| Dist | COUNTY | ROUTE | POST MILES TOTAL PROJECT | SHEET No. | TOTAL SHEETS |
|---|---|---|---|---|---|
| | | | | | |

Theresa Gabriel
REGISTERED ELECTRICAL ENGINEER

October 30, 2015
PLANS APPROVAL DATE

REGISTERED PROFESSIONAL ENGINEER Theresa Aziz Gabriel No. E15129 Exp. 6-30-16 ELECTRICAL STATE OF CALIFORNIA

*THE STATE OF CALIFORNIA OR ITS OFFICERS OR AGENTS SHALL NOT BE RESPONSIBLE FOR THE ACCURACY OR COMPLETENESS OF SCANNED COPIES OF THIS PLAN SHEET.*

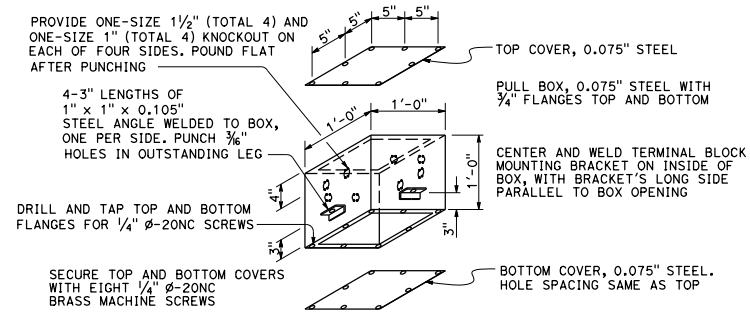


## No. 7 CEILING PULL BOX

See Note 6

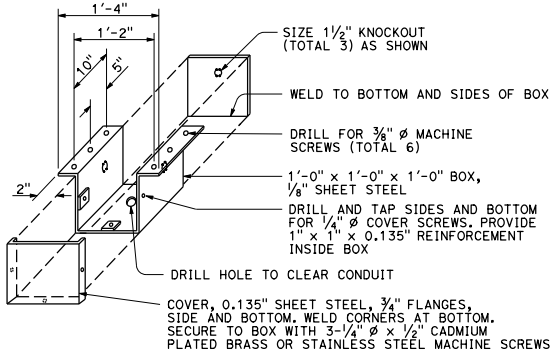


## No. 8 PULL BOX

**NOTES:**

1. Corner joints shall be lapped and secured by spot welding or riveting.
2. Where cap screws are used to attach cover to box, either of the following methods of providing adequate threading may be used:
   a. Tack weld stainless steel Hex nut to bottom of flange (total 4)
   b. Tack weld a ¼" x ⅝" x 8" bar beneath flange (total 2)
3. Pound knockouts flat after punching.
4. Multiple size knockouts (concentric) shall not be permitted.
5. Pull box covers shall be marked as specified on Standard Plans ES-8A and ES-8B.
6. Installation of No. 7 pull box:
   a) Install with bottom flange flush with concrete.
   b) Both covers shall be on a box during pouring.
7. Install box parallel to top of railing. Cover box during pouring with ¼" plywood of sufficient size to provide 1:1 chamfer on 3 sides of cover. Upper edge of plywood shall fit against lower edge of rain tight hood.

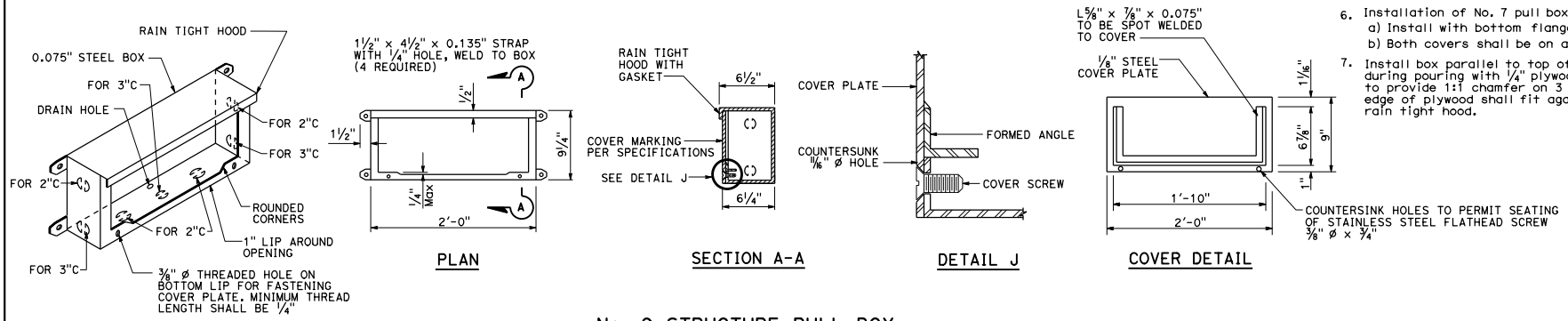


## No. 9 STRUCTURE PULL BOX

See Note 7

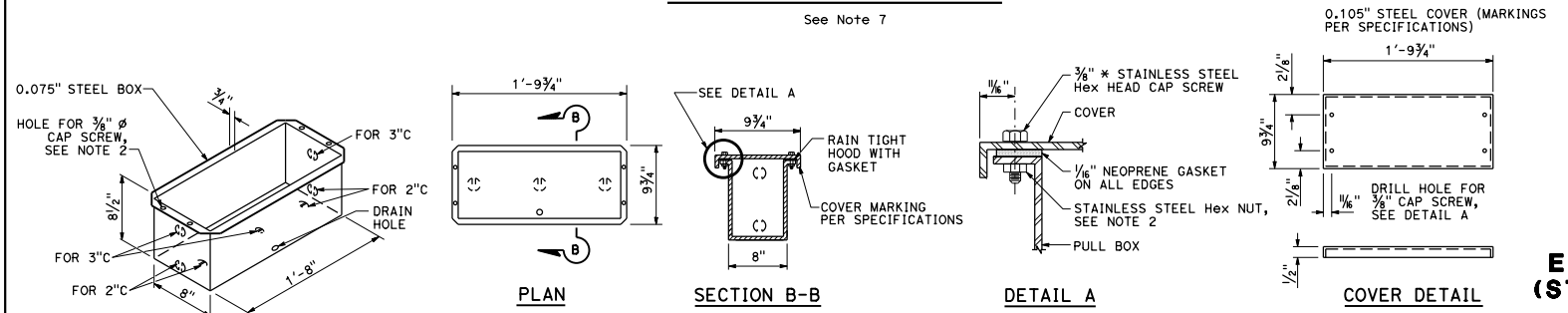


## No. 9A STRUCTURE PULL BOX

STATE OF CALIFORNIA
DEPARTMENT OF TRANSPORTATION

# ELECTRICAL SYSTEMS (STRUCTURE PULL BOX)

NO SCALE

**ES-9C**

**2015 STANDARD PLAN ES-9C**



9-22-15