Dist	COUNTY	ROUTE	POST MILES TOTAL PROJECT	SHEET No.	TOTAL SHEETS

REGISTERED CIVIL ENGINEER

October 30, 2015
PLANS APPROVAL DATE

REGISTERED PROFESSIONAL ENGINEER Stanley P. Johnson No. C57793 Exp. 3-31-16 CIVIL STATE OF CALIFORNIA

THE STATE OF CALIFORNIA OR ITS OFFICERS OR AGENTS SHALL NOT BE RESPONSIBLE FOR THE ACCURACY OR COMPLETENESS OF SCANNED COPIES OF THIS PLAN SHEET.

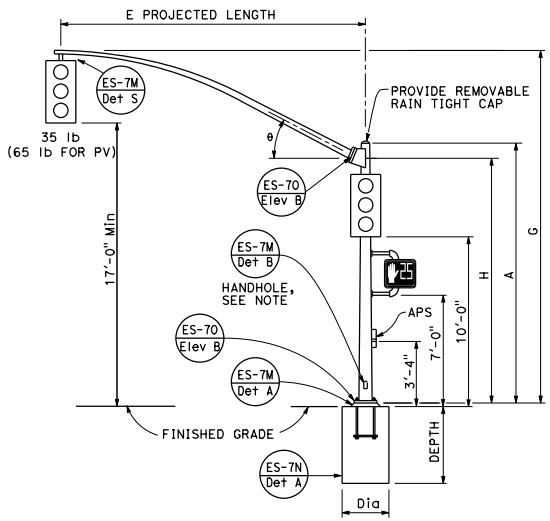

TYPE 16-1-100, 18-1-100

ELEVATION A

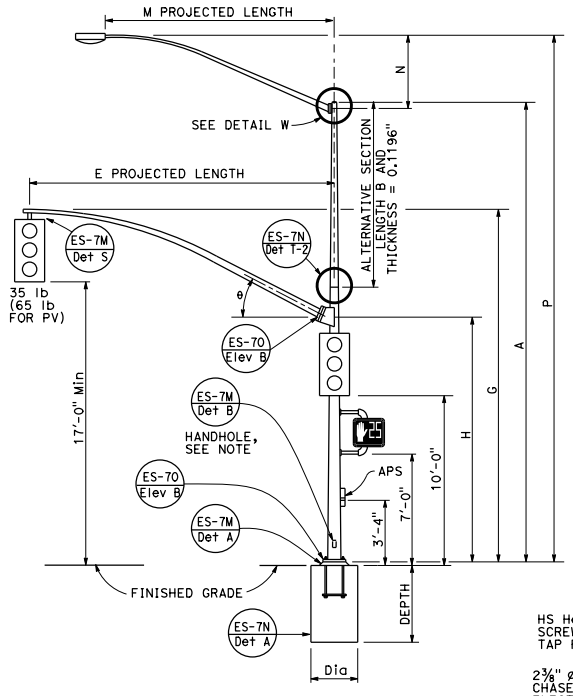

TYPE 19-1-100, 19A-1-100

ELEVATION B

Δ = LUMINAIRE MAST ARM SKEW -90° TO +90° DEFAULT 0°

NOTE:

Handhole shall be located on the downstream side of traffic.

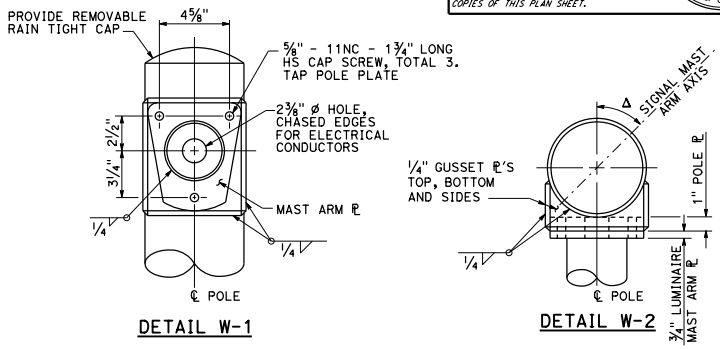

DETAIL W-1

DETAIL W-2

LUMINAIRE MAST ARM CONNECTION

DETAIL W

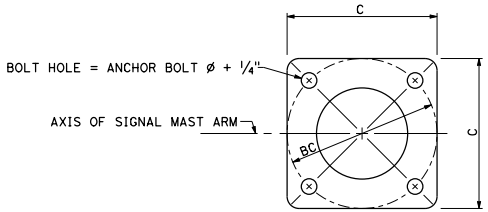

BASE PLATE

DETAIL D

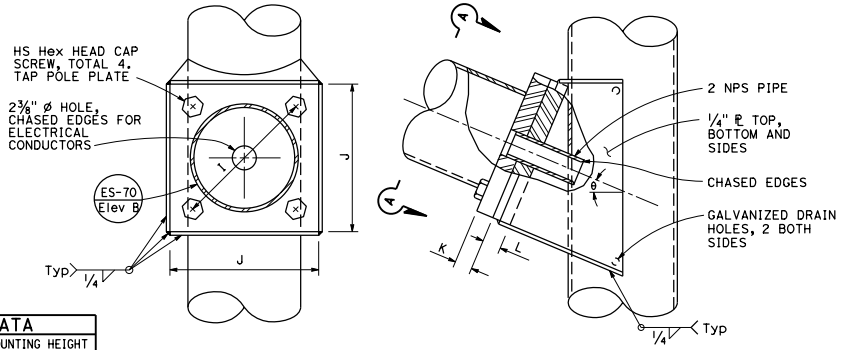

VIEW A-A

ELEVATION C

SIGNAL MAST ARM CONNECTION

DETAIL C

SIGNAL MAST ARM DATA										
E PROJECTED LENGTH	G MOUNTING HEIGHT	H	Min OD AT POLE	THICKNESS	I BOLT CIRCLE	HS CAP SCREWS	J PLATE SIZE	K MAST ARM ℄ THICKNESS	L POLE ℄ THICKNESS	θ
15'-0"	21'-8"±	17'-6"	7⅜"	0.1196"	12"	1¼"-7NC-3"	1'-0"	1¼"	1½"	23°
20'-0"										
25'-0"	22'-8"±	16'-0"								
30'-0"	23'-0"±		8"							

LUMINAIRE MAST ARM DATA					
M PROJECTED LENGTH	N RISE	Min OD AT POLE	THICKNESS	P MOUNTING HEIGHT 30'-0" POLE	P MOUNTING HEIGHT 35'-0" POLE
6'-0"	2'-0"±	3¼"	0.1196"	31'-6"±	36'-6"±
8'-0"	2'-6"±	3½"		32'-0"±	37'-0"±
10'-0"	3'-3"±	3⅞"		32'-9"±	37'-9"±
12'-0"	4'-3"±			33'-9"±	38'-9"±
15'-0"	4'-9"±	4¼"		34'-3"±	39'-3"±

POLE TYPE	LOAD CASE	WIND VELOCITY (mph)	POLE DATA: A HEIGHT	Min OD BASE	Min OD TOP	THICKNESS	ALTERNATIVE SECTION B LENGTH	ALTERNATIVE SECTION BOTTOM	ALTERNATIVE SECTION TOP	BASE PLATE DATA: C	BC = BOLT CIRCLE	THICKNESS	ANCHOR BOLT SIZE	LUMINAIRE MAST ARM	SIGNAL MAST ARM	CIDH PILE FOUNDATION: DIAMETER	DEPTH	REINFORCED
16-1-100	1	100	18'-6"	10¾"	8 1/16"	0.1793"	None			1'-5½"	1'-5½"	3"	1½" ø x 42"	NONE	15'-0", [20'-0"]	2'-6"	9'-0"	YES
18-1-100			17'-0"		8 5/16"		None							NONE	25'-0", [30'-0"]			
19-1-100			30'-0"		6 7/16"		10'-0"	7⅞"	6 7/16"					6'-15' [12'-0"]				
19A-1-100			35'-0"		5 11/16"		15'-0"		5 11/16"					6'-15' [15'-0"]				

[ ] INDICATES MAST ARM LENGTH TO BE USED UNLESS OTHERWISE NOTED ON PLANS.

STATE OF CALIFORNIA
DEPARTMENT OF TRANSPORTATION

ELECTRICAL SYSTEMS (SIGNAL AND LIGHTING STANDARD, CASE 1 SIGNAL MAST ARM LOADING, WIND VELOCITY = 100 MPH AND SIGNAL MAST ARM LENGTHS 15' TO 30')

NO SCALE

ES-7C

2015 STANDARD PLAN ES-7C

9-22-15