Dist	COUNTY	ROUTE	POST MILES TOTAL PROJECT	SHEET No.	TOTAL SHEETS

REGISTERED CIVIL ENGINEER

May 20, 2011
PLANS APPROVAL DATE

REGISTERED PROFESSIONAL ENGINEER Stanley P. Johnson No. C57793 Exp. 3-31-12 CIVIL STATE OF CALIFORNIA

THE STATE OF CALIFORNIA OR ITS OFFICERS OR AGENTS SHALL NOT BE RESPONSIBLE FOR THE ACCURACY OR COMPLETENESS OF SCANNED COPIES OF THIS PLAN SHEET.

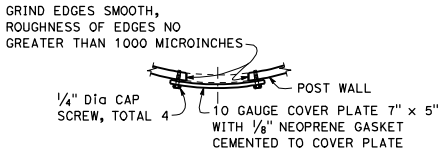

PLAN

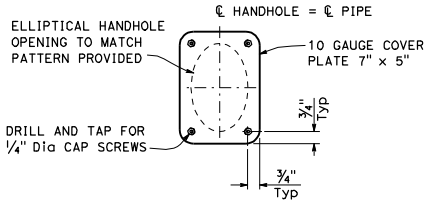

ELEVATION

UPPER HANDHOLE AND COVER DETAILS

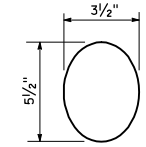

PATTERN OF ELLIPTICAL HANDHOLE CUT OUT

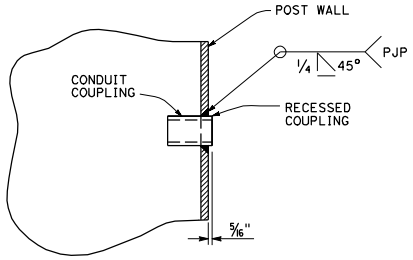

RECESSED COUPLING DETAIL

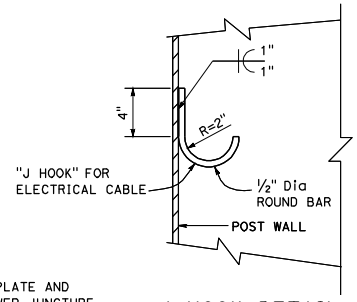

J HOOK DETAIL

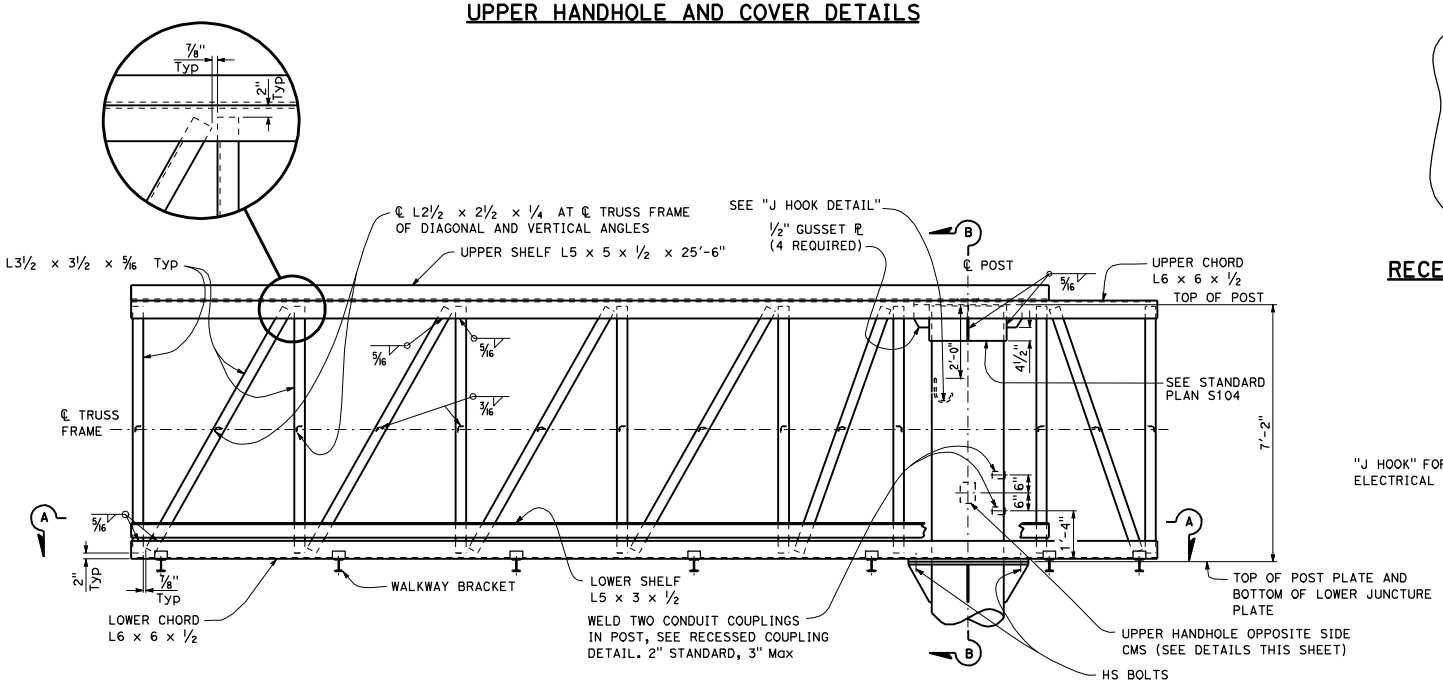

FRAME ELEVATION

See Note 1

NOTES:

1. Walkways and safety anchorages not shown for clarity.
2. For Section B-B details, see Standard Plan S104.
3. For Section A-A details, including vertical angle spacing, see Standard Plan S104.

STATE OF CALIFORNIA
DEPARTMENT OF TRANSPORTATION

OVERHEAD SIGN-TRUSS SINGLE POST TYPE STRUCTURAL FRAME DETAILS UNBALANCED BUTTERFLY CHANGEABLE MESSAGE SIGNS MODEL 500

NO SCALE

S102

2010 STANDARD PLAN S102

9-30-09