Dist	COUNTY	ROUTE	POST MILES TOTAL PROJECT	SHEET No.	TOTAL SHEETS

REGISTERED ELECTRICAL ENGINEER

May 20, 2011
PLANS APPROVAL DATE

Jeffery G. McRae
No. E14512
Exp. 6-30-12
ELECTRICAL
REGISTERED PROFESSIONAL ENGINEER
STATE OF CALIFORNIA

THE STATE OF CALIFORNIA OR ITS OFFICERS OR AGENTS SHALL NOT BE RESPONSIBLE FOR THE ACCURACY OR COMPLETENESS OF SCANNED COPIES OF THIS PLAN SHEET.

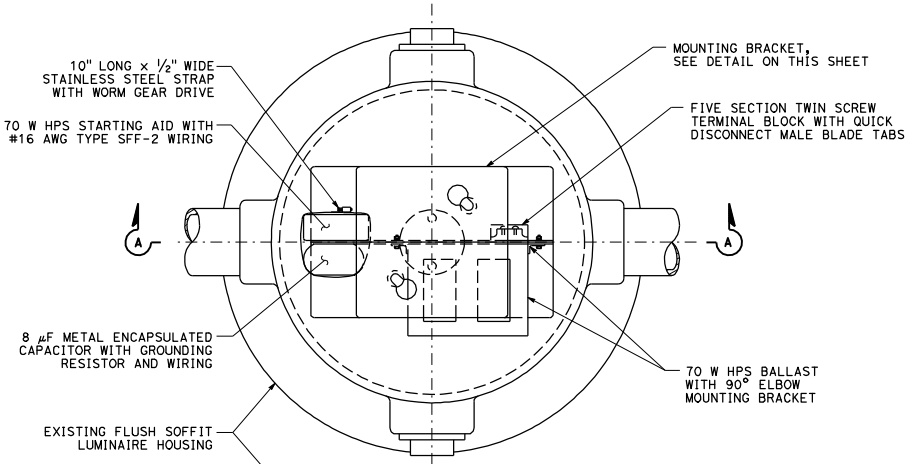

PLAN

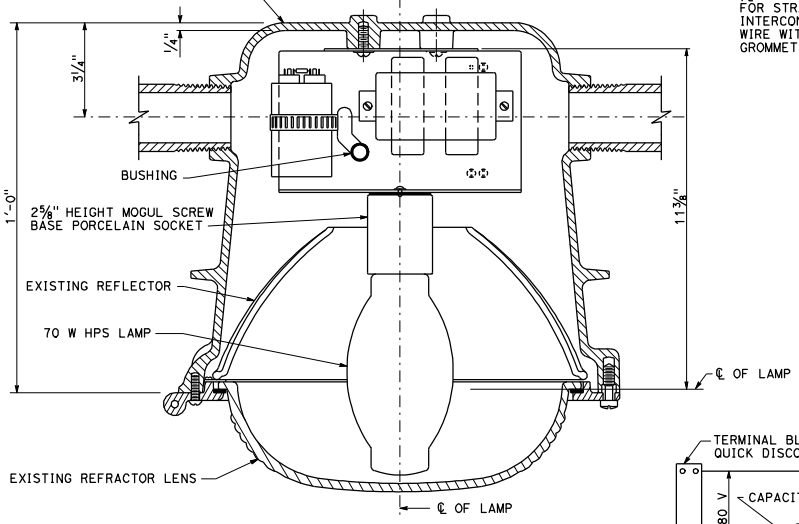

SECTION A-A

FLUSH SOFFIT LUMINAIRE ASSEMBLY

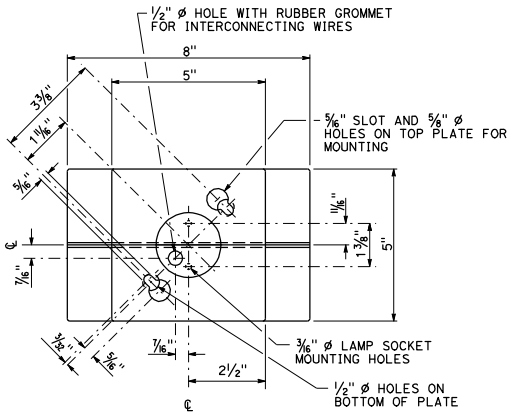

TOP VIEW

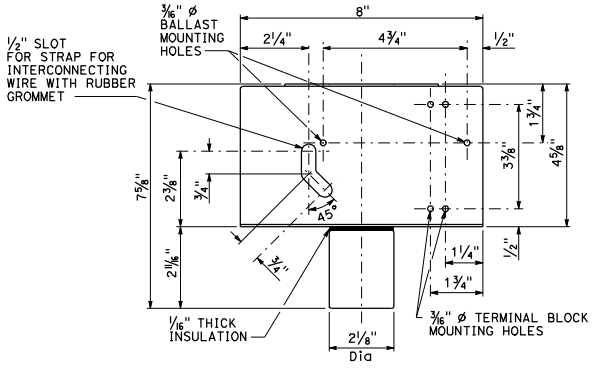

FRONT VIEW

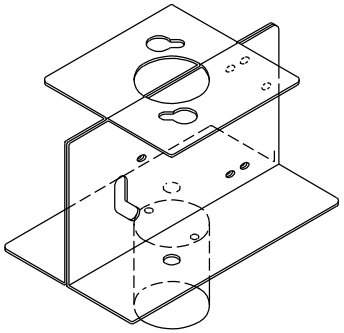

PREFORM TWO SHEETS 1/16" MILD STEEL AS SHOWN, SPOTWELD TOGETHER IN EACH CORNER WITH FOUR SPOTWELDS.

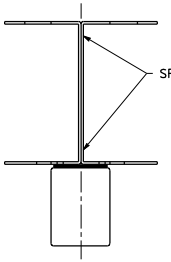

SIDE VIEW

MOUNTING BRACKET DETAILS

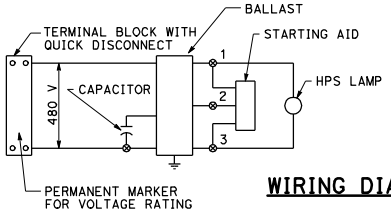

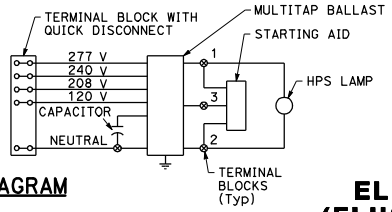

WIRING DIAGRAM

NOTES:

1. Fixture wiring shall be Type SFF-2.
2. Use No. 8 ø machine screws, lockwashers and nuts for mounting ballast and terminal strips.
3. In-line fuse as required on Standard Plan ES-13B.

STATE OF CALIFORNIA
DEPARTMENT OF TRANSPORTATION

ELECTRICAL SYSTEMS (FLUSH SOFFIT LUMINAIRE DETAILS)

NO SCALE

ES-9F

2010 STANDARD PLAN ES-9F

4-5-10