Dist	COUNTY	ROUTE	POST MILES TOTAL PROJECT	SHEET No.	TOTAL SHEETS

REGISTERED CIVIL ENGINEER

May 20, 2011
PLANS APPROVAL DATE

REGISTERED PROFESSIONAL ENGINEER Dallas Forester No. C37765 Exp. 12-31-12 CIVIL STATE OF CALIFORNIA

THE STATE OF CALIFORNIA OR ITS OFFICERS OR AGENTS SHALL NOT BE RESPONSIBLE FOR THE ACCURACY OR COMPLETENESS OF SCANNED COPIES OF THIS PLAN SHEET.

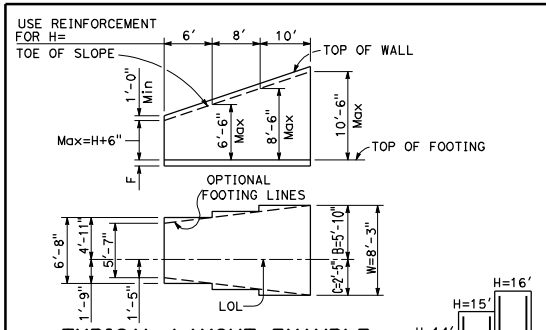

TYPICAL LAYOUT EXAMPLE

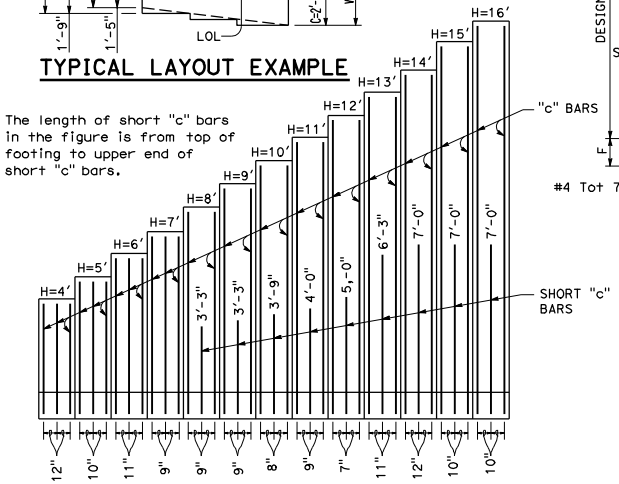

REINFORCED CONCRETE WINGWALLS

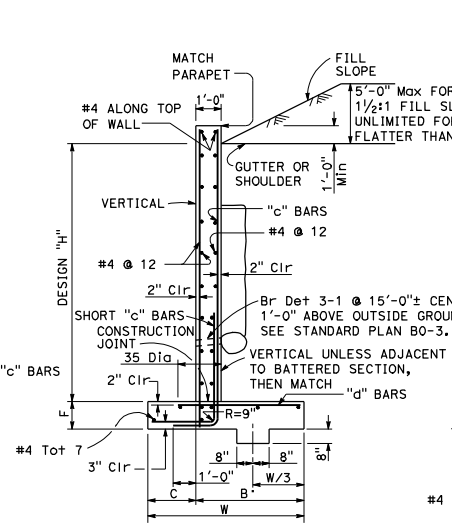

TYPICAL SECTION H=4′ THRU 12′

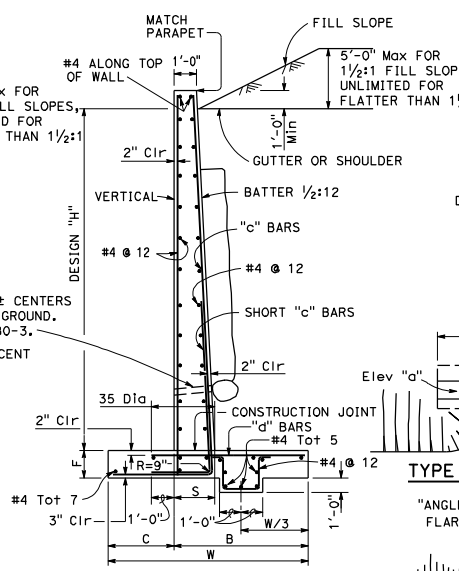

TYPICAL SECTION H=13′ THRU 16′

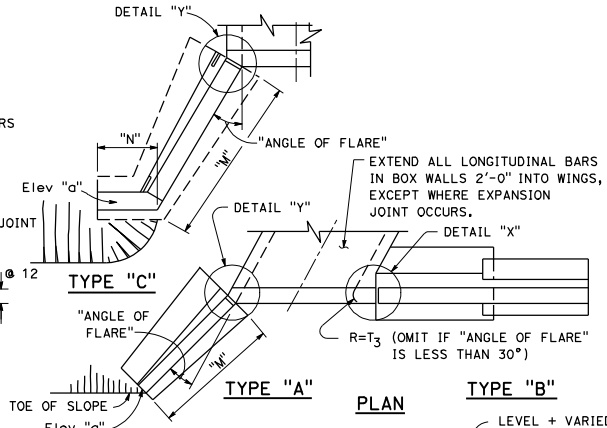

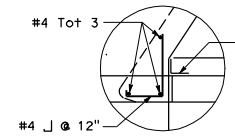

DETAIL "X"

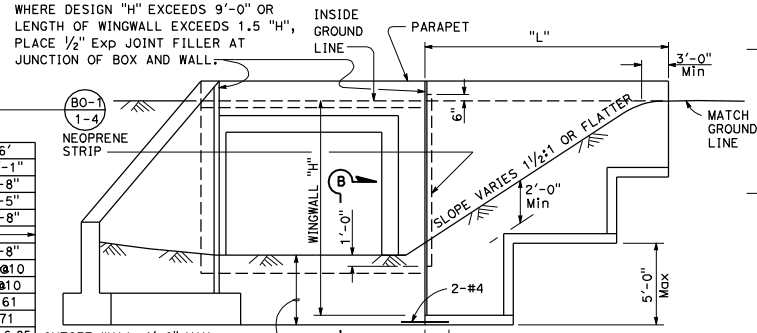

TYPE "A" END ELEVATION TYPE "B"

STRAIGHT WINGWALLS

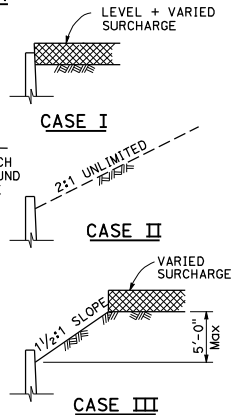

DETAIL OF DESIGN LOADING CASES

"H"	4′	5′	6′	7′	8′	9′	10′	11′	12′	13′	14′	15′	16′
W	5′-7″	6′-2″	6′-8″	7′-1″	7′-6″	7′-10″	8′-3″	8′-8″	9′-2″	9′-7″	10′-2″	10′-6″	11′-1″
C	1′-5″	1′-7″	1′-9″	1′-11″	2′-1″	2′-3″	2′-5″	2′-8″	2′-10″	3′-1″	3′-4″	3′-6″	3′-8″
B	4′-2″	4′-7″	4′-11″	5′-2″	5′-5″	5′-7″	5′-10″	6′-0″	6′-4″	6′-6″	6′-10″	7′-0″	7′-5″
F	1′-2″	1′-2″	1′-2″	1′-2″	1′-2″	1′-2″	1′-2″	1′-3″	1′-5″	1′-5″	1′-6″	1′-6″	1′-8″
BATTER	None									½:12			
S	1′-0″	1′-0″	1′-0″	1′-0″	1′-0″	1′-0″	1′-0″	1′-0″	1′-0″	1′-6½″	1′-7″	1′-7½″	1′-8″
"c" BARS	#4@12	#4@10	#5@11	#5@9	#6@9	#7@9	#7@8	#8@9	#7@7	#8@11	#9@12	#10@10	#10@10
"d" BARS	#5@12	#5@10	#6@11	#6@9	#6@9	#6@9	#6@8	#7@9	#6@7	#7@11	#8@12	#8@10	#9@10
* Conc CY/LF	0.46	0.52	0.58	0.64	0.69	0.74	0.80	0.88	1.00	1.25	1.37	1.45	1.61
* Reinf LB/LF	26	32	41	50	59	70	81	95	102	99	120	156	171
** CASE I qu (ksf), B′(ft)	3.75,2.24	3.66,2.69	3.59,3.11	3.56,3.49	3.52,3.89	3.52,4.21	3.69,4.46	3.77,4.77	3.89,5.17	3.92,5.61	3.92,6.18	4.04,6.40	4.13,6.95
** CASE II qu (ksf), B′(ft)	1.16,5.58	1.33,6.13	1.51,6.55	1.69,6.86	1.88,7.16	2.08,7.33	2.29,7.60	2.50,7.86	2.77,8.14	2.97,8.47	3.18,8.93	3.41,9.05	3.70,9.43
** CASE III qu (ksf), B′(ft)	1.26,5.46	1.36,5.97	1.49,6.37	1.64,6.66	1.79,6.93	1.95,7.08	2.11,7.33	2.28,7.55	2.50,7.84	2.66,8.12	2.81,8.59	3.00,8.69	3.22,9.10

B′=B-(2) eccentricity, B′ is the effective footing width.
* Quantities include 1′-0″ extension above the design "H" limit.
** Soil bearing pressure shown in the table is the equivalent uniform pressure per AASHTO LRFD - 11.6.3.2

NOTES:

Unit Stresses: f′c=3,600 psi, fy=60,000 psi
Earth density: 120 pcf
Equivalent fluid pressure: 36 pcf
Elevations, length and angle of flare of wings may be varied by the Engineer to suit conditions encountered in the field.
Dimensions "H","L","M","N", Elevation "a" and "Angle of flare" (as apply) are shown on the plans.
Wall height may be exceeded by 6″ before going to next greater "H".
Eliminate cutoff wall if adjacent channel is paved and skew is 20° maximum.
For wall offset values, see Standard Plan B3-5.

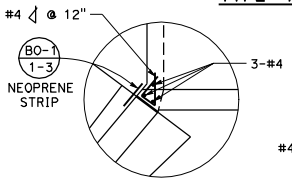

DETAIL "Y"

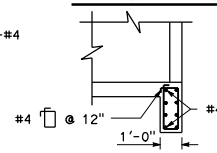

SECTION B-B

STATE OF CALIFORNIA
DEPARTMENT OF TRANSPORTATION

BOX CULVERT WINGWALLS TYPES A, B AND C

NO SCALE

D84

2010 STANDARD PLAN D84

10-4-10