Dist	COUNTY	ROUTE	POST MILES TOTAL PROJECT	SHEET No.	TOTAL SHEETS

Randell D. Hiatt
REGISTERED CIVIL ENGINEER

May 20, 2011
PLANS APPROVAL DATE

REGISTERED PROFESSIONAL ENGINEER Randell D. Hiatt No. C50200 Exp. 6-30-11 CIVIL STATE OF CALIFORNIA

THE STATE OF CALIFORNIA OR ITS OFFICERS OR AGENTS SHALL NOT BE RESPONSIBLE FOR THE ACCURACY OR COMPLETENESS OF SCANNED COPIES OF THIS PLAN SHEET.

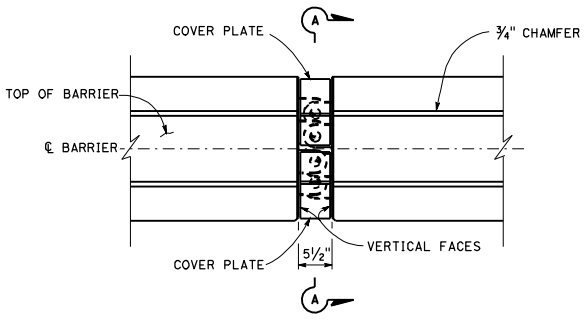

Connection pins not shown in this view.

TOP VIEW

VERTICAL CONCRETE FACE JOINTS

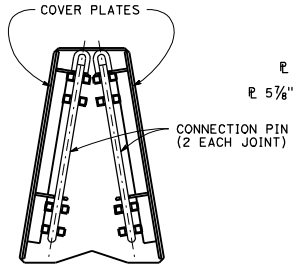

SECTION A-A

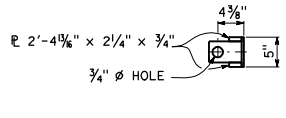

TOP VIEW

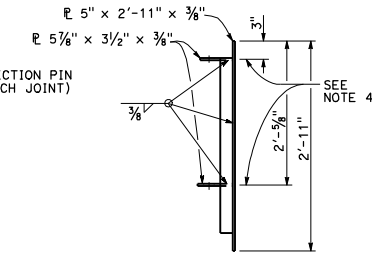

SIDE VIEW

COVER PLATE

NOTES:

1. "R" Panels are to be placed at a maximum of 10 panel segment intervals and at connections to permanent concrete barrier. "R" panels provide for quick and easy placement and removal by lateral movement of panel (NO Notched Ends). "N" Panels have concrete notches at each end of the panel. "T" panels have a concrete notch at one end of the panel and a vertical face at the other end of the panel. Notched end connections plus overlapping connection plates require longitudinal movement of the panels during placement or removal. If portable concrete barrier (Type 60K) is to be removed after installation, "R" panels are to be removed first to facilitate removal of the remaining panels.
2. Reinforcement and dimensioning details for "R" and "T" Panels are similar to the "N" Panel details shown on Standard Plan A63A.
3. Modify end of permanent concrete barrier with the installation of connection plates for connection pins and cover plates. Remove 2' of existing Type 60 permanent concrete barrier to install connection plates for "R" Panel connection. Where the connection to existing barrier requires a height transition, remove existing barrier to end of the height transition.
4. Dimension to bottom of the 5⅞" x 3½" x ⅜" plate.
5. For additional details of connection plate configurations, see Sections C-C and D-D of Standard Plan A63A.

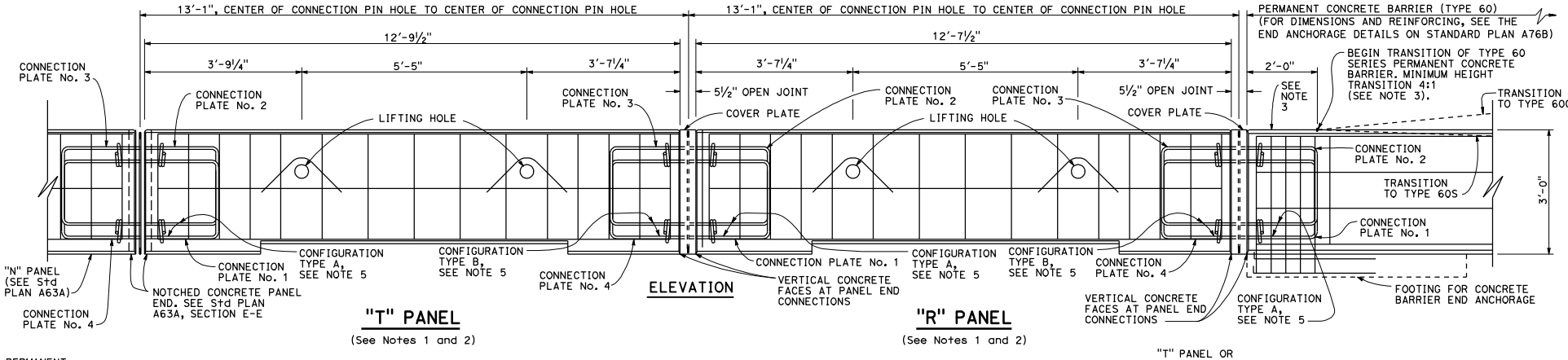

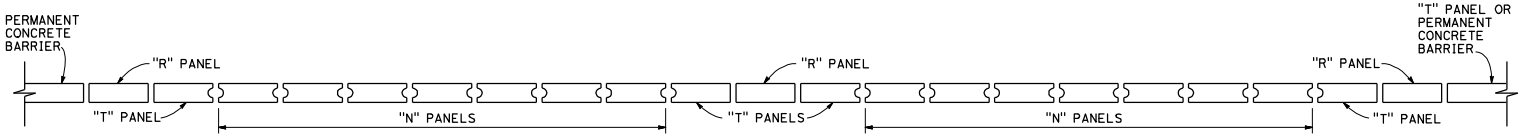

PLAN

TYPICAL PORTABLE CONCRETE BARRIER (TYPE 60K) LAYOUT

See Note 1

STATE OF CALIFORNIA
DEPARTMENT OF TRANSPORTATION

PORTABLE CONCRETE BARRIER (TYPE 60K)

NO SCALE

A63B

2010 STANDARD PLAN A63B

8-11-09