© 2016 California Department of Transportation
All Rights Reserved

| Dist | COUNTY | ROUTE | POST MILES TOTAL PROJECT | SHEET No. | TOTAL SHEETS |
|---|---|---|---|---|---|
| | | | | | |

REGISTERED CIVIL ENGINEER

July 15, 2016
PLANS APPROVAL DATE

Stanley P. Johnson
No. C57793
Exp. 3-31-18
CIVIL
STATE OF CALIFORNIA

*THE STATE OF CALIFORNIA OR ITS OFFICERS OR AGENTS SHALL NOT BE RESPONSIBLE FOR THE ACCURACY OR COMPLETENESS OF SCANNED COPIES OF THIS PLAN SHEET.*

TO ACCOMPANY PLANS DATED _____

**NOTE:**
Handhole shall be located on the downstream side of traffic.

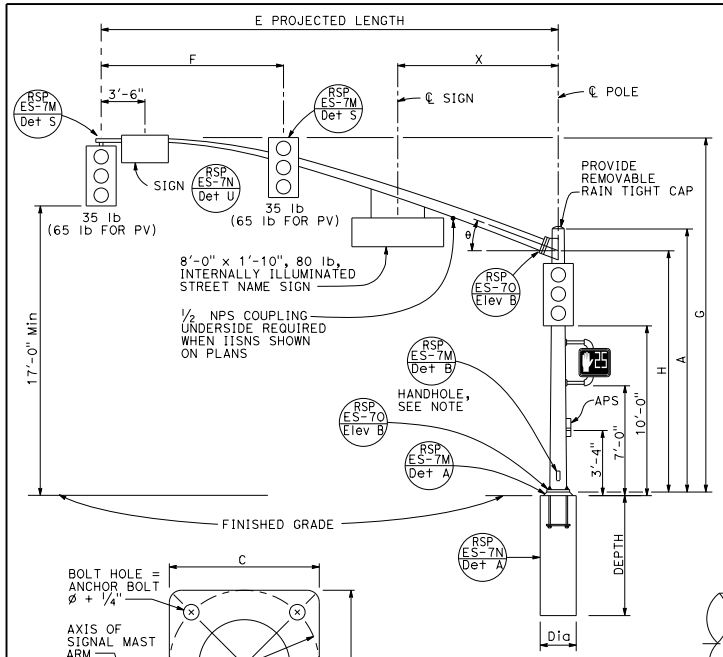


TYPE 18-4-100, 23-4-100, 27-4-100
ELEVATION A

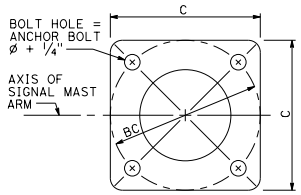


BASE PLATE
DETAIL B

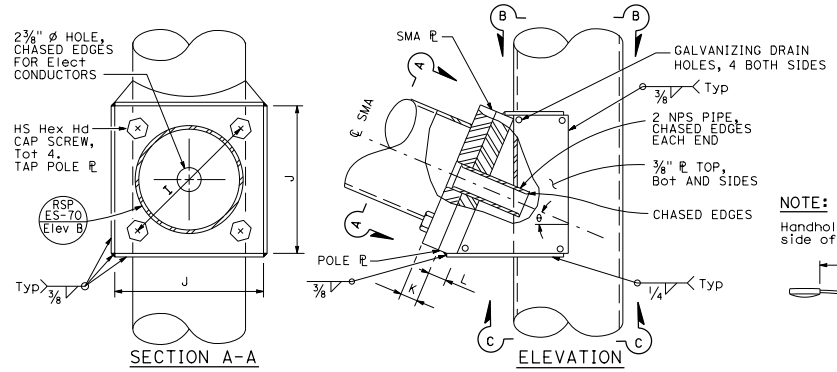


SIGNAL MAST ARM CONNECTION
DETAIL A

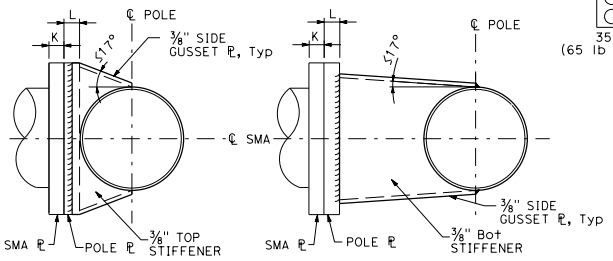


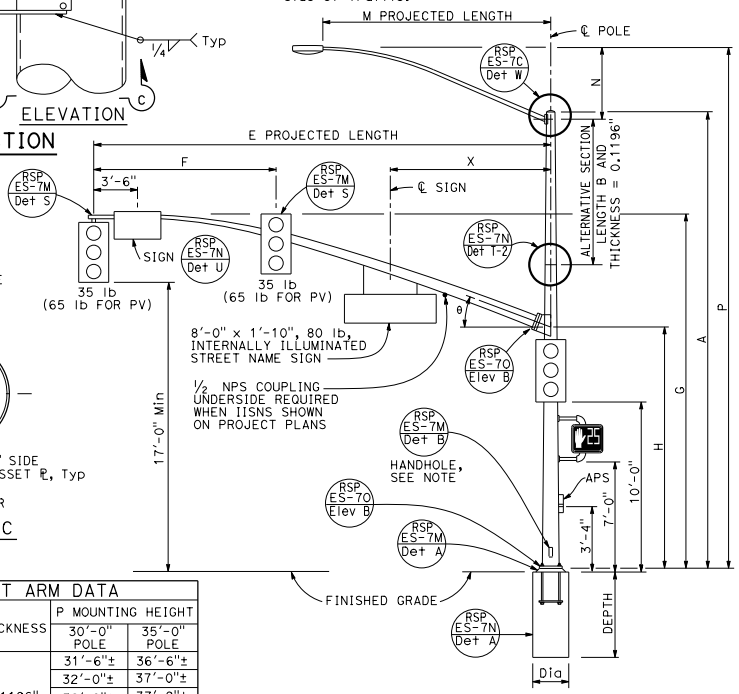


TYPE 19-4-100, 19A-4-100, 24-4-100, 24A-4-100, 26-4-100, 26A-4-100
ELEVATION B

| SIGNAL MAST ARM DATA | | | | | | | | | | | | |
|---|---|---|---|---|---|---|---|---|---|---|---|---|
| E PROJECTED LENGTH | F Min SPACING | G MOUNTING HEIGHT | H | Min OD AT POLE | THICKNESS | I BOLT CIRCLE | HS CAP SCREWS | J PLATE SIZE | K MAST ARM ℄ THICKNESS | L POLE ℄ THICKNESS | θ | X Max |
| 25'-0" | 10'-0" | 22'-8"± | 16'-0" | 7 3/8" | 0.2391" | 12" | 1 1/4"-7NC-3" | 1'-3" | 1 1/4" | 1 1/2" | 23° | 10'-6" |
| 30'-0" | 12'-0" | 23'-0"± | | 8" | | 13 1/2" | | | 1 1/2" | 1 3/4" | 21° | 13'-0" |
| 35'-0" | 14'-0" | | | 8 11/16" | | | | | | | 15° | |
| 40'-0" | 15'-0" | | | 9 3/8" | | | | | | | | |
| 45'-0" | | 23'-8"± | | 10 1/4" | | | | 1'-5" | | | | |

| LUMINAIRE MAST ARM DATA | | | | | |
|---|---|---|---|---|---|
| M PROJECTED LENGTH | N RISE | Min OD AT POLE | THICKNESS | P MOUNTING HEIGHT 30'-0" POLE | P MOUNTING HEIGHT 35'-0" POLE |
| 6'-0" | 2'-0"± | 3 1/4" | 0.1196" | 31'-6"± | 36'-6"± |
| 8'-0" | 2'-6"± | 3 1/2" | | 32'-0"± | 37'-0"± |
| 10'-0" | 3'-3"± | 3 7/8" | | 32'-9"± | 37'-9"± |
| 12'-0" | 4'-3"± | | | 33'-9"± | 38'-9"± |
| 15'-0" | 4'-9"± | 4 1/4" | | 34'-3"± | 39'-3"± |

| POLE TYPE | LOAD CASE | WIND VELOCITY (mph) | POLE DATA: A HEIGHT | Min OD BASE | Min OD TOP | THICKNESS | ALTERNATIVE SECTION B LENGTH | ALTERNATIVE SECTION BOTTOM | ALTERNATIVE SECTION TOP | BASE PLATE DATA: C | BC = BOLT CIRCLE | THICKNESS | ANCHOR BOLT SIZE | LUMINAIRE MAST ARM | SIGNAL MAST ARM | CIDH PILE FOUNDATION Dia | CIDH PILE FOUNDATION DEPTH |
|---|---|---|---|---|---|---|---|---|---|---|---|---|---|---|---|---|---|
| 18-4-100 | 4 | 100 | 17'-0" | 16" | 13 5/8" | 0.2391" OR 0.25" | | | | 1'-11" | 1'-9" | 3" | 2 1/4"ø x 42" | NONE | 25'-0", [30'-0"] | 3'-6" | 12'-0" |
| 19-4-100 | | | 30'-0" | | 11 3/4" | | 10'-0" | 13 1/8" | 11 3/4" | | | | | 6'-15' 12'-0" | | | |
| 19A-4-100 | | | 35'-0" | | 11" | | 15'-0' | 13 1/8" | 11" | | | | | 6'-15' 15'-0" | | | |
| 23-4-100 | | | 17'-0" | | 13 5/8" | 0.3125" | | | | | | | | NONE | 35'-0" | | |
| 24-4-100 | | | 30'-0" | | 11 3/4" | | 10'-0" | 15 1/8" | 13 3/4" | | | | | 6'-15' 12'-0" | | | |
| 24A-4-100 | | | 35'-0" | | 11" | | 15'-0" | 13 1/8" | 11" | | | | | 6'-15' 15'-0" | | | |
| 26-4-100 | | | 30'-0" | 18" | 13 3/4" | | 10'-0" | 15 1/8" | 13 3/4" | 2'-1" | 1'-11" | | | 6'-15' 12'-0" | 40'-0", [45'-0"] | | 13'-0" |
| 26A-4-100 | | | 35'-0" | | 13" | | 15'-0" | 15 1/8" | 13" | | | | | 6'-15' 15'-0" | | | |
| 27-4-100 | | | 17'-0" | | 15 5/8" | | | | | | | | | NONE | | | |

[ ] INDICATES MAST ARM LENGTH TO BE USED UNLESS OTHERWISE NOTED ON PLANS.

STATE OF CALIFORNIA
DEPARTMENT OF TRANSPORTATION

# ELECTRICAL SYSTEMS (SIGNAL AND LIGHTING STANDARD, CASE 4 SIGNAL MAST ARM LOADING, WIND VELOCITY=100 MPH AND SIGNAL MAST ARM LENGTHS 25' TO 45')

NO SCALE

RSP ES-7F DATED JULY 15, 2016 SUPERSEDES RSP ES-7F DATED OCTOBER 30, 2015 AND RSP ES-7F DATED JULY 19, 2013 AND STANDARD PLAN ES-7F DATED MAY 20, 2011 - PAGE 467 OF THE STANDARD PLANS BOOK DATED 2010.

**REVISED STANDARD PLAN RSP ES-7F**

**2010 REVISED STANDARD PLAN RSP ES-7F**

6-20-16