© 2011 California Department of Transportation
All Rights Reserved

Dist	COUNTY	ROUTE	POST MILES TOTAL PROJECT	SHEET No.	TOTAL SHEETS

REGISTERED CIVIL ENGINEER

May 20, 2011
PLANS APPROVAL DATE

REGISTERED PROFESSIONAL ENGINEER Stanley P. Johnson No. C57793 Exp. 3-31-12 CIVIL STATE OF CALIFORNIA

THE STATE OF CALIFORNIA OR ITS OFFICERS OR AGENTS SHALL NOT BE RESPONSIBLE FOR THE ACCURACY OR COMPLETENESS OF SCANNED COPIES OF THIS PLAN SHEET.

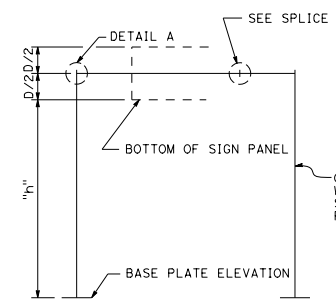

SINGLE CROSS BEAM SERIES
TYPE A-1

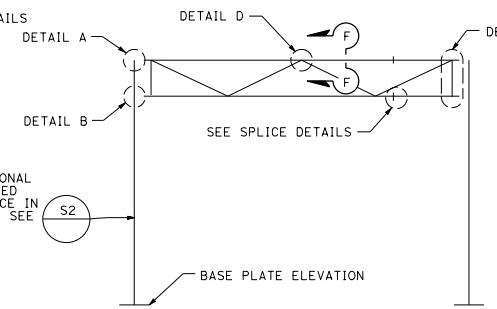

TRUSS CROSS BEAM SERIES
TYPE A-2

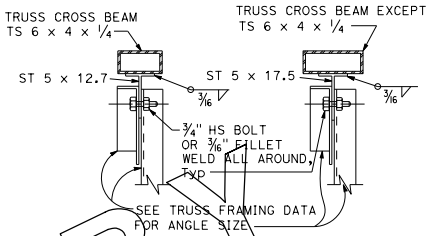

SECTION F-F

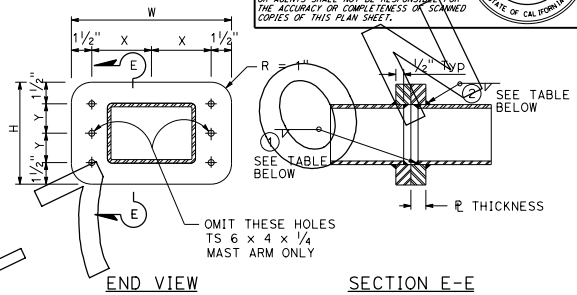

END VIEW SECTION E-E

SPLICE DETAILS

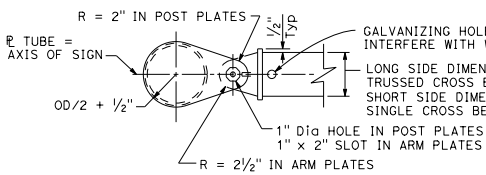

PLAN

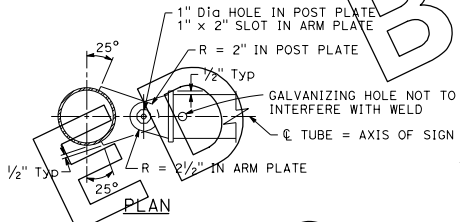

PLAN

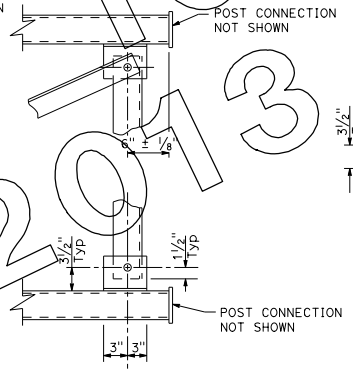

DETAIL C

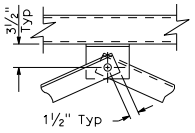

DETAIL D

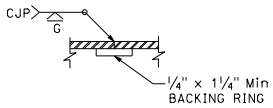

OPTIONAL WELDED SPLICE

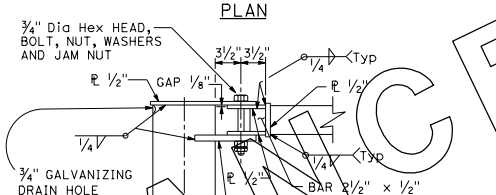

DETAIL A

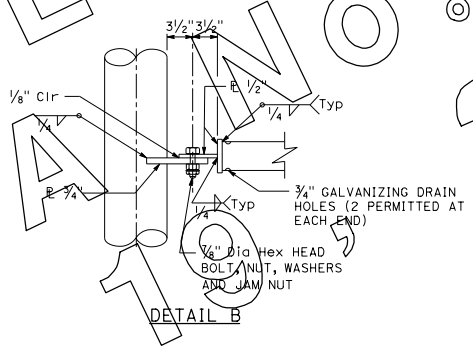

DETAIL B

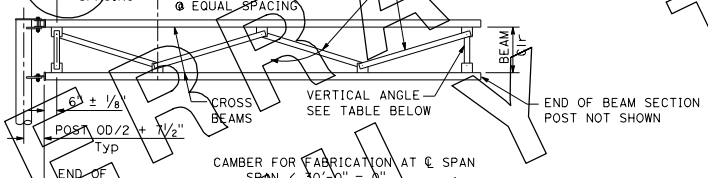

CAMBER FOR FABRICATION AT ℄ SPAN
SPAN < 30'-0" = 0"
SPAN ≥ 30'-0" = 1/2"

TRUSS FRAMING DATA

SIGN DEPTH	BEAM CLEARANCE	MAXIMUM PANEL SPACING	VERTICAL ANGLE	DIAGONAL ANGLE
40" TO 70"	2'-0"	5'-6"	L3 1/2 x 2 1/2 x 1/4 *	L3 1/2 x 2 1/2 x 1/4 *
80" TO 100"	4'-6"	6'-6"	L3 1/2 x 2 1/2 x 1/4 *	L3 1/2 x 2 1/2 x 1/4 *

* SHORT LEG OUTSTANDING.

SPLICE DATA

TUBULAR CROSS BEAM SIZE	HIGH STRENGTH BOLTS				A-36 PLATES			WELDING	
	No.	SIZE	X	Y	W	H	THICKNESS	1	2
TS 6 x 4 x 1/4	4	3/4"	4 1/4"	2"	11 1/2"	7"	1"	3/16"	5/16"
TS 8 x 4 x 1/4	6		5 1/4"		13 1/2"				
TS 8 x 6 x 1/4				2 1/2"		8"	1 1/8"		3/8"
TS 8 x 6 x 3/8 **			4 1/4"	3 1/2"	11 1/2"	10"		1/4"	5/16"
TS 10 x 6 x 1/4			6 1/2"	2 1/2"	16"	8"	1 3/8"	3/16"	3/8"
TS 10 x 6 x 3/8				3"		9"	1 5/8"	5/16"	1/2"

** LONG DIMENSION VERTICAL FOR SINGLE CROSS BEAM

NOTES:

For post connection to base ℄ see S48.

For cross beam to sign panel connections see S46.

SEE PROJECT PLANS FOR:

1. Sign type and location.
2. Panel type and location on structure.
3. Post size and dimension "h".
4. Cross beam size.
5. Foundation type.
6. Illumination if required.

STATE OF CALIFORNIA
DEPARTMENT OF TRANSPORTATION

OVERHEAD SIGNS-LIGHTWEIGHT TYPE A CONNECTION DETAILS

NO SCALE

S43

2010 STANDARD PLAN S43

2-8-10

CANCELLED BY ADDENDUM NO. 10-1 © 2013
OFFICIALLY