© 2015 California Department of Transportation
All Rights Reserved

POLE EXTENSION TYPE	POLE DATA				HANDHOLE SIZE
	HEIGHT "h"	Min OD		THICKNESS	
		BASE	TOP		
CCTV 5	5′	4 9/16"	3 3/4"	0.1793"	3" x 5"
CCTV 10	10′	5 1/4"			
CCTV 15	15′	5 15/16"			

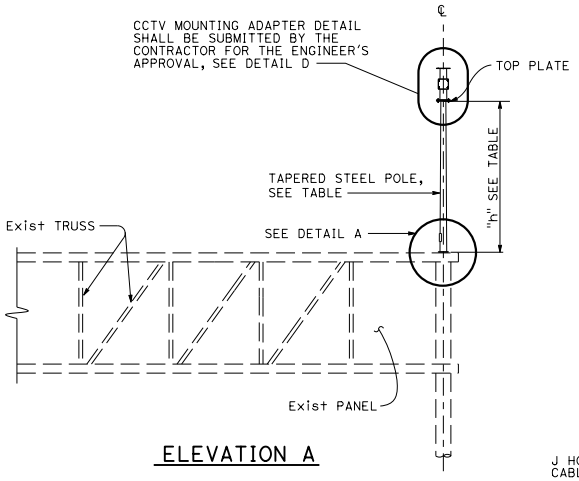

ELEVATION A

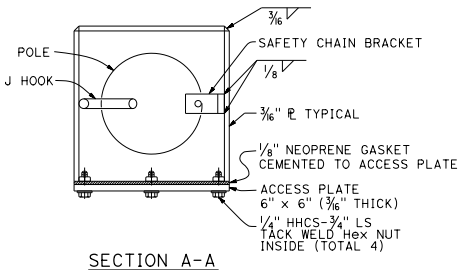

SECTION A-A

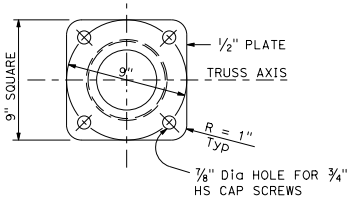

SECTION K-K

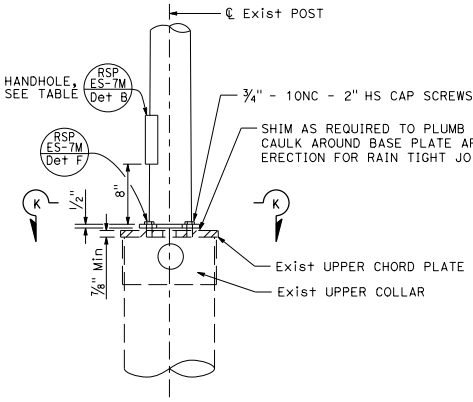

DETAIL A

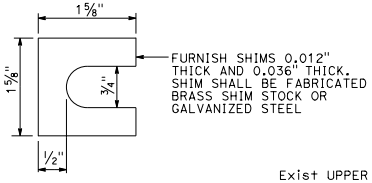

SHIM

DETAIL B

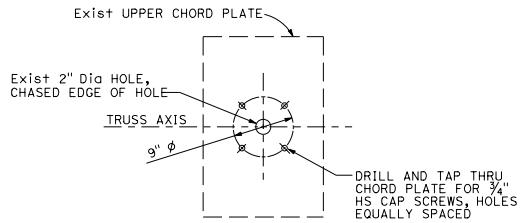

UPPER CHORD PLATE

DETAIL C

See Note 3

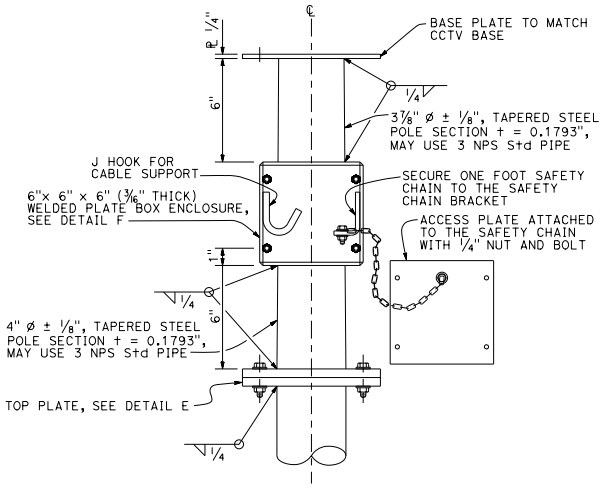

CLOSED CIRCUIT TELEVISION MOUNTING ADAPTER

DETAIL D

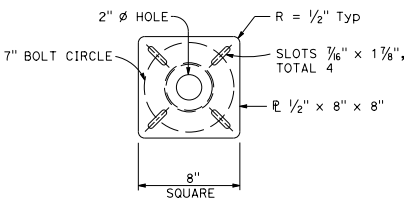

TOP PLATE

DETAIL E

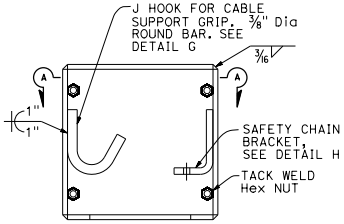

BOX ENCLOSURE

DETAIL F

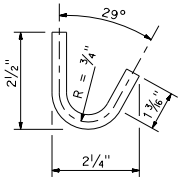

J HOOK

DETAIL G

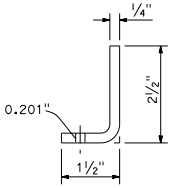

SAFETY CHAIN BRACKET

DETAIL H

NOTES:

1. Verify controlling field dimensions before ordering or fabricating any material.
2. Bolt hole locations may vary at the discretion of the Engineer.
3. See Std Plan S13.
4. Wind Loadings (3-second gust) : 100 mph.
5. Unit Stresses (Structural Steel):
   a. fy = 55,000 psi (tapered steel tube)
   b. fy = 50,000 psi (unless otherwise noted)

Dist	COUNTY	ROUTE	POST MILES TOTAL PROJECT	SHEET No.	TOTAL SHEETS

REGISTERED CIVIL ENGINEER

October 30, 2015
PLANS APPROVAL DATE

REGISTERED PROFESSIONAL ENGINEER Stanley P. Johnson No. C57793 Exp. 3-31-16 CIVIL STATE OF CALIFORNIA

THE STATE OF CALIFORNIA OR ITS OFFICERS OR AGENTS SHALL NOT BE RESPONSIBLE FOR THE ACCURACY OR COMPLETENESS OF SCANNED COPIES OF THIS PLAN SHEET.

TO ACCOMPANY PLANS DATED _____

STATE OF CALIFORNIA
DEPARTMENT OF TRANSPORTATION

ELECTRICAL SYSTEMS (CLOSED CIRCUIT TELEVISION, 5' TO 15' OVERHEAD SIGN MOUNTED POLE)

NO SCALE

RSP ES-16A DATED OCTOBER 30, 2015 SUPERSEDES STANDARD PLAN ES-16A DATED MAY 20, 2011 - PAGE 500 OF THE STANDARD PLANS BOOK DATED 2010.

REVISED STANDARD PLAN RSP ES-16A

2010 REVISED STANDARD PLAN RSP ES-16A

8-24-15