Dist	COUNTY	ROUTE	POST MILES TOTAL PROJECT	SHEET No.	TOTAL SHEETS
12	Ora	405	8.4	1	142

STATE OF CALIFORNIA ACBRNHPI-405-2(978)101E

DEPARTMENT OF TRANSPORTATION

PROJECT PLANS FOR CONSTRUCTION ON

STATE HIGHWAY

IN ORANGE COUNTY
IN COSTA MESA
AT RED HILL AVENUE OVERCROSSING

TO BE SUPPLEMENTED BY STANDARD PLANS DATED 2010

INDEX OF PLANS

SHEET No.	DESCRIPTION
1	TITLE AND LOCATION MAP
2-3	TYPICAL CROSS SECTIONS
4	LAYOUTS
5	PROFILE
6-9	CONSTRUCTION DETAILS
10	TEMPORARY WATER POLLUTION CONTROL PLANS
11	CONTOUR GRADING PLAN
12-15	DRAINAGE PLANS, PROFILES, DETAILS AND QUANTITIES
16-18	UTILITY PLANS
19	CONSTRUCTION AREA SIGN
20-29	STAGE CONSTRUCTION PLANS AND QUANTITIES
30-34	TRAFFIC HANDLING PLANS, DETAILS AND QUANTITIES
35-38	PAVEMENT DELINEATION PLANS AND QUANTITIES
39	SIGN QUANTITIES
40	SUMMARY OF QUANTITIES
41-47	LANDSCAPE PLANS
48-63	ELECTRICAL PLANS
64-93	REVISED STANDARD PLANS

STRUCTURE PLANS

94-100	RED HILL AVENUE OVERCROSSING, Br No. 55-0959
101-121	RETAINING WALL No. 1&2, Br No. 55E0162 & 55E0163
122-142	RETAINING WALL No. 3&4, Br No. 55E0164 & 55E0165

THE STANDARD PLANS LIST APPLICABLE TO THIS CONTRACT IS INCLUDED IN THE NOTICE TO BIDDERS AND SPECIAL PROVISIONS BOOK.

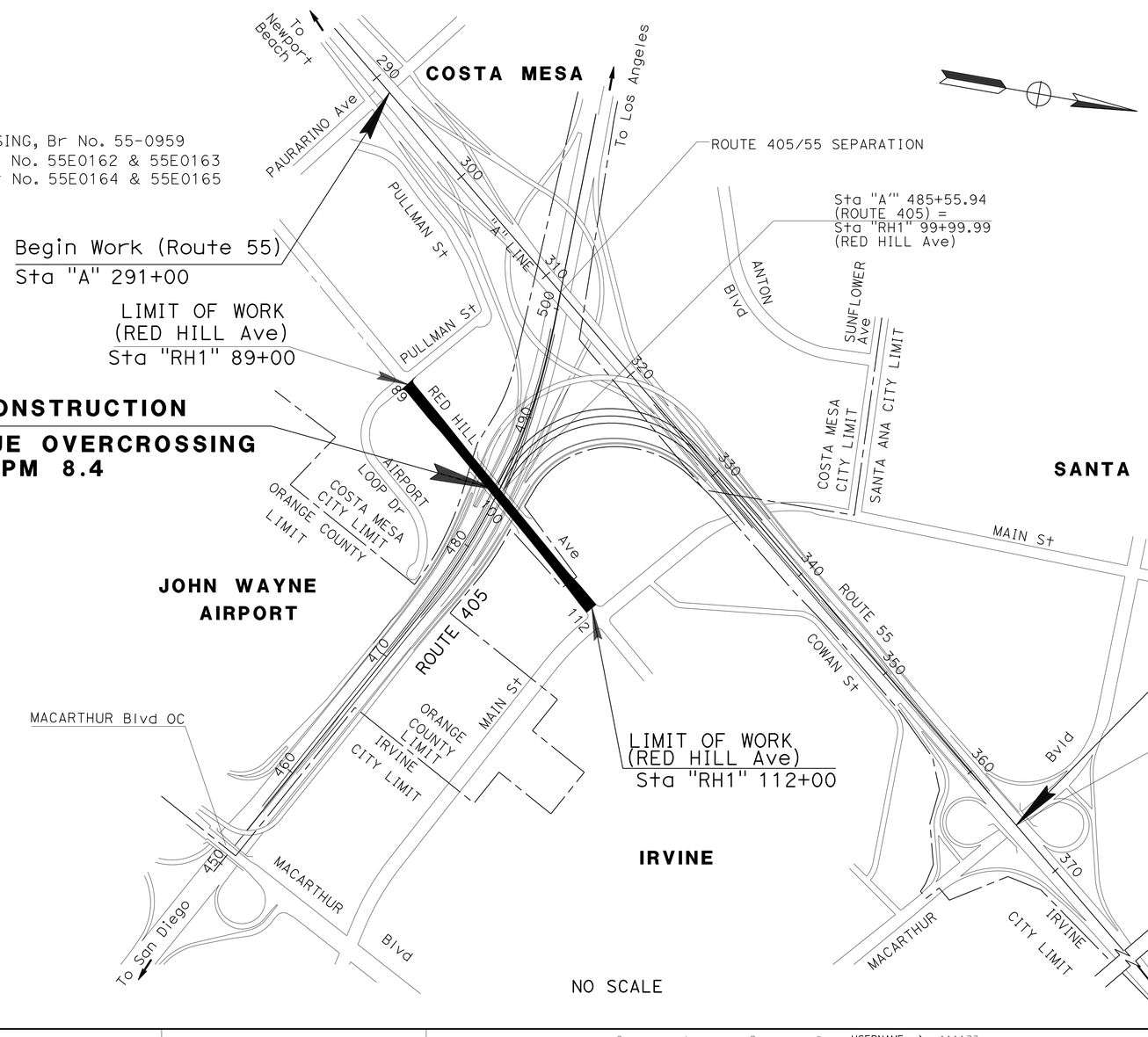

LOCATION MAP

THE CONTRACTOR SHALL POSSESS THE CLASS (OR CLASSES) OF LICENSE AS SPECIFIED IN THE "NOTICE TO BIDDERS."

PROJECT MANAGER: BOB BAZARGAN

DESIGN ENGINEER: DAVID LAM

PROJECT ENGINEER REGISTERED CIVIL ENGINEER — DATE: 4-22-15

April 27, 2015
PLANS APPROVAL DATE

REGISTERED PROFESSIONAL ENGINEER — DAVID H. LAM No. C63493 Exp. 09-30-16 CIVIL — STATE OF CALIFORNIA

THE STATE OF CALIFORNIA OR ITS OFFICERS OR AGENTS SHALL NOT BE RESPONSIBLE FOR THE ACCURACY OR COMPLETENESS OF SCANNED COPIES OF THIS PLAN SHEET.

CONTRACT No.	12-0N5404
PROJECT ID	1214000057

LAST REVISION 03-26-15 — DATE PLOTTED => 10-JUL-2015 TIME PLOTTED => 13:31

Dist	COUNTY	ROUTE	POST MILES TOTAL PROJECT	SHEET No.	TOTAL SHEETS
12	Ora	405	8.4	2	142

REGISTERED CIVIL ENGINEER 4-22-15 DATE

4-27-15
PLANS APPROVAL DATE

REGISTERED PROFESSIONAL ENGINEER DAVID H. LAM No. C63493 Exp. 09-30-16 CIVIL STATE OF CALIFORNIA

THE STATE OF CALIFORNIA OR ITS OFFICERS OR AGENTS SHALL NOT BE RESPONSIBLE FOR THE ACCURACY OR COMPLETENESS OF SCANNED COPIES OF THIS PLAN SHEET.

NOTES:

1. DIMENSIONS OF THE PAVEMENT STRUCTURAL SECTIONS ARE SUBJECT TO TOLERANCES SPECIFIED IN THE STANDARD SPECIFICATIONS.
2. SUPERELEVATIONS ARE AS SHOWN OR AS DIRECTED BY THE ENGINEER.
3. ALL DIMENSIONS ARE TO THE FLOWLINE OF CURB UNLESS OTHERWISE NOTED ON THE PLANS.
4. FOR LOCATION OF RETAINING WALLS Nos. 1, 2, 3, AND 4 SEE STRUCTURE PLANS.
5. FOR LOCATIONS OF MIDWEST GUARDRAIL SYSTEM AND VEGETATION CONTROL SEE LAYOUT AND QUANTITIES SHEETS.
6. FOR LIMIT OF COLD PLANE SEE LAYOUT PLANS.
7. FOR LIMIT OF ROADWAY OVER-EXCAVATION SEE CONSTRUCTION DETAILS.
8. FOR LIMIT OF SOIL NAIL ASSEMBLY REMOVAL SEE CONSTRUCTION DETAIL.

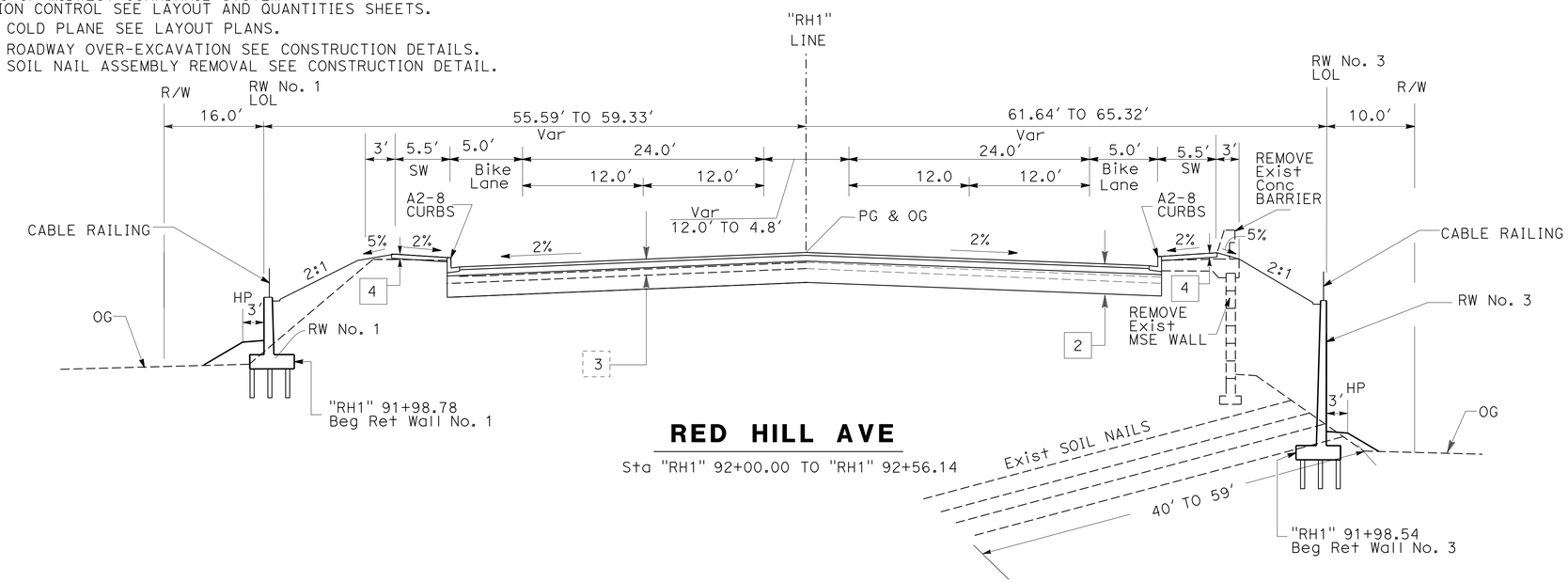

RED HILL AVE

Sta "RH1" 92+00.00 TO "RH1" 92+56.14

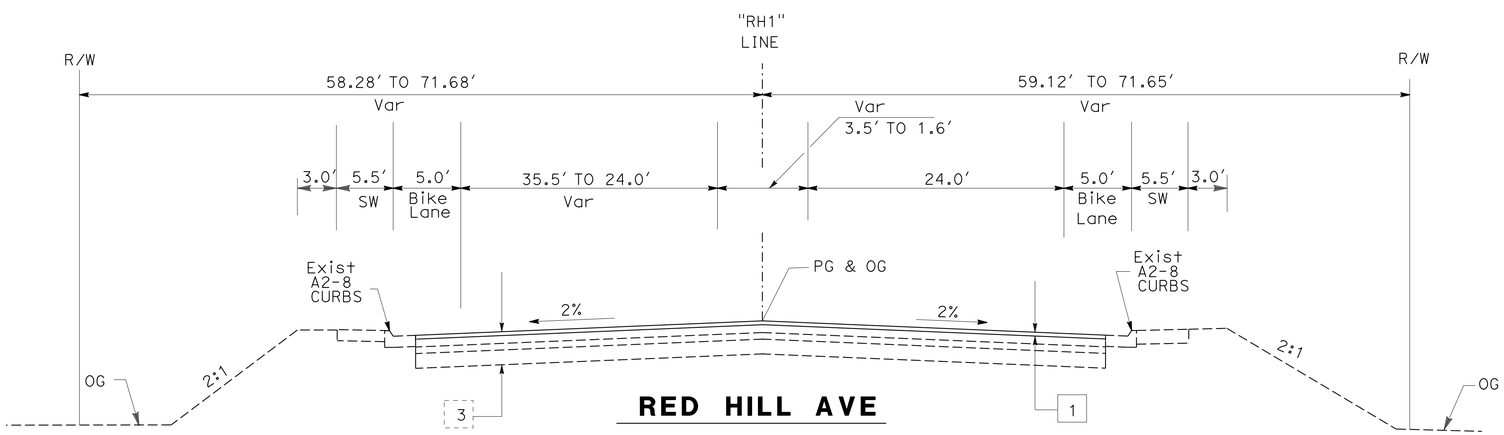

RED HILL AVE

Sta "RH1" 89+57.37 TO "RH1" 92+00.00

TYPICAL PAVEMENT STRUCTURE SECTIONS:

1 — COLD PLANE 0.20' AC PAVEMENT
0.20' RHMA (GAP GRADED)

2 — 0.20' RHMA (GAP GRADED)
0.95' HMA (TYPE A)
2.85' CLASS 2 AB

4 — 0.34' PCC

EXIST:

3 — 0.58' AC (Type B)
0.75' CL 2 AB
1.17' CL AS

TYPICAL CROSS SECTIONS

NO SCALE

X-1

REVISED BY | DATE REVISED
DAVID LAM | MATTHEW Q. CUGINI
CALCULATED-DESIGNED BY | CHECKED BY
FUNCTIONAL SUPERVISOR | MATTHEW Q. CUGINI
STATE OF CALIFORNIA - DEPARTMENT OF TRANSPORTATION
Caltrans
DESIGN

LAST REVISION 07-29-14 | DATE PLOTTED => 10-JUL-2015 | TIME PLOTTED => 13:31

Dist	COUNTY	ROUTE	POST MILES TOTAL PROJECT	SHEET No.	TOTAL SHEETS
12	Ora	405	8.4	3	142

REGISTERED CIVIL ENGINEER 4-22-15 DATE

4-27-15
PLANS APPROVAL DATE

REGISTERED PROFESSIONAL ENGINEER
DAVID H. LAM
No. C63493
Exp. 09-30-16
CIVIL
STATE OF CALIFORNIA

THE STATE OF CALIFORNIA OR ITS OFFICERS OR AGENTS SHALL NOT BE RESPONSIBLE FOR THE ACCURACY OR COMPLETENESS OF SCANNED COPIES OF THIS PLAN SHEET.

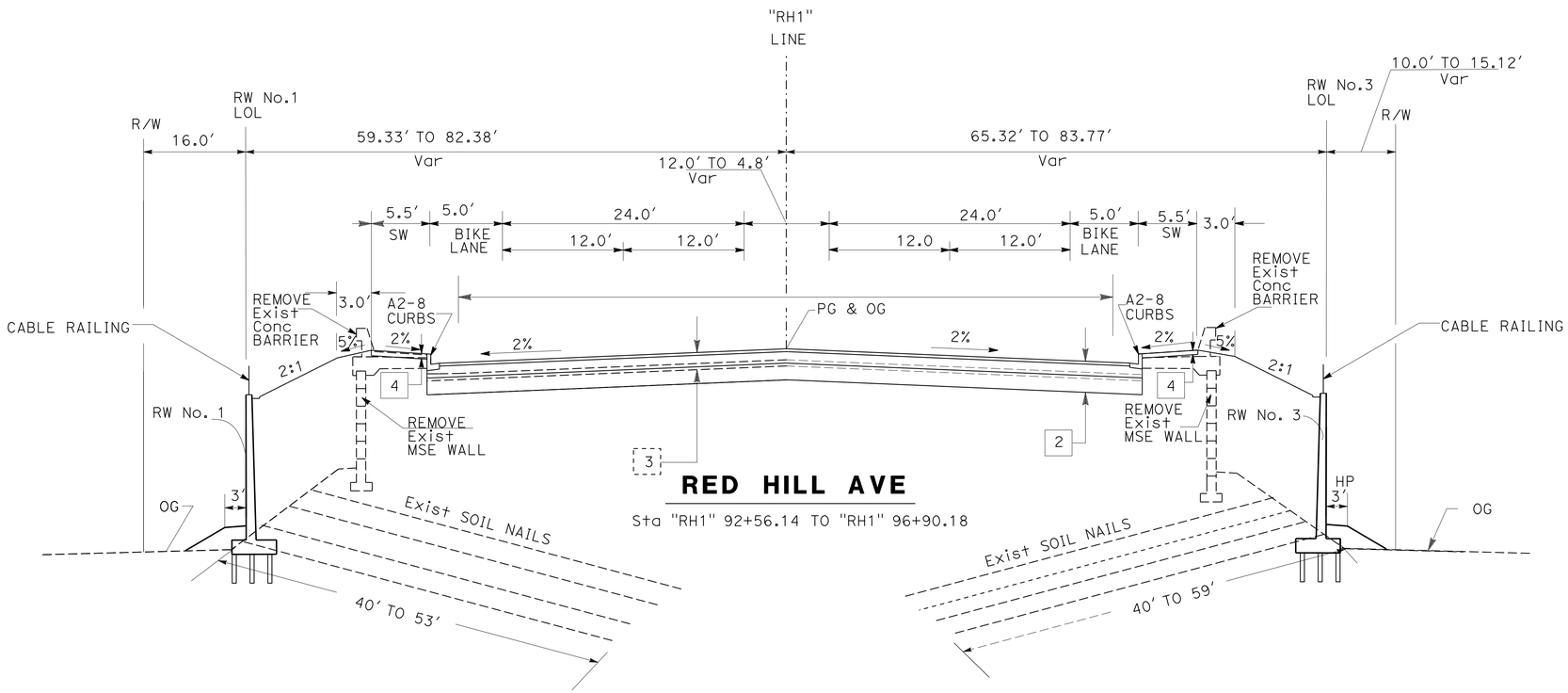

RED HILL AVE

Sta "RH1" 92+56.14 TO "RH1" 96+90.18

TYPICAL CROSS SECTIONS

NO SCALE

X-2

STATE OF CALIFORNIA - DEPARTMENT OF TRANSPORTATION
Caltrans
DESIGN

FUNCTIONAL SUPERVISOR: MATTHEW Q. CUGINI
CALCULATED-DESIGNED BY: DAVID LAM
CHECKED BY: MATTHEW Q. CUGINI
REVISED BY
DATE REVISED

LAST REVISION 07-29-14
DATE PLOTTED => 10-JUL-2015
TIME PLOTTED => 13:31

Dist	COUNTY	ROUTE	POST MILES TOTAL PROJECT	SHEET No.	TOTAL SHEETS
12	Ora	405	8.4	4	142

REGISTERED CIVIL ENGINEER 4-22-15 DATE

4-27-15
PLANS APPROVAL DATE

REGISTERED PROFESSIONAL ENGINEER DAVID H. LAM No. C63493 Exp. 09-30-16 CIVIL STATE OF CALIFORNIA

THE STATE OF CALIFORNIA OR ITS OFFICERS OR AGENTS SHALL NOT BE RESPONSIBLE FOR THE ACCURACY OR COMPLETENESS OF SCANNED COPIES OF THIS PLAN SHEET.

NOTES:

1. FOR ACCURATE RIGHT OF WAY DATA, CONTACT RIGHT OF WAY ENGINEERING AT THE DISTRICT OFFICE.
2. NO FILL OR STOCKPILE OF MATERIAL SHALL BE PLACED WITH IN THIS SOUTHERN CALIFORNIA EDISION (SCE) EASEMENT. SEE RIGHT OF WAY MAP FOR DETAILS.
3. ALL MATURE TREES WITHIN TCE SHALL BE PROTECTED IN PLACE UNLESS OTHERWISE DIRECTED BY THE ENGINEER.

LEGEND:

(#) : LAYOUT NOTE

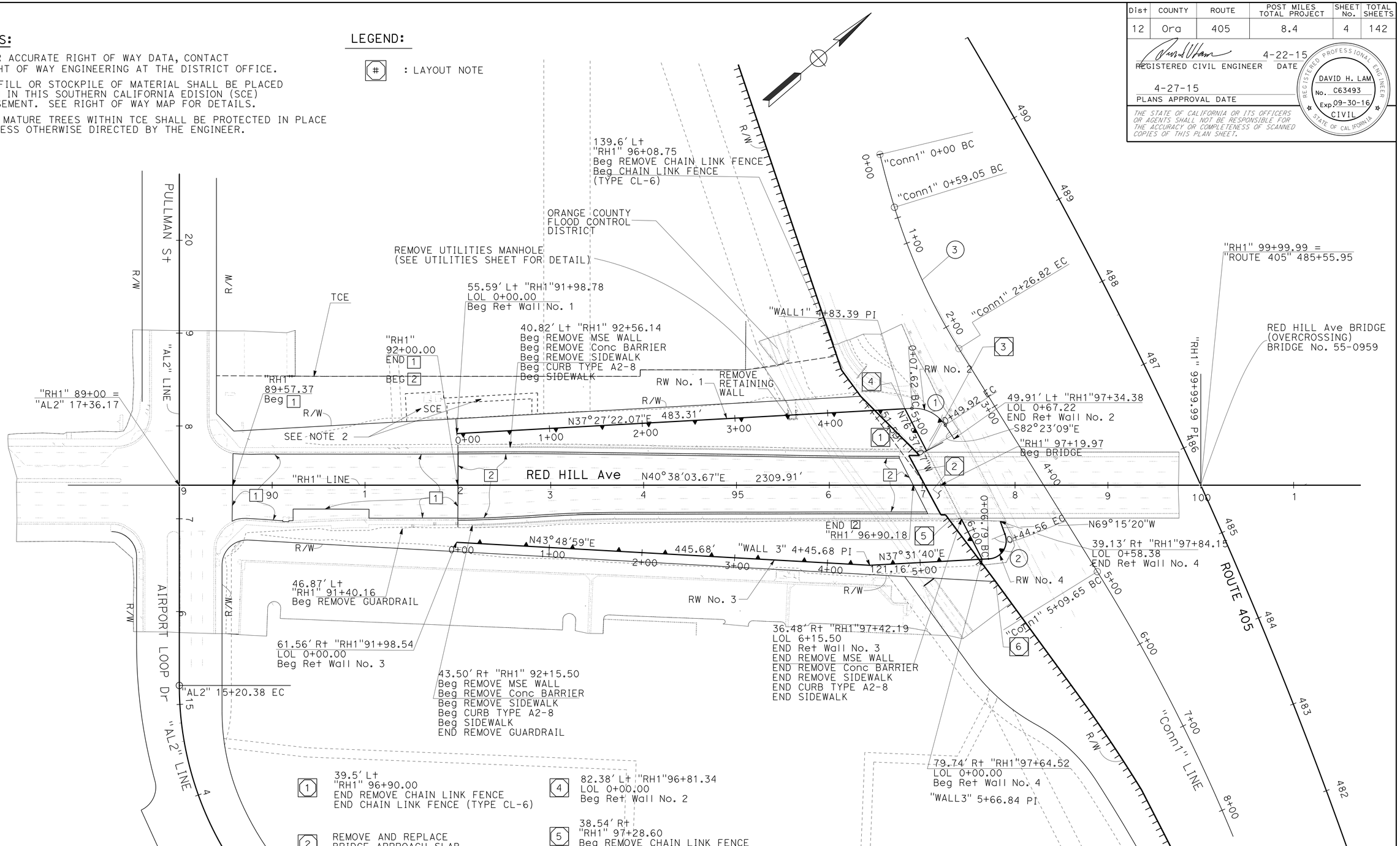

(1) 39.5' Lt
"RH1" 96+90.00
END REMOVE CHAIN LINK FENCE
END CHAIN LINK FENCE (TYPE CL-6)

(2) REMOVE AND REPLACE
BRIDGE APPROACH SLAB
SEE STRUCTURE PLANS

(3) 36.52' Lt "RH1"97+04.96
LOL 5+34.90
END Ret Wall No. 1
END REMOVE MSE WALL
END REMOVE Conc BARRIER
END REMOVE SIDEWALK
END CURB TYPE A2-8
END SIDEWALK

(4) 82.38' Lt "RH1"96+81.34
LOL 0+00.00
Beg Ret Wall No. 2

(5) 38.54' Rt
"RH1" 97+28.60
Beg REMOVE CHAIN LINK FENCE
Beg CHAIN LINK FENCE (TYPE CL-6)

(6) 103.85' Rt
"RH1" 97+79.00
END REMOVE CHAIN LINK FENCE
END CHAIN LINK FENCE (TYPE CL-6)

CURVE DATA

No. (#)	R	Δ	T	L
1	40'	60°09'28"	23.17'	42.00'
2	19'	111°10'33"	28.41'	37.76'
3	656'	14°38'57"	84.34'	167.77'

LAYOUT

SCALE: 1" = 50'

L-1

STATE OF CALIFORNIA - DEPARTMENT OF TRANSPORTATION
Caltrans DESIGN

FUNCTIONAL SUPERVISOR: MATTHEW Q. CUGINI
CALCULATED-DESIGNED BY: DAVID LAM
CHECKED BY: MATTHEW Q. CUGINI
REVISED BY
DATE REVISED

LAST REVISION 01-09-15
DATE PLOTTED => 10-JUL-2015
TIME PLOTTED => 13:31

Dist	COUNTY	ROUTE	POST MILES TOTAL PROJECT	SHEET No.	TOTAL SHEETS
12	Ora	405	8.4	5	142

REGISTERED CIVIL ENGINEER DATE 4-22-15

4-27-15
PLANS APPROVAL DATE

REGISTERED PROFESSIONAL ENGINEER
DAVID H. LAM
No. C63493
Exp.09-30-16
CIVIL
STATE OF CALIFORNIA

THE STATE OF CALIFORNIA OR ITS OFFICERS OR AGENTS SHALL NOT BE RESPONSIBLE FOR THE ACCURACY OR COMPLETENESS OF SCANNED COPIES OF THIS PLAN SHEET.

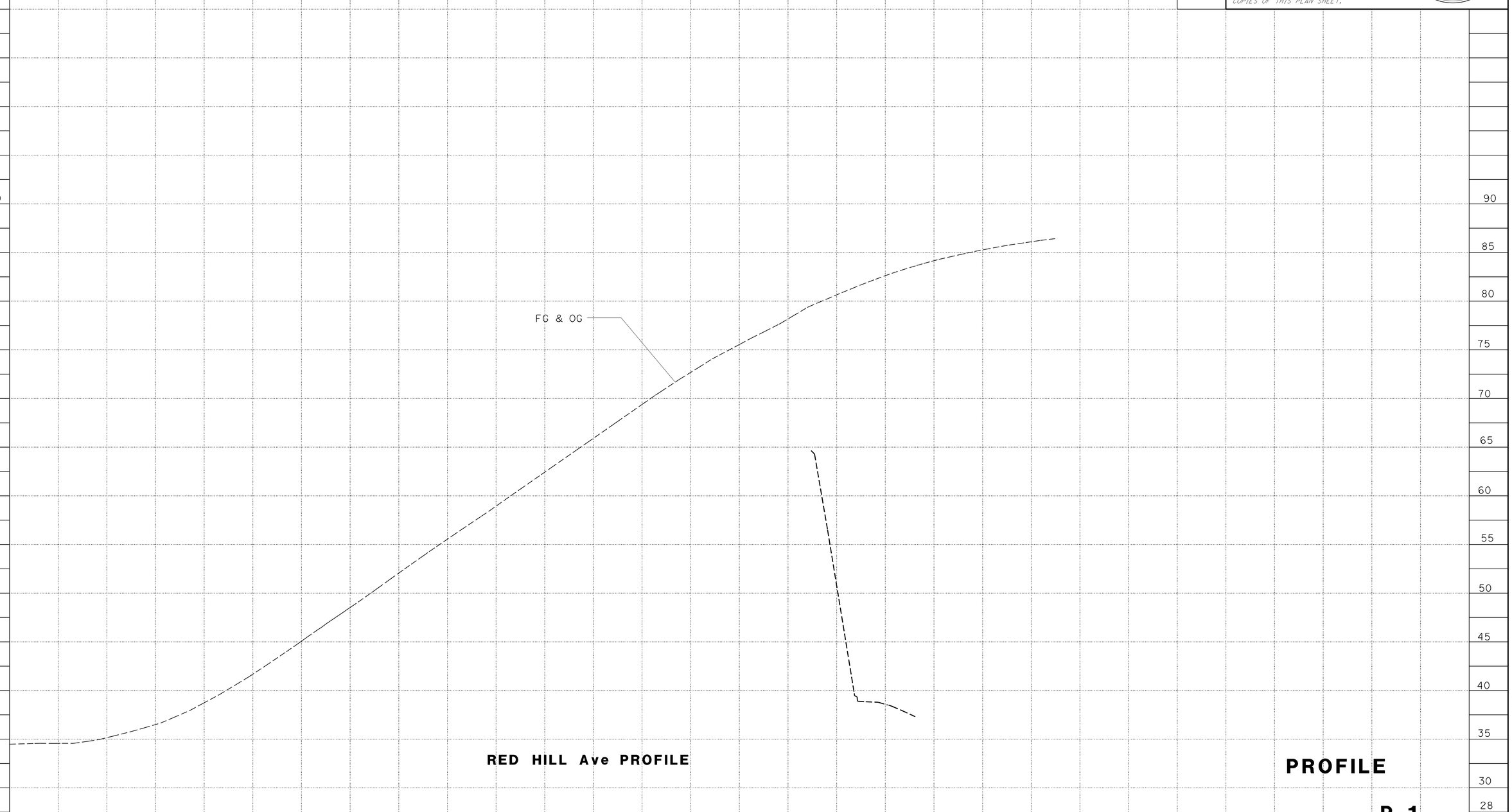

REVISED BY
DATE REVISED

DAVID LAM
MATTHEW Q. CUGINI

CALCULATED-DESIGNED BY
CHECKED BY

FUNCTIONAL SUPERVISOR
MATTHEW Q. CUGINI

STATE OF CALIFORNIA - DEPARTMENT OF TRANSPORTATION
DESIGN

LAST REVISION 01-09-15
DATE PLOTTED => 10-JUL-2015
TIME PLOTTED => 13:31

Dist	COUNTY	ROUTE	POST MILES TOTAL PROJECT	SHEET No.	TOTAL SHEETS
12	Ora	405	8.4	6	142

REGISTERED CIVIL ENGINEER 4-22-15 DATE

4-27-15
PLANS APPROVAL DATE

REGISTERED PROFESSIONAL ENGINEER DAVID H. LAM No. C63493 Exp. 09-30-16 CIVIL STATE OF CALIFORNIA

THE STATE OF CALIFORNIA OR ITS OFFICERS OR AGENTS SHALL NOT BE RESPONSIBLE FOR THE ACCURACY OR COMPLETENESS OF SCANNED COPIES OF THIS PLAN SHEET.

NOTES:

1. FOR ACCURATE RIGHT OF WAY DATA, CONTACT RIGHT OF WAY ENGINEERING AT THE DISTRICT OFFICE.
2. FOR SECTION A-A SEE C-2 SHEET

LEGEND:

: OVER-EXCAVATION LIMITS

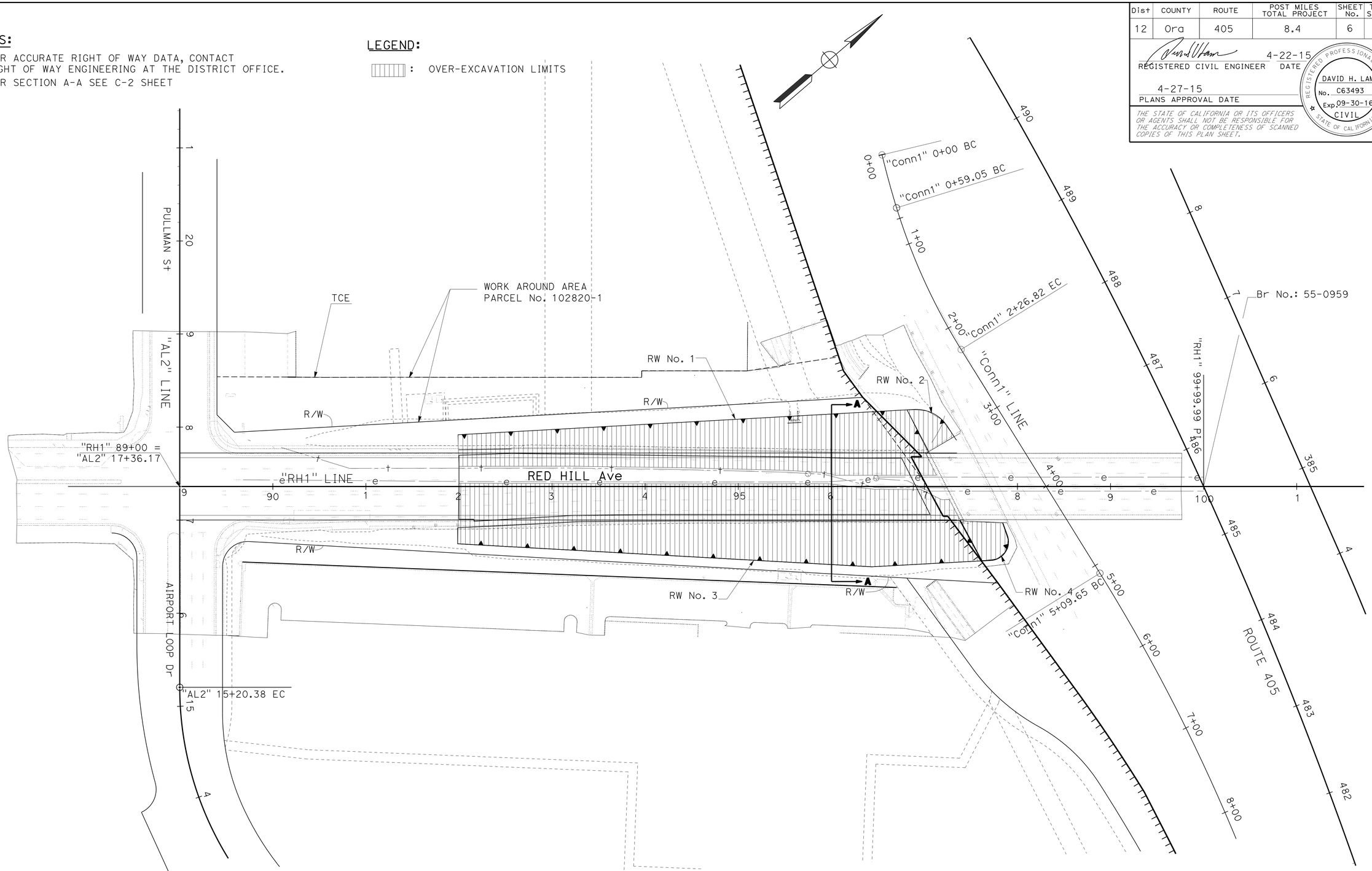

CONSTRUCTION DETAILS

(OVER-EXCAVATION LIMITS)

SCALE: 1" = 50'

C-1

STATE OF CALIFORNIA - DEPARTMENT OF TRANSPORTATION
Caltrans
DESIGN

FUNCTIONAL SUPERVISOR: MATTHEW Q. CUGINI

CALCULATED-DESIGNED BY: DAVID LAM
CHECKED BY: MATTHEW Q. CUGINI

REVISED BY
DATE REVISED

LAST REVISION 04-02-15 | DATE PLOTTED => 10-JUL-2015 | TIME PLOTTED => 13:31

Dist	COUNTY	ROUTE	POST MILES TOTAL PROJECT	SHEET No.	TOTAL SHEETS
12	Ora	405	8.4	7	142

REGISTERED CIVIL ENGINEER 4-22-15 DATE

4-27-15
PLANS APPROVAL DATE

REGISTERED PROFESSIONAL ENGINEER
DAVID H. LAM
No. C63493
Exp 09-30-16
CIVIL
STATE OF CALIFORNIA

THE STATE OF CALIFORNIA OR ITS OFFICERS OR AGENTS SHALL NOT BE RESPONSIBLE FOR THE ACCURACY OR COMPLETENESS OF SCANNED COPIES OF THIS PLAN SHEET.

LEGEND:

:OVER-EXCAVATION UNSUITABLE MATERIAL AND FILL IMPORTED BORROW

:FILL WITH IMPORTED BORROW

:STRUCTURE BACKFILL

:EXISTING MSE WALL STRUCTURE BACKFILL

TYPICAL CROSS SECTION FOR ROADWAY OVER-EXCAVATION & IMPORTED BORROW

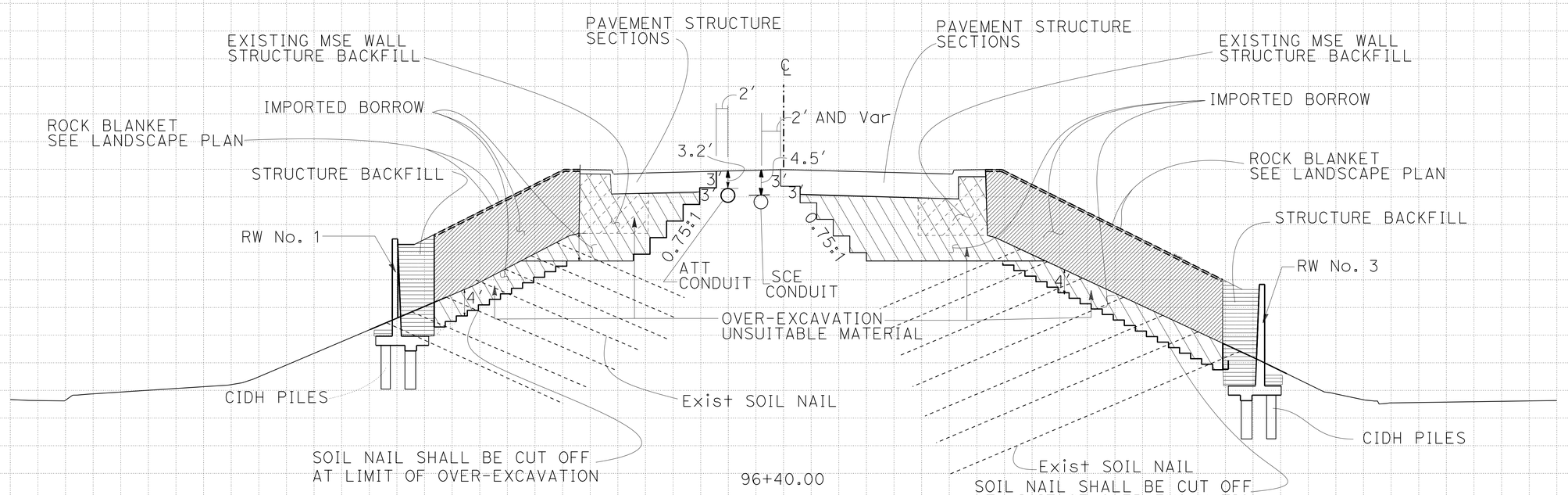

SECTION A-A

CONSTRUCTION DETAILS

SCALE: NONE

C-2

STATE OF CALIFORNIA - DEPARTMENT OF TRANSPORTATION
Caltrans
DESIGN

FUNCTIONAL SUPERVISOR: MATTHEW Q. CUGINI
CALCULATED-DESIGNED BY: DAVID LAM
CHECKED BY: MATTHEW Q. CUGINI
REVISED BY
DATE REVISED

LAST REVISION 08-25-14
DATE PLOTTED => 10-JUL-2015
TIME PLOTTED => 13:31

Dist	COUNTY	ROUTE	POST MILES TOTAL PROJECT	SHEET No.	TOTAL SHEETS
12	Ora	405	8.4	8	142

REGISTERED CIVIL ENGINEER 4-22-15 DATE

4-27-15
PLANS APPROVAL DATE

REGISTERED PROFESSIONAL ENGINEER
DAVID H. LAM
No. C63493
Exp. 09-30-16
CIVIL
STATE OF CALIFORNIA

THE STATE OF CALIFORNIA OR ITS OFFICERS OR AGENTS SHALL NOT BE RESPONSIBLE FOR THE ACCURACY OR COMPLETENESS OF SCANNED COPIES OF THIS PLAN SHEET.

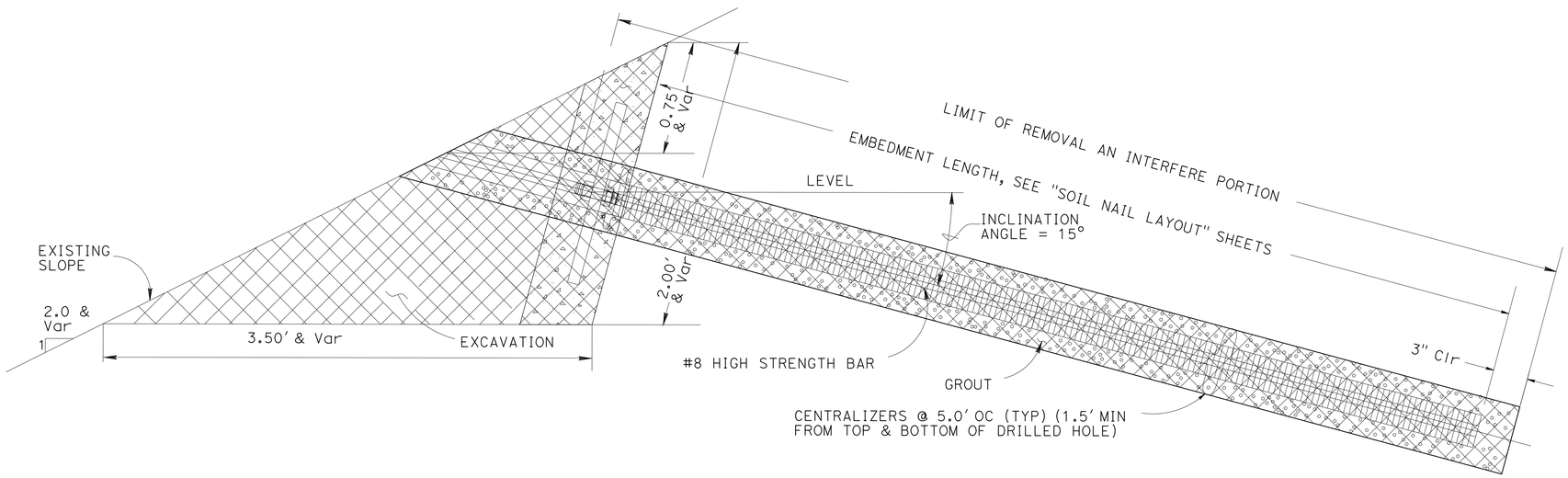

SOIL NAIL ASSEMBLY REMOVAL

CONSTRUCTION DETAILS

SCALE: NONE

C-3

STATE OF CALIFORNIA - DEPARTMENT OF TRANSPORTATION
Caltrans DESIGN

FUNCTIONAL SUPERVISOR: MATTHEW Q. CUGINI
CALCULATED-DESIGNED BY: DAVID LAM
CHECKED BY: MATTHEW Q. CUGINI
REVISED BY
DATE REVISED

LAST REVISION 07-29-14
DATE PLOTTED => 10-JUL-2015
TIME PLOTTED => 13:31

Dist	COUNTY	ROUTE	POST MILES TOTAL PROJECT	SHEET No.	TOTAL SHEETS
12	Ora	405	8.4	9	142

REGISTERED CIVIL ENGINEER 4-22-15 DATE

4-27-15
PLANS APPROVAL DATE

REGISTERED PROFESSIONAL ENGINEER
DAVID H. LAM
No. C63493
Exp. 09-30-16
CIVIL
STATE OF CALIFORNIA

THE STATE OF CALIFORNIA OR ITS OFFICERS OR AGENTS SHALL NOT BE RESPONSIBLE FOR THE ACCURACY OR COMPLETENESS OF SCANNED COPIES OF THIS PLAN SHEET.

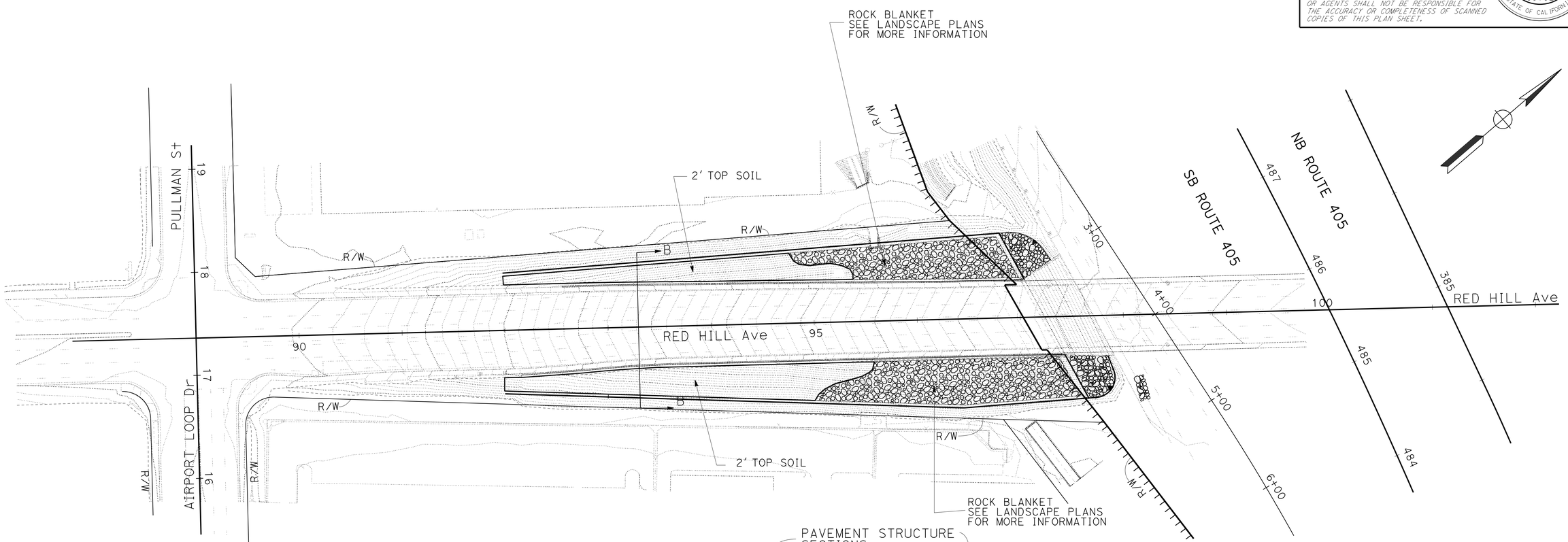

LEGEND:

:OVER-EXCAVATION UNSUITABLE MATERIAL AND FILL WITH COMPACT EMBANKMENT

:IMPORTED BORROW

:STRUCTURE BACKFILL

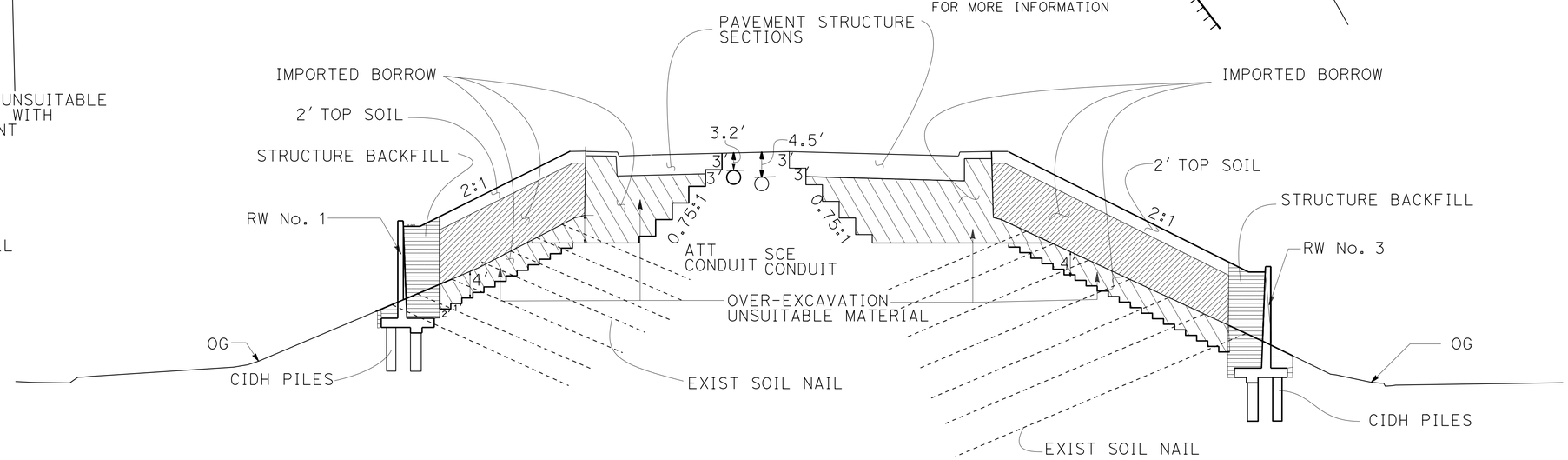

SECTION B-B

CONSTRUCTION DETAILS

NO SCALE

C-4

REVISED BY	DATE REVISED
DAVID LAM	MATTHEW Q. CUGINI

CALCULATED-DESIGNED BY | CHECKED BY

FUNCTIONAL SUPERVISOR: MATTHEW Q. CUGINI

STATE OF CALIFORNIA - DEPARTMENT OF TRANSPORTATION

Caltrans® DESIGN

LAST REVISION 04-02-15 | DATE PLOTTED => 10-JUL-2015 | TIME PLOTTED => 13:31

Dist	COUNTY	ROUTE	POST MILES TOTAL PROJECT	SHEET No.	TOTAL SHEETS
12	Ora	405	8.4	10	142

REGISTERED CIVIL ENGINEER 4-22-15 DATE

4-27-15
PLANS APPROVAL DATE

REGISTERED PROFESSIONAL ENGINEER DAVID H. LAM No. C63493 Exp. 09-30-16 CIVIL STATE OF CALIFORNIA

THE STATE OF CALIFORNIA OR ITS OFFICERS OR AGENTS SHALL NOT BE RESPONSIBLE FOR THE ACCURACY OR COMPLETENESS OF SCANNED COPIES OF THIS PLAN SHEET.

NOTE:

1. FOR ACCURATE RIGHT OF WAY DATA, CONTACT RIGHT OF WAY ENGINEERING AT THE DISTRICT OFFICE.
2. WPC PLANS ARE INTENDED TO BE USED AS A GUIDELINE ONLY. CONTRACTOR SHALL PREPARE SWPPP PLANS DEVELOPED BY A QSD TO COMPLY WITH THE WATER POLLUTION CONTROL REQUIREMENTS.

LEGEND:

- TEMPORARY GRAVEL BAG BERM
- TEMPORARY HYDRAULIC MULCH (BOND FIBER MATRIX)
- TEMPORARY SILT FENCE

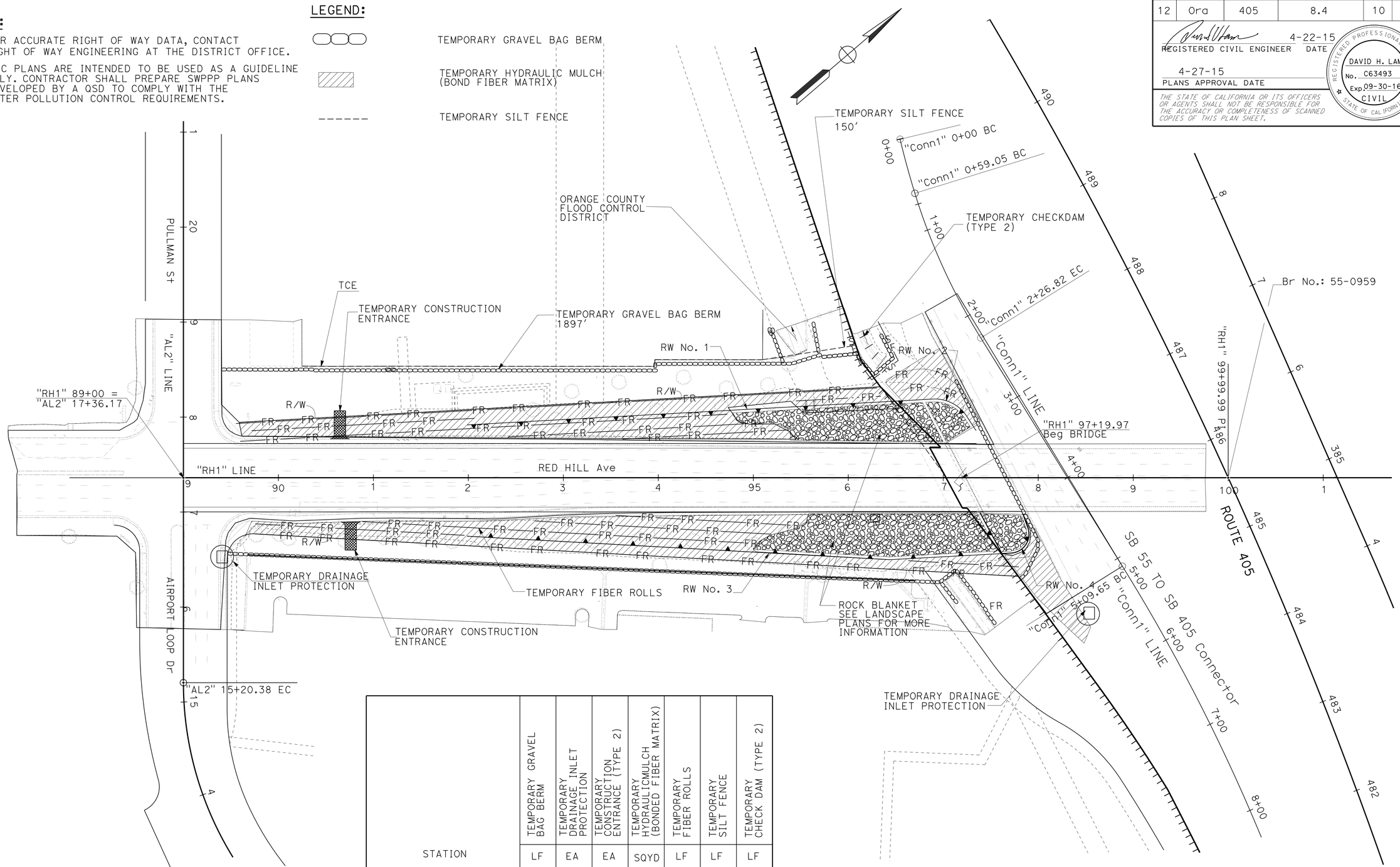

STATION	TEMPORARY GRAVEL BAG BERM	TEMPORARY DRAINAGE INLET PROTECTION	TEMPORARY CONSTRUCTION ENTRANCE (TYPE 2)	TEMPORARY HYDRAULICMULCH (BONDED FIBER MATRIX)	TEMPORARY FIBER ROLLS	TEMPORARY SILT FENCE	TEMPORARY CHECK DAM (TYPE 2)
	LF	EA	EA	SQYD	LF	LF	LF
"RH1" 89+00 TO "RH1"98+00	1897	2	2	5227	2202	150	60
TOTAL	1897	2	2	5227	2202	150	60

APPROVED FOR TEMPORARY WATER POLLUTION CONTROL AND EROSION CONTROL WORK ONLY

TEMPORARY WATER POLLUTION AND EROSION CONTROL PLAN

SCALE: 1" = 50'

WPC-1

STATE OF CALIFORNIA - DEPARTMENT OF TRANSPORTATION
Caltrans® DESIGN

FUNCTIONAL SUPERVISOR: MATTHEW Q. CUGINI
CALCULATED-DESIGNED BY: DAVID LAM
CHECKED BY: MATTHEW Q. CUGINI
REVISED BY / DATE REVISED

LAST REVISION 01-29-15 | DATE PLOTTED => 10-JUL-2015 | TIME PLOTTED => 13:31

Dist	COUNTY	ROUTE	POST MILES TOTAL PROJECT	SHEET No.	TOTAL SHEETS
12	Ora	405	8.4	11	142

REGISTERED CIVIL ENGINEER 4-22-15 DATE

4-27-15
PLANS APPROVAL DATE

REGISTERED PROFESSIONAL ENGINEER
DAVID H. LAM
No. C63493
Exp. 09-30-16
CIVIL
STATE OF CALIFORNIA

THE STATE OF CALIFORNIA OR ITS OFFICERS OR AGENTS SHALL NOT BE RESPONSIBLE FOR THE ACCURACY OR COMPLETENESS OF SCANNED COPIES OF THIS PLAN SHEET.

NOTE:

FOR ACCURATE RIGHT OF WAY DATA, CONTACT RIGHT OF WAY ENGINEERING AT THE DISTRICT OFFICE.

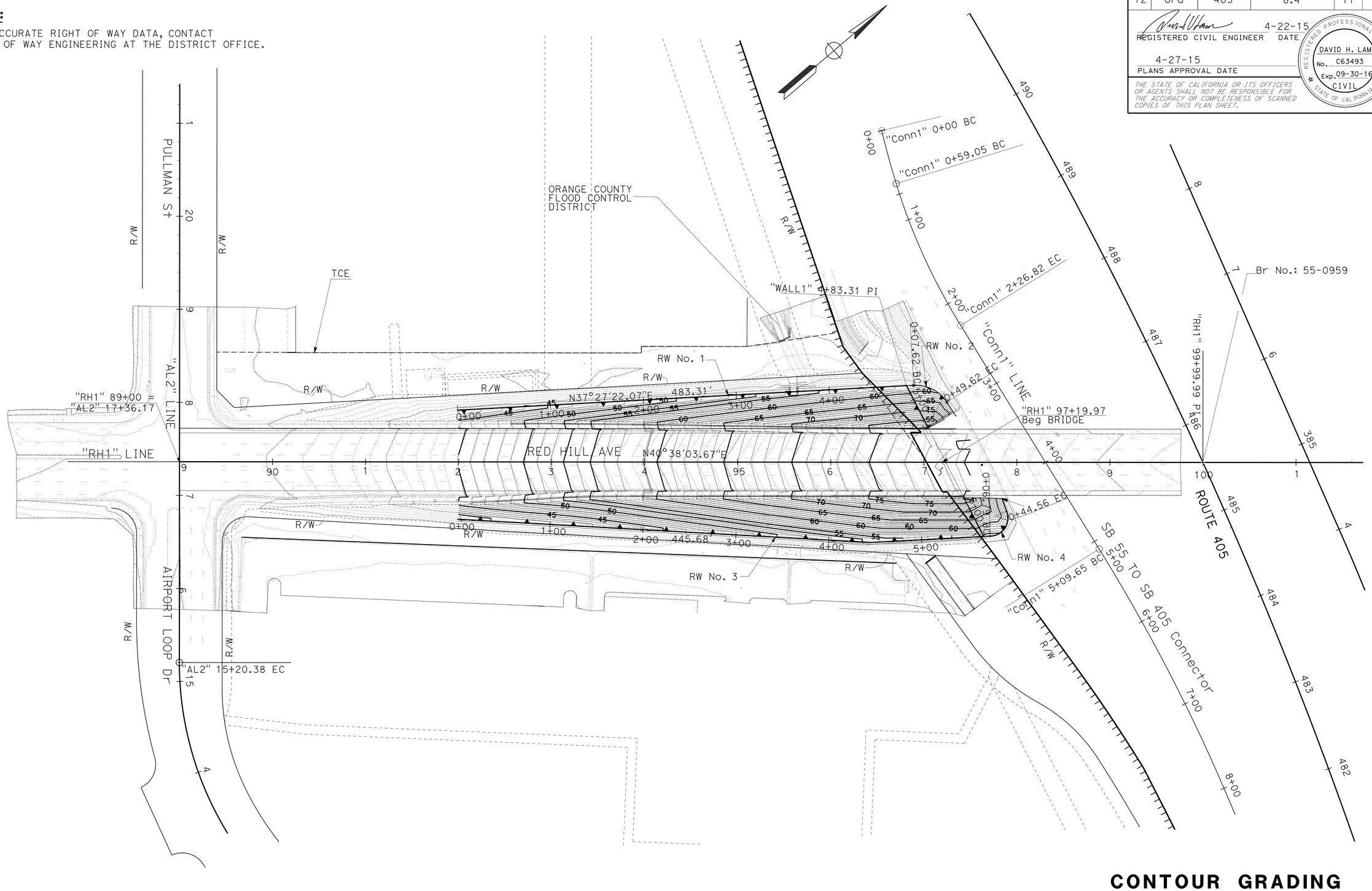

CONTOUR GRADING

SCALE: 1" = 50'

G-1

APPROVED FOR CONTOUR GRADING WORK ONLY

STATE OF CALIFORNIA - DEPARTMENT OF TRANSPORTATION
Caltrans
DESIGN

FUNCTIONAL SUPERVISOR: MATTHEW Q. CUGINI
CALCULATED-DESIGNED BY: DAVID LAM
CHECKED BY: MATTHEW Q. CUGINI
REVISED BY
DATE REVISED

LAST REVISION 07-29-14
DATE PLOTTED => 10-JUL-2015
TIME PLOTTED => 13:31

Dist	COUNTY	ROUTE	POST MILES TOTAL PROJECT	SHEET No.	TOTAL SHEETS
12	Ora	405	8.4	12	142

REGISTERED CIVIL ENGINEER 4-22-15 DATE

4-27-15
PLANS APPROVAL DATE

REGISTERED PROFESSIONAL ENGINEER HITESH PATEL No. C55984 Exp. 12-31-16 CIVIL STATE OF CALIFORNIA

THE STATE OF CALIFORNIA OR ITS OFFICERS OR AGENTS SHALL NOT BE RESPONSIBLE FOR THE ACCURACY OR COMPLETENESS OF SCANNED COPIES OF THIS PLAN SHEET.

NOTE:

1. FOR ACCURATE RIGHT OF WAY DATA, CONTACT RIGHT OF WAY ENGINEERING AT THE DISTRICT OFFICE.
2. ALL EXISTING DRAINAGE SYSTEMS ARE PROTECT IN PLACE UNLESS OTHERWISE SHOWN IN PLAN.

LEGEND:

(X) DRAINAGE SYSTEM No.

(X) DRAINAGE UNIT No.

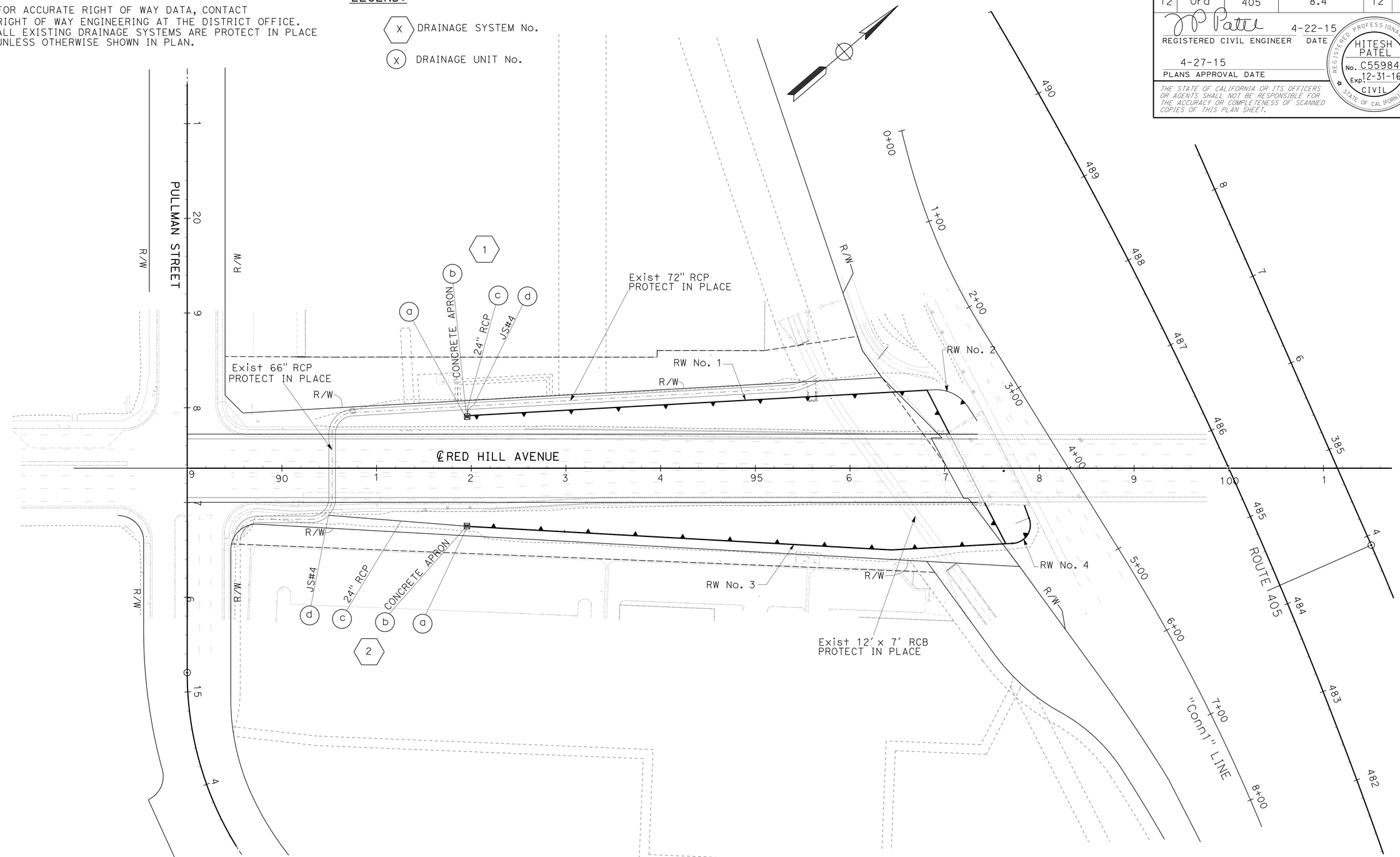

DRAINAGE PLAN

SCALE: 1" = 50'

D-1

APPROVED FOR DRAINAGE WORK ONLY

STATE OF CALIFORNIA - DEPARTMENT OF TRANSPORTATION
Caltrans
HYDRAULICS

FUNCTIONAL SUPERVISOR: KATHY LOWE
CALCULATED-DESIGNED BY: HITESH PATEL
CHECKED BY: TAN NGUYEN
REVISED BY
DATE REVISED

LAST REVISION 01-08-15
DATE PLOTTED => 10-JUL-2015
TIME PLOTTED => 13:31

Dist	COUNTY	ROUTE	POST MILES TOTAL PROJECT	SHEET No.	TOTAL SHEETS
12	Ora	405	8.4	13	142

REGISTERED CIVIL ENGINEER 4-22-15 DATE

4-27-15
PLANS APPROVAL DATE

REGISTERED PROFESSIONAL ENGINEER HITESH PATEL No. C55984 Exp. 12-31-16 CIVIL STATE OF CALIFORNIA

THE STATE OF CALIFORNIA OR ITS OFFICERS OR AGENTS SHALL NOT BE RESPONSIBLE FOR THE ACCURACY OR COMPLETENESS OF SCANNED COPIES OF THIS PLAN SHEET.

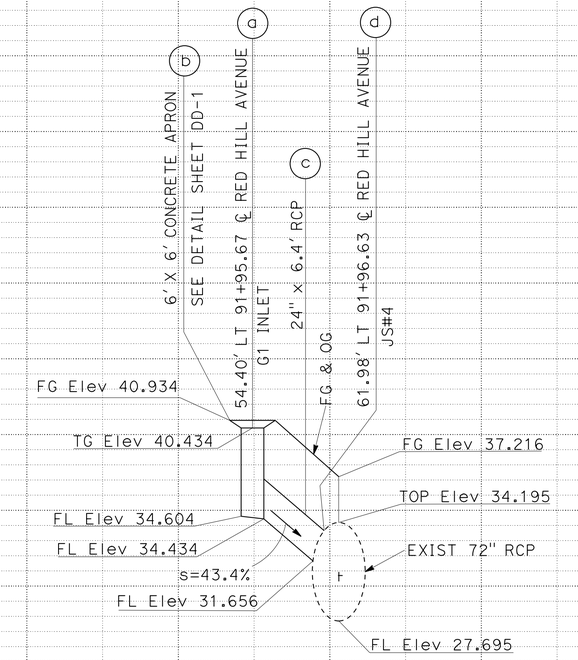

DRAINAGE SYSTEM NO. 1

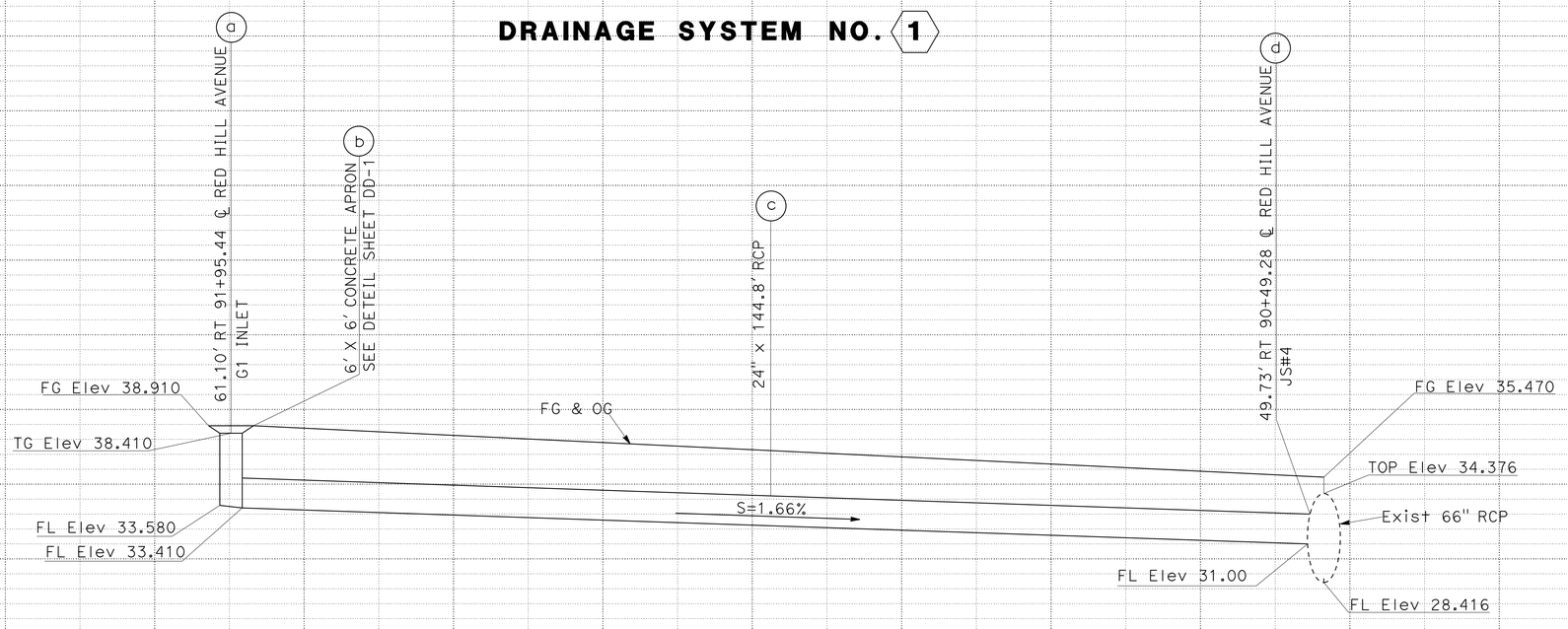

DRAINAGE SYSTEM NO. 2

APPROVED FOR DRAINAGE WORK ONLY

DRAINAGE PROFILE

SCALE : Horiz 1" = 20'
Vert 1" = 5'

DP-1

STATION		TOTAL
CY	Exc	
	Emb	

STATE OF CALIFORNIA - DEPARTMENT OF TRANSPORTATION
Caltrans
HYDRAULICS

FUNCTIONAL SUPERVISOR: KATHY LOWE
CALCULATED-DESIGNED BY: HITESH PATEL
CHECKED BY: TAN NGUYEN
REVISED BY
DATE REVISED

LAST REVISION 01-08-15
DATE PLOTTED => 10-JUL-2015
TIME PLOTTED => 13:31

Dist	COUNTY	ROUTE	POST MILES TOTAL PROJECT	SHEET No.	TOTAL SHEETS
12	Ora	405	8.4	14	142

REGISTERED CIVIL ENGINEER 4-22-15 DATE

4-27-15
PLANS APPROVAL DATE

REGISTERED PROFESSIONAL ENGINEER HITESH PATEL No. C55984 Exp. 12-31-16 CIVIL STATE OF CALIFORNIA

THE STATE OF CALIFORNIA OR ITS OFFICERS OR AGENTS SHALL NOT BE RESPONSIBLE FOR THE ACCURACY OR COMPLETENESS OF SCANNED COPIES OF THIS PLAN SHEET.

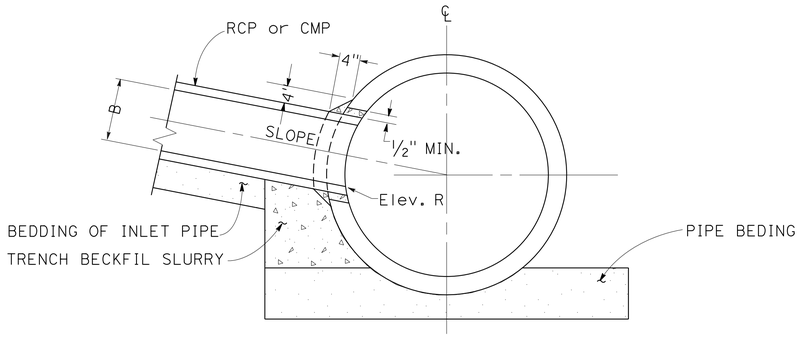

SECTION M-M
FOR SLOPE ≦ 1

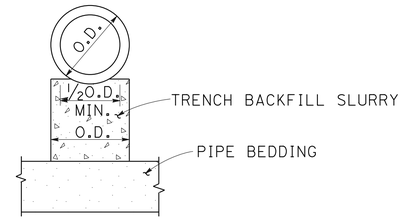

SECTION N-N

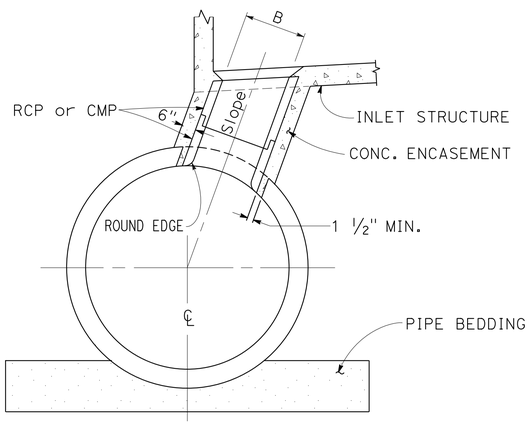

SECTION M-M
FOR SLOPE > 1

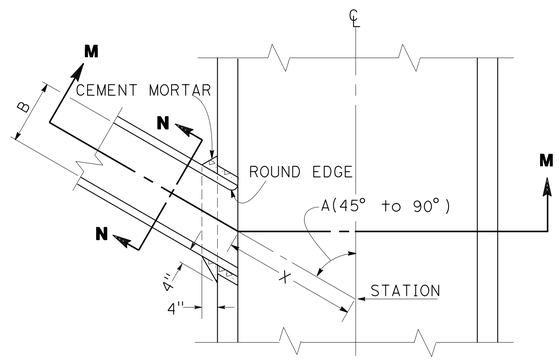

PLAN

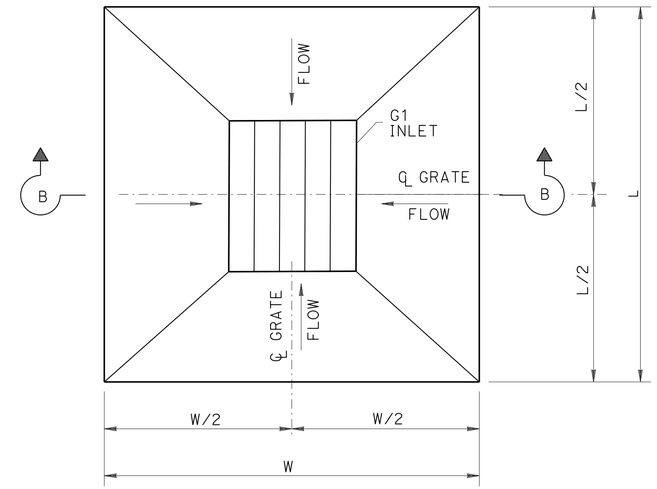

PLAN

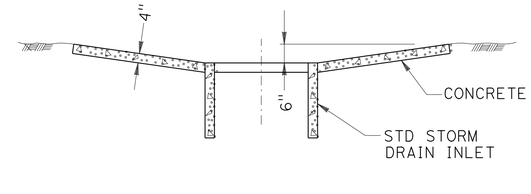

SECTION B-B

SYSTEM #	UNIT#	INLET TYPE	APRON	
			W (FT)	L (FT)
1	b	G1	6	6
2	b	G1	6	6

DEPRESSED APRON DETAIL

NOTES:

1. VALUES FOR SLOPE, ANGLE A, X, Elev. R ARE SHOWN IN THE TABLE.
2. ALL CORRUGATED METAL PIPE AND FITTING SHALL BE GALVANIZED.
3. CONCRETE ENCASEMENT SHALL BE MINOR CONCRETE (MINOR STRUCTURE).

JUNCTION STRUCTURE DATA

DRAINAGE SYSTEM No. ⬡	DRAINAGE UNIT ◯	TYPE OF J.S.	A (DEGREE)	X (FT)	ELEV. R (FT)
1	d	JS#4	77	3.1	31.656
2	d	JS#4	54	3.4	31.00

JUNCTION STRUCTURE No. 4 (JS#4)

DRAINAGE DETAILS

NO SCALE **DD-1**

APPROVED FOR DRAINAGE WORK ONLY

STATE OF CALIFORNIA - DEPARTMENT OF TRANSPORTATION
Caltrans® HYDRAULICS
FUNCTIONAL SUPERVISOR KATHY LOWE
CALCULATED-DESIGNED BY HITESH PATEL CHECKED BY TAN NGUYEN
REVISED BY DATE REVISED

LAST REVISION 01-08-15 DATE PLOTTED => 10-JUL-2015 TIME PLOTTED => 13:31

Dist	COUNTY	ROUTE	POST MILES TOTAL PROJECT	SHEET No.	TOTAL SHEETS
12	Ora	405	8.4	15	142

REGISTERED CIVIL ENGINEER 4-22-15 DATE

4-27-15
PLANS APPROVAL DATE

REGISTERED PROFESSIONAL ENGINEER HITESH PATEL No. C55984 Exp. 12-31-16 CIVIL STATE OF CALIFORNIA

THE STATE OF CALIFORNIA OR ITS OFFICERS OR AGENTS SHALL NOT BE RESPONSIBLE FOR THE ACCURACY OR COMPLETENESS OF SCANNED COPIES OF THIS PLAN SHEET.

NOTES:

1. (N) NOT A SEPERATE PAY ITEM, FOR INFORMATION ONLY

ABBREVIATIONS:

S = STANDARD JOINT TYPE
Bet = BETWEEN

DRAINAGE SYSTEM NUMBER	DRAINAGE UNIT	"H" OR "V"	MINOR CONCRETE (MINOR STRUCTURE)	MISCELLANEOUS IRON AND STEEL	FRAME & GRATE (24-12) (N)	24" REINFORCED CONCRETE PIPE	PIPE JOINT CLASSIFICATION (N)	MAXIMUM COVER	DESCRIPTION	STATION	DRAINAGE PLAN SHEET No.	DRAINAGE SYSTEM NUMBER	DRAINAGE UNIT
		FT	CY	LB	EA	LF		FT					
1	a	6.0	1.61	326	1				G1 INLET	54.40' LT 91+95.67 ℄ RED HILL AVENUE	D-1	1	a
	b		0.44						6' X 6' CONCRETE APRON	54.40' LT 91+95.67 ℄ RED HILL AVENUE	D-1		b
	c					6.4	S	4.5	24" RCP	Bet 54.40' LT 91+95.67 ℄ RED HILL AVENUE TO 61.98' LT 91+96.63 ℄ RED HILL AVENUE	D-1		c
	d		0.4						JS#4	61.98' LT 91+96.63 ℄ RED HILL AVENUE	D-1		d
2	a	5.0	1.39	326	1				G1 INLET	61.10' RT 91+95.44 ℄ RED HILL AVENUE	D-1	2	a
	b		0.44						6' X 6' CONCRETE APRON	61.10' RT 91+95.44 ℄ RED HILL AVENUE	D-1		b
	c					144.8	S	3.5	24" RCP	Bet 61.10' RT 91+95.44 ℄ RED HILL AVENUE TO 49.73' RT 90+49.28 ℄ RED HILL AVENUE	D-1		c
	d		0.4						JS#4	49.73' RT 90+49.28 ℄ RED HILL AVENUE	D-1		d
SHEET TOTAL			4.68	652	2	151.2							

DRAINAGE QUANTITIES

DQ-1

APPROVED FOR DRAINAGE WORK ONLY

STATE OF CALIFORNIA - DEPARTMENT OF TRANSPORTATION
Caltrans HYDRAULICS

FUNCTIONAL SUPERVISOR: KATHY LOWE
CALCULATED-DESIGNED BY: HITESH PATEL
CHECKED BY: TAN NGUYEN
REVISED BY
DATE REVISED

LAST REVISION 01-08-15
DATE PLOTTED => 10-JUL-2015
TIME PLOTTED => 13:31

Dist	COUNTY	ROUTE	POST MILES TOTAL PROJECT	SHEET No.	TOTAL SHEETS
12	Ora	405	8.4	16	142

REGISTERED CIVIL ENGINEER DATE 4-22-15

PLANS APPROVAL DATE 4-27-15

REGISTERED PROFESSIONAL ENGINEER KEVIN D PHAM No. C61965 Exp. 9-30-15 CIVIL STATE OF CALIFORNIA

THE STATE OF CALIFORNIA OR ITS OFFICERS OR AGENTS SHALL NOT BE RESPONSIBLE FOR THE ACCURACY OR COMPLETENESS OF SCANNED COPIES OF THIS PLAN SHEET.

NOTES:

1. FOR ACCURATE RIGHT OF WAY DATA, CONTACT RIGHT OF WAY ENGINEERING AT THE DISTRICT OFFICE.
2. LOCATIONS OF UTILITY FACILITIES SHOWN ON THIS PLANS ARE APPROXIMATE AND SHALL BE VERIFIED BY THE CONTRACTOR PRIOR TO CONSTRUCTION.
3. CONTACT OCSD INSPECTOR (TERRY KRIE) AT (714) 861-2644 2 DAYS PRIOR TO SEWER ABANDONMENT OR REMOVAL.

UTILITY OWNERSHIP:

NATURE GAS: SOUTHERN CALIFORNIA GAS (SCG)
SEWER: ORANGE COUNTY SANITATION DISTRICT (OCSD)
ELECTRICITY: SOUTHERN CALIFORNIA EDISON (SCE)
WATER: MESA CONSOLIDATED WATER DISTRICT (MCWD)
TELEPHONE: AMERICAN TELEPHONE & TELEGRAPH COMPANY (AT&T)
COMMUNICATIONS: TW TELECOM (TWT)
LEVEL 3 COMMUNICATIONS (LEVEL 3)
TELEPACIFIC COMMUNICATIONS (TPC
WILCON
NETGEAR
STORM DRAIN: ORANGE COUNTY FLOOD CONTROL DISTRICT (OCFCD)
CITY OF COSTA MESA (CCM)

SYMBOLS & ABBREVIATIONS:

XX POSITIVE IDENTIFICATION LOCATION & NUMBER

POSITIVE LOCATION TABLE

LOC No.	UTILITY	NORTHING	EASTING	TOP DEPTH (FT)	METHOD
1	SCE 5" PVC CONDUIT	2196859.434	6069266.508	-11.60	AS-BUILTS
1A	6' DIA RCP OCFCD	2196864.144	6069264.781	-3.08	AS-BUILTS
2	SCE 5" PVC CONDUIT	2196866.163	6069256.926	-9.70	AS-BUILTS
3	SCE 36" WIDE ENCASEMENT CONDUIT	2197052.535	6069419.902	-10.02	AS-BUILTS
4	SCE & TPC 2 5"STEEL CONDUITS	2197058.940	6069427.939	-15.50	AS-BUILTS

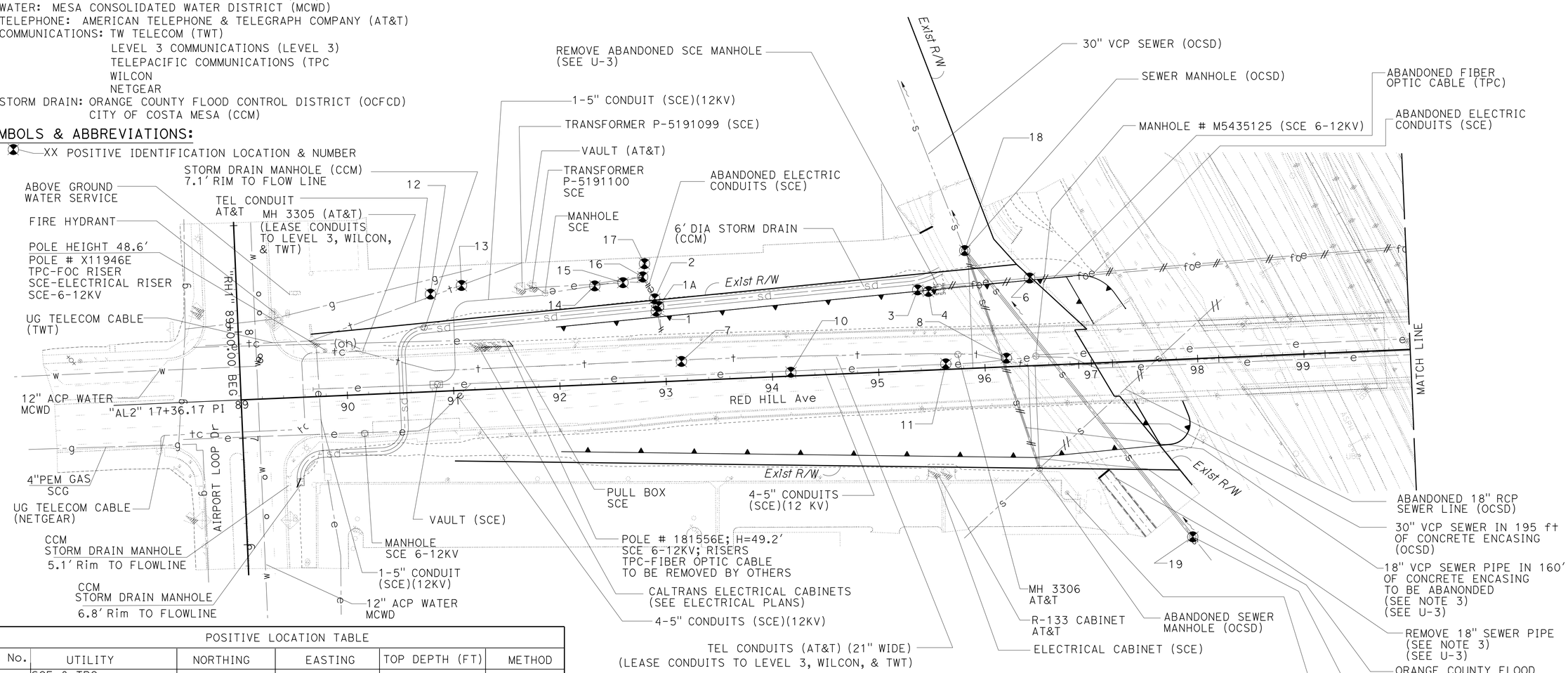

POSITIVE LOCATION TABLE

LOC No.	UTILITY	NORTHING	EASTING	TOP DEPTH (FT)	METHOD
6	SCE & TPC 24"+ WIDE ENCASEMENT	2197136.707	6069483.659	-13.40	AS-BUILTS
7	AT&T 21" WIDE ENCASEMENT CONDUIT	2196844.105	6069317.096	-3.70	AS-BUILTS
8	AT&T 21" WIDE ENCASEMENT CONDUIT	2197069.585	6069523.800	-4.70	AS-BUILTS
10	SCE 29" ENCASEMENT CONDUIT	2196912.600	6069394.956	-3.20	AS-BUILTS
11	SCE 29" ENCASEMENT CONDUIT	2197024.329	6069488.684	-4.50	AS-BUILTS
12	AT&T 5" PVC CONDUIT	2196715.348	6069109.906	-3.00	AS-BUILTS
13	AT&T 5" PVC CONDUIT	2196742.400	6069123.756	-2.40	AS-BUILTS

POSITIVE LOCATION TABLE

LOC No.	UTILITY	NORTHING	EASTING	TOP DEPTH (FT)	METHOD
14	SCE 20" WIDE CONDUIT ENCASEMENT	2196833.622	6069209.830	-2.40	AS-BUILTS
15	SCE 18" WIDE CONDUIT ENCASEMENT	2196855.090	6069225.703	-1.70	AS-BUILTS
16	SCE 47" WIDE CONDUIT ENCASEMENT	2196872.243	6069234.344	-2.80	AS-BUILTS
17	SCE 18" WIDE ENCASEMENT CONDUIT	2196881.601	6069226.499	-3.24	AS-BUILTS
18	SEWER MANHOLE	2197110.033	6069423.152	-17.85	SURVEYS
19	SEWER MANHOLE	2197082.764	6069765.978	-17.04	SURVEYS

UTILITY PLAN

SCALE: 1"=50'

U-1

APPROVED FOR UTILITY INFORMATION ONLY

STATE OF CALIFORNIA - DEPARTMENT OF TRANSPORTATION
Caltrans UTILITY ENGINEERING

FUNCTIONAL SUPERVISOR: CHRISTOPHER LE
CALCULATED-DESIGNED BY: MINH PHAM
CHECKED BY: KEVIN PHAM
REVISED BY: MINH PHAM
DATE REVISED: 10-22-14

LAST REVISION 02-03-15 | DATE PLOTTED => 10-JUL-2015 | TIME PLOTTED => 13:31

Dist	COUNTY	ROUTE	POST MILES TOTAL PROJECT	SHEET No.	TOTAL SHEETS
12	Ora	405	8.4	17	142

REGISTERED CIVIL ENGINEER 4-22-15 DATE

4-27-15
PLANS APPROVAL DATE

REGISTERED PROFESSIONAL ENGINEER KEVIN D PHAM No. C61965 Exp. 9-30-15 CIVIL STATE OF CALIFORNIA

THE STATE OF CALIFORNIA OR ITS OFFICERS OR AGENTS SHALL NOT BE RESPONSIBLE FOR THE ACCURACY OR COMPLETENESS OF SCANNED COPIES OF THIS PLAN SHEET.

NOTE:

FOR ACCURATE RIGHT OF WAY DATA, CONTACT
RIGHT OF WAY ENGINEERING AT THE DISTRICT OFFICE.

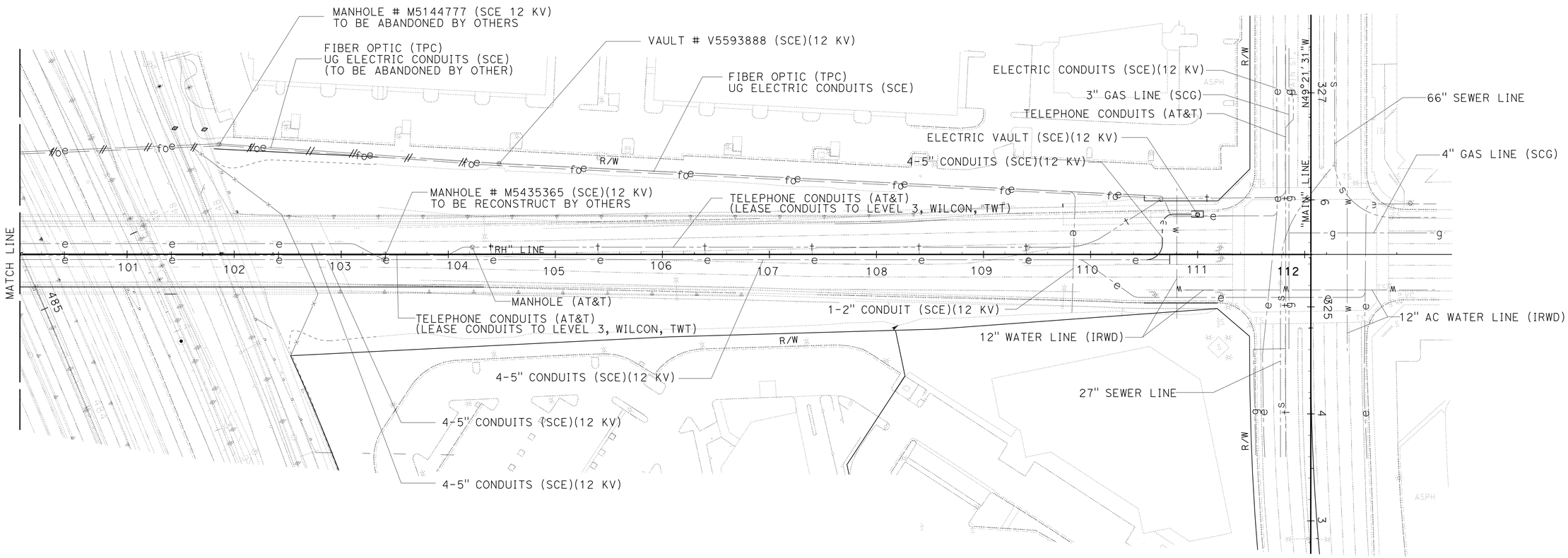

UTILITY PLAN

SCALE: 1" = 50'

U-2

APPROVED FOR UTILITY INFORMATION ONLY

STATE OF CALIFORNIA - DEPARTMENT OF TRANSPORTATION
Caltrans® UTILITY ENGINEERING

FUNCTIONAL SUPERVISOR: CHRISTOPHER LE

CALCULATED-DESIGNED BY: MINH PHAM
CHECKED BY: KEVIN PHAM

REVISED BY
DATE REVISED

LAST REVISION 02-03-15
DATE PLOTTED => 10-JUL-2015
TIME PLOTTED => 13:31

Dist	COUNTY	ROUTE	POST MILES TOTAL PROJECT	SHEET No.	TOTAL SHEETS
12	Ora	405	8.4	18	142

REGISTERED CIVIL ENGINEER 4-22-15 DATE

4-27-15
PLANS APPROVAL DATE

REGISTERED PROFESSIONAL ENGINEER KEVIN D PHAM No. C61965 Exp. 9-30-15 CIVIL STATE OF CALIFORNIA

THE STATE OF CALIFORNIA OR ITS OFFICERS OR AGENTS SHALL NOT BE RESPONSIBLE FOR THE ACCURACY OR COMPLETENESS OF SCANNED COPIES OF THIS PLAN SHEET.

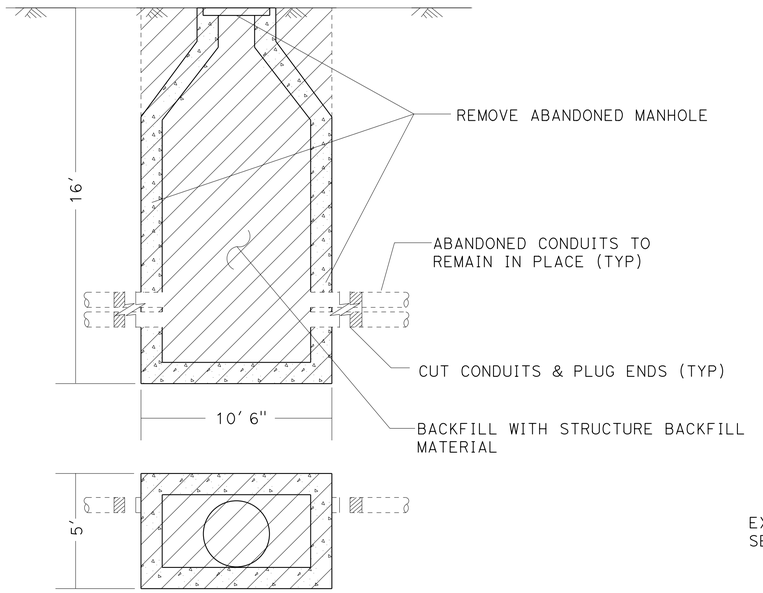

REMOVED ABANONDED MANHOLE DETAILS

NO SCALE

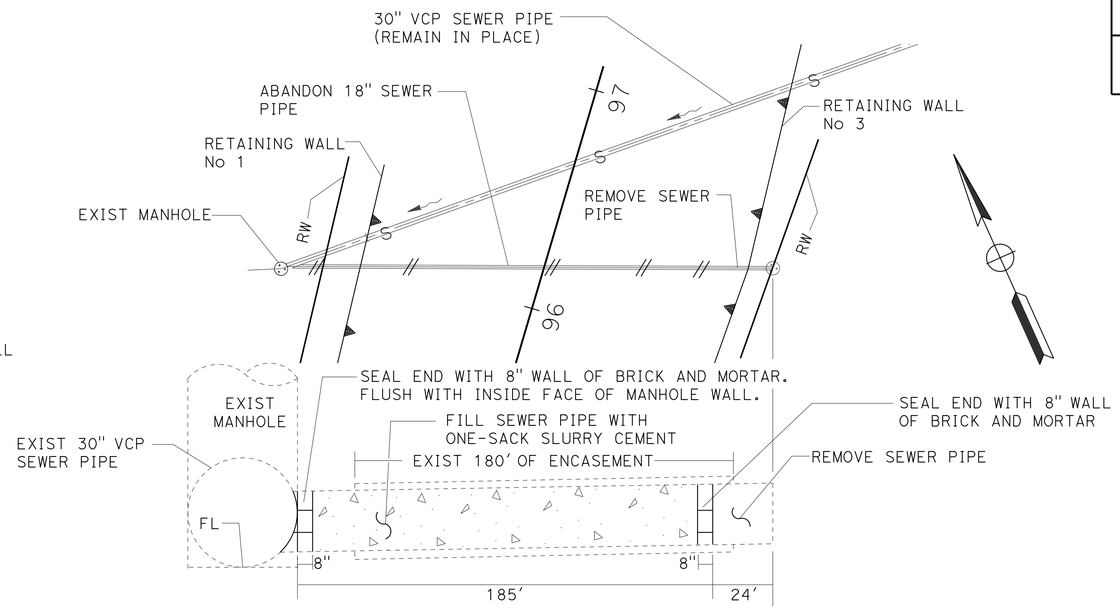

ABANDON 18' SEWER PIPE DETAILS

NO SCALE

UTILITY QUANTITIES

SHEET No.	LOCATION	REMOVE MANHOLE	IMPORTED BORROW *	REMOVE SEWER PIPE	ABANDON SEWER PIPE	SLURRY CEMENT BACKFILL (N)
		EA	CY	LF	LF	CY
U-1	77 FT LEFT OF STA 95+60 OF "RH1"	1	32			
U-1	104 FT LT OF STA 95+89 TO 74 FT RT OF STA 96+40 OF "RH1"				185	13
U-1	74 FT RT OF STA 96+40 TO 96 FT RT OF STA 96+47 OF "RH1"			24		
TOTAL		1	32	24	185	13 (N)

(N)= NOT A SEPARATE PAY ITEM, FOR INFORMATION ONLY.

* FOR GRAND TOTAL OF STRUCTURE BACKFILL (EMBANKMENT), SEE SHEET Q-1.

UTILITY DETAILS AND QUANTITIES

NO SCALE

U-3

REVISED BY | DATE REVISED

MINH PHAM | KEVIN PHAM

CALCULATED-DESIGNED BY | CHECKED BY

FUNCTIONAL SUPERVISOR: CHRISTOPHER LE

STATE OF CALIFORNIA - DEPARTMENT OF TRANSPORTATION

Caltrans® UTILITY ENGINEERING

LAST REVISION 02-03-15 | DATE PLOTTED => 10-JUL-2015 | TIME PLOTTED => 13:31

Dist	COUNTY	ROUTE	POST MILES TOTAL PROJECT	SHEET No.	TOTAL SHEETS
12	Ora	405	8.4	19	142

REGISTERED CIVIL ENGINEER DATE 4-22-15

4-27-15
PLANS APPROVAL DATE

REGISTERED PROFESSIONAL ENGINEER
DAVID H. LAM
No. C63493
Exp. 09-30-16
CIVIL
STATE OF CALIFORNIA

THE STATE OF CALIFORNIA OR ITS OFFICERS OR AGENTS SHALL NOT BE RESPONSIBLE FOR THE ACCURACY OR COMPLETENESS OF SCANNED COPIES OF THIS PLAN SHEET.

NOTE:

1. LOCATION OF CONSTRUCTION SIGNS SHOWN ARE APPROXIMATE. EXACT LOCATIONS TO BE DETERMINED BY THE ENGINEER.

LEGEND:

- (A) CONSTRUCTION AREA SIGN NUMBER PER PLAN
- STAGE CONSTRUCTION LIMITS
- CONSTRUCTION AREA SIGN, ONE POST

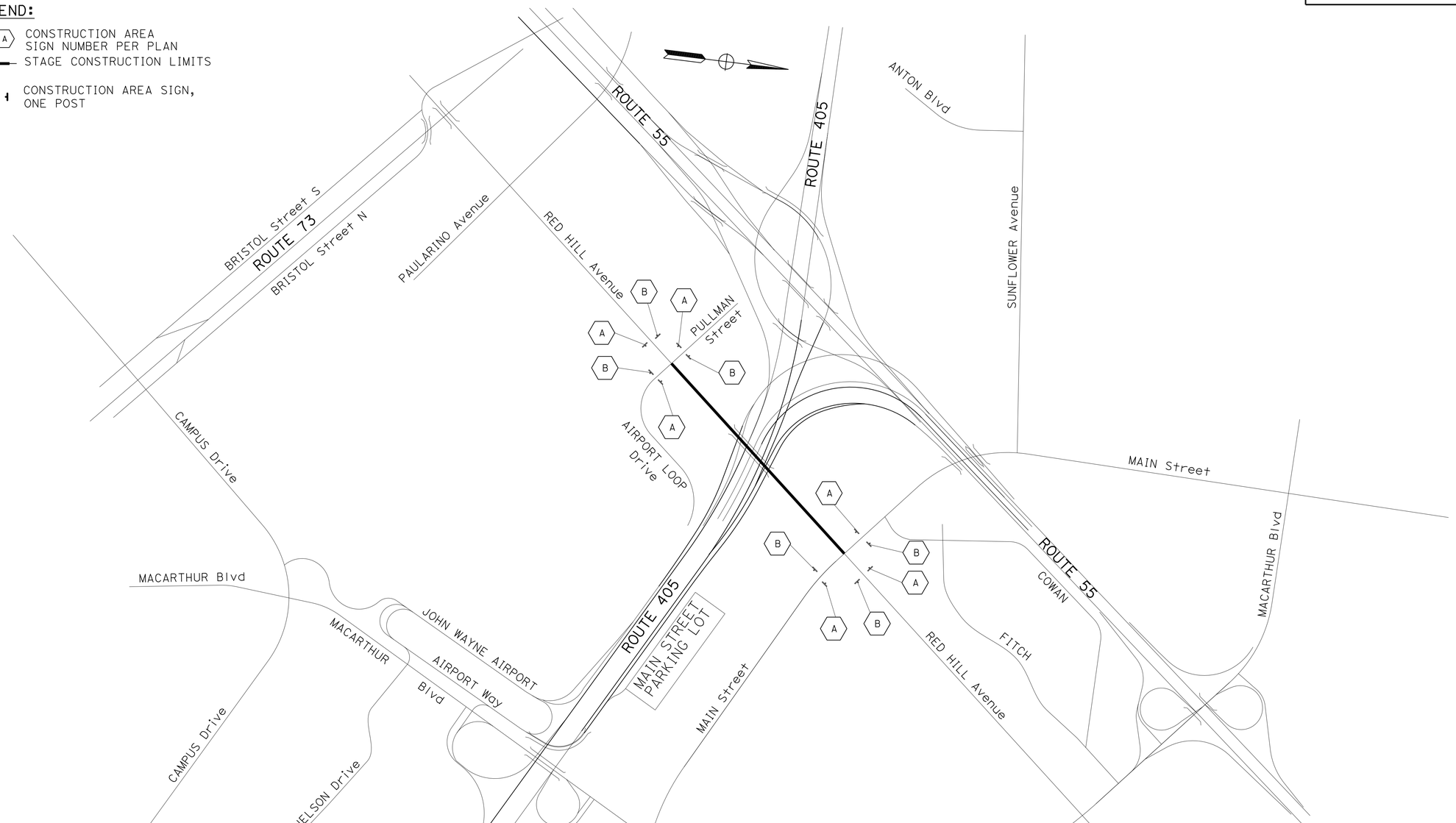

STATIONARY MOUNTED CONSTRUCTION AREA SIGNS **

SIGN SYMBOL	SIGN CODE	PANEL SIZE (IN)	SIGN MESSAGE	No. OF POST AND SIZE (IN)	No. OF SIGNS
(A)	W20-1	48 x 48	ROAD WORK AHEAD	1 - 4 x 6	6
(B)	G20-2	48 x 24	END WORK	1 - 4 x 6	6

**: FOR ADDITIONAL CONSTRUCTION AREA SIGNS SEE SHEETS SCQ-2 AND THQ-1

APPROVED FOR CONSTRUCTION AREA SIGN WORK ONLY

CONSTRUCTION AREA SIGN

NO SCALE

CS-1

REVISED BY | DATE REVISED
DAVID LAM | MATTHEW Q. CUGINI
CALCULATED-DESIGNED BY | CHECKED BY
FUNCTIONAL SUPERVISOR | MATTHEW Q. CUGINI
STATE OF CALIFORNIA - DEPARTMENT OF TRANSPORTATION
Caltrans
DESIGN

LAST REVISION 03-26-15 | DATE PLOTTED => 10-JUL-2015 | TIME PLOTTED => 13:32

Dist	COUNTY	ROUTE	POST MILES TOTAL PROJECT	SHEET No.	TOTAL SHEETS
12	Ora	405	8.4	20	142

REGISTERED CIVIL ENGINEER 4-22-15 DATE

4-27-15
PLANS APPROVAL DATE

REGISTERED PROFESSIONAL ENGINEER
DAVID H. LAM
No. C63493
Exp. 09-30-16
CIVIL
STATE OF CALIFORNIA

THE STATE OF CALIFORNIA OR ITS OFFICERS OR AGENTS SHALL NOT BE RESPONSIBLE FOR THE ACCURACY OR COMPLETENESS OF SCANNED COPIES OF THIS PLAN SHEET.

NOTES:

1. FOR ACCURATE RIGHT OF WAY DATA, CONTACT RIGHT OF WAY ENGINEERING AT THE DISTRICT OFFICE.
2. EXACT LOCATION OF PCMS WILL BE DETERMINED BY THE ENGINEER IN THE FIELD.

LEGEND:

- (XX) TEMPORARY STRIPING DETAIL
- TEMPORARY CRASH CUSHIONS
- CHANNELIZERS
- TEMPORARY RAILING (TYPE K)
- PORTABLE CHANGEABLE MESSAGE SIGN (PCMS)
- CHANGE IN PAVEMENT DELINEATION
- END PAVEMENT DELINEATION MATCH EXISTING
- : ROADWAY CONSTRUCTION AREA
- : TYPE III BARRICADES
- (XX) : SIGN NUMBER
- : DIRECTION OF TRAVEL

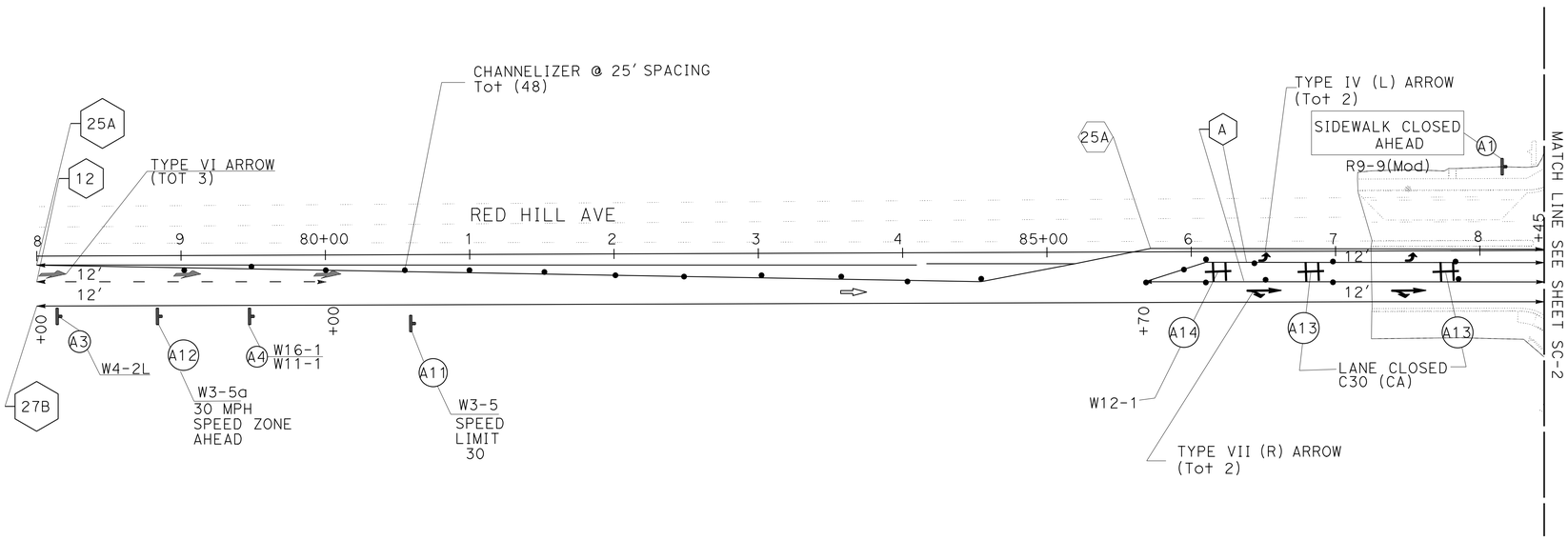

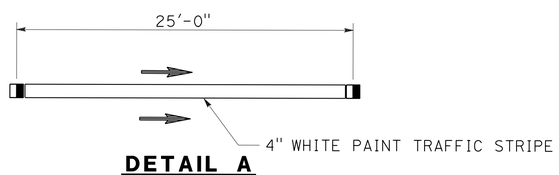

DETAIL A

STAGE 1
STAGE CONSTRUCTION AND TRAFFIC HANDLING

SCALE: 1" = 50'

APPROVED FOR STAGE CONSTRUCTION AND TRAFFIC HANDLING WORK ONLY

SC-1

STATE OF CALIFORNIA - DEPARTMENT OF TRANSPORTATION
Caltrans®
DESIGN

FUNCTIONAL SUPERVISOR: MATTHEW Q. CUGINI
CALCULATED-DESIGNED BY: DAVID LAM
CHECKED BY: MATTHEW Q. CUGINI
REVISED BY
DATE REVISED

LAST REVISION 12-24-14
DATE PLOTTED => 10-JUL-2015
TIME PLOTTED => 13:32

Dist	COUNTY	ROUTE	POST MILES TOTAL PROJECT	SHEET No.	TOTAL SHEETS
12	Ora	405	8.4	21	142

REGISTERED CIVIL ENGINEER 4-22-15 DATE

4-27-15
PLANS APPROVAL DATE

REGISTERED PROFESSIONAL ENGINEER DAVID H. LAM No. C63493 Exp. 09-30-16 CIVIL STATE OF CALIFORNIA

THE STATE OF CALIFORNIA OR ITS OFFICERS OR AGENTS SHALL NOT BE RESPONSIBLE FOR THE ACCURACY OR COMPLETENESS OF SCANNED COPIES OF THIS PLAN SHEET.

NOTES:

1. FOR ACCURATE RIGHT OF WAY DATA, CONTACT RIGHT OF WAY ENGINEERING AT THE DISTRICT OFFICE.
2. EXACT LOCATION OF PCMS WILL BE DETERMINED BY THE ENGINEER IN THE FIELD.

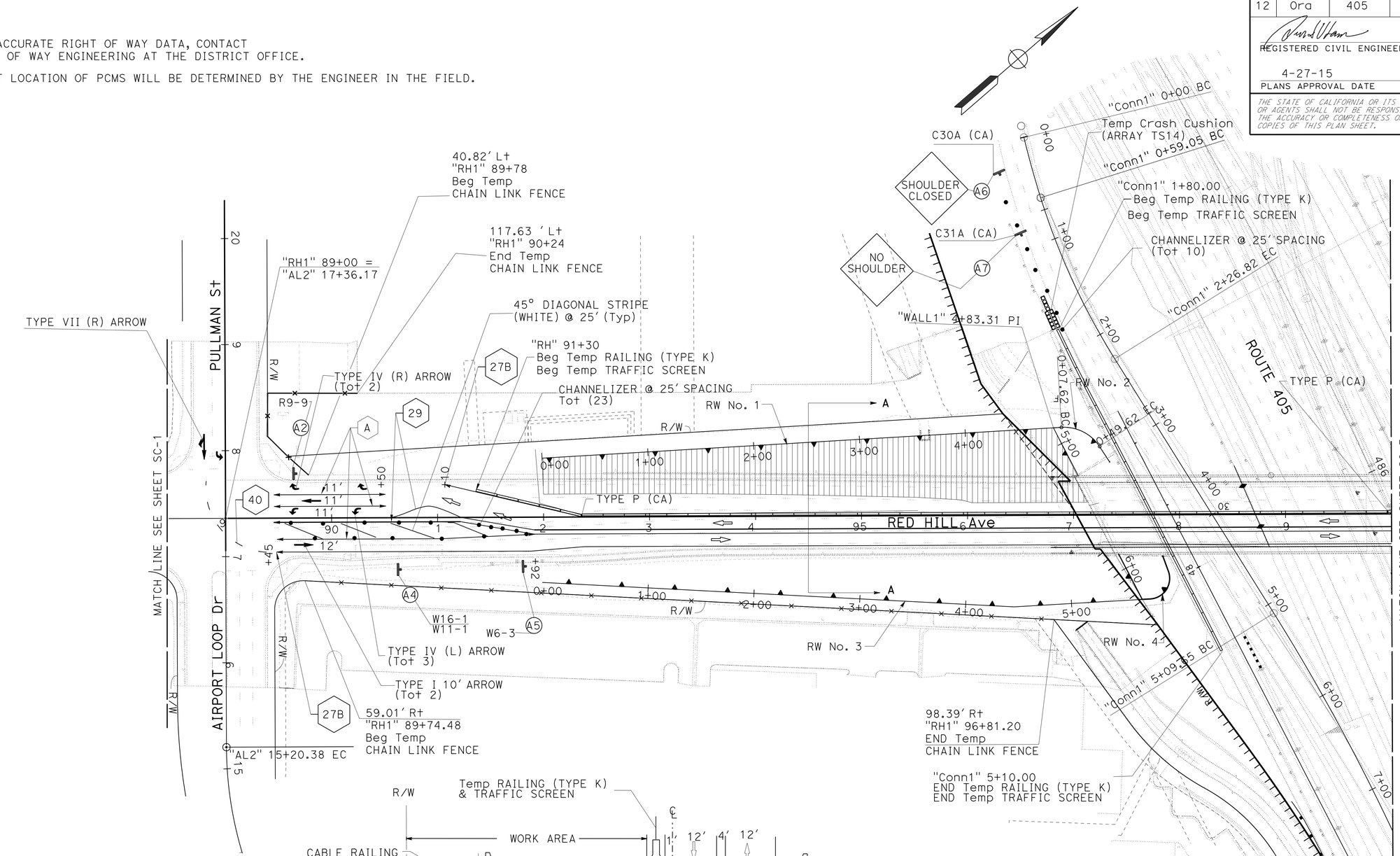

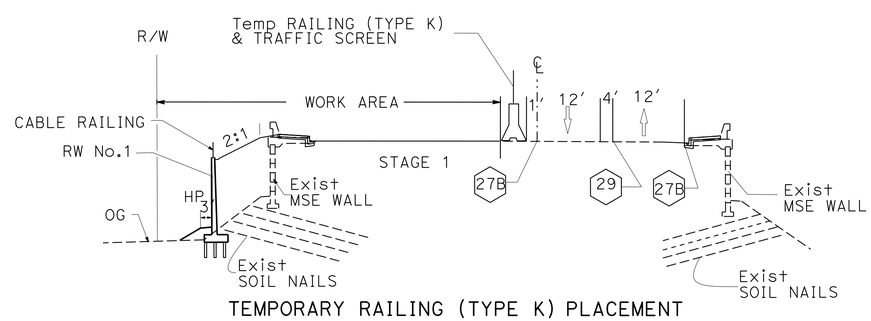

TEMPORARY RAILING (TYPE K) PLACEMENT

A-A SECTION

NO SCALE

APPROVED FOR STAGE CONSTRUCTION AND TRAFFIC HANDLING WORK ONLY

STAGE 1
STAGE CONSTRUCTION AND TRAFFIC HANDLING

SCALE: 1" = 50'

SC-2

STATE OF CALIFORNIA - DEPARTMENT OF TRANSPORTATION
Caltrans® DESIGN

FUNCTIONAL SUPERVISOR: MATTHEW Q. CUGINI
CALCULATED-DESIGNED BY: DAVID LAM
CHECKED BY: MATTHEW Q. CUGINI
REVISED BY
DATE REVISED

LAST REVISION 01-08-15
DATE PLOTTED => 10-JUL-2015
TIME PLOTTED => 13:32

Dist	COUNTY	ROUTE	POST MILES TOTAL PROJECT	SHEET No.	TOTAL SHEETS
12	Ora	405	8.4	22	142

REGISTERED CIVIL ENGINEER 4-22-15 DATE

4-27-15
PLANS APPROVAL DATE

REGISTERED PROFESSIONAL ENGINEER
DAVID H. LAM
No. C63493
Exp 09-30-16
CIVIL
STATE OF CALIFORNIA

THE STATE OF CALIFORNIA OR ITS OFFICERS OR AGENTS SHALL NOT BE RESPONSIBLE FOR THE ACCURACY OR COMPLETENESS OF SCANNED COPIES OF THIS PLAN SHEET.

NOTES:

1. FOR ACCURATE RIGHT OF WAY DATA, CONTACT RIGHT OF WAY ENGINEERING AT THE DISTRICT OFFICE.
2. EXACT LOCATION OF PCMS WILL BE DETERMINED BY THE ENGINEER IN THE FIELD.

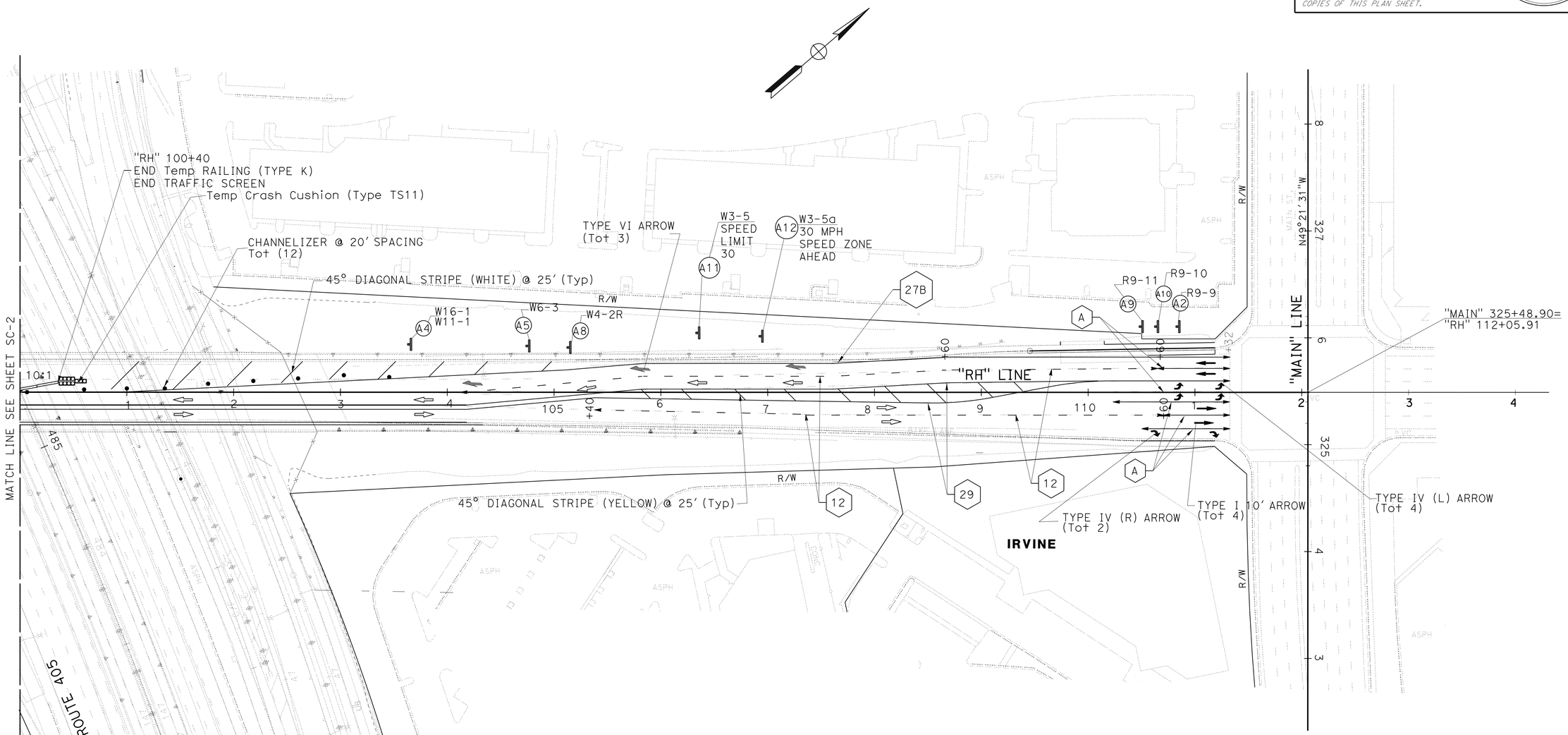

STAGE 1
STAGE CONSTRUCTION AND TRAFFIC HANDLING

SCALE: 1" = 50'

SC-3

APPROVED FOR STAGE CONSTRUCTION AND TRAFFIC HANDLING WORK ONLY

STATE OF CALIFORNIA - DEPARTMENT OF TRANSPORTATION
Caltrans
DESIGN

FUNCTIONAL SUPERVISOR: MATTHEW Q. CUGINI
CALCULATED-DESIGNED BY: DAVID LAM
CHECKED BY: MATTHEW Q. CUGINI
REVISED BY
DATE REVISED

LAST REVISION 07-28-14
DATE PLOTTED => 10-JUL-2015
TIME PLOTTED => 13:32

Dist	COUNTY	ROUTE	POST MILES TOTAL PROJECT	SHEET No.	TOTAL SHEETS
12	Ora	405	8.4	23	142

REGISTERED CIVIL ENGINEER 4-22-15 DATE

4-27-15
PLANS APPROVAL DATE

REGISTERED PROFESSIONAL ENGINEER DAVID H. LAM No. C63493 Exp. 09-30-16 CIVIL STATE OF CALIFORNIA

THE STATE OF CALIFORNIA OR ITS OFFICERS OR AGENTS SHALL NOT BE RESPONSIBLE FOR THE ACCURACY OR COMPLETENESS OF SCANNED COPIES OF THIS PLAN SHEET.

NOTES:

1. FOR ACCURATE RIGHT OF WAY DATA, CONTACT RIGHT OF WAY ENGINEERING AT THE DISTRICT OFFICE.
2. EXACT LOCATION OF PCMS WILL BE DETERMINEDBY THE ENGINEER IN THE FIELD.

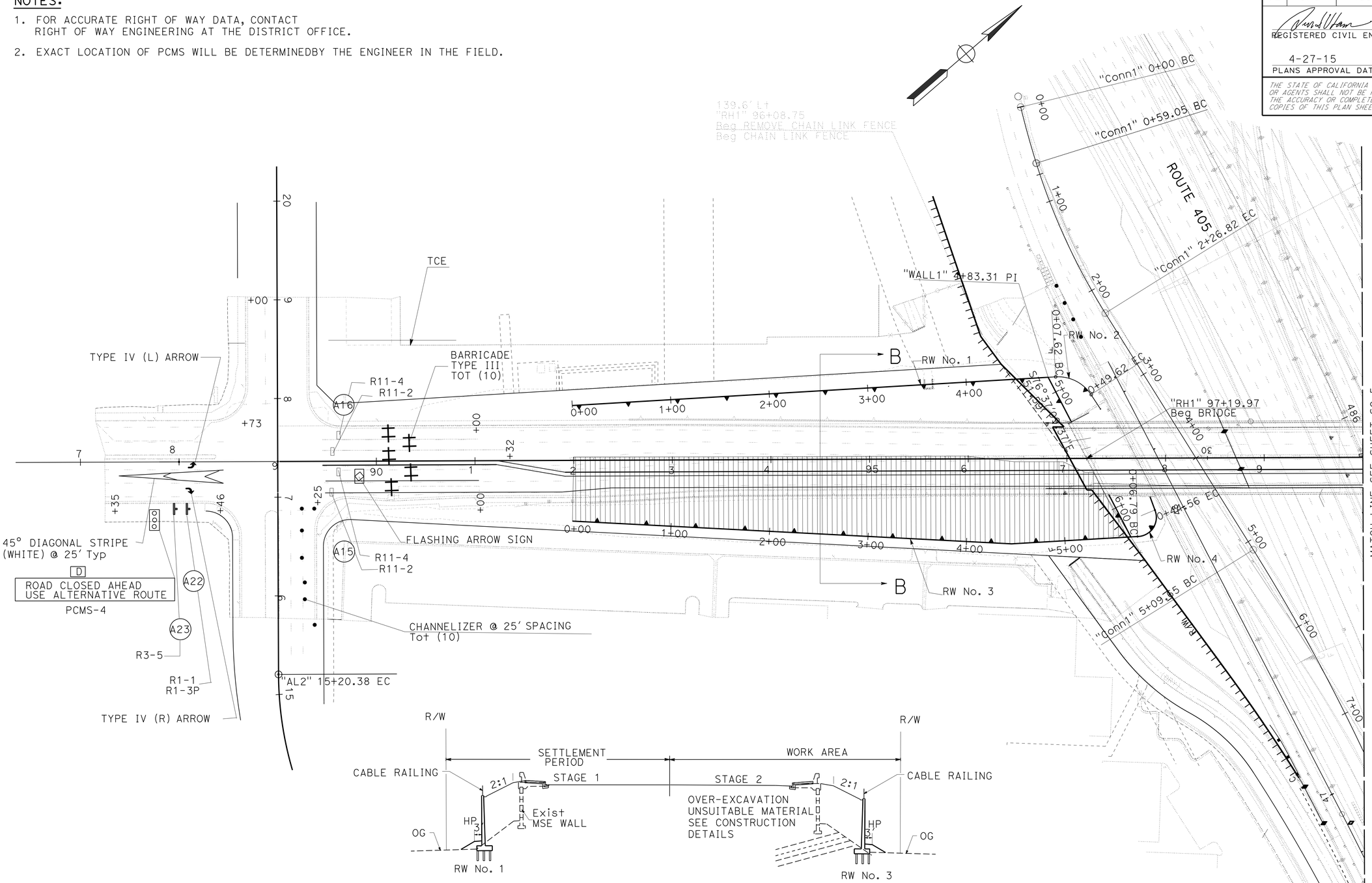

B-B SECTION

NO SCALE

STAGE 2
STAGE CONSTRUCTION AND TRAFFIC HANDLING

SCALE: 1" = 50'

SC-4

APPROVED FOR STAGE CONSTRUCTION AND TRAFFIC HANDLING WORK ONLY

STATE OF CALIFORNIA - DEPARTMENT OF TRANSPORTATION
Caltrans DESIGN

FUNCTIONAL SUPERVISOR: MATTHEW Q. CUGINI
CALCULATED-DESIGNED BY: DAVID LAM
CHECKED BY: MATTHEW Q. CUGINI
REVISED BY
DATE REVISED

LAST REVISION 07-29-14 | DATE PLOTTED => 10-JUL-2015 | TIME PLOTTED => 13:32

Dist	COUNTY	ROUTE	POST MILES TOTAL PROJECT	SHEET No.	TOTAL SHEETS
12	Ora	405	8.4	24	142

REGISTERED CIVIL ENGINEER 4-22-15 DATE

4-27-15
PLANS APPROVAL DATE

REGISTERED PROFESSIONAL ENGINEER
DAVID H. LAM
No. C63493
Exp. 09-30-16
CIVIL
STATE OF CALIFORNIA

THE STATE OF CALIFORNIA OR ITS OFFICERS OR AGENTS SHALL NOT BE RESPONSIBLE FOR THE ACCURACY OR COMPLETENESS OF SCANNED COPIES OF THIS PLAN SHEET.

NOTES:

1. FOR ACCURATE RIGHT OF WAY DATA, CONTACT RIGHT OF WAY ENGINEERING AT THE DISTRICT OFFICE.
2. EXACT LOCATION OF PCMS WILL BE DETERMINED BY THE ENGINEER IN THE FIELD.

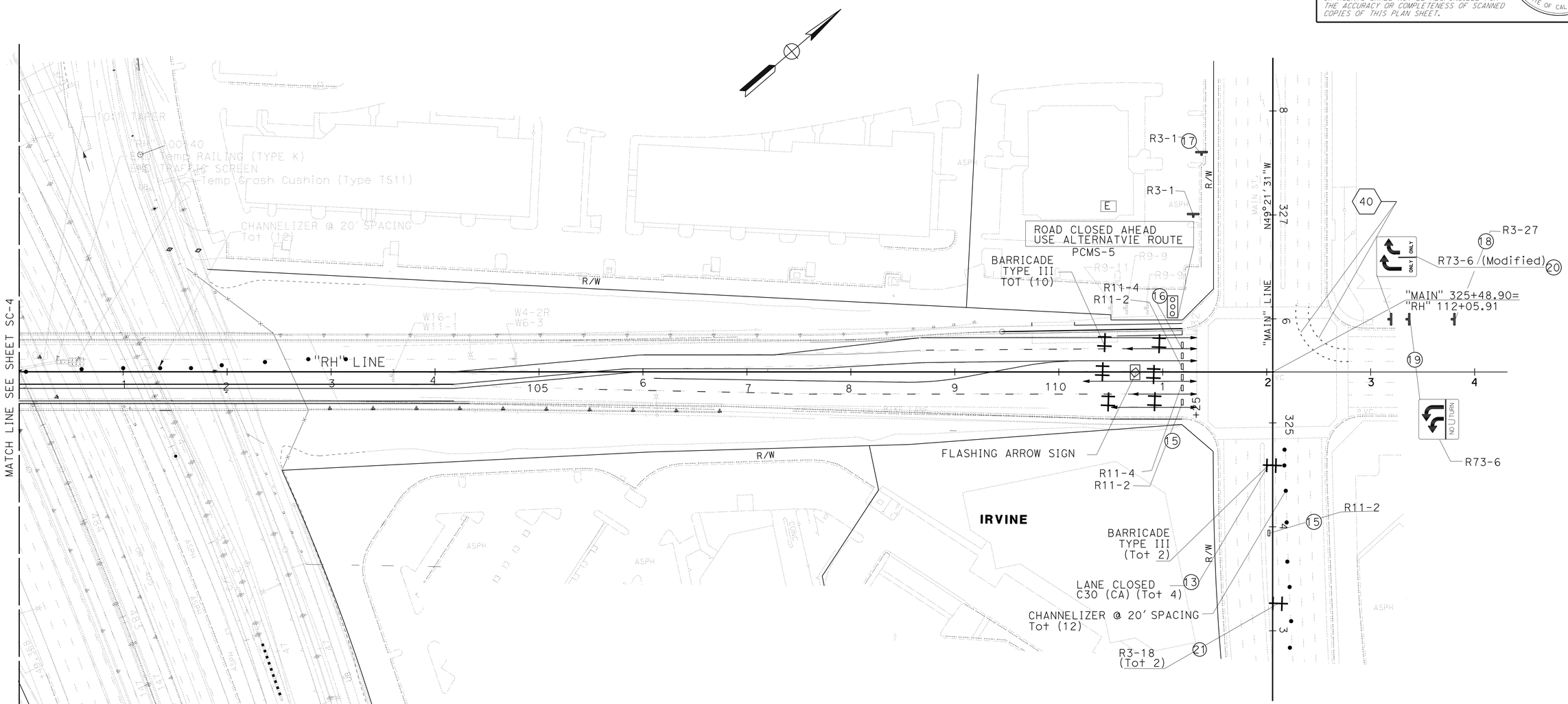

STAGE 2
STAGE CONSTRUCTION AND TRAFFIC HANDLING

SCALE: 1" = 50' **SC-5**

APPROVED FOR STAGE CONSTRUCTION AND TRAFFIC HANDLING WORK ONLY

STATE OF CALIFORNIA - DEPARTMENT OF TRANSPORTATION
Caltrans® DESIGN

FUNCTIONAL SUPERVISOR: MATTHEW Q. CUGINI
CALCULATED-DESIGNED BY: DAVID LAM
CHECKED BY: MATTHEW Q. CUGINI
REVISED BY
DATE REVISED

LAST REVISION 07-29-14
DATE PLOTTED => 10-JUL-2015
TIME PLOTTED => 13:32

Dist	COUNTY	ROUTE	POST MILES TOTAL PROJECT	SHEET No.	TOTAL SHEETS
12	Ora	405	8.4	25	142

REGISTERED CIVIL ENGINEER 4-22-15 DATE

4-27-15
PLANS APPROVAL DATE

REGISTERED PROFESSIONAL ENGINEER
DAVID H. LAM
No. C63493
Exp. 09-30-16
CIVIL
STATE OF CALIFORNIA

THE STATE OF CALIFORNIA OR ITS OFFICERS OR AGENTS SHALL NOT BE RESPONSIBLE FOR THE ACCURACY OR COMPLETENESS OF SCANNED COPIES OF THIS PLAN SHEET.

NOTES:

1. FOR ACCURATE RIGHT OF WAY DATA, CONTACT RIGHT OF WAY ENGINEERING AT THE DISTRICT OFFICE.
2. EXACT LOCATION OF PCMS WILL BE DETERMINED BY THE ENGINEER IN THE FIELD.
3. NON CONFLICT STRIPING AND SIGNING TO BE REMAINED IN PLACE FOR STAGE 3 CONSTRUCTION.
4. STAGE 3 WORK SHALL NOT COMMENCE UNTIL SOUTH BOUND RED HILL AVE IS OPENED TO TRAFFIC.

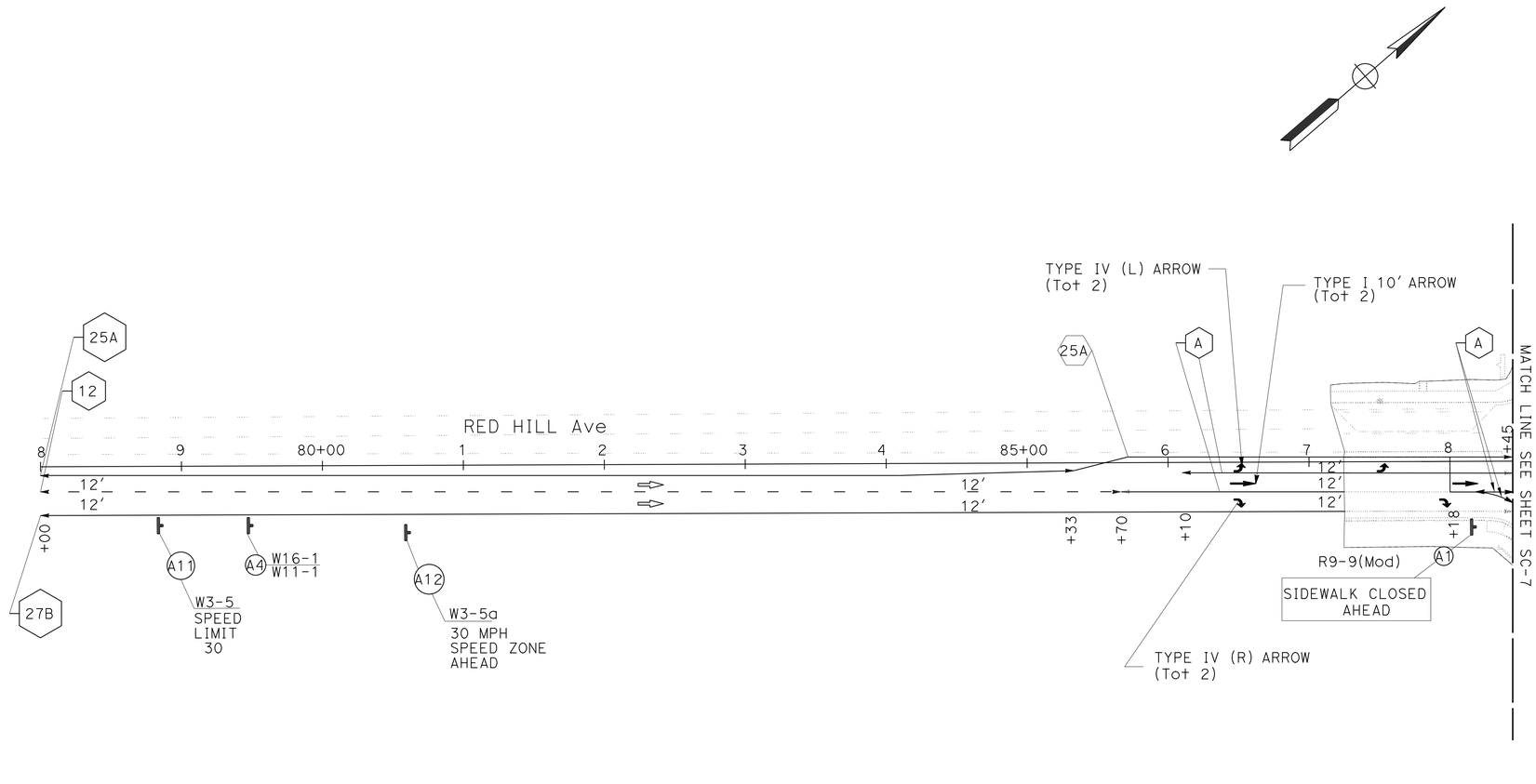

STAGE 3

STAGE CONSTRUCTION AND TRAFFIC HANDLING

SCALE: 1" = 50'

SC-6

APPROVED FOR STAGE CONSTRUCTION AND TRAFFIC HANDLING WORK ONLY

STATE OF CALIFORNIA - DEPARTMENT OF TRANSPORTATION
Caltrans® DESIGN

FUNCTIONAL SUPERVISOR: MATTHEW Q. CUGINI
CALCULATED-DESIGNED BY: DAVID LAM
CHECKED BY: MATTHEW Q. CUGINI
REVISED BY
DATE REVISED

LAST REVISION 01-20-15
DATE PLOTTED => 10-JUL-2015
TIME PLOTTED => 13:32

Dist	COUNTY	ROUTE	POST MILES TOTAL PROJECT	SHEET No.	TOTAL SHEETS
12	Ora	405	8.4	26	142

REGISTERED CIVIL ENGINEER 4-22-15 DATE

4-27-15
PLANS APPROVAL DATE

REGISTERED PROFESSIONAL ENGINEER DAVID H. LAM No. C63493 Exp. 09-30-16 CIVIL STATE OF CALIFORNIA

THE STATE OF CALIFORNIA OR ITS OFFICERS OR AGENTS SHALL NOT BE RESPONSIBLE FOR THE ACCURACY OR COMPLETENESS OF SCANNED COPIES OF THIS PLAN SHEET.

NOTES:

1. FOR ACCURATE RIGHT OF WAY DATA, CONTACT RIGHT OF WAY ENGINEERING AT THE DISTRICT OFFICE.
2. EXACT LOCATION OF PCMS WILL BE DETERMINED BY THE ENGINEER IN THE FIELD.

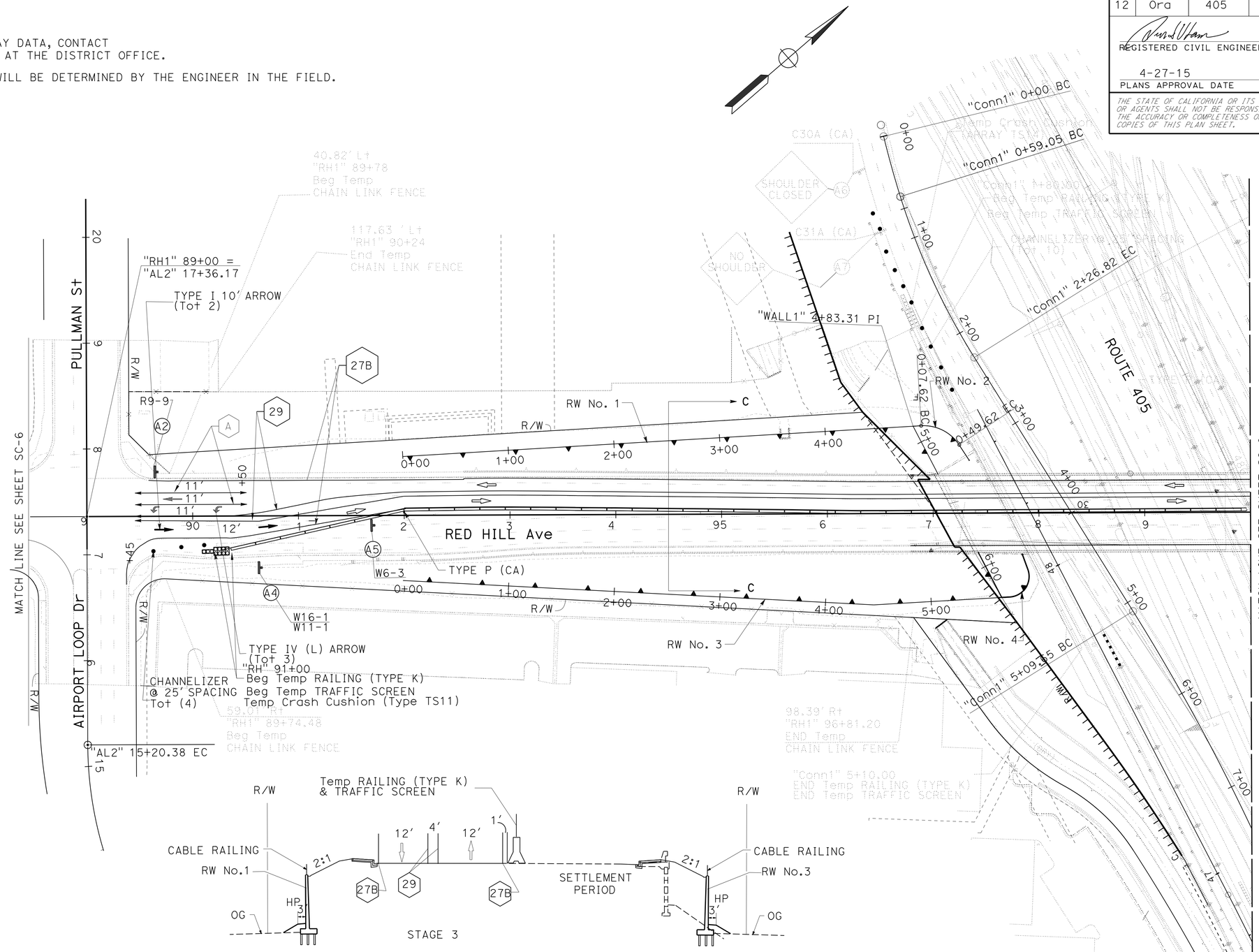

TEMPORARY RAILING (TYPE K) PLACEMENT

C-C SECTION

NO SCALE

APPROVED FOR STAGE CONSTRUCTION AND TRAFFIC HANDLING WORK ONLY

STAGE 3
STAGE CONSTRUCTION AND TRAFFIC HANDLING

SCALE: 1" = 50'

SC-7

STATE OF CALIFORNIA - DEPARTMENT OF TRANSPORTATION

Caltrans® DESIGN

FUNCTIONAL SUPERVISOR: MATTHEW Q. CUGINI

CALCULATED-DESIGNED BY: DAVID LAM

CHECKED BY: MATTHEW Q. CUGINI

REVISED BY

DATE REVISED

LAST REVISION 01-20-15

DATE PLOTTED => 10-JUL-2015
TIME PLOTTED => 13:32

Dist	COUNTY	ROUTE	POST MILES TOTAL PROJECT	SHEET No.	TOTAL SHEETS
12	Ora	405	8.4	27	142

REGISTERED CIVIL ENGINEER 4-22-15 DATE

4-27-15
PLANS APPROVAL DATE

REGISTERED PROFESSIONAL ENGINEER
DAVID H. LAM
No. C63493
Exp 09-30-16
CIVIL
STATE OF CALIFORNIA

THE STATE OF CALIFORNIA OR ITS OFFICERS OR AGENTS SHALL NOT BE RESPONSIBLE FOR THE ACCURACY OR COMPLETENESS OF SCANNED COPIES OF THIS PLAN SHEET.

NOTES:

1. FOR ACCURATE RIGHT OF WAY DATA, CONTACT RIGHT OF WAY ENGINEERING AT THE DISTRICT OFFICE.
2. EXACT LOCATION OF PCMS WILL BE DETERMINED BY THE ENGINEER IN THE FIELD.

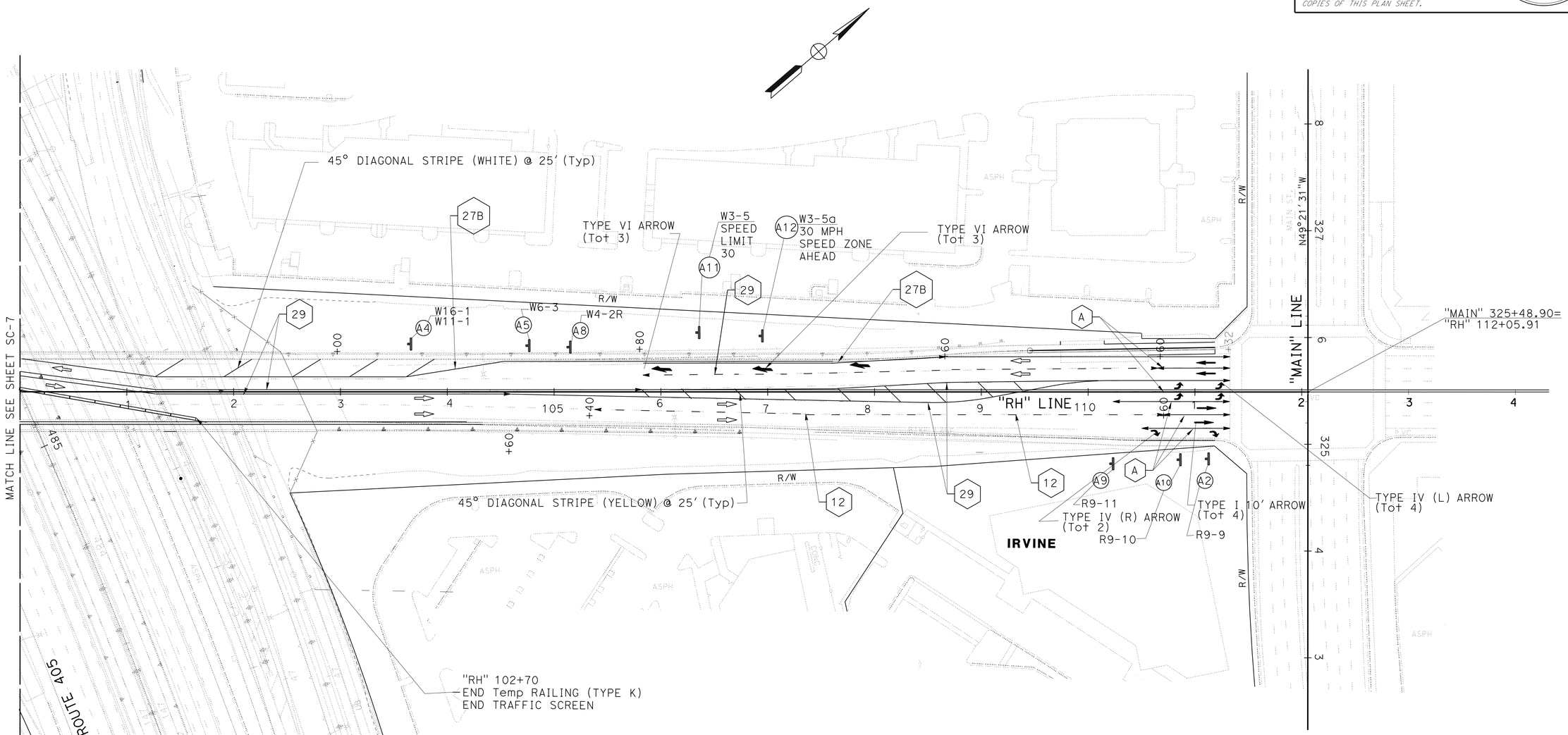

STAGE 3
STAGE CONSTRUCTION AND TRAFFIC HANDLING

SCALE: 1" = 50'

SC-8

APPROVED FOR STAGE CONSTRUCTION AND TRAFFIC HANDLING WORK ONLY

STATE OF CALIFORNIA - DEPARTMENT OF TRANSPORTATION
Caltrans
DESIGN

FUNCTIONAL SUPERVISOR: MATTHEW Q. CUGINI
CALCULATED-DESIGNED BY: DAVID LAM
CHECKED BY: MATTHEW Q. CUGINI
REVISED BY
DATE REVISED

LAST REVISION 01-20-15
DATE PLOTTED => 10-JUL-2015
TIME PLOTTED => 13:32

Dist	COUNTY	ROUTE	POST MILES TOTAL PROJECT	SHEET No.	TOTAL SHEETS
12	Ora	405	8.4	28	142

REGISTERED CIVIL ENGINEER 4-22-15 DATE

4-27-15
PLANS APPROVAL DATE

REGISTERED PROFESSIONAL ENGINEER DAVID H. LAM No. C63493 Exp 09-30-16 CIVIL STATE OF CALIFORNIA

THE STATE OF CALIFORNIA OR ITS OFFICERS OR AGENTS SHALL NOT BE RESPONSIBLE FOR THE ACCURACY OR COMPLETENESS OF SCANNED COPIES OF THIS PLAN SHEET.

TRAFFIC STRIPE, PAVEMENT MARKINGS, PAVEMENT MARKERS, AND TRAFFIC CONTROL DEVICES

SHEET No.	ALIGNMENT AND STATIONS	PAINT TRAFFIC STRIPE (2-COAT)					PAINT PAVEMENT MARKING (2-COAT)	PAVEMENT MARKER *			OBJECT MARKER (TYPE P)	TEMPORARY RAILING (TYPE K)	TEMPORARY TRAFFIC SCREEN	CHANNELIZER (SURFACE MOUNTED)	TYPE III BARRICADE	TEMPORARY CRASH CUSHION MODULE	
								RETROREFLECTIVE									
		DETAIL 29 4" SOLID YELLOW	DETAIL 12 4" WHITE BROKEN (12-48)	DETAIL A 4" SOLID WHITE	DETAIL 27B 4" SOLID WHITE	DETAIL 25A 4" SOLID YELLOW	ARROW/ DIAGANOL STRIPE	TYPE D	TYPE G	TYPE H						ARRAY "TS11"	ARRAY "TS14"
		LF	LF	LF	LF	LF	SQFT	EA	EA	EA	EA	LF	LF	EA	EA	EA	EA
SC-1 SC-6	LINE "RH1" 78+00 TO 88+45		1422	550	1045	1768	268		58	77				48	3		
SC-2 SC-7	LINE "RH1" 89+45 TO 100+00	6330		575	4250		600	182	24		4	1544	1544	37			
SC-2	LINE "Conn1" 1+80.00 TO 5+10.00											330	330	10		11	14
SC-3 SC-8	LINE "RH1" 100+00 TO 111+32	4528	1494	448	3124		1402	140	54			218	218	12		11	
SC-4	LINE "RH1" 89+45 TO 100+00						527							10	10		
SC-5	LINE "RH1" 100+00 TO 111+32			153										12	8		
SUBTOTAL		10858	2916	1726	8419	1768		322	136	77						22	14
TOTAL		25687					2797	535			4	2092	2092	129	21	36	

REMOVE TRAFFIC STRIPE, PAVEMENT MARKINGS, PAVEMENT MARKERS, AND TRAFFIC CONTROL DEVICES

SHEET No.	ALIGNMENT AND STATIONS	REMOVE PAINTED TRAFFIC STRIPE					REMOVE PAINTED PAVEMENT MARKING	REMOVE PAVEMENT MARKER *		
								RETROREFLECTIVE		
		DETAIL 29 4" SOLID YELLOW	DETAIL 12 4" WHITE BROKEN (12-48)	DETAIL A 4" SOLID WHITE	DETAIL 27B 4" SOLID WHITE	DETAIL 25A 4" SOLID YELLOW	ARROW/ DIAGANOL STRIPE	TYPE D	TYPE G	TYPE H
		LF	LF	LF	LF	LF	SQFT	EA	EA	EA
SC-1 SC-6	LINE "RH1" 78+00 TO 88+45		1422	550	1045	1768	268		58	77
SC-2 SC-7	LINE "RH1" 89+45 TO 100+00	6330		575	4250		600	182	24	
SC-2	LINE "Conn1" 1+80.00 TO 5+10.00									
SC-3 SC-8	LINE "RH1" 100+00 TO 111+32	4528	1494	448	3124		1402	140	54	
SC-4	LINE "RH1" 89+45 TO 100+00						527			
SC-5	LINE "RH1" 100+00 TO 111+32			153						
SUBTOTAL		10858	2916	1726	8419	1768		322	136	77
TOTAL		25687					2797	535		

*: FOR GRAND TOTAL OF REMOVE PAINTED TRAFFIC STRIPE, PAVEMENT MARKER (RETROREFLECTIVE) AND REMOVE PAVEMENT MARKER SEE SHEET PDQ-1

TEMPORARY FENCE

ALIGNMENT/SHEET No.	TEMPORARY FENCE (TYPE CL-6)
	LF
LINE "RH1" 89+74.48 TO 96+81.20 (RIGHT) / SC-2	707
LINE "RH1" 89+78 TO 90+24 (LEFT)/ SC-2	179
TOTAL	886

FLASHING ARROW SIGN

ALIGNMENT/SHEET No.	FLASING ARROW SIGN
	EA
LINE "RH1" 89+80 / (SC-4)	1
LINE "RH1" 110+80 / (SC-5)	1
TOTAL	2

STAGE CONSTRUCTION QUANTITIES
SCQ-1

REVISED BY	DATE REVISED
DAVID LAM	MATTHEW CUGINI
CALCULATED-DESIGNED BY	CHECKED BY
FUNCTIONAL SUPERVISOR	MATTHEW CUGINI

STATE OF CALIFORNIA - DEPARTMENT OF TRANSPORTATION
Caltrans
DESIGN

LAST REVISION 07-22-14 | DATE PLOTTED => 10-JUL-2015 TIME PLOTTED => 13:32

Dist	COUNTY	ROUTE	POST MILES TOTAL PROJECT	SHEET No.	TOTAL SHEETS
12	Ora	405	8.4	29	142

REGISTERED CIVIL ENGINEER 4-22-15 DATE

4-27-15
PLANS APPROVAL DATE

REGISTERED PROFESSIONAL ENGINEER
DAVID H. LAM
No. C63493
Exp. 09-30-16
CIVIL
STATE OF CALIFORNIA

THE STATE OF CALIFORNIA OR ITS OFFICERS OR AGENTS SHALL NOT BE RESPONSIBLE FOR THE ACCURACY OR COMPLETENESS OF SCANNED COPIES OF THIS PLAN SHEET.

STATIONARY MOUNTED CONSTRUCTION AREA SIGNS **

SHEET No.	ALIGNMENT	SIGN	SIGN CODE	PANEL SIZE (inch x inch)	No. OF POST AND SIZE (in)	No. OF SIGNS (EA)	REMARK
SC-1 SC-2 SC-6 SC-7	"RH1"	A1	R9-9(Mod)	24 x 12	1 - 6 x 6	2	SIDEWALK CLOSED AHEAD
		A2	R9-9	24 x 12	1 - 6 x 6	1	
		A3	W4-2L	36 x 36	1 - 6 x 6	2	
		A4	W16-1 W11-1	18 x 24 18 x 18	1 - 6 x 6	1	
		A5	W6-3	36 x 36	1 - 6 x 6	2	
		A11	W3-5	36 x 36	1 - 6 x 6	1	SPEED LIMIT 30
		A12	W3-5a	36 x 36	1 - 6 x 6	1	30MPH SPEED ZONE AHEAD
		A13	C30 (CA)	36 x 36		2	ON TYPE III BARRICADES
		A14	W12-1	36 x 36		1	ON TYPE III BARRICADES
	"Conn1"	A6	C30A (CA)	36 x 36	1 - 6 x 6	1	
		A7	C31A (CA)	24 x 24	1 - 6 x 6	1	
SC-3 SC-8	"RH1"	A4	W16-1 W11-1	18 x 24 18 x 18	1 - 6 x 6	1	
		A5	W6-3	36 x 36	1 - 6 x 6	1	
		A8	W4-2R	36 x 36	1 - 6 x 6	1	
		A9	R9-11	24 x 18	1 - 6 x 6	2	
		A10	R9-10	24 x 12	1 - 6 x 6	2	
		A2	R9-9	24 x 12	1 - 6 x 6	2	
		A11	W3-5	36 x 36	1 - 6 x 6	1	SPEED LIMIT 30
		A12	W3-5a	36 x 36	1 - 6 x 6	1	30MPH SPEED ZONE AHEAD
SC-4 & SC-5	"RH1" & "MAIN"	A15	W11-2	36 x 36		5	ON TYPE III BARRICADES
		A16	W11-4	36 x 36		4	ON TYPE III BARRICADES
		A17	R3-1	36 x 36	1 - 6 x 6	2	
		A18	R3-27	36 x 36	1 - 6 x 6	1	
		A19	R73-6	36 x 36	1 - 6 x 6	1	
		A20	R73-6 Modified	36 x 36	1 - 6 x 6	1	
		A21	R3-18	36 x 36		2	ON TYPE III BARRICADES
		A22	R1-1 & R1-3P	36 x 36 & 18 x6	1 - 6 x 6	2	
		A23	R3-5	36 x 36	1 - 6 x 6	1	
		A13	C30 (CA)	36 x 36		4	ON TYPE III BARRICADES

** : FOR ADDITIONAL CONSTRUCTION AREA SIGNS SEE SHEETS CS-1 AND THQ-1

STAGE CONSTRUCTION QUANTITIES

SCQ-2

STATE OF CALIFORNIA - DEPARTMENT OF TRANSPORTATION
DESIGN

FUNCTIONAL SUPERVISOR: MATTHEW CUGINI
CALCULATED-DESIGNED BY: DAVID LAM
CHECKED BY: MATTHEW CUGINI
REVISED BY
DATE REVISED

LAST REVISION 12-24-14
DATE PLOTTED => 10-JUL-2015
TIME PLOTTED => 13:32

Dist	COUNTY	ROUTE	POST MILES TOTAL PROJECT	SHEET No.	TOTAL SHEETS
12	Ora	405	8.4	30	142

REGISTERED CIVIL ENGINEER 4-22-15 DATE

4-27-15
PLANS APPROVAL DATE

REGISTERED PROFESSIONAL ENGINEER DAVID H. LAM No. C63493 Exp. 09-30-16 CIVIL STATE OF CALIFORNIA

THE STATE OF CALIFORNIA OR ITS OFFICERS OR AGENTS SHALL NOT BE RESPONSIBLE FOR THE ACCURACY OR COMPLETENESS OF SCANNED COPIES OF THIS PLAN SHEET.

NOTES:

1. SEE QUANTITY SHEETS FOR SIGN SIZE.
2. ALL SPECIAL SIGNS SHALL BE 6 INCHES BLACK LETTERS AND SYMBOLS ON ORANGE BACKGROUND UNLESS NOTED OTHERWISE, EXCEPT DETOUR AND SHIELD SIGN SIZE SHALL BE AS NOTED ON THE QUANTITY SHEETS.

LEGEND:

- (XX) DETOUR SIGN No.
- (#) DETOUR No.
- → DIRECTION OF DETOUR TRAFFIC / BIKE
- PORTABLE CHANGEABLE MESSAGE SIGN (PCMS #)
- CLOSURE
- DETOUR SIGN - ONE POST

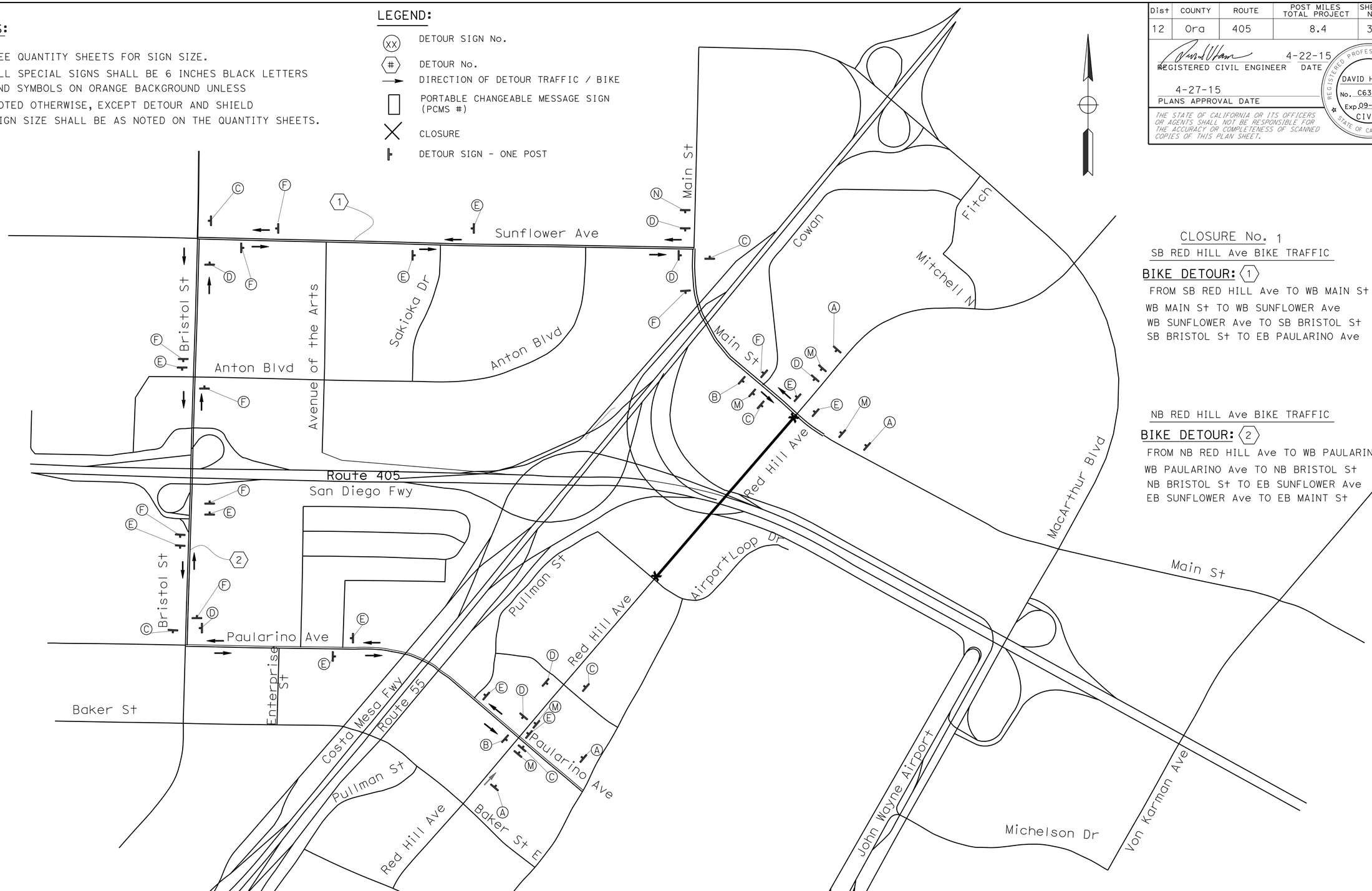

CLOSURE No. 1

SB RED HILL Ave BIKE TRAFFIC

BIKE DETOUR: (1)

FROM SB RED HILL Ave TO WB MAIN St
WB MAIN St TO WB SUNFLOWER Ave
WB SUNFLOWER Ave TO SB BRISTOL St
SB BRISTOL St TO EB PAULARINO Ave

NB RED HILL Ave BIKE TRAFFIC

BIKE DETOUR: (2)

FROM NB RED HILL Ave TO WB PAULARINO Ave
WB PAULARINO Ave TO NB BRISTOL St
NB BRISTOL St TO EB SUNFLOWER Ave
EB SUNFLOWER Ave TO EB MAINT St

APPROVED FOR TRAFFIC HANDLING WORK ONLY

TRAFFIC HANDLING PLAN
(BIKE DETOUR)

NO SCALE

TH-1

STATE OF CALIFORNIA - DEPARTMENT OF TRANSPORTATION
Caltrans® DESIGN

FUNCTIONAL SUPERVISOR: MATTHEW Q. CUGINI
CALCULATED-DESIGNED BY: DAVID LAM
CHECKED BY: MATTHEW Q. CUGINI
REVISED BY
DATE REVISED

LAST REVISION 07-22-14
DATE PLOTTED => 10-JUL-2015
TIME PLOTTED => 13:32

Dist	COUNTY	ROUTE	POST MILES TOTAL PROJECT	SHEET No.	TOTAL SHEETS
12	Ora	405	8.4	31	142

REGISTERED CIVIL ENGINEER 4-22-15 DATE

4-27-15
PLANS APPROVAL DATE

REGISTERED PROFESSIONAL ENGINEER
DAVID H. LAM
No. C63493
Exp. 09-30-16
CIVIL
STATE OF CALIFORNIA

THE STATE OF CALIFORNIA OR ITS OFFICERS OR AGENTS SHALL NOT BE RESPONSIBLE FOR THE ACCURACY OR COMPLETENESS OF SCANNED COPIES OF THIS PLAN SHEET.

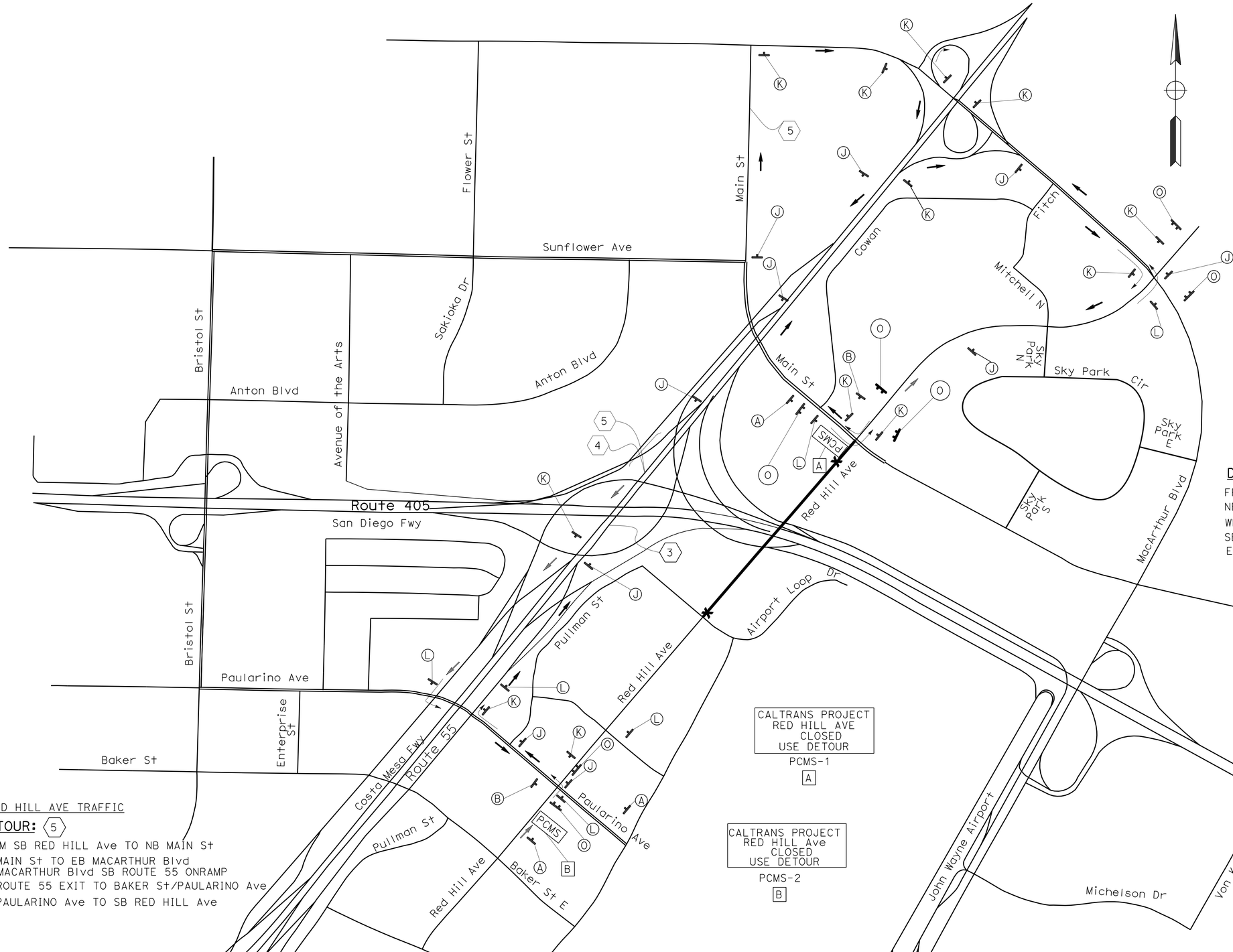

CLOSURE No. 1

NB RED HILL AVE TRAFFIC

DETOUR: (3)

FROM NB RED HILL Ave TO WB PAULARINO Ave
WB PAULARINO Ave TO NB ROUTE 55 ON-RAMP
NB ROUTE 55 TO EB MACARTHUR Blvd
EB MACARTHUR Blvd TO SB RED HILL Ave

SB RED HILL AVE TRAFFIC

DETOUR: (4)

FROM SB MAIN St TO NB RED HILL Ave
NB RED HILL Ave TO WB MACARTHUR Blvd
WB MACARTHUR Blvd TO SB ROUTE 55 ON-RAMP
SB ROUTE 55 EXIT TO BAKER St/PAULARINO Ave
EB PAULARINO Ave TO SB RED HILL Ave

SB RED HILL AVE TRAFFIC

DETOUR: (5)

FROM SB RED HILL Ave TO NB MAIN St
NB MAIN St TO EB MACARTHUR Blvd
EB MACARTHUR Blvd SB ROUTE 55 ONRAMP
SB ROUTE 55 EXIT TO BAKER St/PAULARINO Ave
EB PAULARINO Ave TO SB RED HILL Ave

APPROVED FOR TRAFFIC HANDLING WORK ONLY

TRAFFIC HANDLING PLAN
(DETOUR)

NO SCALE

TH-2

STATE OF CALIFORNIA - DEPARTMENT OF TRANSPORTATION
Caltrans® DESIGN

FUNCTIONAL SUPERVISOR: MATTHEW Q. CUGINI
CALCULATED-DESIGNED BY: DAVID LAM
CHECKED BY: MATTHEW Q. CUGINI
REVISED BY
DATE REVISED

LAST REVISION 07-22-14
DATE PLOTTED => 10-JUL-2015
TIME PLOTTED => 13:32

Dist	COUNTY	ROUTE	POST MILES TOTAL PROJECT	SHEET No.	TOTAL SHEETS
12	Ora	405	8.4	32	142

REGISTERED CIVIL ENGINEER 4-22-15 DATE

4-27-15
PLANS APPROVAL DATE

REGISTERED PROFESSIONAL ENGINEER
DAVID H. LAM
No. C63493
Exp. 09-30-16
CIVIL
STATE OF CALIFORNIA

THE STATE OF CALIFORNIA OR ITS OFFICERS OR AGENTS SHALL NOT BE RESPONSIBLE FOR THE ACCURACY OR COMPLETENESS OF SCANNED COPIES OF THIS PLAN SHEET.

SB RTE 55 TO SB RTE 405
CONNECTOR CLOSED
USE DETOUR

PCMS-3

C

CLOSURE No. 2

SB ROUTE 55 TO SB ROUTE 405 CONNECTOR

DETOUR: 6

* CONTINUE SB ROUTE 55 TO EXIT 5B
* EXIT BAKER St/PAULARINO Ave TO EB PAULARINO Ave
* WB PAULARINO Ave TO SB ROUTE 405 ON-RAMP

CLOSURE No. 2A

SB ROUTE 55 TO JOHN WAYNE AIRPORT CONNECTOR

DETOUR: 6A

* CONTINUE SB ROUTE 55 TO SB 405 CONNECTOR AND MERGE TO SB ROUTE 405
* EXIT MACARTHUR BLVD AND FOLLOW AIRPORT SIGNS

TRAFFIC HANDLING PLAN
(DETOUR)

NO SCALE

TH-3

APPROVED FOR TRAFFIC HANDLING WORK ONLY

STATE OF CALIFORNIA - DEPARTMENT OF TRANSPORTATION
Caltrans
DESIGN

FUNCTIONAL SUPERVISOR: MATTHEW Q. CUGINI

CALCULATED-DESIGNED BY: DAVID LAM
CHECKED BY: MATTHEW Q. CUGINI

REVISED BY
DATE REVISED

LAST REVISION 07-22-14
DATE PLOTTED => 10-JUL-2015
TIME PLOTTED => 13:32

Dist	COUNTY	ROUTE	POST MILES TOTAL PROJECT	SHEET No.	TOTAL SHEETS
12	Ora	405	8.4	33	142

REGISTERED CIVIL ENGINEER 4-22-15 DATE

4-27-15
PLANS APPROVAL DATE

REGISTERED PROFESSIONAL ENGINEER
DAVID H. LAM
No. C63493
Exp. 09-30-16
CIVIL
STATE OF CALIFORNIA

THE STATE OF CALIFORNIA OR ITS OFFICERS OR AGENTS SHALL NOT BE RESPONSIBLE FOR THE ACCURACY OR COMPLETENESS OF SCANNED COPIES OF THIS PLAN SHEET.

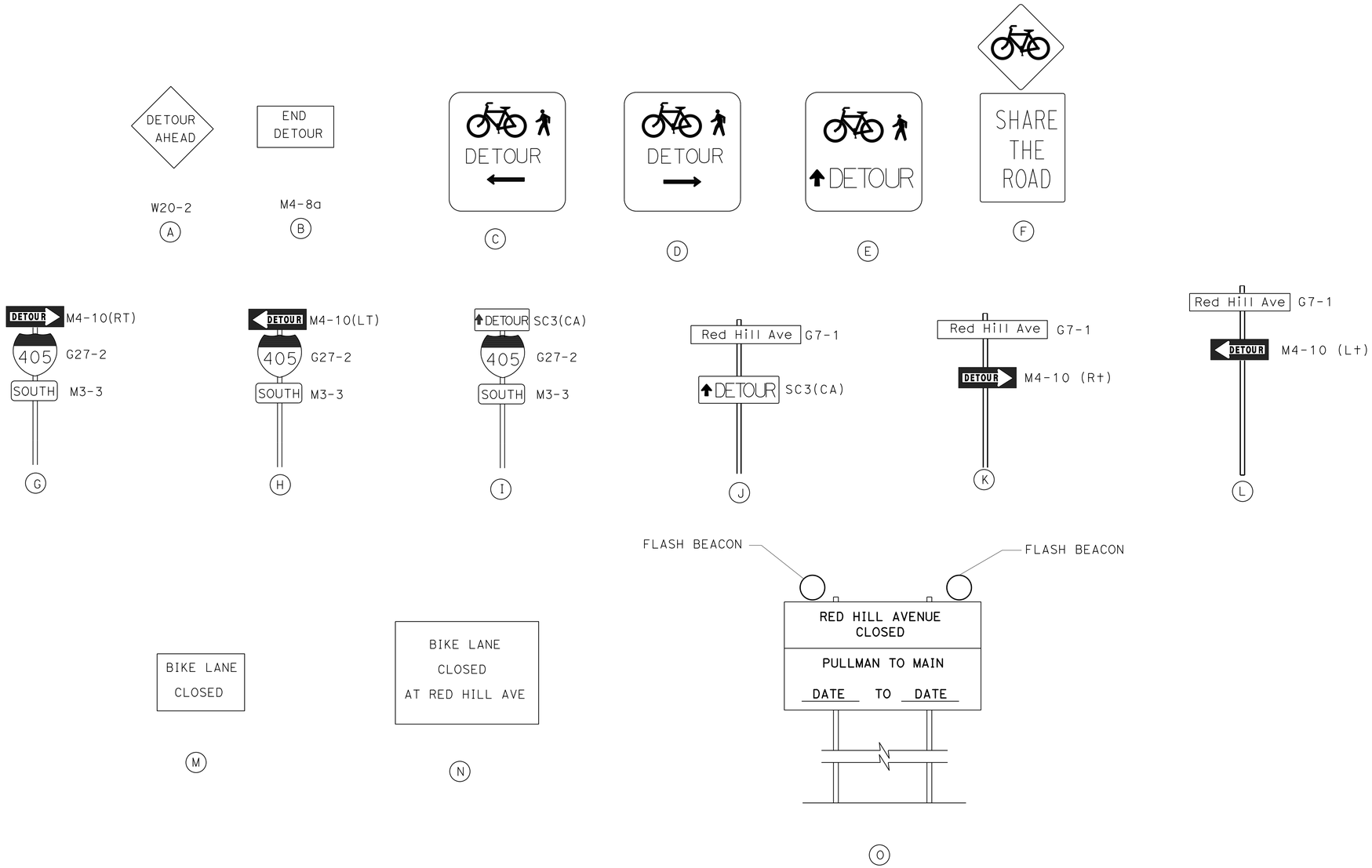

TRAFFIC HANDLING DETAIL

NO SCALE

THD-1

REVISED BY	DATE REVISED

CALCULATED-DESIGNED BY	CHECKED BY
DAVID LAM	MATTHEW Q. CUGINI

FUNCTIONAL SUPERVISOR: MATTHEW Q. CUGINI

STATE OF CALIFORNIA - DEPARTMENT OF TRANSPORTATION

Caltrans® DESIGN

LAST REVISION 07-29-14 | DATE PLOTTED => 10-JUL-2015 | TIME PLOTTED => 13:32

Dist	COUNTY	ROUTE	POST MILES TOTAL PROJECT	SHEET No.	TOTAL SHEETS
12	Ora	405	8.4	34	142

REGISTERED CIVIL ENGINEER 4-22-15 DATE

4-27-15
PLANS APPROVAL DATE

REGISTERED PROFESSIONAL ENGINEER
DAVID H. LAM
No. C63493
Exp. 09-30-16
CIVIL
STATE OF CALIFORNIA

THE STATE OF CALIFORNIA OR ITS OFFICERS OR AGENTS SHALL NOT BE RESPONSIBLE FOR THE ACCURACY OR COMPLETENESS OF SCANNED COPIES OF THIS PLAN SHEET.

STATIONARY MOUNTED CONSTRUCTION AREA SIGNS **

SIGN SYMBOL	SIGN CODE	PANEL SIZE (in)	No. OF SIGNS	No. OF POST AND SIZE (in)	SIGN MESSAGE
A	W20-2	48 x 48	8	1 - 6 x 6	
B	M4-8a	20 x 16	5	1 - 6 x 6	
C	SPECIAL	30 x 24	5	1 - 6 x 6	SEE THD-1 FOR DETAIL
D	SPECIAL	30 x 24	7	1 - 6 x 6	SEE THD-1 FOR DETAIL
E	SPECIAL	30 x 24	11	1 - 6 x 6	SEE THD-1 FOR DETAIL
F	W11-1	18 x 18	9	1 - 6 x 6	SEE THD-1 FOR DETAIL
	W16-1	18 x 24			
G	M4-10(Rt)	48 X 18	1	1 - 6 x 6	SEE THD-1 FOR DETAIL
	G27-2	42 x 36			
	M3-3	30 x 15			
H	M4-10(Lt)	48 X 18	2	1 - 6 x 6	SEE THD-1 FOR DETAIL
	G27-2	42 x 36			
	M3-3	30 x 15			
I	SC3(CA)	48 X 18	4	1 - 6 x 6	SEE THD-1 FOR DETAIL
	G28-1	42 x 36			
	M3-3	30 x 15			
J	G7-1	72 x 18	10	1 - 6 x 6	SEE THD-1 FOR DETAIL
	SC3(CA)	48 X 18			
K	G7-1	72 x 18	11	1 - 6 x 6	SEE THD-1 FOR DETAIL
	M4-10(Rt)	48 X 18			
L	G7-1	72 x 18	7	1 - 6 x 6	SEE THD-1 FOR DETAIL
	M4-10(Lt)	48 X 18			
M	SPECIAL	30 X 18	5	1 - 6 x 6	SEE THD-1 FOR DETAIL
N	SPECIAL	36 X 24	1	1 - 6 x 6	SEE THD-1 FOR DETAIL
O	SPECIAL	120 x 60	7	2 - 6 x 6	SEE THD-1 FOR DETAIL

**: FOR ADDITIONAL CONSTRUCTION AREA SIGNS SEE SHEETS CS-1 AND SCQ-2

PORTABLE CHANGABLE MESSAGE SIGN

SIGN SYMBOL	SIGN CODE	SHEET No.	SIGN MESSAGE
A	PCMS-1	TH-2	CALTRANS PROJECT RED HILL AVENUE CLOSED USE DETOUR
B	PCMS-2	TH-2	CALTRANS PROJECT RED HILL AVENUE CLOSED USE DETOUR
C	PCMS-3	TH-3	SB RTE 55 TO SB RTE 405 CONNECTOR CLOSED USE DETOUR
D	PCMS-4	SC-4	ROAD CLOSED AHEAD USE ALTERNATIVE ROUTE
E	PCMS-5	SC-5	ROAD CLOSED AHEAD USE ALTERNATIVE ROUTE

TRAFFIC HANDLING QUANTITIES

NO SCALE

THQ-1

APPROVED FOR TRAFFIC HANDLING WORK ONLY

STATE OF CALIFORNIA - DEPARTMENT OF TRANSPORTATION
Caltrans
DESIGN

FUNCTIONAL SUPERVISOR: MATTHEW Q. CUGINI
CALCULATED-DESIGNED BY: DAVID LAM
CHECKED BY: MATTHEW Q. CUGINI
REVISED BY
DATE REVISED

LAST REVISION 07-29-14
DATE PLOTTED => 10-JUL-2015
TIME PLOTTED => 13:32

Dist	COUNTY	ROUTE	POST MILES TOTAL PROJECT	SHEET No.	TOTAL SHEETS
12	Ora	405	8.4	35	142

REGISTERED CIVIL ENGINEER 4-22-15 DATE

4-27-15
PLANS APPROVAL DATE

REGISTERED PROFESSIONAL ENGINEER
LAWRENCE LE
No. C57405
Exp. 12-31-15
CIVIL
STATE OF CALIFORNIA

THE STATE OF CALIFORNIA OR ITS OFFICERS OR AGENTS SHALL NOT BE RESPONSIBLE FOR THE ACCURACY OR COMPLETENESS OF SCANNED COPIES OF THIS PLAN SHEET.

NOTES:

1. FOR ACCURATE RIGHT OF WAY DATA, CONTACT RIGHT OF WAY ENGINEERING AT THE DISTRICT OFFICE.
2. EXISTING STRIPES SHALL BE REMOVED IN SUCH A WAY THAT DOES NOT DAMAGE THE ROADWAY SURFACE.
3. NEW STRIPES TO BE PLACED AT THE SAME ALIGNMENT AS OF EXISTING STRIPES.
4. TRAFFIC STRIPE AND PAVEMENT MARKINGS SHALL BE THERMOPLASTIC (ENHANCED WET NIGHT VISIBILITY), UNLESS OTHERWISE NOTED.

LEGENDS:

B	"BIKE" PAVEMENT MARKING
L	"LANE" PAVEMENT MARKING
S	"SIGNAL" PAVEMENT MARKINS
A	"AHEAD" PAVEMENT MARKING
T	"STOP" PAVEMENT MARKINS
⊢	BEGIN/END PAVEMENT DELINEATION
⊢⊣	CHANGE IN PAVEMENT DELINEATION DETAILS
No.	PAVEMENT DELINEATION DETAIL NUMBER

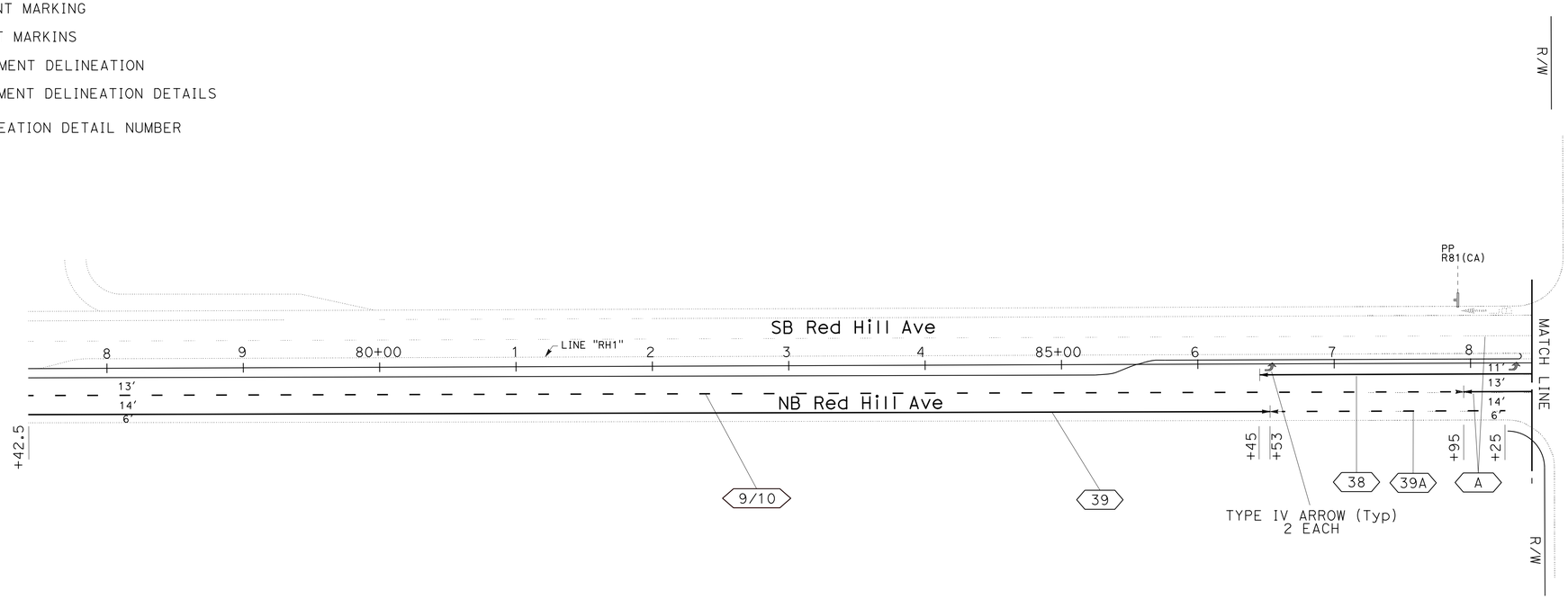

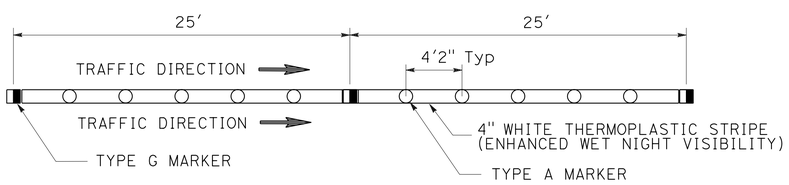

DETAIL A
(NO SCALE)

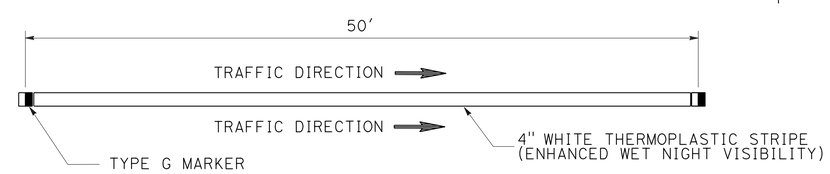

DETAIL B
(NO SCALE)

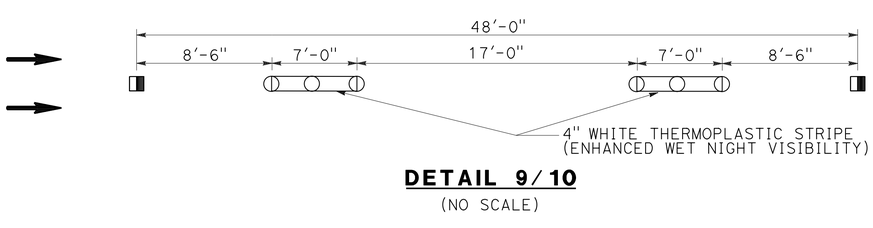

DETAIL 9/10
(NO SCALE)

PAVEMENT DELINEATION AND SIGN PLAN

SCALE: 1" = 50'

PD-1

APPROVED FOR PAVEMENT DELINEATION WORK ONLY

STATE OF CALIFORNIA - DEPARTMENT OF TRANSPORTATION
Caltrans®
DESIGN "F"
FUNCTIONAL SUPERVISOR: KAMRAN MAZHAR
CALCULATED-DESIGNED BY: LAWRENCE LE
CHECKED BY
REVISED BY
DATE REVISED

LAST REVISION 11-19-14
DATE PLOTTED => 10-JUL-2015
TIME PLOTTED => 13:32

Dist	COUNTY	ROUTE	POST MILES TOTAL PROJECT	SHEET No.	TOTAL SHEETS
12	Ora	405	8.4	36	142

REGISTERED CIVIL ENGINEER 4-22-15 DATE

4-27-15
PLANS APPROVAL DATE

REGISTERED PROFESSIONAL ENGINEER
LAWRENCE LE
No. C57405
Exp. 12-31-15
CIVIL
STATE OF CALIFORNIA

THE STATE OF CALIFORNIA OR ITS OFFICERS OR AGENTS SHALL NOT BE RESPONSIBLE FOR THE ACCURACY OR COMPLETENESS OF SCANNED COPIES OF THIS PLAN SHEET.

NOTES:

1. FOR ACCURATE RIGHT OF WAY DATA, CONTACT RIGHT OF WAY ENGINEERING AT THE DISTRICT OFFICE.

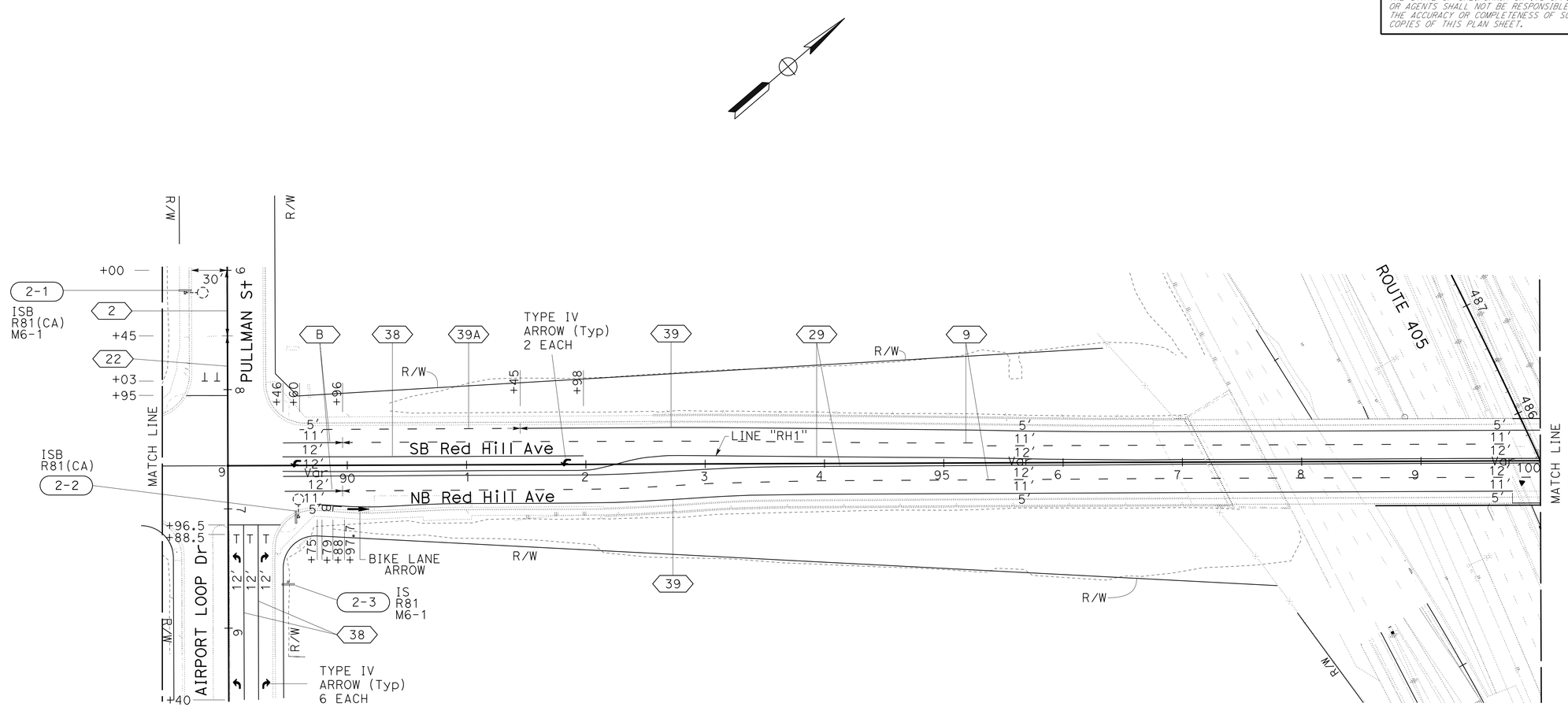

PAVEMENT DELINEATION AND SIGN PLAN

SCALE: 1" = 50'

APPROVED FOR PAVEMENT DELINEATION WORK ONLY

PD-2

STATE OF CALIFORNIA - DEPARTMENT OF TRANSPORTATION
Caltrans®
DESIGN "F"

FUNCTIONAL SUPERVISOR: KAMRAN MAZHAR
CALCULATED-DESIGNED BY: LAWRENCE LE
CHECKED BY
REVISED BY
DATE REVISED

LAST REVISION 11-19-14
DATE PLOTTED => 10-JUL-2015
TIME PLOTTED => 13:32

Dist	COUNTY	ROUTE	POST MILES TOTAL PROJECT	SHEET No.	TOTAL SHEETS
12	Ora	405	8.4	37	142

REGISTERED CIVIL ENGINEER 4-22-15 DATE

4-27-15
PLANS APPROVAL DATE

REGISTERED PROFESSIONAL ENGINEER
LAWRENCE LE
No. C57405
Exp. 12-31-15
CIVIL
STATE OF CALIFORNIA

THE STATE OF CALIFORNIA OR ITS OFFICERS OR AGENTS SHALL NOT BE RESPONSIBLE FOR THE ACCURACY OR COMPLETENESS OF SCANNED COPIES OF THIS PLAN SHEET.

NOTES:

1. FOR ACCURATE RIGHT OF WAY DATA, CONTACT RIGHT OF WAY ENGINEERING AT THE DISTRICT OFFICE.

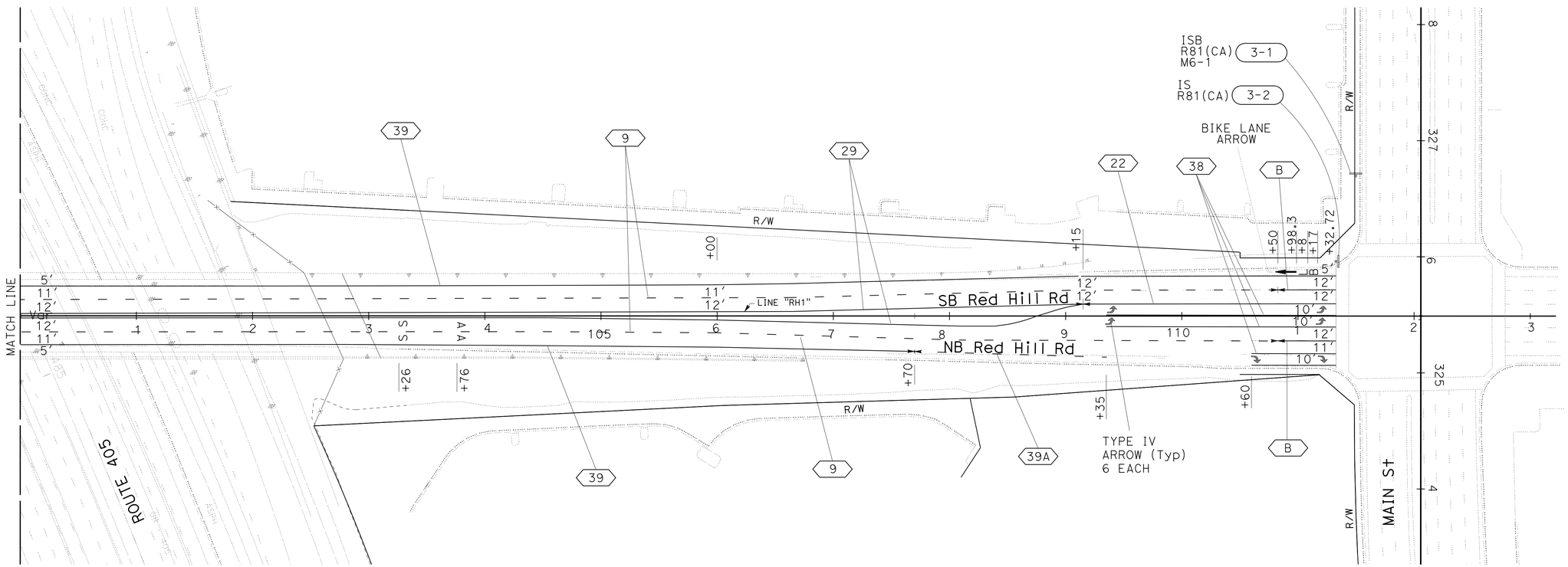

PAVEMENT DELINEATION AND SIGN PLAN

SCALE: 1" = 50'

PD-3

APPROVED FOR PAVEMENT DELINEATION WORK ONLY

STATE OF CALIFORNIA - DEPARTMENT OF TRANSPORTATION
Caltrans®
DESIGN "F"

FUNCTIONAL SUPERVISOR: KAMRAN MAZHAR
CALCULATED-DESIGNED BY: LAWRENCE LE
CHECKED BY
REVISED BY
DATE REVISED

LAST REVISION 11-19-14
DATE PLOTTED => 10-JUL-2015
TIME PLOTTED => 13:32

BORDER LAST REVISED 7/2/2010
USERNAME => s111173
DGN FILE => 1214000057na003.dgn
RELATIVE BORDER SCALE IS IN INCHES 0 1 2 3
UNIT 3004
PROJECT NUMBER & PHASE 12140000571

Dist	COUNTY	ROUTE	POST MILES TOTAL PROJECT	SHEET No.	TOTAL SHEETS
12	Ora	405	8.4	38	142

REGISTERED CIVIL ENGINEER 4-22-15 DATE

4-27-15
PLANS APPROVAL DATE

REGISTERED PROFESSIONAL ENGINEER LAWRENCE LE No. C57405 Exp. 12-31-15 CIVIL STATE OF CALIFORNIA

THE STATE OF CALIFORNIA OR ITS OFFICERS OR AGENTS SHALL NOT BE RESPONSIBLE FOR THE ACCURACY OR COMPLETENESS OF SCANNED COPIES OF THIS PLAN SHEET.

PAVEMENT DELINEATION QUANTITIES (INSTALL)

SHEET No.	ALIGNMENT AND STATIONS	3" PAINT TRAFFIC STRIPE (BLACK) DETAIL 27, 29	THERMOPLASTIC TRAFFIC STRIPE (ENHANCED WET-NIGHT VISIBILITY)										THERMOPLASTIC PAVEMENT MARKING (ENHANCED WET-NIGHT VISIBILITY)			PAVEMENT MARKER			
			DETAIL 2 4" YELLOW (BROKEN 17-7)	DETAIL 9 4" WHITE (BROKEN 17-7)	DETAIL 9/10 4" WHITE (BROKEN 17-7)	DETAIL A 4" SOLID WHITE	DETAIL B 4" SOLID WHITE	DETAIL 22 4" YELLOW SOLID (2 LINES)	DETAIL 29 4" YELLOW SOLID (4 LINES)	DETAIL 39 6" SOLID WHITE	DETAIL 39A 6" WHITE (BROKEN 8-4)	DETAIL 38 8" SOLID WHITE	STOP LINE	WORDS	ARROWS	(NON-REFLECTIVE)	(RETRO-REFLECTIVE)		
																DETAIL 10	DETAILS 22, 29	DETAILS A, B 9, 10, 38	DETAILS 2, 26, 27
																TYPE A	TYPE D	TYPE G	TYPE H
		LF	LF	LF	LF	LF	LF	LF	LF	LF	LF	LF	SQFT	SQFT	SQFT	EA	EA	EA	EA
PD-1	"RH1" Line- Sta 77+42.5 to Sta 88+45				1153	100				911	172	200			30	145		43	24
PD-2	"RH1" Line- Sta 89+46 to Sta 100+00	2128		2008			100		4256	1880	185	252		11	37		91	62	
	"AL2" Line- Sta 7+95 to Sta 9+00	100	55					100					35	44					10
	"AL2" Line- Sta 5+40 to Sta 6+96.5											293	78	110	60			15	
PD-3	"RH1" Line Sta 100+00 to Sta 111+32.72	1850		2265			146	218	3700	1903	363	469		137	97		112		77
	SUBTOTAL	4078	55	4273	1153	100	246	318	7956	4694	720	1214	639			145	203	120	111
	TOTAL FROM SHEET SCQ-1																322	136	77
	GRAND TOTAL	4078	5481			8620				4694	720	1214	639			145	969		

PAVEMENT DELINEATION QUANTITIES (REMOVE)

SHEET No.	ALIGNMENT AND STATIONS	REMOVE PAINTED 3" TRAFFIC STRIPE (BLACK) DETAIL 27, 29	REMOVE THERMOPLASTIC TRAFFIC STRIPE										REMOVE THERMOPLASTIC PAVEMENT MARKING			REMOVE PAVEMENT MARKER			
			DETAIL 9 4" WHITE (BROKEN 17-7)	DETAIL 9/10 4" WHITE (BROKEN 17-7)	DETAIL A 4" SOLID WHITE	DETAIL B 4" SOLID WHITE	DETAIL 39 6" SOLID WHITE	DETAIL 39A 6" WHITE (BROKEN 8-4)	DETAIL 38 8" SOLID WHITE	DETAIL 2 4" BROKEN YELLOW (HAZARDOUS WASTE)	DETAIL 22 4" YELLOW SOLID (2 LINES) (HAZARDOUS WASTE)	DETAIL 29 4" YELLOW SOLID (4 LINES) (HARZARDOUS WASTE)	STOP LINE	ARROWS	WORDS	(NON-REFLECTIVE)	(RETRO-REFLECTIVE)		
																DETAIL 10	DETAILS 22, 29	DETAILS A, B 9, 10, 38	DETAILS 2, 26, 27
																TYPE A	TYPE D	TYPE G	TYPE H
		LF	LF	LF	LF	LF	LF	LF	LF	LF	LF	LF	SQFT	SQFT	SQFT	EA	EA	EA	EA
PD-1	"RH1" Line- Sta 77+42.5 to Sta 88+45			307	50		1336	258	400						30	145		43	24
PD-2	"RH1" Line- Sta 89+46 to Sta 100+00	2128	586			100	2820	62	504			4256		11	37		91	62	
	"AL2" Line- Sta 7+95 to Sta 9+00	100						100		17			35	44					10
	"AL2" Line- Sta 5+40 to Sta 6+96.5											586	78	110	60			15	
PD-3	"RH1" Line Sta 854+00 to Sta 867+00	1850	661			146	2855	121	937		218	3700		137	97		112		77
	SUBTOTAL	4078	1247	307	50	246	7011	541	1841	17	218	8542	113	302	224	145	203	120	111
	TOTAL FROM SHEET SCQ-1	25687															322	136	77
	GRAND TOTAL	29765	11243							8777			639			1114			

PAVEMENT DELINEATION QUANTITIES

PDQ-1

STATE OF CALIFORNIA - DEPARTMENT OF TRANSPORTATION
Caltrans® DESIGN "F"
FUNCTIONAL SUPERVISOR: KAMRAN MAZHAR
CALCULATED-DESIGNED BY: LAWRENCE LE
CHECKED BY
REVISED BY
DATE REVISED

LAST REVISION 11-19-14
DATE PLOTTED => 10-JUL-2015
TIME PLOTTED => 13:32

Dist	COUNTY	ROUTE	POST MILES TOTAL PROJECT	SHEET No.	TOTAL SHEETS
12	Ora	405	8.4	39	142

REGISTERED CIVIL ENGINEER 4-22-15 DATE

4-27-15
PLANS APPROVAL DATE

REGISTERED PROFESSIONAL ENGINEER
LAWRENCE LE
No. C57405
Exp. 12-31-15
CIVIL
STATE OF CALIFORNIA

THE STATE OF CALIFORNIA OR ITS OFFICERS OR AGENTS SHALL NOT BE RESPONSIBLE FOR THE ACCURACY OR COMPLETENESS OF SCANNED COPIES OF THIS PLAN SHEET.

ROADSIDE SIGN QUANTITIES

SHEET No.	SIGN No.	SIGN CODE	PANEL SIZE (IN x IN)	POST SIZE & LENGTH 4" x 4" FT	ROADSIDE SIGN ONE POST EA	INSTALL SIGN (STRAP & SADDLE BRACKET METHOD) EA	REMARK
PD-2	2-1	R81(CA)	24 x 18			1	
		M6-1	21 x 15			1	
	2-2	R81(CA)	24 x 18			1	
	2-3	R81(CA)	24 x 18	13.5	1		
		M6-1	21 x 15				
PD-3	3-1	R81(CA)	24 x 18	13.5	1		
		M6-1	21 x 15				
	3-2	R81(CA)	24 x 18			1	
	TOTAL				2	4	

(N) - NOT A SEPARATE PAY ITEM, FOR INFORMATION ONLY.

ROADSIDE SIGN PANEL QUANTITIES

SHEET No.	SIGN No.	SIGN CODE	PANEL SIZE	SIGN PANEL (EA)	SINGLE FACED	BACKGROUND SHEETING COLOR	BACKGROUND RETROREFLECTIVE ASTM TYPE	LEGENDS SHEETING COLOR	LEGENDS RETROREFLECTIVE ASTM TYPE	PROTECTIVE FILM STANDARD	FURNISH SINGLE SHEET ALUMINUM SIGN 0.063" (UNFRAMED) SQFT
PD-2	2-1	R81(CA)	24 x 18	1	1	W	VIII	B	Non	X	3
		M6-1	21 x 15	1	1	W	VIII	B	Non	X	2.19
	2-2	R81(CA)	24 x 18	1	1	W	VIII	B	Non	X	3
	2-3	R81(CA)	24 x 18	1	1	W	VIII	B	Non	X	3
		M6-1	21 x 15	1	1	W	VIII	B	Non	X	2.19
PD-3	3-1	R81(CA)	24 x 18	1	1	W	VIII	B	Non	X	3
		M6-1	21 x 15	1	1	W	VIII	B	Non	X	2.19
	3-2	R81(CA)	24 x 18	1	1	W	VIII	B	Non	X	3
SHEET TOTAL											116.75

LEGENDS:

B = BLACK Non-Reflective

W = WHITE

SIGN QUANTITIES

SQ-1

STATE OF CALIFORNIA - DEPARTMENT OF TRANSPORTATION

Caltrans

DESIGN "F"

FUNCTIONAL SUPERVISOR: KAMRAN MAZHAR

CALCULATED-DESIGNED BY: LAWRENCE LE

CHECKED BY

REVISED BY

DATE REVISED

LAST REVISION 11-19-14

DATE PLOTTED => 10-JUL-2015
TIME PLOTTED => 13:32

Dist	COUNTY	ROUTE	POST MILES TOTAL PROJECT	SHEET No.	TOTAL SHEETS
12	Ora	405	8.4	40	142

REGISTERED CIVIL ENGINEER 4-22-15 DATE

4-27-15
PLANS APPROVAL DATE

REGISTERED PROFESSIONAL ENGINEER DAVID H. LAM No. C63493 Exp. 09-30-16 CIVIL STATE OF CALIFORNIA

THE STATE OF CALIFORNIA OR ITS OFFICERS OR AGENTS SHALL NOT BE RESPONSIBLE FOR THE ACCURACY OR COMPLETENESS OF SCANNED COPIES OF THIS PLAN SHEET.

REMOVE GUARDRAIL

SHEET No.	LOCATION	STATION LIMITS	REMOVE GUARDRAIL
			LF
L-1	NB RED HILL Ave	"RH1" 91+40.16 TO "RH1" 92+15.50	75
		TOTAL	75

REMOVE MSE WALL, SIDEWALKS, CONCRETE BARRIER, TUBULAR HANDRAILING & BARRIER SLAB

SHEET No.	LOCATION	STATION LIMITS	REMOVE MSE WALL	REMOVE CONCRETE SIDEWALK	REMOVE CONCRETE BARRIER	REMOVE BARRIER SLAB	REMOVE TUBULAR HANDRAILING	REMOVE CHAIN LINK FENCE	REMOVE ASPHALT CONCRETE PAVEMENT	REMOVE SOIL NAIL ANCHORS	REMOVE RETAINING WALL
			SQFT	SQYD	LF	SQFT	LF	LF	SQFT	EA	LF
L-1	NB RED HILL AVE	"RH1" 92+15.50 TO "RH1" 97+38.53	5425	291	524	3668	524		31443	332	
L-1	SB RED HILL AVE	"RH1" 92+56.14 TO "RH1" 97+03.95	4703	249	448	3136	448			279	60
L-1	SB RED HILL AVE	"RH1" 96+08.75 TO "RH1" 96+90.00						130			
L-1	NB RED HILL AVE	"RH1" 97+28.60 TO "RH1" 97+96.25						110			
		TOTAL	10128	540	975	6804	975	240	31443	611	60

ROADWAY QUANTITIES

SHEET No.	LOCATION	STATION LIMITS	MINOR CONCRETE (CURB AND SIDEWALK)		ROADWAY EXCAVATION	IMPORTED BORROW	TOP SOIL	RUBBERIZED HMA (GAP GRADE)	HMA (TYPE A)	CLASS 2 AGGREGATE BASE	COLD PLANE AC PAVEMENT	CHAIN LINK FENCE (TYPE CL-6)
			CURB	SIDEWALK								
			CY	CY	CY	CY	CY	TON	TON	CY	SQYD	LF
L-1	SB RED HILL Ave	"RH1" 92+56.14 To "RH1" 97+03.95	30.36	890.12	27124	40337	1500	540	2200	3520		
L-1	NB RED HILL Ave	"RH1" 92+15.50 To "RH1" 97+38.53	33.36	946.22								
L-1	RED HILL Ave	"RH1" 89+57.37 To "RH1" 92+00.00						260			1800	
L-1	SB 55 TO SB 405 Conn	"Conn1" 1+80 To "Conn1" 3+00										
L-1	SB RED HILL AVE	"RH1" 96+08.75 TO "RH1" 96+90.00										130
L-1	NB RED HILL AVE	"RH1" 97+28.60 TO "RH1" 97+96.25										110
		SUBTOTAL	63.72	1836.34	27124	40337	1500	800	2200	3520	1800	240
TOTAL FROM SHEET U-3						32						
TOTAL FROM SHEET LQ-1										47		
		GRAND TOTAL	1900.06		27124	40369	1500	800	2200	3567	1800	240

SUMMARY OF QUANTITIES

Q-1

REVISED BY | DATE REVISED
DAVID LAM | MATTHEW CUGINI
CALCULATED-DESIGNED BY | CHECKED BY
FUNCTIONAL SUPERVISOR | MATTHEW CUGINI
STATE OF CALIFORNIA - DEPARTMENT OF TRANSPORTATION
Caltrans
DESIGN

LAST REVISION 07-24-14 | DATE PLOTTED => 10-JUL-2015 | TIME PLOTTED => 13:32

Dist	COUNTY	ROUTE	POST MILES TOTAL PROJECT	SHEET No.	TOTAL SHEETS
12	Ora	405	8.4	41	142

LICENSED LANDSCAPE ARCHITECT 4-22-15

4-27-15
PLANS APPROVAL DATE

LICENSED LANDSCAPE ARCHITECT STEPHEN SHUN-MIN SU NO. 4838 Expiration Date 9-30-2015 Renewal Date 4-22-2015 Date STATE OF CALIFORNIA

THE STATE OF CALIFORNIA OR ITS OFFICERS OR AGENTS SHALL NOT BE RESPONSIBLE FOR THE ACCURACY OR COMPLETENESS OF SCANNED COPIES OF THIS PLAN SHEET.

NOTE: FOR ACCURATE RIGHT OF WAY DATA, CONTACT RIGHT OF WAY ENGINEERING AT THE DISTRICT OFFICE.

ABBREVIATIONS

RSAGD - RISER SPRINKLER ASSEMBLY (GEAR DRIVEN)
PSAGD - POP-UP SPRINKLER ASSEMBLY (GEAR DRIVEN)
RSARN - RISER SPRINKLER ASSEMBLY (ROTARY NOZZLE)
PSARN - POP-UP SPRINKLER ASSEMBLY (ROTARY NOZZLE)
RSA - RISER SPRINKLER ASSEMBLY
PSA - POP-UP SPRINKLER ASSEMBLY
TWSA - TREE WELL SPRINKLER ASSEMBLY

IRRIGATION LEGEND

SYMBOL	DESCRIPTION	SPRAY PATTERN	OPERATING PRESSURE (psi)	PRESSURE COMPENSATING	PLUS/MINUS 5% ② DISCHARGE: GALLONS PER MINUTE (GPM)	GALLONS PER HOUR (GPH)	RADIUS (ft)	WIDTH x LENGTH (ft)	FLOW SHUTOFF DEVICE	SPRINLER ASSEMBLY: RISER: TYPE	MATERIAL: PLASTIC	GALVANIZED	SIZE (IPS INCH)	HEIGHT (INCH)	POP-UP: TYPE ④	INLET CONNECTION (NPT INCH)	SPRINKLER PROTECTOR (TYPE)	TREE WELL: HEIGHT (INCH)	REMARKS
①	RISER SPRINKLER ASSEMBLY (GEAR DRIVEN))	Q/ TH/ H	35	X	0.88/ 1.21/ 1.73	--	24	--	--	IV	X	--	¾"	18"	--	¾"	--	--	
②	POP-UP SPRINKLER ASSEMBLY (GEAR DRIVEN)	Q/ TH/ H	35	X	0.88/ 1.21/ 1.73	--	24	--	--	--	--	--	--	--	I	¾"	--	--	⑥
③	RISER SPRINKLER ASSEMBLY (GEAR DRIVEN))	Q/ TH/ H	35	X	1.23/ 1.62/ 2.59	--	30	--	--	IV	X	--	¾"	18"	--	¾"	--	--	
④	POP-UP SPRINKLER ASSEMBLY (GEAR DRIVEN)	Q/ TH/ H	35	X	1.23/ 1.62/ 2.59	--	30	--	--	--	--	--	--	--	I	¾"	--	--	⑥
⑤	RISER SPRINKLER ASSEMBLY (GEAR DRIVEN))	Q/ TH/ H	35	X	1.67/ 2.15/ 3.33	--	34	--	--	IV	X	--	¾"	18"	--	¾"	--	--	
⑥	POP-UP SPRINKLER ASSEMBLY (GEAR DRIVEN)	Q/ TH/ H	35	X	1.67/ 2.15/ 3.33	--	34	--	--	--	--	--	--	--	I	¾"	--	--	⑥
△	RISER SPRINKLER ASSEMBLY (WITH ROTARY NOZZLE)	Q/ TH/ H	35	--	0.43/ 0.58/ 0.86	--	16	--	--	IV	X	--	½"	12"	--	½"	--	--	
▲	POP-UP SPRINKLER ASSEMBLY (WITH ROTARY NOZZLE)	Q/ TH/ H	35	X	0.43/ 0.58/ 0.86	--	16	--	--	--	--	--	--	--	I	½"	--	--	⑥
□	RISER SPRINKLER ASSEMBLY (WITH ROTARY NOZZLE)	Q/ TH/ H	35	--	0.81/ 1.08/ 1.62	--	22	--	--	IV	X	--	½"	12"	--	½"	--	--	
■	POP-UP SPRINKLER ASSEMBLY (WITH ROTARY NOZZLE)	Q/ TH/ H	35	X	0.81/ 1.08/ 1.62	--	22	--	--	--	--	--	--	--	I	½"	--	--	⑥
○	RISER SPRINKLER ASSEMBLY	Q/ TH/ H	30	--	0.2	--	5	--	--	II	X	--	½"	6"	--	½"	--	--	⑦
●	TREE WELL SPRINKLER ASSEMBLY	Q/ TH/ H	30	--	0.2	--	5	--	--	II	X	--	½"	18"	--	½"	--	--	⑦

APPLICABLE WHEN CIRCLED BELOW:

1 - SEE SPECIAL PROVISIONS.
2 - IF A PRESSURE COMPENSATING DEVICE IS SPECIFIED, THE DISCHARGE AND RADII SHOWN REFLECT ITS USE.
3 - VINYL-COATED CAST IRON HOUSING.
④ - SWING JOINTS REQUIRED ADJACENT TO SHOULDERS, CURBS, SIDEWALKS, AND DIKES.
5 - UNLESS OTHERWISE SHOWN ON PLANS.
⑥ - Use 12" Pop-up.
⑦ - 2 SPRINKLER ASSEMBLIES FOR EACH ITALIAN CYPRESS TREE AS SHOWN ON PLANS.

X IN BOX DENOTES REQUIREMENT

STATE OF CALIFORNIA - DEPARTMENT OF TRANSPORTATION
Caltrans® LANDSCAPE ARCHITECTURE
SENIOR LANDSCAPE ARCHITECT: ERIC DICKSON
CALCULATED-DESIGNED BY: KEN CHAN
CHECKED BY: STEPHEN SU
REVISED BY
DATE REVISED

IRRIGATION LEGEND
ISS-1

LAST REVISION 02-10-15
DATE PLOTTED => 10-JUL-2015
TIME PLOTTED => 13:32

Dist	COUNTY	ROUTE	POST MILES TOTAL PROJECT	SHEET No.	TOTAL SHEETS
12	Ora	405	8.4	42	142

4-22-15
LICENSED LANDSCAPE ARCHITECT

4-27-15
PLANS APPROVAL DATE

LICENSED LANDSCAPE ARCHITECT STEPHEN SHUN-MIN SU NO. 4838 Expiration Date 9-30-2015 Renewal Date 4-22-2015 Date STATE OF CALIFORNIA

THE STATE OF CALIFORNIA OR ITS OFFICERS OR AGENTS SHALL NOT BE RESPONSIBLE FOR THE ACCURACY OR COMPLETENESS OF SCANNED COPIES OF THIS PLAN SHEET.

NOTE: FOR ACCURATE RIGHT OF WAY DATA, CONTACT RIGHT OF WAY ENGINEERING AT THE DISTRICT OFFICE.

WATER METER INFORMATION (SERVING 'A' SYSTEM) ADDRESS: 3190 RED HILL METER#: #60238347	
DOMESTIC WATER METER SIZE	2"
STATIC PRESSURE @ P.O.C.	85 psi
ELEVATION @ P.O.C.	35 Feet
DESIGN PRESSURE @ ELEV. 76 Feet	35 psi
AREA IRRIGATED	0.5 Acres
MAXIMUM FLOW	30 gpm

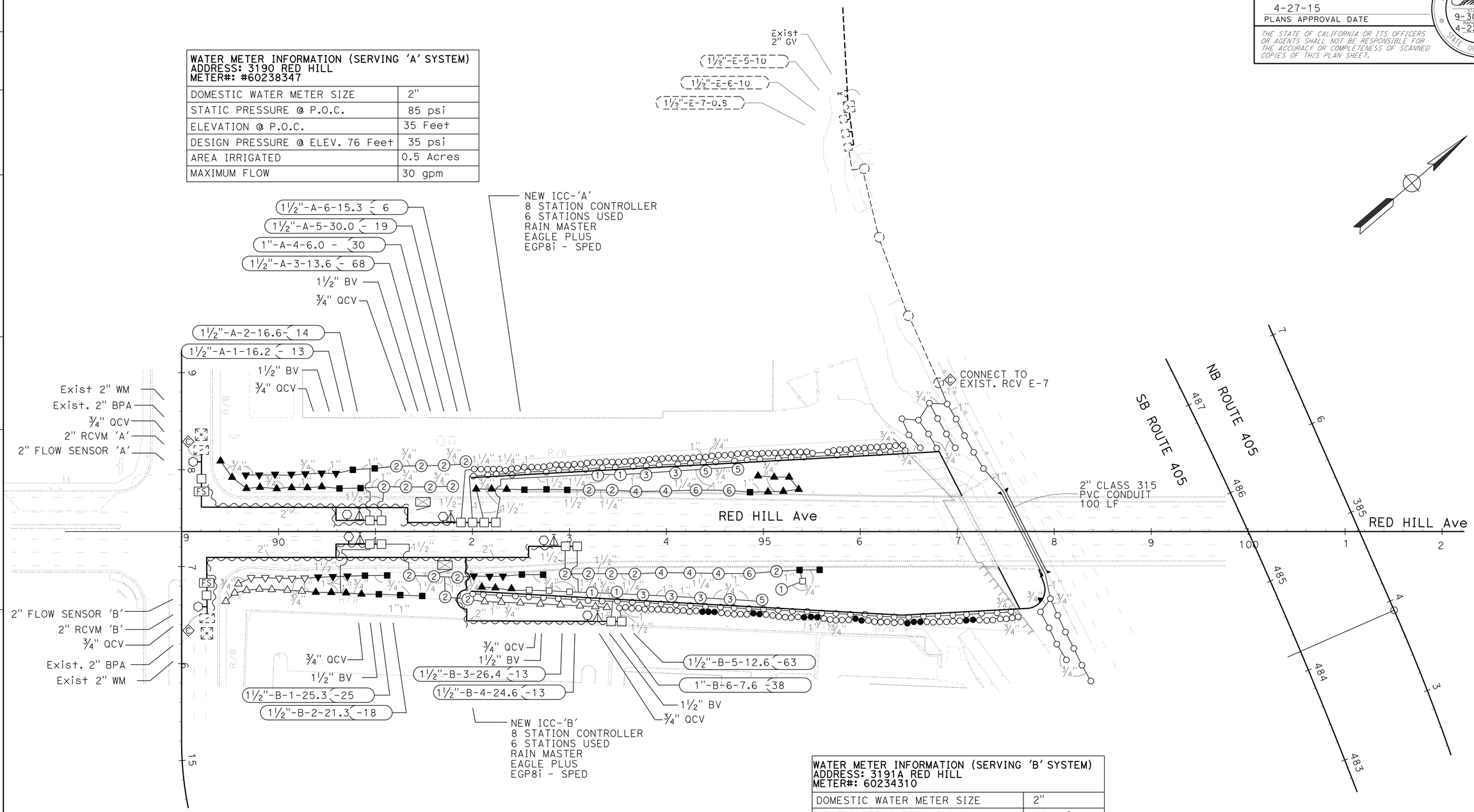

WATER METER INFORMATION (SERVING 'B' SYSTEM) ADDRESS: 3191A RED HILL METER#: 60234310	
DOMESTIC WATER METER SIZE	2"
STATIC PRESSURE @ P.O.C.	85 psi
ELEVATION @ P.O.C.	35 Feet
DESIGN PRESSURE @ ELEV. 76 Feet	35 psi
AREA IRRIGATED	0.6 Acres
MAXIMUM FLOW	30 gpm

APPROVED FOR IRRIGATION WORK ONLY

IRRIGATION PLAN

SCALE : 1"=50'

IP-1

STATE OF CALIFORNIA - DEPARTMENT OF TRANSPORTATION
Caltrans® LANDSCAPE ARCHITECTURE

SENIOR LANDSCAPE ARCHITECT: ERIC DICKSON
CALCULATED-DESIGNED BY: KEN CHAN
CHECKED BY: STEPHEN SU
REVISED BY
DATE REVISED

LAST REVISION 00-00-00 | DATE PLOTTED => 10-JUL-2015 | TIME PLOTTED => 13:32

Dist	COUNTY	ROUTE	POST MILES TOTAL PROJECT	SHEET No.	TOTAL SHEETS
12	Ora	405	8.4	43	142

4-22-15
LICENSED LANDSCAPE ARCHITECT

4-27-15
PLANS APPROVAL DATE

LICENSED LANDSCAPE ARCHITECT
STEPHEN SHUN-MIN SU
NO. 4838
Signature
9-30-2015
Renewal Date
4-22-2015
Date
STATE OF CALIFORNIA

THE STATE OF CALIFORNIA OR ITS OFFICERS OR AGENTS SHALL NOT BE RESPONSIBLE FOR THE ACCURACY OR COMPLETENESS OF SCANNED COPIES OF THIS PLAN SHEET.

ABBREVIATIONS

RSAGD - RISER SPRINKLER ASSEMBLY (GEAR DRIVEN)
PSAGD - POP-UP SPRINKLER ASSEMBLY (GEAR DRIVEN)
RSARN - RISER SPRINKLER ASSEMBLY (ROTARY NOZZLE)
PSARN - POP-UP SPRINKLER ASSEMBLY (ROTARY NOZZLE)
RSA - RISER SPRINKLER ASSEMBLY
PSA - POP-UP SPRINKLER ASSEMBLY
TWSA - TREE WELL SPRINKLER ASSEMBLY

IRRIGATION QUANTITIES

DESCRIPTION		PLASTIC PIPE SCHEDULE 40 SUPPLY LINE					SPRINKLER TYPE ASSEMBLY																	
							RSAGD								PSAGD				RSARN		PSARN		TWSA	RSA
		3/4"	1"	1 1/4"	1 1/2"	2"	①	1	③	3	⑤	5	⑦	7	②	④	⑥	⑧	△	□	▲	■	●	○
UNIT		LF	LF	LF	LF	LF	EA	EA	EA	EA	EA	EA	EA	EA	EA	EA	EA	EA	EA	EA	EA	EA	EA	EA
SUBTOTALS PER VALVE ON LATERAL SUPPLY SIDE OF CONTROL VALVE	CONTROLLER AND VALVE NUMBER A-1	170	80	-	60	-	-	-	-	-	-	-	-	-	4	-	-	-	-	-	7	2	-	-
	A-2	180	100	-	40	-	-	-	-	-	-	-	-	-	4	-	-	-	-	-	8	2	-	-
	A-3	150	150	70	70	-	-	-	-	-	-	-	-	-	-	-	-	-	-	-	-	-	-	68
	A-4	490	60	-	-	-	-	-	-	-	-	-	-	-	-	-	-	-	-	-	-	-	-	30
	A-5	80	90	120	170	-	-	-	-	-	-	-	-	-	2	2	2	-	-	-	9	4	-	-
	A-6	40	90	25	160	-	2	-	2	-	2	-	-	-	-	-	-	-	-	-	-	-	-	-
	A-7	-	-	-	-	-	-	-	-	-	-	-	-	-	-	-	-	-	-	-	-	-	-	-
	A-8	-	-	-	-	-	-	-	-	-	-	-	-	-	-	-	-	-	-	-	-	-	-	-
	-	-	-	-	-	-	-	-	-	-	-	-	-	-	-	-	-	-	-	-	-	-	-	-
	-	-	-	-	-	-	-	-	-	-	-	-	-	-	-	-	-	-	-	-	-	-	-	-
	-	-	-	-	-	-	-	-	-	-	-	-	-	-	-	-	-	-	-	-	-	-	-	-
	-	-	-	-	-	-	-	-	-	-	-	-	-	-	-	-	-	-	-	-	-	-	-	-
	-	-	-	-	-	-	-	-	-	-	-	-	-	-	-	-	-	-	-	-	-	-	-	-
	-	-	-	-	-	-	-	-	-	-	-	-	-	-	-	-	-	-	-	-	-	-	-	-
SUBTOTAL		1,110	570	215	500	-	2	-	2	-	2	-	-	-	10	2	2	-	-	-	24	8	-	98

	PLASTIC PIPE SCHEDULE 40 SUPPLY LINE					SPRINKLER TYPE ASSEMBLY																		
						RSAGD								PSAGD				RSARN		PSARN		TWSA	RSA
	3/4"	1"	1 1/4"	1 1/2"	2"	①	1	③	3	⑤	5	⑦	7	②	④	⑥	⑧	△	□	▲	■	●	○
UNIT	LF	LF	LF	LF	LF	EA	EA	EA	EA	EA	EA	EA	EA	EA	EA	EA	EA	EA	EA	EA	EA	EA	EA
B-1	310	110	-	70	-	-	-	-	-	-	-	-	-	-	-	-	-	13	-	7	5	-	-
B-2	220	100	40	70	-	-	-	-	-	-	-	-	-	5	-	-	-	8	-	3	2	-	-
B-3	70	80	125	85	-	1	-	-	-	-	-	-	-	5	3	1	-	-	1	-	2	-	-
B-4	180	60	75	50	-	2	-	4	-	1	-	-	-	-	-	-	-	-	3	3	-	-	-
B-5	220	230	-	20	-	-	-	-	-	-	-	-	-	-	-	-	-	-	-	-	-	15	48
B-6	620	20	-	-	-	-	-	-	-	-	-	-	-	-	-	-	-	-	-	-	-	-	38
B-7	-	-	-	-	-	-	-	-	-	-	-	-	-	-	-	-	-	-	-	-	-	-	-
B-8	-	-	-	-	-	-	-	-	-	-	-	-	-	-	-	-	-	-	-	-	-	-	-
SUBTOTAL	1,620	600	240	295	-	3	-	4	-	1	-	-	-	10	3	1	-	21	4	13	9	15	86
E-7	380	280	-	-	-	-	-	-	-	-	-	-	-	-	-	-	-	-	-	-	-	-	25
-	-	-	-	-	-	-	-	-	-	-	-	-	-	-	-	-	-	-	-	-	-	-	-
-	-	-	-	-	-	-	-	-	-	-	-	-	-	-	-	-	-	-	-	-	-	-	-
-	-	-	-	-	-	-	-	-	-	-	-	-	-	-	-	-	-	-	-	-	-	-	-
SUBTOTAL	380	280	-	-	-	-	-	-	-	-	-	-	-	-	-	-	-	-	-	-	-	-	25

IRRIGATION TOTAL QUANTITIES

	SHEET NUMBER	IRRIGATION CONTROLLER						PLASTIC PIPE (CLASS 315) CONDUIT			BPA			PRV	RCV			DVA			FS		GV			BV			QCV			PLASTIC PIPE (CLASS 315) (SUPPLY LINE)		PLASTIC PIPE (SCHEDULE 40) (SUPPLY LINE)					DRIP IRRIGATION TUBING	CV	SPRINKLER ASSEMBLY						
		8 STATION	16 STATION	24 STATION	TWO WIRE	CEC (N) SINGLE	CEC (N) DOUBLE	1"	2"	3"	2"	(N) ENCLOSURE	(N) BLANKET	2"	1"	1 1/2"	2"	1"	1 1/2"	2"	1 1/2"	2"	1 1/2"	2"	3"	1"	1 1/2"	2"	3/4"	1 1/2"	3"	2"	3"	3/4"	1"	1 1/4"	1 1/2"	2 "	3/4"		TREE WELL	RSAGD	PSAGD	RSARN	PSARN	TWSA	RSA
		EA	EA	EA	EA	EA	EA	LF	LF	LF	EA	EA	EA	EA	EA	EA	EA	EA	EA	EA	EA	EA	EA	EA	EA	EA	EA	EA	EA	EA	EA	LF	LF	LF	LF	LF	LF	LF	EA	EA	EA	EA	EA	EA	EA	EA
SUBTOTALS PER SHEET ON MAIN SUPPLY SIDE OF CONTROL VALVE	IP-1	2							100						2	10	2					2					5		7			1,300														
SUBTOTALS PER CONTROLLER ON LATERAL SIDE OF CONTROL VALVE	A																																	1,110	570	215	500				6	14		32		98
	B																																	1,620	600	240	295				8	14	25	22	15	86
	E																																	380	280											25
TOTAL		2							100						2	10	2					2					5		7			1,300		3,110	1,450	455	795				14	28	25	54	15	209

IRRIGATION QUANTITIES

IQ-1

STATE OF CALIFORNIA - DEPARTMENT OF TRANSPORTATION
Caltrans® LANDSCAPE ARCHITECTURE
SENIOR LANDSCAPE ARCHITECT: ERIC DICKSON
CALCULATED-DESIGNED BY: KEN CHAN
CHECKED BY: STEPHEN SU
REVISED BY
DATE REVISED

LAST REVISION 02-10-15
DATE PLOTTED => 10-JUL-2015
TIME PLOTTED => 13:32

Dist	COUNTY	ROUTE	POST MILES TOTAL PROJECT	SHEET No.	TOTAL SHEETS
12	Ora	405	8.4	44	142

LICENSED LANDSCAPE ARCHITECT 4-22-15

4-27-15
PLANS APPROVAL DATE

LICENSED LANDSCAPE ARCHITECT STEPHEN SHUN-MIN SU NO. 4838 Expiration Date 9-30-2015 Renewal Date 4-22-2015 Date STATE OF CALIFORNIA

THE STATE OF CALIFORNIA OR ITS OFFICERS OR AGENTS SHALL NOT BE RESPONSIBLE FOR THE ACCURACY OR COMPLETENESS OF SCANNED COPIES OF THIS PLAN SHEET.

NOTE: FOR ACCURATE RIGHT OF WAY DATA, CONTACT RIGHT OF WAY ENGINEERING AT THE DISTRICT OFFICE.

ABBREVIATIONS

AMEND — amendment
B & B — balled and burlapped
Dia — diameter
EA — each
LB — pound
Oz — ounce
Ft — foot/feet
SQFT — square feet
SQYD — square yard
CF — cubic feet
Max — maximum
Min — minimum
NCN — no common name
No. — number
Pkt — packet
PLT ESTB — plant establishment
Pvmt — pavement
R/W — right of way
SB — shredded bark
SF — state furnished
WC — wood chip
TRVD — traveled

APPLICABLE WHEN CIRCLED:

1 - QUANTITIES SHOWN ARE "PER PLANT" UNLESS SHOWN AS SQFT OR SQYD APPLICATION RATES
2 - BASIN MULCH IS INCLUDED WITH MULCH QUANTITIES SHOWN ON PLANTING PLAN
3 - SUFFICIENT TO RECEIVE ROOT BALL AND AMENDMENTS IF REQUIRED
4 - SEE DETAIL
5 - SEE SPECIAL PROVISIONS
6 - SEE STANDARD SPECIFICATIONS
7 - AS SHOWN ON PLANS
8 - UNLESS OTHERWISE SHOWN ON PLANS
9 - APPLY 2" THICK LAYER OF WOOD MULCH OUTSIDE OF PLATING BASIN
10 - ROOT PROTECTOR REQUIRED
11 - ROOT BARRIER REQUIRED
12 - DEPARTMENT-FURNISHED

PLANTING LEGEND

PLANT GROUP	PLANT No.	SYMBOL	BOTANICAL NAME	COMMON NAME	SIZE	QUANTITY (EA)	HOLE SIZE (INCH) Dia	HOLE SIZE (INCH) DEPTH	BASIN TYPE	SOIL AMEND TYPE	SOIL AMEND CF	COMMERCIAL FERTILIZER 1 PLANTING	COMMERCIAL FERTILIZER 1 PLT ESTB	BASIN MULCH TYPE	BASIN MULCH CF	STAKING	PLANTING LIMITS MINIMUM DISTANCE (ft) FROM ETW	Pvmt	FENCE	WALL	PAVED DITCH	EARTH DITCH	ON CENTER (ft)	REMARKS
A	1		ACACIA REDOLENS 'DESERT CARPET'	PROSTRATE ACACIA	No. 1	25	12	12	II	N	0.4	2 Oz	2 Oz	WC	2	-	10	10	5	5	5	5	7	SHRUB
	2		LANTANA SPREADING SUNSHINE	YELLOW LANTANA	No. 1	310	12	12	II	N	0.4	2 Oz	2 Oz	WC	2	-	8	3	3	3	3	3	4	SHRUB
	3		MYOPORUM PARVIFOLIUM	PROSTRATE MYOPORUM	No. 1	1,160	12	12	II	N	0.4	2 Oz	2 Oz	WC	2	-	8	3	5	2	3	3	3	GROUNDCOVER
	4		SENECIO SERPENS	BLUE CHALK STICKS	No. 1	2,120	12	12	II	N	0.4	2 Oz	2 Oz	WC	2	-	8	3	3	3	3	3	1.5	GROUNDCOVER
	5		PARTHENOCISSUS TRICUSPIDATA	BOSTON IVY	No. 1	68	12	12	II	N	0.4	2 Oz	2 Oz	WC	2	-	8	3	3	3	3	3	15	GROUNDCOVER
B	6		PLUMBAGO AURICULATA	CAPE PLUMBAGO	No. 5	116	12	12	II	N	0.7	2 Oz	2 Oz	WC	0.7	-	6	6	6	6	6	6	6.5	SHRUB
F	7		DELOSPERMA COOPERI	TRAILING ICEPLANT	IN FLAT	6,800	3	3	-	-	-	-	4.0 LB/ 100 SQYD	WC	2	-	6	3	3	3	3	3	1	GROUNDCOVER
U	8		CUPRESSUS SEMPERVIRENS	ITALIAN CYPRESS	No. 15	13	22	20	II	N	0.7	4 Oz	2 Oz	WC	2	X	-	4	-	6	4	4	7	TREE

INERT MATERIAL CONSTRUCTION LEGEND

MAINTENANCE ACCESS CLASS 2 AGGREGATE BASE 4

MINOR CONCRETE (CONCRETE MOW STRIP) 4

WOOD CHIP

ROCK BLANKET 4 5
NOTE:
ROCK BLANKET, WAVY PATTERN AREAS HAVE VARIOUS ROCK SIZES, SEE LD-1 AND LD-2 PLANS FOR DETAILS

NOTE:
UNDERLINED PORTIONS OF BOTANICAL NAME INDICATE ABBREVIATIONS USED ON PLANTING PLANS.

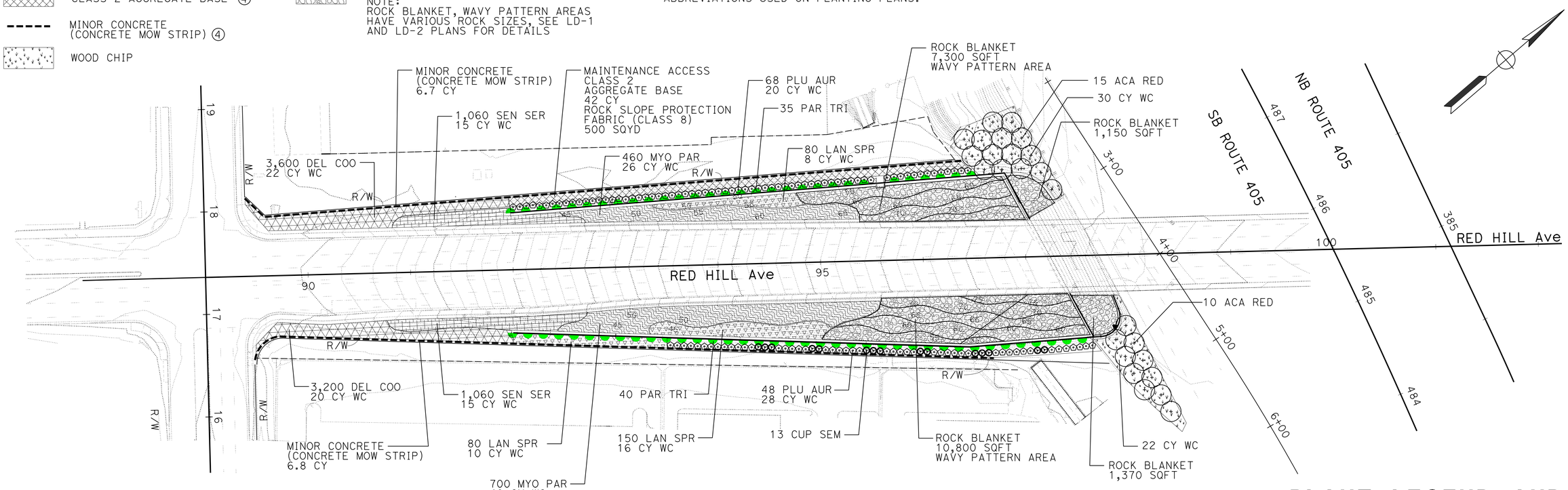

APPROVED FOR PLANTING WORK ONLY

PLANT LEGEND AND PLANTING PLAN PP-1

SCALE : 1"=50'

STATE OF CALIFORNIA - DEPARTMENT OF TRANSPORTATION
Caltrans LANDSCAPE ARCHITECTURE
SENIOR LANDSCAPE ARCHITECT ERIC DICKSON
CALCULATED/DESIGNED BY KEN CHAN
CHECKED BY STEPHEN SU
REVISED BY
DATE REVISED

LAST REVISION 00-00-00
DATE PLOTTED => 10-JUL-2015
TIME PLOTTED => 13:32

Dist	COUNTY	ROUTE	POST MILES TOTAL PROJECT	SHEET No.	TOTAL SHEETS
12	Ora	405	8.4	45	142

LICENSED LANDSCAPE ARCHITECT 4-22-15

4-27-15
PLANS APPROVAL DATE

LICENSED LANDSCAPE ARCHITECT STEPHEN SHUN-MIN SU NO. 4838 Signature 9-30-2015 Renewal Date 4-22-2015 Date STATE OF CALIFORNIA

THE STATE OF CALIFORNIA OR ITS OFFICERS OR AGENTS SHALL NOT BE RESPONSIBLE FOR THE ACCURACY OR COMPLETENESS OF SCANNED COPIES OF THIS PLAN SHEET.

NOTE: FOR ACCURATE RIGHT OF WAY DATA, CONTACT RIGHT OF WAY ENGINEERING AT THE DISTRICT OFFICE.

NOTE:
1. LAYOUT CENTER LINES SHALL BE PARALLEL TO THE CONTOUR LINE.
2. LAYOUT DIMENTION SHALL FOLLOW THE GROUND SURFACE OF SLOPE
3. SEE LD-2 SHEET FOR CROSS SECTIONS 'A', 'AA', 'B', 'C'. AND CONSTRUCTION DETAILS

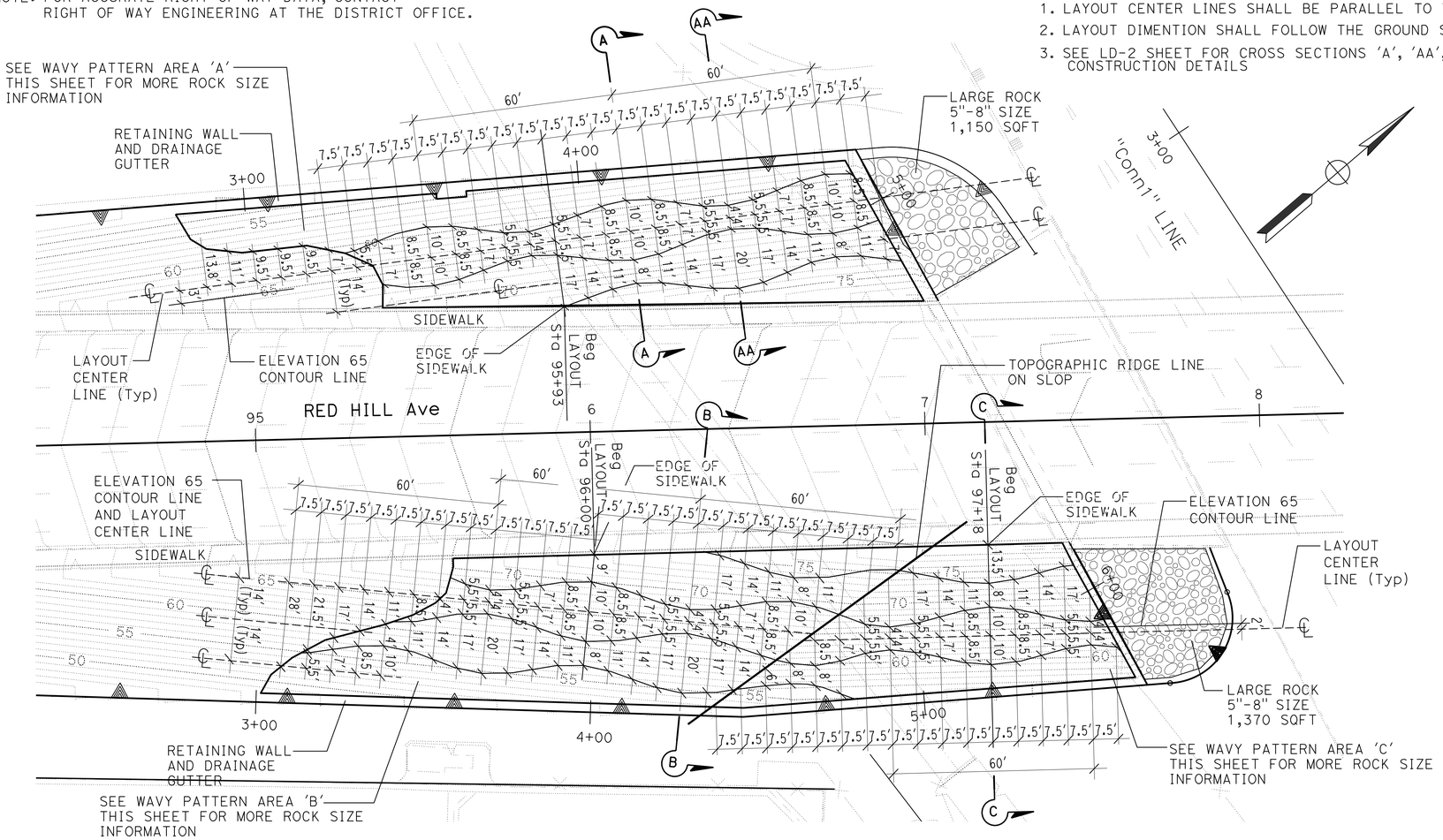

ROCK BLANKET WAVY PATTERN LAYOUT PLAN

SCALE : 1"=20'

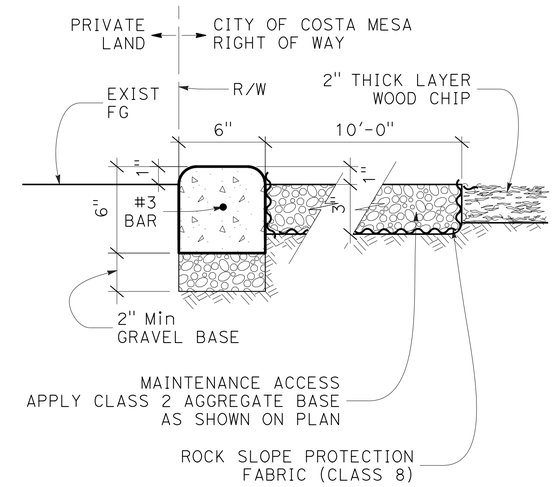

MINOR CONCRETE (CONCRETE MOW STRIP) AND MAINTENANCE ACCESS

NOT TO SCALE

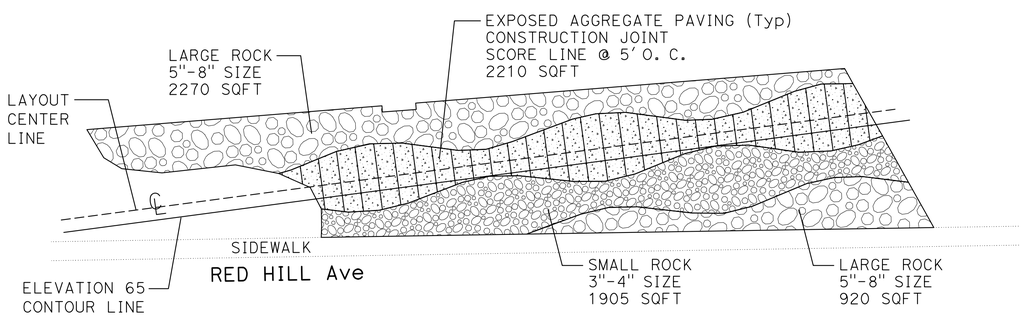

WAVY PATTERN AREA 'A'

SCALE : 1"=20'

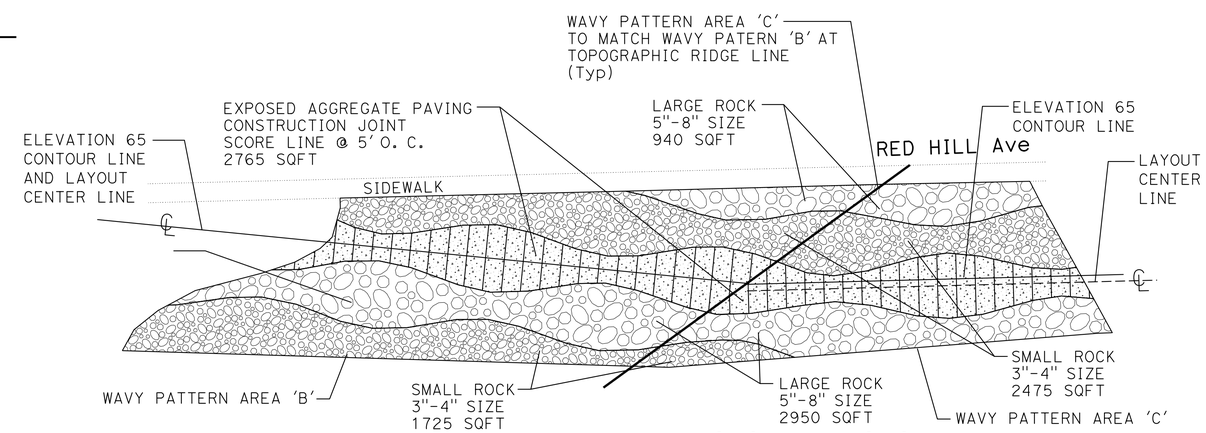

WAVY PATTERN AREA 'B' AND 'C'

SCALE : 1"=20'

LANDSCAPE DETAIL LD-1

APPROVED FOR LANDSCAPE WORK ONLY

STATE OF CALIFORNIA - DEPARTMENT OF TRANSPORTATION
Caltrans LANDSCAPE ARCHITECTURE
SENIOR LANDSCAPE ARCHITECT ERIC DICKSON
CALCULATED-DESIGNED BY STEPHEN SU
CHECKED BY KEN CHAN
REVISED BY
DATE REVISED

LAST REVISION 02-05-15
DATE PLOTTED => 10-JUL-2015
TIME PLOTTED => 13:32

Dist	COUNTY	ROUTE	POST MILES TOTAL PROJECT	SHEET No.	TOTAL SHEETS
12	Ora	405	8.4	46	142

LICENSED LANDSCAPE ARCHITECT 4-22-15

4-27-15
PLANS APPROVAL DATE

LICENSED LANDSCAPE ARCHITECT STEPHEN SHUN-MIN SU NO. 4838 Registration 9-30-2015 Renewal Date 4-22-2015 Date STATE OF CALIFORNIA

THE STATE OF CALIFORNIA OR ITS OFFICERS OR AGENTS SHALL NOT BE RESPONSIBLE FOR THE ACCURACY OR COMPLETENESS OF SCANNED COPIES OF THIS PLAN SHEET.

NOTE: FOR ACCURATE RIGHT OF WAY DATA, CONTACT RIGHT OF WAY ENGINEERING AT THE DISTRICT OFFICE.

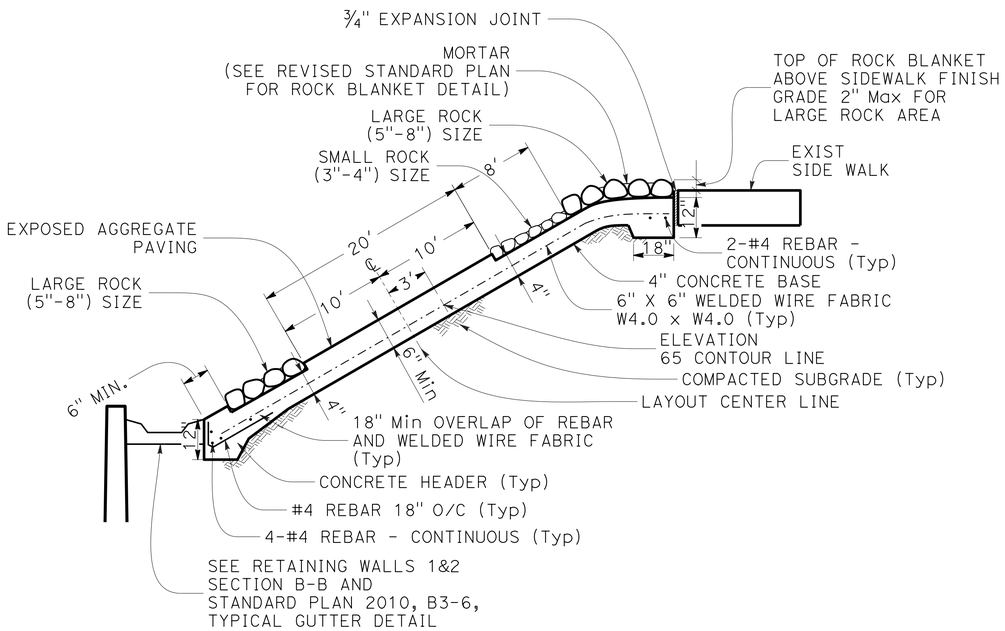

DETAIL A
NOT TO SCALE

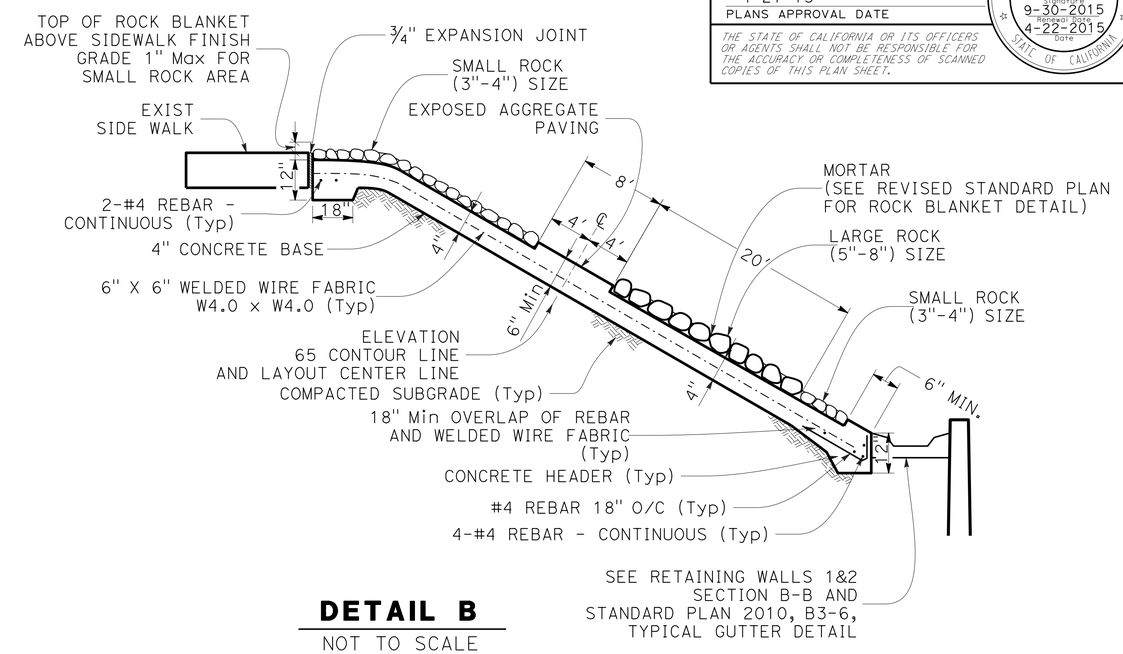

DETAIL B
NOT TO SCALE

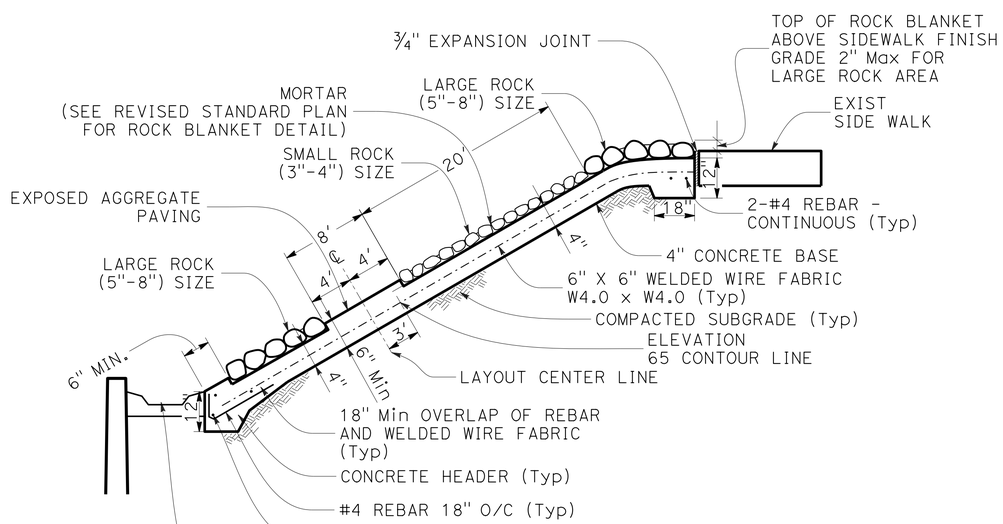

DETAIL AA
NOT TO SCALE

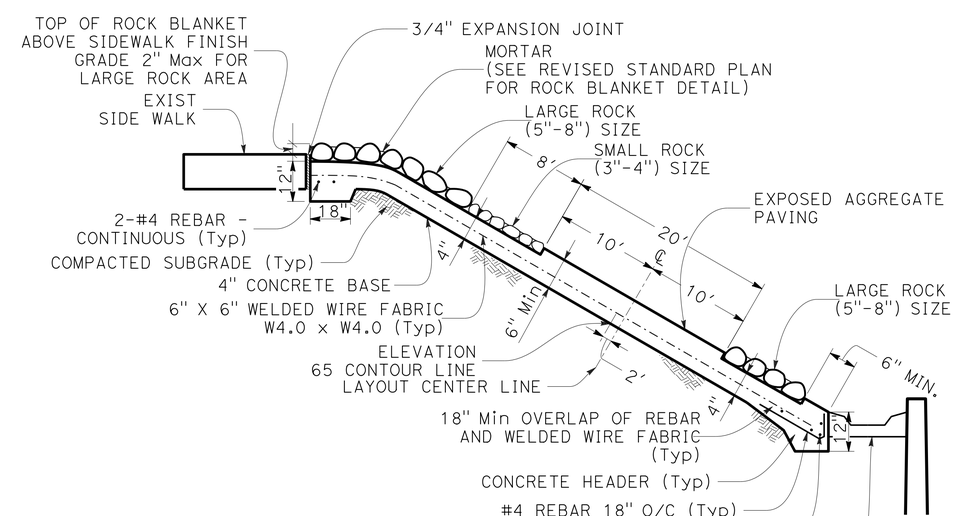

DETAIL C
NOT TO SCALE

LANDSCAPE DETAIL
LD-2

STATE OF CALIFORNIA - DEPARTMENT OF TRANSPORTATION
Caltrans® LANDSCAPE ARCHITECTURE
SENIOR LANDSCAPE ARCHITECT ERIC DICKSON
CALCULATED-DESIGNED BY KEN CHAN
CHECKED BY STEPHEN SU
REVISED BY
DATE REVISED

LAST REVISION 02-05-15
DATE PLOTTED => 10-JUL-2015
TIME PLOTTED => 13:32

Dist	COUNTY	ROUTE	POST MILES TOTAL PROJECT	SHEET No.	TOTAL SHEETS
12	Ora	405	8.4	47	142

4-22-15
LICENSED LANDSCAPE ARCHITECT

4-27-15
PLANS APPROVAL DATE

LICENSED LANDSCAPE ARCHITECT STEPHEN SHUN-MIN SU NO. 4839 REGISTERED 9-30-2015 RENEWAL DATE 4-22-2015 DATE STATE OF CALIFORNIA

THE STATE OF CALIFORNIA OR ITS OFFICERS OR AGENTS SHALL NOT BE RESPONSIBLE FOR THE ACCURACY OR COMPLETENESS OF SCANNED COPIES OF THIS PLAN SHEET.

PLANT QUANTITIES

ITEM	UNIT	QUANTITY
PLANT (GROUP A)	EA	3,683
PLANT (GROUP B)	EA	116
PLANT (GROUP F)	EA	6,800
PLANT (GROUP U)	EA	13

WOOD MULCH

TYPE	QUANTITY (CY)
TREE BARK (N)	--
WOOD CHIP (N)	280
SHREDDED BARK (N)	--
TREE TRIMMING	--
TOTAL	280

SOIL AMENDMENT

TYPE	QUANTITY (CY)
SPHAGNUM PEAT MOSS (N)	--
NITROLIZED FIR BARK (N)	100
VERMICULITE (N)	--
PERLITE (N)	--
TOTAL	100

(N) - NOT A SEPARATE PAY ITEM, FOR INFORMATION ONLY

COMMERCIAL FERTILIZERS

TYPE	QUANTITY (LB)
SLOW RELEASE FERTILIZER	480
TOTAL	480

ROCK BLANKET

TYPE *	UNIT	QUANTITY
EXPOSED AGGREGATE PAVING AREA (N)	SQFT	4,975
SMALL ROCK AREA (N)	SQFT	6,105
LARGE ROCK AREA (N)	SQFT	9,600
TOTAL	SQFT	20,680

* ROCK BLANKET INCLUDES EXPOSED AGGREGATE PAVING AREA AND VARIOUS ROCK SIZES AREAS AS SHOWN IN THE PLANS

(N) - NOT A SEPARATE PAY ITEM, FOR INFORMATION ONLY

OTHER INERT MATERIAL CONSTRUCTIONS

ITEM	UNIT	QUANTITY
CLASS 2 AGGREGATE BASE **	CY	47
ROCK SLOPE PROTECTION FABRIC (CLASS 8)	SQYD	500
MINOR CONCRETE (CONCRETE MOW STRIP)	CY	14

** FOR GRAND TOTAL OF CLASS 2 AGGREGATE BASE, SEE SHEET Q-1

(N) - NOT A SEPARATE PAY ITEM, FOR INFORMATION ONLY

LANDSCAPE QUANTITIES
LQ-1

STATE OF CALIFORNIA - DEPARTMENT OF TRANSPORTATION
Caltrans® LANDSCAPE ARCHITECTURE
SENIOR LANDSCAPE ARCHITECT: ERIC DICKSON
CALCULATED-DESIGNED BY: KEN CHAN
CHECKED BY: STEPHEN SU
REVISED BY / DATE REVISED

LAST REVISION 02-10-15
DATE PLOTTED => 10-JUL-2015
TIME PLOTTED => 13:32

Dist	COUNTY	ROUTE	POST MILES TOTAL PROJECT	SHEET No.	TOTAL SHEETS
12	Ora	405	8.4	48	142

Vanessa Van Truong 4-22-15
REGISTERED ELECTRICAL ENGINEER DATE

4-27-15
PLANS APPROVAL DATE

REGISTERED PROFESSIONAL ENGINEER
V.V. TRUONG
No. E 13983
Exp 6/30/16
ELECTRICAL
STATE OF CALIFORNIA

THE STATE OF CALIFORNIA OR ITS OFFICERS OR AGENTS SHALL NOT BE RESPONSIBLE FOR THE ACCURACY OR COMPLETENESS OF SCANNED COPIES OF THIS PLAN SHEET.

NOTES:

1. FOR ACCURATE RIGHT OF WAY DATA, CONTACT RIGHT OF WAY ENGINEERING AT THE DISTRICT OFFICE.
2. SEE WIRING DIAGRAM FOR NUMBER OF CONDUCTORS AND CONDUCTOR SIZES.
3. SEE SES SHEETS FOR TEMPORARY WOOD POLE DETAILS.

LEGEND:

[1] [RC] AFTER TEMPORARY. ALL OTHER EQUIPMENT TO REMAIN.

STAGE 1

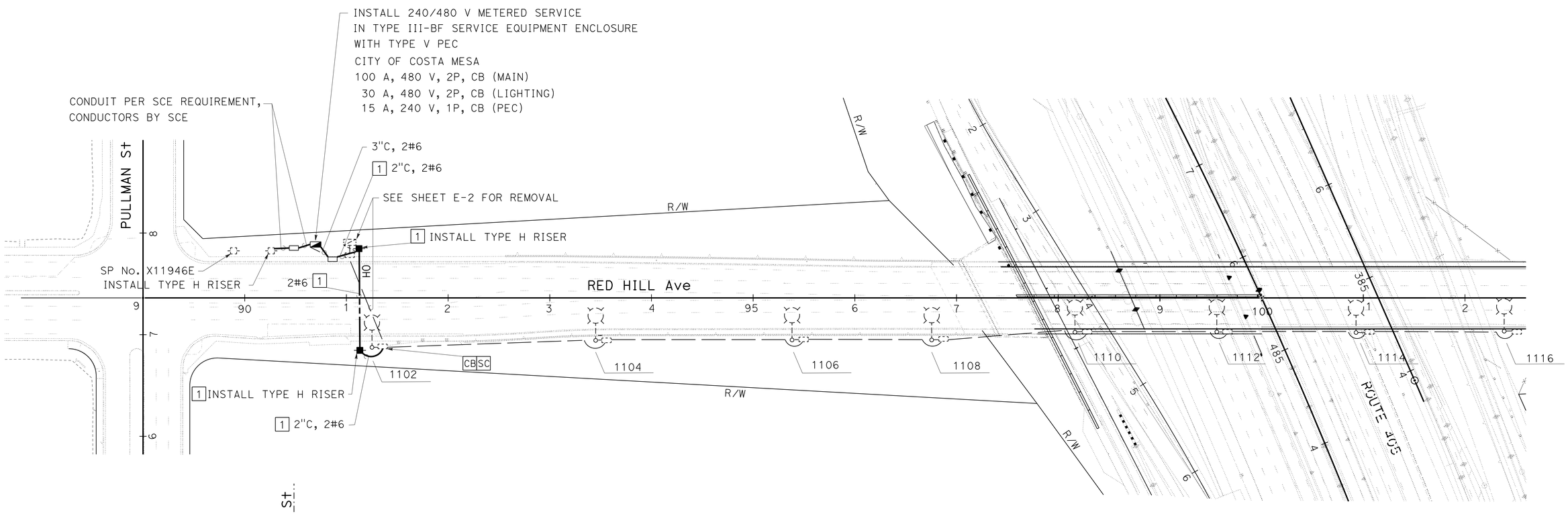

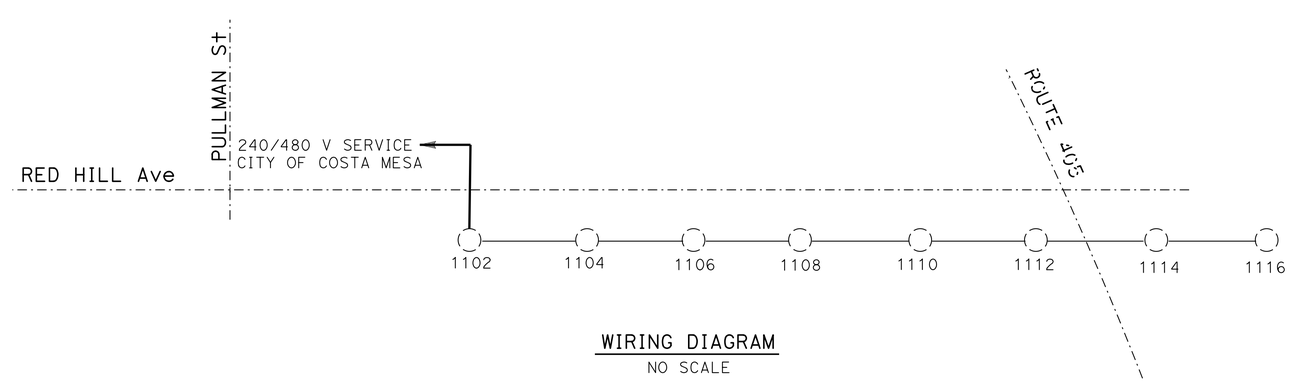

WIRING DIAGRAM
NO SCALE

WIRING DIAGRAM LEGEND

- Exist LUMINAIRE
- Exist 2#6
- 2#6

TEMPORARY LIGHTING
(CITY OF COSTA MESA)

SCALE: 1" = 50'

APPROVED FOR ELECTRICAL WORK ONLY

E-1

STATE OF CALIFORNIA - DEPARTMENT OF TRANSPORTATION
Caltrans
ELECTRICAL DESIGN

FUNCTIONAL SUPERVISOR: SHAHRAM SHAHRIARI
CALCULATED-DESIGNED BY: VANESSA TRUONG
CHECKED BY: SHAHRAM SHAHRIARI
REVISED BY
DATE REVISED

LAST REVISION 01-13-14
DATE PLOTTED => 10-JUL-2015
TIME PLOTTED => 13:32

Dist	COUNTY	ROUTE	POST MILES TOTAL PROJECT	SHEET No.	TOTAL SHEETS
12	Ora	405	8.4	49	142

Vanessa Van Truong 4-22-15
REGISTERED ELECTRICAL ENGINEER DATE

4-27-15
PLANS APPROVAL DATE

REGISTERED PROFESSIONAL ENGINEER V.V. TRUONG No. E 13983 Exp 6/30/16 ELECTRICAL STATE OF CALIFORNIA

THE STATE OF CALIFORNIA OR ITS OFFICERS OR AGENTS SHALL NOT BE RESPONSIBLE FOR THE ACCURACY OR COMPLETENESS OF SCANNED COPIES OF THIS PLAN SHEET.

NOTES:

1. FOR ACCURATE RIGHT OF WAY DATA, CONTACT RIGHT OF WAY ENGINEERING AT THE DISTRICT OFFICE.
2. ALL NEW CONDUITS MUST BE 2"C, 2#6, UNLESS OTHERWISE NOTED.
3. SEE WIRING DIAGRAM FOR NUMBER OF CONDUCTORS AND CONDUCTOR SIZES.

LEGEND:

[1] INSTALL TYPE 15 STANDARD WITH MODIFIED POLE HEIGHT OF 18' TO GRADE, 8' LUMINAIRE ARM AND LED LUMINAIRE ROADWAY 1.

[2] INSTALL TYPE 15 STANDARD WITH MODIFIED POLE HEIGHT OF 22' TO GRADE, 8' LUMINAIRE ARM AND LED LUMINAIRE ROADWAY 1.

[3] [RC] EXISTING 200 W HPS LUMINAIRE. INSTALL LED LUMINAIRE ROADWAY 1.

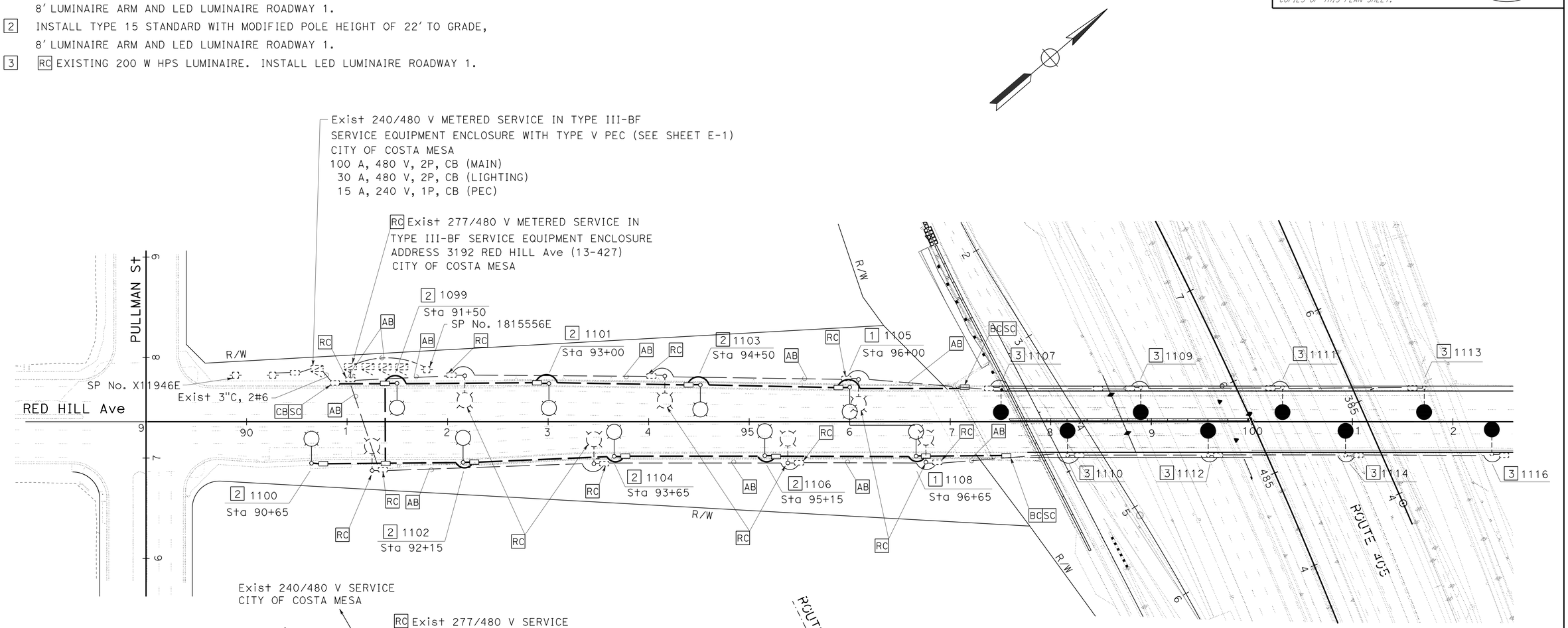

WIRING DIAGRAM
NO SCALE

WIRING DIAGRAM LEGEND

- [RC] Exist LUMINAIRE
- [RC] Exist 200 W HPS LUMINAIRE. INSTALL LED LUMINAIRE ROADWAY 1
- LED LUMINAIRE ROADWAY 1
- [RC] 2#6
- Exist 2#6
- 2#6
- SPLICE

LIGHTING
(CITY OF COSTA MESA)

SCALE: 1" = 50'

E-2

APPROVED FOR ELECTRICAL WORK ONLY

STATE OF CALIFORNIA - DEPARTMENT OF TRANSPORTATION
Caltrans
ELECTRICAL DESIGN

FUNCTIONAL SUPERVISOR: SHAHRAM SHAHRIARI
CALCULATED-DESIGNED BY: VANESSA TRUONG
CHECKED BY: SHAHRAM SHAHRIARI
REVISED BY
DATE REVISED

LAST REVISION 01-13-15
DATE PLOTTED => 10-JUL-2015
TIME PLOTTED => 13:32

Dist	COUNTY	ROUTE	POST MILES TOTAL PROJECT	SHEET No.	TOTAL SHEETS
12	Ora	405	8.4	50	142

Vanessa Van Truong 4-22-15
REGISTERED ELECTRICAL ENGINEER DATE

4-27-15
PLANS APPROVAL DATE

REGISTERED PROFESSIONAL ENGINEER
V.V.TRUONG
No. E 13983
Exp 6/30/16
ELECTRICAL
STATE OF CALIFORNIA

THE STATE OF CALIFORNIA OR ITS OFFICERS OR AGENTS SHALL NOT BE RESPONSIBLE FOR THE ACCURACY OR COMPLETENESS OF SCANNED COPIES OF THIS PLAN SHEET.

NOTE:

FOR ACCURATE RIGHT OF WAY DATA, CONTACT
RIGHT OF WAY ENGINEERING AT THE DISTRICT OFFICE.

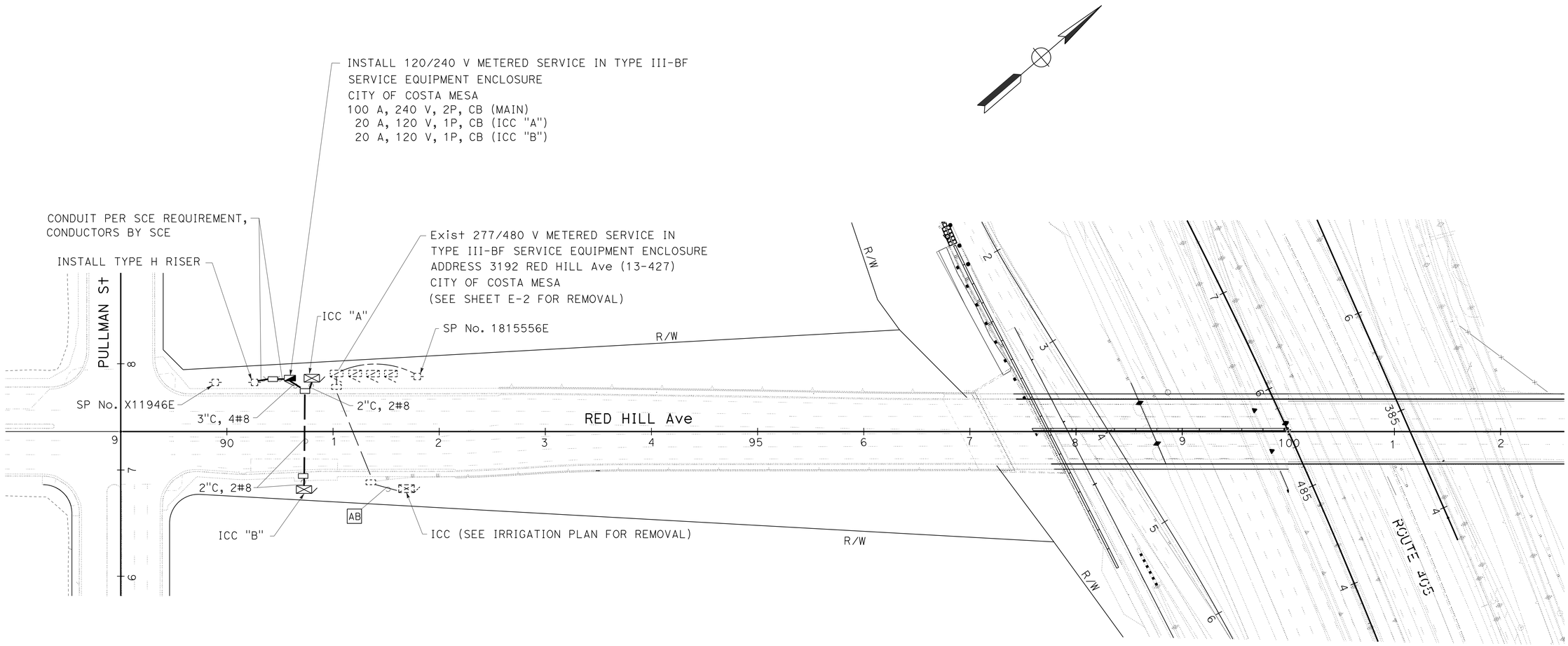

ELECTRIC SERVICE
(IRRIGATION)
(CITY OF COSTA MESA)

SCALE: 1" = 50'

E-3

APPROVED FOR ELECTRICAL WORK ONLY

STATE OF CALIFORNIA - DEPARTMENT OF TRANSPORTATION
Caltrans® ELECTRICAL DESIGN

FUNCTIONAL SUPERVISOR: SHAHRAM SHAHRIARI
CALCULATED-DESIGNED BY: VANESSA TRUONG
CHECKED BY: SHAHRAM SHAHRIARI
REVISED BY
DATE REVISED

LAST REVISION 01-13-15
DATE PLOTTED => 10-JUL-2015
TIME PLOTTED => 13:32

Dist	COUNTY	ROUTE	POST MILES TOTAL PROJECT	SHEET No.	TOTAL SHEETS
12	Ora	405	8.4	51	142

Vanessa Van Truong 4-22-15
REGISTERED ELECTRICAL ENGINEER DATE

4-27-15
PLANS APPROVAL DATE

REGISTERED PROFESSIONAL ENGINEER
V.V. TRUONG
No. E 13983
Exp 6/30/16
ELECTRICAL
STATE OF CALIFORNIA

THE STATE OF CALIFORNIA OR ITS OFFICERS OR AGENTS SHALL NOT BE RESPONSIBLE FOR THE ACCURACY OR COMPLETENESS OF SCANNED COPIES OF THIS PLAN SHEET.

NOTES:

1. FOR ACCURATE RIGHT OF WAY DATA, CONTACT RIGHT OF WAY ENGINEERING AT THE DISTRICT OFFICE.
2. SEE WIRING DIAGRAM SHEET E-5 FOR NUMBER OF CONDUCTORS AND CONDUCTOR SIZES.
3. WORK MUST BE DONE DURING STAGE 1.

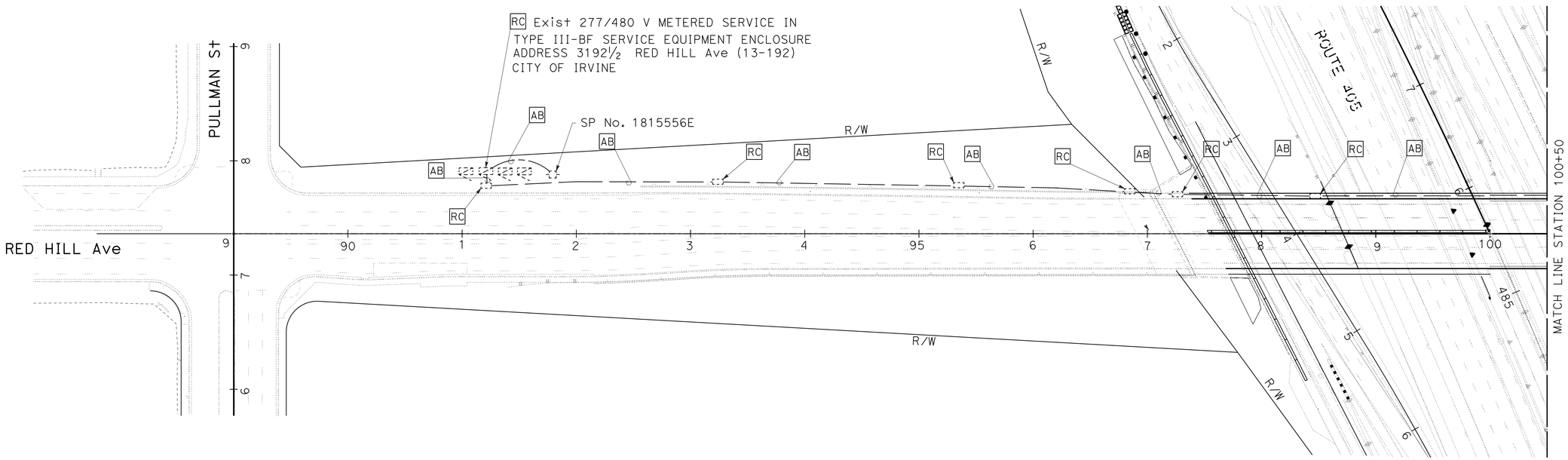

LIGHTING
(CITY OF IRVINE)
SCALE: 1" = 50'

E-4

APPROVED FOR ELECTRICAL WORK ONLY

STATE OF CALIFORNIA - DEPARTMENT OF TRANSPORTATION
Caltrans® **ELECTRICAL DESIGN**

FUNCTIONAL SUPERVISOR: SHAHRAM SHAHRIARI
CALCULATED-DESIGNED BY: VANESSA TRUONG
CHECKED BY: SHAHRAM SHAHRIARI
REVISED BY
DATE REVISED

LAST REVISION 01-13-15
DATE PLOTTED => 10-JUL-2015
TIME PLOTTED => 13:32

Dist	COUNTY	ROUTE	POST MILES TOTAL PROJECT	SHEET No.	TOTAL SHEETS
12	Ora	405	8.4	52	142

Vanessa Van Truong 4-22-15
REGISTERED ELECTRICAL ENGINEER DATE

4-27-15
PLANS APPROVAL DATE

REGISTERED PROFESSIONAL ENGINEER V.V. TRUONG No. E 13983 Exp 6/30/16 ELECTRICAL STATE OF CALIFORNIA

THE STATE OF CALIFORNIA OR ITS OFFICERS OR AGENTS SHALL NOT BE RESPONSIBLE FOR THE ACCURACY OR COMPLETENESS OF SCANNED COPIES OF THIS PLAN SHEET.

NOTES:

1. FOR ACCURATE RIGHT OF WAY DATA, CONTACT RIGHT OF WAY ENGINEERING AT THE DISTRICT OFFICE.
2. ALL NEW CONDUITS MUST BE 2"C, 2#6, UNLESS OTHERWISE NOTED.
3. SEE WIRING DIAGRAM FOR NUMBER OF CONDUCTORS AND CONDUCTOR SIZES.
4. WORK MUST BE DONE DURING STAGE 1.

LEGEND:

1 RC EXISTING 200 W HPS LUMINAIRE. INSTALL LED LUMINAIRE ROADWAY 1.

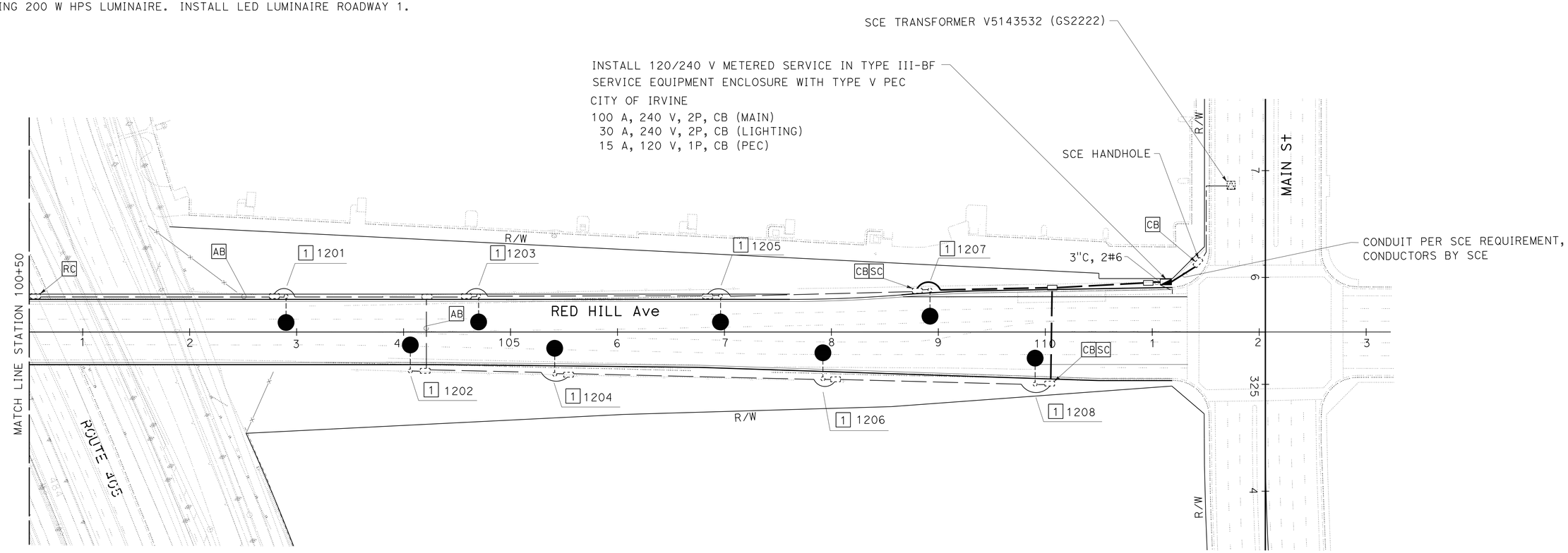

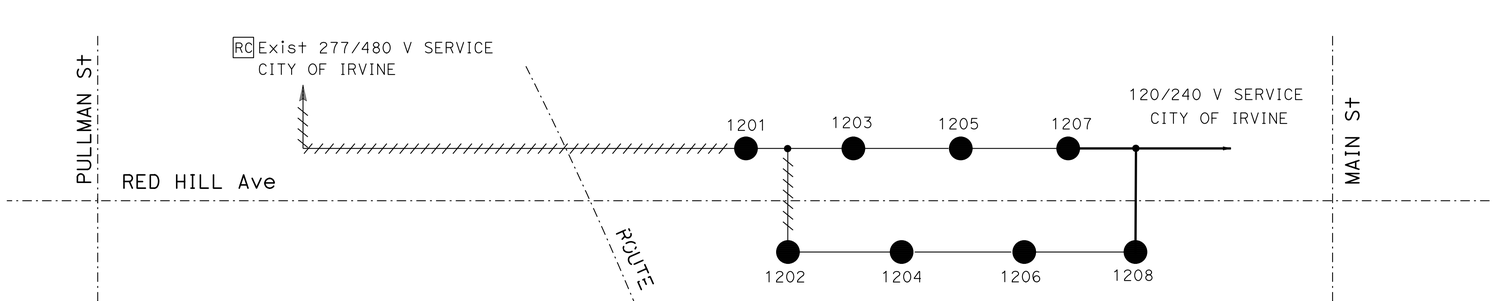

WIRING DIAGRAM
NO SCALE

WIRING DIAGRAM LEGEND

- RC EXISTING 200 W HPS LUMINAIRE. INSTALL LED LUMINAIRE ROADWAY 1
- RC EXISTING 2#6
- Exist 2#6
- 2#6
- SPLICE

LIGHTING
(CITY OF IRVINE)

SCALE: 1" = 50'

E-5

APPROVED FOR ELECTRICAL WORK ONLY

STATE OF CALIFORNIA - DEPARTMENT OF TRANSPORTATION
Caltrans ELECTRICAL DESIGN

FUNCTIONAL SUPERVISOR: SHAHRAM SHAHRIARI
CALCULATED-DESIGNED BY: VANESSA TRUONG
CHECKED BY: SHAHRAM SHAHRIARI
REVISED BY
DATE REVISED

LAST REVISION 03-04-15
DATE PLOTTED => 10-JUL-2015
TIME PLOTTED => 13:32

Dist	COUNTY	ROUTE	POST MILES TOTAL PROJECT	SHEET No.	TOTAL SHEETS
12	Ora	405	8.4	53	142

Vanessa Van Truong 4-22-15
REGISTERED ELECTRICAL ENGINEER DATE

4-27-15
PLANS APPROVAL DATE

REGISTERED PROFESSIONAL ENGINEER V.V. TRUONG No. E 13983 Exp 6/30/16 ELECTRICAL STATE OF CALIFORNIA

THE STATE OF CALIFORNIA OR ITS OFFICERS OR AGENTS SHALL NOT BE RESPONSIBLE FOR THE ACCURACY OR COMPLETENESS OF SCANNED COPIES OF THIS PLAN SHEET.

NOTES:

1. FOR ACCURATE RIGHT OF WAY DATA, CONTACT RIGHT OF WAY ENGINEERING AT THE DISTRICT OFFICE.
2. SEE WIRING DIAGRAM SHEET E-7 FOR NUMBER OF CONDUCTORS AND CONDUCTOR SIZES.
3. SEE SHEET E-8 FOR ADDITIONAL INFORMATION ON EXISTING SERVICE.
4. SEE SES SHEETS FOR TEMPORARY WOOD POLE DETAILS.

LEGEND:

[1] INSTALL FOR STAGE 1. [RC] AFTER TEMPORARY. ALL OTHER EQUIPMENT TO REMAIN.

[2] INSTALL FOR STAGE 2. [RC] AFTER TEMPORARY. ALL OTHER EQUIPMENT TO REMAIN.

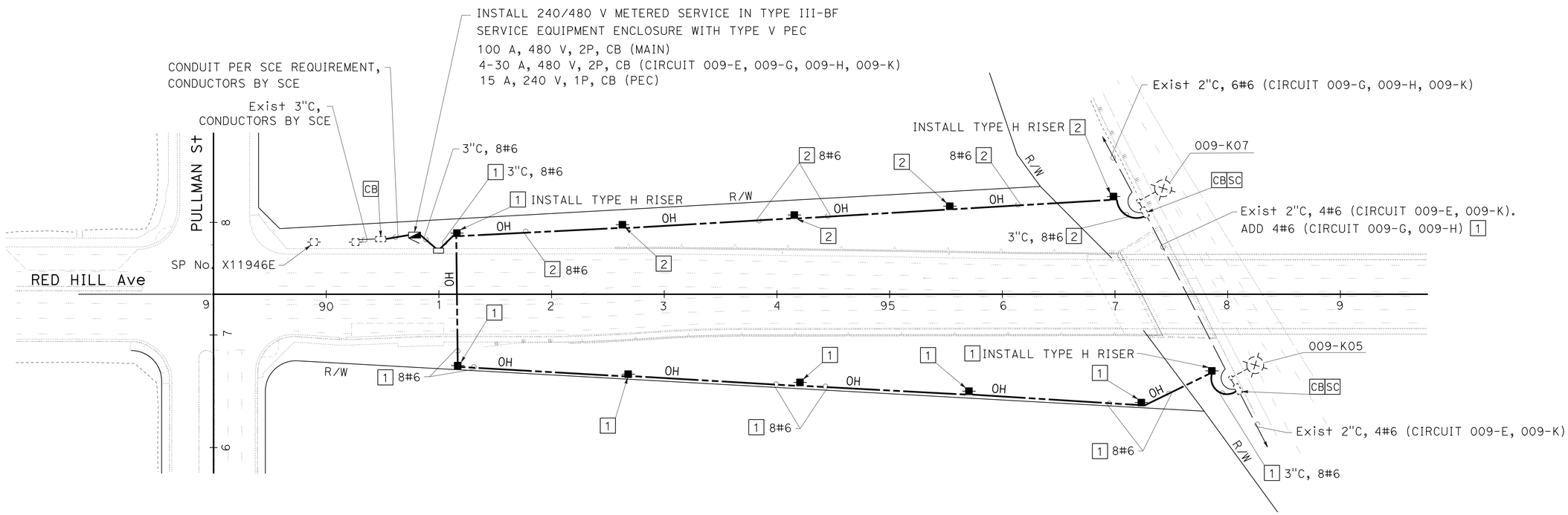

LIGHTING
(TEMPORARY)

SCALE: 1" = 50'

E-6

APPROVED FOR ELECTRICAL WORK ONLY

STATE OF CALIFORNIA - DEPARTMENT OF TRANSPORTATION
Caltrans® ELECTRICAL DESIGN

FUNCTIONAL SUPERVISOR: SHAHRAM SHAHRIARI
CALCULATED-DESIGNED BY: VANESSA TRUONG
CHECKED BY: SHAHRAM SHAHRIARI
REVISED BY
DATE REVISED

LAST REVISION 02-27-15
DATE PLOTTED => 10-JUL-2015
TIME PLOTTED => 13:32

Dist	COUNTY	ROUTE	POST MILES TOTAL PROJECT	SHEET No.	TOTAL SHEETS
12	Ora	405	8.4	54	142

Vanessa Van Truong 4-22-15
REGISTERED ELECTRICAL ENGINEER DATE

4-27-15
PLANS APPROVAL DATE

REGISTERED PROFESSIONAL ENGINEER V.V. TRUONG No. E 13983 Exp 6/30/16 ELECTRICAL STATE OF CALIFORNIA

THE STATE OF CALIFORNIA OR ITS OFFICERS OR AGENTS SHALL NOT BE RESPONSIBLE FOR THE ACCURACY OR COMPLETENESS OF SCANNED COPIES OF THIS PLAN SHEET.

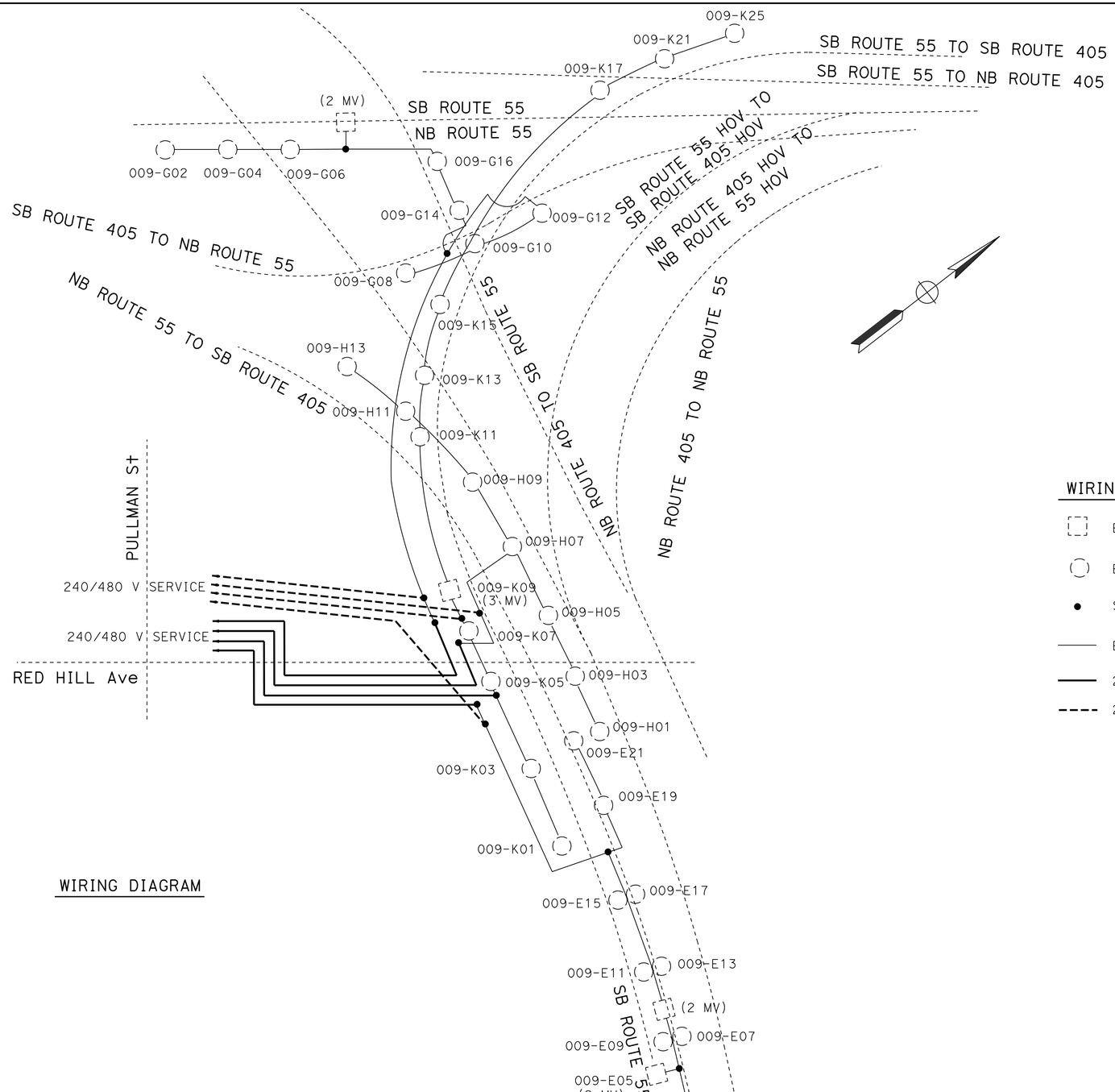

WIRING DIAGRAM

WIRING DIAGRAM LEGEND

- EXISTING SIGN ILLUMINATION
- EXISTING LUMINAIRE
- SPLICE
- EXISTING 2#6
- 2#6 (TEMPORARY FOR STAGE 1)
- 2#6 (TEMPORARY FOR STAGE 2)

LIGHTING
(TEMPORARY)

NO SCALE

E-7

STATE OF CALIFORNIA - DEPARTMENT OF TRANSPORTATION
Caltrans® ELECTRICAL DESIGN

FUNCTIONAL SUPERVISOR: SHAHRAM SHAHRIARI
CALCULATED-DESIGNED BY: VANESSA TRUONG
CHECKED BY: SHAHRAM SHAHRIARI
REVISED BY
DATE REVISED

LAST REVISION 02-27-15
DATE PLOTTED => 10-JUL-2015
TIME PLOTTED => 13:32

Dist	COUNTY	ROUTE	POST MILES TOTAL PROJECT	SHEET No.	TOTAL SHEETS
12	Ora	405	8.4	55	142

Vanessa Van Truong 4-22-15
REGISTERED ELECTRICAL ENGINEER DATE

4-27-15
PLANS APPROVAL DATE

REGISTERED PROFESSIONAL ENGINEER V.V. TRUONG No. E 13983 Exp 6/30/16 ELECTRICAL STATE OF CALIFORNIA

THE STATE OF CALIFORNIA OR ITS OFFICERS OR AGENTS SHALL NOT BE RESPONSIBLE FOR THE ACCURACY OR COMPLETENESS OF SCANNED COPIES OF THIS PLAN SHEET.

NOTES:

1. FOR ACCURATE RIGHT OF WAY DATA, CONTACT RIGHT OF WAY ENGINEERING AT THE DISTRICT OFFICE.
2. ALL NEW CONDUITS MUST BE 3"C, 8#6, UNLESS OTHERWISE NOTED.
3. SEE WIRING DIAGRAM SHEET E-9 FOR NUMBER OF CONDUCTORS AND CONDUCTOR SIZES.

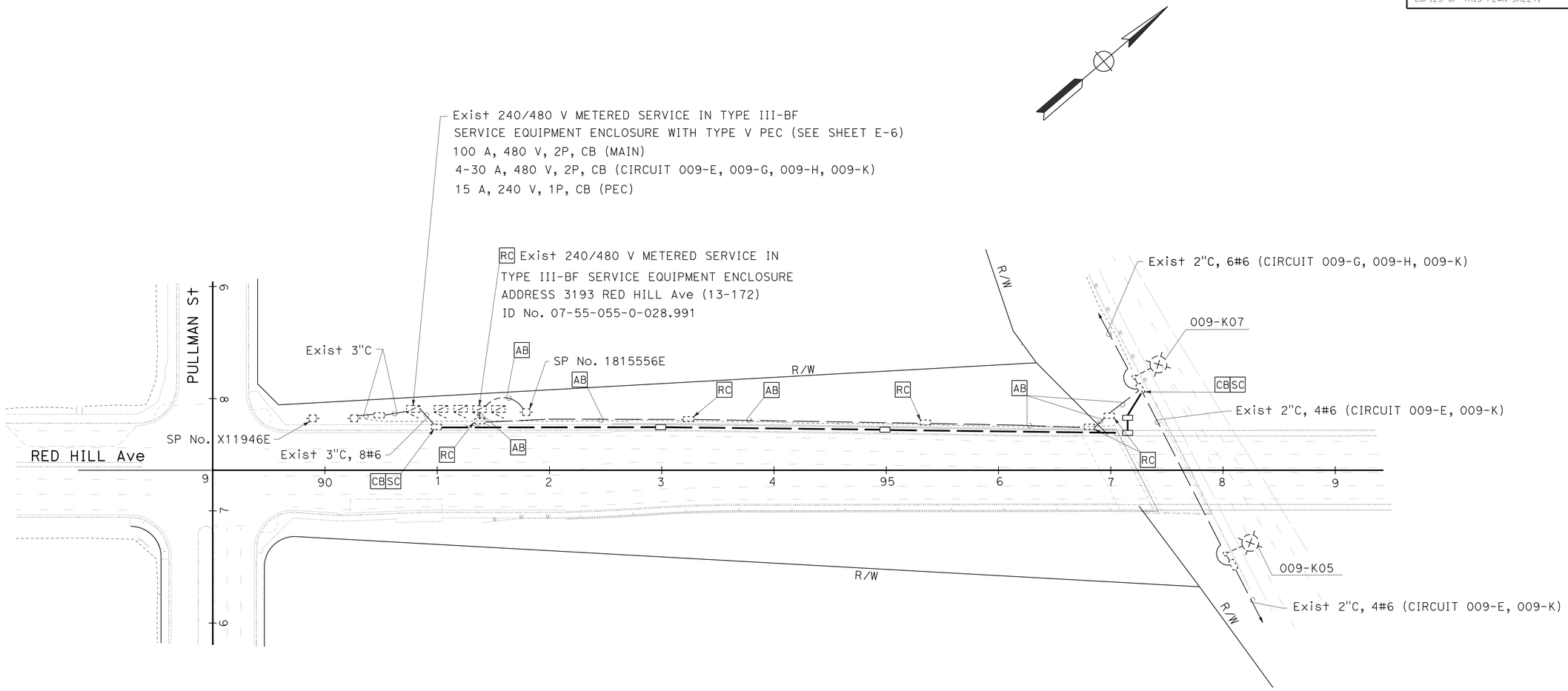

LIGHTING
SCALE: 1" = 50'

E-8

APPROVED FOR ELECTRICAL WORK ONLY

STATE OF CALIFORNIA - DEPARTMENT OF TRANSPORTATION
Caltrans® ELECTRICAL DESIGN
FUNCTIONAL SUPERVISOR: SHAHRAM SHAHRIARI
CALCULATED-DESIGNED BY: VANESSA TRUONG
CHECKED BY: SHAHRAM SHAHRIARI
REVISED BY
DATE REVISED

LAST REVISION 01-13-15
DATE PLOTTED => 10-JUL-2015
TIME PLOTTED => 13:32

Dist	COUNTY	ROUTE	POST MILES TOTAL PROJECT	SHEET No.	TOTAL SHEETS
12	Ora	405	8.4	56	142

Vanessa Van Truong 4-22-15
REGISTERED ELECTRICAL ENGINEER DATE

4-27-15
PLANS APPROVAL DATE

REGISTERED PROFESSIONAL ENGINEER V.V. TRUONG No. E 13983 Exp 6/30/16 ELECTRICAL STATE OF CALIFORNIA

THE STATE OF CALIFORNIA OR ITS OFFICERS OR AGENTS SHALL NOT BE RESPONSIBLE FOR THE ACCURACY OR COMPLETENESS OF SCANNED COPIES OF THIS PLAN SHEET.

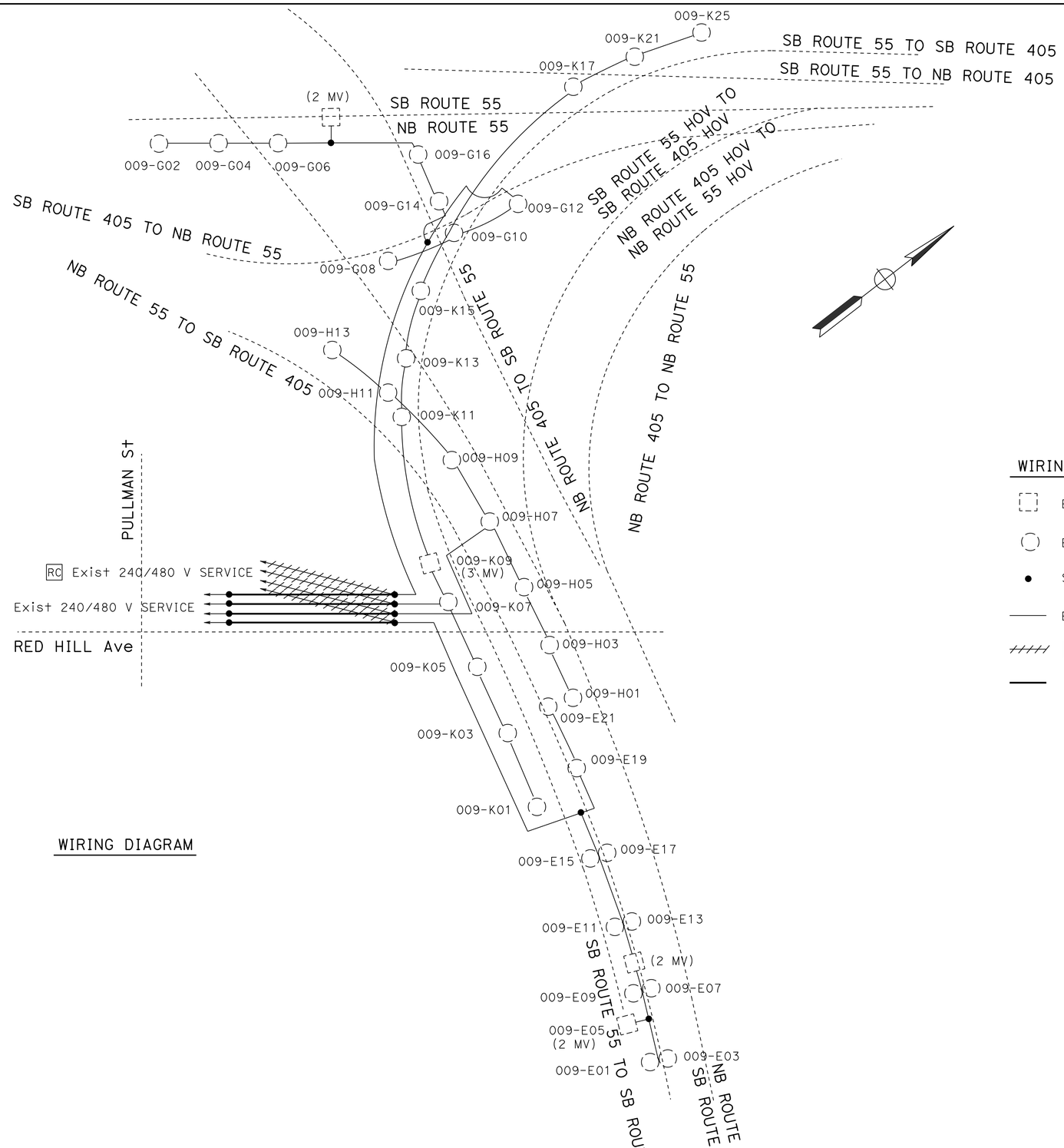

WIRING DIAGRAM LEGEND

- EXISTING SIGN ILLUMINATION
- EXISTING LUMINAIRE
- SPLICE
- EXISTING 2#6
- RC EXISTING 2#6
- 2#6

LIGHTING

NO SCALE

E-9

STATE OF CALIFORNIA - DEPARTMENT OF TRANSPORTATION
Caltrans® ELECTRICAL DESIGN

FUNCTIONAL SUPERVISOR: SHAHRAM SHAHRIARI
CALCULATED-DESIGNED BY: VANESSA TRUONG
CHECKED BY: SHAHRAM SHAHRIARI
REVISED BY
DATE REVISED

LAST REVISION 01-13-15
DATE PLOTTED => 10-JUL-2015
TIME PLOTTED => 13:32

Dist	COUNTY	ROUTE	POST MILES TOTAL PROJECT	SHEET No.	TOTAL SHEETS
12	Ora	405	8.4	57	142

Vanessa Van Truong 4-22-15
REGISTERED ELECTRICAL ENGINEER DATE

4-27-15
PLANS APPROVAL DATE

REGISTERED PROFESSIONAL ENGINEER V.V. TRUONG No. E 13983 Exp 6/30/16 ELECTRICAL STATE OF CALIFORNIA

THE STATE OF CALIFORNIA OR ITS OFFICERS OR AGENTS SHALL NOT BE RESPONSIBLE FOR THE ACCURACY OR COMPLETENESS OF SCANNED COPIES OF THIS PLAN SHEET.

NOTES:

1. FOR ACCURATE RIGHT OF WAY DATA, CONTACT RIGHT OF WAY ENGINEERING AT THE DISTRICT OFFICE.
2. ALL NEW CONDUITS MUST BE 2"C, 2#6, UNLESS OTHERWISE NOTED.

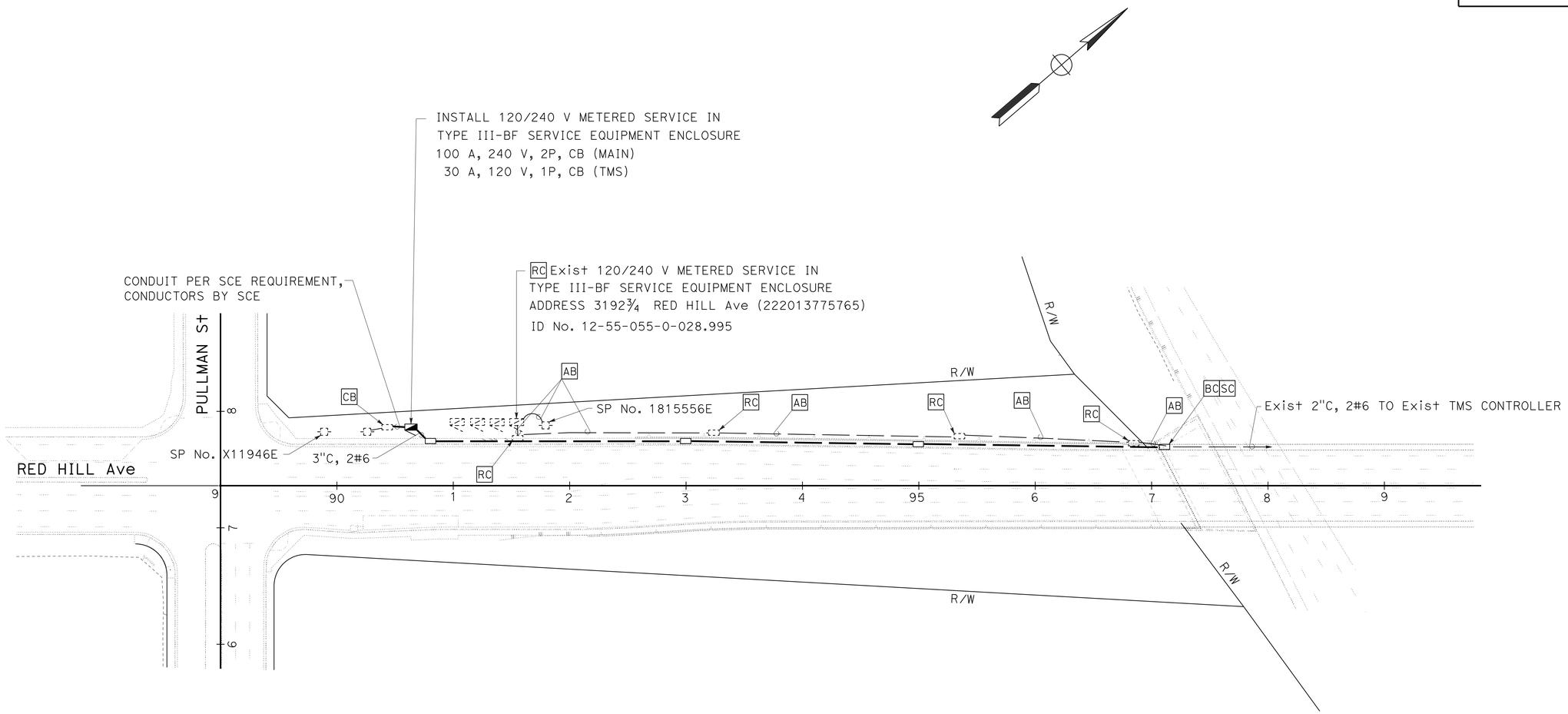

TRAFFIC MONITORING STATION

SCALE: 1" = 50'

E-10

APPROVED FOR ELECTRICAL WORK ONLY

STATE OF CALIFORNIA - DEPARTMENT OF TRANSPORTATION
Caltrans® ELECTRICAL DESIGN

FUNCTIONAL SUPERVISOR: SHAHRAM SHAHRIARI
CALCULATED-DESIGNED BY: VANESSA TRUONG
CHECKED BY: SHAHRAM SHAHRIARI
REVISED BY
DATE REVISED

LAST REVISION 01-13-15
DATE PLOTTED => 10-JUL-2015
TIME PLOTTED => 13:32

Dist	COUNTY	ROUTE	POST MILES TOTAL PROJECT	SHEET No.	TOTAL SHEETS
12	Ora	405	8.4	58	142

Vanessa Van Truong 4-22-15
REGISTERED ELECTRICAL ENGINEER DATE

4-27-15
PLANS APPROVAL DATE

REGISTERED PROFESSIONAL ENGINEER V.V. TRUONG No. E 13983 Exp 6/30/16 ELECTRICAL STATE OF CALIFORNIA

THE STATE OF CALIFORNIA OR ITS OFFICERS OR AGENTS SHALL NOT BE RESPONSIBLE FOR THE ACCURACY OR COMPLETENESS OF SCANNED COPIES OF THIS PLAN SHEET.

NOTE:

1. ELECTRICAL QUANTITY INFORMATION ON THIS SHEET IS FOR DESIGNER USE ONLY. DO NOT USE FOR BIDDING PURPOSES.

TEMPORARY LIGHTING (CITY OF COSTA MESA)

SHEET No.	3"C	2"C	2#6	TYPE H RISER	WOOD POLE	TYPE III-BF ENCLOSURE & FOUNDATION	No. 5 PULL BOX
	LF	LF	LF	EA	EA	EA	EA
E-1	20	20	170	2	2	1	2

LIGHTING (CITY OF COSTA MESA)

SHEET No.	2"C	2#6	No. 5 PULL BOX	RC TYPE 15	TYPE 15 & FOUNDATION	LED LUM ROADWAY 1	RC PULL BOX	RC SERVICE ENCLOSURE	RC 200 W HPS
	LF	LF	EA	EA	EA	EA	EA	EA	EA
E-2	1500	1500	12	7	9	17	8	1	15

ELECTRIC SERVICE (IRRIGATION)(CITY OF COSTA MESA)

SHEET No.	3"C	2"C	2#8	No. 5 PULL BOX	TYPE III-BF ENCLOSURE & FOUNDATION
	LF	LF	LF	EA	EA
E-3	10	100	100	3	1

LIGHTING (CITY OF IRVINE)

SHEET No.	3"C	2"C	2#6	No. 5 PULL BOX	TYPE III-BF ENCLOSURE & FOUNDATION	LED LUM ROADWAY 1	RC 200 W HPS	RC PULL BOX	RC SERVICE ENCLOSURE
	LF	LF	LF	EA	EA	EA	EA	EA	EA
E-4								6	1
E-5	50	350	350	2	1	8	8	1	

LIGHTING (TEMPORARY)

SHEET No.	3"C	2#6	TYPE H RISER	WOOD POLE	No. 5 PULL BOX	TYPE III-BF ENCLOSURE & FOUNDATION
	LF	LF	EA	EA	EA	EA
E-6	30	6000	3	11	1	1

LIGHTING

SHEET No.	3"C	2#6	No. 5 PULL BOX	RC PULL BOX	RC SERVICE ENCLOSURE
	LF	LF	EA	EA	EA
E-8	700	2800	4	5	1

TRAFFIC MONITORING STATION

SHEET No.	3"C	2"C	2#6	No. 5 PULL BOX	TYPE III-BF ENCLOSURE & FOUNDATION	RC PULL BOX	RC SERVICE ENCLOSURE
	LF	LF	LF	EA	EA	EA	EA
E-10	10	700	700	4	1	4	1

ELECTRICAL QUANTITIES

E-11

REVISED BY | DATE REVISED
VANESSA TRUONG | SHAHRAM SHAHRIARI
CALCULATED-DESIGNED BY | CHECKED BY
FUNCTIONAL SUPERVISOR | SHAHRAM SHAHRIARI
STATE OF CALIFORNIA - DEPARTMENT OF TRANSPORTATION
Caltrans ELECTRICAL DESIGN

LAST REVISION 03-04-15 | DATE PLOTTED => 10-JUL-2015 | TIME PLOTTED => 13:32

DIST	COUNTY	ROUTE	POST MILES TOTAL PROJECT	SHEET No.	TOTAL SHEETS
12	Ora	405	8.4	59	142

REGISTERED CIVIL ENGINEER 1-20-15 DATE

4-27-15
PLANS APPROVAL DATE

REGISTERED PROFESSIONAL ENGINEER DAVID A. NEUMANN No. C52639 Exp. 12/31/2016 CIVIL STATE OF CALIFORNIA

The State of California or its officers or agents shall not be responsible for the accuracy or completeness of scanned copies of this plan sheet.

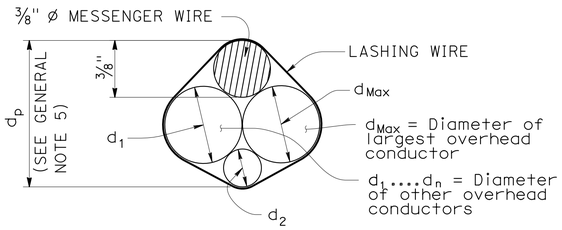

$d_p = 3/8" + d_{Max} + 0.30 * (d_1 + d_2 + \ldots d_n)$

PROJECTED DEPTH OF OVERHEAD BUNDLE, (d_p)

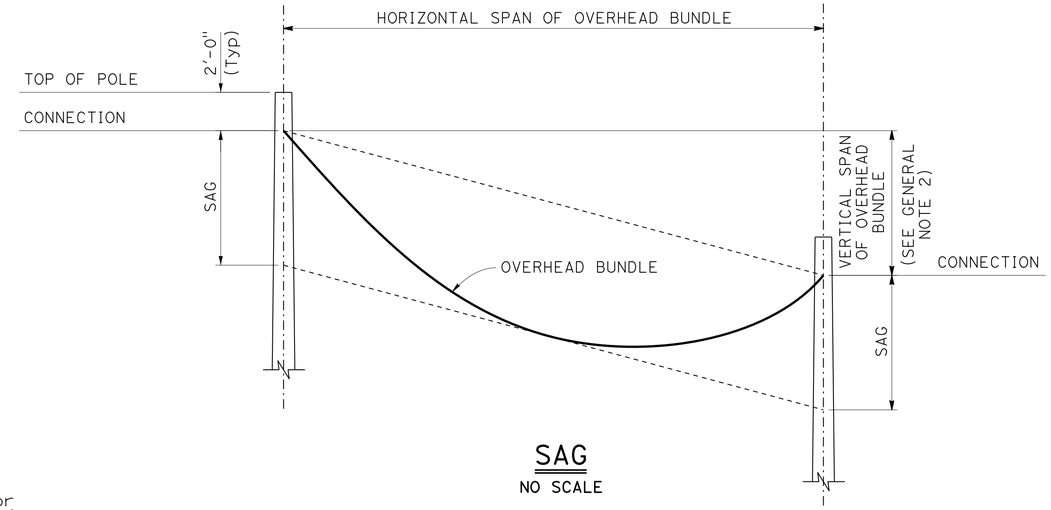

SAG

NO SCALE

Design: AASHTO Standard Specifications for Structural Supports for Highway Signs, Luminaires and Traffic Signals, Fifth Edition (LTS-5).

GROUP LOAD COMBINATIONS:

I Dead Load
II Dead Load + Wind Load
III Dead Load + 0.5 (Wind Load) + Ice Load
IV Fatigue: Not used

LOADING:

Wind Loading: 100 mph (3-second gust)
Wind Recurrence Interval: 10 years
Combined height, exposure, and elevated terrain factor = 1.05
(Exposure C, structure is not located on or over the top half of a ridge, hill, or escarpment)

Ice Loading: 3.0 psf on surfaces, 0.60 in radial thickness of ice at a unit weight of 60 pcf on overhead bundles

BASIC DESIGN VALUES:

Timber Poles: Fb = 1850 psi
Fv = 110 psi
Fcp = 230 psi
Fc = 950 psi
E = 1500 x 10^3 psi

DESIGN WIRE BREAKING STRENGTHS:

ASTM A475, Utilities Grade, 7 strand modified by termination efficiency factor of 0.8

FOUNDATION DESIGN NOTES:

1. Pole embedment depth design is based on Broms' approximate procedure as described in Article 13.6 of AASHTO LTS-5.

2. Embedment depth is calculated based on following soil parameters,
Cohesive Soil:
Shear strength of soil c = 1500 psf.
Cohesionless Soil:
ø = 30 deg, γ = 120 pcf.
Soil assumed to be unsaturated.

3. An overload factor of 2.0 and an undercapacity factor of 0.7 were used for safety factor of 2.86.

4. Allowable vertical bearing pressure at the end bearing of poles is 3000 psf at 6 feet or more embedment.

5. Guy wire anchor minimum allowable tension capacity, "Qa" = 8,900 lbs.

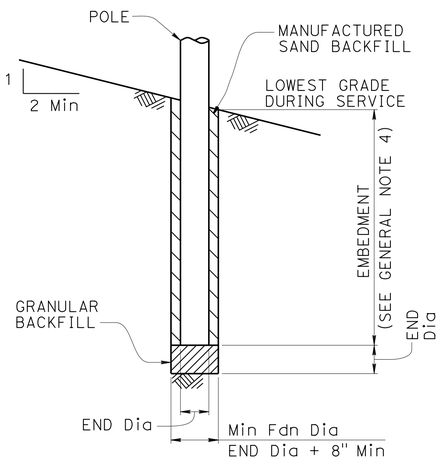

POLE FOUNDATION

GENERAL NOTES:

1. The messenger wire and any combination of overhead conductors must not exceed either a self weight of 3.0 lb/ft or the maximum d in the pole selection tables.

2. The maximum vertical span is 10% of the horizontal span.

3. For poles with adjacent unbalanced horizontal spans, the shortest horizontal span must be at least 50% of the largest horizontal span.

4. Add 2'-0" for slopes above 1V:4H.

5. For a pole supporting multiple spans, calculate d_p for each span and use the largest value.

6. Do not exceed the attachments shown.

DIAMETERS AND SELF WEIGHT OF OVERHEAD CONDUCTORS

CONDUCTOR OR CABLE TYPE	DIAMETER d (in)	WEIGHT w (plf)
3 CONDUCTOR SIGNAL CABLE (3CSC)	0.400	0.0980
5 CONDUCTOR SIGNAL CABLE (5CSC)	0.500	0.1560
9 CONDUCTOR SIGNAL CABLE (9CSC)	0.650	0.2760
12 CONDUCTOR SIGNAL CABLE (12CSC)	0.800	0.3970
28 CONDUCTOR SIGNAL CABLE (28CSC)	0.900	0.6490
1-#14	0.166	0.0235
1-#12	0.185	0.0330
1-#10	0.210	0.0476
1-#8	0.271	0.0774
1-#6	0.310	0.1130
1-#4	0.359	0.1690
1-#3	0.388	0.2080
1-#2	0.420	0.2560
1-#1	0.498	0.3340
6-CONDUCTOR SIGNAL INTERCONNECT CABLE (SIC)	0.350	0.0860
12-CONDUCTOR SIGNAL INTERCONNECT CABLE (SIC)	0.500	0.1440
DETECTOR LEAD-IN CABLE (DLC)	0.310	0.0440
12 to 48-STRAND FIBER OPTIC CABLE (48FOC)	0.424	0.0600
72-STRAND FIBER OPTIC CABLE (72FOC)	0.484	0.0770
96-STRAND FIBER OPTIC CABLE (96FOC)	0.535	0.1050
144-STRAND FIBER OPTIC CABLE (144FOC)	0.670	0.1890
3/8" ø MESSENGER WIRE	0.375	0.2730

NO SCALE

STANDARD DRAWING
FILE NO. xs18-010
APPROVAL DATE July 2014

STATE OF CALIFORNIA
DEPARTMENT OF TRANSPORTATION

DIVISION OF ENGINEERING SERVICES
DESIGN AND TECHNICAL SERVICES
SPECIAL DESIGNS BRANCH B

BRIDGE NO. N/A
POST MILE 6.3/12.8

TEMPORARY WOOD POLES
GENERAL NOTES

SES-1

DS OSD 2147A (ENGLISH STANDARD DRAWING "XS" BORDER REV. (02-02-11)

ORIGINAL SCALE IN INCHES FOR REDUCED PLANS 0 1 2 3

UNIT: 3619
PROJECT NUMBER & PHASE: 1214000057-1
CONTRACT NO.: ON5404

DISREGARD PRINTS BEARING EARLIER REVISION DATES

REVISION DATES: 9-18-14 10-21-14 10-31-14 1-20-15

SHEET 1 OF 5

FILE => 1214000057uh001.dgn

USERNAME => s111173 DATE PLOTTED => 10-JUL-2015 TIME PLOTTED => 13:32

DIST	COUNTY	ROUTE	POST MILES TOTAL PROJECT	SHEET No.	TOTAL SHEETS
12	Ora	405	8.4	60	142

REGISTERED CIVIL ENGINEER 1-20-15 DATE

4-27-15
PLANS APPROVAL DATE

REGISTERED PROFESSIONAL ENGINEER DAVID A. NEUMANN No. C52639 Exp. 12/31/2016 CIVIL STATE OF CALIFORNIA

The State of California or its officers or agents shall not be responsible for the accuracy or completeness of scanned copies of this plan sheet.

LEGEND

- Wood Pole No Attachments
- A Wood Pole with Attachments
- —OH— Overhead Bundle

POLE SELECTION TABLE

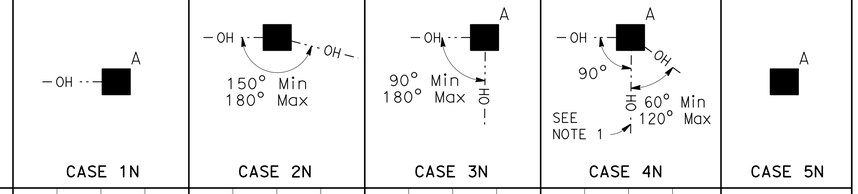

			CASE 1N				CASE 2N				CASE 3N				CASE 4N				CASE 5N
		MAXIMUM d_p	1"	1.5"	2.0"	2.5"	1"	1.5"	2.0"	2.5"	1.0"	1.5"	2.0"	2.5"	1"	1.5"	2.0"	2.5"	N/A
OVERHEAD BUNDLE HORIZONTAL SPAN (Max)	50'	MINIMUM POLE CLASS	H-1	H-2	H-2	H-2	4	3	2	1	H-2	H-2	H-3	H-3	H-4	H-4	H-4	H-5	CLASS 1 E = 10'
		POLE EMBEDMENT (E)	11'				10'				11'				12'				
	100'	MINIMUM POLE CLASS	H-2	H-3	H-4	H-5	1	H-1	H-2	H-3	H-4	H-5	H-5	H-6	H-5	H-5	H-6		
		POLE EMBEDMENT (E)	12'				11'				12'				12'				
	150'	MINIMUM POLE CLASS	H-4	H-5	H-6		H-1	H-2	H-3	H-5	H-6				H-6				
		POLE EMBEDMENT (E)	12'				12'				12'				12'				
	200'	MINIMUM POLE CLASS	H-5	H-6			H-2	H-3	H-5										
		POLE EMBEDMENT (E)	12'				12'												

1. CCTV camera assembly or vehicle detection system
2. Overhead bundle consisting of a 3/8" ø messenger wire, overhead conductors, and lashing wire
3. Luminaire with mast arm
4. Pedestrian push button assembly or accessible push button assembly
5. Signal face with 3 indications or single sheet sign panel (10 SQFT Max)
6. Riser with weather head as required
7. Pull box as required
8. Grounding as required
9. Single flashing beacon or single sheet sign panel (4 SQFT Max)
10. Single sheet sign panel (4' x 4' Max) or signal face with 3 indications
11. Flashing beacon control assembly
12. NEMA 3R enclosure, 26"(W) x 56"(H) x 12"(D) Max dimensions. Max weight including batteries, 450 lbs
13. 25' SQFT Max total photovoltaic panels mounted as shown as required
14. 2-12" flashing beacons

NOTES:

1. In addition to other restrictions on maximum horizontal span, this horizontal span must not exceed 100'.
2. Cases 1N, 3N and 4N may substitute the attachments shown in Case 5N if the photovoltaic panel is not included.
3. For Case 1N without an overhead bundle (item 2) use minimum pole class H-1 with E=11'.

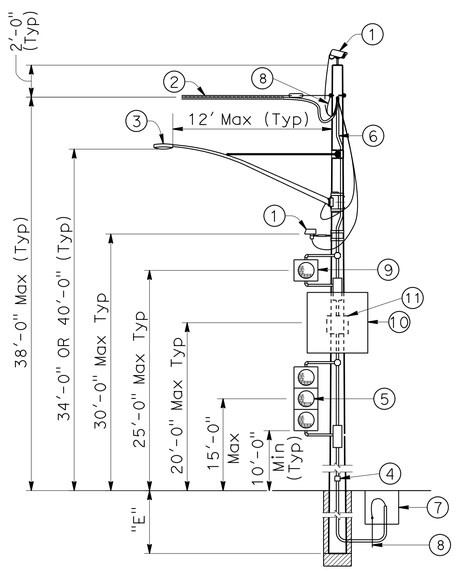

CASE 1N
POLE AT DEAD END WITH ATTACHMENTS
SEE NOTE 2

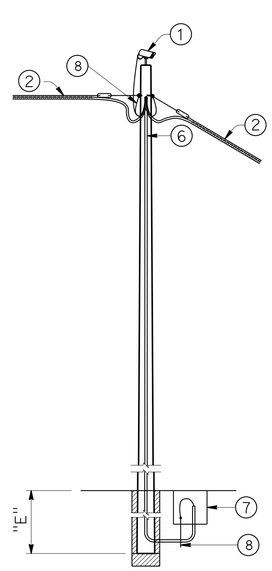

CASE 2N
POLE AT TANGENT WITHOUT ATTACHMENTS

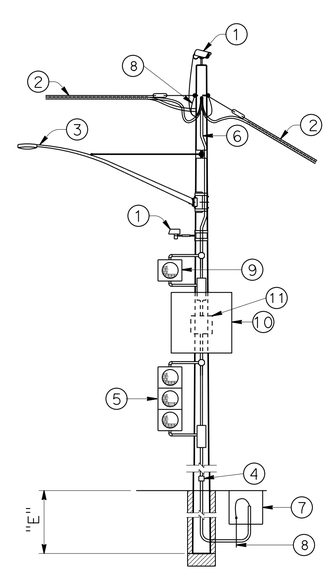

CASE 3N
POLE AT TANGENT OR CORNER WITH ATTACHMENTS
SEE NOTE 2

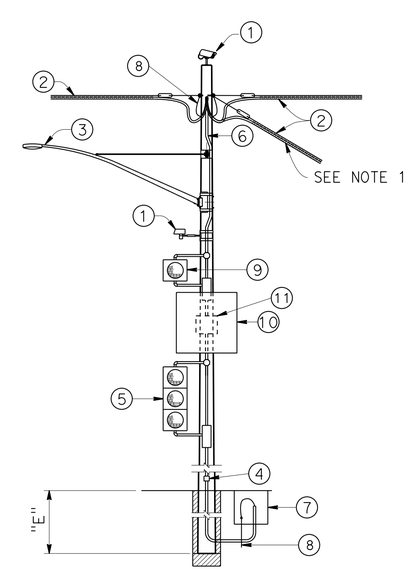

CASE 4N
POLE AT JUNCTION WITH ATTACHMENTS
SEE NOTE 2

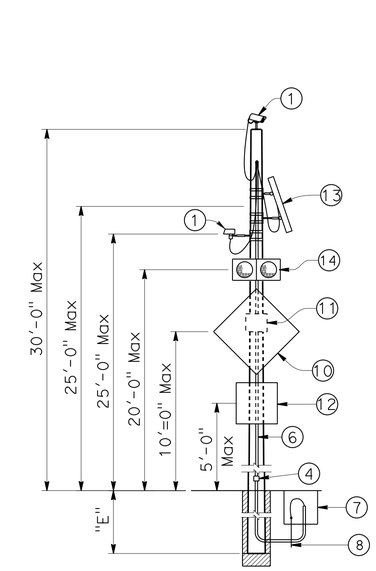

CASE 5N
POLE WITHOUT OVERHEAD BUNDLE WITH ATTACHMENTS

NO SCALE

STANDARD DRAWING
FILE NO. xs18-020
APPROVAL DATE July 2014

STATE OF CALIFORNIA
DEPARTMENT OF TRANSPORTATION

DIVISION OF ENGINEERING SERVICES
DESIGN AND TECHNICAL SERVICES
SPECIAL DESIGNS BRANCH B

BRIDGE NO. N/A
POST MILE 6.3/12.8

TEMPORARY WOOD POLES
NON-GUYED - NO SIGNALS ON SPANS

SES-2

DS OSD 2147A (ENGLISH STANDARD DRAWING "XS" BORDER REV. (02-02-11)

ORIGINAL SCALE IN INCHES FOR REDUCED PLANS 0 1 2 3

UNIT: 3619
PROJECT NUMBER & PHASE: 1214000057-1
CONTRACT NO.: 0N5404

DISREGARD PRINTS BEARING EARLIER REVISION DATES

REVISION DATES 9-18-14 10-21-14 10-31-14 1-20-15

SHEET 2 OF 5

FILE => 1214000057uh002.dgn

USERNAME => s111173 DATE PLOTTED => 10-JUL-2015 TIME PLOTTED => 13:32

DIST	COUNTY	ROUTE	POST MILES TOTAL PROJECT	SHEET No.	TOTAL SHEETS
12	Ora	405	8.4	61	142

REGISTERED CIVIL ENGINEER 1-20-15 DATE

4-27-15
PLANS APPROVAL DATE

REGISTERED PROFESSIONAL ENGINEER DAVID A. NEUMANN No. C52639 Exp. 12/31/2016 CIVIL STATE OF CALIFORNIA

The State of California or its officers or agents shall not be responsible for the accuracy or completeness of scanned copies of this plan sheet.

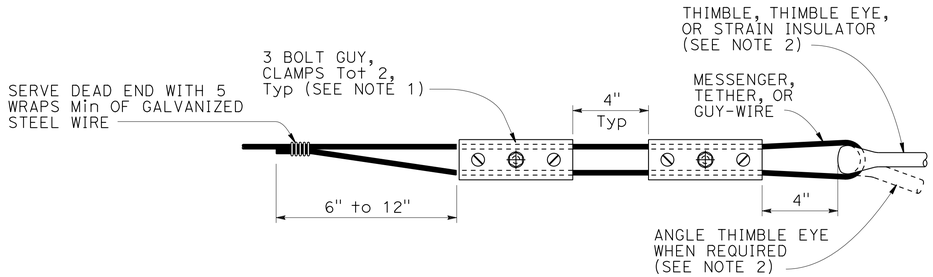

ALTERNATIVE TERMINATION OF MESSENGER WIRES USING GUY CLAMPS

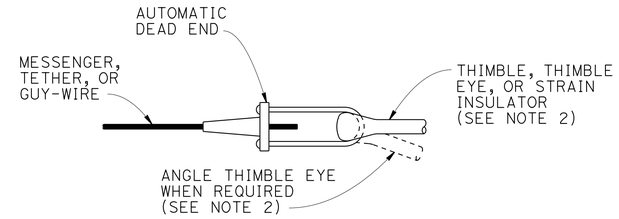

TERMINATION OF WIRES USING AUTOMATIC DEAD END

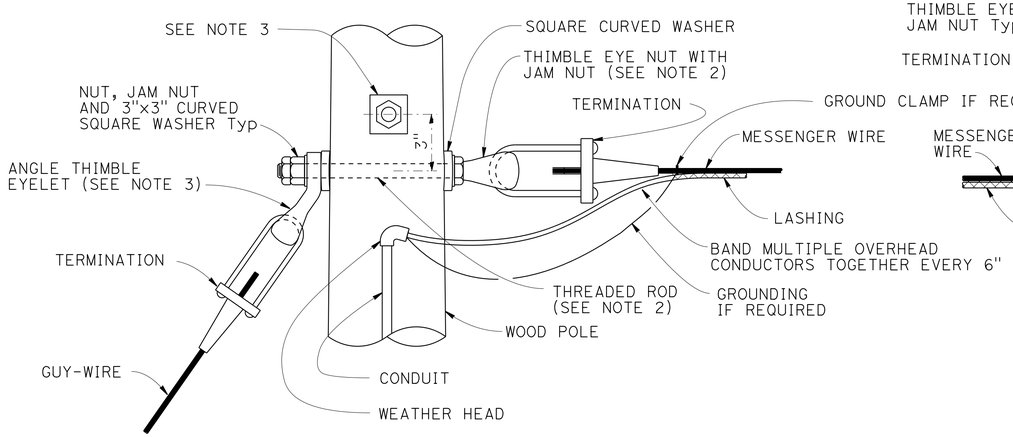

POLE AT DEAD END WITH GUY-WIRE CONNECTION

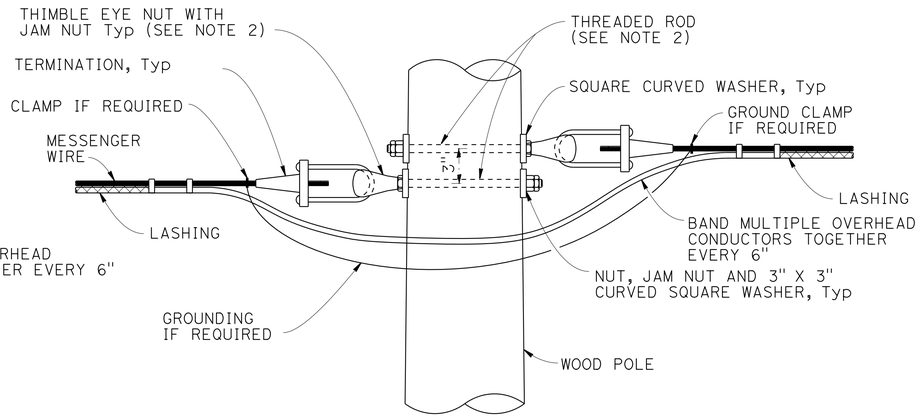

POLE AT TANGENT OR CORNER CONNECTION

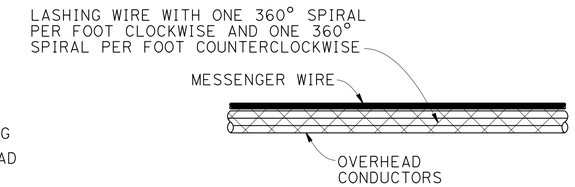

DOUBLE LASHING DETAIL

USE IF d_p IS GREATER THAN $1\frac{1}{2}$"

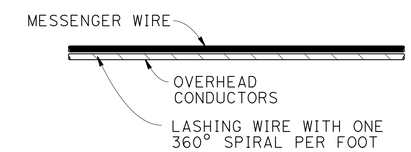

TYPICAL LASHING DETAIL

USE IF d_p IS $1\frac{1}{2}$" OR LESS

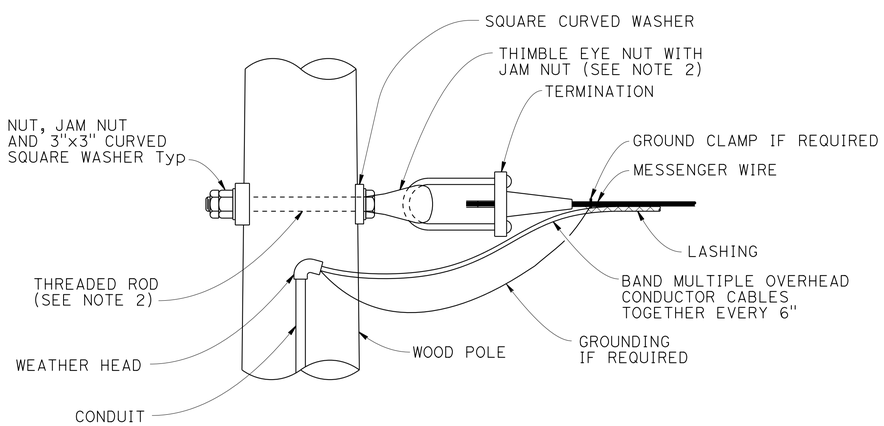

POLE AT DEAD END CONNECTION

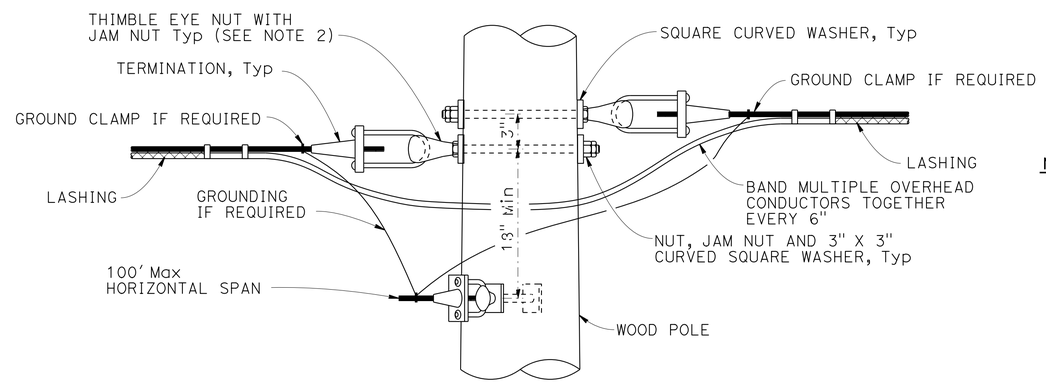

POLE AT JUNCTION CONNECTION

NOTES:

1. For guy wires use 3 clamps.
2. Use $\frac{5}{8}$" ø except $\frac{3}{4}$" ø at guyed wires
3. Install additional angle thimble eyelet at poles with two guy wires.

NO SCALE

STANDARD DRAWING

FILE NO. xs18-080-1

APPROVAL DATE July 2014

STATE OF CALIFORNIA DEPARTMENT OF TRANSPORTATION

DIVISION OF ENGINEERING SERVICES DESIGN AND TECHNICAL SERVICES SPECIAL DESIGNS BRANCH B

BRIDGE NO. N/A

POST MILE 6.3/12.8

TEMPORARY WOOD POLES DETAILS No. 1

SES-3

DS OSD 2147A (ENGLISH STANDARD DRAWING "XS" BORDER REV. (02-02-11)

ORIGINAL SCALE IN INCHES FOR REDUCED PLANS 0 1 2 3

UNIT: 3619
PROJECT NUMBER & PHASE: 121400057-1
CONTRACT NO.: ON5404

DISREGARD PRINTS BEARING EARLIER REVISION DATES

REVISION DATES: 9-18-14 10-21-14 10-31-14 1-20-15

SHEET 3 OF 5

FILE => 1214000057uh003.dgn

USERNAME => s111173 DATE PLOTTED => 10-JUL-2015 TIME PLOTTED => 13:32

DIST	COUNTY	ROUTE	POST MILES TOTAL PROJECT	SHEET No.	TOTAL SHEETS
12	Ora	405	8.4	62	142

REGISTERED CIVIL ENGINEER 1-20-15 DATE

4-27-15
PLANS APPROVAL DATE

REGISTERED PROFESSIONAL ENGINEER DAVID A. NEUMANN No. C52639 Exp. 12/31/2016 CIVIL STATE OF CALIFORNIA

The State of California or its officers or agents shall not be responsible for the accuracy or completeness of scanned copies of this plan sheet.

NOTES:

1. Luminaire mast arms must be in compliance with Standard Plan ES-6D with noted modifications.
2. Verify pole dimensions at tie-rod attachment height. Fabricate 8" flat bar with "L" Dimension to maintain an open gap between flanges in finished installation.
3. Not all screw heads and bolt heads are shown for clarity.
4. Mast arm not shown for clarity.

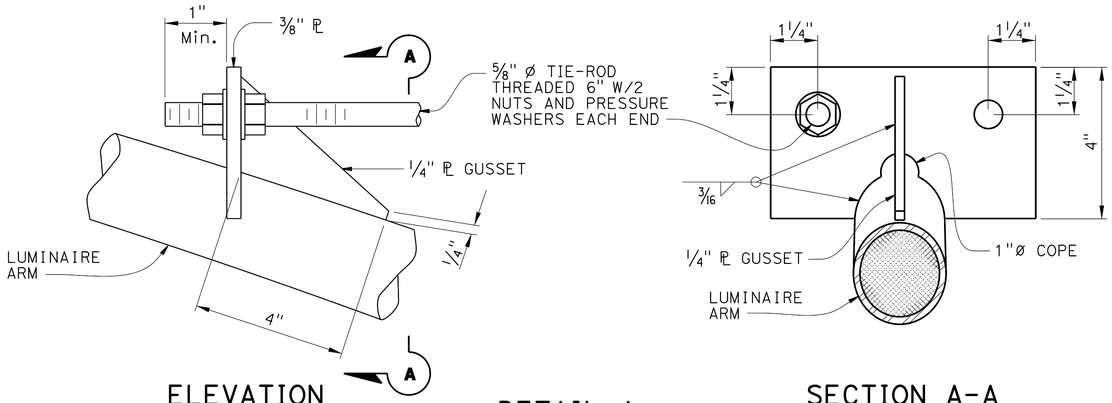

ELEVATION

SECTION A-A

DETAIL A
TIE-ROD AT LUMINAIRE ARM
NO SCALE

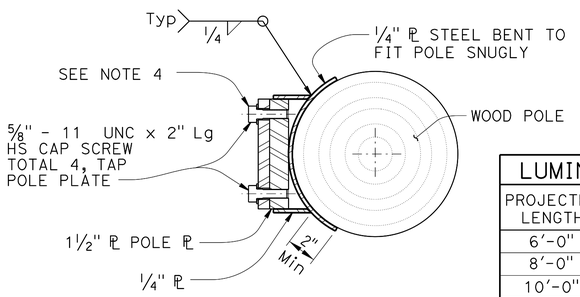

SECTION E-E

LUMINAIRE MAST ARM DATA			
PROJECTED LENGTH	N RISE	Min OD AT POLE	NOMINAL THICKNESS
6'-0"	2'-0"±	3 1/4"	0.1196"
8'-0"	2'-6"±	3 1/2"	
10'-0"	3'-3"±	3 7/8"	
12'-0"	4'-3"±		

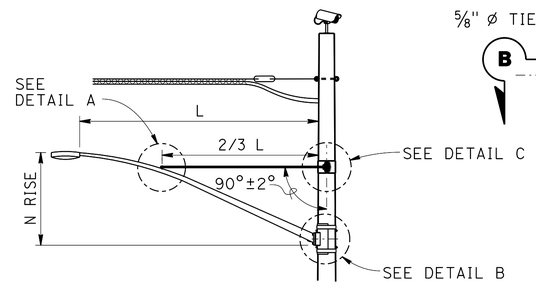

LUMINAIRE MAST ARM

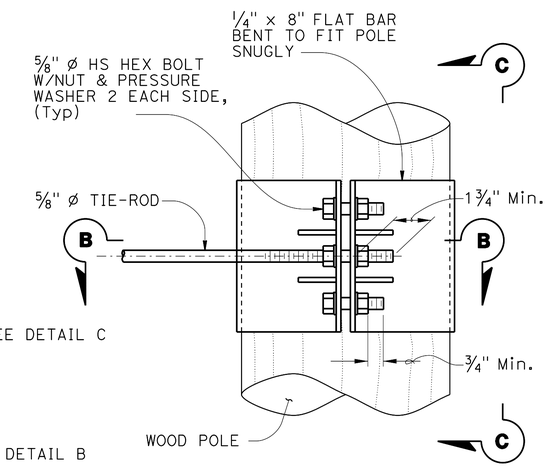

ELEVATION

NOTE:
Not all screw and bolt heads shown for clarity.

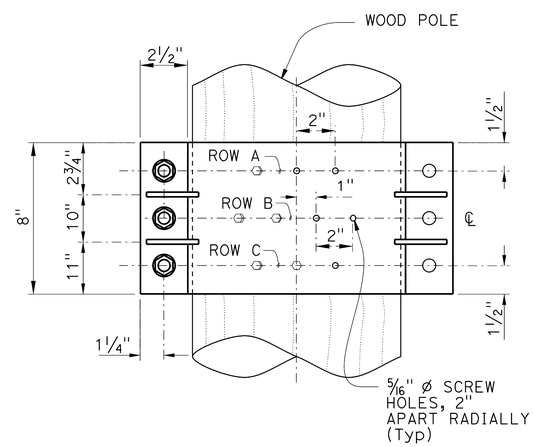

VIEW C-C

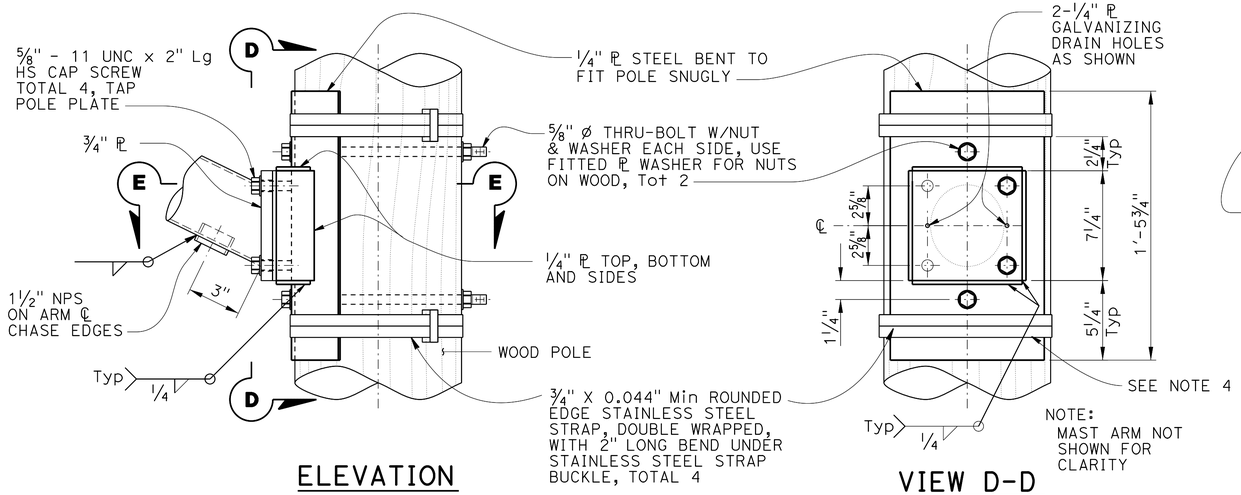

ELEVATION

VIEW D-D

DETAIL B
ARM CONNECTION DETAILS
NO SCALE

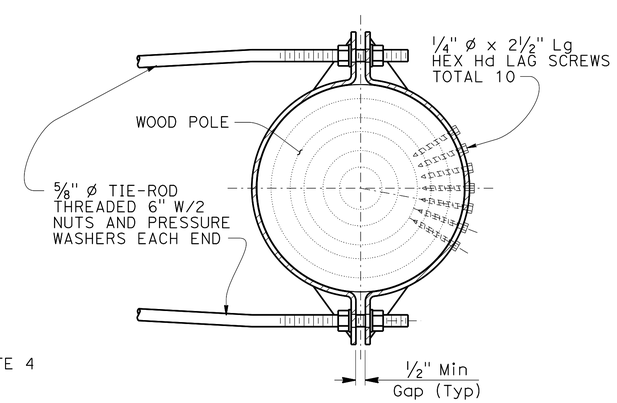

SECTION B-B

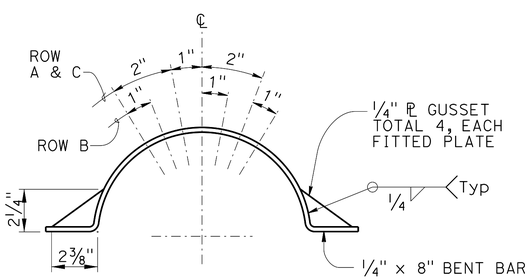

LAG SCREW AND
GUSSET PLATE LAYOUT

DETAIL C
TIE-ROD AT POLE
NO SCALE

STANDARD DRAWING					
FILE NO. xs18-080-3	APPROVAL DATE July 2014	STATE OF CALIFORNIA DEPARTMENT OF TRANSPORTATION	DIVISION OF ENGINEERING SERVICES DESIGN AND TECHNICAL SERVICES SPECIAL DESIGNS BRANCH B	BRIDGE NO. N/A POST MILE 6.3/12.8	TEMPORARY WOOD POLES DETAILS No. 2 — SES-4

DS OSD 2147A (ENGLISH STANDARD DRAWING "XS" BORDER REV. (02-02-11))

ORIGINAL SCALE IN INCHES FOR REDUCED PLANS 0 1 2 3

UNIT: 3619
PROJECT NUMBER & PHASE: 1214000057-1 CONTRACT NO.: 0N5404

DISREGARD PRINTS BEARING EARLIER REVISION DATES

REVISION DATES: 9-18-14 10-21-14 10-31-14 1-20-15

SHEET 4 OF 5

FILE => 1214000057un004.dgn

USERNAME => s111173 DATE PLOTTED => 10-JUL-2015 TIME PLOTTED => 13:32

DIST	COUNTY	ROUTE	POST MILES TOTAL PROJECT	SHEET No.	TOTAL SHEETS
12	Ora	405	8.4	63	142

REGISTERED CIVIL ENGINEER 1-20-15 DATE

4-27-15
PLANS APPROVAL DATE

REGISTERED PROFESSIONAL ENGINEER DAVID A. NEUMANN No. C52639 Exp. 12/31/2016 CIVIL STATE OF CALIFORNIA

The State of California or its officers or agents shall not be responsible for the accuracy or completeness of scanned copies of this plan sheet.

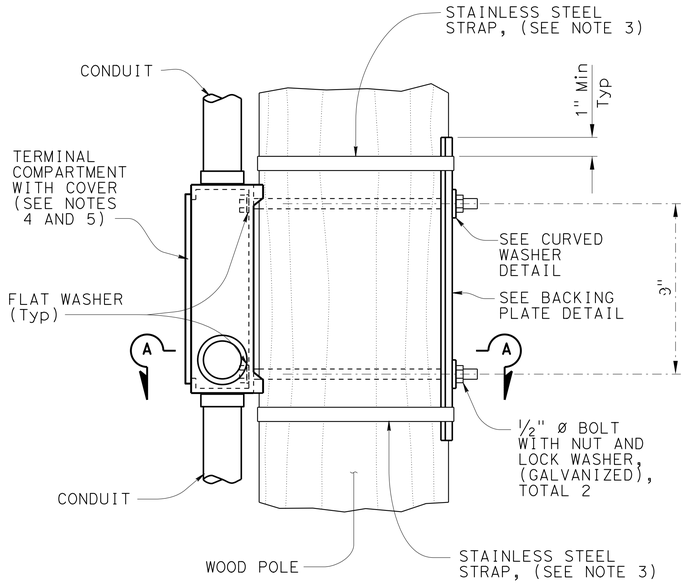

ELEVATION

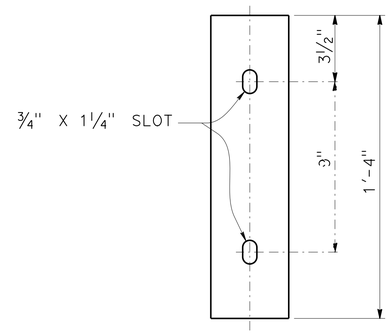

ELEVATION

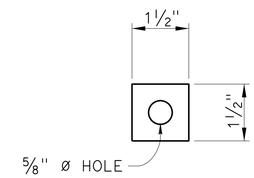

ELEVATION

PLAN

BACKING PLATE DETAIL

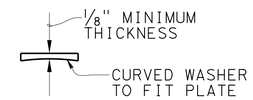

PLAN

CURVED WASHER DETAIL

NOTES:

1. Verify pole dimensions at terminal compartment for fabrication of backing plate and curved washer.
2. Backing plate to be galvanized after fabrication.
3. ¾" x 0.044" minimum, rounded edge stainless steel straps, double wrapped with 2" long bend under stainless steel strap buckle.
4. For miscellaneous details for signal mounting not shown see Standard Plan ES-4D.
5. If the terminal compartment has a cable entry guide on the rear face, remove the cable entry guide to a level that will not interfere with the wood post. Close any unused cable entry locations with raintight cap.

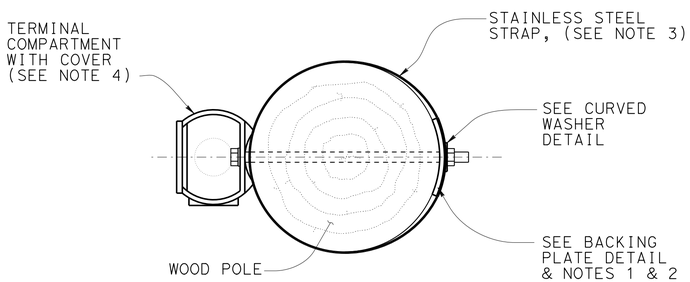

SECTION A-A

SIDE MOUNTING TERMINAL COMPARTMENT

STANDARD DRAWING

FILE NO. xs18-080-4

APPROVAL DATE July 2014

STATE OF CALIFORNIA DEPARTMENT OF TRANSPORTATION

DIVISION OF ENGINEERING SERVICES DESIGN AND TECHNICAL SERVICES SPECIAL DESIGNS BRANCH B

BRIDGE NO. N/A

POST MILE 6.3/12.8

TEMPORARY WOOD POLES DETAILS No. 3

SES-5

DS OSD 2147A (ENGLISH STANDARD DRAWING "XS" BORDER REV. (02-02-11)

ORIGINAL SCALE IN INCHES FOR REDUCED PLANS 0 1 2 3

UNIT: 3619
PROJECT NUMBER & PHASE: 1214000057-1 CONTRACT NO.: 0N5404

DISREGARD PRINTS BEARING EARLIER REVISION DATES

REVISION DATES 9-10-14 10-21-14 10-31-14 1-20-15

SHEET 5 OF 5

FILE => 1214000057uh005.dgn

USERNAME => s111173 DATE PLOTTED => 10-JUL-2015 TIME PLOTTED => 13:32

M

Maint	MAINTENANCE
Max	MAXIMUM
MB	METAL BEAM
MBB	METAL BEAM BARRIER
MBGR	METAL BEAM GUARD RAILING
Med	MEDIAN
MGS	MIDWEST GUARDRAIL SYSTEM
MH	MANHOLE
Min	MINIMUM
Misc	MISCELLANEOUS
Misc I & S	MISCELLANEOUS IRON AND STEEL
Mkr	MARKER
Mod	MODIFIED,
	MODIFY
Mon	MONUMENT
MP	METAL PLATE
MPGR	METAL PLATE GUARD RAILING
MR	MOVEMENT RATING
MSE	MECHANICALLY STABILIZED EMBANKMENT
Mt	MOUNTAIN, MOUNT
Mtl	MATERIAL
MVP	MAINTENANCE VEHICLE PULLOUT

N

N	NORTH
NB	NORTHBOUND
No.	NUMBER (MUST HAVE PERIOD)
Nos.	NUMBERS (MUST HAVE PERIOD)
NPS	NOMINAL PIPE SIZE
NS	NEAR SIDE
NSP	NEW STANDARD PLAN
NTS	NOT TO SCALE

O

Oblr	OBLITERATE
OC	OVERCROSSING
OD	OUTSIDE DIAMETER
OF	OUTSIDE FACE
OG	ORIGINAL GROUND
OGAC	OPEN GRADED ASPHALT CONCRETE
OGFC	OPEN GRADED FRICTION COURSE
OH	OVERHEAD
OHWM	ORDINARY HIGH WATER MARK
O-O	OUT TO OUT
Opp	OPPOSITE
OSD	OVERSIDE DRAIN

P

P	PAGE
PAP	PERFORATED ALUMINUM PIPE
PB	PULL BOX
PC	POINT OF CURVATURE,
	PRECAST
PCC	POINT OF COMPOUND CURVE,
	PORTLAND CEMENT CONCRETE
PCMS	PORTABLE CHANGEABLE MESSAGE SIGN
PCP	PERFORATED CONCRETE PIPE,
	PRESTRESSED CONCRETE PIPE
PCVC	POINT OF COMPOUND VERTICAL CURVE
PEC	PERMIT TO ENTER AND CONSTRUCT
Ped	PEDESTRIAN
Ped OC	PEDESTRIAN OVERCROSSING
Ped UC	PEDESTRIAN UNDERCROSSING
Perm Mtl	PERMEABLE MATERIAL

P continued

PG	PROFILE GRADE
PI	POINT OF INTERSECTION
PJP	PARTIAL JOINT PENETRATION
Pkwy	PARKWAY
ℙ,PL	PLATE
P/L	PROPERTY LINE
PM	POST MILE,
	TIME FROM NOON TO MIDNIGHT
PN	PAVING NOTCH
POC	POINT OF HORIZONTAL CURVE
POT	POINT OF TANGENT
POVC	POINT OF VERTICAL CURVE
PP	PIPE PILE,
	PLASTIC PIPE,
	POWER POLE
PPL	PREFORMED PERMEABLE LINER
PPP	PERFORATED PLASTIC PIPE
PRC	POINT OF REVERSE CURVE
PRF	PAVEMENT REINFORCING FABRIC
PRVC	POINT OF REVERSE VERTICAL CURVE
PS&E	PLANS, SPECIFICATIONS AND ESTIMATES
PS, P/S	PRESTRESSED
PSP	PERFORATED STEEL PIPE
PT	POINT OF TANGENCY
PVC	POLYVINYL CHLORIDE
Pvmt	PAVEMENT

Q

Qty	QUANTITY

R

R	RADIUS
R & D	REMOVE AND DISPOSE
R & S	REMOVE AND SALVAGE
R/C	RATE OF CHANGE
RCA	REINFORCED CONCRETE ARCH
RCB	REINFORCED CONCRETE BOX
RCP	REINFORCED CONCRETE PIPE
RCPA	REINFORCED CONCRETE PIPE ARCH
Rd	ROAD
Reinf	REINFORCED,
	REINFORCEMENT,
	REINFORCING
Rel	RELOCATE
Repl	REPLACEMENT
Ret	RETAINING
Rev	REVISED, REVISION
Rdwy	ROADWAY
RHMA	RUBBERIZED HOT MIX ASPHALT
Riv	RIVER
RM	ROAD-MIXED
RP	RADIUS POINT,
	REFERENCE POINT
RR	RAILROAD
RSP	ROCK SLOPE PROTECTION,
	REVISED STANDARD PLAN
Rt	RIGHT
Rte	ROUTE
RW	REDWOOD,
	RETAINING WALL
R/W	RIGHT OF WAY
Rwy	RAILWAY

S

S	SOUTH,
	SUPPLEMENT
SAE	STRUCTURE APPROACH EMBANKMENT
Salv	SALVAGE
SAPP	STRUCTURAL ALUMINUM PLATE PIPE
SB	SOUTHBOUND
SC	SAND CUSHION
SCSP	SLOTTED CORRUGATED STEEL PIPE
SD	STORM DRAIN
Sec	SECOND,
	SECTION
Sep	SEPARATION
SG	SUBGRADE
Shld	SHOULDER
Sht	SHEET
Sim	SIMILAR
℄	STATION LINE
SM	SELECTED MATERIAL
Spec	SPECIAL,
	SPECIFICATIONS
SPP	SLOTTED PLASTIC PIPE
SS	SLOPE STAKE
SSBM	STRAP AND SADDLE BRACKET METHOD
SSD	STRUCTURAL SECTION DRAIN
SSPA	STRUCTURAL STEEL PLATE ARCH
SSPP	STRUCTURAL STEEL PLATE PIPE
SSPPA	STRUCTURAL STEEL PLATE PIPE ARCH
SSRP	STEEL SPIRAL RIB PIPE
St	STREET
Sta	STATION
STBB	SINGLE THRIE BEAM BARRIER
Std	STANDARD
Str	STRUCTURE
Surf	SURFACING
SW	SIDEWALK,
	SOUND WALL
Swr	SEWER
Sym	SYMMETRICAL
S4S	SURFACE 4 SIDES

T

T	SEMI-TANGENT
Tan	TANGENT
TBB	THRIE BEAM BARRIER
Tbr	TIMBER
TC	TOP OF CURB
TCB	TRAFFIC CONTROL BOX
TCE	TEMPORARY CONSTRUCTION EASEMENT
Tel	TELEPHONE
Temp	TEMPORARY
TG	TOP OF GRADE
Tot	TOTAL
TP	TELEPHONE POLE
TPB	TREATED PERMEABLE BASE
TPM	TREATED PERMEABLE MATERIAL
Trans	TRANSITION

T continued

TS	TRANSVERSE,
	TRAFFIC SIGNAL,
	TUBULAR STEEL
Typ	TYPICAL

U

UC	UNDERCROSSING
UD	UNDERDRAIN
UG	UNDERGROUND
UON	UNLESS OTHERWISE NOTED
UP	UNDERPASS

V

V	VALVE,
	DESIGN SPEED
Var	VARIABLE,
	VARIES
VC	VERTICAL CURVE
VCP	VITRIFIED CLAY PIPE
Vert	VERTICAL
Via	VIADUCT
Vol	VOLUME

W

W	WEST,
	WIDTH
WB	WESTBOUND
WH	WEEP HOLE
WM	WIRE MESH
WS	WATER SURFACE
WSP	WELDED STEEL PIPE
Wt	WEIGHT
WV	WATER VALVE
WW	WINGWALL
WWLOL	WINGWALL LAYOUT LINE

X

X Sec	CROSS SECTION
Xing	CROSSING

Y

Yr	YEAR
Yrs	YEARS

Dist	COUNTY	ROUTE	POST MILES TOTAL PROJECT	SHEET No.	TOTAL SHEETS
12	Ora	405	8.4	64	142

Grace M. Tsushima
REGISTERED CIVIL ENGINEER

July 19, 2013
PLANS APPROVAL DATE

REGISTERED PROFESSIONAL ENGINEER Grace M. Tsushima No. C49814 Exp. 9-30-14 CIVIL STATE OF CALIFORNIA

THE STATE OF CALIFORNIA OR ITS OFFICERS OR AGENTS SHALL NOT BE RESPONSIBLE FOR THE ACCURACY OR COMPLETENESS OF SCANNED COPIES OF THIS PLAN SHEET.

TO ACCOMPANY PLANS DATED 4-27-15

2010 REVISED STANDARD PLAN RSP A10B

UNIT OF MEASUREMENT SYMBOLS:

Some of the symbols used in the project plan quantity tables and in the Bid Item List are:

TABLE A

SYMBOL USED	DEFINITIONS
ACRE	ACRE
CF	CUBIC FOOT
CY	CUBIC YARD
EA	EACH
GAL	GALLON
LB	POUND
LF	LINEAR FOOT
SQFT	SQUARE FOOT
SQYD	SQUARE YARD
STA	100 FEET
TAB	TABLET
TON	2,000 POUNDS

Some of the symbols used in the plans other than in the project plan quantity tables are:

TABLE B

SYMBOL USED	DEFINITIONS
ksi	KIPS PER SQUARE INCH
ksf	KIPS PER SQUARE FOOT
psi	POUNDS PER SQUARE INCH
psf	POUNDS PER SQUARE FOOT
lb/ft^3, pcf	POUNDS PER CUBIC FOOT
tsf	TONS PER SQUARE FOOT
mph, MPH *	MILES PER HOUR
ø	NOMINAL DIAMETER
oz	OUNCE
lb	POUND
kip	1,000 POUNDS
cal	CALORIE
ft	FOOT OR FEET
gal	GALLON

* For use on a sign panel only

STATE OF CALIFORNIA
DEPARTMENT OF TRANSPORTATION

ABBREVIATIONS (SHEET 2 OF 2)

NO SCALE

RSP A10B DATED JULY 19, 2013 SUPERSEDES STANDARD PLAN A10B DATED MAY 20, 2011 - PAGE 2 OF THE STANDARD PLANS BOOK DATED 2010.

REVISED STANDARD PLAN RSP A10B

6-7-13

Dist	COUNTY	ROUTE	POST MILES TOTAL PROJECT	SHEET No.	TOTAL SHEETS
12	Ora	405	8.4	65	142

REGISTERED CIVIL ENGINEER

July 19, 2013
PLANS APPROVAL DATE

REGISTERED PROFESSIONAL ENGINEER Roberta L. McLaughlin No. C40375 Exp. 3-31-15 CIVIL STATE OF CALIFORNIA

THE STATE OF CALIFORNIA OR ITS OFFICERS OR AGENTS SHALL NOT BE RESPONSIBLE FOR THE ACCURACY OR COMPLETENESS OF SCANNED COPIES OF THIS PLAN SHEET.

TO ACCOMPANY PLANS DATED 4-27-15

EXIT RAMP NEUTRAL AREA (GORE) TREATMENT

DETAIL 36

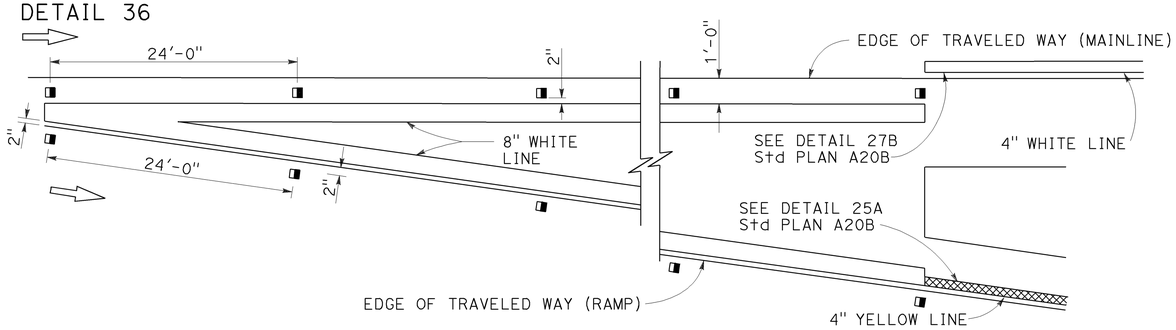

ENTRANCE RAMP NEUTRAL AREA (MERGE) TREATMENT

DETAIL 36A

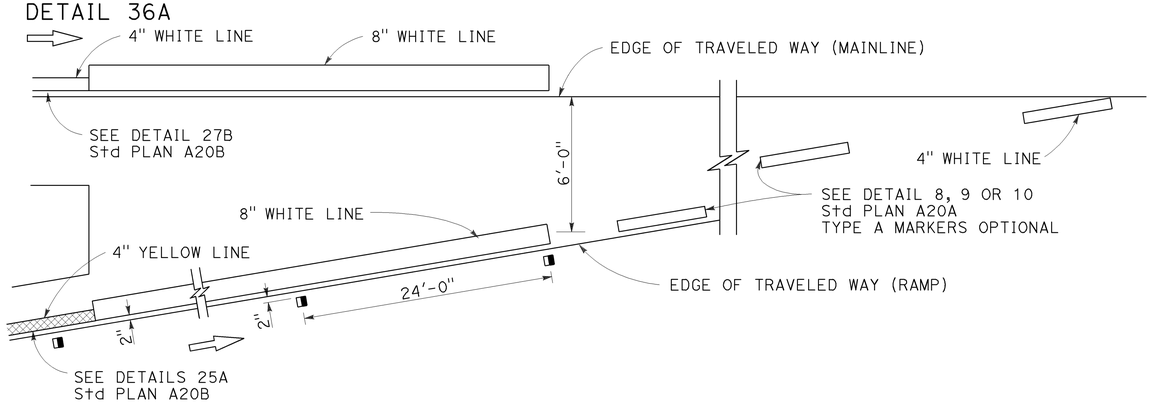

ENTRANCE RAMP NEUTRAL AREA (ACCELERATION LANE) TREATMENT

DETAIL 36B

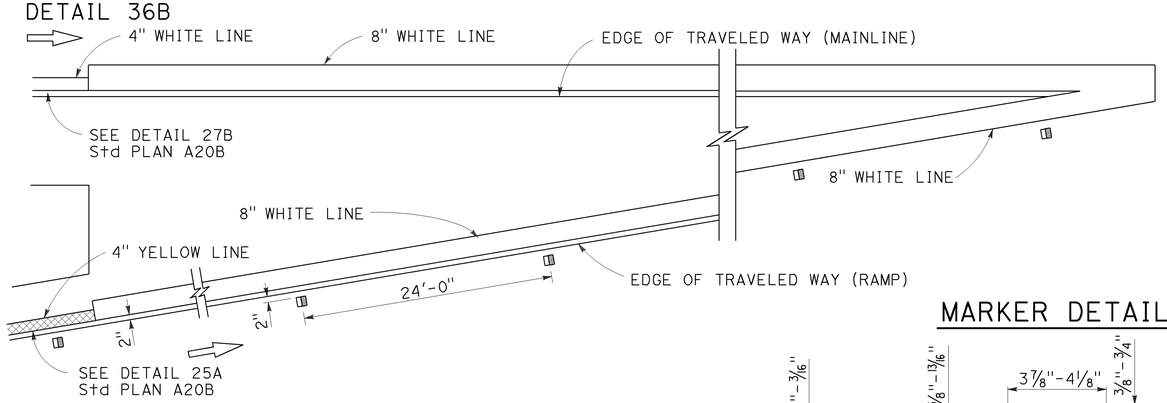

LANE DROP AT EXIT RAMPS

DETAIL 37

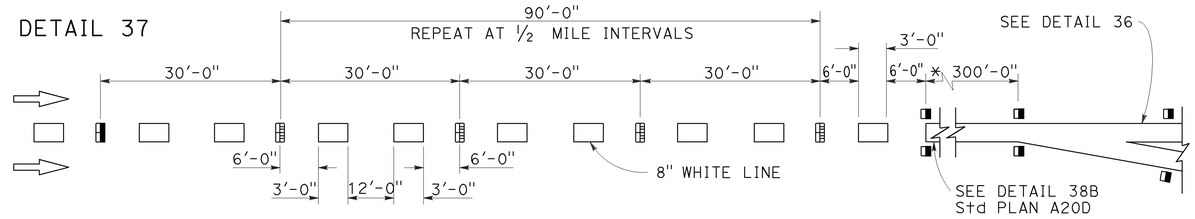

DETAIL 37A

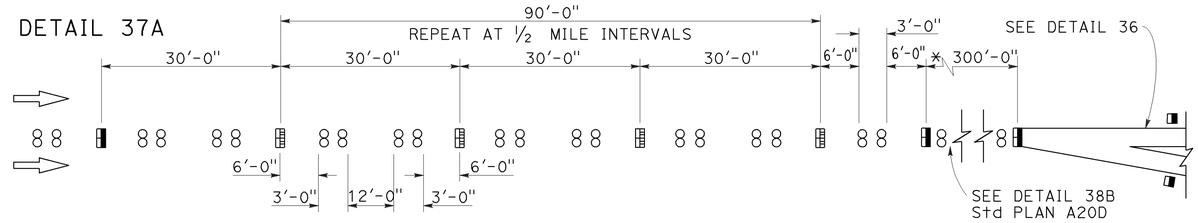

* The solid channelizing line shown may be omitted on short auxiliary lanes where weaving length is critical.

LANE DROP AT INTERSECTIONS

DETAIL 37B

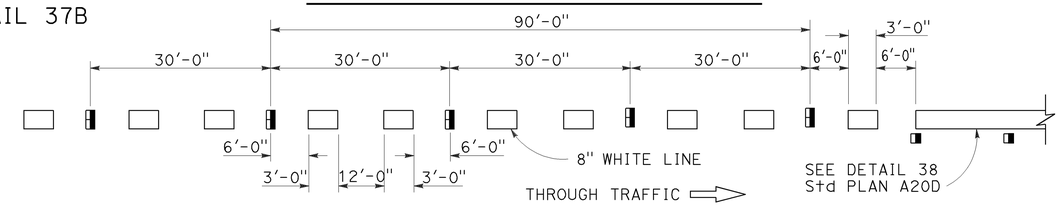

DETAIL 37C

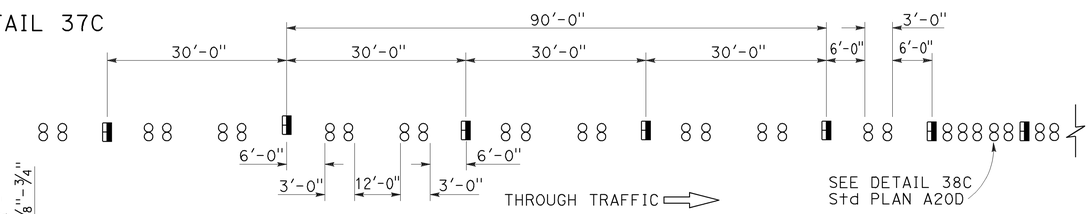

MARKER DETAILS

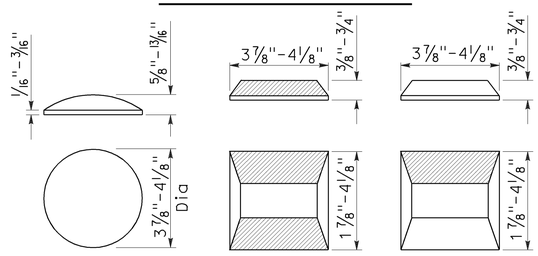

RETROREFLECTIVE FACE

LEGEND:

MARKERS

- ○ TYPE A WHITE NON-REFLECTIVE
- ⊟ TYPE C RED-CLEAR RETROREFLECTIVE
- ◨ TYPE G ONE-WAY CLEAR RETROREFLECTIVE

STATE OF CALIFORNIA
DEPARTMENT OF TRANSPORTATION

PAVEMENT MARKERS AND TRAFFIC LINE TYPICAL DETAILS

NO SCALE

RSP A20C DATED JULY 19, 2013 SUPERSEDES STANDARD PLAN A20C DATED MAY 20, 2011 - PAGE 11 OF THE STANDARD PLANS BOOK DATED 2010.

REVISED STANDARD PLAN RSP A20C

2010 REVISED STANDARD PLAN RSP A20C

4-29-13

Dist	COUNTY	ROUTE	POST MILES TOTAL PROJECT	SHEET No.	TOTAL SHEETS
12	Ora	405	8.4	66	142

REGISTERED CIVIL ENGINEER

April 20, 2012
PLANS APPROVAL DATE

REGISTERED PROFESSIONAL ENGINEER
Roberta L. McLaughlin
No. C40375
Exp. 3-31-13
CIVIL
STATE OF CALIFORNIA

THE STATE OF CALIFORNIA OR ITS OFFICERS OR AGENTS SHALL NOT BE RESPONSIBLE FOR THE ACCURACY OR COMPLETENESS OF SCANNED COPIES OF THIS PLAN SHEET.

TO ACCOMPANY PLANS DATED 4-27-15

2010 REVISED STANDARD PLAN RSP A24A

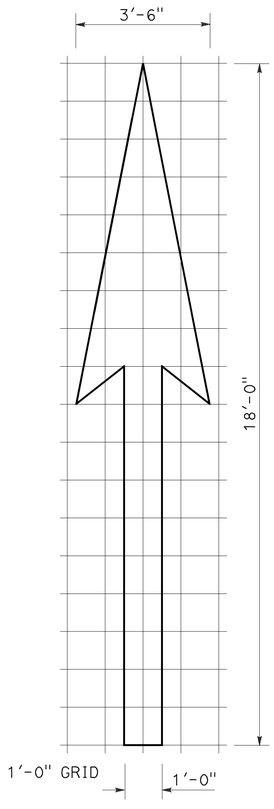

A=25 ft^2

TYPE I 18'-0" ARROW

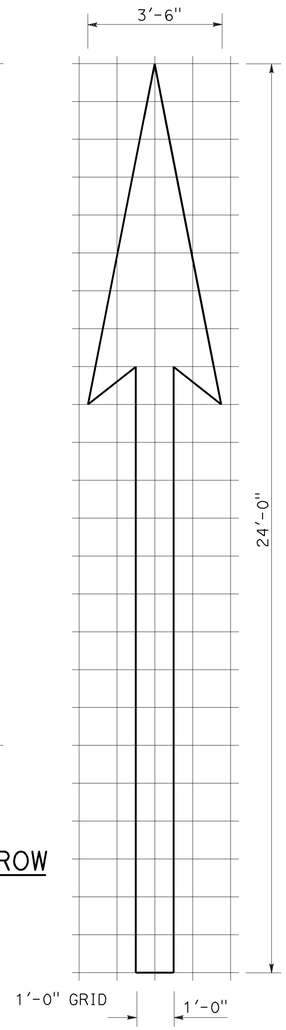

A=31 ft^2

TYPE I 24'-0" ARROW

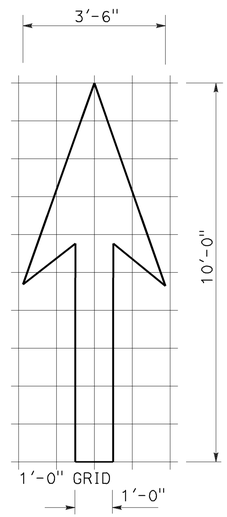

A=14 ft^2

TYPE I 10'-0" ARROW

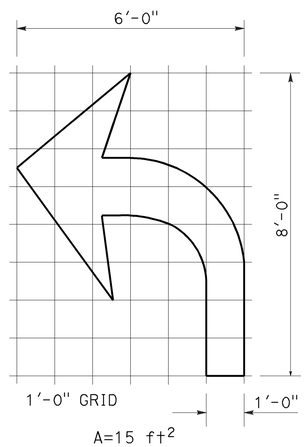

A=15 ft^2

TYPE IV (L) ARROW

(For Type IV (R) arrow, use mirror image)

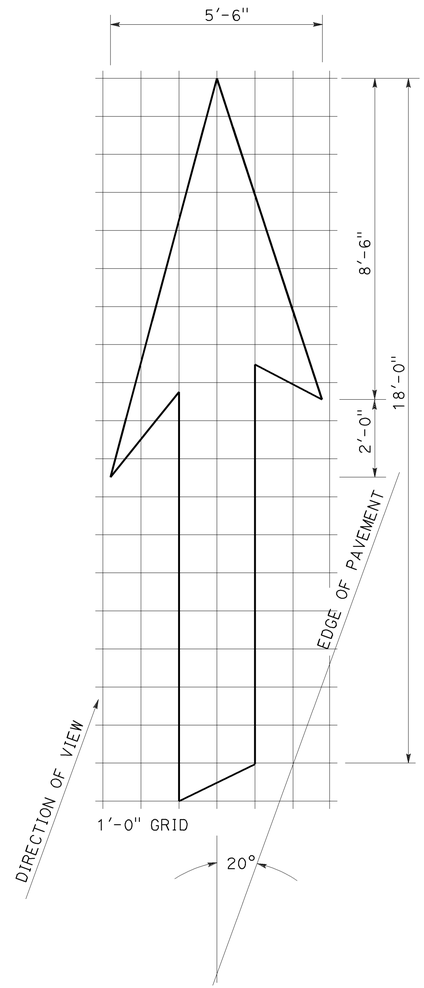

A=42 ft^2

TYPE VI ARROW

Right lane drop arrow
(For left lane, use mirror image)

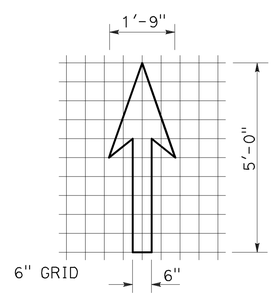

A=3.5 ft^2

BIKE LANE ARROW

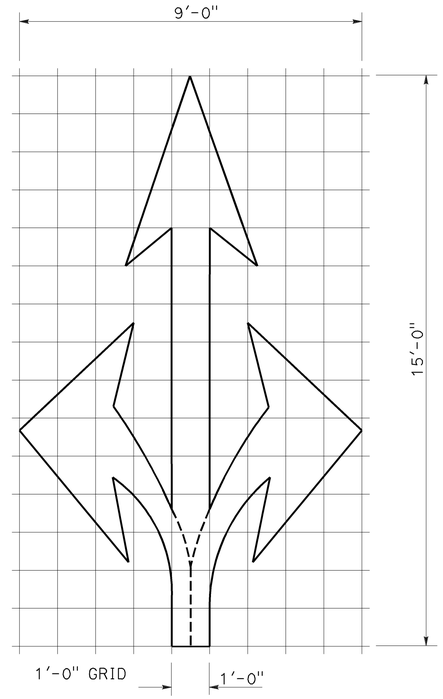

A=36 ft^2

TYPE VIII ARROW

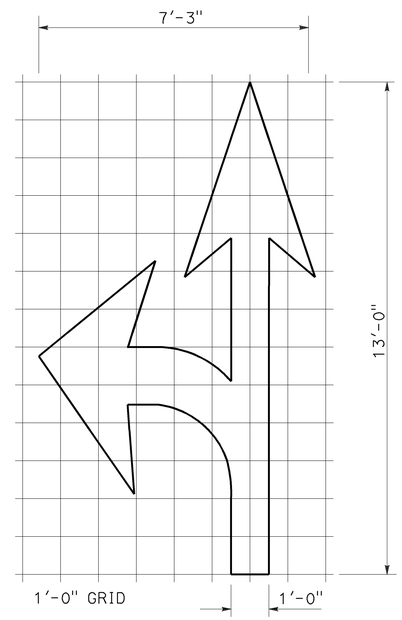

A=27 ft^2

TYPE VII (L) ARROW

(For Type VII (R) arrow, use mirror image)

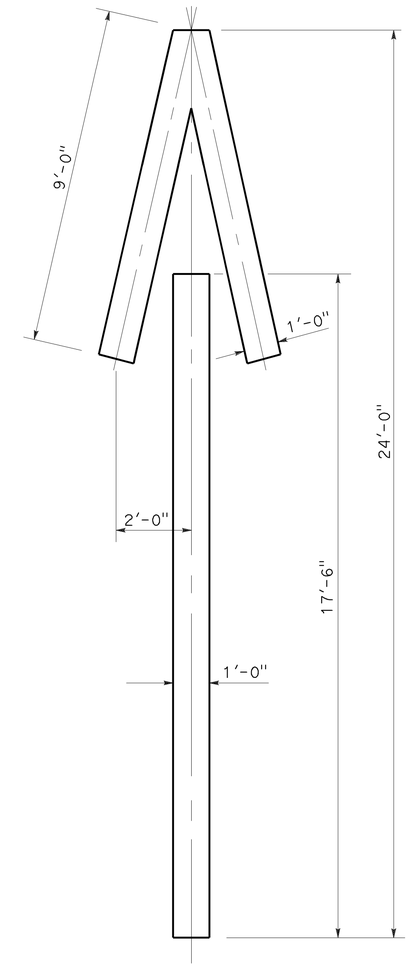

A=33 ft^2

TYPE V ARROW

NOTE:
Minor variations in dimensions may be accepted by the Engineer.

STATE OF CALIFORNIA
DEPARTMENT OF TRANSPORTATION

PAVEMENT MARKINGS ARROWS

NO SCALE

RSP A24A DATED APRIL 20, 2012 SUPERSEDES STANDARD PLAN A24A DATED MAY 20, 2011 - PAGE 13 OF THE STANDARD PLANS BOOK DATED 2010.

REVISED STANDARD PLAN RSP A24A

3-14-12

Dist	COUNTY	ROUTE	POST MILES TOTAL PROJECT	SHEET No.	TOTAL SHEETS
12	Ora	405	8.4	67	142

REGISTERED CIVIL ENGINEER

July 20, 2012
PLANS APPROVAL DATE

REGISTERED PROFESSIONAL ENGINEER
Roberta L. McLaughlin
No. C40375
Exp. 3-31-13
CIVIL
STATE OF CALIFORNIA

THE STATE OF CALIFORNIA OR ITS OFFICERS OR AGENTS SHALL NOT BE RESPONSIBLE FOR THE ACCURACY OR COMPLETENESS OF SCANNED COPIES OF THIS PLAN SHEET.

TO ACCOMPANY PLANS DATED 4-27-15

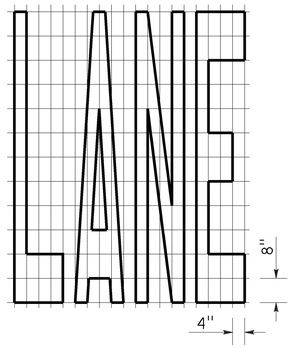

A=24 ft^2

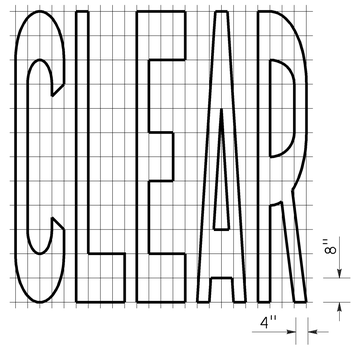

A=27 ft^2

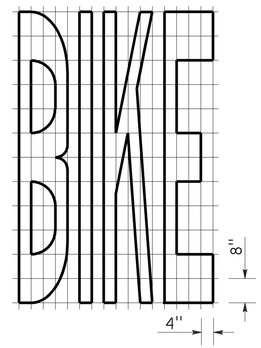

A=21 ft^2

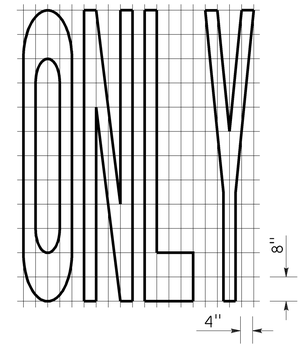

A=22 ft^2

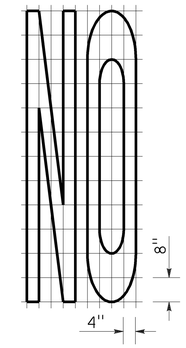

A=14 ft^2

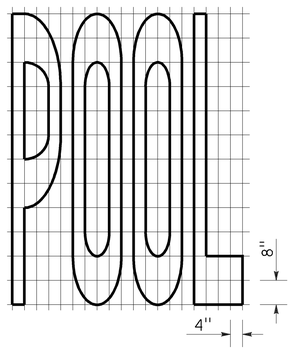

A=23 ft^2

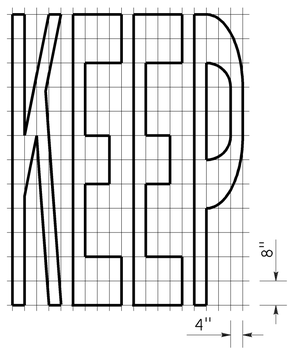

A=24 ft^2

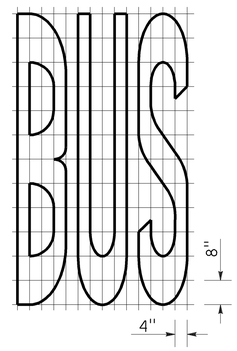

A=20 ft^2

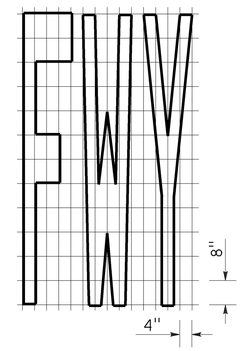

A=16 ft^2

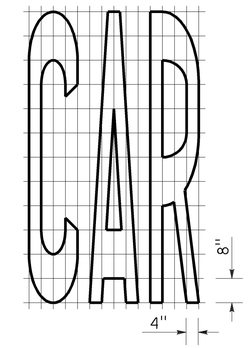

A=17 ft^2

WORD MARKINGS			
ITEM	ft^2	ITEM	ft^2
LANE	24	NO	14
POOL	23	BIKE	21
CAR	17	BUS	20
CLEAR	27	ONLY	22
KEEP	24	FWY	16

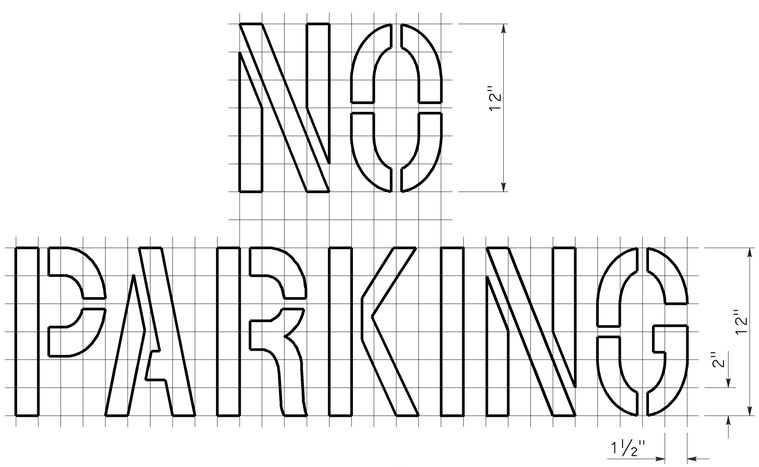

A=2 ft^2
See Notes 6 and 7

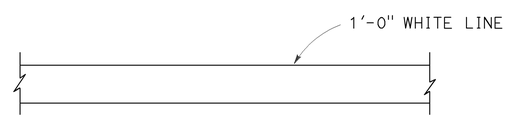

LIMIT LINE (STOP LINE)

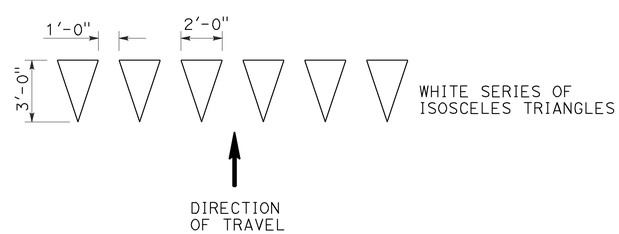

YIELD LINE

NOTES:

1. If a message consists of more than one word, it should read "UP", i.e., the first word should be nearest the driver.
2. The space between words should be at least four times the height of the characters for low speed roads, but not more than ten times the height of the characters. The space may be reduced appropriately where there is limited space because of local conditions.
3. Minor variations in dimensions may be accepted by the Engineer.
4. Portions of a letter, number or symbol may be separated by connecting segments not to exceed 2" in width.
5. The words "NO PARKING" pavement marking is to be used for parking facilities. For typical locations of markings, see Standard Plans A90A and A90B.
6. The words "NO PARKING", shall be painted in white letters no less than 1'-0" high on a contrasting background and located so that it is visible to traffic enforcement officials.

STATE OF CALIFORNIA
DEPARTMENT OF TRANSPORTATION

PAVEMENT MARKINGS WORDS, LIMIT AND YIELD LINES

NO SCALE

RSP A24E DATED JULY 20, 2012 SUPERSEDES STANDARD PLAN A24E
DATED MAY 20, 2011 - PAGE 17 OF THE STANDARD PLANS BOOK DATED 2010.

REVISED STANDARD PLAN RSP A24E

2010 REVISED STANDARD PLAN RSP A24E

6-12-12

Dist	COUNTY	ROUTE	POST MILES TOTAL PROJECT	SHEET No.	TOTAL SHEETS
12	Ora	405	8.4	68	142

REGISTERED CIVIL ENGINEER

July 18, 2014
PLANS APPROVAL DATE

Glenn DeCou
No. C34547
Exp. 9-30-15
CIVIL
STATE OF CALIFORNIA
REGISTERED PROFESSIONAL ENGINEER

THE STATE OF CALIFORNIA OR ITS OFFICERS OR AGENTS SHALL NOT BE RESPONSIBLE FOR THE ACCURACY OR COMPLETENESS OF SCANNED COPIES OF THIS PLAN SHEET.

TO ACCOMPANY PLANS DATED 4-27-15

2010 REVISED STANDARD PLAN RSP A85

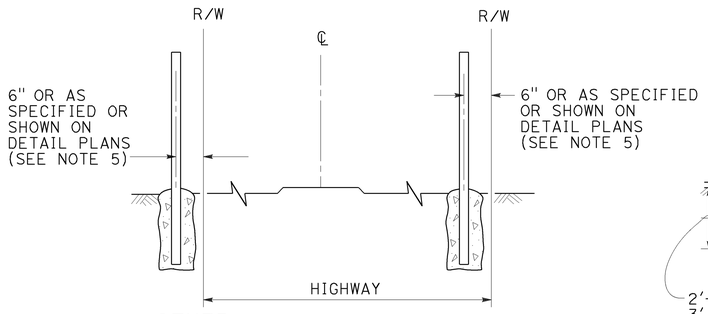

FENCE LOCATION

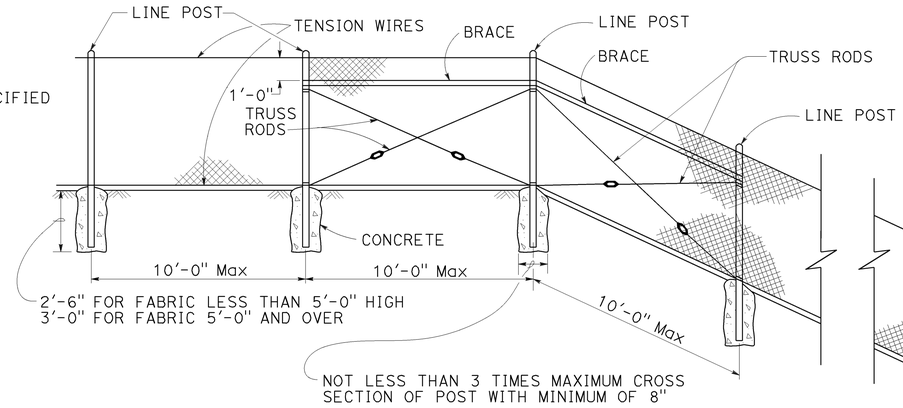

CHAIN LINK FENCE ON SHARP BREAK IN GRADE

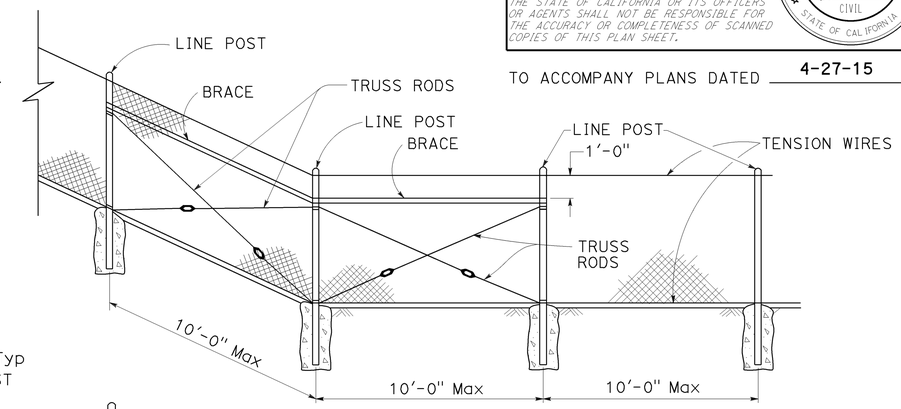

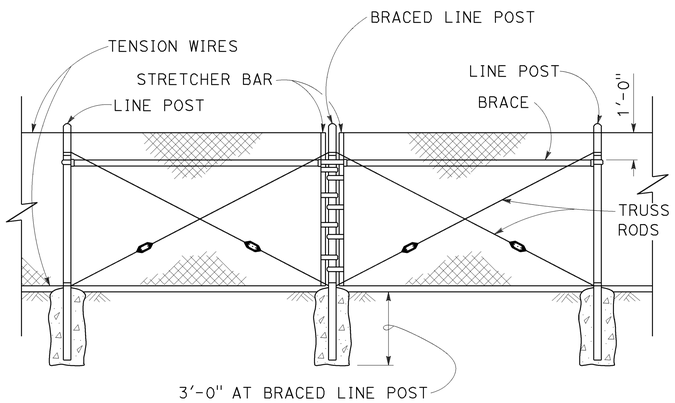

BRACED LINE POST INSTALLATION

Braced line post at intervals not exceeding 1000'

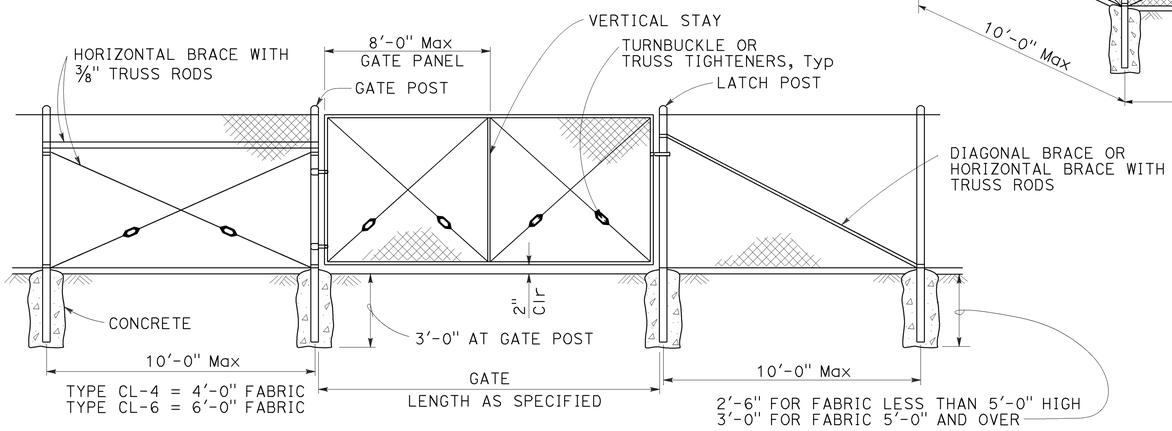

CHAIN LINK GATE INSTALLATION

GATE POST			
FENCE HEIGHT	GATE WIDTHS	ROUND OD PIPE	WEIGHT (lb/ft)
6'-0" AND LESS	UP THRU 6'-0"	2.875"	5.80
	OVER 6'-0" THRU 12'-0"	4.500"	10.80
	OVER 12'-0" THRU 18'-0"	5.563"	14.63
	OVER 18'-0" TO 24'-0" Max	6.625"	18.99
OVER 6'-0" TO 8'-0" Max	UP THRU 6'-0"	3.500"	7.58
	OVER 6'-0" THRU 12'-0"	5.563"	14.63
	OVER 12'-0" THRU 18'-0"	6.625"	18.99
	OVER 18'-0" TO 24'-0" Max	8.625"	28.58

Above post dimensions and weights are minimums. Larger sizes may be used upon approval.

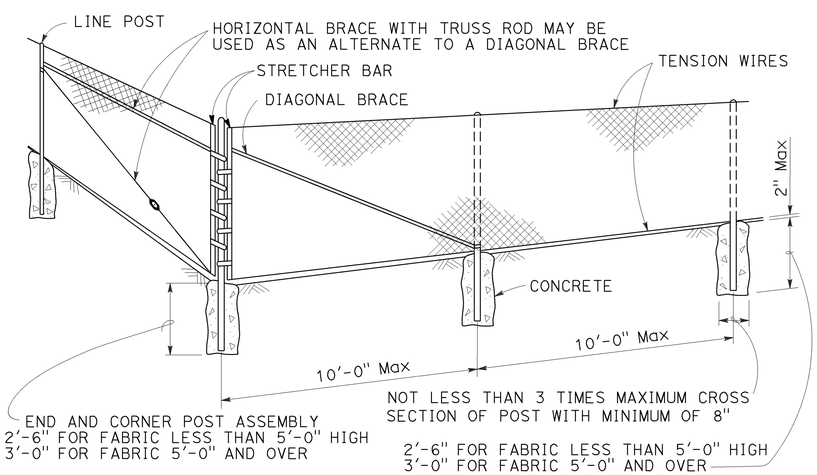

CORNER POST

NOTES:

1. The table below shows minimum sized posts and braces complying with the specifications. Larger or heavier post and brace sizes may be used upon approval.
2. Sections shown in the tables must also comply with the strength requirements and other provisions of the Specifications.
3. Other sections which comply with the strength requirements and other provisions of the Specifications may be used upon approval.
4. Options exercised shall be uniform on any one project.
5. Offset to be 2'-0" at monument locations, measured at right angles to R/W lines. Taper to achieve offset to be at least 20'-0" long.
6. See Revised Standard Plan RSP A85B for Brace, Stretcher Bar, and Truss Tightener Details.

TYPICAL MEMBER DIMENSIONS (See Notes)										
FENCE HEIGHT	LINE POSTS				END, LATCH AND CORNER POSTS		BRACES			
	ROUND OD PIPE	WEIGHT (lb/ft)	ROLL FORMED SECTION	ROLL FORMED WEIGHT (lb/ft)	ROUND OD PIPE	WEIGHT (lb/ft)	ROUND OD PIPE	WEIGHT (lb/ft)	ROLL FORMED SECTION	ROLL FORMED WEIGHT (lb/ft)
6'-0" AND LESS	1.900"	2.72	1.875" x 1.625"	1.85	2.375"	3.65	1.66"	2.27	1.625" x 1.25"	1.35
OVER 6'-0" TO 8'-0" Max	2.375"	3.65	2.25" x 1.70"	2.78	2.875"	5.80	1.66"	2.27	1.625" x 1.25"	1.35

RSP A85 DATED JULY 18, 2014 SUPERSEDES STANDARD PLAN A85
DATED MAY 20, 2011 - PAGE 112 OF THE STANDARD PLANS BOOK DATED 2010.

STATE OF CALIFORNIA
DEPARTMENT OF TRANSPORTATION

CHAIN LINK FENCE

NO SCALE

REVISED STANDARD PLAN RSP A85

7-1-14

Dist	COUNTY	ROUTE	POST MILES TOTAL PROJECT	SHEET No.	TOTAL SHEETS
12	Ora	405	8.4	69	142

REGISTERED CIVIL ENGINEER

October 19, 2012
PLANS APPROVAL DATE

REGISTERED PROFESSIONAL ENGINEER Glenn DeCou No. C34547 Exp. 9-30-13 CIVIL STATE OF CALIFORNIA

THE STATE OF CALIFORNIA OR ITS OFFICERS OR AGENTS SHALL NOT BE RESPONSIBLE FOR THE ACCURACY OR COMPLETENESS OF SCANNED COPIES OF THIS PLAN SHEET.

TO ACCOMPANY PLANS DATED 4-27-15

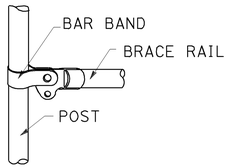

BRACE RAIL

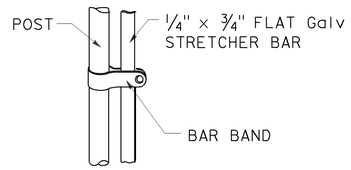

STRETCHER BAR

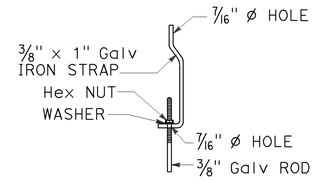

TRUSS TIGHTENER

NOTES:

1. All material for abutment connection to be galvanized.
2. The chain link fabric shall be replaced by barbed wire strands at 12" maximum centers between the double posts.
3. When the width of the culvert makes it necessary to anchor a post to the top of the culvert, a cast iron shoe or other device approved by the Engineer shall be used.
4. Fencing over stream and around headwall may also use Barbed Wire or Wire Mesh fencing with either wood post or steel post installation.
5. See Standard Plan A85 for Chain Link fence dimensions. See Standard Plan A86 for Barbed Wire and Wire Mesh fence dimensions and for wood post and steel post installation.

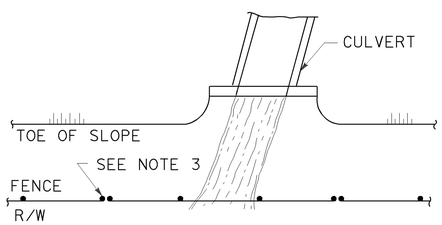

PLAN

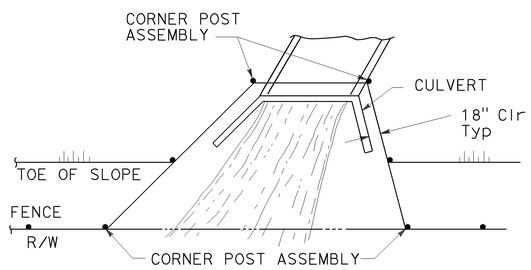

PLAN

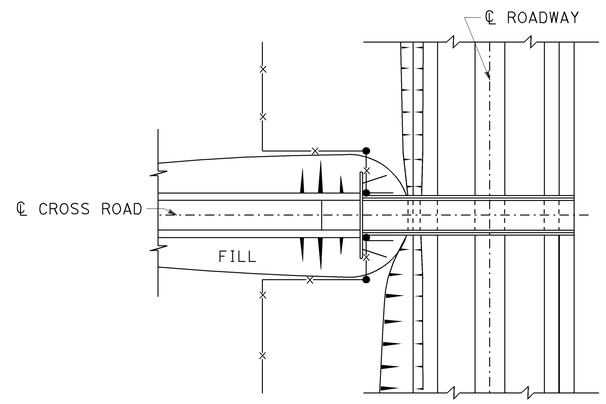

PLAN OF ROADWAY - OVERCROSSING

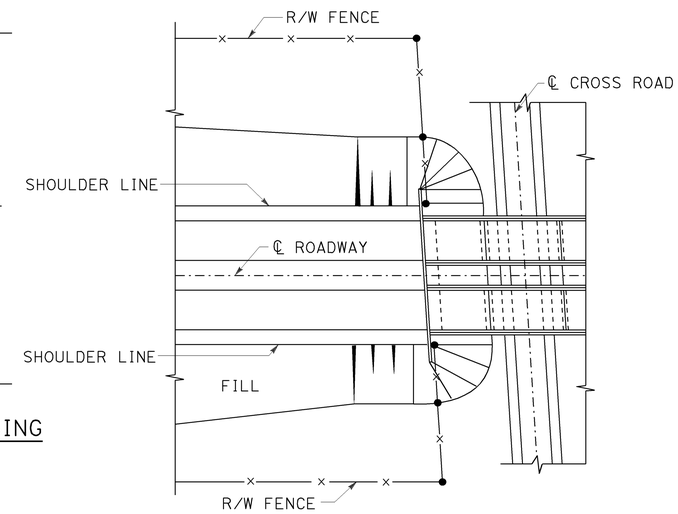

PLAN OF ROADWAY - UNDERCROSSING

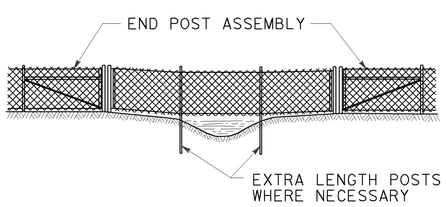

ELEVATION

INSTALLATION OVER STREAM

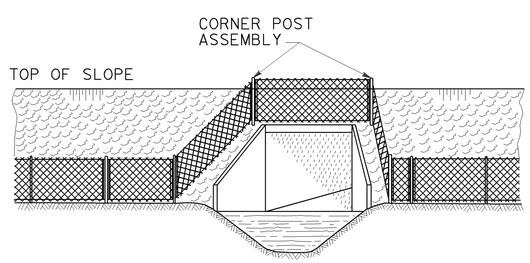

ELEVATION

INSTALLATION AROUND HEADWALL

See Note 4

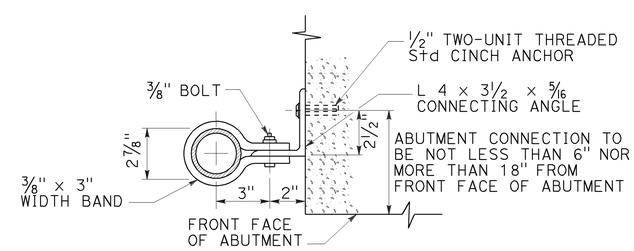

ABUTMENT CONNECTION

TYPICAL INSTALLATION AT BRIDGES

STATE OF CALIFORNIA
DEPARTMENT OF TRANSPORTATION

CHAIN LINK FENCE DETAILS

NO SCALE

RSP A85B DATED OCTOBER 19, 2012 SUPERSEDES STANDARD PLAN A85B DATED MAY 20, 2011 - PAGE 114 OF THE STANDARD PLANS BOOK DATED 2010.

REVISED STANDARD PLAN RSP A85B

2010 REVISED STANDARD PLAN RSP A85B

7-19-12

Dist	COUNTY	ROUTE	POST MILES TOTAL PROJECT	SHEET No.	TOTAL SHEETS
12	Ora	405	8.4	70	142

REGISTERED CIVIL ENGINEER

July 19, 2013
PLANS APPROVAL DATE

REGISTERED PROFESSIONAL ENGINEER William K. Farnbach No. C49042 Exp. 9-30-14 CIVIL STATE OF CALIFORNIA

THE STATE OF CALIFORNIA OR ITS OFFICERS OR AGENTS SHALL NOT BE RESPONSIBLE FOR THE ACCURACY OR COMPLETENESS OF SCANNED COPIES OF THIS PLAN SHEET.

TO ACCOMPANY PLANS DATED 4-27-15

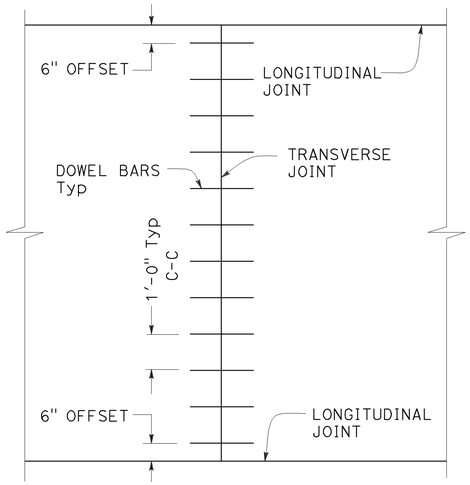

TRANSVERSE JOINT DOWEL BAR LAYOUT

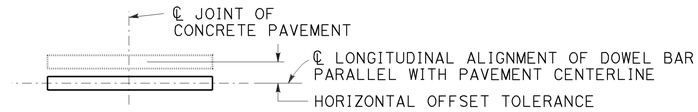

PLAN

HORIZONTAL OFFSET TOLERANCE

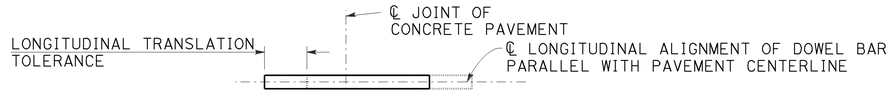

PLAN

LONGITUDINAL TRANSLATION TOLERANCE

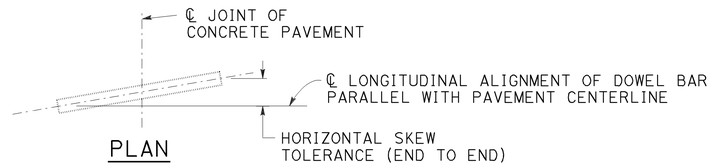

PLAN

HORIZONTAL SKEW TOLERANCE

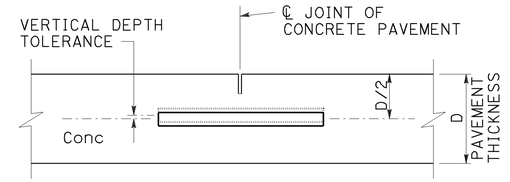

ELEVATION

VERTICAL DEPTH TOLERANCE

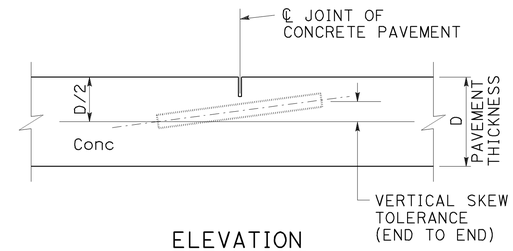

ELEVATION

VERTICAL SKEW TOLERANCE

NOTES:

1. See Revised Standard Plan RSP P1 for typical dowel bar placement and locations.
2. Where fresh concrete pavement is placed against new concrete or existing concrete pavement, rounding the corner of the existing concrete pavement is not required.
3. May also use ¾" Dia dowel bars 2'-4" ± ¼" in length. Center the length of dowel bars at the centerline of longitudinal joint.

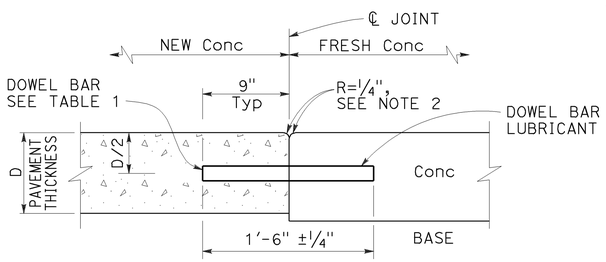

TRANSVERSE CONSTRUCTION JOINT DETAIL

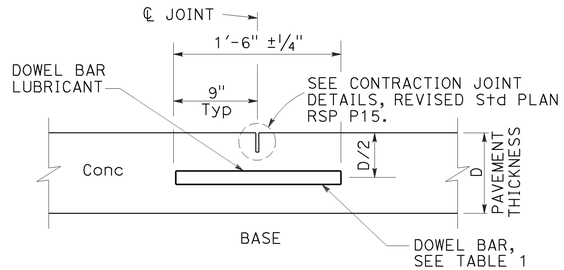

TRANSVERSE CONTRACTION JOINT

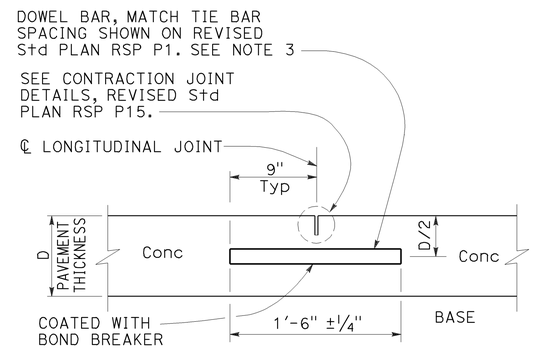

LONGITUDINAL CONTRACTION JOINT WITH DOWEL BARS

See Revised Std Plan RSP P18

TABLE 1

DOWEL BAR DIAMETER TABLE			
PAVEMENT THICKNESS	0.65'	> 0.65' - 0.85'	> 0.85'
MINIMUM DOWEL * BAR DIAMETER	1"	1¼"	1½"

* The drilled hole diameter must be ⅛" to 3/16" larger than the bar diameter.

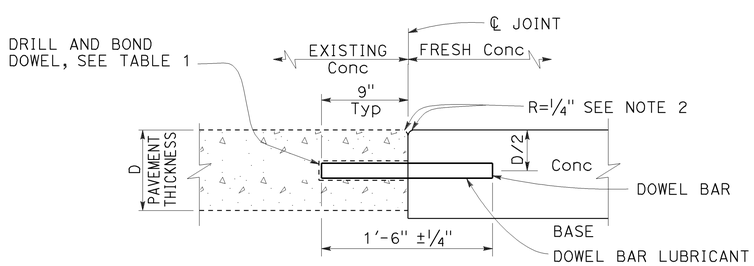

TRANSVERSE CONSTRUCTION JOINT FOR EXISTING CONCRETE PAVEMENT

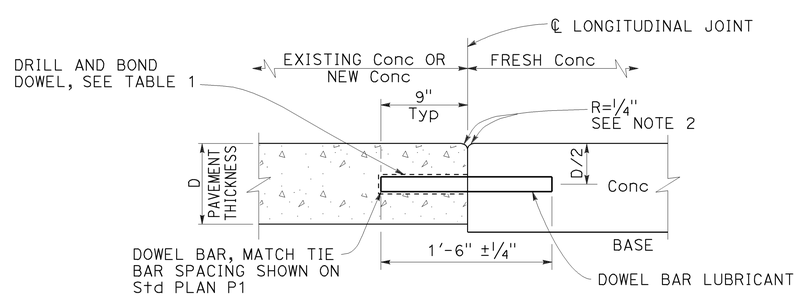

LONGITUDINAL CONSTRUCTION JOINT WITH DOWEL BARS

See Revised Std Plan RSP P18

STATE OF CALIFORNIA
DEPARTMENT OF TRANSPORTATION

CONCRETE PAVEMENT DOWEL BAR DETAILS

NO SCALE

RSP P10 DATED JULY 19, 2013 SUPERSEDES RSP P10 DATED APRIL 20, 2012 AND STANDARD PLAN P10 DATED MAY 20, 2011 - PAGE 131 OF THE STANDARD PLANS BOOK DATED 2010.

REVISED STANDARD PLAN RSP P10

2010 REVISED STANDARD PLAN RSP P10

5-31-13

TO ACCOMPANY PLANS DATED 4-27-15

Dist	COUNTY	ROUTE	POST MILES TOTAL PROJECT	SHEET No.	TOTAL SHEETS
12	Ora	405	8.4	71	142

REGISTERED CIVIL ENGINEER

October 19, 2012
PLANS APPROVAL DATE

REGISTERED PROFESSIONAL ENGINEER Glenn DeCou No. C34547 Exp. 9-30-13 CIVIL STATE OF CALIFORNIA

THE STATE OF CALIFORNIA OR ITS OFFICERS OR AGENTS SHALL NOT BE RESPONSIBLE FOR THE ACCURACY OR COMPLETENESS OF SCANNED COPIES OF THIS PLAN SHEET.

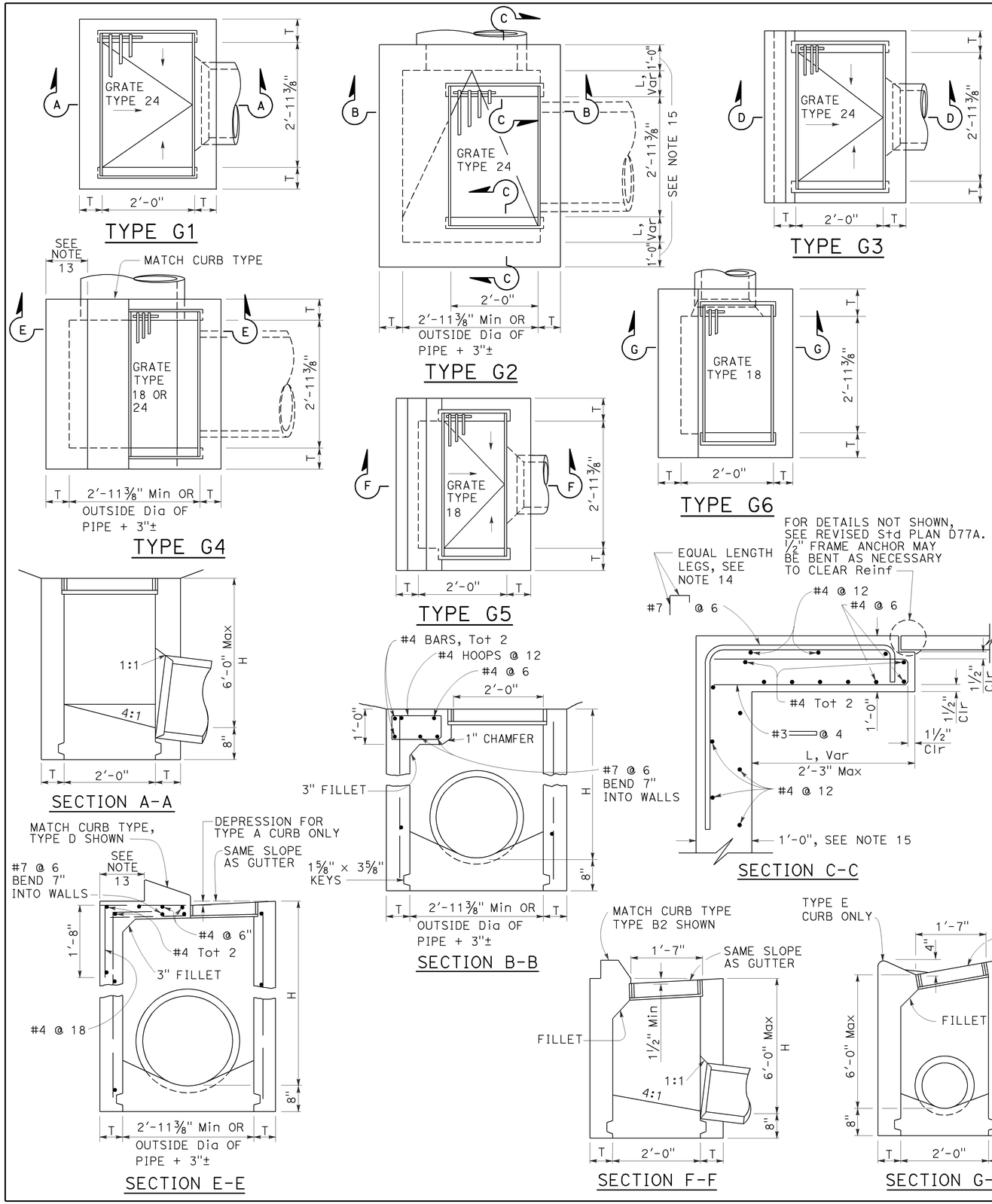

NOTES:

1. "H" is the difference in elevation between the outlet pipe flow line and the normal gutter grade line undepressed.
2. For "T" wall thickness, see Table A below.
3. Wall reinforcing not required when "H" is 8'-0" or less and the unsupported width or length is 7'-0" or less. Walls exceeding these limits shall be reinforced with #4 bars @ 1'-6" ± centers placed 1½" clear to inside of box unless otherwise shown.
4. Inlet bottom reinforcing not required. See Standard Plan D74C for alternative reinforced bottom and alternative half round bottom.
5. Steps-None required where "H" is less than 2'-6". Where "H" is 2'-6" or more, install steps with lowest rung 1'-0" above the floor and highest rung not more than 6" below top of inlet. The distance between steps shall not exceed 1'-0" and shall be uniform throughout the length of the wall. Place steps in the wall without an opening. Steps inserts may be substituted for the bar steps. Step inserts shall comply with State Industrial Safety requirements. See Standard Plan D74C for step details.
6. Details shown apply to both metal and concrete pipe.
7. Pipe(s) can be placed in any wall.
8. Curb section shall match adjacent curb.
9. Basin floors shall have wood trowel finish and a minimum slope of 12:3 from all directions toward outlet pipe.
10. Set inlet so that grate bars are parallel to direction of principal surface flow.
11. See Revised Standard Plans D77A and D77B for grate and frame details and weights of miscellaneous iron and steel.
12. See Standard Plan D78A for gutter depression details.
13. This dimenison will vary with different grates, curbs types, box width and wall thickness.
14. Bar may be rotated as necessary to clear opening. Where "L" is 6" or less, bar may be omitted.
15. Where "L" is 6" or less, wall thickness shall be as shown in Table A.
16. Cast-in-place inlets to be formed around all pipes/stubs intersecting the inlet, and concrete poured in one continuous operation. Precast inlets shall have mortared connections conforming to details for Type GCP Inlet shown on Standard Plan D75B. See Standard Specifications for mortar composition.

TABLE A

CONCRETE QUANTITIES				
TYPE	H=3'-0" TO 8'-0" (T=6")		H=8'-1" TO 20'-0" (T=8")	
	H=3'-0" (CY)	ADDITIONAL PCC PER FOOT (CY)	H=8'-1" (CY)	ADDITIONAL PCC PER FOOT (CY)
G-1	0.95	0.220	See Note A	SEE NOTE A
G-2*	1.31	0.255	3.50	0.357
G-3	1.03	0.220	See Note A	SEE NOTE A
G-4* (TYPE 24)	1.27	0.255	3.48	0.357
G-4* (TYPE 18)	1.30	0.255	3.50	0.357
G-5	1.02	0.220	SEE NOTE A	SEE NOTE A
G-6	1.04	0.220	SEE NOTE A	SEE NOTE A

TABLE BASED ON 8" FLOOR SLAB. NO DEDUCTIONS ARE TO BE MADE TO THESE QUANTITIES BECAUSE OF PIPE OPENINGS, DIFFERENT FLOOR ALTERNATIVES OR DIFFERENT CURB TYPES. * QUANTITIES FOR TYPE G-2 AND G-4 INLETS BASED ON THE MINIMUM INTERIOR DIMENSIONS.

NOTE A:

Maximum allowable height 6'-0".

STATE OF CALIFORNIA
DEPARTMENT OF TRANSPORTATION

DRAINAGE INLETS

NO SCALE

RSP D73 DATED OCTOBER 19, 2012 SUPERSEDES STANDARD PLAN D73 DATED MAY 20, 2011 - PAGE 156 OF THE STANDARD PLANS BOOK DATED 2010.

REVISED STANDARD PLAN RSP D73

2010 REVISED STANDARD PLAN RSP D73

7-19-12

Dist	COUNTY	ROUTE	POST MILES TOTAL PROJECT	SHEET No.	TOTAL SHEETS
12	Ora	405	8.4	72	142

REGISTERED CIVIL ENGINEER

April 19, 2013
PLANS APPROVAL DATE

REGISTERED PROFESSIONAL ENGINEER Raymond Don Tsztoo No. C37332 Exp. 6-30-14 CIVIL STATE OF CALIFORNIA

THE STATE OF CALIFORNIA OR ITS OFFICERS OR AGENTS SHALL NOT BE RESPONSIBLE FOR THE ACCURACY OR COMPLETENESS OF SCANNED COPIES OF THIS PLAN SHEET.

TO ACCOMPANY PLANS DATED 4-27-15

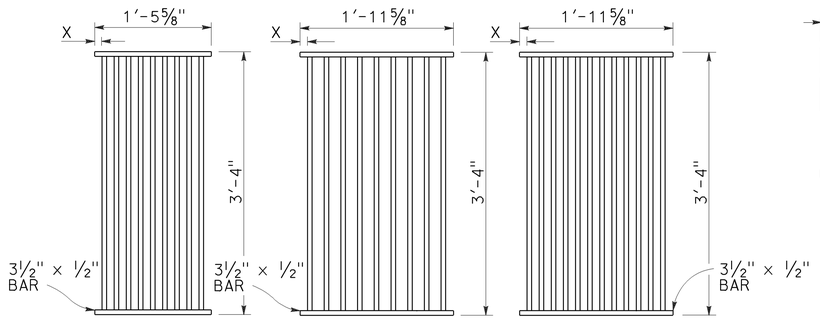

TYPE 18-9

1⅜" Clear spacing. Use within the roadbed on highways where bicycles and pedestrians are excluded.

TYPE 24-9

2" Clear spacing. Use in locations off the roadbed on all types of highways.

TYPE 24-12

1⅜" Clear spacing. Use within the roadbed on highways where bicycles and pedestrians are excluded.

RECTANGULAR GRATE DETAILS

(See table below)

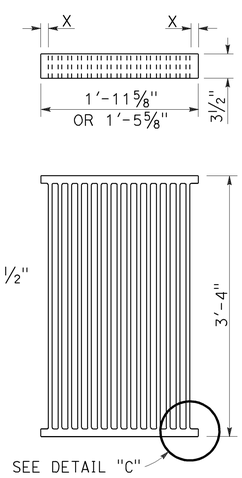

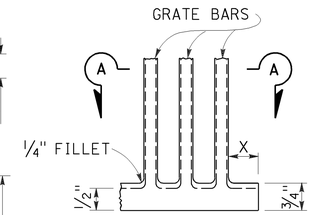

DETAIL "C"

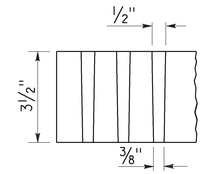

SECTION A-A

ALTERNATIVE CAST DUCTILE IRON GRATE OR CAST CARBON STEEL GRATE

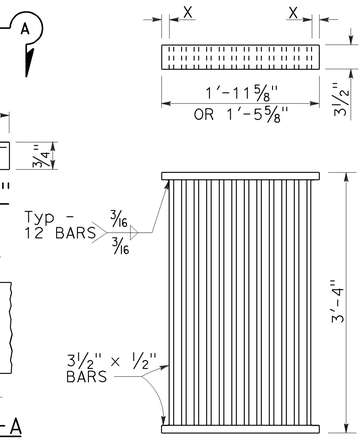

ALTERNATIVE WELDED GRATE

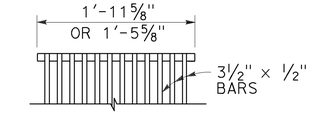

CAST END BLOCK

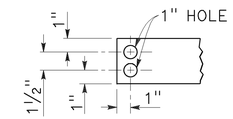

END OF BAR

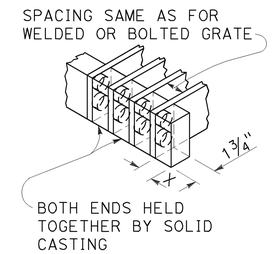

ALTERNATIVE CAST DUCTILE IRON OR CAST CARBON STEEL END BLOCK GRATE

NOTES:

1. Grate type numbers refer to approximate width of grate in inches and number of bars, respectively.
2. Contractor has the option of using cast ductile iron, cast carbon steel, welded, bolted, or cast end block grate.
3. Rounded top of bars optional on all grates.
4. Pipe inlets with a grate shall be placed so that bars parallel direction of principle surface flow.
5. Complete joint penetration butt welds may be substituted for the fillet welds on all anchors.
6. Standard square, hexagon, round or equivalent headed anchors may be substituted for the right angle hooks on the anchors shown on this plan.
7. Grate and frame weights are based on welded grates (weights of face angles, steps, protection bars, etc. are not included).
8. Connect chain to grate and frame only at locations shown on the plans. When chain is required, do not use cast ductile iron grates.

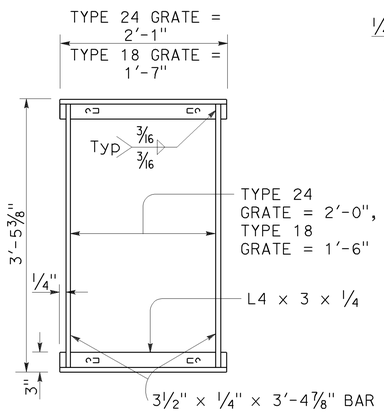

TYPICAL FRAME

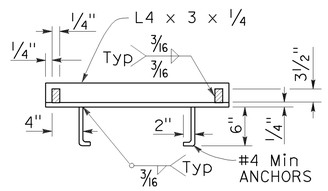

CROSS SECTION

(Thru frame)

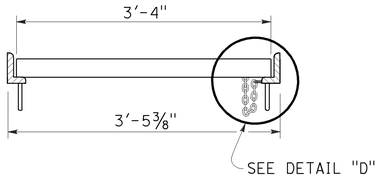

LONGITUDINAL SECTION

(Thru frame and grate)

RECTANGULAR FRAME DETAILS

(For all rectangular grates)

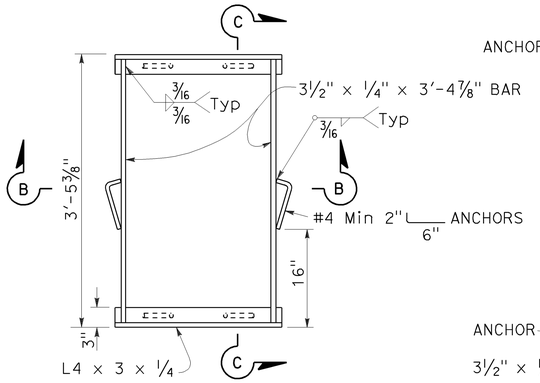

TYPICAL FRAME

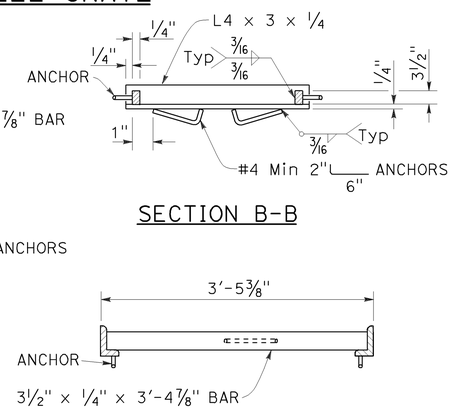

SECTION B-B

SECTION C-C

ALTERNATIVE ANCHOR FOR RECTANGULAR FRAME

(For details not shown, See Rectangular Frame Details)

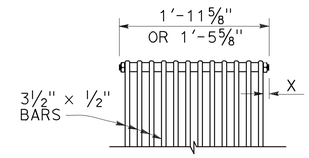

BOLTED END BLOCK

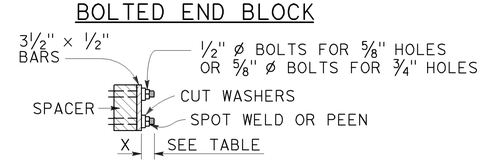

BOLTING DETAIL

ALTERNATIVE BOLTED GRATE

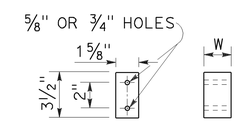

BAR SPACER

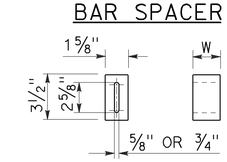

ALTERNATIVE SPACER

W = 1⅜" or 2"

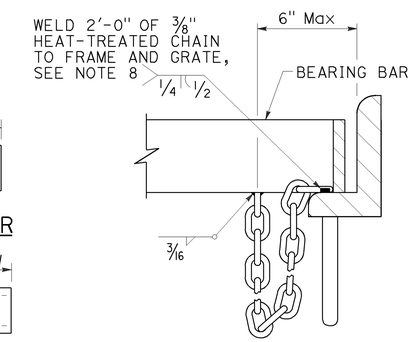

DETAIL "D"

(Steel grates only)

GRATE BAR SPACING TABLE

TYPE	No. OF BARS	CLEAR BAR SPACING	X
18-9	9	1⅜"	1 1/16"
24-9	9	2"	1 9/16"
24-12	12	1⅜"	1¼"

INLET TYPE	COVER TYPE	WEIGHT LB
OS	PLATE	174
OL-7	PLATE	170
OL-10	PLATE	170
OL-14	PLATE	170
OL-21	PLATE	170
OCP	PLATE	112
OCPI	PLATE	112
OCPI	REDWOOD	42
OMP	PLATE	177
OMPI	PLATE	177

INLET TYPE	GRATE TYPE	No. OF GRATES	WEIGHT LB
GDO	24-12	2	634
GOL-7	24-12	1	326
GOL-10	24-12	1	326
GO,G1,G2,G3,G4 (TYPE 24)	24-9	1	263
	24-12	1	326
G4 (TYPE 18),G5,G6	18-9	1	249
GT1	18-9	2	498
GT2	18-9	2	498
GT3	24-12	2	652
GT4	24-12	2	652
TRASH RACK			22
GRATE CHAIN			3

BASIS FOR Misc IRON & STEEL FINAL PAY WEIGHTS FOR DRAINAGE INLETS

(See Note 7)

STATE OF CALIFORNIA
DEPARTMENT OF TRANSPORTATION

GRATE DETAILS No. 1

NO SCALE

RSP D77A DATED APRIL 19, 2013 SUPERSEDES RSP D77A DATED JULY 20, 2012 AND STANDARD PLAN D77A DATED MAY 20, 2011 - PAGE 164 OF THE STANDARD PLANS BOOK DATED 2010.

REVISED STANDARD PLAN RSP D77A

2010 REVISED STANDARD PLAN RSP D77A

4-4-13

Dist	COUNTY	ROUTE	POST MILES TOTAL PROJECT	SHEET No.	TOTAL SHEETS
12	Ora	405	8.4	73	142

LICENSED LANDSCAPE ARCHITECT

July 19, 2013
PLANS APPROVAL DATE

THE STATE OF CALIFORNIA OR ITS OFFICERS OR AGENTS SHALL NOT BE RESPONSIBLE FOR THE ACCURACY OR COMPLETENESS OF SCANNED COPIES OF THIS PLAN SHEET.

LICENSED LANDSCAPE ARCHITECT — Gregory A. Balzer — 2516 — 02-28-15 Renewal Date — 7-19-13 Date — STATE OF CALIFORNIA

TO ACCOMPANY PLANS DATED 4-27-15

A

AB	AGGREGATE BASE
ABS	ACRYLONITRILE-BUTADIENE-STYRENE
AC	ASPHALT CONCRETE
ACC	ARMOR-CLAD CONDUCTORS
Adj	ADJACENT/ADJUSTABLE
AIC	AUXILIARY IRRIGATION CONTROLLER
Alt	ALTERNATIVE
AMEND	AMENDMENT
ARV	AIR RELEASE VALVE
AUTO	AUTOMATIC
AUX	AUXILIARY
AVB	ATMOSPHERIC VACUUM BREAKER

B

B&B	BALLED AND BURLAPPED
B/B	BRASS/BRONZE
B/B/PL	BRASS/BRONZE/PLASTIC
B/PL	BRASS/PLASTIC
BFM	BONDED FIBER MATRIX
Bit Ctd	BITUMINOUS COATED
BP	BOOSTER PUMP
BPA	BACKFLOW PREVENTER ASSEMBLY
BPE	BACKFLOW PREVENTER ENCLOSURE
BV	BALL VALVE

C

C	CONDUIT
CAP	CORRUGATED ALUMINUM PIPE
CARV	COMBINATION AIR RELEASE VALVE
CB	COUPLING BAND
CCA	CAM COUPLER ASSEMBLY
CEC	CONTROLLER ENCLOSURE CABINET
CHDPE	CORRUGATED HIGH DENSITY POLYETHYLENE
CL	CHAIN LINK
CNC	CONTROL AND NEUTRAL CONDUCTORS
Conc	CONCRETE
CP	COPPER PIPE
CS	COMPOST SOCK
CSP	CORRUGATED STEEL PIPE
CST	CENTER STRIP
CV	CHECK VALVE

D

Dia	DIAMETER
DIP	DUCTILE IRON PIPE
DIT	DRIP IRRIGATION TUBING
DG	DECOMPOSED GRANITE
DN	DIAMETER NOMINAL
DVA	DRIP VALVE ASSEMBLY

E

EC	EROSION CONTROL
ECTC	EROSION CONTROL TECHNOLOGY COUNCIL
Elect	ELECTRIC/ELECTRICAL
Elev	ELEVATION
ELL	ELBOW
ENCL	ENCLOSURE
EP	EDGE OF PAVEMENT
ES	EDGE OF SHOULDER
EST	END STRIP
ESTB	ESTABLISHMENT
ETW	EDGE OF TRAVELED WAY

F

F	FULL CIRCLE
F/P	FULL/PART CIRCLE
FCV	FLOW CONTROL VALVE
FERT	FERTILIZER
FG	FINISHED GRADE
FH	FLEXIBLE HOSE
FIPT	FEMALE IRON PIPE THREAD
FIS	FERTILIZER INJECTOR SYSTEM
FL	FLOW LINE
FR	FIBER ROLL
FS	FLOW SENSOR
FSC	FLOW SENSOR CABLE
FV	FLUSH VALVE

G

Galv	GALVANIZED
GARV	GARDEN VALVE
GARVA	GARDEN VALVE ASSEMBLY
GM	GRAVEL MULCH
GPH	GALLONS PER HOUR
GPM	GALLONS PER MINUTE
GSP	GALVANIZED STEEL PIPE
GV	GATE VALVE

H

H	HALF CIRCLE
HDPE	HIGH DENSITY POLYETHYLENE
HP	HORSEPOWER/HINGE POINT
HPL	HIGH PRESSURE LINE
Hwy	HIGHWAY

I

IC	IRRIGATION CONTROLLER
ICC	IRRIGATION CONTROLLER(S) IN CONTROLLER ENCLOSURE CABINET
ID	INSIDE DIAMETER
IFS	IRRIGATION FILTRATION SYSTEM
IPS	IRON PIPE SIZE
IPT	IRON PIPE THREAD
Irr	IRRIGATION

L

L	LENGTH

M

Max	MAXIMUM
MBGR	METAL BEAM GUARD RAILING
MCV	MANUAL CONTROL VALVE
MIC	MASTER IRRIGATION CONTROLLER
Min	MINIMUM
MIPT	MALE IRON PIPE THREAD
Misc	MISCELLANEOUS
Mtl	MATERIAL
MVP	MAINTENANCE VEHICLE PULLOUT

N

NCN	NO COMMON NAME
NL	NOZZLE LINE
No.	NUMBER
NPT	NATIONAL PIPE THREAD

O

O/C	ON CENTER
OD	OUTSIDE DIAMETER
OL	OVERLAP

P

P	PART CIRCLE
PB	PULL BOX
PCC	PORTLAND CEMENT CONCRETE
PE	POLYETHYLENE
Pkt	PACKET
PL	PLASTIC
PLS	PURE LIVE SEED
PLT	PLANT/PLANTING
PLT ESTB	PLANT ESTABLISHMENT
PM	POST MILE
PR	PRESSURE RATED
PRLV	PRESSURE RELIEF VALVE
PRV	PRESSURE REGULATING VALVE
PVC	POLYVINYL CHLORIDE
Pvmt	PAVEMENT

Q

Q	QUARTER CIRCLE
QCV	QUICK COUPLING VALVE

R

R	RADIUS
RCP	REINFORCED CONCRETE PIPE
RCV	REMOTE CONTROL VALVE
RCVM	REMOTE CONTROL VALVE (MASTER)
RCVMF	REMOTE CONTROL VALVE (MASTER) W/FLOW SENSOR
RCVP	REMOTE CONTROL VALVE W/PRESSURE REGULATOR
RCW	RECYCLED WATER
RECP	ROLLED EROSION CONTROL PRODUCT
REQ	REQUIRED
RICS	REMOTE IRRIGATION CONTROL SYSTEM
R/W	RIGHT OF WAY

S

S	SLIP
SCH	SCHEDULE
SF	STATE-FURNISHED
Shld	SHOULDER
Sq	SQUARE
SST	SIDE STRIP
Sta	STATION
Std	STANDARD
SW	SIDEWALK/SOUND WALL

T

T	THIRD CIRCLE/THREAD
TLS	TRUCK LOADING STANDPIPE
TQ	THREE QUARTER CIRCLE
TRM	TURF REINFORCEMENT MAT
TT	TWO-THIRDS CIRCLE
TWSA	TREE WELL SPRINKLER ASSEMBLY
Typ	TYPICAL

U

UG	UNDERGROUND

W

W	WIDTH
W/	WITH
WM	WATER METER
WS	WYE STRAINER
WSA	WYE STRAINER ASSEMBLY
WSP	WELDED STEEL PIPE
WWM	WELDED WIRE MESH

NOTE:
For additional abbreviations, see Standard Plans A10A and A10B.

STATE OF CALIFORNIA
DEPARTMENT OF TRANSPORTATION

LANDSCAPE AND EROSION CONTROL ABBREVIATIONS

NO SCALE

RSP H1 DATED JULY 19, 2013 SUPERSEDES STANDARD PLAN H1 DATED MAY 20, 2011 - PAGE 218 OF THE STANDARD PLANS BOOK DATED 2010.

REVISED STANDARD PLAN RSP H1

2010 REVISED STANDARD PLAN RSP H1

6-28-13

Dist	COUNTY	ROUTE	POST MILES TOTAL PROJECT	SHEET No.	TOTAL SHEETS
12	Ora	405	8.4	74	142

LICENSED LANDSCAPE ARCHITECT

November 15, 2013
PLANS APPROVAL DATE

Gregory A. Balzer 2516
LICENSED LANDSCAPE ARCHITECT
02-28-14
Renewal Date
11-15-13
Date
STATE OF CALIFORNIA

THE STATE OF CALIFORNIA OR ITS OFFICERS OR AGENTS SHALL NOT BE RESPONSIBLE FOR THE ACCURACY OR COMPLETENESS OF SCANNED COPIES OF THIS PLAN SHEET.

TO ACCOMPANY PLANS DATED 4-27-15

EXISTING	NEW	ITEM DESCRIPTION
		WATER METER (WM)
		BACKFLOW PREVENTER ASSEMBLY (BPA)
		BACKFLOW PREVENTER ENCLOSURE (BPE)
		BOOSTER PUMP (BP)
		TRUCK LOADING STANDPIPE (TLS)
	FS	FLOW SENSOR (FS)
		MASTER IRRIGATION CONTROLLER (MIC)
		AUXILIARY IRRIGATION CONTROLLER (AIC)
		IRRIGATION CONTROLLER (IC) IRRIGATION CONTROLLER (IC) (BATTERY) IRRIGATION CONTROLLER (IC) (SOLAR) IRRIGATION CONTROLLER (IC) (TWO WIRE) IRRIGATION CONTROLLER(S) IN CONTROLLER ENCLOSURE CABINET (ICC)
acc	ACC	ARMOR-CLAD CONDUCTORS (ACC)
cnc	CNC	CONTROL AND NEUTRAL CONDUCTORS (CNC)
		IRRIGATION CONDUIT
		EXTEND IRRIGATION CONDUIT
dip	DIP	DUCTILE IRON PIPE (SUPPLY LINE) (MAIN) (DIP)
		GALVANIZED STEEL PIPE (SUPPLY LINE) (MAIN) (GSP)
		GALVANIZED STEEL PIPE (SUPPLY LINE) (LATERAL) (GSP)
		PLASTIC PIPE (SUPPLY LINE) (MAIN)
		PLASTIC PIPE (SUPPLY LINE) (LATERAL)
cp	CP	COPPER PIPE (SUPPLY LINE)
dit	DIT	DRIP IRRIGATION TUBING
		REMOTE CONTROL VALVE (RCV) REMOTE CONTROL VALVE (MASTER) (RCVM) REMOTE CONTROL VALVE (MASTER) W/FLOW METER (RCVMF)
P	P	REMOTE CONTROL VALVE W/PRESSURE REGULATOR (RCVP)
		EXISTING MANUAL CONTROL VALVE (MCV)
	V	DRIP VALVE ASSEMBLY (DVA)
	Y	WYE STRAINER ASSEMBLY (WSA)

EXISTING	NEW	ITEM DESCRIPTION
		GATE VALVE (GV)
		BALL VALVE (BV)
		QUICK COUPLING VALVE (QCV)
		CAM COUPLER ASSEMBLY (CCA)
		GARDEN VALVE ASSEMBLY (GARVA)
		PRESSURE REGULATING VALVE (PRV)
		PRESSURE RELIEF VALVE (PRLV)
		FLOW CONTROL VALVE (FCV)
		COMBINATION AIR RELEASE VALVE (CARV)
		CHECK VALVE (CV)
		FLUSH VALVE (FV)
		EXISTING NOZZLE LINE W/TURNING UNION
		EXISTING IRRIGATION SYSTEM
		EXISTING IRRIGATION SYSTEM TO BE REMOVED
		CHAIN LINK GATE
		QUICK COUPLING VALVE W/SPRINKLER PROTECTOR
3	3	SPRINKLER W/SPRINKLER PROTECTOR
	C	CONNECT TO EXISTING SYSTEM
		CAP
		CAP EXISTING
	\\\FR\\\	FIBER ROLL
	\\\CS\\\	COMPOST SOCK

- RCV SIZE
- IRRIGATION CONTROLLER
- CONTROLLER STATION
- VALVE IN PARALLEL (IF APPLICABLE)
- GPM
- QUANTITY OF SPRINKLERS (WHEN SHOWN)

* 2½"-A-2b-40-60

VALVE CODE

* VALVE CODES FOR EXISTING VALVES ARE SHOWN IN A DASHED ENCLOSURE.

STATE OF CALIFORNIA
DEPARTMENT OF TRANSPORTATION

LANDSCAPE AND EROSION CONTROL SYMBOLS

NO SCALE

RSP H2 DATED NOVEMBER 15, 2013 SUPERSEDES RSP H2 DATED JULY 19, 2013 AND STANDARD PLAN H2 DATED MAY 20, 2011 - PAGE 219 OF THE STANDARD PLANS BOOK DATED 2010.

REVISED STANDARD PLAN RSP H2

2010 REVISED STANDARD PLAN RSP H2

10-9-13

Dist	COUNTY	ROUTE	POST MILES TOTAL PROJECT	SHEET No.	TOTAL SHEETS
12	Ora	405	8.4	75	142

Gregory A. Balzer
LICENSED LANDSCAPE ARCHITECT

July 19, 2013
PLANS APPROVAL DATE

LICENSED LANDSCAPE ARCHITECT
Gregory A. Balzer 2576
Expiration Date 2-28-15
Renewal Date 7-19-13
Date
STATE OF CALIFORNIA

THE STATE OF CALIFORNIA OR ITS OFFICERS OR AGENTS SHALL NOT BE RESPONSIBLE FOR THE ACCURACY OR COMPLETENESS OF SCANNED COPIES OF THIS PLAN SHEET.

TO ACCOMPANY PLANS DATED 4-27-15

2010 REVISED STANDARD PLAN RSP H4

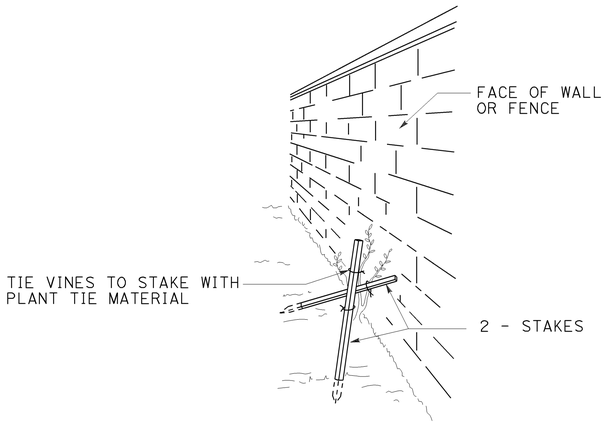

PERSPECTIVE
VINE STAKING

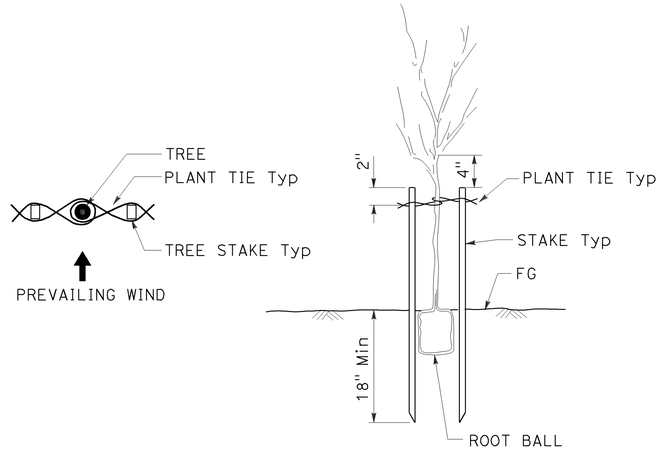

TREE STAKING

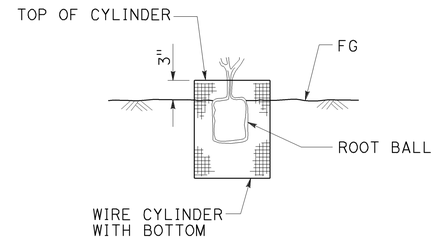

SECTION
ROOT PROTECTOR

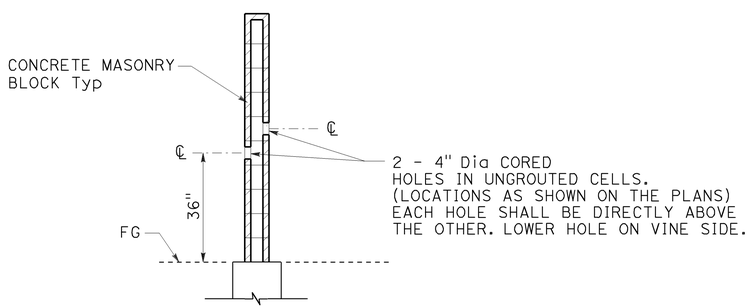

SECTION
CORE HOLE (VINE)

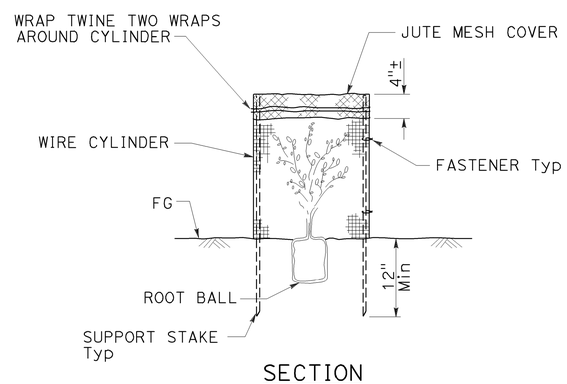

SECTION
FOLIAGE PROTECTOR

STATE OF CALIFORNIA
DEPARTMENT OF TRANSPORTATION

LANDSCAPE DETAILS

NO SCALE

RSP H4 DATED JULY 19, 2013 SUPERSEDES STANDARD PLAN H4
DATED MAY 20, 2011 - PAGE 221 OF THE STANDARD PLANS BOOK DATED 2010.

REVISED STANDARD PLAN RSP H4

6-28-13

Dist	COUNTY	ROUTE	POST MILES TOTAL PROJECT	SHEET No.	TOTAL SHEETS
12	Ora	405	8.4	76	142

LICENSED LANDSCAPE ARCHITECT

July 19, 2013
PLANS APPROVAL DATE

THE STATE OF CALIFORNIA OR ITS OFFICERS OR AGENTS SHALL NOT BE RESPONSIBLE FOR THE ACCURACY OR COMPLETENESS OF SCANNED COPIES OF THIS PLAN SHEET.

LICENSED LANDSCAPE ARCHITECT — Gregory A. Balzer — 2516 — Expiration Date 2-28-15 — Renewal Date 7-19-13 — Date — STATE OF CALIFORNIA

TO ACCOMPANY PLANS DATED 4-27-15

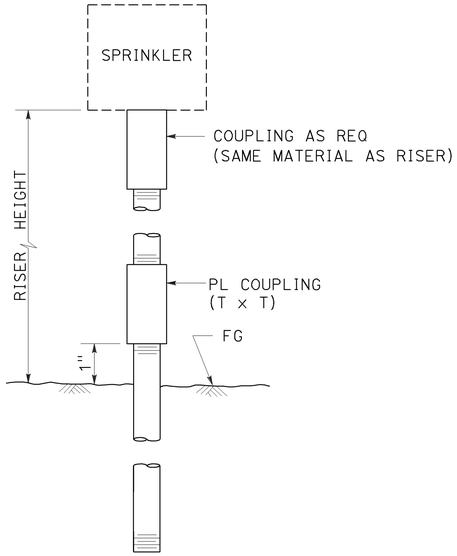

ELEVATION

RISER SPRINKLER ASSEMBLY TYPE I

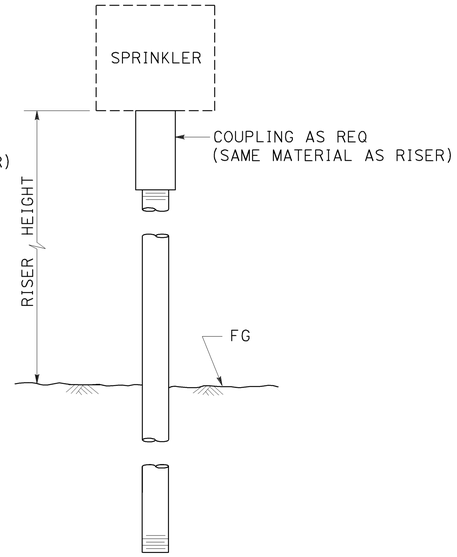

ELEVATION

RISER SPRINKLER ASSEMBLY TYPE II

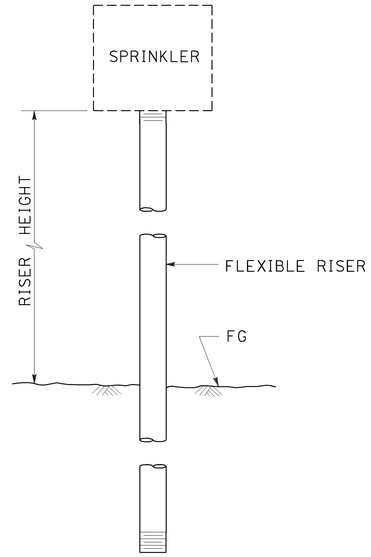

ELEVATION

RISER SPRINKLER ASSEMBLY TYPE III

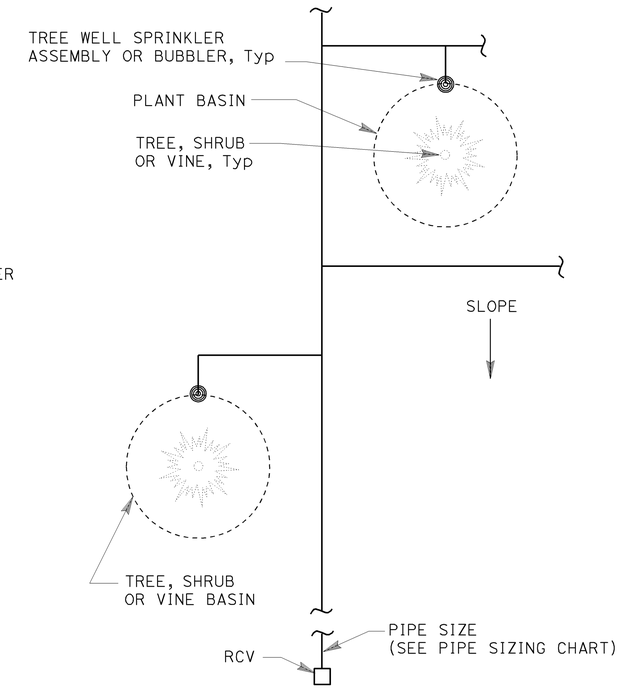

PLAN

NOTES:

1. Install tree well sprinkler assembly on up-hill side of plant when on slope.
2. Install bubbler within basin.

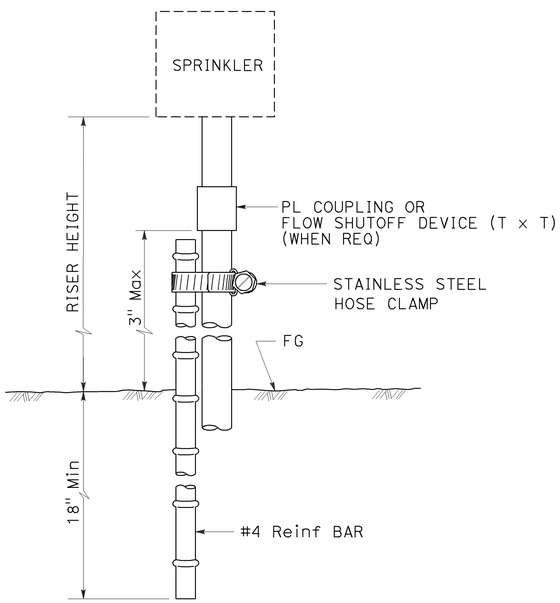

ELEVATION

RISER SPRINKLER ASSEMBLY TYPE IV

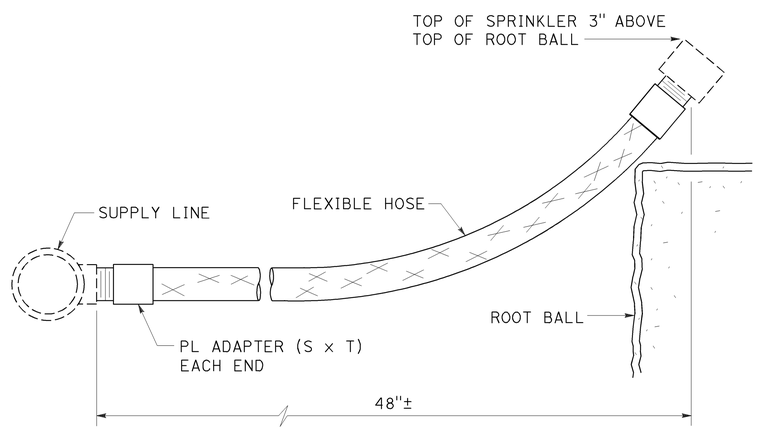

ELEVATION

RISER SPRINKLER ASSEMBLY TYPE V

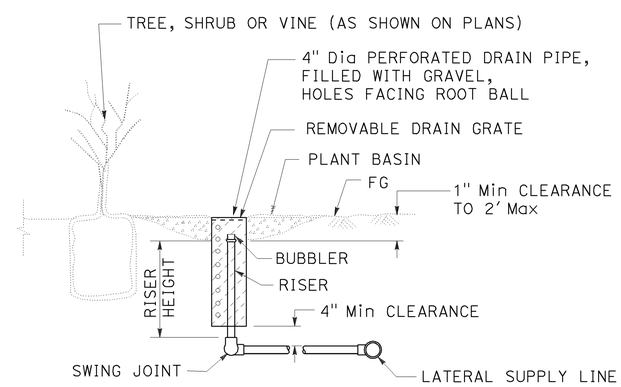

SECTION

TREE WELL SPRINKLER ASSEMBLY

STATE OF CALIFORNIA
DEPARTMENT OF TRANSPORTATION

LANDSCAPE DETAILS

NO SCALE

RSP H5 DATED JULY 19, 2013 SUPERSEDES STANDARD PLAN H5
DATED MAY 20, 2011 - PAGE 222 OF THE STANDARD PLANS BOOK DATED 2010.

REVISED STANDARD PLAN RSP H5

2010 REVISED STANDARD PLAN RSP H5

6-28-13

Dist	COUNTY	ROUTE	POST MILES TOTAL PROJECT	SHEET No.	TOTAL SHEETS
12	Ora	405	8.4	77	142

Gregory A. Balzer
LICENSED LANDSCAPE ARCHITECT

July 19, 2013
PLANS APPROVAL DATE

LICENSED LANDSCAPE ARCHITECT
Gregory A. Balzer 2576
Expiration Date 2-28-15
Renewal Date 7-19-13
Date
STATE OF CALIFORNIA

THE STATE OF CALIFORNIA OR ITS OFFICERS OR AGENTS SHALL NOT BE RESPONSIBLE FOR THE ACCURACY OR COMPLETENESS OF SCANNED COPIES OF THIS PLAN SHEET.

TO ACCOMPANY PLANS DATED 4-27-15

2010 REVISED STANDARD PLAN RSP H6

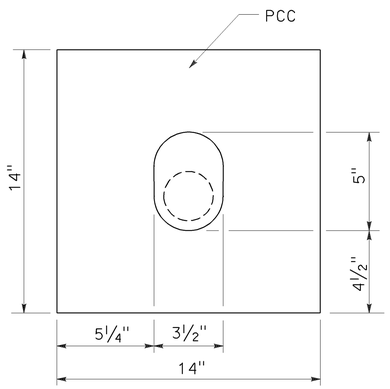

PLAN

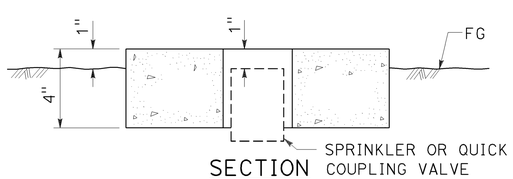

SECTION

SPRINKLER PROTECTOR TYPE I

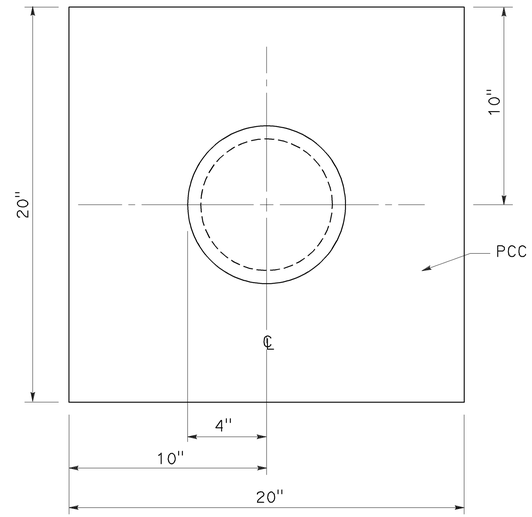

PLAN

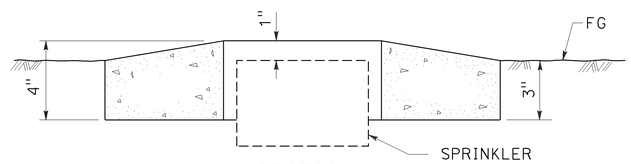

SECTION

SPRINKLER PROTECTOR TYPE II

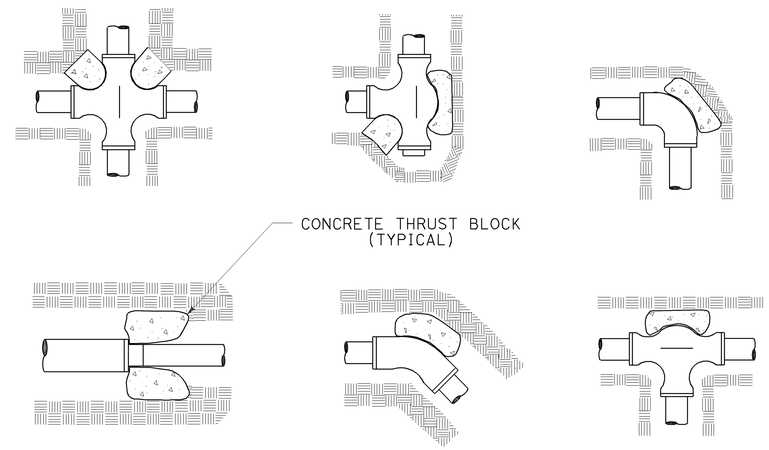

TYPICAL THRUST BLOCKS

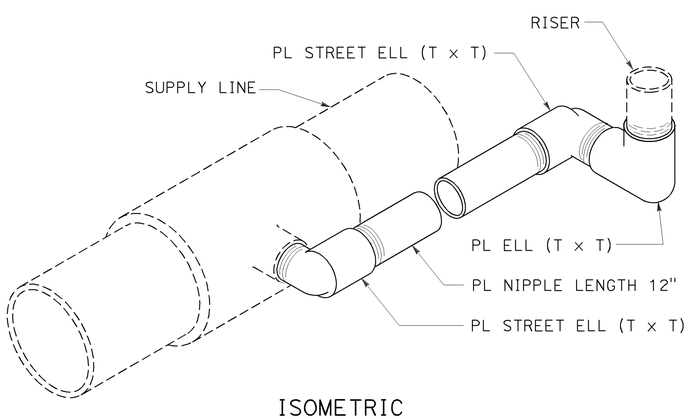

ISOMETRIC

POP-UP SPRINKLER ASSEMBLY TYPE I

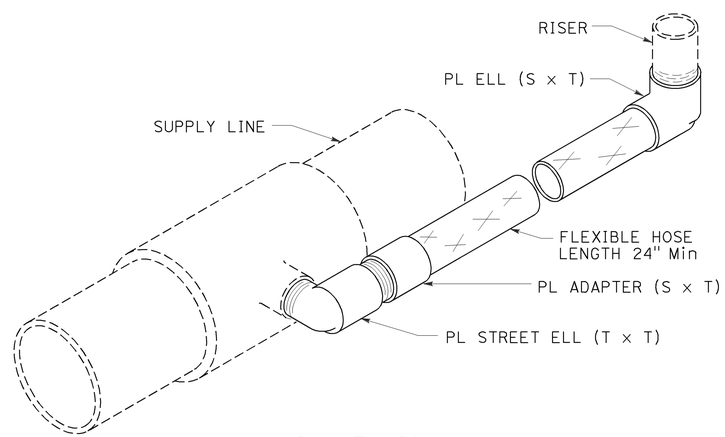

ISOMETRIC

POP-UP SPRINKLER ASSEMBLY TYPE II

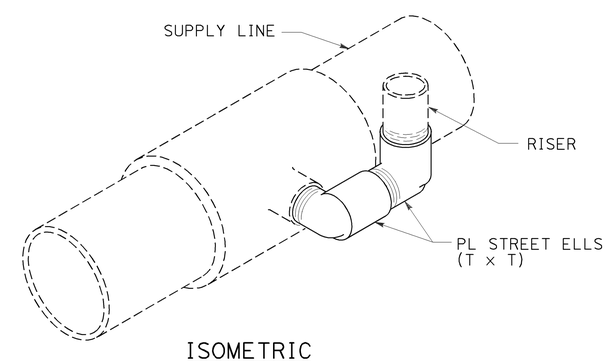

ISOMETRIC

POP-UP SPRINKLER ASSEMBLY TYPE III

STATE OF CALIFORNIA
DEPARTMENT OF TRANSPORTATION

LANDSCAPE DETAILS

NO SCALE

RSP H6 DATED JULY 19, 2013 SUPERSEDES STANDARD PLAN H6
DATED MAY 20, 2011 - PAGE 223 OF THE STANDARD PLANS BOOK DATED 2010.

REVISED STANDARD PLAN RSP H6

6-28-13

Dist	COUNTY	ROUTE	POST MILES TOTAL PROJECT	SHEET No.	TOTAL SHEETS
12	Ora	405	8.4	78	142

LICENSED LANDSCAPE ARCHITECT

July 19, 2013
PLANS APPROVAL DATE

THE STATE OF CALIFORNIA OR ITS OFFICERS OR AGENTS SHALL NOT BE RESPONSIBLE FOR THE ACCURACY OR COMPLETENESS OF SCANNED COPIES OF THIS PLAN SHEET.

LICENSED LANDSCAPE ARCHITECT — Gregory A. Balzer — 2516 — Expiration Date 2-28-15 — Renewal Date 7-19-13 — Date — STATE OF CALIFORNIA

TO ACCOMPANY PLANS DATED 4-27-15

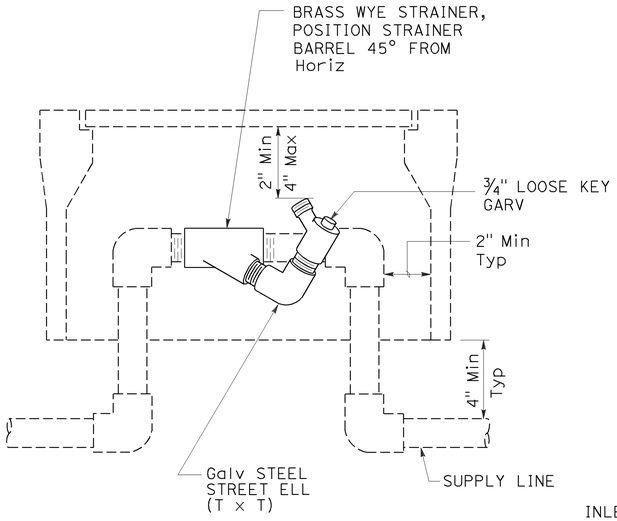

ELEVATION
WYE STRAINER ASSEMBLY

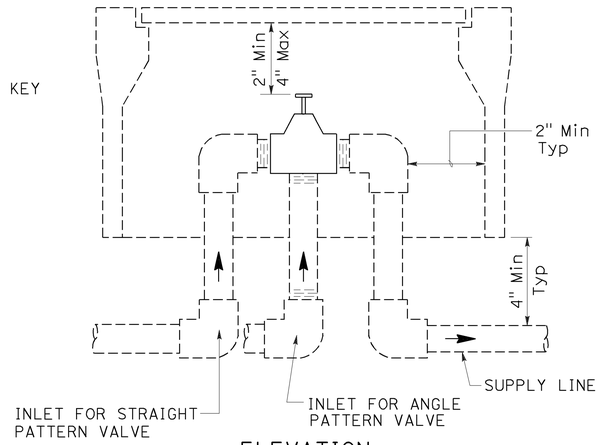

ELEVATION
VALVE

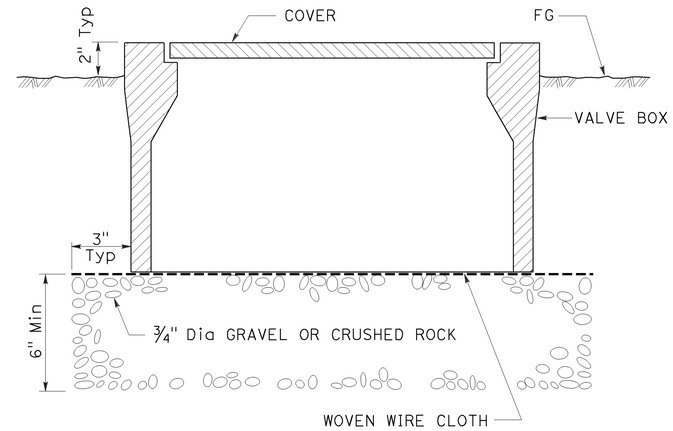

SECTION
VALVE BOX

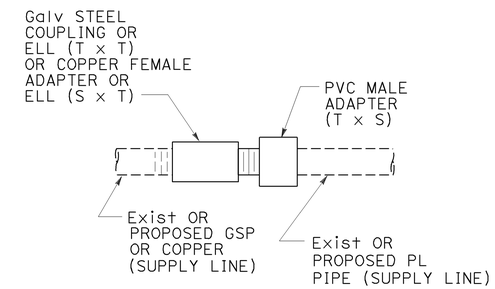

GALVANIZED OR COPPER PIPE CONNECTION TO PLASTIC PIPE

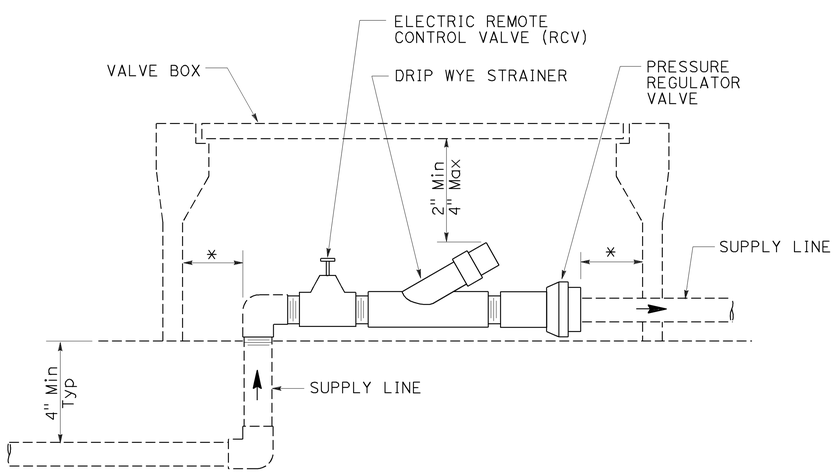

* 2" CLEARANCE ON ALL SIDES

ELEVATION
DRIP VALVE ASSEMBLY

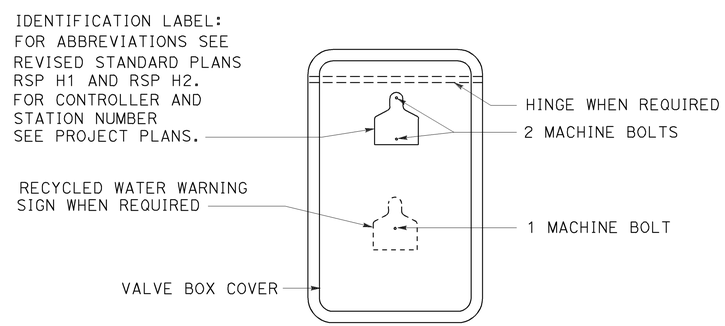

PLAN

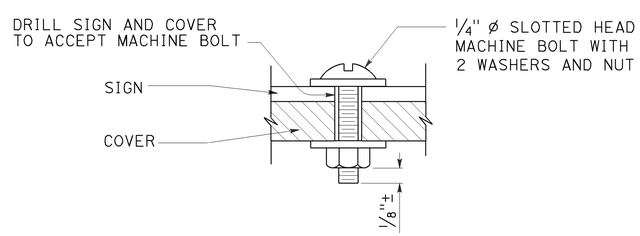

SECTION
VALVE BOX IDENTIFICATION

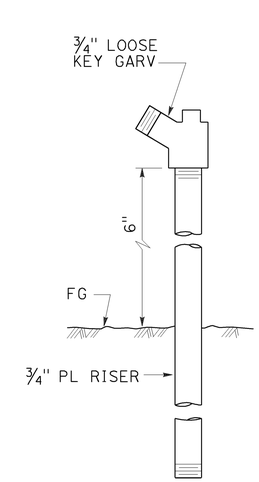

ELEVATION
GARDEN VALVE ASSEMBLY

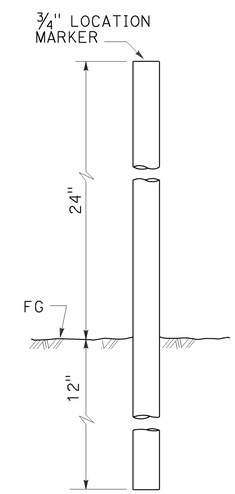

ELEVATION
LOCATION MARKER

GARDEN VALVE ASSEMBLY

STATE OF CALIFORNIA
DEPARTMENT OF TRANSPORTATION

LANDSCAPE DETAILS

NO SCALE

RSP H7 DATED JULY 19, 2013 SUPERSEDES STANDARD PLAN H7 DATED MAY 20, 2011 - PAGE 224 OF THE STANDARD PLANS BOOK DATED 2010.

REVISED STANDARD PLAN RSP H7

2010 REVISED STANDARD PLAN RSP H7

6-20-13

Dist	COUNTY	ROUTE	POST MILES TOTAL PROJECT	SHEET No.	TOTAL SHEETS
12	Ora	405	8.4	79	142

Gregory A. Balzer
LICENSED LANDSCAPE ARCHITECT

July 19, 2013
PLANS APPROVAL DATE

LICENSED LANDSCAPE ARCHITECT Gregory A. Balzer 2576 STATE OF CALIFORNIA
2-28-15 Renewal Date
7-19-13 Date

THE STATE OF CALIFORNIA OR ITS OFFICERS OR AGENTS SHALL NOT BE RESPONSIBLE FOR THE ACCURACY OR COMPLETENESS OF SCANNED COPIES OF THIS PLAN SHEET.

TO ACCOMPANY PLANS DATED 4-27-15

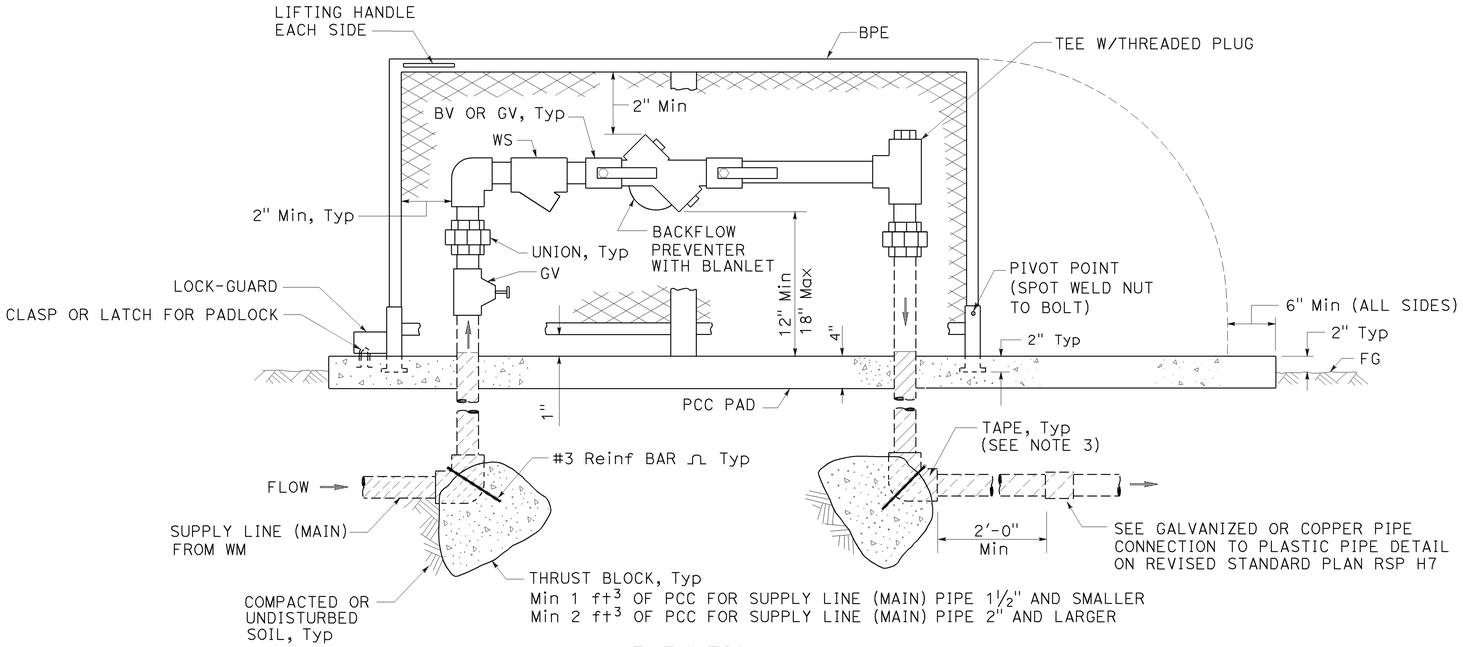

ELEVATION

BACKFLOW PREVENTER ASSEMBLY

IN ONE PIECE ENCLOSURE

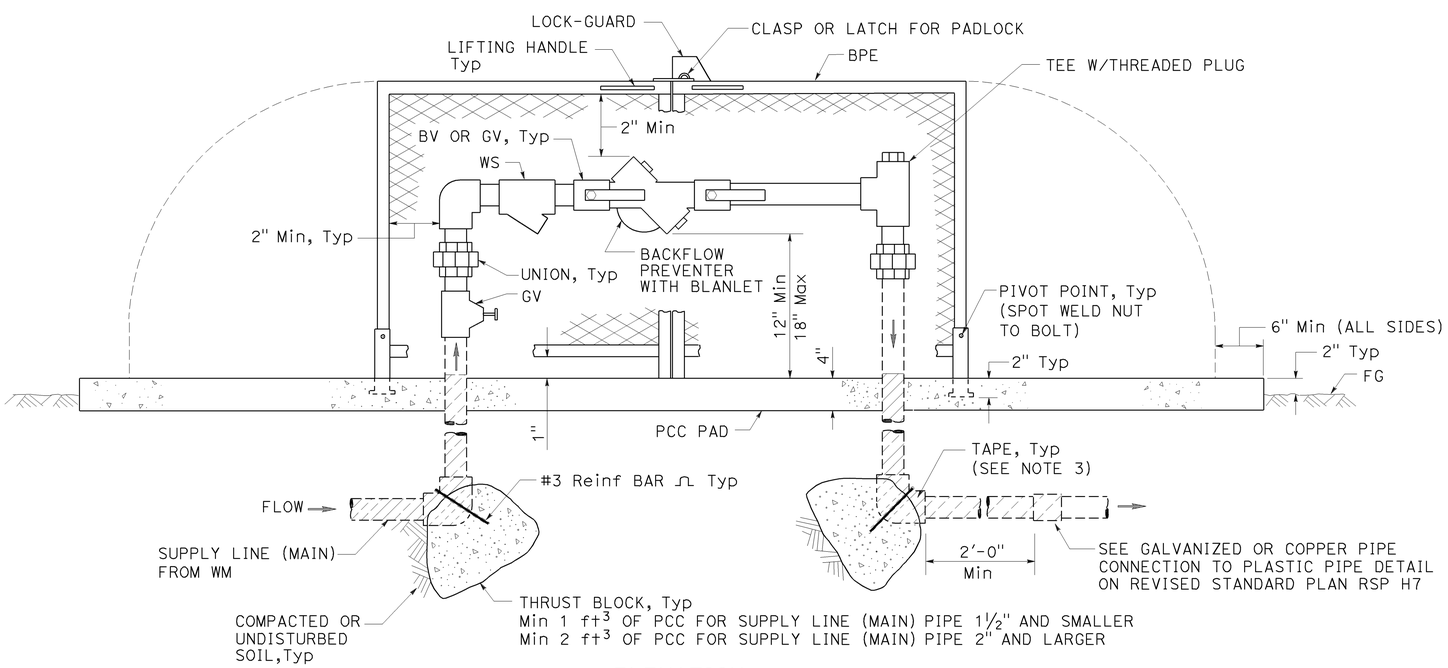

ELEVATION

BACKFLOW PREVENTER ASSEMBLY

IN TWO PIECE ENCLOSURE

NOTES:

1. Wye strainer and fittings must be the same size as the backflow preventer shown on the plans.
2. Backflow preventer assembly manifold pipe must be the same pipe as the supply line (main) pipe to be installed from the water meter to the backflow preventer assembly.
3. All metal in contact with soil and Portland Cement Concrete must be wrapped with 2" wide plastic backed adhesive polyethylene tape 20 mil thick with ½" overlap.

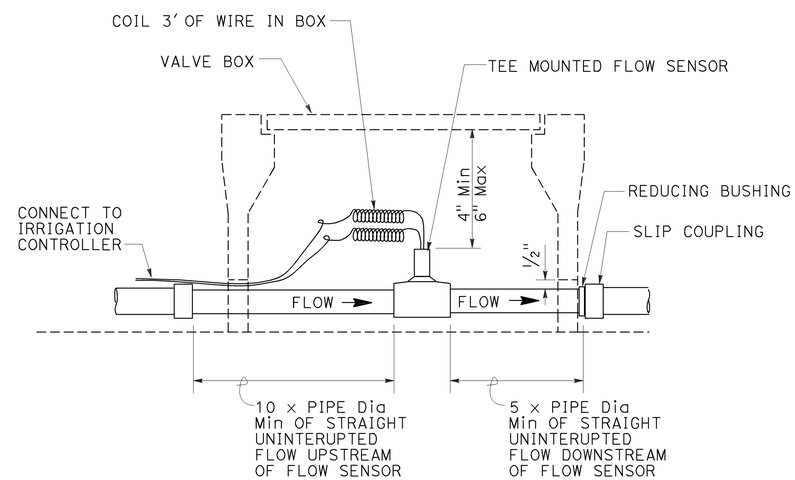

SECTION

FLOW SENSOR

STATE OF CALIFORNIA
DEPARTMENT OF TRANSPORTATION

LANDSCAPE DETAILS

NO SCALE

RSP H8 DATED JULY 19, 2013 SUPERSEDES STANDARD PLAN H8
DATED MAY 20, 2011 - PAGE 225 OF THE STANDARD PLANS BOOK DATED 2010.

REVISED STANDARD PLAN RSP H8

2010 REVISED STANDARD PLAN RSP H8

6-28-13

Dist	COUNTY	ROUTE	POST MILES TOTAL PROJECT	SHEET No.	TOTAL SHEETS
12	Ora	405	8.4	80	142

LICENSED LANDSCAPE ARCHITECT

July 19, 2013
PLANS APPROVAL DATE

LICENSED LANDSCAPE ARCHITECT
Gregory A. Balzer 2576
Renewal Date 2-28-15
7-19-13
Date
STATE OF CALIFORNIA

THE STATE OF CALIFORNIA OR ITS OFFICERS OR AGENTS SHALL NOT BE RESPONSIBLE FOR THE ACCURACY OR COMPLETENESS OF SCANNED COPIES OF THIS PLAN SHEET.

TO ACCOMPANY PLANS DATED 4-27-15

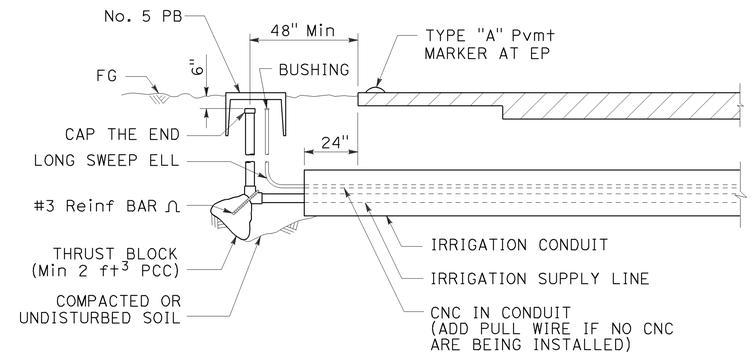

SECTION

IRRIGATION CONDUIT

UNDER TRAVELED WAY

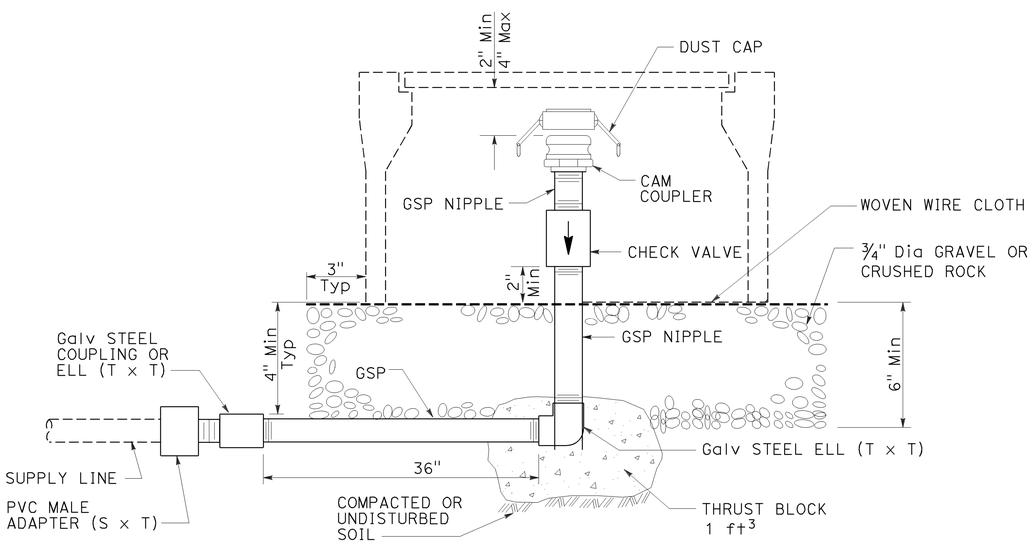

ELEVATION

CAM COUPLER ASSEMBLY

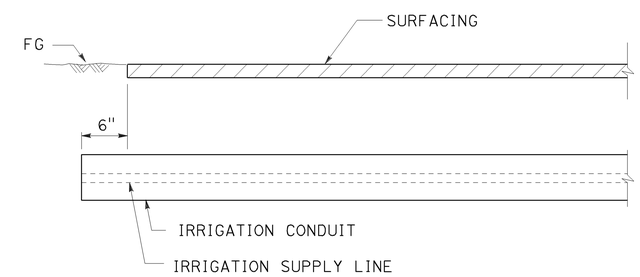

SECTION

IRRIGATION CONDUIT

UNDER SIDEWALKS, DRIVEWAYS AND PATHS

STATE OF CALIFORNIA
DEPARTMENT OF TRANSPORTATION

LANDSCAPE DETAILS

NO SCALE

RSP H9 DATED JULY 19, 2013 SUPERSEDES STANDARD PLAN H9
DATED MAY 20, 2011 - PAGE 226 OF THE STANDARD PLANS BOOK DATED 2010.

REVISED STANDARD PLAN RSP H9

2010 REVISED STANDARD PLAN RSP H9

6-28-13

Dist	COUNTY	ROUTE	POST MILES TOTAL PROJECT	SHEET No.	TOTAL SHEETS
12	Ora	405	8.4	81	142

REGISTERED CIVIL ENGINEER

July 19, 2013
PLANS APPROVAL DATE

REGISTERED PROFESSIONAL ENGINEER Gurinderpal Bhullar No. C48815 Exp. 9-30-14 CIVIL STATE OF CALIFORNIA

THE STATE OF CALIFORNIA OR ITS OFFICERS OR AGENTS SHALL NOT BE RESPONSIBLE FOR THE ACCURACY OR COMPLETENESS OF SCANNED COPIES OF THIS PLAN SHEET.

TO ACCOMPANY PLANS DATED 4-27-15

TABLE 1

TAPER LENGTH CRITERIA AND CHANNELIZING DEVICE SPACING

SPEED (S)	MINIMUM TAPER LENGTH * FOR WIDTH OF OFFSET 12 FEET (W)				MAXIMUM CHANNELIZING DEVICE SPACING		
					X	Y	Z **
	TANGENT 2L	MERGING L	SHIFTING L/2	SHOULDER L/3	TAPER	TANGENT	CONFLICT
mph	ft	ft	ft	ft	ft	ft	ft
20	160	80	40	27	20	40	10
25	250	125	63	42	25	50	12
30	360	180	90	60	30	60	15
35	490	245	123	82	35	70	17
40	640	320	160	107	40	80	20
45	1080	540	270	180	45	90	22
50	1200	600	300	200	50	100	25
55	1320	660	330	220	55	110	27
60	1440	720	360	240	60	120	30
65	1560	780	390	260	65	130	32
70	1680	840	420	280	70	140	35

* - For other offsets, use the following merging taper length formula for L:
For speed of 40 mph or less, $L = WS^2/60$
For speed of 45 mph or more, $L = WS$

Where: L = Taper length in feet
W = Width of offset in feet
S = Posted speed limit, off-peak 85th-percentile speed prior to work starting, or the anticipated operating speed in mph

** - Use for taper and tangent sections where there are no pavement markings or where there is a conflict between existing pavement markings and channelizers (CA).

TABLE 2

LONGITUDINAL BUFFER SPACE AND FLAGGER STATION SPACING

SPEED *	Min D **	DOWNGRADE Min D ***		
		-3%	-6%	-9%
mph	ft	ft	ft	ft
20	115	116	120	126
25	155	158	165	173
30	200	205	215	227
35	250	257	271	287
40	305	315	333	354
45	360	378	400	427
50	425	446	474	507
55	495	520	553	593
60	570	598	638	686
65	645	682	728	785
70	730	771	825	891

* - Speed is posted speed limit, off-peak 85th-percentile speed prior to work starting, or the anticipated operating speed in mph

** - Longitudinal buffer space or flagger station spacing

*** - Use on sustained downgrade steeper than -3 percent and longer than 1 mile.

TABLE 3

ADVANCE WARNING SIGN SPACING

ROAD TYPE	DISTANCE BETWEEN SIGNS *		
	A	B	C
	ft	ft	ft
URBAN - 25 mph OR LESS	100	100	100
URBAN - MORE THAN 25 mph TO 40 mph	250	250	250
URBAN - MORE THAN 40 mph	350	350	350
RURAL	500	500	500
EXPRESSWAY / FREEWAY	1000	1500	2640

* - The distances are approximate, are intended for guidance purposes only, and should be applied with engineering judgment. These distances should be adjusted by the Engineer for field conditions, if necessary, by increasing or decreasing the recommmended distances.

STATE OF CALIFORNIA
DEPARTMENT OF TRANSPORTATION

TRAFFIC CONTROL SYSTEM TABLES FOR LANE AND RAMP CLOSURES

NO SCALE

RSP T9 DATED JULY 19, 2013 SUPERSEDES RSP T9 DATED APRIL 19, 2013 THAT SUPPLEMENTS THE STANDARD PLANS BOOK DATED 2010.

REVISED STANDARD PLAN RSP T9

2010 REVISED STANDARD PLAN RSP T9

4-30-13

Dist	COUNTY	ROUTE	POST MILES TOTAL PROJECT	SHEET No.	TOTAL SHEETS
12	Ora	405	8.4	82	142

REGISTERED CIVIL ENGINEER

April 19, 2013
PLANS APPROVAL DATE

REGISTERED PROFESSIONAL ENGINEER Gurinderpal Bhullar No. C48815 Exp. 9-30-14 CIVIL STATE OF CALIFORNIA

THE STATE OF CALIFORNIA OR ITS OFFICERS OR AGENTS SHALL NOT BE RESPONSIBLE FOR THE ACCURACY OR COMPLETENESS OF SCANNED COPIES OF THIS PLAN SHEET.

TO ACCOMPANY PLANS DATED 4-27-15

NOTES:

See Revised Standard Plan RSP T9 for tables.

Use cone spacing X for taper segment, Y for tangent segment or Z for conflict situations, as approriate, per Table 1, unless X, Y, or Z cone spacing is shown on this sheet.

Unless otherwise specified in the special provisions, all temporary warning signs shall have black legend on fluorescent orange background.

California codes are designated by (CA). Otherwise, Federal (MUTCD) codes are shown.

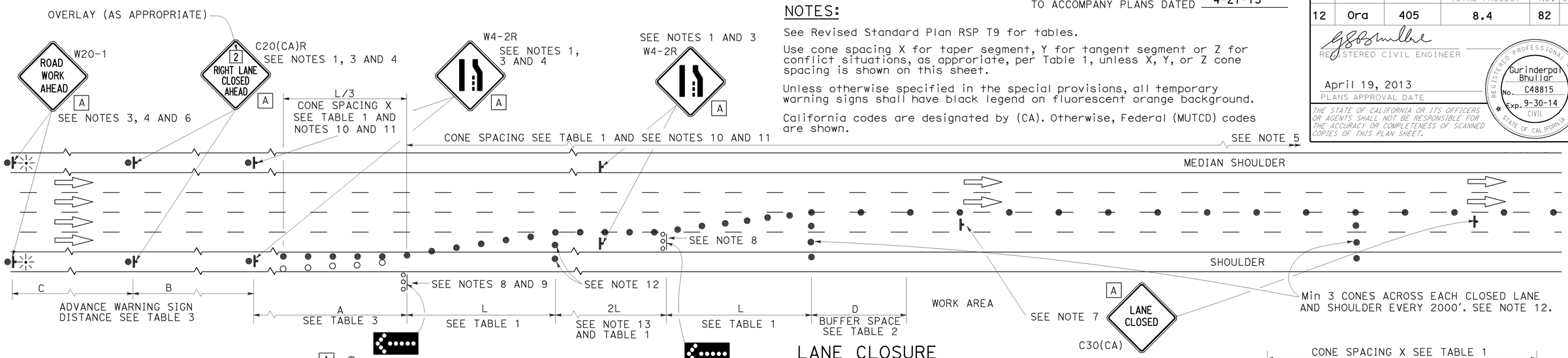

LANE CLOSURE

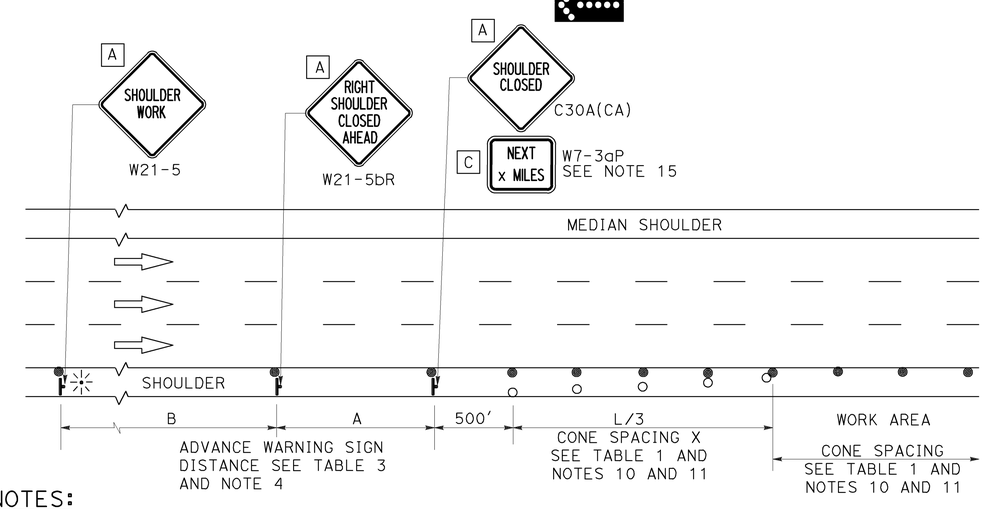

SHOULDER CLOSURE

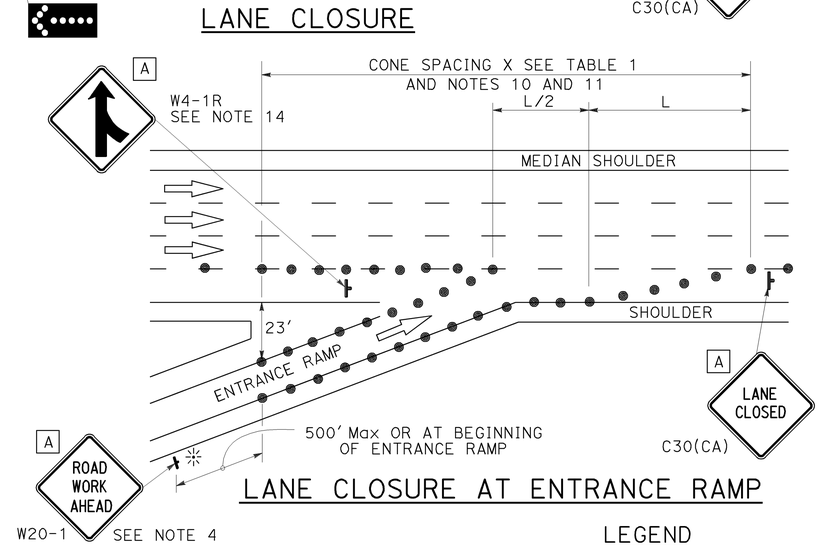

LANE CLOSURE AT ENTRANCE RAMP

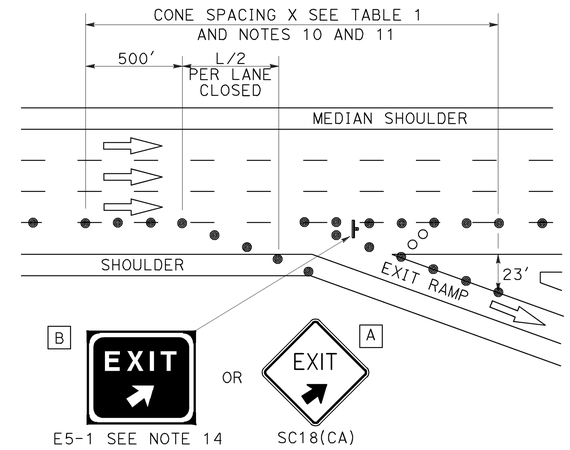

LANE CLOSURE AT EXIT RAMP

NOTES:

1. Median lane closures shall conform to the details as shown except that C20(CA)L and W4-2L signs shall be used.
2. At least one person shall be assigned to provide full time maintenance of traffic control devices for lane closures.
3. Duplicate sign installations are not required:
   a) On opposite shoulder if at least one-half of the available lanes remain open to traffic.
   b) In the median if the width of the median shoulder is less than 8' and the outside lanes are to be closed.
4. Each advance warning sign on each side of the roadway shall be equipped with at least two flags for daytime closure. Each flag shall be at least 16" x 16" in size and shall be orange or fluorescent red-orange in color. Flashing beacons shall be placed at the locations indicated for lane closure during hours of darkness.
5. A G20-2 "END ROAD WORK" sign, with minimum size of 48" x 24" as appropriate, shall be placed at the end of the lane closure unless the end of work area is obvious or ends within a larger project's limits.
6. If the W20-1 sign would follow within 2000' of a stationary W20-1 or G20-1 "ROAD WORK NEXT _____ MILES", use a C20(CA) sign for the first advance warning sign.
7. Place a C30(CA) sign every 2000' throughout length of lane closure.
8. One flashing arrow sign for each lane closed. The flashing arrow signs shall be Type I.
9. A minimum 1500' of sight distance shall be provided where possible for vehicles approaching the first flashing arrow sign. Lane closures shall not begin at top of crest vertical curve or on a horizontal curve.
10. All cones used for lane closures during the hours of darkness shall be fitted with retroreflective bands (or sleeves) as specified in the specifications.
11. Portable delineators, placed at one-half the spacing indicated for traffic cones may be used instead of cones for daytime closures only.
12. Unless otherwise specified in the special provisions, a minimum of 3 cones shall be placed transversely across each closed lane and shoulder at each location where a taper across a traffic lane ends and every 2000' as shown on the "Lane Closure" detail. Two Type II barricades may be used instead of the 3 cones. The transverse alignment of the cones or barricades on the closed shoulder may be shifted from the transverse alignment to provide access to the work.
13. Unless otherwise specified in the special provisions, the 2L tangent shown along lane lines shall be used between the L tapers required for each closed traffic lane.
14. Unless otherwise specified in the special provisions, the E5-1 or SC18(CA) and W4-1 signs shall be used as shown.
15. A W7-3aP "NEXT____ MILES" plaque must be used if theshoulder closure extends beyond the distance that can be perceived by road users.

LEGEND

- TRAFFIC CONE
- TRAFFIC CONE (OPTIONAL TAPER)
- TEMPORARY TRAFFIC CONTROL SIGN
- FLASHING ARROW SIGN (FAS)
- FAS SUPPORT OR TRAILER
- PORTABLE FLASHING BEACON

SIGN PANEL SIZE (Min)

A	48" x 48"
B	72" x 60"
C	36" x 30"

STATE OF CALIFORNIA
DEPARTMENT OF TRANSPORTATION

TRAFFIC CONTROL SYSTEM FOR LANE CLOSURE ON FREEWAYS AND EXPRESSWAYS

NO SCALE

RSP T10 DATED APRIL 19, 2013 SUPERSEDES STANDARD PLAN T10 DATED MAY 20, 2011 - PAGE 237 OF THE STANDARD PLANS BOOK DATED 2010.

REVISED STANDARD PLAN RSP T10

2010 REVISED STANDARD PLAN RSP T10

12-18-12

TO ACCOMPANY PLANS DATED 4-27-15

Dist	COUNTY	ROUTE	POST MILES TOTAL PROJECT	SHEET No.	TOTAL SHEETS
12	Ora	405	8.4	83	142

REGISTERED CIVIL ENGINEER

April 19, 2013
PLANS APPROVAL DATE

REGISTERED PROFESSIONAL ENGINEER Gurinderpal Bhullar No. C48815 Exp. 9-30-14 CIVIL STATE OF CALIFORNIA

THE STATE OF CALIFORNIA OR ITS OFFICERS OR AGENTS SHALL NOT BE RESPONSIBLE FOR THE ACCURACY OR COMPLETENESS OF SCANNED COPIES OF THIS PLAN SHEET.

NOTES: See Revised Standard Plan RSP T9 for tables.

Use cone spacing X for taper segment, Y for tangent segment or Z for conflict situations, as approriate, per Table 1, unless X, Y, or Z cone spacing is shown on this sheet.

Unless otherwise specified in the special provisions, all temporary warning signs shall have black legend on fluorescent orange background.

California codes are designated by (CA). Otherwise, Federal (MUTCD) codes are shown.

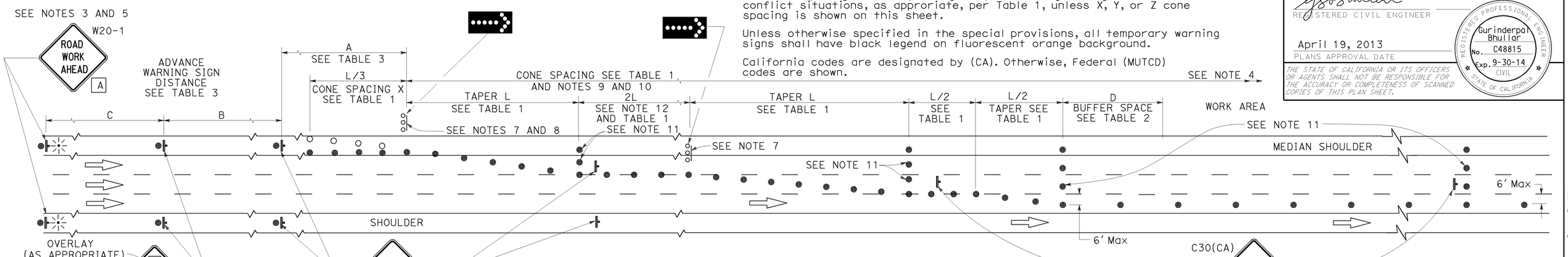

LANE CLOSURE WITH PARTIAL SHOULDER USE

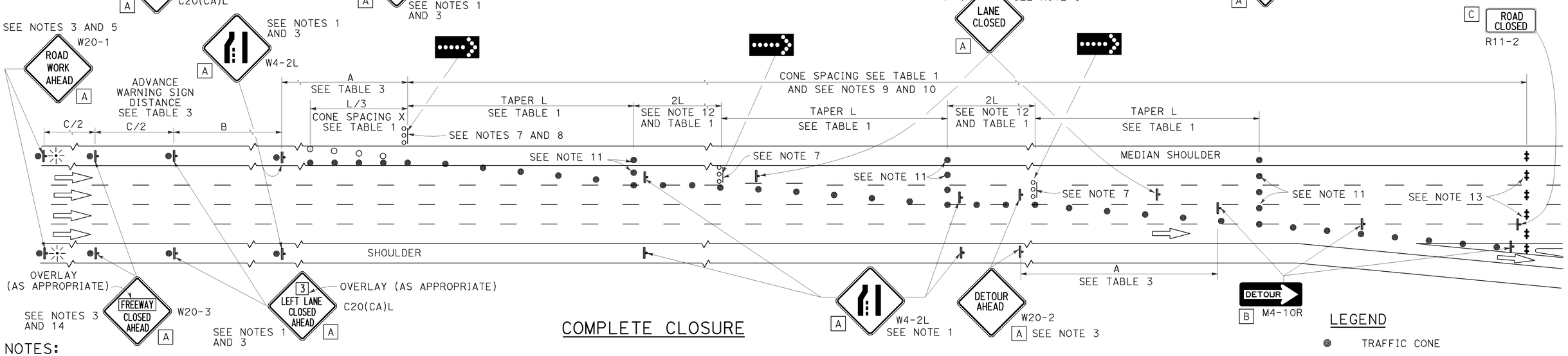

COMPLETE CLOSURE

NOTES:

1. Lane closures on the right side using partial median shoulder as a traffic lane shall conform to the details as shown except that C20(CA)R and W4-2R signs shall be used.
2. At least one person shall be assigned to provide full time maintenance of traffic control devices for lane closures.
3. Each advance warning sign on each side of the roadway shall be equipped with at least two flags for daytime closure. Each flag shall be at least 16" X 16" in size and shall be orange or fluorescent red-orange in color. Flashing beacons shall be placed at the locations indicated for lane closure during hours of darkness.
4. A G20-2 "END ROAD WORK" sign, with minimum size of 48" x 24" as appropriate, shall be placed at the end of the lane closure unless the end of work area is obvious or ends within a larger project's limits.
5. If the W20-1 sign would follow within 2000' of a stationary W20-1 or G20-1 "ROAD WORK NEXT ___ MILES", use a C20(CA) sign for the first advance warning sign.
6. Place a C30(CA) sign every 2000' throughout length of lane closure.
7. One flashing arrow sign for each lane closed. The flashing arrow signs shall be Type I.
8. A minimum 1500' of sight distance shall be provided where possible for vehicles approaching the first flashing arrow sign. Lane closures shall not begin at the top of crest vertical curve or on a horizontal curve.
9. All cones used for lane closures during the hours of darkness shall be fitted with retroreflective bands (or sleeves) as specified in the specifications.
10. Portable delineators, placed at one-half the spacing indicated for traffic cones, may be used instead of cones for daytime closures only.
11. Unless otherwise specified in the special provisions, a minimum of 3 cones shall be placed transversely across each closed lane and shoulder at each location where a taper across a traffic lane ends and every 2000' as shown on the "Lane Closure With Partial Shoulder Use" detail. Two Type II barricades may be used instead of the 3 cones. The transverse alignment of the cones or barricades on the closed shoulder may be shifted from the transverse alignment to provide access to the work.
12. Unless otherwise specified in the special provisions, the 2L tangent shown along lane lines shall be used between the L tapers required for each closed traffic lane.
13. A minimum of Two Type II or III barricades shall be placed across each closed lane and shoulder at the location shown and every 2000' within the complete closure area. Within the complete closure area, the transverse alignment of the barricades on the closed shoulder may be shifted from the transverse alignment to provide access to the work.
14. When specified in the special provisions, a W20-2 "DETOUR AHEAD" sign is to be used in place of the W20-3 "FREEWAY CLOSED AHEAD" sign.

SIGN PANEL SIZE (Min)

A	48" x 48"
B	48" x 18"
C	48" x 30"

LEGEND

- TRAFFIC CONE
- TRAFFIC CONE (OPTIONAL TAPER)
- TEMPORARY TRAFFIC CONTROL SIGN
- FLASHING ARROW SIGN (FAS)
- FAS SUPPORT OR TRAILER
- PORTABLE FLASHING BEACON

STATE OF CALIFORNIA
DEPARTMENT OF TRANSPORTATION

TRAFFIC CONTROL SYSTEM FOR LANE CLOSURES ON FREEWAYS AND EXPRESSWAYS

NO SCALE

RSP T10A DATED APRIL 19, 2013 SUPERSEDES STANDARD PLAN T10A DATED MAY 20, 2011 - PAGE 238 OF THE STANDARD PLANS BOOK DATED 2010.

REVISED STANDARD PLAN RSP T10A

2010 REVISED STANDARD PLAN RSP T10A

12-18-12

Dist	COUNTY	ROUTE	POST MILES TOTAL PROJECT	SHEET No.	TOTAL SHEETS
12	Ora	405	8.4	84	142

REGISTERED CIVIL ENGINEER

April 20, 2012
PLANS APPROVAL DATE

REGISTERED PROFESSIONAL ENGINEER Gary Wang No. C58298 Exp. 6-30-12 CIVIL STATE OF CALIFORNIA

THE STATE OF CALIFORNIA OR ITS OFFICERS OR AGENTS SHALL NOT BE RESPONSIBLE FOR THE ACCURACY OR COMPLETENESS OF SCANNED COPIES OF THIS PLAN SHEET.

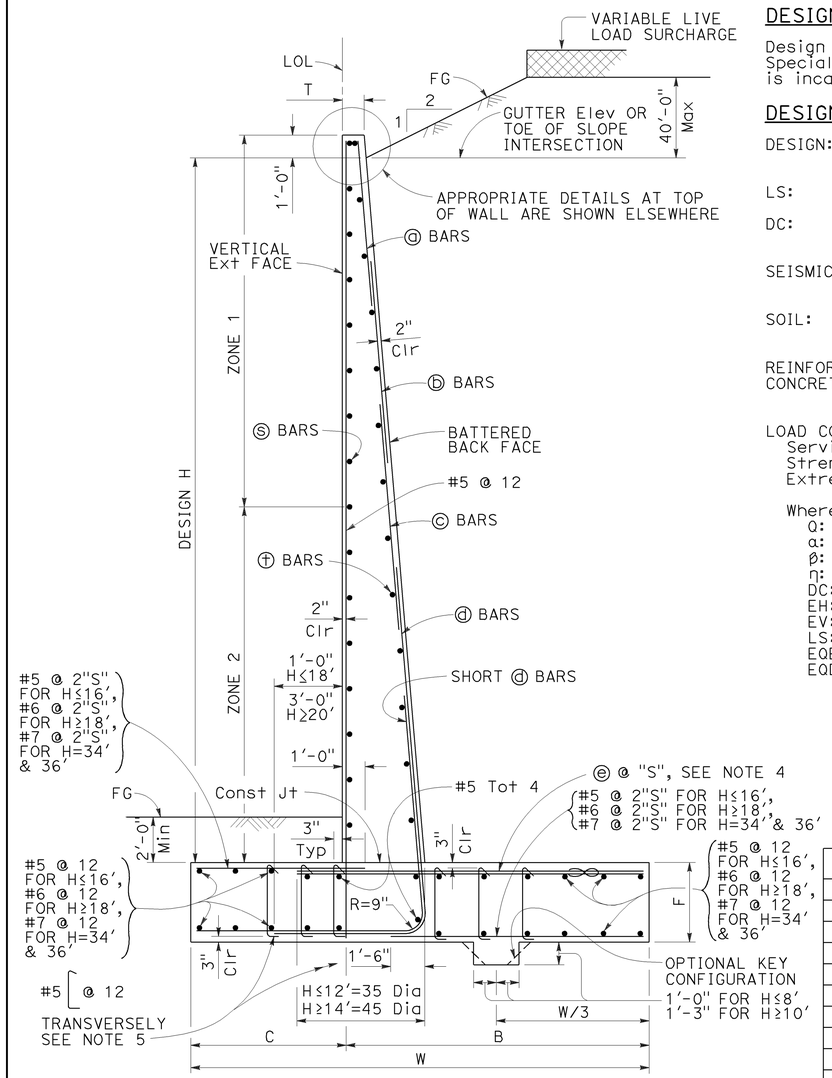

TYPICAL SECTION

DESIGN CONDITIONS:

Design H may be exceeded by 6" before going to the next size. Special footing design is required where foundation material is incapable of supporting bearing stress listed in the table.

DESIGN NOTES:

DESIGN: AASHTO LRFD Bridge Design Specifications, 4th Edition with California Amendments

LS: Varied surcharge on level ground surface

DC: Stem Architectural Treatment of thickness up to 6" of concrete (75 psf) considered

SEISMIC: $k_h = 0.2$
$k_v = 0.0$

SOIL: $\phi = 34°$
$\gamma = 120$ pcf

REINFORCED CONCRETE: $f'c = 3{,}600$ psi
$fy = 60{,}000$ psi

LOAD COMBINATIONS AND LIMIT STATES:

Service I	$Q = 1.00DC+1.00EV+1.00EH+1.00LS$
Strength I	$Q = \alpha DC+\phi EV+\eta EH+1.75LS$
Extreme I	$Q = 1.00DC+1.00EV+1.00EH+1.00EQD+1.00EQE$

Where:

Q:	Force Effects
α:	1.25 or 0.90, Whichever Controls Design
φ:	1.35 or 1.00, Whichever Controls Design
η:	1.50 or 0.90, Whichever Controls Design
DC:	Dead Load of Structure Components
EH:	Horizontal Earth Fill Pressure
EV:	Vertical Earth Pressure from Earth Fill Weight
LS:	Live Load Surcharge
EQE:	Seismic Earth Pressure
EQD:	Soil and Structural and Nonstructural Components Inertia

SYMBOLS:

TO ACCOMPANY PLANS DATED 4-27-15

Ser - service limit state I
Str - strength limit state I
Ext - extreme event limit state I
B' - effective footing width (ft)
q'_o - net bearing stress (ksf), OG assumed to be FG at toe
q_o - gross uniform bearing stress (ksf)
h1 = Top of footing to top of short ⓓ bar
h2 = Top of footing to top of ⓓ bar
h3 = Top of footing to top of ⓒ bar
h4 = Top of footing to top of ⓑ bar
Zone 1 = Top half of stem height
Zone 2 = Bottom half of stem height
∞ - Bundle of two bars

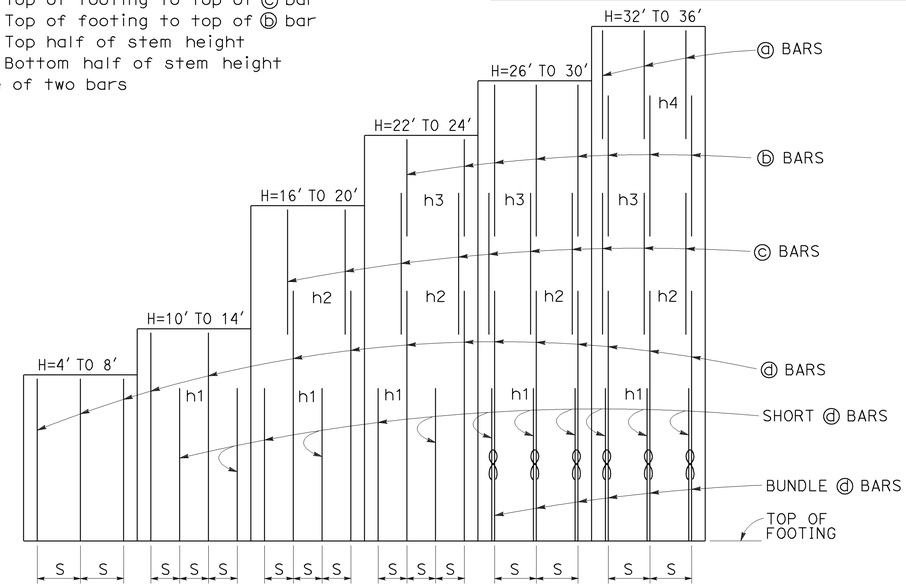

ELEVATION

TABLE OF REINFORCING STEEL, DIMENSIONS AND DATA

DESIGN H	4'	6'	8'	10'	12'	14'	16'	18'	20'	22'	24'	26'	28'	30'	32'	34'	36'
W	6'-0"	7'-6"	9'-6"	11'-0"	12'-6"	15'-6"	17'-3"	19'-6"	21'-9"	23'-6"	26'-0"	28'-1"	30'-3"	31'-6"	33'-0"	34'-8"	35'-11"
C	2'-0"	2'-6"	3'-3"	3'-6"	4'-3"	5'-0"	5'-3"	5'-9"	6'-9"	7'-3"	8'-3"	8'-9"	9'-0"	9'-6"	10'-0"	10'-10"	11'-3"
B	4'-0"	5'-0"	6'-3"	7'-6"	8'-3"	10'-6"	12'-0"	13'-9"	15'-0"	16'-3"	17'-9"	19'-4"	21'-3"	22'-0"	23'-0"	23'-10"	24'-8"
F	1'-6"	1'-6"	2'-0"	2'-3"	2'-6"	2'-8"	2'-10"	3'-0"	3'-4"	3'-6"	3'-6"	3'-7"	3'-7"	3'-9"	3'-9"	4'-0"	4'-4"
T	11½"	11½"	11½"	11½"	11½"	11½"	11½"	11½"	11½"	11½"	11½"	11½"	1'-2"	1'-5"	1'-10"	2'-3"	2'-9"
BATTER	½: 12	½: 12	½: 12	½: 12	½: 12	⅝: 12	⅝: 12	¾: 12	⅞: 12	1 : 12	1⅛: 12	1⅛: 12	1⅛: 12	1⅛: 12	1⅛: 12	1⅛: 12	1⅛: 12
SPACING "S"	16"	12"	10"	7"	7"	7"	7"	7"	7"	6"	6"	10"	8"	7"	7"	7"	7"
ⓐ BARS	-	-	-	-	-	-	-	-	-	-	-	-	-	-	#5	#5	#5
ⓑ BARS	-	-	-	-	-	-	-	-	-	#5	#5	#5	#5	#5	#7	#7	#7
ⓒ BARS	-	-	-	-	-	-	#6	#6	#6	#7	#8	#8	#8	#8	#9	#9	#9
ⓓ BARS	#5	#5	#6	#6	#7	#8	#9	#10	#10	#10	#11	#11	#11	#11	#11	#11	#11
ⓔ BARS	#5	#5	#6	#6	#7	#8	#9	#10	#10	#10	#11	#11	#11	#11	#11	#11	#11
h1	-	-	-	5'-3"	6'-4"	7'-6"	8'-9"	9'-9"	11'-0"	11'-3"	11'-6"	10'-3"	11'-9"	12'-3"	12'-6"	13'-3"	13'-8"
h2	-	-	-	-	-	-	12'-8"	15'-6"	17'-0"	16'-6"	17'-3"	18'-0"	17'-6"	17'-4"	14'-10"	15'-9"	16'-4"
h3	-	-	-	-	-	-	-	-	-	18'-9"	21'-3"	21'-3"	22'-4"	22'-8"	18'-0"	18'-6"	19'-6"
h4	-	-	-	-	-	-	-	-	-	-	-	-	-	-	26'-3"	27'-4"	28'-6"
No. of Toe Stirrups	0	0	0	0	0	0	0	0	0	0	0	5	5	6	7	8	9
No. of Heel Stirrups	0	0	0	0	0	0	0	0	4	6	7	8	10	10	11	11	11
ZONE 1 ⓢ BARS	#5 @ 18	#5 @ 18	#5 @ 18	#5 @ 18	#5 @ 18	#5 @ 18	#5 @ 18	#5 @ 18	#5 @ 12	#5 @ 12	#5 @ 12	#5 @ 12	#5 @ 12	#6 @ 12	#6 @ 12	#6 @ 10	#6 @ 10
ZONE 2 ⓢ BARS	#5 @ 18	#5 @ 18	#5 @ 18	#5 @ 18	#5 @ 18	#5 @ 12	#5 @ 12	#5 @ 12	#5 @ 12	#6 @ 12	#6 @ 12	#7 @ 12	#7 @ 12	#7 @ 12	#7 @ 12	#7 @ 10	#7 @ 10
ZONE 1 ⓣ BARS	#4 @ 18	#4 @ 18	#4 @ 18	#4 @ 18	#4 @ 18	#4 @ 18	#4 @ 18	#4 @ 18	#4 @ 18	#4 @ 18	#4 @ 18	#4 @ 12	#4 @ 12	#4 @ 12	#5 @ 12	#5 @ 12	#5 @ 12
ZONE 2 ⓣ BARS	#4 @ 18	#4 @ 18	#4 @ 18	#4 @ 18	#4 @ 18	#4 @ 12	#4 @ 12	#4 @ 12	#4 @ 12	#4 @ 12	#4 @ 12	#5 @ 12	#5 @ 12	#5 @ 12	#6 @ 12	#6 @ 12	#6 @ 12
Ser: B', q'_o	4.0, 0.9	5.5, 1.0	9.3, 1.0	10.9, 1.3	12.3, 1.5	14.8, 1.9	16.6, 2.1	18.7, 2.4	20.6, 2.7	22.3, 3.0	24.2, 3.3	26.1, 3.5	28.2, 3.9	29.6, 4.0	31.1, 4.2	32.7, 4.4	34.1, 4.6
Str: B', q_o	2.2, 2.2	3.5, 2.2	5.1, 2.3	6.3, 2.6	7.6, 2.7	12.9, 3.1	14.3, 3.6	16.5, 3.9	19.4, 4.5	20.7, 4.8	22.5, 5.2	24.3, 5.6	26.2, 6.0	27.5, 6.3	28.8, 6.6	30.3, 6.9	31.8, 7.2
Ext: B', q_o	2.3, 3.4	2.7, 4.4	3.6, 5.0	3.8, 6.5	4.5, 7.0	7.0, 6.1	7.6, 6.9	9.3, 7.0	11.0, 7.1	11.8, 7.6	14.1, 7.4	15.6, 7.7	17.1, 8.0	17.2, 8.7	18.1, 9.0	19.0, 9.4	19.4, 10.0

NOTES:

1. For details not shown and drainage notes see RSP B3-5
2. For wall stem joint details see B0-3 3-3 and B0-3 3-4
3. At ⓓ and short ⓓ bars:
   H ≤ 6', no splices are allowed within 1'-8" above the top of footing.
   H > 6', no splices are allowed within H/4 above the top of footing.
4. Bundle ⓔ bars for H ≥ 26'.
5. Hook stirrups around & space with alternating transverse reinforcement at 2 x "S".

RSP B3-1B DATED APRIL 20, 2012 SUPPLEMENTS THE STANDARD PLANS BOOK DATED 2010.

STATE OF CALIFORNIA
DEPARTMENT OF TRANSPORTATION

RETAINING WALL TYPE 1 (CASE 2)

NO SCALE

REVISED STANDARD PLAN RSP B3-1B

2010 REVISED STANDARD PLAN RSP B3-1B

3-30-12

Dist	COUNTY	ROUTE	POST MILES TOTAL PROJECT	SHEET No.	TOTAL SHEETS
12	Ora	405	8.4	85	142

REGISTERED CIVIL ENGINEER

April 20, 2012
PLANS APPROVAL DATE

REGISTERED PROFESSIONAL ENGINEER Gary Wang No. C58298 Exp. 6-30-12 CIVIL STATE OF CALIFORNIA

THE STATE OF CALIFORNIA OR ITS OFFICERS OR AGENTS SHALL NOT BE RESPONSIBLE FOR THE ACCURACY OR COMPLETENESS OF SCANNED COPIES OF THIS PLAN SHEET.

TO ACCOMPANY PLANS DATED 4-27-15

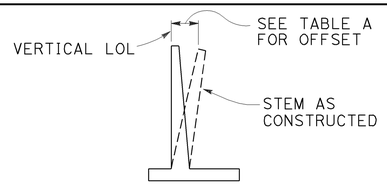

APPROXIMATE WALL OFFSET VALUES

Values for offseting forms to be determined by the Engineer.

TABLE A

H	OFFSET
4'-12'	H/200
14'-16'	H/160
18'-20'	H/140
22'-24'	H/130
26'-36'	2½"

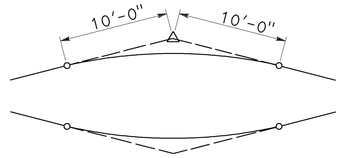

20'-0" VC AT TOP OF WALL SLOPE CHANGE

Where shown on the plans

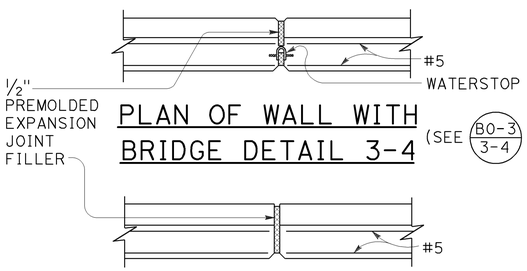

PLAN OF WALL WITH BRIDGE DETAIL 3-4

(SEE B0-3 / 3-4)

PLAN OF WALL WITH EXPANSION JOINT ONLY

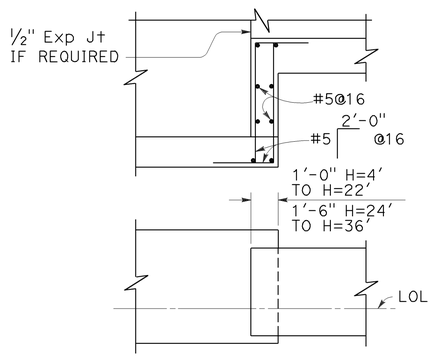

FOOTING STEP

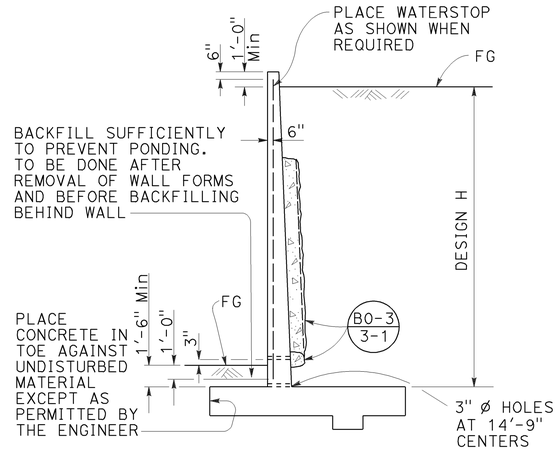

DESIGN AND DRAINAGE

DESIGN CONDITIONS:

Design "H" may be exceeded by 6" before going to the next size. Special footing design is required where foundation material is incapable of supporting bearing stress listed in table

Return wall not required unless shown elsewhere

DESIGN NOTES:

DESIGN: AASHTO LRFD Bridge Design Specifications, 4th edition with California Amendments

LIVE LOAD: Surcharge on level ground surface

SOIL: ϕ = 34°
γ = 120 pcf

REINFORCED CONCRETE: fy = 60,000 psi
fc' = 3,600 psi

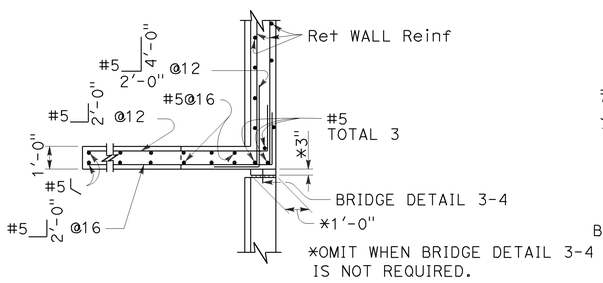

PLAN

(For return wall Type "A")

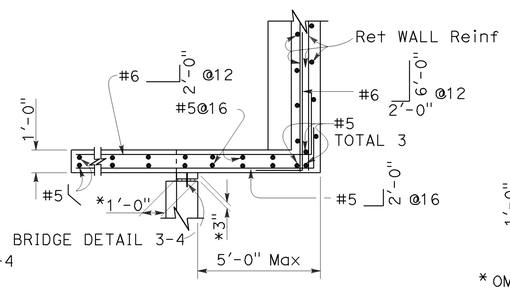

PLAN

(For return wall Type "B")

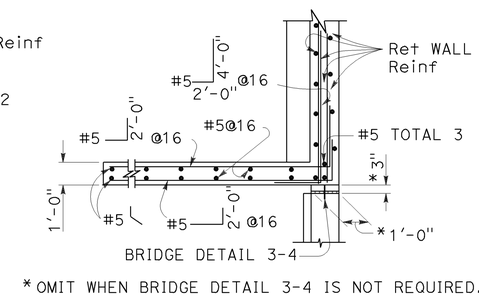

PLAN

(For return wall Type "C")

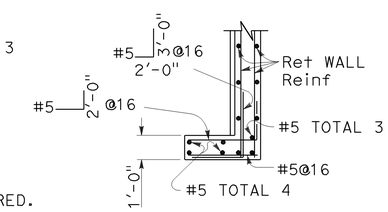

PLAN

(For return wall Type "D")

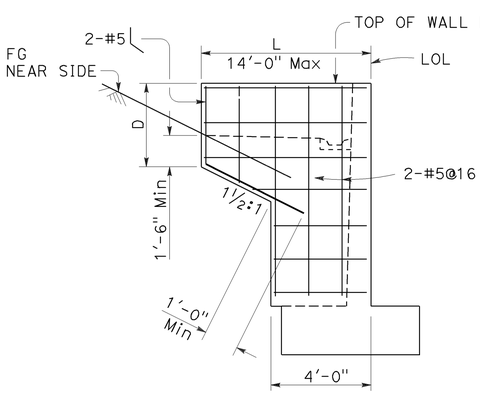

ELEVATION

RETURN WALL TYPE "A"

Use where H=8' or less

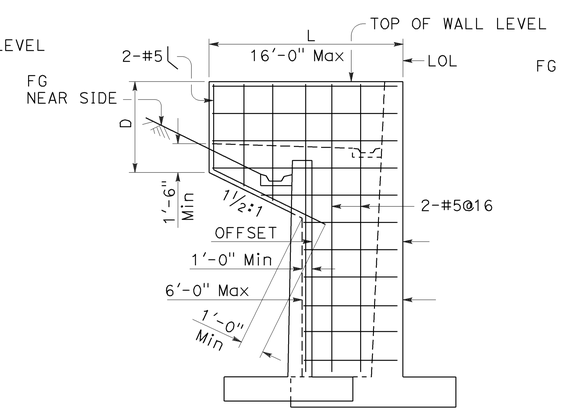

ELEVATION

RETURN WALL TYPE "B"

Use where H=10' or more on offset walls

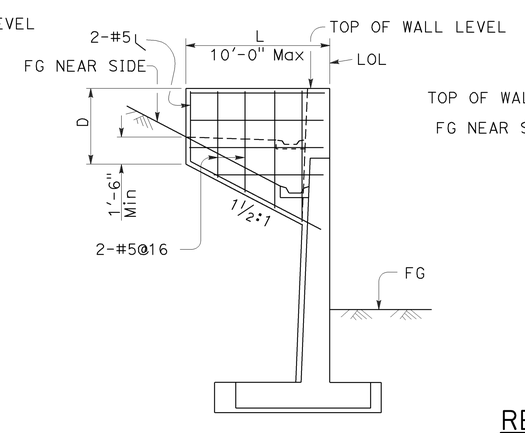

ELEVATION

RETURN WALL TYPE "C"

Use where H=10' or more on straight walls

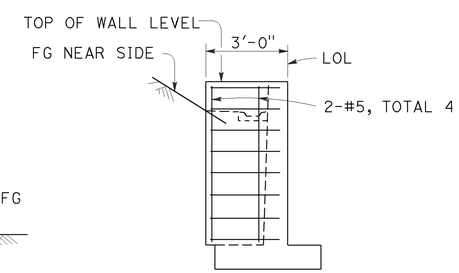

ELEVATION

RETURN WALL TYPE "D"

Use where H=6' or less

STATE OF CALIFORNIA
DEPARTMENT OF TRANSPORTATION

RETAINING WALL DETAILS No. 1

NO SCALE

RSP B3-5 DATED APRIL 20, 2012 SUPERSEDES STANDARD PLAN B3-5
DATED MAY 20, 2011 - PAGE 277 OF THE STANDARD PLANS BOOK DATED 2010.

REVISED STANDARD PLAN RSP B3-5

2010 REVISED STANDARD PLAN RSP B3-5

Dist	COUNTY	ROUTE	POST MILES TOTAL PROJECT	SHEET No.	TOTAL SHEETS
12	Ora	405	8.4	86	142

REGISTERED CIVIL ENGINEER

October 21, 2011
PLANS APPROVAL DATE

REGISTERED PROFESSIONAL ENGINEER Tillat Satter No. C42892 Exp. 3-31-12 CIVIL STATE OF CALIFORNIA

THE STATE OF CALIFORNIA OR ITS OFFICERS OR AGENTS SHALL NOT BE RESPONSIBLE FOR THE ACCURACY OR COMPLETENESS OF SCANNED COPIES OF THIS PLAN SHEET.

TO ACCOMPANY PLANS DATED 4-27-15

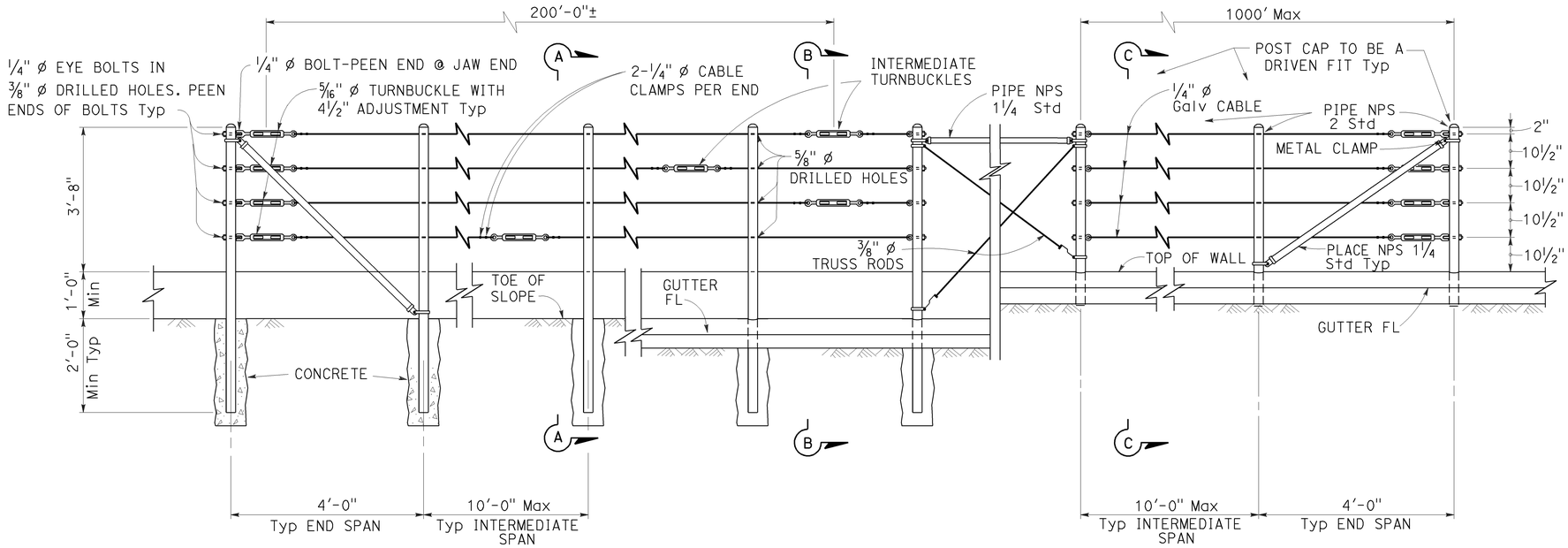

EXISTING WALL (WITHOUT GUTTER)
Existing

RETAINING WALL (WITH GUTTER)
Existing

RETAINING WALL (WITH GUTTER)
New construction

ELEVATION

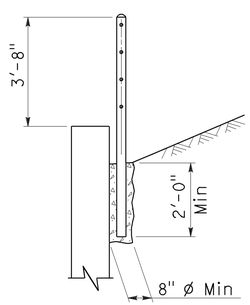

SECTION A-A
Existing

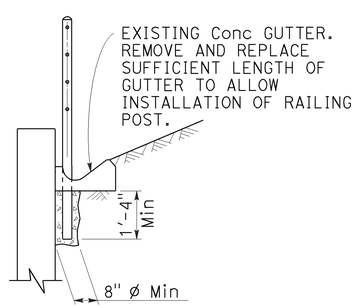

SECTION B-B
Existing

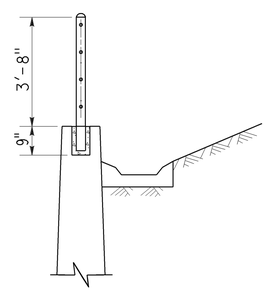

SECTION C-C
New construction

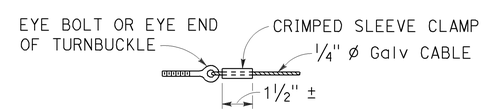

ALTERNATIVE CABLE CONNECTION

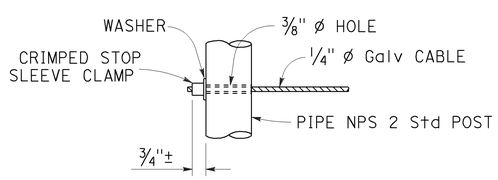

ALTERNATIVE DEAD END ANCHORAGE

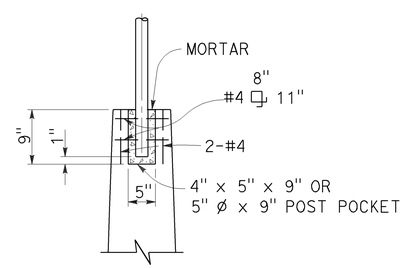

POST POCKET

NOTES:

1. Maximum distance between turnbuckles shall be 200'-0"±.
2. Intermediate turnbuckles to be placed in adjacent spans.
3. Cable shall not be spliced between intermediate turnbuckles and end posts.
4. Posts to be vertical.
5. Alignment of holes in posts may vary to conform to slope of top of retaining wall.
6. The Contractor shall verify all dependent dimensions in the field before ordering or fabricating any material.
7. Line posts shall be braced horizontally and trussed diagonally in both directions at intervals not to exceed 1000'.
8. Post pockets to be centered in top of wall.
9. Typical end spans, braced in both directions, shall be constructed at changes in line where the angle of deflection is 15° or more.
10. Provide thimbles at all cable loops.

STATE OF CALIFORNIA
DEPARTMENT OF TRANSPORTATION

CABLE RAILING

NO SCALE

RSP B11-47 DATED OCTOBER 21, 2011 SUPERSEDES STANDARD PLAN B11-47 DATED MAY 20, 2011 - PAGE 293 OF THE STANDARD PLANS BOOK DATED 2010.

REVISED STANDARD PLAN RSP B11-47

2010 REVISED STANDARD PLAN RSP B11-47

9-14-11

Dist	COUNTY	ROUTE	POST MILES TOTAL PROJECT	SHEET No.	TOTAL SHEETS
12	Ora	405	8.4	87	142

REGISTERED CIVIL ENGINEER

November 15, 2013
PLANS APPROVAL DATE

REGISTERED PROFESSIONAL ENGINEER
Tillat Satter
No. C42892
Exp. 3-31-14
CIVIL
STATE OF CALIFORNIA

THE STATE OF CALIFORNIA OR ITS OFFICERS OR AGENTS SHALL NOT BE RESPONSIBLE FOR THE ACCURACY OR COMPLETENESS OF SCANNED COPIES OF THIS PLAN SHEET.

TO ACCOMPANY PLANS DATED 4-27-15

2010 REVISED STANDARD PLAN RSP B11-54

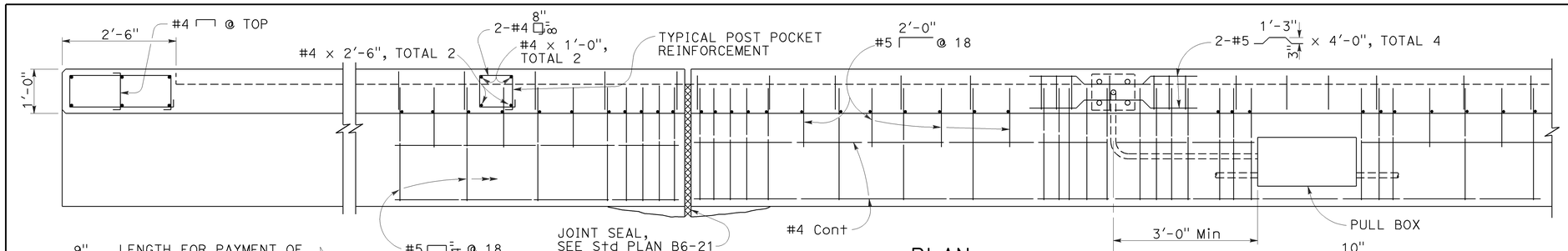

PLAN

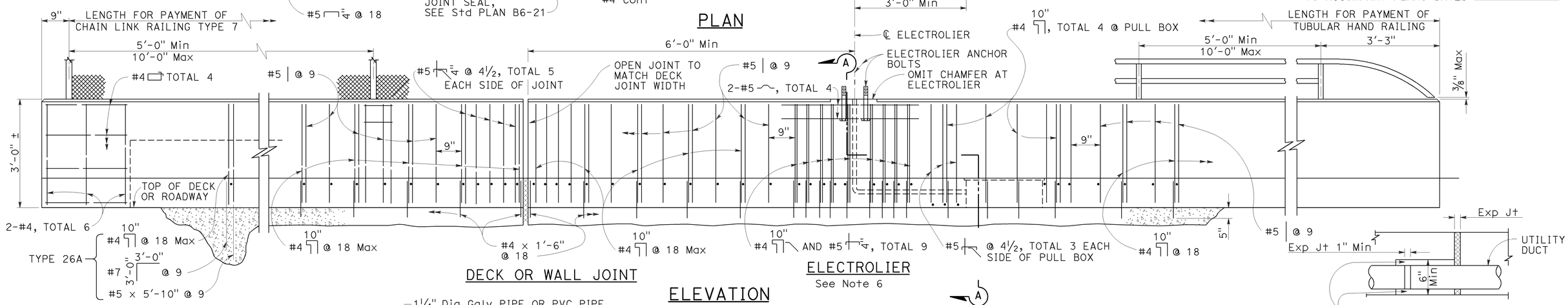

DECK OR WALL JOINT

ELECTROLIER
See Note 6

ELEVATION

UTILITY DUCT EXPANSION JOINT

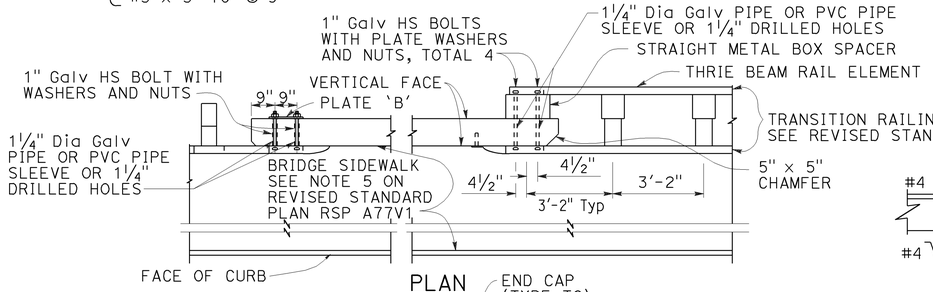

PLAN

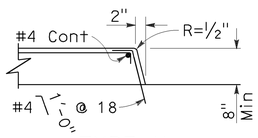

TYPE H
To be used unless otherwise shown on plans.

CURB DETAIL

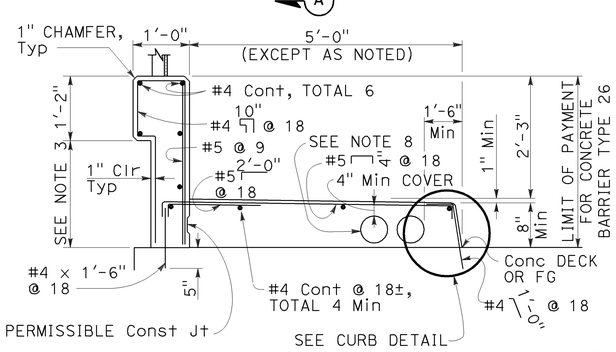

TYPE 26
On bridge deck

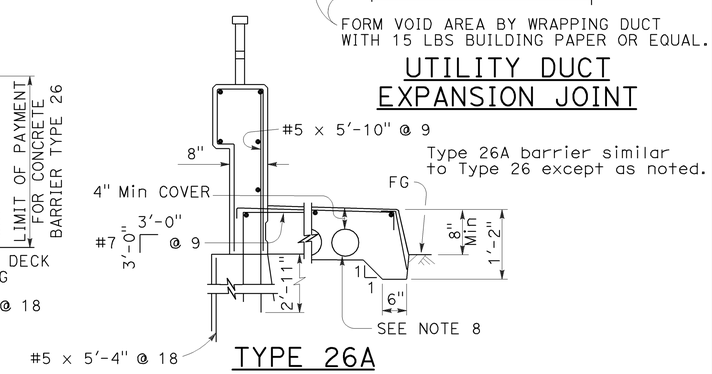

TYPE 26A
Off bridge deck

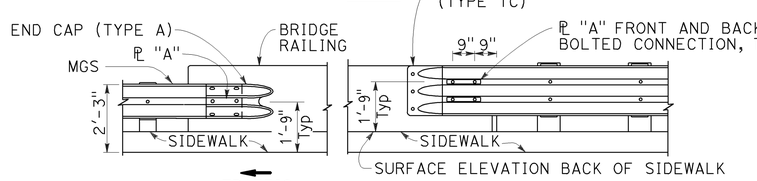

ELEVATION

METAL RAILING CONNECTION TO BRIDGE RAILING
See Note 9

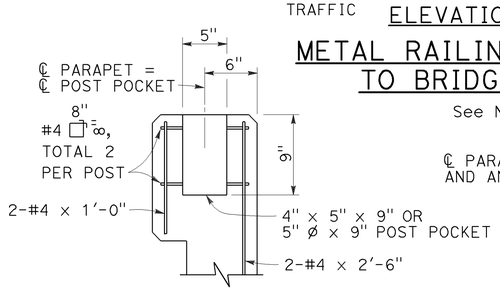

POST ANCHORAGE DETAIL
Applies to Chain Link Railing Type 7 and Tubular Hand Railing. See respective Standard Plans for additional details.

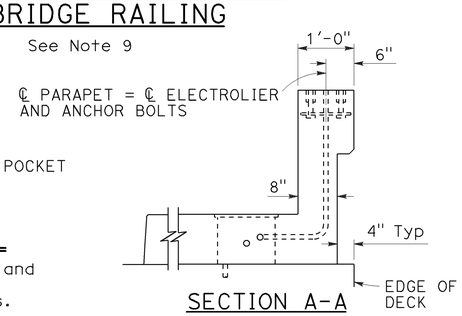

SECTION A-A

NOTES:

1. For Chain Link Railing notes and details not shown, see Standard Plan B11-52.
2. For Hand Railing notes and details not shown, see Standard Plan B11-51.
3. Dimensions will vary with cross slope and with certain thicknesses of surfacing. See Project Plans.
4. Walls are to be backfilled before railing is placed.
5. Clearance to reinforcing steel in curb and railing to be 1" except as noted. Longitudinal reinforcement to stop at all expansion joints.
6. See Project Plans for electrolier locations and pull box type.
7. For electrical details, see Standard Plans ES-9A, ES-9B, ES-9C, ES-9D, and ES-9E.
8. A maximum of five - 4" and a minimum of two - 4" round openings for future utilities. Openings are to be sealed at ends and extended 8" minimum past end of sidewalk if not used. Duct forms are to be tied down. Minimum of 6" from face of rail to utility opening.
9. For typical metal railing connection details not shown, see Revised Standard Plans RSP A77V1 and RSP A77V2.
10. This barrier is to be used only for speeds of 45 MPH or less. For speeds greater than 45 MPH, pedestrians should be protected by a separation traffic barrier.

STATE OF CALIFORNIA
DEPARTMENT OF TRANSPORTATION

CONCRETE BARRIER TYPE 26

NO SCALE

RSP B11-54 DATED NOVEMBER 15, 2013 SUPERSEDES RSP B11-54 DATED JULY 19, 2013 AND STANDARD PLAN B11-54 DATED MAY 20, 2011 - PAGE 296 OF THE STANDARD PLANS BOOK DATED 2010.

REVISED STANDARD PLAN RSP B11-54

10-4-13

Dist	COUNTY	ROUTE	POST MILES TOTAL PROJECT	SHEET No.	TOTAL SHEETS
12	Ora	405	8.4	88	142

Theresa Gabriel
REGISTERED ELECTRICAL ENGINEER

July 19, 2013
PLANS APPROVAL DATE

REGISTERED PROFESSIONAL ENGINEER Theresa Aziz Gabriel No. E15129 Exp. 6-30-14 ELECTRICAL STATE OF CALIFORNIA

THE STATE OF CALIFORNIA OR ITS OFFICERS OR AGENTS SHALL NOT BE RESPONSIBLE FOR THE ACCURACY OR COMPLETENESS OF SCANNED COPIES OF THIS PLAN SHEET.

TO ACCOMPANY PLANS DATED 4-27-15

2010 REVISED STANDARD PLAN RSP ES-1A

LEGEND:

AB	ABANDON. IF APPLIED TO CONDUIT, REMOVE CONDUCTORS
BC	INSTALL PULL BOX IN EXISTING CONDUIT RUN
BP	PEDESTRIAN BARRICADE, TYPE AS INDICATED ON PLAN
CB	INSTALL CONDUIT INTO EXISTING PULL BOX
CC	CONNECT NEW AND EXISTING CONDUIT. REMOVE EXISTING CONDUCTORS AND INSTALL CONDUCTORS AS INDICATED
CF	CONDUIT TO REMAIN FOR FUTURE USE. REMOVE CONDUCTORS. INSTALL PULL TAPE
DH	DETECTOR HANDHOLE
FA	FOUNDATION TO BE ABANDONED
IS	INSTALL SIGN ON SIGNAL MAST ARM
NS	NO SLIP BASE ON STANDARD
PEC	PHOTOELECTRIC CONTROL
PEU	PHOTOELECTRIC UNIT
RC	EQUIPMENT OR MATERIAL TO BE REMOVED AND BECOME THE PROPERTY OF THE CONTRACTOR
RE	REMOVE ELECTROLIER, FUSES AND BALLAST. TAPE ENDS OF CONDUCTORS
RL	RELOCATE EQUIPMENT
RR	REMOVE AND REUSE EQUIPMENT
RS	REMOVE AND SALVAGE EQUIPMENT
SC	SPLICE NEW TO EXISTING CONDUCTORS
SD	SERVICE DISCONNECT
TSP	TELEPHONE SERVICE POINT

ABBREVIATIONS

APS	ACCESSIBLE PEDESTRIAN SIGNAL
BBS	BATTERY BACKUP SYSTEM
BC	BOLT CIRCLE
BPB	BICYCLE PUSH BUTTON
C	CONDUIT
CB	CIRCUIT BREAKER
CCTV	CLOSED CIRCUIT TELEVISION
Ckt	CIRCUIT
CMS	CHANGEABLE MESSAGE SIGN
Ctid	CALTRANS IDENTIFICATION
Comm	COMMUNICATION
DLC	LOOP DETECTOR LEAD-IN CABLE
EMS	EXTINGUISHABLE MESSAGE SIGN
EVUC	EMERGENCY VEHICLE UNIT CABLE
EVUD	EMERGENCY VEHICLE UNIT DETECTOR
FB	FLASHING BEACON
FBCA	FLASHING BEACON CONTROL ASSEMBLY
FBS	FLASHING BEACON WITH SLIP BASE
FO	FIBER OPTIC
G	EQUIPMENT GROUNDING CONDUCTOR
GB	GROUND BUS
GFCI	GROUND FAULT CIRCUIT INTERRUPTER
HAR	HIGHWAY ADVISORY RADIO
Hex	HEXAGONAL
HPS	HIGH PRESSURE SODIUM
IISNS	INTERNALLY ILLUMINATED STREET NAME SIGN
ISL	INDUCTION SIGN LIGHTING
LED	LIGHT EMITTING DIODE
LMA	LUMINAIRE MAST ARM
LPS	LOW PRESSURE SODIUM
Ltg	LIGHTING
Lum	LUMINAIRE
M	METERED
MAT	MAST ARM MOUNTING TOP ATTACHMENT
MAS	MAST ARM MOUNTING SIDE ATTACHMENT
M/M	MULTIPLE TO MULTIPLE TRANSFORMER
Mtg	MOUNTING
MV	MERCURY VAPOR LIGHTING FIXTURE
MVDS	MICROWAVE VEHICLE DETECTION SYSTEM
N	NEUTRAL (GROUNDED CONDUCTOR)
NB	NEUTRAL BUS
NC	NORMALLY CLOSE
NO	NORMALLY OPEN
P	CIRCUIT BREAKER'S POLE
PB	PULL BOX
PBA	PUSH BUTTON ASSEMBLY
PEC	PHOTOELECTRIC CONTROL
Ped	PEDESTRIAN
PEU	PHOTOELECTRIC UNIT
PT	CONDUIT WITH PULL TAPE
RE	RELOCATED EQUIPMENT
RM	RAMP METERING
RWIS	ROADSIDE WEATHER INFORMATION SYSTEM
SB	SLIP BASE
SIC	SIGNAL INTERCONNECT CABLE
Sig	SIGNAL
SMA	SIGNAL MAST ARM
SNS	STREET NAME SIGN
SP	SERVICE POINT
TDC	TELEPHONE DEMARCATION CABINET
TMS	TRAFFIC MONITORING STATION
TOS	TRAFFIC OPERATIONS SYSTEM
Veh	VEHICLE
VIVDS	VIDEO IMAGE VEHICLE DETECTION SYSTEM
WIM	WEIGH-IN-MOTION
Xfmr	TRANSFORMER

SOFFIT AND WALL MOUNTED LUMINAIRES

PENDANT, 70 W HPS UNLESS OTHERWISE SPECIFIED

FLUSH, 70 W HPS UNLESS OTHERWISE SPECIFIED

WALL SURFACE, 70 W HPS UNLESS OTHERWISE SPECIFIED

EXISTING SOFFIT OR WALL LUMINAIRE TO REMAIN UNMODIFIED

EXISTING SOFFIT OR WALL LUMINAIRE TO BE MODIFIED AS SPECIFIED

NOTE:

Arrow indicates "street side" of luminaire.

COMMONLY USED SYMBOLS FOR UNITED STATES CUSTOMARY UNITS OF MEASUREMENT:

SYMBOL USED	DEFINITIONS
Ω	OHMS
min	MINUTE
s	SECOND
bps	BITS PER SECOND
Bps	BYTES PER SECOND
A	AMPERE
V	VOLT
V(dc)	VOLT (DIRECT CURRENT)
V(ac)	VOLT (ALTERNATING CURRENT)
FC	FOOT - CANDLE
W	WATTS
VA	VOLT-AMPERE
M	MEGA
k	KILO
m	MILLI
μ	MICRO
P	PICO
Hz	HERTZ

MISCELLANEOUS ELECTROLIERS

NEW	EXISTING	
		LUMINAIRE ON WOOD POLE
		NON-STANDARD ELECTROLIER (SEE PROJECT NOTES OR PROJECT PLANS)
		CITY ELECTROLIER
		ELECTROLIER FOUNDATION (FUTURE INSTALLATION)

NOTES:

1. HPS luminaires shall be 310 W HPS when installed on Type 21, 21D, 30, 31 and 32 Standards, unless otherwise specified. HPS luminaires shall be 200 W when installed on other type standards or poles, unless otherwise specified.
2. LED luminaires shall be 235 W when installed on Type 21, 21D, 30, 31 and 32 Standards, unless otherwise specified. LED luminaires shall be 165 W when installed on other type standards or poles, unless otherwise specified.
3. Luminaires shall be the cutoff type, ANSI Type III medium cutoff lighting distribution, unless otherwise specified.

STANDARD ELECTROLIER

NEW	EXISTING	STANDARD TYPE
		15
		15D
		15 STRUCTURE
		15D STRUCTURE
		21
		21D
		21 STRUCTURE
		21D STRUCTURE
		30
		31
		32

STATE OF CALIFORNIA
DEPARTMENT OF TRANSPORTATION

ELECTRICAL SYSTEMS (LEGEND AND ABBREVIATIONS)

NO SCALE

RSP ES-1A DATED JULY 19, 2013 SUPERSEDES STANDARD PLAN ES-1A DATED MAY 20, 2011 - PAGE 425 OF THE STANDARD PLANS BOOK DATED 2010.

REVISED STANDARD PLAN RSP ES-1A

Dist	COUNTY	ROUTE	POST MILES TOTAL PROJECT	SHEET No.	TOTAL SHEETS
12	Ora	405	8.4	89	142

Theresa Gabriel
REGISTERED ELECTRICAL ENGINEER

July 19, 2013
PLANS APPROVAL DATE

REGISTERED PROFESSIONAL ENGINEER Theresa Aziz Gabriel No. E15129 Exp. 6-30-14 ELECTRICAL STATE OF CALIFORNIA

THE STATE OF CALIFORNIA OR ITS OFFICERS OR AGENTS SHALL NOT BE RESPONSIBLE FOR THE ACCURACY OR COMPLETENESS OF SCANNED COPIES OF THIS PLAN SHEET.

TO ACCOMPANY PLANS DATED 4-27-15

CONDUIT

NEW	EXISTING	
		LIGHTING CONDUIT, UNLESS OTHERWISE INDICATED OR NOTED
		TRAFFIC SIGNAL CONDUIT
C	c	COMMUNICATION CONDUIT
T	t	TELEPHONE CONDUIT
F	f	FIRE ALARM CONDUIT
FO	fo	FIBER OPTIC CONDUIT
		CONDUIT TERMINATION
R	r	CONDUIT RISER ATTACHED TO THE STRUCTURE OR SERVICE POLE

SERVICE EQUIPMENT

NEW	EXISTING	
OH	oh	OVERHEAD LINES
U	U	WOOD POLE, "U" INDICATES UTILITY OWNED
		POLE GUY WITH ANCHOR
		UTILITY TRANSFORMER - GROUND MOUNTED
III	III	SERVICE EQUIPMENT ENCLOSURE TYPE. DOOR INDICATES FRONT OF ENCLOSURE
T	t	TELEPHONE DEMARCATION CABINET

POLE-MOUNTED SERVICE DESIGNATION

TYPE H SERVICE, 28'-10" — TYPE OF INSTALLATION AND POLE HEIGHT ABOVE GRADE

FLASHING BEACON

NEW	EXISTING	
R	R	FLASHING BEACON (ONE VEHICLE SIGNAL HEAD WITH BACKPLATE AND VISOR) "R" INDICATES RED INDICATION, "Y" INDICATES YELLOW INDICATION
Y Y	Y Y	FLASHING BEACON WITH TYPE 15-FBS STANDARD AND A SIGN.
R R	R R	FLASHING BEACON WITH TYPES 9, 9A OR 9B SIGN UNLESS OTHERWISE SPECIFIED OR INDICATED

SIGNAL EQUIPMENT

NEW	EXISTING	
C	C	PEDESTRIAN SIGNAL HEAD "C" INDICATES COUNTDOWN PEDESTRIAN HEAD
		PUSH BUTTON ASSEMBLY POST
		PEDESTRIAN BARRICADE
		VEHICLE SIGNAL HEAD (WITH BACKPLATE AND 3-SECTIONS: RED, YELLOW AND GREEN)
		VEHICLE SIGNAL HEAD WITH ANGLE VISOR
PV	PV	MODIFICATIONS OF BASIC SYMBOL: "L" INDICATES ALL NON-ARROW SECTIONS LOUVERED "LG" INDICATES LOUVERED GREEN SECTION ONLY "PV" INDICATES ALL 12" SECTIONS PROGRAMMED VISIBILITY "8" INDICATES ALL 8" SECTIONS (ONLY WHEN SPECIFIED)
		VEHICLE SIGNAL HEAD CONSISTING OF RED, YELLOW AND GREEN LEFT ARROW SECTIONS
		VEHICLE SIGNAL HEAD CONSISTING OF RED AND YELLOW SECTIONS WITH AN UP GREEN ARROW SECTION
		VEHICLE SIGNAL HEAD (5 SECTION) CONSISTING OF RED, YELLOW AND GREEN SECTIONS WITH YELLOW AND GREEN RIGHT ARROW SECTIONS
		TYPE 15TS STANDARD WITH VEHICLE SIGNAL HEAD AND LUMINAIRE
		TYPE 21TS STANDARD WITH VEHICLE SIGNAL HEAD AND LUMINAIRE
		STANDARD WITH LUMINAIRE AND SIGNAL MAST ARMS AND ATTACHED VEHICLE SIGNAL HEADS
		TYPE 1 STANDARD WITH ATTACHED VEHICLE SIGNAL HEADS
		STANDARD WITH A SIGNAL MAST ARM, ATTACHED VEHICLE SIGNAL HEADS AND INTERNALLY ILLUMINATED STREET NAME SIGN
		CONTROLLER ASSEMBLY. DOOR INDICATES FRONT OF CABINET

SIGNAL EQUIPMENT Cont

NEW	EXISTING	
		GUARD POST
		TYPE 1 STANDARD WITH RAMP METERING SIGN
		OPTICAL DETECTOR FOR THE EMERGENCY VEHICLE DETECTION SYSTEM

NOTES:

1. All signal sections shall be 12" unless shown otherwise.
2. Signal heads shall be provided with backplates unless shown otherwise.

ILLUMINATED OVERHEAD SIGN

NEW	EXISTING	
		SINGLE POST, SINGLE ILLUMINATED SIGN, BALANCED BUTTERFLY
		SINGLE POST, DOUBLE ILLUMINATED SIGN, BALANCED BUTTERFLY
		SINGLE POST, SINGLE ILLUMINATED SIGN, FULL CANTILEVER
		DOUBLE POST, SINGLE ILLUMINATED SIGN
		SINGLE ILLUMINATED SIGN MOUNTED ON STRUCTURE
		DOUBLE POST, SINGLE ILLUMINATED SIGN WITH ELECTROLIER

STATE OF CALIFORNIA
DEPARTMENT OF TRANSPORTATION

ELECTRICAL SYSTEMS (LEGEND AND ABBREVIATIONS)

NO SCALE

RSP ES-1B DATED JULY 19, 2013 SUPERSEDES STANDARD PLAN ES-1B DATED MAY 20, 2011 - PAGE 426 OF THE STANDARD PLANS BOOK DATED 2010.

REVISED STANDARD PLAN RSP ES-1B

2010 REVISED STANDARD PLAN RSP ES-1B

7-15-13

Dist	COUNTY	ROUTE	POST MILES TOTAL PROJECT	SHEET No.	TOTAL SHEETS
12	Ora	405	8.4	90	142

Theresa Gabriel
REGISTERED ELECTRICAL ENGINEER

July 19, 2013
PLANS APPROVAL DATE

REGISTERED PROFESSIONAL ENGINEER
Theresa Aziz Gabriel
No. E15129
Exp. 6-30-14
ELECTRICAL
STATE OF CALIFORNIA

THE STATE OF CALIFORNIA OR ITS OFFICERS OR AGENTS SHALL NOT BE RESPONSIBLE FOR THE ACCURACY OR COMPLETENESS OF SCANNED COPIES OF THIS PLAN SHEET.

TO ACCOMPANY PLANS DATED 4-27-15

EQUIPMENT IDENTIFICATION

ILLUMINATED SIGN IDENTIFICATION NUMBER:

SIGN No. 12345
10 ISL SCI 1.0

- SIGN NUMBER - PLACE ON POST OR STRUCTURE
- TRANSFORMER RATING (kVA)
- LIGHTING CONTROL TYPE
- NUMBER AND TYPE OF FIXTURES

DO NOT PLACE ON STANDARD OR STRUCTURE

ELECTROLIER OR EQUIPMENT IDENTIFICATION NUMBER:

12345 - 15'-0"

- MAST ARM LENGTH, IF SHOWN. DO NOT PLACE ON STANDARD OR STRUCTURE
- EQUIPMENT NUMBER - PLACE ON STANDARD OR STRUCTURE. EXISTING EQUIPMENT NUMBERS ARE SHOWN IN PARENTHESIS

CONDUIT AND CONDUCTOR IDENTIFICATION:

1½"C, 2#10, 15#14, 2 DLC, 12P#18

- PAIR
- NUMBER AND SIZE OF CONDUCTORS AND CABLES
- SIZE OF CONDUIT IN INCHES

ø1, ø2, ø2P, etc.	TRAFFIC PHASE IDENTIFICATION FOR SIGNAL FACES, DETECTORS AND PHASE DIAGRAMS
1 2 3	LEGEND NUMBERS
A B C	EQUIPMENT, SIGNAL POLES, INSTALLATION OR ITEMS
1 2 3	CONDUIT RUN NUMBERS

SIGNAL AND LIGHTING STANDARD (TYPICAL DESIGNATION):

19A - 3 - 100

- WIND VELOCITY = 100 mph
- CASE 3 ARM LOADING
- STANDARD TYPE
- STANDARD PLAN SHEET NUMBER
- DETAIL, NUMBER, SECTION, TYPE OR ELEVATION

MISCELLANEOUS EQUIPMENT

NEW	EXISTING	
CMS	cms	CHANGEABLE MESSAGE SIGN
		CLOSED CIRCUIT TELEVISION CAMERA
		HIGHWAY ADVISORY RADIO POLE AND ANTENNA
EMS	ems	EXTINGUISHABLE MESSAGE SIGN
M V	m v	DETECTION DEVICE M = MICROWAVE SENSOR V = VIDEO IMAGE SENSOR

WIRING DIAGRAM LEGEND

----	EXTERNAL CONDUCTOR
	CONDUCTOR OR BUS
	TIE POINT
	CONTACTOR COIL
	CONTACTOR, NO CONTACT
	TERMINAL BLOCKS
	CONTACTOR, NC CONTACT
	ENCLOSURE BOND
	GROUNDING ELECTRODE
	CIRCUIT BREAKER
	RECEPTACLE

PULL BOXES

NEW	EXISTING	
		PULL BOX, No. 5 UNLESS OTHERWISE INDICATED OR NOTED
3	9A(21)	PULL BOX, ADDITIONAL DESIGNATIONS OR DESCRIPTIONS

3 No. 3½ PULL BOX
5 No. 5 PULL BOX
6 No. 6 PULL BOX
7 No. 7 (CEILING PULL BOX)
8 No. 8 (PENDANT SOFFIT PULL BOX)
9 No. 9 PULL BOX
9A No. 9A PULL BOX

(C) COMMUNICATIONS PULL BOX
(E) PULL BOX WITH EXTENSION
(S) SPRINKLER CONTROL PULL BOX
(21) ANCHOR BOLTS AND CONDUIT FOR FUTURE INSTALLATION OF TYPE 21 STANDARD
(T) TRAFFIC PULL BOX

VEHICLE DETECTORS

5 J 9 U

- VEHICLE DETECTOR DESIGNATION
- U = UPPER
  L = LOWER
- SLOT NUMBER IN INPUT FILE
- INPUT FILE (I OR J)
- PHASE

NEW	EXISTING	
		TYPE A DETECTOR LOOP. OUTLINE OF SAWCUT SHOWN
		TYPE B DETECTOR LOOP. OUTLINE OF SAWCUT SHOWN
		TYPE C DETECTOR LOOP. OUTLINE OF SAWCUT SHOWN
		TYPE D DETECTOR LOOP. OUTLINE OF SAWCUT SHOWN
		TYPE E DETECTOR LOOP. OUTLINE OF SAWCUT SHOWN
		TYPE Q DETECTOR LOOP. OUTLINE OF SAWCUT SHOWN
		MAGNETIC DETECTOR
DH	dh	DETECTOR HANDHOLE
		MICROWAVE OR VIDEO DETECTION ZONE

STATE OF CALIFORNIA
DEPARTMENT OF TRANSPORTATION

ELECTRICAL SYSTEMS (LEGEND AND ABBREVIATIONS)

NO SCALE

RSP ES-1C DATED JULY 19, 2013 SUPERSEDES STANDARD PLAN ES-1C DATED MAY 20, 2011 - PAGE 427 OF THE STANDARD PLANS BOOK DATED 2010.

REVISED STANDARD PLAN RSP ES-1C

2010 REVISED STANDARD PLAN RSP ES-1C

7-11-13

DIST	COUNTY	ROUTE	POST MILES TOTAL PROJECT	SHEET NO.	TOTAL SHEETS
12	Ora	405	8.4	91	142

Theresa Gabriel
REGISTERED ELECTRICAL ENGINEER

July 19, 2013
PLANS APPROVAL DATE

REGISTERED PROFESSIONAL ENGINEER Theresa Aziz Gabriel No. E15129 Exp. 6-30-14 ELECTRICAL STATE OF CALIFORNIA

THE STATE OF CALIFORNIA OR ITS OFFICERS OR AGENTS SHALL NOT BE RESPONSIBLE FOR THE ACCURACY OR COMPLETENESS OF SCANNED COPIES OF THIS PLAN SHEET.

TO ACCOMPANY PLANS DATED 4-27-15

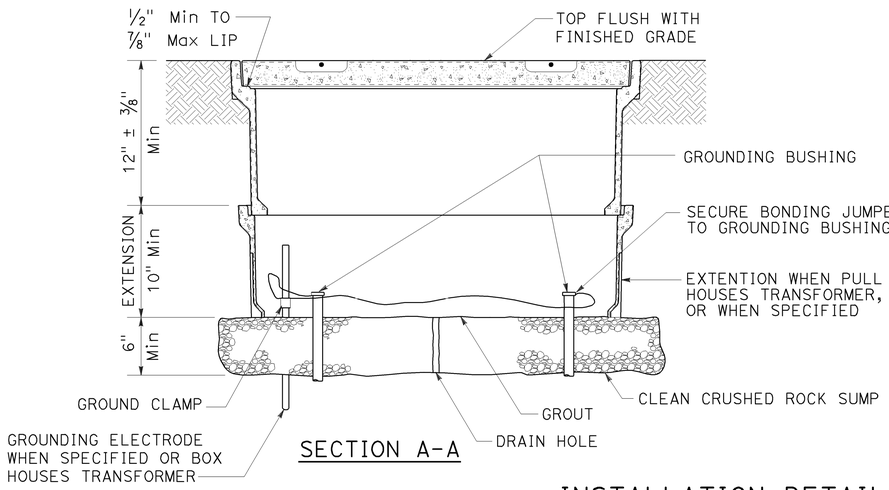

SECTION A-A

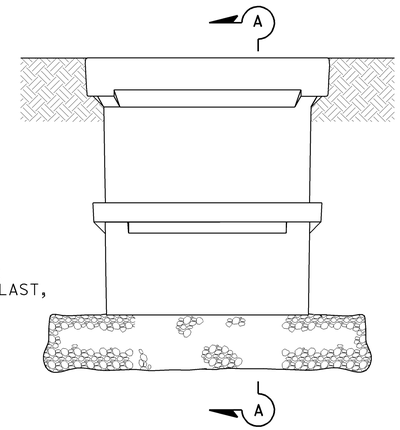

SIDE VIEW

INSTALLATION DETAILS

DETAIL A

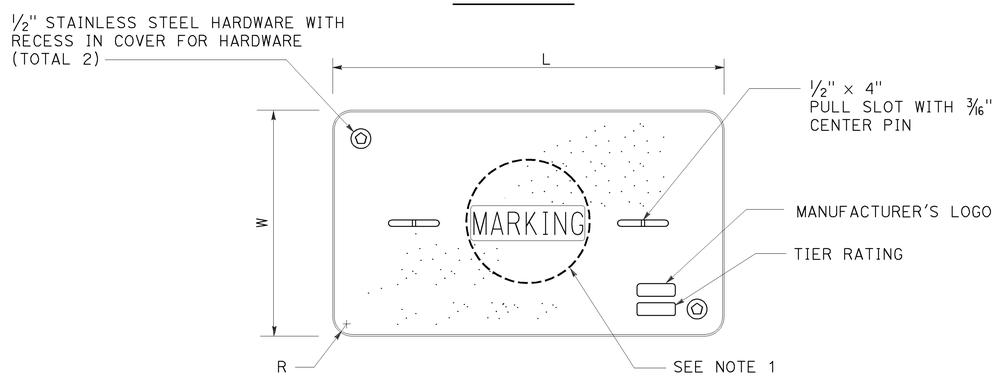

COVER TOP VIEW

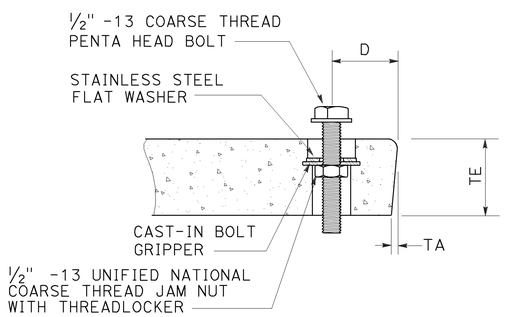

TYPICAL COVER CAPTIVE BOLT

OR SIMILAR

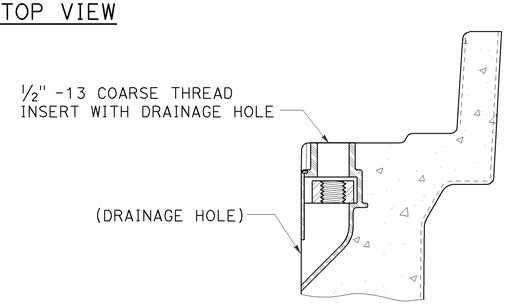

TYPICAL THREADED INSERT

OR SIMILAR

DIMENSION TABLE										
PULL BOX	PULL BOX			COVER						
	MINIMUM DEPTH BOX	MINIMUM DEPTH EXTENSION	MAXIMUM WEIGHT	L	W	R	TE	TA	D	MAXIMUM WEIGHT
No. 3½	12"	N/A	40 lb	1′ - 3⅜"	10⅛"	1⅜"	2"	⅛"	1¾"	30 lb
No. 5	12"	10"	55 lb	1′ - 11¼"	1′ - 1¾"	1⅜"	2"	⅛"	1¾"	60 lb
No. 6	12"	10"	70 lb	2′ - 6½"	1′ - 5½"	1⅜"	2"	⅛"	2"	85 lb

NOTES:

1. Pull box covers shall be marked as follows: "SERVICE" Service circuits between service point and service disconnect; "SPRINKLER-CONTROL" sprinkler control circuits, 50 V or less; "CALTRANS" on all pull boxes, except pull boxes marked "SPRINKLER-CONTROL"; and "TELEPHONE" Telephone service;
   - A) No. 3½ pull box.
     - 1) "SIGNAL" - Traffic signal circuits with or without lighting or sign lighting circuits.
     - 2) "LIGHTING" - Lighting or sign lighting circuits where voltage is under 600 V.
   - B) No. 5, 6, 9 or 9A pull box.
     - 1) "TRAFFIC SIGNAL" - Traffic signal circuits with or without lighting or sign lighting circuits.
     - 2) "LIGHTING" - Lighting or sign lighting circuits where voltage is under 600 V.
     - 3) "LIGHTING-HIGH VOLTAGE" - Lighting or sign lighting circuits where voltage is above 600 V.
     - 4) "IRRIGATION" - Circuits to irrigation controller 120 V or more.
     - 5) "RAMP METER" - Ramp meter circuits.
     - 6) "COUNT STATION" - Count or speed monitor circuits.
     - 7) "COMMUNICATIONS" - Communication circuits.
     - 8) "TOS COMMUNICATIONS" - TOS communication line.
     - 9) "TOS POWER" - TOS power.
     - 10) "TDC POWER" - Telephone demarcation cabinet power.
     - 11) "CCTV" - Closed circuit television circuits.
     - 12) "TMS" - Traffic monitoring station circuits.
     - 13) "CMS" - Changeable message sign circuits.
     - 14) "HAR" - Highway advisory radio circuits.
     - 15) "BOOSTER PUMP" - Booster pump circuit.
2. The nominal dimensions of the opening in which the cover sets shall be the same as the cover dimensions except the length and width dimensions shall be ⅛" greater.
3. Covers and boxes shall be interchangeable with California standard male and female gages. When interchanged with a standard male or female gage, the top surfaces shall be flush within ⅛". Top outside radius of covers and pull boxes shall have a ⅛" radius.
4. Pull box extension may be another pull box as long as the bottom edge of the pull box can fit into the cover opening.
5. All dimensions for the cover for non-traffic pull box are nominal values.

STATE OF CALIFORNIA
DEPARTMENT OF TRANSPORTATION

ELECTRICAL SYSTEMS (NON-TRAFFIC PULL BOX)

NO SCALE

RSP ES-8A DATED JULY 19, 2013 SUPERSEDES RSP ES-8A DATED JANUARY 20, 2012 THAT SUPPLEMENTS THE STANDARD PLANS BOOK DATED 2010.

REVISED STANDARD PLAN RSP ES-8A

2010 REVISED STANDARD PLAN RSP ES-8A

7-15-13

Dist	COUNTY	ROUTE	POST MILES TOTAL PROJECT	SHEET No.	TOTAL SHEETS
12	Ora	405	8.4	92	142

Theresa Gabriel
REGISTERED ELECTRICAL ENGINEER

July 19, 2013
PLANS APPROVAL DATE

REGISTERED PROFESSIONAL ENGINEER
Theresa Aziz Gabriel
No. E15129
Exp. 6-30-14
ELECTRICAL
STATE OF CALIFORNIA

THE STATE OF CALIFORNIA OR ITS OFFICERS OR AGENTS SHALL NOT BE RESPONSIBLE FOR THE ACCURACY OR COMPLETENESS OF SCANNED COPIES OF THIS PLAN SHEET.

TO ACCOMPANY PLANS DATED 4-27-15

2010 REVISED STANDARD PLAN RSP ES-10A

ISOFOOTCANDLE CURVE - MINIMUM

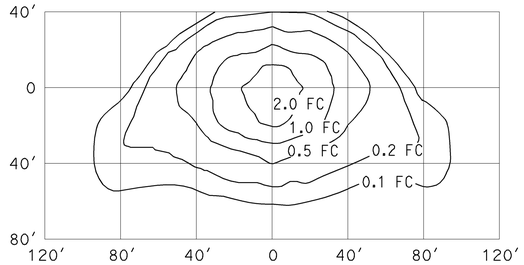

TYPE III MEDIUM CUTOFF

Cutoff Luminaire
34′ Mounting Height
Lamp operated at 22,000 lm
200-W high pressure sodium lamp
ANSI Designation S66

ISOFOOTCANDLE CURVE - MINIMUM

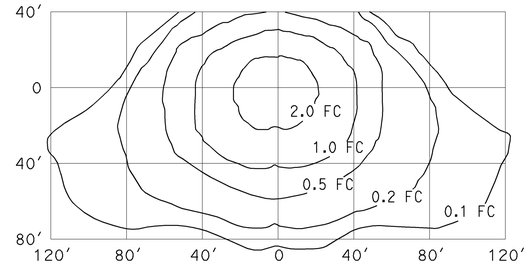

TYPE III MEDIUM CUTOFF

Cutoff Luminaire
40′ Mounting Height
Lamp operated at 37,000 lm
310-W high pressure sodium lamp
ANSI Designation S67

ISOFOOTCANDLE CURVE - MINIMUM

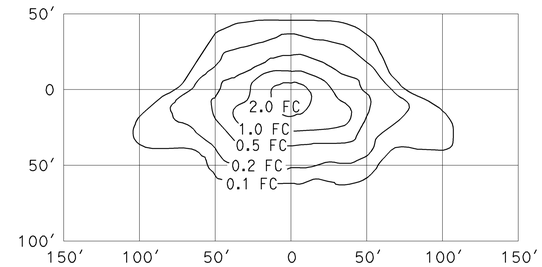

TYPE III MEDIUM CUTOFF

Cutoff Luminaire
30′ Mounting Height
Lamp operated at 16,000 lm
150-W high pressure sodium lamp
ANSI Designation S55

ISOFOOTCANDLE CURVE - MINIMUM

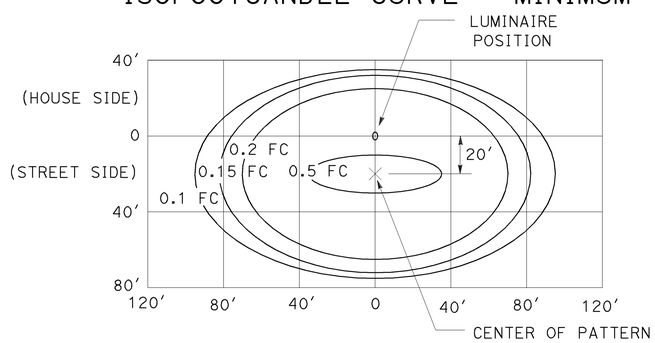

LED LUMINAIRE ROADWAY 1

165-W at 34′ Mounting Height

ISOFOOTCANDLE CURVE - MINIMUM

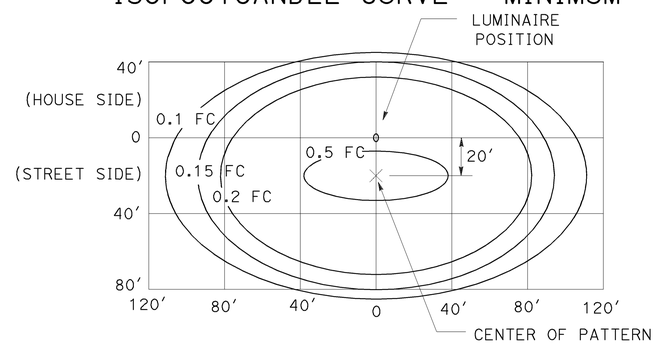

LED LUMINAIRE ROADWAY 2

235-W at 40′ Mounting Height

ISOFOOTCANDLE CURVE - MINIMUM

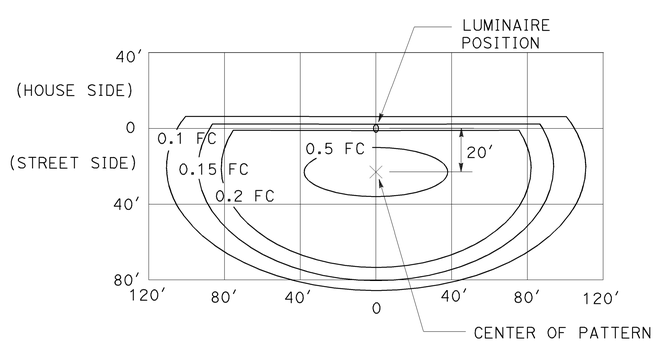

LED LUMINAIRE ROADWAY 3

235-W at 40′ Mounting Height
with back side control

ISOFOOTCANDLE CURVE - MINIMUM

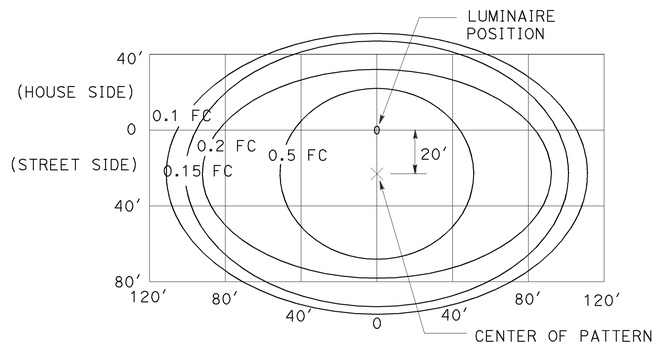

LED LUMINAIRE ROADWAY 4

300-W at 40′ Mounting Height

ISOFOOTCANDLE CURVE - MINIMUM

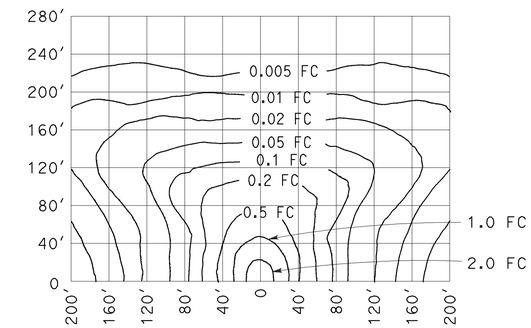

LOW PRESSURE SODIUM LUMINAIRE

40′ Mounting Height
Lamp operated at 33,000 lm
180-W low pressure sodium lamp

STATE OF CALIFORNIA
DEPARTMENT OF TRANSPORTATION

ELECTRICAL SYSTEMS (ISOFOOTCANDLE DIAGRAMS)

NO SCALE

RSP ES-10A DATED JULY 19, 2013 SUPERSEDES RSP ES-10A DATED JULY 20, 2012 THAT SUPPLEMENTS THE STANDARD PLANS BOOK DATED 2010.

REVISED STANDARD PLAN RSP ES-10A

Dist	COUNTY	ROUTE	POST MILES TOTAL PROJECT	SHEET No.	TOTAL SHEETS
12	Ora	405	8.4	93	142

REGISTERED CIVIL ENGINEER

July 19, 2013
PLANS APPROVAL DATE

REGISTERED PROFESSIONAL ENGINEER
Stanley P. Johnson
No. C57793
Exp. 3-31-14
CIVIL
STATE OF CALIFORNIA

THE STATE OF CALIFORNIA OR ITS OFFICERS OR AGENTS SHALL NOT BE RESPONSIBLE FOR THE ACCURACY OR COMPLETENESS OF SCANNED COPIES OF THIS PLAN SHEET.

TO ACCOMPANY PLANS DATED 4-27-15

STANDARD TYPE	SETBACK (DIMENSION A)
32	30'-0" (Min)
31	20'-0" (Min)
15, 15D, 15-SB, 21, 21D, 30	ARM LENGTH (Min)

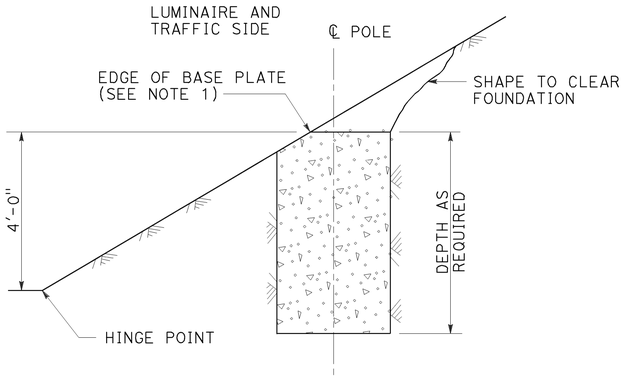

CUT SLOPES
STEEPER THAN 4:1,
LESS THAN 2:1
DETAIL A-1
See Note 2 and 3

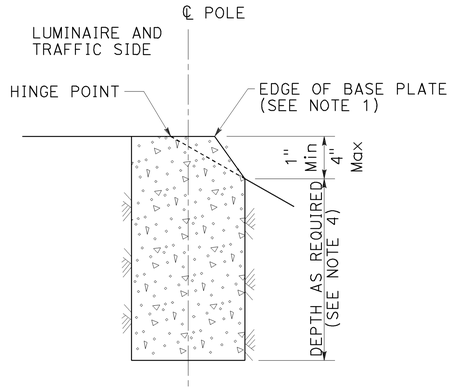

FILL SLOPES
STEEPER THAN 4:1,
LESS THAN 2:1
DETAIL A-2
See Note 2 and 3

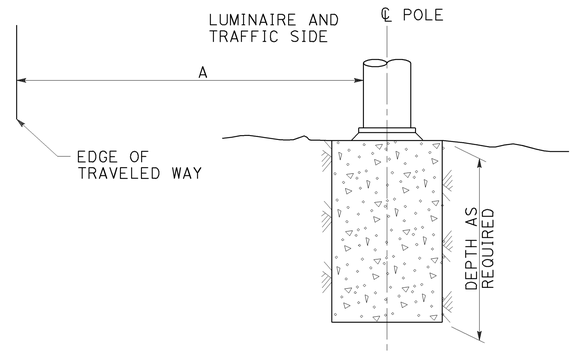

FLAT SECTIONS, CUT OR FILL SLOPES
4:1 OR FLATTER
DETAIL A-3
See Note 2

FOUNDATIONS ADJACENT TO ALL ROADWAYS EXCEPT
IN SIDEWALK, MEDIAN AND ISLAND AREAS
DETAIL A

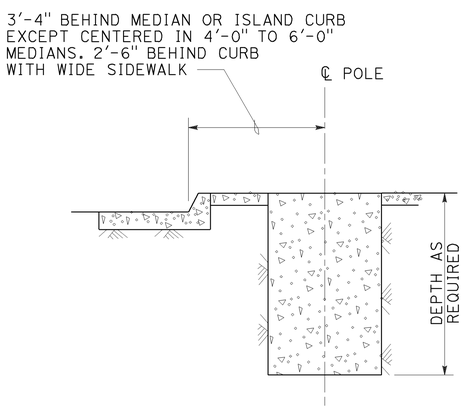

MEDIAN, ISLAND
OR WIDE SIDEWALK
DETAIL B-1
7' Wide and wider

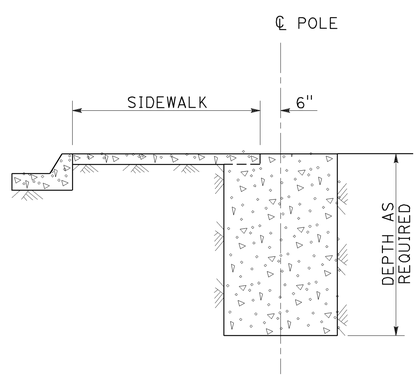

NARROW SIDEWALK
DETAIL B-2
Less than 7' wide

FOUNDATIONS IN SIDEWALK, MEDIAN AND ISLAND AREAS
DETAIL B

NOTES:

1. Where a portion of the foundation is above grade, the top edges shall have a 1" chamfer.
2. Slopes shall be horizontal to vertical ratio (Horizontal : Vertical).
3. Horizontal setbacks on cut and fill slopes steeper than 4:1 shall not exceed the distance shown for flat sections.
4. CIDH embedment depth shall be increased beyond standard depths by the diameter of the CIDH.

STATE OF CALIFORNIA
DEPARTMENT OF TRANSPORTATION

ELECTRICAL SYSTEMS (FOUNDATION INSTALLATIONS)

NO SCALE

RSP ES-11 DATED JULY 19, 2013 SUPERSEDES STANDARD PLAN ES-11
DATED MAY 20, 2011 - PAGE 488 OF THE STANDARD PLANS BOOK DATED 2010.

REVISED STANDARD PLAN RSP ES-11

2010 REVISED STANDARD PLAN RSP ES-11

7-9-13

DIST	COUNTY	ROUTE	POST MILES TOTAL PROJECT	SHEET No.	TOTAL SHEETS
12	ORA	405	8.4	94	142

REGISTERED CIVIL ENGINEER — DATE 1-05-15

4-27-15
PLANS APPROVAL DATE

REGISTERED PROFESSIONAL ENGINEER — HOMA IRANINEJADIAN — No. C 68284 — Exp. 09-30-15 — CIVIL — STATE OF CALIFORNIA

The State of California or its officers or agents shall not be responsible for the accuracy or completeness of electronic copies of this plan sheet.

INDEX TO PLANS

SHEET No.	SHEET NAME
1.	GENERAL PLAN
2.	APPROACH SLAB LAYOUT
3.	STRUCTURE APPROACH TYPE R(30S)
4.	STRUCTURE APPROACH DRAINAGE DETAILS
5.	STRIP JOINT SEAL ASSEMBLY MAXIMUM MOVEMENT RATING = 4"
6.	SLOPE PAVING - FULL SLOPE - NO SKEW
7.	JOINT ARMOR FOR PEDESTRIAN WALKWAYS

STANDARD PLANS Dated 2010

A10A	ACRONYMS AND ABBREVIATIONS (SHEET 1 OF 2)
RSP A10B	ACRONYMS AND ABBREVIATIONS (SHEET 2 OF 2)
A10C	LINES AND SYMBOLS (SHEET 1 OF 3)
A10D	LINES AND SYMBOLS (SHEET 2 OF 3)
A10E	LINES AND SYMBOLS (SHEET 3 OF 3)
B11-52	CHAIN LINK RAILING TYPE 7
RSP B11-54	CONCRETE BARRIER TYPE 26

REDHILL AVENUE OC (55-0959)

	QUANTITIES	
RECONSTRUCT CHAIN LINK RAILING	60	LF
BRIDGE REMOVAL (PORTION)	LUMP	SUM
STRUCTURAL CONCRETE, BRIDGE	5	CY
STRUCTURAL CONCRETE, APPROACH SLAB (TYPE N)	89	CY
JOINT SEAL ASSEMBLY (MR 3 1/2")	67	LF
SLOPE PAVING (CONCRETE)	38	CY
MISCELLANEOUS METAL (BRIDGE)	253	LB
CONCRETE BARRIER (TYPE 26 MODIFIED)	60	LF

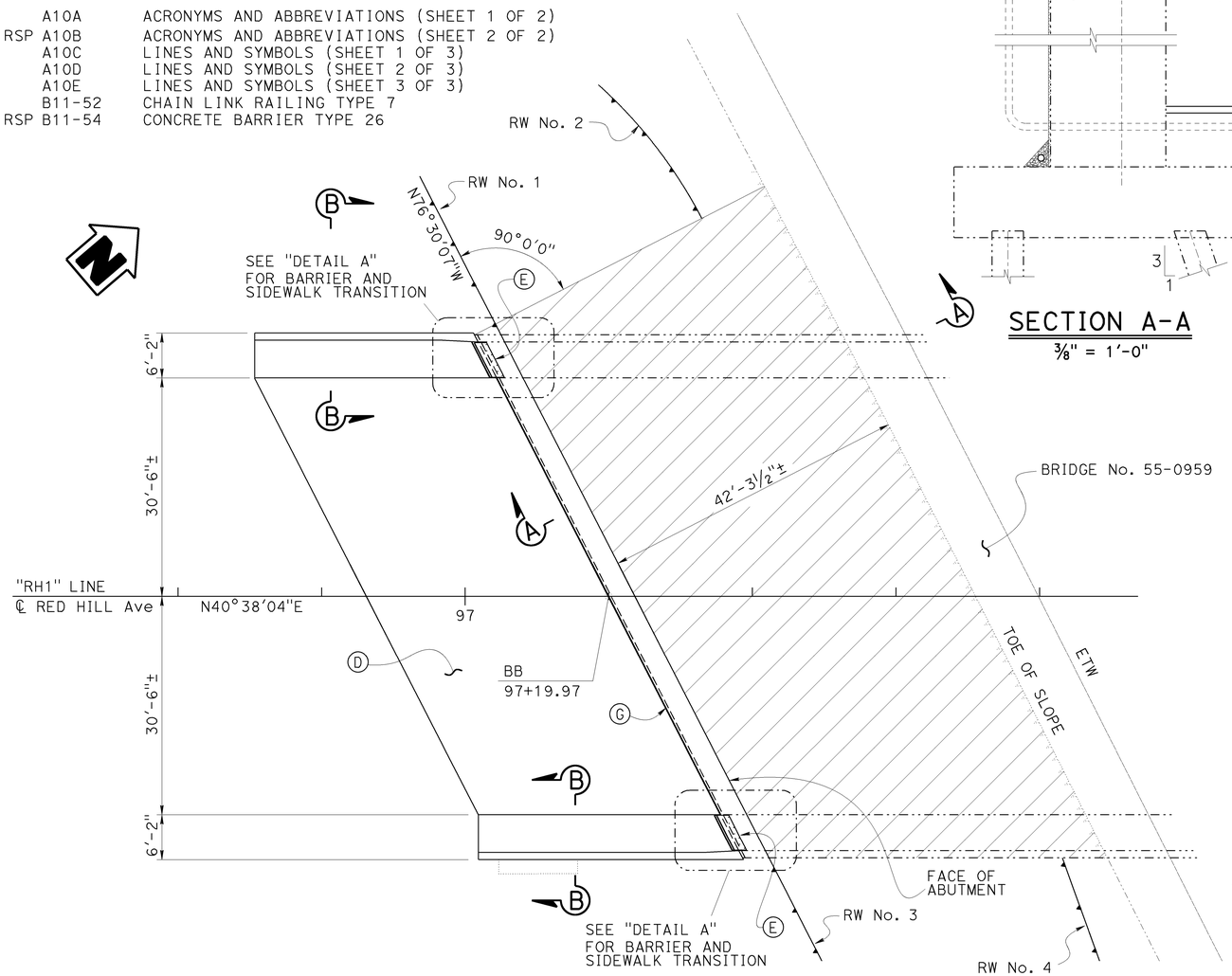

PLAN
1" = 10'

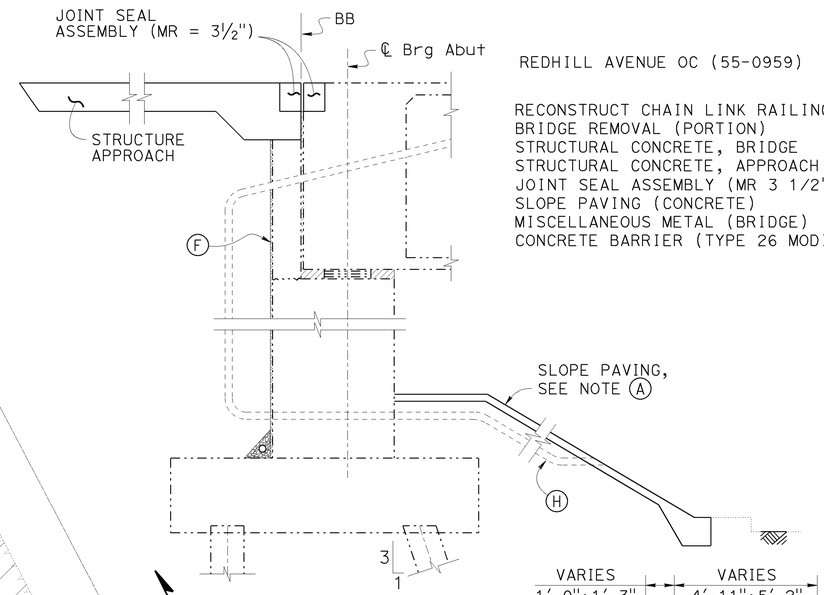

SECTION A-A
⅜" = 1'-0"

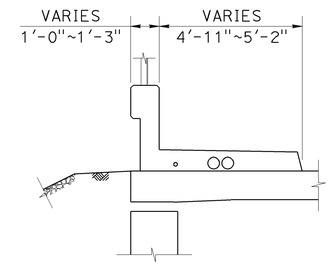

SECTION C-C
⅜" = 1'-0"

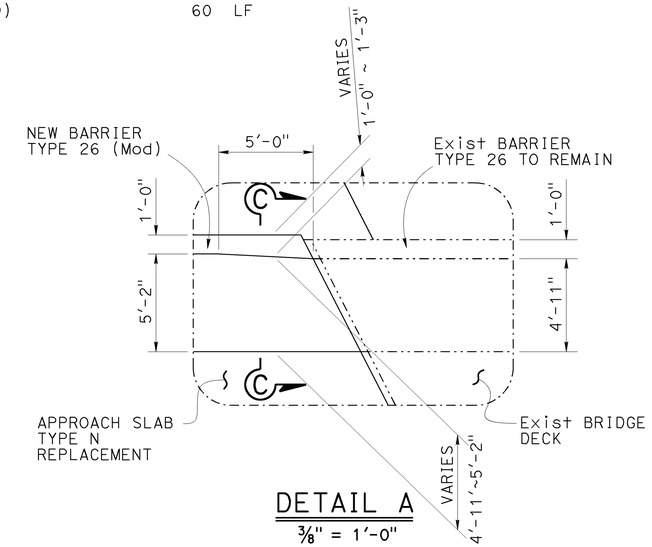

DETAIL A
⅜" = 1'-0"

NOTE: JOINT ARMOR FOR PEDESTRIAN WALKWAY IS NOT SHOWN

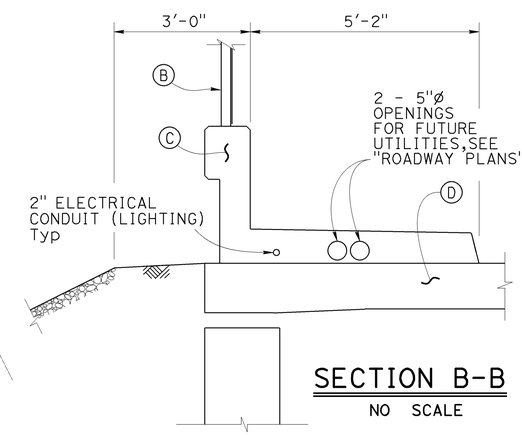

SECTION B-B
NO SCALE

LEGEND:

- Indicates New Construction
- Indicates Existing Structure
- Bridge Removal (Portion) For Excavation and Backfill limits, see "ROADWAY PLANS"

NOTES:

(A) Remove existing Slope Paving and construct new Slope Paving.

(B) Reconstruct Chain Link Railing Type 7 on Concrete Barrier Type 26 (Mod). B11-52

(C) Concrete Barrier Type 26 (Mod), see "STRUCTURE APPROACH TYPE N(30S)" sheet. B11-54 RSP

(D) Structure Approach Type N(30S)

(E) Joint Armor for Pedestrian Walkway, see "JOINT ARMOR FOR PEDESTRIANS WALKWAYS" sheet.

(F) Replace existing Geocomposite Drainage System.

(G) Joint Seal Assembly MR = 3½"

(H) Protect existing Drainage Pipe

NOTE:
VERIFY ALL CONTROLLING FIELD DIMENSIONS BEFORE ORDERING OR FABRICATING ANY MATERIAL.

HOWARD NG — DESIGN ENGINEER	DESIGN	BY HOMA IRANINEJADIAN	CHECKED MOHAMMAD MUQTADIR	LOAD & RESISTANCE FACTOR DESIGN	LIVE LOADING: HL93 W/"LOW-BOY"; PERMIT DESIGN VEHICLE
	DETAILS	BY LAN T TRAN/A. ONG	CHECKED MOHAMMAD MUQTADIR	LAYOUT — BY DAWIT WORKU	CHECKED HOMA IRANINEJADIAN
	QUANTITIES	BY HOMA IRANINEJADIAN	CHECKED MOHAMMAD MUQTADIR	SPECIFICATIONS — BY KEVIN ELLINGSON	PLANS AND SPECS COMPARED KEVIN ELLINGSON

ORIGINAL SCALE IN INCHES FOR REDUCED PLANS 0 1 2 3

STATE OF CALIFORNIA
DEPARTMENT OF TRANSPORTATION

DIVISION OF ENGINEERING SERVICES
STRUCTURE DESIGN
DESIGN BRANCH 20

BRIDGE NO. 55-0959
POST MILE 8.40

RED HILL AVENUE OC
GENERAL PLAN

UNIT: 3622
PROJECT NUMBER & PHASE: 1214000057 1
CONTRACT NO.: 12-0N5404

DISREGARD PRINTS BEARING EARLIER REVISION DATES

REVISION DATES: 01/05/15 01/13/15 04/21/15

SHEET 1 OF 7

USERNAME => s136853 DATE PLOTTED => 21-APR-2015 TIME PLOTTED => 14:56

STRUCTURES DESIGN GENERAL PLAN SHEET (ENGLISH) (REV.09-01-10)

FILE => 55-0959-a-gp01.dgn

DIST	COUNTY	ROUTE	POST MILES TOTAL PROJECT	SHEET No.	TOTAL SHEETS
12	ORA	405	8.4	95	142

REGISTERED CIVIL ENGINEER 1-05-15 DATE

4-27-15
PLANS APPROVAL DATE

REGISTERED PROFESSIONAL ENGINEER HOMA IRANINEJADIAN No. C 68284 Exp. 09-30-15 CIVIL STATE OF CALIFORNIA

The State of California or its officers or agents shall not be responsible for the accuracy or completeness of electronic copies of this plan sheet.

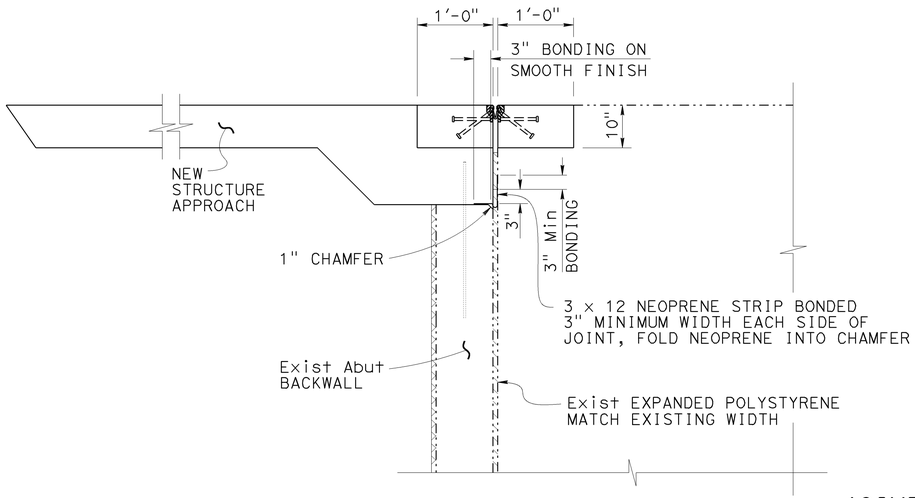

SECTION A-A
NO SCALE

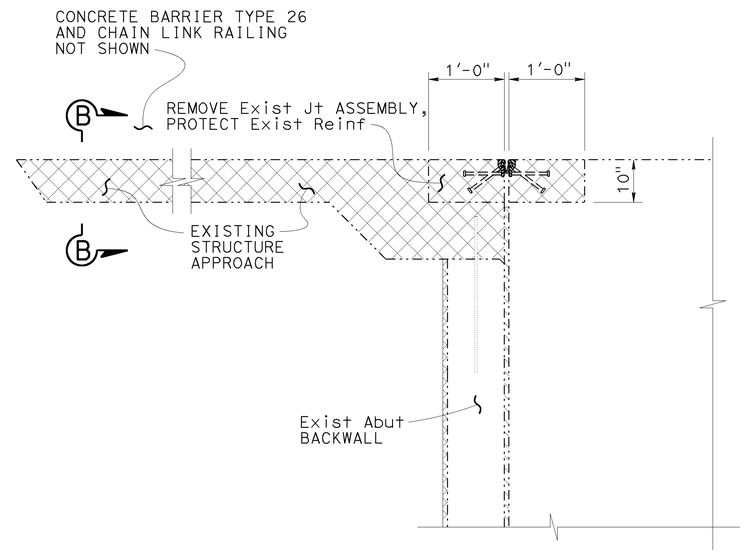

BRIDGE REMOVAL (PORTION)
NO SCALE

JOINT SEAL TABLE

LOCATION	Min "MR" (IN)	Approx LENGTH (FT)	EXISTING WATERSTOP
ABUTMENT 1	3½	67	NO

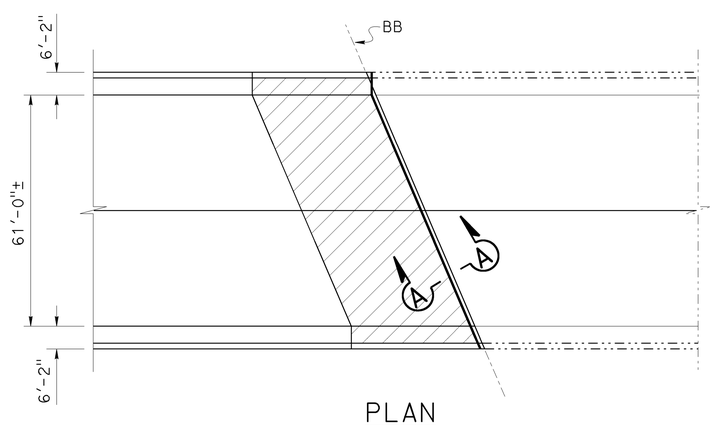

PLAN
1" = 20'

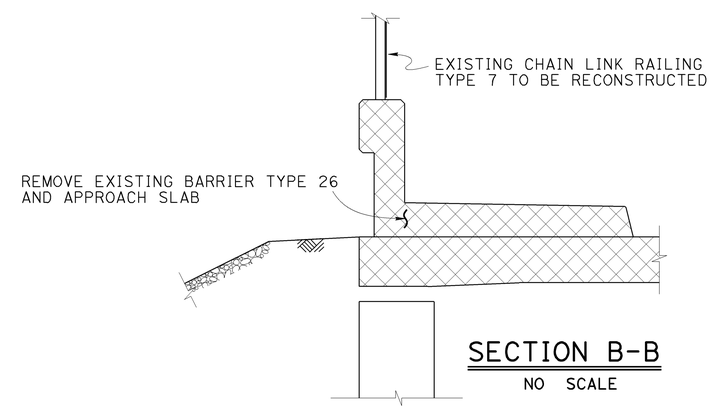

SECTION B-B
NO SCALE

NOTE:
VERIFY ALL CONTROLLING FIELD DIMENSIONS BEFORE ORDERING OR FABRICATING ANY MATERIAL.

NOTES:

1. Match existing joint width
2. Bend joint seal 6" up into curb or rail on the low side of the deck where deck joint matches curb or rail joint
3. For details not shown, see "STRIP JOINT SEAL ASSEMBLY" sheet

LEGEND:

- Indicates New Construction
- Indicates Existing Structure
- Indicates Joint Seal Assembly
- Indicates Structure Approach Type N(30S)
- Bridge Removal (Portion)

	BY	CHECKED
DESIGN	HOMA IRANINEJADIAN	MOHAMMAD MUQTADIR
DETAILS	ANTONETTE ONG / S. PINK	MOHAMMAD MUQTADIR
QUANTITIES	HOMA IRANINEJADIAN	MOHAMMAD MUQTADIR

STATE OF CALIFORNIA
DEPARTMENT OF TRANSPORTATION

DIVISION OF ENGINEERING SERVICES
STRUCTURE DESIGN
DESIGN BRANCH 20

BRIDGE NO. 55-0959
POST MILE 8.40

RED HILL AVENUE OC
APPROACH SLAB LAYOUT

STRUCTURES DESIGN DETAIL SHEET (ENGLISH) (REV. 09-01-10)

ORIGINAL SCALE IN INCHES FOR REDUCED PLANS 0 1 2 3

UNIT: 3622
PROJECT NUMBER & PHASE: 1214000057 1
CONTRACT NO.: 12-0N5404

DISREGARD PRINTS BEARING EARLIER REVISION DATES

REVISION DATES 12/16/14 01/05/15 04/21/15

SHEET 2 OF 7

FILE => 55-0959-b-as-lo01.dgn

USERNAME => s736853 DATE PLOTTED => 21-APR-2015 TIME PLOTTED => 14:56

DIST	COUNTY	ROUTE	POST MILES TOTAL PROJECT	SHEET No.	TOTAL SHEETS
12	ORA	405	8.4	96	142

REGISTERED CIVIL ENGINEER 1-05-15 DATE

4-27-15
PLANS APPROVAL DATE

REGISTERED PROFESSIONAL ENGINEER HOMA IRANINEJADIAN No. C 68284 Exp. 09-30-15 CIVIL STATE OF CALIFORNIA

The State of California or its officers or agents shall not be responsible for the accuracy or completeness of electronic copies of this plan sheet.

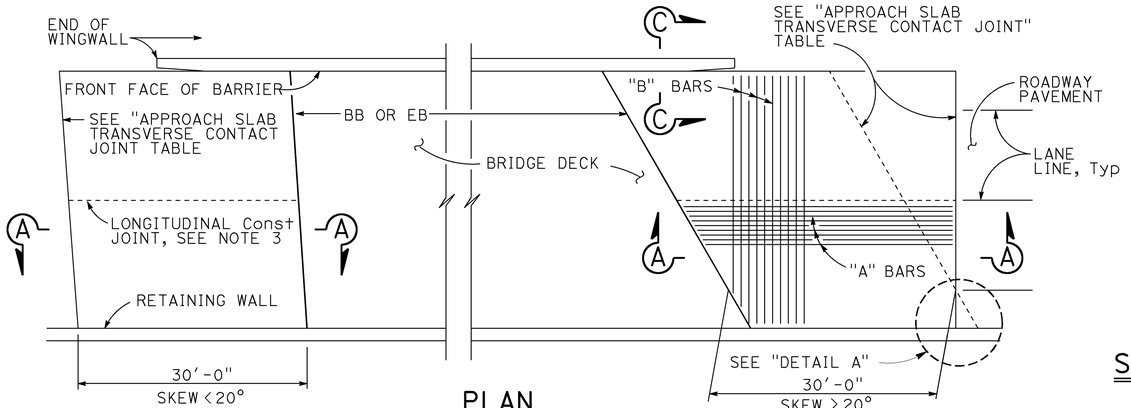

PLAN

1" = 10'

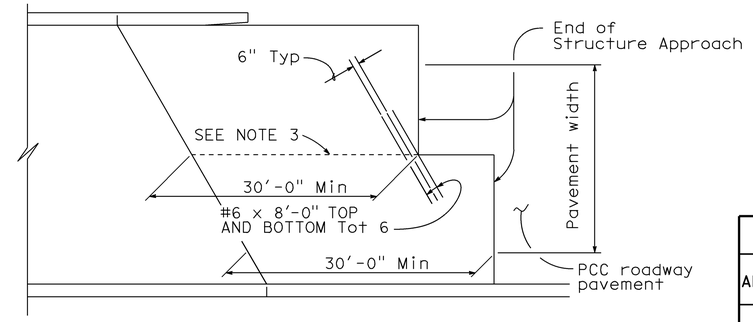

STRUCTURE APPROACH - END STAGGER DETAIL

No Scale

APPROACH SLAB TRANSVERSE CONTACT JOINT		
APPROACH SKEW	WITH AC ROADWAY PAVEMENT	WITH PCC ROADWAY PAVEMENT
< 20°	PARALLEL TO FACE OF PN	PARALLEL TO FACE OF PN
20° - 45°	PARALLEL TO FACE OF PN USE "DETAIL A"	STAGGER LINES 24' TO 36' APART
> 45°	PARALLEL TO FACE OF PN USE "DETAIL A"	STAGGER AT EACH LANE LINE

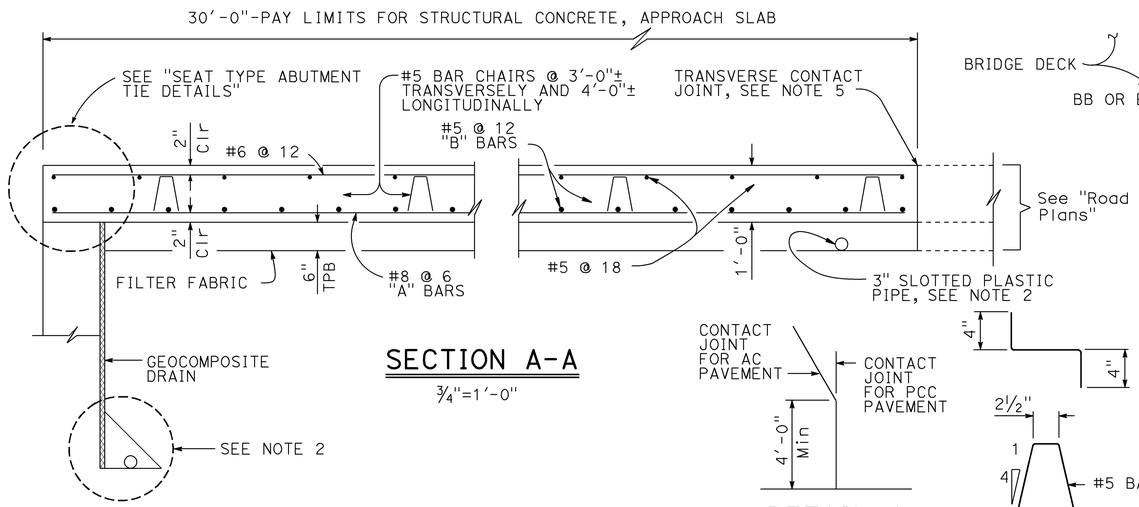

SECTION A-A

¾"=1'-0"

DETAIL A

No Scale

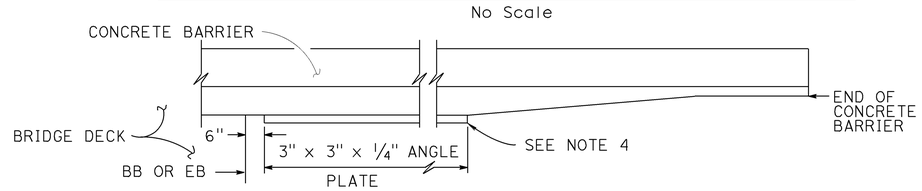

EDGE ANGLE DETAIL

½"=1'-0"

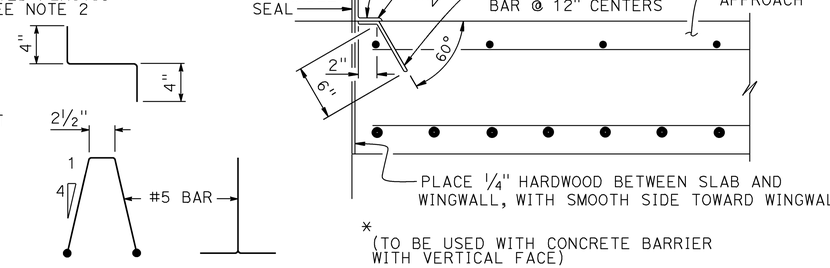

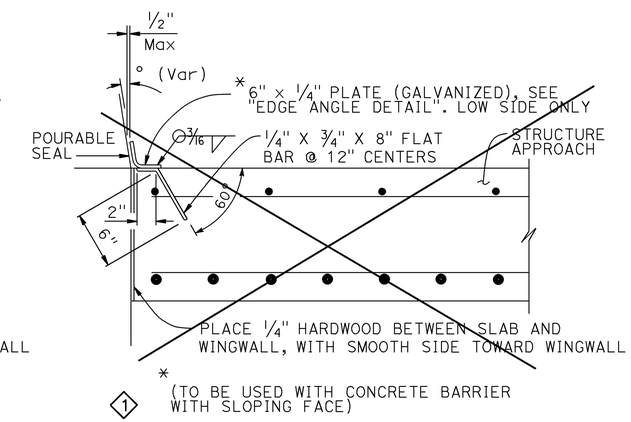

DETAIL B

1½" = 1'-0"

BAR CHAIR DETAIL

1½"=1'-0"

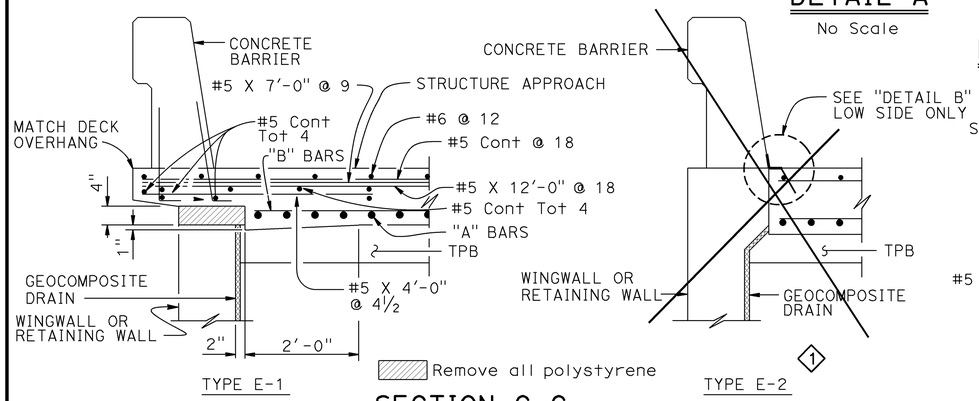

SECTION C-C

¾"=1'-0"

(Type E-1 to be used, unless otherwise shown on plans)

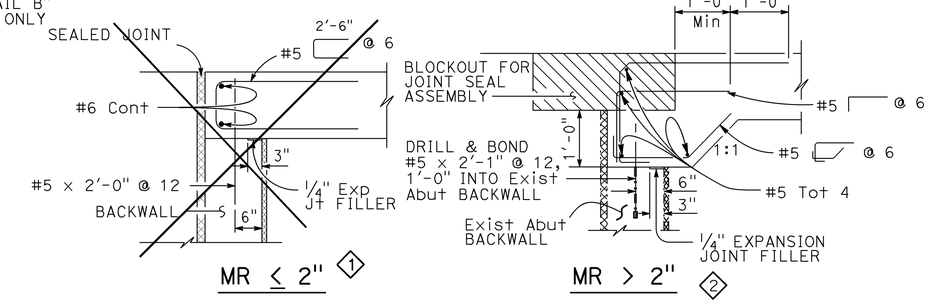

MR ≤ 2" 1 MR > 2" 2

SEAT TYPE ABUTMENT TIE DETAILS (SEE NOTE 1)

¾"=1'-0"

NOTES:

1. For details not shown, see Structure Plans. For MR ≤ 2", adjust bar reinforcement to clear a sawcut for sealed joint, when required
2. For drainage details, see "STRUCTURE APPROACH DRAINAGE DETAILS" sheet
3. Longitudinal construction joints, when permitted by the Engineer, shall be located on lane lines
4. End angle or plate at beginning of barrier transition, end of wingwall or end of structure approach as applicable
5. For transverse contact joint with new PCC paving, refer to Standard Plan P10
6. At the Contractor's option, approach slab transverse reinforcement may be placed parallel to paving notch. Spacing of transverse reinforcement is measured along ℄ roadway

STANDARD DRAWING

FILE NO. xs3-120

APPROVAL DATE July 2011

1 Deleted Details
2 Modified Detail

STATE OF CALIFORNIA
DEPARTMENT OF TRANSPORTATION

DIVISION OF ENGINEERING SERVICES

BRIDGE NO. 55-0959
POST MILE 8.40

RED HILL AVENUE OC
STRUCTURE APPROACH TYPE N(30S)

DS OSD 2147A (ENGLISH STANDARD DRAWING "XS" BORDER REV. (02-02-11)

ORIGINAL SCALE IN INCHES FOR REDUCED PLANS 0 1 2 3

UNIT: 3622
PROJECT NUMBER & PHASE: 1214000057 1
CONTRACT NO.: 12-0N5404

DISREGARD PRINTS BEARING EARLIER REVISION DATES

REVISION DATES 12/16/14

SHEET 3 OF 7

FILE => 55-0959-c-satN(30S).dgn

USERNAME => s136853 DATE PLOTTED => 09-FEB-2015 TIME PLOTTED => 15:13

DIST	COUNTY	ROUTE	POST MILES TOTAL PROJECT	SHEET No.	TOTAL SHEETS
12	ORA	405	8.4	97	142

REGISTERED CIVIL ENGINEER 1-05-15 DATE

4-27-15
PLANS APPROVAL DATE

REGISTERED PROFESSIONAL ENGINEER HOMA IRANINEJADIAN No. C 68284 Exp. 09-30-15 CIVIL STATE OF CALIFORNIA

The State of California or its officers or agents shall not be responsible for the accuracy or completeness of electronic copies of this plan sheet.

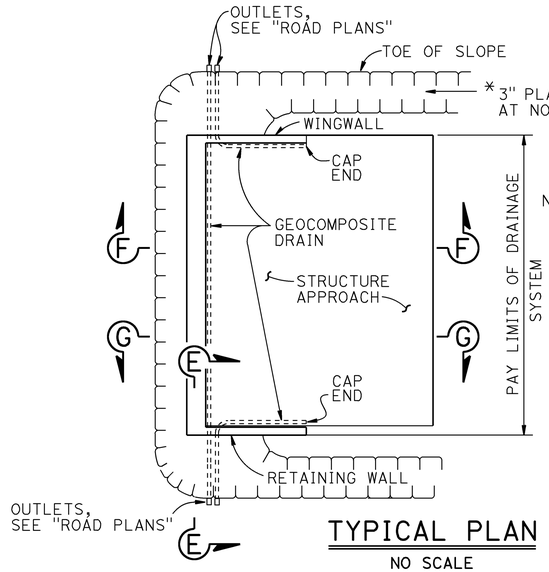

NOTE: All pipes removed are to be replaced by the same sizes and at the same locations 2

TYPICAL PLAN 1

NO SCALE

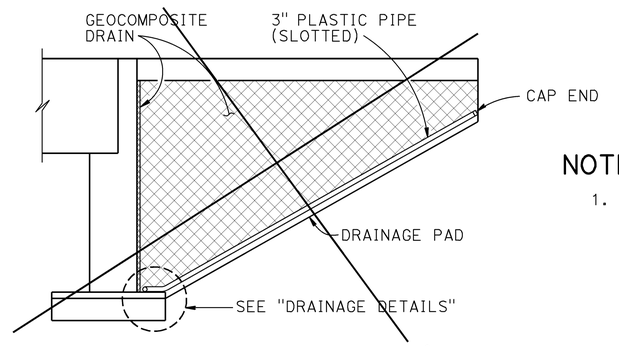

CANTILEVER WINGWALL 3

SECTION F-F

1/4" = 1'-0"

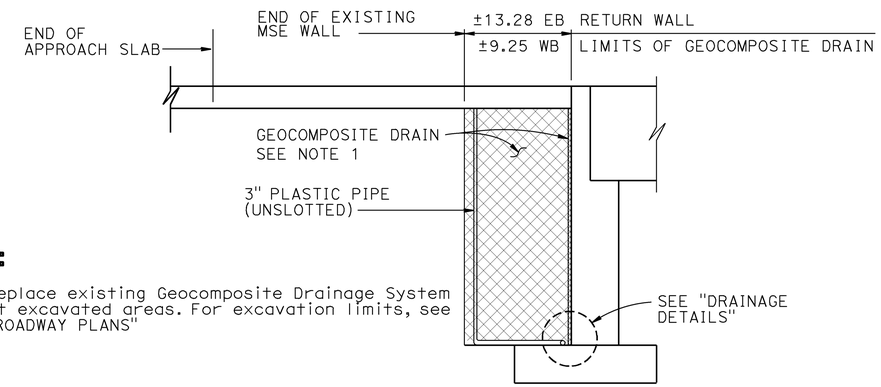

NOTE:

1. Replace existing Geocomposite Drainage System at excavated areas. For excavation limits, see "ROADWAY PLANS"

RETAINING WALL WINGWALL DRAINAGE DETAILS 1

SECTION G-G

1/4" = 1'-0"

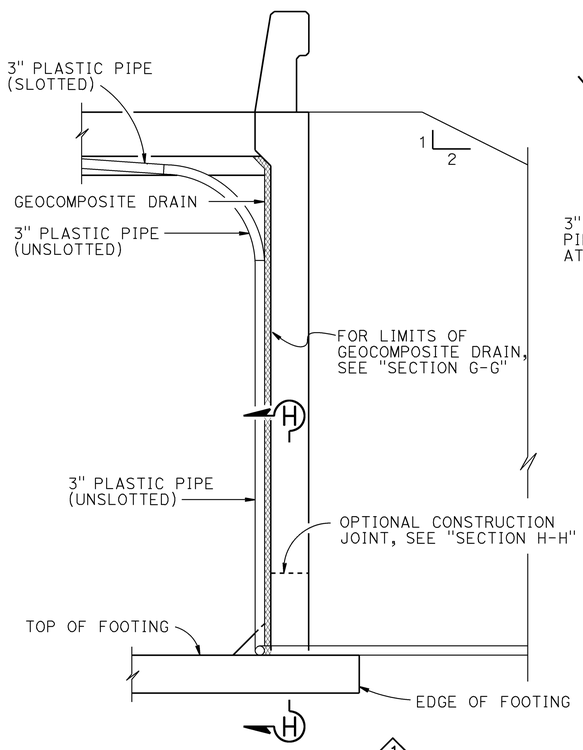

SECTION E-E 1

1/2" = 1'-0"

NOTE: Bends and junctions in 3" plastic pipe are 30" radius Min

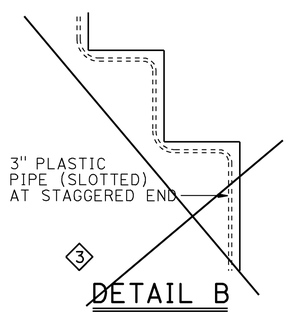

DETAIL B 3

No Scale

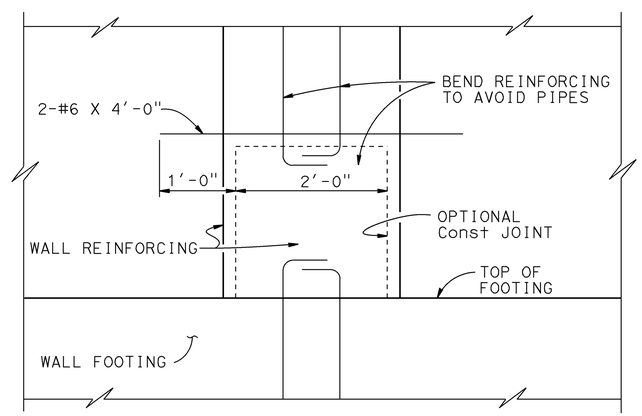

SECTION H-H

1" = 1'-0"

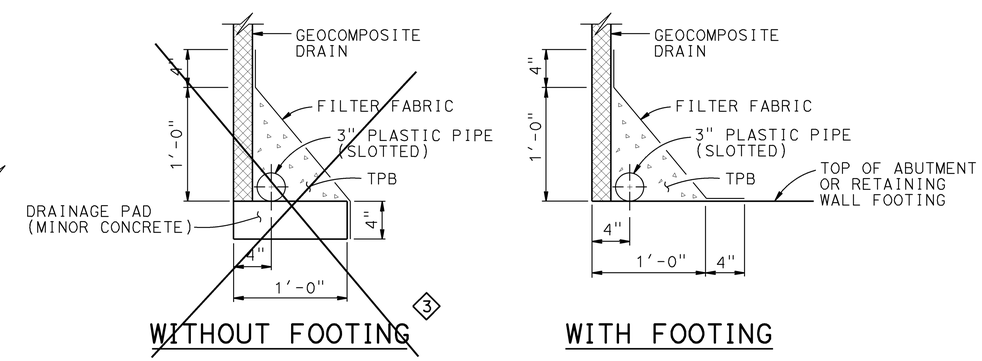

WITHOUT FOOTING 3

WITH FOOTING

DRAINAGE DETAILS

1 1/2" = 1'-0"

STANDARD DRAWING		
FILE NO. xs3-110	APPROVAL DATE July 2011	1 Modified Details 3 Deleted Details 2 Added Note

STATE OF CALIFORNIA DEPARTMENT OF TRANSPORTATION

DIVISION OF ENGINEERING SERVICES

BRIDGE NO. 55-0959

POST MILE 8.40

RED HILL AVENUE OC

STRUCTURE APPROACH DRAINAGE DETAILS

DS OSD 2147A (ENGLISH STANDARD DRAWING "XS" BORDER REV. (02-02-11)

ORIGINAL SCALE IN INCHES FOR REDUCED PLANS 0 1 2 3

UNIT: 3622
PROJECT NUMBER & PHASE: 1214000057 1
CONTRACT NO.: 12-0N5404

DISREGARD PRINTS BEARING EARLIER REVISION DATES

REVISION DATES 11/18/14 11/24/14 01/13/15

SHEET 4 OF 7

FILE => 55-0959-d-sadd.dgn

USERNAME => s136853 DATE PLOTTED => 09-FEB-2015 TIME PLOTTED => 15:14

DIST	COUNTY	ROUTE	POST MILES TOTAL PROJECT	SHEET No.	TOTAL SHEETS
12	ORA	405	8.4	98	142

REGISTERED CIVIL ENGINEER — DATE 1-05-15

4-27-15
PLANS APPROVAL DATE

REGISTERED PROFESSIONAL ENGINEER — HOMA IRANINEJADIAN — No. C 68284 — Exp. 09-30-15 — CIVIL — STATE OF CALIFORNIA

The State of California or its officers or agents shall not be responsible for the accuracy or completeness of electronic copies of this plan sheet.

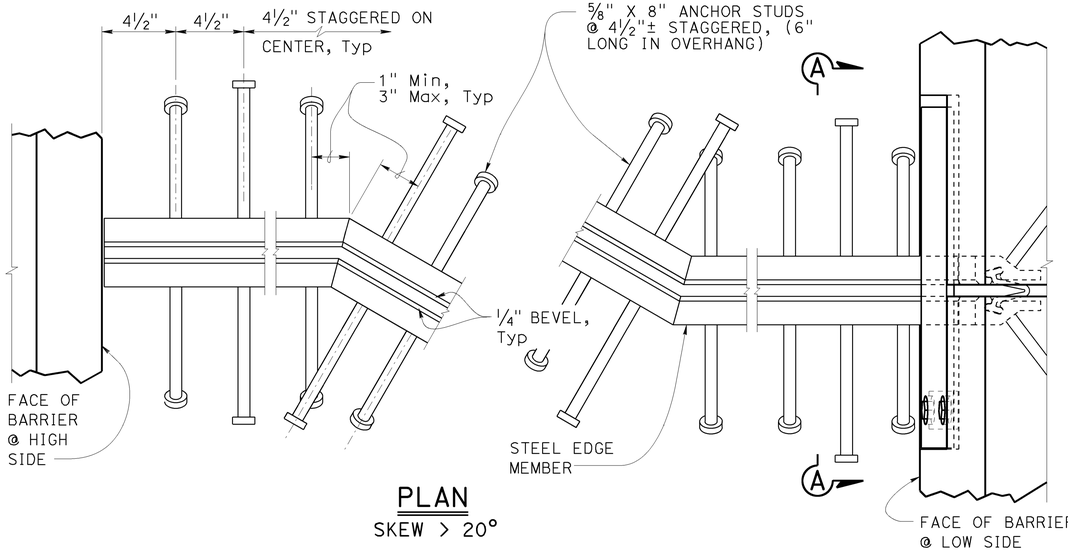

PLAN
SKEW > 20°

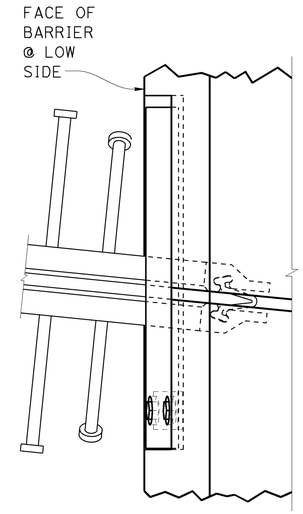

PLAN
SKEW ≤ 20°

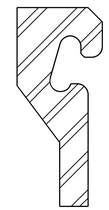

SCHEMATIC STEEL EDGE MEMBER

NOTES:

1. Alternatively, fillet or complete penetration welds may be used at anchor studs.
2. Alternate types of anchor studs may be permitted subject to the authorization by the Engineer.
3. Joint seal assembly to be used in conjunction with closure pour. (See other sheets for limits). Closure pour shall not be placed until final deck surface is within the tolerances specified.
4. Use joint at crown of roadway, at any change in traverse slope in deck and at changes in horizontal direction. Place other joints at or near lanes. All metal parts to be painted or galvanized after fabrication.
5. Sheet Neoprene shall be fabricated in one continuous piece and shall be fabricated to bend around corners. Field splices of the neoprene are not allowed.
6. Insert assembly or expansion anchorage for ⅝" x 1¾" bolts. Use installation bolts extended ½" minimum past nut and coat with bond breaker, after concrete has cured, remove installation bolts, install HS bolts and sheet neoprene.
7. Sidewalk Detail similar to Barrier Detail on low side at both sides if the roadway is crowned or if the difference in elevation between the ends of the seal is 0.5′ or less.
8. a_C, a_S, are the thermal expansion coefficients for concrete and steel respectively.
9. Anchor studs shall conform to ASTM 108.

JOINT INFORMATION			"a" DIMENSIONS		
LOCATION	MOVEMENT RATING (MR)	SKEW	WINTER	SPRING & FALL	SUMMER
ABUTMENT 1	3½"	27°08′05"	1-¾"	1-⅜"	1"

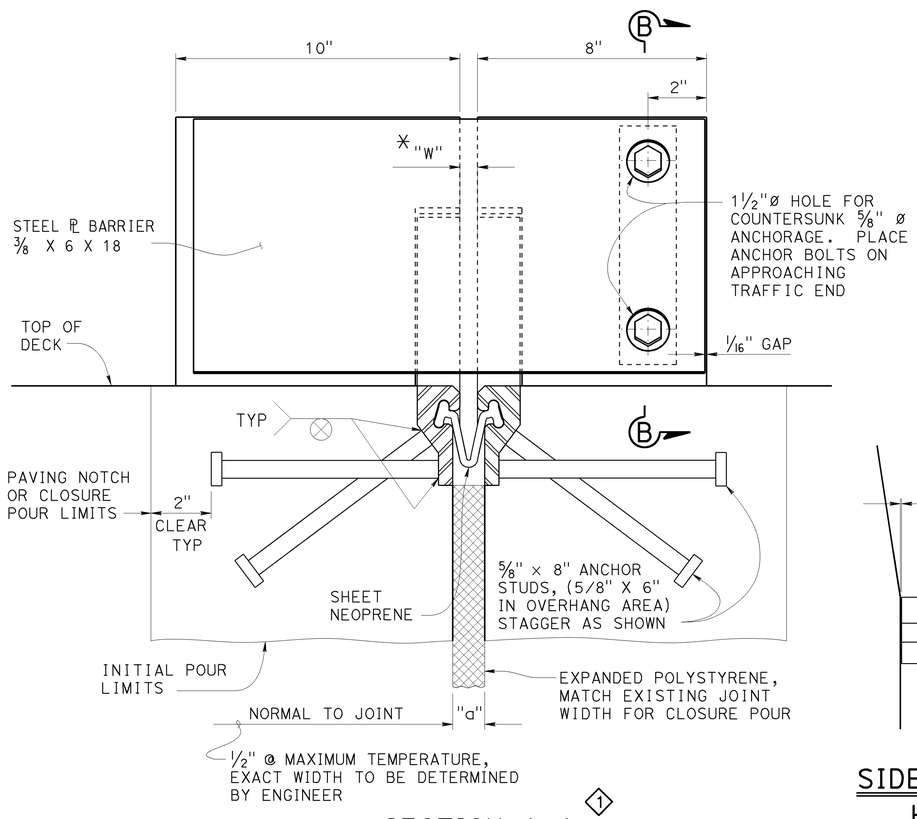

SECTION A-A ⟨1⟩

* TO SET MINIMUM JOINT OPENING "W"

$$"W" = \begin{cases} \tfrac{1}{2}" + [(\text{Max Str temperature in °F}) - (\text{actual Str temperature in °F})] * (a_C \text{ or } a_S)(12)(\text{contributory L in feet}) \\ \tfrac{1}{2}" \text{ Minimum} \\ a_C = 0.0000060 \\ a_S = 0.0000065 \end{cases}$$

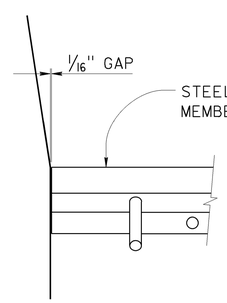

SIDEWALK DETAIL
HIGH SIDE

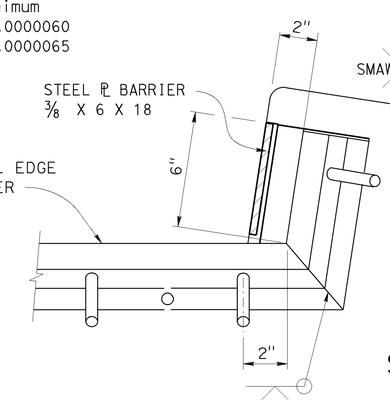

SIDEWALK DETAIL
LOW SIDE ⟨1⟩

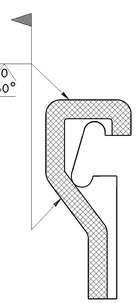

SCHEMATIC FIELD
WELD DETAIL

NOTE:
SHADED AREAS TO BE WELDED

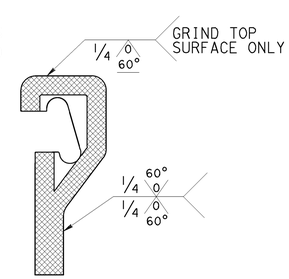

SCHEMATIC SHOP
WELD DETAIL

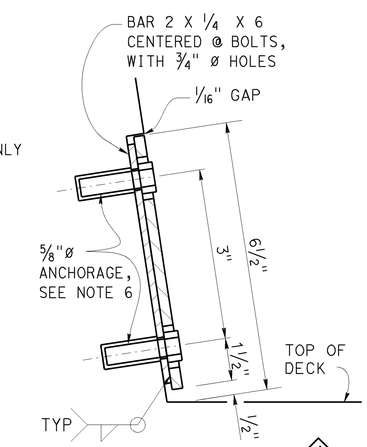

SECTION B-B ⟨1⟩

NO SCALE

STANDARD DRAWING		
FILE NO. xs8-010	APPROVAL DATE July 2014	⟨1⟩ Revised Details

STATE OF CALIFORNIA
DEPARTMENT OF TRANSPORTATION

DIVISION OF ENGINEERING SERVICES

BRIDGE NO. 55-0959
POST MILE 8.40

RED HILL AVENUE OC
STRIP JOINT SEAL ASSEMBLY
MAXIMUM MOVEMENT RATING = 4"

DS OSD 2147A (ENGLISH STANDARD DRAWING "XS" BORDER REV. (02-02-11)

ORIGINAL SCALE IN INCHES FOR REDUCED PLANS 0 1 2 3

UNIT: 3622
PROJECT NUMBER & PHASE: 1214000057 1
CONTRACT NO.: 12-0N5404

DISREGARD PRINTS BEARING EARLIER REVISION DATES → 09/15/14 10/08/14 11/19/14

SHEET 5 OF 7

FILE => 55-0959-e-sjsa.dgn

USERNAME => s136853 DATE PLOTTED => 09-FEB-2015 TIME PLOTTED => 15:14

DIST	COUNTY	ROUTE	POST MILES TOTAL PROJECT	SHEET No.	TOTAL SHEETS
12	ORA	405	8.4	99	142

REGISTERED CIVIL ENGINEER — DATE 1-05-15

4-27-15
PLANS APPROVAL DATE

REGISTERED PROFESSIONAL ENGINEER — HOMA IRANINEJADIAN — No. C 68284 — Exp. 09-30-15 — CIVIL — STATE OF CALIFORNIA

The State of California or its officers or agents shall not be responsible for the accuracy or completeness of electronic copies of this plan sheet.

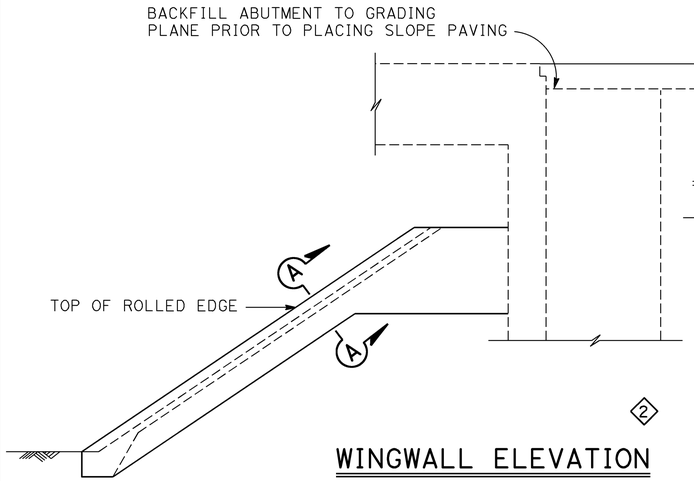

WINGWALL ELEVATION

NO SCALE

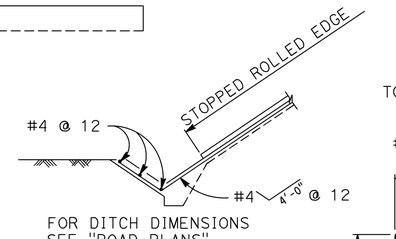

WITH DITCH

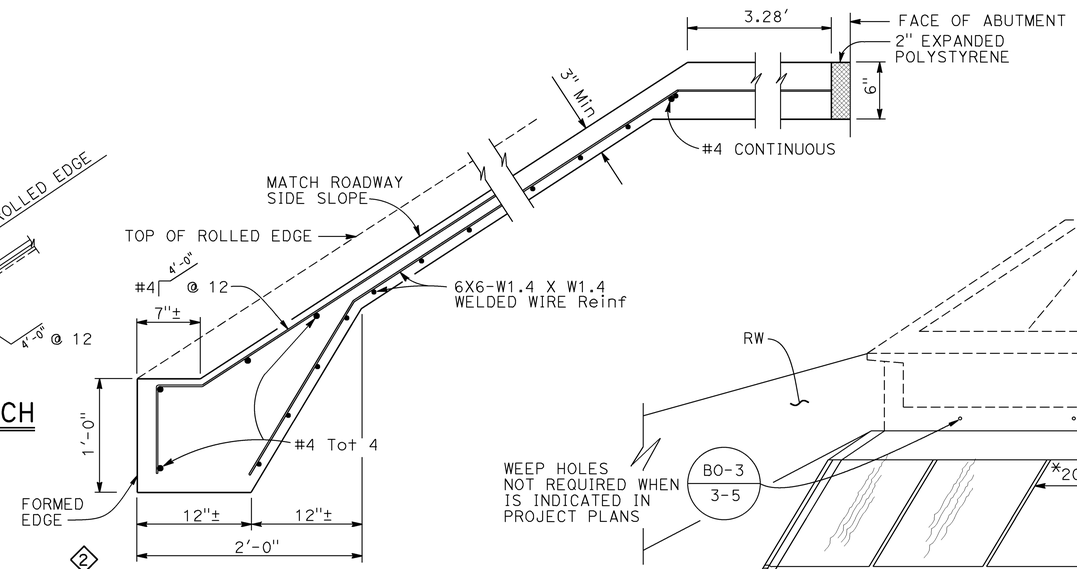

TYPICAL SECTION - CONCRETE PAVING

NO SCALE

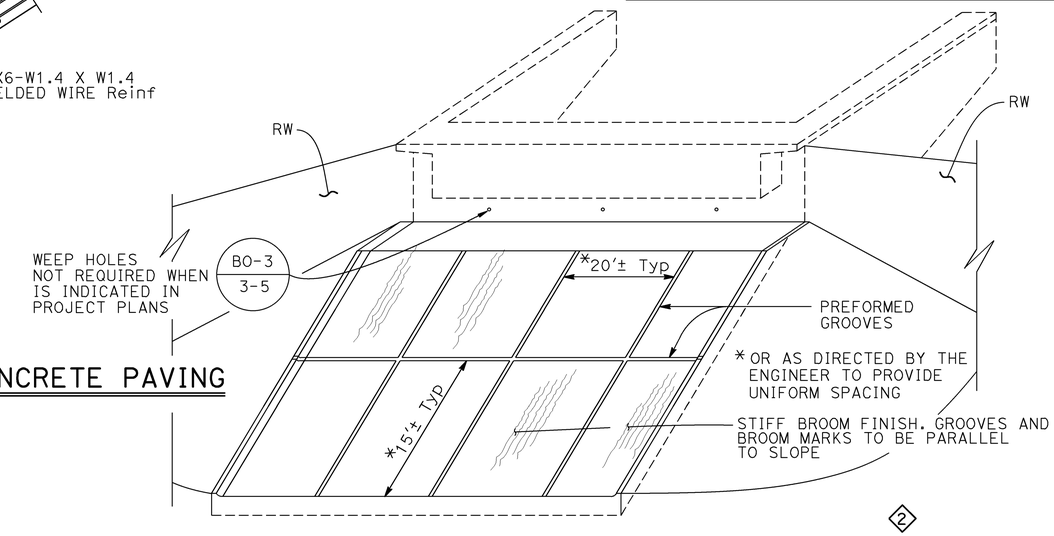

PICTORIAL VIEW OF TYPICAL INSTALLATION

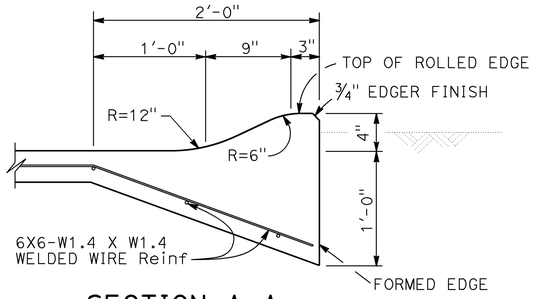

SECTION A-A

NO SCALE

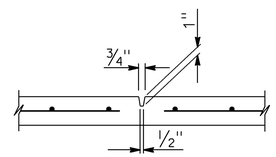

PREFORMED GROOVE

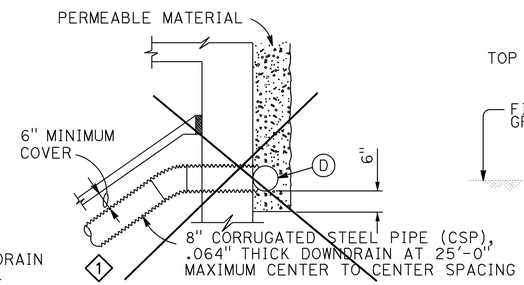

TYPICAL - DRAIN CONNECTION

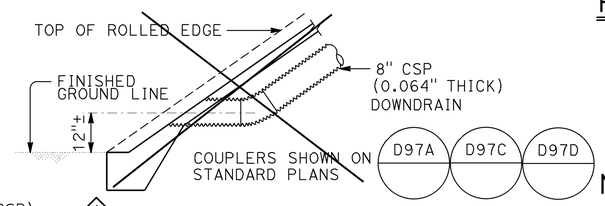

TYPICAL - NO CURB

NOTE:

1. For Rock Blanket Slope Paving limits and details, see "ROADWAY PLANS"

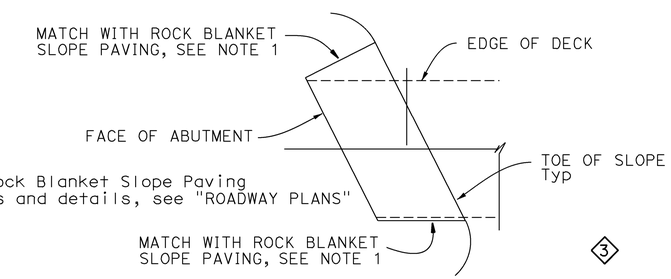

LIMITS OF SLOPE PAVING AND DRAINAGE LAYOUT

NO SCALE

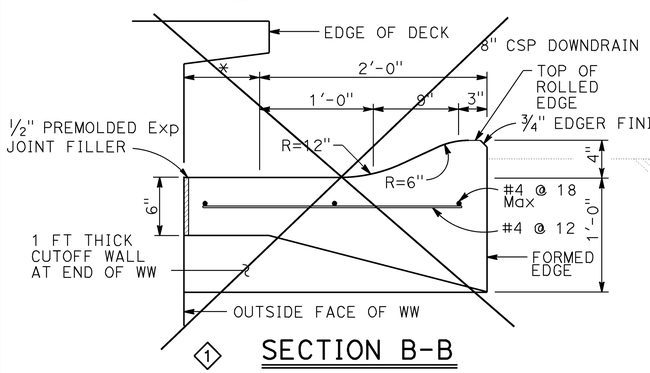

SECTION B-B

NO SCALE

* THIS DIMENSION BECOMES ZERO WHEN EDGE OF DECK IS AT OUTSIDE FACE OF WW

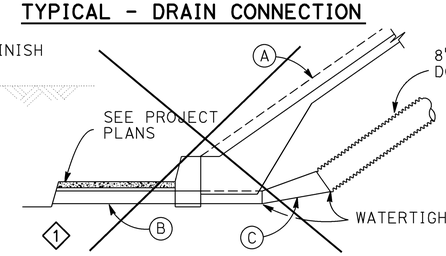

TYPICAL - WITH SIDEWALK

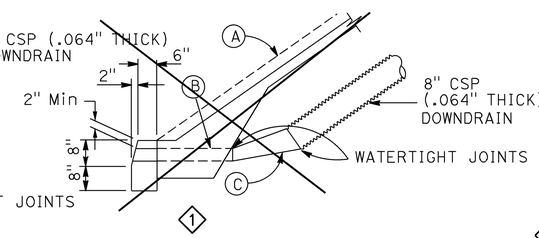

TYPICAL - WITH CURB

DRAINAGE DETAILS

NO SCALE

Drainage details are only applicable when is indicated in project plans — B0-3 / 3-5

NOTES

(A) Top of rolled edge

(B) Conduit:
0.064" galv corrugated steel or 0.109" smooth galv steel

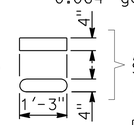

(C) Taper: 0.064" galv corrugated steel or 0.109" smooth galv steel

(D) 8" perforated steel pipe (0.064" thick) underdrain behind abutment.

(E) See Project Plans for limits of Slope Paving & Drainage layout.

NO SCALE

REVISED STANDARD DRAWING				STATE OF CALIFORNIA DEPARTMENT OF TRANSPORTATION	DIVISION OF ENGINEERING SERVICES	BRIDGE NO. 55-0959 / POST MILE 8.40	RED HILL AVENUE OC
FILE NO. xs4-210	APPROVAL DATE July 2014	1 Deleted Details	3 Added Detail				SLOPE PAVING-FULL SLOPE-NO SKEW
		2 Revised Details	4 Deleted Notes				

DS OSD 2147A (ENGLISH STANDARD DRAWING "XS" BORDER REV. (02-02-11)

ORIGINAL SCALE IN INCHES FOR REDUCED PLANS 0 1 2 3

UNIT: 3622
PROJECT NUMBER & PHASE: 1214000057 1
CONTRACT NO.: 12-0N5404

DISREGARD PRINTS BEARING EARLIER REVISION DATES

REVISION DATES: 04/21/15 12/04/14 01/13/15 — SHEET 6 OF 7

FILE => 55-0959-f-spfsns.dgn

USERNAME => s136853 DATE PLOTTED => 21-APR-2015 TIME PLOTTED => 14:56

DIST	COUNTY	ROUTE	POST MILES TOTAL PROJECT	SHEET No.	TOTAL SHEETS
12	ORA	405	8.4	100	142

REGISTERED CIVIL ENGINEER — DATE 1-05-15

4-27-15
PLANS APPROVAL DATE

The State of California or its officers or agents shall not be responsible for the accuracy or completeness of scanned copies of this plan sheet.

REGISTERED PROFESSIONAL ENGINEER — HOMA IRANINEJADIAN — No. C 68284 — Exp. 09-30-15 — CIVIL — STATE OF CALIFORNIA

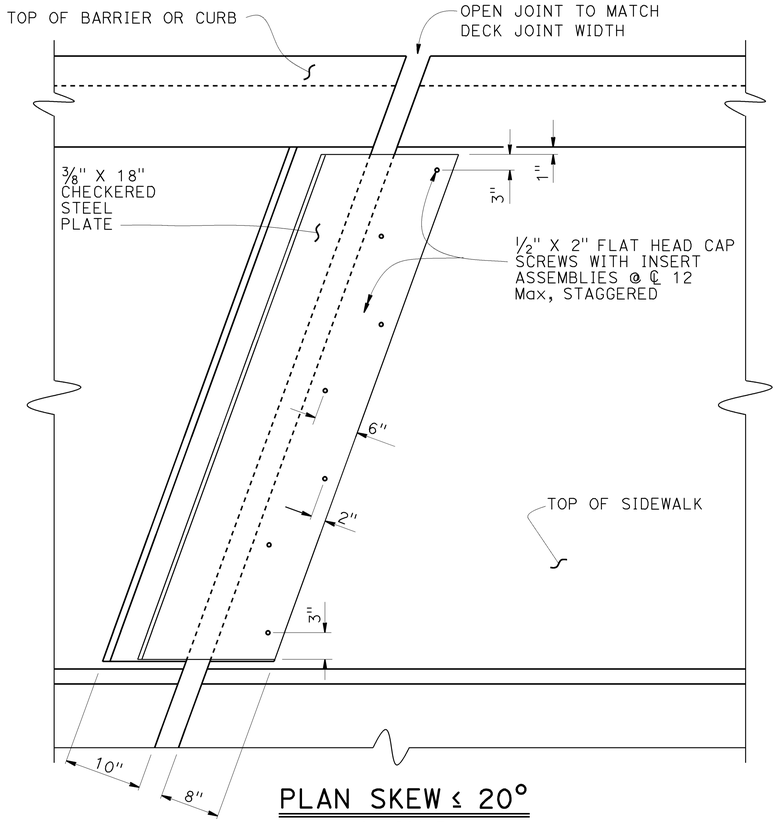

PLAN SKEW ≤ 20°

NO SCALE

⇦ DIRECTION OF TRAFFIC

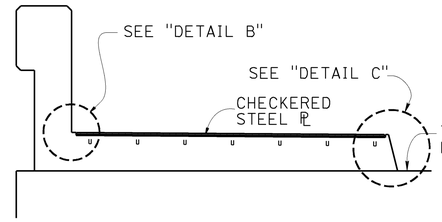

SECTION A-A

NO SCALE

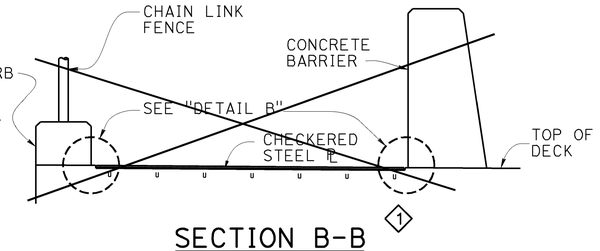

SECTION B-B ◇1

NO SCALE

NOTES:

1. Utility openings and expansion joints not shown for clarity.
2. Recess concrete 1/2" for plates.
3. Plates to be galvanized.
4. Architectural treatment not shown

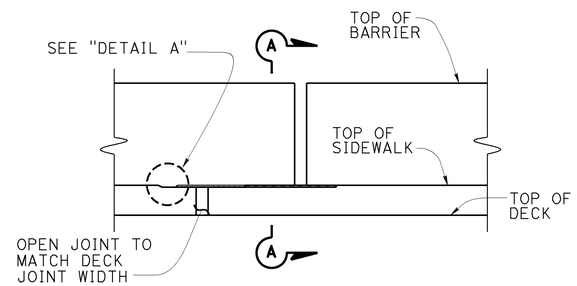

ELEVATION

NO SCALE

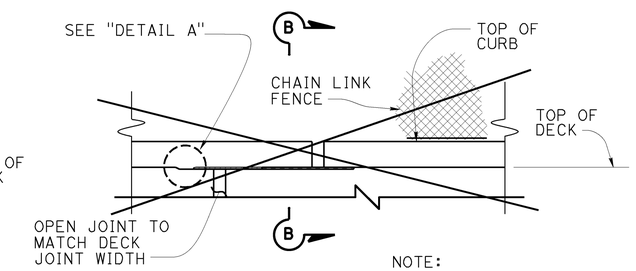

NOTE:
Barrier not shown for clarity

ELEVATION ◇1

NO SCALE

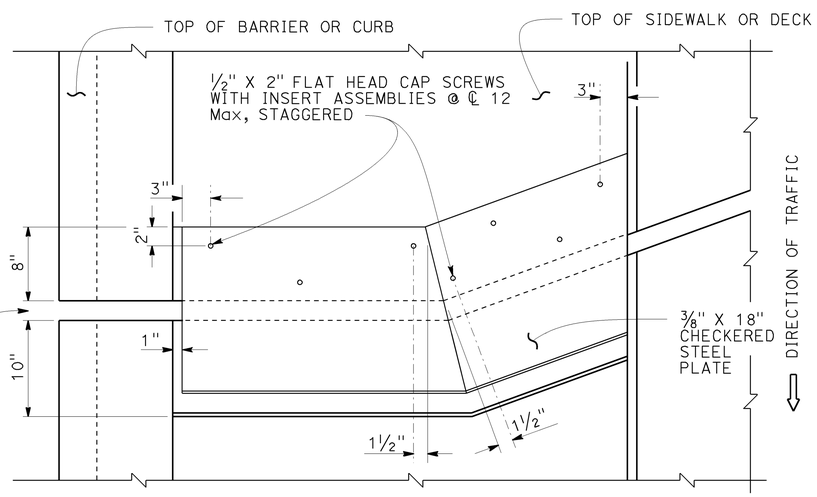

PLAN SKEW > 20°

NO SCALE

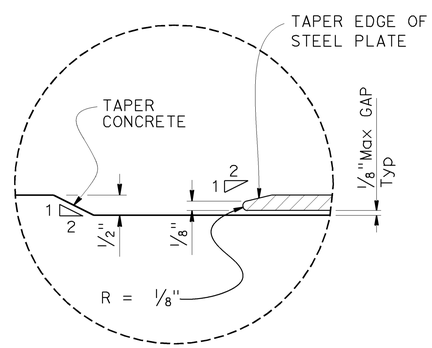

DETAIL A

NO SCALE

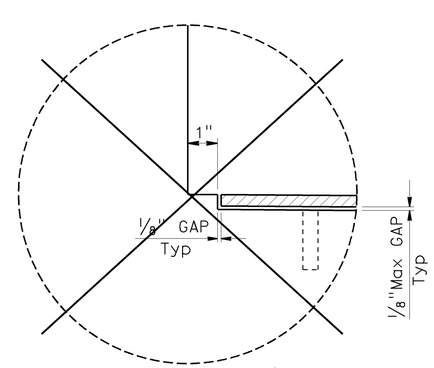

DETAIL B ◇1

NO SCALE

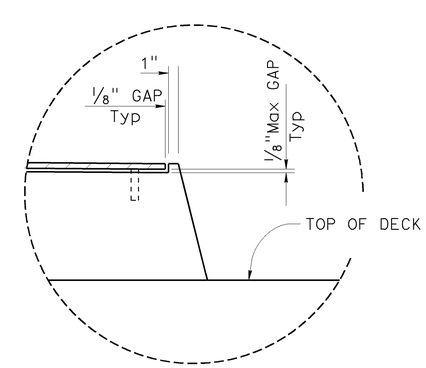

DETAIL C

NO SCALE

STANDARD DRAWING			
FILE NO. xs8-050	APPROVAL DATE July 2014	◇1 Deleted Details	STATE OF CALIFORNIA DEPARTMENT OF TRANSPORTATION

DIVISION OF ENGINEERING SERVICES

BRIDGE NO. 55-0959
POST MILE 8.40

RED HILL AVENUE OC
JOINT ARMOR FOR PEDESTRIAN WALKWAYS

DS OSD 2147A (ENGLISH STANDARD DRAWING "XS" BORDER REV. (02-02-11)

ORIGINAL SCALE IN INCHES FOR REDUCED PLANS 0 1 2 3

UNIT: 3622
PROJECT NUMBER & PHASE: 1214000057 1
CONTRACT NO.: 12-0N5404

DISREGARD PRINTS BEARING EARLIER REVISION DATES

REVISION DATES: 12/16/14 01/05/15 01/13/15

SHEET 7 OF 7

FILE => 55-0959-v-japw.dgn

USERNAME => s136853 DATE PLOTTED => 09-FEB-2015 TIME PLOTTED => 15:14