DIST	COUNTY	ROUTE	POST MILES TOTAL PROJECT	SHEET No.	TOTAL SHEETS
12	Ora	91	R1.0,5.4	131	134

REGISTERED CIVIL ENGINEER 1/21/16 DATE

02-29-16
PLANS APPROVAL DATE

The State of California or its officers or agents shall not be responsible for the accuracy or completeness of scanned copies of this plan sheet.

REGISTERED PROFESSIONAL ENGINEER JUAN J. JAUREGUI JR. No. C63939 Exp. 9/30/16 CIVIL STATE OF CALIFORNIA

2

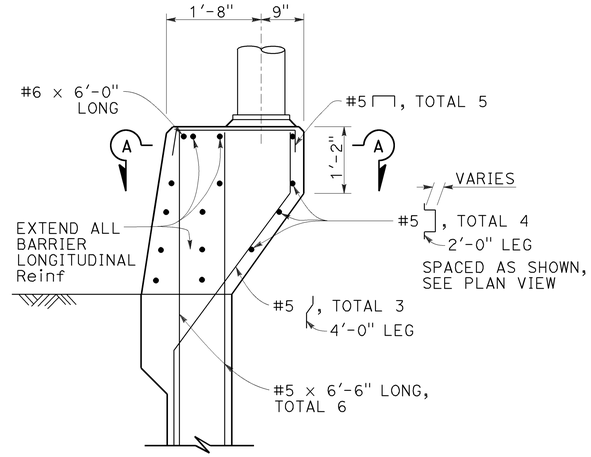

DETAIL A

PEDESTAL DETAIL

ANCHOR BOLT TABLE	
POLE TYPE	ANCHOR BOLT DIAMETER
1-A (Mod)	1"
15	1"
21	1¼"

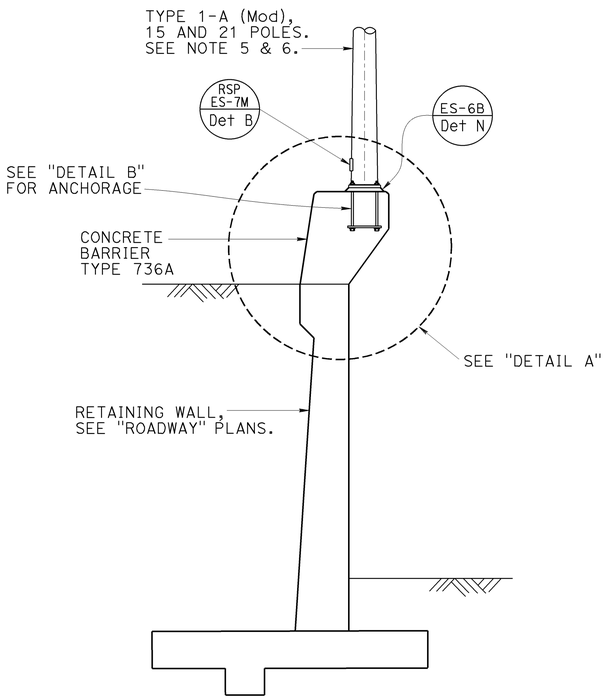

ELEVATION

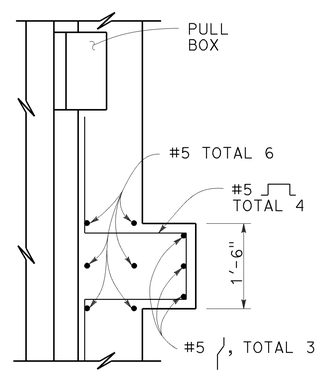

SECTION A-A

PLAN VIEW

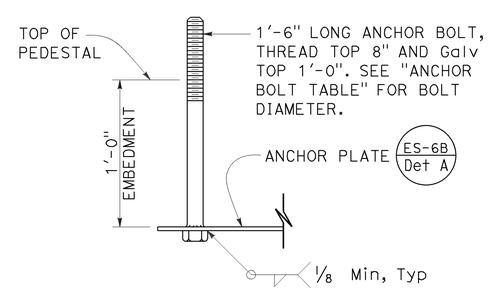

DETAIL B

ANCHORAGE

GENERAL NOTES

SPECIFICATIONS:

DESIGN: AASHTO Standard Specifications for Structural Supports for Highway Signs, Luminaires, and Traffic Signals, Sixth Edition.

LOADING:

Wind Loading (3 second gust) : 100 MPH

UNIT STRESSES:

Structural Steel: fy = 55,000 psi (tapered steel tube)
fy = 50,000 psi (unless otherwise noted)

Anchor bolts: fy = 55,000 psi

Reinforced Concrete : f'c = 3,600 psi
fy = 60,000 psi

NOTES:

1. For pole locations, see "ROADWAY PLANS".
2. All steel must be galvanized after fabrication.
3. During pole erection, the post must be raked as necessary with the use of leveling nuts to provide a plumb pole axis.
4. Reinforcement shown is in addition to Type 736A barrier and retaining wall reinforcement, unless otherwise noted.
5. For Type 1-A (Mod) details see sheet "SES-2".
6. For details not shown, see "2010 STANDARD PLANS" and "2010 REVISED STANDARD PLANS".

2 **REPLACED PER ADDENDUM No. 2 DATED MAY 25, 2016**

NOTE:
THE CONTRACTOR MUST VERIFY ALL CONTROLLING FIELD DIMENSIONS BEFORE ORDERING OR FABRICATING ANY MATERIAL.

NO SCALE

STANDARD PLAN SHEET No.
DETAIL No.

BRANCH CHIEF JEFF WOODY	DESIGN	BY J. JAUREGUI	CHECKED A. GUTIERREZ
	DETAILS	BY M. CLEVERLEY	CHECKED J. JAUREGUI
	QUANTITIES	BY	CHECKED

STATE OF CALIFORNIA
DEPARTMENT OF TRANSPORTATION

DIVISION OF ENGINEERING SERVICES
DESIGN AND TECHNICAL SERVICES
SPECIAL DESIGNS BRANCH A

BRIDGE NO. N/A
POST MILE

PEDESTAL DETAIL FOR TYPE 1-A (Mod) TYPE 15 AND 21 POLES ON CONCRETE BARRIER TYPE 736A (Mod)

SES-1

(ENGLISH) SPECIAL DESIGNS BRANCH BORDER SHEET (REV. 7-1-09)

ORIGINAL SCALE IN INCHES FOR REDUCED PLANS 0 1 2 3

UNIT: 3619
PROJECT NUMBER & PHASE: 1214000004-1
CONTRACT NO.: 12-0N3604

DISREGARD PRINTS BEARING EARLIER REVISION DATES
REVISION DATES 12/11/15 1/21/16 4/28/16 5/17/16
SHEET OF

FILE => spec_des_br_prj/2015sd/12-0N3601/12-0n3601_ses-1.dgn

USERNAME => s114037 DATE PLOTTED => 17-MAY-2016 TIME PLOTTED => 15:03

DIST	COUNTY	ROUTE	POST MILES TOTAL PROJECT	SHEET No.	TOTAL SHEETS
12	Ora	91	R1.0,5.4	132	134

2

REGISTERED CIVIL ENGINEER 1/21/16 DATE

02-29-16
PLANS APPROVAL DATE

The State of California or its officers or agents shall not be responsible for the accuracy or completeness of scanned copies of this plan sheet.

REGISTERED PROFESSIONAL ENGINEER JUAN J. JAUREGUI JR. No. C63939 Exp. 9/30/16 CIVIL STATE OF CALIFORNIA

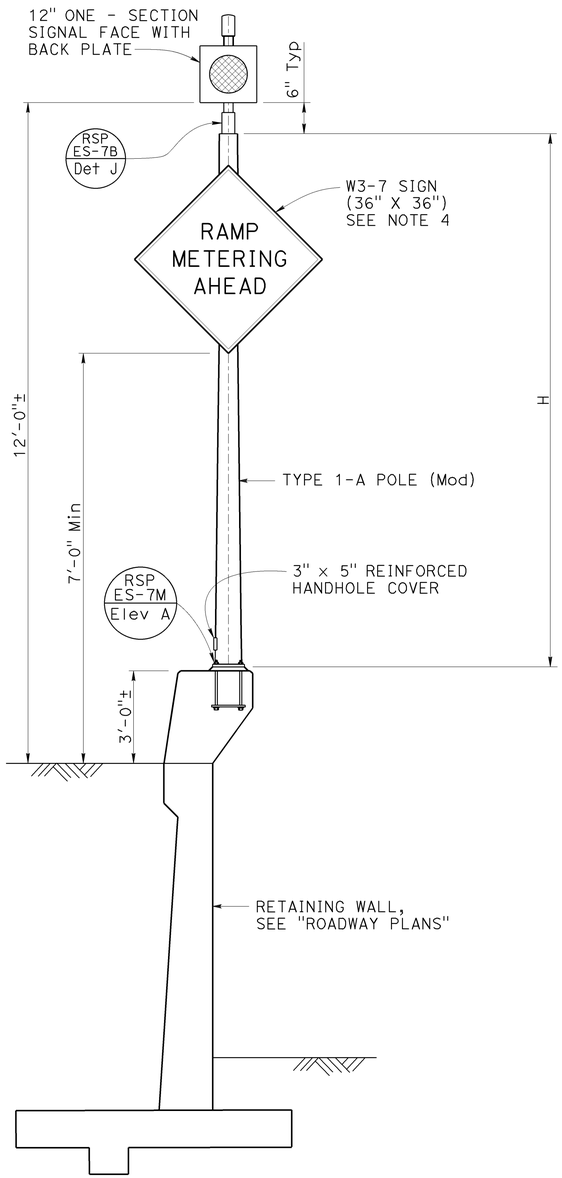

FRONT VIEW

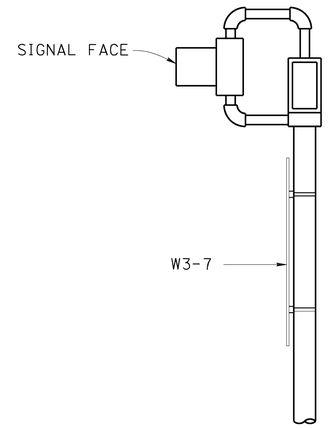

SIDE VIEW

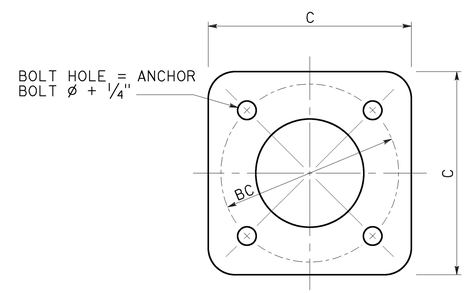

BASE PLATE

GENERAL NOTES

SPECIFICATIONS:

DESIGN: AASHTO Standard Specifications for Structural Supports for Highway Signs, Luminaires, and Traffic Signals, Sixth Edition.

LOADING:

Wind Loading (3 second gust) : 100 MPH

UNIT STRESSES:

Structural Steel: fy = 55,000 psi (tapered steel tube)
fy = 50,000 psi (unless otherwise noted)

Anchor bolts: fy = 55,000 psi

Reinforced Concrete : f'c = 3,600 psi
fy = 60,000 psi

NOTES:

1. For pole locations, see "ROADWAY PLANS".
2. All steel must be galvanized after fabrication.
3. During pole erection, the post must be raked as necessary with the use of leveling nuts to provide a plumb pole axis.
4. W3-7 Sign, unless otherwise noted, must be mounted to pole with stainless steel straps or other method without drilling holes in pole.
5. For Pedestal Details, see sheet "SES-1".
6. For details not shown, see "2010 STANDARD PLANS" and "2010 REVISED STANDARD PLANS".

TABLE A

POLE TYPE	POLE DATA				BASE PLATE DATA			
	H HEIGHT	Min OD BASE	Min OD TOP	THICKNESS	C	BC = BOLT CIRCLE	THICKNESS	ANCHOR BOLTS SIZE
1-A (MODIFIED)	8'-6"	5 1/4"	4"	0.1196"	9 1/2"	8 1/2"	3/4"	1" ø x 1'-6"

2 **REPLACED PER ADDENDUM No. 2 DATED MAY 25, 2016**

NOTE:
THE CONTRACTOR MUST VERIFY ALL CONTROLLING FIELD DIMENSIONS BEFORE ORDERING OR FABRICATING ANY MATERIAL.

STANDARD PLAN SHEET No.
DETAIL No.

NO SCALE

BRANCH CHIEF JEFF WOODY

	BY	CHECKED
DESIGN	J. JAUREGUI	A. GUTIERREZ
DETAILS	M. CLEVERLEY	J. JAUREGUI
QUANTITIES		

STATE OF CALIFORNIA
DEPARTMENT OF TRANSPORTATION

DIVISION OF ENGINEERING SERVICES
DESIGN AND TECHNICAL SERVICES
SPECIAL DESIGNS BRANCH A

BRIDGE NO. N/A
POST MILE Var

RAMP METER FLASHING BEACON ON CONCRETE BARRIER TYPE 736A (Mod)
TYPE 1-A (Mod) POLE DETAILS

SES-2

(ENGLISH) SPECIAL DESIGNS BRANCH BORDER SHEET (REV. 7-1-09)

ORIGINAL SCALE IN INCHES FOR REDUCED PLANS 0 1 2 3

UNIT: 3619
PROJECT NUMBER & PHASE: 1214000004-1 CONTRACT NO.: 12-0N3604

DISREGARD PRINTS BEARING EARLIER REVISION DATES 12/2/15 1/21/16 4/29/16 5/17/16

SHEET OF

FILE => spec_des_br_prj/2015sd/12-0N3601/12-0n3601_ses-2.dgn

USERNAME => s114937 DATE PLOTTED => 17-MAY-2016 TIME PLOTTED => 15:03