DIST	COUNTY	ROUTE	POST MILES TOTAL PROJECT	SHEET No.	TOTAL SHEETS
12	Ora	5	1.2/2.2	201	244

REGISTERED CIVIL ENGINEER 02-01-16 DATE

3-28-16
PLANS APPROVAL DATE

REGISTERED PROFESSIONAL ENGINEER JINRONG WANG No. C49844 Exp. 09-30-16 CIVIL STATE OF CALIFORNIA

The State of California or its officers or agents shall not be responsible for the accuracy or completeness of scanned copies of this plan sheet.

NOTES:

1. All bolts in splice plate connection details to be 7/8"Ø HS with hardened washers
2. Splice plate detail at girder A1 shown. Splice plate detail at girder B1 symmetrical and opposite hand

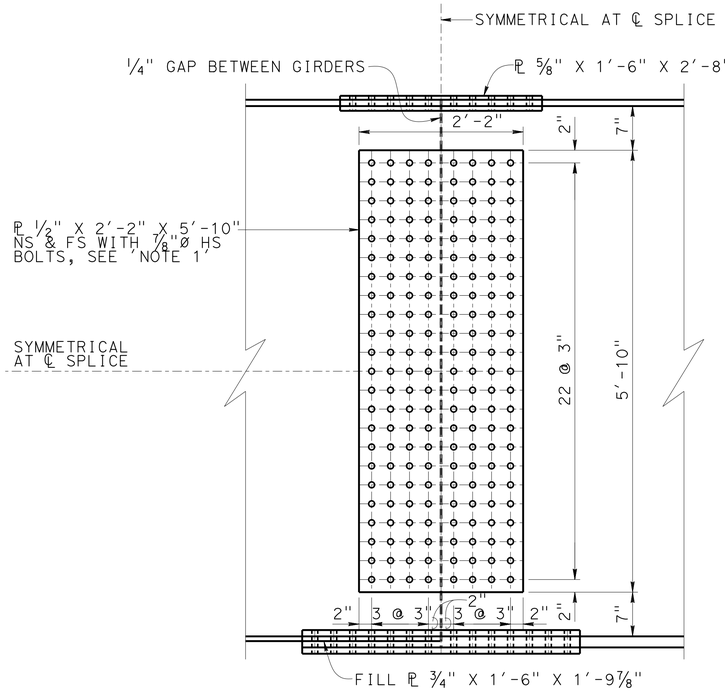

ELEVATION
1"=1'-0"

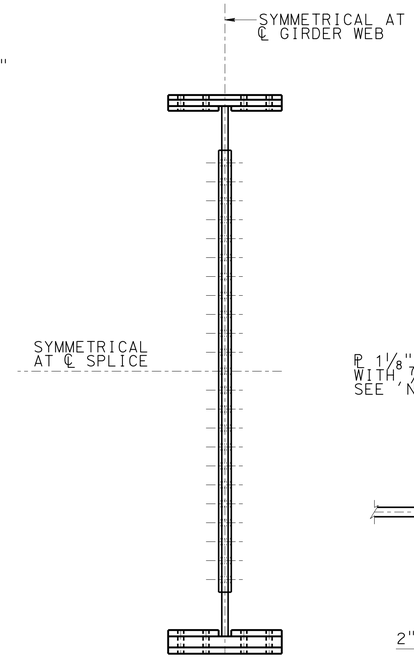

SECTION
1"=1'-0"

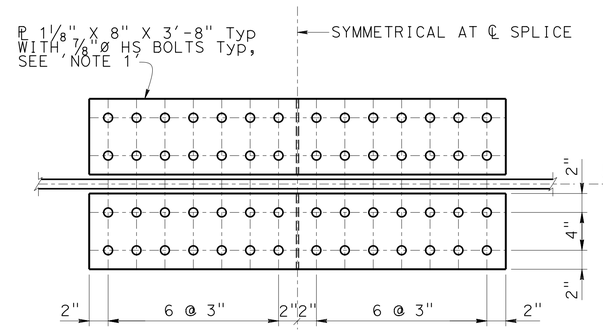

BOTTOM INSIDE FLANGE
1-1/2"=1'-0"

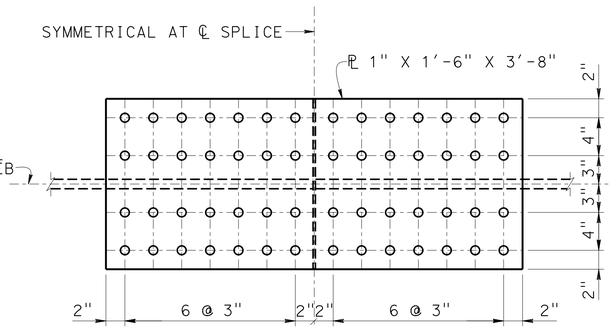

BOTTOM OUTSIDE FLANGE
1-1/2"=1'-0"

OPTIONAL FIELD SPLICE PLATE DETAIL

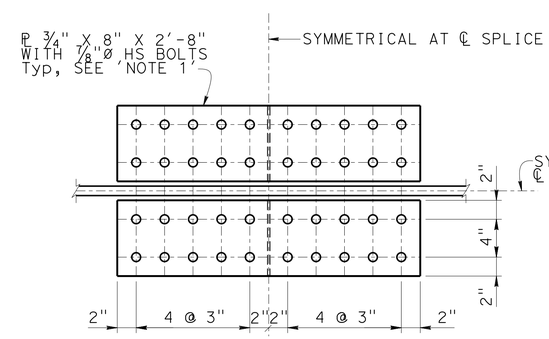

TOP INSIDE FLANGE
1-1/2"=1'-0"

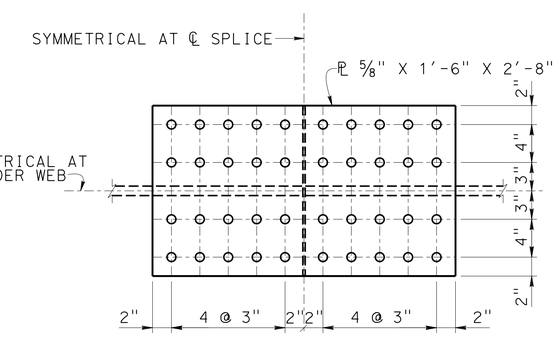

TOP OUTSIDE FLANGE
1-1/2"=1'-0"

OPTIONAL FIELD SPLICE PLATE DETAIL

NOTE:
THE CONTRACTOR MUST VERIFY ALL CONTROLLING FIELD DIMENSIONS BEFORE ORDERING OR FABRICATING ANY MATERIAL.

	BY	CHECKED
DESIGN	LEON VALLA	WILLIAM ADDLESPURGER
DETAILS	TON DOAN	LEON VALLA
QUANTITIES	LEON VALLA	WILLIAM ADDLESPURGER

STATE OF CALIFORNIA
DEPARTMENT OF TRANSPORTATION

DIVISION OF ENGINEERING SERVICES
STRUCTURE DESIGN
DESIGN BRANCH 12

BRIDGE NO. 55-0203
POST MILE 1.6

EL CAMINO REAL UC WIDENING
GIRDER DETAILS NO. 2

STRUCTURES DESIGN DETAIL SHEET (ENGLISH) (REV. 09-01-10)

ORIGINAL SCALE IN INCHES FOR REDUCED PLANS 0 1 2 3

UNIT: 3606
PROJECT NUMBER & PHASE: 1212000090 & 1 CONTRACT NO.: 12-0M491

DISREGARD PRINTS BEARING EARLIER REVISION DATES

REVISION DATES 07-08-15 12-08-15 03-09-16 12-08-15

SHEET 31 OF 74

FILE => 55-0203-1-gdt02.dgn

USERNAME => s127956 DATE PLOTTED => 18-MAY-2016 TIME PLOTTED => 14:39

NOTES:

A. Joint seal detail at pier 2 shown, for pier 3, see 'Joint Seal At Pier 3' detail

B. Not all deck steel shown for clarity

C. Note 'Section D-D' taken from 'End Diaphragm Bracing Detail' on "Bracing Details No. 2" sheet

LEGEND:

Limits of expansion joint filler

Limits of expanded polystyrene

DIST	COUNTY	ROUTE	POST MILES TOTAL PROJECT	SHEET No.	TOTAL SHEETS
12	Ora	5	1.2/2.2	202	244

Jinrong Wang 02-01-16
REGISTERED CIVIL ENGINEER DATE

3-28-16
PLANS APPROVAL DATE

REGISTERED PROFESSIONAL ENGINEER JINRONG WANG No. C49844 Exp. 09-30-16 CIVIL STATE OF CALIFORNIA

The State of California or its officers or agents shall not be responsible for the accuracy or completeness of scanned copies of this plan sheet.

REPLACEMENT JOINT SEAL TABLE

LOCATION	MINIMUM 'MR' (IN)	MINIMUM 'WI' (IN)	APPROX LENGTH (FT)	EXIST WATER STOP	CLEAN EXP JT DEPTH LIMITS
PIER 2	1"*	-	244'	YES	6"±
PIER 3	1"*	-	275'	YES	6"±

* USE TYPE A SEAL ONLY

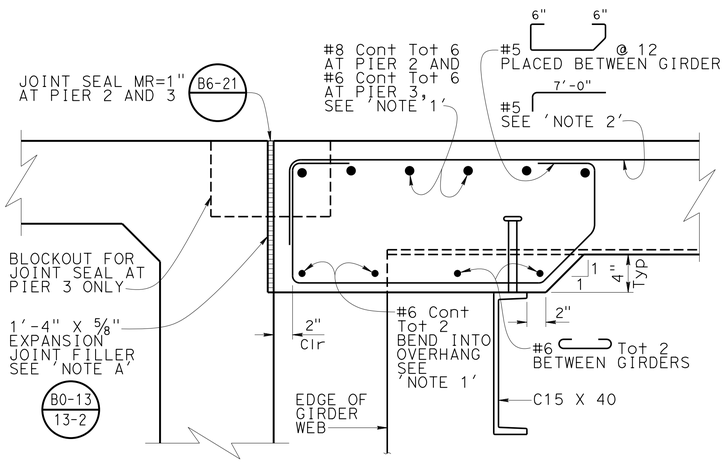

SECTION D-D

1-1/2"=1'-0"

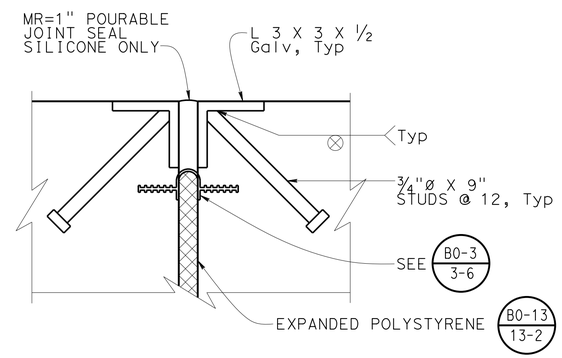

JOINT SEAL AT PIER 3

1"=1'-0"

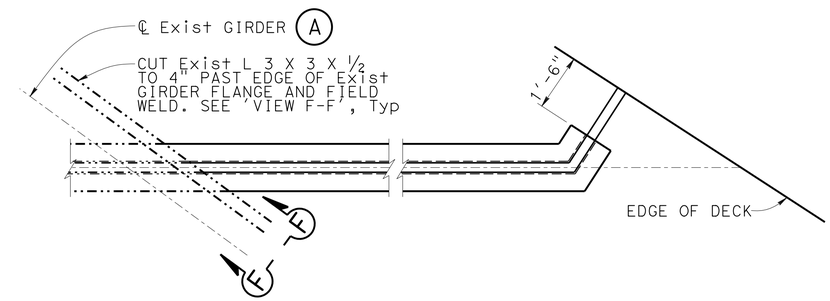

PLAN VIEW OF JOINT SEAL ARMOR AT PIER 3

1/2"=1'-0"

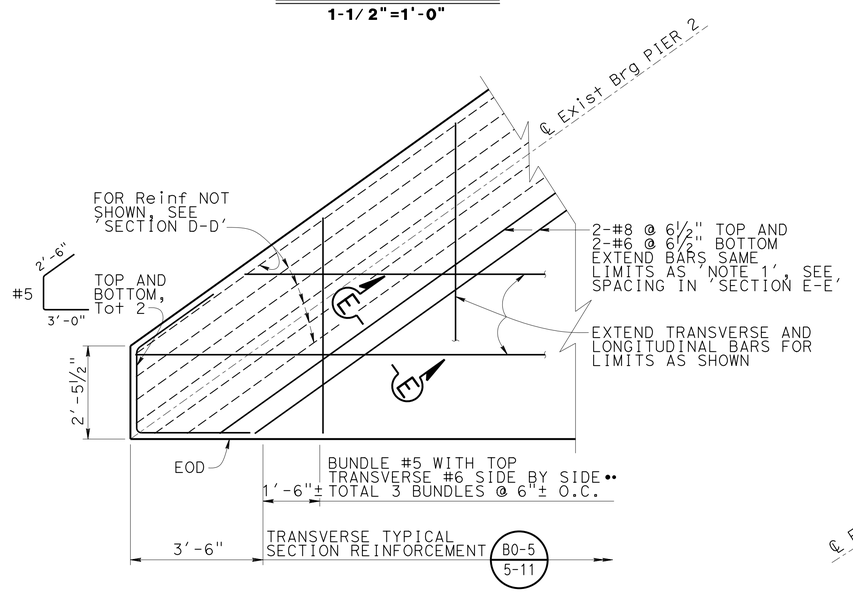

GIRDERS OMITTED FOR CLARITY

ACUTE CORNER DECK STEEL AT PIER 2

1/2"=1'-0"

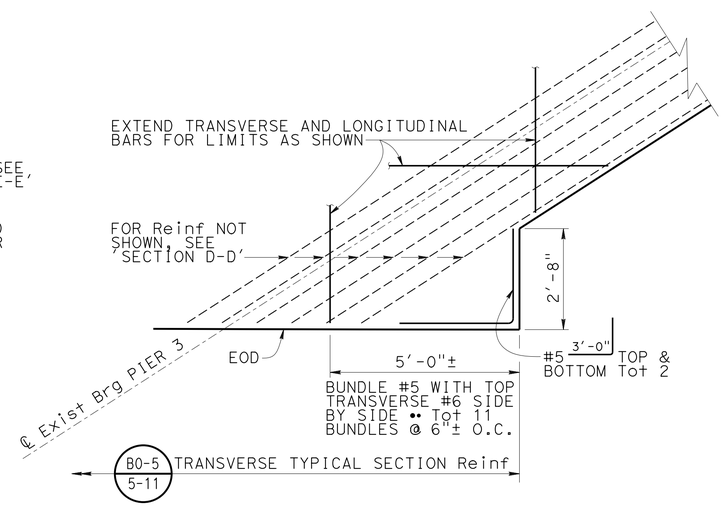

GIRDERS OMITTED FOR CLARITY

OBTUSE CORNER DECK STEEL AT PIER 3

1/2"=1'-0"

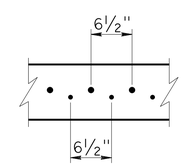

SECTION E-E

1"=1'-0"

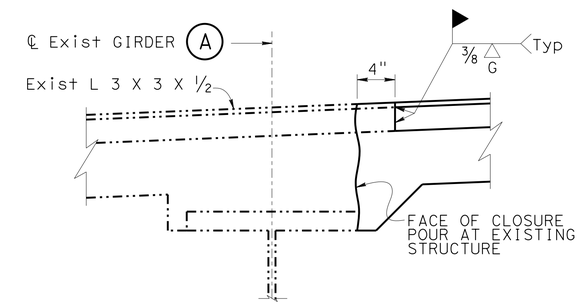

VIEW F-F

1-1/2"=1'-0"

NOTES:

1. Lap existing #6 diaphragm reinforcement with same closure pour and lapped condition detail as "Typical Section" sheet. Existing #6 diaphragm reinforcement to remain exposed and undamaged after removing concrete. Extend new diaphragm reinforcement from face of existing girder flange to edge of deck. Extend new 16" concrete diaphragm from face of existing girder flange to outside edge of exterior girder flange

2. Place @12 between girders including closure pour radial to ℄ of new interior girder. Place @6 over top flange of girders radial to ℄ of new interior girder. Extend all reinforcement from face of existing girder flange to outside edge of exterior girder flange

NOTE:
THE CONTRACTOR MUST VERIFY ALL CONTROLLING FIELD DIMENSIONS BEFORE ORDERING OR FABRICATING ANY MATERIAL.

	BY	CHECKED
DESIGN	LEON VALLA	WILLIAM ADDLESPURGER
DETAILS	TON DOAN	LEON VALLA
QUANTITIES	LEON VALLA	WILLIAM ADDLESPURGER

STATE OF CALIFORNIA
DEPARTMENT OF TRANSPORTATION

DIVISION OF ENGINEERING SERVICES
STRUCTURE DESIGN
DESIGN BRANCH 12

BRIDGE NO. 55-0203
POST MILE 1.6

EL CAMINO REAL UC WIDENING
GIRDER DETAILS NO. 3

STRUCTURES DESIGN DETAIL SHEET (ENGLISH) (REV. 09-01-10)

ORIGINAL SCALE IN INCHES FOR REDUCED PLANS 0 1 2 3

UNIT: 3606
PROJECT NUMBER & PHASE: 1212000090 & 1 CONTRACT NO.: 12-0M491

DISREGARD PRINTS BEARING EARLIER REVISION DATES

REVISION DATES 07-22-15 11-06-15 12-29-15 01-20-16

SHEET 32 OF 74

FILE => 55-0203-1-gdt03.dgn

USERNAME => s127956 DATE PLOTTED => 18-MAY-2016 TIME PLOTTED => 14:39

DIST	COUNTY	ROUTE	POST MILES TOTAL PROJECT	SHEET No.	TOTAL SHEETS
12	Ora	5	1.2/2.2	203	244

Jinrong Wang 02-01-16
REGISTERED CIVIL ENGINEER DATE

REGISTERED PROFESSIONAL ENGINEER
JINRONG WANG
No. C49844
Exp. 09-30-16
CIVIL
STATE OF CALIFORNIA

3-28-16
PLANS APPROVAL DATE

The State of California or its officers or agents shall not be responsible for the accuracy or completeness of scanned copies of this plan sheet.

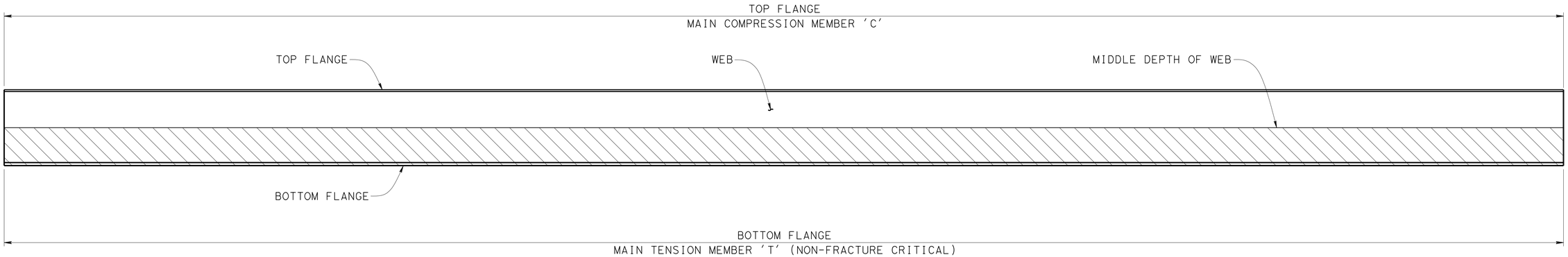

GIRDER SPANS A1 AND B1

MAIN MEMBER DESIGNATIONS

NO SCALE

NOTES:

1. 'Primary Components Of Main Members' are flange, webs, splice plates and transverse and bearing stiffeners
2. 'Secondary Member' are all members not designated as main member

LEGEND:

Indicates Main Tension Member 'T' (non-fracture critical)

Indicates Main Compression Member 'C'

NOTE:
THE CONTRACTOR MUST VERIFY ALL CONTROLLING FIELD DIMENSIONS BEFORE ORDERING OR FABRICATING ANY MATERIAL.

	BY	CHECKED
DESIGN	LEON VALLA	WILLIAM ADDLESPURGER
DETAILS	TON DOAN	LEON VALLA
QUANTITIES	LEON VALLA	WILLIAM ADDLESPURGER

STATE OF CALIFORNIA
DEPARTMENT OF TRANSPORTATION

DIVISION OF ENGINEERING SERVICES
STRUCTURE DESIGN
DESIGN BRANCH 12

BRIDGE NO. 55-0203
POST MILE 1.6

EL CAMINO REAL UC WIDENING
GIRDER DETAILS NO. 4

STRUCTURES DESIGN DETAIL SHEET (ENGLISH) (REV. 09-01-10)

ORIGINAL SCALE IN INCHES FOR REDUCED PLANS 0 1 2 3

UNIT: 3606
PROJECT NUMBER & PHASE: 1212000090 & 1 CONTRACT NO.: 12-0M491

DISREGARD PRINTS BEARING EARLIER REVISION DATES

REVISION DATES 08-04-15 11-03-15 12-29-15 03-09-16

SHEET 33 OF 74

DIST	COUNTY	ROUTE	POST MILES TOTAL PROJECT	SHEET No.	TOTAL SHEETS
12	Ora	5	1.2/2.2	204	244

Jinrong Wang 02-01-16
REGISTERED CIVIL ENGINEER DATE

03-28-16
PLANS APPROVAL DATE

REGISTERED PROFESSIONAL ENGINEER
JINRONG WANG
No. C49844
Exp. 09-30-16
CIVIL
STATE OF CALIFORNIA

The State of California or its officers or agents shall not be responsible for the accuracy or completeness of scanned copies of this plan sheet.

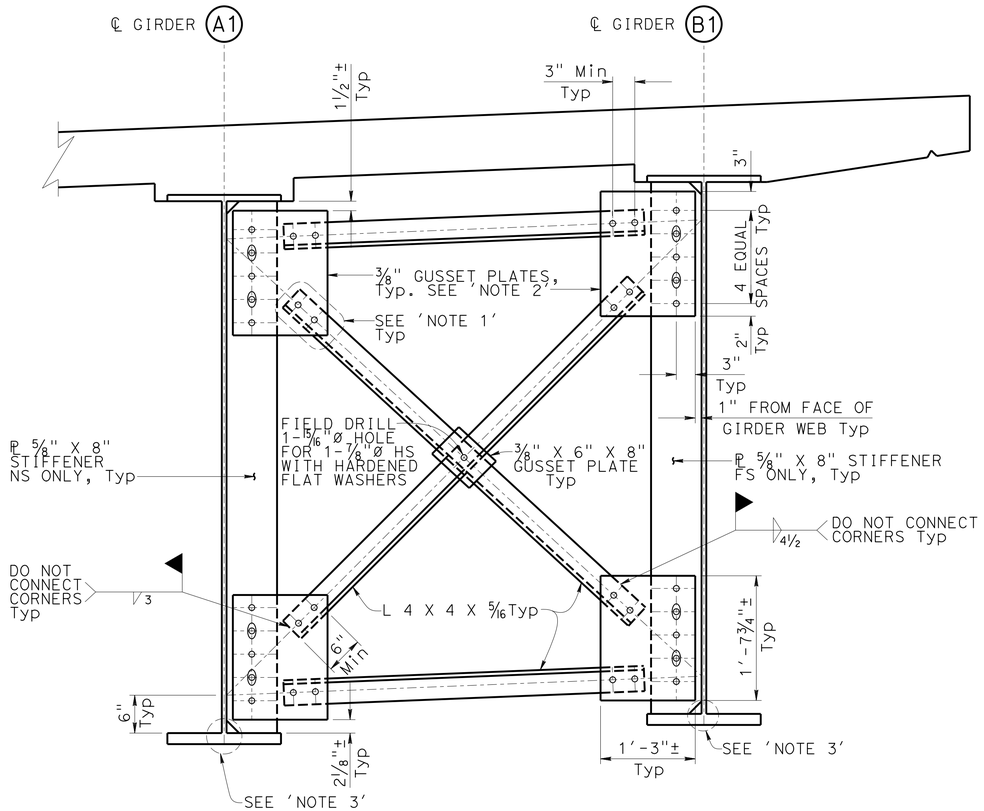

SECTION A-A

1"=1'-0"

TYPICAL INTERMEDIATE DIAPHRAGM BRACING DETAIL

NOTES:

1. Field drill 1-15/16"ø hole in ⅜" gusset plate for 1-⅞"ø HS bolt with hardened flat washers for erection purposes only. Field weld or field drill an additional 15/16"ø hole for a total of 2-⅞"ø HS bolts per each L 4 X 4 X 5/16 to ⅜" gusset plate connection with hardened flat washers typical. Sub-punch or field ream
2. Field drill 2-15/16"ø holes in ½" stiffener plates with 2½" long vertical slots for 2-⅞"ø HS bolts with washers as noted for erection purposes only. Field drill 3 additional 15/16"ø holes in ½" stiffener plates for a total of 5-⅞"ø HS bolts per each ⅜" gusset plate to ½" stiffener plate connection with hardened flat washers or as noted typical. Note contractor may bevel ½" X 8" ns stiffeners plates at girder A1 at all locations except at 1" bearing stiffeners at pier 2. Here contractor must use bent ⅜" gusset plates or use bevel shim plates and/or washers. 1" bearing stiffeners must be left vertical (plumb) to face of girder web typical. Sub-punch or field ream
3. For intermediate diaphragm stiffener connections to girder flange plates see "Steel Girder Connection Stiffener Details" sheet
4. Use 3½" diameter plate washers with 5/16" thickness at 2½" long vertical slot ⅞"ø HS bolts connections in lieu of hardened flat washers NS and FS

NOTE:
THE CONTRACTOR MUST VERIFY ALL CONTROLLING FIELD DIMENSIONS BEFORE ORDERING OR FABRICATING ANY MATERIAL.

	BY	CHECKED
DESIGN	LEON VALLA	WILLIAM ADDLESPURGER
DETAILS	TON DOAN	LEON VALLA
QUANTITIES	LEON VALLA	WILLIAM ADDLESPURGER

STATE OF CALIFORNIA
DEPARTMENT OF TRANSPORTATION

DIVISION OF ENGINEERING SERVICES
STRUCTURE DESIGN
DESIGN BRANCH 12

BRIDGE NO. 55-0203
POST MILE 1.6

EL CAMINO REAL UC WIDENING
BRACING DETAILS NO. 1

STRUCTURES DESIGN DETAIL SHEET (ENGLISH) (REV. 09-01-10)

ORIGINAL SCALE IN INCHES FOR REDUCED PLANS 0 1 2 3

UNIT: 3606
PROJECT NUMBER & PHASE: 1212000090 & 1 CONTRACT NO.: 12-0M491

DISREGARD PRINTS BEARING EARLIER REVISION DATES

REVISION DATES: 07-06-15 12-28-15 03-09-16 11-03-15

SHEET 34 OF 74

FILE => 55-0203-1-gdt05.dgn

USERNAME => s127956 DATE PLOTTED => 18-MAY-2016 TIME PLOTTED => 14:39

DIST	COUNTY	ROUTE	POST MILES TOTAL PROJECT	SHEET No.	TOTAL SHEETS
12	Ora	5	1.2/2.2	205	244

REGISTERED CIVIL ENGINEER 02-01-16 DATE

03-28-16
PLANS APPROVAL DATE

REGISTERED PROFESSIONAL ENGINEER JINRONG WANG No. C49844 Exp. 09-30-16 CIVIL STATE OF CALIFORNIA

The State of California or its officers or agents shall not be responsible for the accuracy or completeness of scanned copies of this plan sheet.

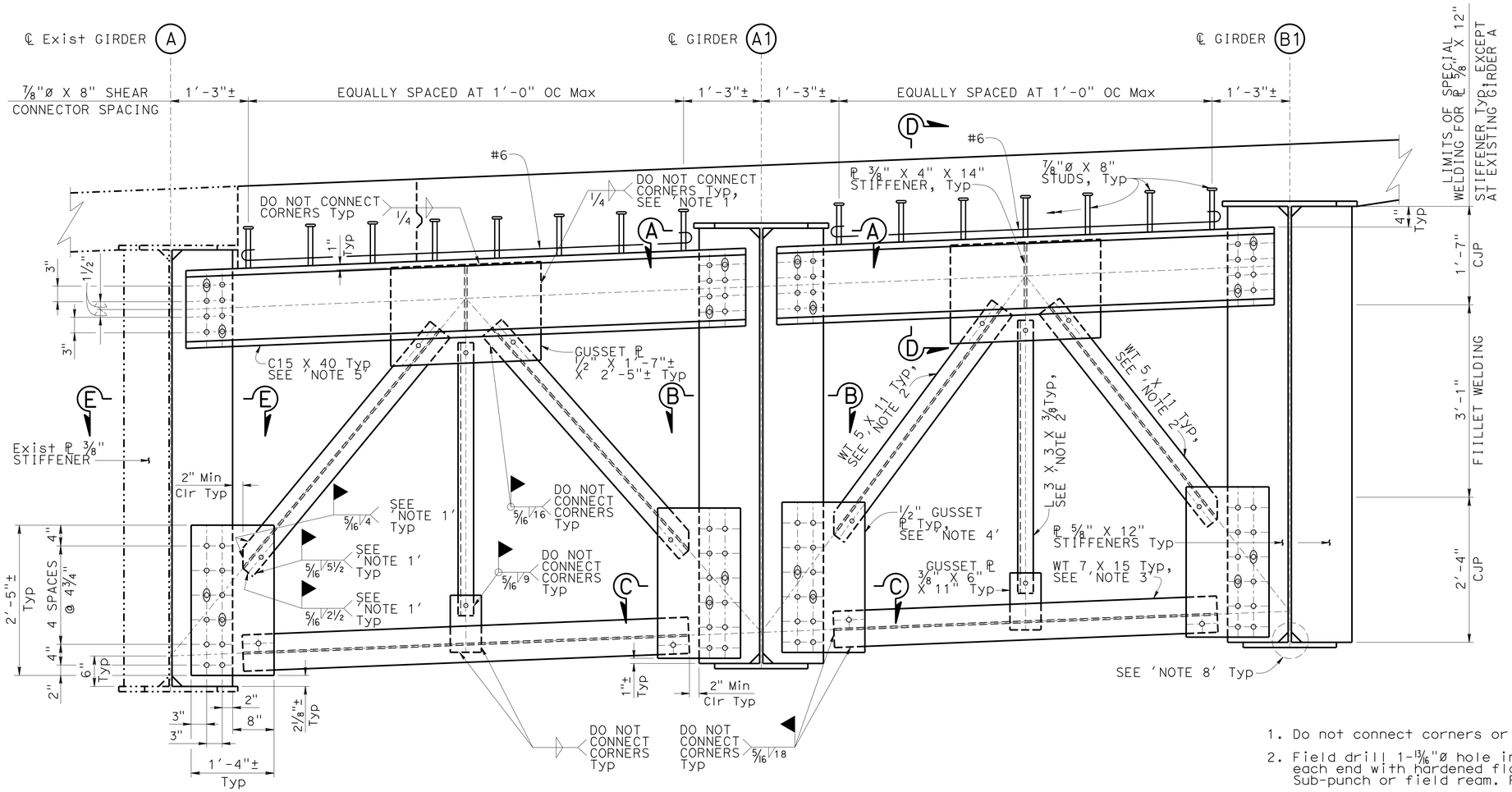

VIEW B-B

1"=1'-0"

END DIAPHRAGM BRACING DETAIL

SECTION AT PIER 3 ELEVATION SHOWN
SECTION AT PIER 2 ELEVATION SIMILAR

NOTE:
THE CONTRACTOR MUST VERIFY ALL CONTROLLING FIELD DIMENSIONS BEFORE ORDERING OR FABRICATING ANY MATERIAL.

NOTES:

1. Do not connect corners or return ends on any shop or field welding
2. Field drill 1-13/16"ø hole in member shown with 1-3/4"ø HS bolt at each end with hardened flat washers for erection purposes only. Sub-punch or field ream. Field weld as shown
3. Field drill 1-15/16"ø hole in member shown with 1-7/8"ø HS bolt at each end with hardened flat washers for erection purposes only. Sub-punch or field ream. Field weld as shown
4. Field drill 2-15/16"ø holes in 5/8" stiffener plates with 2 1/2" long vertical slots for 2-7/8"ø HS bolts with washers as noted for erection purposes only. Field drill 10 additional 15/16"ø holes in 5/8" stiffener plates for a total of 12-7/8"ø HS bolts per each 1/2" gusset plate to 5/8" stiffener plate connection along center line of piers with hardened flat washers, or as noted. Sub-punch or field ream
5. Field drill 2-15/16"ø holes in C15 X 40 channel section with 2 1/2" long vertical slots for 2-7/8"ø HS bolts with washers as noted for erection purposes only. Field drill 6 additional 15/16"ø holes in C15 X 40 channel section for a total of 8-7/8"ø HS bolts per each C15 X 40 channel section to 5/8" stiffener plate connection along center line of piers with hardened flat washers or as noted. Sub-punch or field ream
6. Use 3" X 3" square plate washers with 5/16" thickness at 2 1/2" long vertical slot, 7/8"ø HS bolt connections in lieu of hardened flat washers NS and FS
7. For 'Section A-A', 'Section B-B', 'Section C-C' and 'Section E-E', see "Bracing Details No. 3" sheet. For 'Section D-D', see "Girder Details No. 3" sheet
8. For details of end diaphragm stiffener connections to girder flange plates, see "Steel Girder Connection Stiffener Details" sheet
9. For 7/8"ø X 8" shear stud connection details, see "Steel Girder Shop Splice And Stud Connection Details" sheet

	BY	CHECKED
DESIGN	LEON VALLA	WILLIAM ADDLESPURGER
DETAILS	TON DOAN	LEON VALLA
QUANTITIES	LEON VALLA	WILLIAM ADDLESPURGER

STATE OF CALIFORNIA
DEPARTMENT OF TRANSPORTATION

DIVISION OF ENGINEERING SERVICES
STRUCTURE DESIGN
DESIGN BRANCH 12

BRIDGE NO. 55-0203
POST MILE 1.6

EL CAMINO REAL UC WIDENING
BRACING DETAILS NO. 2

STRUCTURES DESIGN DETAIL SHEET (ENGLISH) (REV. 09-01-10)

ORIGINAL SCALE IN INCHES FOR REDUCED PLANS 0 1 2 3

UNIT: 3606
PROJECT NUMBER & PHASE: 1212000090 & 1 CONTRACT NO.: 12-0M491

DISREGARD PRINTS BEARING EARLIER REVISION DATES

REVISION DATES 07-24-15 11-04-15 03-09-16

SHEET 35 OF 74

FILE => 55-0203-1-gdt06.dgn

USERNAME => s127956 DATE PLOTTED => 18-MAY-2016 TIME PLOTTED => 14:39

DIST	COUNTY	ROUTE	POST MILES TOTAL PROJECT	SHEET No.	TOTAL SHEETS
12	Ora	5	1.2/2.2	206	244

Jinrong Wang 02-01-16
REGISTERED CIVIL ENGINEER DATE

03-28-16
PLANS APPROVAL DATE

REGISTERED PROFESSIONAL ENGINEER
JINRONG WANG
No. C49844
Exp. 09-30-16
CIVIL
STATE OF CALIFORNIA

The State of California or its officers or agents shall not be responsible for the accuracy or completeness of scanned copies of this plan sheet.

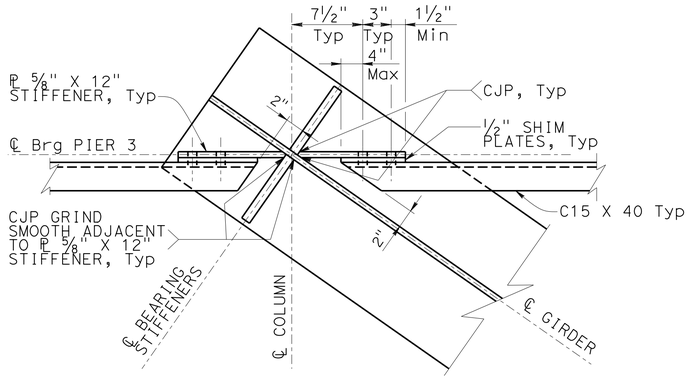

SECTION A-A
1-1/2"=1'-0"

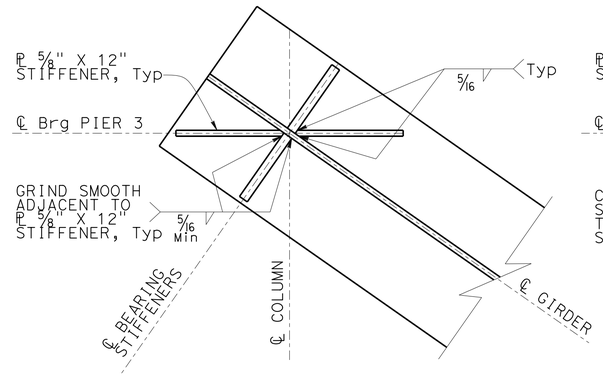

SECTION B-B
1-1/2"=1'-0"

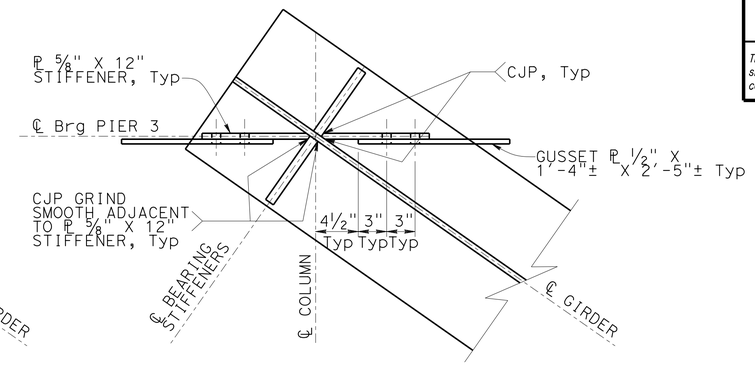

SECTION C-C
1-1/2"=1'-0"

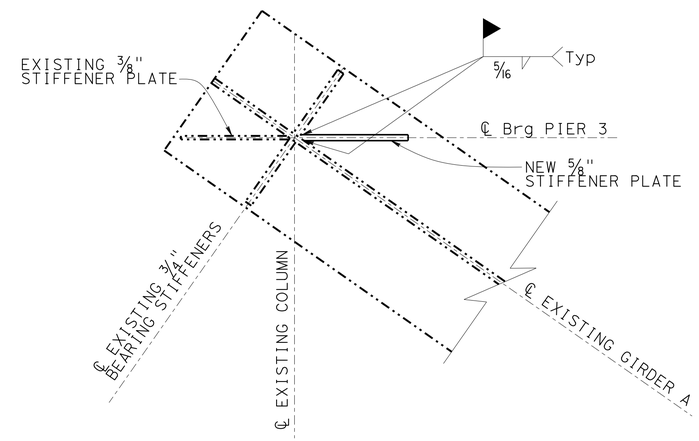

NOTES:

1. For dimension details of new stiffener plate not shown see 'Section A-A' and 'Section C-C'
2. For field welding of new ⅝" stiffener plate to existing girder flanges see 'Alternative 1 Connection Stiffener' details on 'Steel Girder Connection Stiffener Details' sheet

SECTION E-E
1-1/2"=1'-0"

NOTE:
THE CONTRACTOR MUST VERIFY ALL CONTROLLING FIELD DIMENSIONS BEFORE ORDERING OR FABRICATING ANY MATERIAL.

	BY	CHECKED
DESIGN	LEON VALLA	WILLIAM ADDLESPURGER
DETAILS	TON DOAN	LEON VALLA
QUANTITIES	LEON VALLA	WILLIAM ADDLESPURGER

STATE OF CALIFORNIA
DEPARTMENT OF TRANSPORTATION

DIVISION OF ENGINEERING SERVICES
STRUCTURE DESIGN
DESIGN BRANCH 12

BRIDGE NO. 55-0203
POST MILE 1.6

EL CAMINO REAL UC WIDENING
BRACING DETAILS NO. 3

STRUCTURES DESIGN DETAIL SHEET (ENGLISH) (REV. 09-01-10)

ORIGINAL SCALE IN INCHES FOR REDUCED PLANS 0 1 2 3

UNIT: 3606
PROJECT NUMBER & PHASE: 1212000090 & 1 CONTRACT NO.: 12-0M491

DISREGARD PRINTS BEARING EARLIER REVISION DATES

REVISION DATES: 07-22-15 11-04-15 12-29-15 03-09-16

SHEET 36 OF 74

FILE => 55-0203-I-gdt07.dgn

USERNAME => s127956 DATE PLOTTED => 18-MAY-2016 TIME PLOTTED => 14:39

DIST	COUNTY	ROUTE	POST MILES TOTAL PROJECT	SHEET No.	TOTAL SHEETS
12	Ora	5	1.2/2.2	207	244

Jinrong Wang 02-01-16
REGISTERED CIVIL ENGINEER DATE

03-28-16
PLANS APPROVAL DATE

REGISTERED PROFESSIONAL ENGINEER
JINRONG WANG
No. C49844
Exp. 09-30-16
CIVIL
STATE OF CALIFORNIA

The State of California or its officers or agents shall not be responsible for the accuracy or completeness of scanned copies of this plan sheet.

NOTES:

1. All rectangular plate washers to be beveled to provide a level surface for 1½" diameter anchor rod, elastomeric washer, and nuts. Minimum thickness of rectangular plate washers = ⅜" after beveling
2. For end diaphragm bracing details, see "Bracing Details No. 2" sheet
3. For 'Section C-C' and 'View D-D' see "Bearing Details No. 2" sheet.
4. Bearing for Girder A1 shown, bearing for girder B1 similar

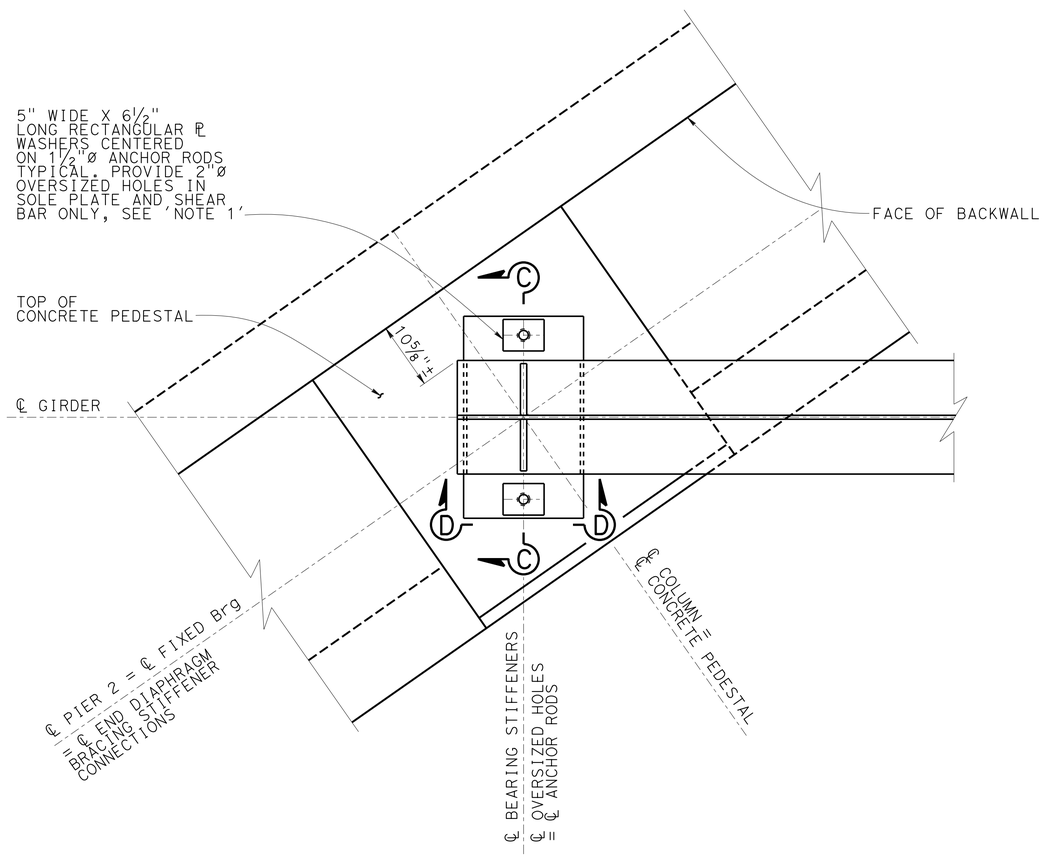

PIER 2 FIXED BEARING

1"=1'-0"

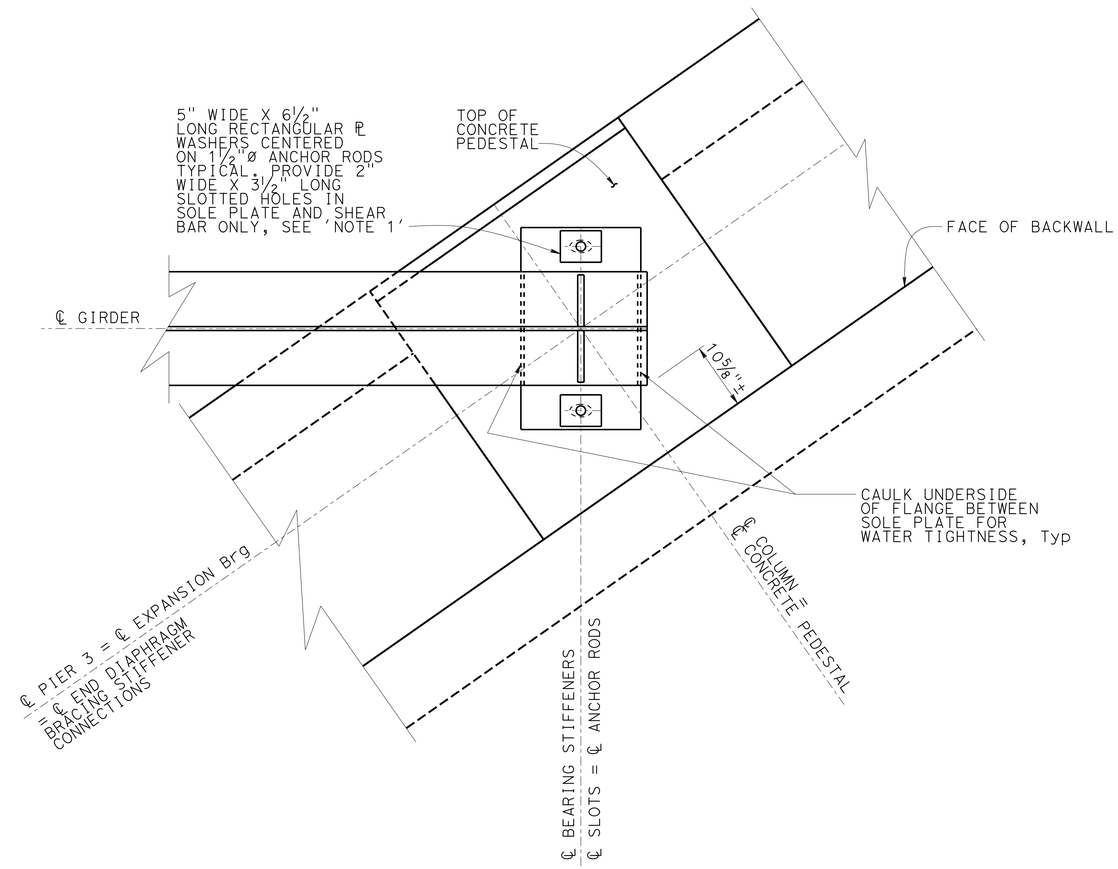

PIER 3 EXPANSION BEARING

1"=1'-0"

NOTE:
THE CONTRACTOR MUST VERIFY ALL CONTROLLING FIELD DIMENSIONS BEFORE ORDERING OR FABRICATING ANY MATERIAL.

	BY	CHECKED
DESIGN	LEON VALLA	WILLIAM ADDLESPURGER
DETAILS	TON DOAN	LEON VALLA
QUANTITIES	LEON VALLA	WILLIAM ADDLESPURGER

STATE OF CALIFORNIA
DEPARTMENT OF TRANSPORTATION

DIVISION OF ENGINEERING SERVICES
STRUCTURE DESIGN
DESIGN BRANCH 12

BRIDGE NO. 55-0203
POST MILE 1.6

EL CAMINO REAL UC WIDENING
BEARING DETAILS NO. 1

STRUCTURES DESIGN DETAIL SHEET (ENGLISH) (REV. 09-01-10)

ORIGINAL SCALE IN INCHES FOR REDUCED PLANS 0 1 2 3

UNIT: 3606
PROJECT NUMBER & PHASE: 1212000090 & 1 CONTRACT NO.: 12-0M491

DISREGARD PRINTS BEARING EARLIER REVISION DATES

REVISION DATES: 07-16-15 08-17-15 11-04-15 12-29-15

SHEET 37 OF 74

FILE => 55-0203-1-gdt08.dgn

USERNAME => s127956 DATE PLOTTED => 18-MAY-2016 TIME PLOTTED => 14:39

DIST	COUNTY	ROUTE	POST MILES TOTAL PROJECT	SHEET No.	TOTAL SHEETS
12	Ora	5	1.2/2.2	208	244

Jinrong Wang 02-01-16
REGISTERED CIVIL ENGINEER DATE

03-28-16
PLANS APPROVAL DATE

REGISTERED PROFESSIONAL ENGINEER
JINRONG WANG
No. C49844
Exp. 09-30-16
CIVIL
STATE OF CALIFORNIA

The State of California or its officers or agents shall not be responsible for the accuracy or completeness of scanned copies of this plan sheet.

NOTES:

1. Bevel the sole plate to provide a level bearing surface. Minimum thickness of sole plate=1½" after beveling
2. Install elastomeric washer and lower nut in contact with plate and then back off ½ turn. Install upper nut snug tight to prevent lower nut from loosening. Double nut detail must provide a thread locking system

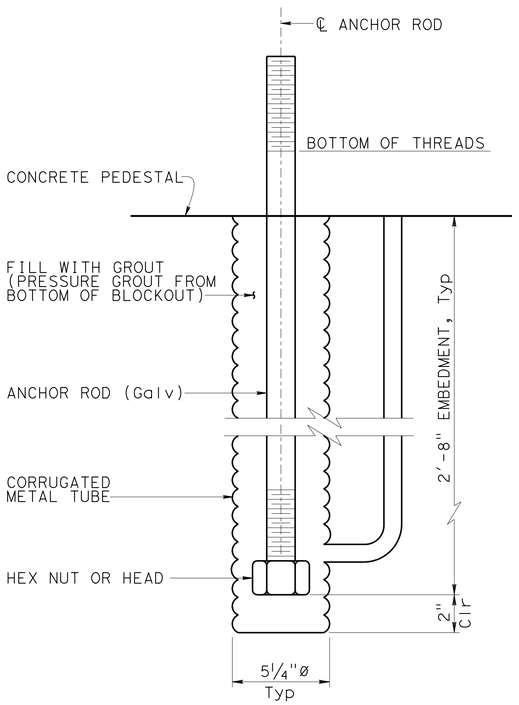

TYPICAL ANCHOR ROD BLOCKOUT
3"=1'-0"

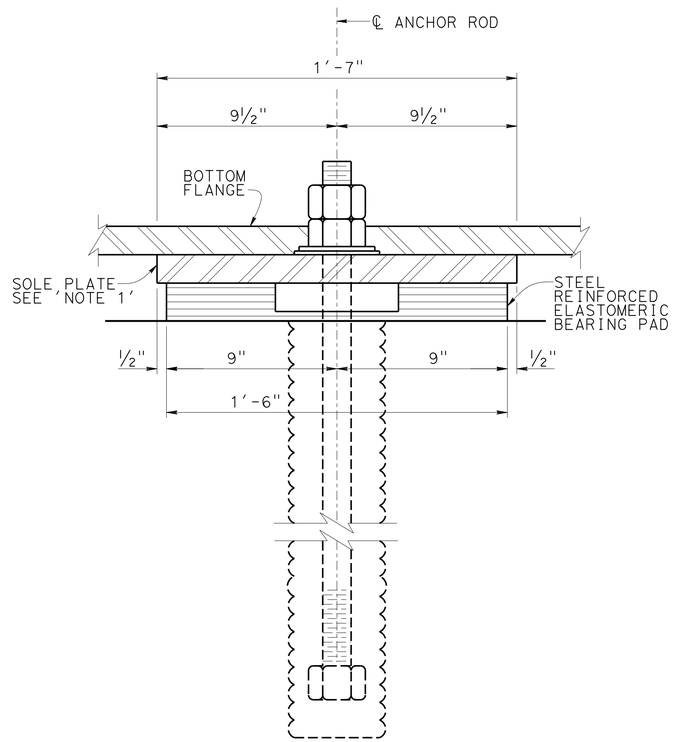

VIEW D-D
3"=1'-0"

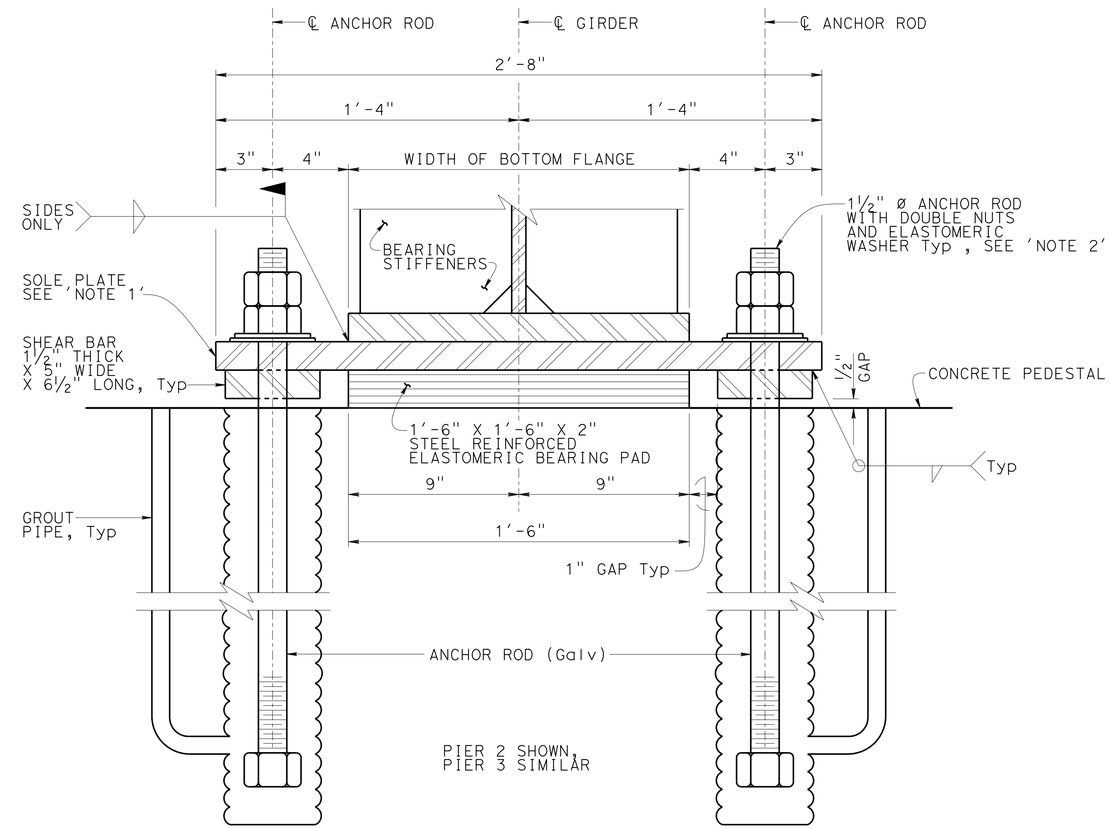

SECTION C-C
3"=1'-0"

NOTE:
THE CONTRACTOR MUST VERIFY ALL CONTROLLING FIELD DIMENSIONS BEFORE ORDERING OR FABRICATING ANY MATERIAL.

	BY	CHECKED
DESIGN	LEON VALLA	WILLIAM ADDLESPURGER
DETAILS	TON DOAN	LEON VALLA
QUANTITIES	LEON VALLA	WILLIAM ADDLESPURGER

STATE OF CALIFORNIA
DEPARTMENT OF TRANSPORTATION

DIVISION OF ENGINEERING SERVICES
STRUCTURE DESIGN
DESIGN BRANCH 12

BRIDGE NO. 55-0203
POST MILE 1.6

EL CAMINO REAL UC WIDENING
BEARING DETAILS NO. 2

STRUCTURES DESIGN DETAIL SHEET (ENGLISH) (REV. 09-01-10)

ORIGINAL SCALE IN INCHES FOR REDUCED PLANS 0 1 2 3

UNIT: 3606
PROJECT NUMBER & PHASE: 1212000090 & 1 CONTRACT NO.: 12-0M491

DISREGARD PRINTS BEARING EARLIER REVISION DATES

REVISION DATES: 07-12-15 11-04-15 12-29-15

SHEET 38 OF 74

FILE => 55-0203-1-gd+09.dgn

USERNAME => s127956 DATE PLOTTED => 18-MAY-2016 TIME PLOTTED => 14:39

DIST	COUNTY	ROUTE	POST MILES TOTAL PROJECT	SHEET No.	TOTAL SHEETS
12	Ora	5	1.2/2.2	209	244

REGISTERED CIVIL ENGINEER 02-01-16 DATE

03-28-16
PLANS APPROVAL DATE

REGISTERED PROFESSIONAL ENGINEER JINRONG WANG No. C49844 Exp. 09-30-16 CIVIL STATE OF CALIFORNIA

The State of California or its officers or agents shall not be responsible for the accuracy or completeness of scanned copies of this plan sheet.

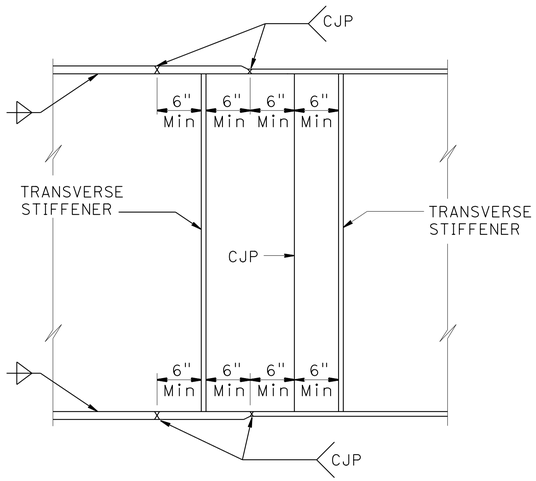

GIRDER SHOP SPLICE
NO SCALE

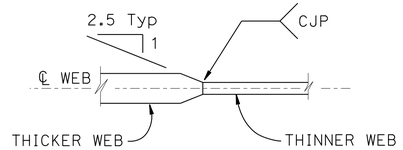

WEB THICKNESS

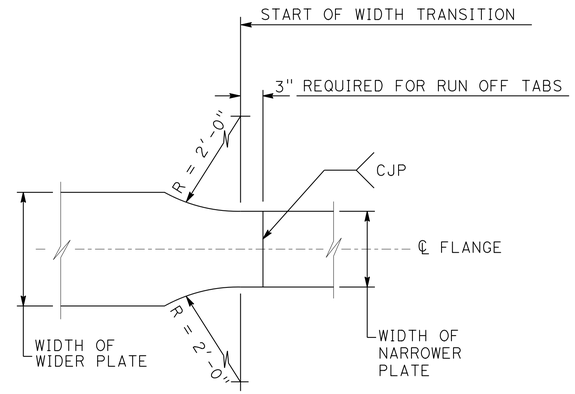

FLANGE WIDTH

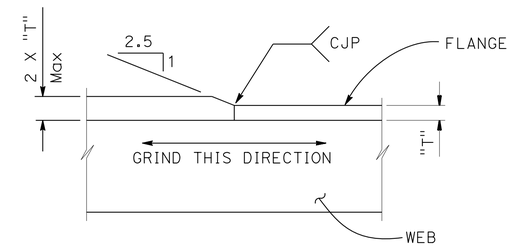

FLANGE THICKNESS

TRANSITION DETAILS
NO SCALE

NOTES:

1. Alternative girder splices may be permitted subject to approval by the Engineer
2. Web splices:
   Grind all weld surfaces flush on the exterior face of exterior girders
3. Flange splices:
   Grind all weld surfaces flush on tension flanges.
   Grind all weld surfaces flush on compression

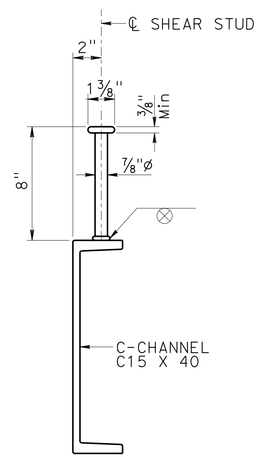

SHEAR STUD CONNECTION AT CHANNEL SECTION
NO SCALE

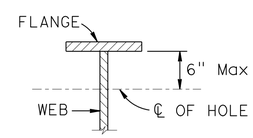

1" Max ø HOLE AT 4' ± Min SPACING TO BE USED FOR FALSEWORK SUPPORT WHEN SPECIFIED BY THE CONTRACTOR. CONTRACTOR TO DETERMINE LOCATION, SIZE AND SPACING

2" Max ø HOLE TO BE DRILLED WHERE LIGHTING CONDUIT PASSES THROUGH GIRDER WEB. FOR LOCATION AND SIZE OF HOLE SEE "ROAD WAY PLANS"

HOLES FOR CONDUIT AND FALSEWORK
NO SCALE

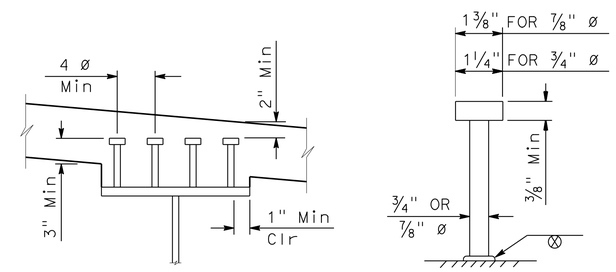

LENGTHS OF STUDS TO BE DETERMINED BY THE CONTRACTOR, MINIMUM LENGTH IS 6"

ALTERNATIVE TYPES OF SHEAR CONNECTORS MAY BE PERMITTED SUBJECT TO APPROVAL BY THE ENGINEER

STUD CONNECTOR (UON)
NO SCALE

NOTE:
THE CONTRACTOR MUST VERIFY ALL CONTROLLING FIELD DIMENSIONS BEFORE ORDERING OR FABRICATING ANY MATERIAL.

DESIGN	BY LEON VALLA	CHECKED WILLIAM ADDLESPURGER	
DETAILS	BY VARIES	CHECKED LEON VALLA	
QUANTITIES	BY LEON VALLA	CHECKED WILLIAM ADDLESPURGER	

STATE OF CALIFORNIA
DEPARTMENT OF TRANSPORTATION

DIVISION OF ENGINEERING SERVICES
STRUCTURE DESIGN
DESIGN BRANCH 12

BRIDGE NO. 55-0203
POST MILE 1.6

EL CAMINO REAL UC WIDENING
STEEL GIRDER SHOP SPLICE & STUD CONNECTOR DETAILS

STRUCTURES DESIGN DETAIL SHEET (ENGLISH) (REV. 09-01-10)

ORIGINAL SCALE IN INCHES FOR REDUCED PLANS 0 1 2 3

UNIT: 3606
PROJECT NUMBER & PHASE: 1212000090 & 1 CONTRACT NO.: 12-0M491

DISREGARD PRINTS BEARING EARLIER REVISION DATES

REVISION DATES 06-16-14 01-20-16 11-06-15 12-29-15

SHEET 39 OF 74

FILE => 55-0203-1-gdt10.dgn

USERNAME => s127956 DATE PLOTTED => 18-MAY-2016 TIME PLOTTED => 14:39

DIST	COUNTY	ROUTE	POST MILES TOTAL PROJECT	SHEET No.	TOTAL SHEETS
12	Ora	5	1.2/2.2	210	244

Jinrong Wang 02-01-16
REGISTERED CIVIL ENGINEER DATE

03-28-16
PLANS APPROVAL DATE

REGISTERED PROFESSIONAL ENGINEER
JINRONG WANG
No. C49844
Exp. 09-30-16
CIVIL
STATE OF CALIFORNIA

The State of California or its officers or agents shall not be responsible for the accuracy or completeness of scanned copies of this plan sheet.

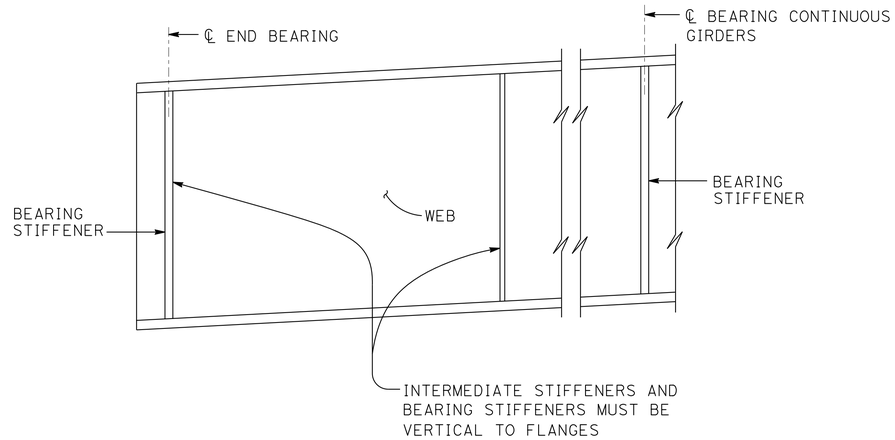

TRANSVERSE STIFFENERS

NO SCALE

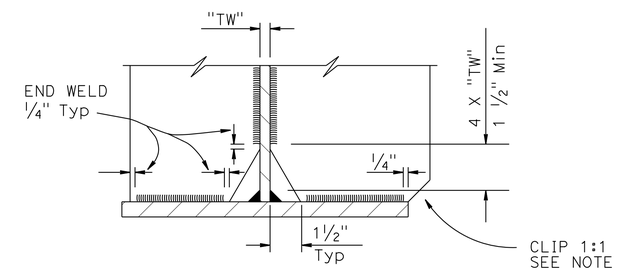

COPE AND WELDING DETAIL

NO SCALE

NOTE: Omit clip at bottom flange when less than 2"

NOTES:

1. Under full dead load as shown on the camber diagram, girder ends and bearing stiffeners shall be vertical
2. For intermediate stiffeners which have Cross Frames or Diaphragms attached, see "STEEL GIRDER CONNECTION STIFFENER DETAILS" sheet
3. For Bearing Stiffeners which have Cross Frames or Diaphragms attached, use details shown on this sheet. For top tension flange alternative connection see "ALTERNATIVE 3 BOLTED CONNECTION" detail on "STEEL GIRDER CONNECTION STIFFENER DETAILS" sheet. See Project Plan sheets for locations where bolted connection is required
4. For stiffener sizes see Project Plan sheets
5. Fillet Weld size to be minimum size from Project Specifications unless otherwise shown on Project Plan sheets

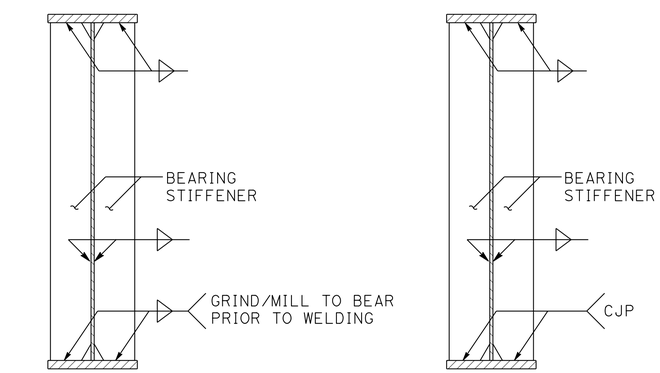

ALTERNATIVE 1 **ALTERNATIVE 2**

BEARING STIFFENERS

NO SCALE

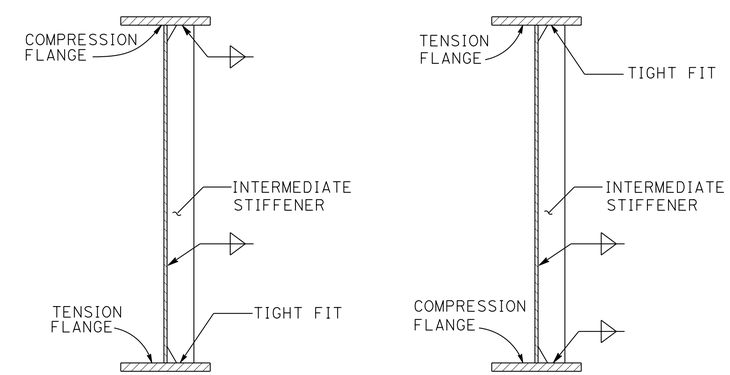

INTERMEDIATE STIFFENERS

NO SCALE

(WITHOUT CROSS FRAME ATTACHED)
(ONE-SIDE STIFFENER SHOWN, OTHER SIDE SIMILAR)

NOTE:
THE CONTRACTOR MUST VERIFY ALL CONTROLLING FIELD DIMENSIONS BEFORE ORDERING OR FABRICATING ANY MATERIAL.

	BY	CHECKED
DESIGN	LEON VALLA	WILLIAM ADDLESPURGER
DETAILS	VARIES	LEON VALLA
QUANTITIES	LEON VALLA	WILLIAM ADDLESPURGER

STATE OF CALIFORNIA
DEPARTMENT OF TRANSPORTATION

DIVISION OF ENGINEERING SERVICES
STRUCTURE DESIGN
DESIGN BRANCH 12

BRIDGE NO. 55-0203
POST MILE 1.6

EL CAMINO REAL UC WIDENING
STEEL GIRDER TRANSVERSE STIFFENER DETAILS

STRUCTURES DESIGN DETAIL SHEET (ENGLISH) (REV. 09-01-10)

ORIGINAL SCALE IN INCHES FOR REDUCED PLANS 0 1 2 3

UNIT: 3606
PROJECT NUMBER & PHASE: 1212000090 & 1 CONTRACT NO.: 12-0M491

DISREGARD PRINTS BEARING EARLIER REVISION DATES

REVISION DATES: 06-16-14 11-06-15 12-29-15

SHEET 40 OF 74

FILE => 55-0203-1-gdt11.dgn

USERNAME => s127956 DATE PLOTTED => 18-MAY-2016 TIME PLOTTED => 14:39

DIST	COUNTY	ROUTE	POST MILES TOTAL PROJECT	SHEET No.	TOTAL SHEETS
12	Ora	5	1.2/2.2	211	244

Jinrong Wang 02-01-16
REGISTERED CIVIL ENGINEER DATE

03-28-16
PLANS APPROVAL DATE

REGISTERED PROFESSIONAL ENGINEER
JINRONG WANG
No. C49844
Exp. 09-30-16
CIVIL
STATE OF CALIFORNIA

The State of California or its officers or agents shall not be responsible for the accuracy or completeness of scanned copies of this plan sheet.

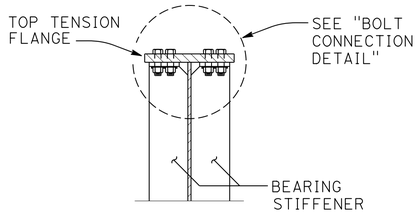

ALTERNATIVE 3
BOLTED CONNECTION

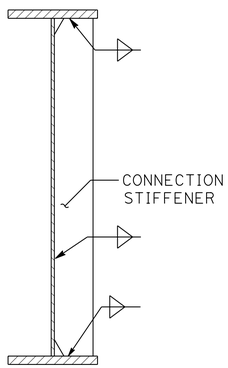

ALTERNATIVE 1
WELDED CONNECTION AT END AND INTERMEDIATE DIAPHRAGMS

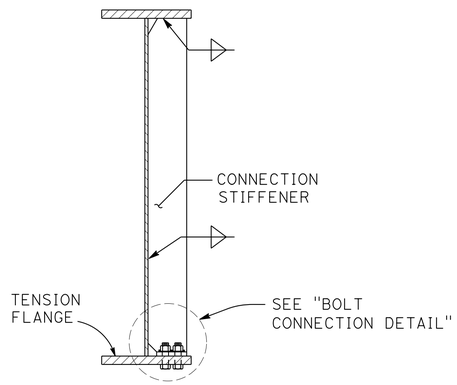

ALTERNATIVE 2
AT INTERMEDIATE DIAPHRAGMS ONLY

CONNECTION STIFFENER

NO SCALE

CROSS FRAME OR DIAPHRAGM NOT SHOWN
(ONE-SIDE STIFFENER SHOWN, OTHER SIDE SIMILAR)

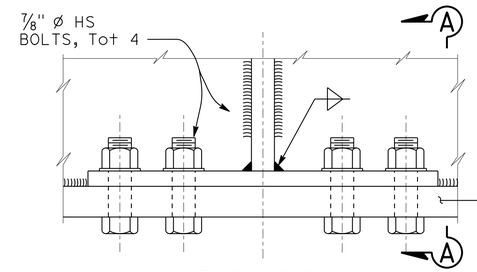

ELEVATION

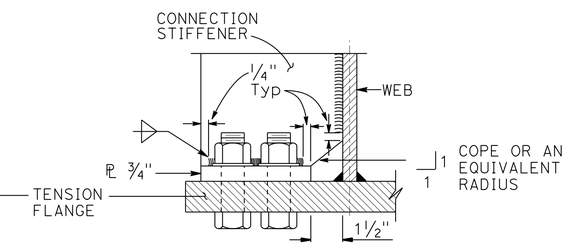

SECTION A-A

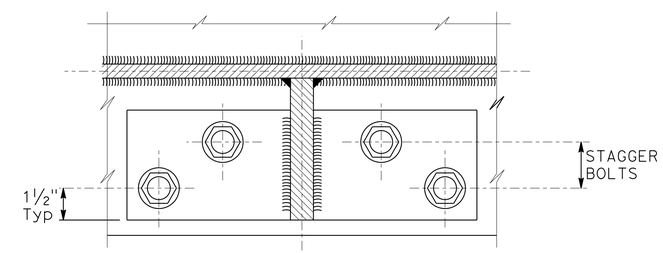

PLAN VIEW

BOLT CONNECTION DETAIL

NO SCALE

FOR 3/4" PLATE:
WIDTH TO BE AS DRAWN.
LENGTH TO BE MINIMUM TO PROVIDE FOR INSTALLATION CLEARANCE AND 2 5/8" C-C BETWEEN ADJACENT BOLTS.

NOTES:

1. For stiffener sizes see Project Plan sheets.
2. Fillet Weld size to be minimum size from Project Specifications unless otherwise shown on Project Plan sheets.
3. See Project Plan sheets for locations where bolted connection is required.

NOTE:
THE CONTRACTOR MUST VERIFY ALL CONTROLLING FIELD DIMENSIONS BEFORE ORDERING OR FABRICATING ANY MATERIAL.

	BY	CHECKED
DESIGN	LEON VALLA	WILLIAM ADDLESPURGER
DETAILS	VARIES	LEON VALLA
QUANTITIES	LEON VALLA	WILLIAM ADDLESPURGER

STATE OF CALIFORNIA
DEPARTMENT OF TRANSPORTATION

DIVISION OF ENGINEERING SERVICES
STRUCTURE DESIGN
DESIGN BRANCH 12

BRIDGE NO. 55-0203
POST MILE 1.6

EL CAMINO REAL UC WIDENING
STEEL GIRDER CONNECTION STIFFENER DETAILS

STRUCTURES DESIGN DETAIL SHEET (ENGLISH) (REV. 09-01-10)

ORIGINAL SCALE IN INCHES FOR REDUCED PLANS 0 1 2 3

UNIT: 3606
PROJECT NUMBER & PHASE: 1212000090 & 1 CONTRACT NO.: 12-0M491

DISREGARD PRINTS BEARING EARLIER REVISION DATES

REVISION DATES: 06-16-14 11-06-15 12-29-15

SHEET 41 OF 74

FILE => 55-0203-1-gdt12.dgn

USERNAME => s127956 DATE PLOTTED => 18-MAY-2016 TIME PLOTTED => 14:39

DIST	COUNTY	ROUTE	POST MILES TOTAL PROJECT	SHEET No.	TOTAL SHEETS
12	Ora	5	1.2/2.2	212	244

Jinrong Wang 02-01-16
REGISTERED CIVIL ENGINEER DATE

03-28-16
PLANS APPROVAL DATE

REGISTERED PROFESSIONAL ENGINEER
JINRONG WANG
No. C49844
Exp. 09-30-16
CIVIL
STATE OF CALIFORNIA

The State of California or its officers or agents shall not be responsible for the accuracy or completeness of electronic copies of this plan sheet.

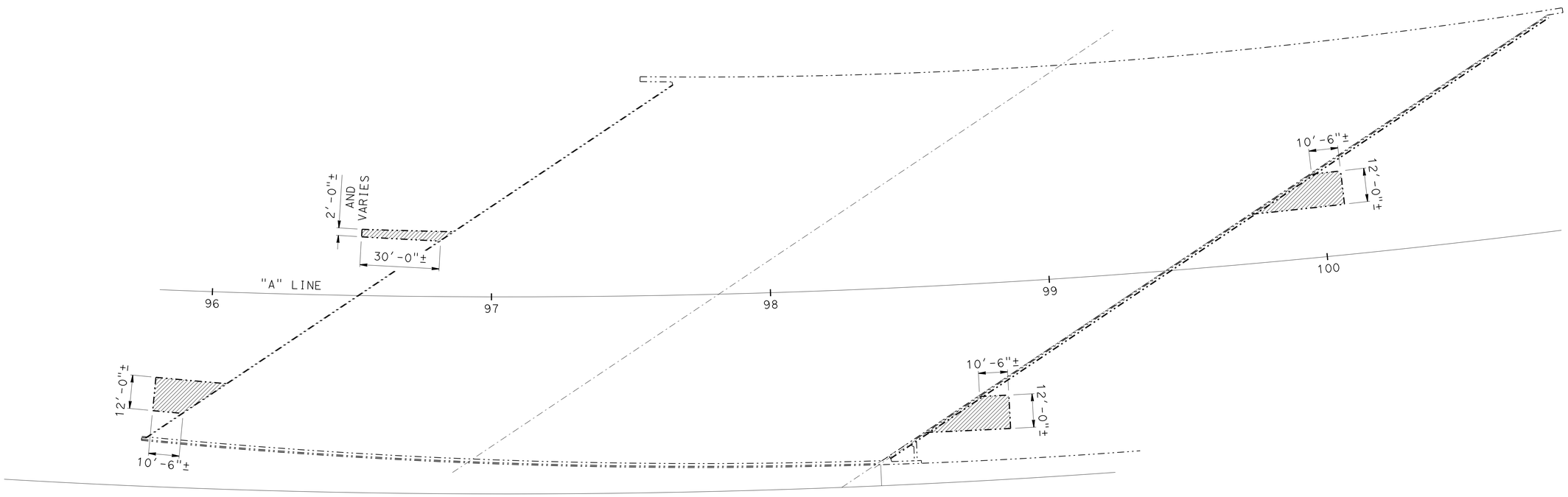

PLAN
NO SCALE

Indicates removal of existing approach slabs

NOTE:
THE CONTRACTOR MUST VERIFY ALL CONTROLLING FIELD DIMENSIONS BEFORE ORDERING OR FABRICATING ANY MATERIAL.

DESIGN	BY J. WANG	CHECKED L. VALLA	
DETAILS	BY Kc	CHECKED L. VALLA	
QUANTITIES	BY L. VALLA	CHECKED P. MAK	

STATE OF CALIFORNIA
DEPARTMENT OF TRANSPORTATION

DIVISION OF ENGINEERING SERVICES
STRUCTURE DESIGN
DESIGN BRANCH 12

BRIDGE NO. 55-0203
POST MILE 1.6

EL CAMINO REAL UC WIDENING
EXISTING APPROACH SLAB REMOVAL

STRUCTURES DESIGN DETAIL SHEET (ENGLISH) (REV. 09-01-10)

ORIGINAL SCALE IN INCHES FOR REDUCED PLANS 0 1 2 3

UNIT: 3606
PROJECT NUMBER & PHASE: 1212000090 1
CONTRACT NO.: 12-0M4901

DISREGARD PRINTS BEARING EARLIER REVISION DATES

REVISION DATES: 4-18-15 1-20-16 3-10-16

SHEET 42 OF 74

FILE => 55-0203-m-appr-rem.dgn

USERNAME => s127956 DATE PLOTTED => 18-MAY-2016 TIME PLOTTED => 14:39

DIST	COUNTY	ROUTE	POST MILES TOTAL PROJECT	SHEET No.	TOTAL SHEETS
12	Ora	5	1.2/2.2	213	244

Jinrong Wang 02-01-16
REGISTERED CIVIL ENGINEER DATE

03-28-16
PLANS APPROVAL DATE

REGISTERED PROFESSIONAL ENGINEER
JINRONG WANG
No. C49844
Exp. 09-30-16
CIVIL
STATE OF CALIFORNIA

The State of California or its officers or agents shall not be responsible for the accuracy or completeness of scanned copies of this plan sheet.

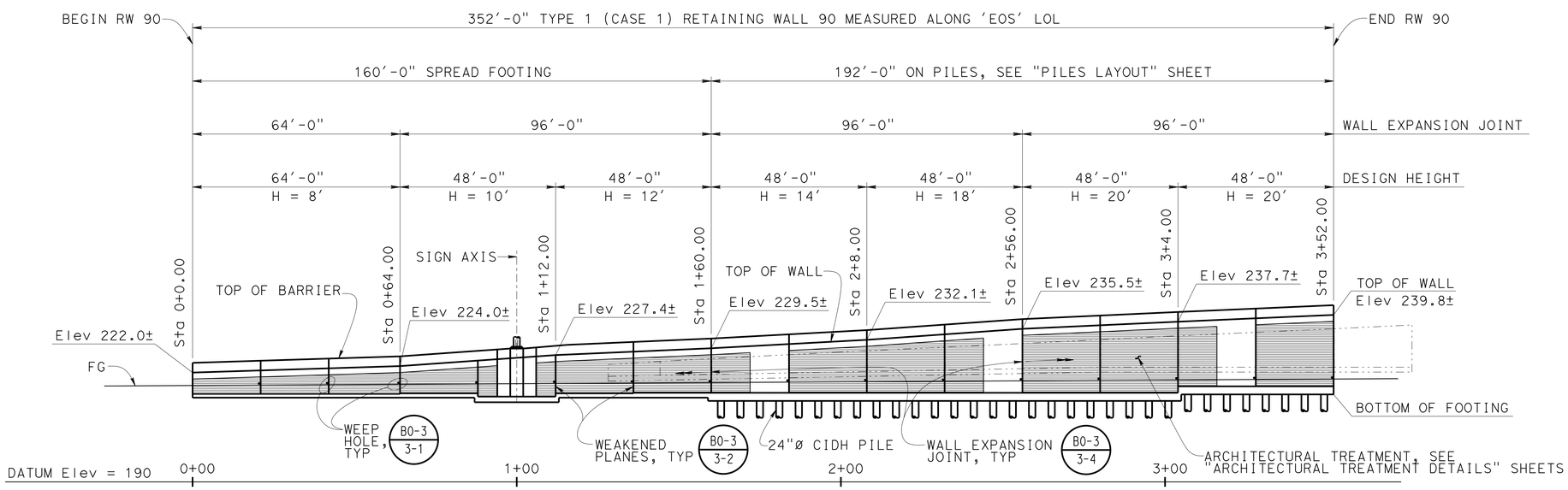

ELEVATION RSP B3-1A
1"=20'-0"

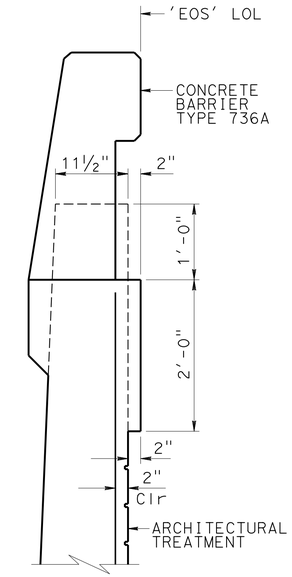

TYPICAL SECTION
1"=1'-0"

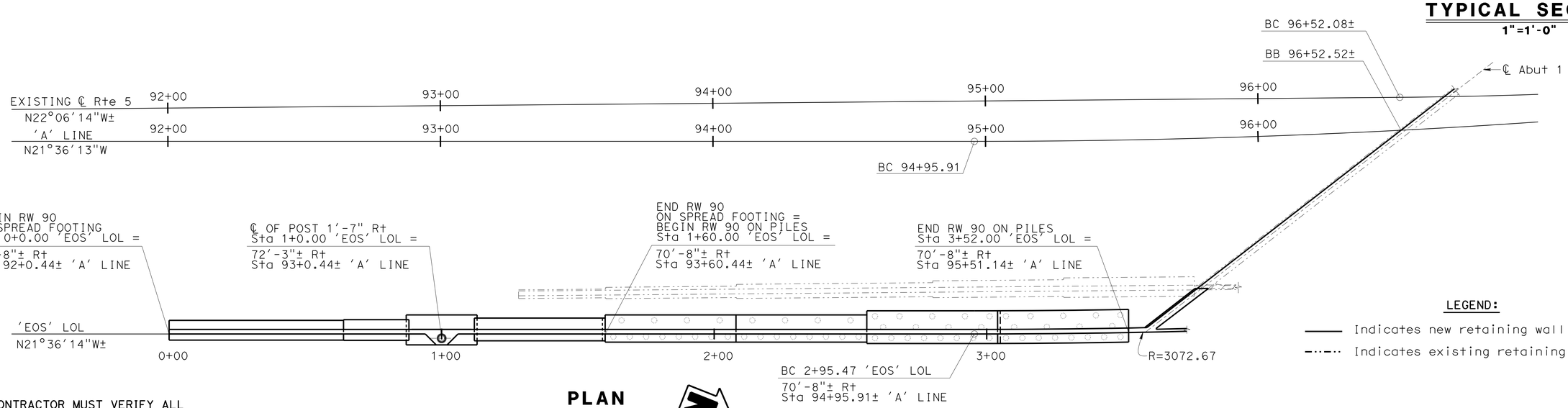

PLAN
1"=20'-0"

LEGEND:

——— Indicates new retaining wall

—··—·· Indicates existing retaining wall to stay

NOTE:
THE CONTRACTOR MUST VERIFY ALL CONTROLLING FIELD DIMENSIONS BEFORE ORDERING OR FABRICATING ANY MATERIAL.

	BY	CHECKED
DESIGN	JINRONG WANG	FAYEK TANNOUS
DETAILS	TON DOAN	FAYEK TANNOUS
QUANTITIES	JINRONG WANG	FAYEK TANNOUS

STATE OF CALIFORNIA
DEPARTMENT OF TRANSPORTATION

DIVISION OF ENGINEERING SERVICES
STRUCTURE DESIGN
DESIGN BRANCH 12

BRIDGE NO. 55-0203
POST MILE 1.6

EL CAMINO REAL UC WIDENING
RETAINING WALL 90
RETAINING WALL LAYOUT

STRUCTURES DESIGN DETAIL SHEET (ENGLISH) (REV. 09-01-10)

ORIGINAL SCALE IN INCHES FOR REDUCED PLANS 0 1 2 3

UNIT: 3606
PROJECT NUMBER & PHASE: 1212000090 & 1 CONTRACT NO.: 12-0M4901

DISREGARD PRINTS BEARING EARLIER REVISION DATES

REVISION DATES 06-22-15 12-29-15 08-11-15 08-19-15

SHEET 43 OF 74

FILE => 55-0203-m-rw90_lo01.dgn

USERNAME => s127956 DATE PLOTTED => 18-MAY-2016 TIME PLOTTED => 14:39

DIST	COUNTY	ROUTE	POST MILES TOTAL PROJECT	SHEET No.	TOTAL SHEETS
12	Ora	5	1.2/2.2	214	244

Jinrong Wang 02-01-16
REGISTERED CIVIL ENGINEER DATE

03-28-16
PLANS APPROVAL DATE

REGISTERED PROFESSIONAL ENGINEER
JINRONG WANG
No. C49844
Exp. 09-30-16
CIVIL
STATE OF CALIFORNIA

The State of California or its officers or agents shall not be responsible for the accuracy or completeness of scanned copies of this plan sheet.

NOTES:

1. Reinforcing shown is in addition to retaining wall H=12'-0", and concrete barrier reinforcing
2. For location of sign, see "Roadway Plans" RSP B3-1A
3. Bundle bars with retaining wall footing bars
4. place these tie bars just out side anchor bolts

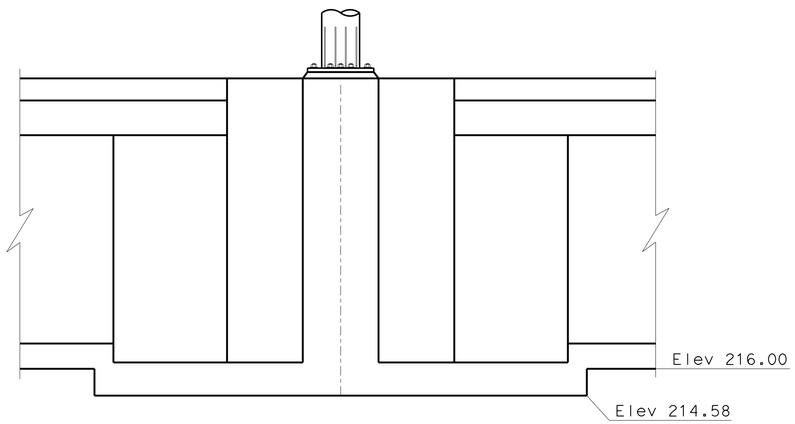

ELEVATION
1/4"=1'-0"

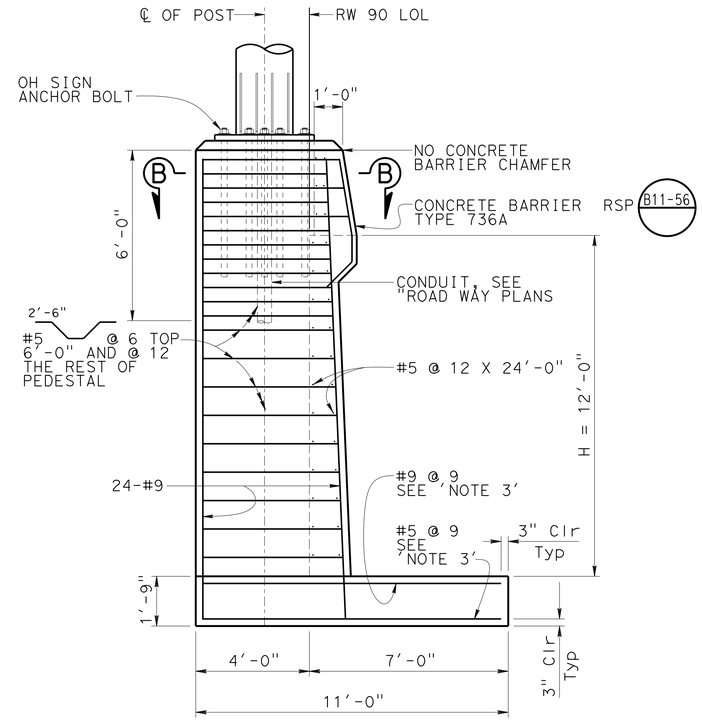

SECTION A-A
3/8"=1'-0"

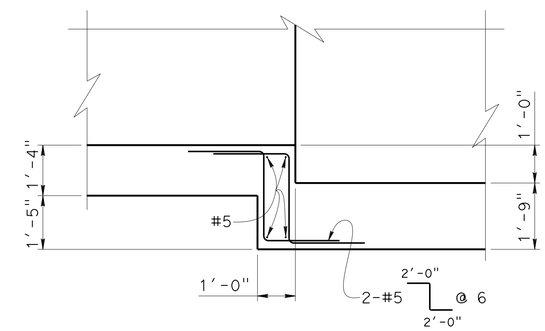

STEP DETAIL
1/2"=1'-0"

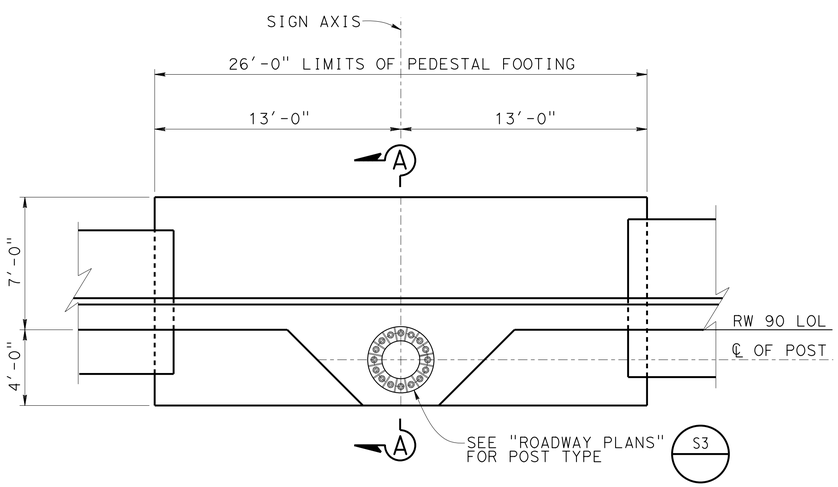

PLAN
1/4"=1'-0"

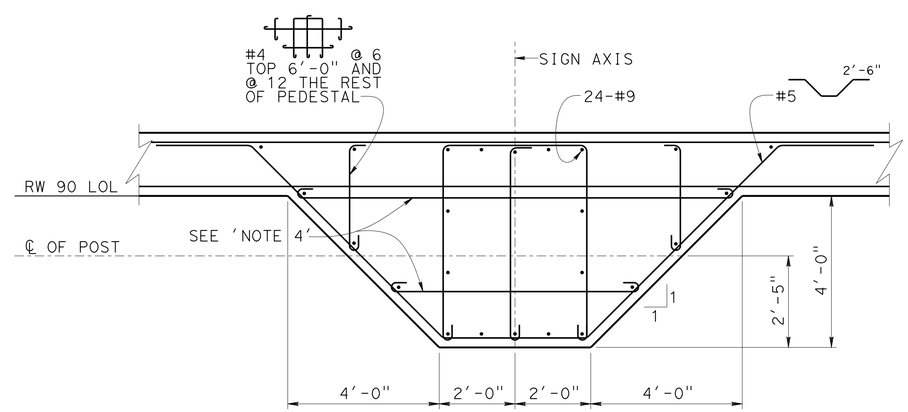

SECTION B-B
1/2"=1'-0"

DESIGN	BY JINRONG WANG	CHECKED FAYEK TANNOUS	
DETAILS	BY TON DOAN	CHECKED FAYEK TANNOUS	
QUANTITIES	BY JINRONG WANG	CHECKED FAYEK TANNOUS	

STATE OF CALIFORNIA
DEPARTMENT OF TRANSPORTATION

DIVISION OF ENGINEERING SERVICES
STRUCTURE DESIGN
DESIGN BRANCH 12

BRIDGE NO. 55-0203
POST MILE 1.6

EL CAMINO REAL UC WIDENING
RETAINING WALL 90
PEDESTAL DETAILS ON RETAINING WALL

STRUCTURES DESIGN DETAIL SHEET (ENGLISH) (REV. 09-01-10)

ORIGINAL SCALE IN INCHES FOR REDUCED PLANS 0 1 2 3

UNIT: 3606
PROJECT NUMBER & PHASE: 1212000090 & 1 CONTRACT NO.: 12-0M4901

DISREGARD PRINTS BEARING EARLIER REVISION DATES

REVISION DATES: 05-26-15 12-29-15 03-09-16

SHEET 44 OF 74

FILE => 55-0203-m-rw90dt.dgn

USERNAME => s127956 DATE PLOTTED => 18-MAY-2016 TIME PLOTTED => 14:39

DIST	COUNTY	ROUTE	POST MILES TOTAL PROJECT	SHEET No.	TOTAL SHEETS
12	Ora	5	1.2/2.2	215	244

Jinrong Wang 02-01-16
REGISTERED CIVIL ENGINEER DATE

03-28-16
PLANS APPROVAL DATE

REGISTERED PROFESSIONAL ENGINEER
JINRONG WANG
No. C49844
Exp. 09-30-16
CIVIL
STATE OF CALIFORNIA

The State of California or its officers or agents shall not be responsible for the accuracy or completeness of scanned copies of this plan sheet.

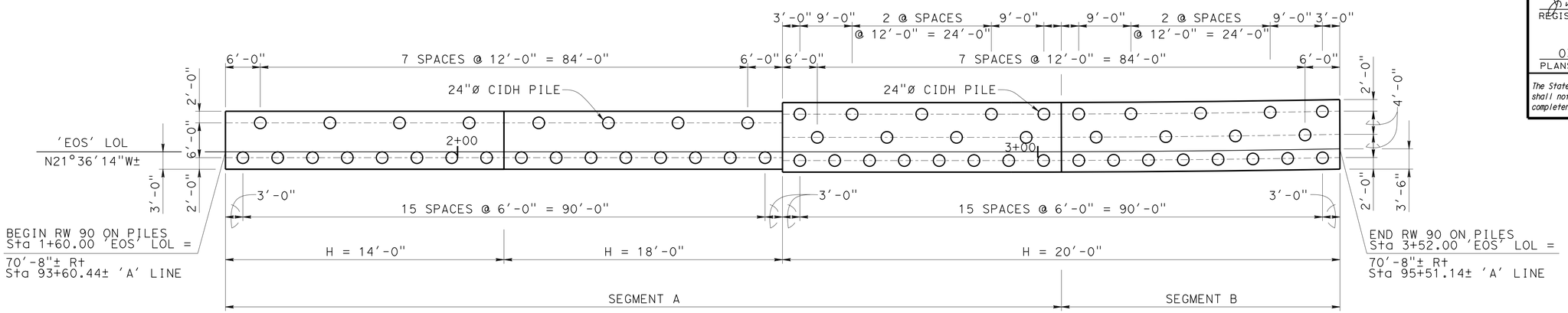

PLAN
1"=10'-0"

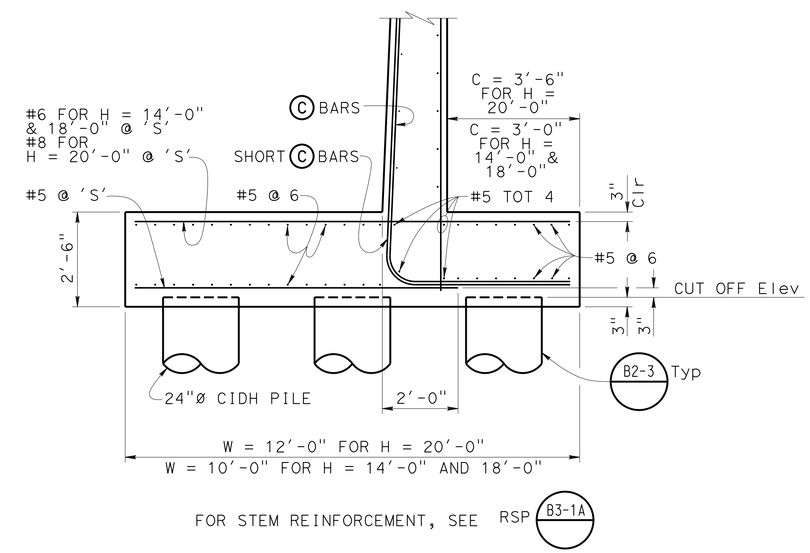

TYPICAL SECTION
1/2"=1'-0"

NOTE:
THE CONTRACTOR MUST VERIFY ALL CONTROLLING FIELD DIMENSIONS BEFORE ORDERING OR FABRICATING ANY MATERIAL.

	BY	CHECKED
DESIGN	JINRONG WANG	FAYEK TANNOUS
DETAILS	TON DOAN	FAYEK TANNOUS
QUANTITIES	JINRONG WANG	FAYEK TANNOUS

STATE OF CALIFORNIA
DEPARTMENT OF TRANSPORTATION

DIVISION OF ENGINEERING SERVICES
STRUCTURE DESIGN
DESIGN BRANCH 12

BRIDGE NO. 55-0203
POST MILE 1.6

EL CAMINO REAL UC WIDENING
RETAINING WALL 90
PILE LAYOUT

STRUCTURES DESIGN DETAIL SHEET (ENGLISH) (REV. 09-01-10)

ORIGINAL SCALE IN INCHES FOR REDUCED PLANS 0 1 2 3

UNIT: 3606
PROJECT NUMBER & PHASE: 1212000090 & 1 CONTRACT NO.: 12-0M4901

DISREGARD PRINTS BEARING EARLIER REVISION DATES

REVISION DATES: 08-12-15 12-29-15 01-20-16

SHEET 45 OF 74

FILE => 55-0203-m-rw90ftg.dgn

USERNAME => s127956 DATE PLOTTED => 18-MAY-2016 TIME PLOTTED => 14:39

DIST	COUNTY	ROUTE	POST MILES TOTAL PROJECT	SHEET No.	TOTAL SHEETS
12	Ora	5	1.2/2.2	216	244

Jinrong Wang 02-01-16
REGISTERED CIVIL ENGINEER DATE

03-28-16
PLANS APPROVAL DATE

REGISTERED PROFESSIONAL ENGINEER
JINRONG WANG
No. C49844
Exp. 09-30-16
CIVIL
STATE OF CALIFORNIA

The State of California or its officers or agents shall not be responsible for the accuracy or completeness of electronic copies of this plan sheet.

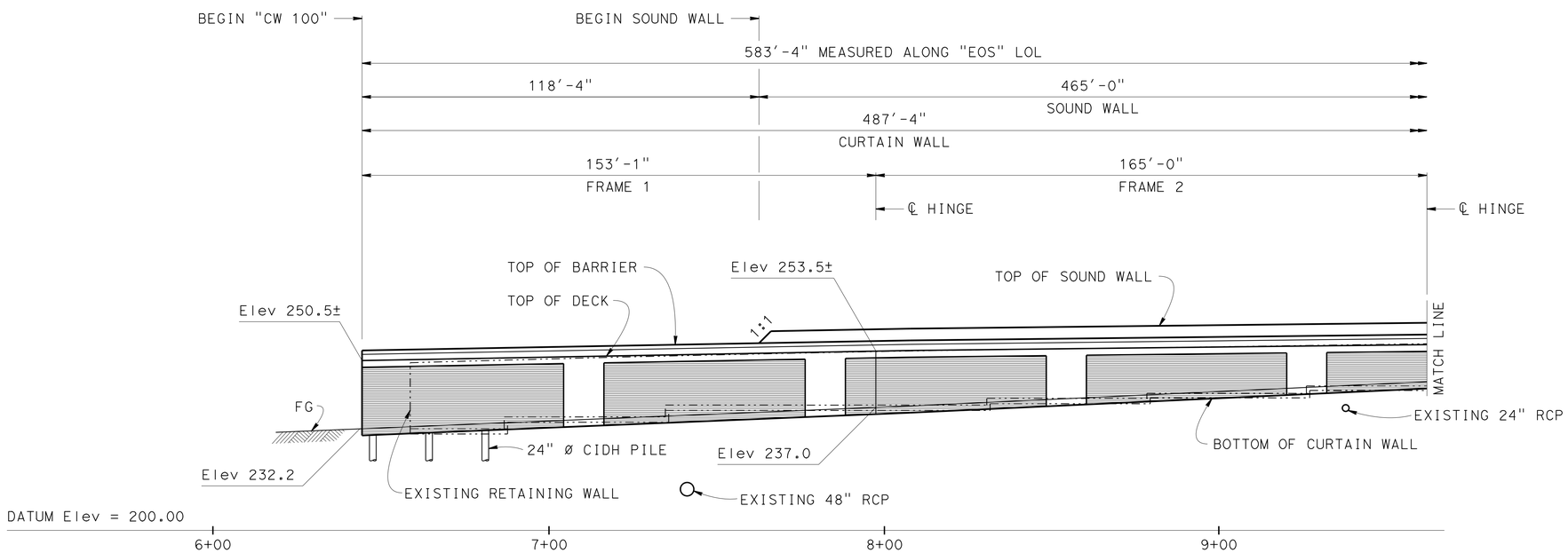

ELEVATION
1" = 20'

NOTE: Not all piles shown.

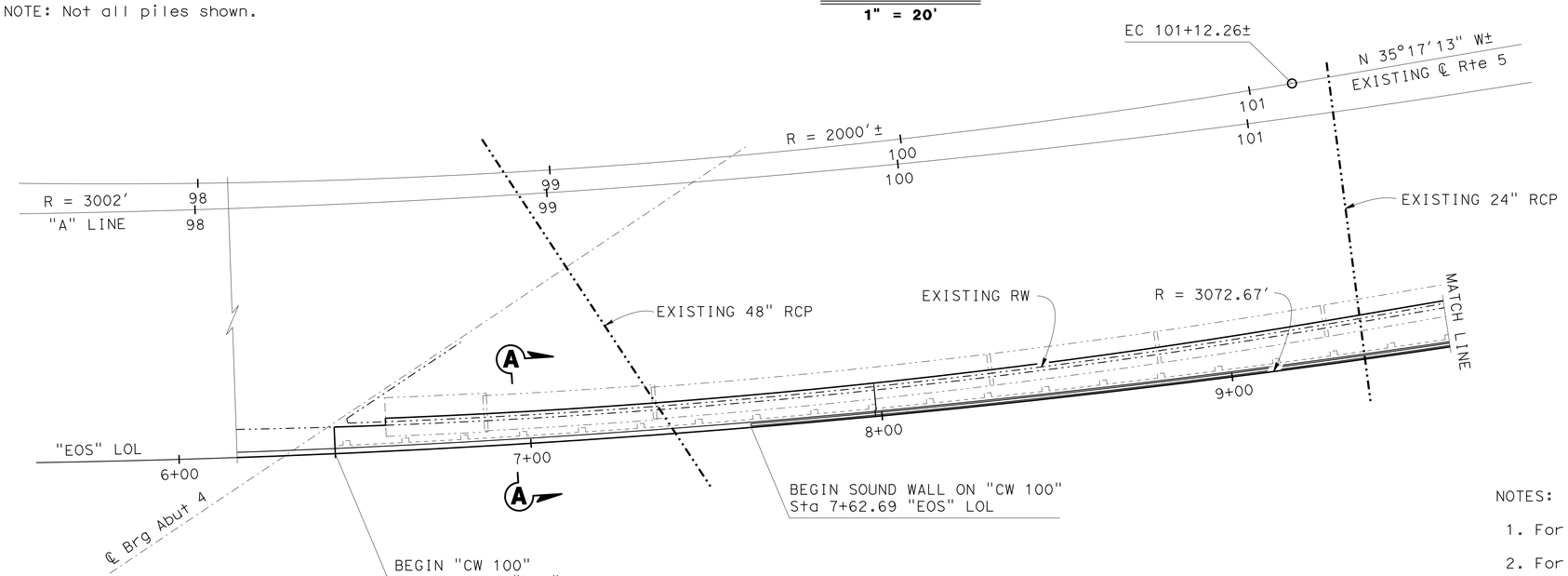

PLAN
1" = 20'

NOTES:

1. For "VIEW A-A" see "WALL DETAILS NO. 1" sheet.
2. For "SECTION A-A" see "WALL DETAILS NO. 2" sheet.

NOTE:
THE CONTRACTOR MUST VERIFY ALL CONTROLLING FIELD DIMENSIONS BEFORE ORDERING OR FABRICATING ANY MATERIAL.

	BY	CHECKED
DESIGN	J. WANG	P. MAK
DETAILS	Kc	P. MAK
QUANTITIES	F. TANNOUS	P. MAK

STATE OF CALIFORNIA
DEPARTMENT OF TRANSPORTATION

DIVISION OF ENGINEERING SERVICES
STRUCTURE DESIGN
DESIGN BRANCH 12

BRIDGE NO. 55-0203
POST MILE 1.6

EL CAMINO REAL UC WIDENING
CURTAIN WALL 100 / RETAINING WALL 103
WALL LAYOUT NO. 1

STRUCTURES DESIGN DETAIL SHEET (ENGLISH) (REV. 09-01-10)

ORIGINAL SCALE IN INCHES FOR REDUCED PLANS 0 1 2 3

UNIT: 3606
PROJECT NUMBER & PHASE: 1212000090 1
CONTRACT NO.: 12-0M4901

DISREGARD PRINTS BEARING EARLIER REVISION DATES

REVISION DATES: 7-6-15 11-2-15 3-10-16

SHEET 46 OF 74

FILE => 55-0203-n-crwl001.dgn

USERNAME => s127956 DATE PLOTTED => 18-MAY-2016 TIME PLOTTED => 14:39

DIST	COUNTY	ROUTE	POST MILES TOTAL PROJECT	SHEET No.	TOTAL SHEETS
12	Ora	5	1.2/2.2	217	244

Jinrong Wang 02-01-16
REGISTERED CIVIL ENGINEER DATE

03-28-16
PLANS APPROVAL DATE

REGISTERED PROFESSIONAL ENGINEER
JINRONG WANG
No. C49844
Exp. 09-30-16
CIVIL
STATE OF CALIFORNIA

The State of California or its officers or agents shall not be responsible for the accuracy or completeness of electronic copies of this plan sheet.

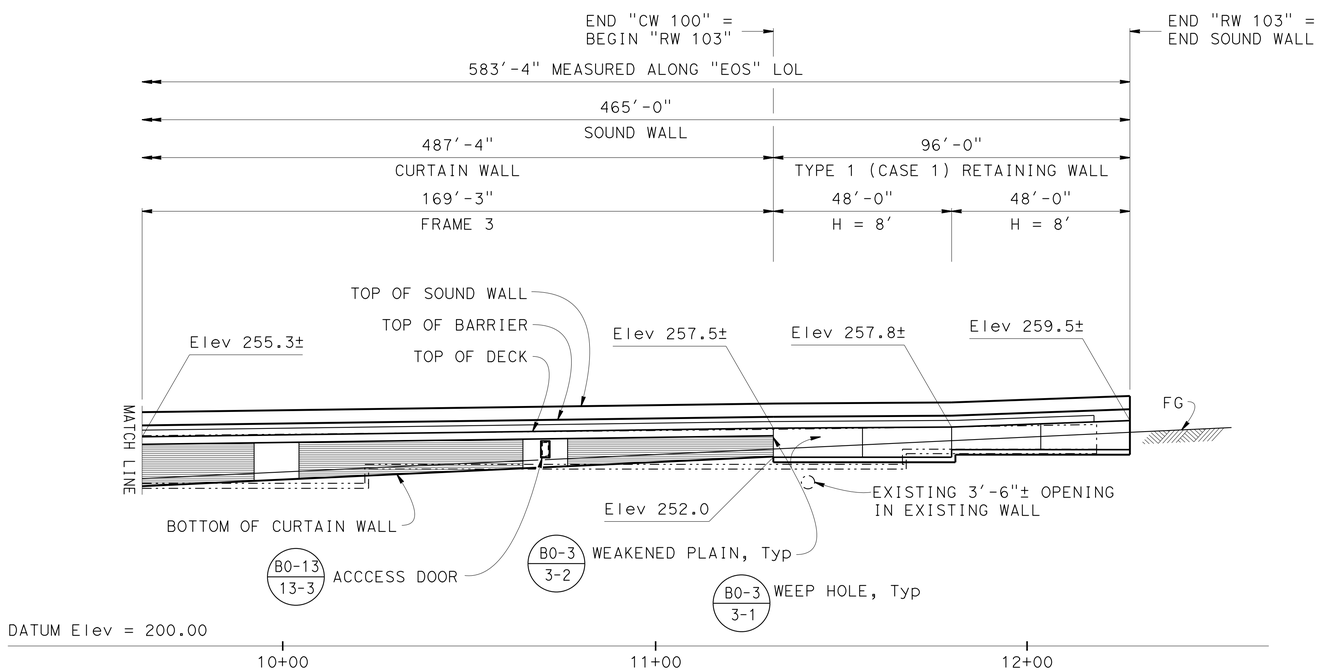

ELEVATION
1" = 20'

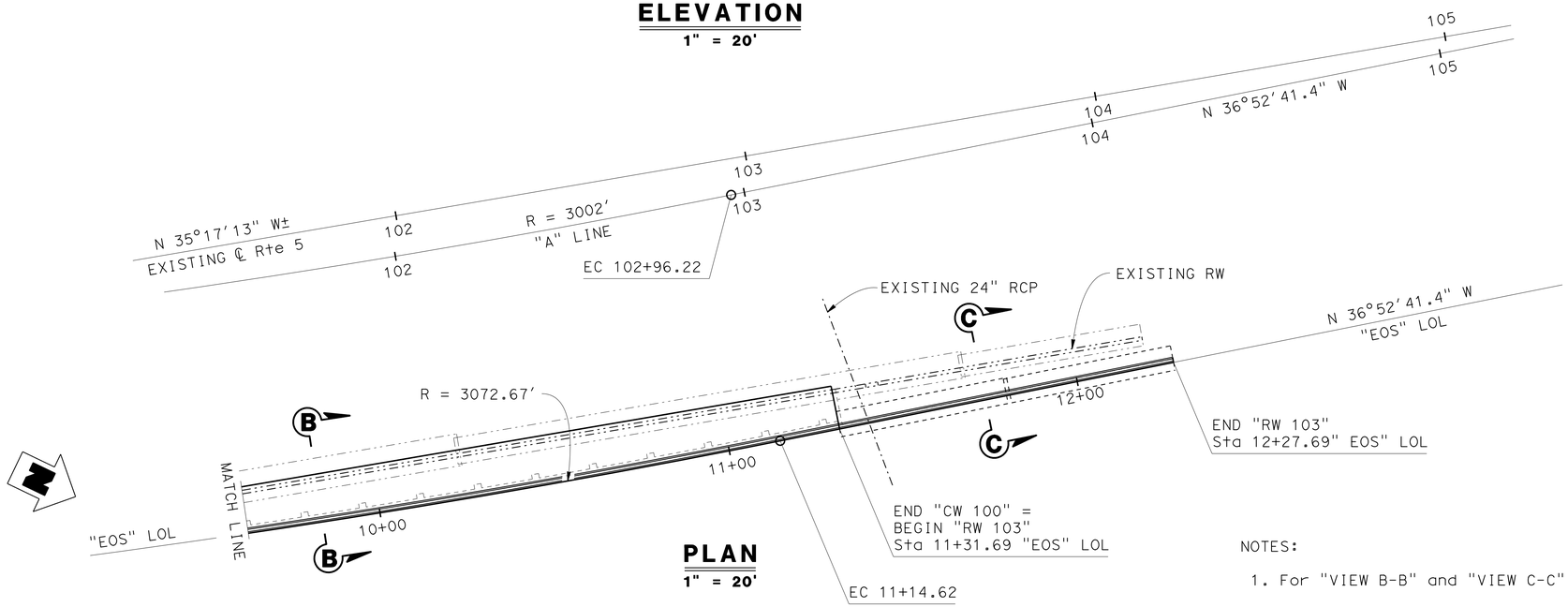

PLAN
1" = 20'

NOTES:

1. For "VIEW B-B" and "VIEW C-C" see "WALL DETAILS NO. 1" sheet.

NOTE:
THE CONTRACTOR MUST VERIFY ALL CONTROLLING FIELD DIMENSIONS BEFORE ORDERING OR FABRICATING ANY MATERIAL.

EL CAMINO REAL UC WIDENING
CURTAIN WALL 100 / RETAINING WALL 103
WALL LAYOUT NO. 2

	BY	CHECKED
DESIGN	J. WANG	P. MAK
DETAILS	kc	P. MAK
QUANTITIES	F. TANNOUS	P. MAK

STATE OF CALIFORNIA
DEPARTMENT OF TRANSPORTATION

DIVISION OF ENGINEERING SERVICES
STRUCTURE DESIGN
DESIGN BRANCH 12

BRIDGE NO. 55-0203
POST MILE 1.6

STRUCTURES DESIGN DETAIL SHEET (ENGLISH) (REV. 09-01-10)

ORIGINAL SCALE IN INCHES FOR REDUCED PLANS 0 1 2 3

UNIT: 3606
PROJECT NUMBER & PHASE: 1212000090 1
CONTRACT NO.: 12-0M4901

DISREGARD PRINTS BEARING EARLIER REVISION DATES

REVISION DATES: 7-6-15 1-20-16 3-10-16

SHEET 47 OF 74

FILE => 55-0203-n-crwlo02.dgn

USERNAME => s127956 DATE PLOTTED => 18-MAY-2016 TIME PLOTTED => 14:39

DIST	COUNTY	ROUTE	POST MILES TOTAL PROJECT	SHEET No.	TOTAL SHEETS
12	Ora	5	1.2/2.2	218	244

Jinrong Wang 02-01-16
REGISTERED CIVIL ENGINEER DATE

03-28-16
PLANS APPROVAL DATE

REGISTERED PROFESSIONAL ENGINEER
JINRONG WANG
No. C49844
Exp. 09-30-16
CIVIL
STATE OF CALIFORNIA

The State of California or its officers or agents shall not be responsible for the accuracy or completeness of electronic copies of this plan sheet.

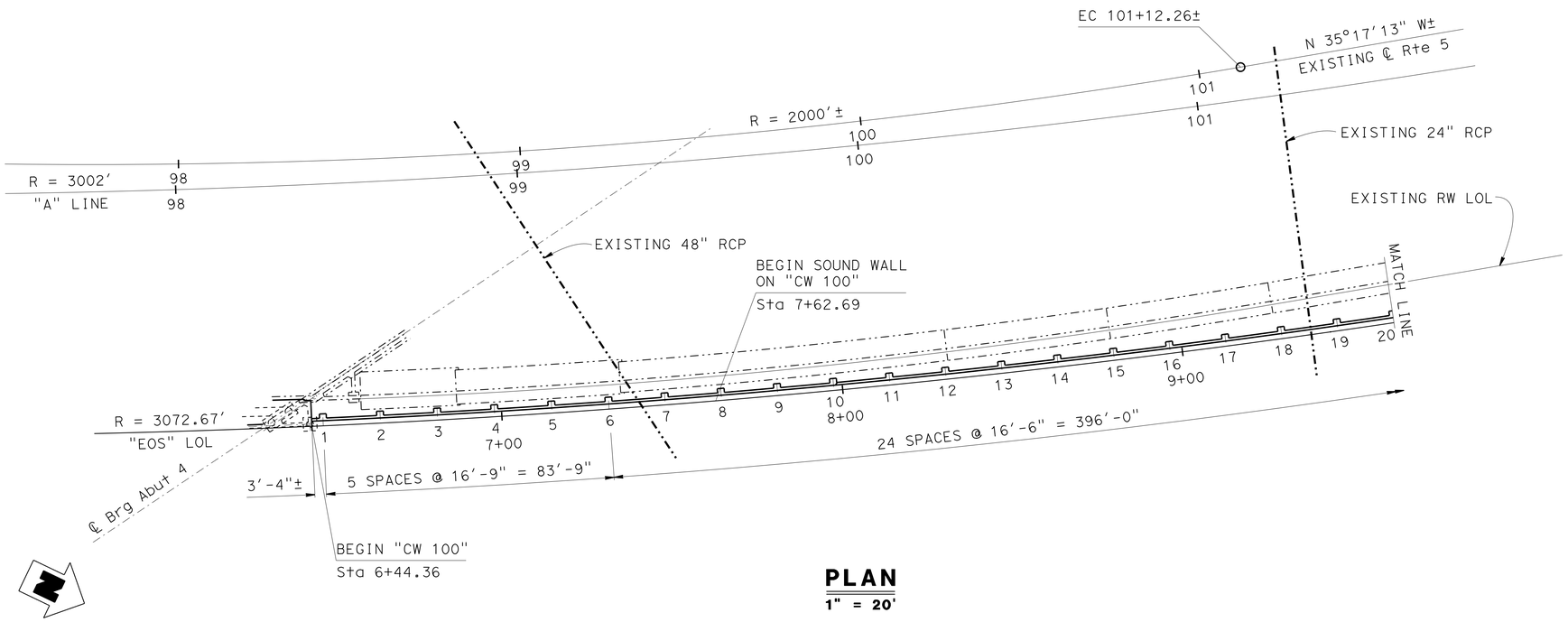

PLAN
1" = 20'

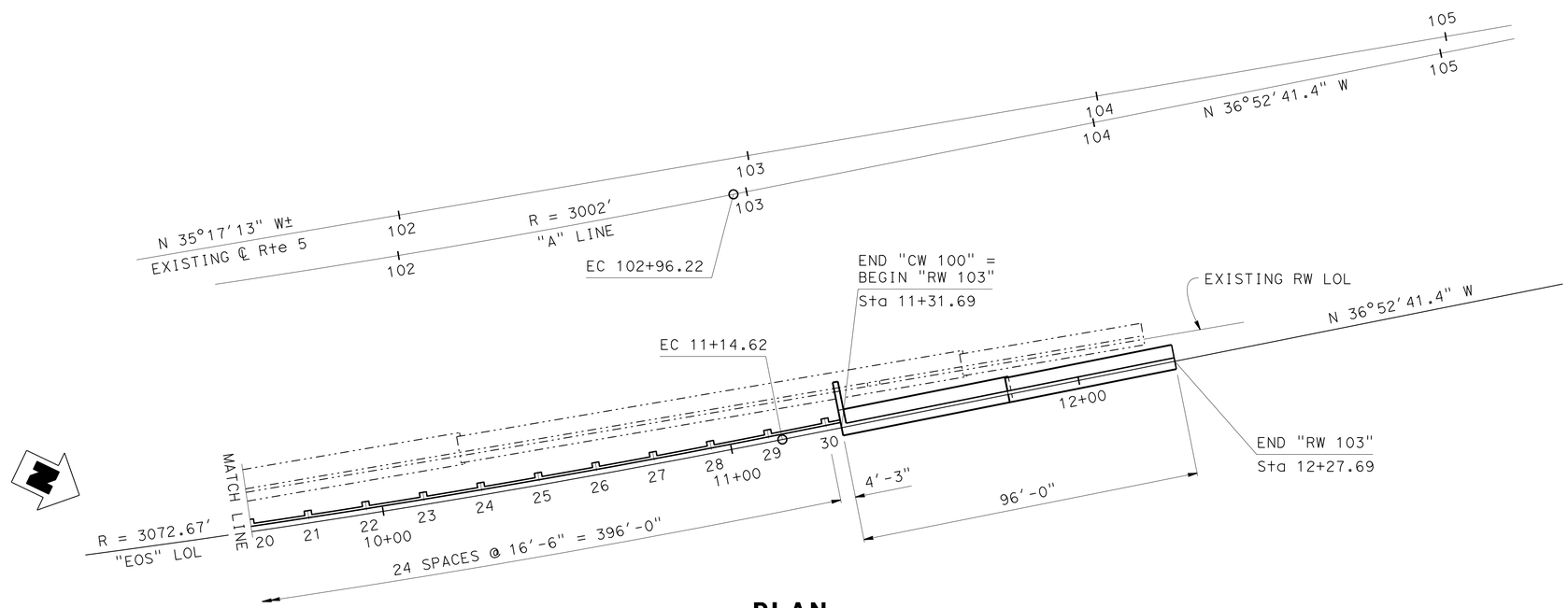

PLAN
1" = 20'

NOTE:
THE CONTRACTOR MUST VERIFY ALL CONTROLLING FIELD DIMENSIONS BEFORE ORDERING OR FABRICATING ANY MATERIAL.

	BY	CHECKED
DESIGN	J. WANG	P. MAK
DETAILS	kc	P. MAK
QUANTITIES	F. TANNOUS	P. MAK

STATE OF CALIFORNIA
DEPARTMENT OF TRANSPORTATION

DIVISION OF ENGINEERING SERVICES
STRUCTURE DESIGN
DESIGN BRANCH 12

BRIDGE NO. 55-0203
POST MILE 1.6

EL CAMINO REAL UC WIDENING
CURTAIN WALL 100 / RETAINING WALL 103
PILE AND FOOTING LAYOUT

STRUCTURES DESIGN DETAIL SHEET (ENGLISH) (REV. 09-01-10)

ORIGINAL SCALE IN INCHES FOR REDUCED PLANS 0 1 2 3

UNIT: 3606
PROJECT NUMBER & PHASE: 1212000090 1
CONTRACT NO.: 12-0M4901

DISREGARD PRINTS BEARING EARLIER REVISION DATES
REVISION DATES: 4-16-15 9-2-15 10-2-15

SHEET 48 OF 74

FILE => 55-0203-n-pdt01.dgn

USERNAME => s127956 DATE PLOTTED => 18-MAY-2016 TIME PLOTTED => 14:39

DIST	COUNTY	ROUTE	POST MILES TOTAL PROJECT	SHEET No.	TOTAL SHEETS
12	Ora	5	1.2/2.2	219	244

Jinrong Wang 02-01-16
REGISTERED CIVIL ENGINEER DATE

03-28-16
PLANS APPROVAL DATE

REGISTERED PROFESSIONAL ENGINEER
JINRONG WANG
No. C49844
Exp. 09-30-16
CIVIL
STATE OF CALIFORNIA

The State of California or its officers or agents shall not be responsible for the accuracy or completeness of electronic copies of this plan sheet.

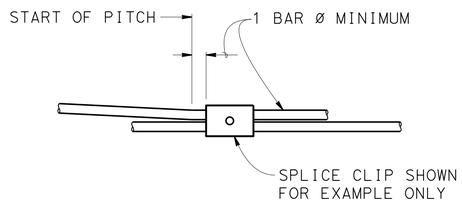

MECHANICAL LAP SPLICE

SPIRAL TERMINATION DETAIL TYPE 3

NO SCALE

FOR ONLY #4, #5 AND #6 Reinf

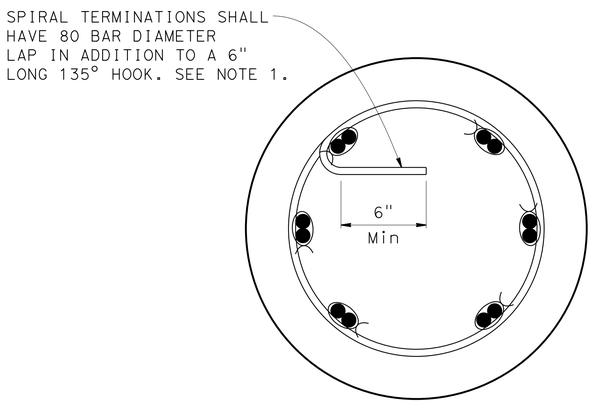

SPIRAL ANCHOR 135° HOOK DETAIL

SPIRAL TERMINATION DETAIL TYPE 2

NO SCALE

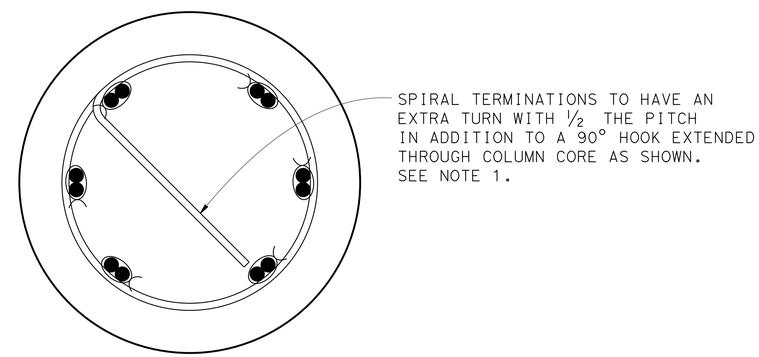

SPIRAL ANCHOR 90° HOOK DETAIL

SPIRAL TERMINATION DETAIL TYPE 1

NO SCALE

NOTES:

1. Hooks for Spiral Termination Details Type 1 and 2 shall line up so as not to interfere with construction operations.
2. Inspection tubes are not shown.

NOTE:
THE CONTRACTOR SHALL VERIFY ALL CONTROLLING FIELD DIMENSIONS BEFORE ORDERING OR FABRICATING ANY MATERIAL.

	BY	CHECKED
DESIGN	J. WANG	P. MAK
DETAILS	Kc	P. MAK
QUANTITIES	F. TANNOUS	P. MAK

STATE OF CALIFORNIA
DEPARTMENT OF TRANSPORTATION

DIVISION OF ENGINEERING SERVICES
STRUCTURE DESIGN
DESIGN BRANCH 12

BRIDGE NO. 55-0203
POST MILE 1.6

EL CAMINO REAL UC WIDENING
CURTAIN WALL 100 / RETAINING WALL 103
PILE DETAILS

STRUCTURES DESIGN DETAIL SHEET (ENGLISH) (REV. 09-01-10)

ORIGINAL SCALE IN INCHES FOR REDUCED PLANS 0 1 2 3

UNIT: 3606
PROJECT NUMBER & PHASE: 1212000090 1
CONTRACT NO.: 12-0M4901

DISREGARD PRINTS BEARING EARLIER REVISION DATES
REVISION DATES: ~~4-18-15~~ 11-2-15

SHEET 49 OF 74

FILE => 55-0203-n-pdt02.dgn

USERNAME => s127956 DATE PLOTTED => 18-MAY-2016 TIME PLOTTED => 14:39

DIST	COUNTY	ROUTE	POST MILES TOTAL PROJECT	SHEET No.	TOTAL SHEETS
12	Ora	5	1.2/2.2	220	244

Jinrong Wang 02-01-16
REGISTERED CIVIL ENGINEER DATE

03-28-16
PLANS APPROVAL DATE

REGISTERED PROFESSIONAL ENGINEER JINRONG WANG No. C49844 Exp. 09-30-2016 CIVIL STATE OF CALIFORNIA

The State of California or its officers or agents shall not be responsible for the accuracy or completeness of electronic copies of this plan sheet.

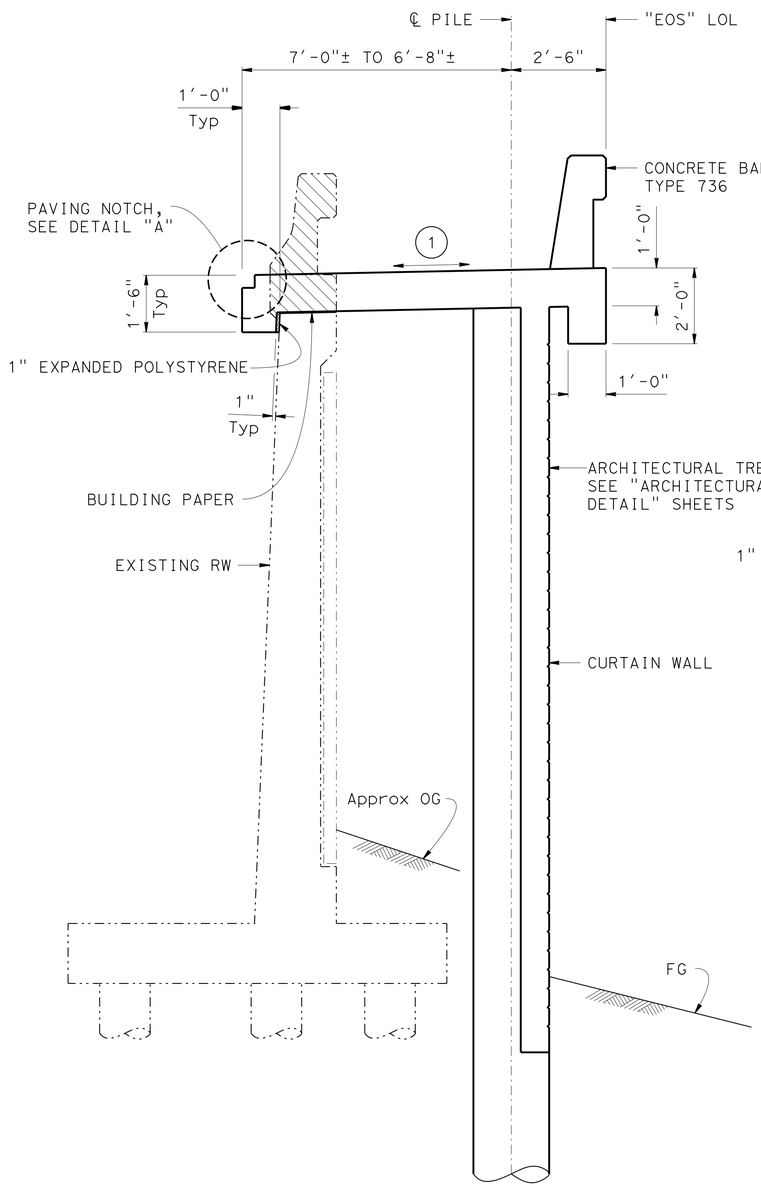

VIEW A-A
1/2" = 1'-0"

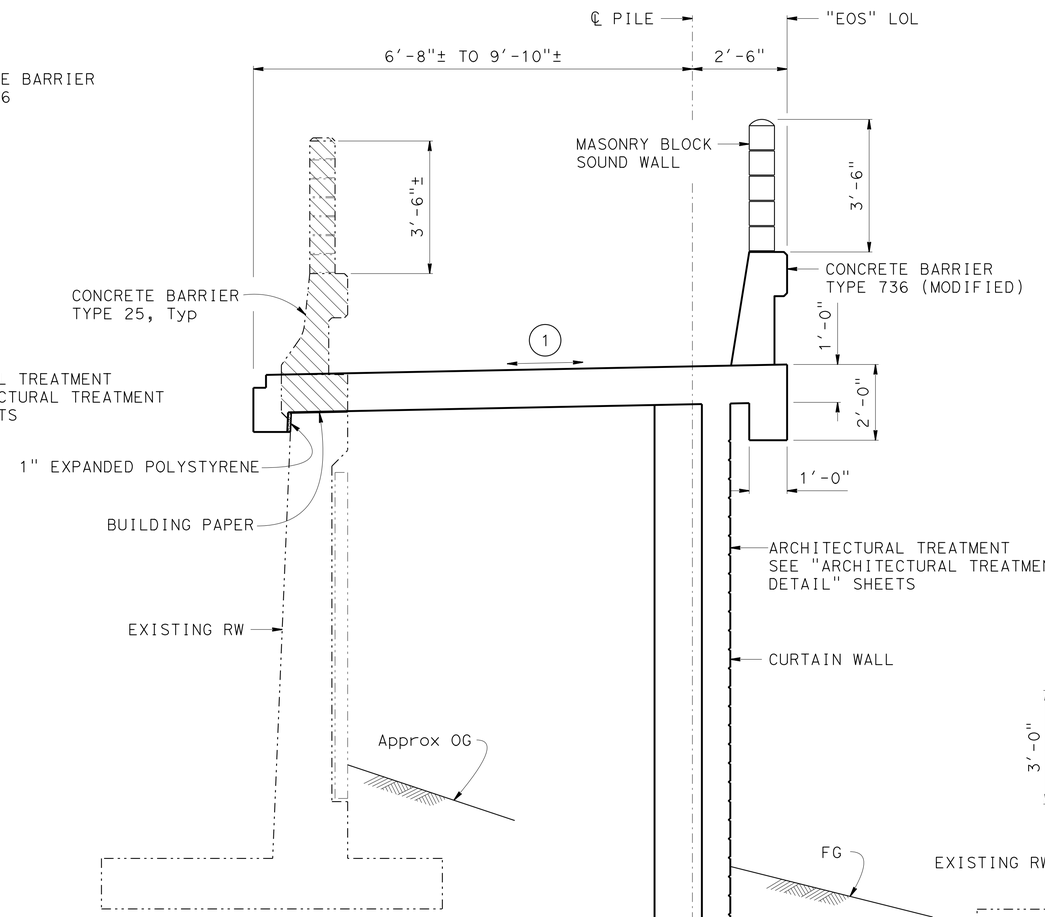

VIEW B-B
1/2" = 1'-0"

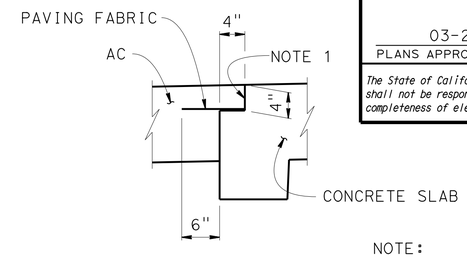

DETAIL A
1" = 1'-0"

NOTE:

1. Limit of paving notch is from the end of approach slab to the end of "CW100".

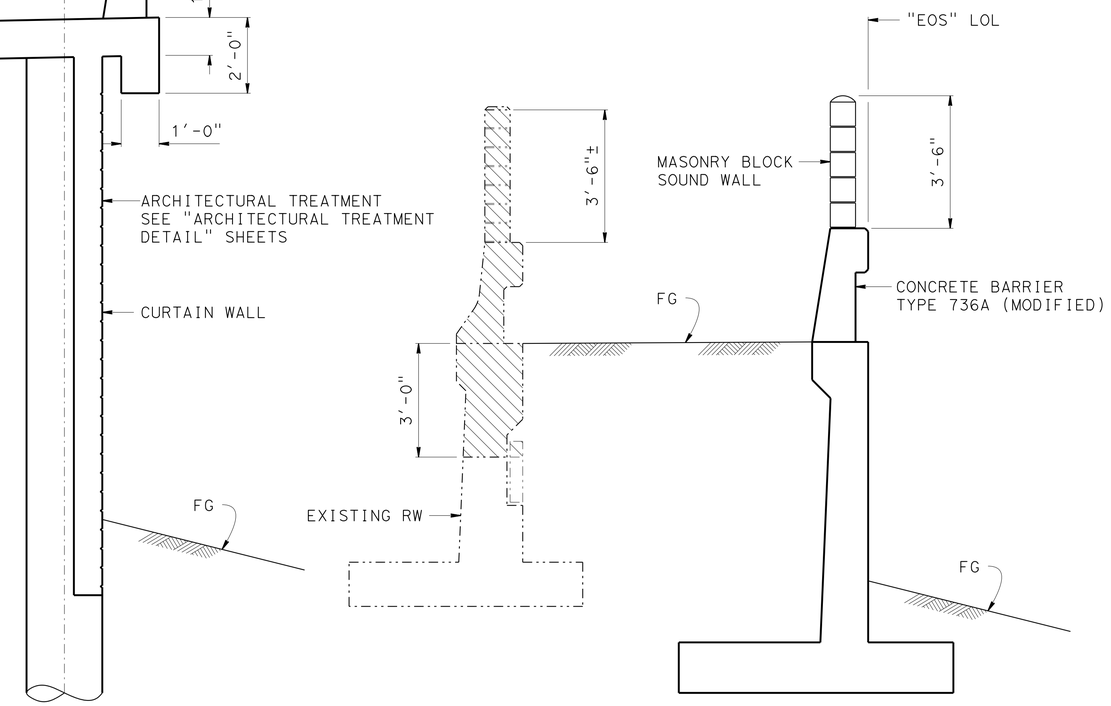

VIEW C-C
1/2" = 1'-0"

(1) MATCH EXISTING X-SLOPE

INDICATES CONCRETE REMOVAL

NOTE:
THE CONTRACTOR MUST VERIFY ALL CONTROLLING FIELD DIMENSIONS BEFORE ORDERING OR FABRICATING ANY MATERIAL.

	BY	CHECKED
DESIGN	J. WANG	P. MAK
DETAILS	Kc	P. MAK
QUANTITIES	F. TANNOUS	P. MAK

STATE OF CALIFORNIA
DEPARTMENT OF TRANSPORTATION

DIVISION OF ENGINEERING SERVICES
STRUCTURE DESIGN
DESIGN BRANCH 12

BRIDGE NO. 55-0203
POST MILE 1.6

EL CAMINO REAL UC WIDENING
CURTAIN WALL 100 / RETAINING WALL 103
WALL DETAILS NO. 1

STRUCTURES DESIGN DETAIL SHEET (ENGLISH) (REV. 09-01-10)

ORIGINAL SCALE IN INCHES FOR REDUCED PLANS 0 1 2 3

UNIT: 3606
PROJECT NUMBER & PHASE: 1212000090 1
CONTRACT NO.: 12-0M4901

DISREGARD PRINTS BEARING EARLIER REVISION DATES

REVISION DATES: 4-30-15 11-4-15 7-18-15

SHEET 50 OF 74

FILE => 55-0203-o-crwdet01.dgn

USERNAME => s127956 DATE PLOTTED => 18-MAY-2016 TIME PLOTTED => 14:39

DIST	COUNTY	ROUTE	POST MILES TOTAL PROJECT	SHEET No.	TOTAL SHEETS
12	Ora	5	1.2/2.2	221	244

Jinrong Wang 02-01-16
REGISTERED CIVIL ENGINEER DATE

03-28-16
PLANS APPROVAL DATE

REGISTERED PROFESSIONAL ENGINEER
JINRONG WANG
No. C49844
Exp. 09-30-2016
CIVIL
STATE OF CALIFORNIA

The State of California or its officers or agents shall not be responsible for the accuracy or completeness of electronic copies of this plan sheet.

NOTES:

1. Design service level loading is 200 kips or less.
2. No splices allowed in main and spiral reinforcement within this zone. Spiral termination detail TYPE 1 is required.
3. Spiral termination detail TYPE 2 or TYPE 3 is allowed.
4. Aggregate must be 1" maiximum combined grading.
5. See "PILE DATA TABLE" for specified tip and pile cut-off elevations.
6. For "SECTION C-C" see "WALL DETAILS NO. 3" sheet.

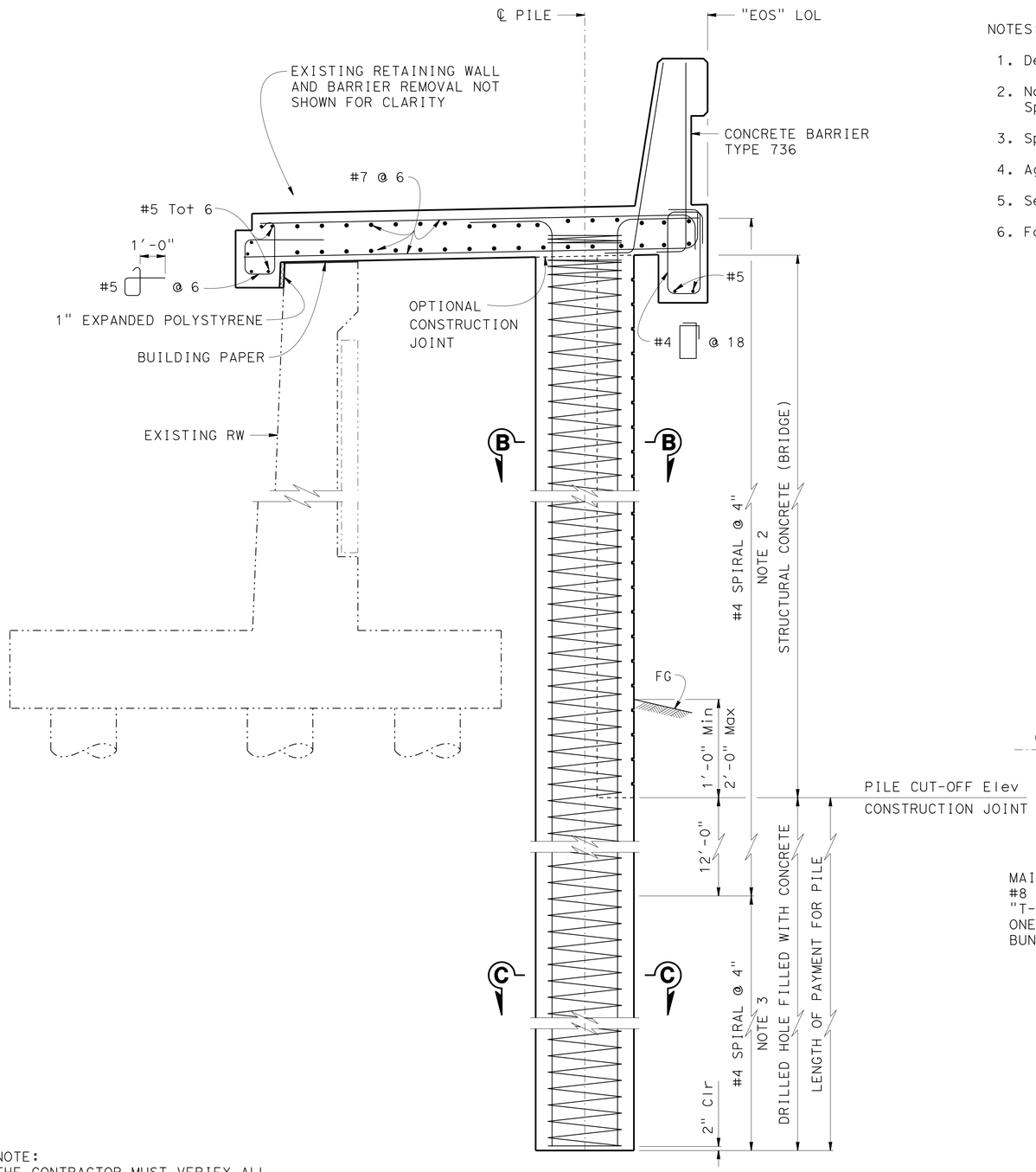

SECTION A-A
3/4" = 1'-0"

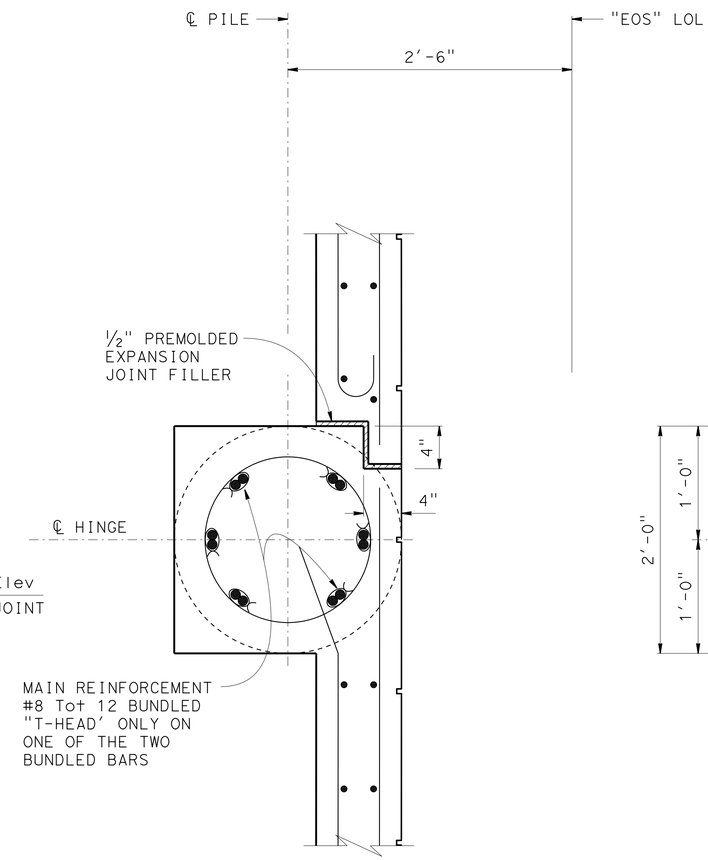

AT EXPANSION JOINT

SECTION B-B
1 1/2" = 1'-0"

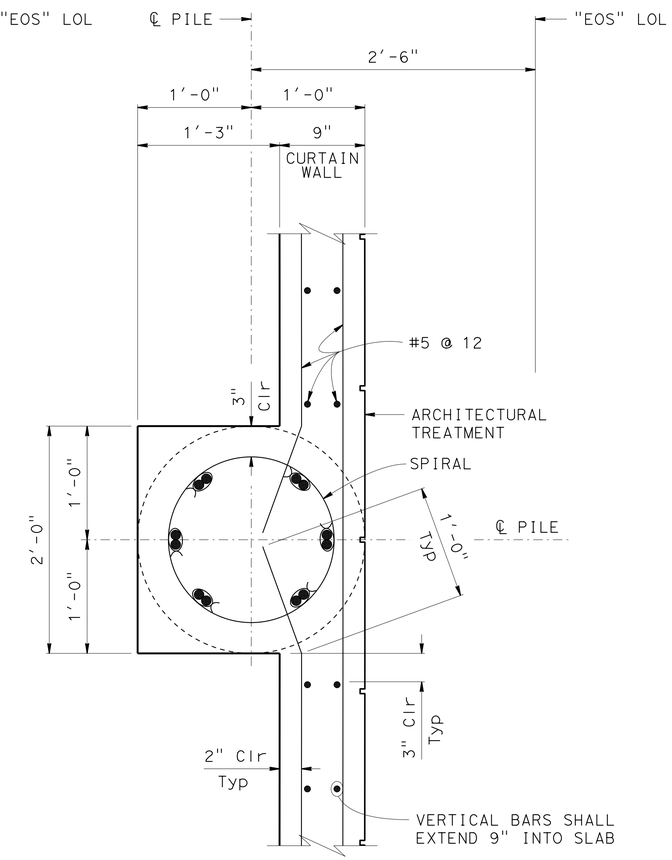

TYPICAL

SECTION B-B
1 1/2" = 1'-0"

NOTE:
THE CONTRACTOR MUST VERIFY ALL CONTROLLING FIELD DIMENSIONS BEFORE ORDERING OR FABRICATING ANY MATERIAL.

	BY	CHECKED
DESIGN	J. WANG	P. MAK
DETAILS	Kc	P. MAK
QUANTITIES	F. TANNOUS	P. MAK

STATE OF CALIFORNIA
DEPARTMENT OF TRANSPORTATION

DIVISION OF ENGINEERING SERVICES
STRUCTURE DESIGN
DESIGN BRANCH 12

BRIDGE NO. 55-0203
POST MILE 1.6

EL CAMINO REAL UC WIDENING
CURTAIN WALL 100 / RETAINING WALL 103
WALL DETAILS NO. 2

STRUCTURES DESIGN DETAIL SHEET (ENGLISH) (REV. 09-01-10)

ORIGINAL SCALE IN INCHES FOR REDUCED PLANS 0 1 2 3

UNIT: 3606
PROJECT NUMBER & PHASE: 1212000090 1
CONTRACT NO.: 12-0M4901

DISREGARD PRINTS BEARING EARLIER REVISION DATES

REVISION DATES: 4-30-15 3-10-16 1-20-16

SHEET 51 OF 74

FILE => 55-0203-o-crwdet02.dgn

USERNAME => s127956 DATE PLOTTED => 18-MAY-2016 TIME PLOTTED => 14:39

DIST	COUNTY	ROUTE	POST MILES TOTAL PROJECT	SHEET No.	TOTAL SHEETS
12	Ora	5	1.2/2.2	222	244

Jinrong Wang 02-01-16
REGISTERED CIVIL ENGINEER DATE

03-28-16
PLANS APPROVAL DATE

REGISTERED PROFESSIONAL ENGINEER
JINRONG WANG
No. C49844
Exp. 09-30-16
CIVIL
STATE OF CALIFORNIA

The State of California or its officers or agents shall not be responsible for the accuracy or completeness of electronic copies of this plan sheet.

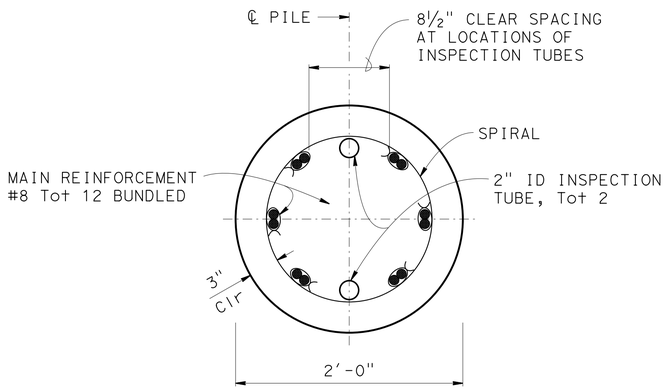

SECTION C-C

1 1/2" = 1'-0"

INDICATES BUNDLED BARS

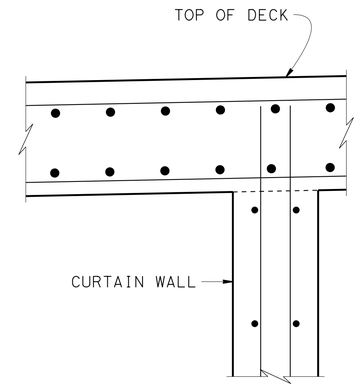

DECK - CURTAIN WALL CONNECTION DETAIL

1 1/2" = 1'-0"

NOTE:
THE CONTRACTOR SHALL VERIFY ALL CONTROLLING FIELD DIMENSIONS BEFORE ORDERING OR FABRICATING ANY MATERIAL.

	BY	CHECKED
DESIGN	J. WANG	P. MAK
DETAILS	KC	P. MAK
QUANTITIES	F. TANNOUWS	P. MAK

STATE OF CALIFORNIA
DEPARTMENT OF TRANSPORTATION

DIVISION OF ENGINEERING SERVICES
STRUCTURE DESIGN
DESIGN BRANCH 12

BRIDGE NO. 55-0203
POST MILE 1.6

EL CAMINO REAL UC WIDENING
CURTAIN WALL 100 / RETAINING WALL 103
WALL DETAILS NO. 3

STRUCTURES DESIGN DETAIL SHEET (ENGLISH) (REV. 09-01-10)

ORIGINAL SCALE IN INCHES FOR REDUCED PLANS 0 1 2 3

UNIT: 3606
PROJECT NUMBER & PHASE: 1212000090 1
CONTRACT NO.: 12-0M4901

DISREGARD PRINTS BEARING EARLIER REVISION DATES

REVISION DATES: 4-15-15 7-17-15 11-2-15

SHEET 52 OF 74

FILE => 55-0203-o-crwdet03.dgn

USERNAME => s127956 DATE PLOTTED => 18-MAY-2016 TIME PLOTTED => 14:39

DIST	COUNTY	ROUTE	POST MILES TOTAL PROJECT	SHEET No.	TOTAL SHEETS
12	Ora	5	1.2/2.2	223	244

Jinrong Wang 02-01-16
REGISTERED CIVIL ENGINEER DATE

03-28-16
PLANS APPROVAL DATE

REGISTERED PROFESSIONAL ENGINEER
JINRONG WANG
No. C49844
Exp. 09-30-16
CIVIL
STATE OF CALIFORNIA

The State of California or its officers or agents shall not be responsible for the accuracy or completeness of electronic copies of this plan sheet.

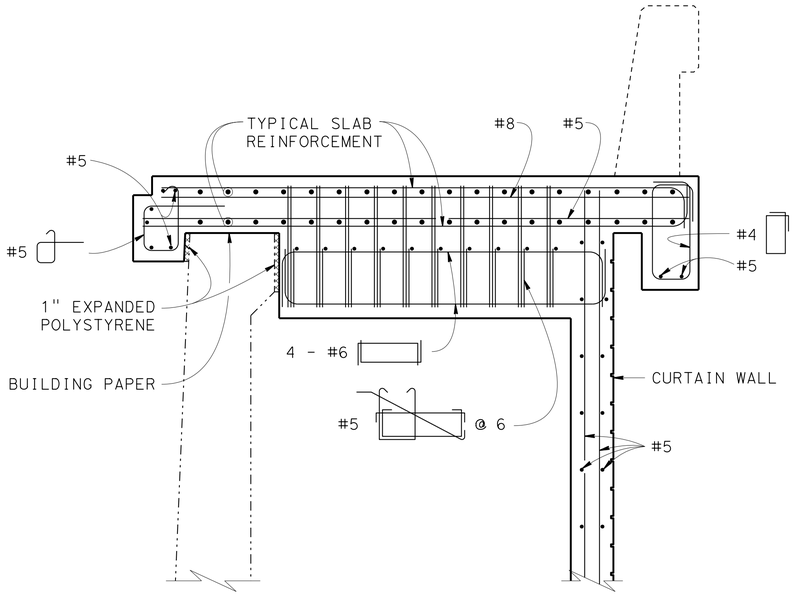

SECTION A-A
3/4" = 1'-0"

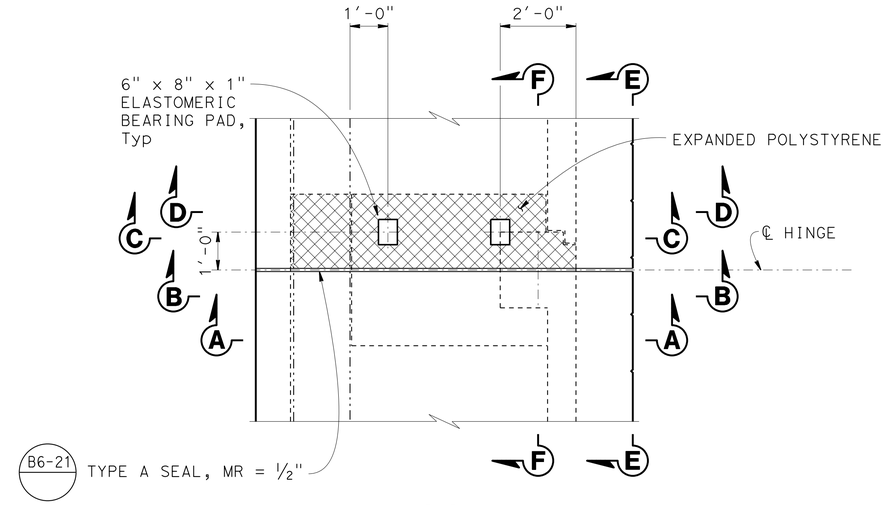

PLAN
1/2" = 1'-0"

NOTES:

1. See "SECTION A-A" for details not shown on SECTIONS "B-B", "C-C" and "D-D".
2. For "SECTION E-E" and "SECTION F-F" see "WALL DETAILS NO. 5" sheet.

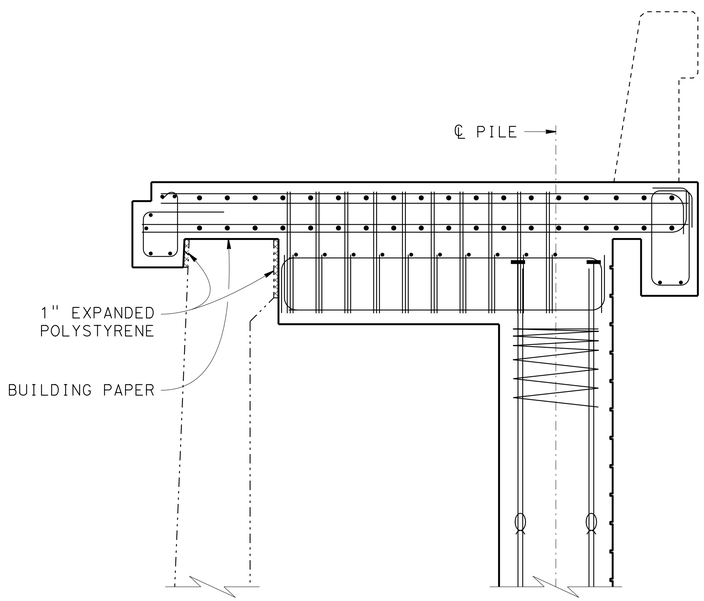

SECTION B-B
3/4" = 1'-0"

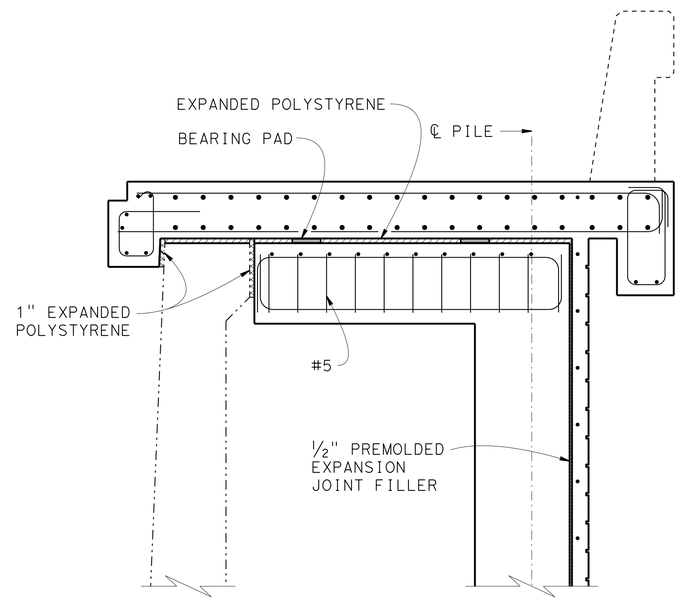

SECTION C-C
3/4" = 1'-0"

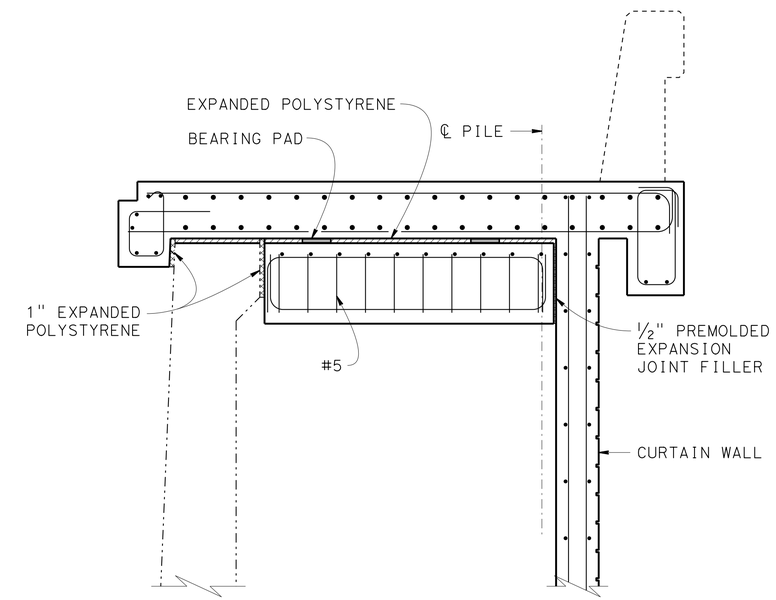

SECTION D-D
3/4" = 1'-0"

NOTE:
THE CONTRACTOR MUST VERIFY ALL CONTROLLING FIELD DIMENSIONS BEFORE ORDERING OR FABRICATING ANY MATERIAL.

	BY	CHECKED
DESIGN	J. WANG	P. MAK
DETAILS	kc	P. MAK
QUANTITIES	F. TANNOUS	P. MAK

STATE OF CALIFORNIA
DEPARTMENT OF TRANSPORTATION

DIVISION OF ENGINEERING SERVICES
STRUCTURE DESIGN
DESIGN BRANCH 12

BRIDGE NO. 55-0203
POST MILE 1.6

EL CAMINO REAL UC WIDENING
CURTAIN WALL 100 / RETAINING WALL 103
WALL DETAILS NO. 4

STRUCTURES DESIGN DETAIL SHEET (ENGLISH) (REV. 09-01-10)

ORIGINAL SCALE IN INCHES FOR REDUCED PLANS 0 1 2 3

UNIT: 3606
PROJECT NUMBER & PHASE: 1212000090 1
CONTRACT NO.: 12-0M4901

DISREGARD PRINTS BEARING EARLIER REVISION DATES

REVISION DATES: 4-15-15 8-24-15 11-2-15

SHEET 53 OF 74

FILE => 55-0203-o-crwdet04.dgn

USERNAME => s127956 DATE PLOTTED => 18-MAY-2016 TIME PLOTTED => 14:39

DIST	COUNTY	ROUTE	POST MILES TOTAL PROJECT	SHEET No.	TOTAL SHEETS
12	Ora	5	1.2/2.2	224	244

Jinrong Wang 02-01-16
REGISTERED CIVIL ENGINEER DATE

03-28-16
PLANS APPROVAL DATE

REGISTERED PROFESSIONAL ENGINEER
JINRONG WANG
No. C49844
Exp. 09-30-16
CIVIL
STATE OF CALIFORNIA

The State of California or its officers or agents shall not be responsible for the accuracy or completeness of electronic copies of this plan sheet.

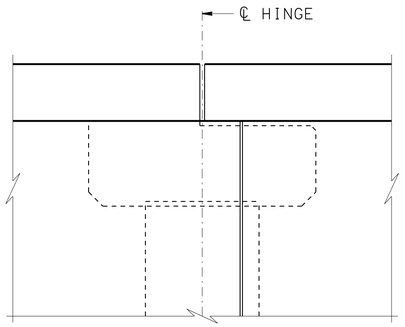

VIEW E-E
3/4" = 1'-0"

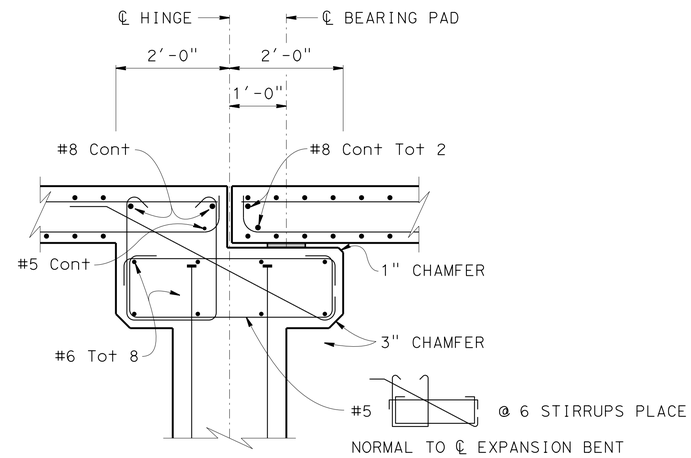

SECTION F-F
3/4" = 1'-0"

NOTE:
THE CONTRACTOR MUST VERIFY ALL CONTROLLING FIELD DIMENSIONS BEFORE ORDERING OR FABRICATING ANY MATERIAL.

	BY	CHECKED
DESIGN	J. WANG	P. MAK
DETAILS	KC	P. MAK
QUANTITIES	F. TANNOUS	P. MAK

STATE OF CALIFORNIA
DEPARTMENT OF TRANSPORTATION

DIVISION OF ENGINEERING SERVICES
STRUCTURE DESIGN
DESIGN BRANCH 12

BRIDGE NO. 55-0203
POST MILE 1.6

EL CAMINO REAL UC WIDENING
CURTAIN WALL 100 / RETAINING WALL 103
WALL DETAILS NO. 5

STRUCTURES DESIGN DETAIL SHEET (ENGLISH) (REV. 09-01-10)

ORIGINAL SCALE IN INCHES FOR REDUCED PLANS 0 1 2 3

UNIT: 3606
PROJECT NUMBER & PHASE: 1212000090 1
CONTRACT NO.: 12-0M4901

DISREGARD PRINTS BEARING EARLIER REVISION DATES

REVISION DATES: 4-15-15 8-22-15 11-2-15

SHEET 54 OF 74

FILE => 55-0203-o-crwdet05.dgn

USERNAME => s127956 DATE PLOTTED => 18-MAY-2016 TIME PLOTTED => 14:39

DIST	COUNTY	ROUTE	POST MILES TOTAL PROJECT	SHEET No.	TOTAL SHEETS
12	Ora	5	1.2/2.2	225	244

Jinrong Wang 02-01-16
REGISTERED CIVIL ENGINEER DATE

03-28-16
PLANS APPROVAL DATE

REGISTERED PROFESSIONAL ENGINEER
JINRONG WANG
No. C49844
Exp. 09-30-16
CIVIL
STATE OF CALIFORNIA

The State of California or its officers or agents shall not be responsible for the accuracy or completeness of electronic copies of this plan sheet.

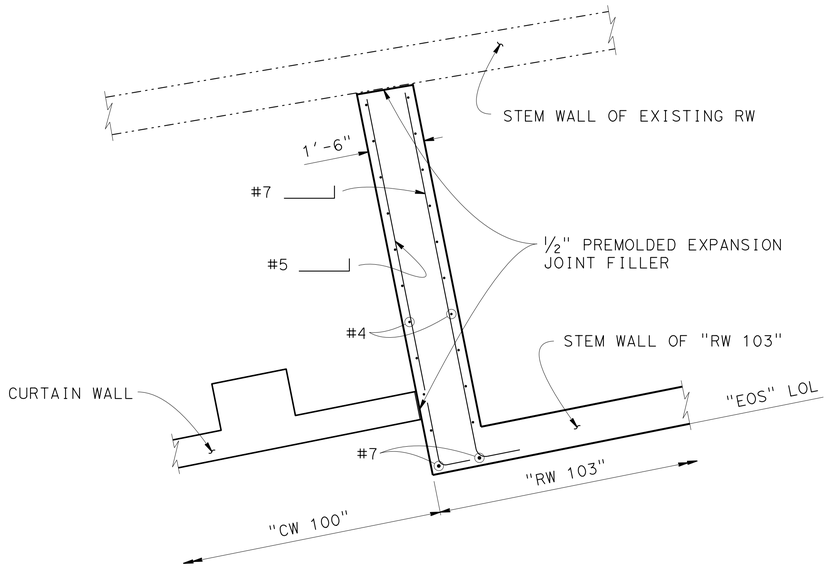

SECTION B-B

1/2" = 1'-0"

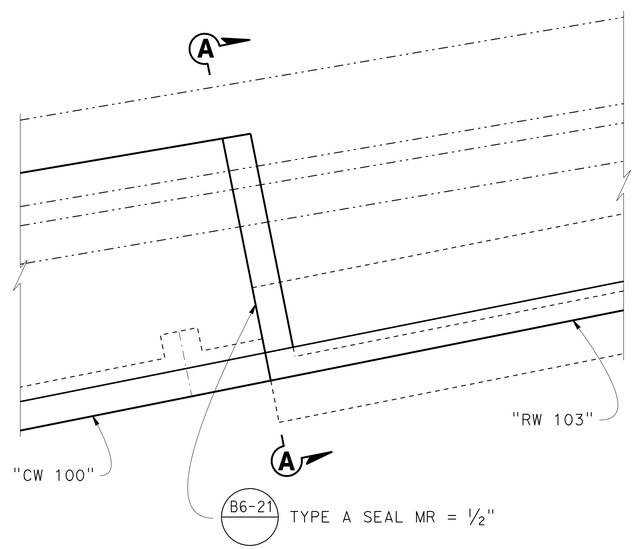

PLAN

1/4" = 1'-0"

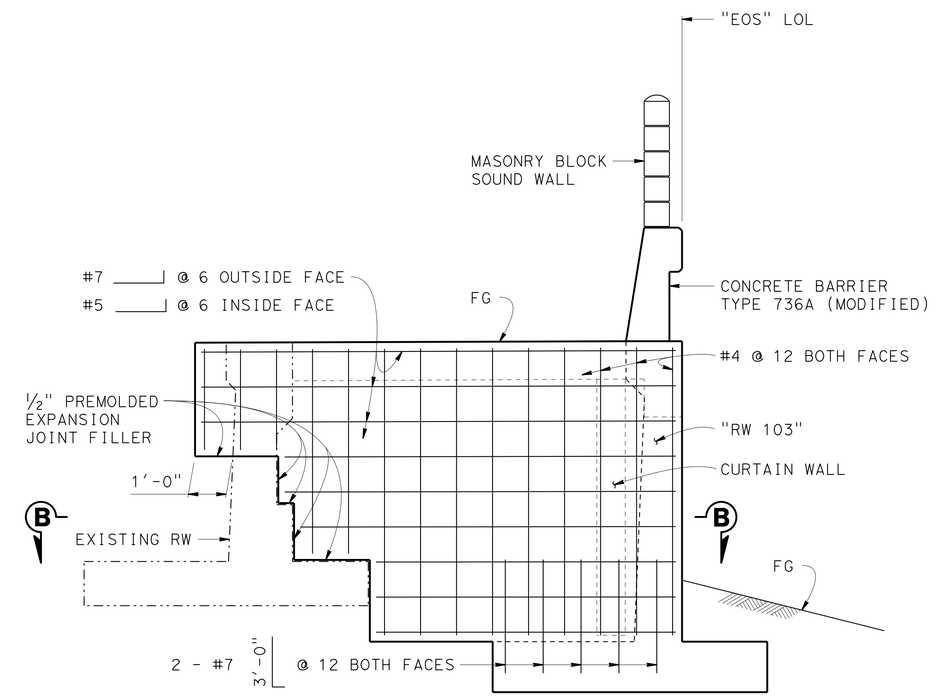

VIEW A-A

1/2" = 1'-0"

NOTE:
THE CONTRACTOR MUST VERIFY ALL CONTROLLING FIELD DIMENSIONS BEFORE ORDERING OR FABRICATING ANY MATERIAL.

	BY	CHECKED
DESIGN	J. WANG	P. MAK
DETAILS	KC	P. MAK
QUANTITIES	F. TANNOUS	P. MAK

STATE OF CALIFORNIA
DEPARTMENT OF TRANSPORTATION

DIVISION OF ENGINEERING SERVICES
STRUCTURE DESIGN
DESIGN BRANCH 12

BRIDGE NO. 55-0203
POST MILE 1.6

EL CAMINO REAL UC WIDENING
CURTAIN WALL 100 / RETAINING WALL 103
WALL DETAILS NO. 6

STRUCTURES DESIGN DETAIL SHEET (ENGLISH) (REV. 09-01-10)

ORIGINAL SCALE IN INCHES FOR REDUCED PLANS 0 1 2 3

UNIT: 3606
PROJECT NUMBER & PHASE: 1212000090 1
CONTRACT NO.: 12-0M4901

DISREGARD PRINTS BEARING EARLIER REVISION DATES

REVISION DATES: 9-1-15 11-2-15

SHEET 55 OF 74

FILE => 55-0203-o-crwdet06.dgn

USERNAME => s127956 DATE PLOTTED => 18-MAY-2016 TIME PLOTTED => 14:39

DIST	COUNTY	ROUTE	POST MILES TOTAL PROJECT	SHEET No.	TOTAL SHEETS
12	Ora	5	1.2/2.2	226	244

Jinrong Wang 02-01-16
REGISTERED CIVIL ENGINEER DATE

03-28-16
PLANS APPROVAL DATE

REGISTERED PROFESSIONAL ENGINEER
JINRONG WANG
No. C49844
Exp. 09-30-16
CIVIL
STATE OF CALIFORNIA

The State of California or its officers or agents shall not be responsible for the accuracy or completeness of electronic copies of this plan sheet.

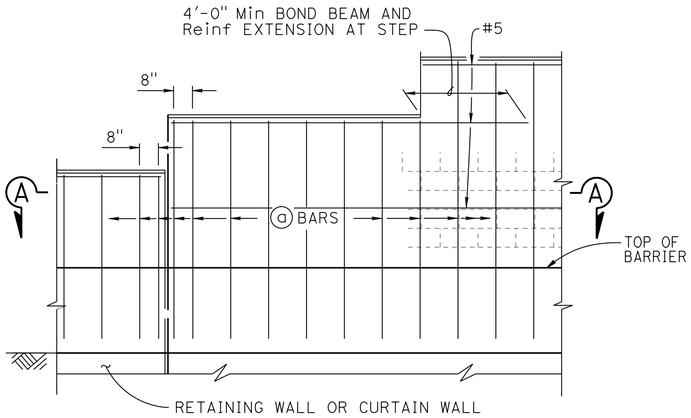

H=6'-4" MAX

PART ELEVATION

SOUND WALL REINFORCEMENT TABLE						
MAXIMUM "H"	ⓐ BARS @ 1'-4" Max	ⓑ BARS @ 1'-4" Max	"Y"	f'm (psi)	COMPRESSIVE STRENGTH OF CMU (psi)	MAXIMUM "H"
6'-4"	#4	———	———	1500	2000	6'-4"

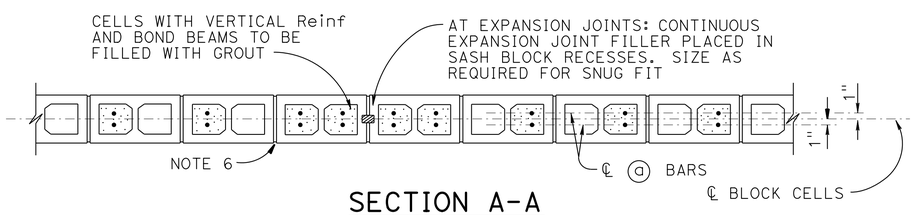

SECTION A-A

H=6'-4" MAX

For detail not shown, see other sections

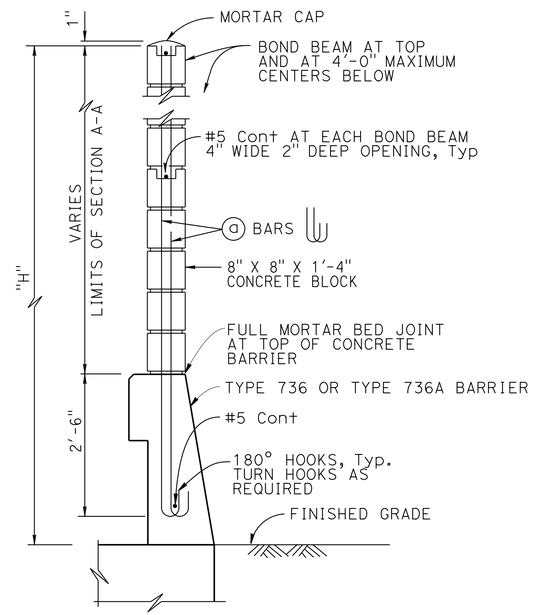

H=6'-4" MAX

TYPICAL SECTION

NOTES:

1. For details not shown, see "MASONRY BLOCK SOUND WALL WITH BARRIER ON RETAINING WALL - DETAILS NO. 2" sheet.
2. Slope ground at traffic side of barrier to drain. Maximum slope ±10%.
3. See "STANDARD PLAN B15-9" for other details. Use "TYPE I" end.
4. For type of block and joint finish, see other sheets.
5. When blocks are laid in stacked bond, ladder type, galvanized joint reinforcement shall be provided. A minimum of 2-9 gauge wire continuous at 4'-0" maximum to be used. Locate reinforcement in joints that are at the approximate midpoint between bond beams.
6. Horizontal joints shall be tooled concave or may be weathered. Vertical joints shall be tooled concave or may be raked.
7. For intermediate wall heights that are between the "H's" given, use the tabular information for the next higher "H".
8. Barrier and retaining wall reinforcement not all shown see "STANDARD PLAN RSP B15-6" for reinforcement.

NOTE:
THE CONTRACTOR MUST VERIFY ALL CONTROLLING FIELD DIMENSIONS BEFORE ORDERING OR FABRICATING ANY MATERIAL.

	BY	CHECKED
DESIGN	J. WANG	P. MAK
DETAILS	VARIOUS/kc	P. MAK
QUANTITIES	F. TANNOUS	P. MAK

STATE OF CALIFORNIA
DEPARTMENT OF TRANSPORTATION

DIVISION OF ENGINEERING SERVICES
STRUCTURE DESIGN
DESIGN BRANCH 12

BRIDGE NO. 55-0203
POST MILE 1.6

EL CAMINO REAL UC WIDENING
CURTAIN WALL 100 / RETAINING WALL 103
SOUND WALL DETAILS NO. 1

STRUCTURES DESIGN DETAIL SHEET (ENGLISH) (REV. 09-01-10)

ORIGINAL SCALE IN INCHES FOR REDUCED PLANS 0 1 2 3

UNIT: 3606
PROJECT NUMBER & PHASE: 1212000090 1
CONTRACT NO.: 12-0M4901

DISREGARD PRINTS BEARING EARLIER REVISION DATES

REVISION DATES: 7-24-15 11-2-15 1-20-16

SHEET 56 OF 74

FILE => 55-0203-o-crwswdt01.dgn

USERNAME => s127956 DATE PLOTTED => 18-MAY-2016 TIME PLOTTED => 14:39

DIST	COUNTY	ROUTE	POST MILES TOTAL PROJECT	SHEET No.	TOTAL SHEETS
12	Ora	5	1.2/2.2	227	244

Jinrong Wang 02-01-16
REGISTERED CIVIL ENGINEER DATE

03-28-16
PLANS APPROVAL DATE

REGISTERED PROFESSIONAL ENGINEER
JINRONG WANG
No. C49844
Exp. 09-30-16
CIVIL
STATE OF CALIFORNIA

The State of California or its officers or agents shall not be responsible for the accuracy or completeness of electronic copies of this plan sheet.

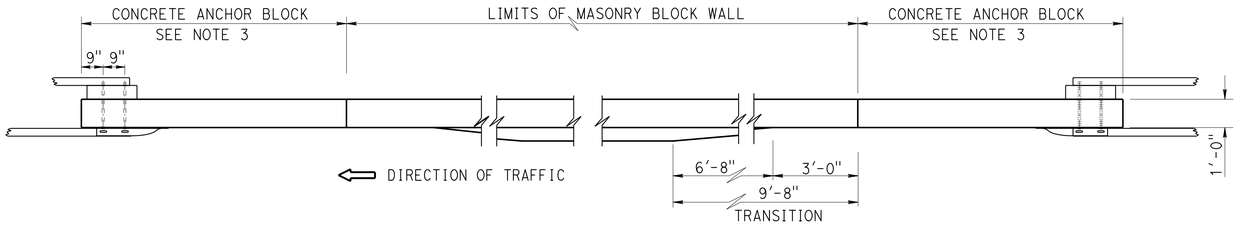

PLAN

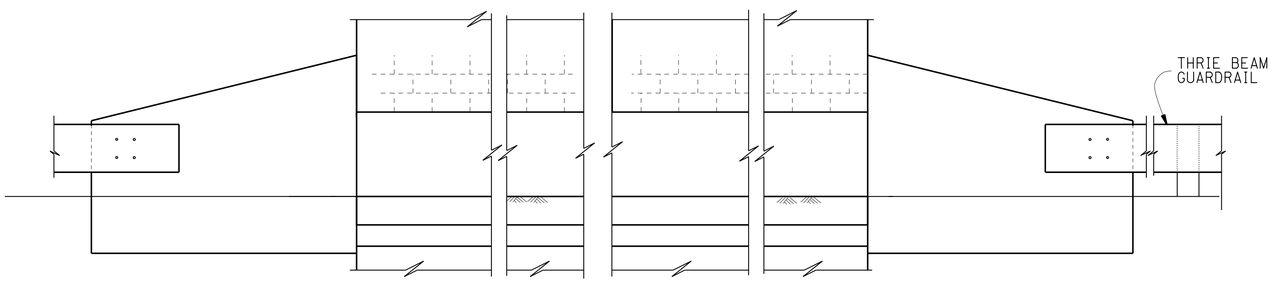

ELEVATION

MIDWEST GUARDRAIL SYSTEM ANCHORAGE

For details not shown, see STANDARD PLAN RSP B11-56

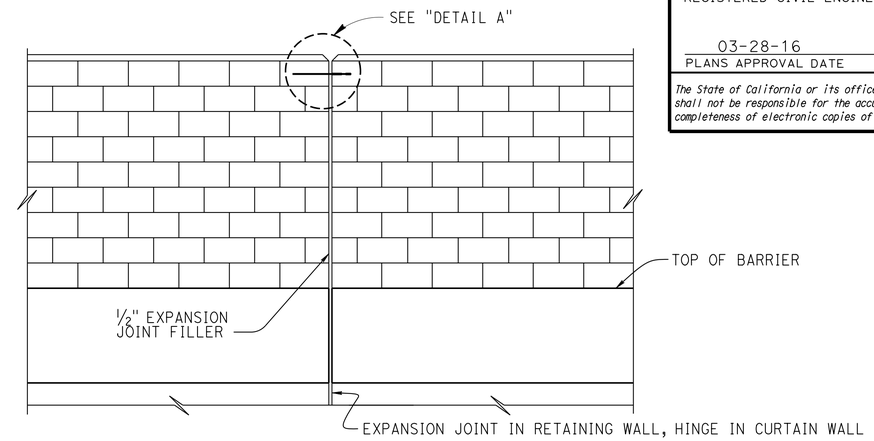

ALIGNMENT KEY DETAIL

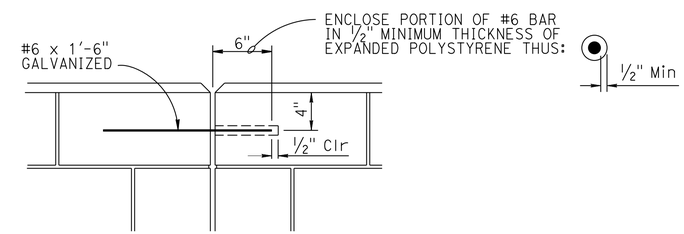

DETAIL A

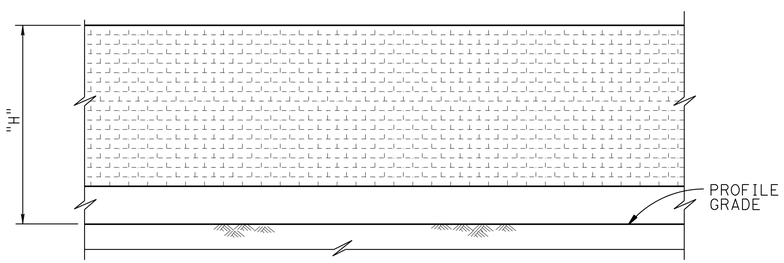

CLEARANCE DETAIL

DESIGN NOTES

DESIGN
Uniform Building Code, 1997 Edition and the Bridge Design Specifications

DESIGN WIND LOAD
33 psf

DESIGN SEISMIC LOAD
0.57 Dead load

CONCRETE MASONRY

REINFORCED CONCRETE	REGULAR STRENGTH	HIGH STRENGTH
f'c = 3600 psi	f'm = 2000 psi	f'm = 2500 psi
fy = 60 ksi	fb = 660 psi	fb = 830 psi
	fs = 24,000 psi	fs = 24,000 psi
	n = 19.3	n = 15.5

NOTES:

1. For details not shown, see STANDARD PLAN RSP B15-6
2. Slope ground at traffic side of barrier to drain. Maximum slope ±10% See STANDARD PLAN RSP B11-56, Note 3.
3. For Concrete Anchor Block and connection details, see "ANCHOR BLOCK FOR TRANSITION RAILING CONNECTION DETAIL C" on STANDARD PLAN A77U3.

NOTE:
THE CONTRACTOR MUST VERIFY ALL CONTROLLING FIELD DIMENSIONS BEFORE ORDERING OR FABRICATING ANY MATERIAL.

	BY	CHECKED
DESIGN	J. WANG	P. MAK
DETAILS	VARIOUS/kc	P. MAK
QUANTITIES	F. TANNOUS	P. MAK

STATE OF CALIFORNIA
DEPARTMENT OF TRANSPORTATION

DIVISION OF ENGINEERING SERVICES
STRUCTURE DESIGN
DESIGN BRANCH 12

BRIDGE NO. 55-0203
POST MILE 1.6

EL CAMINO REAL UC WIDENING
CURTAIN WALL 100 / RETAINING WALL 103
SOUND WALL DETAILS NO. 2

STRUCTURES DESIGN DETAIL SHEET (ENGLISH) (REV. 09-01-10)

ORIGINAL SCALE IN INCHES FOR REDUCED PLANS 0 1 2 3

UNIT: 3606
PROJECT NUMBER & PHASE: 1212000090 1
CONTRACT NO.: 12-0M4901

DISREGARD PRINTS BEARING EARLIER REVISION DATES

REVISION DATES 7-29-15 11-2-15 12-28-15

SHEET 57 OF 74

FILE => 55-0203-o-crwswdt02.dgn

USERNAME => s127956 DATE PLOTTED => 18-MAY-2016 TIME PLOTTED => 14:39

DIST	COUNTY	ROUTE	POST MILES TOTAL PROJECT	SHEET No.	TOTAL SHEETS
12	Ora	5	1.2/2.2	228	244

Jinrong Wang 02-01-16
REGISTERED CIVIL ENGINEER DATE

03-28-16
PLANS APPROVAL DATE

REGISTERED PROFESSIONAL ENGINEER
JINRONG WANG
No. C49844
Exp. 09-30-16
CIVIL
STATE OF CALIFORNIA

The State of California or its officers or agents shall not be responsible for the accuracy or completeness of electronic copies of this plan sheet.

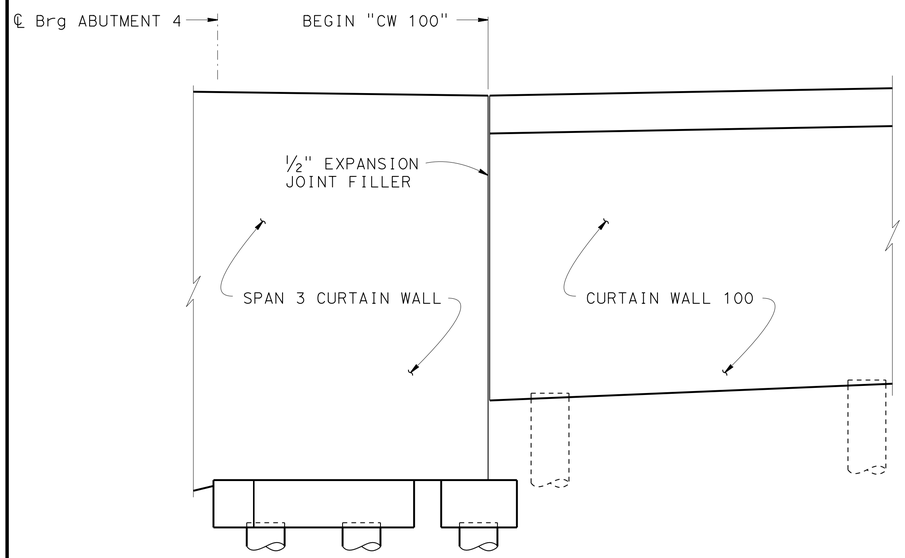

ELEVATION
1/4" = 1'-0"

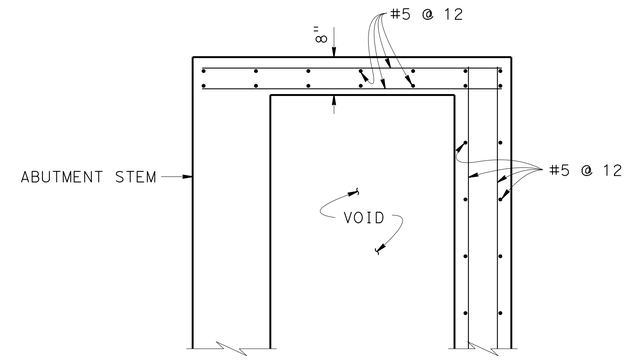

SECTION A-A
3/4" = 1'-0"

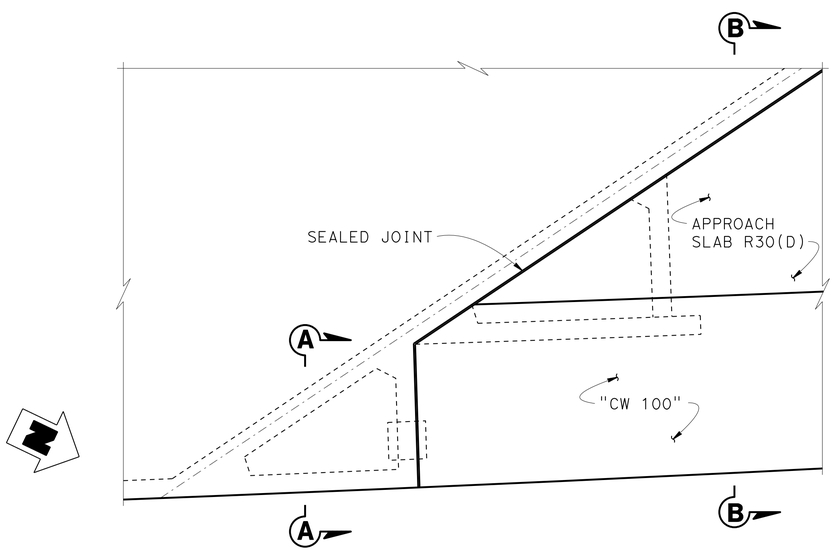

PLAN
1/4" = 1'-0"

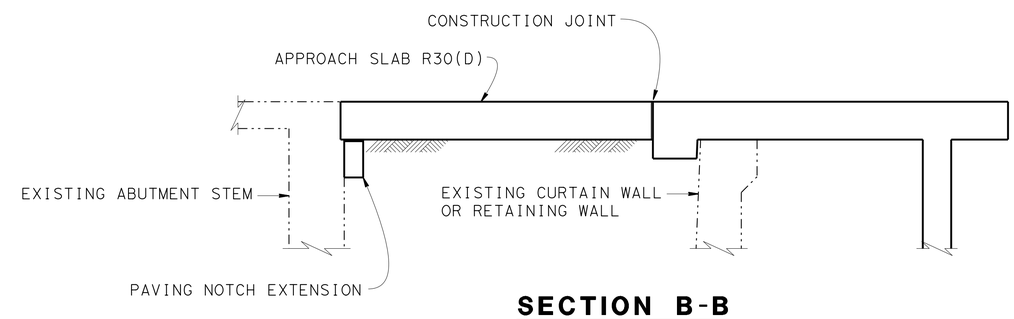

SECTION B-B
1/2" = 1'-0"

NOTE:
THE CONTRACTOR MUST VERIFY ALL CONTROLLING FIELD DIMENSIONS BEFORE ORDERING OR FABRICATING ANY MATERIAL.

NOTE: Concrete barrier not shown for clarity

DESIGN	BY J. WANG	CHECKED P. MAK	
DETAILS	BY Kc	CHECKED P. MAK	
QUANTITIES	BY F. TANNOUS	CHECKED P. MAK	

STATE OF CALIFORNIA
DEPARTMENT OF TRANSPORTATION

DIVISION OF ENGINEERING SERVICES
STRUCTURE DESIGN
DESIGN BRANCH 12

BRIDGE NO. 55-0203
POST MILE 1.6

EL CAMINO REAL UC WIDENING
CURTAIN WALL 100 / RETAINING WALL 103
MISCELLANEOUS DETAILS NO. 1

STRUCTURES DESIGN DETAIL SHEET (ENGLISH) (REV. 09-01-10)

ORIGINAL SCALE IN INCHES FOR REDUCED PLANS 0 1 2 3

UNIT: 3606
PROJECT NUMBER & PHASE: 1212000090 1
CONTRACT NO.: 12-0M4901

DISREGARD PRINTS BEARING EARLIER REVISION DATES

REVISION DATES: 4-29-15 11-4-15 3-10-16

SHEET 58 OF 74

FILE => 55-0203-o-crwswmdt.dgn

USERNAME => s127956 DATE PLOTTED => 18-MAY-2016 TIME PLOTTED => 14:39

DIST	COUNTY	ROUTE	POST MILES TOTAL PROJECT	SHEET No.	TOTAL SHEETS
12	Ora	5	1.2/2.2	229	244

Jinrong Wang 02-01-16
REGISTERED CIVIL ENGINEER DATE

03-28-16
PLANS APPROVAL DATE

REGISTERED PROFESSIONAL ENGINEER
JINRONG WANG
No. C49844
Exp. 09-30-16
CIVIL
STATE OF CALIFORNIA

The State of California or its officers or agents shall not be responsible for the accuracy or completeness of electronic copies of this plan sheet.

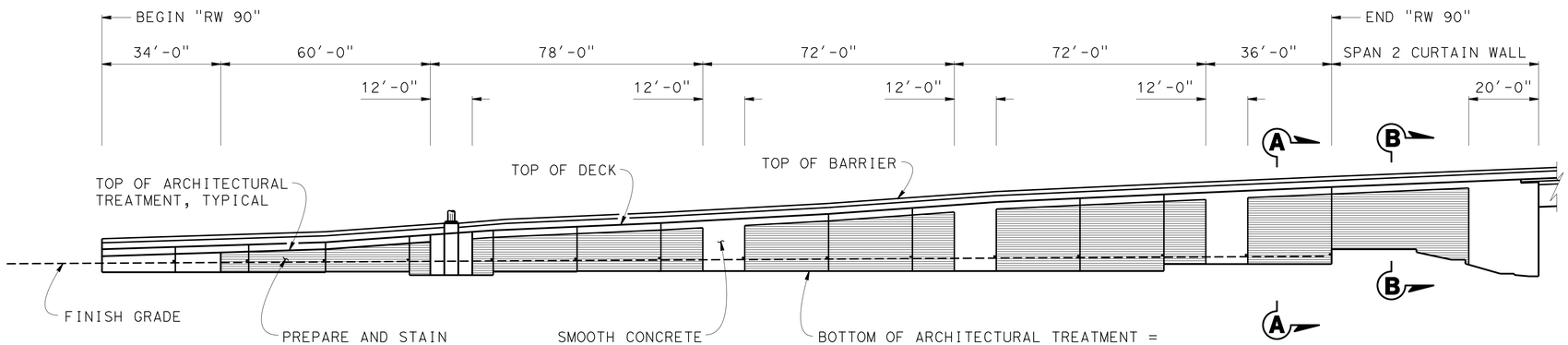

ELEVATION

1" = 20'

NOTE:
THE CONTRACTOR MUST VERIFY ALL CONTROLLING FIELD DIMENSIONS BEFORE ORDERING OR FABRICATING ANY MATERIAL.

NOTE:

For "SECTION A-A" and "SECTION B-B" see "ARCHITECTURAL TREATMENT DETAILS NO. 3" sheet.

	BY	CHECKED
DESIGN	J. WANG	P. MAK
DETAILS	kc	P. MAK
QUANTITIES	F. TANNOUS	P. MAK

STATE OF CALIFORNIA
DEPARTMENT OF TRANSPORTATION

DIVISION OF ENGINEERING SERVICES
STRUCTURE DESIGN
DESIGN BRANCH 12

BRIDGE NO. 55-0203
POST MILE 1.6

EL CAMINO REAL UC WIDENING
RETAINING WALL 90
ARCHITECTURAL TREATMENT DETAILS NO. 1

STRUCTURES DESIGN DETAIL SHEET (ENGLISH) (REV. 09-01-10)

ORIGINAL SCALE IN INCHES FOR REDUCED PLANS 0 1 2 3

UNIT: 3606
PROJECT NUMBER & PHASE: 1212000090 1
CONTRACT NO.: 12-0M4901

DISREGARD PRINTS BEARING EARLIER REVISION DATES

REVISION DATES: 9-8-15 11-2-15 1-20-16

SHEET 59 OF 74

FILE => 55-0203-r-arch01.dgn

USERNAME => s127956 DATE PLOTTED => 18-MAY-2016 TIME PLOTTED => 14:39

DIST	COUNTY	ROUTE	POST MILES TOTAL PROJECT	SHEET No.	TOTAL SHEETS
12	Ora	5	1.2/2.2	230	244

Jinrong Wang 02-01-16
REGISTERED CIVIL ENGINEER DATE

03-28-16
PLANS APPROVAL DATE

REGISTERED PROFESSIONAL ENGINEER
JINRONG WANG
No. C49844
Exp. 09-30-16
CIVIL
STATE OF CALIFORNIA

The State of California or its officers or agents shall not be responsible for the accuracy or completeness of electronic copies of this plan sheet.

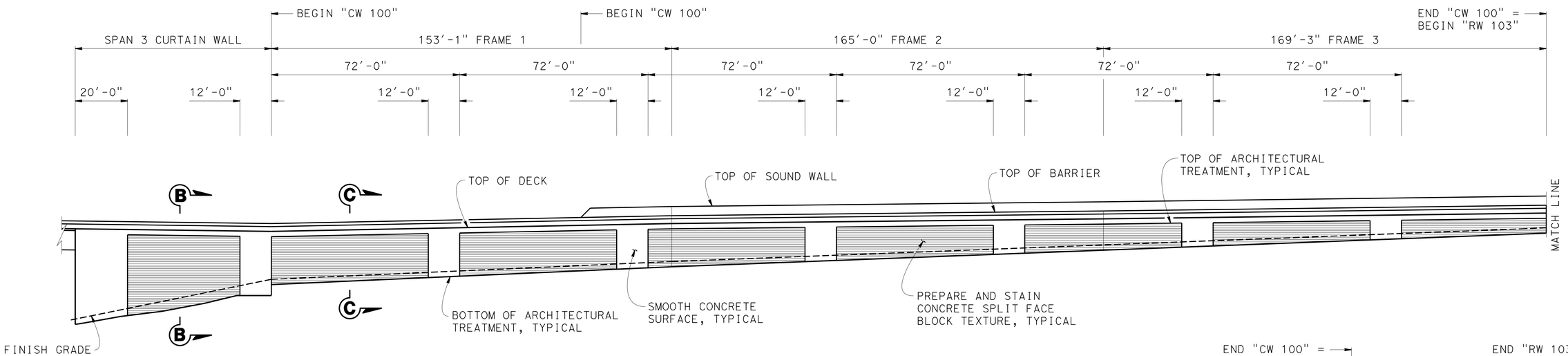

ELEVATION

1" = 20'

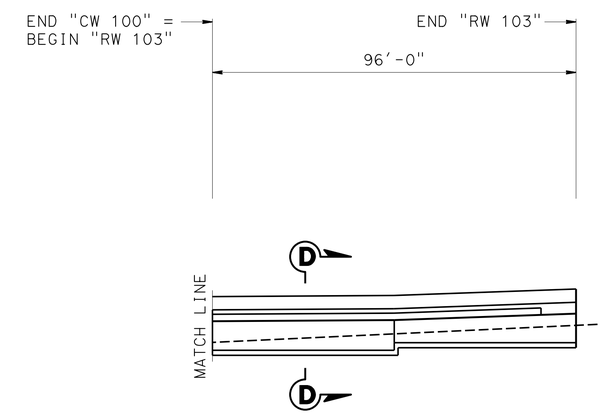

NOTE:
THE CONTRACTOR MUST VERIFY ALL CONTROLLING FIELD DIMENSIONS BEFORE ORDERING OR FABRICATING ANY MATERIAL.

NOTE:

For "SECTION B-B", "SECTION C-C" and "SECTION D-D" see "ARCHITECTURAL TREATMENT DETAILS NO. 3" sheet.

	BY	CHECKED
DESIGN	J. WANG	P. MAK
DETAILS	kc	P. MAK
QUANTITIES	F. TANNOUS	P. MAK

STATE OF CALIFORNIA
DEPARTMENT OF TRANSPORTATION

DIVISION OF ENGINEERING SERVICES
STRUCTURE DESIGN
DESIGN BRANCH 12

BRIDGE NO. 55-0203
POST MILE 1.6

EL CAMINO REAL UC WIDENING
CURTAIN WALL 100 / RETAINING WALL 103
ARCHITECTURAL TREATMENT DETAILS NO. 2

STRUCTURES DESIGN DETAIL SHEET (ENGLISH) (REV. 09-01-10)

ORIGINAL SCALE IN INCHES FOR REDUCED PLANS 0 1 2 3

UNIT: 3606
PROJECT NUMBER & PHASE: 1212000090 1
CONTRACT NO.: 12-0M4901

DISREGARD PRINTS BEARING EARLIER REVISION DATES
REVISION DATES: 9-3-15 11-2-15 1-20-16

SHEET 60 OF 74

FILE => 55-0203-r-arch02.dgn

USERNAME => s127956 DATE PLOTTED => 18-MAY-2016 TIME PLOTTED => 14:39

DIST	COUNTY	ROUTE	POST MILES TOTAL PROJECT	SHEET No.	TOTAL SHEETS
12	Ora	5	1.2/2.2	231	244

Jinrong Wang 02-01-16
REGISTERED CIVIL ENGINEER DATE

03-28-16
PLANS APPROVAL DATE

REGISTERED PROFESSIONAL ENGINEER JINRONG WANG No. C49844 Exp. 09-30-16 CIVIL STATE OF CALIFORNIA

The State of California or its officers or agents shall not be responsible for the accuracy or completeness of electronic copies of this plan sheet.

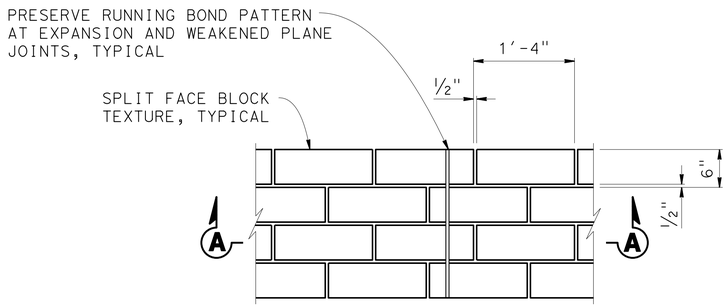

RUNNING BOND PATTERN - ELEVATION VIEW

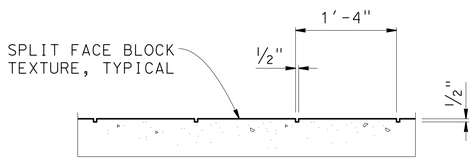

SECTION A-A

SPLIT FACE BLOCK TEXTURE
NO SCALE

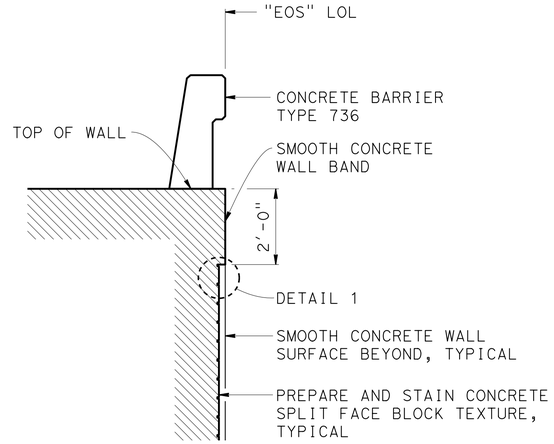

SECTION A-A
NO SCALE

SECTION B-B
NO SCALE

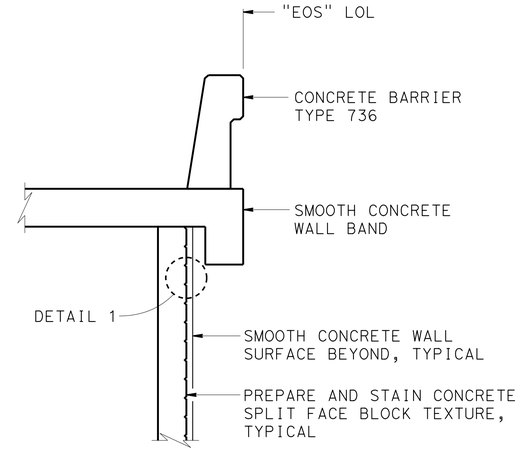

SECTION C-C
NO SCALE

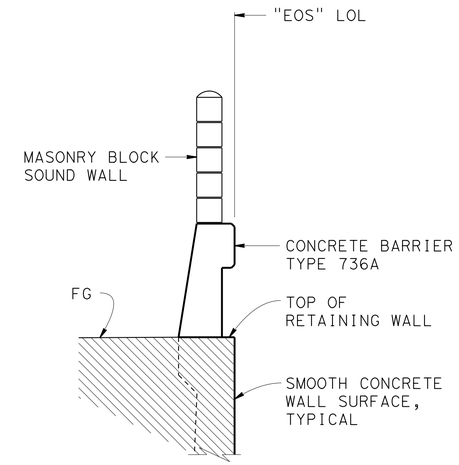

SECTION D-D
NO SCALE

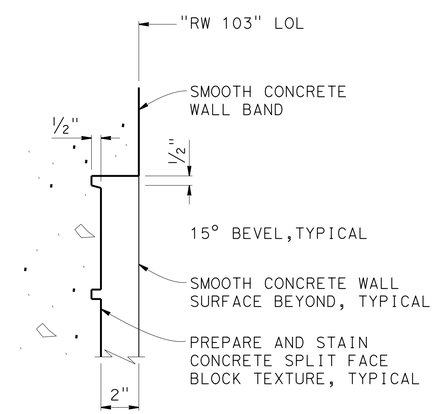

DETAIL 1
NO SCALE

NOTE:
THE CONTRACTOR MUST VERIFY ALL CONTROLLING FIELD DIMENSIONS BEFORE ORDERING OR FABRICATING ANY MATERIAL.

	BY	CHECKED
DESIGN	J. WANG	P. MAK
DETAILS	KC	P. MAK
QUANTITIES	F. TANNOUS	P. MAK

STATE OF CALIFORNIA
DEPARTMENT OF TRANSPORTATION

DIVISION OF ENGINEERING SERVICES
STRUCTURE DESIGN
DESIGN BRANCH 12

BRIDGE NO. 55-0203
POST MILE 1.6

EL CAMINO REAL UC WIDENING
CURTAIN WALL / RETAINING WALL
ARCHITECTURAL TREATMENT DETAILS NO. 3

STRUCTURES DESIGN DETAIL SHEET (ENGLISH) (REV. 09-01-10)

ORIGINAL SCALE IN INCHES FOR REDUCED PLANS 0 1 2 3

UNIT: 3606
PROJECT NUMBER & PHASE: 1212000090 1
CONTRACT NO.: 12-0M4901

DISREGARD PRINTS BEARING EARLIER REVISION DATES

REVISION DATES: 9-1-15 11-2-15 3-10-16

SHEET 61 OF 74

FILE => 55-0203-r-arch03.dgn

USERNAME => s127956 DATE PLOTTED => 18-MAY-2016 TIME PLOTTED => 14:39

DIST	COUNTY	ROUTE	POST MILES TOTAL PROJECT	SHEET No.	TOTAL SHEETS
12	Ora	5	1.2/2.2	232	244

Jinrong Wang 02-01-16
REGISTERED CIVIL ENGINEER DATE

03-28-16
PLANS APPROVAL DATE

REGISTERED PROFESSIONAL ENGINEER
JINRONG WANG
No. C49844
Exp. 09-30-16
CIVIL
STATE OF CALIFORNIA

The State of California or its officers or agents shall not be responsible for the accuracy or completeness of electronic copies of this plan sheet.

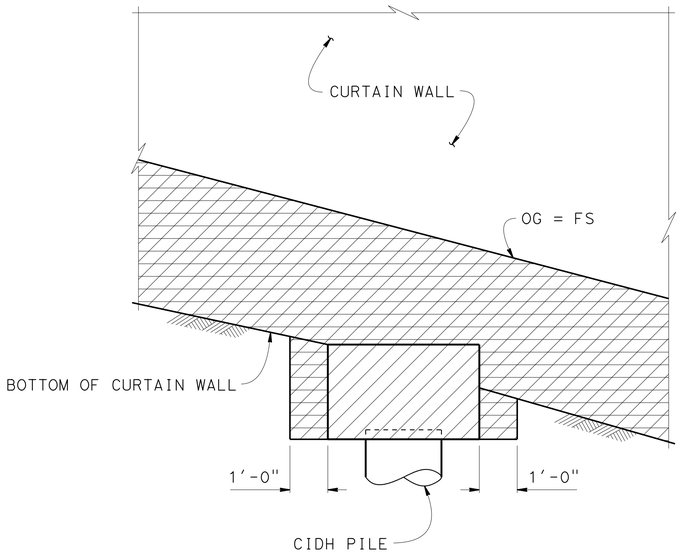

ELEVATION

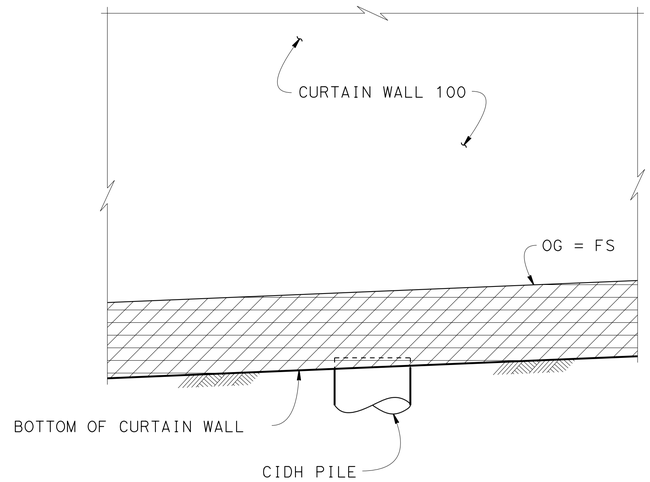

ELEVATION

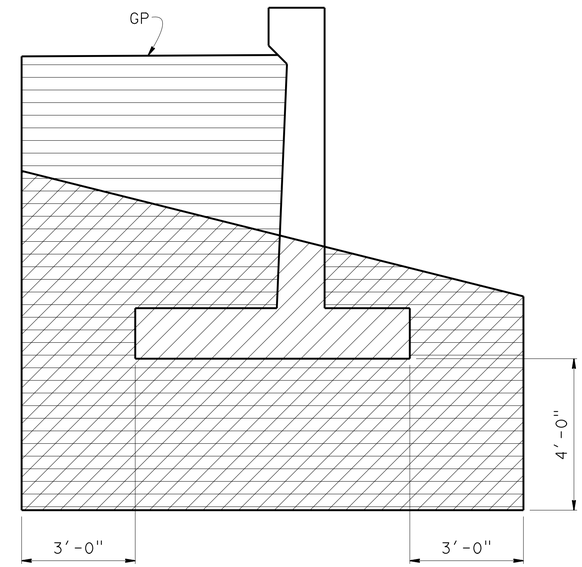

PAY LIMITS FOR STRUCTURE EXCAVATION AND BACKFILL - RETAINING WALL 103

NO SCALE

LEGEND:

STRUCTURE EXCAVATION

STRUCTURE BACKFILL

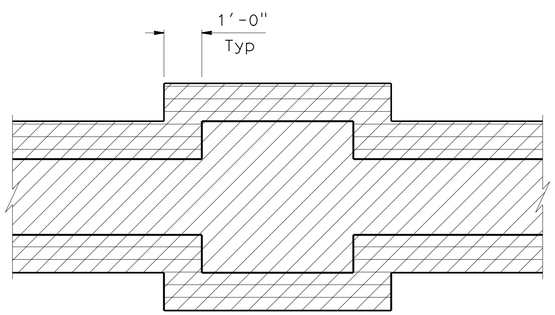

PLAN

PAY LIMITS FOR STRUCTURE EXCAVATION AND BACKFILL CURTAIN WALL AT SPAN 1 AND SPAN 3

NO SCALE

LEGEND:

STRUCTURE EXCAVATION

STRUCTURE BACKFILL

NOTE:
THE CONTRACTOR MUST VERIFY ALL CONTROLLING FIELD DIMENSIONS BEFORE ORDERING OR FABRICATING ANY MATERIAL.

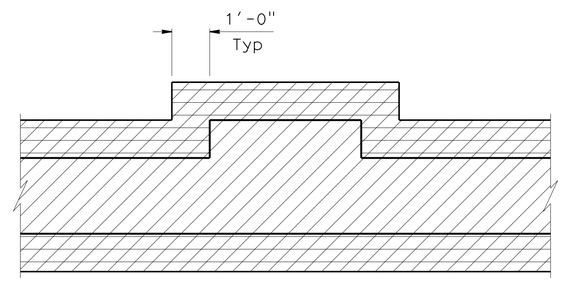

PLAN

PAY LIMITS FOR STRUCTURE EXCAVATION AND BACKFILL - CURTAIN WALL 100

NO SCALE

LEGEND:

STRUCTURE EXCAVATION

STRUCTURE BACKFILL

	BY	CHECKED
DESIGN	J. WANG	L. VALLA
DETAILS	Kc	L. VALLA
QUANTITIES	L. VALLA	P. MAK

STATE OF CALIFORNIA
DEPARTMENT OF TRANSPORTATION

DIVISION OF ENGINEERING SERVICES
STRUCTURE DESIGN
DESIGN BRANCH 12

BRIDGE NO. 55-0203
POST MILE 1.6

EL CAMINO REAL UC WIDENING
CURTAIN WALL 100 / RETAINING WALL 103
EXCAVATION AND BACKFILL

STRUCTURES DESIGN DETAIL SHEET (ENGLISH) (REV. 09-01-10)

ORIGINAL SCALE IN INCHES FOR REDUCED PLANS 0 1 2 3

UNIT: 3606
PROJECT NUMBER & PHASE: 1212000090 1
CONTRACT NO.: 12-0M4901

DISREGARD PRINTS BEARING EARLIER REVISION DATES

REVISION DATES: 8-4-15 3-10-16 12-8-15

SHEET 62 OF 74

FILE => 55-0203-s-misc01.dgn

USERNAME => s127956 DATE PLOTTED => 18-MAY-2016 TIME PLOTTED => 14:39

DIST	COUNTY	ROUTE	POST MILES TOTAL PROJECT	SHEET No.	TOTAL SHEETS
12	Ora	5	1.2/2.2	233	244

Jinrong Wang 02-01-16
REGISTERED CIVIL ENGINEER DATE

03-28-16
PLANS APPROVAL DATE

REGISTERED PROFESSIONAL ENGINEER JINRONG WANG No. C49844 Exp. 09-30-16 CIVIL STATE OF CALIFORNIA

The State of California or its officers or agents shall not be responsible for the accuracy or completeness of electronic copies of this plan sheet.

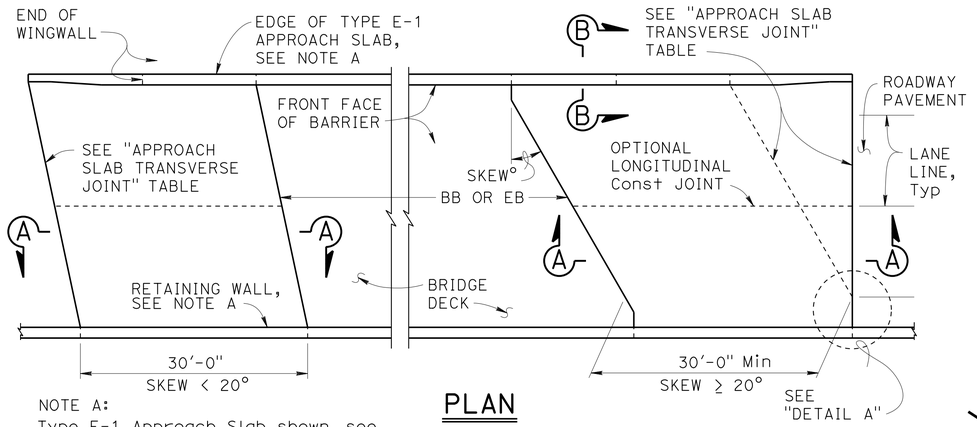

NOTE A:
Type E-1 Approach Slab shown, see "SECTION B-B" for Type E-2 details.

PLAN
1" = 10'

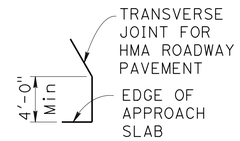

DETAIL A
No Scale

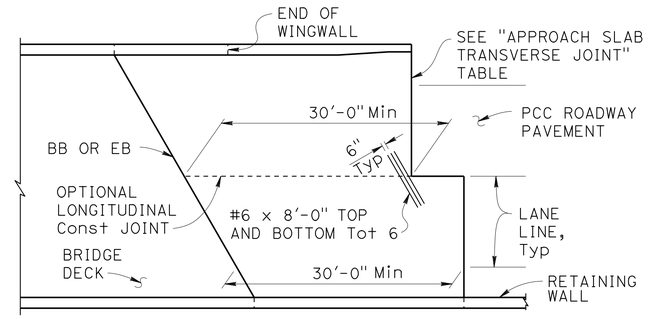

END STAGGER DETAIL
1" = 10'

APPROACH SLAB TRANSVERSE JOINT		
APPROACH SKEW	WITH HMA ROADWAY PAVEMENT	WITH PCC ROADWAY PAVEMENT
< 20°	PARALLEL TO BB OR EB	PARALLEL TO BB OR EB
20° - 45°	PARALLEL TO BB OR EB USE "DETAIL A"	STAGGER AT LANE LINES 24' TO 36' APART, SEE "END STAGGER DETAIL"
> 45°	PARALLEL TO BB OR EB USE "DETAIL A"	STAGGER AT EACH LANE LINE, SEE "END STAGGER DETAIL"

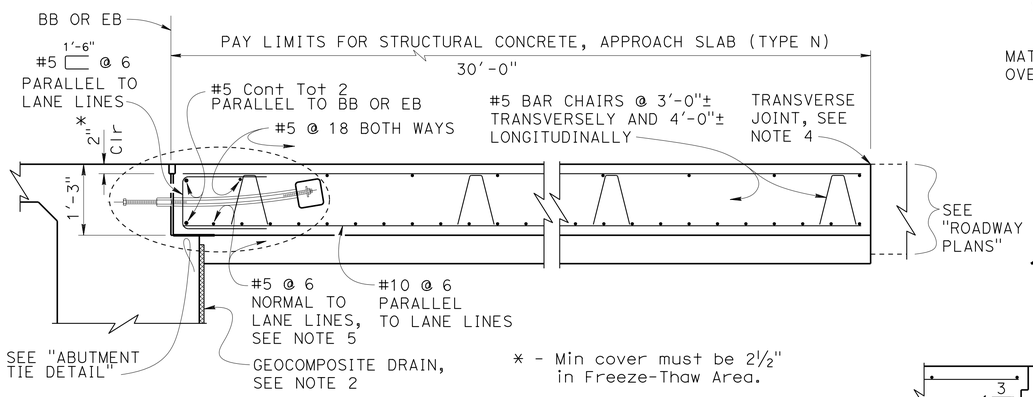

* - Min cover must be 2½" in Freeze-Thaw Area.

① SECTION A-A
¾" = 1'-0"

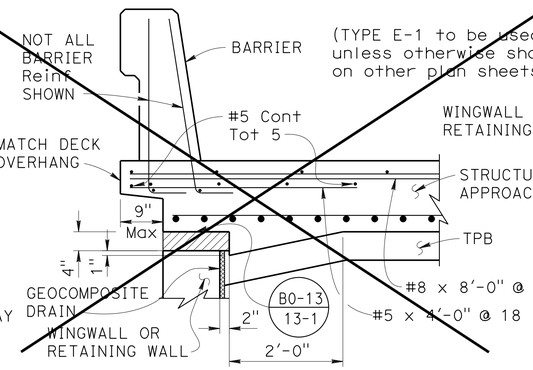

② TYPE E-1

Indicates Expanded Polystyrene, remove after concrete is placed.

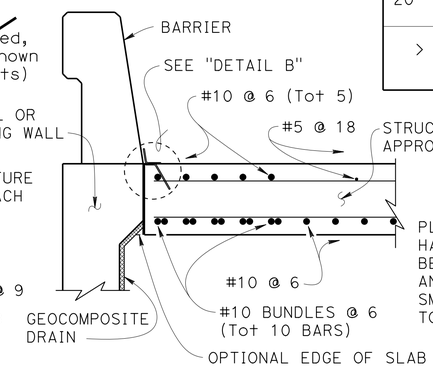

TYPE E-2 ①

SECTION B-B
¾" = 1'-0"

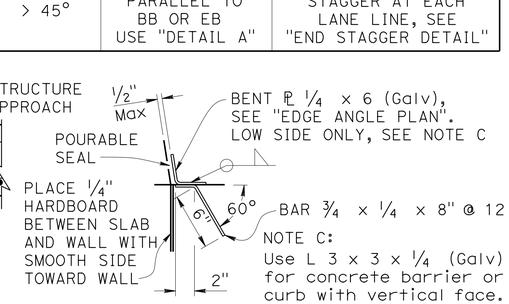

NOTE C:
Use L 3 x 3 x ¼ (Galv) for concrete barrier or curb with vertical face.

DETAIL B
1½" = 1'-0"

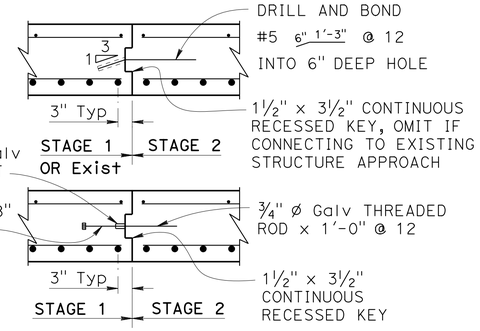

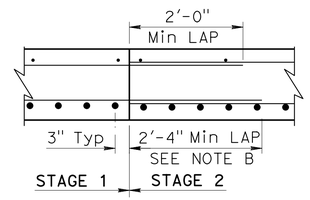

NOTE B:
Min lap splice for bottom Reinf must be 2'-9" in Freeze-Thaw Area.

LONGITUDINAL CONSTRUCTION JOINT ALTERNATIVES
¾" = 1'-0"

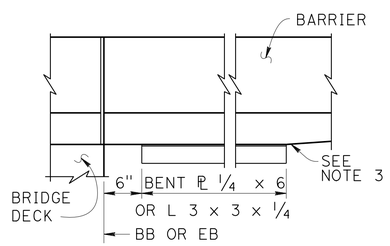

EDGE ANGLE PLAN
1" = 1'-0"

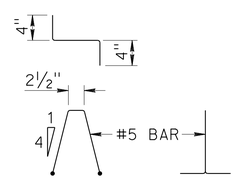

BAR CHAIR DETAIL
1" = 1'-0"

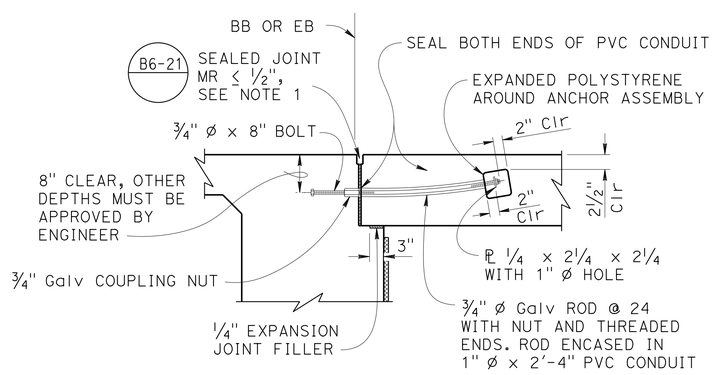

ABUTMENT TIE DETAILS
¾" = 1'-0"

DESIGN NOTES

DESIGN: AASHTO LRFD Bridge Design Specifications, 2012 Edition with Caltrans Amendments, preface dated January 2014

LIMIT STATES: Service I, Strength I & II, Extreme II and Fatigue I (γ_{FAT} = 1.0)

DEAD LOAD: Includes 35 psf for future wearing surface

LIVE LOAD: HL93 and permit design load
Equivalent strip width method: W_1 = 12 ft
Slab span: L_1 = 24.5 ft

REINFORCED CONCRETE:
f_y = 60 ksi
f'_c = 3.6 ksi
n = 8

NOTES:

1. For details not shown, see other plan sheets. Adjust reinforcement to clear sawcut for sealed joint.
2. ~~For drainage details, see "STRUCTURE APPROACH DRAINAGE DETAILS" sheet.~~ ③
3. End the plate or edge angle at beginning of barrier transition, end of wingwall, or end of structure approach as applicable.
4. Transverse Joint must be a minimum of 5'-0" from an existing or constructed weakened plane joint in approach PCC roadway pavement. Refer to Standard Plans P10 and P14.
5. At the Contractor's option, approach slab transverse reinforcement may be placed parallel to BB or EB. Spacing of transverse reinforcement is measured along ℄ roadway.

SPECIAL DETAILS

REVISED STANDARD DRAWING

FILE NO. xs3-140

APPROVAL DATE January 2015

① MODIFIED DETAIL
② DETAIL DOES NOT APPLY
③ NOTE DOES NOT APPLY

STATE OF CALIFORNIA
DEPARTMENT OF TRANSPORTATION

DIVISION OF ENGINEERING SERVICES

BRIDGE NO. 55-0203
POST MILE 1.6

EL CAMINO REAL UC WIDENING
STRUCTURE APPROACH TYPE N (30D)

DS OSD 2147A (ENGLISH STANDARD DRAWING "XS" BORDER REV. (10-01-14)

ORIGINAL SCALE IN INCHES FOR REDUCED PLANS 0 1 2 3

UNIT: 3606
PROJECT NUMBER & PHASE: 1212000090 & 1 CONTRACT NO.: 12-0M491

DISREGARD PRINTS BEARING EARLIER REVISION DATES

REVISION DATES 12-29-15

SHEET 63 OF 74

FILE => 55-0203-s-sad01.dgn

USERNAME => S127956 DATE PLOTTED => 18-MAY-2016 TIME PLOTTED => 14:33

DIST	COUNTY	ROUTE	POST MILES TOTAL PROJECT	SHEET No.	TOTAL SHEETS
12	Ora	5	1.2/2.2	234	244

Jinrong Wang 02-01-16
REGISTERED CIVIL ENGINEER DATE

03-28-16
PLANS APPROVAL DATE

REGISTERED PROFESSIONAL ENGINEER JINRONG WANG No. C49844 Exp. 09-30-16 CIVIL STATE OF CALIFORNIA

The State of California or its officers or agents shall not be responsible for the accuracy or completeness of electronic copies of this plan sheet.

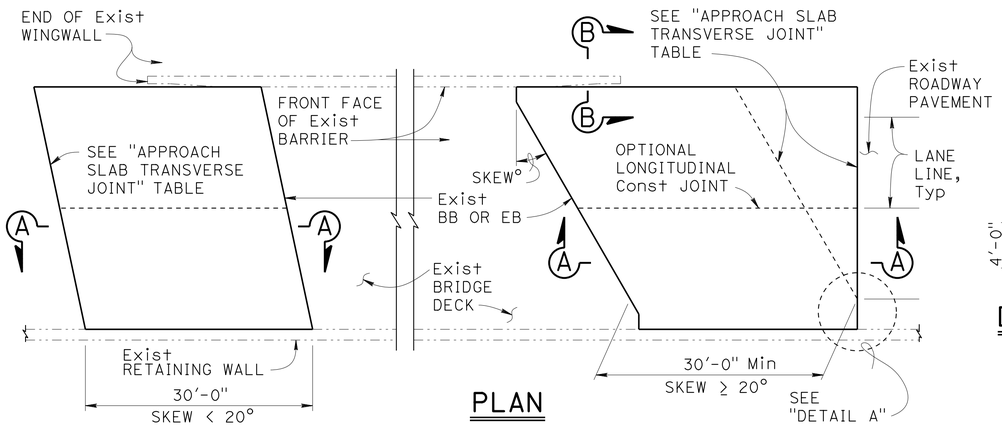

PLAN
1" = 10'

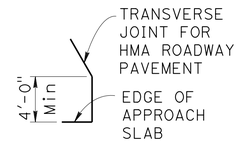

DETAIL A
No Scale

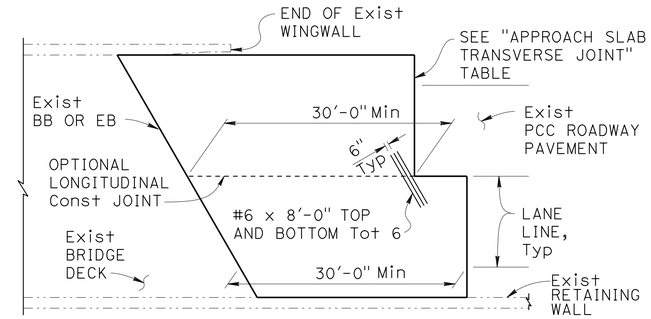

END STAGGER DETAIL
1" = 10'

APPROACH SLAB TRANSVERSE JOINT		
APPROACH SKEW	WITH HMA ROADWAY PAVEMENT	WITH PCC ROADWAY PAVEMENT
< 20°	PARALLEL TO BB OR EB	PARALLEL TO BB OR EB
20° - 45°	PARALLEL TO BB OR EB USE "DETAIL A"	STAGGER AT LANE LINES 24' TO 36' APART, SEE "END STAGGER DETAIL"
> 45°	PARALLEL TO BB OR EB USE "DETAIL A"	STAGGER AT EACH LANE LINE, SEE "END STAGGER DETAIL"

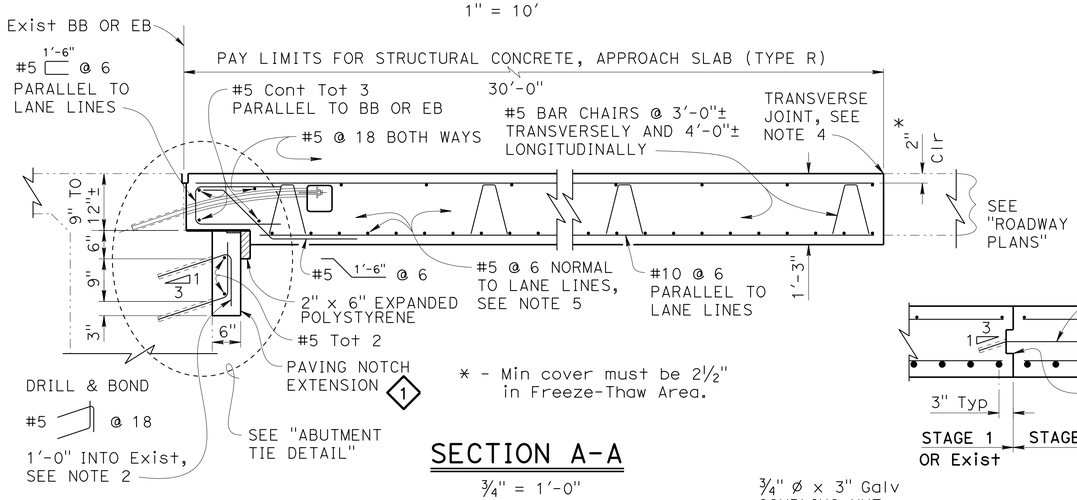

* - Min cover must be 2½" in Freeze-Thaw Area.

SECTION A-A
¾" = 1'-0"

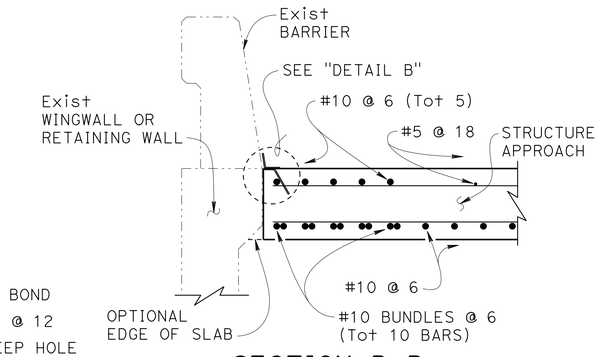

SECTION B-B
¾" = 1'-0"

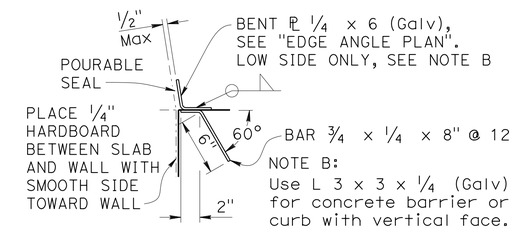

DETAIL B
1½" = 1'-0"

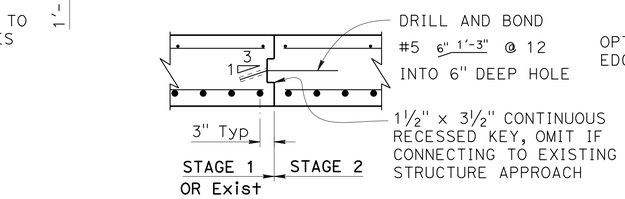

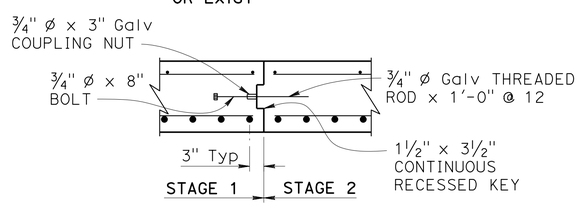

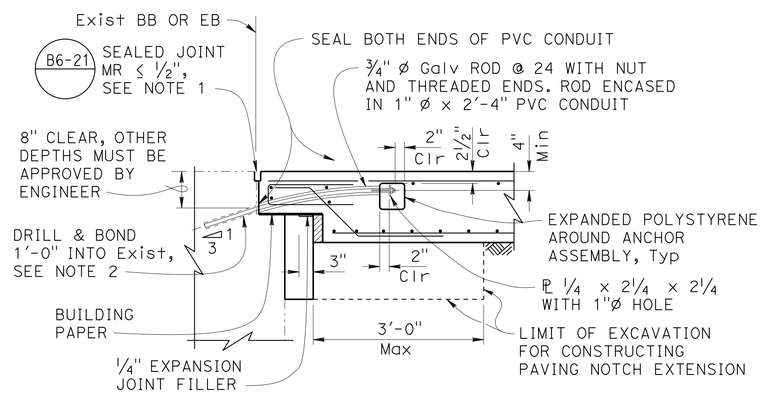

NOTE: For details not shown, see "SECTION A-A".

NOTE:
The contractor must verify all controlling field dimensions before ordering or fabricating any material.

ABUTMENT TIE DETAIL
¾" = 1'-0"

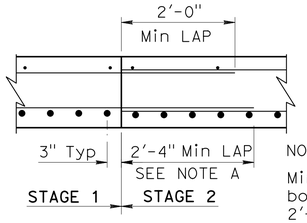

NOTE A:
Min lap splice for bottom Reinf must be 2'-9" in Freeze-Thaw Area.

LONGITUDINAL CONSTRUCTION JOINT ALTERNATIVES
¾" = 1'-0"

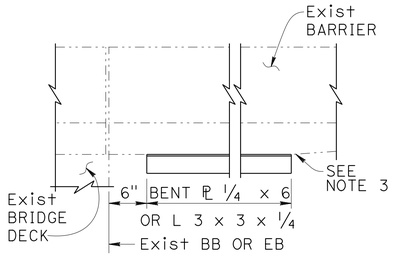

EDGE ANGLE PLAN
1" = 1'-0"

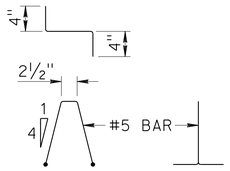

BAR CHAIR DETAIL
1" = 1'-0"

DESIGN NOTES

DESIGN: AASHTO LRFD Bridge Design Specifications, 2012 Edition with Caltrans Amendments, preface dated January 2014

LIMIT STATES: Service I, Strength I & II, Extreme II and Fatigue I (γ_{FAT} = 1.0)

DEAD LOAD: Includes 35 psf for future wearing surface

LIVE LOAD: HL93 and permit design load
Equivalent strip width method: W_1 = 12 ft
Slab span: L_1 = 24.5 ft

REINFORCED CONCRETE:
f_y = 60 ksi
f'_c = 3.6 ksi
n = 8

NOTES:

1. For details not shown, see other plan sheets. Adjust reinforcement to clear sawcut for sealed joint.
2. Space reinforcement to avoid existing prestress anchorages and other abutment reinforcement.
3. End the plate or edge angle at beginning of barrier transition, end of wingwall, or end of structure approach as applicable.
4. Transverse Joint must be a minimum of 5'-0" from an existing or constructed weakened plane joint in approach PCC roadway pavement. Refer to Standard Plans RSP P10 and RSP P14.
5. At the Contractor's option, approach slab transverse reinforcement may be placed parallel to BB or EB. Spacing of transverse reinforcement is measured along ℄ roadway.

—·—·— Indicates Existing Structure

SPECIAL DETAILS

REVISED STANDARD DRAWING
FILE NO. xs3-150
APPROVAL DATE January 2015

1 MODIFIED NOTE

STATE OF CALIFORNIA DEPARTMENT OF TRANSPORTATION

DIVISION OF ENGINEERING SERVICES

BRIDGE NO. 55-0203
POST MILE 1.6

EL CAMINO REAL UC WIDENING
STRUCTURE APPROACH TYPE R (30D)

DS OSD 2147A (ENGLISH STANDARD DRAWING "XS" BORDER REV. (10-01-14)

ORIGINAL SCALE IN INCHES FOR REDUCED PLANS 0 1 2 3

UNIT: 3606
PROJECT NUMBER & PHASE: 1212000090 & 1 CONTRACT NO.: 12-0M491

DISREGARD PRINTS BEARING EARLIER REVISION DATES

REVISION DATES 12-29-15

SHEET 64 OF 74

FILE => 55-0203-s-sad02.dgn

USERNAME => s127956 DATE PLOTTED => 18-MAY-2016 TIME PLOTTED => 14:39

DIST	COUNTY	ROUTE	POST MILES TOTAL PROJECT	SHEET No.	TOTAL SHEETS
12	Ora	5	1.2/2.2	235	244

Jinrong Wang 02-01-16
REGISTERED CIVIL ENGINEER DATE

03-28-16
PLANS APPROVAL DATE

REGISTERED PROFESSIONAL ENGINEER
JINRONG WANG
No. C49844
Exp. 09-30-16
CIVIL
STATE OF CALIFORNIA

The State of California or its officers or agents shall not be responsible for the accuracy or completeness of electronic copies of this plan sheet.

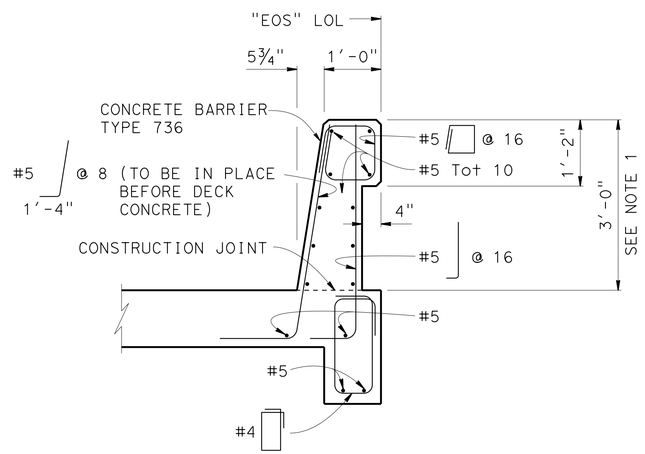

CW 100 TOP OF SLAB
3/4" = 1'-0"

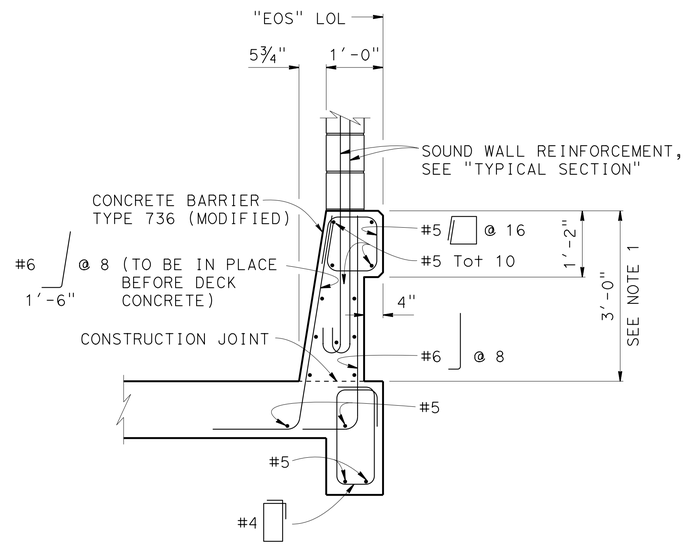

CW 100 SLAB TOP
3/4" = 1'-0"

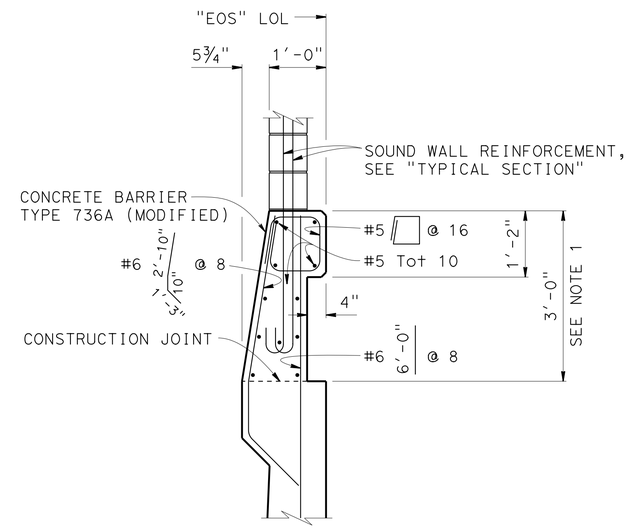

RW 103 TYPE 1 WALL
3/4" = 1'-0"

NOTES:

1. Dimensions may vary with roadway cross slope and with certain thickness of surfacing.

EL CAMINO REAL UC WIDENING

CURTAIN WALL 100 / RETAINING WALL 103

CONCRETE BARRIER TYPE 736 DETAILS

	BY	CHECKED
DESIGN	J. WANG	P. MAK
DETAILS	Kc	P. MAK
QUANTITIES	F. TANNOUS	P. MAK

STATE OF CALIFORNIA
DEPARTMENT OF TRANSPORTATION

DIVISION OF ENGINEERING SERVICES
STRUCTURE DESIGN
DESIGN BRANCH 12

BRIDGE NO. 55-0203
POST MILE 1.6

STRUCTURES DESIGN DETAIL SHEET (ENGLISH) (REV. 09-01-10)

ORIGINAL SCALE IN INCHES FOR REDUCED PLANS 0 1 2 3

UNIT: 3606
PROJECT NUMBER & PHASE: 1212000090 1
CONTRACT NO.: 12-0M4901

DISREGARD PRINTS BEARING EARLIER REVISION DATES

REVISION DATES: 7-22-15 8-27-15 11-2-15

SHEET 65 OF 74

FILE => 55-0203-t-bar01.dgn

USERNAME => s127956 DATE PLOTTED => 18-MAY-2016 TIME PLOTTED => 14:40

DIST	COUNTY	ROUTE	POST MILES TOTAL PROJECT	SHEET No.	TOTAL SHEETS
12	Ora	5	1.2/2.2	236	244

Jinrong Wang 02-01-16
REGISTERED CIVIL ENGINEER DATE

03-28-16
PLANS APPROVAL DATE

REGISTERED PROFESSIONAL ENGINEER
JINRONG WANG
No. C49844
Exp. 09-30-16
CIVIL
STATE OF CALIFORNIA

The State of California or its officers or agents shall not be responsible for the accuracy or completeness of electronic copies of this plan sheet.

REPLACEMENT JOINT SEAL TABLE

LOCATION	MINIMUM "MR" (In)	MINIMUM "WI" (In)	APPROXIMATE LENGTH (fT)	EXISTING WATER STOP	CLEAN EXPANSION JOINT DEPTH LIMITS
ABUTMENT 1	½" *	-	238′	NO	±12"
ABUTMENT 4	½"	-	298′	NO	±12"

* USE TYPE A SEAL ONLY

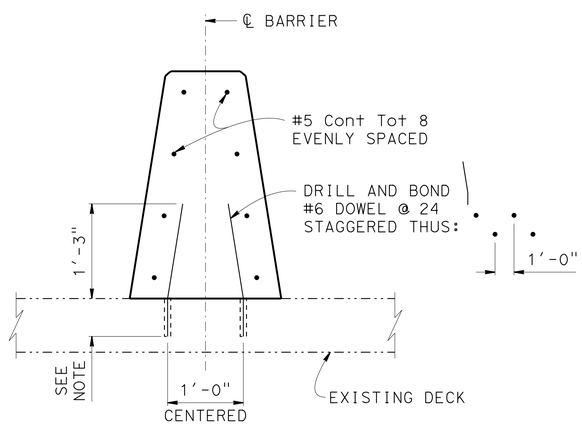

MODIFIED TYPE 60A

1" = 1'-0"

NOTE: Depth of drilled hole equals depth of slab minus 1½" up to 6" maximum.

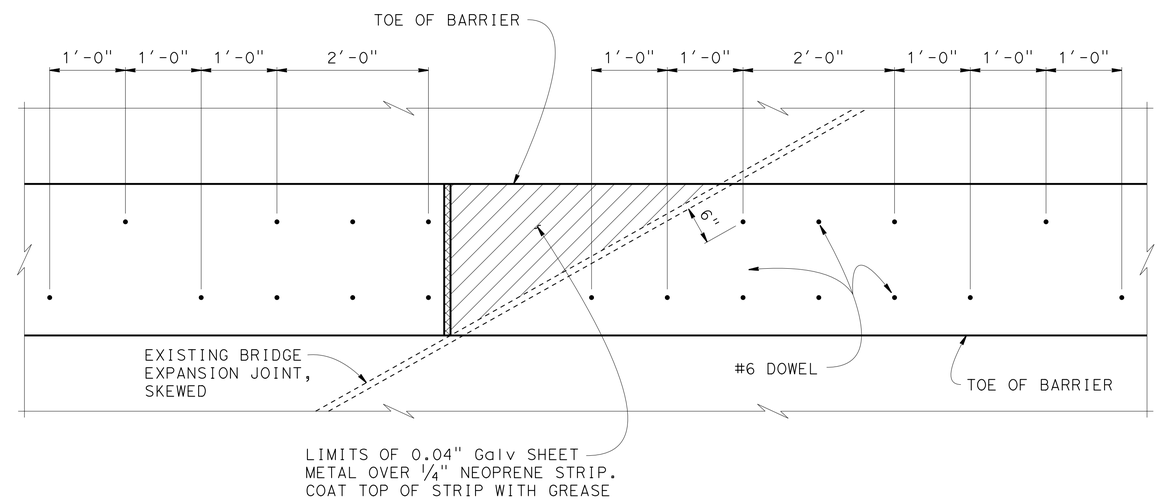

DOWEL SPACING AT EXPANSION JOINT

1" = 1'-0"

NOTE:
THE CONTRACTOR MUST VERIFY ALL CONTROLLING FIELD DIMENSIONS BEFORE ORDERING OR FABRICATING ANY MATERIAL.

	BY	CHECKED
DESIGN	J. WANG	L. VALLA
DETAILS	Kc	L. VALLA
QUANTITIES	L. VALLA	P. MAK

STATE OF CALIFORNIA
DEPARTMENT OF TRANSPORTATION

DIVISION OF ENGINEERING SERVICES
STRUCTURE DESIGN
DESIGN BRANCH 12

BRIDGE NO. 55-0203
POST MILE 1.6

EL CAMINO REAL UC WIDENING
CONCRETE BARRIER TYPE 60A MOD DETAILS

STRUCTURES DESIGN DETAIL SHEET (ENGLISH) (REV. 09-01-10)

ORIGINAL SCALE IN INCHES FOR REDUCED PLANS 0 1 2 3

UNIT: 3606
PROJECT NUMBER & PHASE: 1212000090 1
CONTRACT NO.: 12-0M4901

DISREGARD PRINTS BEARING EARLIER REVISION DATES

REVISION DATES: 5-28-15 8-18-15 11-2-15

SHEET 66 OF 74

FILE => 55-0203-t-bar02.dgn

USERNAME => s127956 DATE PLOTTED => 18-MAY-2016 TIME PLOTTED => 14:40

DIST	COUNTY	ROUTE	POST MILES TOTAL PROJECT	SHEET No	TOTAL SHEETS
12	Ora	5	1.2/2.2	237	244

REGISTERED GEOTECHNICAL ENGINEER 12-23-15

03-28-16
PLANS APPROVAL DATE

REGISTERED PROFESSIONAL ENGINEER Sam Sukiasian No. 2681 Exp. 6-30-16 GEOTECHNICAL STATE OF CALIFORNIA

The State of California or its officers or agents shall not be responsible for the accuracy or completeness of electronic copies of this plan sheet.

This LOTB sheet was prepared in accordance with the Caltrans Soil & Rock Logging, Classification, & Presentation Manual (2010 Edition).

See 2010 Standard Plans A10F and A10G for Soil Legend, and A10H for Rock Legend.

BENCH MARK

BM PRHVII Elev 239.46
Fnd steel plate on curb
(PK & TIN)
NGVD88

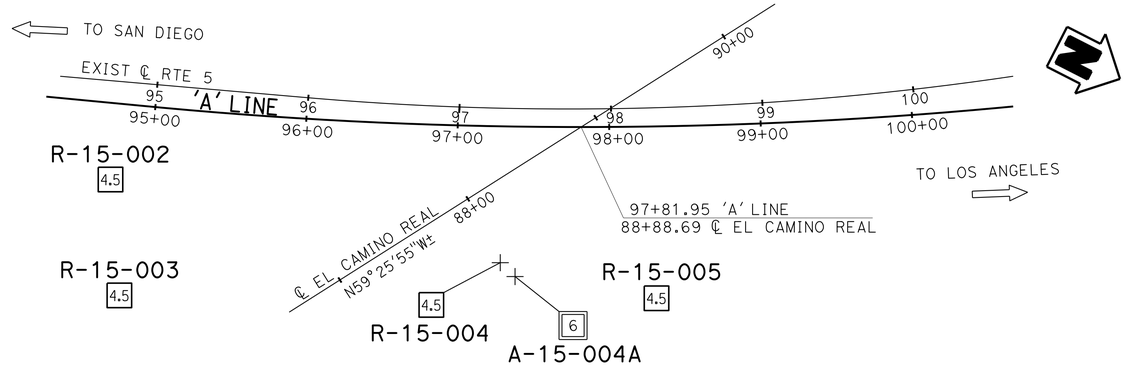

PLAN

1" = 50'

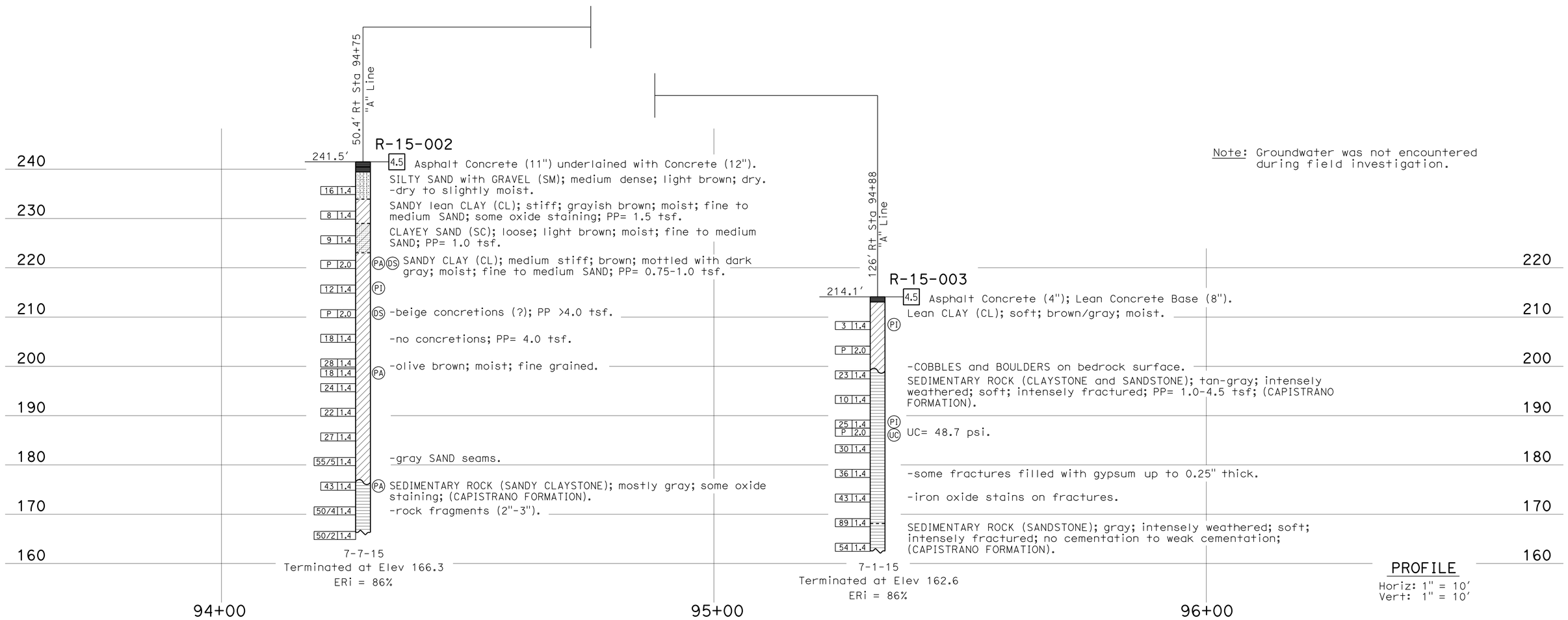

Note: Groundwater was not encountered during field investigation.

PROFILE

Horiz: 1" = 10'
Vert: 1" = 10'

ENGINEERING SERVICES	MATERIALS AND GEOTECHNICAL SERVICES	STATE OF CALIFORNIA DEPARTMENT OF TRANSPORTATION	DIVISION OF ENGINEERING SERVICES STRUCTURE DESIGN DESIGN BRANCH 12	BRIDGE NO. 55-0203 POST MILE 1.6	EL CAMINO REAL UC WIDENING
FUNCTIONAL SUPERVISOR NAME: T. Liu	DRAWN BY: I. G-Remmen CHECKED BY: D. Wathugala	FIELD INVESTIGATION BY: S. Sukiasian, C. Harris			LOG OF TEST BORINGS 1 OF 5

OGS CIVIL LOG OF TEST BORINGS SHEET

ORIGINAL SCALE IN INCHES FOR REDUCED PLANS 0 1 2 3

UNIT: 3650
PROJECT NUMBER & PHASE: 1212000090 & 1 CONTRACT NO.: 12-0M4901

DISREGARD PRINTS BEARING EARLIER REVISION DATES

REVISION DATES: 11-05-15 12-04-15 12-23-15

SHEET 67 OF 74

FILE => 55-0203-z-ltb01.dgn

USERNAME => s127956 DATE PLOTTED => 18-MAY-2016 TIME PLOTTED => 14:40

DIST	COUNTY	ROUTE	POST MILES TOTAL PROJECT	SHEET No	TOTAL SHEETS
12	Ora	5	1.2/2.2	238	244

REGISTERED GEOTECHNICAL ENGINEER 12-23-15

03-28-16
PLANS APPROVAL DATE

REGISTERED PROFESSIONAL ENGINEER
Sam Sukiasian
No. 2681
Exp. 6-30-16
GEOTECHNICAL
STATE OF CALIFORNIA

The State of California or its officers or agents shall not be responsible for the accuracy or completeness of electronic copies of this plan sheet.

This LOTB sheet was prepared in accordance with the Caltrans Soil & Rock Logging, Classification, & Presentation Manual (2010 Edition).

See 2010 Standard Plans A10F and A10G for Soil Legend, and A10H for Rock Legend.

FOR PLAN VIEW, SEE
"LOG OF TEST BORINGS 1 OF 5"

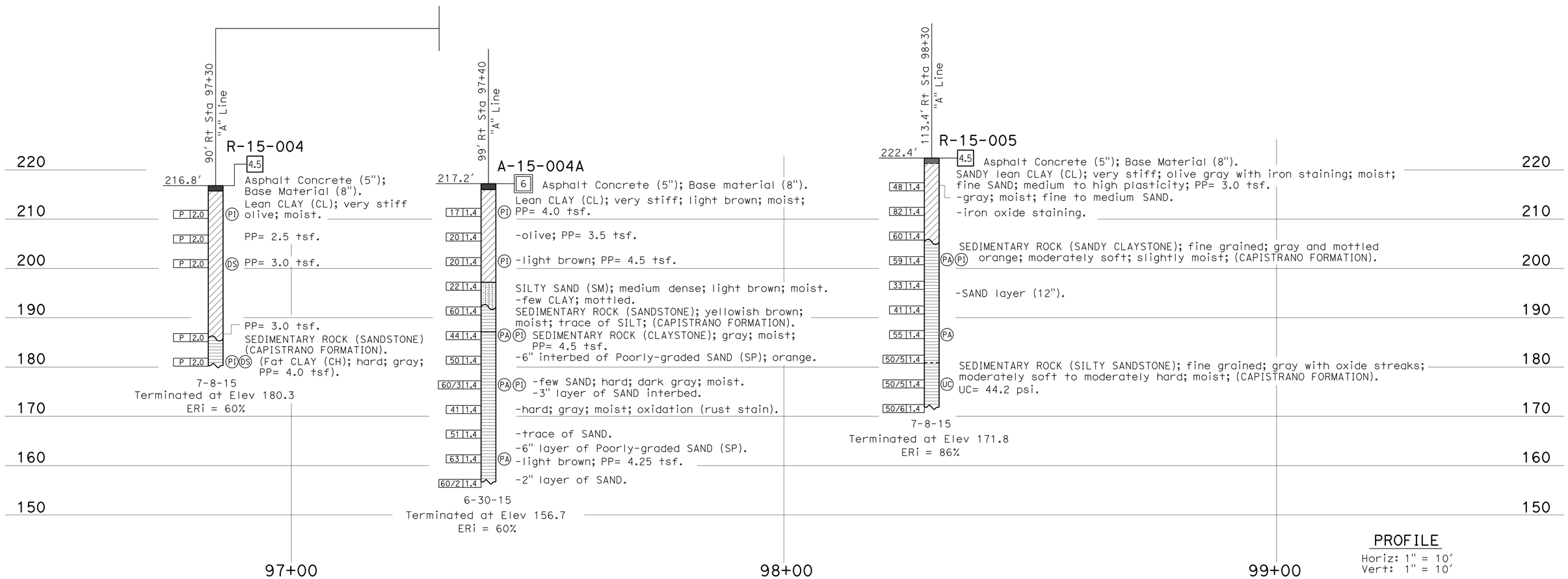

PROFILE
Horiz: 1" = 10'
Vert: 1" = 10'

ENGINEERING SERVICES	MATERIALS AND GEOTECHNICAL SERVICES	STATE OF CALIFORNIA DEPARTMENT OF TRANSPORTATION	DIVISION OF ENGINEERING SERVICES STRUCTURE DESIGN DESIGN BRANCH 12	BRIDGE NO. 55-0203 POST MILE 1.6	EL CAMINO REAL UC WIDENING
FUNCTIONAL SUPERVISOR NAME: T. Liu	DRAWN BY: I. G-Remmen CHECKED BY: D. Wathugala	FIELD INVESTIGATION BY: S. Sukiasian, H. Ngo			LOG OF TEST BORINGS 2 OF 5

OGS CIVIL LOG OF TEST BORINGS SHEET

ORIGINAL SCALE IN INCHES FOR REDUCED PLANS 0 1 2 3

UNIT: 3650
PROJECT NUMBER & PHASE: 1212000090 & 1 CONTRACT NO.: 12-0M4901

DISREGARD PRINTS BEARING EARLIER REVISION DATES

REVISION DATES 11-05-15 12-04-15 12-23-15

SHEET 68 OF 74

FILE => 55-0203-z-1tb02.dgn

USERNAME => s127956 DATE PLOTTED => 18-MAY-2016 TIME PLOTTED => 14:40

DIST	COUNTY	ROUTE	POST MILES TOTAL PROJECT	SHEET No	TOTAL SHEETS
12	Ora	5	1.2/2.2	239	244

REGISTERED PROFESSIONAL ENGINEER 1/6/2009

03-28-16
PLANS APPROVAL DATE

REGISTERED PROFESSIONAL ENGINEER DIAN CHANDRA No. 2376 Exp. 6/30/09 GEOTECHNICAL STATE OF CALIFORNIA

The State of California or its officers or agents shall not be responsible for the accuracy or completeness of electronic copies of this plan sheet.

ORANGE COUNTY TRANSPORTATION AUTHORITY
550 SOUTH MAIN STREET
ORANGE, CA 92863

LEIGHTON CONSULTING INC.
17781 COWAN
IRVINE, CA 92614

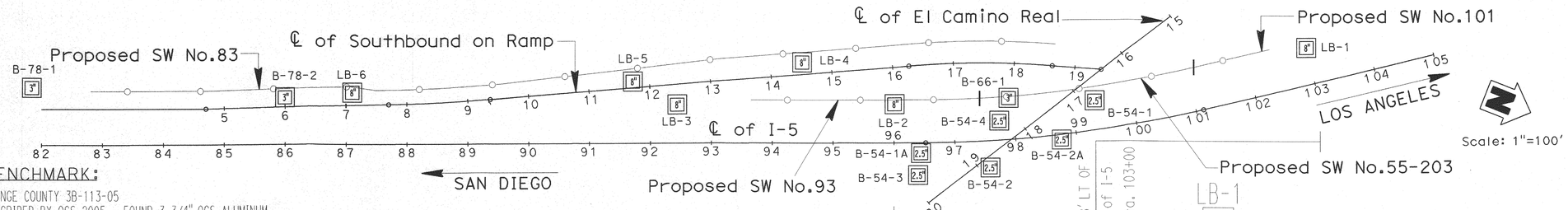

BENCHMARK:

ORANGE COUNTY 3B-113-05
DESCRIBED BY OCS 2005 - FOUND 3 3/4" OCS ALUMINUM BENCHMARK DISK STAMPED "3B-113-05" SET IN THE TOP SOUTHWESTERLY CORNER OF A 6.4 FT. BY 9.5 FT. CONCRETE CATCH BASIN. MONUMENT IS LOCATED IN THE SOUTHEASTERLY CORNER OF THE INTERSECTION OFAVENIDA DEL PRESIDENTE AND AVENIDA MENDOCINO, 36 FT. EASTERLY OF THE CENTERLINE OF DEL PRESIDENTE, AND 63 FT. SOUTHERLY OF THE CENTERLINE OF MENDOCINO. MONUMENT IS SET LEVEL WITH THE SIDEWALK

180.998 FEET, 1995 ADJUSTMENT (2005 YEAR LEVELED)

LEGEND

LB-3 — 8" BORING BY LEIGHTON CONSULTING INC., 2008
B-54-4 — 2.5" BORING BY OTHERS (CALTRANS, 1957)
B-66-1 — 3" BORING BY OTHERS (CALTRANS, 1979)

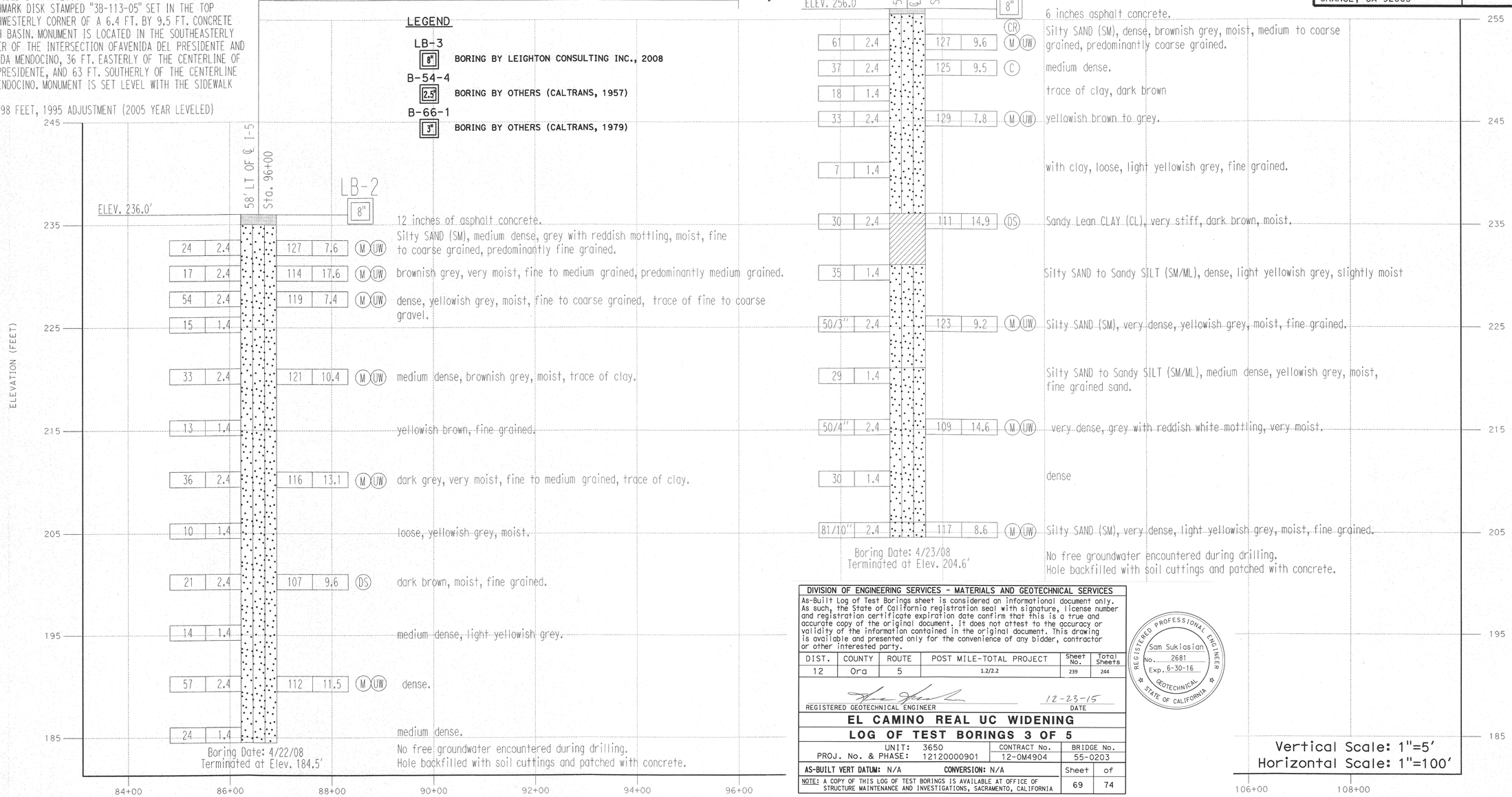

DIVISION OF ENGINEERING SERVICES - MATERIALS AND GEOTECHNICAL SERVICES

As-Built Log of Test Borings sheet is considered an informational document only. As such, the State of California registration seal with signature, license number and registration certificate expiration date confirm that this is a true and accurate copy of the original document. It does not attest to the accuracy or validity of the information contained in the original document. This drawing is available and presented only for the convenience of any bidder, contractor or other interested party.

DIST.	COUNTY	ROUTE	POST MILE-TOTAL PROJECT	Sheet No.	Total Sheets
12	Ora	5	1.2/2.2	239	244

REGISTERED GEOTECHNICAL ENGINEER — DATE 12-23-15

REGISTERED PROFESSIONAL ENGINEER Sam Sukiasian No. 2681 Exp. 6-30-16 GEOTECHNICAL STATE OF CALIFORNIA

EL CAMINO REAL UC WIDENING
LOG OF TEST BORINGS 3 OF 5

UNIT: 3650 — CONTRACT No. 12-0M4904 — BRIDGE No. 55-0203
PROJ. No. & PHASE: 12120000901
AS-BUILT VERT DATUM: N/A — CONVERSION: N/A — Sheet 69 of 74
NOTE: A COPY OF THIS LOG OF TEST BORINGS IS AVAILABLE AT OFFICE OF STRUCTURE MAINTENANCE AND INVESTIGATIONS, SACRAMENTO, CALIFORNIA

NO AS BUILT CORRECTIONS
CORRECTIONS TRANSFERRED BY: AV
STRUCTURE REP: BMCGAHEY
DATE: 08-06-2012 TRANSFER DATE: 12-19-2012
CONTRACT No: 12-0G9404

ENGINEERING SERVICES
DESIGN OVERSIGHT
SIGN OFF DATE
DRAWN BY: BUU TRAN
CHECKED BY: T. KIM
GEOTECHNICAL SERVICES
FIELD INVESTIGATION BY: S. PULIJALA

STATE OF CALIFORNIA
DEPARTMENT OF TRANSPORTATION

DIVISION OF ENGINEERING SERVICES
STRUCTURE DESIGN
DESIGN BRANCH

BRIDGE NO. 55-0203
POST MILES 1.3/1.7

I-5/EL-CAMINO REAL SOUNDWALL
LOG OF TEST BORINGS SHEET 3 OF 3

OGS CIVIL LOG OF TEST BORINGS SHEET
ORIGINAL SCALE IN INCHES FOR REDUCED PLANS 0 1 2 3
CU 12231
EA 0G9401
DISREGARD PRINTS BEARING EARLIER REVISION DATES
REVISION DATES 01/05/09
SHEET 21 OF 23

FILE => 55-0203-1obt3_21_21_.dgn
USERNAME => s117075 DATE PLOTTED => 11-JUN-2013 TIME PLOTTED => 08:48

ClibPDF - www.fastio.com

FED. ROAD DIV. NO.	STATE	F. A. PROJECT No.	SHEET No.	TOTAL SHEETS
7	CALIF.		240	244

PLANS APPROVAL DATE: 03-28-16

DIST.	COUNTY	ROUTE	SECTION	SHEET No.	TOTAL SHEETS
07	Ora	5	00/6.1	475	538
	SD	5	472.1/R.18		

Robert W. Reynolds #165
CERTIFIED ENGINEERING GEOLOGIST

DATE APPROVED March 12, 1979

BENCH MARK

B.M. 96-S.Cle.-58 Elev. 235.78
Top of brass cap in type "A" survey Mon. on ℄ existing Rte. 5 Sta. 95+99.45.

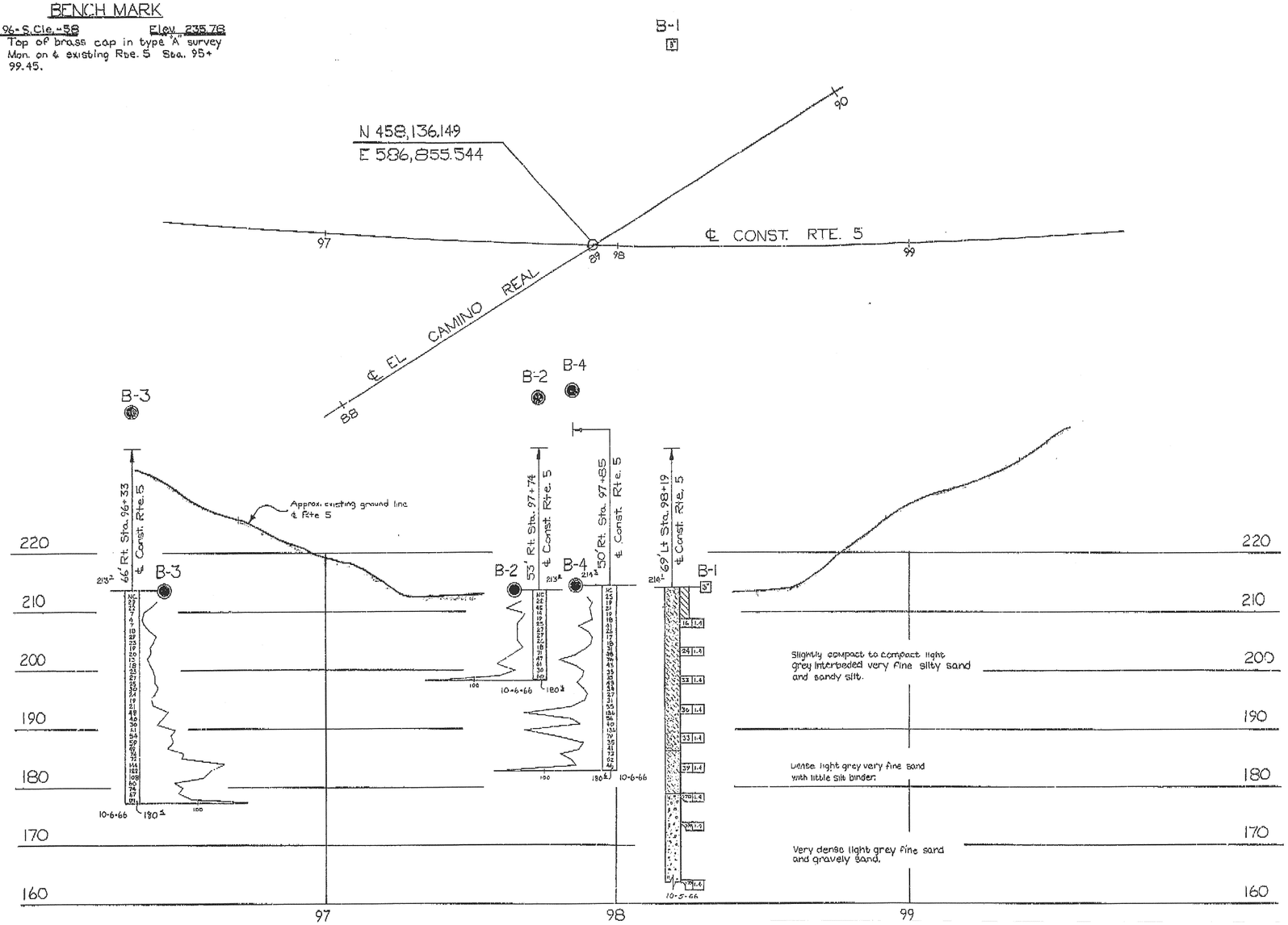

PLAN

Scale: 1" = 20'

PROFILE

Scale: Vert. 1" = 10'
Horiz. 1" = 20'

AS BUILT PLANS
Contract No. 07-105274
Date Completed
Document No.

NO AS BUILT CORRECTION

AS BUILT
CORRECTIONS BY W. Lohse
CONTRACT NO. 07-105274
DATE 4-1-83 and 10-14-83

SHEET	OF
20	20

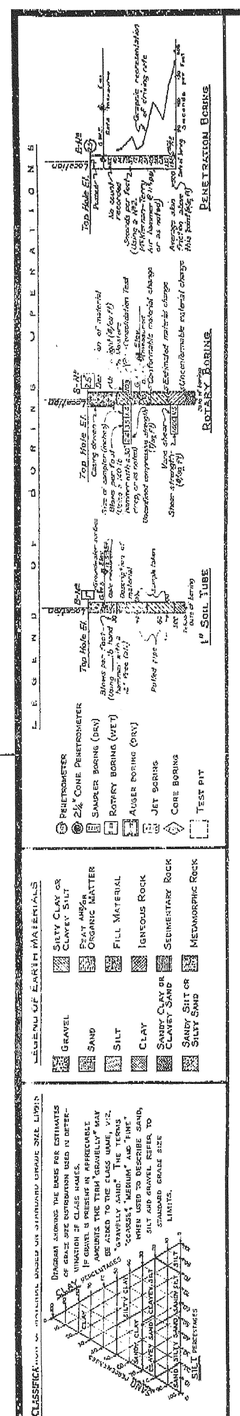

NOTE: Classification of earth material as shown on this sheet is based upon field inspection and is not to be construed to imply mechanical analysis.

FIELD STUDY	by O. Mikes	10-6-66
DRAWN	by B. Allen	10-13-66
CHECKED	by R. CORBLEY	10-24-66

Approval Recommended by: Chief, Engineering Geology

BRIDGE DEPARTMENT
ENGINEERING GEOLOGY SECTION

475

DIVISION OF ENGINEERING SERVICES - MATERIALS AND GEOTECHNICAL SERVICES

As-Built Log of Test Borings sheet is considered an informational document only. As such, the State of California registration seal with signature, license number and registration certificate expiration date confirm that this is a true and accurate copy of the original document. It does not attest to the accuracy or validity of the information contained in the original document. This drawing is available and presented only for the convenience of any bidder, contractor or other interested party.

DIST.	COUNTY	ROUTE	POST MILE-TOTAL PROJECT	Sheet No.	Total Sheets
12	Ora	5		240	244

REGISTERED GEOTECHNICAL ENGINEER — DATE 12-23-15

REGISTERED PROFESSIONAL ENGINEER
Sam Sukiasian
No. 2681
Exp. 6-30-16
GEOTECHNICAL
STATE OF CALIFORNIA

EL CAMINO REAL UC WIDENING

LOG OF TEST BORINGS 4 OF 5

UNIT: 3650	CONTRACT No.	BRIDGE No.
PROJ. No. & PHASE: 12120000901	12-0M4904	55-0203

AS-BUILT VERT DATUM: NGVD29 CONVERSION: NAVD88= NGVD+0.694'

NOTE: A COPY OF THIS LOG OF TEST BORINGS IS AVAILABLE AT OFFICE OF STRUCTURE MAINTENANCE AND INVESTIGATIONS, SACRAMENTO, CALIFORNIA

Sheet	of
70	74

STATE OF CALIFORNIA
DEPARTMENT OF TRANSPORTATION

EL CAMINO REAL UNDERCROSSING (WIDENING)

LOG OF TEST BORINGS

SCALE AS NOTED	BRIDGE 55-203	FILE	DRAWING 55203-16

Chg. 07209
WA. 105211

Disregard prints bearing earlier numbers

PREL. DRAWING No. PR-

I-136 (18) I-0406(5)

PLANS APPROVAL DATE: 03-28-16

FED ROAD DIV NO	STATE	PROJ NO	FISCAL YEAR	SHEET NO	TOTAL SHEETS
7	CAL.			241	244

DIST	COUNTY	ROUTE	SECTION	SHEET NO	TOTAL SHEETS
VII	Ora	5	SCIe	10	13

BRIDGE ENGINEER — CIVIL ENGINEER — STRUCTURES — LICENSE OFFICE

DATE APPROVED ____ 19 ____

DIVISION OF ENGINEERING SERVICES - MATERIALS AND GEOTECHNICAL SERVICES

As-Built Log of Test Borings sheet is considered an informational document only. As such, the State of California registration seal with signature, license number and registration certificate expiration date confirm that this is a true and accurate copy of the original document. It does not attest to the accuracy or validity of the information contained in the original document. This drawing is available and presented only for the convenience of any bidder, contractor or other interested party.

DIST.	COUNTY	ROUTE	POST MILE-TOTAL PROJECT	Sheet No.	Total Sheets
12	Ora	5		241	244

REGISTERED GEOTECHNICAL ENGINEER — DATE 12-23-15

EL CAMINO REAL UC WIDENING

LOG OF TEST BORINGS 5 OF 5

UNIT: 3650	CONTRACT No.	BRIDGE No.
PROJ. No. & PHASE: 12120000901	12-0M4904	55-0203

AS-BUILT VERT DATUM: NGVD29 CONVERSION: NAVD88= NGVD+0.694' — Sheet 71 of 74

NOTE: A COPY OF THIS LOG OF TEST BORINGS IS AVAILABLE AT OFFICE OF STRUCTURE MAINTENANCE AND INVESTIGATIONS, SACRAMENTO, CALIFORNIA

AS BUILT PLANS
Contract No. 58-7VC10
Date Completed
Document No. 7000 2057

REGISTERED PROFESSIONAL ENGINEER — Sam Sukiasian — No. 2681 — Exp. 6-30-16 — GEOTECHNICAL — STATE OF CALIFORNIA

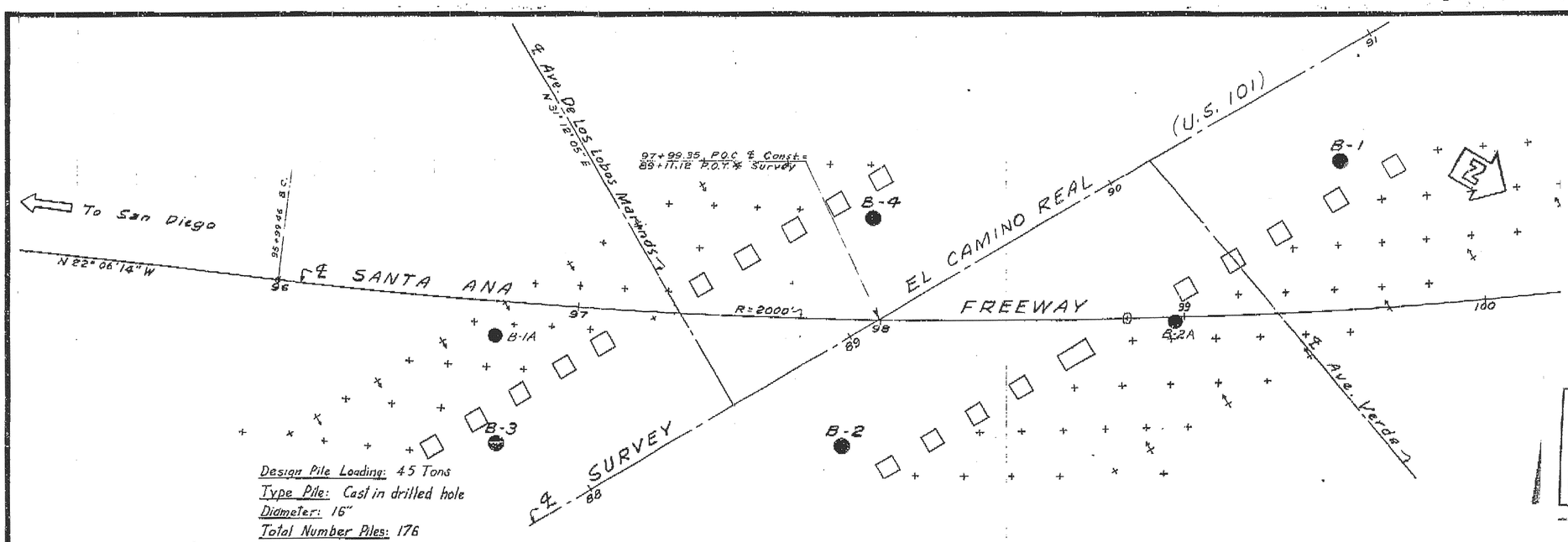

Note: Borings number B-1A & B-2A present a more accurate picture of the material at the site than do Borings B-1, 2, 3 & 4.

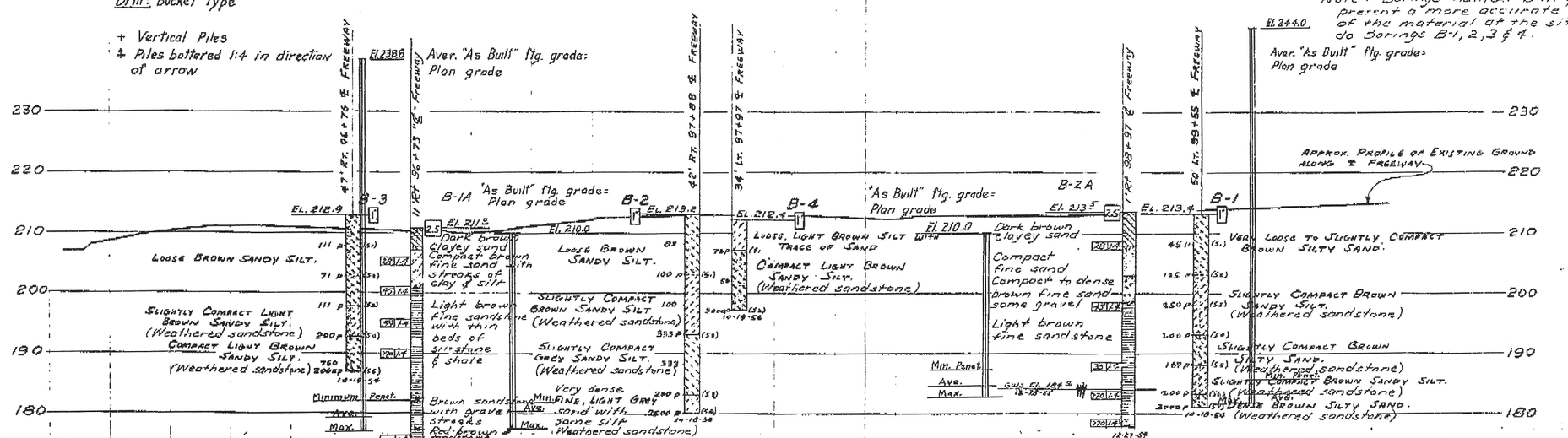

AS BUILT
58-7VC10-FI
ENGR. J. L. Burns
Sept. 17, 1958

B.M. #10-SCIe-54
L.&T. in P.C.C. Curb E side 101 Hwy. 105' N of Inter. Ave. Verde & 101 Hwy. Elev. ~~243.34~~ Destroyed

B.M. #11-SCIe-54
L&T in P.C.C. Curb S. Side Ave Santiago, 118' E. Hwy 101. Elev. 244.~~82~~ 8.02

Test Boring By Bridge Dept.

BRIDGE DEPARTMENT

FIELD STUDY	by	K. J. MACKEY 10-31-56
DRAWING	by	K. J. MACKEY 10-31-56
CHECKED	by	A. J. BURNS
Approval Recommended by		Bridge Engineer / Bridge Engineer

CLASSIFICATION OF MATERIAL BASED ON STANDARD GRADE SIZE LIMITS

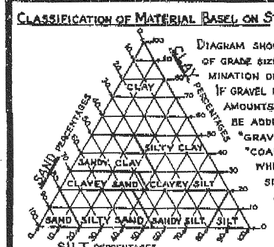

DIAGRAM SHOWING THE BASIS FOR ESTIMATES OF GRADE SIZE DISTRIBUTION USED IN DETERMINATION OF CLASS NAMES.

IF GRAVEL IS PRESENT IN APPRECIABLE AMOUNTS THE TERM "GRAVELLY" MAY BE ADDED TO THE CLASS NAME, VIZ. "GRAVELLY SAND." THE TERMS "COARSE", "MEDIUM" AND "FINE" WHEN USED TO DESCRIBE SAND, SILT AND GRAVEL REFER TO STANDARD GRADE SIZE LIMITS.

LEGEND OF EARTH MATERIALS

- Gravel
- Sand
- Silt
- Clay
- Sandy Clay or Clayey Sand
- Sandy Silt or Silty Sand
- Silty Clay or Clayey Silt
- Peat and/or Organic Matter
- Fill Material
- Igneous Rock
- Sedimentary Rock
- Metamorphic Rock

LEGEND OF BORING OPERATIONS

- Plan of any boring
- Penetrometer
- 2 1/4" Cone Penetrometer
- Sampler boring (DRY)
- Rotary boring (WET)
- Auger boring (DRY)
- Jet boring
- Core boring
- Test pit

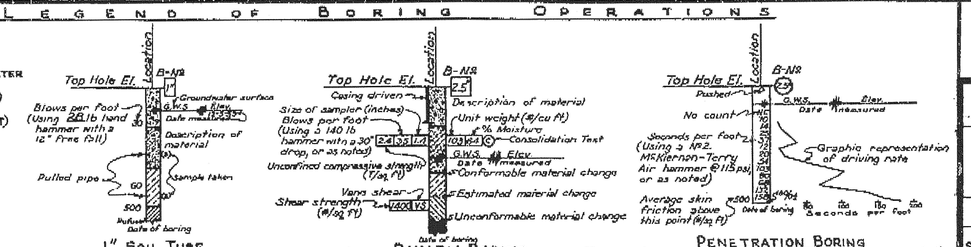

NOTES

The contractor's attention is directed to Section 2, Article (c) of the Standard Specifications and to the Special Provisions accompanying this set of plans.

Classification of earth material as shown on this sheet is based upon field inspection and is not to be construed to imply mechanical analysis.

STATE OF CALIFORNIA
DEPARTMENT OF PUBLIC WORKS
DIVISION OF HIGHWAYS

EL CAMINO REAL U.C.

LOG OF TEST BORINGS

SCALE Horiz. 1" = 20' Vert. 1" = 10'	BRIDGE 55-203	FILE E-55	DRAWING C-3719-10

120

3719 A 28

DIST	COUNTY	ROUTE	POST MILES TOTAL PROJECT	SHEET No	TOTAL SHEETS
12	Ora	5	1.2/2.2	242	244

REGISTERED GEOTECHNICAL ENGINEER 12-23-15

03-28-16
PLANS APPROVAL DATE

REGISTERED PROFESSIONAL ENGINEER Sam Sukiasian No. 2681 Exp. 6-30-16 GEOTECHNICAL STATE OF CALIFORNIA

The State of California or its officers or agents shall not be responsible for the accuracy or completeness of electronic copies of this plan sheet.

This LOTB sheet was prepared in accordance with the Caltrans Soil & Rock Logging, Classification, & Presentation Manual (2010 Edition).

See 2010 Standard Plans A10F and A10G for Soil Legend, and A10H for Rock Legend.

BENCH MARK

BM PRHVII Elev 239.46
Fnd steel plate on curb
(PK & TIN)
NGVD88

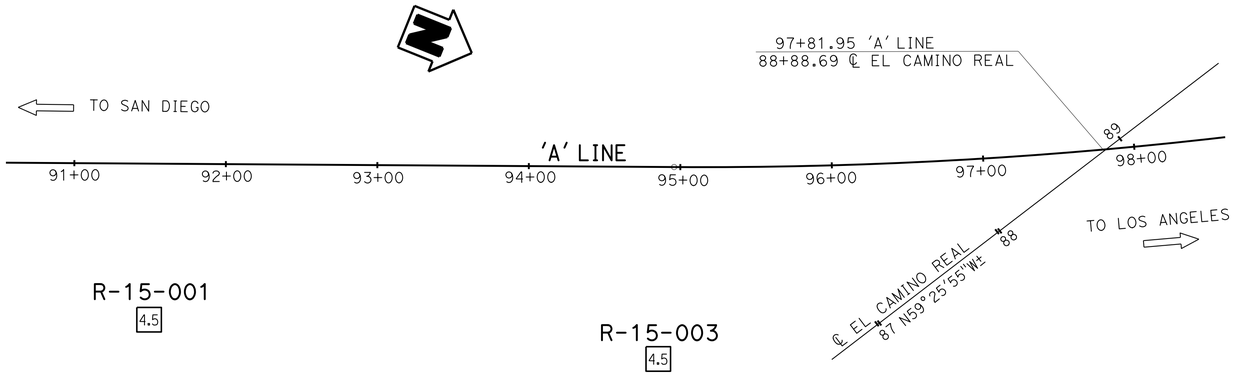

PLAN

1" = 50'

Note: Groundwater was not measured during field investigation.

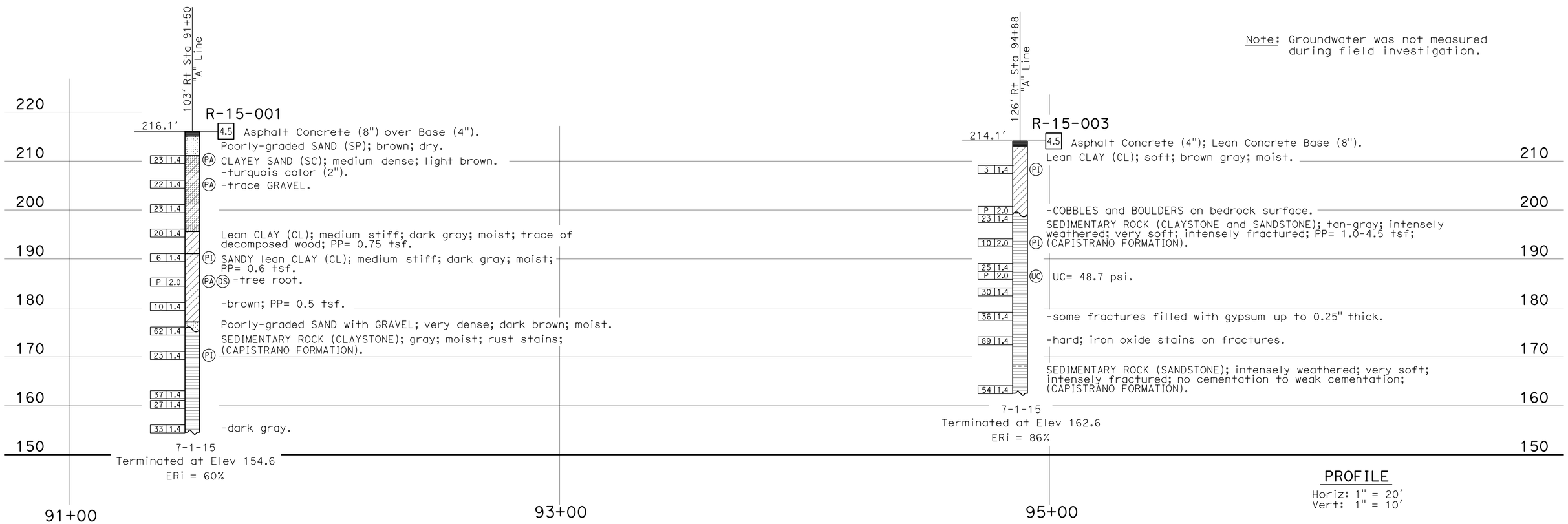

PROFILE

Horiz: 1" = 20'
Vert: 1" = 10'

EL CAMINO REAL UC WIDENING
RETAINING WALL 90
LOG OF TEST BORINGS

ENGINEERING SERVICES	MATERIALS AND GEOTECHNICAL SERVICES	STATE OF CALIFORNIA DEPARTMENT OF TRANSPORTATION	DIVISION OF ENGINEERING SERVICES STRUCTURE DESIGN DESIGN BRANCH 12	BRIDGE NO. 55-0203 POST MILE 1.6
FUNCTIONAL SUPERVISOR NAME: T. Liu	DRAWN BY: I. G-Remmen CHECKED BY: D. Wathugala	FIELD INVESTIGATION BY: H. Ngo, C. Harris		

OGS CIVIL LOG OF TEST BORINGS SHEET

ORIGINAL SCALE IN INCHES FOR REDUCED PLANS 0 1 2 3

UNIT: 3650
PROJECT NUMBER & PHASE: 1212000090 & 1 CONTRACT NO.: 12-0M4901

DISREGARD PRINTS BEARING EARLIER REVISION DATES

REVISION DATES 11-06-15 12-08-15 12-23-15

SHEET 72 OF 74

FILE => 55-0203-z-ltb06.dgn

USERNAME => s127956 DATE PLOTTED => 18-MAY-2016 TIME PLOTTED => 14:41

DIST	COUNTY	ROUTE	POST MILES TOTAL PROJECT	SHEET No	TOTAL SHEETS
12	Ora	5	1.2/2.2	243	244

REGISTERED GEOTECHNICAL ENGINEER 12-10-15

03-28-16
PLANS APPROVAL DATE

REGISTERED PROFESSIONAL ENGINEER Sam Sukiasian No. 2681 Exp. 6-30-16 GEOTECHNICAL STATE OF CALIFORNIA

The State of California or its officers or agents shall not be responsible for the accuracy or completeness of electronic copies of this plan sheet.

This LOTB sheet was prepared in accordance with the Caltrans Soil & Rock Logging, Classification, & Presentation Manual (2010 Edition).

See 2010 Standard Plans A10F and A10G for Soil Legend, and A10H for Rock Legend.

BENCH MARK

BM PRHVII Elev 239.46
Fnd steel plate on curb
(PK & TIN)
NGVD88

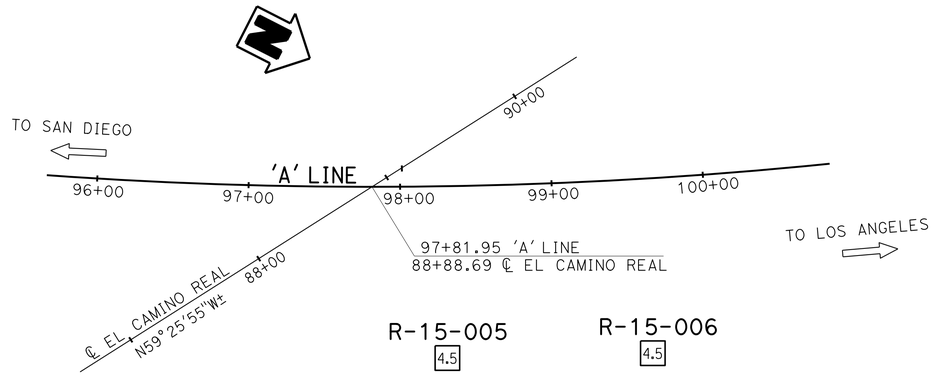

PLAN

1" = 50'

Note: Groundwater was not measured during field investigation.

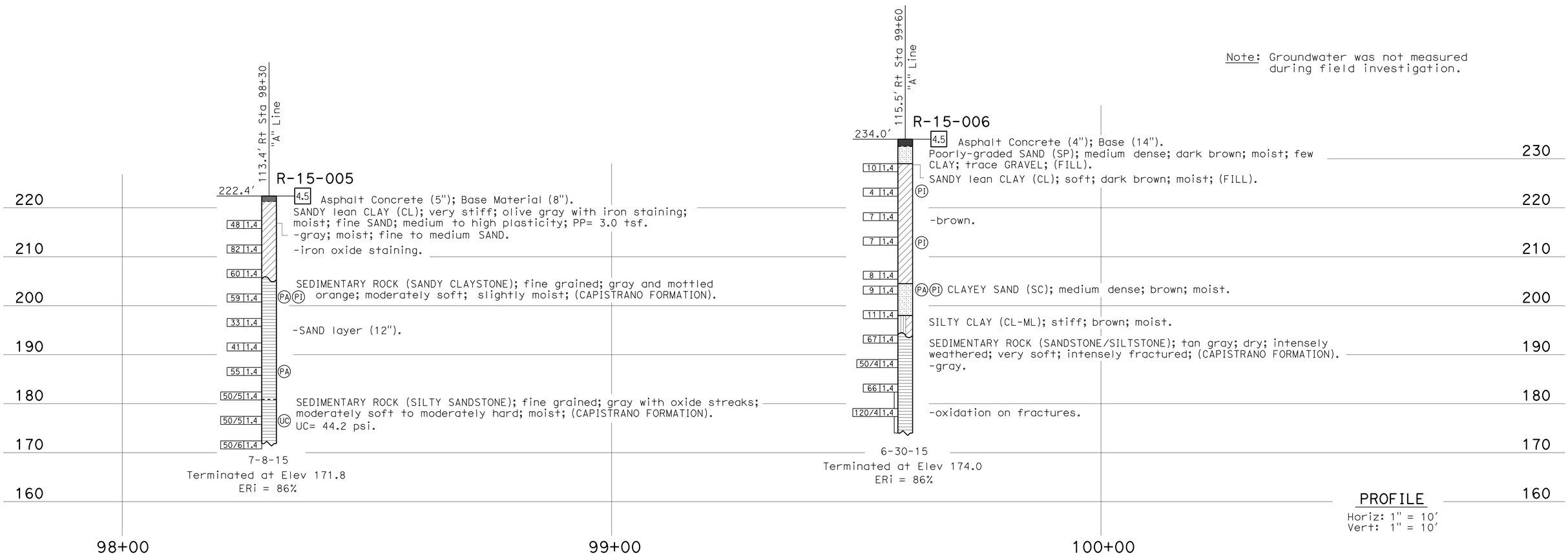

PROFILE

Horiz: 1" = 10'
Vert: 1" = 10'

ENGINEERING SERVICES	MATERIALS AND GEOTECHNICAL SERVICES	STATE OF CALIFORNIA DEPARTMENT OF TRANSPORTATION	DIVISION OF ENGINEERING SERVICES STRUCTURE DESIGN DESIGN BRANCH 12	BRIDGE NO. 55-0203 POST MILE 1.6	EL CAMINO REAL UC WIDENING CURTAIN WALL 100 LOG OF TEST BORINGS
FUNCTIONAL SUPERVISOR NAME: T. Liu	DRAWN BY: I. G-Remmen CHECKED BY: D. Wathugala	FIELD INVESTIGATION BY: S. Sukiasian, C. Harris			

OGS CIVIL LOG OF TEST BORINGS SHEET

ORIGINAL SCALE IN INCHES FOR REDUCED PLANS 0 1 2 3

UNIT: 3650
PROJECT NUMBER & PHASE: 1212000090 & 1 CONTRACT NO.: 12-0M4901

DISREGARD PRINTS BEARING EARLIER REVISION DATES

REVISION DATES 11-06-15 12-03-15

SHEET 73 OF 74

FILE => 55-0203-z-ltb07.dgn

USERNAME => s127956 DATE PLOTTED => 18-MAY-2016 TIME PLOTTED => 14:41

DIST	COUNTY	ROUTE	POST MILES TOTAL PROJECT	SHEET No	TOTAL SHEETS
12	Ora	5	1.2/2.2	244	244

REGISTERED GEOTECHNICAL ENGINEER 12-23-15

03-28-16
PLANS APPROVAL DATE

REGISTERED PROFESSIONAL ENGINEER
Sam Sukiasian
No. 2681
Exp. 6-30-16
GEOTECHNICAL
STATE OF CALIFORNIA

The State of California or its officers or agents shall not be responsible for the accuracy or completeness of electronic copies of this plan sheet.

This LOTB sheet was prepared in accordance with the Caltrans Soil & Rock Logging, Classification, & Presentation Manual (2010 Edition).

See 2010 Standard Plans A10F and A10G for Soil Legend, and A10H for Rock Legend.

BENCH MARK

BM PRHVII Elev 239.46
Fnd steel plate on curb
(PK & TIN)
NGVD88

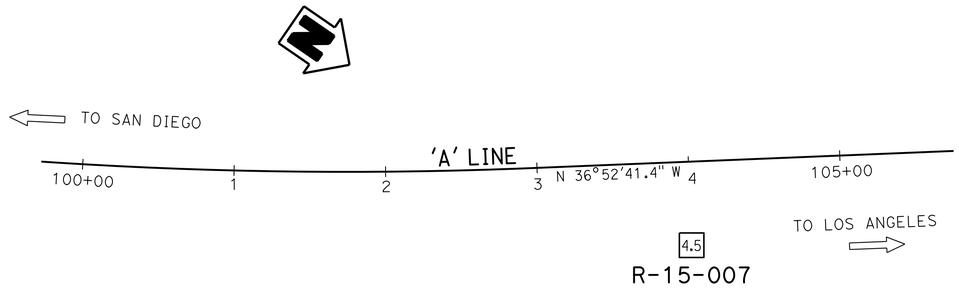

PLAN

1" = 50'

Note: Groundwater was not measured during field investigation.

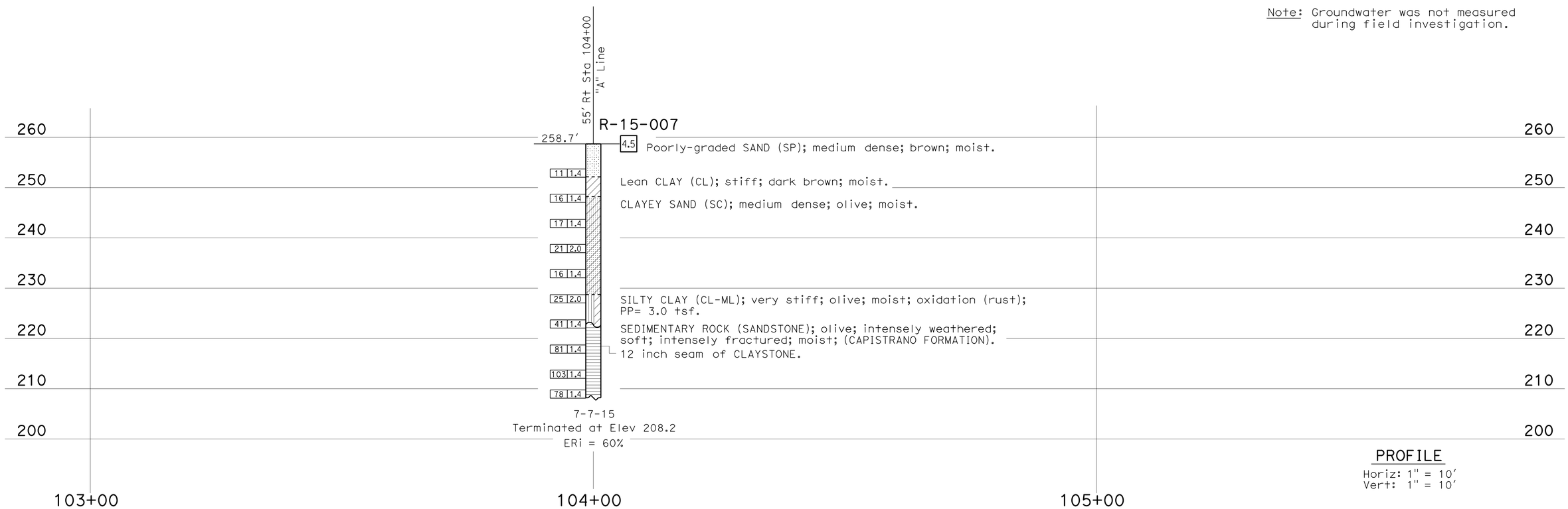

PROFILE

Horiz: 1" = 10'
Vert: 1" = 10'

ENGINEERING SERVICES	MATERIALS AND GEOTECHNICAL SERVICES	STATE OF CALIFORNIA DEPARTMENT OF TRANSPORTATION	DIVISION OF ENGINEERING SERVICES STRUCTURE DESIGN DESIGN BRANCH 12	BRIDGE NO. 55-0203 POST MILE 1.6	EL CAMINO REAL UC WIDENING RETAINING WALL 103 LOG OF TEST BORINGS
FUNCTIONAL SUPERVISOR NAME: T. Liu	DRAWN BY: I. G-Remmen CHECKED BY: C. Harris	FIELD INVESTIGATION BY: H. Ngo			

OGS CIVIL LOG OF TEST BORINGS SHEET

ORIGINAL SCALE IN INCHES FOR REDUCED PLANS 0 1 2 3

UNIT: 3650
PROJECT NUMBER & PHASE: 1212000090 & 1 CONTRACT NO.: 12-0M4901

DISREGARD PRINTS BEARING EARLIER REVISION DATES

REVISION DATES: 11-06-15 12-04-15 12-23-15

SHEET 74 OF 74

FILE => 55-0203-z-1tb08.dgn

USERNAME => s127956 DATE PLOTTED => 18-MAY-2016 TIME PLOTTED => 14:41