DIST	COUNTY	ROUTE	POST MILES TOTAL PROJECT	SHEET No.	TOTAL SHEETS
12	Ora	73,133	16.6,4.2	101	107

REGISTERED CIVIL ENGINEER — 5-20-15 DATE

06-01-15
PLANS APPROVAL DATE

Hung Po Yang
No. C66376
Exp. 06-30-16
CIVIL
REGISTERED PROFESSIONAL ENGINEER
STATE OF CALIFORNIA

The State of California or its officers or agents shall not be responsible for the accuracy or completeness of scanned copies of this plan sheet.

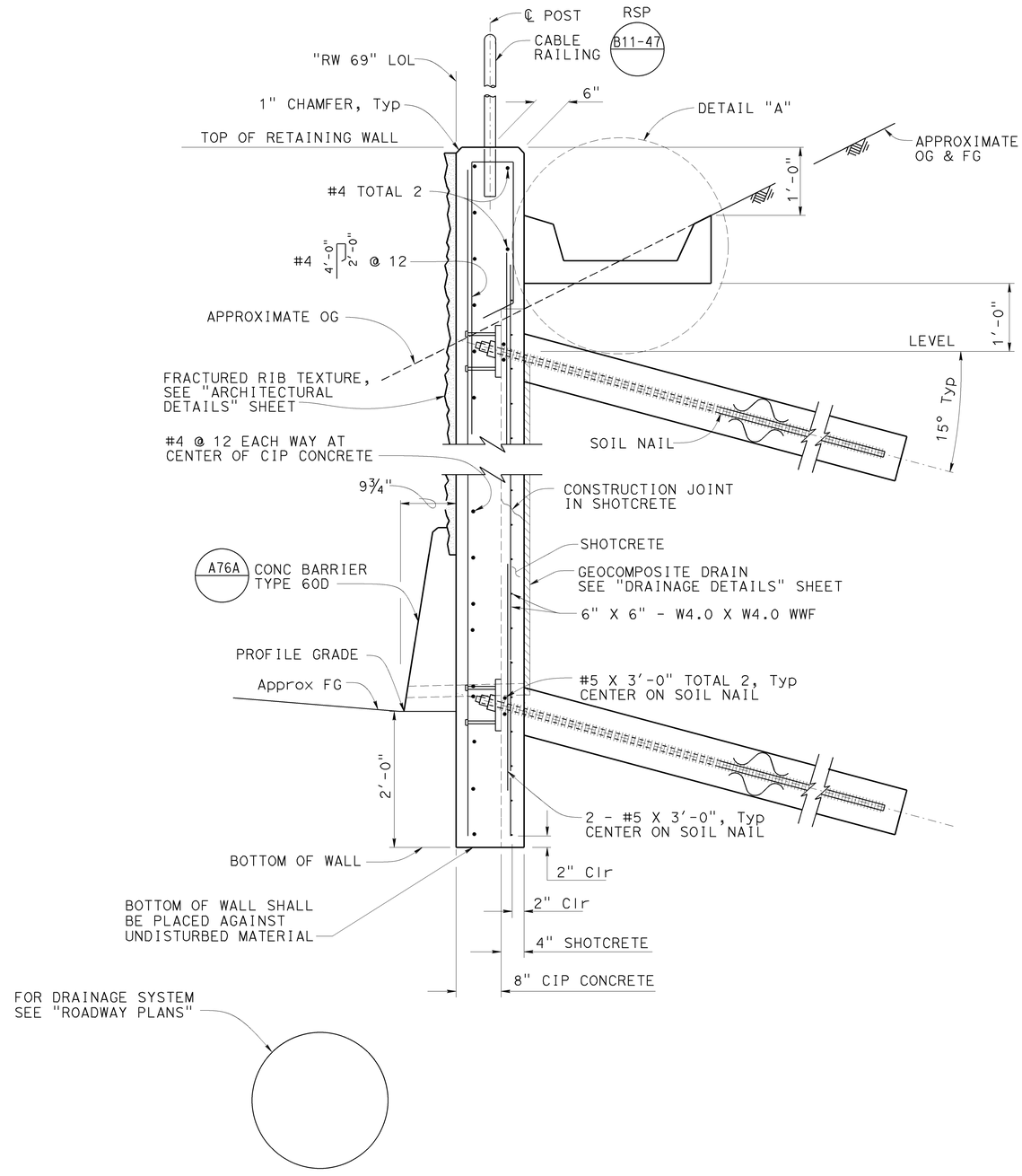

TYPICAL SECTION
NO SCALE

NOTES:

1. The vertical and horizontal Construction lift line joints in the shotcrete layer shall be located a minimum of 1'-6" from adjacent soil nails.
2. Lap splice length for Welded Wire Fabric (WWF) shall be 2 squares.

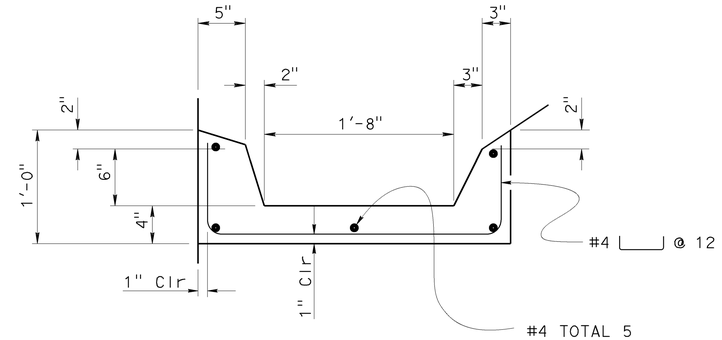

DETAIL A
1½" = 1'-0"

DESIGN	BY Paul Yang	CHECKED Jose Higareda	STATE OF CALIFORNIA DEPARTMENT OF TRANSPORTATION	DIVISION OF ENGINEERING SERVICES STRUCTURE DESIGN DESIGN BRANCH 15	BRIDGE NO. 55E0170
DETAILS	BY Herman Mauroschadt	CHECKED Jose Higareda			POST MILE 16.6
QUANTITIES	BY Paul Yang	CHECKED Fred Feng			

RETAINING WALL NO. 69
SOIL NAIL WALL DETAILS NO. 1

STRUCTURES DESIGN DETAIL SHEET (ENGLISH) (REV. 09-01-10)

ORIGINAL SCALE IN INCHES FOR REDUCED PLANS 0 1 2 3

UNIT: 3604
PROJECT NUMBER & PHASE: 1212000017
CONTRACT NO.: 12-0M340

DISREGARD PRINTS BEARING EARLIER REVISION DATES →

REVISION DATES				SHEET	OF
2-14-15	3-13-15	3-20-15	4-24-15	9	15

FILE => 55e0170-d-snd-1.dgn

USERNAME => s132486 DATE PLOTTED => 29-MAY-2015 TIME PLOTTED => 13:32

DIST	COUNTY	ROUTE	POST MILES TOTAL PROJECT	SHEET No.	TOTAL SHEETS
12	Ora	73,133	16.6,4.2	102	107

REGISTERED CIVIL ENGINEER 5-20-15 DATE

06-01-15
PLANS APPROVAL DATE

REGISTERED PROFESSIONAL ENGINEER Hung Po Yang No. C66376 Exp. 06-30-16 CIVIL STATE OF CALIFORNIA

The State of California or its officers or agents shall not be responsible for the accuracy or completeness of scanned copies of this plan sheet.

NOTES:

1. The test nail embedment length, LeT, must be equal to 2/3 of the embedment length, Le, of the adjacent production soil nail assemblies, but not less than 10'-0"
2. The total length of the test nail assembly equals the embedment length plus the length required for jacking equipment.
3. For location of proof test nails, see "STRUCTURE PLAN" sheets. Additional proof test nails must be installed and tested per special provisions.
4. Contractor to determine drilled hole diameter.
5. Finished grout surface to be normal to the bar.

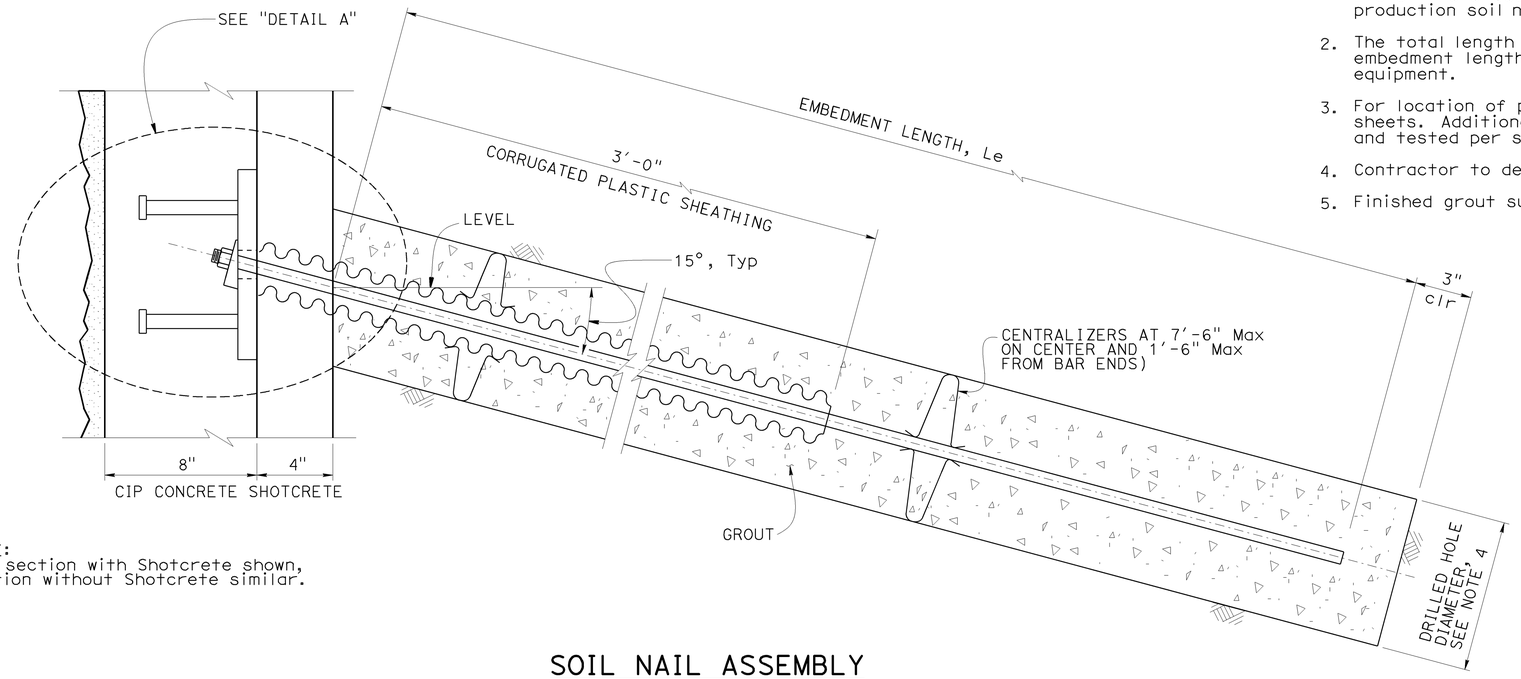

NOTE:
Wall section with Shotcrete shown, section without Shotcrete similar.

SOIL NAIL ASSEMBLY

3" = 1'-0"

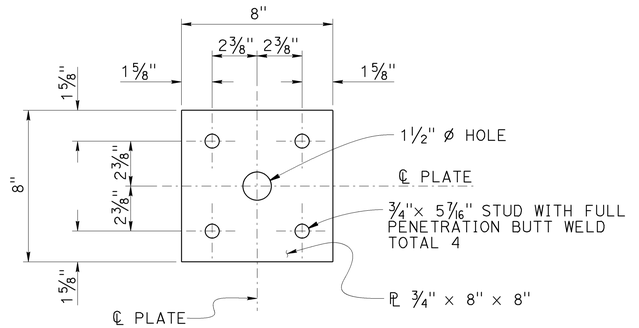

BEARING PLATE DETAIL

3" = 1'-0"

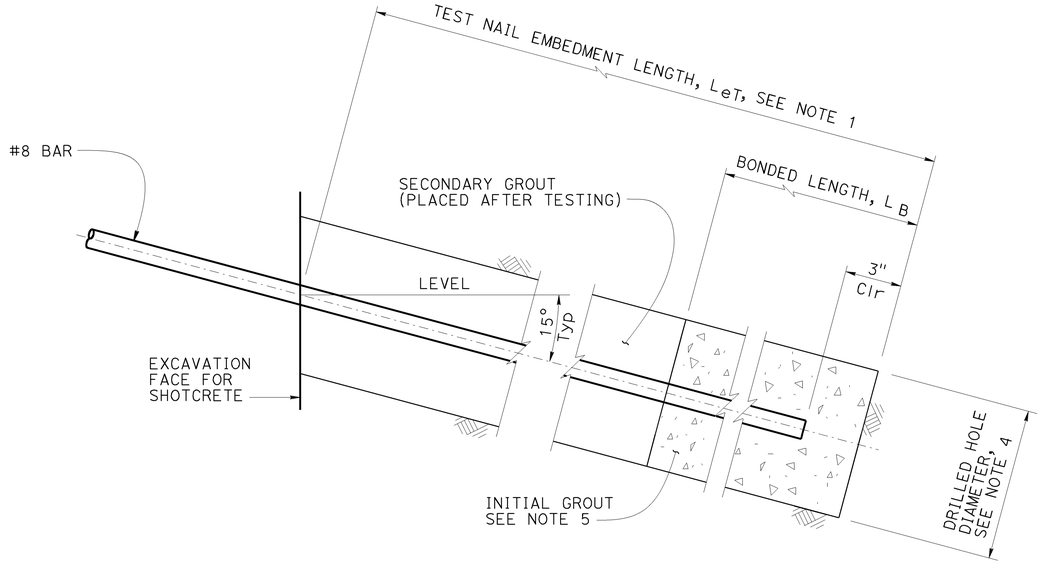

TEST NAIL DETAIL

3" = 1'-0"

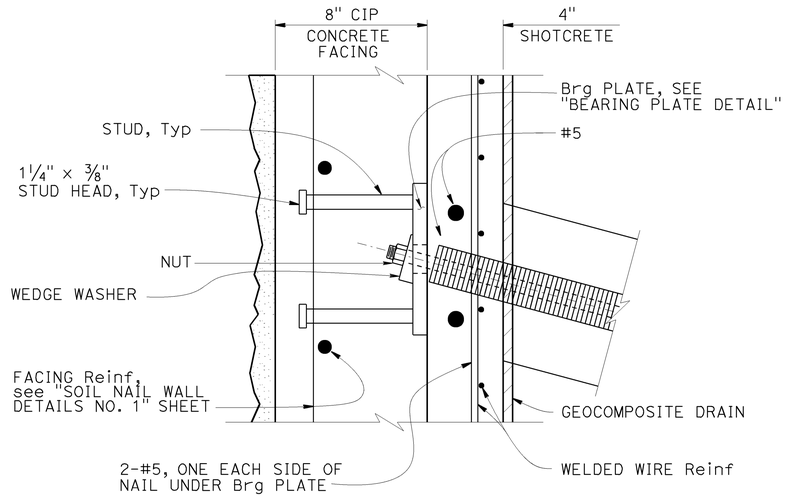

DETAIL A

3" = 1'-0"

NOTE:
Wall section with Shotcrete shown, section without Shotcrete similar.

DESIGN	BY Paul Yang	CHECKED Jose Higareda	STATE OF CALIFORNIA DEPARTMENT OF TRANSPORTATION	DIVISION OF ENGINEERING SERVICES STRUCTURE DESIGN DESIGN BRANCH 15	BRIDGE NO. 55E0170
DETAILS	BY Herman Mauroschadt	CHECKED Jose Higareda			POST MILE 16.6
QUANTITIES	BY Paul Yang	CHECKED Fred Feng			

RETAINING WALL NO. 69
SOIL NAIL WALL DETAILS NO. 2

STRUCTURES DESIGN DETAIL SHEET (ENGLISH) (REV. 09-01-10)

ORIGINAL SCALE IN INCHES FOR REDUCED PLANS 0 1 2 3

UNIT: 3604
PROJECT NUMBER & PHASE: 1212000017
CONTRACT NO.: 12-0M340

DISREGARD PRINTS BEARING EARLIER REVISION DATES

REVISION DATES 3-17-15 3-18-15 3-25-15 4-24-15

SHEET 10 OF 15

FILE => 55e0170-d-snd-2.dgn

USERNAME => s132486 DATE PLOTTED => 29-MAY-2015 TIME PLOTTED => 13:33

DIST	COUNTY	ROUTE	POST MILES TOTAL PROJECT	SHEET No.	TOTAL SHEETS
12	Ora	73,133	16.6,4.2	103	107

REGISTERED CIVIL ENGINEER — 5-20-15 DATE

06-01-15
PLANS APPROVAL DATE

Hung Po Yang
No. C66376
Exp. 06-30-16
CIVIL
REGISTERED PROFESSIONAL ENGINEER
STATE OF CALIFORNIA

The State of California or its officers or agents shall not be responsible for the accuracy or completeness of scanned copies of this plan sheet.

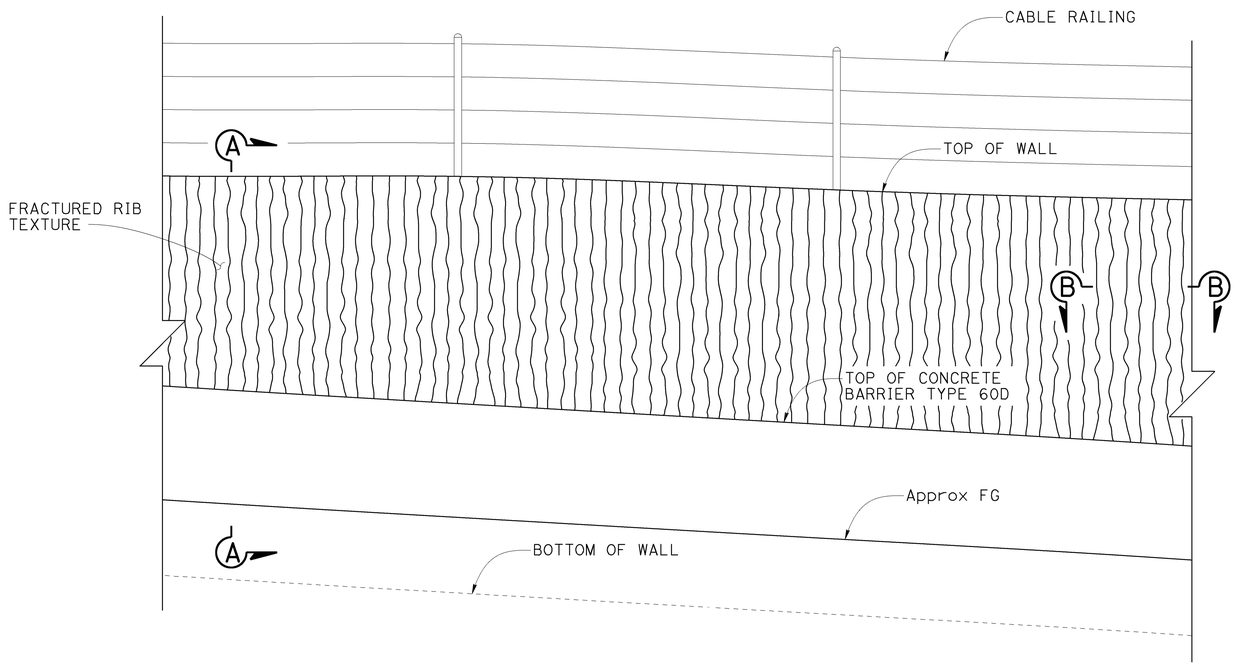

PARTIAL DEVELOPED MIRRORED ELEVATION

½" = 1'-0"

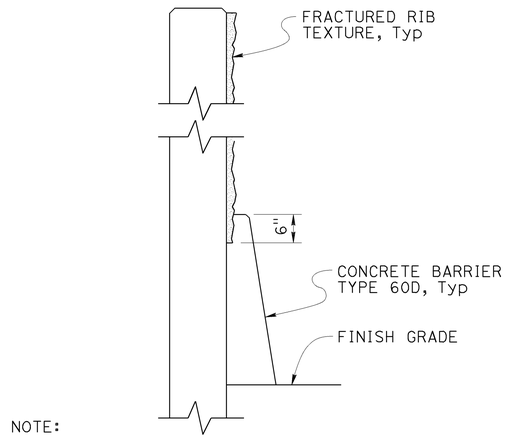

NOTE:

1. Gutter and Cable Railing not shown.

SECTION A-A

NO SCALE

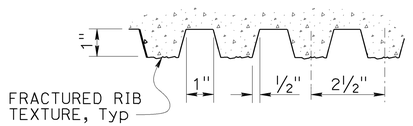

SECTION B-B

NO SCALE

NOTE:
THE CONTRACTOR MUST VERIFY ALL CONTROLLING FIELD DIMENSIONS BEFORE ORDERING OR FABRICATING ANY MATERIAL.

DESIGN	BY Paul Yang	CHECKED Jose Higareda	STATE OF CALIFORNIA DEPARTMENT OF TRANSPORTATION	DIVISION OF ENGINEERING SERVICES STRUCTURE DESIGN DESIGN BRANCH 15	BRIDGE NO. 55E0170	RETAINING WALL NO. 69
DETAILS	BY Herman Mauroschadt	CHECKED Jose Higareda			POST MILE 16.6	ARCHITECTURAL DETAILS
QUANTITIES	BY Paul Yang	CHECKED Fred Feng				

STRUCTURES DESIGN DETAIL SHEET (ENGLISH) (REV. 09-01-10)

ORIGINAL SCALE IN INCHES FOR REDUCED PLANS 0 1 2 3

UNIT: 3604
PROJECT NUMBER & PHASE: 1212000017
CONTRACT NO.: 12-0M340

DISREGARD PRINTS BEARING EARLIER REVISION DATES →

REVISION DATES				SHEET	OF
4-21-15				11	15

FILE => 55e0170-e-archdet.dgn

DATE PLOTTED => 29-MAY-2015 TIME PLOTTED => 13:34
USERNAME => s132486

DIST	COUNTY	ROUTE	POST MILES TOTAL PROJECT	SHEET No.	TOTAL SHEETS
12	Ora	73,133	16.6,4.2	104	107

REGISTERED CIVIL ENGINEER — 5-20-15 DATE

Hung Po Yang No. C66376 Exp. 06-30-16 CIVIL — REGISTERED PROFESSIONAL ENGINEER — STATE OF CALIFORNIA

06-01-15
PLANS APPROVAL DATE

The State of California or its officers or agents shall not be responsible for the accuracy or completeness of scanned copies of this plan sheet.

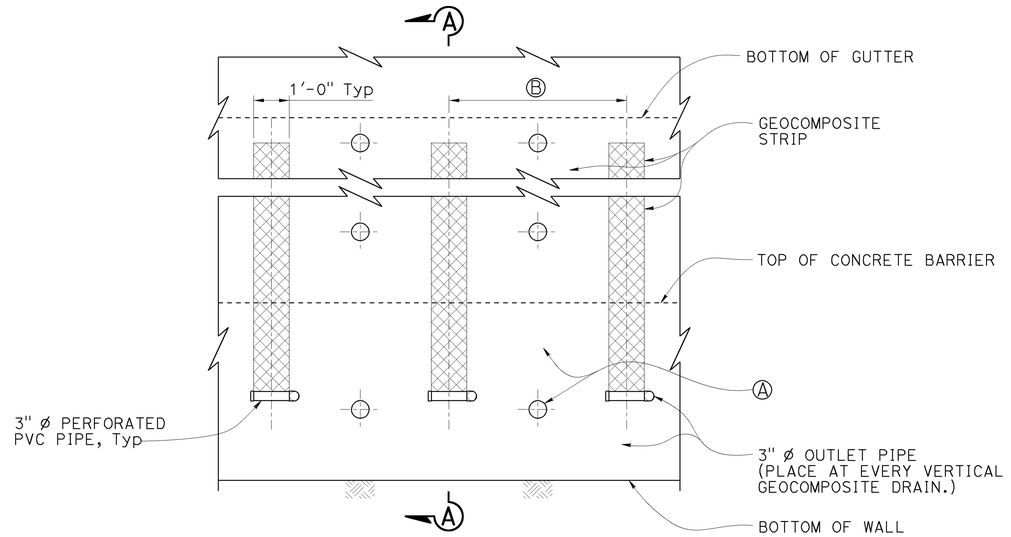

NOTE:

1. Wall reinforcement not shown for clarity.

LEGEND:

Ⓐ Indicates soil nail locations.

Ⓑ Center of geocomposite strips shall be centered vertically between soil nails.

WALL PART ELEVATION

NO SCALE

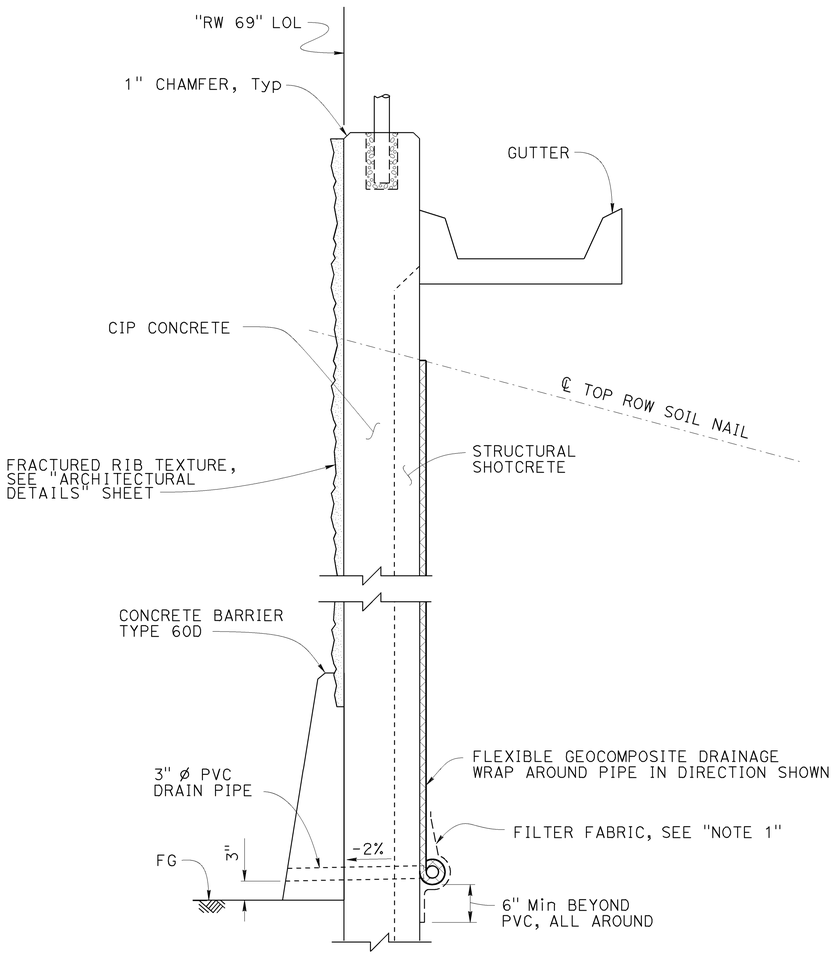

SECTION A-A

1" = 1'-0"

NOTES:

1. Provide filter fabric where necessary to prevent soil from entering drain.
2. Center Geocomposite Drains between Soil Nail columns.
3. Geocomposite Drains must have filter fabric on soil side and wrapped around top and side edges.
4. Begin Geocomposite Drain at center line of top Soil Nail row.

DESIGN	BY Paul Yang	CHECKED Jose Higareda	STATE OF CALIFORNIA DEPARTMENT OF TRANSPORTATION
DETAILS	BY Herman Mauroschadt	CHECKED Jose Higareda	
QUANTITIES	BY Paul Yang	CHECKED Fred Feng	

DIVISION OF ENGINEERING SERVICES STRUCTURE DESIGN
DESIGN BRANCH 15

BRIDGE NO. 55E0170
POST MILE 16.6

RETAINING WALL NO. 69
DRAINAGE DETAILS NO. 1

STRUCTURES DESIGN DETAIL SHEET (ENGLISH) (REV. 09-01-10)

ORIGINAL SCALE IN INCHES FOR REDUCED PLANS 0 1 2 3

UNIT: 3604
PROJECT NUMBER & PHASE: 1212000017
CONTRACT NO.: 12-0M340

DISREGARD PRINTS BEARING EARLIER REVISION DATES →

REVISION DATES				SHEET	OF
2-11-15	3-11-15	4-24-15	5-20-15	12	15

FILE => 55e0170-e-dd-01.dgn

USERNAME => s132686 DATE PLOTTED => 29-MAY-2015 TIME PLOTTED => 13:35

DIST	COUNTY	ROUTE	POST MILES TOTAL PROJECT	SHEET No.	TOTAL SHEETS
12	Ora	73,133	16.6,4.2	105	107

REGISTERED CIVIL ENGINEER — 5-20-15 DATE

06-01-15
PLANS APPROVAL DATE

Hung Po Yang
No. C66376
Exp. 06-30-16
CIVIL
REGISTERED PROFESSIONAL ENGINEER
STATE OF CALIFORNIA

The State of California or its officers or agents shall not be responsible for the accuracy or completeness of scanned copies of this plan sheet.

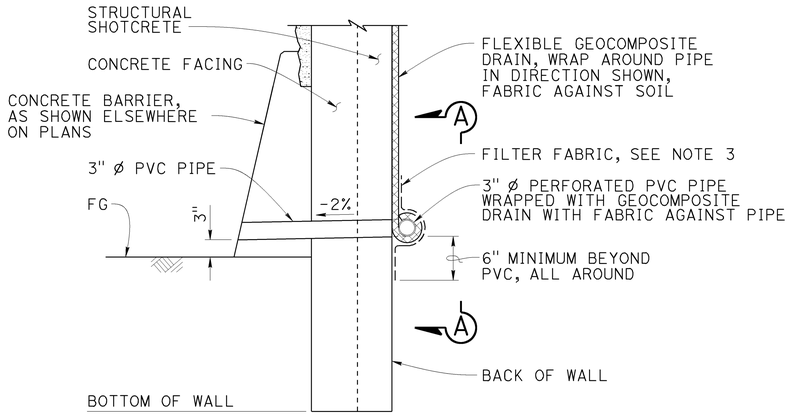

WALL DRAIN DETAIL AT WEEPHOLE OPTION A

NO SCALE

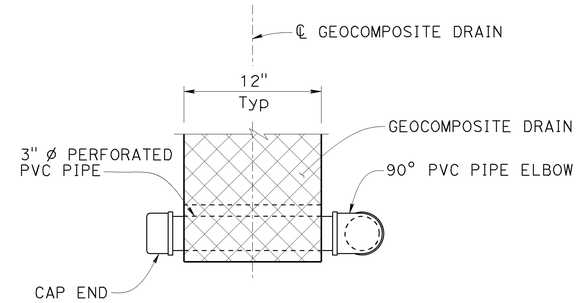

VIEW A-A

NO SCALE

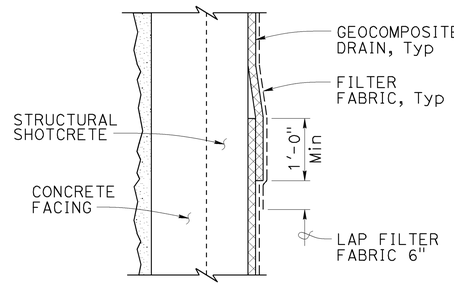

DRAIN SPLICE

NO SCALE

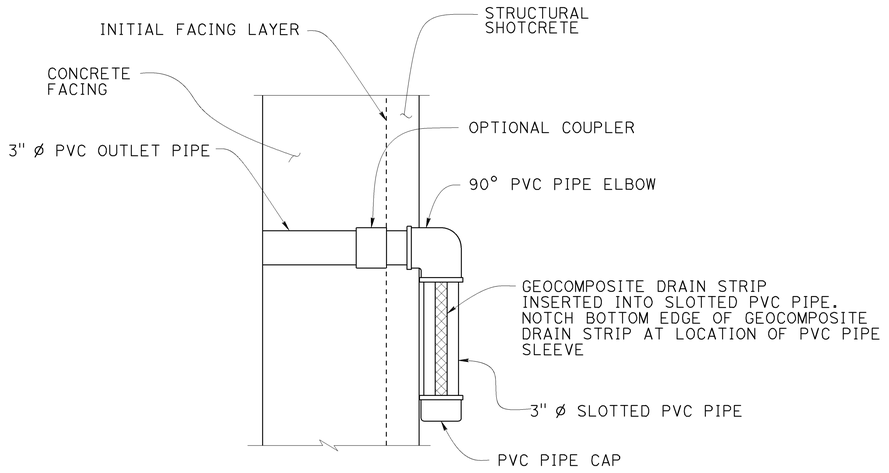

SECTION B-B

NO SCALE

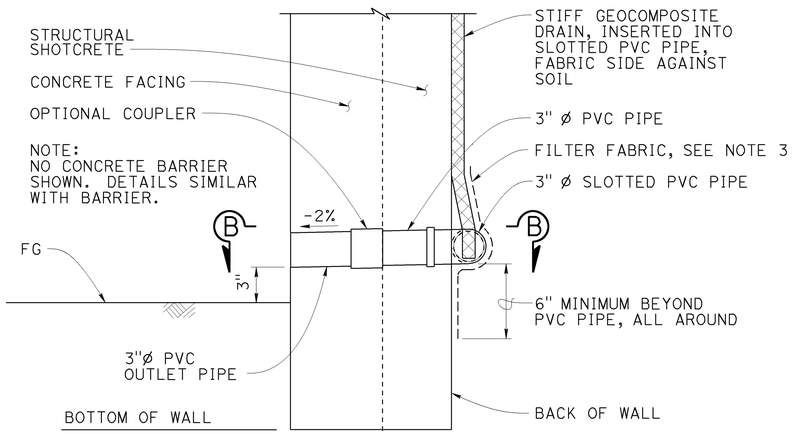

WALL DRAIN DETAIL AT WEEPHOLE OPTION B

NO SCALE

NOTES:

1. Center Geocomposite Drains between soil nail columns.
2. Provide filter fabric where necessary to prevent soil from entering drain.
3. Alternative drain outlet details may be submitted for Engineer's approval.
4. Splice length for Geocomposite drain shall be 12".

DESIGN	BY Paul Yang	CHECKED Jose Higareda	STATE OF CALIFORNIA DEPARTMENT OF TRANSPORTATION	DIVISION OF ENGINEERING SERVICES STRUCTURE DESIGN DESIGN BRANCH 15	BRIDGE NO. 55E0170
DETAILS	BY Herman Mauroschadt	CHECKED Jose Higareda			POST MILE 16.6
QUANTITIES	BY Paul Yang	CHECKED Fred Feng			

RETAINING WALL NO. 69
DRAINAGE DETAILS NO. 2

STRUCTURES DESIGN DETAIL SHEET (ENGLISH) (REV. 09-01-10)

ORIGINAL SCALE IN INCHES FOR REDUCED PLANS 0 1 2 3

UNIT: 3604
PROJECT NUMBER & PHASE: 1212000017
CONTRACT NO.: 12-0M340

DISREGARD PRINTS BEARING EARLIER REVISION DATES →

REVISION DATES				SHEET	OF
02-24-15	3-13-15	4-24-15	5-20-15	13	15

FILE => 55e0170-e-dd-02.dgn

USERNAME => s132486 DATE PLOTTED => 29-MAY-2015 TIME PLOTTED => 13:35

DIST	COUNTY	ROUTE	POST MILES TOTAL PROJECT	SHEET No.	TOTAL SHEETS
12	Ora	73,133	16.6,4.2	106	107

REGISTERED CIVIL ENGINEER — 5-20-15 DATE

06-01-15
PLANS APPROVAL DATE

Hung Po Yang
No. C66376
Exp. 06-30-16
CIVIL
REGISTERED PROFESSIONAL ENGINEER
STATE OF CALIFORNIA

The State of California or its officers or agents shall not be responsible for the accuracy or completeness of scanned copies of this plan sheet.

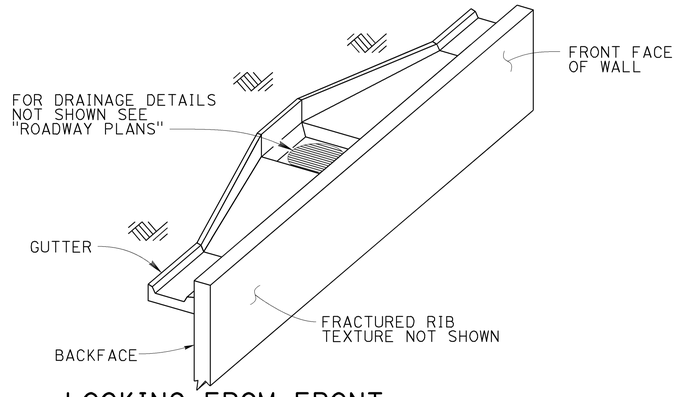

LOOKING FROM FRONT FACE OF WALL

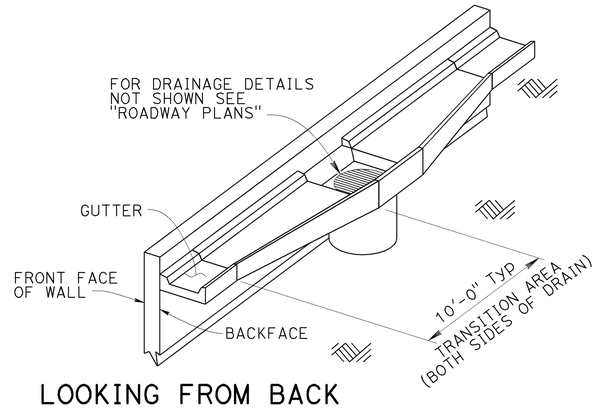

LOOKING FROM BACK SIDE OF WALL

ISOMETRIC VIEW

NO SCALE

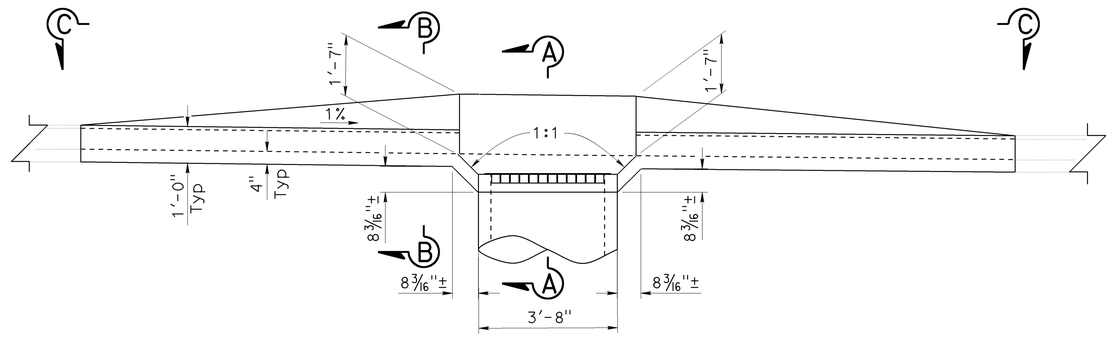

ELEVATION

NOTE:

1. For "SECTION A-A", "SECTION B-B" and "VIEW C-C" see "DRAINAGE DETAILS NO. 4" sheet.

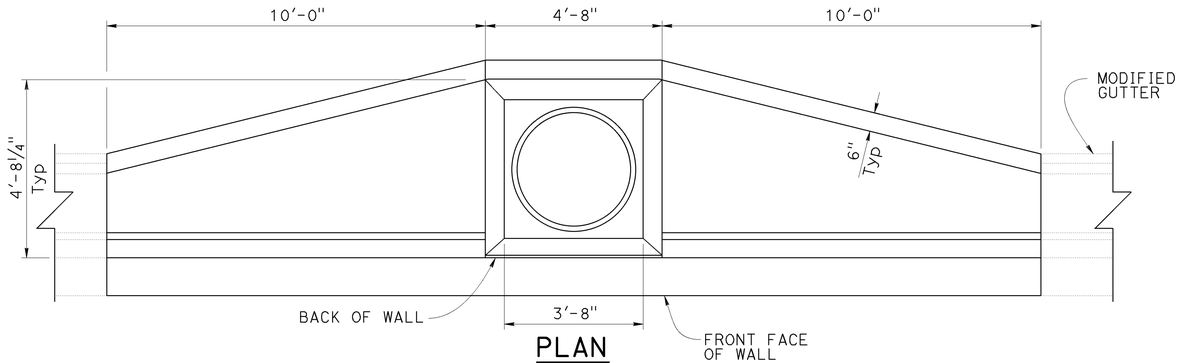

PLAN

MODIFIED GUTTER AT APRON

1/2" = 1'-0"

NOTE:
THE CONTRACTOR MUST VERIFY ALL CONTROLLING FIELD DIMENSIONS BEFORE ORDERING OR FABRICATING ANY MATERIAL.

DESIGN	BY Paul Yang	CHECKED Jose Higareda	STATE OF CALIFORNIA DEPARTMENT OF TRANSPORTATION	DIVISION OF ENGINEERING SERVICES STRUCTURE DESIGN DESIGN BRANCH 15	BRIDGE NO. 55E0170
DETAILS	BY Herman Mauroschadt	CHECKED Jose Higareda			POST MILE 16.6
QUANTITIES	BY Paul Yang	CHECKED Fred Feng			

RETAINING WALL NO. 69
DRAINAGE DETAILS NO. 3

STRUCTURES DESIGN DETAIL SHEET (ENGLISH) (REV. 09-01-10)

ORIGINAL SCALE IN INCHES FOR REDUCED PLANS 0 1 2 3

UNIT: 3604
PROJECT NUMBER & PHASE: 1212000017
CONTRACT NO.: 12-0M340

DISREGARD PRINTS BEARING EARLIER REVISION DATES →

REVISION DATES				SHEET	OF
12-2-14	3-25-15	3-18-15	3-18-15	14	15

FILE => 55e0170-e-dd-03.dgn

USERNAME => s132486 DATE PLOTTED => 29-MAY-2015 TIME PLOTTED => 13:56

DIST	COUNTY	ROUTE	POST MILES TOTAL PROJECT	SHEET No.	TOTAL SHEETS
12	Ora	73,133	16.6,4.2	107	107

REGISTERED CIVIL ENGINEER — 5-20-15 DATE

06-01-15
PLANS APPROVAL DATE

The State of California or its officers or agents shall not be responsible for the accuracy or completeness of scanned copies of this plan sheet.

REGISTERED PROFESSIONAL ENGINEER — Hung Po Yang — No. C66376 — Exp. 06-30-16 — CIVIL — STATE OF CALIFORNIA

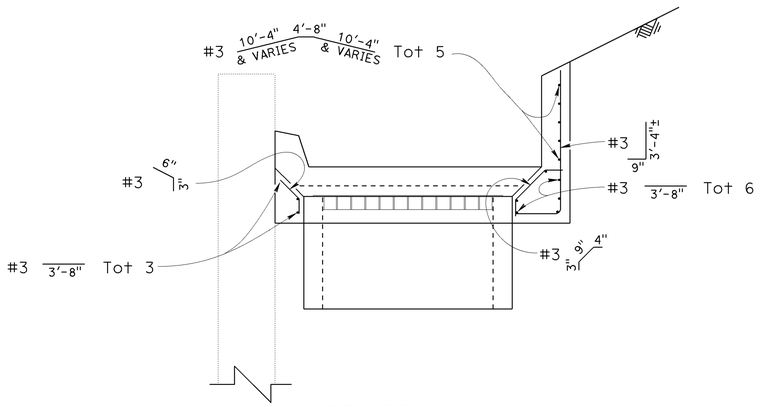

SECTION A-A
3/4" = 1'-0"

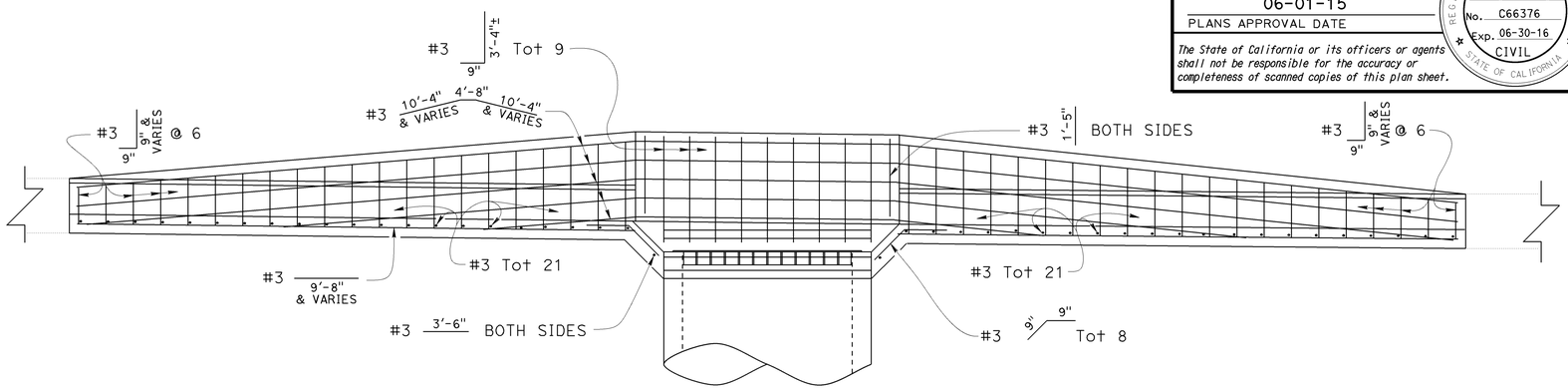

VIEW D-D
3/4" = 1'-0"

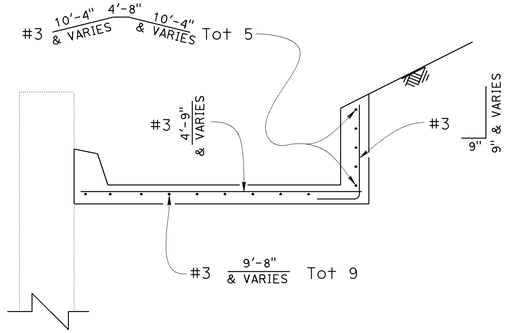

SECTION B-B
3/4" = 1'-0"

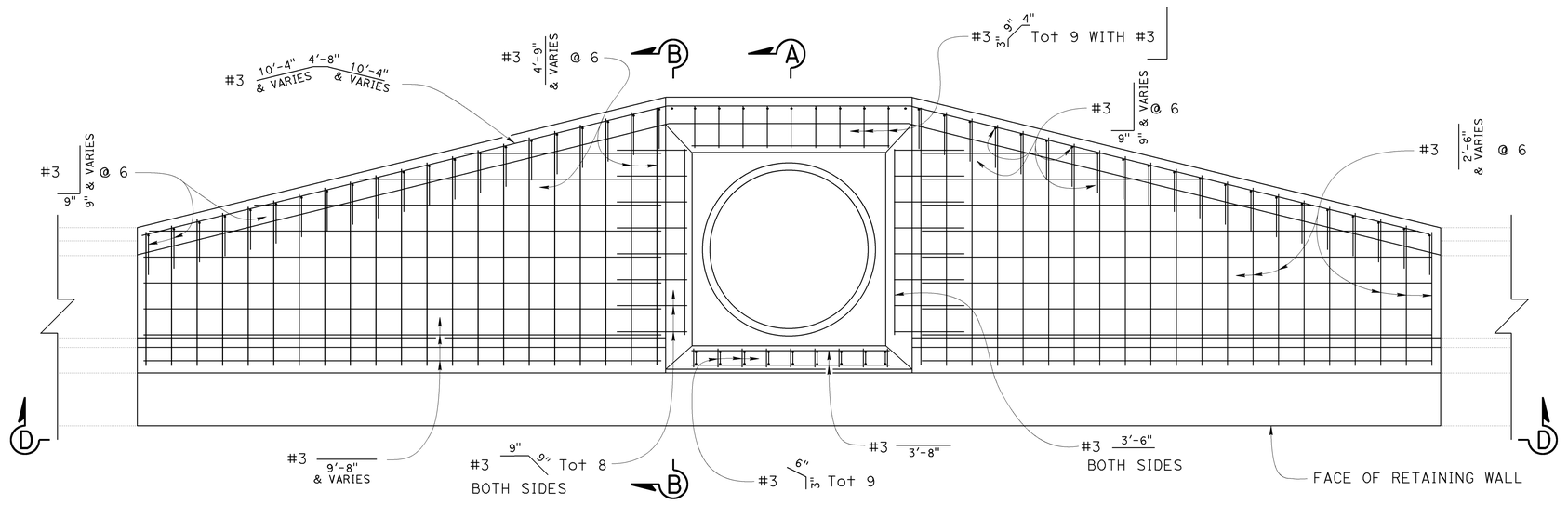

VIEW C-C
3/4" = 1'-0"

NOTE:
THE CONTRACTOR MUST VERIFY ALL CONTROLLING FIELD DIMENSIONS BEFORE ORDERING OR FABRICATING ANY MATERIAL.

	BY	CHECKED
DESIGN	Paul Yang	Jose Higareda
DETAILS	Herman Mauroschadt	Jose Higareda
QUANTITIES	Paul Yang	Fred Feng

STATE OF CALIFORNIA
DEPARTMENT OF TRANSPORTATION

DIVISION OF ENGINEERING SERVICES
STRUCTURE DESIGN
DESIGN BRANCH 15

BRIDGE NO. 55E0170
POST MILE 16.6

RETAINING WALL NO. 69
DRAINAGE DETAILS NO. 4

STRUCTURES DESIGN DETAIL SHEET (ENGLISH) (REV. 09-01-10)

ORIGINAL SCALE IN INCHES FOR REDUCED PLANS 0 1 2 3

UNIT: 3604
PROJECT NUMBER & PHASE: 1212000017
CONTRACT NO.: 12-0M340

DISREGARD PRINTS BEARING EARLIER REVISION DATES

REVISION DATES				SHEET	OF
10-1-14	10-17-14	4-24-15	5-20-15	15	15

FILE => 55e0170-e-dd-04.dgn

USERNAME => s132486 DATE PLOTTED => 29-MAY-2015 TIME PLOTTED => 13:36