Dist	COUNTY	ROUTE	POST MILES TOTAL PROJECT	SHEET No.	TOTAL SHEETS
12	Ora	91	R0.3	1	48

STATE OF CALIFORNIA

DEPARTMENT OF TRANSPORTATION

ACHSNH-P091(138)E

PROJECT PLANS FOR CONSTRUCTION ON

STATE HIGHWAY

IN ORANGE COUNTY
IN LA PALMA
AT ORANGETHORPE AVENUE UNDERCROSSING

TO BE SUPPLEMENTED BY STANDARD PLANS DATED 2010

INDEX OF PLANS

SHEET No.	DESCRIPTION
1	TITLE AND LOCATION MAP
2-3	TYPICAL CROSS SECTIONS
4	LAYOUT
5	PROFILE
6-12	CONSTRUCTION DETAILS
13	TEMPORARY WATER POLLUTION CONTROL PLAN
14-15	DRAINAGE PLAN, PROFILE AND QUANTITIES
16	UTILITY PLAN
17	CONSTRUCTION AREA SIGNS
18-20	STAGE CONSTRUCTION PLANS AND QUANTITIES
21-24	TRAFFIC HANDLING PLANS, DETAILS AND QUANTITIES
25-26	PAVEMENT DELINEATION PLAN AND QUANTITIES
27-30	SIGN PLAN, DETAILS AND QUANTITIES
31-32	SUMMARY OF QUANTITIES
33-37	PLANTING AND IRRIGATION PLANS
38-40	ELECTRICAL PLANS
41-42	TRAFFIC CONTROL SYSTEM PLANS
43-48	REVISED STANDARD PLANS

THE STANDARD PLANS LIST APPLICABLE TO THIS CONTRACT IS INCLUDED IN THE NOTICE TO BIDDERS AND SPECIAL PROVISIONS BOOK.

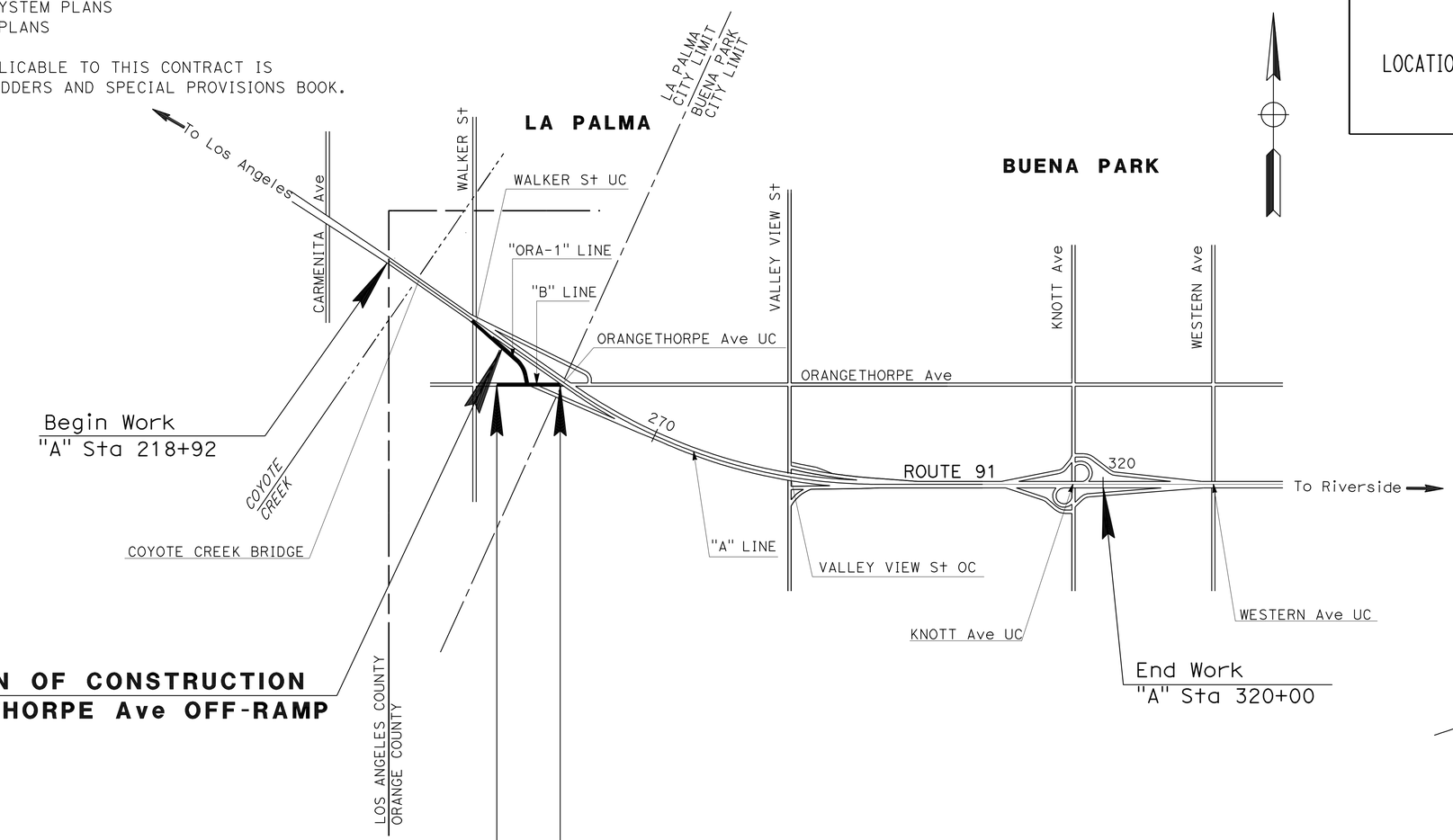

LOCATION OF CONSTRUCTION
ORANGETHORPE Ave OFF-RAMP
PM R0.3

NO SCALE

THE CONTRACTOR SHALL POSSESS THE CLASS (OR CLASSES) OF LICENSE AS SPECIFIED IN THE "NOTICE TO BIDDERS."

PROJECT MANAGER: LEO CHEN

DESIGN ENGINEER: YENHAI NGUYEN

12-28-12
PROJECT ENGINEER DATE
REGISTERED CIVIL ENGINEER

March 18, 2013
PLANS APPROVAL DATE

REGISTERED PROFESSIONAL ENGINEER
YENHAI M. NGUYEN
No. C62100
Exp. 9/30/13
CIVIL
STATE OF CALIFORNIA

THE STATE OF CALIFORNIA OR ITS OFFICERS OR AGENTS SHALL NOT BE RESPONSIBLE FOR THE ACCURACY OR COMPLETENESS OF SCANNED COPIES OF THIS PLAN SHEET.

CONTRACT No.	12-0L7504
PROJECT ID	1200020185

LAST REVISION 01-15-13
DATE PLOTTED => 21-MAR-2013
TIME PLOTTED => 10:19

Dist	COUNTY	ROUTE	POST MILES TOTAL PROJECT	SHEET No.	TOTAL SHEETS
12	Ora	91	R0.3	2	48

REGISTERED CIVIL ENGINEER 12-28-12 DATE

03-18-13
PLANS APPROVAL DATE

REGISTERED PROFESSIONAL ENGINEER YENHAI M. NGUYEN No. C62100 Exp. 9/30/13 CIVIL STATE OF CALIFORNIA

THE STATE OF CALIFORNIA OR ITS OFFICERS OR AGENTS SHALL NOT BE RESPONSIBLE FOR THE ACCURACY OR COMPLETENESS OF SCANNED COPIES OF THIS PLAN SHEET.

NOTES:

1. DIMENSIONS OF THE PAVEMENT STRUCTURES (STRUCTURAL SECTIONS) ARE SUBJECT TO TOLERANCES SPECIFIED IN THE STANDARD SPECIFICATIONS.
2. EXACT LOCATIONS OF DIKE, CURB, MBGR, AND CONCRETE BARRIER ARE SHOWN ON THE LAYOUTS AND IN THE SUMMARY OF QUANTITIES SHEETS.

TYPICAL PAVEMENT STRUCTURE SECTIONS:

1 — 0.85′ HMA (TYPE A)
1.65′ CLASS 2 AB

2 — 0.20′ HMA (TYPE A)
0.20′ COLD PLAN ASPHALT CONC PVMT

3 — 1.5′ HMA (TYPE A)

4 — 0.33′ MINOR CONCRETE (TEXTURED PAVING)
0.33′ CLASS 2 AB

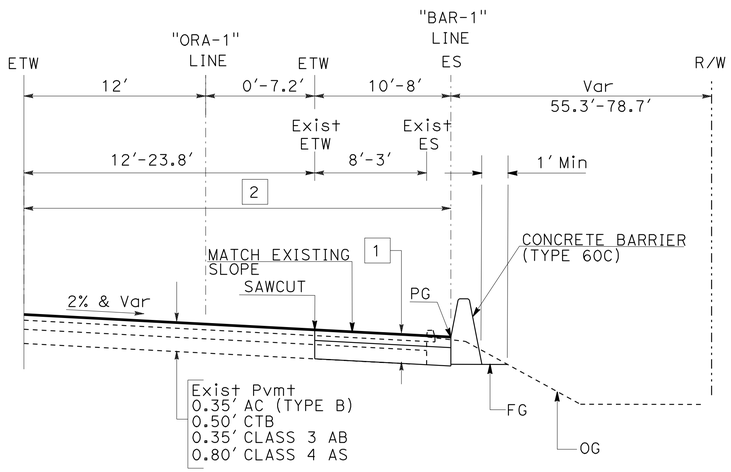

"ORA-1" 15+80 TO "ORA-1" 17+13

EB ORANGETHORPE Ave OFF-RAMP

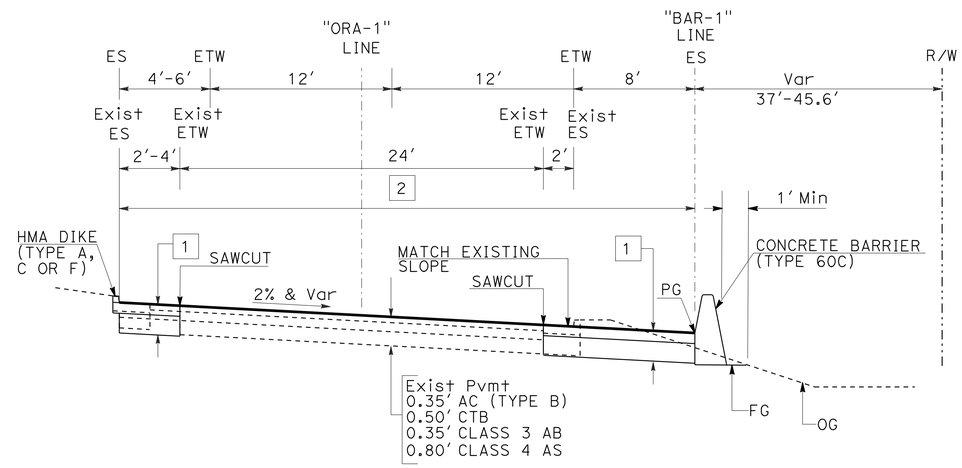

"ORA-1" 17+64.87 TO "ORA-1" 18+68.84

EB ORANGETHORPE Ave OFF-RAMP

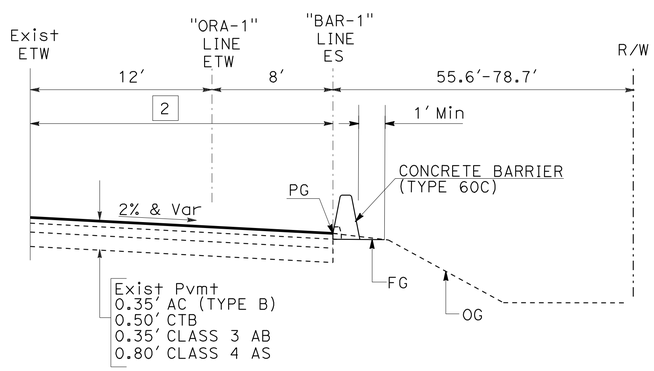

"ORA-1" 15+08.86 TO "ORA-1" 15+80

EB ORANGETHORPE Ave OFF-RAMP

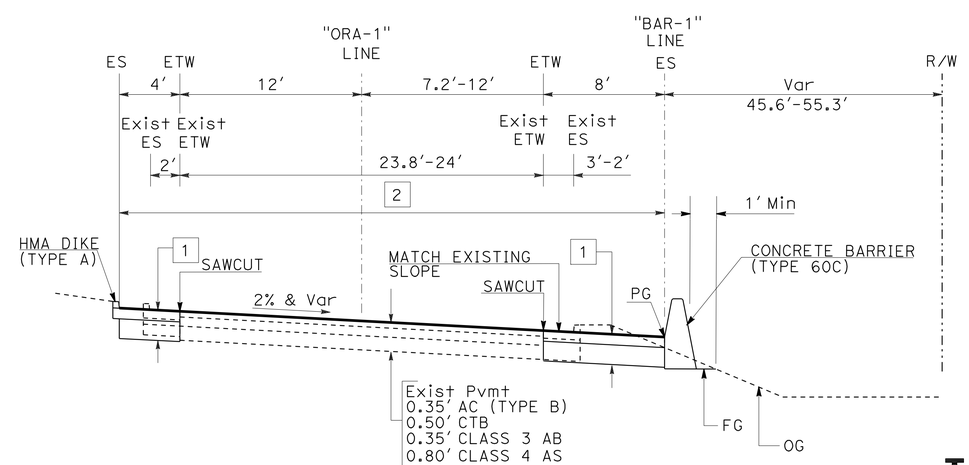

"ORA-1" 17+13 TO "ORA-1" 17+64.87

EB ORANGETHORPE Ave OFF-RAMP

TYPICAL CROSS SECTIONS

NO SCALE

X-1

STATE OF CALIFORNIA - DEPARTMENT OF TRANSPORTATION
Caltrans® DESIGN BRANCH B

FUNCTIONAL SUPERVISOR: CHRISTOPHER LE
CALCULATED-DESIGNED BY: YENHAI NGUYEN
CHECKED BY: CHRISTOPHER LE
REVISED BY: Y. NGUYEN
DATE REVISED: 01-15-13

LAST REVISION 01-15-13 | DATE PLOTTED => 21-MAR-2013 | TIME PLOTTED => 10:19

Dist	COUNTY	ROUTE	POST MILES TOTAL PROJECT	SHEET No.	TOTAL SHEETS
12	Ora	91	R0.3	3	48

REGISTERED CIVIL ENGINEER 12-28-12 DATE

03-18-13
PLANS APPROVAL DATE

REGISTERED PROFESSIONAL ENGINEER
YENHAI M. NGUYEN
No. C62100
Exp. 9/30/13
CIVIL
STATE OF CALIFORNIA

THE STATE OF CALIFORNIA OR ITS OFFICERS OR AGENTS SHALL NOT BE RESPONSIBLE FOR THE ACCURACY OR COMPLETENESS OF SCANNED COPIES OF THIS PLAN SHEET.

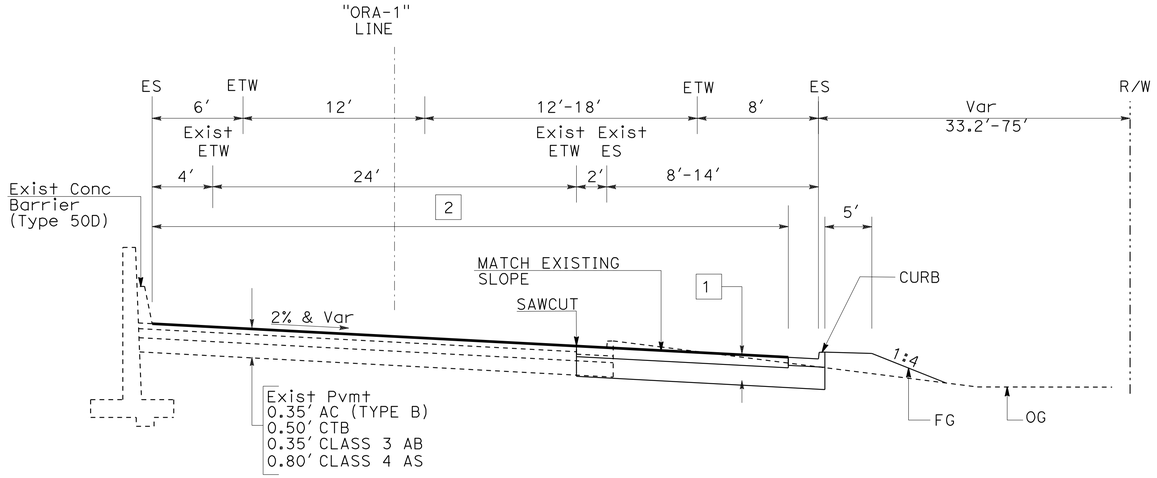

"ORA-1" 19+86.23 TO "ORA-1" 20+46.40

EB ORANGETHORPE Ave OFF-RAMP

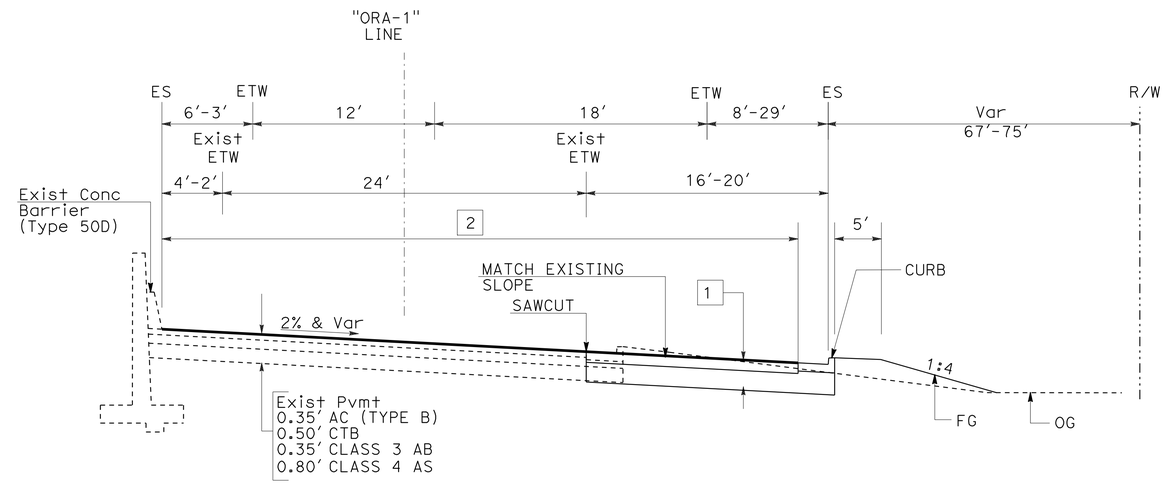

"ORA-1" 20+46.40 TO "ORA-1" 21+46.7

EB ORANGETHORPE Ave OFF-RAMP

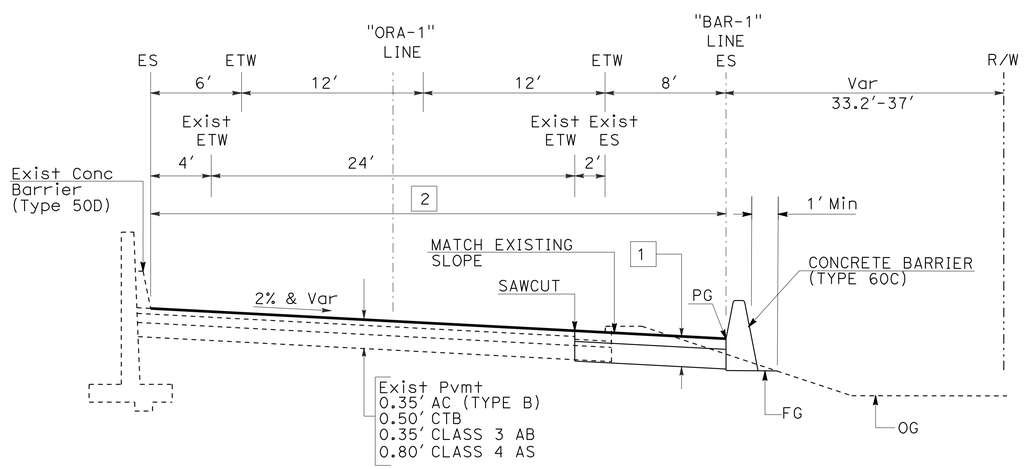

"ORA-1" 18+68.84 TO "ORA-1" 19+86.23

EB ORANGETHORPE Ave OFF-RAMP

TYPICAL CROSS SECTIONS

NO SCALE

X-2

REVISED BY	Y. NGUYEN
DATE REVISED	01-15-13
CALCULATED-DESIGNED BY	YENHAI NGUYEN
CHECKED BY	CHRISTOPHER LE
FUNCTIONAL SUPERVISOR	CHRISTOPHER LE

STATE OF CALIFORNIA - DEPARTMENT OF TRANSPORTATION
Caltrans® DESIGN BRANCH B

LAST REVISION 01-15-13 | DATE PLOTTED => 21-MAR-2013 | TIME PLOTTED => 10:19

Dist	COUNTY	ROUTE	POST MILES TOTAL PROJECT	SHEET No.	TOTAL SHEETS
12	Ora	91	R0.3	4	48

REGISTERED CIVIL ENGINEER 12-28-12 DATE

03-18-13
PLANS APPROVAL DATE

REGISTERED PROFESSIONAL ENGINEER
YENHAI M. NGUYEN
No. C62100
Exp. 9/30/13
CIVIL
STATE OF CALIFORNIA

THE STATE OF CALIFORNIA OR ITS OFFICERS OR AGENTS SHALL NOT BE RESPONSIBLE FOR THE ACCURACY OR COMPLETENESS OF SCANNED COPIES OF THIS PLAN SHEET.

NOTES:

1. FOR ACCURATE RIGHT OF WAY DATA, CONTACT RIGHT OF WAY ENGINEERING AT THE DISTRICT OFFICE.
2. FOR DIKE, ANCHOR BLOCK AND CONCRETE BARRIER TRANSITION DETAILS, SEE CONSTRUCTION DETAIL SHEETS.

CURVE DATA

No.	R	Δ	T	L
1	5000′	3°58′10"	173.27′	346.40′
2	100′	62°30′36"	60.70′	109.11′
3	5567.77′	1°12′42"	58.87′	117.73′

LEGEND:

[X] STRUCTURAL SECTION TYPE SEE SHEET X-1

(X) CURVE No.

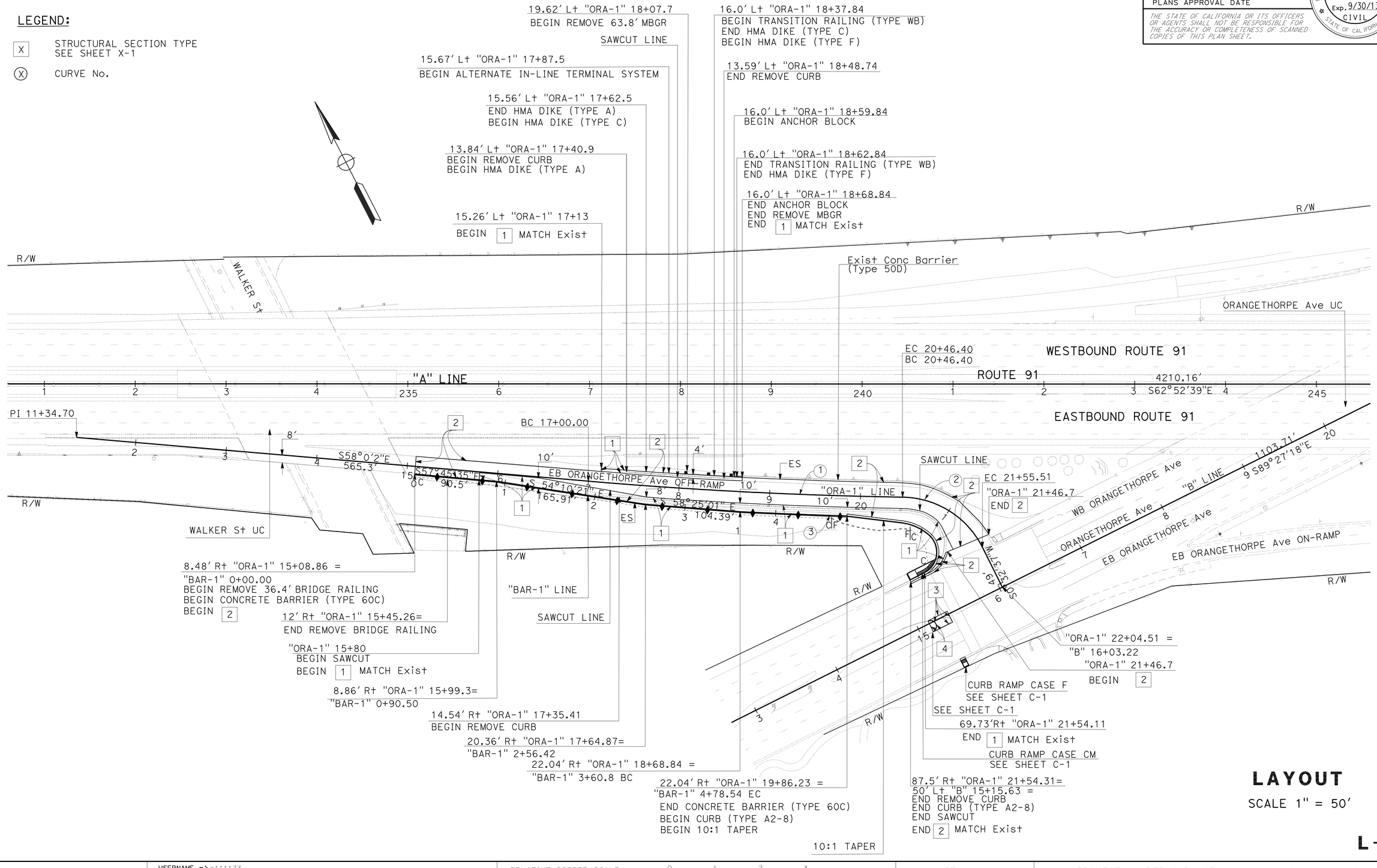

LAYOUT

SCALE 1" = 50′

L-1

Y. NGUYEN	01-15-13	REVISED BY	DATE REVISED
YENHAI NGUYEN	CHRISTOPHER LE	CALCULATED-DESIGNED BY	CHECKED BY
CHRISTOPHER LE		FUNCTIONAL SUPERVISOR	

STATE OF CALIFORNIA - DEPARTMENT OF TRANSPORTATION
Caltrans
DESIGN BRANCH B

LAST REVISION 01-15-13 | DATE PLOTTED => 21-MAR-2013 | TIME PLOTTED => 10:19

Dist	COUNTY	ROUTE	POST MILES TOTAL PROJECT	SHEET No.	TOTAL SHEETS
12	Ora	91	R0.3	5	48

REGISTERED CIVIL ENGINEER 12-28-12 DATE

03-18-13
PLANS APPROVAL DATE

REGISTERED PROFESSIONAL ENGINEER YENHAI M. NGUYEN No. C62100 Exp. 9/30/13 CIVIL STATE OF CALIFORNIA

THE STATE OF CALIFORNIA OR ITS OFFICERS OR AGENTS SHALL NOT BE RESPONSIBLE FOR THE ACCURACY OR COMPLETENESS OF SCANNED COPIES OF THIS PLAN SHEET.

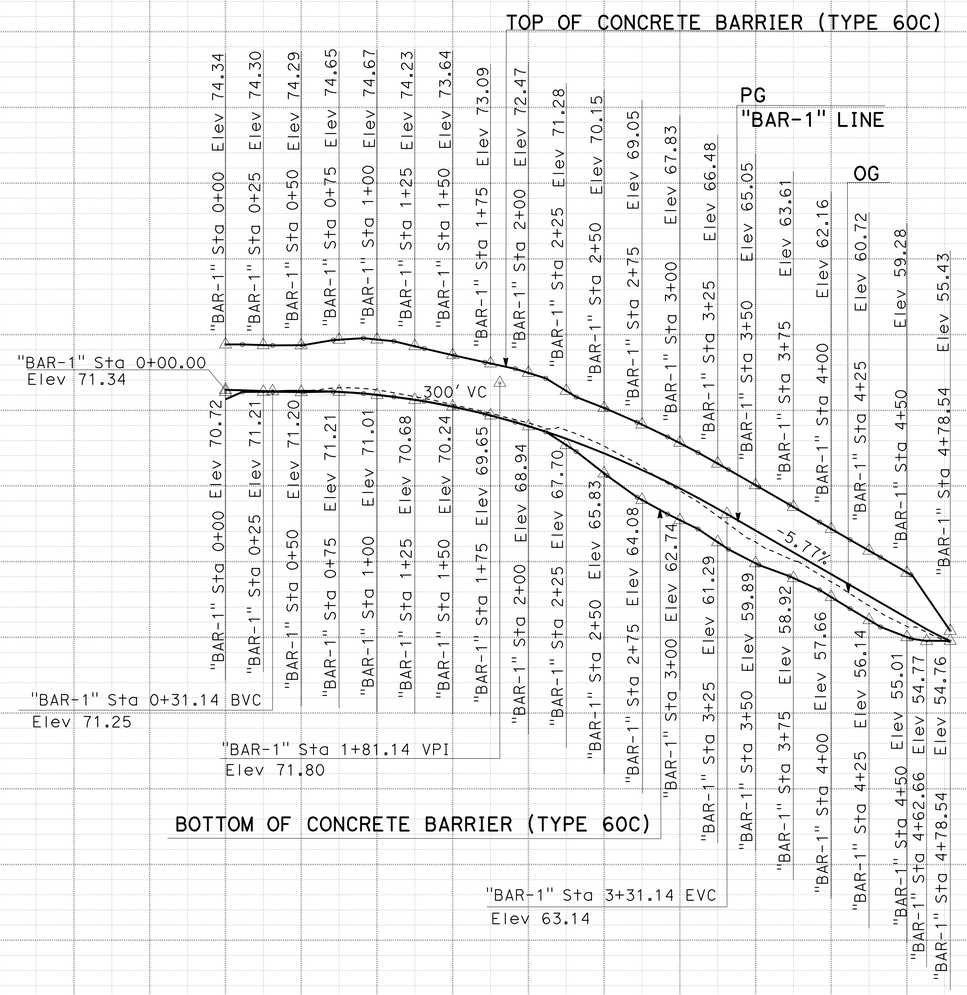

PROFILE
"BAR-1" LINE

PROFILE
SCALE: Horz 1" = 50'
Vert 1" = 5'

P-1

STATION		0+00	1+00	2+00	3+00	4+00	TOTAL
CY	Exc						
	Emb						

STATE OF CALIFORNIA - DEPARTMENT OF TRANSPORTATION
Caltrans® DESIGN BRANCH B

FUNCTIONAL SUPERVISOR: CHRISTOPHER LE
CALCULATED-DESIGNED BY: YENHAI NGUYEN
CHECKED BY: CHRISTOPHER LE
REVISED BY: Y. NGUYEN
DATE REVISED: 01-15-13

LAST REVISION 01-15-13 | DATE PLOTTED => 21-MAR-2013 | TIME PLOTTED => 10:19

Dist	COUNTY	ROUTE	POST MILES TOTAL PROJECT	SHEET No.	TOTAL SHEETS
12	Ora	91	R0.3	6	48

12-28-12
REGISTERED CIVIL ENGINEER DATE

03-18-13
PLANS APPROVAL DATE

REGISTERED PROFESSIONAL ENGINEER
YENHAI M. NGUYEN
No. C62100
Exp. 9/30/13
CIVIL
STATE OF CALIFORNIA

THE STATE OF CALIFORNIA OR ITS OFFICERS OR AGENTS SHALL NOT BE RESPONSIBLE FOR THE ACCURACY OR COMPLETENESS OF SCANNED COPIES OF THIS PLAN SHEET.

NOTE:

1. FOR ACCURATE RIGHT OF WAY DATA, CONTACT RIGHT OF WAY ENGINEERING AT THE DISTRICT OFFICE.

LEGEND:

- [X] STRUCTURAL SECTION TYPE SEE SHEET X-1
- LIMIT OF REMOVE BRIDGE RAILING
- MINOR CONCRETE (TEXTURED PAVING) MATCH EXISTING CONCRETE PATTERN

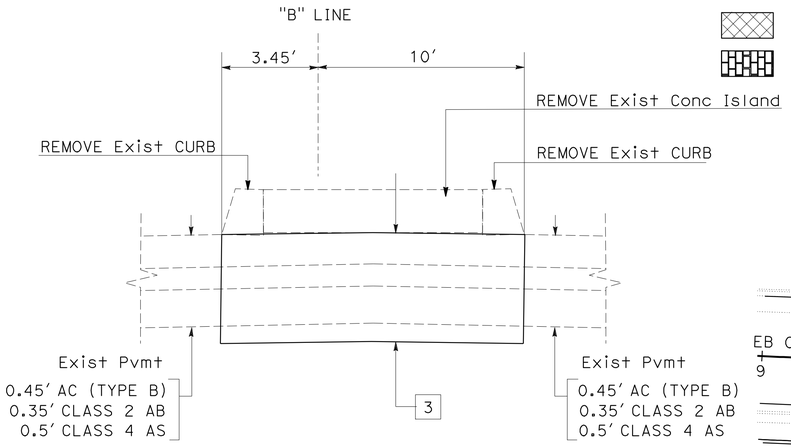

SECTION B-B
NO SCALE

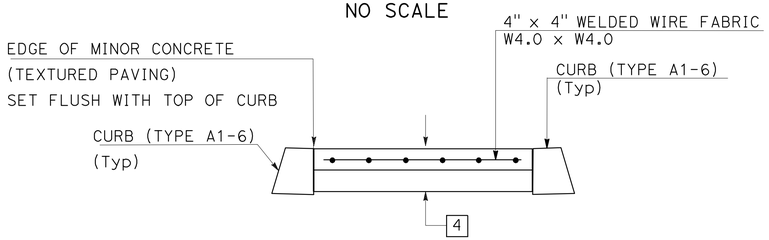

SECTION A-A
NO SCALE

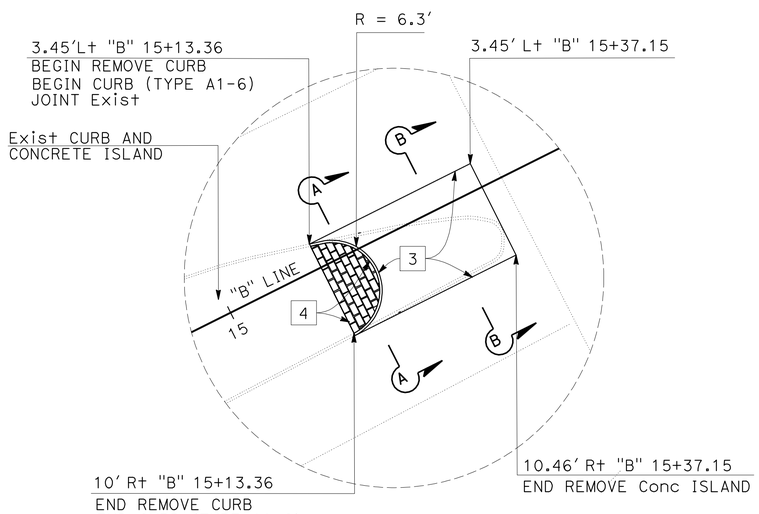

DETAIL A
ORANGETHORPE Ave ISLAND
NO SCALE

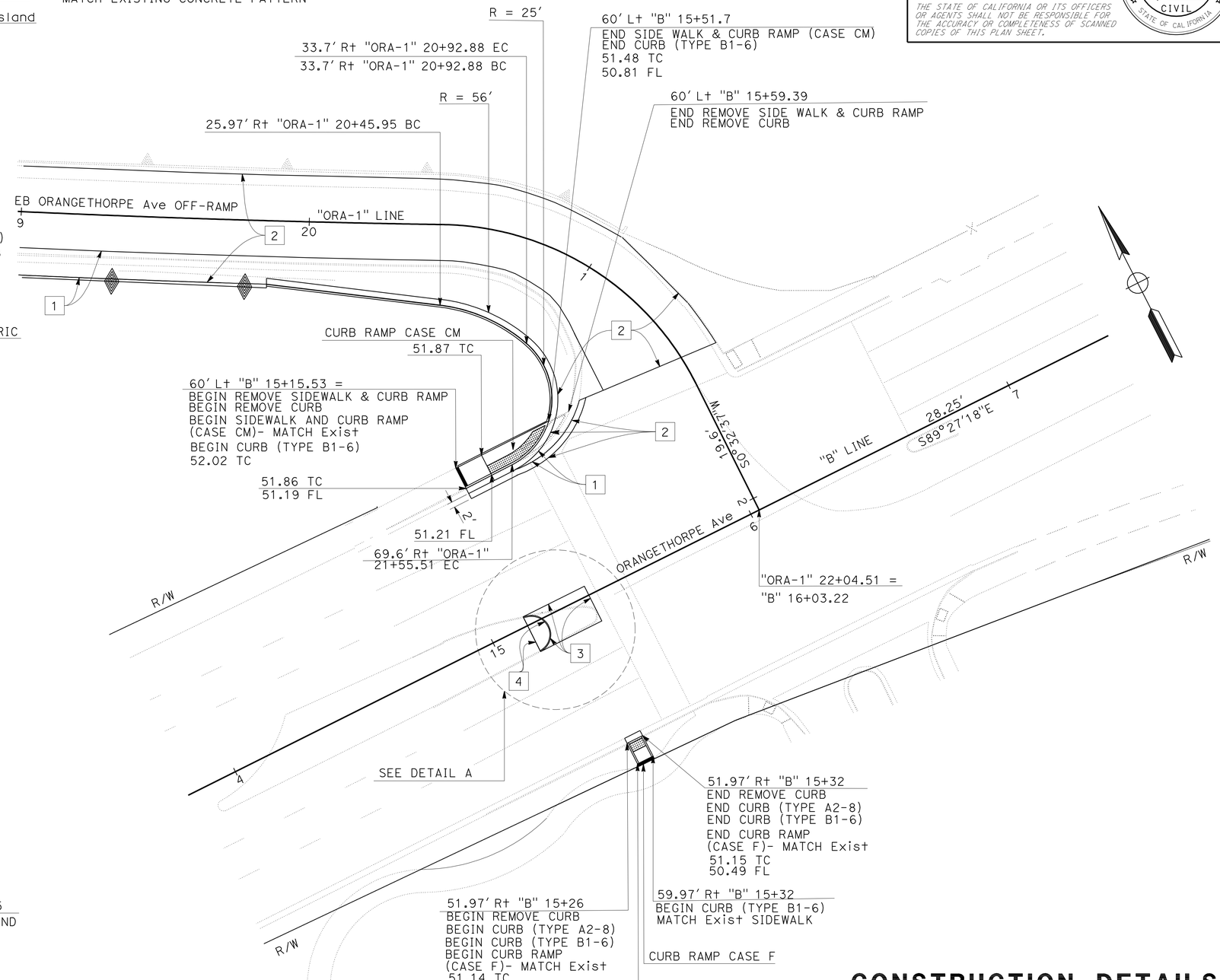

CONSTRUCTION DETAILS
SCALE 1" = 20'

C-1

REVISED BY	DATE REVISED
Y. NGUYEN	01-15-13

CALCULATED-DESIGNED BY	CHECKED BY
YENHAI NGUYEN	CHRISTOPHER LE

FUNCTIONAL SUPERVISOR
CHRISTOPHER LE

STATE OF CALIFORNIA - DEPARTMENT OF TRANSPORTATION
Caltrans
DESIGN BRANCH B

LAST REVISION 01-15-13 | DATE PLOTTED => 21-MAR-2013 | TIME PLOTTED => 10:19

Dist	COUNTY	ROUTE	POST MILES TOTAL PROJECT	SHEET No.	TOTAL SHEETS
12	Ora	91	R0.3	7	48

12-28-12
REGISTERED CIVIL ENGINEER DATE

03-18-13
PLANS APPROVAL DATE

REGISTERED PROFESSIONAL ENGINEER
YENHAI M. NGUYEN
No. C62100
Exp. 9/30/13
CIVIL
STATE OF CALIFORNIA

THE STATE OF CALIFORNIA OR ITS OFFICERS OR AGENTS SHALL NOT BE RESPONSIBLE FOR THE ACCURACY OR COMPLETENESS OF SCANNED COPIES OF THIS PLAN SHEET.

NOTE:

1. FOR ACCURATE RIGHT OF WAY DATA, CONTACT RIGHT OF WAY ENGINEERING AT THE DISTRICT OFFICE.

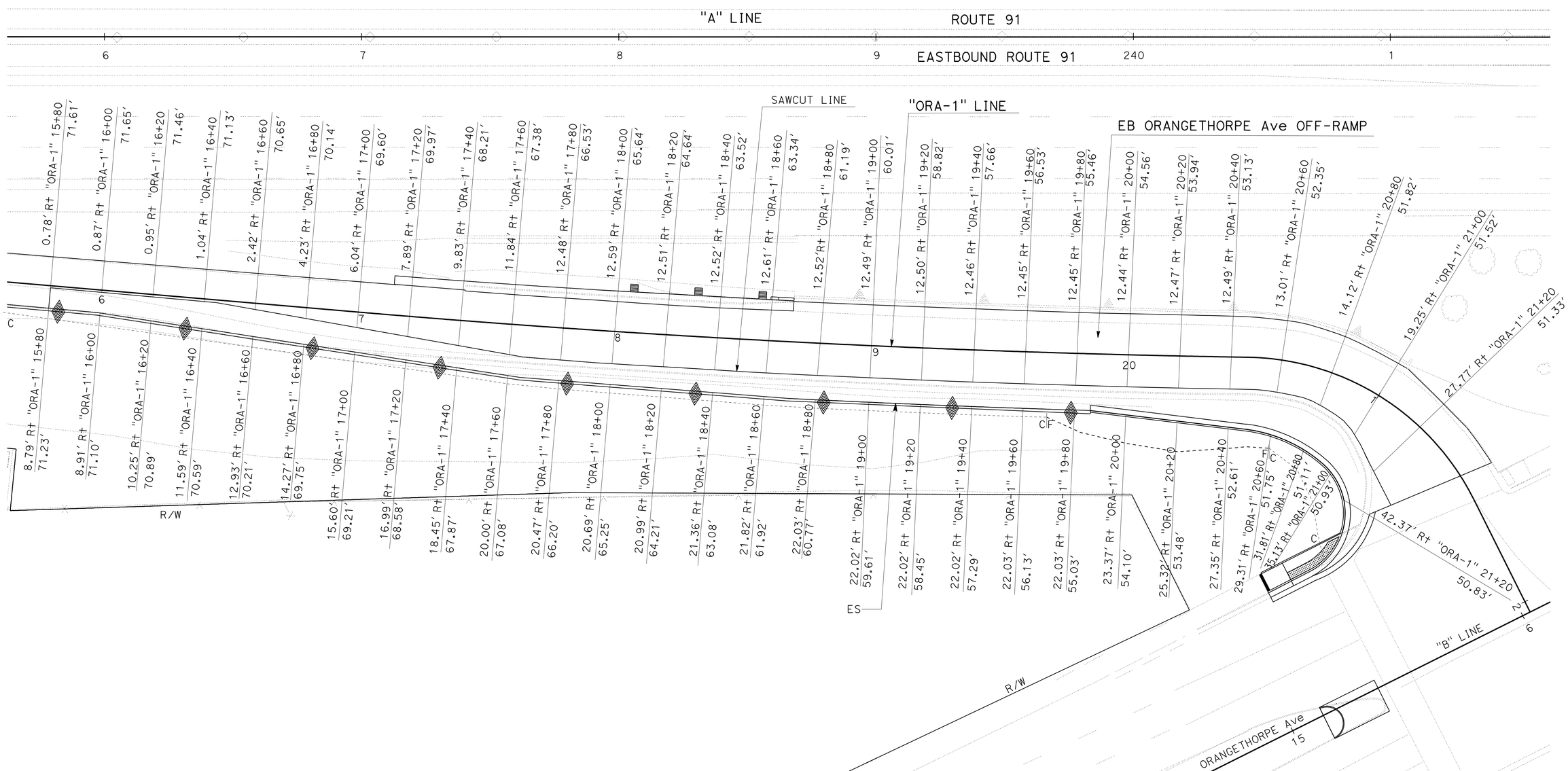

CONSTRUCTION DETAILS
(FINISHED GRADE ELEVATIONS)
SCALE 1" = 20'

C-2

REVISED BY	Y. NGUYEN
DATE REVISED	01-15-13
CALCULATED-DESIGNED BY	YENHAI NGUYEN
CHECKED BY	CHRISTOPHER LE
FUNCTIONAL SUPERVISOR	CHRISTOPHER LE

STATE OF CALIFORNIA - DEPARTMENT OF TRANSPORTATION
Caltrans
DESIGN BRANCH B

LAST REVISION 01-15-13 | DATE PLOTTED => 21-MAR-2013 | TIME PLOTTED => 10:19

Dist	COUNTY	ROUTE	POST MILES TOTAL PROJECT	SHEET No.	TOTAL SHEETS
12	Ora	91	R0.3	8	48

REGISTERED CIVIL ENGINEER 12-28-12 DATE

03-18-13
PLANS APPROVAL DATE

REGISTERED PROFESSIONAL ENGINEER
YENHAI M. NGUYEN
No. C62100
Exp. 9/30/13
CIVIL
STATE OF CALIFORNIA

THE STATE OF CALIFORNIA OR ITS OFFICERS OR AGENTS SHALL NOT BE RESPONSIBLE FOR THE ACCURACY OR COMPLETENESS OF SCANNED COPIES OF THIS PLAN SHEET.

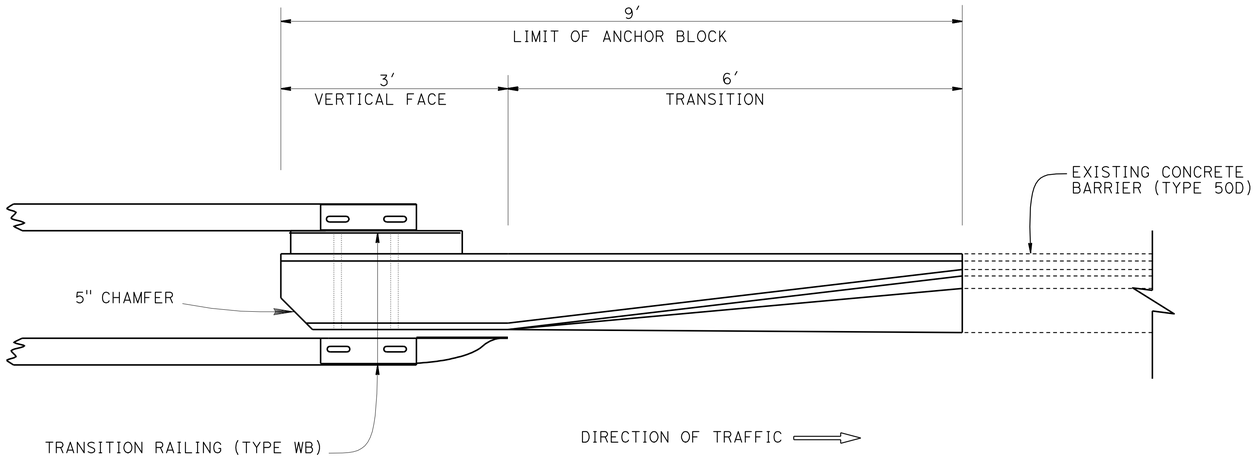

PLAN

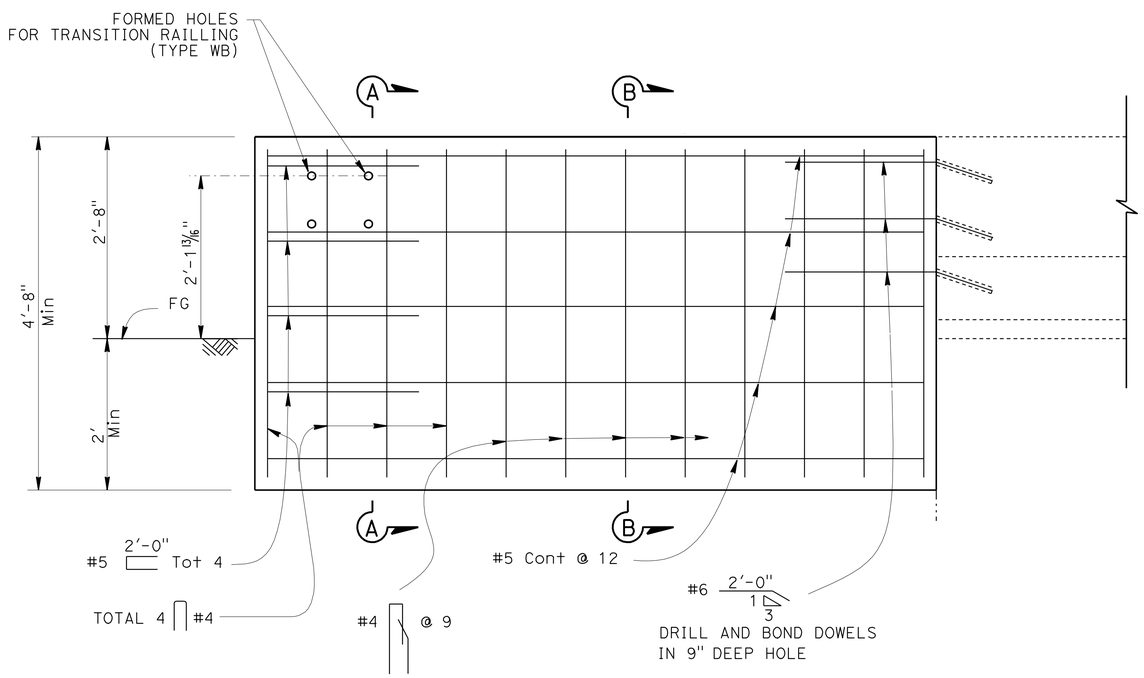

ELEVATION

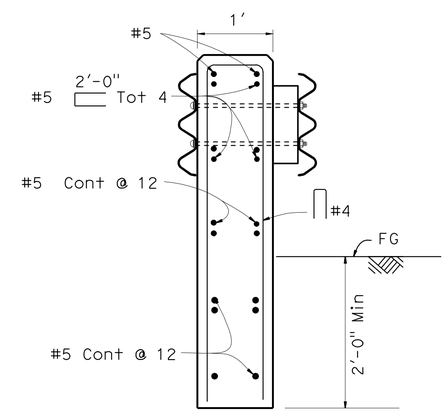

SECTION A-A

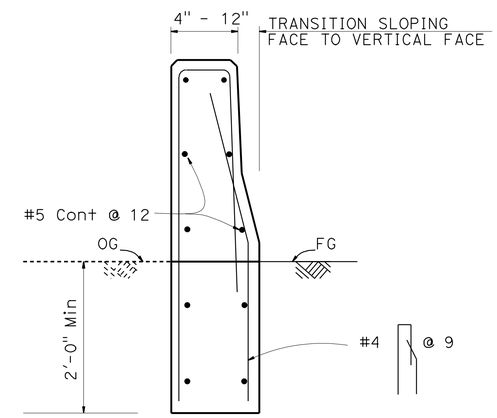

SECTION B-B

NOTES:

1. FOR DETAILS NOT SHOWN, SEE STANDARD PLANS.
2. DEPENDENT DIMENSIONS WILL BE VERIFIED IN THE FIELD BEFORE FABRICATING ANY END CONNECTION TO CONFORM WITH EXISTING PAVED CONDITIONS.
3. ALL PLATES AND BOLTS ARE GALVANIZED.

TRANSITION RAILING (TYPE WB) CONNECTION TO ANCHOR BLOCK

CONSTRUCTION DETAILS

NO SCALE

C-3

REVISED BY	Y. NGUYEN
DATE REVISED	01-15-13
YENHAI NGUYEN	
CHRISTOPHER LE	
CALCULATED-DESIGNED BY	
CHECKED BY	
FUNCTIONAL SUPERVISOR	CHRISTOPHER LE

STATE OF CALIFORNIA - DEPARTMENT OF TRANSPORTATION
Caltrans® DESIGN BRANCH B

LAST REVISION 01-15-13 DATE PLOTTED => 21-MAR-2013 TIME PLOTTED => 10:19

Dist	COUNTY	ROUTE	POST MILES TOTAL PROJECT	SHEET No.	TOTAL SHEETS
12	Ora	91	R0.3	9	48

REGISTERED CIVIL ENGINEER 12-28-12 DATE

03-18-13
PLANS APPROVAL DATE

REGISTERED PROFESSIONAL ENGINEER
YENHAI M. NGUYEN
No. C62100
Exp. 9/30/13
CIVIL
STATE OF CALIFORNIA

THE STATE OF CALIFORNIA OR ITS OFFICERS OR AGENTS SHALL NOT BE RESPONSIBLE FOR THE ACCURACY OR COMPLETENESS OF SCANNED COPIES OF THIS PLAN SHEET.

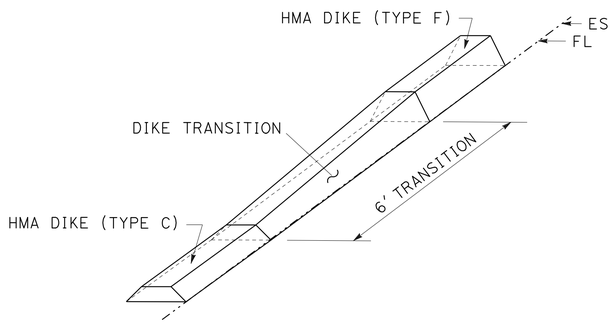

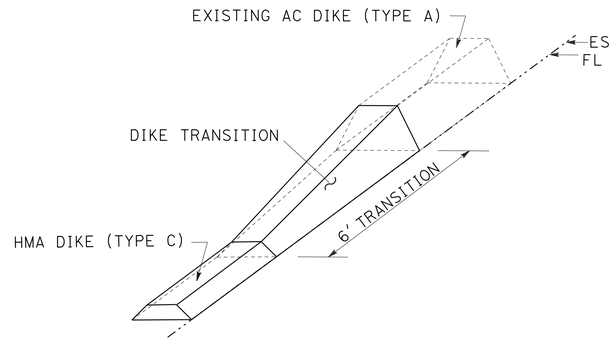

HMA DIKE TRANSITIONS

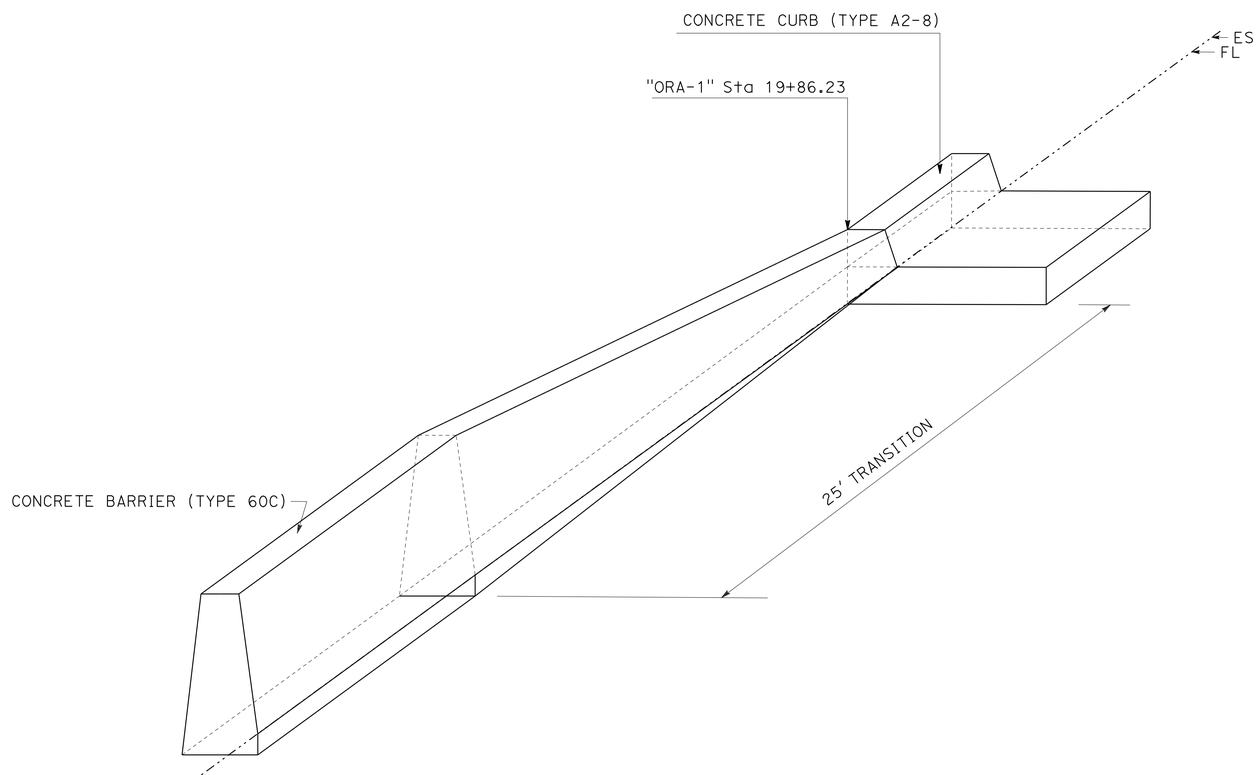

CONCRETE BARRIER (TYPE 60C) TRANSITION TO CURB

CONSTRUCTION DETAILS

NO SCALE

C-4

STATE OF CALIFORNIA - DEPARTMENT OF TRANSPORTATION
Caltrans
DESIGN BRANCH B

FUNCTIONAL SUPERVISOR: CHRISTOPHER LE
CALCULATED-DESIGNED BY: YENHAI NGUYEN
CHECKED BY: CHRISTOPHER LE
REVISED BY: Y. NGUYEN
DATE REVISED: 01-15-13

LAST REVISION 01-15-13
DATE PLOTTED => 21-MAR-2013
TIME PLOTTED => 10:19

Dist	COUNTY	ROUTE	POST MILES TOTAL PROJECT	SHEET No.	TOTAL SHEETS
12	Ora	91	R0.3	10	48

REGISTERED CIVIL ENGINEER 12-28-12 DATE

03-18-13
PLANS APPROVAL DATE

REGISTERED PROFESSIONAL ENGINEER
YENHAI M. NGUYEN
No. C62100
Exp. 9/30/13
CIVIL
STATE OF CALIFORNIA

THE STATE OF CALIFORNIA OR ITS OFFICERS OR AGENTS SHALL NOT BE RESPONSIBLE FOR THE ACCURACY OR COMPLETENESS OF SCANNED COPIES OF THIS PLAN SHEET.

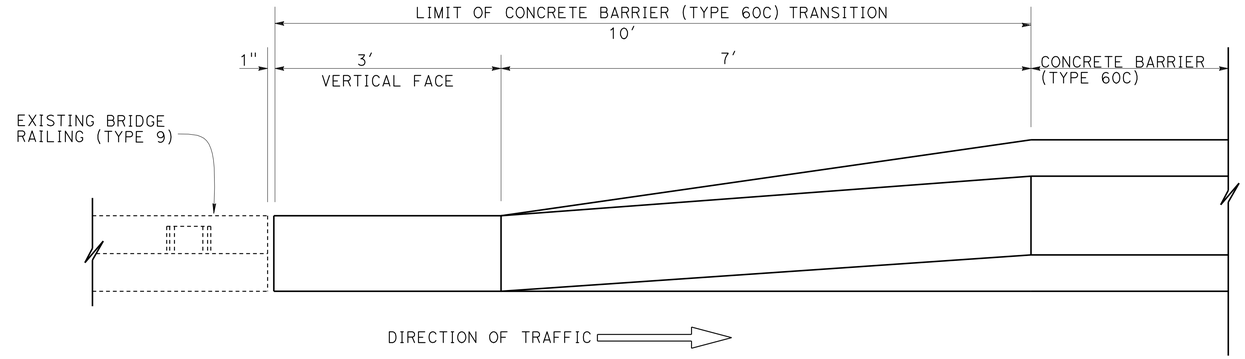

PLAN

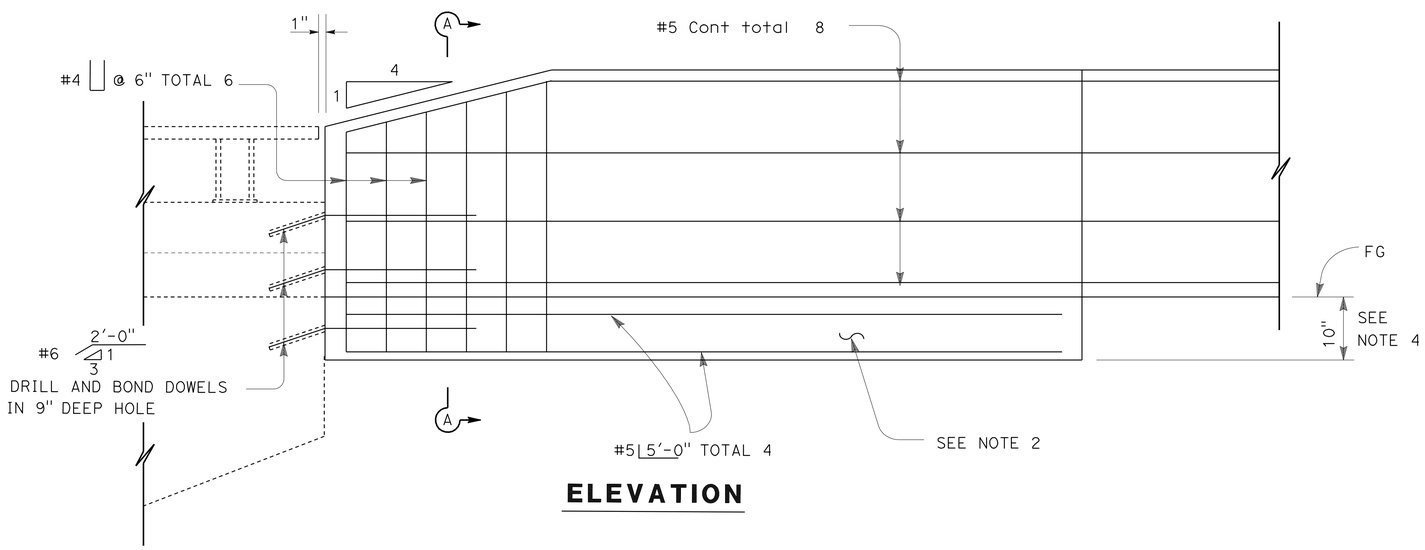

ELEVATION

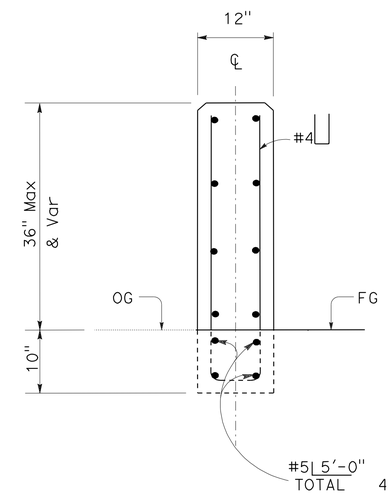

SECTION A-A

CONCRETE BARRIER (TYPE 60C) TRANSITION TO EXISTING BRIDGE RAILING

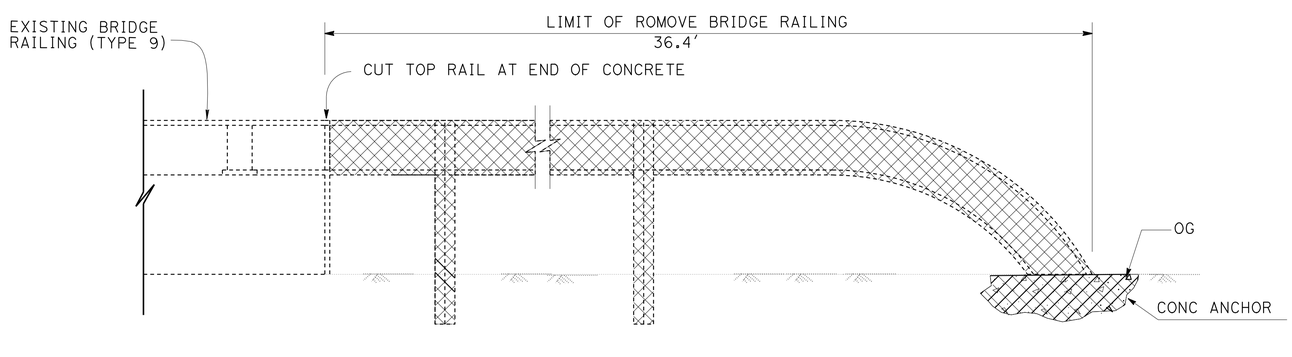

REMOVE BRIDGE RAILING

NOTES:

1. FOR DETAILS NOT SHOWN, SEE STANDARD PLANS.
2. FOOTING MONOLITHIC OR DOWELED WITH 2-#8X8" @ 2'-0". THE FOOTING IS REQUIRED AT CONCRETE BARRIER ENDS AND AT INTERRUPTIONS IN CONCRETE BARRIER.
3. SEE STANDARD PLAN A76A FOR CONCRETE BARRIER TYPE 60 AND TYPE 60C.
4. 10" CONCRETE BARRIER FOOTING EXTENDS 10'-0" BACK FROM BARRIER TERMINI.
5. CUT AND REMOVE PORTIONS OF TYPE 9 RAILING AS REQUIRED.

CONSTRUCTION DETAILS

NO SCALE

C-5

REVISED BY	DATE REVISED
Y. NGUYEN	01-15-13

CALCULATED-DESIGNED BY	CHECKED BY
YENHAI NGUYEN	CHRISTOPHER LE

FUNCTIONAL SUPERVISOR: CHRISTOPHER LE

STATE OF CALIFORNIA - DEPARTMENT OF TRANSPORTATION
Caltrans® DESIGN BRANCH B

LAST REVISION 01-15-13 | DATE PLOTTED => 21-MAR-2013 | TIME PLOTTED => 10:19

Dist	COUNTY	ROUTE	POST MILES TOTAL PROJECT	SHEET No.	TOTAL SHEETS
12	Ora	91	R0.3	11	48

REGISTERED CIVIL ENGINEER 12-28-12 DATE

03-18-13
PLANS APPROVAL DATE

REGISTERED PROFESSIONAL ENGINEER
YENHAI M. NGUYEN
No. C62100
Exp. 9/30/13
CIVIL
STATE OF CALIFORNIA

THE STATE OF CALIFORNIA OR ITS OFFICERS OR AGENTS SHALL NOT BE RESPONSIBLE FOR THE ACCURACY OR COMPLETENESS OF SCANNED COPIES OF THIS PLAN SHEET.

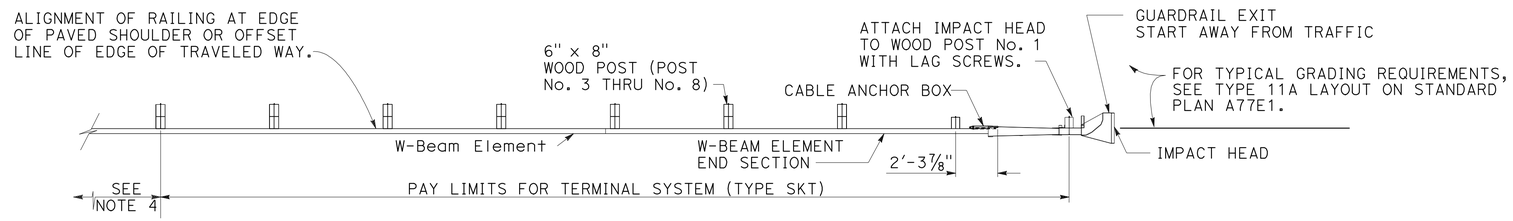

PLAN

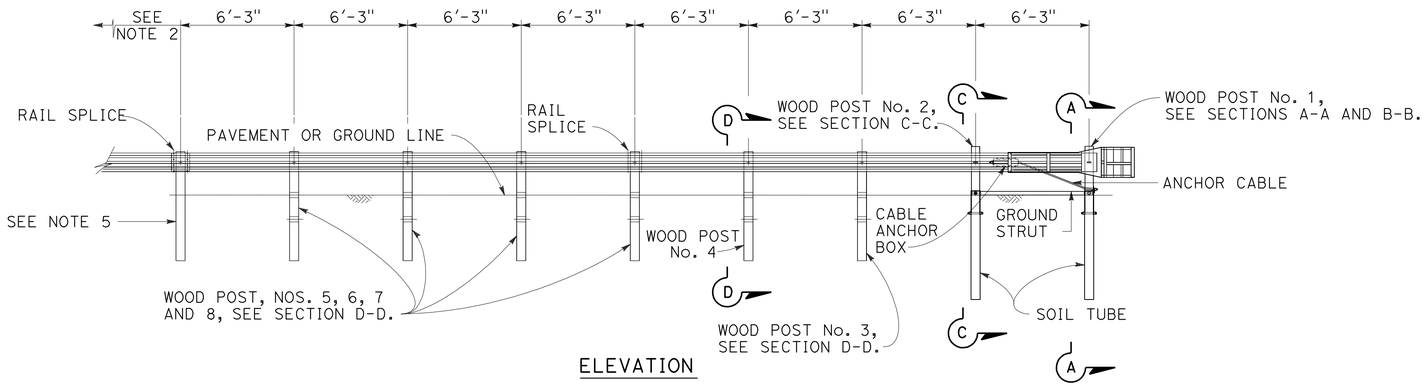

ELEVATION

TERMINAL SYSTEM (TYPE SKT)

NOTES:

1. FOR ADDITIONAL DETAILS OF TERMINAL SYSTEM (TYPE SKT), REFER TO THE MANUFACTURER'S INSTALLATION INSTRUCTIONS.
2. TERMINAL SYSTEM (TYPE SKT) MUST BE CONSTRUCTED SO THAT THE FULL LENGTH OF THE TERMINAL SYSTEM GUARD RAILING IS IN STRAIGHT ALIGNMENT. TERMINAL SYSTEM (TYPE SKT) CAN BE FLARED AT A MAXIMUM RATE OF 25:1 TO PREVENT THE IMPACT HEAD FROM ENCROACHING ON THE SHOULDER. THE FLARE IS NOT REQUIRED AND MAY BE DECREASED OR ELIMINATED FOR SPECIFIC INSTALLATIONS.
3. TERMINAL SYSTEM (TYPE SKT) NOT TO BE USED WHERE EXTRUSION OF THE RAIL ON THE BACK SIDE OF THE INSTALLATION WOULD BE IN THE PATH OF PEDESTRIAN TRAFFIC OR WHERE THERE IS LESS THAN 25'-0" BETWEEN THE OUTLET SIDE OF THE IMPACTED HEAD AND ANY ADJACENT VEHICLE TRAFFIC.
4. FOR THE LENGTH AND TYPE OF METAL BEAM GUARD RAILING OR METAL BARRIER RAILING THE TERMINAL SYSTEM IS ATTACHED TO, SEE PROJECT PLANS. FOR TYPICAL USE OF THIS TERMINAL SYSTEM WITH GUARD RAILING, SEE THE A77E, A77F AND A77G SERIES OF THE STANDARD PLANS.
5. ATTACH RAIL ELEMENT TO THIS POST AND BLOCK. PAYMENT FOR THIS POST, BLOCK AND HARDWARE IS INCLUDED IN PAYMENT FOR THE TYPE OF RAILING OR BARRIER THE TERMINAL SYSTEM IS ATTACHED TO, NOT PART OF PAYMENT FOR TERMINAL SYSTEM (TYPE SKT).

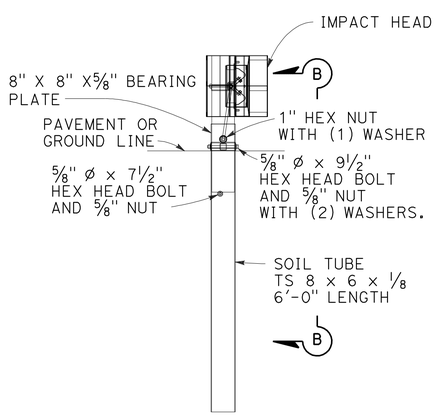

SECTION A-A

POST No. 1

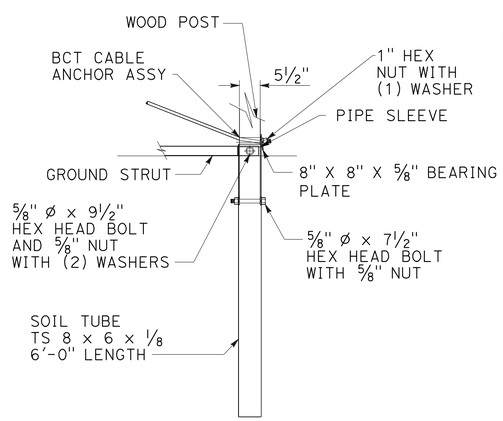

SECTION B-B

PARTIAL VIEW POST No. 1

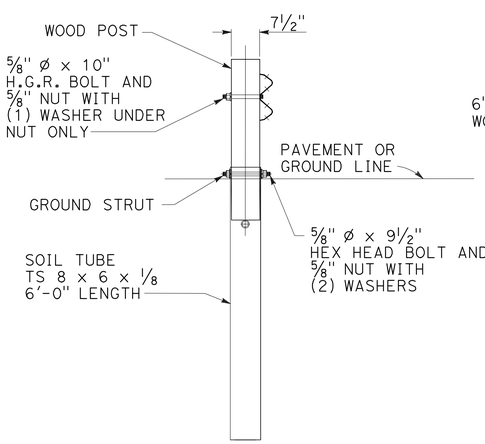

SECTION C-C

AT POST No. 2

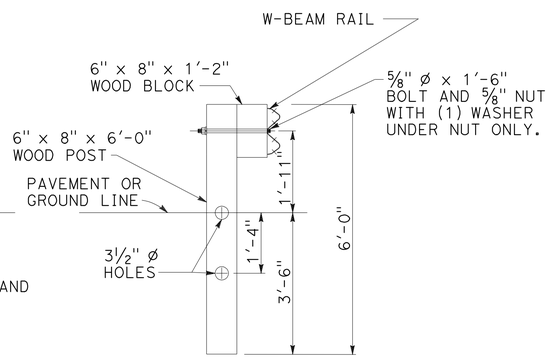

SECTION D-D

POST No. 3 THROUGH No. 8

METAL BEAM RAILING TERMINAL SYSTEM (TYPE SKT)

CONSTRUCTION DETAILS

NO SCALE

C-6

REVISED BY	DATE REVISED
Y. NGUYEN	01-15-13

YENHAI NGUYEN — CHRISTOPHER LE — CALCULATED-DESIGNED BY
CHECKED BY
FUNCTIONAL SUPERVISOR: CHRISTOPHER LE

STATE OF CALIFORNIA - DEPARTMENT OF TRANSPORTATION
Caltrans® DESIGN BRANCH B

LAST REVISION 01-15-13 | DATE PLOTTED => 21-MAR-2013 | TIME PLOTTED => 10:19

Dist	COUNTY	ROUTE	POST MILES TOTAL PROJECT	SHEET No.	TOTAL SHEETS
12	Ora	91	R0.3	12	48

REGISTERED CIVIL ENGINEER 12-28-12 DATE

03-18-13
PLANS APPROVAL DATE

REGISTERED PROFESSIONAL ENGINEER YENHAI M. NGUYEN No. C62100 Exp. 9/30/13 CIVIL STATE OF CALIFORNIA

THE STATE OF CALIFORNIA OR ITS OFFICERS OR AGENTS SHALL NOT BE RESPONSIBLE FOR THE ACCURACY OR COMPLETENESS OF SCANNED COPIES OF THIS PLAN SHEET.

NOTES:

1. FOR ADDITIONAL DETAILS OF TERMINAL SYSTEM (TYPE ET), REFER TO THE MANUFACTURER'S INSTALLATION INSTRUCTIONS.
2. TERMINAL SYSTEM (TYPE ET) MUST BE CONSTRUCTED SO THAT THE FULL LENGTH OF THE TERMINAL SYSTEM GUARD RAILING IS IN STRAIGHT ALIGNMENT. THE GUARD RAIL EXTRUDER HEAD OF THE TERMINAL SYSTEM SHALL NOT ENCROACH UPON THE ADJACENT PAVED SHOULDER OR LANE. A TRAFFIC APPROACH FLARE OF 50:1 OR 25:1 FOR THE FULL LENGTH OF TERMINAL SYSTEM (TYPE ET) INSTALLATION MAY BE USED WHERE THE GUARD RAIL EXTRUDER HEAD WOULD ENCROACH UPON THE ADJACENT PAVED SHOULDER OR LANE.
3. SLIDE GUARD RAIL EXTRUDER OVER THE END OF THE RAIL ELEMENT AND ATTACH TO POST No.1 WITH LAG SCREWS. DO NOT BOLT RAIL ELEMENT TO POST. GUARD RAIL EXTRUDER ATTACHMENT BRACKETS HAVE 3 HOLES IN EACH BRACKET TO PROVIDE TOLERANCE ADJUSTMENT. USE THE HOLES IN THE BRACKET CLOSEST TO CENTER OF POST No.1. DRILL 1/4" PILOT HOLES TO ACCOMMODATE LAG SCREWS.
4. ATTACH STRUT TO POST NOS. 1 AND 2 FOUNDATION TUBES WITH HEX HEAD BOLTS, WASHERS AND HEX NUTS. BOLTS EXTEND THROUGH THE STRUT, STEEL FOUNDATION TUBE, AND WOOD POSTS. CHANNEL SIDE OF STRUT TO FACE DOWNWARD.
5. FOR LENGTH AND TYPE OF METAL BEAM GUARD RAILING OR METAL BARRIER RAILING THE TERMINAL SYSTEM IS ATTACHED TO, SEE PROJECT PLANS. FOR TYPICAL USE OF THIS TERMINAL SYSTEM, SEE THE A77E, A77F AND A77G SERIES OF THE STANDARD PLANS.
6. ATTACH RAIL ELEMENT TO THIS POST AND BLOCK. PAYMENT FOR THIS POST, BLOCK AND HARDWARE INCLUDED IN PAYMENT FOR THE TYPE OF RAILING OR BARRIER THE TERMINAL SYSTEM IS ATTACHED TO, NOT PART OF THE PAYMENT FOR TERMINAL SYSTEM (TYPE ET).
7. YELLOW RETROREFLECTIVE SHEETING, AS PROVIDED BY TERMINAL SYSTEM (TYPE ET) MANUFACTURER, SHALL BE ADHERED TO THE FACE OF EXTRUDER HEAD. THE SHEETING SHALL BE CONSISTENT WITH THE DESIGN PATTERN AND COLORS OF A TYPE P OBJECT MARKER PANEL.
8. ATTACH RAIL TO POST No.2 (NO WOOD BLOCK) IN SAME MANNER SHOWN IN SECTION A-A. DO NOT BOLT RAIL TO POST No.1, SEE NOTE 3.
9. TERMINAL SYSTEM (TYPE ET) NOT TO BE USED WHERE EXTRUSION OF THE RAIL ON THE BACK SIDE OF THE INSTALLATION WOULD BE IN THE PATH OF PEDESTRIAN OR VEHICULAR TRAFFIC.
10. A CONTINUOUS RAIL ELEMENT SECTION BETWEEN POST NOS.1 AND 5 (NO INTERMEDIATE RAIL SPLICES) MAY CONTINUE TO BE USED IN EXISTING INSTALLATIONS. NEW INSTALLATIONS SHALL BE CONSTRUCTED AS SHOWN WITH TWO RAIL ELEMENT SECTIONS BETWEEN POST NOS.1 AND 5.
11. A 6'-0" LENGTH STEEL FOUNDATION TUBE, TS 8 X 6 X 3/16", WITHOUT SOIL PLATE, MAY BE USED IN PLACE OF THE 4'-6" LENGTH STEEL FOUNDATION TUBE AND SOIL PLATE SHOWN. MINIMUM EMBEDMENT OF THE 6'-0" LENGTH TUBE SHALL BE 5'-9". A 5/8" Ø HEX HEAD BOLT AND NUTS SHALL BE INSTALLED IN THE HOLE IN THE 6'-0" LENGTH TUBE TO KEEP THE WOOD POST FROM DROPPING INTO THE TUBE.

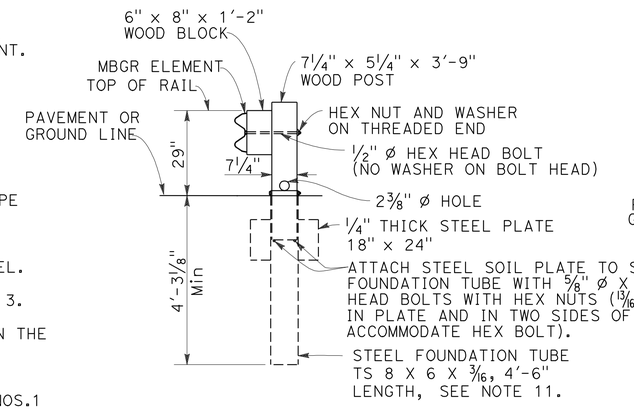

SECTION A-A

SOIL PLATE AND WOOD POST ATTACHMENT TO STEEL FOUNDATION TUBE SIMILAR FOR POST NOS. 1, 2 AND 4. WOOD BLOCKS NOT USED WITH POST NOS.1 AND 2. SEE NOTE 8.

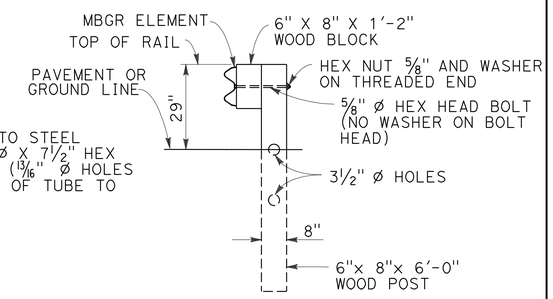

SECTION B-B

POST NOS. 5, 7 AND 8 SIMILAR EXCEPT RAIL ELEMENTS ARE NOT ATTACHED TO POST NOS. 5 AND 7

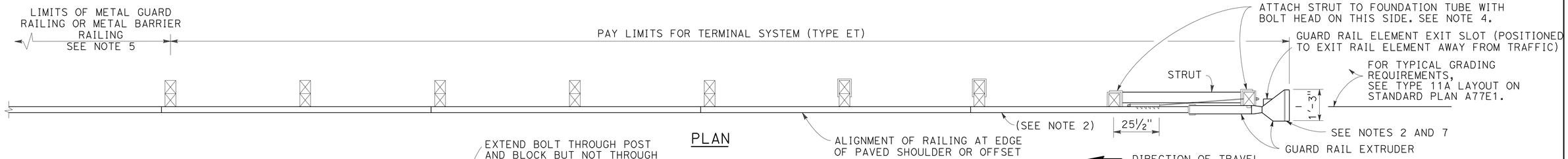

PLAN

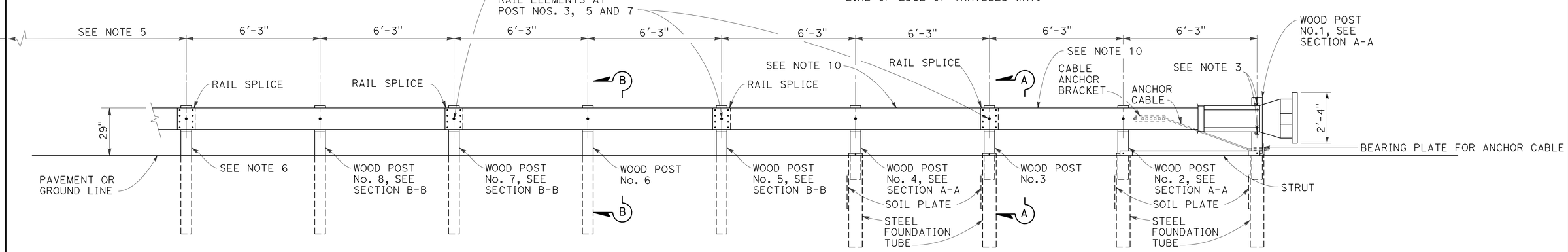

ELEVATION

METAL BEAM RAILING TERMINAL SYSTEM (TYPE ET)

(TYPE ET PLUS SHOWN)
SEE NOTES 9 AND 10

CONSTRUCTION DETAILS

NO SCALE

C-7

STATE OF CALIFORNIA - DEPARTMENT OF TRANSPORTATION
Caltrans DESIGN BRANCH B

FUNCTIONAL SUPERVISOR: CHRISTOPHER LE
CALCULATED-DESIGNED BY: YENHAI NGUYEN
CHECKED BY: CHRISTOPHER LE
REVISED BY: Y. NGUYEN
DATE REVISED: 01-15-13

LAST REVISION 01-15-13 | DATE PLOTTED => 21-MAR-2013 | TIME PLOTTED => 10:19

Dist	COUNTY	ROUTE	POST MILES TOTAL PROJECT	SHEET No.	TOTAL SHEETS
12	Ora	91	R0.3	13	48

12-28-12
LICENSED LANDSCAPE ARCHITECT

03-18-13
PLANS APPROVAL DATE

LICENSED LANDSCAPE ARCHITECT
I-HONG SUN No. 3364
Signature
12-31-14
Renewal Date
12-28-12
Date
STATE OF CALIFORNIA

THE STATE OF CALIFORNIA OR ITS OFFICERS OR AGENTS SHALL NOT BE RESPONSIBLE FOR THE ACCURACY OR COMPLETENESS OF SCANNED COPIES OF THIS PLAN SHEET.

NOTE:

FOR ACCURATE RIGHT OF WAY DATA, CONTACT RIGHT OF WAY ENGINEERING AT THE DISTRICT OFFICE.

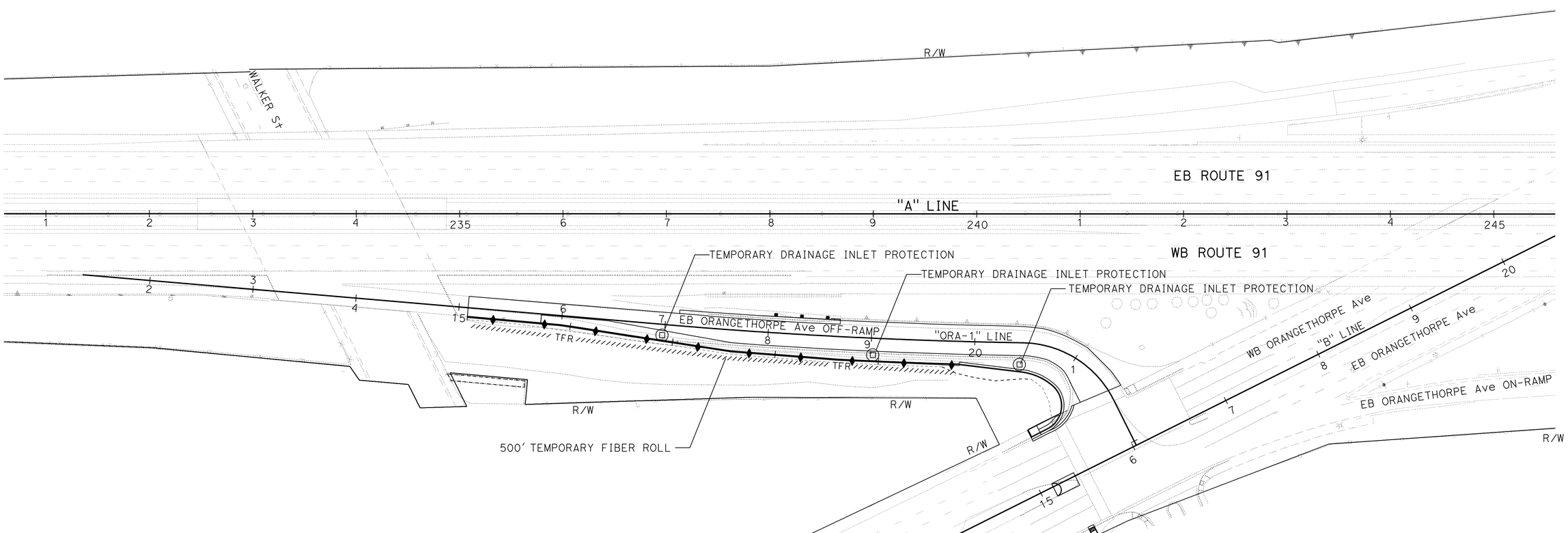

TEMPORARY WATER POLLUTION CONTROL PLAN

SCALE 1" = 50'

WPC-1

APPROVED FOR TEMPORARY WATER POLLUTION CONTROL WORK ONLY

STATE OF CALIFORNIA - DEPARTMENT OF TRANSPORTATION
Caltrans®
LANDSCAPE ARCHITECTURE

SENIOR LANDSCAPE ARCHITECT: ERIC DICKSON
CALCULATED-DESIGNED BY: I-HONG SUN
CHECKED BY: JARED GODETT
REVISED BY
DATE REVISED

LAST REVISION 10-30-12
DATE PLOTTED => 21-MAR-2013
TIME PLOTTED => 10:20

Dist	COUNTY	ROUTE	POST MILES TOTAL PROJECT	SHEET No.	TOTAL SHEETS
12	Ora	91	R0.3	14	48

REGISTERED CIVIL ENGINEER 12-28-12 DATE

03-18-13
PLANS APPROVAL DATE

REGISTERED PROFESSIONAL ENGINEER
TAN T NGUYEN
No. C47660
Exp. 12/31/13
CIVIL
STATE OF CALIFORNIA

THE STATE OF CALIFORNIA OR ITS OFFICERS OR AGENTS SHALL NOT BE RESPONSIBLE FOR THE ACCURACY OR COMPLETENESS OF SCANNED COPIES OF THIS PLAN SHEET.

NOTE:

FOR ACCURATE RIGHT OF WAY DATA, CONTACT RIGHT OF WAY ENGINEERING AT THE DISTRICT OFFICE.

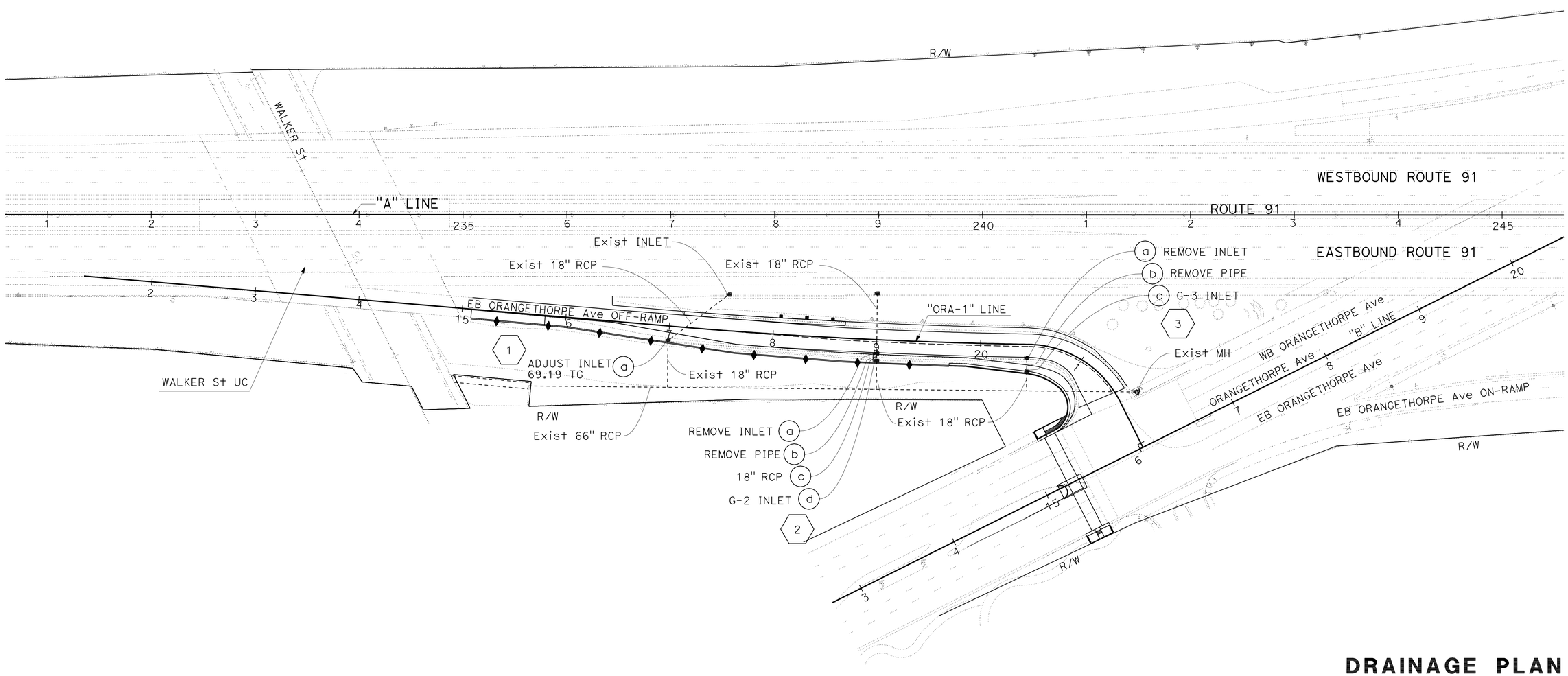

DRAINAGE PLAN

SCALE 1" = 50'

APPROVED FOR DRAINAGE WORK ONLY

D-1

REVISED BY	DATE REVISED

CALCULATED-DESIGNED BY	CHECKED BY
JOE KAO	TAN T NGUYEN

FUNCTIONAL SUPERVISOR: KATHLYNE LOWE

STATE OF CALIFORNIA - DEPARTMENT OF TRANSPORTATION

Caltrans® HYDRAULICS

LAST REVISION 02-12-13 | DATE PLOTTED => 21-MAR-2013 | TIME PLOTTED => 10:20

Dist	COUNTY	ROUTE	POST MILES TOTAL PROJECT	SHEET No.	TOTAL SHEETS
12	Ora	91	R0.3	15	48

REGISTERED CIVIL ENGINEER 12-28-12 DATE

03-18-13
PLANS APPROVAL DATE

REGISTERED PROFESSIONAL ENGINEER TAN T NGUYEN No. C47660 Exp. 12/31/13 CIVIL STATE OF CALIFORNIA

THE STATE OF CALIFORNIA OR ITS OFFICERS OR AGENTS SHALL NOT BE RESPONSIBLE FOR THE ACCURACY OR COMPLETENESS OF SCANNED COPIES OF THIS PLAN SHEET.

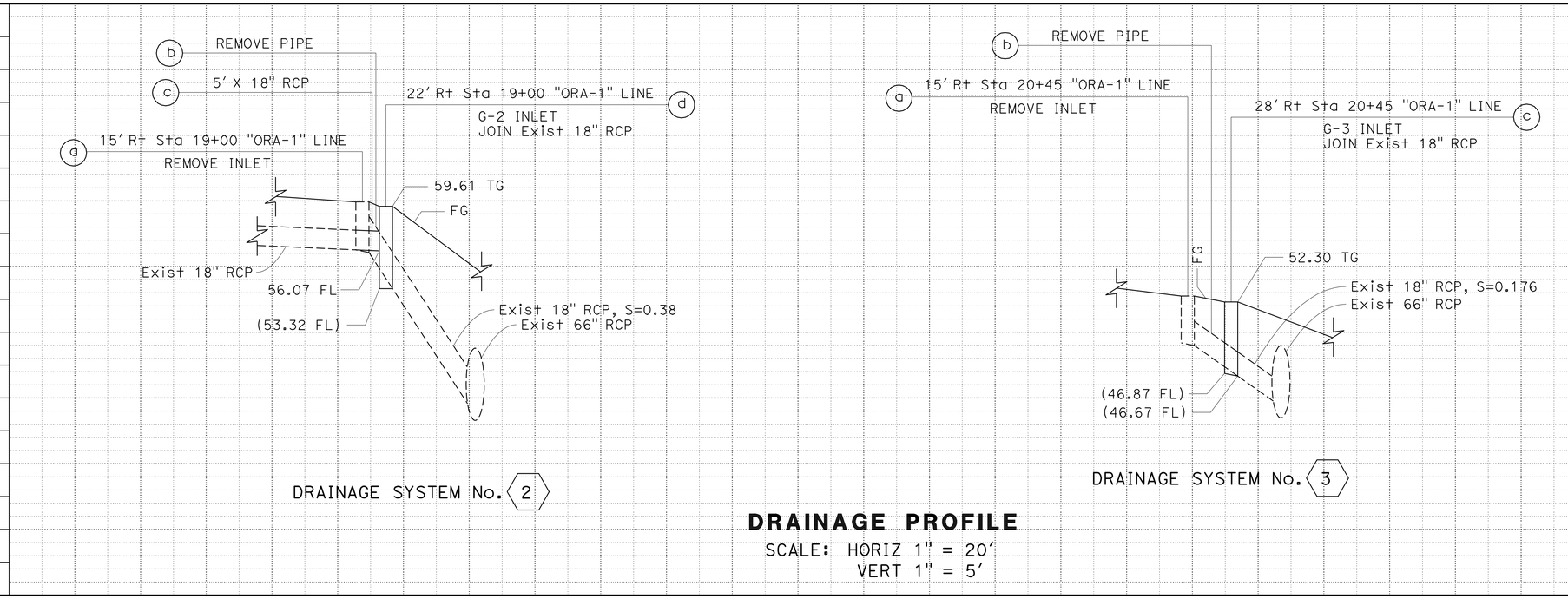

DRAINAGE PROFILE

SCALE: HORIZ 1" = 20'
VERT 1" = 5'

NOTE:

(N) NOT A SEPARATE PAY ITEM, FOR INFORMATION ONLY

ABBREVIATIONS:

S STANDARD JOINT TYPE

DRAINAGE QUANTITIES

DRAINAGE SYSTEM NUMBER	DRAINAGE UNIT	18" RCP	PIPE JOINT CLASSIFICATION	REMOVE PIPE	REMOVE INLET	MINOR CONCRETE (MINOR STRUCTURE)	Misc IRON & STEEL	FRAME & GRATE (24-12) (N)	ADJUST INLET	"V" OR "H"	Max COVER	DESCRIPTION	STATION	DRAINAGE PLAN SHEET NUMBER	DRAINAGE SYSTEM NUMBER	DRAINAGE UNIT
		LF		LF	EA	CY	LB	EA	EA	FT	FT					
1	a								1			ADJUST INLET	16' Rt Sta 17+00 "ORA-1" LINE	D-1	1	a
2	a				1							REMOVE INET	15' Rt Sta 19+00 "ORA-1" LINE	D-1	2	a
	b			11								REMOVE RCP				b
	c	5	S								3.0	18" RCP				c
	d					2.14	326	1		6.3		G-2 INLET	22' Rt Sta 19+00 "ORA-1" LINE			d
3	a				1							REMOVE INET	15' Rt Sta 20+45 "ORA-1" LINE	D-1	3	a
	b			13								REMOVE RCP				b
	c					1.61	326	1		5.6		G-3 INLET	28' Rt Sta 20+45 "ORA-1" LINE			c
TOTAL		5		24	2	3.75*	652	2	1							

* FOR GRAND TOTAL OF MINOR CONCRETE (MINOR STRUCTURE), SEE SHEET Q-1

DRAINAGE PROFILES

DP-1

STATE OF CALIFORNIA - DEPARTMENT OF TRANSPORTATION
Caltrans HYDRAULICS

FUNCTIONAL SUPERVISOR: KATHLYNE LOWE
CALCULATED-DESIGNED BY: JOE KAO
CHECKED BY: TAN T NGUYEN
REVISED BY / DATE REVISED

LAST REVISION 02-12-13
DATE PLOTTED => 21-MAR-2013
TIME PLOTTED => 10:20

Dist	COUNTY	ROUTE	POST MILES TOTAL PROJECT	SHEET No.	TOTAL SHEETS
12	Ora	91	R0.3	16	48

Brandon Tran 12-28-12
REGISTERED CIVIL ENGINEER DATE

03-18-13
PLANS APPROVAL DATE

REGISTERED PROFESSIONAL ENGINEER
BRANDON TRAN
No. C58283
Exp. 6-30-14
CIVIL
STATE OF CALIFORNIA

THE STATE OF CALIFORNIA OR ITS OFFICERS OR AGENTS SHALL NOT BE RESPONSIBLE FOR THE ACCURACY OR COMPLETENESS OF SCANNED COPIES OF THIS PLAN SHEET.

NOTES:

1. FOR ACCURATE RIGHT OF WAY DATA, CONTACT RIGHT OF WAY ENGINEERING AT THE DISTRICT OFFICE.
2. LOCATIONS OF UTILITY FACILITIES SHOWN ON THESE PLANS ARE APPROXIMATE AND SHALL BE VERIFIED BY THE CONTRACTOR PRIOR TO CONSTRUCTION.
3. UTILITY OWNERSHIP:

   GAS - SOUTHERN CALIFORNIA GAS (SCG)
   ELECTRICAL - SOUTHERN CALIFORNIA EDISON (SCE)
   WATER - CITY OF LA PALMA
   TELEMETER CABLE - AMERICAN TELEPHONE & TELEGRAPH (AT&T)

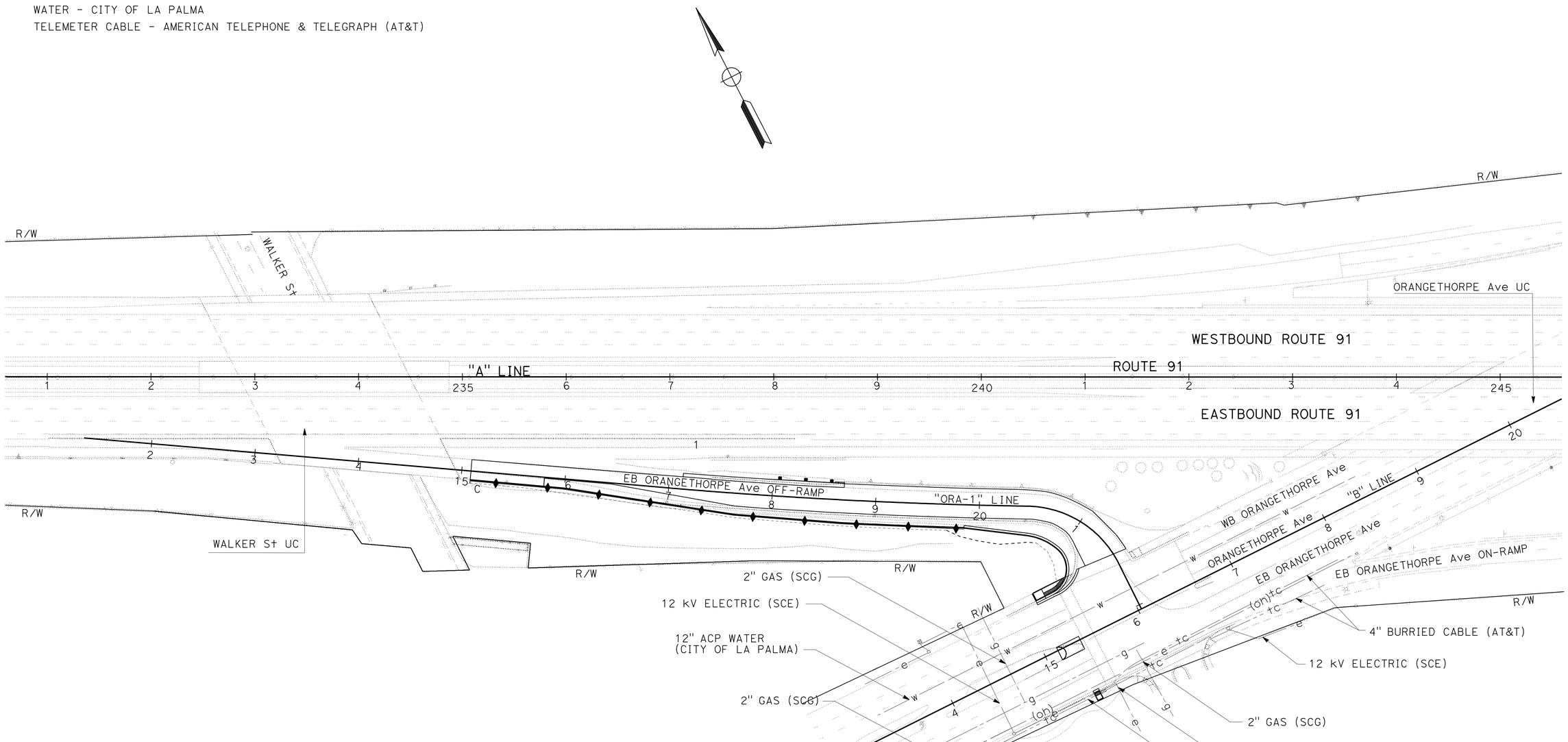

UTILITY PLAN
(Existing)
SCALE 1" = 50'

APPROVED FOR UTILITY INFORMATION ONLY

U-1

STATE OF CALIFORNIA - DEPARTMENT OF TRANSPORTATION
Caltrans® DESIGN DIVISION

FUNCTIONAL SUPERVISOR: CHRISTOPHER LE
CALCULATED-DESIGNED BY: BRANDON TRAN
CHECKED BY: CHRISTOPHER LE
REVISED BY
DATE REVISED

LAST REVISION 08-02-11
DATE PLOTTED => 21-MAR-2013
TIME PLOTTED => 10:20

Dist	COUNTY	ROUTE	POST MILES TOTAL PROJECT	SHEET No.	TOTAL SHEETS
12	Ora	91	R0.3	17	48

12-28-12
REGISTERED CIVIL ENGINEER DATE

03-18-13
PLANS APPROVAL DATE

REGISTERED PROFESSIONAL ENGINEER
YENHAI M. NGUYEN
No. C62100
Exp. 9/30/13
CIVIL
STATE OF CALIFORNIA

THE STATE OF CALIFORNIA OR ITS OFFICERS OR AGENTS SHALL NOT BE RESPONSIBLE FOR THE ACCURACY OR COMPLETENESS OF SCANNED COPIES OF THIS PLAN SHEET.

LEGEND:

(X) CONSTRUCTION AREA SIGN No.

CONSTRUCTION AREA SIGN, 1-POST

STATIONARY MOUNTED CONSTRUCTION AREA SIGNS

SIGN No.	SIGN CODE	SIGN MESSAGE	PANEL SIZE	No. OF POST AND SIZE	No. OF SIGNS
(A)	W20-1	ROAD WORK AHEAD	48" x 48"	1-6" x 6"	3
(B)	G20-2	END ROAD WORK	36" x 18"	1-4" x 6"	2

NOTES:

1. EXACT SIGN LOCATION TO BE DETERMINED BY THE ENGINEER.
2. FOR ADDITIONAL QUANTITIES OF CONSTRUCTION AREA SIGNS, SEE SHEET SCQ-1 & THQ-1

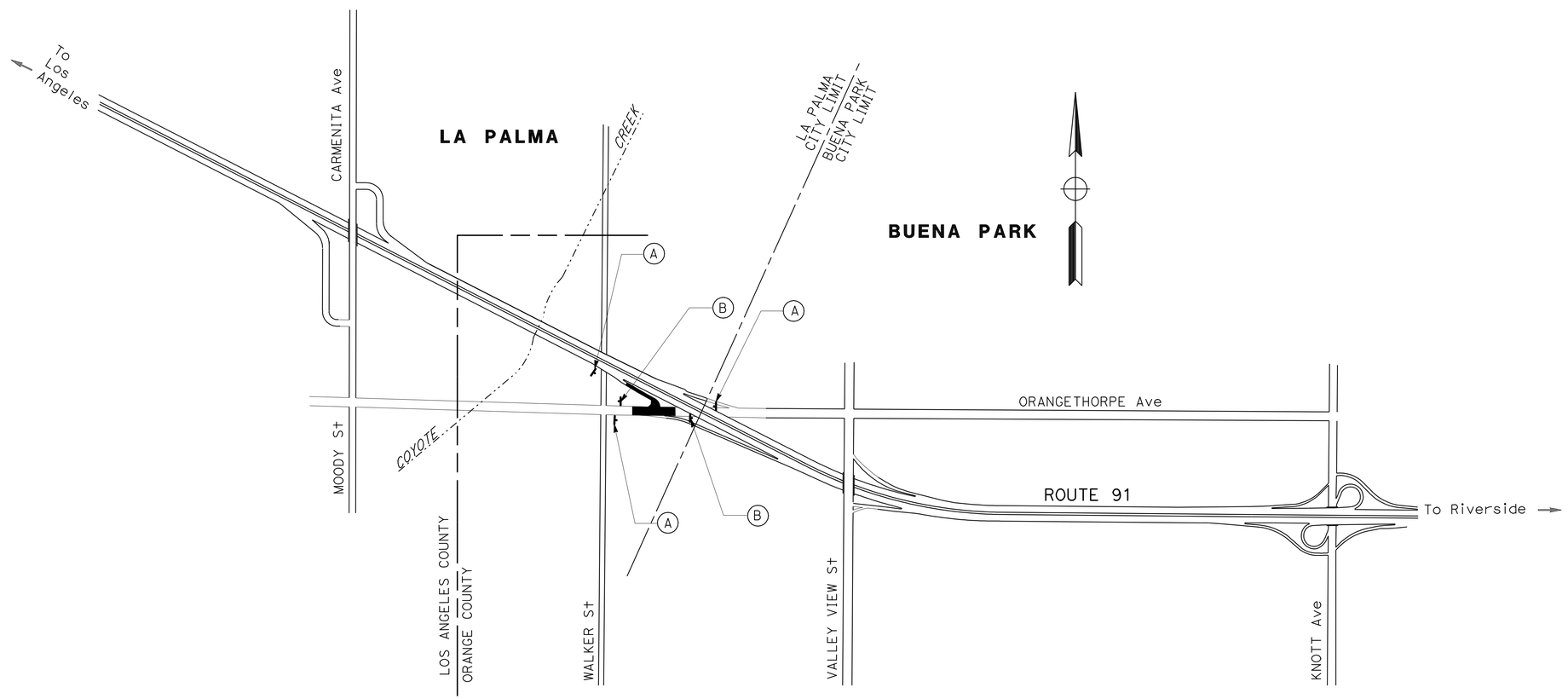

CONSTRUCTION AREA SIGNS

NO SCALE

CS-1

APPROVED FOR CONSTRUCTION AREA SIGN WORK ONLY

STATE OF CALIFORNIA - DEPARTMENT OF TRANSPORTATION
Caltrans® DESIGN BRANCH B

FUNCTIONAL SUPERVISOR: CHRISTOPHER LE
CALCULATED-DESIGNED BY: YENHAI NGUYEN
CHECKED BY: CHRISTOPHER LE
REVISED BY: Y. NGUYEN
DATE REVISED: 01-15-13

LAST REVISION 01-15-13
DATE PLOTTED => 21-MAR-2013
TIME PLOTTED => 10:20

Dist	COUNTY	ROUTE	POST MILES TOTAL PROJECT	SHEET No.	TOTAL SHEETS
12	Ora	91	R0.3	18	48

REGISTERED CIVIL ENGINEER 12-28-12 DATE

03-18-13
PLANS APPROVAL DATE

REGISTERED PROFESSIONAL ENGINEER YENHAI M. NGUYEN No. C62100 Exp. 9/30/13 CIVIL STATE OF CALIFORNIA

THE STATE OF CALIFORNIA OR ITS OFFICERS OR AGENTS SHALL NOT BE RESPONSIBLE FOR THE ACCURACY OR COMPLETENESS OF SCANNED COPIES OF THIS PLAN SHEET.

NOTE:

1. FOR ACCURATE RIGHT OF WAY DATA, CONTACT RIGHT OF WAY ENGINEERING AT THE DISTRICT OFFICE.
2. LOCATION OF CONSTRUCTION AREA SIGN SHOWN ARE APPROXIMATE. EXACT LOCATION TO BE DETERMINED BY THE ENGINEER.
3. ALL CONFLICTING STRIPING AND PAVEMENT MARKING SHALL BE REMOVED.

LEGEND:

- TEMPORARY CRASH CUSHION
- TEMPORARY RAILING (TYPE K)
- CONSTRUCTION AREA
- TEMPORARY RAILING (TYPE K)
- DIRECTION OF TRAFFIC
- CONSTRUCTION AREA SIGN (1 POST)
- (X) PAVEMENT DELINEATION DETAILS
- CHANGE OF PAVEMENT DELINEATION DETAIL
- CHANNELIZER (SURFACE MOUNTED)

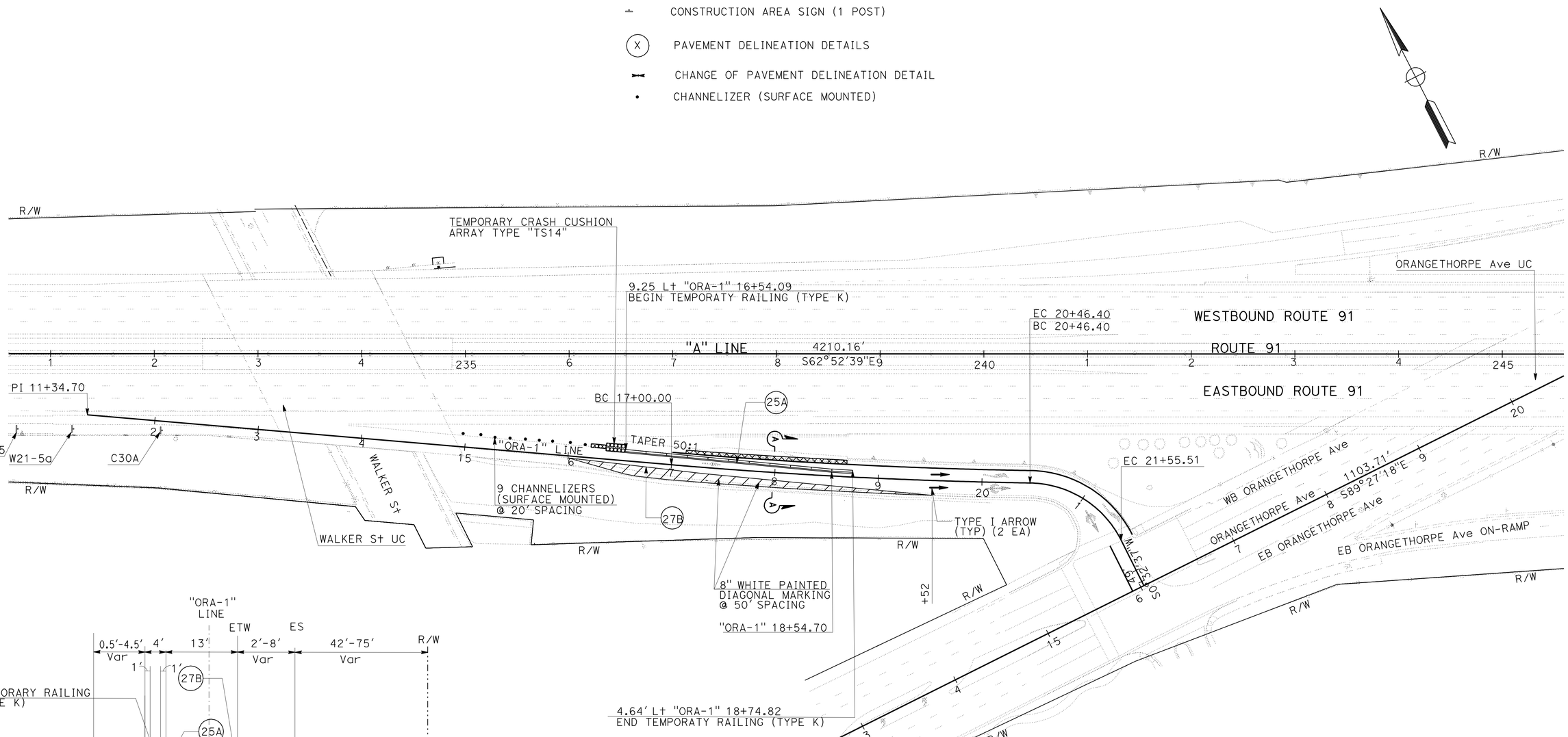

SECTION A-A

NO SCALE

STAGE CONSTRUCTION TRAFFIC HANDLING PLAN STAGE 1

SCALE 1" = 50'

SC-1

APPROVED FOR STAGE CONSTRUCTION AND TRAFFIC HANDLING WORK ONLY

REVISED BY	DATE REVISED
Y. NGUYEN	01-15-13

CALCULATED-DESIGNED BY: YENHAI NGUYEN
CHECKED BY: CHRISTOPHER LE
FUNCTIONAL SUPERVISOR: CHRISTOPHER LE

STATE OF CALIFORNIA - DEPARTMENT OF TRANSPORTATION
Caltrans® DESIGN BRANCH B

LAST REVISION 01-15-13 | DATE PLOTTED => 21-MAR-2013 | TIME PLOTTED => 10:20

Dist	COUNTY	ROUTE	POST MILES TOTAL PROJECT	SHEET No.	TOTAL SHEETS
12	Ora	91	R0.3	19	48

REGISTERED CIVIL ENGINEER 12-28-12 DATE

03-18-13
PLANS APPROVAL DATE

REGISTERED PROFESSIONAL ENGINEER YENHAI M. NGUYEN No. C62100 Exp. 9/30/13 CIVIL STATE OF CALIFORNIA

THE STATE OF CALIFORNIA OR ITS OFFICERS OR AGENTS SHALL NOT BE RESPONSIBLE FOR THE ACCURACY OR COMPLETENESS OF SCANNED COPIES OF THIS PLAN SHEET.

NOTE:

1. FOR ACCURATE RIGHT OF WAY DATA, CONTACT RIGHT OF WAY ENGINEERING AT THE DISTRICT OFFICE.

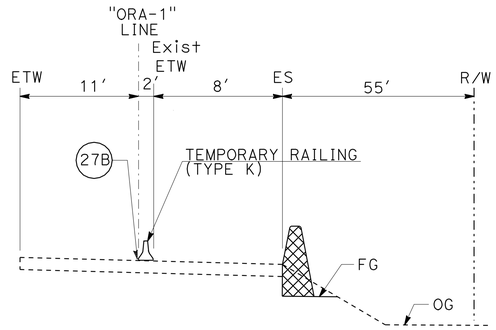

SECTION A-A
NO SCALE

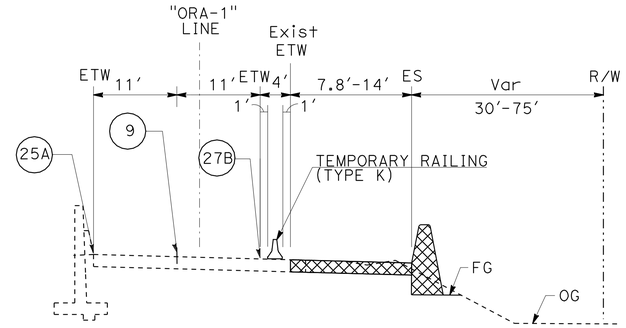

SECTION B-B
NO SCALE

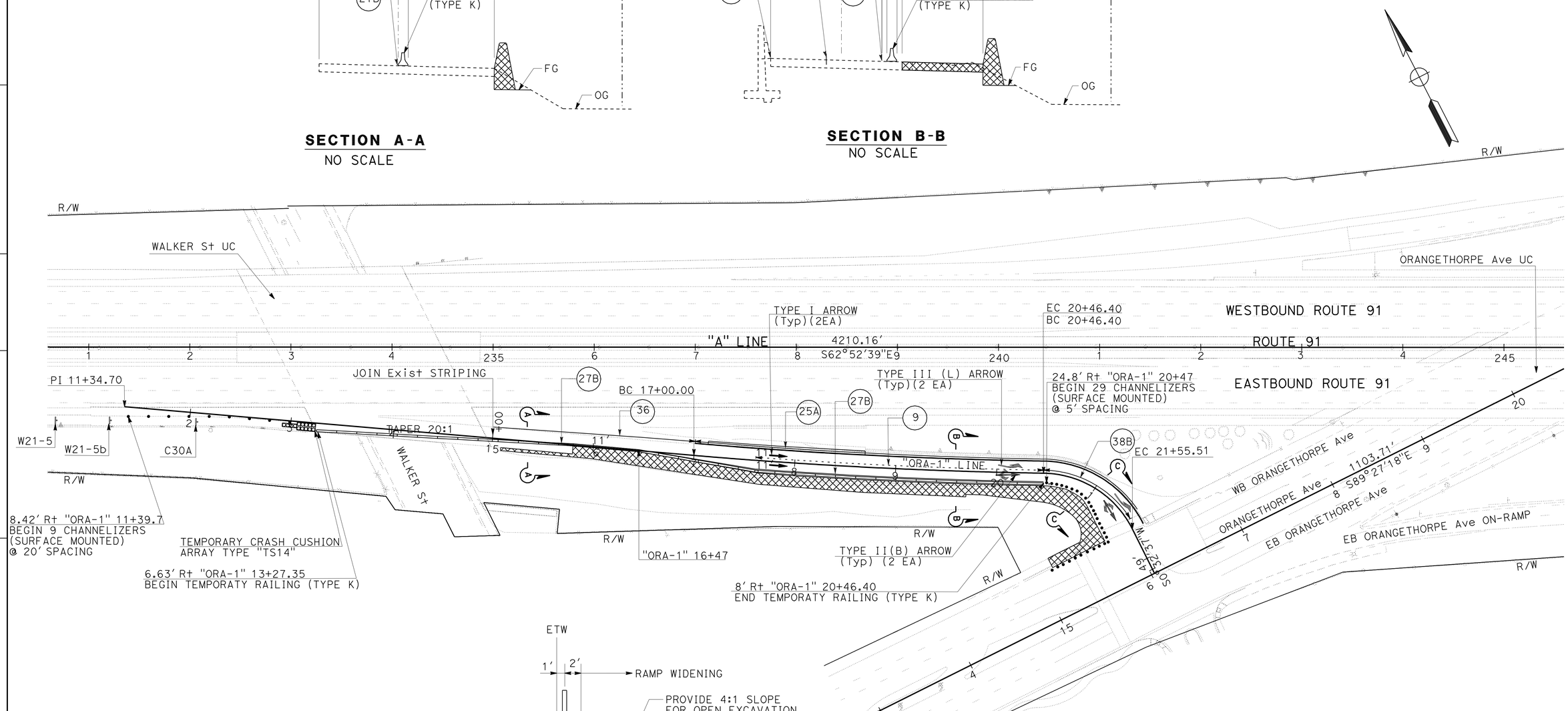

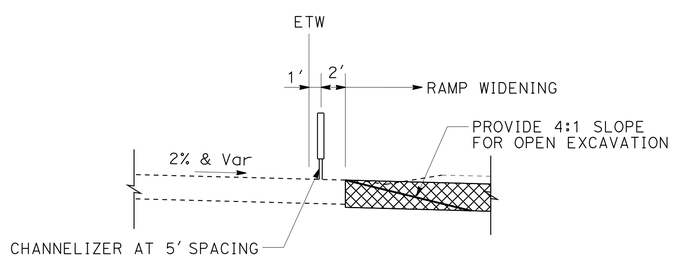

SECTION C-C
NO SCALE

STAGE CONSTRUCTION TRAFFIC HANDLING PLAN STAGE 2

SCALE 1" = 50'

SC-2

APPROVED FOR STAGE CONSTRUCTION AND TRAFFIC HANDLING WORK ONLY

REVISED BY	DATE REVISED
Y. NGUYEN	01-15-13

CALCULATED-DESIGNED BY	CHECKED BY
YENHAI NGUYEN	CHRISTOPHER LE

FUNCTIONAL SUPERVISOR: CHRISTOPHER LE

STATE OF CALIFORNIA - DEPARTMENT OF TRANSPORTATION
Caltrans® DESIGN BRANCH B

LAST REVISION 01-15-13 | DATE PLOTTED => 21-MAR-2013 | TIME PLOTTED => 10:20

Dist	COUNTY	ROUTE	POST MILES TOTAL PROJECT	SHEET No.	TOTAL SHEETS
12	Ora	91	R0.3	20	48

REGISTERED CIVIL ENGINEER 12-28-12 DATE

03-18-13
PLANS APPROVAL DATE

REGISTERED PROFESSIONAL ENGINEER YENHAI M. NGUYEN No. C62100 Exp. 9/30/13 CIVIL STATE OF CALIFORNIA

THE STATE OF CALIFORNIA OR ITS OFFICERS OR AGENTS SHALL NOT BE RESPONSIBLE FOR THE ACCURACY OR COMPLETENESS OF SCANNED COPIES OF THIS PLAN SHEET.

STAGE CONSTRUCTION QUANTITIES

SHEET No.	ALIGNMENT AND STATIONS	PAINT TRAFFIC STRIPE (2-COAT)					PAINT PAVEMENT MARKING (2-COAT)		PAVEMENT MARKER RETRO-REFLECTIVE		REMOVE PAINTED TRAFFIC STRIPE			REMOVE PAINTED PAVEMENT MARKING		REMOVE PAVEMENT MARKER RETRO-REFLECTIVE		TEMPORARY RAILING (TYPE K)	CHANNELIZER (SURFACE MOUNTED)	TEMPORARY CRASH CUSHION MODULE
		DETAIL 9 4" WHITE BROKEN (17-7)	DETAIL 27B 4" SOLID WHITE	DETAIL 25A 4" SOLID YELLOW	DETAIL 36 8" SOLID WHITE	DETAIL 38B 8" SOLID WHITE	ARROWS (TYPE I, II, III)	8" DIAGONAL	DETAIL 25A TYPE H	DETAILS 9,36 & 38B TYPE G	DETAIL 27B 4" SOLID WHITE	DETAIL 25A 4" SOLID YELLOW	DETAIL 36 8" SOLID WHITE	ARROWS (TYPE I, II, III)	8" DIAGONAL	DETAIL 25A TYPE H	DETAILS 9,36 & 38B TYPE G			
		LF	LF	LF	LF	LF	SQFT	SQFT	EA	EA	LF	LF	LF	SQFT	SQFT	EA	EA	LF	EA	EA
SC-1	"ORA-1" Sta 15+00 to Sta 19+52		308	221			62	71	10		308	221		62	32	10		221	9	14
SC-2	"ORA-1" Sta 11+34.70 to Sta 21+55.51	282	550	460	200	110	264		20	23			400				10	719	38	14
	SUBTOTAL	282	858	681	310		326	71	30	23	308	221	400	62	32					
	TOTAL	2131					397		53 *		929			94		20 *		940	47	28

*: FOR GRAND TOTAL OF PAVEMENT MARKER (RETROREFLECTIVE), AND REMOVE PAVEMENT MARKER, SEE SHEET PDQ-1.

CONSTRUCTION AREA SIGN (STAGE CONSTRUCTION)

SHEET No.	SIGN CODE	SIGN MESSAGE	PANEL SIZE	POST NUMBER AND SIZE	No. OF SIGNS
SC-1 & SC-2	C30A (CA)	SHOULDER CLOSED	30" x 30"	1-4.0" x 6.0"	2
SC-1 & SC-2	W21-5	SHOULDER WORK	30" x 30"	1-4.0" x 6.0"	2
SC-1	W21-5a	LEFT SHOULDER CLOSED AHEAD	30" x 30"	1-4.0" x 6.0"	1
SC-2	W21-5b	RIGHT SHOULDER CLOSED AHEAD	30" x 30"	1-4.0" x 6.0"	1

FOR ADDITIONAL QUANTITIES OF CONSTRUCTION AREA SIGNS, SEE SHEET CS-1 AND THQ-1

STAGE CONSTRUCTION TRAFFIC HANDLING QUANTITIES

SCQ-1

REVISED BY Y. NGUYEN | DATE REVISED 01-15-13
CALCULATED-DESIGNED BY YENHAI NGUYEN | CHECKED BY CHRISTOPHER LE
FUNCTIONAL SUPERVISOR CHRISTOPHER LE

STATE OF CALIFORNIA - DEPARTMENT OF TRANSPORTATION
Caltrans DESIGN BRANCH B

LAST REVISION 01-15-13 | DATE PLOTTED => 21-MAR-2013 | TIME PLOTTED => 10:20

Dist	COUNTY	ROUTE	POST MILES TOTAL PROJECT	SHEET No.	TOTAL SHEETS
12	Ora	91	R0.3	21	48

REGISTERED CIVIL ENGINEER 12-28-12 DATE

03-18-13
PLANS APPROVAL DATE

REGISTERED PROFESSIONAL ENGINEER
YENHAI M. NGUYEN
No. C62100
Exp. 9/30/13
CIVIL
STATE OF CALIFORNIA

THE STATE OF CALIFORNIA OR ITS OFFICERS OR AGENTS SHALL NOT BE RESPONSIBLE FOR THE ACCURACY OR COMPLETENESS OF SCANNED COPIES OF THIS PLAN SHEET.

NOTES:

1. LOCATIONS OF CONSTRUCTION AREA SIGNS AND PCMS SHOWN ARE APPROXIMATE. EXACT SIGN LOCATIONS AND MESSAGE ON PCMS TO BE DETERMINED BY THE ENGINEER.

LEGENDS:

- → DIRECTION OF TRAFFIC
- (X) CONSTRUCTION AREA SIGN (DETOUR) No., SEE SHEET THD-1
- PCMS-X PORTABLE CHANGEABLE MESSAGE SIGN
- CONSTRUCTION AREA SIGN 1 POST, STATIONARY MOUNTED
- RAMP CLOSURE
- BARRICADE

CLOSURE:

EB ROUTE 91 ORANGETHORPE Ave OFF-RAMP

DETOUR:

EB ROUTE 91 KNOT Ave OFF-RAMP
TO NB KNOTT Ave
TO WB ORANGETHORPE Ave

PORTABLE CHANGEABLE MESSAGE SIGN

PCMS No.	MESSAGE	
	1ST FRAME	2ND FRAME
PCMS-1	ORANGETHORPE Ave EXIT CLOSED	USE KNOTT Ave EXIT
PCMS-2	ORANGETHORPE Ave EXIT CLOSED	USE KNOTT Ave EXIT

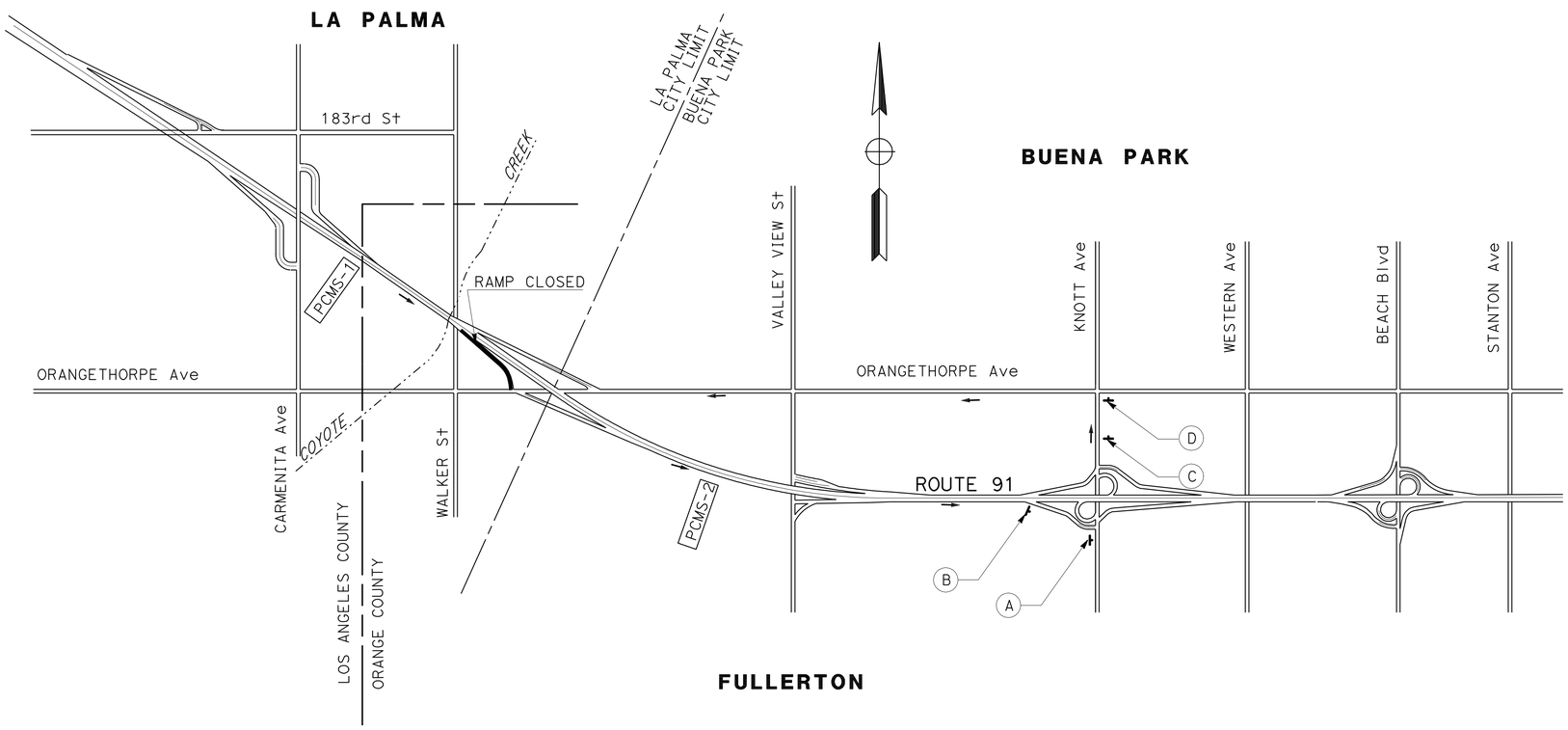

TRAFFIC HANDLING PLAN
(ORANGETHORPE Ave OFF RAMP CLOSURE)
(EASTBOUND ROUTE 91)
(DETOUR)

NO SCALE

TH-1

APPROVED FOR TRAFFIC HANDLING WORK ONLY

STATE OF CALIFORNIA - DEPARTMENT OF TRANSPORTATION
Caltrans® DESIGN BRANCH B

FUNCTIONAL SUPERVISOR: CHRISTOPHER LE
CALCULATED-DESIGNED BY: YENHAI NGUYEN
CHECKED BY: CHRISTOPHER LE
REVISED BY: Y. NGUYEN
DATE REVISED: 01-15-13

LAST REVISION 01-15-13 | DATE PLOTTED => 21-MAR-2013 | TIME PLOTTED => 10:20

Dist	COUNTY	ROUTE	POST MILES TOTAL PROJECT	SHEET No.	TOTAL SHEETS
12	Ora	91	R0.3	22	48

12-28-12
REGISTERED CIVIL ENGINEER DATE

03-18-13
PLANS APPROVAL DATE

REGISTERED PROFESSIONAL ENGINEER
YENHAI M. NGUYEN
No. C62100
Exp. 9/30/13
CIVIL
STATE OF CALIFORNIA

THE STATE OF CALIFORNIA OR ITS OFFICERS OR AGENTS SHALL NOT BE RESPONSIBLE FOR THE ACCURACY OR COMPLETENESS OF SCANNED COPIES OF THIS PLAN SHEET.

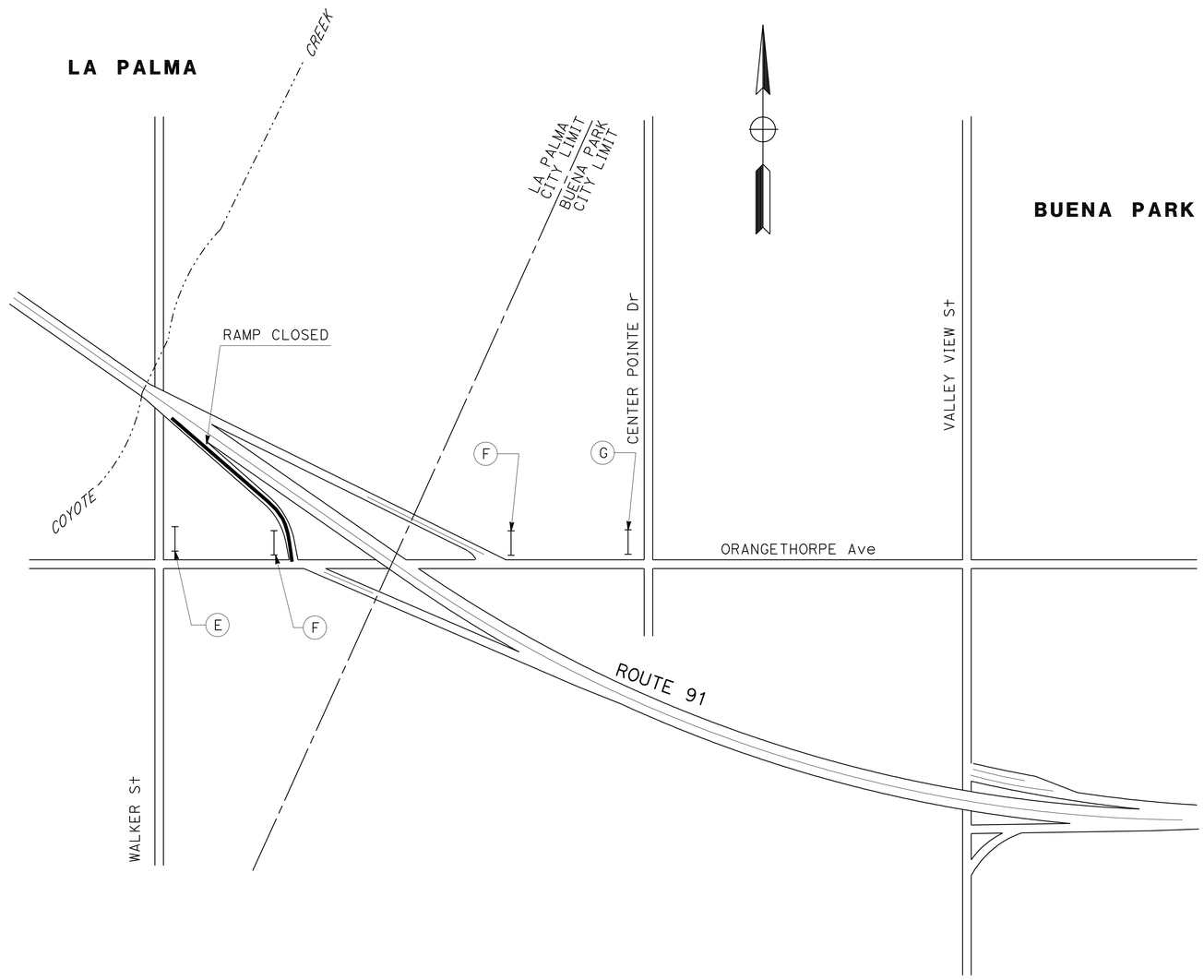

TRAFFIC HANDLING PLAN
(ORANGETHORPE Ave OFF RAMP CLOSURE)
(EASTBOUND ROUTE 91)
(PEDESTRIAN DETOUR)

NO SCALE

TH-2

APPROVED FOR TRAFFIC HANDLING WORK ONLY

STATE OF CALIFORNIA - DEPARTMENT OF TRANSPORTATION
Caltrans® DESIGN BRANCH B

FUNCTIONAL SUPERVISOR: CHRISTOPHER LE
CALCULATED-DESIGNED BY: YENHAI NGUYEN
CHECKED BY: CHRISTOPHER LE
REVISED BY: Y. NGUYEN
DATE REVISED: 01-15-13

LAST REVISION 01-15-13 | DATE PLOTTED => 21-MAR-2013 | TIME PLOTTED => 10:20

Dist	COUNTY	ROUTE	POST MILES TOTAL PROJECT	SHEET No.	TOTAL SHEETS
12	Ora	91	R0.3	23	48

12-28-12
REGISTERED CIVIL ENGINEER DATE

03-18-13
PLANS APPROVAL DATE

REGISTERED PROFESSIONAL ENGINEER
YENHAI M. NGUYEN
No. C62100
Exp. 9/30/13
CIVIL
STATE OF CALIFORNIA

THE STATE OF CALIFORNIA OR ITS OFFICERS OR AGENTS SHALL NOT BE RESPONSIBLE FOR THE ACCURACY OR COMPLETENESS OF SCANNED COPIES OF THIS PLAN SHEET.

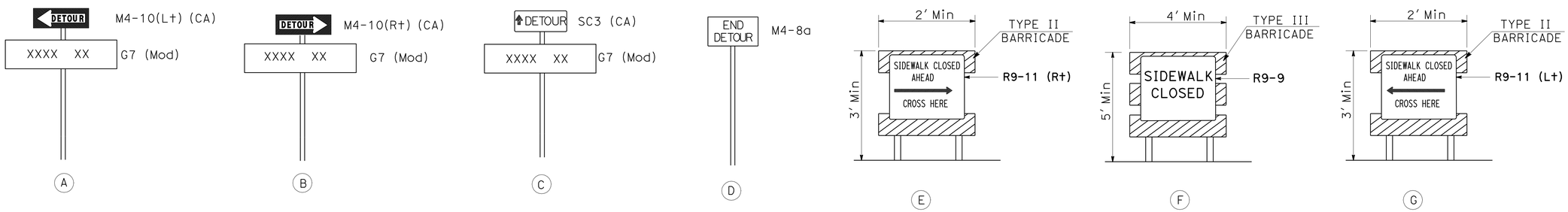

TRAFFIC HANDLING DETAILS

(DETOUR)

NO SCALE

THD-1

REVISED BY	Y. NGUYEN
DATE REVISED	01-15-13
CALCULATED-DESIGNED BY	YENHAI NGUYEN
CHECKED BY	CHRISTOPHER LE
FUNCTIONAL SUPERVISOR	CHRISTOPHER LE

STATE OF CALIFORNIA - DEPARTMENT OF TRANSPORTATION
Caltrans® DESIGN BRANCH B

LAST REVISION 01-15-13 | DATE PLOTTED => 21-MAR-2013 | TIME PLOTTED => 10:20

Dist	COUNTY	ROUTE	POST MILES TOTAL PROJECT	SHEET No.	TOTAL SHEETS
12	Ora	91	R0.3	24	48

REGISTERED CIVIL ENGINEER 12-28-12 DATE

03-18-13
PLANS APPROVAL DATE

REGISTERED PROFESSIONAL ENGINEER
YENHAI M. NGUYEN
No. C62100
Exp. 9/30/13
CIVIL
STATE OF CALIFORNIA

THE STATE OF CALIFORNIA OR ITS OFFICERS OR AGENTS SHALL NOT BE RESPONSIBLE FOR THE ACCURACY OR COMPLETENESS OF SCANNED COPIES OF THIS PLAN SHEET.

CONSTRUCTION AREA SIGN (DETOUR)

SHEET No.	SIGN	CODE	PANEL SIZE	PANEL LABEL	No. OF POST AND SIZE	No. OF SIGNS	REMARKS
TH-1	A	M4-10(L†)	48" x 18"		1 - 6" x 6"	1	
		G7 (Mod)	54" x 12"	ORANGETHORPE			
	B	M4-10(R†)	48" x 18"		1 - 6" x 6"	1	
		G7 (Mod)	54" x 12"	ORANGETHORPE			
	C	SC3(CA)	48" x 18"		1 - 6" x 6"	1	
		G7 (Mod)	54" x 12"	ORANGETHORPE			
	D	M4-8a	24" x 18"	END DETOUR	1 - 6" x 6"	1	
TH-2	E	R9-11 (R†)	48" x 36"	SIDEWALK CLOSED AHEAD CROSS HERE		1	ATTACH TO TYPE II BARRICADE
	F	R9-9	30" x 18"	SIDEWALK CLOSED		2	ATTACH TO TYPE III BARRICADE
	G	R9-11 (L†)	48" x 36"	SIDEWALK CLOSED AHEAD CROSS HERE		1	ATTACH TO TYPE II BARRICADE

FOR ADDITIONAL QUANTITIES OF CONSTRUCTION AREA SIGNS, SEE SHEET CS-1 & SCQ-1.

PORTABLE CHANGEABLE MESSAGE SIGN

SHEET No.	PCMS
	EA
TH-1	2
TOTAL	2

BARRICADE

SHEET No.	TYPE II BARRICADE	TYPE III BARRICADE
	EA	EA
TH-2	2	2
TOTAL	2	2

TRAFFIC HANDLING QUANTITIES

THQ-1

STATE OF CALIFORNIA - DEPARTMENT OF TRANSPORTATION
Caltrans DESIGN BRANCH B

FUNCTIONAL SUPERVISOR: CHRISTOPHER LE
CALCULATED-DESIGNED BY: YENHAI NGUYEN
CHECKED BY: CHRISTOPHER LE
REVISED BY: Y. NGUYEN
DATE REVISED: 01-15-13

LAST REVISION 01-15-13
DATE PLOTTED => 21-MAR-2013
TIME PLOTTED => 10:20

Dist	COUNTY	ROUTE	POST MILES TOTAL PROJECT	SHEET No.	TOTAL SHEETS
12	Ora	91	R0.3	25	48

REGISTERED CIVIL ENGINEER 12-28-12 DATE

03-18-13
PLANS APPROVAL DATE

REGISTERED PROFESSIONAL ENGINEER LAWRENCE LE No. C 57405 Exp. 12/31/13 CIVIL STATE OF CALIFORNIA

THE STATE OF CALIFORNIA OR ITS OFFICERS OR AGENTS SHALL NOT BE RESPONSIBLE FOR THE ACCURACY OR COMPLETENESS OF SCANNED COPIES OF THIS PLAN SHEET.

NOTE:

FOR ACCURATE RIGHT OF WAY DATA, CONTACT RIGHT OF WAY ENGINEERING AT THE DISTRICT OFFICE.

ABBREVIATIONS:

W	WAIT (PAVEMENT MARKING)
H	HERE (PAVEMENT MARKING)
S	SIGNAL (PAVEMENT MARKING)
A	AHEAD (PAVEMENT MARKING)
O	ONLY (PAVEMENT MARKING)

LEGENDS:

X	PAVEMENT DELINEATION DETAIL
	CHANGE IN PAVEMENT DELINEATION
	DIRECTION OF TRAVEL
I	DELINEATOR (CLASS 1), TYPE F OR G

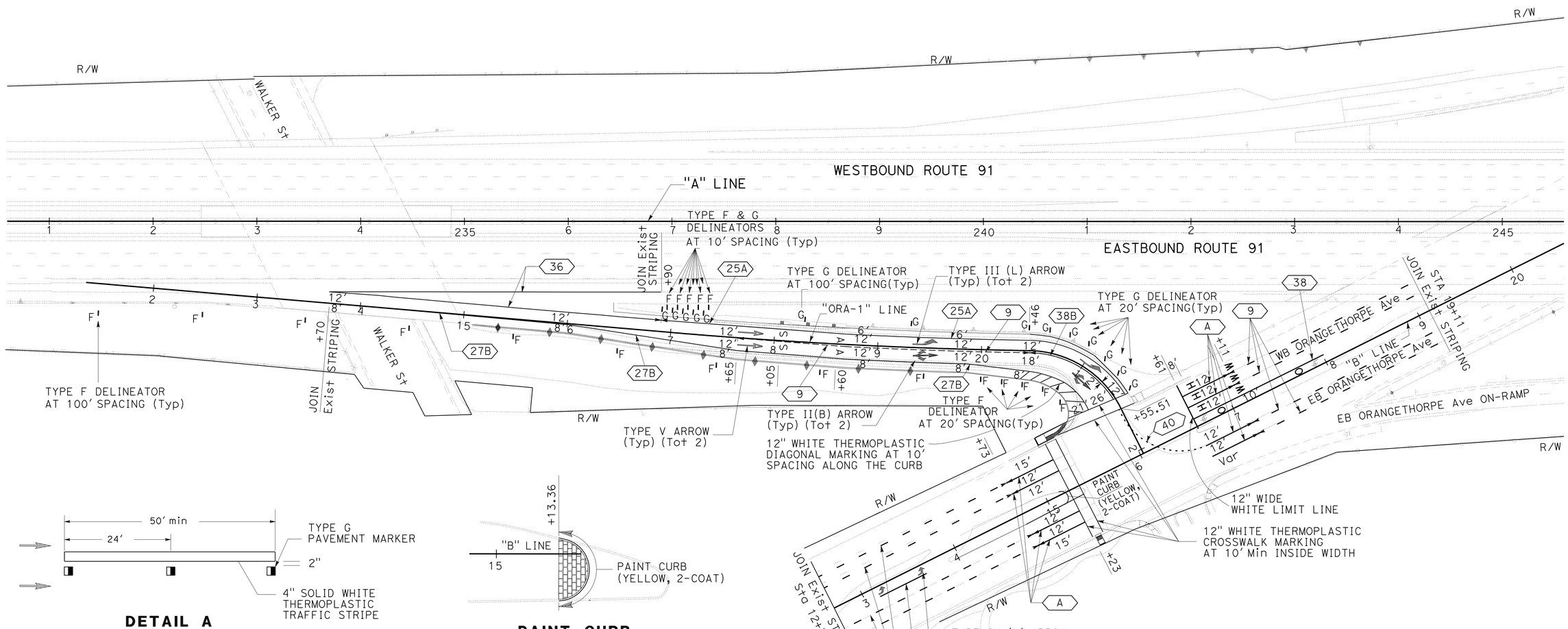

DETAIL A
NO SCALE

PAINT CURB
NO SCALE

PAVEMENT DELINEATION PLAN

SCALE 1" = 50'

PD-1

APPROVED FOR PAVEMENT DELINEATION WORK ONLY

STATE OF CALIFORNIA - DEPARTMENT OF TRANSPORTATION
Caltrans® DESIGN BRANCH I

FUNCTIONAL SUPERVISOR: SON NGUYEN
CALCULATED-DESIGNED BY: LAWRENCE LE
CHECKED BY: GRACE WANG
REVISED BY
DATE REVISED

LAST REVISION 01-15-13
DATE PLOTTED => 21-MAR-2013
TIME PLOTTED => 10:20

Dist	COUNTY	ROUTE	POST MILES TOTAL PROJECT	SHEET No.	TOTAL SHEETS
12	Ora	91	R0.3	26	48

REGISTERED CIVIL ENGINEER 12-28-12 DATE

03-18-13
PLANS APPROVAL DATE

REGISTERED PROFESSIONAL ENGINEER
LAWRENCE LE
No. C 57405
Exp. 12/31/13
STATE OF CALIFORNIA

THE STATE OF CALIFORNIA OR ITS OFFICERS OR AGENTS SHALL NOT BE RESPONSIBLE FOR THE ACCURACY OR COMPLETENESS OF SCANNED COPIES OF THIS PLAN SHEET.

PAVEMENT DELINEATION QUANTITIES

SHEET No.	ALIGNMENT AND STATIONS	THERMOPLASTIC TRAFFIC STRIPE								THERMOPLASTIC PAVEMENT MARKING			PAVEMENT MARKER (RETRO-REFLECTIVE)		DELINEATOR CLASS I		PAINT CURB (2-COAT)
		DETAIL 9 4" WHITE BROKEN (17-7)	DETAIL 40 4" BROKEN (6-1)	DETAIL A 4" SOLID WHITE	DETAIL 27B 4" SOLID WHITE	DETAIL 25A 4" SOLID YELLOW	DETAIL 36 8" SOLID WHITE	DETAIL 38 8" SOLID WHITE	DETAIL 38B 8" SOLID WHITE	ARROWS	WORDS	DIAGONAL CROSSWALK LIMIT LINE	DETAILS 9,A,36,38,38B TYPE G	DETAIL 25A TYPE H	TYPE F	TYPE G	
		LF	LF	LF	LF	LF	LF	LF	LF	SQFT	SQFT	SQFT	EA	EA	EA	EA	SQFT
PD-1	"ORA-1" Line Sta 13+70 to Sta 21+55.51	281			786	466	640		110	264	126	241	43	21	19	14	
	"B" Line Sta 12+70 to Sta 16+61	812	103	200				50		30		201	28				24.5
	"B" Line Sta 16+61 to Sta 19+11	800		200				140		30	179	47	28				
	SUBTOTAL	1893	103	400	786	466	640	190	110	324	305	489	99	21	33		24.5
	TOTAL (THIS SHEET)	1893	103	1652				940		1118			120		33		24.5
	TOTAL FROM SHEET SCQ-1												53				
	GRAND TOTAL	1893	103	1652				940		1118			173		33		24.5

PAVEMENT DELINEATION QUANTITIES (REMOVE)

SHEET No.	ALIGNMENT AND STATIONS	REMOVE THERMOPLASTIC TRAFFIC STRIPE							REMOVE YELLOW THERMOLASTIC TRAFFIC STRIPE (HAZARDOUS WASTE) DETAIL 25A	REMOVE THERMOPLASTIC PAVEMENT MARKING			REMOVE PAVEMENT MARKER (RETRO-REFLECTIVE)		REMOVE DELINEATOR CLASS I	
		DETAIL 9 4" WHITE BROKEN (17-7)	DETAIL 40 4" BROKEN (6-1)	DETAIL A 4" SOLID WHITE	DETAIL 27B 4" SOLID WHITE	DETAIL 36 8" SOLID WHITE	DETAIL 38 8" SOLID WHITE	DETAIL 38B 8" SOLID WHITE		ARROWS	WORDS	DIAGONAL CROSSWALK LIMIT LINE	DETAILS 9,A,36,38,38B TYPE G	DETAIL 25A TYPE H	TYPE F	TYPE G
		LF	LF	LF	LF	LF	LF	LF	LF	SQFT	SQFT	SQFT	EA	EA	EA	EA
PD-1	"ORA-1" Line Sta 13+70 to Sta 21+55.51	82			786	1280		220	466	264	126	143	43	21	10	9
	"B" Line Sta 12+70 to Sta 16+61	237	15	200			100			30		201	28			
	"B" Line Sta 16+61 to Sta 19+11	234		200			280			30	179	47	28			
	SUBTOTAL	553	15	400	786	1280	380	220	466	324	305	391	99	21	19	
	TOTAL (THIS SHEET)	3634							466	1020			120		19	
	TOTAL FROM SHEET SCQ-1												20			
	GRAND TOTAL	3634							466	1020			140		19	

PAVEMENT DELINEATION QUANTITIES

PDQ-1

STATE OF CALIFORNIA - DEPARTMENT OF TRANSPORTATION
Caltrans® DESIGN BRANCH I

FUNCTIONAL SUPERVISOR: SON NGUYEN
CALCULATED-DESIGNED BY: LAWRENCE LE
CHECKED BY: GRACE WANG
REVISED BY: LL
DATE REVISED: 01/10/12

LAST REVISION 01-15-13
DATE PLOTTED => 21-MAR-2013
TIME PLOTTED => 10:21

Dist	COUNTY	ROUTE	POST MILES TOTAL PROJECT	SHEET No.	TOTAL SHEETS
12	Ora	91	R0.3	27	48

REGISTERED CIVIL ENGINEER 12-28-12 DATE

03-18-13
PLANS APPROVAL DATE

REGISTERED PROFESSIONAL ENGINEER
LAWRENCE LE
No. C 57405
Exp. 12/31/13
CIVIL
STATE OF CALIFORNIA

THE STATE OF CALIFORNIA OR ITS OFFICERS OR AGENTS SHALL NOT BE RESPONSIBLE FOR THE ACCURACY OR COMPLETENESS OF SCANNED COPIES OF THIS PLAN SHEET.

NOTE:

FOR ACCURATE RIGHT OF WAY DATA, CONTACT RIGHT OF WAY ENGINEERING AT THE DISTRICT OFFICE.

ABBREVIATIONS:

PP TO REMAIN IN PLACE
RM REMOVE ROADSIDE SIGN
IS ROADSIDE SIGN - ONE POST OR TWO POST
ISB INSTALL SIGN (PEDESTRIAN BARICADE), SEE ELECTRICAL PLANS
MAS INSTALL SIGN(MAST-ARM HANGER METHOD)
RMS REMOVE ROADSIDE SIGN MOUNTED ON MAST ARM

LEGEND:

(X) SIGN IDENTIFICATION NUMBER

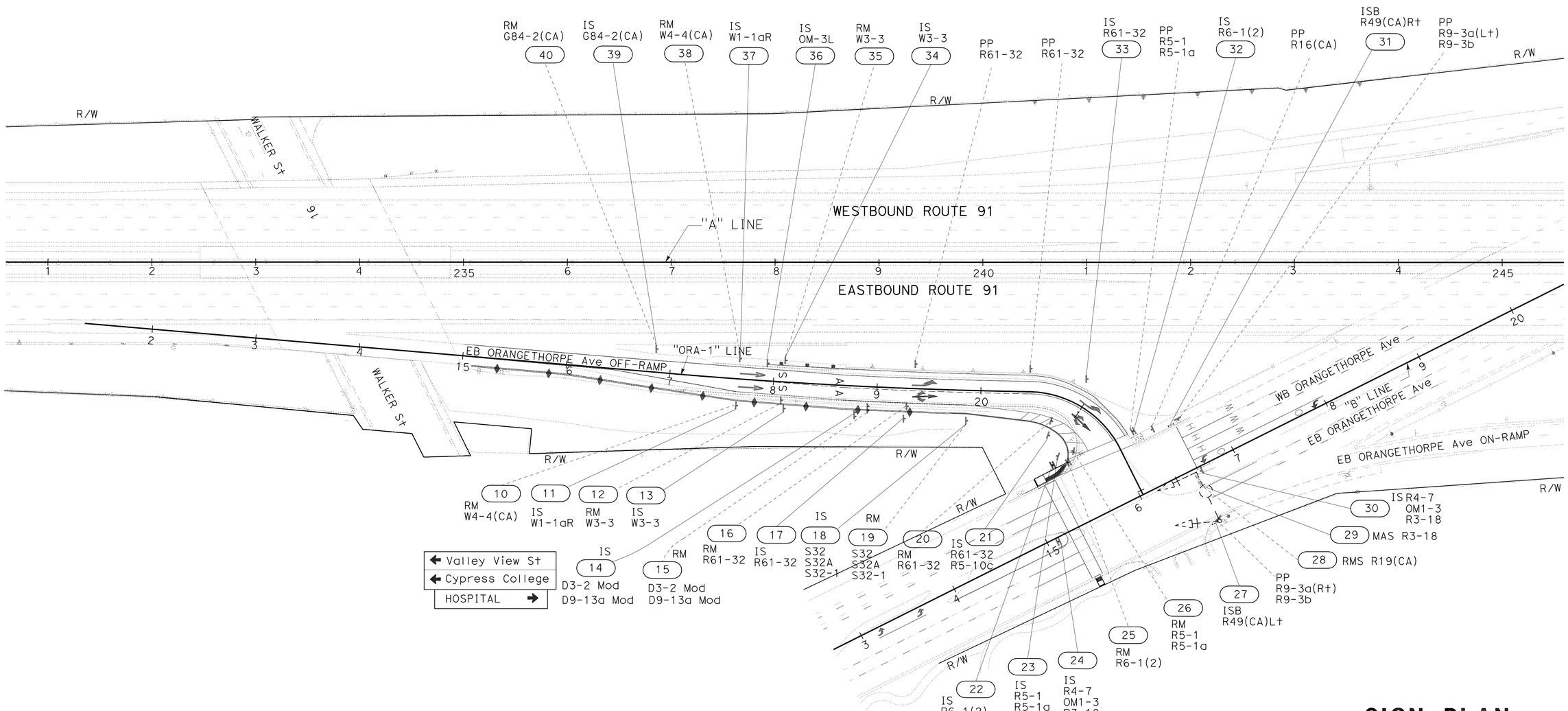

SIGN PLAN

SCALE 1" = 50'

APPROVED FOR SIGN WORK ONLY

S-1

REVISED BY	DATE REVISED
LAWRENCE LE	GRACE WANG
CALCULATED-DESIGNED BY	CHECKED BY
FUNCTIONAL SUPERVISOR	SON NGUYEN

STATE OF CALIFORNIA - DEPARTMENT OF TRANSPORTATION
Caltrans
DESIGN BRANCH I

LAST REVISION 01-15-13
DATE PLOTTED => 21-MAR-2013
TIME PLOTTED => 10:21

Dist	COUNTY	ROUTE	POST MILES TOTAL PROJECT	SHEET No.	TOTAL SHEETS
12	Ora	91	R0.3	28	48

REGISTERED CIVIL ENGINEER 12-28-12 DATE

03-18-13
PLANS APPROVAL DATE

REGISTERED PROFESSIONAL ENGINEER
LAWRENCE LE
No. C 57405
Exp. 12/31/13
CIVIL
STATE OF CALIFORNIA

THE STATE OF CALIFORNIA OR ITS OFFICERS OR AGENTS SHALL NOT BE RESPONSIBLE FOR THE ACCURACY OR COMPLETENESS OF SCANNED COPIES OF THIS PLAN SHEET.

SIGN 14
D3-2 Mod

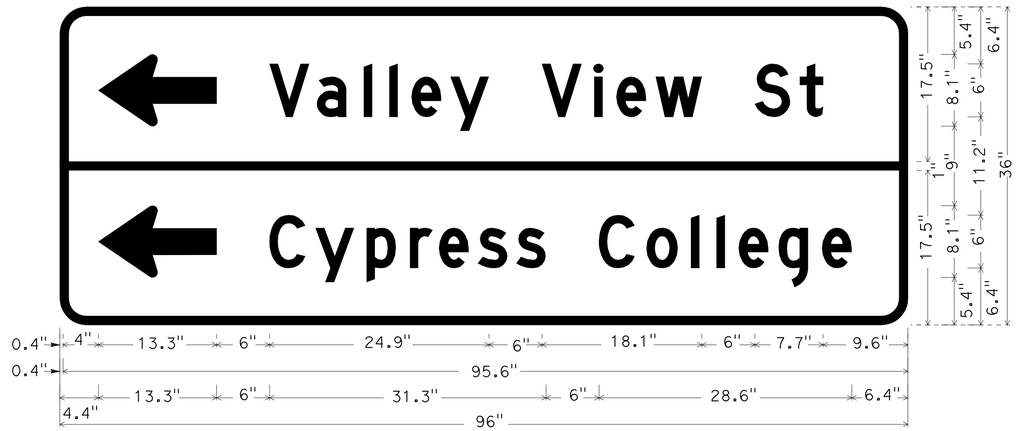

3.0" RADIUS, 1.0" BORDER, WHITE ON GREEN;
STANDARD ARROW CUSTOM 13.4" X 8.1" 180{; [VALLEY VIEW St] D; STANDARD ARROW CUSTOM 13.4" X 8.1" 180{;
[CYPRESS COLLEGE] D;

SIGN 14
D9-13a Mod

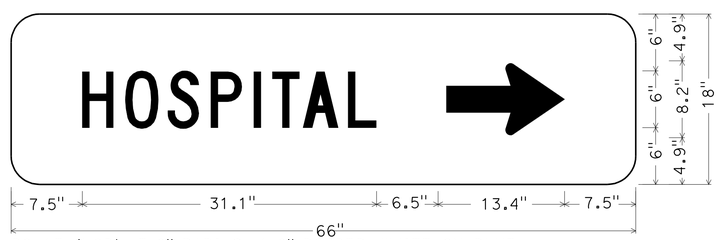

D9-13A(MOD); 3.0" RADIUS, 1.0" BORDER, WHITE ON BLUE;
[HOSPITAL] C; Standard Arrow Custom 13.4" X 8.1"

SIGN DETAILS

NO SCALE

SD-1

REVISED BY	DATE REVISED

LAWRENCE LE — CALCULATED-DESIGNED BY
GRACE WANG — CHECKED BY
FUNCTIONAL SUPERVISOR: SON NGUYEN

STATE OF CALIFORNIA - DEPARTMENT OF TRANSPORTATION
Caltrans® DESIGN BRANCH I

LAST REVISION 01-15-13
DATE PLOTTED => 21-MAR-2013
TIME PLOTTED => 10:21

Dist	COUNTY	ROUTE	POST MILES TOTAL PROJECT	SHEET No.	TOTAL SHEETS
12	Ora	91	R0.3	29	48

REGISTERED CIVIL ENGINEER 12-28-12 DATE

03-18-13
PLANS APPROVAL DATE

REGISTERED PROFESSIONAL ENGINEER LAWRENCE LE No. C 57405 Exp. 12/31/13 CIVIL STATE OF CALIFORNIA

THE STATE OF CALIFORNIA OR ITS OFFICERS OR AGENTS SHALL NOT BE RESPONSIBLE FOR THE ACCURACY OR COMPLETENESS OF SCANNED COPIES OF THIS PLAN SHEET.

SIGN QUANTITIES

SHEET No.	SIGN No.	SIGN CODE	PANEL SIZE	POST SIZE & LENGTH			ROADSIDE SIGN		INSTALL SIGN (PEDESTRIAN BARRICADE) (N)	INSTALL SIGN (MAST-ARM HANGER METHOD)	REMOVE ROADSIDE SIGN MOUNTED ON MAST ARM	REMOVE ROADSIDE SIGN	TREATED WOOD WASTE	REMARKS
				4" x 4"	4 x 6"	6 x 6"	ONE POST	TWO POST						
							EA	EA	EA	EA	EA	EA	LB	
S-1	10	W4-4(CA)										1	150.2	
	11	W1-1aR	48" X 48"			18′	1							20 MPH
	12	W3-3										1	150.2	
	13	W3-3	48" X 48"			18′	1							
	14	D3-2 Mod	96" X 36"			34′		1						TOTAL LENGTH
		D9-13a Mod	66" X 18"											
	15	D3-2 Mod										1	283.1	
		D9-13a Mod												
	16	R61-32										1	133	
	17	R61-32	36" X 30"		14′		1							
	18	S32	54" x 42"			18′	1							
		S32A	15" x 18"											
		S32-1	15" x 18"											
	19	S32										1	158.7	
		S32A												
		S32-1												
	20	R61-32										1	137.3	
	21	R61-32	36" x 30"		14′		1							
		R5-10c	12" x 24"											
	22	R6-1(2)	36" x 12"	6′			1							
	23	R5-1	48" x 48"			14′	1							
		R5-1a	42" x 30"											
	24	R4-7	24" x 30"		14′		1							
		OM1-3	18" x 18"											
		R3-18	36" x 36"											
	25	R6-1(2)										1	22.4	
	26	R5-1										1	120.1	
		R5-1a												
	27	R49(CA)(L†)	42" x 18"						1					SEE ELECTRICAL PLANS
	28	R19(CA)									1			
	29	R3-18	30" x 30"							1				
	30	R4-7	24" x 30"		14′		1							
		OM1-3	18" x 18"											
		R3-18	36" x 36"											R3-18 FEBT
	31	R49(CA)(R†)	42" x 18"						1					SEE ELECTRICAL PLANS
	32	R6-1(2)	36" x 12"	6′			1							
	33	R61-32	36" X 30"		14′		1							
	34	W3-3	48′ x 48"			18′	1							
	35	W3-3										1	154.4	
	36	OM-3L	36" x 12"	7.5′			1							
	37	W1-1aR	48" x 48"			18′	1							
	38	W4-4(CA)										1	154.4	
	39	G84-2(CA)	54" x 48"			16′	1							EXIT 21
	40	G84-2(CA)										1	137.3	
TOTAL							15	1		1	1	11	1601.1*	

(N) - NOT A SEPARATE PAY ITEM, FOR INFORMATION ONLY

* FOR GRAND TOTAL OF TREATED WOOD WASTE, SEE SHEET Q-2

SIGN QUANTITIES

SQ-1

REVISED BY | DATE REVISED

LAWRENCE LE | GRACE WANG

CALCULATED-DESIGNED BY | CHECKED BY

FUNCTIONAL SUPERVISOR: SON NGUYEN

STATE OF CALIFORNIA - DEPARTMENT OF TRANSPORTATION

Caltrans® DESIGN BRANCH I

LAST REVISION 01-15-13 | DATE PLOTTED => 21-MAR-2013 | TIME PLOTTED => 10:21

Dist	COUNTY	ROUTE	POST MILES TOTAL PROJECT	SHEET No.	TOTAL SHEETS
12	Ora	91	R0.3	30	48

REGISTERED CIVIL ENGINEER 12-28-12 DATE

03-18-13
PLANS APPROVAL DATE

REGISTERED PROFESSIONAL ENGINEER
LAWRENCE LE
No. C 57405
Exp. 12/31/13
CIVIL
STATE OF CALIFORNIA

THE STATE OF CALIFORNIA OR ITS OFFICERS OR AGENTS SHALL NOT BE RESPONSIBLE FOR THE ACCURACY OR COMPLETENESS OF SCANNED COPIES OF THIS PLAN SHEET.

MATERIAL SUMMARY (CONTRACTOR FURNISHED SIGNS)

SHEET No.	SIGN No.	SIGN CODE	PANEL SIZE	SINGLE FACED	BACKGROUND		LEGENDS		PROTECTIVE FILM		FURNISH SINGLE SHEET ALUMINUM SIGN			REMARKS
					SHEETING COLOR	RETROREFLECTIVE ASTM TYPE	SHEETING COLOR	RETROREFLECTIVE ASTM TYPE	STANDARD	PREMIUM	0.063"		0.080"	
											FRAMED	UNFRAMED	FRAMED	
											SQFT	SQFT	SQFT	
S-1	11	W1-1aR	48" x 48"	X	Y	IV	B	IV		X		16		
	13	W3-3	48" x 48"	X	Y	IX	R/G/B	IX/Non		X		16		
	14	D3-2 Mod	96" x 36"	X	G	IV	W	IV	X				24	
		D9-13a Mod	66" x 18"	X	Blue	IV	W	IV	X		8.25			
	17	R61-32	36" x 30"	X	W	IV	B	Non	X			7.5		
	18	S32	54" x 42"	X	Teal G	II	W	II	X		15.75			
		S32A	15" x 18"	X	Teal G	II	W	II	X			1.88		
		S32-1	15" x 18"	X	Teal G	II	W	II	X			1.88		
	21	R61-32	36" x 30"	X	W	IV	B	Non	X			7.5		
		R5-10c	12" x 24"	X	W	IX	B	Non		X		2		
	22	R6-1(2)	36" x 12"	X	W	IV	B	Non	X			6		
	23	R5-1	48" x 48"	X	W	IX	R	IX		X		16		
		R5-1a	42" x 30"	X	W	IX	R	IX		X		8.75		
	24	R4-7	24" x 30"	X	W	IV	B	Non	X			5		
		OM1-3	18" x 18"	X	Y	IV	N/A	N/A	X			2.25		
		R3-18	36" x 36"	X	W	IX	R/B	IX/Non				9		
	27	R49(CA)(L+)	42" X 18"	X	W	IX	B	N/A	X			5.25		SEE ELECTRICAL PLAN
	29	R3-18	36" x 36"	X	W	IX	R/B	IX/Non				9		
	30	R4-7	24" x 30"	X	W	IV	B	Non	X			5		
		OM1-3	18" x 18"	X	Y	IV	N/A	N/A	X			2.25		
		R3-18	30" x 30"	X	W	IX	R/B	IX/Non				6.25		
	31	R49(CA)(R+)	42" X 18"	X	W	IX	B	N/A	X			5.25		SEE ELECTRICAL PLAN
	32	R6-1(2)	36" x 12"	X	W	IV	B	Non	X			6		
	33	R61-32	36" x 30"	X	W	IV	B	Non	X			7.5		
	34	W3-3	48" x 48"	X	Y	IX	R/G/B	IX		X		16		
	36	OM-3L	36" x 12"	X	Y	IV	Blk	Non	X			3		
	37	W1-1aR	48" x 48"	X	Y	IV	B	IV		X		16		
	39	G84-2(CA)	54" x 48"	X	G	IV	W	IV	X		18			
TOTAL											42.00	181.26	24	

LEGENDS:

B = BLACK
W = WHITE
R = RED
G = GREEN
Y = YELLOW
Non = NON REFLECTIVE

SIGN QUANTITIES

SQ-2

STATE OF CALIFORNIA - DEPARTMENT OF TRANSPORTATION
Caltrans
DESIGN BRANCH I

FUNCTIONAL SUPERVISOR: SON NGUYEN
CALCULATED-DESIGNED BY: GRACE WANG
CHECKED BY: LAWRENCE LE
REVISED BY
DATE REVISED

LAST REVISION 01-15-13
DATE PLOTTED => 21-MAR-2013
TIME PLOTTED => 10:21

Dist	COUNTY	ROUTE	POST MILES TOTAL PROJECT	SHEET No.	TOTAL SHEETS
12	Ora	91	R0.3	31	48

REGISTERED CIVIL ENGINEER 12-28-12 DATE

03-18-13
PLANS APPROVAL DATE

REGISTERED PROFESSIONAL ENGINEER YENHAI M. NGUYEN No. C62100 Exp. 9/30/13 CIVIL STATE OF CALIFORNIA

THE STATE OF CALIFORNIA OR ITS OFFICERS OR AGENTS SHALL NOT BE RESPONSIBLE FOR THE ACCURACY OR COMPLETENESS OF SCANNED COPIES OF THIS PLAN SHEET.

EARTHWORK QUANTITIES

SHEET No.	LOCATION	STATION LIMITS	SIDE	ROADWAY EXCAVATION	EMBANKMENT (N)
				CY	CY
L-1	EB ORANGETHORPE Ave OFF-RAMP	"ORA-1" 15+08.86 TO "ORA-1" 21+54.31	R†	730	30
L-1	EB ORANGETHORPE Ave OFF-RAMP	"ORA-1" 17+13 TO "ORA-1" 18+68.84	L†	76	2
L-1 & C-1	EB ORANGETHORPE Ave	"B" 15+26 TO "B" 15+32	R†	0.6	
L-1 & C-1	ORANGETHORPE Ave ISLAND	"B" 15+13.36 TO "B" 15+37.15	L† / R†	16	
TOTAL				822.6	32

ROADWAY QUANTITIES

SHEET No.	LOCATION	STATION LIMITS	SIDE	PAVEMENT STRUCTURAL SECTION TYPE	HOT MIX ASPHALT (TYPE A)	CLASS 2 AGGREGATE BASE	COLD PLANE ASPHALT CONCRETE PAVEMENT	TACK COAT	MINOR CONCRETE (MINOR STRUCTURE) ANCHOR BLOCK	MINOR CONCRETE (Misc CONSTRUCTION) CURB A1-6	CURB A2-8	CURB B1-6	SW & CURB RAMP	MINOR CONCRETE (TEXTURED PAVING)	DETECTABLE WARNING SURFACE
					TON	CY	SQYD	TON	CY	CY	CY	CY	CY	CY	SQFT
L-1	EB ORANGETHORPE Ave OFF-RAMP	"ORA-1" 17+13 TO "ORA-1" 18+68.84	L†	1	39.4	37.77		0.048							
L-1	EB ORANGETHORPE Ave OFF-RAMP	"ORA-1" 15+80 TO "ORA-1" 21+54.11	R†	1	369.5	354		0.465							
L-1	EB ORANGETHORPE Ave OFF-RAMP	"ORA-1" 15+08.86 TO "ORA-1" 21+46.7	R†	2	316		2342	0.567							
L-1	EB ORANGETHORPE Ave OFF-RAMP	"ORA-1" 21+46.7 TO "ORA-1" 21+54.31	R†	2	3		22								
L-1 & C-1	ORANGETHORPE Ave ISLAND	"B" 15+13.36 TO "B" 15+37.15	L† / R†	3	29			0.042							
L-1 & C-1	ORANGETHORPE Ave ISLAND	"B" 15+13.36	L† / R†	4		0.75				0.6				0.75	
L-1	EB ORANGETHORPE Ave OFF-RAMP	"ORA-1" 19+86.23 TO "ORA-1" 21+54.31	R†								10.3				
L-1 & C-1	WB ORANGETHORPE Ave	"B" 15+15.53 TO "B" 15+51.7	L†									1.03	2.9		69.5
L-1 & C-1	EB ORANGETHORPE Ave	"B" 15+26 TO "B" 15+32	R†								0.38	0.47	0.52		15
L-1	EB ORANGETHORPE Ave OFF-RAMP	"ORA-1" 18+59.84 To "ORA-1" 18+68.84	L†						1.5						
TOTAL					757	392.52	2364	1.122	1.5	0.6	10.68	1.5	3.42	0.75	84.5
TOTAL HMA FROM SHEET Q-2					1.48										
TOTAL MINOR CONCRETE (MINOR STRUCTURE) FROM SHEET DQ-1									3.75						
GRAND TOTAL					758.48	392.52	2364	1.122	5.25	16.23				0.75	84.5

SUMMARY OF QUANTITIES

Q-1

STATE OF CALIFORNIA - DEPARTMENT OF TRANSPORTATION
Caltrans DESIGN BRANCH B

FUNCTIONAL SUPERVISOR: CHRISTOPHER LE
CALCULATED-DESIGNED BY: YENHAI NGUYEN
CHECKED BY: CHRISTOPHER LE
REVISED BY: Y. NGUYEN
DATE REVISED: 01-15-13

LAST REVISION 01-15-13 | DATE PLOTTED => 21-MAR-2013 | TIME PLOTTED => 10:21

Dist	COUNTY	ROUTE	POST MILES TOTAL PROJECT	SHEET No.	TOTAL SHEETS
12	Ora	91	R0.3	32	48

REGISTERED CIVIL ENGINEER 12-28-12 DATE

03-18-13
PLANS APPROVAL DATE

REGISTERED PROFESSIONAL ENGINEER YENHAI M. NGUYEN No. C62100 Exp. 9/30/13 CIVIL STATE OF CALIFORNIA

THE STATE OF CALIFORNIA OR ITS OFFICERS OR AGENTS SHALL NOT BE RESPONSIBLE FOR THE ACCURACY OR COMPLETENESS OF SCANNED COPIES OF THIS PLAN SHEET.

DIKE QUANTITIES

SHEET No.	LOCATION	STATION LIMITS	SIDE	PLACE HMA DIKE (TYPE A)	PLACE HMA DIKE (TYPE C)	PLACE HMA DIKE (TYPE F)	HOT MIX ASPHALT (TYPE A)
				LF	LF	LF	TON
L-1	EB ORANGETHORPE Ave OFF-RAMP	"ORA-1" 17+40.9 TO "ORA-1" 17+62.5	Lt	21			0.57
L-1	EB ORANGETHORPE Ave OFF-RAMP	"ORA-1" 17+62.5 TO "ORA-1" 18+37.84	Lt		75		0.58
L-1	EB ORANGETHORPE Ave OFF-RAMP	"ORA-1" 18+37.84 TO "ORA-1" 18+62.84	Lt			25	0.33
			TOTAL	21	75	25	1.48*

* FOR GRAND TOTAL OF HOT MIX ASPHALT (TYPE A), SEE SHEET Q-1

TEMPORARY WATER POLLUTION CONTROL

SHEET No.	TEMPORARY FIBER ROLL	TEMPORARY DRAINAGE INLET PROTECTION
	LF	EA
WPC-1	500	3
TOTAL	500	3

REMOVE CONCRETE

SHEET No.	LOCATION	STATION LIMITS	SIDE	REMOVE CONCRETE CURB	REMOVE CONCRETE SIDEWALK & CURB RAMP	REMOVE CONCRETE ISLAND
				CY	CY	CY
L-1	EB ORANGETHORPE Ave OFF-RAMP	"ORA-1" 17+40.9 TO "ORA-1" 18+48.74	Lt	6.61		
L-1	EB ORANGETHORPE Ave OFF-RAMP	"ORA-1" 17+35.41 TO "ORA-1" 21+54.31	Rt	27		
L-1 & C-1	WB ORANGETHORPE Ave	"B" 15+15.53 TO "B" 15+59.39	Lt	1.26	3.59	
L-1 & C-1	EB ORANGETHORPE Ave	"B" 15+26 TO "B" 15+32	Rt	0.38		
L-1 & C-1	ORANGETHORPE Ave ISLAND	"B" 15+13.36	Lt / Rt	1.5		
L-1 & C-1	ORANGETHORPE Ave ISLAND	"B" 15+13.36 TO "B" 15+37.15	Lt / Rt			5.3
		SUBTOTAL		36.76	3.59	5.3
		TOTAL		46		

CONCRETE BARRIER

SHEET No.	LOCATION	STATION LIMITS	SIDE	Conc BARRIER (TYPE 60C)	Conc BARRIER MARKER (N)
				LF	EA
L-1	EB ORANGETHORPE Ave OFF-RAMP	"ORA-1" 15+08.86 TO "ORA-1" 19+86.23	Rt	478.54	21
		TOTAL		478.54	21

(N): NOT A SEPARATE PAY ITEM, FOR INFORMATION ONLY.

METAL BEAM GUARD RAILING

SHEET No.	LOCATION	STATION LIMITS	SIDE	Trans RAILING (TYPE WB)	Alt IN-LINE TERMINAL SYSTEM
				EA	EA
L-1	EB ORANGETHORPE Ave OFF-RAMP	"ORA-1" 17+87.5 To "ORA-1" 18+62.84	Lt	1	1
		TOTAL		1	1

REMOVE RAILING

SHEET No.	LOCATION	STATION LIMITS	SIDE	REMOVE MBGR	REMOVE BRIDGE RAILING	TREATED WOOD WASTE
				LF	LF	LB
L-1	EB ORANGETHORPE Ave OFF-RAMP	"ORA-1" 15+08.86 TO "ORA-1" 15+45.26	Rt		36.4	
L-1	EB ORANGETHORPE Ave OFF-RAMP	"ORA-1" 18+07.7 To "ORA-1" 18+68.84	Lt	63.8		1080
		TOTAL TREATED WOOD WASTE FROM SHEET SQ-1				1601
		TOTAL		63.8	36.4	2681

SUMMARY OF QUANTITIES

Q-2

REVISED BY	DATE REVISED
Y. NGUYEN	01-15-13

YENHAI NGUYEN — CALCULATED-DESIGNED BY
CHRISTOPHER LE — CHECKED BY
CHRISTOPHER LE — FUNCTIONAL SUPERVISOR

STATE OF CALIFORNIA - DEPARTMENT OF TRANSPORTATION
Caltrans® DESIGN BRANCH B

LAST REVISION 01-15-13 | DATE PLOTTED => 21-MAR-2013 | TIME PLOTTED => 10:21

Dist	COUNTY	ROUTE	POST MILES TOTAL PROJECT	SHEET No.	TOTAL SHEETS
12	Ora	91	R0.3	33	48

I-Hong Sun 12-28-12
LICENSED LANDSCAPE ARCHITECT

03-18-13
PLANS APPROVAL DATE

THE STATE OF CALIFORNIA OR ITS OFFICERS OR AGENTS SHALL NOT BE RESPONSIBLE FOR THE ACCURACY OR COMPLETENESS OF SCANNED COPIES OF THIS PLAN SHEET.

LICENSED LANDSCAPE ARCHITECT
I-HONG SUN No. 3-564
Signature
12-31-14
Renewal Date
12-28-12
Date
STATE OF CALIFORNIA

NOTES:

1. FOR ACCURATE RIGHT OF WAY DATA, CONTACT RIGHT OF WAY ENGINEERING AT THE DISTRICT OFFICE.
2. WATER METER, CONTROLLER, AND BACKFLOW IN SOUTH EAST QUADRANT AT KNOT Blvd.

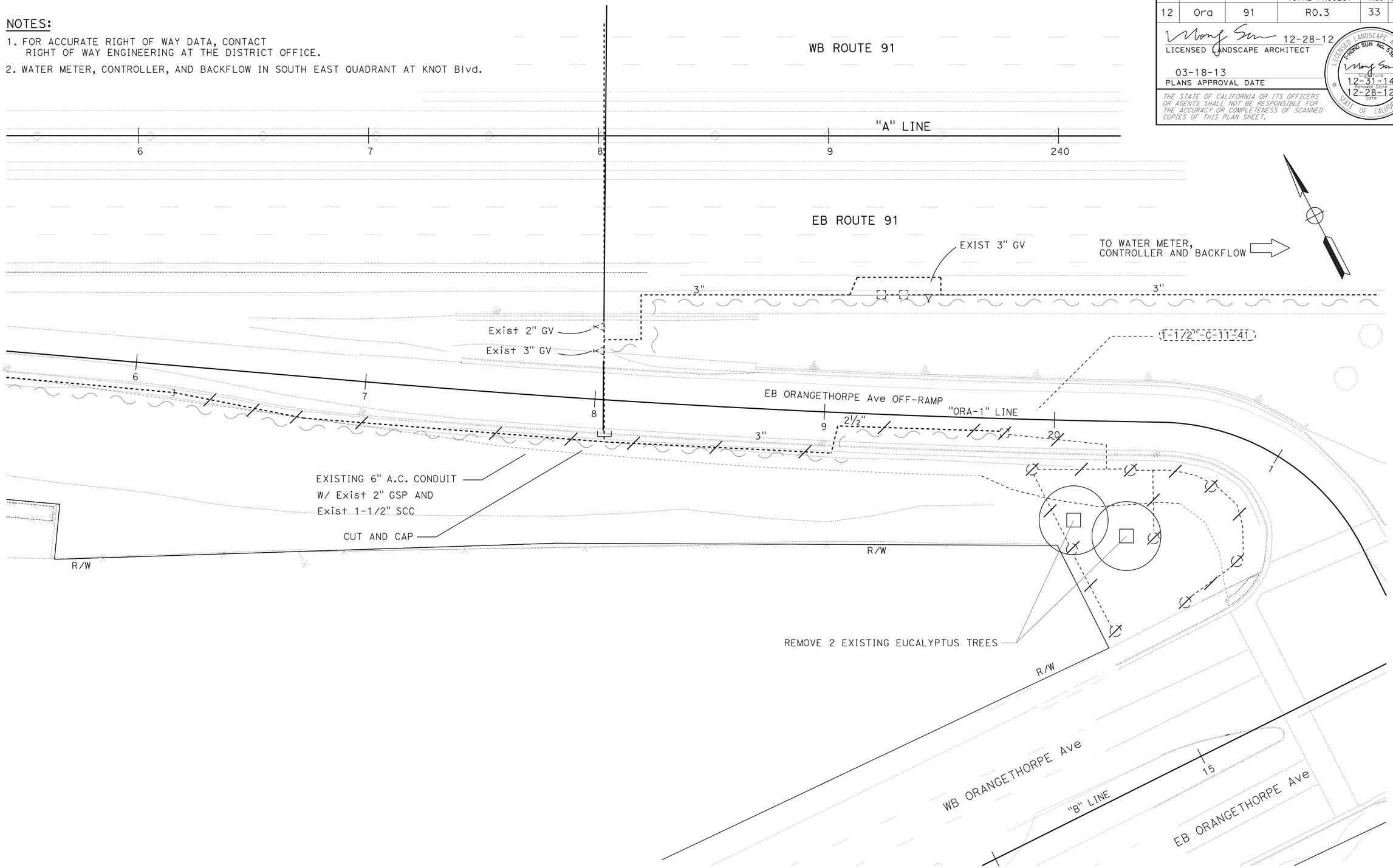

PLANT AND IRRIGATION REMOVAL PLAN

SCALE 1" = 20'

PIR-1

APPROVED FOR PLANT AND IRRIGATION REMOVAL WORK ONLY

REVISED BY | DATE REVISED

JARED GODETT | I-HONG SUN

CALCULATED-DESIGNED BY | CHECKED BY

SENIOR LANDSCAPE ARCHITECT: ERIC DICKSON

STATE OF CALIFORNIA - DEPARTMENT OF TRANSPORTATION
Caltrans
LANDSCAPE ARCHITECTURE

LAST REVISION 01-15-13 | DATE PLOTTED => 21-MAR-2013 | TIME PLOTTED => 10:21

Dist	COUNTY	ROUTE	POST MILES TOTAL PROJECT	SHEET No.	TOTAL SHEETS
12	Ora	91	R0.3	34	48

12-28-12
LICENSED LANDSCAPE ARCHITECT

03-18-13
PLANS APPROVAL DATE

LICENSED LANDSCAPE ARCHITECT — I-HONG SUN No. 3-3614 — Signature — Renewal Date 12-31-14 — Date 12-28-12 — STATE OF CALIFORNIA

THE STATE OF CALIFORNIA OR ITS OFFICERS OR AGENTS SHALL NOT BE RESPONSIBLE FOR THE ACCURACY OR COMPLETENESS OF SCANNED COPIES OF THIS PLAN SHEET.

SPRINKLER SCHEDULE

SYMBOL	TYPE	DESCRIPTION	SPRAY PATTERN	OPERATING PRESSURE (PSI)	PRESSURE COMPENSATING	PLUS/MINUS 5% ② DISCHARGE GALLONS PER MINUTE (GPM)	DISCHARGE GALLONS PER HOUR (GPH)	RADIUS (Ft)	WIDTH x LENGTH (Ft)	MATERIAL	NOZZLE SIZE (INCH)	INLET CONNECTION (NPT INCH)	POSITIVE-LOCKING ADJ ARC STOP	BACKSPLASH PREVENTER	DIFFUSER PIN	DISTANCE CONTROL FLAP	ADJ DISCHARGE	RISER TYPE	RISER MATERIAL PLASTIC	RISER MATERIAL GALVANIZED	RISER SIZE (IPS INCH)	RISER HEIGHT (INCH)	RISER FLOW SHUTOFF DEVICE	⑤ SWING JOINT (TYPE)	RISER SUPPORT	SPRINKLER PROTECTOR (TYPE)	REMARKS
⑤	A-5	Gear driven	H	35	X	2.59	-	30	-	PL	-	¾"	-	-	-	-	-	IV	X	-	¾"	18	-	III	X	-	
[5]	A-5	Gear driven	F	35	X	5.08	-	30	-	PL	-	¾"	-	-	-	-	-	IV	X	-	¾"	18	-	III	X	-	
⑥	A-6	Gear driven	H Q	35	X	2.59 1.23	-	30	-	PL	-	¾"	-	-	-	-	-	-	X	-	¾"	-	-	I	-	-	12" Pop-up

ABBREVIATIONS:

F —— full circle
P —— part circle
F/P — full/part circle
Q —— quarter circle
T —— third circle
H —— half circle
TT —— two third circle
TQ —— three quarter circle
CST — center strip
SST — side strip
EST — end strip
Ft —— feet/foot

GPM —— gallons per minute
GPH —— gallons per hour
Adj —— adjustable
PL —— plastic
B/B —— brass/bronze
B/PL —— brass/plastic
B/B/PL — brass/bronze/plastic
NPT —— national pipe thread
IPS —— iron pipe size
PSI —— pounds per square inch

X IN BOX DENOTES REQUIREMENT

APPLICABLE WHEN CIRCLED BELOW:

1 - See Special Provisions.
② - If a pressure compensating device is specified, the discharge and radii shown reflect its use.
3 - Arc Stop shall be fitted with a nut and bolt.
4 - Vinyl-coated cast iron housing.
⑤ - Swing Joints required adjacent to shoulders, curbs, sidewalks, and dikes.
6 - Sprinkler protector required adjacent to travel way.

1"	1¼"	1½"	2"	2½"	3"
0-12 GPM	12-22 GPM	22-30 GPM	30-50 GPM	50-75 GPM	75-110 GPM

PIPE SIZING CHART

IRRIGATION SPRINKLER SCHEDULE

ISS-1

REVISED BY | DATE REVISED
JARED GODETT | I-HONG SUN
CALCULATED-DESIGNED BY | CHECKED BY
SENIOR LANDSCAPE ARCHITECT
ERIC DICKSON
STATE OF CALIFORNIA - DEPARTMENT OF TRANSPORTATION
Caltrans® LANDSCAPE ARCHITECTURE

LAST REVISION 10-30-12
DATE PLOTTED => 21-MAR-2013
TIME PLOTTED => 10:21

Dist	COUNTY	ROUTE	POST MILES TOTAL PROJECT	SHEET No.	TOTAL SHEETS
12	Ora	91	R0.3	35	48

LICENSED LANDSCAPE ARCHITECT 12-28-12

03-18-13
PLANS APPROVAL DATE

THE STATE OF CALIFORNIA OR ITS OFFICERS OR AGENTS SHALL NOT BE RESPONSIBLE FOR THE ACCURACY OR COMPLETENESS OF SCANNED COPIES OF THIS PLAN SHEET.

LICENSED LANDSCAPE ARCHITECT I-HONG SUN No. 3564 STATE OF CALIFORNIA
Signature 12-31-14
Renewal Date
12-28-12
Date

NOTES:

1. FOR ACCURATE RIGHT OF WAY DATA, CONTACT RIGHT OF WAY ENGINEERING AT THE DISTRICT OFFICE.
2. WATER METER, CONTOLLER, AND BACKFLOW IN SOUTH EAST QUADRANT AT KNOT Blvd.

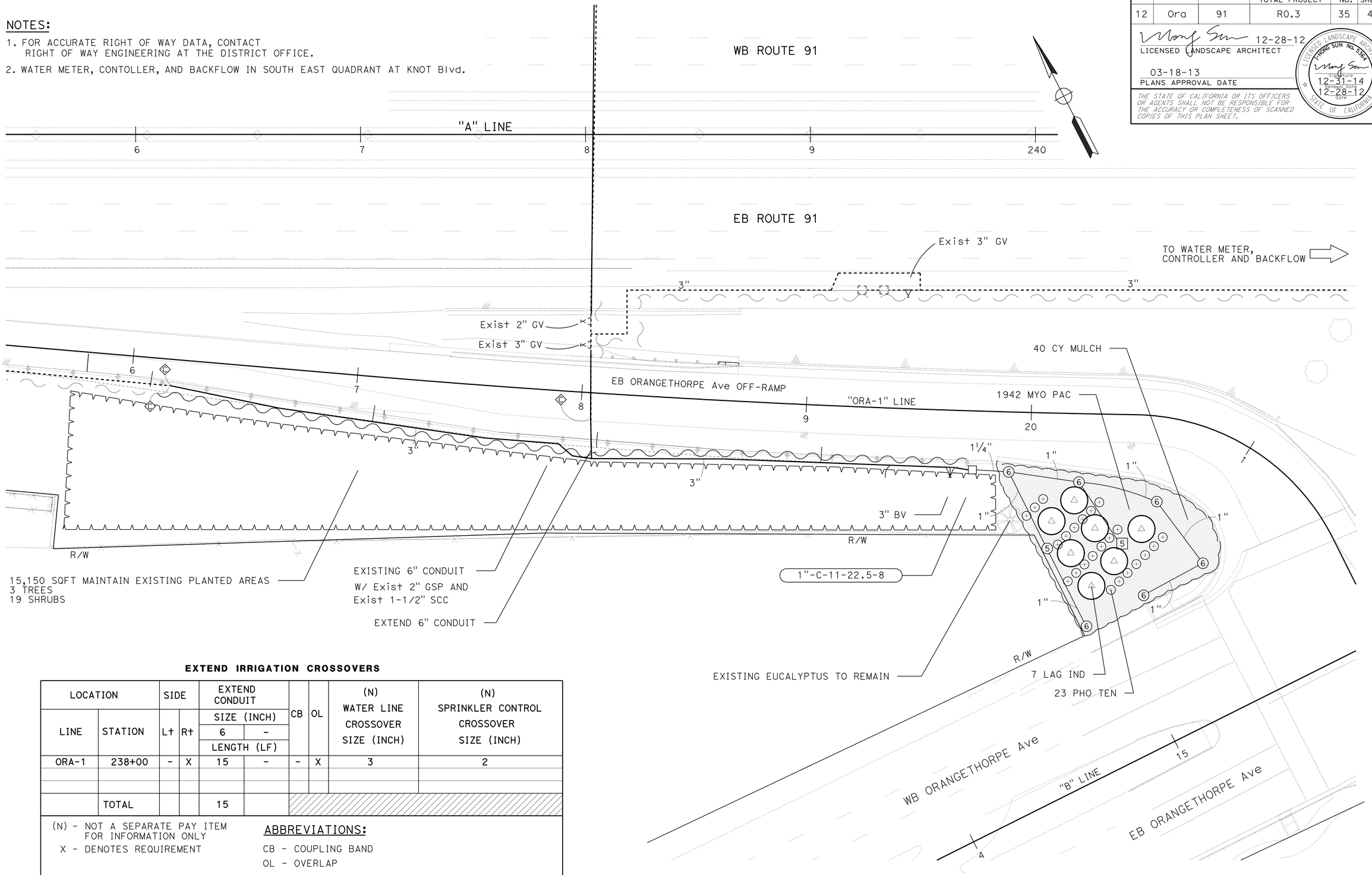

EXTEND IRRIGATION CROSSOVERS

LOCATION		SIDE		EXTEND CONDUIT		CB	OL	(N) WATER LINE CROSSOVER SIZE (INCH)	(N) SPRINKLER CONTROL CROSSOVER SIZE (INCH)
LINE	STATION	L†	R†	SIZE (INCH) 6	SIZE (INCH) -				
				LENGTH (LF)					
ORA-1	238+00	-	X	15	-	-	X	3	2
	TOTAL			15					

(N) - NOT A SEPARATE PAY ITEM FOR INFORMATION ONLY
X - DENOTES REQUIREMENT

ABBREVIATIONS:
CB - COUPLING BAND
OL - OVERLAP

APPROVED FOR IRRIGATION AND PLANTING WORK ONLY

IRRIGATION AND PLANTING PLAN

SCALE 1" = 20'

IPP-1

STATE OF CALIFORNIA - DEPARTMENT OF TRANSPORTATION
LANDSCAPE ARCHITECTURE
SENIOR LANDSCAPE ARCHITECT: ERIC DICKSON
CALCULATED-DESIGNED BY: JARED GODETT
CHECKED BY: I-HONG SUN
REVISED BY
DATE REVISED

LAST REVISION 10-30-12
DATE PLOTTED => 21-MAR-2013
TIME PLOTTED => 10:21

Dist	COUNTY	ROUTE	POST MILES TOTAL PROJECT	SHEET No.	TOTAL SHEETS
12	Ora	91	R0.3	36	48

12-28-12
LICENSED LANDSCAPE ARCHITECT

03-18-13
PLANS APPROVAL DATE

LICENSED LANDSCAPE ARCHITECT
I-HONG SUN No. 3-3614
signature
12-31-14
renewal date
12-28-12
date
STATE OF CALIFORNIA

THE STATE OF CALIFORNIA OR ITS OFFICERS OR AGENTS SHALL NOT BE RESPONSIBLE FOR THE ACCURACY OR COMPLETENESS OF SCANNED COPIES OF THIS PLAN SHEET.

SUBTOTALS PER VALVE ON LATERAL SUPPLY SIDE OF CONTROL VALVE

DESCRIPTION		UNIT	VALVE OR ASSEMBLY NUMBER 11	SUBTOTALS	UNIT	DESCRIPTION	
PLASTIC PIPE SUPPLY LINE SCH 40	1"	ft	200	200	ft	1"	PLASTIC PIPE SUPPLY LINE SCH 40
	1¼"	ft	35	35	ft	1¼"	
RCV	1"		1		EA	1"	RCV
DIP							DIP
SPRINKLER TYPE	A-5	EA	2	2	EA	A-5	SPRINKLER TYPE
	A-6	EA	6	6	EA	A-5	

SUBTOTALS PER PLAN SHEET ON MAIN SUPPLY SIDE OF CONTROL VALVE

DESCRIPTION			UNIT	SHEET NUMBER IPP-1	SUBTOTALS
VALVES AND ASSEMBLIES	RCV	1"	EA	1	1
	BV	3"	EA	1	1
	QCV				
	FV				
	FAU				
PLASTIC PIPE SUPPLY LINE SCH 40		3"	LF	530	530

TOTAL QUANTITIES

TOTALS	UNIT	DESCRIPTION		
				BPA
		ENCLOSURE		BPA
		BOOSTER PUMP		BPA
		STATION		IRRIGATION CONTROLLER
		STATION		IRRIGATION CONTROLLER
		STATION		IRRIGATION CONTROLLER
		SINGLE	CEC	IRRIGATION CONTROLLER
		DOUBLE	CEC	IRRIGATION CONTROLLER
1	EA	1"	RCV	VALVES AND ASSEMBLIES
1	EA	3"	BV	VALVES AND ASSEMBLIES
			QCV	VALVES AND ASSEMBLIES
			FV	VALVES AND ASSEMBLIES
			FAU	VALVES AND ASSEMBLIES
			WSP	CONDUIT
			CSP	CONDUIT
200	LF	1"	SCH 40 PLASTIC PIPE SUPPLY LINE	
35	LF	1¼"	SCH 40 PLASTIC PIPE SUPPLY LINE	
530	LF	3"	SCH 40 PLASTIC PIPE SUPPLY LINE	
			GSP	
			DIP	
2	EA	A-5	SPRINKLER TYPE	
6	EA	A-6	SPRINKLER TYPE	

IRRIGATION QUANTITIES

IQ-1

STATE OF CALIFORNIA - DEPARTMENT OF TRANSPORTATION
Caltrans® LANDSCAPE ARCHITECTURE
SENIOR LANDSCAPE ARCHITECT: ERIC DICKSON
CALCULATED-DESIGNED BY: JARED GODETT
CHECKED BY: I-HONG SUN
REVISED BY
DATE REVISED

LAST REVISION 10-30-12
DATE PLOTTED => 21-MAR-2013
TIME PLOTTED => 10:21

Dist	COUNTY	ROUTE	POST MILES TOTAL PROJECT	SHEET No.	TOTAL SHEETS
12	Ora	91	R0.3	37	48

I-Hong Sun 12-28-12
LICENSED LANDSCAPE ARCHITECT

03-18-13
PLANS APPROVAL DATE

LICENSED LANDSCAPE ARCHITECT — I-HONG SUN No. 3364 — SIGNATURE — 12-31-14 REVIEWED BOTH DATE — 12-28-12 DATE — STATE OF CALIFORNIA

THE STATE OF CALIFORNIA OR ITS OFFICERS OR AGENTS SHALL NOT BE RESPONSIBLE FOR THE ACCURACY OR COMPLETENESS OF SCANNED COPIES OF THIS PLAN SHEET.

ABBREVIATIONS:

AMEND — amendment
B & B — balled and burlapped
Dia — diameter
EA — each
LB — pound
Oz — ounce
Ft — foot/feet
SQFT — square feet
SQYD — square yard
CF — cubic feet
Max — maximum
Min — minimum
NCN — no common name
No. — number
Pkt — packet
PLT ESTB — plant establishment
Pvmt — pavement
R/W — right of way
SF — state furnished
TRVD — traveled

APPLICABLE WHEN CIRCLED:

1 - Quantities shown are "per plant" unless shown as SQFT or SQYD application rates.
2 - Sufficient to receive root ball.
3 - Does not apply to mulch areas.
4 - As shown on plans.
5 - Unless otherwise shown on plans.
6 - See detail.
7 - See Special Provisions.

NOTE:

Underlined portions of botanical name indicate abbreviations used on Planting Plans.

PLANT LIST AND PLANTING SPECIFICATIONS

PLANT GROUP	PLANT No.	SYMBOL	BOTANICAL NAME	COMMON NAME	SIZE	QUANTITY EACH	HOLE SIZE (INCH) Dia	HOLE SIZE (INCH) DEPTH	BASIN TYPE	IRON SULFATE	SOIL AMEND	COMMERCIAL FERTILIZER PLANTING	COMMERCIAL FERTILIZER PLT ESTB	BASIN MULCH	STAKING	PLANTING LIMITS MINIMUM DISTANCE (Ft) FROM TRVD WAY	PVMT	FENCE	WALL	PAVED DITCH	EARTH DITCH	ON CENTER (Ft)	REMARKS
B	1	△	LAGERSTROEMIA INDICA	CREPE MYRTLE	No. 5	7	2	2	II	—	—	—	—	0.50 CF	—	20	6	6	6	6	8	4	SHRUB, MULTI TURNK
	2	⊕	PHORMIUM TENAX 'ATROPURPUREUM'	NEW ZEALAND FLAX	No. 5	23	2	2	II	—	—	—	—	0.50 CF	—	—	6	6	6	6	8	4	SHRUB
F	3		MYOPORUM PACIFICUM	MYOPORUM	In Flat	1942	2	2	II	—	—	—	—	—	—	—	6	6	6	6	8	18"	SHRUB

LEGEND:

MULCH, (TOTAL 40 CY)

MAINTAIN EXISTING PLANTED AREAS

PROTECT EXISTING EUCALYPTUS TREES IN PLACE AND MAINTAIN.

PLANT LIST

PL-1

REVISED BY | DATE REVISED
JARED GODETT | I-HONG SUN
CALCULATED-DESIGNED BY | CHECKED BY
SENIOR LANDSCAPE ARCHITECT: ERIC DICKSON
STATE OF CALIFORNIA - DEPARTMENT OF TRANSPORTATION
Caltrans LANDSCAPE ARCHITECTURE

LAST REVISION 01-15-13 | DATE PLOTTED => 21-MAR-2013 | TIME PLOTTED => 10:21

Dist	COUNTY	ROUTE	POST MILES TOTAL PROJECT	SHEET No.	TOTAL SHEETS
12	Ora	91	R0.3	38	48

Barjesh K. Sharma 12-28-12
REGISTERED ELECTRICAL ENGINEER DATE

03-18-13
PLANS APPROVAL DATE

REGISTERED PROFESSIONAL ENGINEER B.K.SHARMA No. E 19299 Exp 12/31/14 ELECTRICAL STATE OF CALIFORNIA

THE STATE OF CALIFORNIA OR ITS OFFICERS OR AGENTS SHALL NOT BE RESPONSIBLE FOR THE ACCURACY OR COMPLETENESS OF SCANNED COPIES OF THIS PLAN SHEET.

NOTES: (THIS SHEET ONLY)

1. FOR ACCURATE RIGHT OF WAY DATA, CONTACT RIGHT OF WAY ENGINEERING AT THE DISTRICT OFFICE.
2. INSTALL NEW COUNTDOWN PEDESTRIAN SIGNAL.

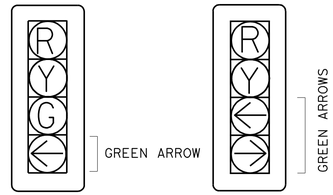

DETAIL A DETAIL B

PHASE DIAGRAM

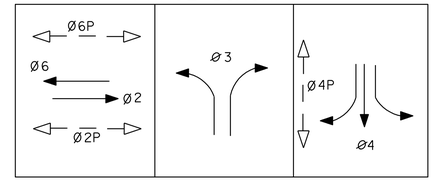

CONDUCTOR AND CONDUIT SCHEDULE

AWG OR CABLE	CONDUCTOR RUN	1	2	3	4	5	6
12CSC	VEHICLE & PED SIGNAL	10	5	2 *	4	3	2 *
3CSC	PPB	6	3	1 *	2	1	
#10	LUMINAIRES		2	2 *	2	2	
#6	SIGNAL SERVICE	2					
12PR#19	SIGNAL INTERCONNECT	1					
DLC	Ø 2 DETECTORS	3	3				
	Ø 3 DETECTORS	2	2	2 *			
	Ø 4 DETECTORS	3			3	2	
	Ø 6 DETECTORS	4			4	4	1 *
	TOTAL DLC	12	5	2 *	7	6	1 *
9#20	APS SIGNAL CABLE				1		
#10	IISNS		2				
	CONDUIT SIZE	2-4"	3½"	3" (E)	3½"	3½"	1½"(E)

* RC EXISTING CONDUCTORS. INSTALL NEW CONDUCTORS
(E) EXISTING

LEGEND :(THIS SHEET ONLY)

1. RL EXISTING MODEL 170 CONTROLLER ASSEMBLY AND BATTERY BACKUP SYSTEM.
2. EXISTING 120/240 V, METERED SERVICE, TYPE III-BF SERVICE EQUIPMENT ENCLOSURE
   ID No. 12-55-091-R-000.446 ADDRESS: 5549 ORANGETHORPE Ave
   100 A, 240 V, 2P, CB (MAIN)
   50 A, 120 V, 1P, CB (SIGNAL)
   30 A, 240 V, 2P, CB (LIGHTING)
   15 A, 120 V, 1P, CB (IISNS)
3. INSTALL TYPE I PEDESTRIAN BARRICADE WITH 2 SIGNS R9-3 AND 2 SIGNS R49 BACK TO BACK.
4. RC EXISTING PEDESTRIAN SIGNAL HEAD. INSTALL LED COUNTDOWN PEDESTRIAN SIGNAL FACE MODULE.

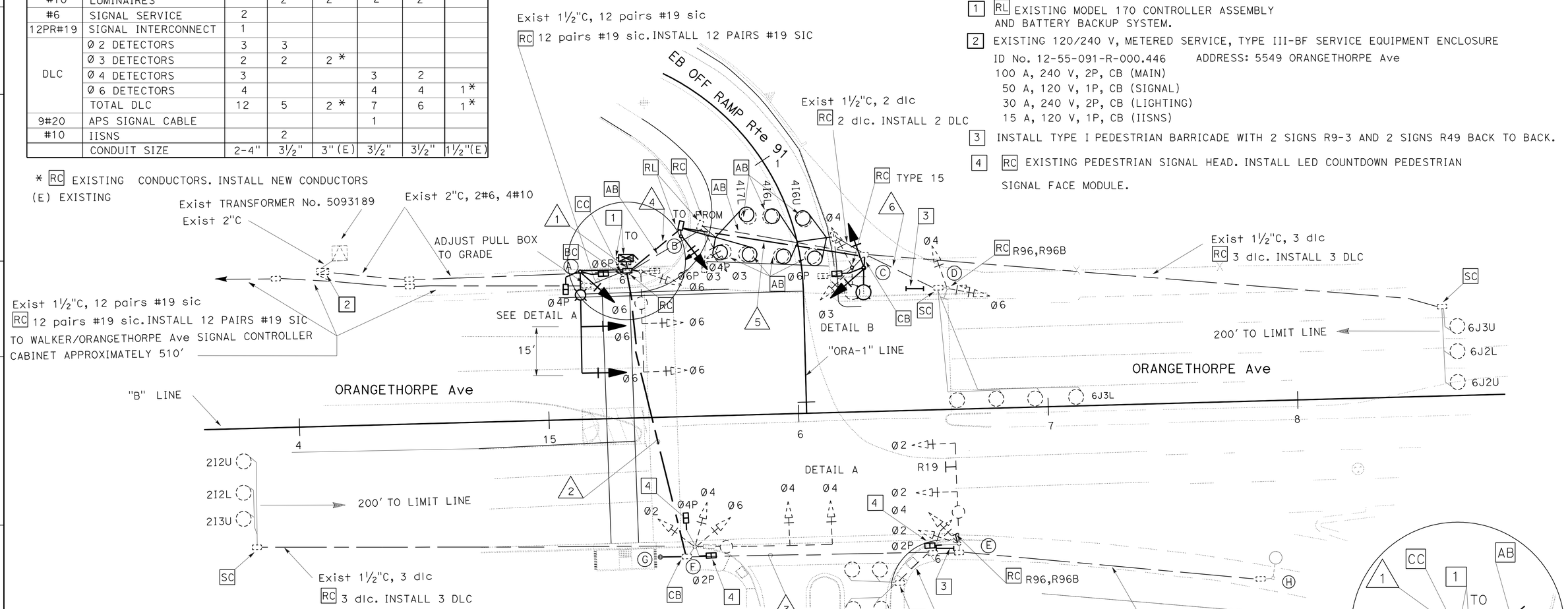

EXISTING POLE AND EQUIPMENT SCHEDULE

No.	Type	STANDARD SMA	STANDARD LMA	VEH SIG MTG Mast Arm	VEH SIG MTG Pole	PED SIG MTG	PPB Ø	PPB ARROW	HPS LUMINAIRE	IISNS
A	26-3-80 (R)	40'(R)	12'(R)	2-MAS(R)	SV-1-T (R)	SP-1-T(R)	—	◄ (R)	200 W(R)	
	26-3-100 (N)	40'(N)	15'(N)	2-MAS(N)	SV-1-T (N)	SP-2-T(N)	4 (N)	◄ (N)	165 W **	
B	1-A RL	—	—	—	TV-1-T RL	SP-1-T(R)	6 (N)	► (N)	—	
C	TYPE 15TS (N)	—	15'(N)	—	SV-2-TA(N)	SP-1-T(N)	6 (N)	◄ (N)	165 W **	
D	1-A	—	—	—	TV-2-TA	—	—	—	—	
E	24-3-80	35'	12'	2-MAS	SV-2-TA	SP-1-T	2 *	◄ *	200W(R) / 165W(N)	
F	29-5-80	55'	12'	2-MAS	SV-3-TA	SP-2-T	2 * / 4 (R)	◄ * / ► (R)	200W(R) / 165W(N)	ORANGETHORPE Ave
G	PPB POST (N)						4 (N)	► (N)		
H	15	—	12'						200W(R) / 165W(N)	

(R) RC EXISTING EQUIPMENT
(N) NEW
APS ACCESSIBLE PEDESTRIAN SIGNAL

* RC EXISTING ppb. INSTALL NEW PPB WITH ACCESSIBLE PEDESTRIAN SIGNAL AT 40" HEIGHT.
** INSTALL NEW LED LUMINAIRE ROADWAY 1.

APPROVED FOR ELECTRICAL WORK ONLY

MODIFY SIGNAL AND LIGHTING

SCALE: 1" = 20'

E-1

01/14/13	01/14/13	BARJESH SHARMA	VANESSA TRUONG
REVISED BY	DATE REVISED	CALCULATED-DESIGNED BY	CHECKED BY

FUNCTIONAL SUPERVISOR: SHAHRAM SHAHRIARI

STATE OF CALIFORNIA - DEPARTMENT OF TRANSPORTATION
Caltrans® ELECTRICAL DESIGN

LAST REVISION 01-14-13 | DATE PLOTTED => 21-MAR-2013 | TIME PLOTTED => 10:21

Dist	COUNTY	ROUTE	POST MILES TOTAL PROJECT	SHEET No.	TOTAL SHEETS
12	Ora	91	R0.3	39	48

Barjesh K. Sharma 12-28-12
REGISTERED ELECTRICAL ENGINEER DATE

03-18-13
PLANS APPROVAL DATE

REGISTERED PROFESSIONAL ENGINEER B.K.SHARMA No. E 19299 Exp 12/31/14 ELECTRICAL STATE OF CALIFORNIA

THE STATE OF CALIFORNIA OR ITS OFFICERS OR AGENTS SHALL NOT BE RESPONSIBLE FOR THE ACCURACY OR COMPLETENESS OF SCANNED COPIES OF THIS PLAN SHEET.

NOTE:
FOR ACCURATE RIGHT OF WAY DATA, CONTACT
RIGHT OF WAY ENGINEERING AT THE DISTRICT OFFICE.

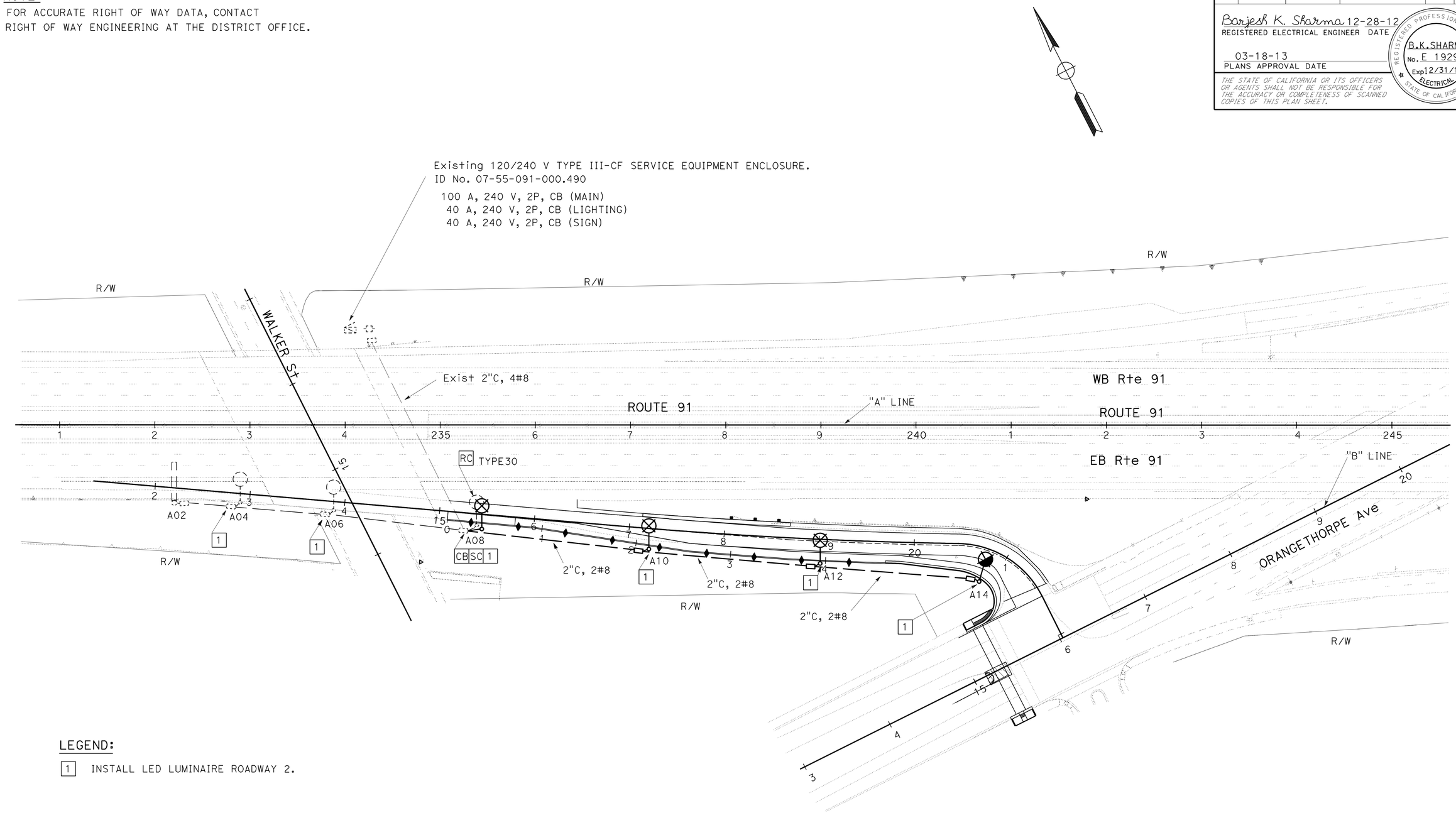

LEGEND:

1 INSTALL LED LUMINAIRE ROADWAY 2.

APPROVED FOR ELECTRICAL WORK ONLY

MODIFY LIGHTING

SCALE: 1" = 50'

E-2

STATE OF CALIFORNIA - DEPARTMENT OF TRANSPORTATION
Caltrans® **ELECTRICAL DESIGN**

FUNCTIONAL SUPERVISOR: SHAHRAM SHAHRIARI
CALCULATED-DESIGNED BY: BARJESH SHARMA
CHECKED BY: VANESSA TRUONG
REVISED BY: 01/14/13
DATE REVISED: 01/14/13

LAST REVISION 01-14-13
DATE PLOTTED => 21-MAR-2013
TIME PLOTTED => 10:22

Dist	COUNTY	ROUTE	POST MILES TOTAL PROJECT	SHEET No.	TOTAL SHEETS
12	Ora	91	R0.3	40	48

Barjesh K. Sharma 12-28-12
REGISTERED ELECTRICAL ENGINEER DATE

03-18-13
PLANS APPROVAL DATE

REGISTERED PROFESSIONAL ENGINEER B.K.SHARMA No. E 19299 Exp12/31/14 ELECTRICAL STATE OF CALIFORNIA

THE STATE OF CALIFORNIA OR ITS OFFICERS OR AGENTS SHALL NOT BE RESPONSIBLE FOR THE ACCURACY OR COMPLETENESS OF SCANNED COPIES OF THIS PLAN SHEET.

MODIFY SIGNAL AND LIGHTING

SHEET No.	SIGNAL HEAD		PULL BOX		BARRICADE	LED COUNTDOWN	ACCESSIBLE	CABLE		CONDUCTOR		DLC	SIC	CONDUIT	
	3-12"	4-12"	No. 5	No. 6	TYPE I PEDESTRIAN	PED SIG FACE MODULE	PED SIGNAL	12CSC	3CSC	No. 6	No. 10		12 PAIRS No. 19	4"	3½"
	EA	EA	EA	EA	EA	EA	EA	FT	FT	FT	FT	FT	FT	FT	FT
E-1	5	1	1	1	2	6	6	1200	600	50	600	3000	525	15	225

SHEET No.	TYPE 15TS		TYPE 26-3-100		TYPE 1		SV-1-T	SV-2-TA	SP-1-T	SP-2-T	DETECTOR LOOPS TYPE E	MODEL 332 FOUNDATION	LED LUMINAIRE ROADWAY 1	PPB	
	POLE	FOUNDATION	POLE	FOUNDATION	POLE	FOUNDATION								POST	FOUNDATION
	EA	EA	EA	EA	EA	EA	EA	EA	EA	EA	EA	EA	EA	EA	EA
E-1	1	1	1	1	-	1	1	1	1	1	7	1	5	1	1

MODIFY LIGHTING

SHEET No.	TYPE 30		TYPE 32		PULL BOX	CONDUIT	CONDUCTOR	LED
	ELECTROLIER	FOUNDATION	ELECTROLIER	FOUNDATION	No. 5	2"	No. 8	LUMINAIRE ROADWAY 2
	EA	EA	EA	EA	EA	FT	FT	EA
E-2	3	3	1	1	3	600	600	6

NOTE:

ELECTRICAL QUANTITIES ARE SHOWN FOR INFORMATION ONLY, NOT A SEPARATE PAY ITEM.

ELECTRICAL QUANTITIES

SCALE: 1" = 50'

APPROVED FOR ELECTRICAL WORK ONLY

E-3

REVISED BY	BARJESH SHARMA
DATE REVISED	01/14/13
CALCULATED-DESIGNED BY	VANESSA TRUONG
CHECKED BY	01/14/13
FUNCTIONAL SUPERVISOR	SHAHRAM SHAHRIARI

STATE OF CALIFORNIA - DEPARTMENT OF TRANSPORTATION
Caltrans ELECTRICAL DESIGN

LAST REVISION 01-14-13 | DATE PLOTTED => 21-MAR-2013 | TIME PLOTTED => 10:22

Dist	COUNTY	ROUTE	POST MILES TOTAL PROJECT	SHEET No.	TOTAL SHEETS
12	Ora	91	R0.3	41	48

REGISTERED CIVIL ENGINEER 12-7-12 DATE

03-18-13
PLANS APPROVAL DATE

REGISTERED PROFESSIONAL ENGINEER Gurinderpal Bhullar No. C48815 Exp. 9-30-14 CIVIL STATE OF CALIFORNIA

THE STATE OF CALIFORNIA OR ITS OFFICERS OR AGENTS SHALL NOT BE RESPONSIBLE FOR THE ACCURACY OR COMPLETENESS OF SCANNED COPIES OF THIS PLAN SHEET.

NOTES:

Unless otherwise specified in the special provisions, all temporary warning signs shall have black legend on orange background.

California code are designated by (CA). Otherwise, Federal (MUTCD) codes are shown.

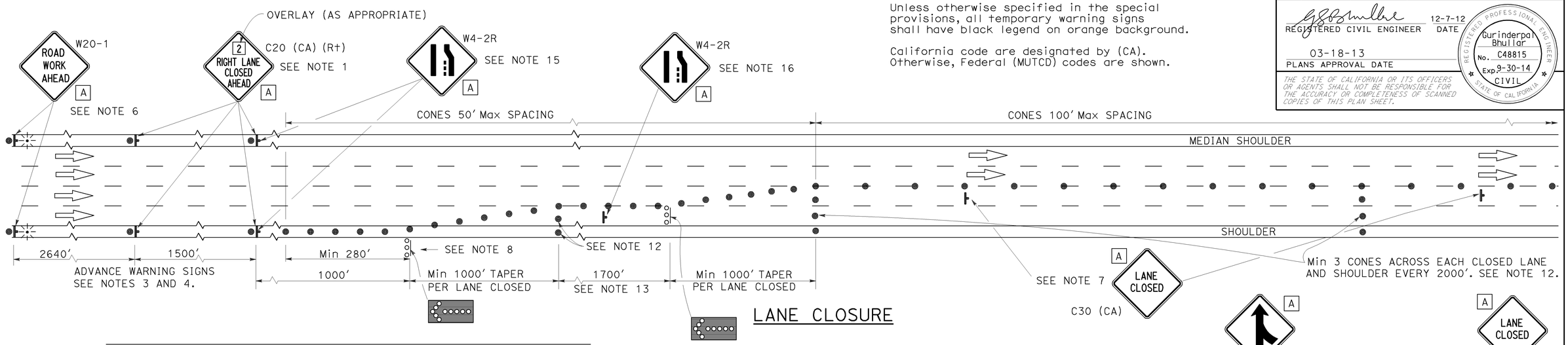

LANE CLOSURE

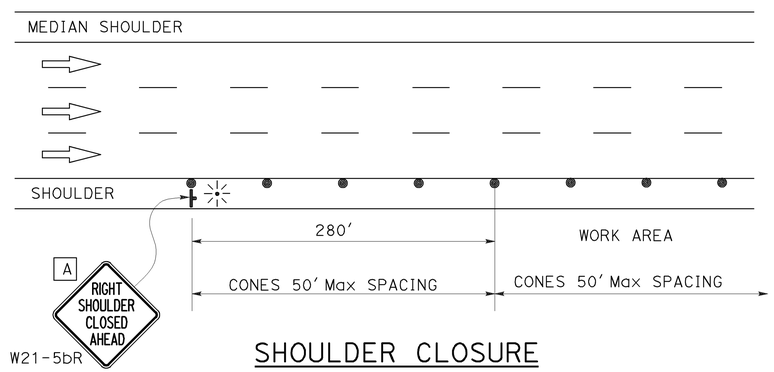

SHOULDER CLOSURE

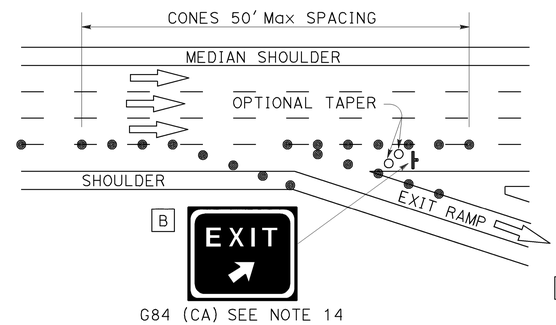

LANE CLOSURE AT EXIT RAMP

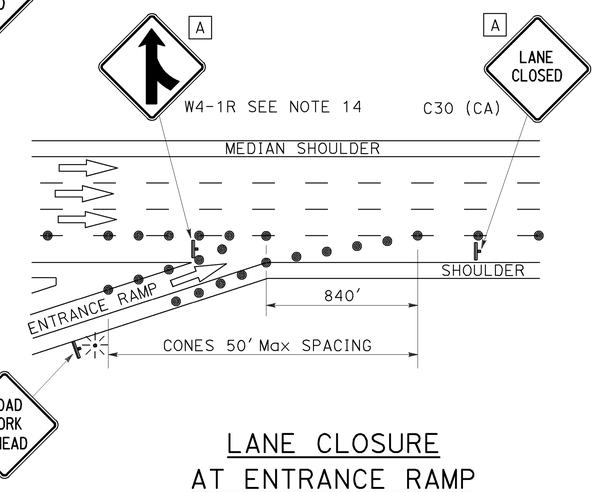

LANE CLOSURE AT ENTRANCE RAMP

NOTES:

1. Median lane closures shall conform to the details for outside lane closures except that C20 (CA) (Lt) signs shall be used.
2. At least one person shall be assigned to provide full time maintenance of traffic control devices for lane closures.
3. Duplicate sign installations are not required:
   a) On opposite shoulder if at least one-half of the available lanes remain open to traffic.
   b) In the median if the width of the median shoulder is less than 8' and the outside lanes are to be closed.
4. Each advance warning sign on each side of the roadway shall be equipped with at least two flags for daytime closure. Each flag shall be at least 16" x 16" in size and shall be orange or fluorescent red-orange in color. Flashing beacons shall be placed at the locations indicated for lane closure during hours of darkness.
5. A C14 (CA) "END ROAD WORK" sign, as appropriate, shall be placed at the end of the lane closure unless the end of work area is obvious or ends within a larger project's limits.
6. If the W20-1 sign would follow within 2000' of a stationary W20-1 or C11 (CA) "ROAD WORK NEXT _____ MILES", use a C20 (CA) sign for the first advance warning sign.
7. Place a C30 (CA) sign every 2000' throughout length of lane closure.
8. One flashing arrow sign for each lane closed. The first flashing arrow sign shall be Type I. All others may be either Type I or Type II.
9. A minimum 1500' of sight distance shall be provided where possible for vehicles approaching the first flashing arrow sign. Lane closures shall not begin at top of crest vertical curve or on a horizontal curve.
10. All cones used for lane closures during the hours of darkness shall be fitted with retroreflective bands (or sleeves) as specified in the specifications.
11. Portable delineators, placed at one-half the spacing indicated for traffic cones may be used instead of cones for daytime closures only.
12. Unless otherwise specified in the special provisions, a minimum of 3 cones shall be placed transversely across each closed lane and shoulder at each location where a taper across a traffic lane ends and every 2000' as shown on the "Lane Closure" detail. Two Type II barricades may be used instead of the 3 cones. The transverse alignment of the cones or barricades on the closed shoulder may be shifted from the transverse alignment to provide access to the work.
13. Unless otherwise specified in the special provisions, the 1700' tangent shown along lane lines shall be used between the 1000' tapers required for each closed traffic lane.
14. Unless otherwise specified in the special provisions, the G84 (CA) and W4-1 signs shall be used as shown.
15. When specified in the special provisions, a W4-2 "LANE ENDS" symbol sign is to be used in place of the C20 (CA) "RIGHT LANE CLOSED AHEAD" sign.
16. The W4-2 "LANE ENDS" symbol sign shown at this location is to be used where the W4-2 sign is used as advance warning as described in Note 15.

SIGN PANEL SIZE (Min)

A	48" x 48"
B	54" x 48"

LEGEND

- TRAFFIC CONE
- TRAFFIC CONE (OPTIONAL TAPER)
- TEMPORARY SIGN
- FLASHING ARROW SIGN (FAS)
- FAS SUPPORT OR TRAILER
- PORTABLE FLASHING BEACON

STATE OF CALIFORNIA
DEPARTMENT OF TRANSPORTATION

TRAFFIC CONTROL SYSTEM FOR LANE CLOSURE ON FREEWAYS AND EXPRESSWAYS

NO SCALE

TCS-1

REVISED BY | DATE REVISED | CALCULATED-DESIGNED BY | CHECKED BY | FUNCTIONAL SUPERVISOR

STATE OF CALIFORNIA - DEPARTMENT OF TRANSPORTATION
Caltrans

LAST REVISION 00-00-00 | DATE PLOTTED => 10-DEC-2012 | TIME PLOTTED => 09:45

Dist	COUNTY	ROUTE	POST MILES TOTAL PROJECT	SHEET No.	TOTAL SHEETS
12	Ora	91	R0.3	42	48

REGISTERED CIVIL ENGINEER 12-7-12 DATE

03-18-13
PLANS APPROVAL DATE

REGISTERED PROFESSIONAL ENGINEER Gurinderpal Bhullar No. C48815 Exp. 9-30-14 CIVIL STATE OF CALIFORNIA

THE STATE OF CALIFORNIA OR ITS OFFICERS OR AGENTS SHALL NOT BE RESPONSIBLE FOR THE ACCURACY OR COMPLETENESS OF SCANNED COPIES OF THIS PLAN SHEET.

TYPICAL RAMP CLOSURES

SIGN PANEL SIZE (Min)

- A 48" x 48"
- B 48" x 30"
- C 30" x 30"
- D 48" x 48" - SPEED OF 50 mph OR MORE
  36" x 36" - SPEED LESS THAN 50 mph
- E 48" x 36"

LEGEND

- TRAFFIC CONE
- TEMPORARY SIGN
- BARRICADES

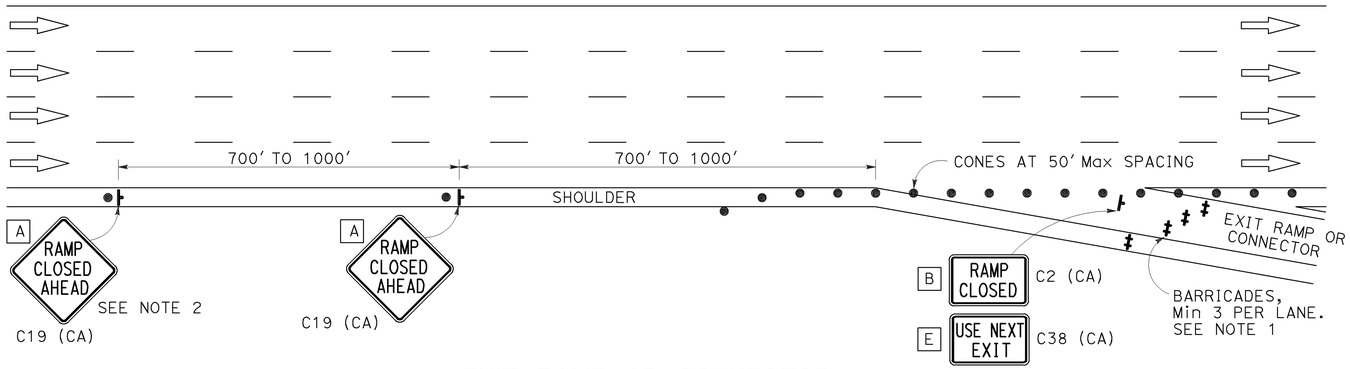

EXIT RAMP OR CONNECTOR

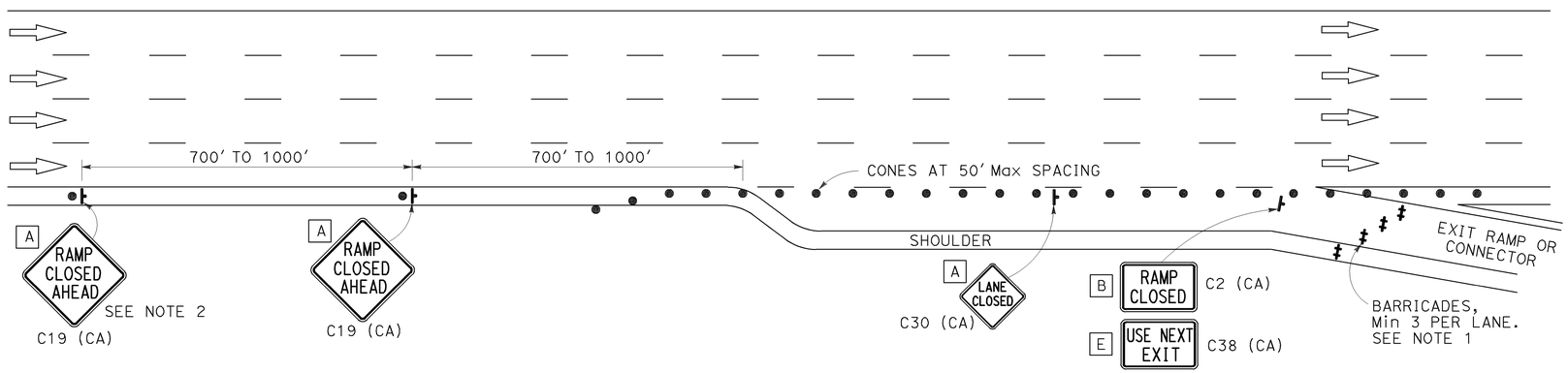

EXIT RAMP OR CONNECTOR WITH ADDITIONAL LANE

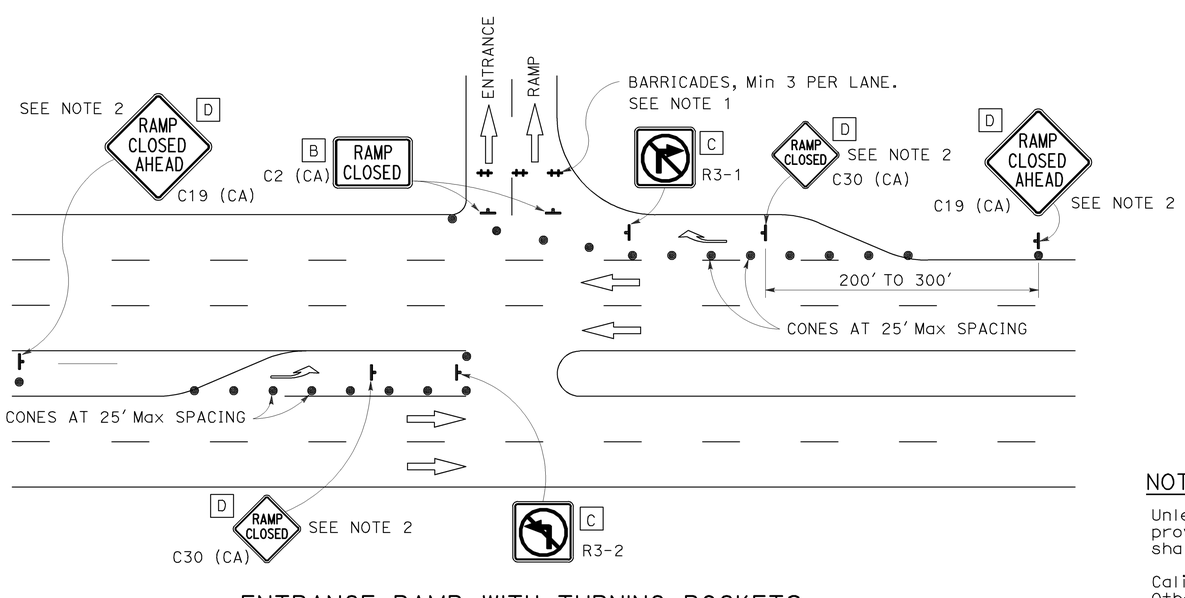

ENTRANCE RAMP WITH TURNING POCKETS

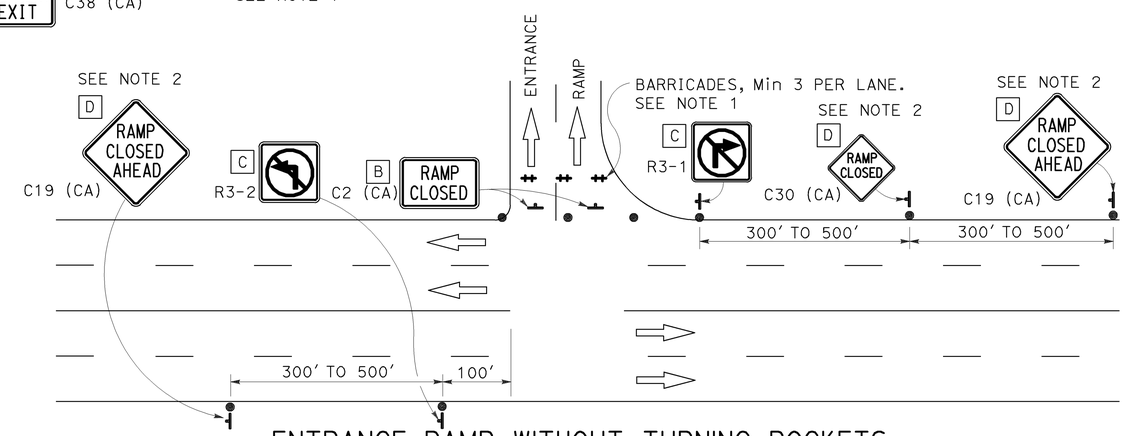

ENTRANCE RAMP WITHOUT TURNING POCKETS

NOTES:

1. Barricades shall be Type I, II, or III for closures lasting one week or less and Type III for closures lasting longer than one week.
2. In addition to placing the C19 (CA) "RAMP CLOSED AHEAD" and C30 (CA) "RAMP CLOSED" signs, black on orange overlay plates with the word "CLOSED" may be mounted, as directed by the Engineer, on all guide signs that refer to the closed ramp. The letter size on the overlay shall be the same as the guide sign.
3. Each advance C19 (CA) "RAMP CLOSED AHEAD" sign shall be equipped with at least two flags for daytime closure. Each flag shall be at least 16" x 16" in size and shall be orange or fluorescent red-orange in color.
4. All cones used for ramp closures during the hours of darkness shall be fitted with retroreflective bands (or sleeves) as specified in the specifications.
5. Portable delineators, placed at one-half the spacing indicated for traffic cones, may be used instead of cones for daytime ramp closures only.
6. At least one person shall be assigned to provide full time maintenance of traffic control devices, unless otherwise directed by the Engineer.
7. The existing "EXIT" sign in the gore area shall be covered during ramp closures.

NOTES:

Unless otherwise specified in the special provisions, all temporary warning signs shall have black legend on orange background.

California code are designated by (CA). Otherwise, Federal (MUTCD) codes are shown.

STATE OF CALIFORNIA
DEPARTMENT OF TRANSPORTATION

TRAFFIC CONTROL SYSTEM FOR RAMP CLOSURE

NO SCALE

TCS-2

STATE OF CALIFORNIA - DEPARTMENT OF TRANSPORTATION
Caltrans

FUNCTIONAL SUPERVISOR | CALCULATED-DESIGNED BY | CHECKED BY | REVISED BY | DATE REVISED

LAST REVISION 00-00-00 | DATE PLOTTED => 10-DEC-2012 | TIME PLOTTED => 09:45

Dist	COUNTY	ROUTE	POST MILES TOTAL PROJECT	SHEET No.	TOTAL SHEETS
12	Ora	91	R0.3	43	48

REGISTERED CIVIL ENGINEER

April 20, 2012
PLANS APPROVAL DATE

Roberta L. McLaughlin No. C40375 Exp. 3-31-13 CIVIL STATE OF CALIFORNIA REGISTERED PROFESSIONAL ENGINEER

THE STATE OF CALIFORNIA OR ITS OFFICERS OR AGENTS SHALL NOT BE RESPONSIBLE FOR THE ACCURACY OR COMPLETENESS OF SCANNED COPIES OF THIS PLAN SHEET.

TO ACCOMPANY PLANS DATED 03-18-13

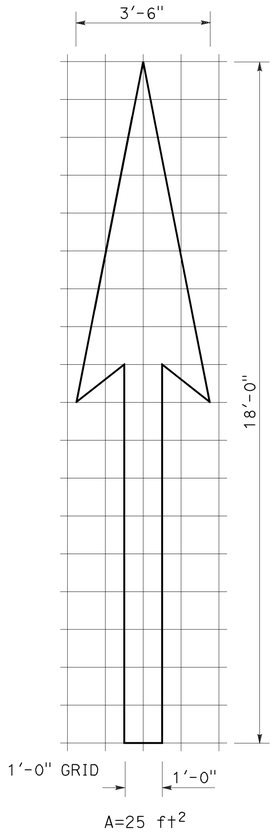

A=25 ft^2

TYPE I 18'-0" ARROW

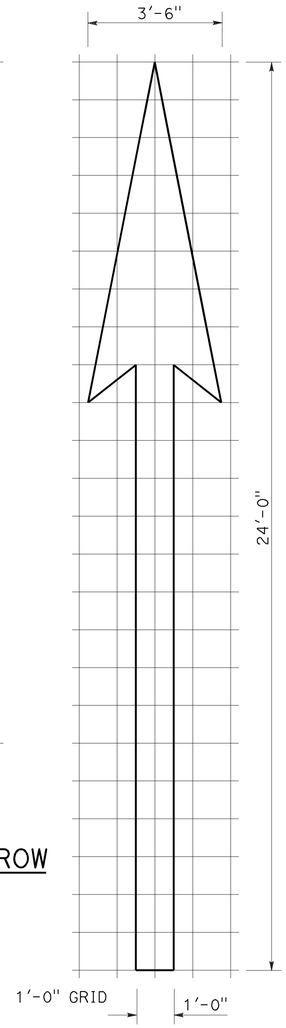

A=31 ft^2

TYPE I 24'-0" ARROW

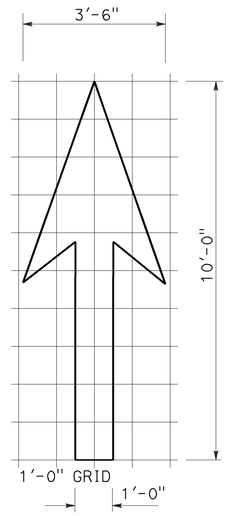

A=14 ft^2

TYPE I 10'-0" ARROW

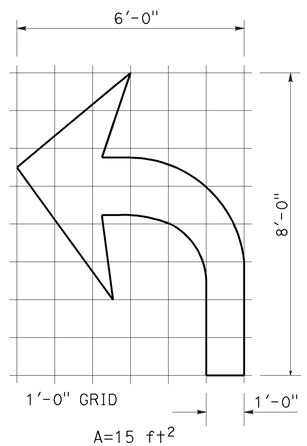

A=15 ft^2

TYPE IV (L) ARROW

(For Type IV (R) arrow, use mirror image)

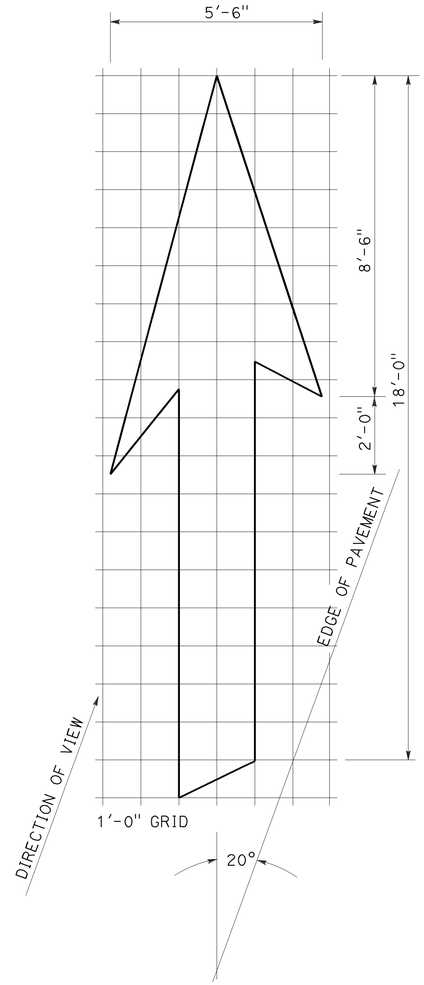

A=42 ft^2

TYPE VI ARROW

Right lane drop arrow (For left lane, use mirror image)

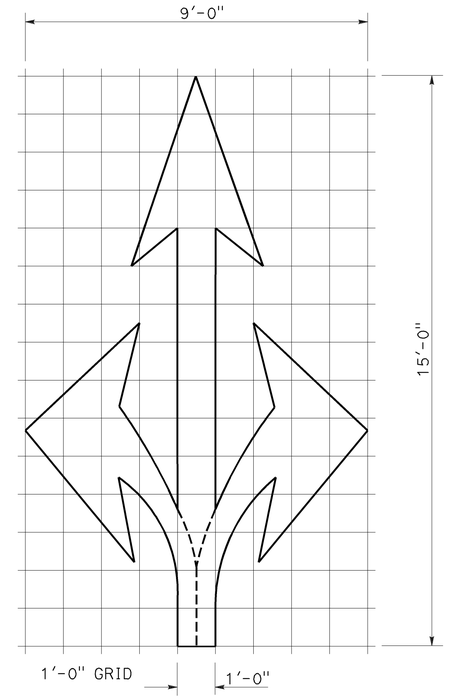

A=36 ft^2

TYPE VIII ARROW

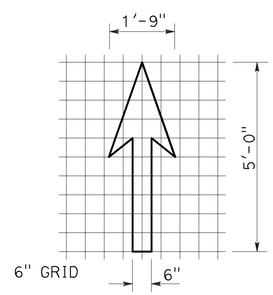

A=3.5 ft^2

BIKE LANE ARROW

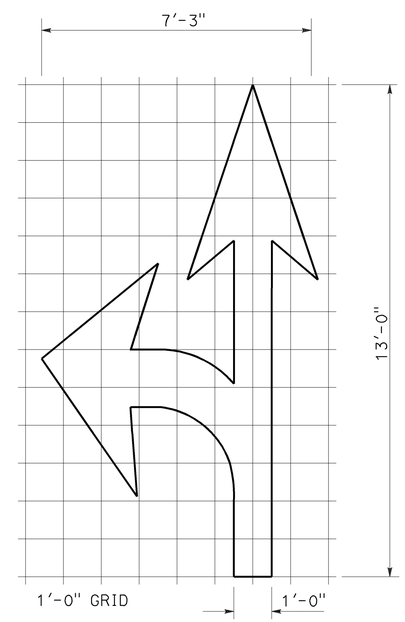

A=27 ft^2

TYPE VII (L) ARROW

(For Type VII (R) arrow, use mirror image)

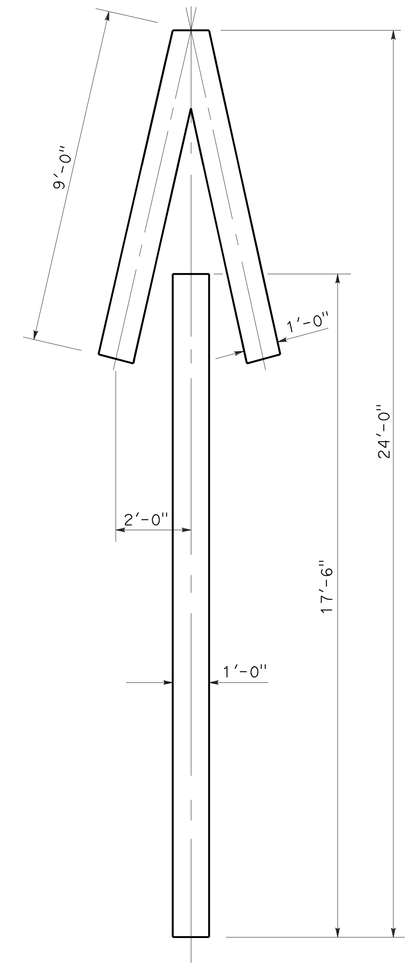

A=33 ft^2

TYPE V ARROW

NOTE:
Minor variations in dimensions may be accepted by the Engineer.

STATE OF CALIFORNIA
DEPARTMENT OF TRANSPORTATION

PAVEMENT MARKINGS ARROWS

NO SCALE

RSP A24A DATED APRIL 20, 2012 SUPERSEDES STANDARD PLAN A24A DATED MAY 20, 2011 - PAGE 13 OF THE STANDARD PLANS BOOK DATED 2010.

REVISED STANDARD PLAN RSP A24A

2010 REVISED STANDARD PLAN RSP A24A

3-14-12

Dist	COUNTY	ROUTE	POST MILES TOTAL PROJECT	SHEET No.	TOTAL SHEETS
12	Ora	91	R0.3	44	48

REGISTERED CIVIL ENGINEER

July 20, 2012
PLANS APPROVAL DATE

Roberta L. McLaughlin
No. C40375
Exp. 3-31-13
CIVIL
REGISTERED PROFESSIONAL ENGINEER
STATE OF CALIFORNIA

THE STATE OF CALIFORNIA OR ITS OFFICERS OR AGENTS SHALL NOT BE RESPONSIBLE FOR THE ACCURACY OR COMPLETENESS OF SCANNED COPIES OF THIS PLAN SHEET.

TO ACCOMPANY PLANS DATED 03-18-13

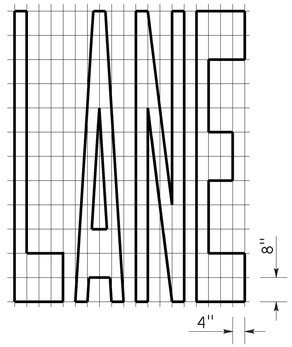

A=24 ft²

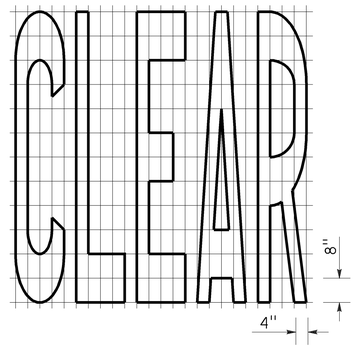

A=27 ft²

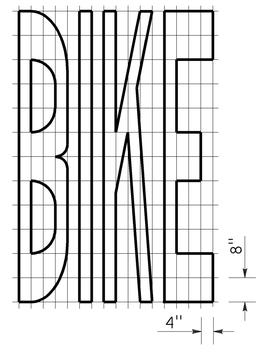

A=21 ft²

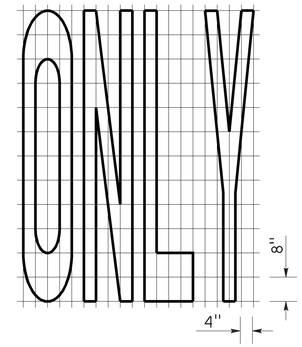

A=22 ft²

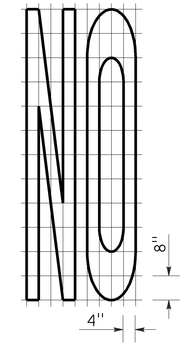

A=14 ft²

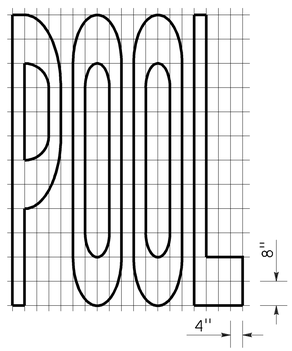

A=23 ft²

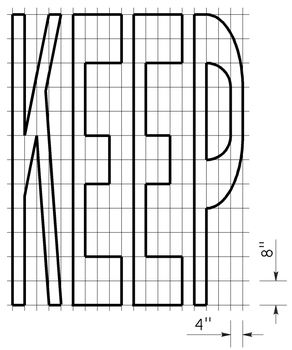

A=24 ft²

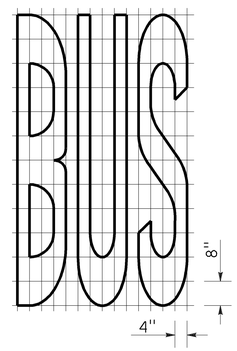

A=20 ft²

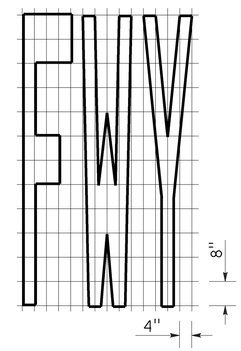

A=16 ft²

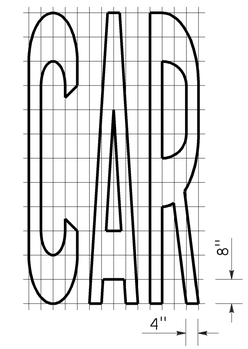

A=17 ft²

WORD MARKINGS			
ITEM	ft²	ITEM	ft²
LANE	24	NO	14
POOL	23	BIKE	21
CAR	17	BUS	20
CLEAR	27	ONLY	22
KEEP	24	FWY	16

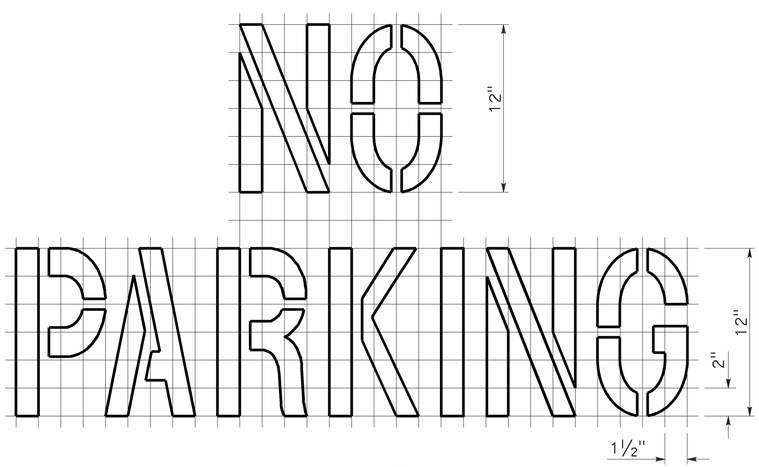

A=2 ft²
See Notes 6 and 7

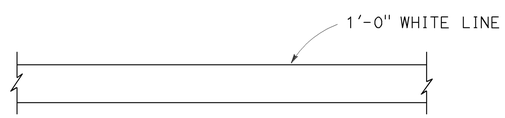

LIMIT LINE (STOP LINE)

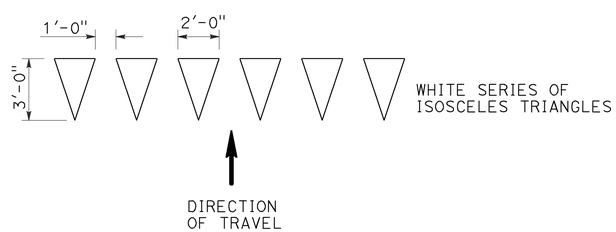

YIELD LINE

NOTES:

1. If a message consists of more than one word, it should read "UP", i.e., the first word should be nearest the driver.
2. The space between words should be at least four times the height of the characters for low speed roads, but not more than ten times the height of the characters. The space may be reduced appropriately where there is limited space because of local conditions.
3. Minor variations in dimensions may be accepted by the Engineer.
4. Portions of a letter, number or symbol may be separated by connecting segments not to exceed 2" in width.
5. The words "NO PARKING" pavement marking is to be used for parking facilities. For typical locations of markings, see Standard Plans A90A and A90B.
6. The words "NO PARKING", shall be painted in white letters no less than 1'-0" high on a contrasting background and located so that it is visible to traffic enforcement officials.

STATE OF CALIFORNIA
DEPARTMENT OF TRANSPORTATION

PAVEMENT MARKINGS WORDS, LIMIT AND YIELD LINES

NO SCALE

RSP A24E DATED JULY 20, 2012 SUPERSEDES STANDARD PLAN A24E
DATED MAY 20, 2011 - PAGE 17 OF THE STANDARD PLANS BOOK DATED 2010.

REVISED STANDARD PLAN RSP A24E

2010 REVISED STANDARD PLAN RSP A24E

6-12-12

TO ACCOMPANY PLANS DATED 03-18-13

Dist	COUNTY	ROUTE	POST MILES TOTAL PROJECT	SHEET No.	TOTAL SHEETS
12	Ora	91	R0.3	45	48

REGISTERED CIVIL ENGINEER

October 19, 2012
PLANS APPROVAL DATE

REGISTERED PROFESSIONAL ENGINEER Glenn DeCou No. C34547 Exp. 9-30-13 CIVIL STATE OF CALIFORNIA

THE STATE OF CALIFORNIA OR ITS OFFICERS OR AGENTS SHALL NOT BE RESPONSIBLE FOR THE ACCURACY OR COMPLETENESS OF SCANNED COPIES OF THIS PLAN SHEET.

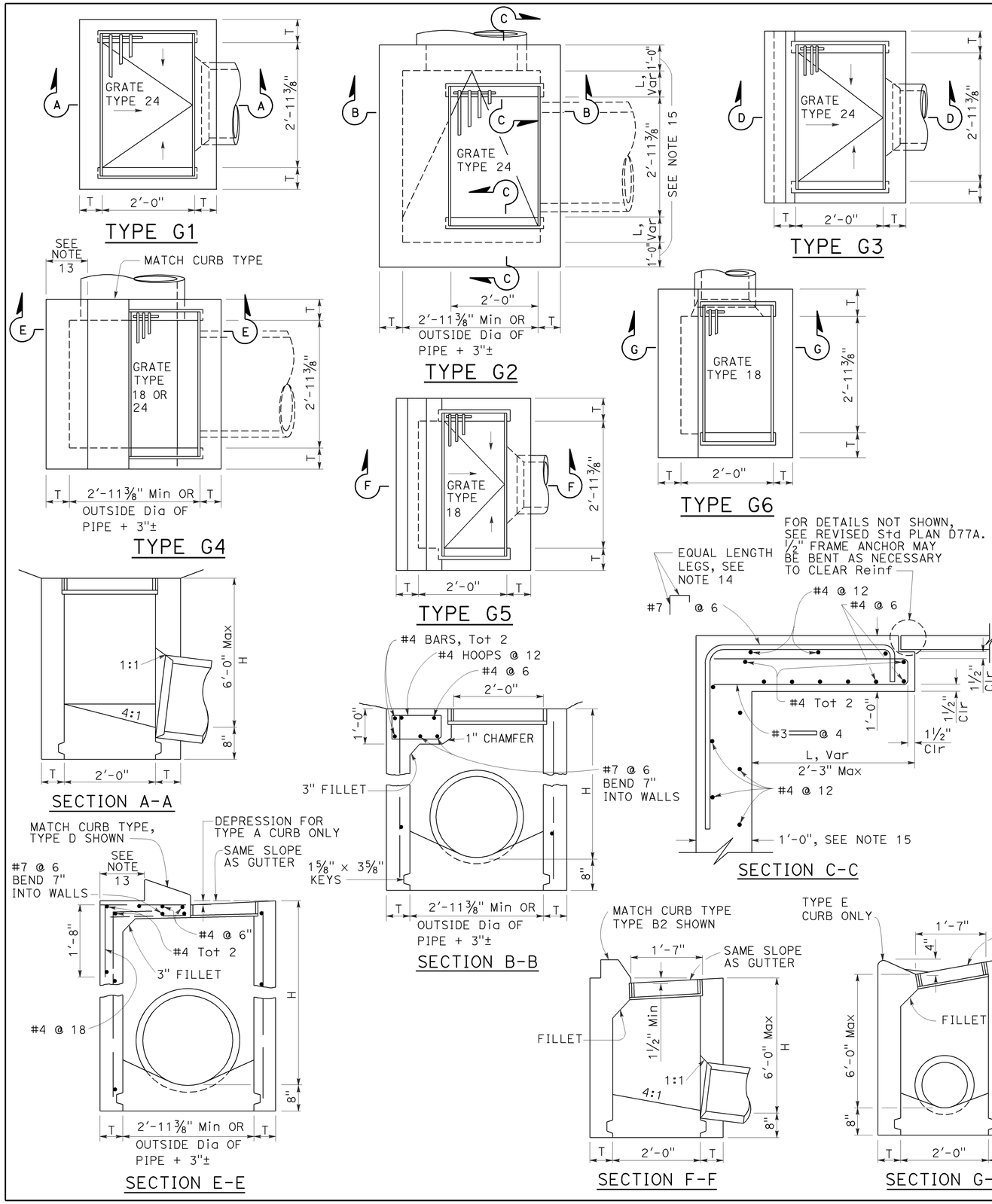

NOTES:

1. "H" is the difference in elevation between the outlet pipe flow line and the normal gutter grade line undepressed.
2. For "T" wall thickness, see Table A below.
3. Wall reinforcing not required when "H" is 8'-0" or less and the unsupported width or length is 7'-0" or less. Walls exceeding these limits shall be reinforced with #4 bars @ 1'-6" ± centers placed 1½" clear to inside of box unless otherwise shown.
4. Inlet bottom reinforcing not required. See Standard Plan D74C for alternative reinforced bottom and alternative half round bottom.
5. Steps-None required where "H" is less than 2'-6". Where "H" is 2'-6" or more, install steps with lowest rung 1'-0" above the floor and highest rung not more than 6" below top of inlet. The distance between steps shall not exceed 1'-0" and shall be uniform throughout the length of the wall. Place steps in the wall without an opening. Steps inserts may be substituted for the bar steps. Step inserts shall comply with State Industrial Safety requirements. See Standard Plan D74C for step details.
6. Details shown apply to both metal and concrete pipe.
7. Pipe(s) can be placed in any wall.
8. Curb section shall match adjacent curb.
9. Basin floors shall have wood trowel finish and a minimum slope of 12:3 from all directions toward outlet pipe.
10. Set inlet so that grate bars are parallel to direction of principal surface flow.
11. See Revised Standard Plans D77A and D77B for grate and frame details and weights of miscellaneous iron and steel.
12. See Standard Plan D78A for gutter depression details.
13. This dimenison will vary with different grates, curbs types, box width and wall thickness.
14. Bar may be rotated as necessary to clear opening. Where "L" is 6" or less, bar may be omitted.
15. Where "L" is 6" or less, wall thickness shall be as shown in Table A.
16. Cast-in-place inlets to be formed around all pipes/stubs intersecting the inlet, and concrete poured in one continuous operation. Precast inlets shall have mortared connections conforming to details for Type GCP Inlet shown on Standard Plan D75B. See Standard Specifications for mortar composition.

TABLE A

CONCRETE QUANTITIES				
TYPE	H=3'-0" TO 8'-0" (T=6")		H=8'-1" TO 20'-0" (T=8")	
	H=3'-0" (CY)	ADDITIONAL PCC PER FOOT (CY)	H=8'-1" (CY)	ADDITIONAL PCC PER FOOT (CY)
G-1	0.95	0.220	See Note A	SEE NOTE A
G-2*	1.31	0.255	3.50	0.357
G-3	1.03	0.220	See Note A	SEE NOTE A
G-4* (TYPE 24)	1.27	0.255	3.48	0.357
G-4* (TYPE 18)	1.30	0.255	3.50	0.357
G-5	1.02	0.220	SEE NOTE A	SEE NOTE A
G-6	1.04	0.220	SEE NOTE A	SEE NOTE A

TABLE BASED ON 8" FLOOR SLAB. NO DEDUCTIONS ARE TO BE MADE TO THESE QUANTITIES BECAUSE OF PIPE OPENINGS, DIFFERENT FLOOR ALTERNATIVES OR DIFFERENT CURB TYPES. * QUANTITIES FOR TYPE G-2 AND G-4 INLETS BASED ON THE MINIMUM INTERIOR DIMENSIONS.

NOTE A:

Maximum allowable height 6'-0".

STATE OF CALIFORNIA
DEPARTMENT OF TRANSPORTATION

DRAINAGE INLETS

NO SCALE

RSP D73 DATED OCTOBER 19, 2012 SUPERSEDES STANDARD PLAN D73 DATED MAY 20, 2011 - PAGE 156 OF THE STANDARD PLANS BOOK DATED 2010.

REVISED STANDARD PLAN RSP D73

2010 REVISED STANDARD PLAN RSP D73

7-19-12

Dist	COUNTY	ROUTE	POST MILES TOTAL PROJECT	SHEET No.	TOTAL SHEETS
12	Ora	91	R0.3	46	48

Raymond Don Tsztoo
REGISTERED CIVIL ENGINEER

July 20, 2012
PLANS APPROVAL DATE

REGISTERED PROFESSIONAL ENGINEER Raymond Don Tsztoo No. C37332 Exp. 6-30-14 CIVIL STATE OF CALIFORNIA

THE STATE OF CALIFORNIA OR ITS OFFICERS OR AGENTS SHALL NOT BE RESPONSIBLE FOR THE ACCURACY OR COMPLETENESS OF SCANNED COPIES OF THIS PLAN SHEET.

TO ACCOMPANY PLANS DATED 03-18-13

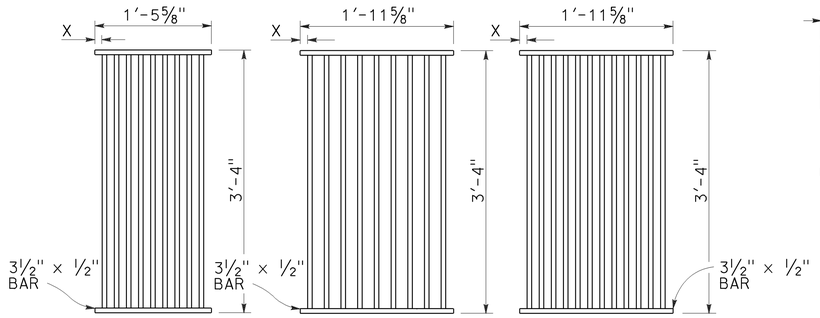

TYPE 18-9
1⅜" Clear spacing. Use within the roadbed on highways where bicycles and pedestrians are excluded.

TYPE 24-9
2" Clear spacing. Use in locations off the roadbed on all types of highways.

TYPE 24-12
1⅜" Clear spacing. Use within the roadbed on highways where bicycles and pedestrians are excluded.

RECTANGULAR GRATE DETAILS
(See table below)

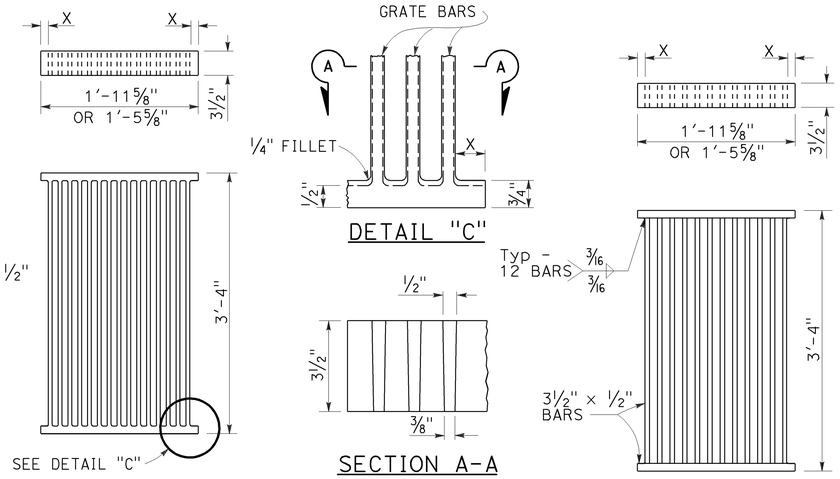

ALTERNATIVE CAST DUCTILE IRON GRATE OR CAST CARBON STEEL GRATE

ALTERNATIVE WELDED GRATE

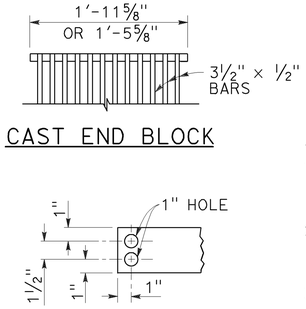

CAST END BLOCK

END OF BAR

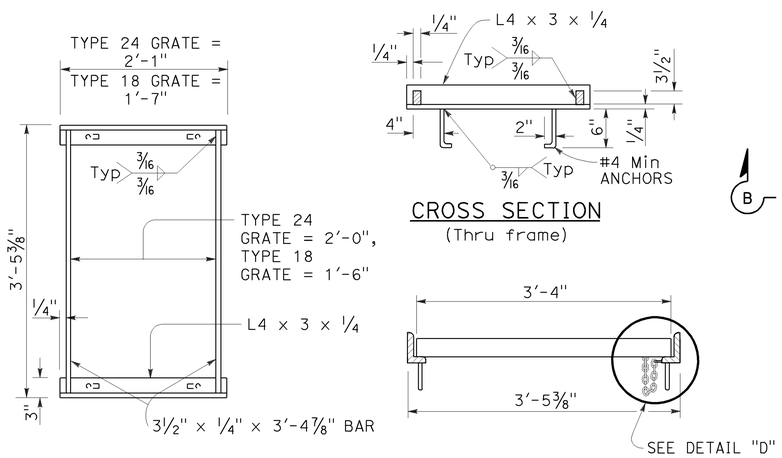

TYPICAL FRAME

CROSS SECTION
(Thru frame)

LONGITUDINAL SECTION
(Thru frame and grate)

RECTANGULAR FRAME DETAILS
(For all rectangular grates)

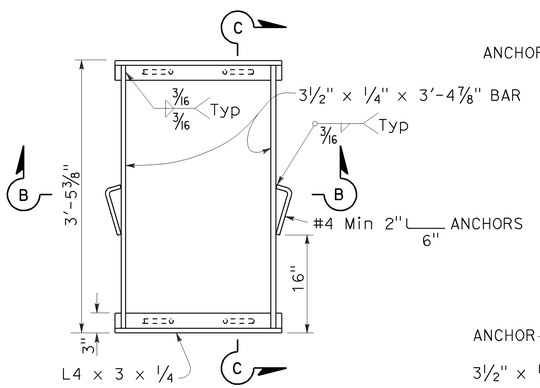

TYPICAL FRAME

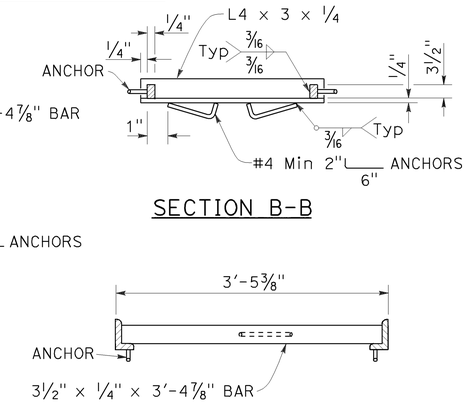

SECTION B-B

SECTION C-C

ALTERNATIVE ANCHOR FOR RECTANGULAR FRAME
(For details not shown, See Rectangular Frame Details)

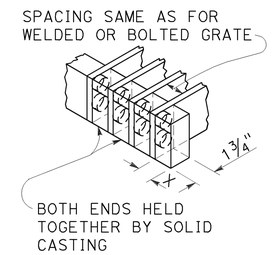

ALTERNATIVE CAST DUCTILE IRON OR CAST CARBON STEEL END BLOCK GRATE

NOTES:

1. Grate type numbers refer to approximate width of grate in inches and number of bars, respectively.
2. Contractor has the option of using cast ductile iron, cast carbon steel, welded, bolted, or cast end block grate.
3. Rounded top of bars optional on all grates.
4. Pipe inlets with a grate shall be placed so that bars parallel direction of principle surface flow.
5. Complete joint penetration butt welds may be substituted for the fillet welds on all anchors.
6. Standard square, hexagon, round or equivalent headed anchors may be substituted for the right angle hooks on the anchors shown on this plan.
7. Grate and frame weights are based on welded grates (weights of face angles, steps, protection bars, etc. are not included).
8. Connect chain to grate and frame only at locations shown on the plans. When chain is required, do not use cast ductile iron grates.

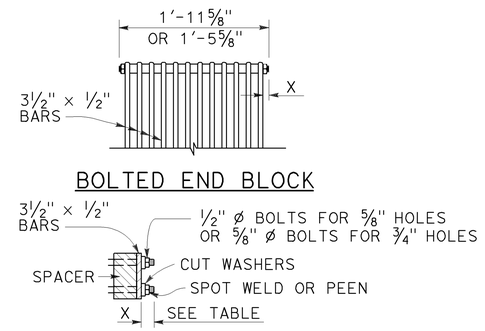

BOLTED END BLOCK

BOLTING DETAIL

ALTERNATIVE BOLTED GRATE

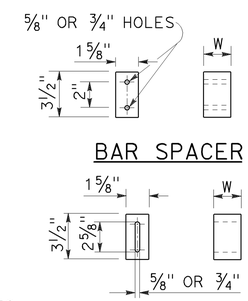

BAR SPACER

ALTERNATIVE SPACER
W = 1⅜" or 2"

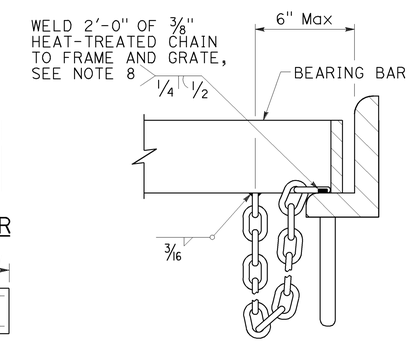

DETAIL "D"
(Steel grates only)

GRATE BAR SPACING TABLE

TYPE	No. OF BARS	CLEAR BAR SPACING	X
18-9	9	1⅜"	1 1/16"
24-9	9	2"	1 9/16"
24-12	12	1⅜"	1¼"

INLET TYPE	COVER TYPE	WEIGHT LB
OS	PLATE	174
OL-7	PLATE	170
OL-10	PLATE	170
OL-14	PLATE	170
OL-21	PLATE	170
OCP	PLATE	112
OCPI	PLATE	112
OCPI	REDWOOD	42
OMP	PLATE	177
OMPI	PLATE	177

INLET TYPE	GRATE TYPE	No. OF GRATES	WEIGHT LB
GDO	24-12	2	634
GOL-7	24-12	1	326
GOL-10	24-12	1	326
GO,G1,G2,G3,G4 (TYPE 24)	24-9	1	263
	24-12	1	326
G4 (TYPE 18),G5,G6	18-9	1	249
GT1	18-9	2	498
GT2	18-9	2	498
GT3	24-12	2	652
GT4	24-12	2	652
TRASH RACK			22
GRATE CHAIN			3

BASIS FOR Misc IRON & STEEL FINAL PAY WEIGHTS FOR DRAINAGE INLETS
(See Note 7)

STATE OF CALIFORNIA
DEPARTMENT OF TRANSPORTATION

GRATE DETAILS

NO SCALE

RSP D77A DATED JULY 20, 2012 SUPERSEDES STANDARD PLAN D77A DATED MAY 20, 2011 - PAGE 164 OF THE STANDARD PLANS BOOK DATED 2010.

REVISED STANDARD PLAN RSP D77A

2010 REVISED STANDARD PLAN RSP D77A

6-13-12

DIST	COUNTY	ROUTE	POST MILES TOTAL PROJECT	SHEET NO.	TOTAL SHEETS
12	Ora	91	R0.3	47	48

REGISTERED ELECTRICAL ENGINEER

January 20, 2012
PLANS APPROVAL DATE

REGISTERED PROFESSIONAL ENGINEER Jeffery G. McRae No. E14512 Exp. 6-30-12 ELECTRICAL STATE OF CALIFORNIA

THE STATE OF CALIFORNIA OR ITS OFFICERS OR AGENTS SHALL NOT BE RESPONSIBLE FOR THE ACCURACY OR COMPLETENESS OF SCANNED COPIES OF THIS PLAN SHEET.

TO ACCOMPANY PLANS DATED 03-18-13

2010 REVISED STANDARD PLAN RSP ES-8A

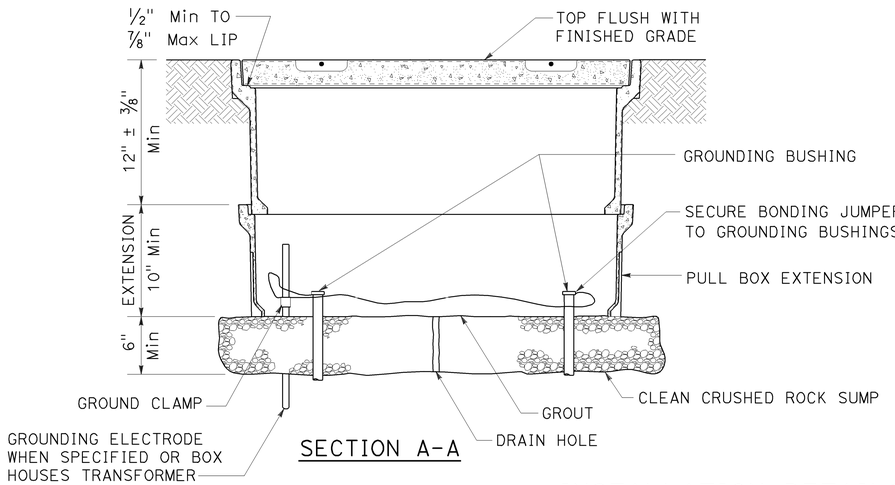

SECTION A-A

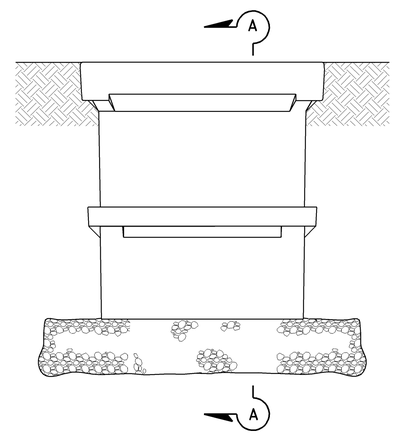

SIDE VIEW

INSTALLATION DETAILS

DETAIL A

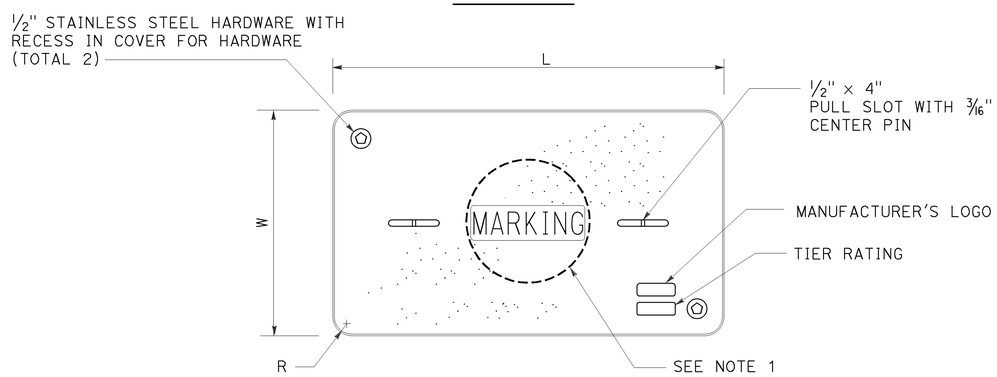

COVER TOP VIEW

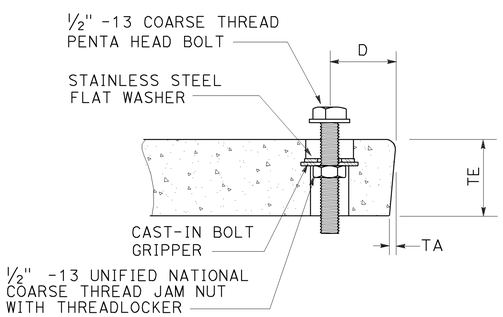

TYPICAL COVER CAPTIVE BOLT

OR SIMILAR

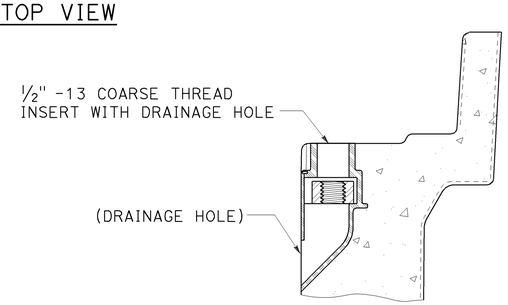

TYPICAL THREADED INSERT

OR SIMILAR

DIMENSION TABLE										
PULL BOX	PULL BOX			COVER						
	MINIMUM DEPTH BOX	MINIMUM DEPTH EXTENSION	MAXIMUM WEIGHT	L	W	R	TE	TA	D	MAXIMUM WEIGHT
No. 3 1/2	12"	N/A	40 lb	1' - 3 3/8"	10 1/8"	1 3/8"	2"	1/8"	1 3/4"	30 lb
No. 5	12"	10"	55 lb	1' - 11 1/4"	1' - 1 3/4"	1 3/8"	2"	1/8"	1 3/4"	60 lb
No. 6	12"	10"	70 lb	2' - 6 1/2"	1' - 5 1/2"	1 3/8"	2"	1/8"	2"	85 lb

NOTES ON PULL BOXES:

1. Pull box covers must be marked as follows: "SERVICE" Service circuits between service point and service disconnect; "SPRINKLER-CONTROL" sprinkler control circuits, 50 V or less; "CALTRANS" on all pull boxes, except pull boxes marked "SPRINKLER-CONTROL"; and "TELEPHONE" Telephone service;

   A) No. 3 1/2 pull box.
      1) "SIGNAL" - Traffic signal circuits with or without street or sign lighting circuits.
      2) "ST LIGHTING" - Street or sign lighting circuits where voltage is under 600 V.

   B) No. 5, 6, 9 or 9A pull box.
      1) "TRAFFIC SIGNAL" - Traffic signal circuits with or without street or sign lighting circuits.
      2) "STREET LIGHTING" - Street or sign lighting circuits where voltage is under 600 V.
      3) "STREET LIGHTING-HIGH VOLTAGE" - Street or sign lighting circuits where voltage is above 600 V.
      4) "IRRIGATION" - Circuits to irrigation controller 120 V or more.
      5) "RAMP METER" - Ramp meter circuits.
      6) "COUNT STATION" - Count or speed monitor circuits.
      7) "COMMUNICATIONS" - Communication circuits.
      8) "TOS COMMUNICATIONS" - TOS communication line.
      9) "TOS POWER" - TOS power.
      10) "TDC POWER" - Telephone demarcation cabinet power.
      11) "CCTV" - Closed circuit television circuits.
      12) "TMS" - Traffic monitoring station circuits.
      13) "CMS" - Changeable message sign circuits.
      14) "HAR" - Highway advisory radio circuits.

2. The nominal dimensions of the opening in which the cover sets must be the same as the cover dimensions (L and W) plus 1/8" or greater.
3. Covers and boxes must be interchangeable with California Standard. When interchanged with a standard, the top surfaces must be flush within 1/8". Top outside radius of covers and pull boxes must have a 1/8" radius.
4. Pull box extension may be another pull box as long as the bottom edge of the pull box can fit into the cover opening.

STATE OF CALIFORNIA
DEPARTMENT OF TRANSPORTATION

ELECTRICAL SYSTEMS (PULL BOX)

NO SCALE

RSP ES-8A DATED JANUARY 20, 2012 SUPPLEMENTS THE STANDARD PLANS BOOK DATED 2010.

REVISED STANDARD PLAN RSP ES-8A

Dist	COUNTY	ROUTE	POST MILES TOTAL PROJECT	SHEET No.	TOTAL SHEETS
12	Ora	91	R0.3	48	48

REGISTERED ELECTRICAL ENGINEER

July 20, 2012
PLANS APPROVAL DATE

REGISTERED PROFESSIONAL ENGINEER
Jeffery G. McRae
No. E14512
Exp. 6-30-14
ELECTRICAL
STATE OF CALIFORNIA

THE STATE OF CALIFORNIA OR ITS OFFICERS OR AGENTS SHALL NOT BE RESPONSIBLE FOR THE ACCURACY OR COMPLETENESS OF SCANNED COPIES OF THIS PLAN SHEET.

TO ACCOMPANY PLANS DATED 03-18-13

ISOFOOTCANDLE CURVE - MINIMUM

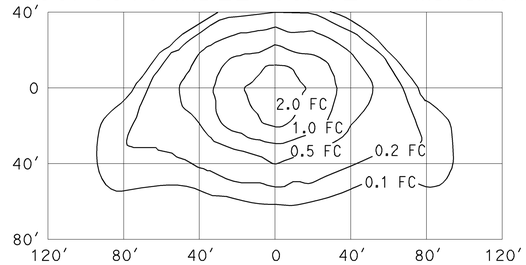

TYPE III MEDIUM CUTOFF

Cutoff Luminaire
34′ Mounting Height
Lamp operated at 22,000 lm
200-W high pressure sodium lamp
ANSI Designation S66

ISOFOOTCANDLE CURVE - MINIMUM

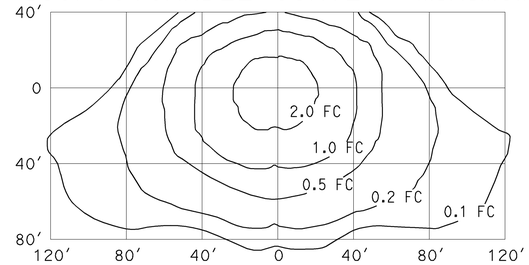

TYPE III MEDIUM CUTOFF

Cutoff Luminaire
40′ Mounting Height
Lamp operated at 37,000 lm
310-W high pressure sodium lamp
ANSI Designation S67

ISOFOOTCANDLE CURVE - MINIMUM

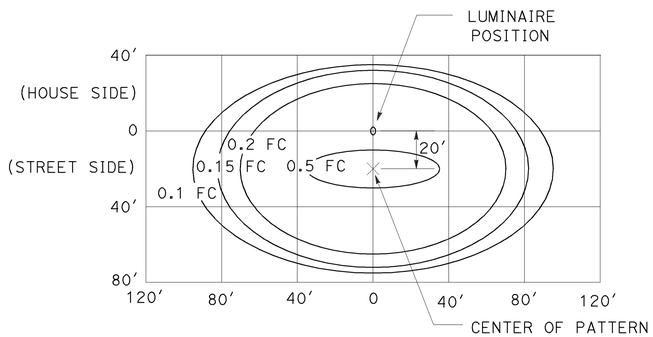

LED LUMINAIRE ROADWAY 1

200-W HPS Equivalent at 34′ Mounting Height

ISOFOOTCANDLE CURVE - MINIMUM

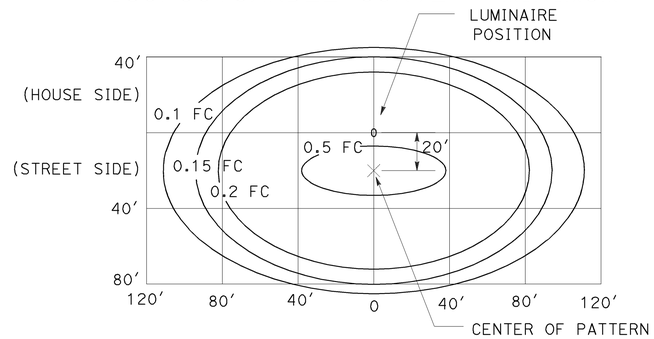

LED LUMINAIRE ROADWAY 2

310-W HPS Equivalent at 40′ Mounting Height

ISOFOOTCANDLE CURVE - MINIMUM

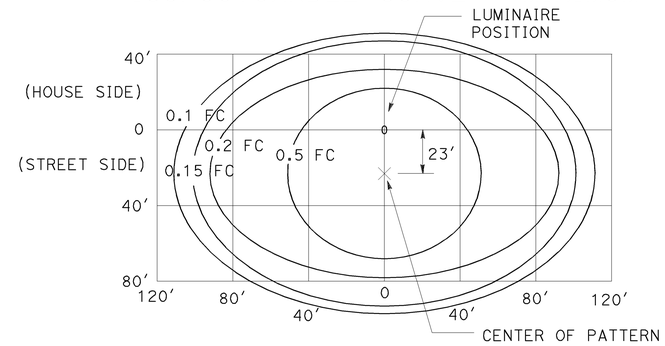

LED LUMINAIRE ROADWAY 4

400-W HPS Equivalent at 40′ Mounting Height

ISOFOOTCANDLE CURVE - MINIMUM

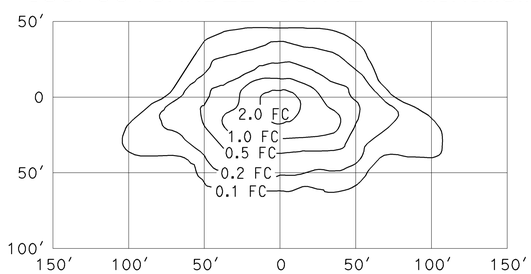

TYPE III MEDIUM CUTOFF

Cutoff Luminaire
30′ Mounting Height
Lamp operated at 16,000 lm
150-W high pressure sodium lamp
ANSI Designation S55

ISOFOOTCANDLE CURVE - MINIMUM

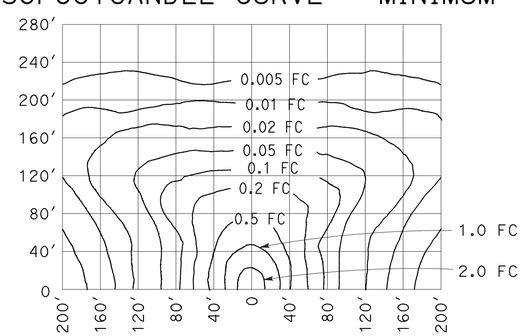

LOW PRESSURE SODIUM LUMINAIRE

40′ Mounting Height
Lamp operated at 33,000 lm
180-W low pressure sodium lamp

STATE OF CALIFORNIA
DEPARTMENT OF TRANSPORTATION

ELECTRICAL SYSTEMS (ISOFOOTCANDLE DIAGRAMS)

NO SCALE

RSP ES-10A DATED JULY 20, 2012 SUPPLEMENTS THE STANDARD PLANS BOOK DATED 2010.

REVISED STANDARD PLAN RSP ES-10A

2010 REVISED STANDARD PLAN RSP ES-10A

2-16-12