Dist	COUNTY	ROUTE	POST MILES TOTAL PROJECT	SHEET No.	TOTAL SHEETS
12	Ora	91	6.4	1	15

ACBRNH-P091(130)E

STATE OF CALIFORNIA
DEPARTMENT OF TRANSPORTATION

PROJECT PLANS FOR CONSTRUCTION ON
STATE HIGHWAY

IN ORANGE COUNTY
IN ANAHEIM
AT LA PALMA AVENUE OVERCROSSING

TO BE SUPPLEMENTED BY STANDARD PLANS DATED MAY 2006

INDEX OF PLANS

SHEET No.	DESCRIPTION
1	TITLE AND LOCATION MAP
2	TYPICAL CROSS SECTIONS
3	LAYOUTS
4-6	CONSTRUCTION AREA SIGNS, DETOUR PLANS
7-13	REVISED AND NEW STANDARD PLANS
STRUCTURE PLANS	
14-15	LA PALMA AVENUE OVERCROSSING Br No. 55-0418

THE STANDARD PLANS LIST APPLICABLE TO THIS CONTRACT IS INCLUDED IN THE NOTICE TO BIDDERS AND SPECIAL PROVISIONS BOOK.

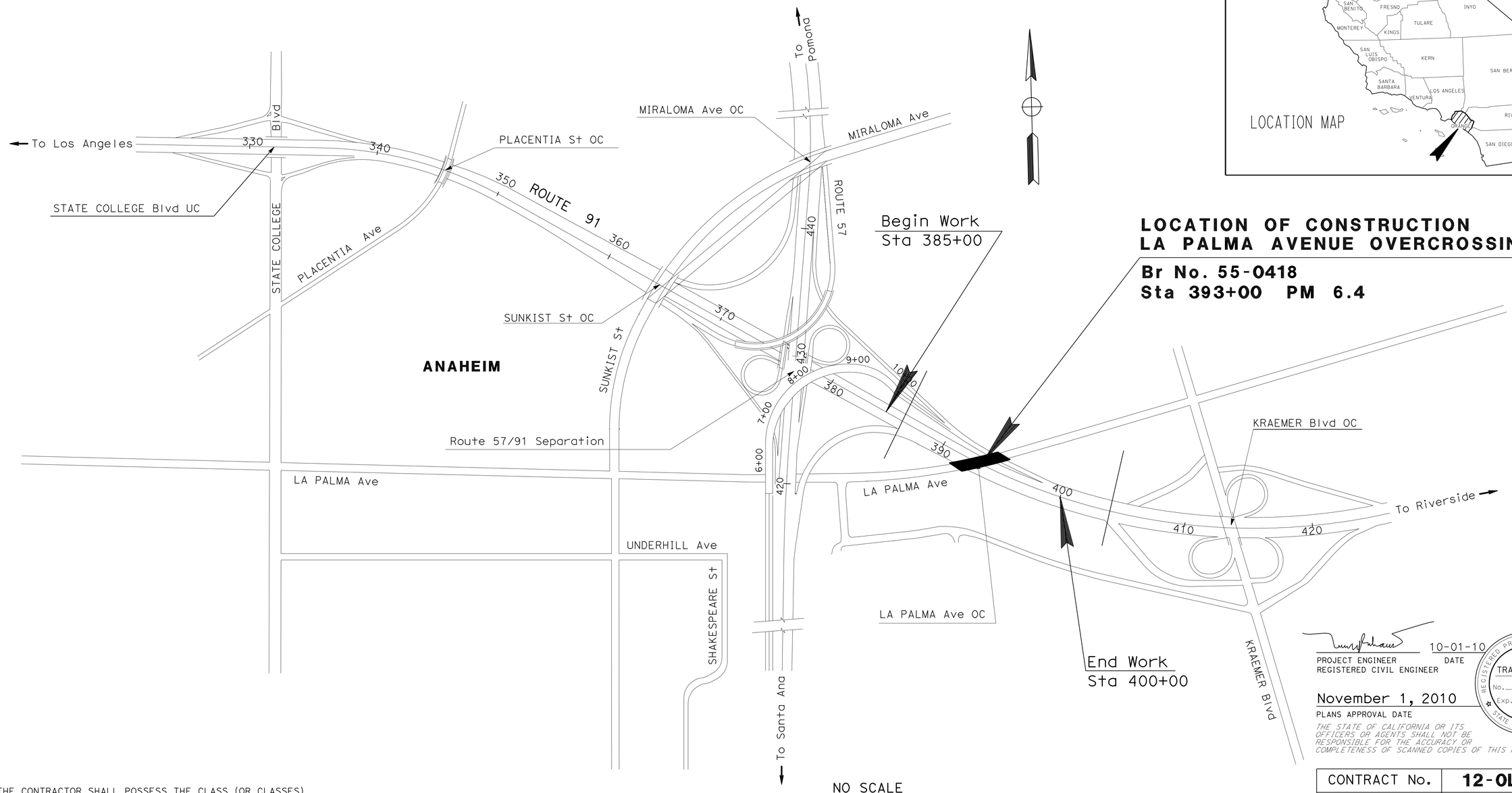

PROJECT ENGINEER
REGISTERED CIVIL ENGINEER

10-01-10
DATE

REGISTERED PROFESSIONAL ENGINEER
TRANG LUONG
No. C64430
Exp. 06/30/11
CIVIL
STATE OF CALIFORNIA

November 1, 2010
PLANS APPROVAL DATE

THE STATE OF CALIFORNIA OR ITS OFFICERS OR AGENTS SHALL NOT BE RESPONSIBLE FOR THE ACCURACY OR COMPLETENESS OF SCANNED COPIES OF THIS PLAN SHEET.

PROJECT MANAGER: LEO CHEN
DESIGN ENGINEER: TRANG LUONG

THE CONTRACTOR SHALL POSSESS THE CLASS (OR CLASSES) OF LICENSE AS SPECIFIED IN THE "NOTICE TO BIDDERS."

CONTRACT No.	12-0L1704
PROJECT ID	1200000639

LAST REVISION 09-23-10 | DATE PLOTTED => 07-MAR-2011 | TIME PLOTTED => 11:56

Dist	COUNTY	ROUTE	POST MILES TOTAL PROJECT	SHEET No.	TOTAL SHEETS
12	Ora	91	6.4	2	15

REGISTERED CIVIL ENGINEER 10-01-10 DATE

11-1-10
PLANS APPROVAL DATE

REGISTERED PROFESSIONAL ENGINEER
TRANG LUONG
No. C64430
Exp. 06/30/11
CIVIL
STATE OF CALIFORNIA

THE STATE OF CALIFORNIA OR ITS OFFICERS OR AGENTS SHALL NOT BE RESPONSIBLE FOR THE ACCURACY OR COMPLETENESS OF SCANNED COPIES OF THIS PLAN SHEET.

NOTES:

1. DIMENSIONS OF PAVEMENT STRUCTURES (STRUCTURAL SECTIONS) ARE SUBJECT TO TOLERANCES SPECIFIED IN THE STANDARD SPECIFICATIONS.
2. SUPERELEVATIONS ARE SHOWN ON THE SUPERELEVATION DIAGRAMS.

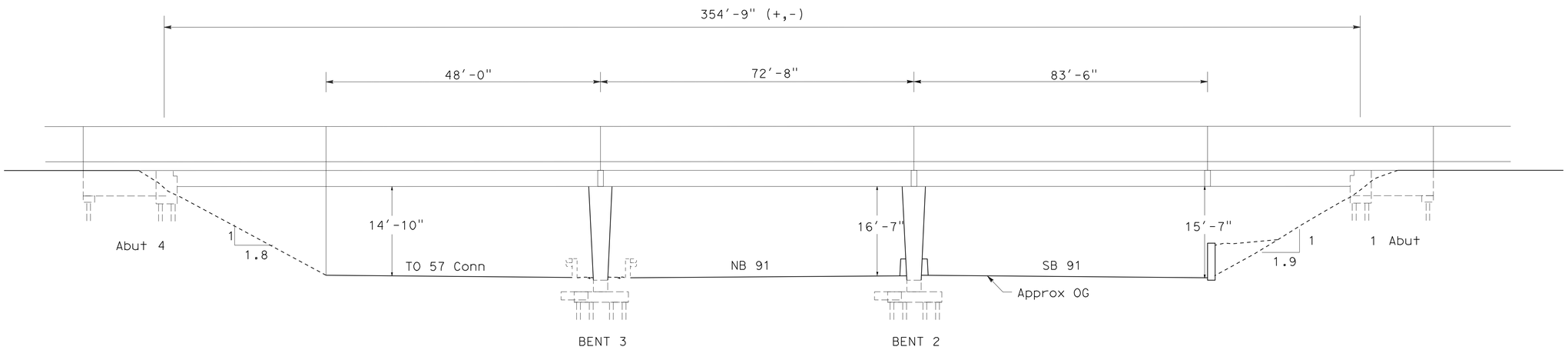

ELEVATION

LA PALMA AVENUE OVERCROSSING
(LOOKING SOUTHEAST)

TYPICAL CROSS SECTION (EXISTING BRIDGE SECTION)

NO SCALE

X-1

STATE OF CALIFORNIA - DEPARTMENT OF TRANSPORTATION
Caltrans
TRAFFIC DESIGN

FUNCTIONAL SUPERVISOR: ADEL MALEK
CALCULATED-DESIGNED BY: TRANG LUONG
CHECKED BY: ADEL MALEK
REVISED BY: ADEL MALEK
DATE REVISED: 9-28-10

LAST REVISION 9-28-10
DATE PLOTTED => 03-NOV-2010
TIME PLOTTED => 08:32

Dist	COUNTY	ROUTE	POST MILES TOTAL PROJECT	SHEET No.	TOTAL SHEETS
12	Ora	91	6.4	3	15

REGISTERED CIVIL ENGINEER 10-01-10 DATE

11-1-10
PLANS APPROVAL DATE

REGISTERED PROFESSIONAL ENGINEER
TRANG LUONG
No. C64430
Exp. 06/30/11
CIVIL
STATE OF CALIFORNIA

THE STATE OF CALIFORNIA OR ITS OFFICERS OR AGENTS SHALL NOT BE RESPONSIBLE FOR THE ACCURACY OR COMPLETENESS OF SCANNED COPIES OF THIS PLAN SHEET.

NOTE:

FOR ACCURATE RIGHT OF WAY DATA, CONTACT RIGHT OF WAY ENGINEERING AT DISTRICT OFFICE.

LEGEND:

(X) TEMPORARY DRAINAGE INLET NEED PROTECTION

LIMIT OF BRIDGE PAINTING (SEE STRUCTURE PLANS)

TEMPORARY WATER POLLUTION CONTROL QUANTITIES

LOCATION	TEMPORARY DRAINAGE INLET PROTECTION
	EA
ROUTE 91	5
57 CONNECTOR	2
TOTAL	7

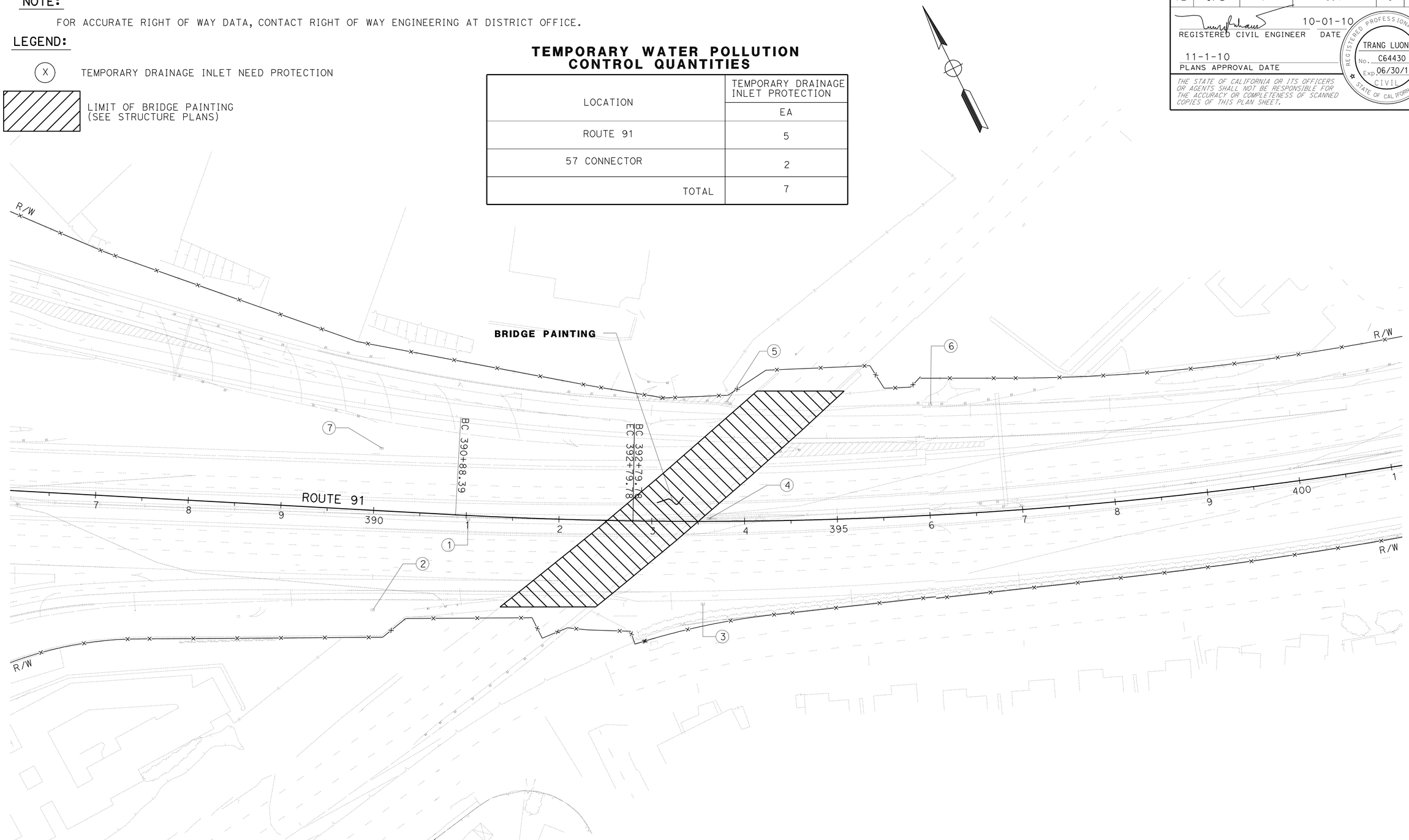

LAYOUT

SCALE: 1" = 50'

L-1

REVISED BY	DATE REVISED
A M	9-28-10

TRANG LUONG — CALCULATED-DESIGNED BY
ADEL MALEK — CHECKED BY
FUNCTIONAL SUPERVISOR: ADEL MALEK

STATE OF CALIFORNIA - DEPARTMENT OF TRANSPORTATION
Caltrans
TRAFFIC DESIGN

LAST REVISION 09-28-10 | DATE PLOTTED => 03-NOV-2010 | TIME PLOTTED => 08:32

Dist	COUNTY	ROUTE	POST MILES TOTAL PROJECT	SHEET No.	TOTAL SHEETS
12	Ora	91	6.4	4	15

REGISTERED CIVIL ENGINEER 10-01-10 DATE

11-1-10
PLANS APPROVAL DATE

REGISTERED PROFESSIONAL ENGINEER
TRANG LUONG
No. C64430
Exp. 06/30/11
CIVIL
STATE OF CALIFORNIA

THE STATE OF CALIFORNIA OR ITS OFFICERS OR AGENTS SHALL NOT BE RESPONSIBLE FOR THE ACCURACY OR COMPLETENESS OF SCANNED COPIES OF THIS PLAN SHEET.

NOTES:

1. (S) DENOTES STATIONARY MOUNTED SIGN.
2. EXACT SIGN LOCATION TO BE DETERMINED BY THE ENGINEER.

ABBREVIATIONS:

CPFIS - CONSTRUCTION PROJECT FUNDING IDENTIFICATION SIGNS

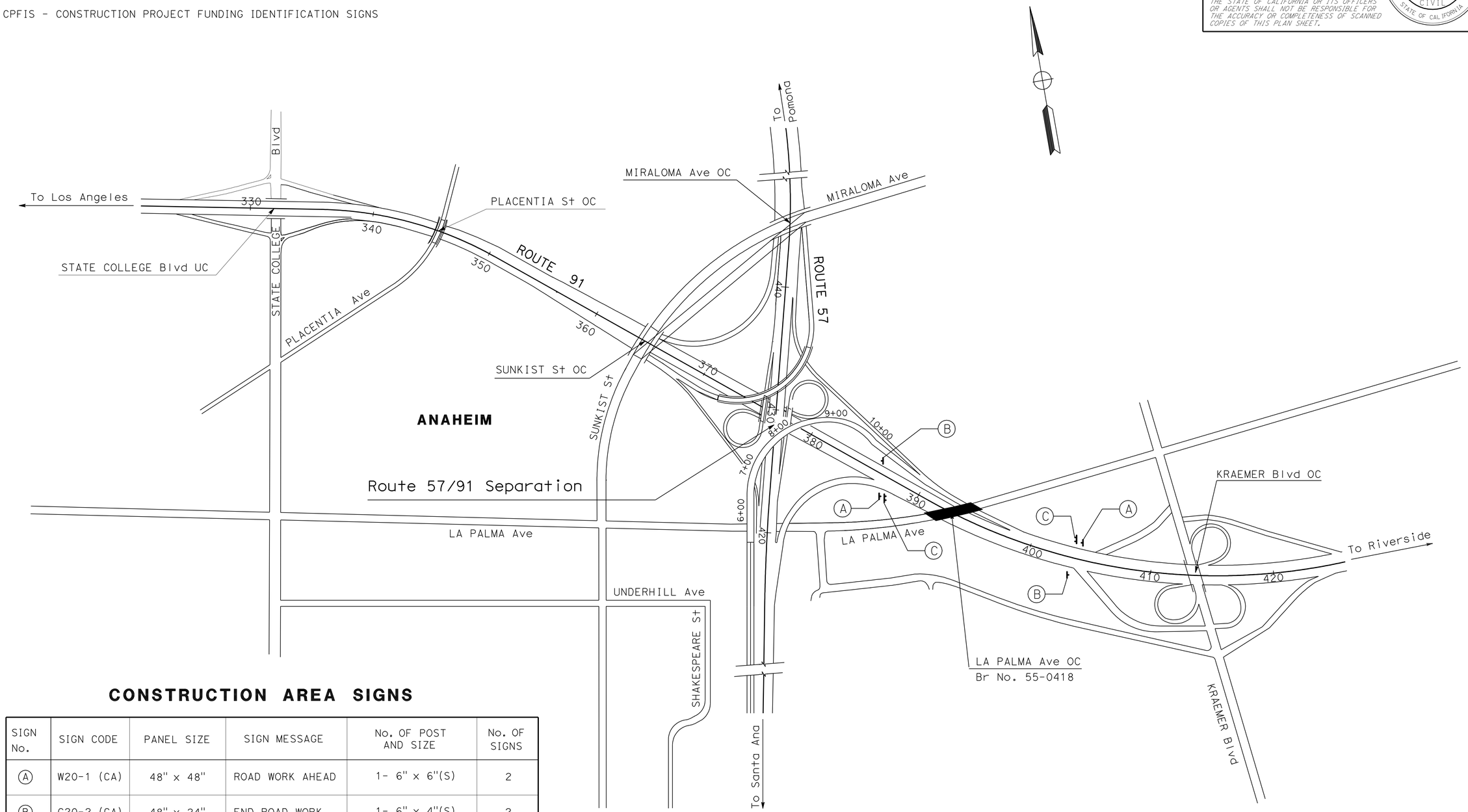

CONSTRUCTION AREA SIGNS

SIGN No.	SIGN CODE	PANEL SIZE	SIGN MESSAGE	No. OF POST AND SIZE	No. OF SIGNS
A	W20-1 (CA)	48" x 48"	ROAD WORK AHEAD	1- 6" x 6"(S)	2
B	G20-2 (CA)	48" x 24"	END ROAD WORK	1- 6" x 4"(S)	2
C	CPFIS	90" x 60"	TO BE DETERMINED BY THE ENGINEER	2- 6" x 6"(S)	2

CONSTRUCTION AREA SIGNS

NO SCALE

CS-1

THIS PLAN ACCURATE FOR CONSTRUCTION AREA SIGNS ONLY

REVISED BY	DATE REVISED
A M	9-27-10

CALCULATED-DESIGNED BY: TRANG LUONG
CHECKED BY: ADEL MALEK
FUNCTIONAL SUPERVISOR: ADEL MALEK

STATE OF CALIFORNIA - DEPARTMENT OF TRANSPORTATION
Caltrans
TRAFFIC DESIGN

LAST REVISION 09-28-10
DATE PLOTTED => 03-NOV-2010
TIME PLOTTED => 08:32

Dist	COUNTY	ROUTE	POST MILES TOTAL PROJECT	SHEET No.	TOTAL SHEETS
12	Ora	91	6.4	5	15

REGISTERED CIVIL ENGINEER 10-01-10 DATE

11-1-10
PLANS APPROVAL DATE

REGISTERED PROFESSIONAL ENGINEER TRANG LUONG No. C64430 Exp. 06/30/11 CIVIL STATE OF CALIFORNIA

THE STATE OF CALIFORNIA OR ITS OFFICERS OR AGENTS SHALL NOT BE RESPONSIBLE FOR THE ACCURACY OR COMPLETENESS OF SCANNED COPIES OF THIS PLAN SHEET.

NOTES:

1. LOCATIONS OF CONSTRUCTION AREA SIGNS (DETOUR) AND PCMS SHOWN ARE APPROXIMATE. EXACT LOCATIONS WILL DE DETERMINED BY THE ENGINEER.
2. EXACT MESSAGE TO BE DISPLAYED ON THE PCMS WILL BE DETERMINED BY THE ENGINEER.

LEGEND:

- DIRECTION OF TRAVEL THROUGH DETOUR
- CONSTRUCTION AREA SIGN (DETOUR), 1-POST
- PCMS — PORTABLE CHANGEABLE MESSAGE SIGN
- X — CONSTRUCTION AREA SIGN (DETOUR)
- CONNECTOR CLOSURE

ABBREVIATIONS:

PCMS : PORTABLE CHANGEABLE MESSAGE SIGN

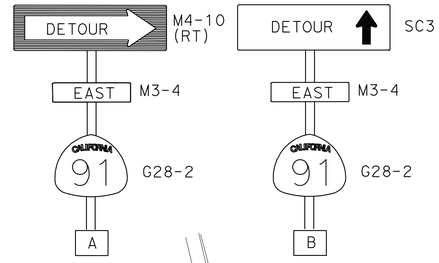

DURING CONNECTOR NB ROUTE 57 TO EB ROUTE 91 CLOSURE, THE PCMS SHOULD READ AS FOLLOWS:

CONNECTOR TO EB 91 CLOSED USE ORANGETHORPE	DETOUR EB 91 EXIT HERE
PCMS-1	PCMS-2

CLOSURE 1:

NB ROUTE 57 TO EB ROUTE 91 CONNECTOR

DETOUR 1:

NB Rte 57 ORANGETHORPE Ave OFF-RAMP,
RIGHT ON ORANGETHORPE Ave,
RIGHT ON KRAMER Blvd

CONSTRUCTION AREA SIGNS (DETOUR) STATIONARY MOUNTED

SIGN No.	SIGN CODE	No. OF POST AND SIZE	QUANTITY EA
A	M4-10 (RT) M3-4 G28-2	1-4" X 6"	2
B	SC3 M3-4 G28-2	1-4" X 6"	5

THIS PLAN ACCURATE FOR CONSTRUCTION AREA SIGNS (DETOUR) ONLY

CONSTRUCTION AREA SIGNS (DETOUR)

NO SCALE

CS-2

STATE OF CALIFORNIA - DEPARTMENT OF TRANSPORTATION
Caltrans
TRAFFIC DESIGN

FUNCTIONAL SUPERVISOR: ADEL MALEK
CALCULATED-DESIGNED BY: TRANG LUONG
CHECKED BY: ADEL MALEK
REVISED BY: A M
DATE REVISED: 9-27-10

LAST REVISION 09-27-10
DATE PLOTTED => 03-NOV-2010
TIME PLOTTED => 08:32

Dist	COUNTY	ROUTE	POST MILES TOTAL PROJECT	SHEET No.	TOTAL SHEETS
12	Ora	91	6.4	6	15

REGISTERED CIVIL ENGINEER 10-01-10 DATE

11-1-10
PLANS APPROVAL DATE

REGISTERED PROFESSIONAL ENGINEER TRANG LUONG No. C64430 Exp. 06/30/11 CIVIL STATE OF CALIFORNIA

THE STATE OF CALIFORNIA OR ITS OFFICERS OR AGENTS SHALL NOT BE RESPONSIBLE FOR THE ACCURACY OR COMPLETENESS OF SCANNED COPIES OF THIS PLAN SHEET.

NOTES:

1. LOCATIONS OF CONSTRUCTION AREA SIGNS (DETOUR) AND PCMS SHOWN ARE APPROXIMATE. EXACT LOCATIONS WILL DE DETERMINED BY THE ENGINEER.
2. EXACT MESSAGE TO BE DISPLAYED ON THE PCMS WILL BE DETERMINED BY THE ENGINEER.

LEGEND:

- DIRECTION OF TRAVEL THROUGH DETOUR
- CONSTRUCTION AREA SIGN (DETOUR), 1-POST
- PCMS PORTABLE CHANGEABLE MESSAGE SIGN
- X CONSTRUCTION AREA SIGN (DETOUR)
- CONNECTOR CLOSURE

ABBREVIATIONS:

PCMS : PORTABLE CHANGEABLE MESSAGE SIGN

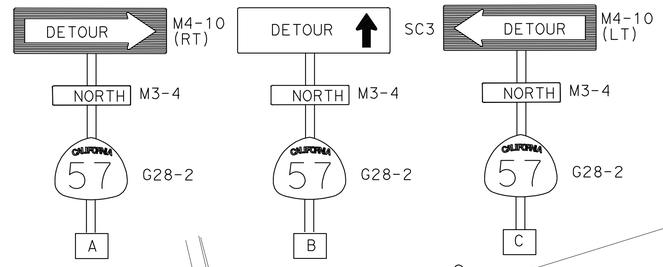

DURING CONNECTOR WB ROUTE 91 TO NB, SB ROUTE 57 CLOSURE, THE PCMS SHOULD READ AS FOLLOWS:

57 NB, SB CLOSED USE STATE COLLEGE DETOURS	DETOUR NB, SB 57 EXIT HERE
PCMS-1	PCMS-2

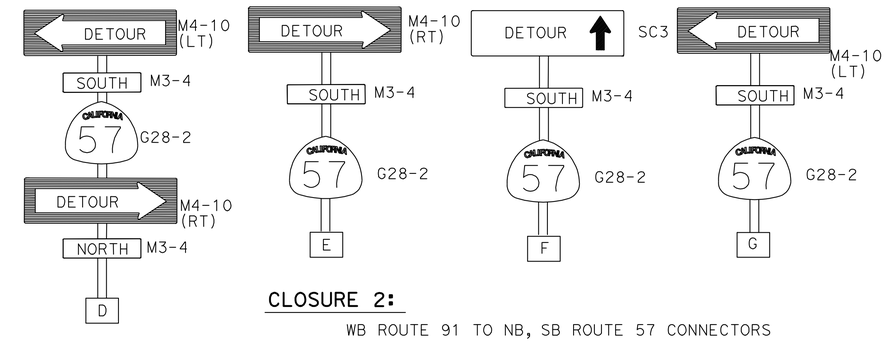

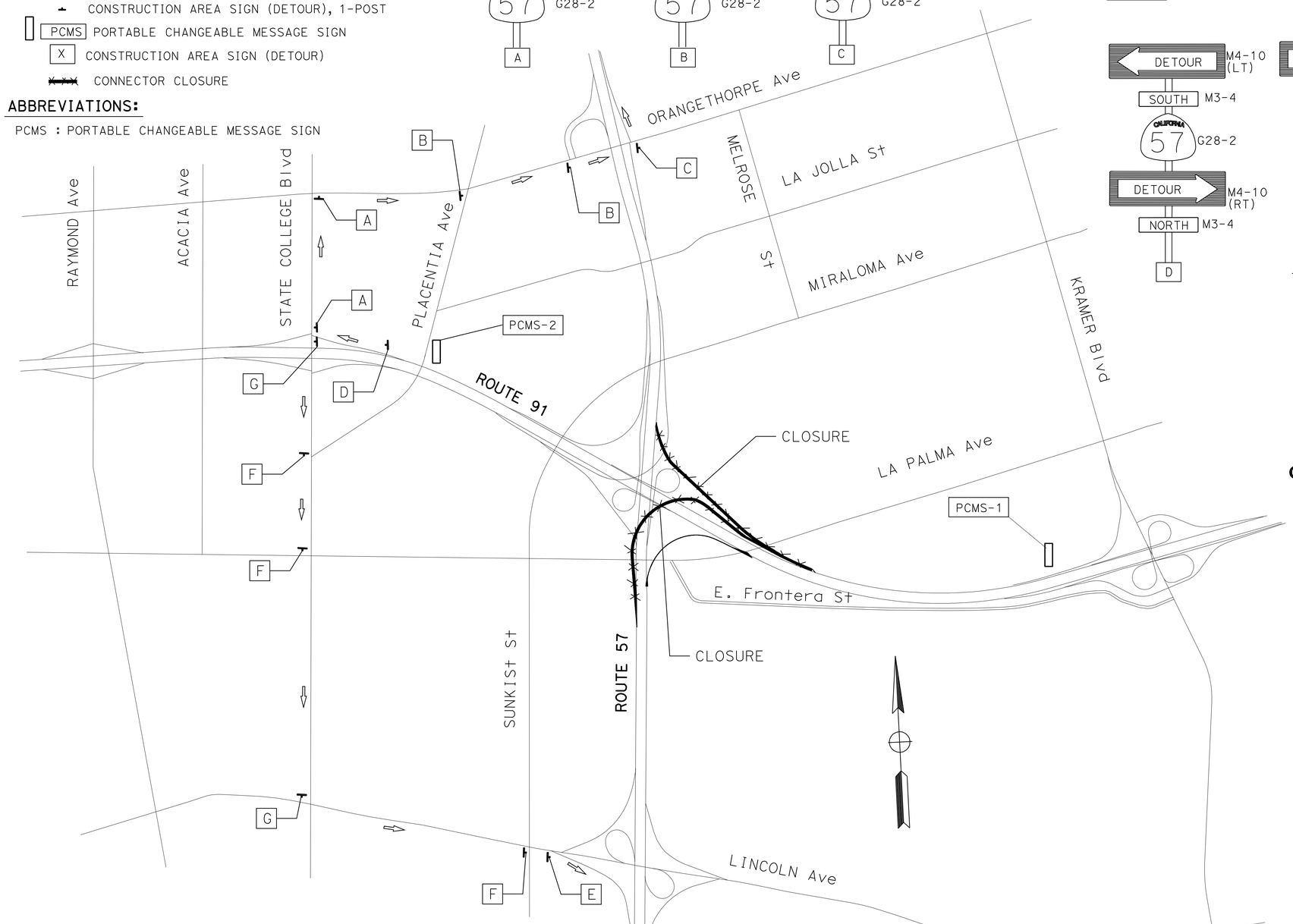

CLOSURE 2:

WB ROUTE 91 TO NB, SB ROUTE 57 CONNECTORS

DETOUR TO NB 57:

WB Rte 91 STATE COLLEGE Blvd OFF-RAMP,
RIGHT ON STATE COLLEGE Blvd
RIGHT ON ORANGETHORPE Ave

DETOUR TO SB 57:

WB Rte 91 STATE COLLEGE Blvd OFF-RAMP,
LEFT ON STATE COLLEGE Blvd
RIGHT ON LINCOLN Ave

CONSTRUCTION AREA SIGNS (DETOUR) STATIONARY MOUNTED

SIGN NO.	SIGN CODE	NO. OF POST AND SIZE	QUANTITY EA
A	M4-10 (RT) M3-4 G28-2	1-4" X 6"	2
B	SC3 M3-4 G28-2	1-4" X 6"	2
C	M4-10 (LT) M3-4 G28-2	1-4" X 6"	1
D	M4-10 (LT) M3-4 G28-2 M4-10 (RT) M3-4	1-4" X 6"	1
E	M4-10 (LT) M3-4 G28-2	1-4" X 6"	1
F	M4-10 (LT) M3-4 G28-2	1-4" X 6"	3
G	M4-10 (LT) M3-4 G28-2	1-4" X 6"	2

THIS PLAN ACCURATE FOR CONSTRUCTION AREA SIGNS (DETOUR) ONLY

CONSTRUCTION AREA SIGNS (DETOUR)

NO SCALE

CS-3

STATE OF CALIFORNIA - DEPARTMENT OF TRANSPORTATION
Caltrans
TRAFFIC DESIGN

FUNCTIONAL SUPERVISOR: ADEL MALEK
CALCULATED-DESIGNED BY: TRANG LUONG
CHECKED BY: ADEL MALEK
REVISED BY: A M
DATE REVISED: 9-27-10

LAST REVISION DATE PLOTTED => 03-NOV-2010
09-28-10 TIME PLOTTED => 08:32

DIST	COUNTY	ROUTE	POST MILES TOTAL PROJECT	SHEET NO.	TOTAL SHEETS
12	Ora	91	6.4	7	15

Randell D. Hiatt
REGISTERED CIVIL ENGINEER

June 6, 2008
PLANS APPROVAL DATE

REGISTERED PROFESSIONAL ENGINEER
Randell D. Hiatt
No. C50200
Exp. 6-30-09
CIVIL
STATE OF CALIFORNIA

The State of California or its officers or agents shall not be responsible for the accuracy or completeness of electronic copies of this plan sheet.

To accompany plans dated 11-1-10

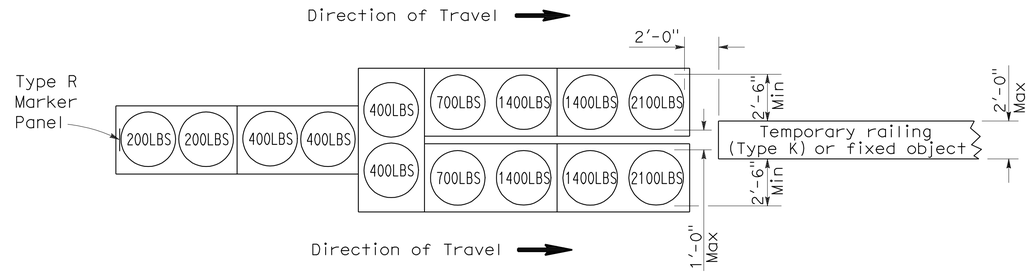

ARRAY 'TU14'

Approach speed 45 mph or more

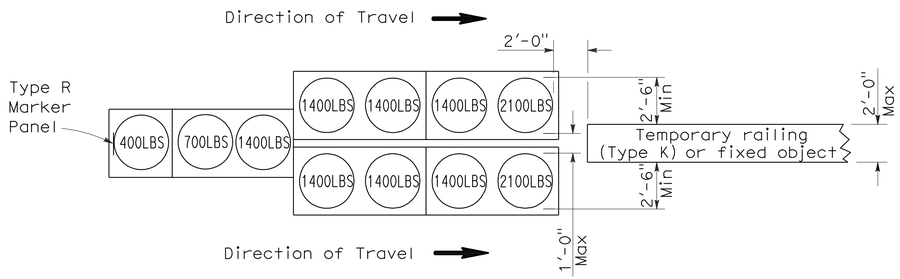

ARRAY 'TU11'

Approach speed less than 45 mph

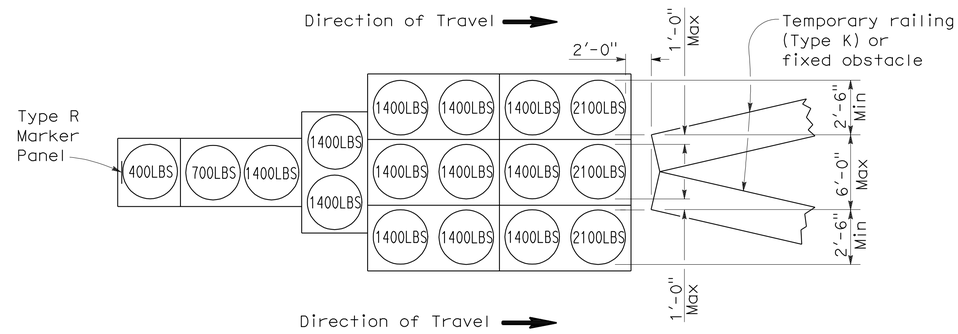

ARRAY 'TU17'

Approach speed less than 45 mph

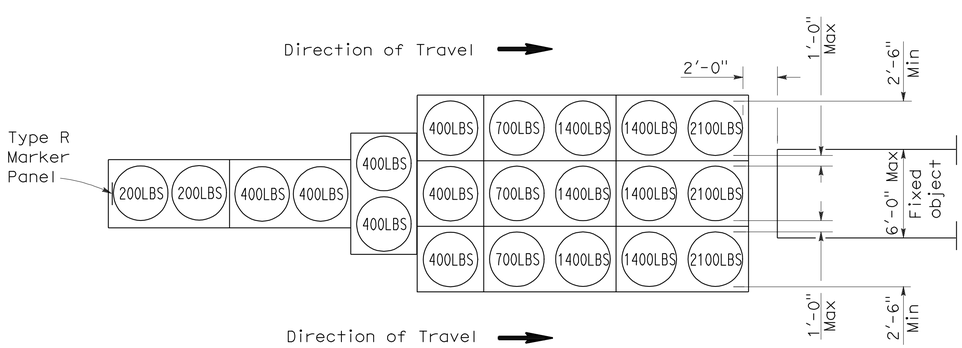

ARRAY 'TU21'

Approach speed 45 mph or more

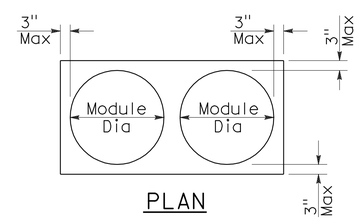

PLAN

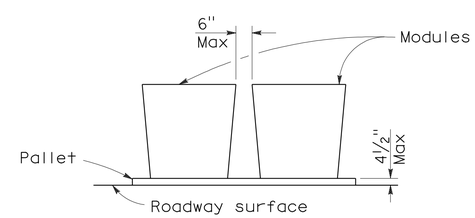

ELEVATION

CRASH CUSHION PALLET DETAIL

See Note 7

NOTES:

1. (XXX) Indicates sand filled module location and weight of sand in pounds for each module. Module spacing is based on the greater diameter of the module.
2. All sand weights are nominal.
3. Temporary crash cushion arrays shall not encroach on the traveled way.
4. Place the top of Type R marker panel 1" below the module lid.
5. Refer to Standard Plan A73B for marker details.
6. Approach speeds indicated conform to NCHRP 350 Report criteria.
7. Use of pallets is optional.

STATE OF CALIFORNIA
DEPARTMENT OF TRANSPORTATION

TEMPORARY CRASH CUSHION, SAND FILLED (UNIDIRECTIONAL)

NO SCALE

RSP T1A DATED JUNE 6, 2008 SUPERSEDES STANDARD PLAN T1A
DATED MAY 1, 2006 - PAGE 211 OF THE STANDARD PLANS BOOK DATED MAY 2006.

REVISED STANDARD PLAN RSP T1A

2006 REVISED STANDARD PLAN RSP T1A

DIST	COUNTY	ROUTE	POST MILES TOTAL PROJECT	SHEET NO.	TOTAL SHEETS
12	Ora	91	6.4	8	15

Randell D. Hiatt
REGISTERED CIVIL ENGINEER

June 6, 2008
PLANS APPROVAL DATE

REGISTERED PROFESSIONAL ENGINEER
Randell D. Hiatt
No. C50200
Exp. 6-30-09
CIVIL
STATE OF CALIFORNIA

The State of California or its officers or agents shall not be responsible for the accuracy or completeness of electronic copies of this plan sheet.

To accompany plans dated 11-1-10

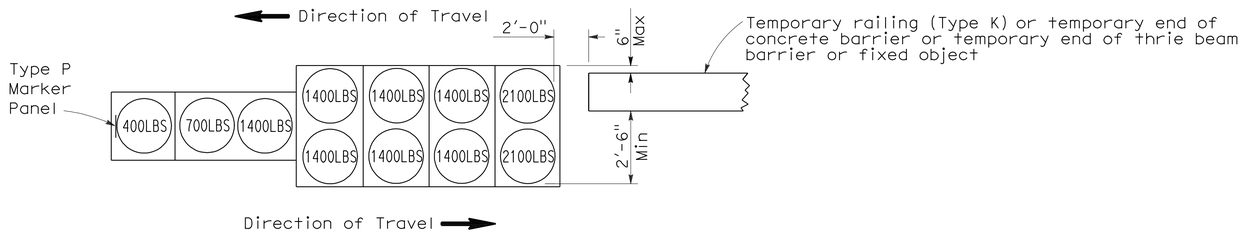

ARRAY 'TB11'

Approach speed less than 45 mph

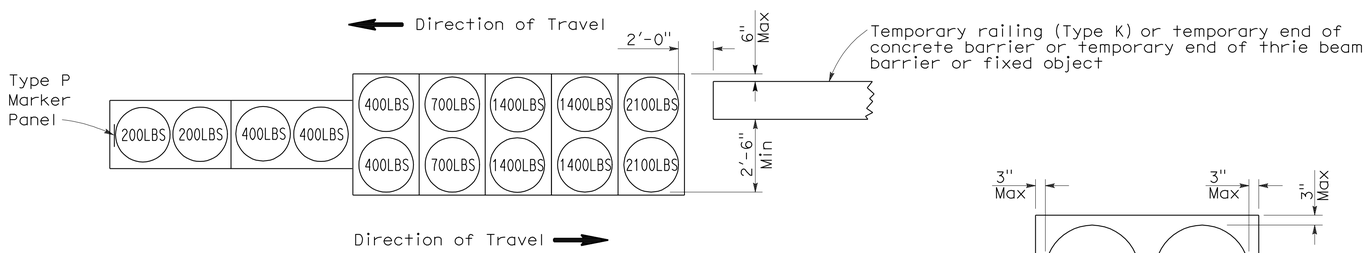

ARRAY 'TB14'

Approach speed 45 mph or more

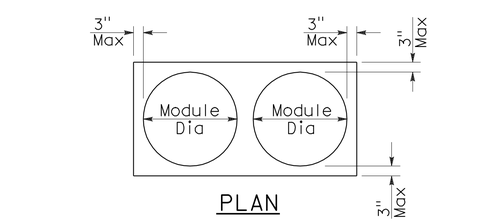

PLAN

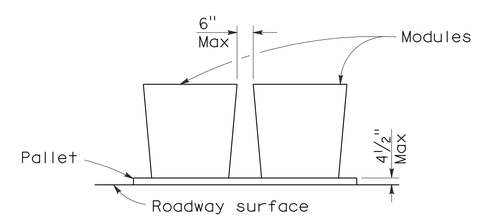

ELEVATION

CRASH CUSHION PALLET DETAIL

See Note 7

NOTES:

1. (XXX) Indicates sand filled module location and weight of sand in pounds for each module. Module spacing is based on the greater diameter of the module.
2. All sand weights are nominal.
3. Temporary crash cushion arrays shall not encroach on the traveled way.
4. Place the Type P marker panel so that the bottom of the panel rests upon the pallet.
5. Refer to Standard Plan A73B for marker details.
6. Approach speeds indicated conform to NCHRP 350 Report criteria.
7. Use of pallets is optional.

STATE OF CALIFORNIA
DEPARTMENT OF TRANSPORTATION

TEMPORARY CRASH CUSHION, SAND FILLED (BIDIRECTIONAL)

NO SCALE

RSP T1B DATED JUNE 6, 2008 SUPERSEDES STANDARD PLAN T1B
DATED MAY 1, 2006 - PAGE 212 OF THE STANDARD PLANS BOOK DATED MAY 2006.

REVISED STANDARD PLAN RSP T1B

2006 REVISED STANDARD PLAN RSP T1B

DIST	COUNTY	ROUTE	POST MILES TOTAL PROJECT	SHEET NO.	TOTAL SHEETS
12	Ora	91	6.4	9	15

Randell D. Hiatt
REGISTERED CIVIL ENGINEER

June 6, 2008
PLANS APPROVAL DATE

REGISTERED PROFESSIONAL ENGINEER
Randell D. Hiatt
No. C50200
Exp. 6-30-09
CIVIL
STATE OF CALIFORNIA

The State of California or its officers or agents shall not be responsible for the accuracy or completeness of electronic copies of this plan sheet.

To accompany plans dated 11-1-10

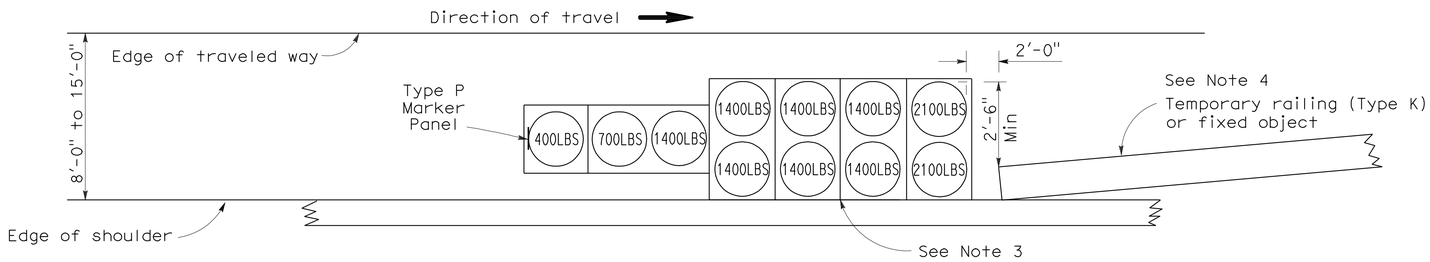

ARRAY 'TS11'

Approach speed less than 45 mph
See Note 9

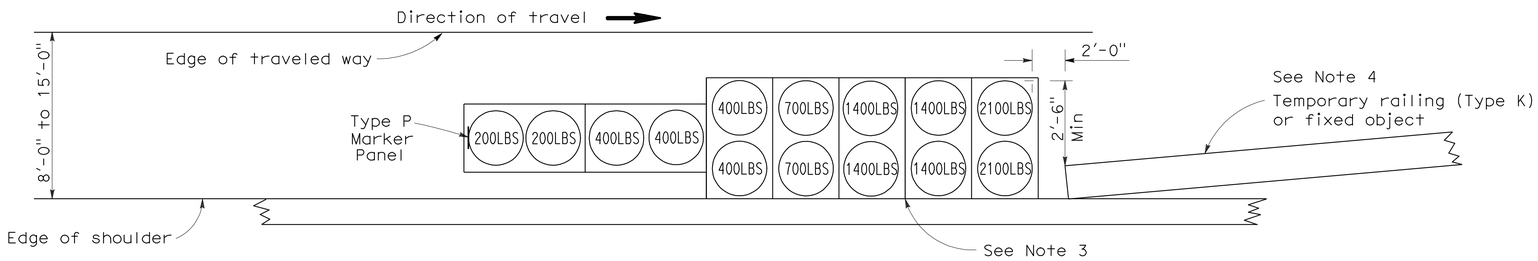

ARRAY 'TS14'

Approach speed 45 mph or more
See Note 9

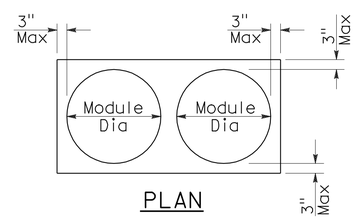

PLAN

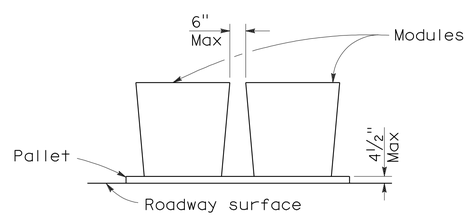

ELEVATION

CRASH CUSHION PALLET DETAIL

See Note 11

NOTES:

1. (XXX) Indicates sand filled module location and weight of sand in pounds for each module. Module spacing is based on the greater diameter of the module.
2. All sand weights are nominal.
3. The temporary crash cushion arrays shown on this plan shall be used only in locations where there will be traffic on one side of the temporary crash cushion array.
4. If the fixed object or approach end of the temporary railing is less than 15'-0" from the edge of traveled way, a temporary crash cushion is required in a construction or work zone.
5. Temporary crash cushion arrays shall not encroach on the traveled way.
6. Arrays for median shoulders shall conform to details shown on this plan for outside shoulders.
7. Place the Type P marker panel so that the bottom of the panel rests upon the pallet and faces traffic.
8. Refer to Standard Plan A73B for marker details.
9. For shoulder widths less than 8'-0", appropriate approved crash cushion protection, other than sand filled modules, shall be provided at fixed objects and at approach ends of temporary railing. The specific type of crash cushion shall be as shown on the project plans or as specified in the Special Provisions, or if not shown on the project plans or specified in the Special Provisions, shall be as approved by the Engineer.
10. Approach speeds indicated conform to NCHRP 350 Report criteria.
11. Use of pallets is optional.

STATE OF CALIFORNIA
DEPARTMENT OF TRANSPORTATION

TEMPORARY CRASH CUSHION, SAND FILLED (SHOULDER INSTALLATIONS)

NO SCALE

RSP T2 DATED JUNE 6, 2008 SUPERSEDES STANDARD PLAN T2
DATED MAY 1, 2006 - PAGE 213 OF THE STANDARD PLANS BOOK DATED MAY 2006.

REVISED STANDARD PLAN RSP T2

2006 REVISED STANDARD PLAN RSP T2

DIST	COUNTY	ROUTE	POST MILES TOTAL PROJECT	SHEET NO.	TOTAL SHEETS
12	Ora	91	6.4	10	15

LICENSED LANDSCAPE ARCHITECT

August 15, 2008
PLANS Approval DATE

The State of California or its officers or agents shall not be responsible for the accuracy or completeness of electronic copies of this plan sheet.

LICENSED LANDSCAPE ARCHITECT — Robert B. Schott — Signature — 11-04-08 Renewal Date — 08-11-08 Date — STATE OF CALIFORNIA

To accompany plans dated 11-1-10

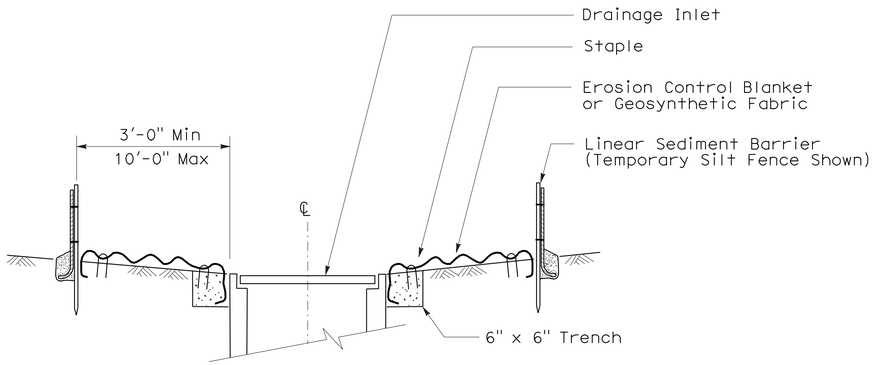

SECTION A-A

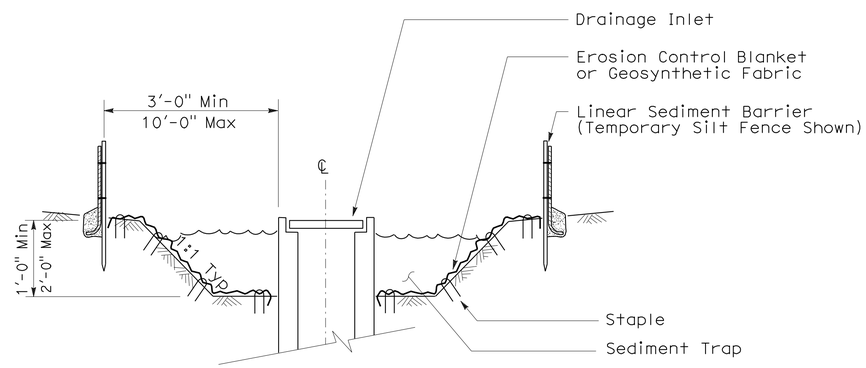

SECTION B-B

NOTES:

1. See Standard Plan T51 for Temporary Silt Fence.
2. Dimensions may vary to fit field conditions.

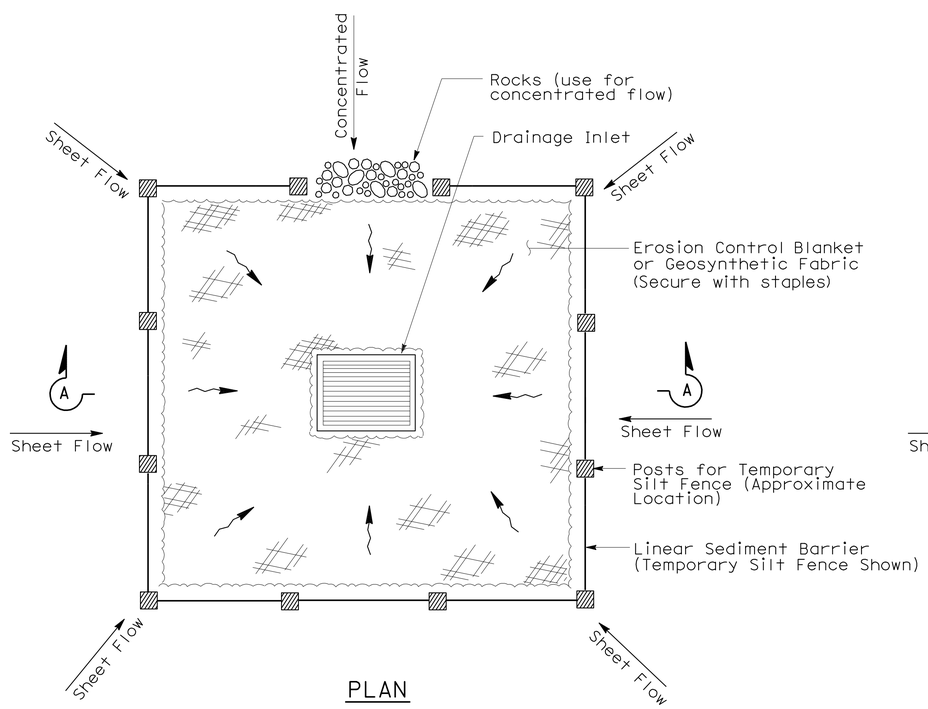

PLAN

TEMPORARY DRAINAGE INLET PROTECTION (TYPE 1)

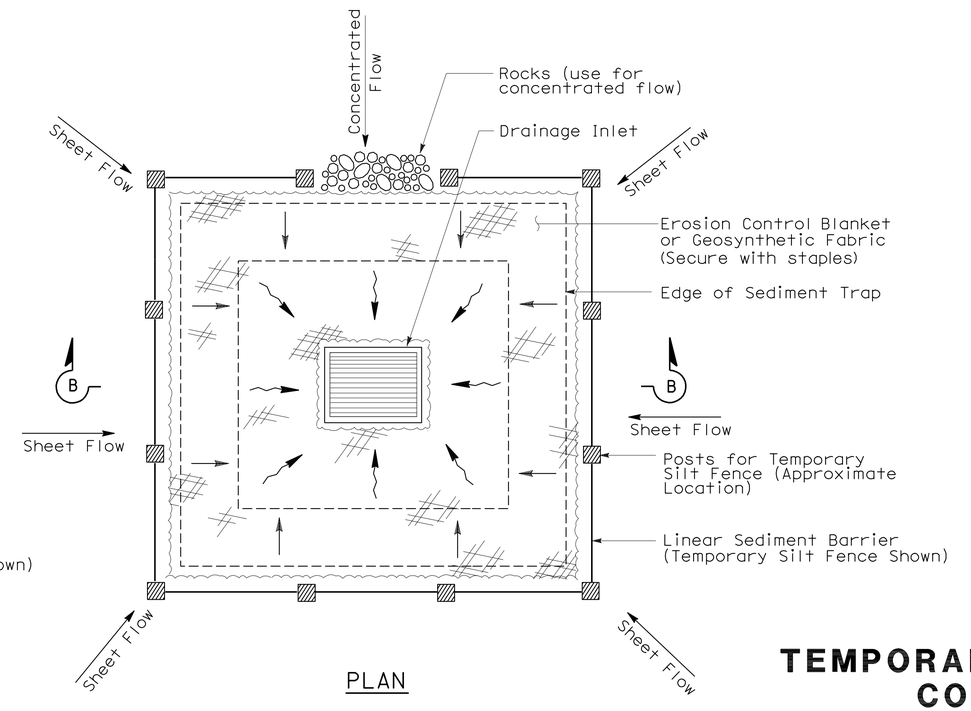

PLAN

TEMPORARY DRAINAGE INLET PROTECTION (TYPE 2) (EXCAVATED SEDIMENT TRAP)

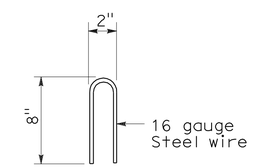

STAPLE DETAIL

STATE OF CALIFORNIA
DEPARTMENT OF TRANSPORTATION

TEMPORARY WATER POLLUTION CONTROL DETAILS (TEMPORARY DRAINAGE INLET PROTECTION)

NO SCALE

NSP T61 DATED AUGUST 15, 2008 SUPPLEMENTS THE STANDARD PLANS BOOK DATED MAY 2006.

NEW STANDARD PLAN NSP T61

2006 NEW STANDARD PLAN NSP T61

7-11-08

DIST	COUNTY	ROUTE	POST MILES TOTAL PROJECT	SHEET NO.	TOTAL SHEETS
12	Ora	91	6.4	11	15

LICENSED LANDSCAPE ARCHITECT

August 15, 2008
PLANS APPROVAL DATE

The State of California or its officers or agents shall not be responsible for the accuracy or completeness of electronic copies of this plan sheet.

LICENSED LANDSCAPE ARCHITECT Robert B. Schott 3895 Signature 11-04-08 Renewal Date 08-11-08 Date STATE OF CALIFORNIA

To accompany plans dated 11-1-10

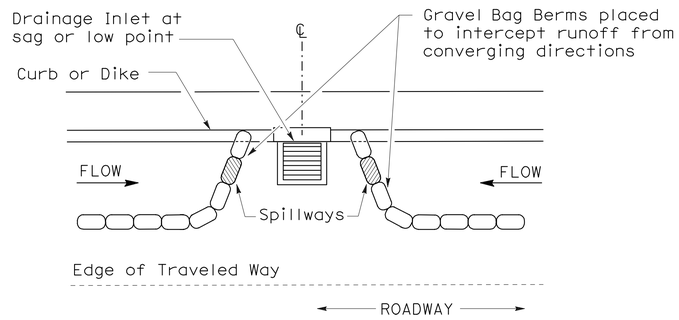

PLAN

CONFIGURATION FOR SAG POINT INLET (GRAVEL BAG BERM)

GRAVEL BAG BERM (TYPE 3A) SPACING TABLE

SLOPE OF ROADWAY (PERCENT)	1 to 3.9	4 to 5.9	6 to 7.9	8 to 10	10+
INTERVAL BETWEEN BERM	100′	75′	50′	25′	12′

For slope of less than 1%, install barriers only if erosion/sediment is prevalent

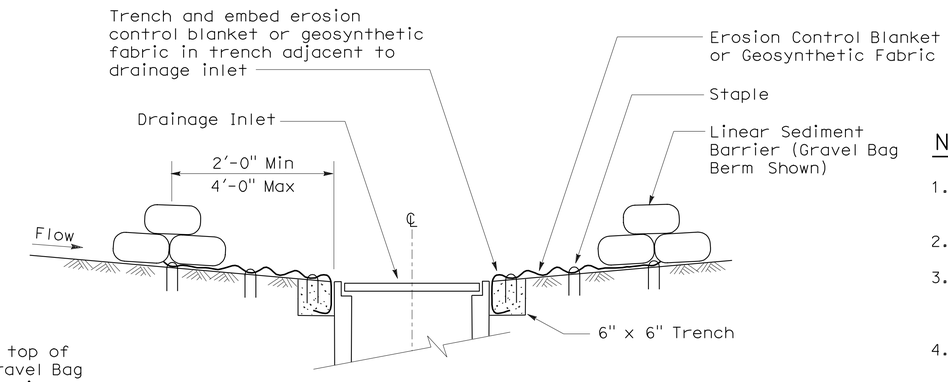

SECTION A-A

NOTES:

1. Place safety cones adjacent to drainage inlet protection.
2. Dimensions may vary to fit field conditions.
3. Install a minimum of 3 gravel bag berms upstream of each drainage inlet to be protected.
4. Position erosion control blanket or geosynthetic fabric at edge of concrete apron and secure in trench.
5. Erosion control blanket or geosynthetic fabric is not required if the area adjacent to the drainage inlet is vegetated or paved.

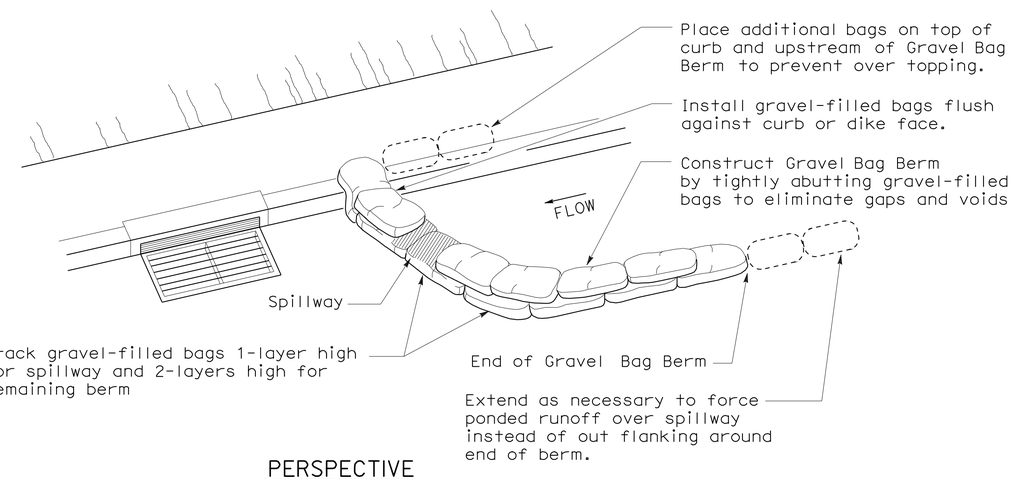

PERSPECTIVE

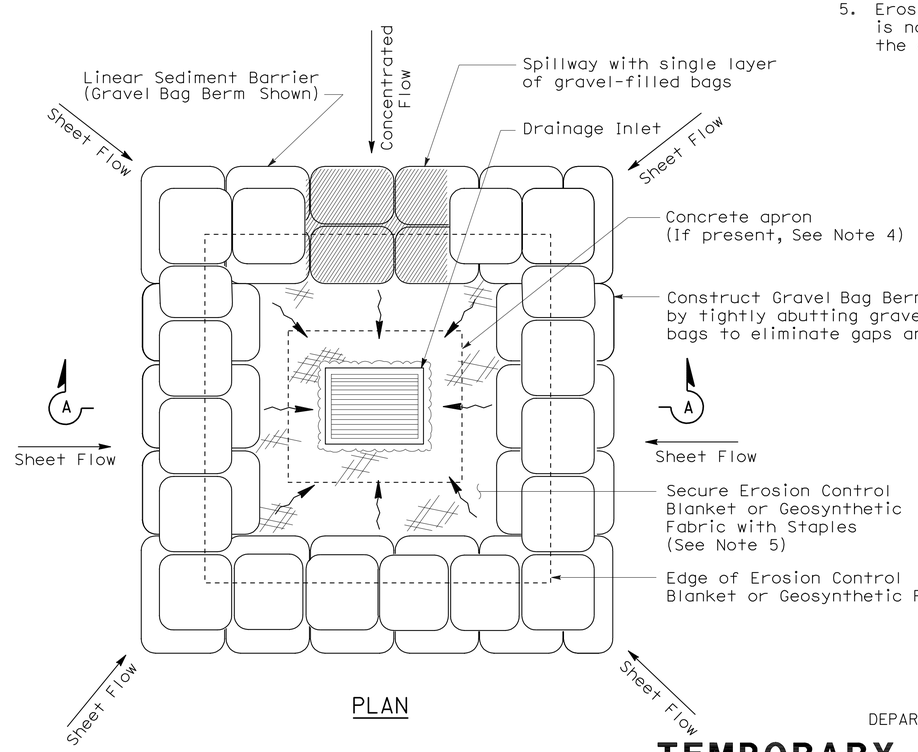

PLAN

TEMPORARY DRAINAGE INLET PROTECTION (TYPE 3B)

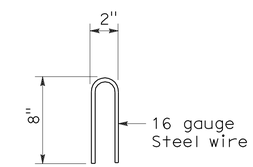

STAPLE DETAIL

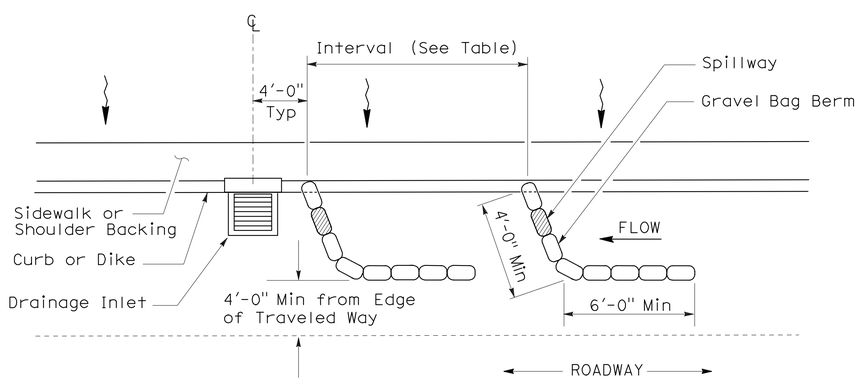

PLAN

TEMPORARY DRAINAGE INLET PROTECTION (TYPE 3A) (GRAVEL BAG BERM)

STATE OF CALIFORNIA
DEPARTMENT OF TRANSPORTATION

TEMPORARY WATER POLLUTION CONTROL DETAILS (TEMPORARY DRAINAGE INLET PROTECTION)

NO SCALE

NSP T62 DATED AUGUST 15, 2008 SUPPLEMENTS THE STANDARD PLANS BOOK DATED MAY 2006.

NEW STANDARD PLAN NSP T62

2006 NEW STANDARD PLAN NSP T62

7-11-08

DIST	COUNTY	ROUTE	POST MILES TOTAL PROJECT	SHEET NO.	TOTAL SHEETS
12	Ora	91	6.4	12	15

Robert B Schott
LICENSED LANDSCAPE ARCHITECT

August 15, 2008
PLANS APPROVAL DATE

LICENSED LANDSCAPE ARCHITECT Robert B. Schott 3625 Signature 11-04-08 Renewal Date 08-11-08 Date STATE OF CALIFORNIA

The State of California or its officers or agents shall not be responsible for the accuracy or completeness of electronic copies of this plan sheet.

To accompany plans dated 11-1-10

2006 NEW STANDARD PLAN NSP T63

FLEXIBLE SEDIMENT BARRIER SPACING TABLE

SLOPE OF ROADWAY (PERCENT)	0 to 0.9	1 to 1.9	2 to 2.9	3 to 4	5+
INTERVAL BETWEEN BARRIERS	50′	35′	30′	25′	20′
ANGLE FROM FACE OF CURB	70°	70°	70°	45°	45°
SUGGESTED BARRIER LENGTH	6′	6′	6′	6′	6′

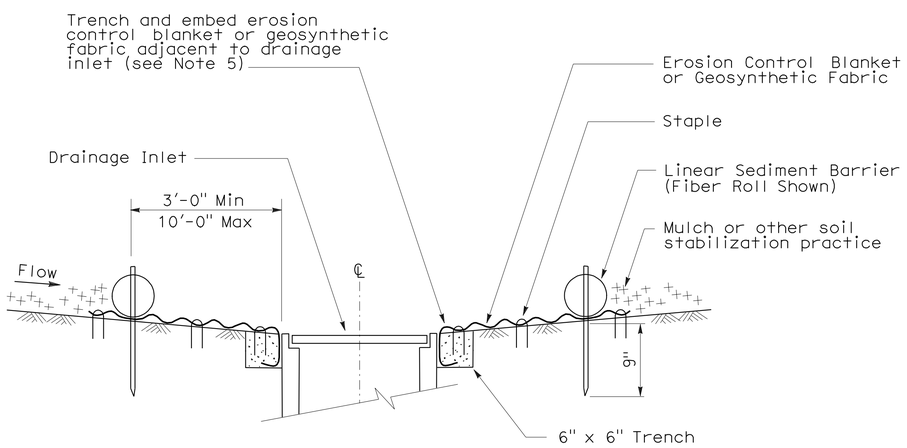

SECTION A-A

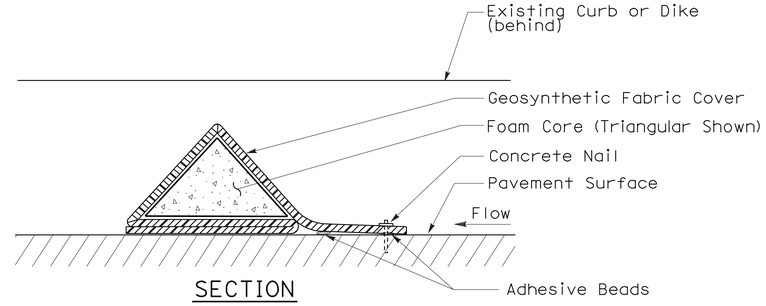

SECTION

FLEXIBLE SEDIMENT BARRIER DETAIL (FOAM BARRIER SHOWN)

NOTES:

1. See Standard Plan T51 for Temporary Silt Fence.
2. Dimensions may vary to fit field conditions.
3. Install a minimum of 3 flexible sediment barriers upstream of each drainage inlet to be protected.
4. Position erosion control blanket or geosynthetic fabric at edge of concrete apron and secure in trench.
5. Erosion control blanket or geosynthetic fabric is not required if the area adjacent to the drainage inlet is vegetated.

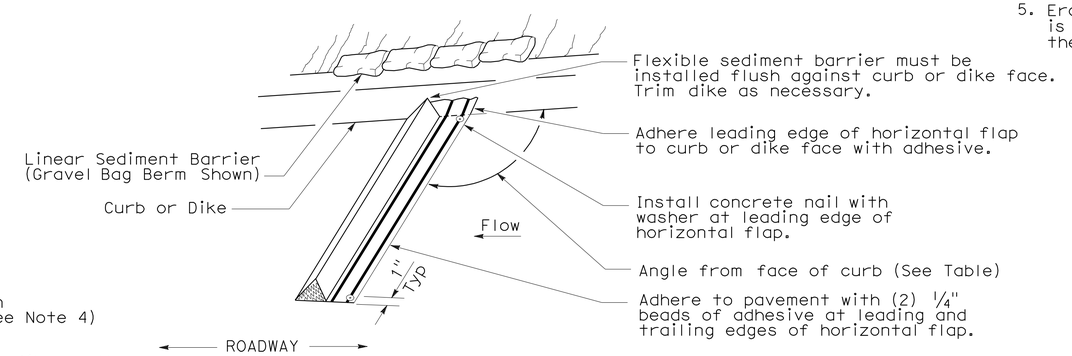

PERSPECTIVE

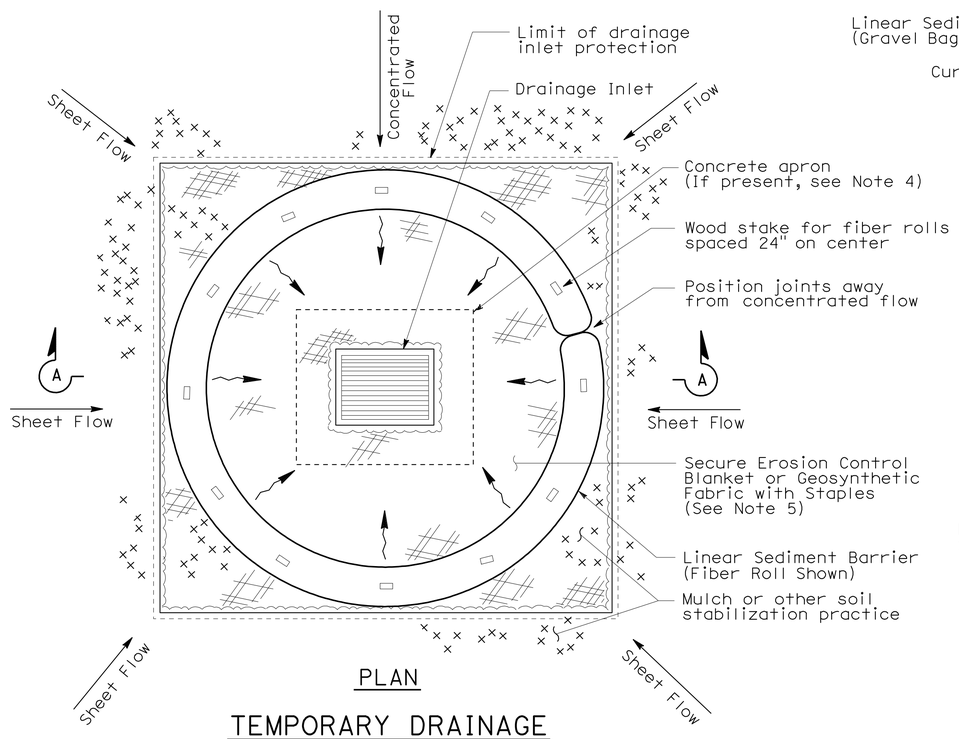

PLAN

TEMPORARY DRAINAGE INLET PROTECTION (TYPE 4A)

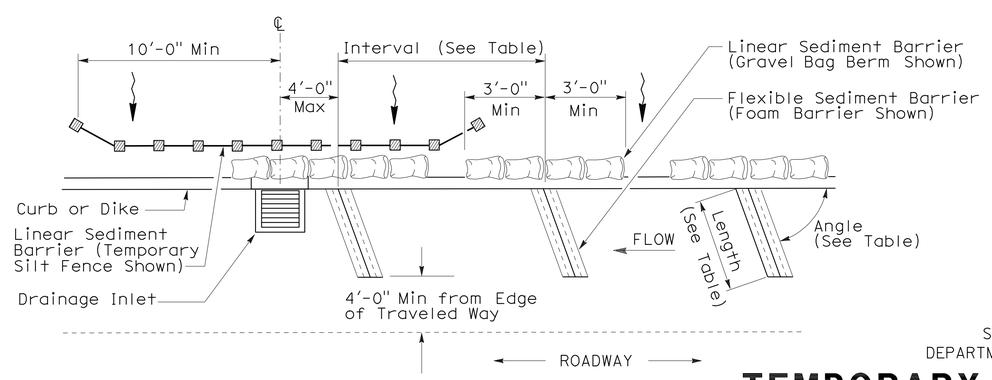

PLAN

TEMPORARY DRAINAGE INLET PROTECTION (TYPE 4B) FLEXIBLE SEDIMENT BARRIER

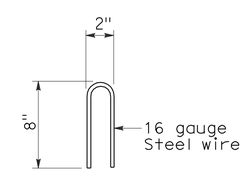

STAPLE DETAIL

STATE OF CALIFORNIA
DEPARTMENT OF TRANSPORTATION

TEMPORARY WATER POLLUTION CONTROL DETAILS (TEMPORARY DRAINAGE INLET PROTECTION)

NO SCALE

NSP T63 DATED AUGUST 15, 2008 SUPPLEMENTS THE STANDARD PLANS BOOK DATED MAY 2006.

NEW STANDARD PLAN NSP T63

7-11-08

DIST	COUNTY	ROUTE	POST MILES TOTAL PROJECT	SHEET NO.	TOTAL SHEETS
12	Ora	91	6.4	13	15

LICENSED LANDSCAPE ARCHITECT

August 15, 2008
PLANS APPROVAL DATE

The State of California or its officers or agents shall not be responsible for the accuracy or completeness of electronic copies of this plan sheet.

LICENSED LANDSCAPE ARCHITECT — Robert B. Schott — Signature — 11-04-08 Renewal Date — 08-11-08 Date — STATE OF CALIFORNIA

To accompany plans dated 11-1-10

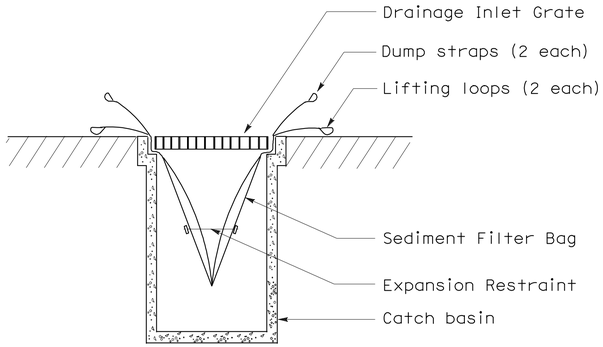

SECTION B-B

SEDIMENT FILTER BAG DETAIL

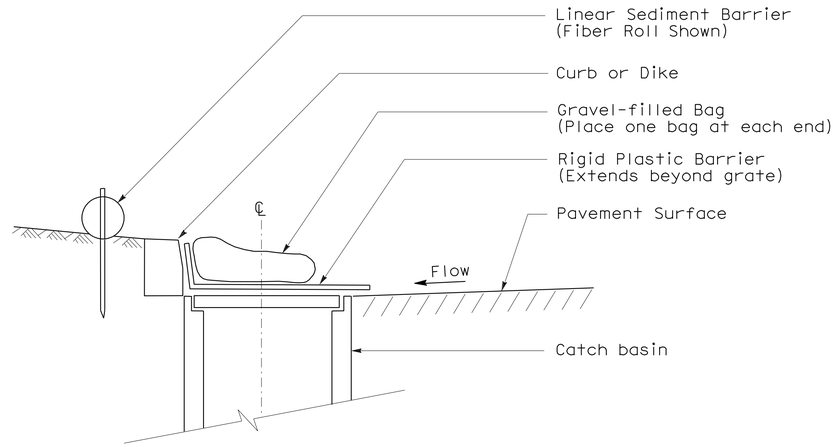

SECTION

TEMPORARY DRAINAGE INLET PROTECTION (TYPE 6A) (CATCH BASIN WITH GRATE)

NOTES:

1. See Standard Plan T51 for Temporary Silt Fence.
2. Dimensions may vary to fit field conditions.

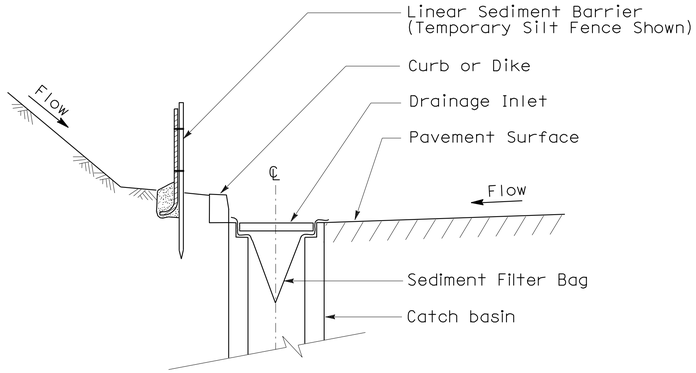

SECTION A-A

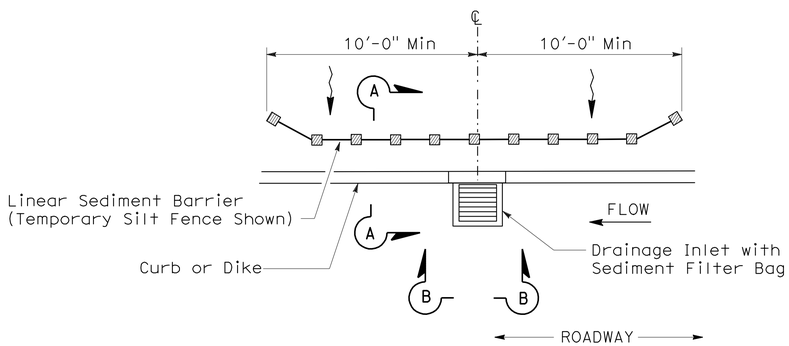

PLAN

TEMPORARY DRAINAGE INLET PROTECTION (TYPE 5) (SEDIMENT FILTER BAG)

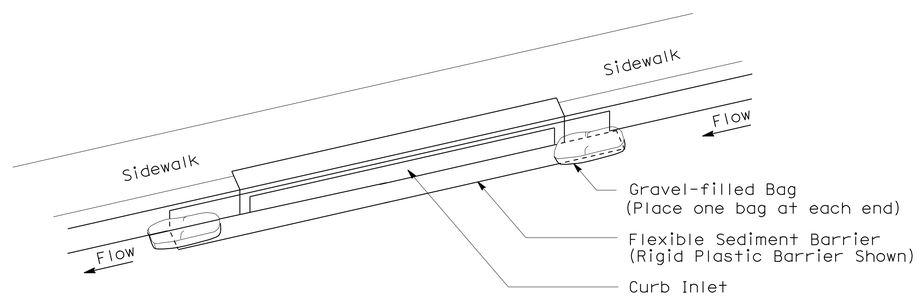

PERSPECTIVE

TEMPORARY DRAINAGE INLET PROTECTION (TYPE 6B) (CURB INLET WITHOUT GRATE)

STATE OF CALIFORNIA
DEPARTMENT OF TRANSPORTATION

TEMPORARY WATER POLLUTION CONTROL DETAILS (TEMPORARY DRAINAGE INLET PROTECTION)

NO SCALE

NSP T64 DATED AUGUST 15, 2008 SUPPLEMENTS
THE STANDARD PLANS BOOK DATED MAY 2006.

NEW STANDARD PLAN NSP T64

2006 NEW STANDARD PLAN NSP T64

7-11-08

DIST	COUNTY	ROUTE	POST MILES TOTAL PROJECT	SHEET No	TOTAL SHEETS
12	Ora	91	6.4	14	15

REGISTERED CIVIL ENGINEER 09/20/10 DATE

11-1-10
PLANS APPROVAL DATE

REGISTERED PROFESSIONAL ENGINEER GERALD D. JOO No. C65380 Exp. 09/30/11 CIVIL STATE OF CALIFORNIA

The State of California or its officers or agents shall not be responsible for the accuracy or completeness of electronic copies of this plan sheet.

LEGEND:

Indicates existing.

Indicates direction of traffic.

(1) Clean and spot blast cleaning of existing paint system on steel members and apply undercoats.

STANDARD PLANS DATED MAY 2006

SHEET NO.	TITLE
A10A	ACRONYMS AND ABBREVIATIONS (SHEET 1 OF 2)
A10B	ACRONYMS AND ABBREVIATIONS (SHEET 2 OF 2)
A10C	SYMBOLS (SHEET 1 OF 2)
A10D	SYMBOLS (SHEET 2 OF 2)

STANDARD PLAN SHEET NO.

DETAIL NO.

INDEX TO PLANS

SHEET NO.	TITLE
1	GENERAL PLAN
2	LATERAL BRACING DETAILS

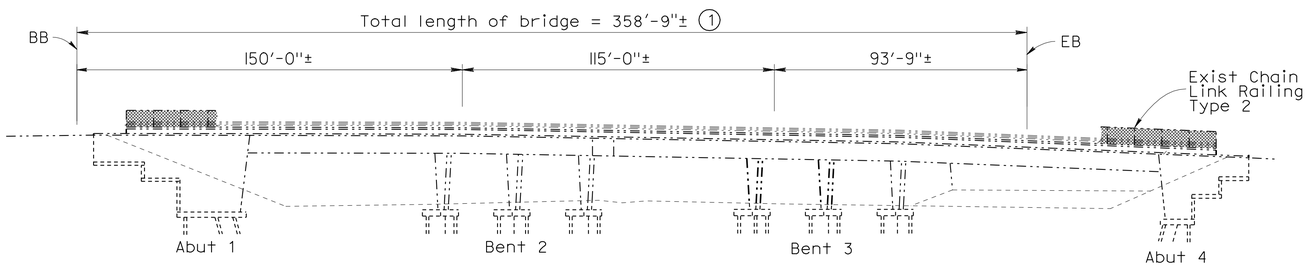

ELEVATION

NO SCALE

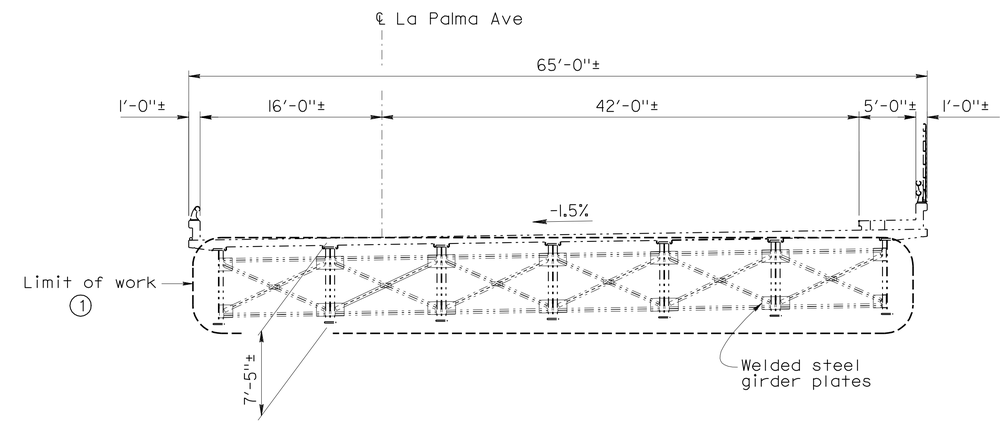

TYPICAL SECTION

NO SCALE

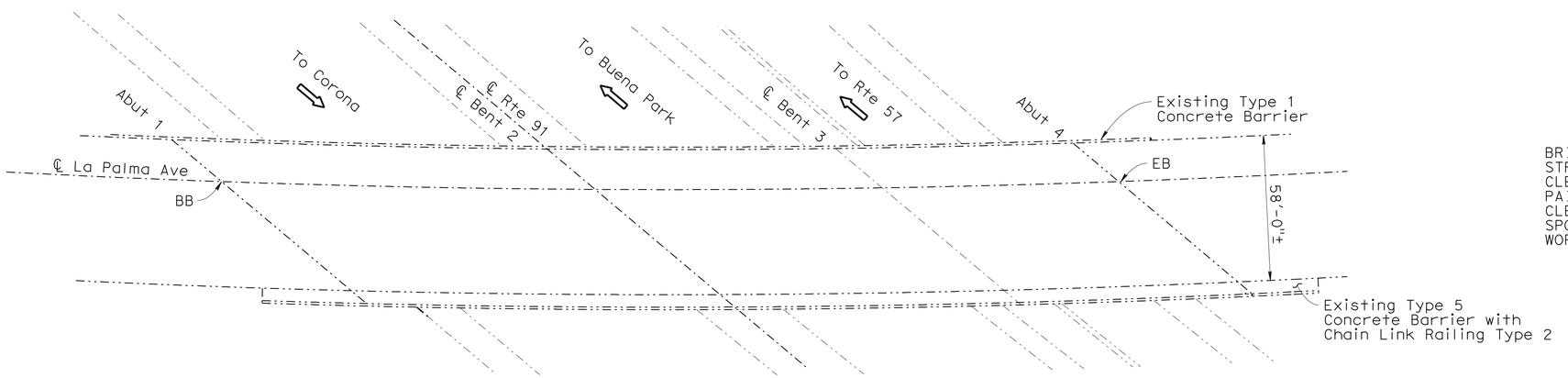

PLAN

NO SCALE

QUANTITIES

BRIDGE REMOVAL (PORTION)	LUMP SUM
STRUCTURAL STEEL (BRIDGE)	210 LB
CLEAN STRUCTURAL STEEL (EXISTING BRIDGE)	LUMP SUM
PAINT STRUCTURAL STEEL (EXISTING BRIDGE)	LUMP SUM
CLEAN AND PAINT STRUCTURAL STEEL	LUMP SUM
SPOT BLAST CLEAN AND PAINT UNDERCOAT	3,800 SQFT
WORK AREA MONITORING	LUMP SUM

NOTE:
THE CONTRACTOR SHALL VERIFY ALL CONTROLLING FIELD DIMENSIONS BEFORE ORDERING OR FABRICATING ANY MATERIAL. EXISTING UTILITY FACILITIES HAVE NOT BEEN PLOTTED ON THESE PLANS.

PAINT STRUCTURE
LA PALMA AVENUE OC
GENERAL PLAN

TONY D. BRAKE
DESIGN ENGINEER

	BY	CHECKED			
DESIGN	Gerald Joo	Edward Li	LOAD FACTOR DESIGN		
DETAILS	Tom Dang	Gerald Joo	LAYOUT	Tom Dang	Gerald Joo
QUANTITIES	Gerald Joo	Edward Li	SPECIFICATIONS	Tanya Kershell	PLANS AND SPECS COMPARED Tanya Kershell

STATE OF CALIFORNIA
DEPARTMENT OF TRANSPORTATION

DIVISION OF MAINTENANCE
STRUCTURE MAINTENANCE DESIGN

CU 12
EA 0L1701

BRIDGE NO. 55-0418
POST MILE 6.42

DISREGARD PRINTS BEARING EARLIER REVISION DATES
REVISION DATES: 5-04-10 7-07-10 7-29-10 7-30-10

SHEET 01 OF 02

STRUCTURES MAINTENANCE GENERAL PLAN SHEET (ENGLISH) (REV. 10/25/05)

ORIGINAL SCALE IN INCHES FOR REDUCED PLANS 0 1 2 3

FILE => 12-0L1701-a-gp.dgn

USERNAME => trmikesl DATE PLOTTED => 03-NOV-2010 TIME PLOTTED => 08:33

DIST	COUNTY	ROUTE	POST MILES TOTAL PROJECT	SHEET No	TOTAL SHEETS
12	Ora	91	6.4	15	15

09/20/10
REGISTERED CIVIL ENGINEER DATE

11-1-10
PLANS APPROVAL DATE

REGISTERED PROFESSIONAL ENGINEER GERALD D. JOO No. C65380 Exp. 09/30/11 CIVIL STATE OF CALIFORNIA

The State of California or its officers or agents shall not be responsible for the accuracy or completeness of electronic copies of this plan sheet.

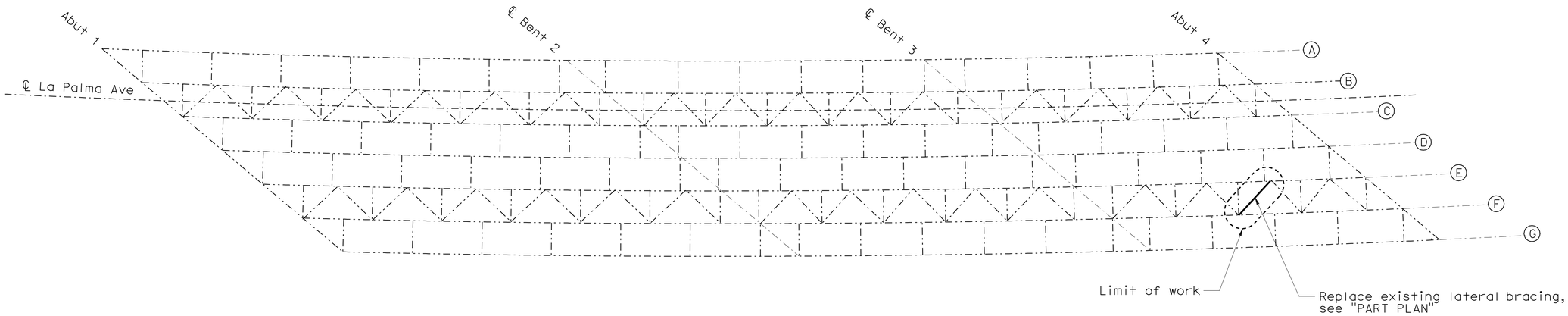

GIRDER LAYOUT

NO SCALE

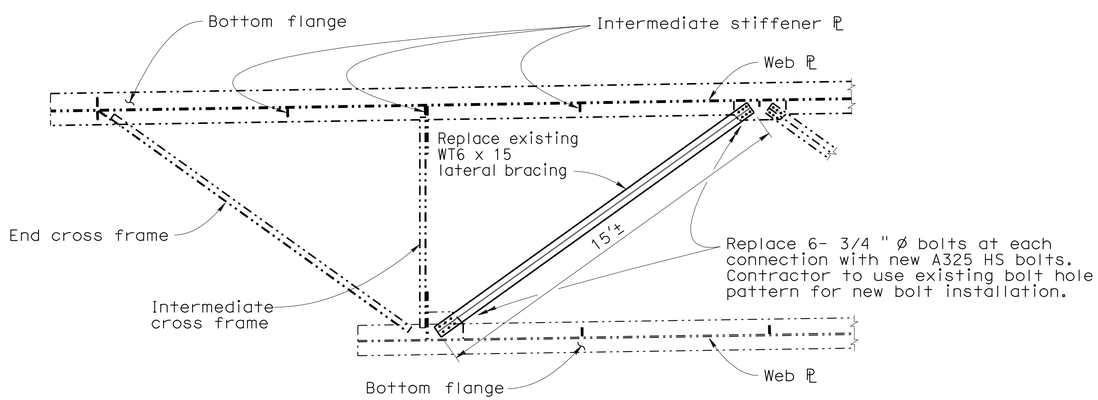

PART PLAN

NO SCALE

LEGEND:

- Indicates existing.
- Indicates direction of traffic.
- ℄ steel girder.

NOTES:

1. The replaced lateral bracing shall have two undercoats of paint and finish coated in the field.

NOTE:
THE CONTRACTOR SHALL VERIFY ALL CONTROLLING FIELD DIMENSIONS BEFORE ORDERING OR FABRICATING ANY MATERIAL. EXISTING UTILITY FACILITIES HAVE NOT BEEN PLOTTED ON THESE PLANS.

	BY	CHECKED
DESIGN	Gerald Joo	Edward Li
DETAILS	Tom Dang	Gerald Joo
QUANTITIES	Gerald Joo	Edward Li

STATE OF CALIFORNIA
DEPARTMENT OF TRANSPORTATION

DIVISION OF MAINTENANCE
STRUCTURE MAINTENANCE DESIGN

BRIDGE NO. 55-0418
POST MILE 6.42

LA PALMA AVENUE OC
LATERAL BRACING DETAILS

STRUCTURES MAINTENANCE DETAIL SHEET (ENGLISH) (REV. 10/25/05)

ORIGINAL SCALE IN INCHES FOR REDUCED PLANS 0 1 2 3

CU 12
EA 0L1701

DISREGARD PRINTS BEARING EARLIER REVISION DATES

REVISION DATES: 5-06-10 9-08-10 9-09-10

SHEET 02 OF 02

FILE => 12-0L1701-b-bracingdtl.dgn

USERNAME => trmikesl DATE PLOTTED => 03-NOV-2010 TIME PLOTTED => 08:33