| Dist | COUNTY | ROUTE | POST MILES TOTAL PROJECT | SHEET No. | TOTAL SHEETS |
|---|---|---|---|---|---|
| 12 | Ora | 5,241 | Var | 1 | 28 |

INDEX OF PLANS


| SHEET No. | DESCRIPTION |
|---|---|
| 1 | TITLE AND LOCATION MAP |
| 2 | CONSTRUCTION AREA SIGNS |
| 3-8 | TRAFFIC HANDLING PLANS AND QUANTITIES |
| 9-10 | PAVEMENT DELINEATION DETAILS AND QUANTITIES |
| 11-15 | REVISED STANDARD PLANS |
| STRUCTURE PLANS | |
| 16-28 | ROUTE 5, 241 BRIDGES |


THE STANDARD PLANS LIST APPLICABLE TO THIS CONTRACT IS INCLUDED IN THE NOTICE TO BIDDERS AND SPECIAL PROVISIONS BOOK.

STATE OF CALIFORNIA

# DEPARTMENT OF TRANSPORTATION

# PROJECT PLANS FOR CONSTRUCTION ON

# STATE HIGHWAY

## IN ORANGE COUNTY

## AT VARIOUS LOCATIONS

TO BE SUPPLEMENTED BY STANDARD PLANS DATED MAY 2006

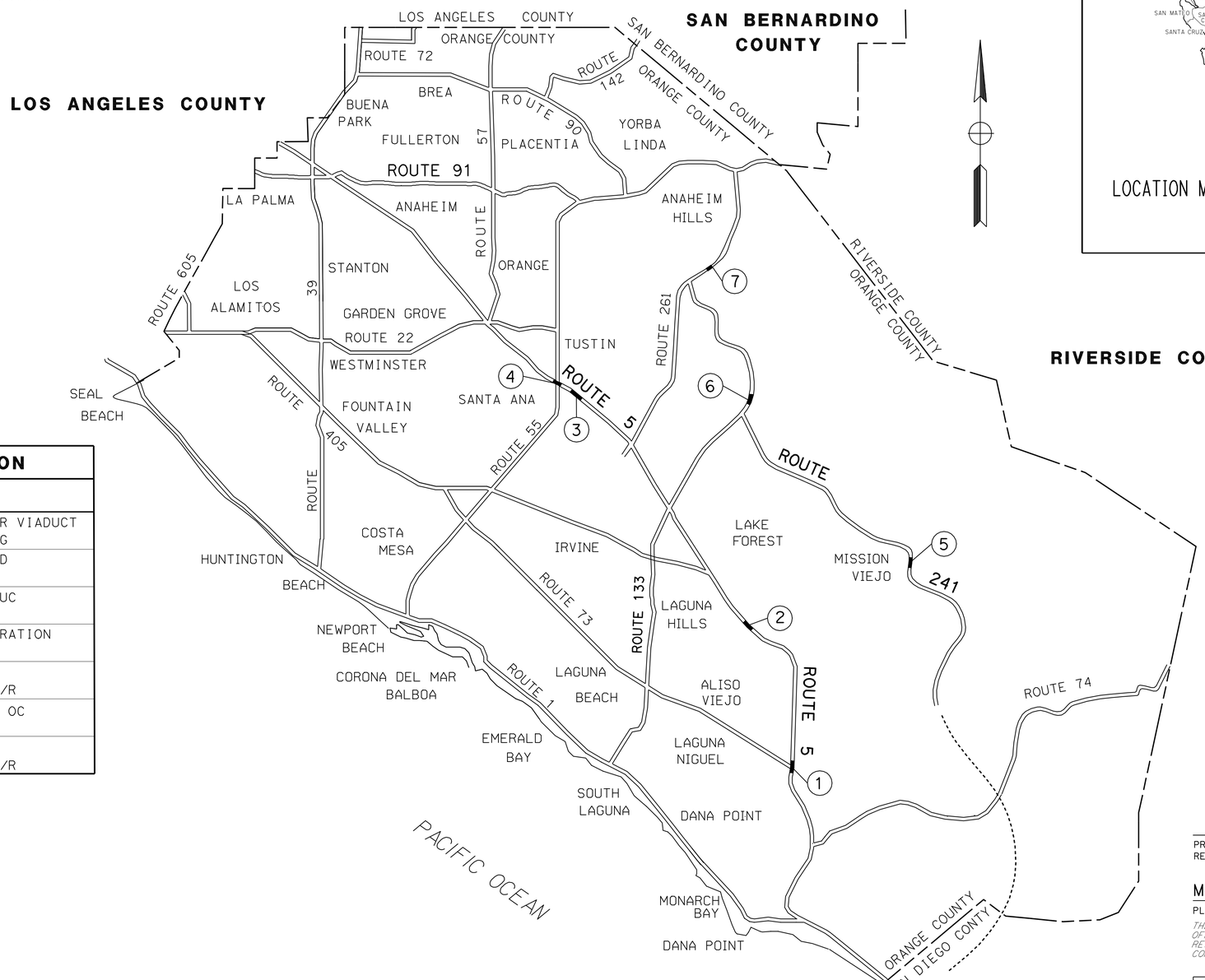

LOCATION MAP

## LOCATIONS OF CONSTRUCTION

| Loc | Rte | PM | DIRECTION | DESCRIPTION |
|---|---|---|---|---|
| 1 | 5 | 12.5 | NB | N5-N73 CONNECTOR VIADUCT Br No. 55-0719 G |
| 2 | 5 | 16.4 | NB/SB | EL TORO OVERHEAD Br No. 55-0221 |
| 3 | 5 | 29.6 | NB/SB | NEWPORT AVENUE UC Br No. 55-0940 |
| 4 | 5 | 30.3 | NB/SB | ROUTE 5/55 SEPARATION Br No. 55-0191 |
| 5 | 241 | 21.0 | NB/SB | ALISO CREEK Br No. 55-0704L/R |
| 6 | 241 | 27.4 | | BEE CANYON ROAD OC Br No. 55-0785 |
| 7 | 241 | 33.7 | NB/SB | SANTIAGO CREEK Br No. 55-0823L/R |

THE CONTRACTOR SHALL POSSESS THE CLASS (OR CLASSES) OF LICENSE AS SPECIFIED IN THE "NOTICE TO BIDDERS."

NO SCALE

PROJECT MANAGER MASSOUD TAJIK

DESIGN ENGINEER JOSEPH TRAN

PROJECT ENGINEER REGISTERED CIVIL ENGINEER — DATE 12-12-10

REGISTERED PROFESSIONAL ENGINEER JOSEPH TRAN No. C59283 Exp. 6.30.11 CIVIL STATE OF CALIFORNIA

March 14, 2011
PLANS APPROVAL DATE

*THE STATE OF CALIFORNIA OR ITS OFFICERS OR AGENTS SHALL NOT BE RESPONSIBLE FOR THE ACCURACY OR COMPLETENESS OF SCANNED COPIES OF THIS PLAN SHEET.*

| CONTRACT No. | 12-0L1204 |
|---|---|
| PROJECT ID | 1200000385 |

LAST REVISION 11-01-10 DATE PLOTTED => 17-MAR-2011 TIME PLOTTED => 11:02

| Dist | COUNTY | ROUTE | POST MILES TOTAL PROJECT | SHEET No. | TOTAL SHEETS |
|---|---|---|---|---|---|
| 12 | Ora | 5,241 | Var | 2 | 28 |

REGISTERED CIVIL ENGINEER — DATE 12-12-10

PLANS APPROVAL DATE 3-14-11

REGISTERED PROFESSIONAL ENGINEER JOSEPH TRAN No. C59283 Exp. 6.30.11 CIVIL STATE OF CALIFORNIA

*THE STATE OF CALIFORNIA OR ITS OFFICERS OR AGENTS SHALL NOT BE RESPONSIBLE FOR THE ACCURACY OR COMPLETENESS OF SCANNED COPIES OF THIS PLAN SHEET.*

## NOTES:

1. LOCATION OF CONSTRUCTION AREA SIGNS SHOWN ARE APPROXIMATE.
2. EXISTING UTILITY FACILITIES HAVE NOT BEEN PLOTTTED ON THESE PLANS.

## LEGEND:

- CONSTRUCTION AREA SIGN, 2-POST
- (X) CONSTRUCTION AREA SIGN
- ● LOCATION OF CONSTRUCTION

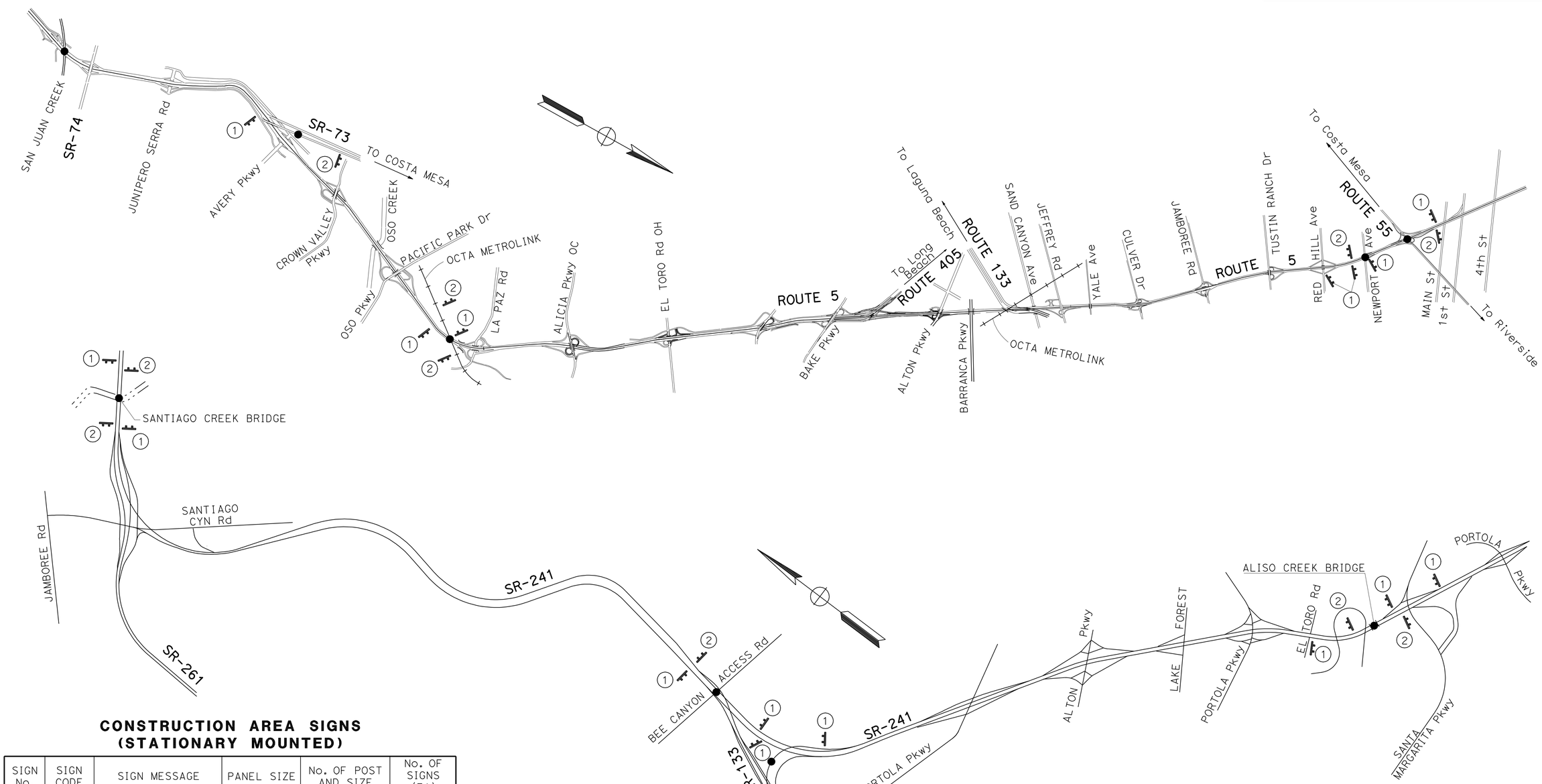


## CONSTRUCTION AREA SIGNS (STATIONARY MOUNTED)

| SIGN No. | SIGN CODE | SIGN MESSAGE | PANEL SIZE | No. OF POST AND SIZE | No. OF SIGNS (EA) |
|---|---|---|---|---|---|
| 1 | W20-1 | ROAD WORK AHEAD | 48" x 48" | 2-4" x 6" | 16 |
| 2 | G20-2 | END ROAD WORK | 48" x 24" | 2-4" x 4" | 11 |

* FOR ADDITIONAL QUANTITIES OF CONSTRUCTION AREA SIGNS, SEE SHEET THQ-1.

THIS PLAN ACCURATE FOR CONSTRUCTION AREA SIGN WORK ONLY

# CONSTRUCTION AREA SIGNS

NO SCALE

CS-1

STATE OF CALIFORNIA - DEPARTMENT OF TRANSPORTATION
Caltrans
MAINTENANCE

FUNCTIONAL SUPERVISOR: MASSOUD TAJIK
CALCULATED-DESIGNED BY: PHAT TRAN
CHECKED BY: JOSEPH TRAN
REVISED BY: 11/1/10
DATE REVISED: 11/1/10

LAST REVISION 11-01-10 | DATE PLOTTED => 22-MAR-2011 | TIME PLOTTED => 09:44

| Dist | COUNTY | ROUTE | POST MILES TOTAL PROJECT | SHEET No. | TOTAL SHEETS |
|---|---|---|---|---|---|
| 12 | Ora | 5,241 | Var | 3 | 28 |

REGISTERED CIVIL ENGINEER — DATE 12-14-10

3-14-11
PLANS APPROVAL DATE

REGISTERED PROFESSIONAL ENGINEER JOSEPH TRAN No. C59283 Exp. 6.30.11 CIVIL STATE OF CALIFORNIA

*THE STATE OF CALIFORNIA OR ITS OFFICERS OR AGENTS SHALL NOT BE RESPONSIBLE FOR THE ACCURACY OR COMPLETENESS OF SCANNED COPIES OF THIS PLAN SHEET.*

## NOTES:

1. LOCATIONS OF CONSTRUCTION AREA SIGNS (DETOUR) AND PCMS SHOWN ARE APPROXIMATE. EXACT LOCATIONS WILL BE DETERMINED BY THE ENGINEER.
2. MESSAGE TO BE DISPLAYED ON THE PCMS SHALL BE AS SHOWN ON THE PLANS OR AS DIRECTED BY THE ENGINEER.
3. EXISTING UTILITY FACILITIES HAVE NOT BEEN PLOTTTED ON THESE PLANS.

## NOTE:

DURING THE CLOSURE,
THE PCMS SHOULD READ AS FOLLOWS:

| NB Rte 73<br>CLOSED<br>USE CROWN VALLEY | → | DETOUR<br>NB Rte 73<br>EXIT HERE |
|---|---|---|
| PCMS-1 | | PCMS-2 |

## CLOSURE 1:

NB Rte 5 TO NB Rte 73 CONNECTOR

## DETOUR:

EXIT NB Rte 5 CROWN VALLEY Pkwy OFF-RAMP,
LEFT ON CROWN VALLEY Pkwy AND RIGHT ON GREENFIELD Dr

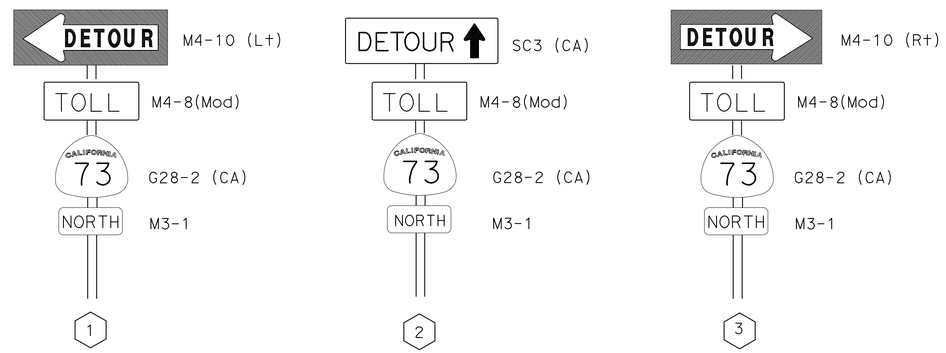


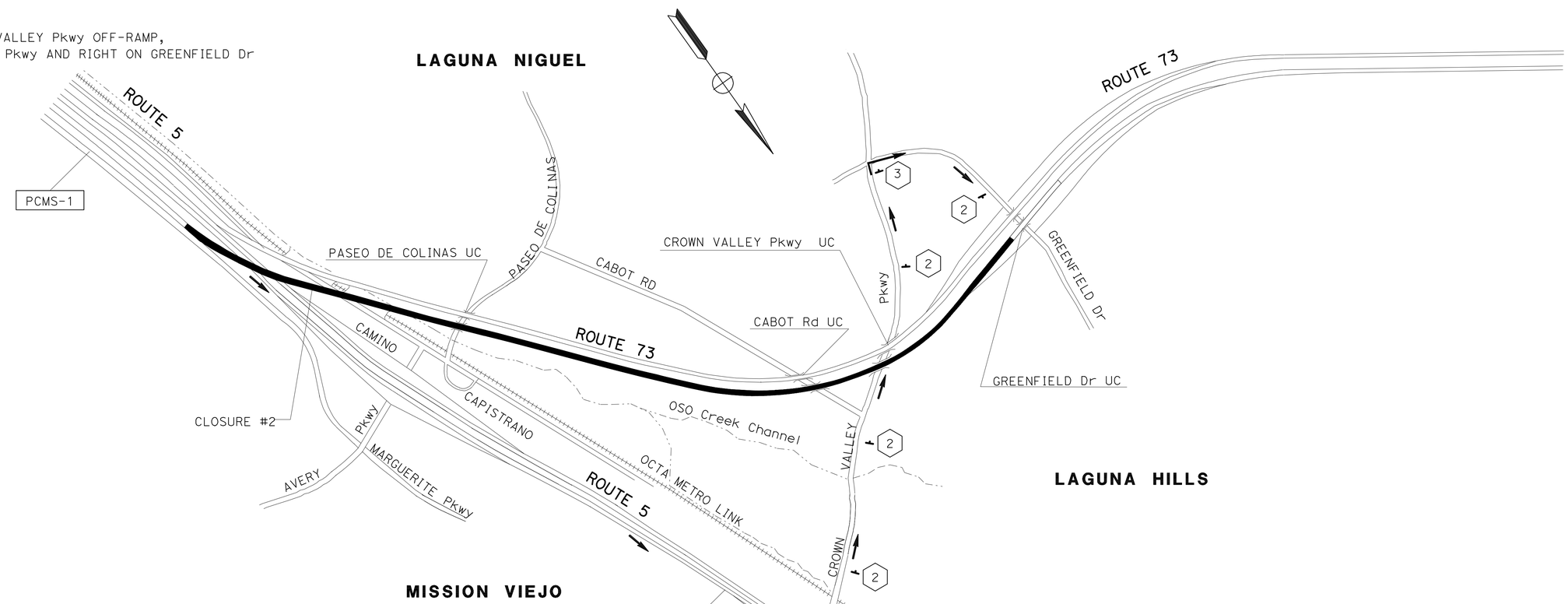


## LOCATION 1

N5 TO N73 CONNECTOR - Br No. 55-0719 G

THIS PLAN ACCURATE FOR TRAFFIC HANDLING WORK ONLY

# TRAFFIC HANDLING PLAN (DETOUR)

LOCATION 1

NO SCALE

**TH-1**

| REVISED BY | DATE REVISED |
|---|---|
| PHAT TRAN | 11/1/10 |

| CALCULATED-DESIGNED BY | CHECKED BY |
|---|---|
| JOSEPH TRAN | |

FUNCTIONAL SUPERVISOR: MASSOUD TAJIK

STATE OF CALIFORNIA - DEPARTMENT OF TRANSPORTATION
Caltrans
MAINTENANCE

LAST REVISION 12-12-10 | DATE PLOTTED => 17-MAR-2011 | TIME PLOTTED => 07:07

| Dist | COUNTY | ROUTE | POST MILES TOTAL PROJECT | SHEET No. | TOTAL SHEETS |
|---|---|---|---|---|---|
| 12 | Ora | 5,241 | Var | 4 | 28 |

REGISTERED CIVIL ENGINEER 12-14-10 DATE

3-14-11
PLANS APPROVAL DATE

REGISTERED PROFESSIONAL ENGINEER JOSEPH TRAN No. C59283 Exp. 6.30.11 CIVIL STATE OF CALIFORNIA

*THE STATE OF CALIFORNIA OR ITS OFFICERS OR AGENTS SHALL NOT BE RESPONSIBLE FOR THE ACCURACY OR COMPLETENESS OF SCANNED COPIES OF THIS PLAN SHEET.*

## CLOSURE 2A:

NB Rte 5 EL TORO Rd LOOP ON-RAMP

## DETOUR:

LEFT ON ROCKFIELD Blvd, AND LEFT ON LAKE FOREST Dr

## CLOSURE 2B:

SB Rte 5 EL TORO ON-RAMP

## DETOUR:

- FROM NORTH AVENIDA DE LA CARLOTA: LEFT ON EL TORO Rd
- FROM EAST PASEO DE VALENCIA: RIGHT ON AVENIDA DE LA CARLOTA, LEFT ON EL TORO Rd

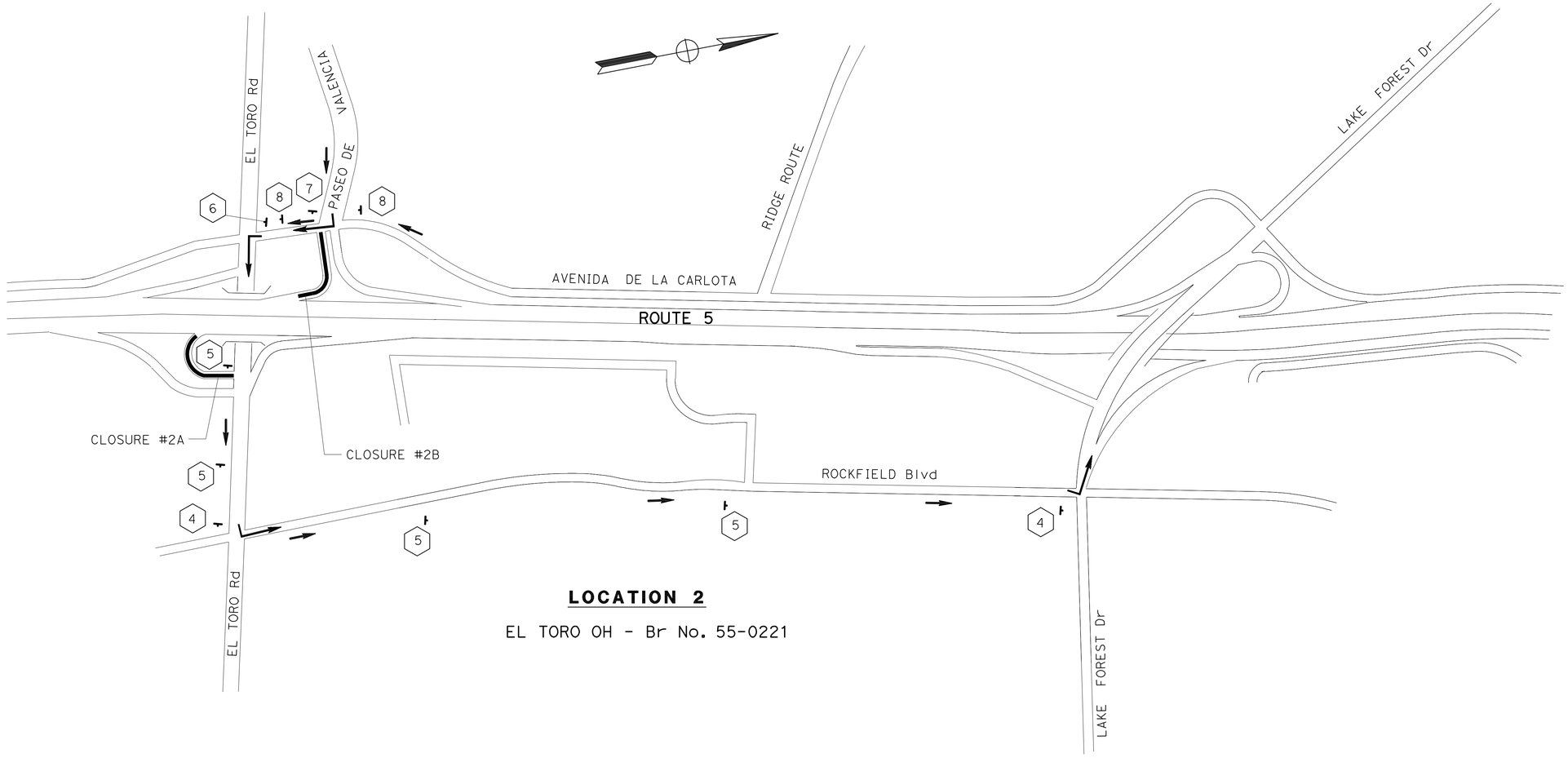


**LOCATION 2**

EL TORO OH - Br No. 55-0221

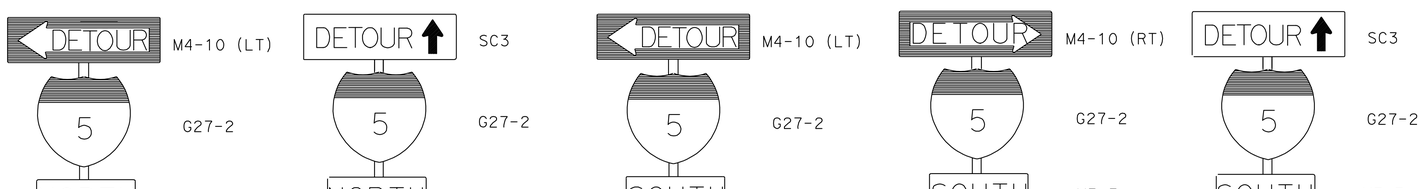


THIS PLAN ACCURATE FOR TRAFFIC HANDLING WORK ONLY

# TRAFFIC HANDLING PLAN (DETOUR)

LOCATION 2

NO SCALE

**TH-2**

| REVISED BY | DATE REVISED |
|---|---|
| PHAT TRAN | 11/1/10 |
| JOSEPH TRAN | 11/1/10 |

CALCULATED-DESIGNED BY
CHECKED BY

FUNCTIONAL SUPERVISOR: MASSOUD TAJIK

STATE OF CALIFORNIA - DEPARTMENT OF TRANSPORTATION
Caltrans
MAINTENANCE

LAST REVISION | DATE PLOTTED => 17-MAR-2011 | TIME PLOTTED => 11:22
12-12-10

| Dist | COUNTY | ROUTE | POST MILES TOTAL PROJECT | SHEET No. | TOTAL SHEETS |
|---|---|---|---|---|---|
| 12 | Ora | 5,241 | Var | 5 | 28 |

REGISTERED CIVIL ENGINEER 12-14-10 DATE

3-14-11
PLANS APPROVAL DATE

REGISTERED PROFESSIONAL ENGINEER JOSEPH TRAN No. C59283 Exp. 6.30.11 CIVIL STATE OF CALIFORNIA

*THE STATE OF CALIFORNIA OR ITS OFFICERS OR AGENTS SHALL NOT BE RESPONSIBLE FOR THE ACCURACY OR COMPLETENESS OF SCANNED COPIES OF THIS PLAN SHEET.*

## NOTES:

DURING THE CLOSURE,
THE PCMS SHOULD READ AS FOLLOWS:

| | |
|---|---|
| NB Rte 5 TO SB Rte 55 CLOSED USE 4TH St → PCMS-3 | DETOUR NB Rte 5 TO SB Rte 55 EXIT HERE → PCMS-4 |
| NEWPORT CLOSED USE RED HILL → PCMS-5 | DETOUR NEWPORT EXIT HERE → PCMS-6 |

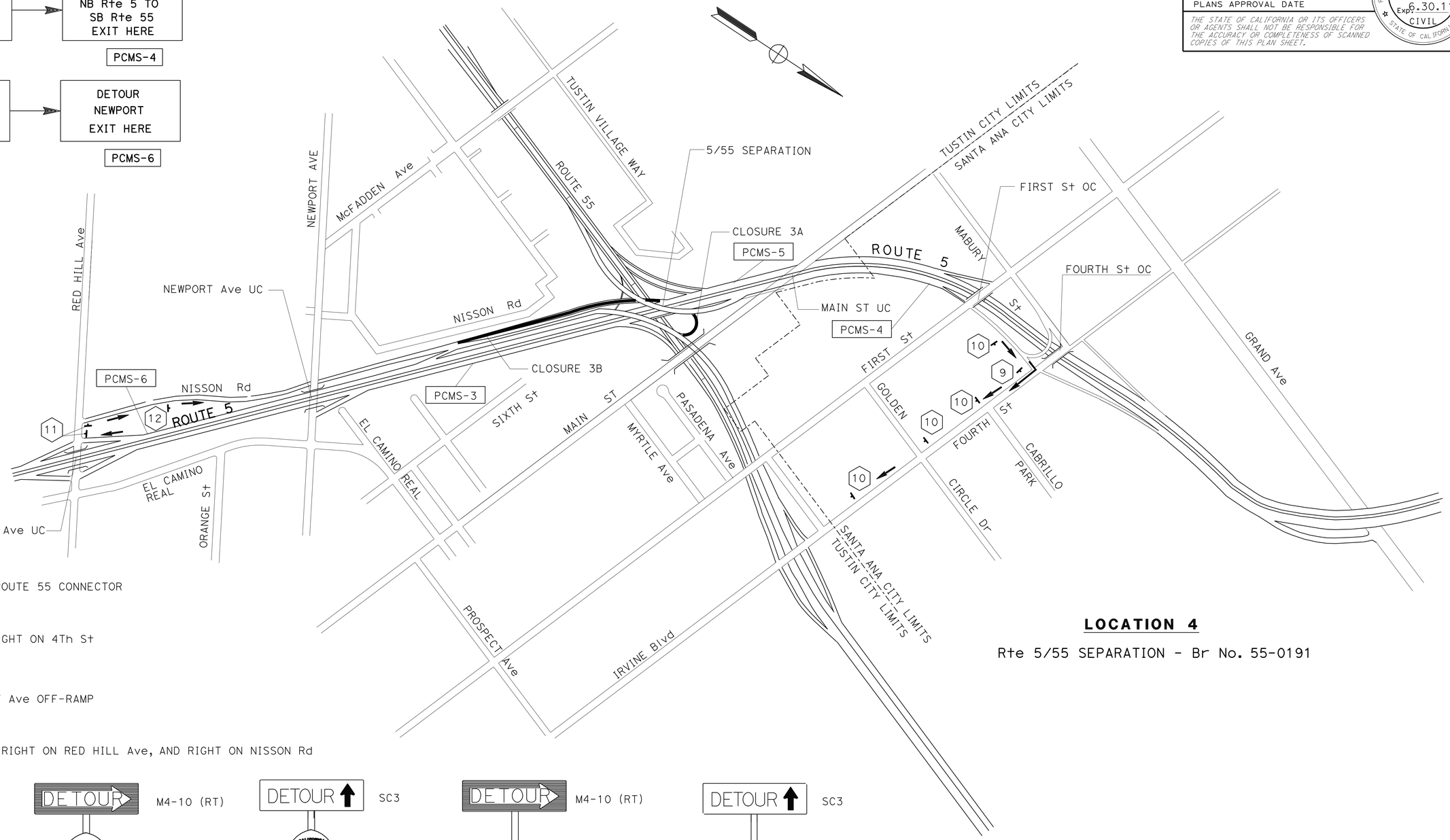


**LOCATION 4**

Rte 5/55 SEPARATION - Br No. 55-0191

### CLOSURE 3A:

NB ROUTE 5 TO SB ROUTE 55 CONNECTOR

### DETOUR:

EXIT 4Th St, AND RIGHT ON 4Th St

### CLOSURE 3B:

SB ROUTE 5 NEWPORT Ave OFF-RAMP

### DETOUR:

EXIT RED HILL Ave, RIGHT ON RED HILL Ave, AND RIGHT ON NISSON Rd

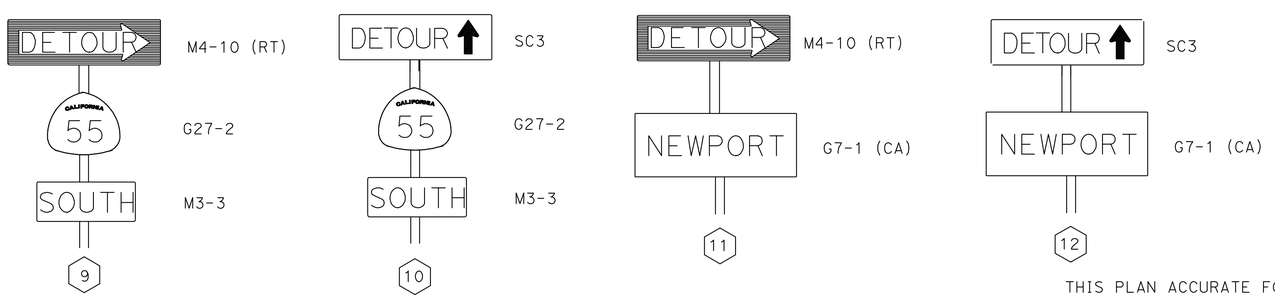


THIS PLAN ACCURATE FOR TRAFFIC HANDLING WORK ONLY.

# TRAFFIC HANDLING PLAN (DETOUR)

LOCATION 4

NO SCALE

**TH-3**

| | | | |
|---|---|---|---|
| J TRAN | 8/1/10 | REVISED BY | DATE REVISED |
| PHAT TRAN | JOSEPH TRAN | CALCULATED-DESIGNED BY | CHECKED BY |
| FUNCTIONAL SUPERVISOR | MASSOUD TAJIK | | |

STATE OF CALIFORNIA - DEPARTMENT OF TRANSPORTATION
Caltrans
MAINTENANCE

LAST REVISION 12-12-10 | DATE PLOTTED => 17-MAR-2011 | TIME PLOTTED => 07:07

| Dist | COUNTY | ROUTE | POST MILES TOTAL PROJECT | SHEET No. | TOTAL SHEETS |
|---|---|---|---|---|---|
| 12 | Ora | 5,241 | Var | 6 | 28 |

REGISTERED CIVIL ENGINEER 02-15-11 DATE

3-14-11
PLANS APPROVAL DATE

REGISTERED PROFESSIONAL ENGINEER JOSEPH TRAN No. C59283 Exp. 6.30.11 CIVIL STATE OF CALIFORNIA

*THE STATE OF CALIFORNIA OR ITS OFFICERS OR AGENTS SHALL NOT BE RESPONSIBLE FOR THE ACCURACY OR COMPLETENESS OF SCANNED COPIES OF THIS PLAN SHEET.*

## NOTES:

DURING THE CLOSURE,
THE PCMS SHOULD READ AS FOLLOWS:

NB 241 TO 91 CLOSED USE SANTIAGO CANYON → DETOUR TO Rte 91 EXIT HERE → DETOUR TO Rte 91 TAKE NB 55

PCMS-7 PCMS-8 PCMS-9

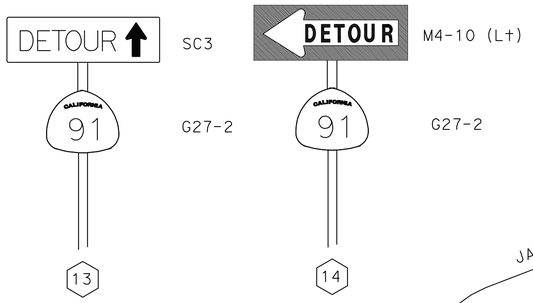


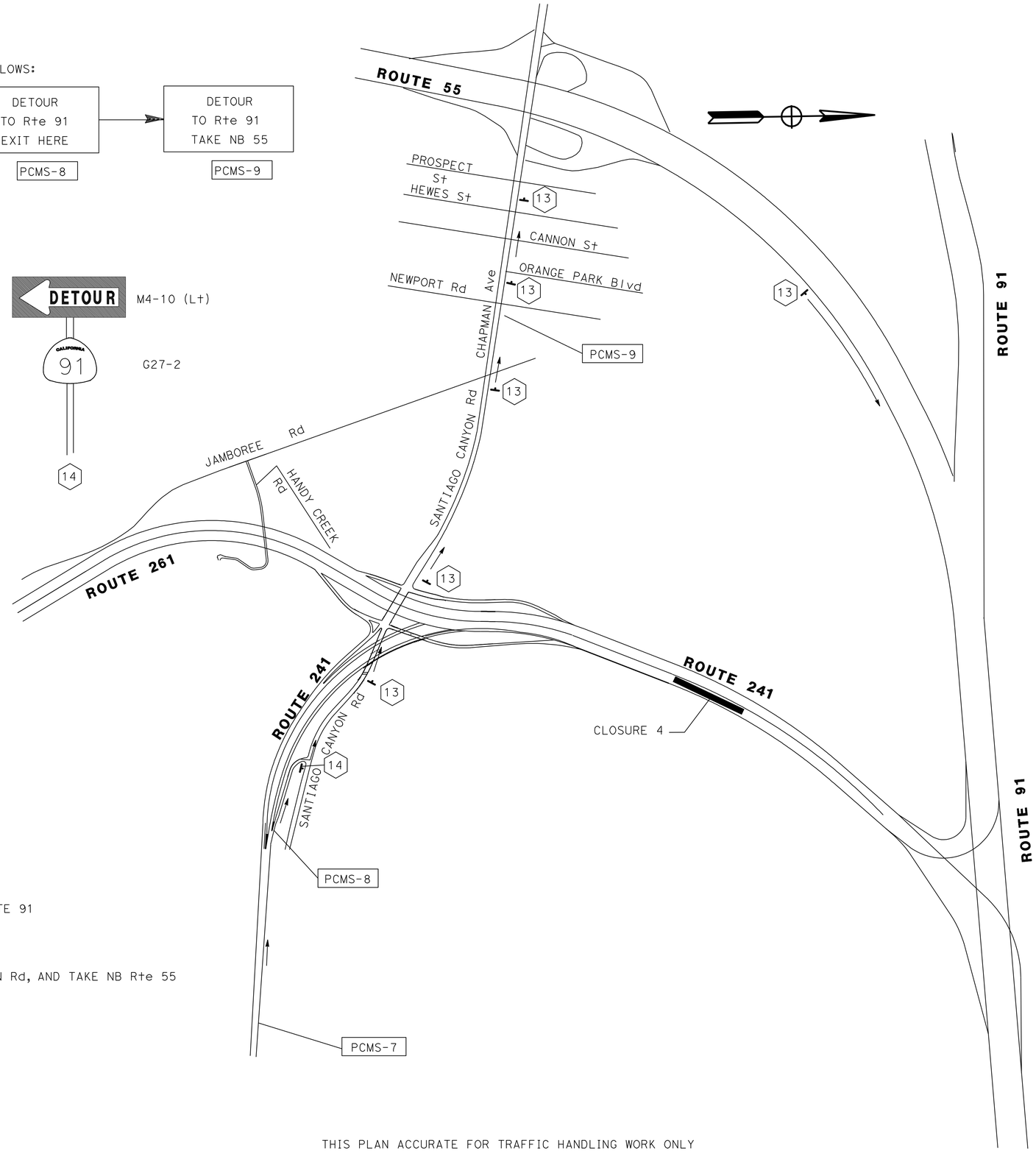


## CLOSURE 4

NB ROUTE 241 TO ROUTE 91

## DETOUR:

EXIT SANTIAGO CANYON Rd, AND TAKE NB Rte 55

THIS PLAN ACCURATE FOR TRAFFIC HANDLING WORK ONLY

# TRAFFIC HANDLING PLAN (DETOUR)

LOCATION 7

NO SCALE

**TH-4**

| | |
|---|---|
| REVISED BY | PHAT TRAN |
| DATE REVISED | 11/1/10 |
| CALCULATED-DESIGNED BY | JOSEPH TRAN |
| CHECKED BY | |
| FUNCTIONAL SUPERVISOR | MASSOUD TAJIK |

STATE OF CALIFORNIA - DEPARTMENT OF TRANSPORTATION
Caltrans
MAINTENANCE

LAST REVISION 2-15-2011 | DATE PLOTTED => 22-MAR-2011 | TIME PLOTTED => 09:45

| Dist | COUNTY | ROUTE | POST MILES TOTAL PROJECT | SHEET No. | TOTAL SHEETS |
|---|---|---|---|---|---|
| 12 | Ora | 5,241 | Var | 7 | 28 |

REGISTERED CIVIL ENGINEER 02-15-11 DATE

3-14-11
PLANS APPROVAL DATE

REGISTERED PROFESSIONAL ENGINEER JOSEPH TRAN No. C59283 Exp. 6.30.11 CIVIL STATE OF CALIFORNIA

*THE STATE OF CALIFORNIA OR ITS OFFICERS OR AGENTS SHALL NOT BE RESPONSIBLE FOR THE ACCURACY OR COMPLETENESS OF SCANNED COPIES OF THIS PLAN SHEET.*

**NOTE:**
DURING THE CLOSURE,
THE PCMS SHOULD READ AS FOLLOWS:

Rte 91 TO Rte 241 CLOSED USE Rte 55 → DETOUR TO Rte 241 USE Rte 55 → DETOUR TO Rte 241 EXIT HERE

PCMS-10 PCMS-11 PCMS-12

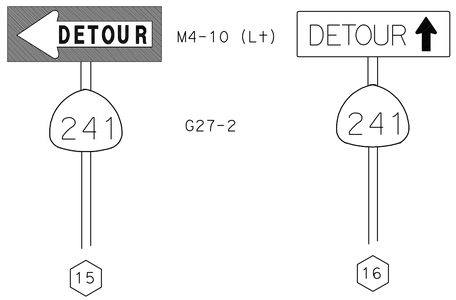


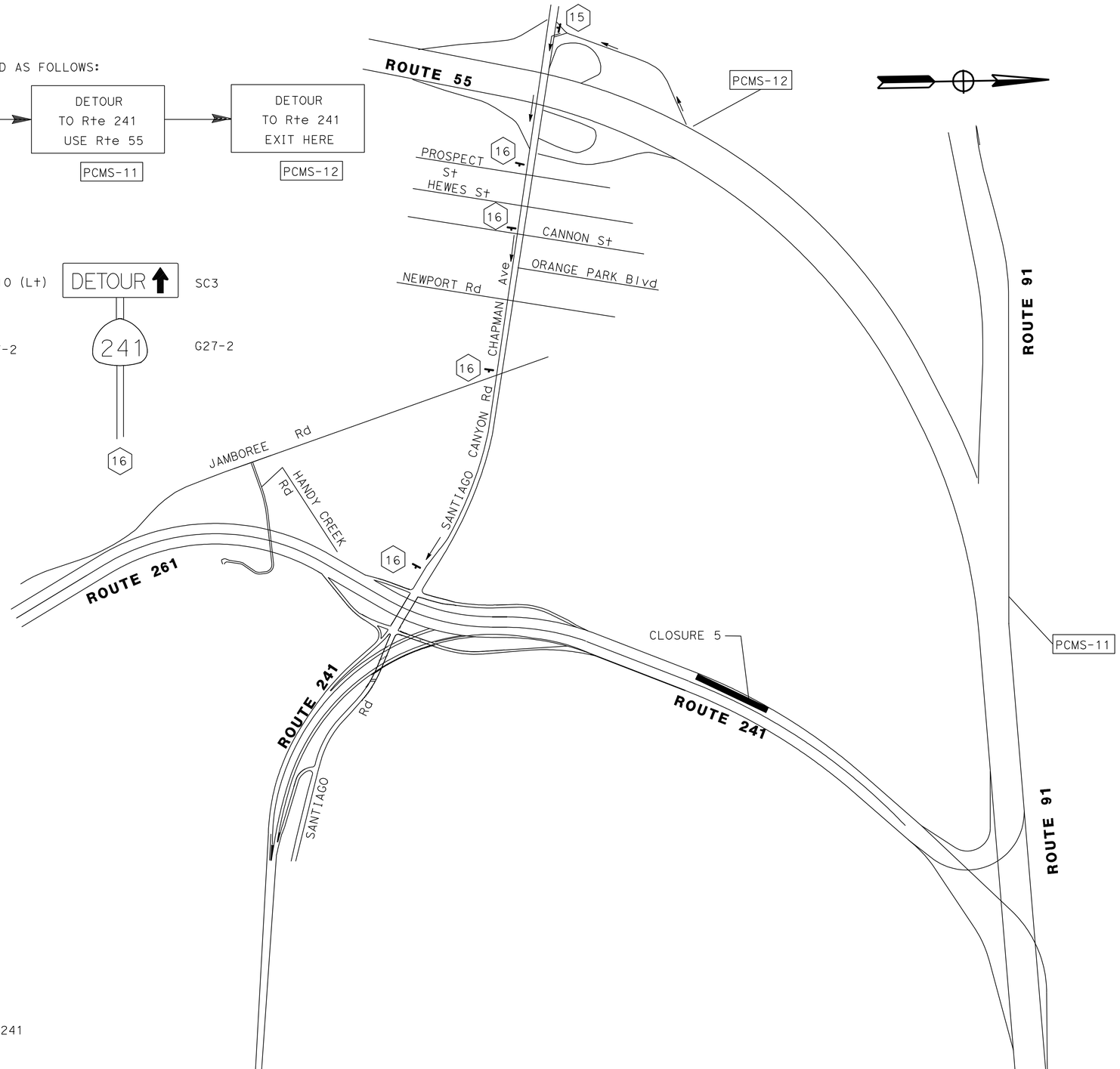


**CLOSURE 5:**
ROUTE 91 TO ROUTE 241

**DETOUR:**
TAKE ROUTE 55, EXIT CHAPMAN Ave, LEFT ON CHAPMAN Ave

THIS PLAN ACCURATE FOR TRAFFIC HANDLING WORK ONLY

# TRAFFIC HANDLING PLAN (DETOUR)

LOCATION 7

NO SCALE

**TH-5**

STATE OF CALIFORNIA - DEPARTMENT OF TRANSPORTATION
Caltrans MAINTENANCE

FUNCTIONAL SUPERVISOR: MASSOUD TAJIK
CALCULATED-DESIGNED BY: PHAT TRAN
CHECKED BY: JOSEPH TRAN
REVISED BY: 11/1/10
DATE REVISED: 11/1/10

LAST REVISION 02-15-11
DATE PLOTTED => 17-MAR-2011
TIME PLOTTED => 10:24

| Dist | COUNTY | ROUTE | POST MILES TOTAL PROJECT | SHEET No. | TOTAL SHEETS |
|---|---|---|---|---|---|
| 12 | Ora | 5,241 | Var | 8 | 28 |

REGISTERED CIVIL ENGINEER 02-15-11 DATE

3-14-11
PLANS APPROVAL DATE

REGISTERED PROFESSIONAL ENGINEER JOSEPH TRAN No. C59283 Exp. 6.30.11 CIVIL STATE OF CALIFORNIA

*THE STATE OF CALIFORNIA OR ITS OFFICERS OR AGENTS SHALL NOT BE RESPONSIBLE FOR THE ACCURACY OR COMPLETENESS OF SCANNED COPIES OF THIS PLAN SHEET.*

## NOTES:

1. ALL SIGNS ARE STATIONARY MOUNTED. EXACT SIGN LOCATIONS TO BE DETERMINED BY THE ENGINEER.
2. FOR ADDITIONAL QUANTITIES OF CONSTRUCTION AREA SIGNS, SEE SHEET CS-1.

## CONSTRUCTION AREA SIGNS (STATIONARY MOUNTED)

| SHEET No. | DETOUR SIGN TYPE | POST SIZE | NO. OF SIGNS (EA) | No. OF POSTS | REMARKS |
|---|---|---|---|---|---|
| TH-1 | 1 | 4" x 6" | 1 | 1 | (S) |
| | 2 | 4" x 6" | 4 | 4 | (S) |
| | 3 | 4" x 6" | 1 | 1 | (S) |
| TH-2 | 4 | 4" x 6" | 2 | 2 | (S) |
| | 5 | 4" x 6" | 4 | 4 | (S) |
| | 6 | 4" x 6" | 1 | 1 | (S) |
| | 7 | 4" x 6" | 1 | 1 | (S) |
| | 8 | 4" x 6" | 2 | 2 | (S) |
| TH-3 | 9 | 4" x 6" | 1 | 1 | (S) |
| | 10 | 4" x 6" | 4 | 4 | (S) |
| | 11 | 4" x 6" | 2 | 2 | (S) |
| | 12 | 4" x 6" | 1 | 1 | (S) |
| TH-4 | 13 | 4" x 6" | 6 | 6 | (S) |
| | 14 | 4" x 6" | 1 | 1 | (S) |
| TH-5 | 15 | 4" x 6" | 1 | 1 | (S) |
| | 16 | 4" x 6" | 4 | 4 | (S) |

(S) DENOTES STATIONARY MOUNTED SIGN.

# TRAFFIC HANDLING QUANTITIES

THQ-1

STATE OF CALIFORNIA - DEPARTMENT OF TRANSPORTATION
Caltrans MAINTENANCE

FUNCTIONAL SUPERVISOR: MASSOUD TAJIK
CALCULATED-DESIGNED BY: PHAT TRAN
CHECKED BY: JOSEPH TRAN
REVISED BY: J TRAN
DATE REVISED: 8/1/10

LAST REVISION 11-01-10
DATE PLOTTED => 17-MAR-2011
TIME PLOTTED => 10:25

| Dist | COUNTY | ROUTE | POST MILES TOTAL PROJECT | SHEET No. | TOTAL SHEETS |
|---|---|---|---|---|---|
| 12 | Ora | 5,241 | Var | 9 | 28 |

REGISTERED CIVIL ENGINEER 12-14-10 DATE

3-14-11
PLANS APPROVAL DATE

REGISTERED PROFESSIONAL ENGINEER JOSEPH TRAN No. C59283 Exp. 6.30.11 CIVIL STATE OF CALIFORNIA

*THE STATE OF CALIFORNIA OR ITS OFFICERS OR AGENTS SHALL NOT BE RESPONSIBLE FOR THE ACCURACY OR COMPLETENESS OF SCANNED COPIES OF THIS PLAN SHEET.*

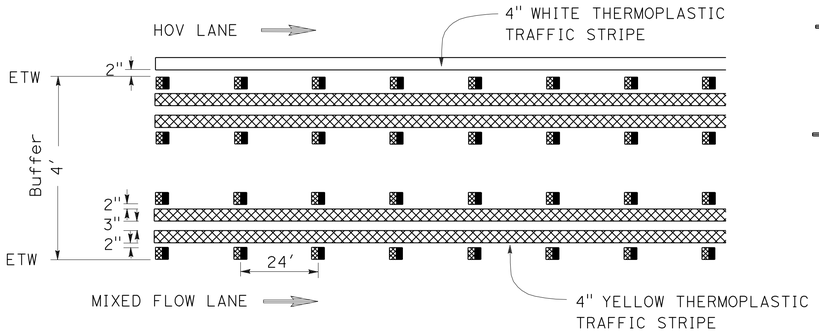


**DETAIL A**

4' BUFFER

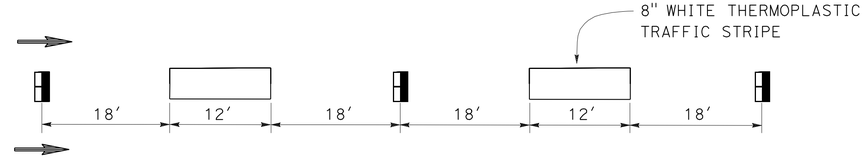


**DETAIL B**

INGRESS/EGRESS STRIPING

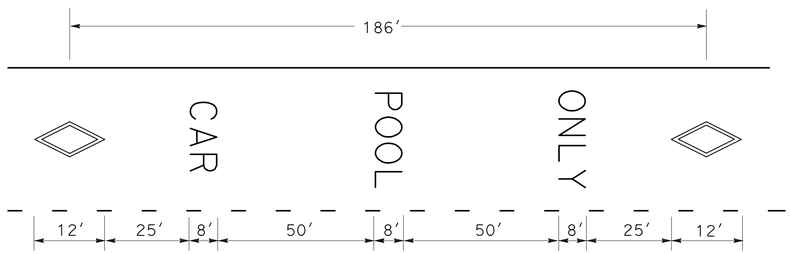


MIXED FLOW TRAFFIC

**DETAIL C**

HOV LANE PAVEMENT MARKING
FOR INGRESS/EGRESS LOCATONS

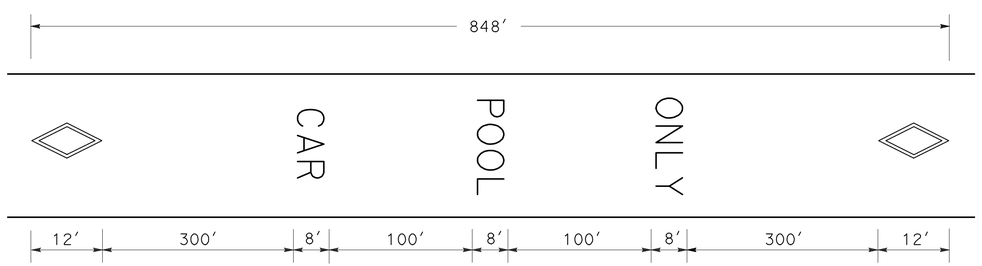


MIXED FLOW TRAFFIC

**DETAIL D**

HOV LANE PAVEMENT MARKING
EXCEPT AT INGRESS/EGRESS LOCATONS

## LEGEND:

- TYPE A WHITE NON-REFLECTIVE MARKER
- TYPE G ONE-WAY CLEAR RETROREFLECTIVE MARKER
- TYPE H ONE-WAY YELLOW RETROREFLECTIVE MARKER
- DIRECTION OF TRAFFIC

## NOTE:

SEE STANDARD PLANS FOR PAVEMENT MARKING SYMBOL AND WORD DETAILS NOT SHOWN.

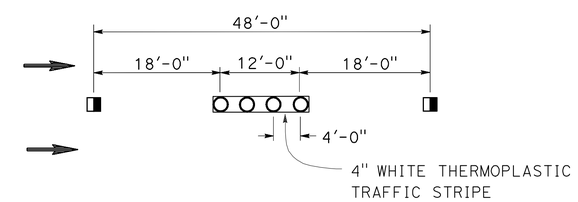


**DETAIL 13 Mod**

# PAVEMENT DELINEATION DETAILS

NO SCALE

**PDD-1**

| | |
|---|---|
| 11/1/10 | REVISED BY |
| 11/1/10 | DATE REVISED |
| PHAT TRAN | |
| JOSEPH TRAN | |
| CALCULATED-DESIGNED BY | |
| CHECKED BY | |
| MASSOUD TAJIK | FUNCTIONAL SUPERVISOR |

STATE OF CALIFORNIA - DEPARTMENT OF TRANSPORTATION
Caltrans
MAINTENANCE

LAST REVISION 12-12-10
DATE PLOTTED => 17-MAR-2011
TIME PLOTTED => 10:25

| Dist | COUNTY | ROUTE | POST MILES TOTAL PROJECT | SHEET No. | TOTAL SHEETS |
|---|---|---|---|---|---|
| 12 | Ora | 5,241 | Var | 10 | 28 |

REGISTERED CIVIL ENGINEER 12-14-10 DATE

3-14-11
PLANS APPROVAL DATE

REGISTERED PROFESSIONAL ENGINEER JOSEPH TRAN No. C59283 Exp. 6.30.11 CIVIL STATE OF CALIFORNIA

*THE STATE OF CALIFORNIA OR ITS OFFICERS OR AGENTS SHALL NOT BE RESPONSIBLE FOR THE ACCURACY OR COMPLETENESS OF SCANNED COPIES OF THIS PLAN SHEET.*

NOTE:

STRIPING LIMIT IS FROM BEGIN BRIDGE TO END BRIDGE.

# PAVEMENT DELINEATION QUANTITIES

| LOCATION - DESCRIPTION | | | | | THERMOPLASTIC TRAFFIC STRIPE | | | | | | | | | | | THERMOPLASTIC PAVEMENT MARKING | | PAVEMENT MARKER | | | REMOVE | | | |
|---|---|---|---|---|---|---|---|---|---|---|---|---|---|---|---|---|---|---|---|---|---|---|---|---|
| | | | | | DETAIL "A" 4" SOLID WHITE | DETAIL "A" 4" SOLID YELLOW | DETAIL 22 4" SOLID YELLOW | DETAIL 25 4" SOLID YELLOW | DETAIL 27B 4" SOLID WHITE | DETAIL 8 4" WHITE BROKEN (17-7) | DETAIL 9 4" WHITE BROKEN (17-7) | DETAIL 13 Mod 4" WHITE BROKEN (36-12) | DETAIL "B" 8" WHITE BROKEN (36-12) | DETAIL 36 8" SOLID WHITE | DETAIL 37 8" WHITE BROKEN (12-3) | DIAMOND SYMBOL | WORDS | NON-REFLECTIVE | RETRO-REFLECTIVE | | YELLOW THERMOPLASTIC TRAFFIC STRIPE (HAZARDOUS WASTE) | THERMOPLASTIC TRAFFIC STRIPE | THERMOPLASTIC PAVEMENT MARKING | PAVEMENT MARKER |
| Loc | Rte | PM | STRUCTURE NAME & BRIDGE No. | Dir | LF | LF | LF | LF | LF | LF | LF | LF | LF | LF | LF | SQFT | SQFT | TYPE A | TYPE G | TYPE H | LF | LF | SQFT | EA |
| 1 | 5 | 12.5 | N5-N73 CONNECTOR VIADUCT Br No. 55-0719 G | NB | | | | 2750 | 2750 | | | 5500 | | | | | | 458 | 115 | 57 | 2750 | 4125 | | 630 |
| 2 | 5 | 16.4 | EL TORO OVERHEAD Br No. 55-0221 | NB | 218 | 872 | | 218 | 218 | 218 | | 872 | | | | | | 73 | 18 | 41 | 1090 | 872 | | 132 |
| | | | | SB | 218 | 872 | | 218 | 218 | 218 | | 1090 | | | | | | 91 | 23 | 41 | 1090 | 927 | | 154 |
| 3 | 5 | 29.6 | NEWPORT AVENUE UC Br No. 55-0940 | NB | 180 | 720 | | 180 | 180 | | | 720 | | | 180 | | | 60 | 27 | 34 | 900 | 720 | | 121 |
| | | | | SB | 180 | 720 | | 180 | 180 | | | 720 | | | 180 | | | 60 | 27 | 34 | 900 | 720 | | 121 |
| 4 | 5 | 30.3 | ROUTE 5/55 SEPARATION Br No. 55-0191 | NB | | | | 211 | 211 | | | 633 | 211 | 500 | | 11 | 22 | 53 | 43 | 4 | 211 | 1080 | 33 | 100 |
| | | | | SB | | | | 243 | 243 | | | 729 | 243 | 500 | | | | 61 | 46 | 5 | 243 | 1168 | | 112 |
| 5 | 241 | 21.0 | ALISO CREEK Br. No. 55-0704L/R | NB | | | | 1520 | 1520 | | | 4300 | | 260 | | | | 358 | 100 | 32 | 1520 | 2855 | | 490 |
| | | | | SB | | | | 1500 | 1500 | | | 1500 | | | 1500 | | | 125 | 131 | 31 | 1500 | 3375 | | 288 |
| 6 | 241 | 27.4 | BEE CANYON ROAD OC Br No. 55-0785 | OC | | | 1060 | | 1060 | | 530 | | | | | | | | 11 | 44 | 530 | 1590 | | 55 |
| 7 | 241 | 33.7 | SANTIAGO CREEK Br No. 55-0823L/R | NB | | | | 1272 | 1272 | | | 2544 | | | | | | 212 | 53 | 27 | 1272 | 1908 | | 292 |
| | | | | SB | | | | 1272 | 1272 | | | 2544 | | | | | | 212 | 53 | 27 | 1272 | 1908 | | 292 |
| SUB-TOTAL | | | | | 796 | 3184 | 1060 | 9564 | 10624 | 436 | 530 | 21152 | 454 | 1260 | 1860 | 11 | 22 | 1763 | 647 | 377 | 13278 | 21248 | 33 | 2787 |
| TOTAL | | | | | 25228 | | | | | 966 | | 21152 | 454 | 1260 | 1860 | 33 | | 1763 | 1024 | | 13278 | 21248 | 33 | 2787 |

STATE OF CALIFORNIA - DEPARTMENT OF TRANSPORTATION
Caltrans
MAINTENANCE

FUNCTIONAL SUPERVISOR: MASSOUD TAJIK

CALCULATED-DESIGNED BY: PHAT TRAN
CHECKED BY: JOSEPH TRAN

REVISED BY: 11/1/10
DATE REVISED: 11/1/10

PAVEMENT DELINEATION QUANTITIES

NO SCALE

PDQ-1

LAST REVISION 12-12-10 | DATE PLOTTED => 17-MAR-2011 | TIME PLOTTED => 11:40

| DIST | COUNTY | ROUTE | POST MILES TOTAL PROJECT | SHEET NO. | TOTAL SHEETS |
|---|---|---|---|---|---|
| 12 | Ora | 5,241 | Var | 11 | 28 |

REGISTERED CIVIL ENGINEER

June 6, 2008
PLANS APPROVAL DATE

REGISTERED PROFESSIONAL ENGINEER
Donald E. Howe
No. C46402
Exp. 3-31-09
CIVIL
STATE OF CALIFORNIA

*The State of California or its officers or agents shall not be responsible for the accuracy or completeness of electronic copies of this plan sheet.*

*To accompany plans dated* 3-14-11

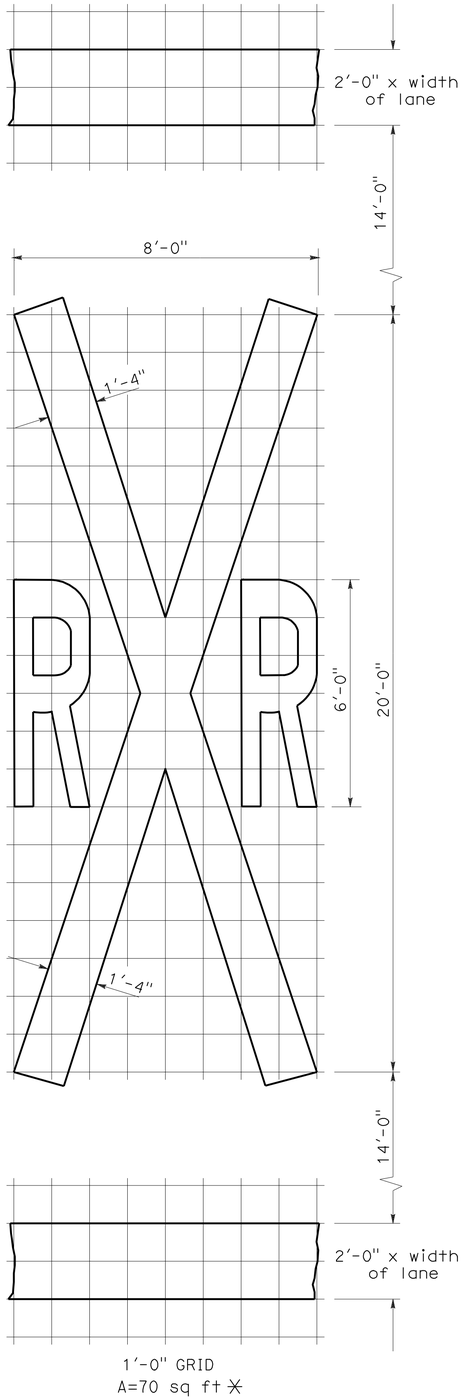


RAILROAD CROSSING SYMBOL

✳70 sq ft DOES NOT INCLUDE THE 2'-0" x VARIABLE WIDTH TRANSVERSE LINES.

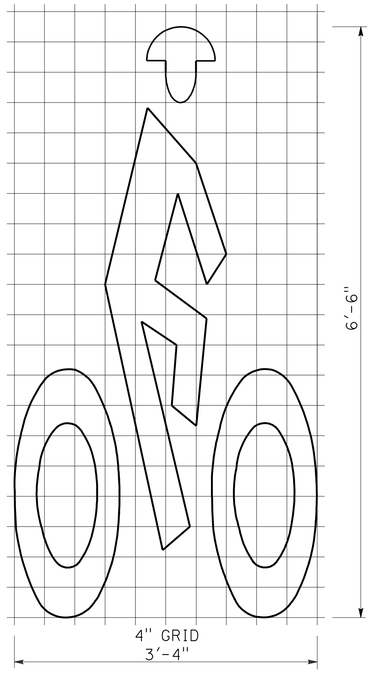


BIKE LANE SYMBOL

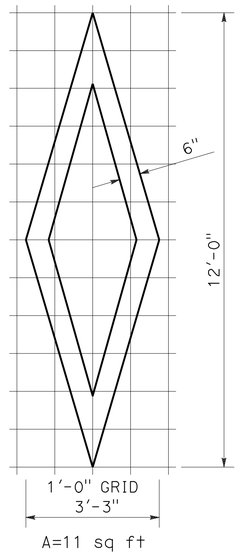


DIAMOND SYMBOL

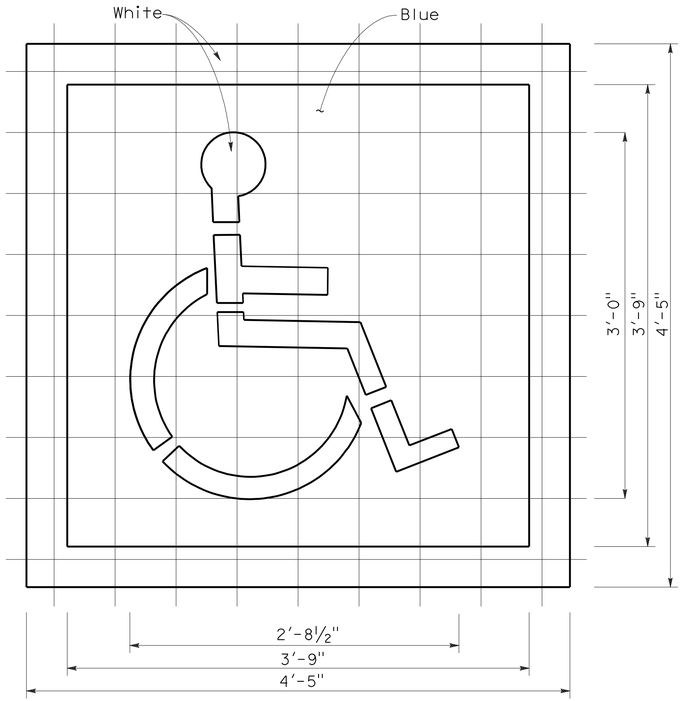


INTERNATIONAL SYMBOL OF ACCESSIBILITY MARKING

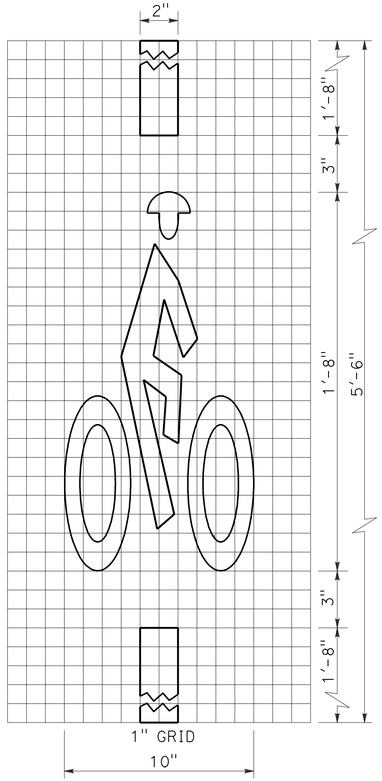


BICYCLE LOOP DETECTOR SYMBOL

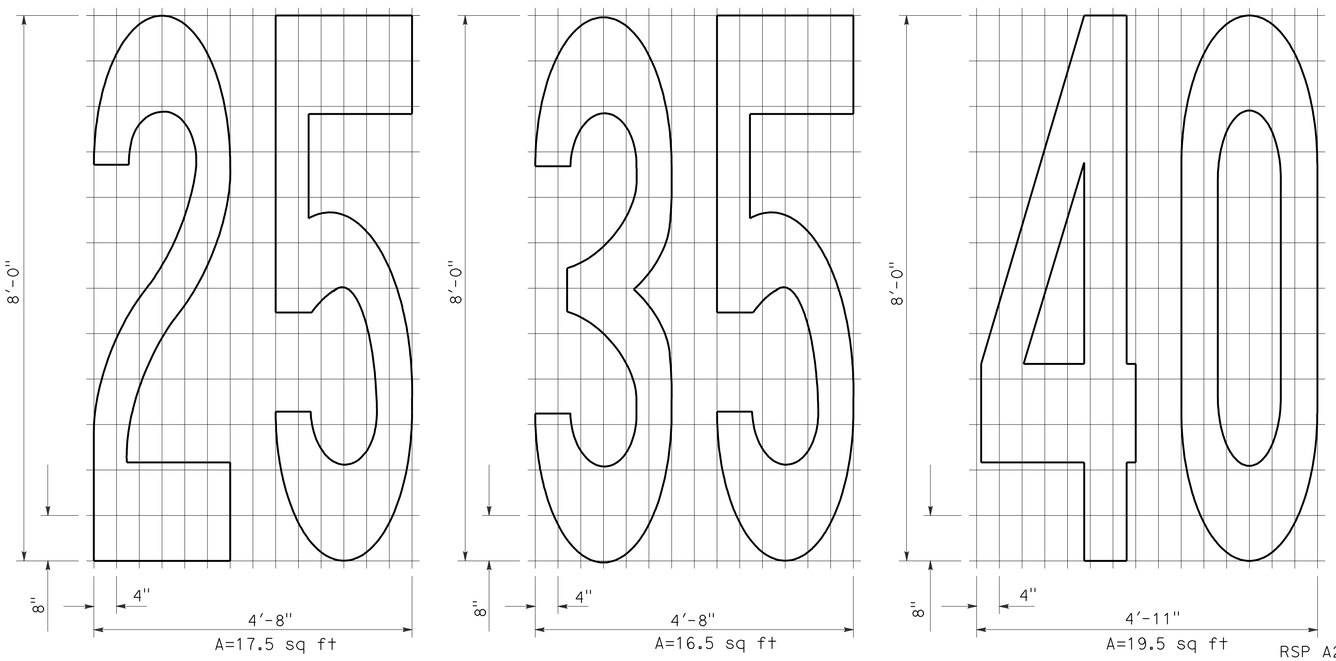


NUMERALS

NOTE:

1. Minor variations in dimensions may be accepted by the Engineer.

STATE OF CALIFORNIA
DEPARTMENT OF TRANSPORTATION

# PAVEMENT MARKINGS SYMBOLS AND NUMERALS

NO SCALE

RSP A24C DATED JUNE 6, 2008 SUPERSEDES STANDARD PLAN A24C DATED MAY 1, 2006 - PAGE 11 OF THE STANDARD PLANS BOOK DATED MAY 2006.

**REVISED STANDARD PLAN RSP A24C**

**2006 REVISED STANDARD PLAN RSP A24C**

5-27-08

| DIST | COUNTY | ROUTE | POST MILES TOTAL PROJECT | SHEET NO. | TOTAL SHEETS |
|---|---|---|---|---|---|
| 12 | Ora | 5,241 | Var | 12 | 28 |

Randell D. Hiatt
REGISTERED CIVIL ENGINEER

June 6, 2008
PLANS APPROVAL DATE

REGISTERED PROFESSIONAL ENGINEER
Randell D. Hiatt
No. C50200
Exp. 6-30-09
CIVIL
STATE OF CALIFORNIA

*The State of California or its officers or agents shall not be responsible for the accuracy or completeness of electronic copies of this plan sheet.*

*To accompany plans dated* 3-14-11

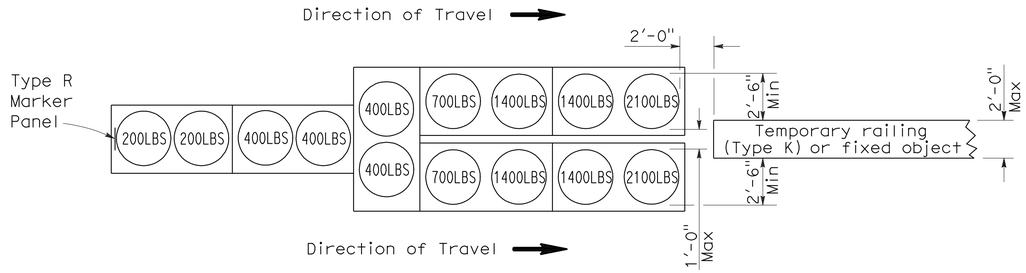


## ARRAY `TU14'

Approach speed 45 mph or more

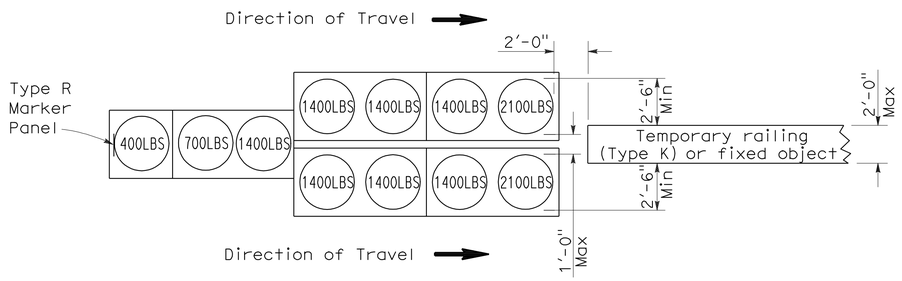


## ARRAY `TU11'

Approach speed less than 45 mph

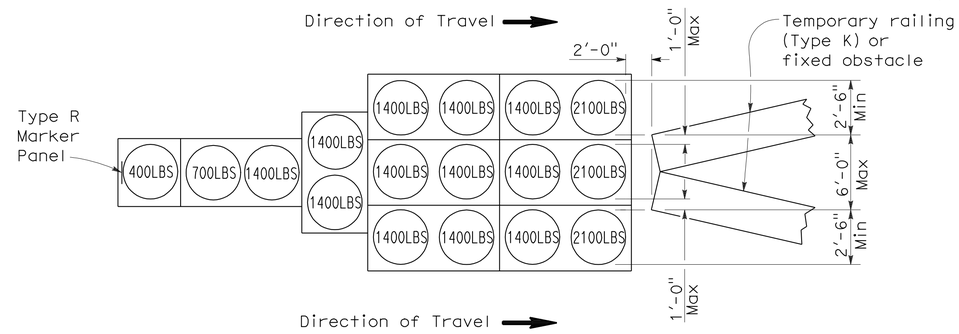


## ARRAY `TU17'

Approach speed less than 45 mph

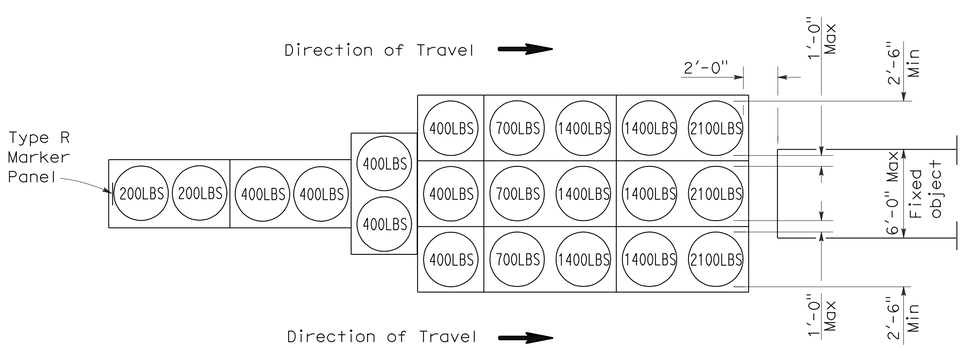


## ARRAY `TU21'

Approach speed 45 mph or more

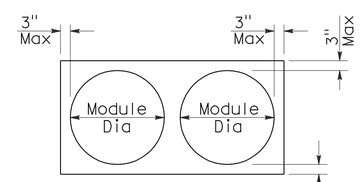


PLAN

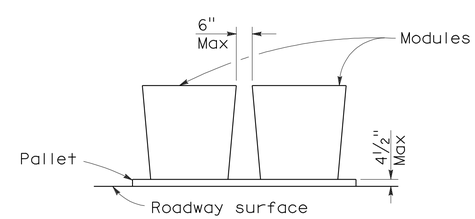


ELEVATION

## CRASH CUSHION PALLET DETAIL

See Note 7

## NOTES:

1. (XXX) Indicates sand filled module location and weight of sand in pounds for each module. Module spacing is based on the greater diameter of the module.
2. All sand weights are nominal.
3. Temporary crash cushion arrays shall not encroach on the traveled way.
4. Place the top of Type R marker panel 1" below the module lid.
5. Refer to Standard Plan A73B for marker details.
6. Approach speeds indicated conform to NCHRP 350 Report criteria.
7. Use of pallets is optional.

STATE OF CALIFORNIA
DEPARTMENT OF TRANSPORTATION

# TEMPORARY CRASH CUSHION, SAND FILLED (UNIDIRECTIONAL)

NO SCALE

RSP T1A DATED JUNE 6, 2008 SUPERSEDES STANDARD PLAN T1A
DATED MAY 1, 2006 - PAGE 211 OF THE STANDARD PLANS BOOK DATED MAY 2006.

**REVISED STANDARD PLAN RSP T1A**

**2006 REVISED STANDARD PLAN RSP T1A**

5-15-08

| DIST | COUNTY | ROUTE | POST MILES TOTAL PROJECT | SHEET NO. | TOTAL SHEETS |
|---|---|---|---|---|---|
| 12 | Ora | 5,241 | Var | 13 | 28 |

Randell D. Hiatt
REGISTERED CIVIL ENGINEER

June 6, 2008
PLANS APPROVAL DATE

REGISTERED PROFESSIONAL ENGINEER
Randell D. Hiatt
No. C50200
Exp. 6-30-09
CIVIL
STATE OF CALIFORNIA

*The State of California or its officers or agents shall not be responsible for the accuracy or completeness of electronic copies of this plan sheet.*

*To accompany plans dated* 3-14-11

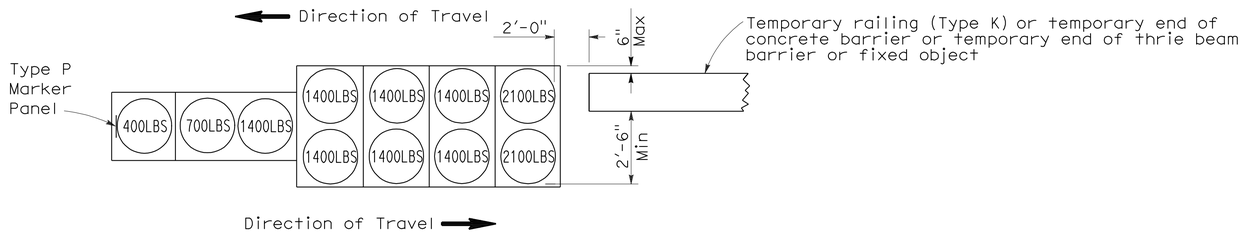


## ARRAY 'TB11'

Approach speed less than 45 mph

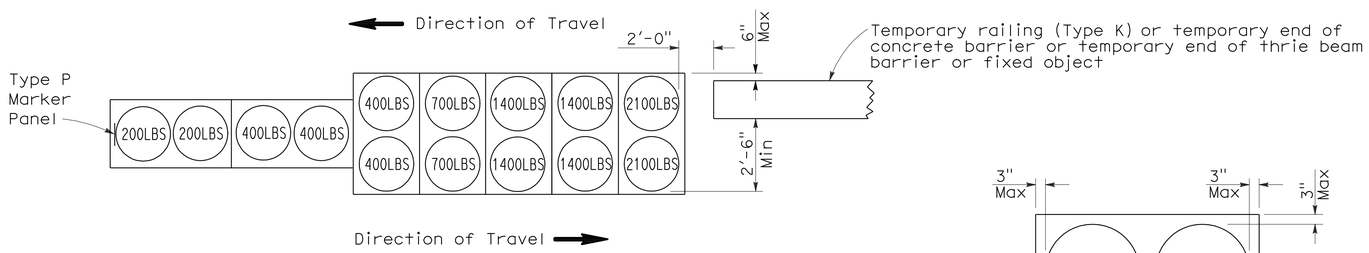


## ARRAY 'TB14'

Approach speed 45 mph or more

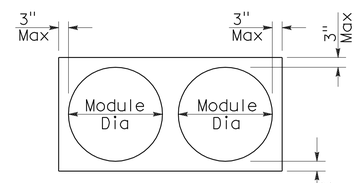


## PLAN

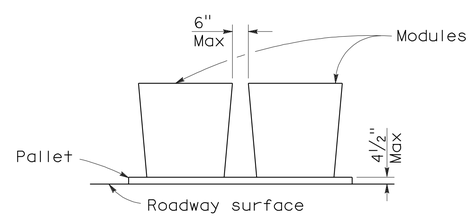


## ELEVATION

## CRASH CUSHION PALLET DETAIL

See Note 7

## NOTES:

1. (XXX) Indicates sand filled module location and weight of sand in pounds for each module. Module spacing is based on the greater diameter of the module.
2. All sand weights are nominal.
3. Temporary crash cushion arrays shall not encroach on the traveled way.
4. Place the Type P marker panel so that the bottom of the panel rests upon the pallet.
5. Refer to Standard Plan A73B for marker details.
6. Approach speeds indicated conform to NCHRP 350 Report criteria.
7. Use of pallets is optional.

STATE OF CALIFORNIA
DEPARTMENT OF TRANSPORTATION

# TEMPORARY CRASH CUSHION, SAND FILLED (BIDIRECTIONAL)

NO SCALE

RSP T1B DATED JUNE 6, 2008 SUPERSEDES STANDARD PLAN T1B
DATED MAY 1, 2006 - PAGE 212 OF THE STANDARD PLANS BOOK DATED MAY 2006.

**REVISED STANDARD PLAN RSP T1B**

**2006 REVISED STANDARD PLAN RSP T1B**

| DIST | COUNTY | ROUTE | POST MILES TOTAL PROJECT | SHEET NO. | TOTAL SHEETS |
|---|---|---|---|---|---|
| 12 | Ora | 5,241 | Var | 14 | 28 |

Randell D. Hiatt
REGISTERED CIVIL ENGINEER

June 6, 2008
PLANS APPROVAL DATE

REGISTERED PROFESSIONAL ENGINEER
Randell D. Hiatt
No. C50200
Exp. 6-30-09
CIVIL
STATE OF CALIFORNIA

*The State of California or its officers or agents shall not be responsible for the accuracy or completeness of electronic copies of this plan sheet.*

*To accompany plans dated* 3-14-11

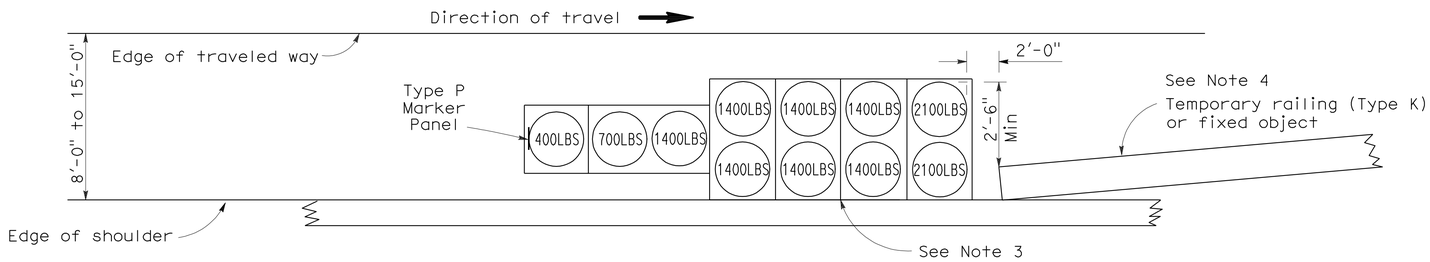


## ARRAY 'TS11'

Approach speed less than 45 mph
See Note 9

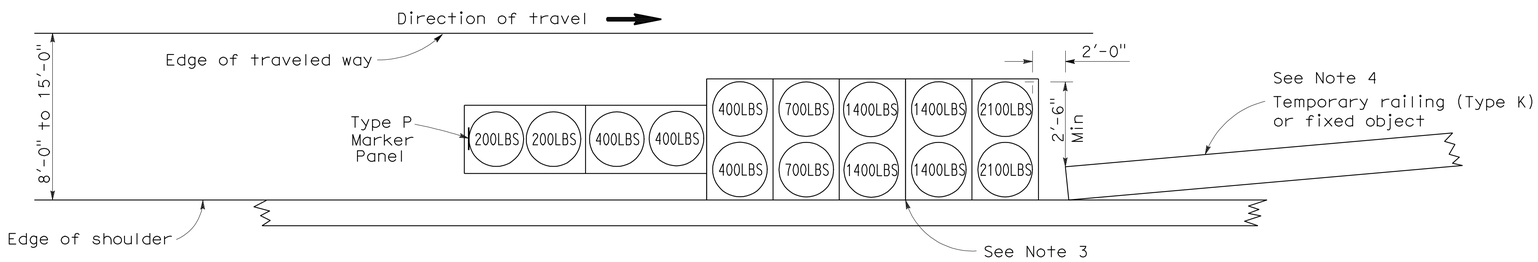


## ARRAY 'TS14'

Approach speed 45 mph or more
See Note 9

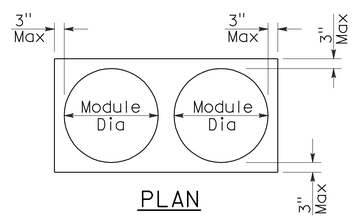


PLAN

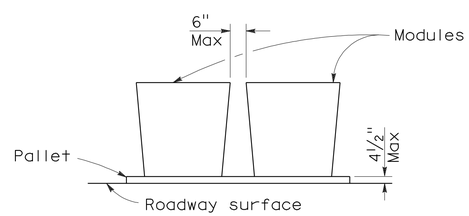


ELEVATION

## CRASH CUSHION PALLET DETAIL

See Note 11

## NOTES:

1. (XXX) Indicates sand filled module location and weight of sand in pounds for each module. Module spacing is based on the greater diameter of the module.
2. All sand weights are nominal.
3. The temporary crash cushion arrays shown on this plan shall be used only in locations where there will be traffic on one side of the temporary crash cushion array.
4. If the fixed object or approach end of the temporary railing is less than 15'-0" from the edge of traveled way, a temporary crash cushion is required in a construction or work zone.
5. Temporary crash cushion arrays shall not encroach on the traveled way.
6. Arrays for median shoulders shall conform to details shown on this plan for outside shoulders.
7. Place the Type P marker panel so that the bottom of the panel rests upon the pallet and faces traffic.
8. Refer to Standard Plan A73B for marker details.
9. For shoulder widths less than 8'-0", appropriate approved crash cushion protection, other than sand filled modules, shall be provided at fixed objects and at approach ends of temporary railing. The specific type of crash cushion shall be as shown on the project plans or as specified in the Special Provisions, or if not shown on the project plans or specified in the Special Provisions, shall be as approved by the Engineer.
10. Approach speeds indicated conform to NCHRP 350 Report criteria.
11. Use of pallets is optional.

STATE OF CALIFORNIA
DEPARTMENT OF TRANSPORTATION

# TEMPORARY CRASH CUSHION, SAND FILLED (SHOULDER INSTALLATIONS)

NO SCALE

RSP T2 DATED JUNE 6, 2008 SUPERSEDES STANDARD PLAN T2
DATED MAY 1, 2006 - PAGE 213 OF THE STANDARD PLANS BOOK DATED MAY 2006.

**REVISED STANDARD PLAN RSP T2**

**2006 REVISED STANDARD PLAN RSP T2**

5-15-08

| DIST | COUNTY | ROUTE | POST MILES TOTAL PROJECT | SHEET NO. | TOTAL SHEETS |
|---|---|---|---|---|---|
| 12 | Ora | 5,241 | Var | 15 | 28 |

REGISTERED CIVIL ENGINEER

October 5, 2007
PLANS APPROVAL DATE

REGISTERED PROFESSIONAL ENGINEER Efthymios Delis No. C51434 Exp. 6-30-08 CIVIL STATE OF CALIFORNIA

*The State of California or its officers or agents shall not be responsible for the accuracy or completeness of electronic copies of this plan sheet.*

*To accompany plans dated* 3-14-11

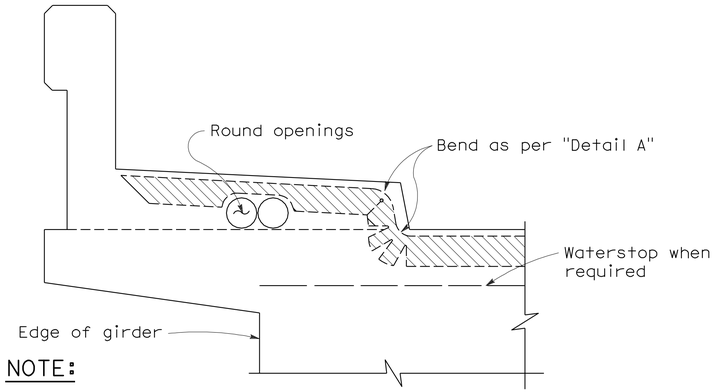


NOTE:

Type "B" seal shown. Type "A" seals to comform to the general path of seal shown, cuts for bending not required. Bend Type "A" seals 3" up into curb or barrier rail on only the low end of the seal.

CONCRETE BARRIER AND SIDEWALK

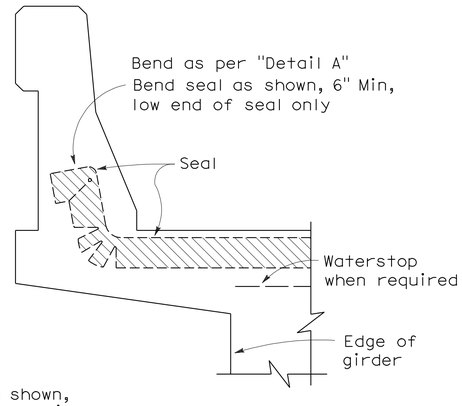


CONCRETE BARRIER

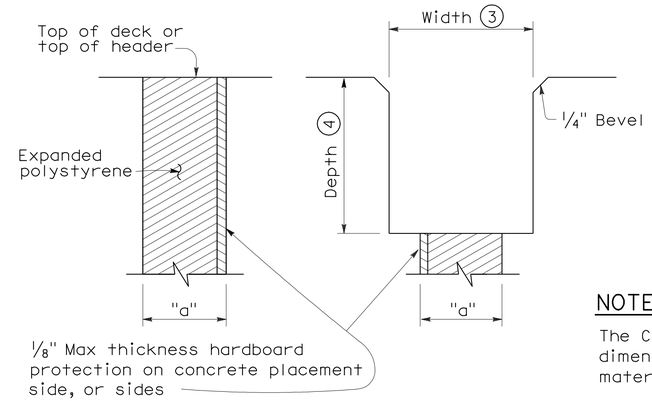


FORMING DETAIL SAWCUT DETAIL

NOTE:

The Contractor shall verify all controlling field dimensions before ordering or fabricatiing any material.

## JOINT SEALS DETAILS

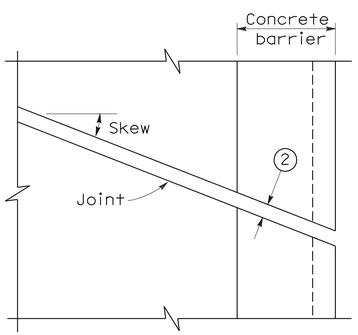


PLAN OF JOINT (SKEW ≤ 20°)

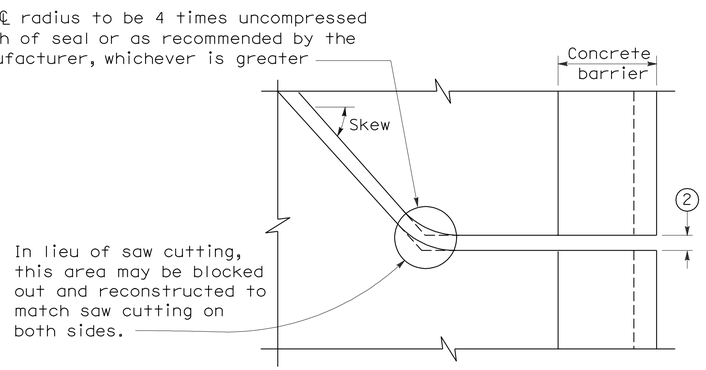


PLAN OF JOINT (SKEW > 20°)

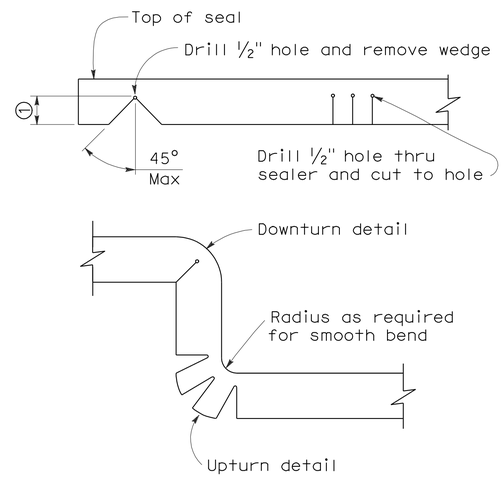


DETAIL A

NOTES:

1. Make smooth cuts from the bottom of seal to 1½" clear of top leaving at least one complete cell between the top of the cut and top of the seal. When necessary cut back of seal to clear conduit and round openings.
2. Opening in barrier to match width of sawn deck joint.
3. Sawcut groove widths shall be as ordered by the Engineer.
4. Depth of sawcut: Type A - Depth to be 2" minimum.
   Type B - Depth to be equal to or greater than the depth of seal measured along the contact surface, when compressed to minimum width position ($W_2$) plus dimensions shown.
5. MR (movement rating) as shown on other plan sheets.
6. Other depths must be approved by the Engineer.

DIMENSIONS "a" OF JOINT REQUIRED

| Movement Rating (MR) (5) | Bridge Type | "a" Dimension Deck Concrete Placed | | |
|---|---|---|---|---|
| | | Winter | Fall-Spring | Summer |
| 2" | All except CIP/PS | 1½" | 1¼" | ¾" |
| | CIP/PS | 1¼" | 1" | ½" |
| 1½" | All except CIP/PS | 1¼" | 1" | ½" |
| | CIP/PS | 1" | ¾" | ½" |
| 1" | All except CIP/PS | 1" | ¾" | ½" |
| | CIP/PS | ¾" | ½" | ½" |
| ½" | All except CIP/PS | ¾" | ¾" | ½" |
| | CIP/PS | ½" | ½" | ½" |

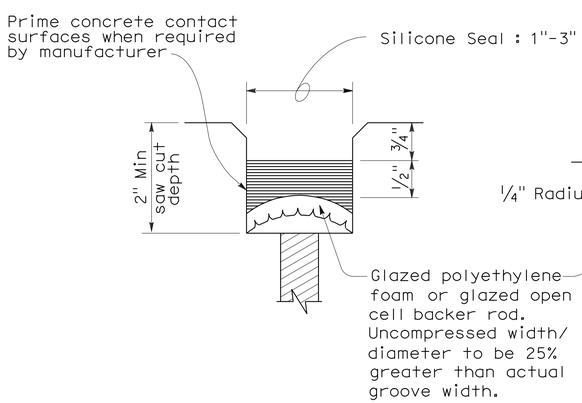


TYPE A SEAL

Movement rating : Silicone = 1" Max

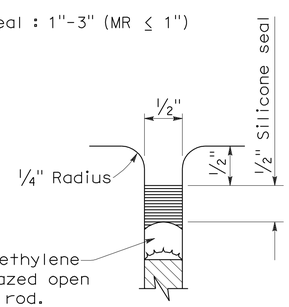


TYPE AL SEAL

Longitudinal joints only

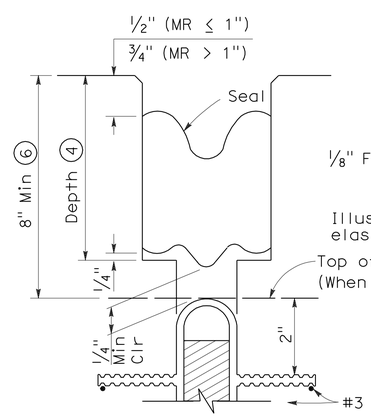


TYPE B JOINT SEAL
IN MINIMUM WIDTH POSITION ($W_2$)

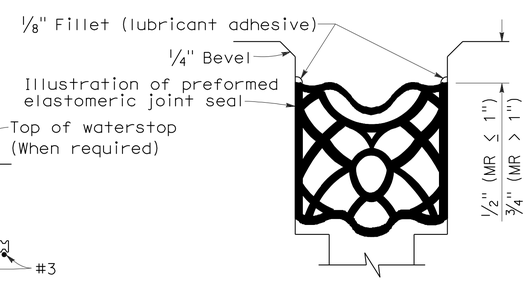


TYPE B SEAL

Movement Rating ≤ 2"

STATE OF CALIFORNIA
DEPARTMENT OF TRANSPORTATION

# JOINT SEALS (MAXIMUM MOVEMENT RATING = 2")

NO SCALE

RSP B6-21 DATED OCTOBER 5, 2007 SUPERSEDES STANDARD PLAN B6-21 DATED MAY 1, 2006 - PAGE 258 OF THE STANDARD PLANS BOOK DATED MAY 2006.

**REVISED STANDARD PLAN RSP B6-21**

**2006 REVISED STANDARD PLAN RSP B6-21**

5-8-07

| DIST | COUNTY | ROUTE | POST MILES TOTAL PROJECT | SHEET No | TOTAL SHEETS |
|---|---|---|---|---|---|
| 12 | Ora | 5,241 | Var | 16 | 28 |

REGISTERED CIVIL ENGINEER 03/09/11 DATE

3-14-11
PLANS APPROVAL DATE

REGISTERED PROFESSIONAL ENGINEER Tony D. Brake No. C57863 Exp. 06/30/12 CIVIL STATE OF CALIFORNIA

*The State of California or its officers or agents shall not be responsible for the accuracy or completeness of electronic copies of this plan sheet.*

## INDEX TO PLANS


| SHEET No. | TITLE |
|---|---|
| 1 | GENERAL PLAN No. 1 |
| 2 | GENERAL PLAN No. 2 |
| 3 | GENERAL PLAN No. 3 |
| 4 | GENERAL PLAN No. 4 |
| 5 | GENERAL PLAN No. 5 |
| 6 | JOINT SEAL DETAILS No. 1 |
| 7 | JOINT SEAL DETAILS No. 2 |
| 8 | DECK REPAIR DETAILS |
| 9 | ABUTMENT MODIFICATION DETAILS No. 1 |
| 10 | ABUTMENT MODIFICATION DETAILS No. 2 |
| 11 | DAMPER DETAILS No. 1 |
| 12 | DAMPER DETAILS No. 2 |
| 13 | SOFFIT ACCESS OPENINGS |


## STANDARD PLANS DATED MAY 2006

| SHEET No. | TITLE |
|---|---|
| A10A | ACRONYMS AND ABBREVIATIONS (SHEET 1 OF 2) |
| A10B | ACRONYMS AND ABBREVIATIONS (SHEET 2 OF 2) |
| A10C | SYMBOLS (SHEET 1 OF 2) |
| A10D | SYMBOLS (SHEET 2 OF 2) |
| RSP B6-21 | JOINT SEALS (MAXIMUM MOVEMENT RATING = 2") |

STANDARD PLAN SHEET No.

DETAIL No.

## LEGEND:

Indicates existing.

Indicates direction of traffic.

Indicates direction of flow.

Indicates location of removal of existing strip seal assembly joint and placement of new modular assembly joint, see "JOINT DETAILS No. 2" sheet.

N5-N73 CONNECTOR VIADUCT No. 55-0719G
QUANTITIES

| | | |
|---|---|---|
| BRIDGE REMOVAL (PORTION), LOCATION A | LUMP | SUM |
| STRUCTURAL CONCRETE, BRIDGE | 7 | CY |
| JOINT SEAL ASSEMBLY (MR 5") | 57 | LF |
| BAR REINFORCING STEEL (BRIDGE) | 900 | LB |

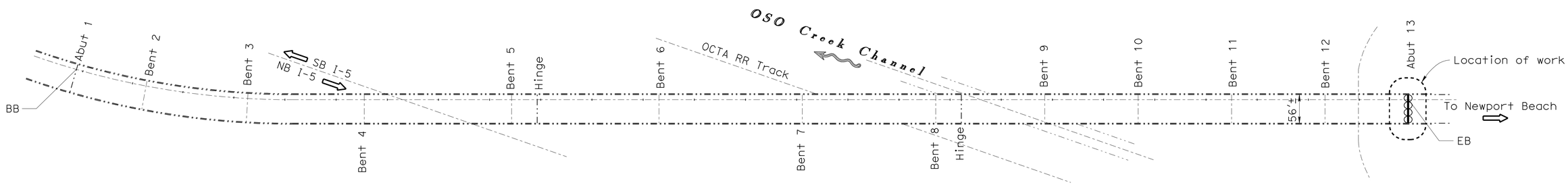


## N5-N73 CONNECTOR VIADUCT

Br No. 55-0719G Rte 5, PM 12.57
1" = 100'

NOTE:
THE CONTRACTOR SHALL VERIFY ALL CONTROLLING FIELD DIMENSIONS BEFORE ORDERING OR FABRICATING ANY MATERIAL.

TONY D. BRAKE
DESIGN ENGINEER

| | BY | CHECKED | | | |
|---|---|---|---|---|---|
| DESIGN | Tony Brake | Ramesh Patel | LOAD FACTOR DESIGN | LIVE LOADING: HS20-44 AND ALTERNATIVE AND PERMIT DESIGN LOAD | |
| DETAILS | Tom Dang | Tony Brake | LAYOUT | Tom Dang | Tony Brake |
| QUANTITIES | Tony Brake | Ramesh Patel | SPECIFICATIONS | Theresa Nedwick | PLANS AND SPECS COMPARED Theresa Nedwick |

STATE OF CALIFORNIA
DEPARTMENT OF TRANSPORTATION

DIVISION OF MAINTENANCE
STRUCTURE MAINTENANCE DESIGN

BRIDGE NO. Various
POST MILE Varies

# ROUTE 5, 241 BRIDGES
# GENERAL PLAN NO. 1

STRUCTURES MAINTENANCE GENERAL PLAN SHEET (ENGLISH) (REV. 10/25/05)

ORIGINAL SCALE IN INCHES FOR REDUCED PLANS 0 1 2 3

CU 12
EA 0L1201

DISREGARD PRINTS BEARING EARLIER REVISION DATES

REVISION DATES: 4-01-10 2-25-11

SHEET 01 OF 13

FILE => 12-0L1201-a-gp01.dgn

USERNAME => trmartin DATE PLOTTED => 17-MAR-2011 TIME PLOTTED => 10:23

| DIST | COUNTY | ROUTE | POST MILES TOTAL PROJECT | SHEET No | TOTAL SHEETS |
|---|---|---|---|---|---|
| 12 | Ora | 5,241 | Var | 17 | 28 |

REGISTERED CIVIL ENGINEER 03/09/11 DATE

3-14-11
PLANS APPROVAL DATE

REGISTERED PROFESSIONAL ENGINEER Tony D. Brake No. C57863 Exp. 06/30/12 CIVIL STATE OF CALIFORNIA

*The State of California or its officers or agents shall not be responsible for the accuracy or completeness of electronic copies of this plan sheet.*

## LEGEND:

Indicates existing.

Indicates direction of traffic.

Indicates location of RC backwall repair, see "BACKWALL REPAIR DETAILS".

Indicates location of existing joint seal removal, clean expansion joint and placement of new joint seal. Prior to placement of new joint seal, reconstruct backwall.

Indicates limits of RC backwall removal. Preserve existing reinforcement.

Indicates new PCC.

Indicates limits of clean and treat existing bridge deck with high molecular weight methacrylate. Prior to bridge deck treatment, remove unsound concrete and patch with rapid setting concrete.

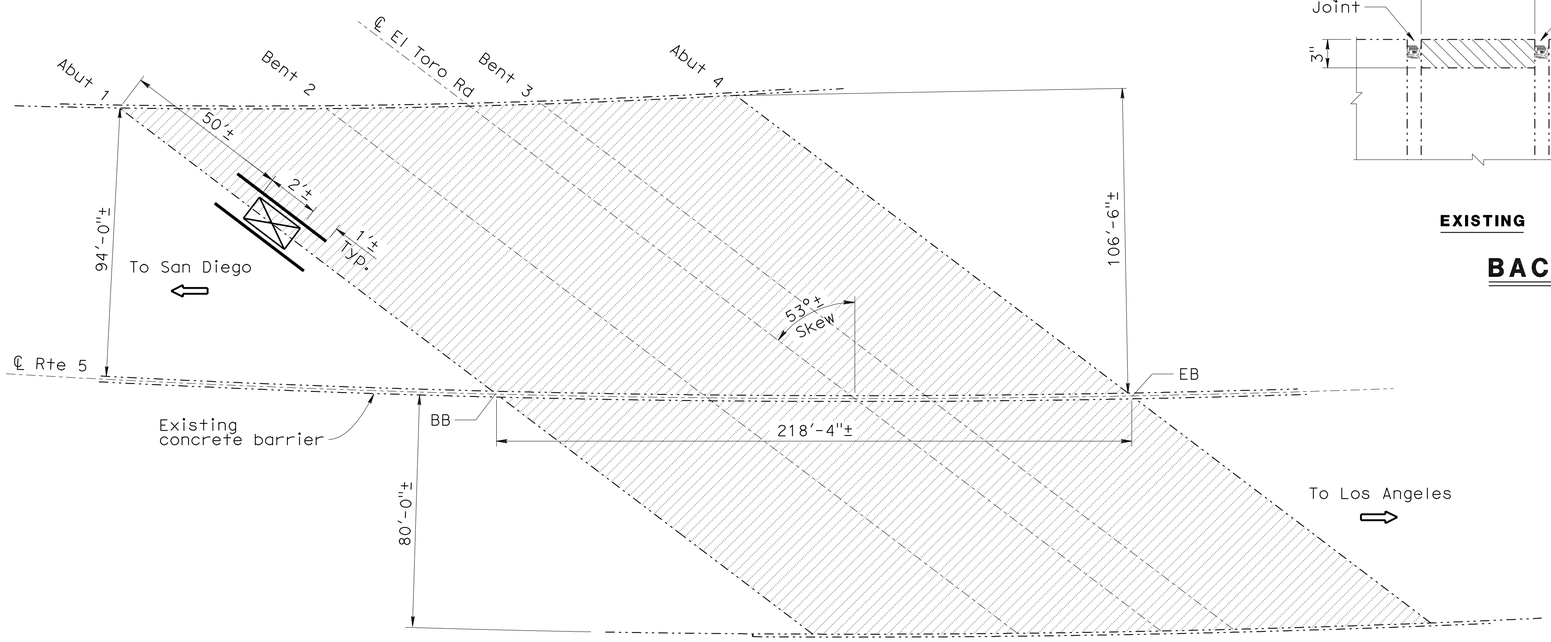


## EL TORO OH

Br No. 55-0221 Rte 5, PM 16.36
NO SCALE

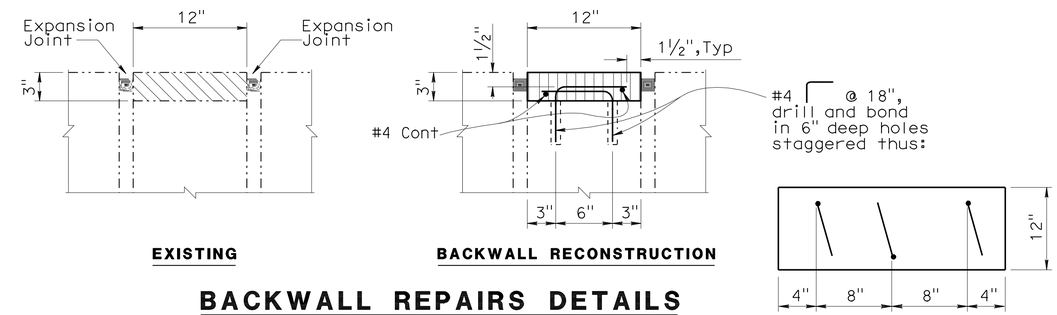


## BACKWALL REPAIRS DETAILS

NO SCALE

EL TORO OVERHEAD #55-0221
QUANTITIES

| | | |
|---|---|---|
| REMOVE UNSOUND CONCRETE | 95 | CF |
| CLEAN BRIDGE DECK | 37,990 | SQFT |
| REPAIR ABUTMENT BACKWALL | LUMP | SUM |
| CLEAN EXPANSION JOINT | 8 | LF |
| RAPID SETTING CONCRETE (PATCH) | 95 | CF |
| JOINT SEAL (MR 1/2") | 8 | LF |
| TREAT BRIDGE DECK | 37,990 | SQFT |
| FURNISH BRIDGE DECK TREATMENT MATERIAL | 540 | GAL |
| PUBLIC SAFETY PLAN | LUMP | SUM |

NOTE:
THE CONTRACTOR SHALL VERIFY ALL CONTROLLING FIELD DIMENSIONS BEFORE ORDERING OR FABRICATING ANY MATERIAL.

TONY D. BRAKE
DESIGN ENGINEER

| | BY | CHECKED | | | |
|---|---|---|---|---|---|
| DESIGN | Tony Brake | Ramesh Patel | LOAD FACTOR DESIGN | LIVE LOADING: HS20-44 AND ALTERNATIVE AND PERMIT DESIGN LOAD | |
| DETAILS | Tom Dang | Tony Brake | LAYOUT | Tom Dang | Tony Brake |
| QUANTITIES | Tony Brake | Ramesh Patel | SPECIFICATIONS | Theresa Nedwick | PLANS AND SPECS COMPARED Theresa Nedwick |

STATE OF CALIFORNIA
DEPARTMENT OF TRANSPORTATION

DIVISION OF MAINTENANCE
STRUCTURE MAINTENANCE DESIGN

BRIDGE NO. Various
POST MILE Varies

# ROUTE 5, 241 BRIDGES
# GENERAL PLAN NO. 2

STRUCTURES MAINTENANCE GENERAL PLAN SHEET (ENGLISH) (REV. 10/25/05)

ORIGINAL SCALE IN INCHES FOR REDUCED PLANS 0 1 2 3

CU 12
EA 0L1201

DISREGARD PRINTS BEARING EARLIER REVISION DATES

REVISION DATES: 4-04-10 2-25-11

SHEET 02 OF 13

FILE => 12-011201-a-gp02.dgn

USERNAME => trmarlok DATE PLOTTED => 17-MAR-2011 TIME PLOTTED => 07:12

| DIST | COUNTY | ROUTE | POST MILES TOTAL PROJECT | SHEET No | TOTAL SHEETS |
|---|---|---|---|---|---|
| 12 | Ora | 5,241 | Var | 18 | 28 |

REGISTERED CIVIL ENGINEER 03/09/11 DATE

3-14-11
PLANS APPROVAL DATE

REGISTERED PROFESSIONAL ENGINEER Tony D. Brake No. C57863 Exp. 06/30/12 CIVIL STATE OF CALIFORNIA

*The State of California or its officers or agents shall not be responsible for the accuracy or completeness of electronic copies of this plan sheet.*

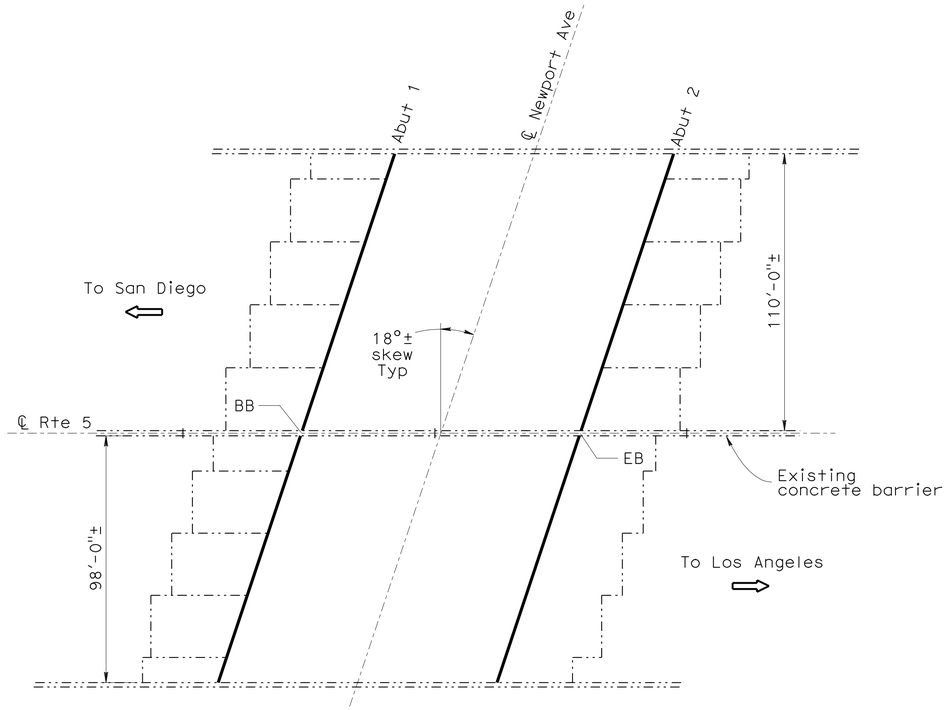


## NEWPORT AVENUE UC

Br No. 55-0940 Rte 5, PM 29.62
1" = 30'

NEWPORT AVE UC #55-0940
QUANTITIES

| | | |
|---|---|---|
| REMOVE UNSOUND CONCRETE | 2 | CF |
| CLEAN EXPANSION JOINT | 440 | LF |
| RAPID SETTING CONCRETE (PATCH) | 2 | CF |
| JOINT SEAL (MR 2") | 440 | LF |

## LEGEND:

Indicates existing.

Indicates direction of traffic.

Indicates limits of clean and treat existing bridge deck with high molecular weight methacrylate. Prior to bridge deck treatment, remove unsound concrete and patch with rapid setting concrete.

Indicates location of existing joint seal removal, clean expansion joint and placement of new joint seal. Prior to placement of new joint seal repair joint spalls.

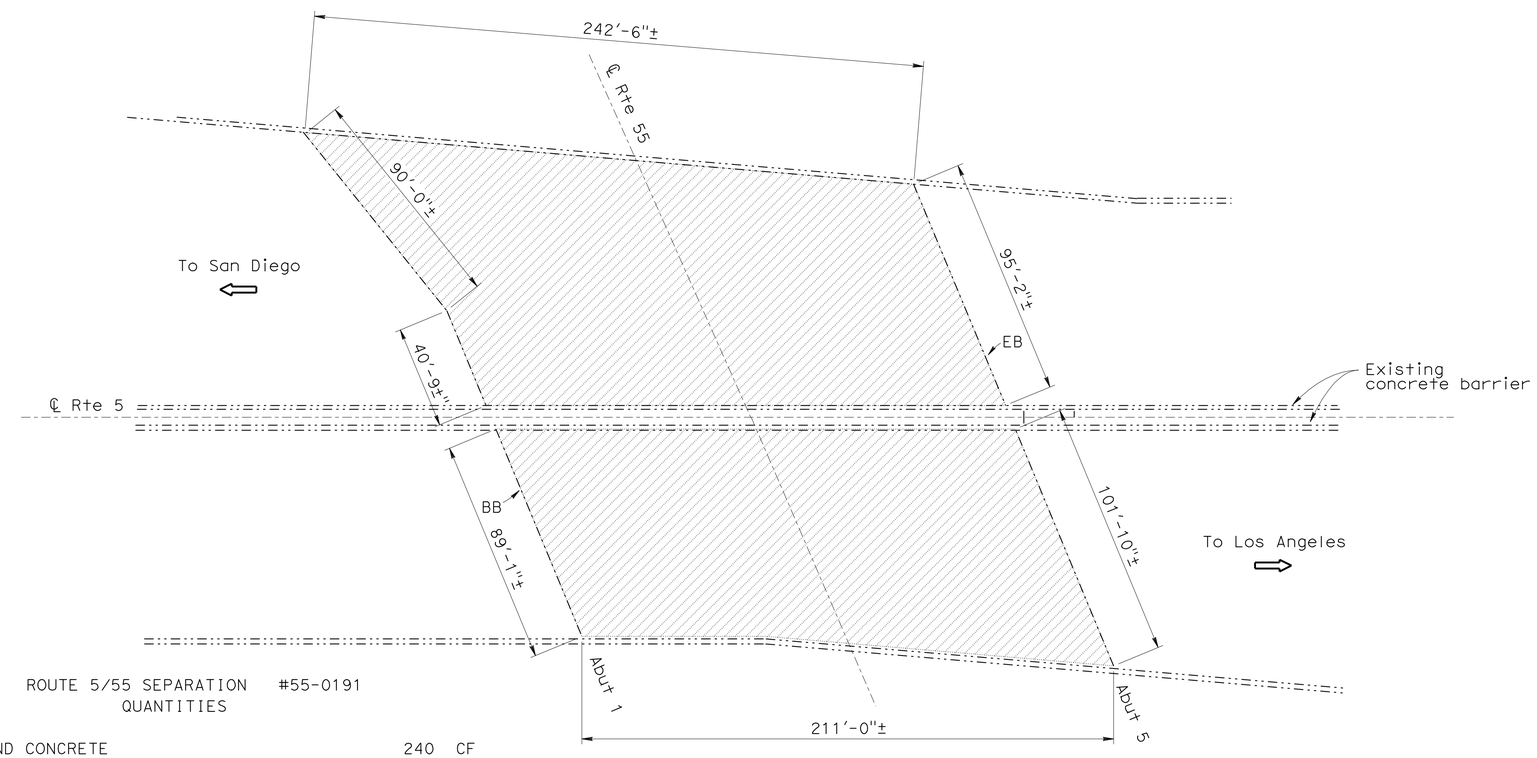


ROUTE 5/55 SEPARATION #55-0191
QUANTITIES

| | | |
|---|---|---|
| REMOVE UNSOUND CONCRETE | 240 | CF |
| CLEAN BRIDGE DECK | 48,000 | SQFT |
| RAPID SETTING CONCRETE (PATCH) | 240 | CF |
| TREAT BRIDGE DECK | 48,000 | SQFT |
| FURNISH BRIDGE DECK TREATMENT MATERIAL | 680 | GAL |
| PUBLIC SAFETY PLAN | LUMP | SUM |

## ROUTE 5/55 SEPARATION

Br No. 55-0191 Rte 5, PM 30.26
1" = 30'

NOTE:
THE CONTRACTOR SHALL VERIFY ALL CONTROLLING FIELD DIMENSIONS BEFORE ORDERING OR FABRICATING ANY MATERIAL.

TONY D. BRAKE
DESIGN ENGINEER

| | BY | CHECKED | | |
|---|---|---|---|---|
| DESIGN | Tony Brake | Ramesh Patel | LOAD FACTOR DESIGN | LIVE LOADING: HS20-44 AND ALTERNATIVE AND PERMIT DESIGN LOAD |
| DETAILS | Tom Dang | Tony Brake | LAYOUT | Tom Dang / Tony Brake |
| QUANTITIES | Tony Brake | Ramesh Patel | SPECIFICATIONS | Theresa Nedwick / Theresa Nedwick |

STATE OF CALIFORNIA
DEPARTMENT OF TRANSPORTATION

DIVISION OF MAINTENANCE
STRUCTURE MAINTENANCE DESIGN

CU 12
EA 0L1201

BRIDGE NO. Various
POST MILE Varies

# ROUTE 5, 241 BRIDGES
# GENERAL PLAN NO. 3

STRUCTURES MAINTENANCE GENERAL PLAN SHEET (ENGLISH) (REV. 10/25/05)

ORIGINAL SCALE IN INCHES FOR REDUCED PLANS 0 1 2 3

DISREGARD PRINTS BEARING EARLIER REVISION DATES 4-08-10 2-25-11

REVISION DATES

SHEET 03 OF 13

FILE => 12-011201-a-gp03.dgn

USERNAME => ttmorfak DATE PLOTTED => 17-MAR-2011 TIME PLOTTED => 07:12

| DIST | COUNTY | ROUTE | POST MILES TOTAL PROJECT | SHEET No | TOTAL SHEETS |
|---|---|---|---|---|---|
| 12 | Ora | 5,241 | Var | 19 | 28 |

REGISTERED CIVIL ENGINEER 03/09/11 DATE

3-14-11
PLANS APPROVAL DATE

REGISTERED PROFESSIONAL ENGINEER Tony D. Brake No. C57863 Exp. 06/30/12 CIVIL STATE OF CALIFORNIA

*The State of California or its officers or agents shall not be responsible for the accuracy or completeness of electronic copies of this plan sheet.*

ALISO CREEK BRIDGE #55-0704 L/R
QUANTITIES

| | | |
|---|---|---|
| STRUCTURAL CONCRETE, BRIDGE | 13 | CY |
| DRILL AND BOND DOWEL | 410 | LF |
| RESET BEARING PADS | LUMP SUM | |
| BAR REINFORCING STEEL (BRIDGE) | 2,720 | LB |

## LEGEND:

Indicates existing.

Indicates direction of traffic.

Indicates location of widen the front of abutment walls and realign existing steel reinforced elastomeric bearing pads, see "ABUTMENT MODIFICATION DETAILS NO. 1 & NO. 2" sheets.

Indicates direction of flow.

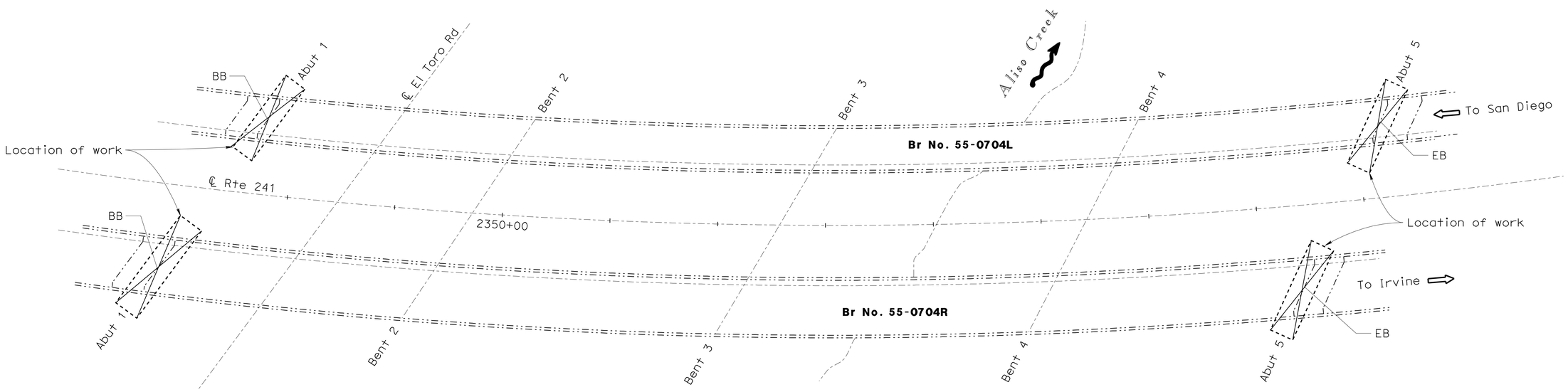


## ALISO CREEK

Br No. 55-0704L/R, Rte 241, PM 21.0
1" = 50'

NOTE:
THE CONTRACTOR SHALL VERIFY ALL CONTROLLING FIELD DIMENSIONS BEFORE ORDERING OR FABRICATING ANY MATERIAL.

TONY D. BRAKE
DESIGN ENGINEER

| | BY | CHECKED | | | |
|---|---|---|---|---|---|
| DESIGN | Tony Brake | Ramesh Patel | LOAD FACTOR DESIGN | LIVE LOADING: HS20-44 AND ALTERNATIVE AND PERMIT DESIGN LOAD | |
| DETAILS | Tom Dang | Tony Brake | LAYOUT | Tom Dang | Tony Brake |
| QUANTITIES | Tony Brake | Ramesh Patel | SPECIFICATIONS | Theresa Nedwick | PLANS AND SPECS COMPARED Theresa Nedwick |

STATE OF CALIFORNIA
DEPARTMENT OF TRANSPORTATION

DIVISION OF MAINTENANCE
STRUCTURE MAINTENANCE DESIGN

CU 12
EA 0L1201

BRIDGE NO. Various
POST MILE Varies

# ROUTE 5, 241 BRIDGES
# GENERAL PLAN NO. 4

STRUCTURES MAINTENANCE GENERAL PLAN SHEET (ENGLISH) (REV. 10/25/05)

ORIGINAL SCALE IN INCHES FOR REDUCED PLANS 0 1 2 3

DISREGARD PRINTS BEARING EARLIER REVISION DATES 4-01-10

REVISION DATES

SHEET 04 OF 13

FILE => 12-011201-a-gp04.dgn

USERNAME => trmarlok DATE PLOTTED => 17-MAR-2011 TIME PLOTTED => 07:12

| DIST | COUNTY | ROUTE | POST MILES TOTAL PROJECT | SHEET No | TOTAL SHEETS |
|---|---|---|---|---|---|
| 12 | Ora | 5,241 | Var | 20 | 28 |

REGISTERED CIVIL ENGINEER 03/09/11 DATE

3-14-11
PLANS APPROVAL DATE

REGISTERED PROFESSIONAL ENGINEER Tony D. Brake No. C57863 Exp. 06/30/12 CIVIL STATE OF CALIFORNIA

*The State of California or its officers or agents shall not be responsible for the accuracy or completeness of electronic copies of this plan sheet.*

BEE CANYON ROAD OC #55-0785
QUANTITIES

| | | |
|---|---|---|
| REMOVE UNSOUND CONCRETE | 60 | CF |
| CLEAN BRIDGE DECK | 24,550 | SQFT |
| RAPID SETTING CONCRETE (PATCH) | 60 | CF |
| TREAT BRIDGE DECK | 24,550 | SQFT |
| FURNISH BRIDGE DECK TREATMENT MATERIAL | 350 | GAL |

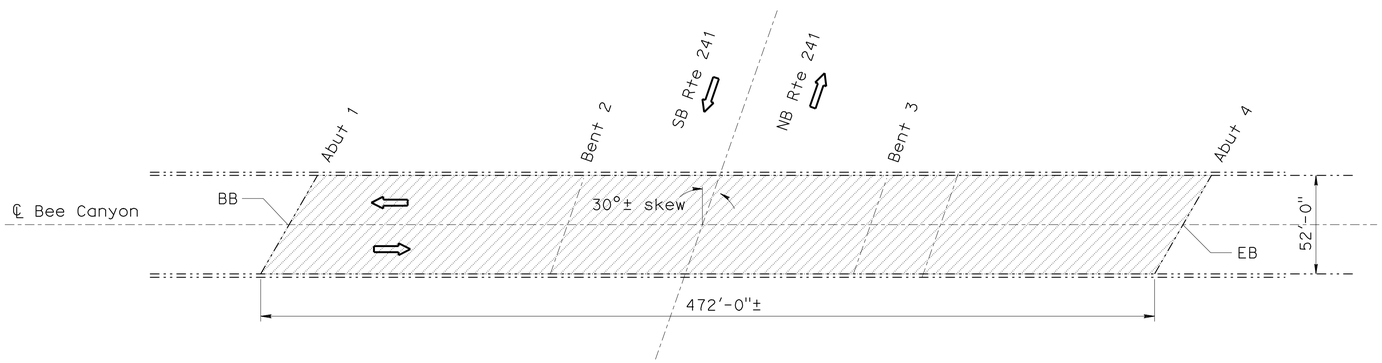


## BEE CANYON ROAD OC

Br No. 55-0785 Rte 241, PM 27.39
1" = 40'

## LEGEND:

Indicates existing.

Indicates direction of traffic.

Indicates limits of clean and treat existing bridge deck with high molecular weight methacrylate. Prior to bridge deck treatment, remove unsound concrete and patch with rapid setting concrete.

Indicates location of remove existing damper and replace with new damper at face of abutment, see "DAMPER DETAILS" sheet.

Indicates location of install soffit access opening, then remove lost deck formwork from end diaphragm to interior diaphragm (approximate 10' length), see "SOFFIT ACCESS OPENINGS" sheet.

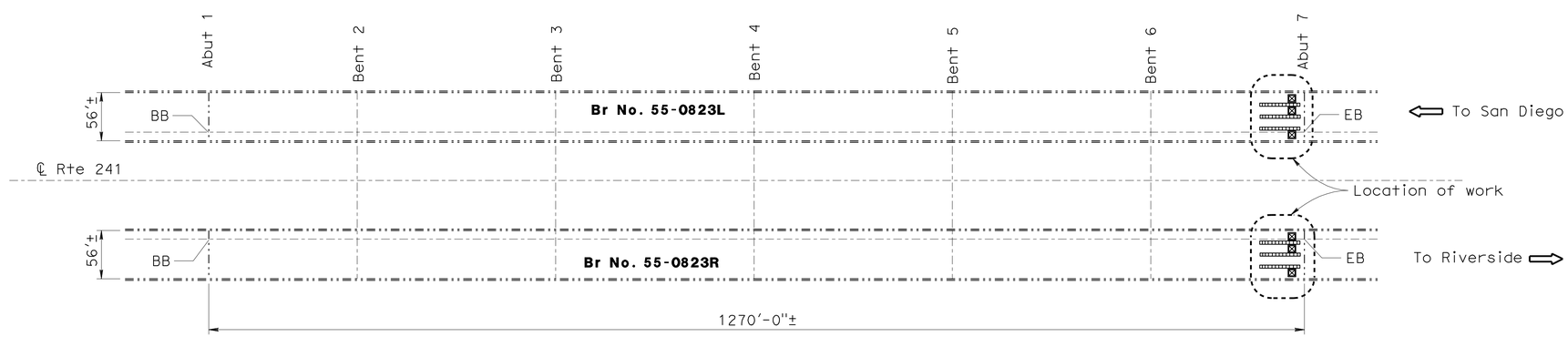


SANTIAGO CREEK BRIDGE #55-0823 L/R
QUANTITIES

| | | |
|---|---|---|
| ACCESS OPENING, SOFFIT | 6 | EA |
| BRIDGE REMOVAL (PORTION), LOCATION B | LUMP | SUM |
| REPLACE DAMPERS | 6 | EA |

## SANTIAGO CREEK

Br No. 55-0823L/R, Rte 241, PM 33.7
1" = 80'

NOTE:
THE CONTRACTOR SHALL VERIFY ALL CONTROLLING FIELD DIMENSIONS BEFORE ORDERING OR FABRICATING ANY MATERIAL.

TONY D. BRAKE
DESIGN ENGINEER

| | BY | CHECKED | | | |
|---|---|---|---|---|---|
| DESIGN | Tony Brake | Ramesh Patel | LOAD FACTOR DESIGN | LIVE LOADING: HS20-44 AND ALTERNATIVE AND PERMIT DESIGN LOAD | |
| DETAILS | Tom Dang | Tony Brake | LAYOUT | Tom Dang | Tony Brake |
| QUANTITIES | Tony Brake | Ramesh Patel | SPECIFICATIONS | Theresa Nedwick | PLANS AND SPECS COMPARED Theresa Nedwick |

STATE OF CALIFORNIA
DEPARTMENT OF TRANSPORTATION

DIVISION OF MAINTENANCE
STRUCTURE MAINTENANCE DESIGN

BRIDGE NO. Various
POST MILE Varies

# ROUTE 5, 241 BRIDGES
# GENERAL PLAN NO. 5

STRUCTURES MAINTENANCE GENERAL PLAN SHEET (ENGLISH) (REV. 10/25/05)

ORIGINAL SCALE IN INCHES FOR REDUCED PLANS 0 1 2 3

CU 12
EA 0L1201

DISREGARD PRINTS BEARING EARLIER REVISION DATES

REVISION DATES 4-01-10 2-25-11

SHEET 05 OF 13

FILE => 12-011201-a-gp05.dgn

USERNAME => trmarlok DATE PLOTTED => 17-MAR-2011 TIME PLOTTED => 07:13

| DIST | COUNTY | ROUTE | POST MILES TOTAL PROJECT | SHEET No | TOTAL SHEETS |
|---|---|---|---|---|---|
| 12 | Ora | 5,241 | Var | 21 | 28 |

REGISTERED CIVIL ENGINEER 03/09/11 DATE

3-14-11
PLANS APPROVAL DATE

REGISTERED PROFESSIONAL ENGINEER Tony D. Brake No. C57863 Exp. 06/30/12 CIVIL STATE OF CALIFORNIA

*The State of California or its officers or agents shall not be responsible for the accuracy or completeness of electronic copies of this plan sheet.*

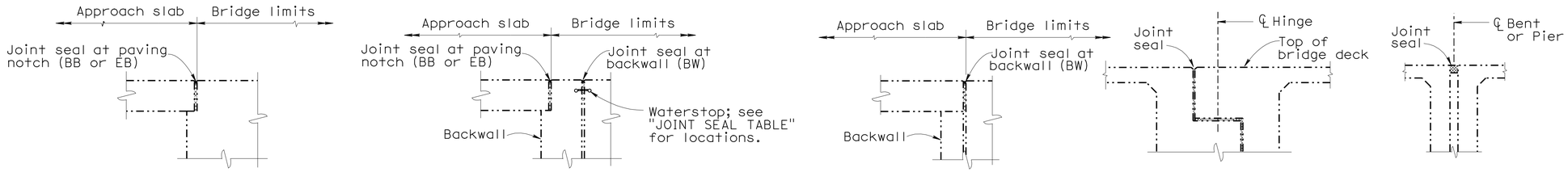


DIAPHRAGM ABUTMENT | ABUTMENT WITH BACKWALL AND PAVING NOTCH | ABUTMENT WITH BACKWALL | HINGE | BENT OR PIER

## JOINT SEAL LOCATION

NO SCALE

## JOINT SEAL TABLE

| BRIDGE NAME | BRIDGE NUMBER | LOCATION | | MINIMUM "MR" (INCHES) | APPROX LENGTH (FT) | EXISTING WATERSTOP | APPROX DEPTH TO CLEAN EXP JOINT (INCHES) | APPROX DEPTH OF JOINT SPALLS (INCHES) | APPROX WIDTH OF JOINT SPALLS (INCHES) | APPROX LENGTH OF JOINT SPALLS (FEET) |
|---|---|---|---|---|---|---|---|---|---|---|
| EL TORO OH | 55-0221 | Abut 1 | BW | ½ | 4 | NO | 9 | 3 | 6 | 1 |
| | | Abut 1 | PN | ½ | 4 | NO | 9 | 3 | 6 | 1 |
| N5-N73 CONNECTOR VIADUCT | 55-0719G | Abut 13 | BW | 5* | 57 | NO | NONE | NONE | NONE | NONE |
| NEWPORT AVENUE UC | 55-0940 | Abut 1 | BW | 2 | 220 | NO | 9 | 3 | 6 | 5 |
| | | Abut 2 | BW | 2 | 220 | NO | 9 | 3 | 6 | 5 |

PN = Paving notch

BW = Backwall

* See "JOINT SEAL DETAILS NO. 2" sheet.

## NOTES:

The following notes apply to JOINT SEAL TYPE A:

Install Joint Seal (MR = ½") or Silicone Joint Seal 3" up into curb or barrier rail on the low side of the deck where deck joint aligns with curb or barrier rail joint.

For details not shown see RSP B6-21 sheet.

The following notes apply to JOINT SEAL TYPE B:

1) Seal must satisfy both minimum Movement Rating (MR) and minimum W1 requirements.

2) Minimum W1 is the calculated maximum width of the joint based on field measurements. After the joints have been cleaned, minimum W1 is to be recalculated by the Engineer.

3) W1 shall be the smaller of the values determined as follows:
   A) 0.85 times the manufacturer's designed minimum uncompressed width of the seal.
   B) The width of the seal on the third successive test cycle of the pressure deflection test, when compressed to an average pressure of 3.0 PSI.

4) Bend Type B joint seal 6 inches up into curb or rail on the low side of the deck where deck joint matches curb or rail joint.

For details not shown see RSP B6-21 sheet.

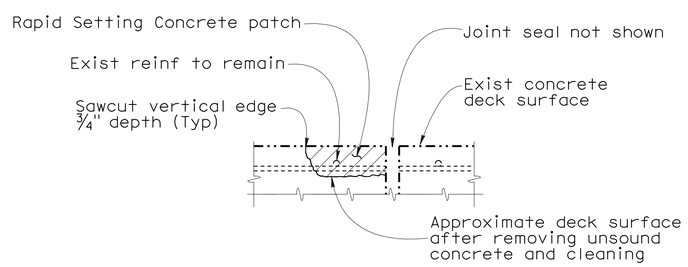


## JOINT SPALL REPAIR DETAIL

Location will be determined by the Engineer. Reinforcement may be encountered during deck concrete removal and is to remain undamaged.

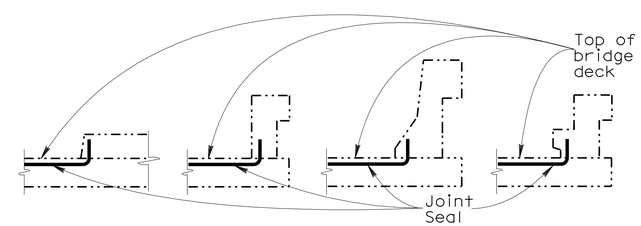


BARRIER RAIL

## JOINT SEAL AT LOW SIDE OF DECK

Note: Details shown for illustration purposes only.

For use only where deck joint matches the sidewalk, curb or barrier rail joint.

NOTE:
THE CONTRACTOR SHALL VERIFY ALL CONTROLLING FIELD DIMENSIONS BEFORE ORDERING OR FABRICATING ANY MATERIAL.

| | BY | CHECKED |
|---|---|---|
| DESIGN | Tony Brake | Ramesh Patel |
| DETAILS | Tom Dang | Tony Brake |
| QUANTITIES | Tony Brake | Ramesh Patel |

STATE OF CALIFORNIA
DEPARTMENT OF TRANSPORTATION

DIVISION OF MAINTENANCE
STRUCTURE MAINTENANCE DESIGN

BRIDGE NO. Various
POST MILE Varies

# ROUTE 5, 241 BRIDGES
# JOINT SEAL DETAILS NO. 1

STRUCTURES MAINTENANCE DETAIL SHEET (ENGLISH) (REV. 10/25/05)

ORIGINAL SCALE IN INCHES FOR REDUCED PLANS 0 1 2 3

CU 12
EA OL1201

DISREGARD PRINTS BEARING EARLIER REVISION DATES 2-15-09

REVISION DATES

SHEET 06 OF 13

FILE => 12-011201-b-jsdt101.dgn

USERNAME => trmarlok DATE PLOTTED => 17-MAR-2011 TIME PLOTTED => 07:13

| DIST | COUNTY | ROUTE | POST MILES TOTAL PROJECT | SHEET No | TOTAL SHEETS |
|---|---|---|---|---|---|
| 12 | Ora | 5,241 | Var | 22 | 28 |

REGISTERED CIVIL ENGINEER 03/09/11 DATE

3-14-11
PLANS APPROVAL DATE

*The State of California or its officers or agents shall not be responsible for the accuracy or completeness of electronic copies of this plan sheet.*

REGISTERED PROFESSIONAL ENGINEER Tony D. Brake No. C57863 Exp. 06/30/12 CIVIL STATE OF CALIFORNIA

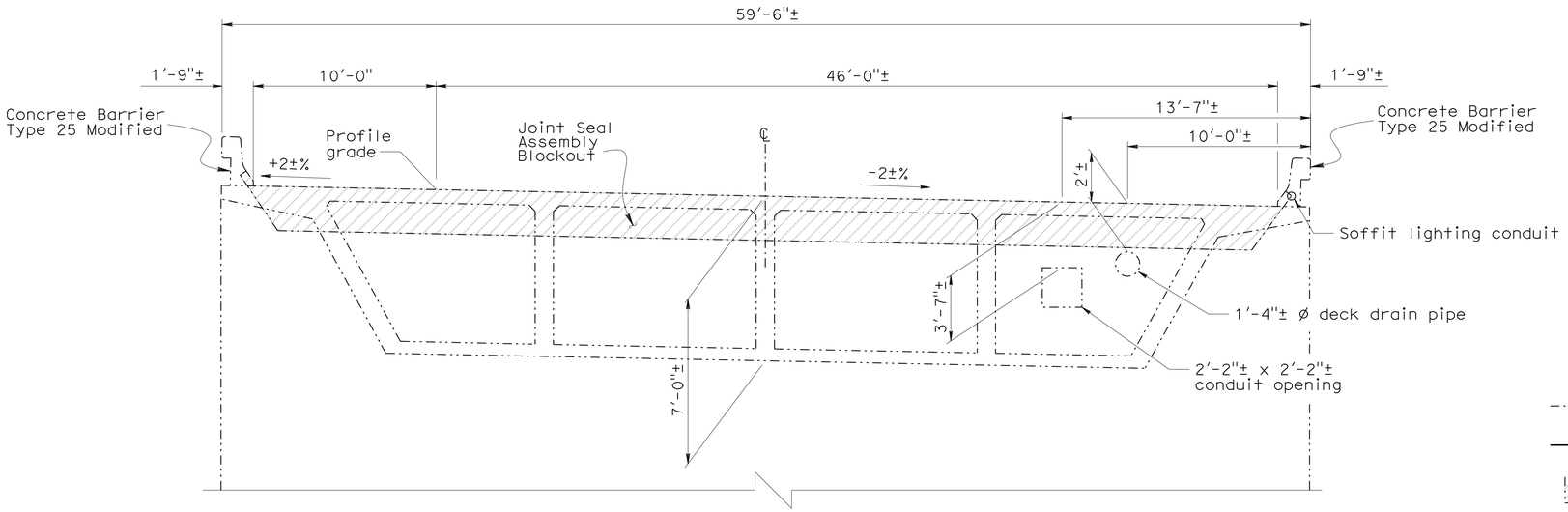


## TYPICAL SECTION

Br No. 55-0719G, Abut 13
1/4" = 1'-0"

## LEGEND:

Indicates existing.

Indicates new structure.

Indicates concrete removal limits. Preserve existing reinf.

Indicates new PCC.

**TEMPORARY DECKING DESIGN LOADING:**

1. Moment demand per foot = 3800 lbs-ft/ft
2. For steel plate systems:
   a. anchor bolt shear per foot = 2700 lbs/ft
   b. anchor bolt tension = 4225 lbs
   c. maximum anchor bolt spacing = 1.0 ft

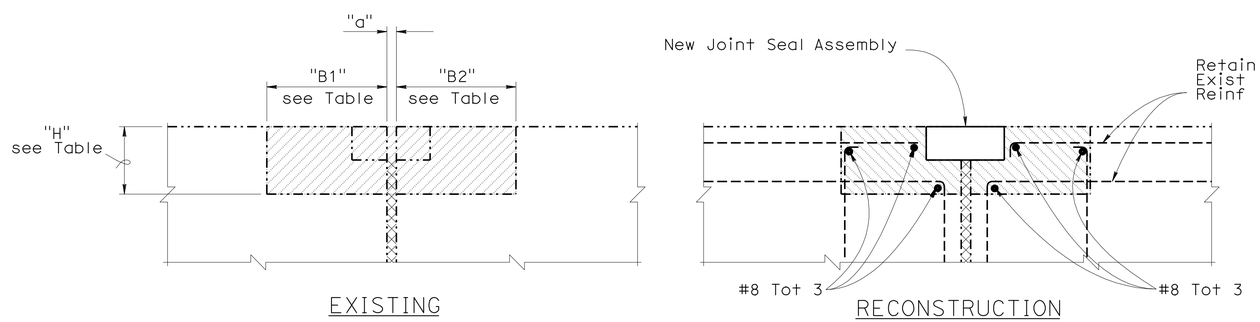


## JOINT SEAL ASSEMBLY REPLACEMENT

NO SCALE

NOTE:
THE CONTRACTOR SHALL VERIFY ALL CONTROLLING FIELD DIMENSIONS BEFORE ORDERING OR FABRICATING ANY MATERIAL.

## JOINT SEAL ASSEMBLY DIMENSIONS

| BRIDGE NUMBER | JOINT SEAL LOCATION | "B1" | "B2" | "H" | Skew | "a" Dimension | | |
|---|---|---|---|---|---|---|---|---|
| | | | | | | Winter | Spring/Fall | Summer |
| 55-0719G | Abut 13 | 1'-3/4" | 1'-4 1/4" | 1'-4" | 0° | 2 1/4" | 1 3/4" | 1 1/4" |

| | | | |
|---|---|---|---|
| DESIGN | BY Tony Brake | CHECKED Ramesh Patel | |
| DETAILS | BY Tom Dang | CHECKED Tony Brake | |
| QUANTITIES | BY Tony Brake | CHECKED Ramesh Patel | |

STATE OF CALIFORNIA
DEPARTMENT OF TRANSPORTATION

DIVISION OF MAINTENANCE
STRUCTURE MAINTENANCE DESIGN

BRIDGE NO. 55-0719G
POST MILE 12.57

# ROUTE 5, 241 BRIDGES
# JOINT SEAL DETAILS NO. 2

STRUCTURES MAINTENANCE DETAIL SHEET (ENGLISH) (REV. 10/25/05)

ORIGINAL SCALE IN INCHES FOR REDUCED PLANS 0 1 2 3

CU 12
EA 0L1201

DISREGARD PRINTS BEARING EARLIER REVISION DATES 2-15-09

REVISION DATES

SHEET 07 OF 13

FILE => 12-011201-b-jsdt102.dgn

USERNAME => trmarlak DATE PLOTTED => 17-MAR-2011 TIME PLOTTED => 07:13

| DIST | COUNTY | ROUTE | POST MILES TOTAL PROJECT | SHEET No | TOTAL SHEETS |
|---|---|---|---|---|---|
| 12 | Ora | 5,241 | Var | 23 | 28 |

REGISTERED CIVIL ENGINEER 03/09/11 DATE

3-14-11
PLANS APPROVAL DATE

REGISTERED PROFESSIONAL ENGINEER
Tony D. Brake
No. C57863
Exp. 06/30/12
CIVIL
STATE OF CALIFORNIA

*The State of California or its officers or agents shall not be responsible for the accuracy or completeness of electronic copies of this plan sheet.*

## DECK REPAIR TABLE
## REMOVE UNSOUND CONCRETE AND RAPID SETTING CONCRETE (PATCH)

| BRIDGE NAME | BRIDGE NUMBER | APPROXIMATE AREA DAMAGED (%) | APPROXIMATE DEPTH (INCHES) |
|---|---|---|---|
| EL TORO OH | 55-0221 | 1 | 3 |
| ROUTE 5/55 SEPARATION | 55-0191 | 2 | 3 |
| BEE CANYON ROAD OC | 55-0785 | 1 | 3 |

DECK REPAIR NOTES:

1. Existing reinforcement shall be protected in place during unsound concrete removal and patching operations.
2. It is responsibility of the Contractor to repair any reinforcement that is accidently cut by saw cutting operations.
3. When existing transverse reinforcement is exposed in the deck surface, saw cutting may be waived with the approval of the Engineer.
4. The saw cut depth shall not exceed 1 inch or the concrete cover over the top steel reinforcing bars, whichever is less.
5. Remove unsound Portland Cement concrete and unsound concrete patches to expose sound, hard concrete substrate. Replace original deck surface with rapid setting concrete patch.

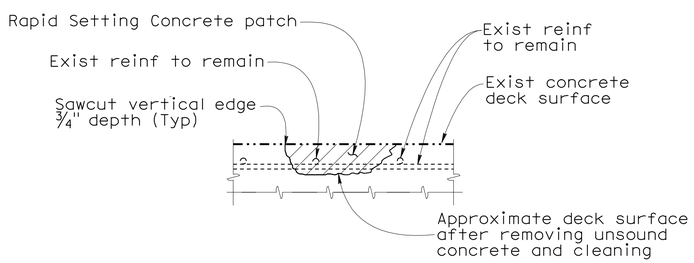


## DECK DAMAGE REPAIR DETAIL

Location will be determined by the Engineer. Reinforcement may be encountered during deck concrete removal and is to remain undamaged.

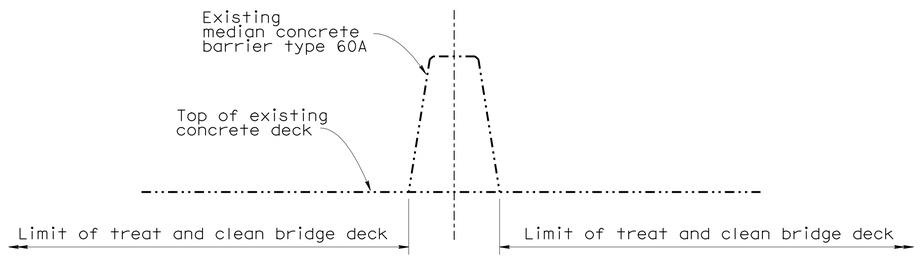


MEDIAN BARRIER

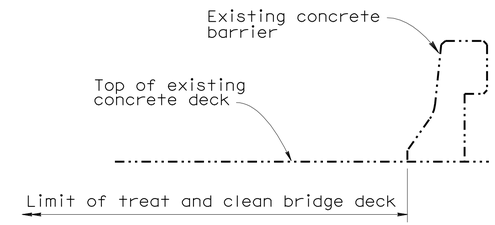


EOD BARRIER

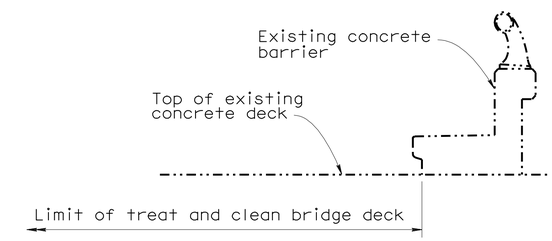


SIDEWALK BARRIER TYPE 2

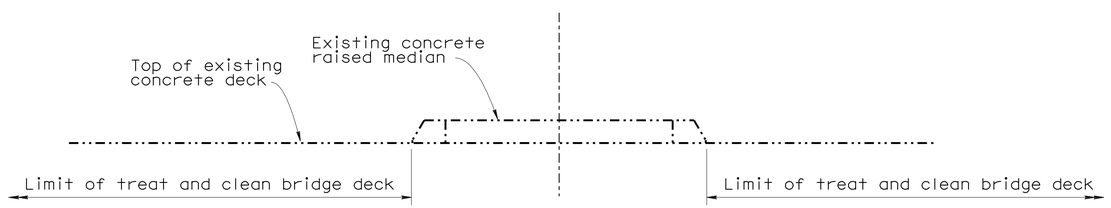


RAISED MEDIAN

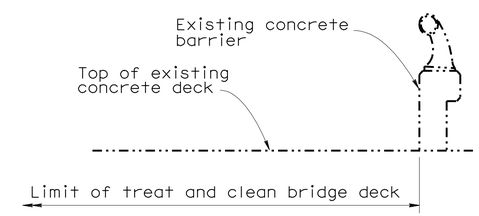


SIDEWALK BARRIER TYPE 1

## TYPICAL LIMITS OF DECK WORK

NO SCALE

NOTE:
THE CONTRACTOR SHALL VERIFY ALL CONTROLLING FIELD DIMENSIONS BEFORE ORDERING OR FABRICATING ANY MATERIAL.

| | BY | CHECKED |
|---|---|---|
| DESIGN | Tony Brake | Ramesh Patel |
| DETAILS | Tom Dang | Tony Brake |
| QUANTITIES | Tony Brake | Ramesh Patel |

STATE OF CALIFORNIA
DEPARTMENT OF TRANSPORTATION

DIVISION OF MAINTENANCE
STRUCTURE MAINTENANCE DESIGN

BRIDGE NO. Various
POST MILE Varies

ROUTE 5, 241 BRIDGES
DECK REPAIR DETAILS

STRUCTURES MAINTENANCE DETAIL SHEET (ENGLISH) (REV. 10/25/05)

ORIGINAL SCALE IN INCHES FOR REDUCED PLANS 0 1 2 3

CU 12
EA 0L1201

DISREGARD PRINTS BEARING EARLIER REVISION DATES 2-15-09

REVISION DATES

SHEET 08 OF 13

FILE => 12-011201-c-deckdtl.dgn

USERNAME => trcarol DATE PLOTTED => 17-MAR-2011 TIME PLOTTED => 07:21

| DIST | COUNTY | ROUTE | POST MILES TOTAL PROJECT | SHEET No | TOTAL SHEETS |
|---|---|---|---|---|---|
| 12 | Ora | 5,241 | Var | 24 | 28 |

REGISTERED CIVIL ENGINEER 03/09/11 DATE

3-14-11
PLANS APPROVAL DATE

REGISTERED PROFESSIONAL ENGINEER Tony D. Brake No. C57863 Exp. 06/30/12 CIVIL STATE OF CALIFORNIA

*The State of California or its officers or agents shall not be responsible for the accuracy or completeness of electronic copies of this plan sheet.*

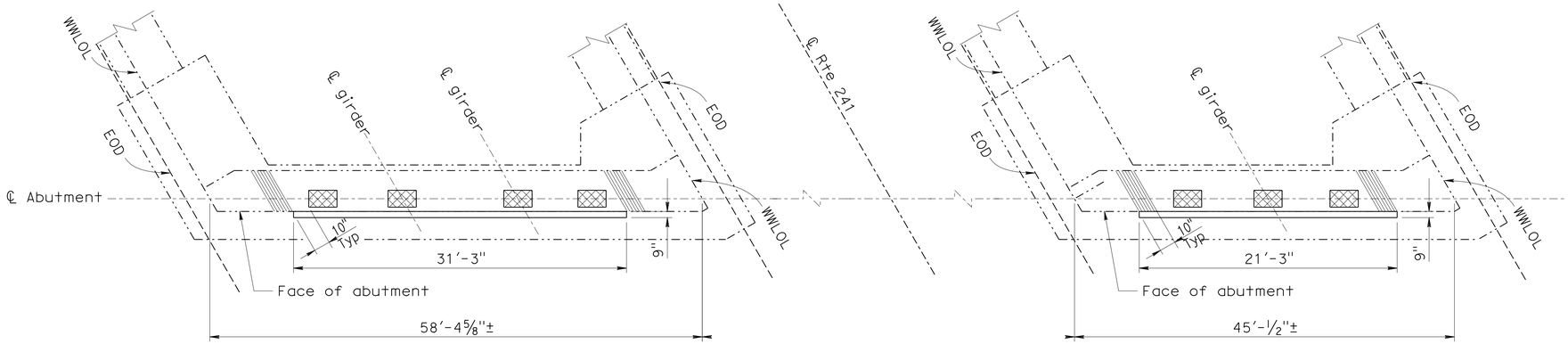


## PLAN

NO SCALE
(Abutment 1 shown, Abutment 5 similar)

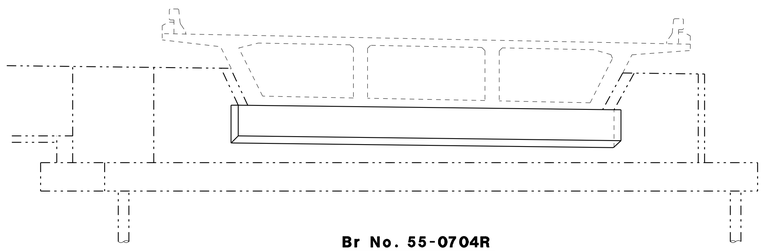

**Br No. 55-0704R**

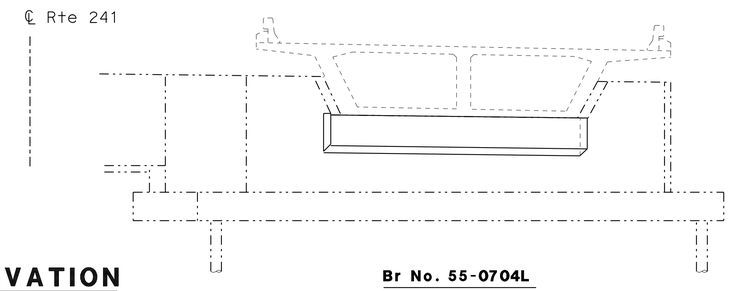


**Br No. 55-0704L**

## ELEVATION

NO SCALE

## LEGEND:

Indicates existing.

Indicates location of reset existing 24" x 40" x 2½". Steel reinforced elestomeric bearing pad.

### ORDER OF WORK:

1. Widen abutment.
2. Raise superstructure.
3. Reset existing bearing pads after concrete has attained its 28 days compressive strength.
4. Lower superstructure on bearing pads.

### JACKING NOTES:

1. The jacking force shall be applied to all jacks simultaneously.
2. The total vertical lift shall be enough to release existing bearing pads and then reset new bearing pads, but no greater than ½" above final grade.
3. The differential lift of girders bearing on elastomeric bearing pads shall not exceed 1/16".

### TEMPORARY SUPPORT TABLE

| BRIDGE NAME | BRIDGE NUMBER | LOCATION | DL+LL+I (Kips) | DL (Kips) | Lateral Load (kips) |
|---|---|---|---|---|---|
| ALISO CREEK BRIDGE | 55-0704R | Abut 1 | 2385 | 2080 | 200 |
| | | Abut 5 | 2385 | 2080 | 200 |
| | 55-0704L | Abut 1 | 2010 | 1700 | 170 |
| | | Abut 5 | 2010 | 1700 | 170 |

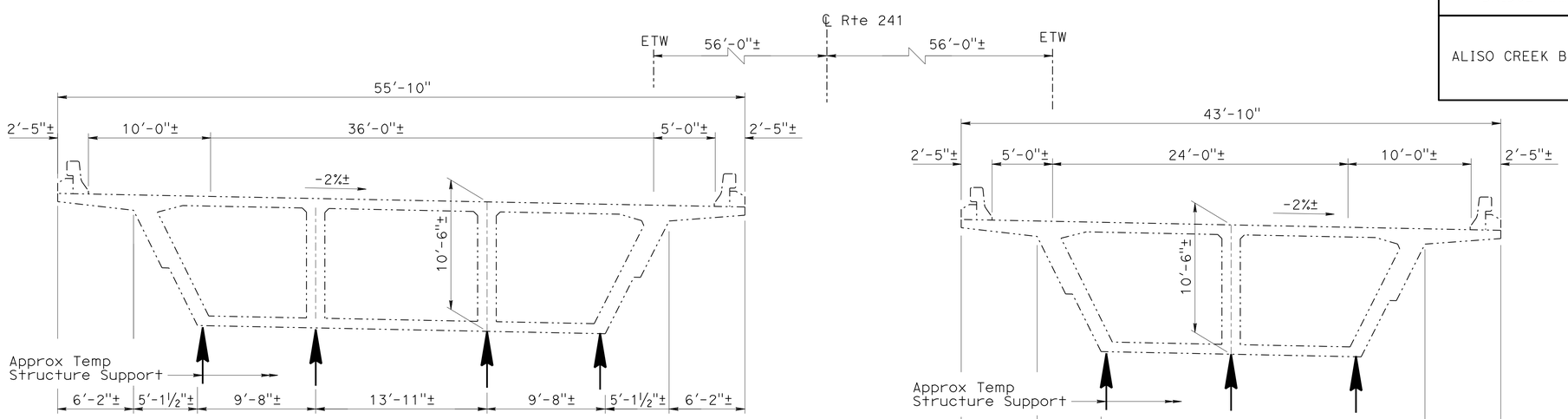


## TYPICAL SECTION

NO SCALE

NOTE:
THE CONTRACTOR SHALL VERIFY ALL CONTROLLING FIELD DIMENSIONS BEFORE ORDERING OR FABRICATING ANY MATERIAL.

| | BY | CHECKED |
|---|---|---|
| DESIGN | Tony Brake | Ramesh Patel |
| DETAILS | Tom Dang | Tony Brake |
| QUANTITIES | Tony Brake | Ramesh Patel |

STATE OF CALIFORNIA
DEPARTMENT OF TRANSPORTATION

DIVISION OF MAINTENANCE
STRUCTURE MAINTENANCE DESIGN

BRIDGE NO. 55-0704L/R
POST MILE 21.0

# ROUTE 5, 241 BRIDGES
# ABUTMENT MODIFICATION DETAILS NO. 1

STRUCTURES MAINTENANCE DETAIL SHEET (ENGLISH) (REV. 10/25/05)

ORIGINAL SCALE IN INCHES FOR REDUCED PLANS 0 1 2 3

CU 12
EA 0L1201

DISREGARD PRINTS BEARING EARLIER REVISION DATES 2-15-09

REVISION DATES

SHEET 09 OF 13

FILE => 12-011201-d-abtmod01.dgn

USERNAME => trcarol DATE PLOTTED => 17-MAR-2011 TIME PLOTTED => 07:21

| DIST | COUNTY | ROUTE | POST MILES TOTAL PROJECT | SHEET No | TOTAL SHEETS |
|---|---|---|---|---|---|
| 12 | Ora | 5,241 | Var | 25 | 28 |

REGISTERED CIVIL ENGINEER 03/09/11 DATE

3-14-11
PLANS APPROVAL DATE

*The State of California or its officers or agents shall not be responsible for the accuracy or completeness of electronic copies of this plan sheet.*

REGISTERED PROFESSIONAL ENGINEER Tony D. Brake No. C57863 Exp. 06/30/12 CIVIL STATE OF CALIFORNIA

## LEGEND:

Indicates existing structure.

Indicates new construction.

3 1 3 1 Indicates Drill and Bond dowels.

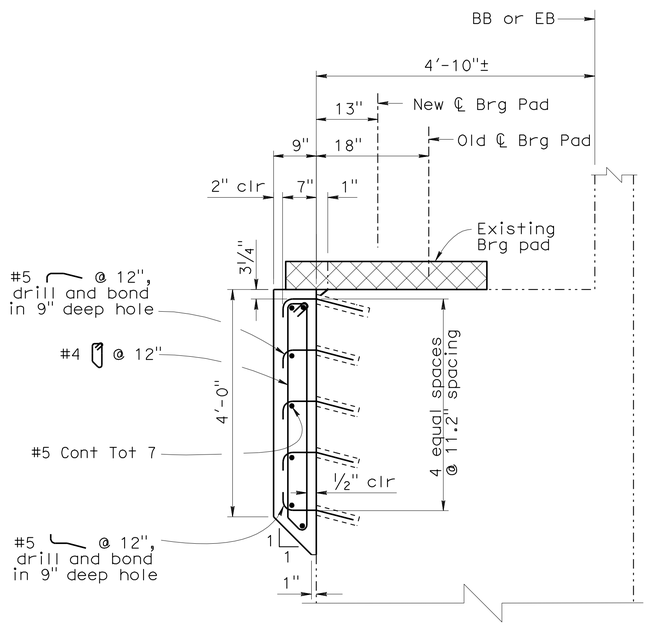


## ABUTMENT WIDENING DETAIL

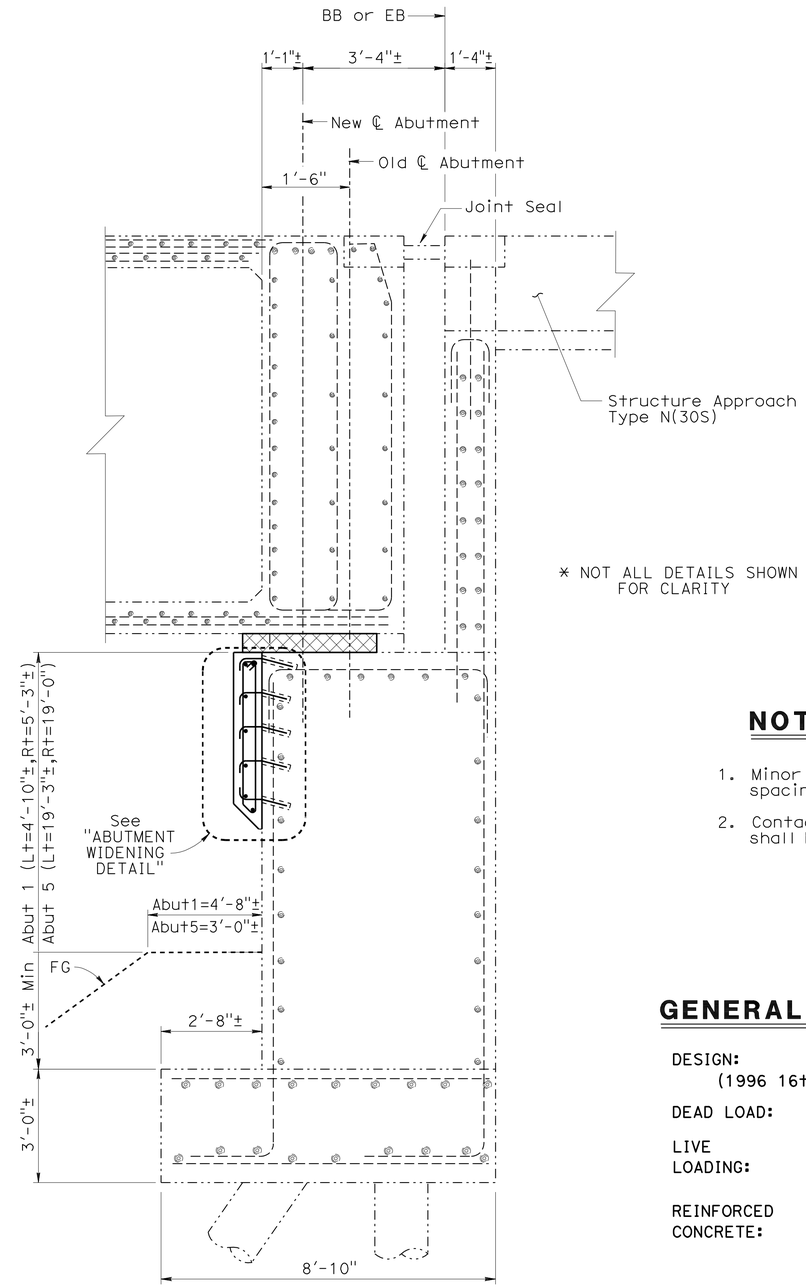


## TYPICAL ABUTMENT SECTION

NO SCALE

## NOTES:

1. Minor adjustments maybe made in dowel spacing to clear existing main reinforcement.
2. Contact surfaces between new and existing concrete shall be roughened to 1/4 in amplitude.

## GENERAL NOTES - LOAD FACTOR DESIGN

DESIGN: BRIDGE DESIGN SPECIFICATIONS - April 2000 (LFD) (1996 16th AASHTO with Interims and Revisions by CALTRANS)

DEAD LOAD: Includes 35 psf for future wearing surface.

LIVE LOADING: HS20-44 and alternative and permit design load.

REINFORCED CONCRETE: $f_y$ = 60,000 psi
$f'_c$ = 3,600 psi
n = 8

NOTE:
THE CONTRACTOR SHALL VERIFY ALL CONTROLLING FIELD DIMENSIONS BEFORE ORDERING OR FABRICATING ANY MATERIAL.

| | BY | CHECKED |
|---|---|---|
| DESIGN | Tony Brake | Ramesh Patel |
| DETAILS | Tom Dang | Tony Brake |
| QUANTITIES | Tony Brake | Ramesh Patel |

STATE OF CALIFORNIA
DEPARTMENT OF TRANSPORTATION

DIVISION OF MAINTENANCE
STRUCTURE MAINTENANCE DESIGN

BRIDGE NO. 55-0704L/R
POST MILE 21.0

# ROUTE 5, 241 BRIDGES
# ABUTMENT MODIFICATION DETAILS NO. 2

STRUCTURES MAINTENANCE DETAIL SHEET (ENGLISH) (REV. 10/25/05)

ORIGINAL SCALE IN INCHES FOR REDUCED PLANS 0 1 2 3

CU 12
EA 0L1201

DISREGARD PRINTS BEARING EARLIER REVISION DATES

REVISION DATES: ~~2-15-09~~ 11-18-10

SHEET 10 OF 13

FILE => 12-011201-d-abtmod02.dgn

USERNAME => ttcarol DATE PLOTTED => 17-MAR-2011 TIME PLOTTED => 07:21

| DIST | COUNTY | ROUTE | POST MILES TOTAL PROJECT | SHEET No | TOTAL SHEETS |
|---|---|---|---|---|---|
| 12 | Ora | 5,241 | Var | 26 | 28 |

REGISTERED CIVIL ENGINEER 03/09/11 DATE

3-14-11
PLANS APPROVAL DATE

REGISTERED PROFESSIONAL ENGINEER Tony D. Brake No. C57863 Exp. 06/30/12 CIVIL STATE OF CALIFORNIA

*The State of California or its officers or agents shall not be responsible for the accuracy or completeness of electronic copies of this plan sheet.*

## NOTES:

1. Existing supports and brackets to remain. Brackets are ASTM A36. Pin is Type 630-H1150 stainless steel, ASTM A564.
2. Existing bolts are ASTM A325.
3. The Stainless Steel hoisting ring shall be located at the non-moving portion of the damper. The Contractor shall verify the dimension prior to installing the Damper Support.
4. The spherical bearing of the damper at the abutment end shall provided 1/4 " of free movement.

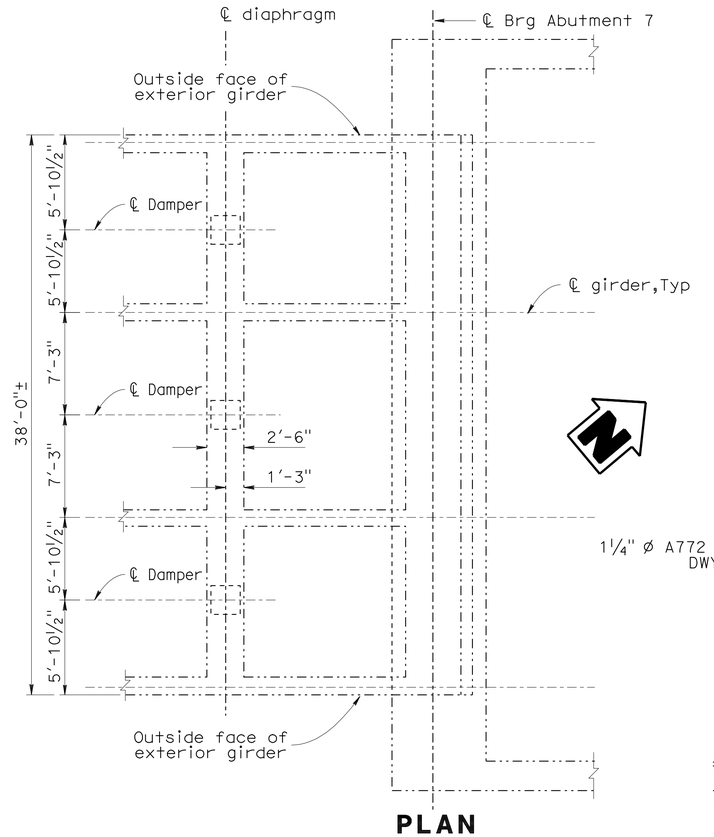


## PLAN

NO SCALE

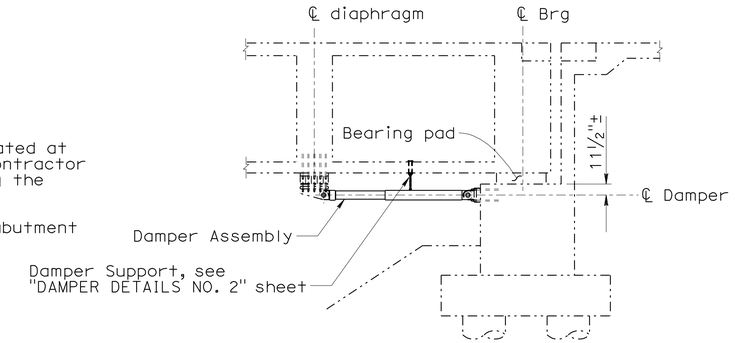


## ELEVATION

NO SCALE

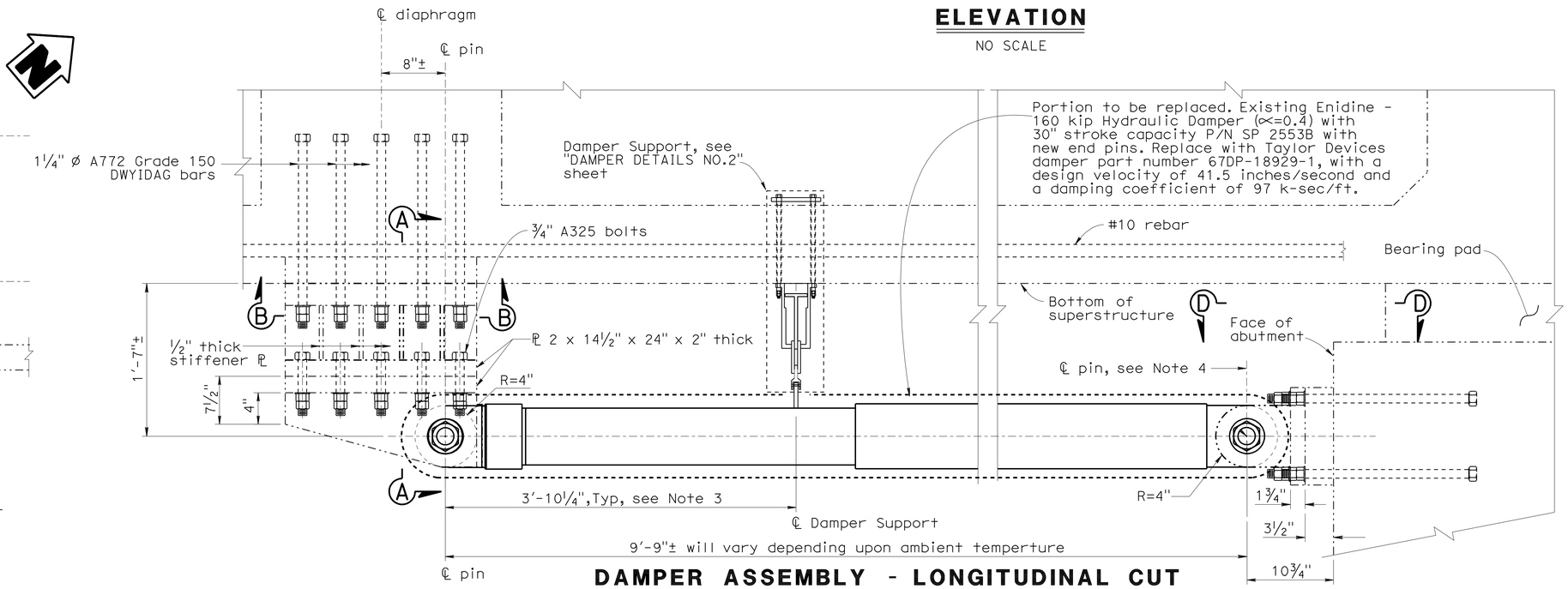


## DAMPER ASSEMBLY - LONGITUDINAL CUT

NO SCALE

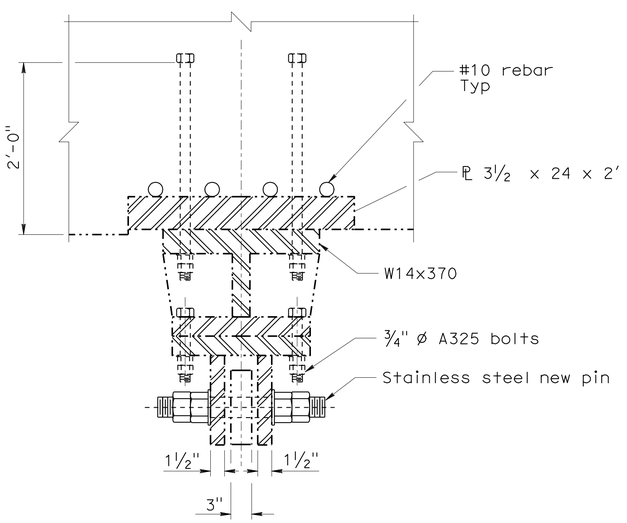


## SECTION A-A

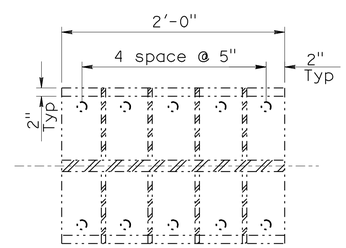


## SECTION B-B

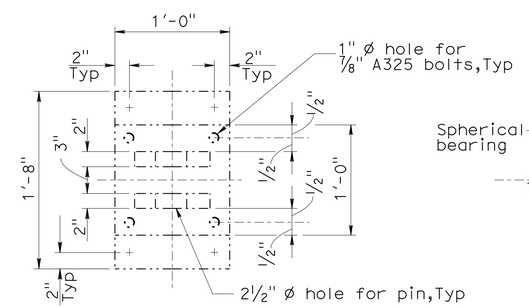


## SECTION C-C

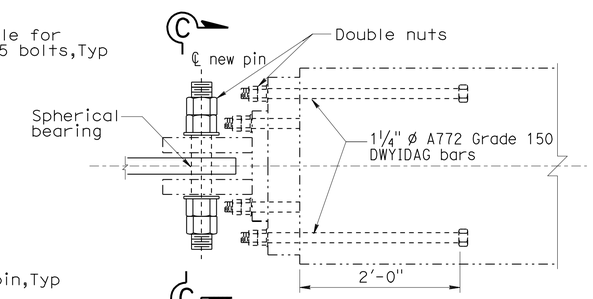


## SECTION D-D

NOTE:
THE CONTRACTOR SHALL VERIFY ALL CONTROLLING FIELD DIMENSIONS BEFORE ORDERING OR FABRICATING ANY MATERIAL.

| | BY | CHECKED |
|---|---|---|
| DESIGN | Tony Brake | Ramesh Patel |
| DETAILS | Tom Dang | Tony Brake |
| QUANTITIES | Tony Brake | Ramesh Patel |

STATE OF CALIFORNIA
DEPARTMENT OF TRANSPORTATION

DIVISION OF MAINTENANCE
STRUCTURE MAINTENANCE DESIGN

BRIDGE NO. 55-0823
POST MILE 33.7

# ROUTE 5, 241 BRIDGES
# DAMPER DETAILS NO. 1

STRUCTURES MAINTENANCE DETAIL SHEET (ENGLISH) (REV. 10/25/05)

ORIGINAL SCALE IN INCHES FOR REDUCED PLANS 0 1 2 3

CU 12
EA 0L1201

DISREGARD PRINTS BEARING EARLIER REVISION DATES

REVISION DATES: 2-15-09, 11-16-10, 11-18-10, 2-25-11

SHEET 11 OF 13

FILE => 12-011201-e-damperdt101.dgn

USERNAME => trcarro1 DATE PLOTTED => 17-MAR-2011 TIME PLOTTED => 07:21

| DIST | COUNTY | ROUTE | POST MILES TOTAL PROJECT | SHEET No | TOTAL SHEETS |
|---|---|---|---|---|---|
| 12 | Ora | 5,241 | Var | 27 | 28 |

REGISTERED CIVIL ENGINEER 03/09/11 DATE

3-14-11
PLANS APPROVAL DATE

REGISTERED PROFESSIONAL ENGINEER Tony D. Brake No. C57863 Exp. 06/30/12 CIVIL STATE OF CALIFORNIA

*The State of California or its officers or agents shall not be responsible for the accuracy or completeness of electronic copies of this plan sheet.*

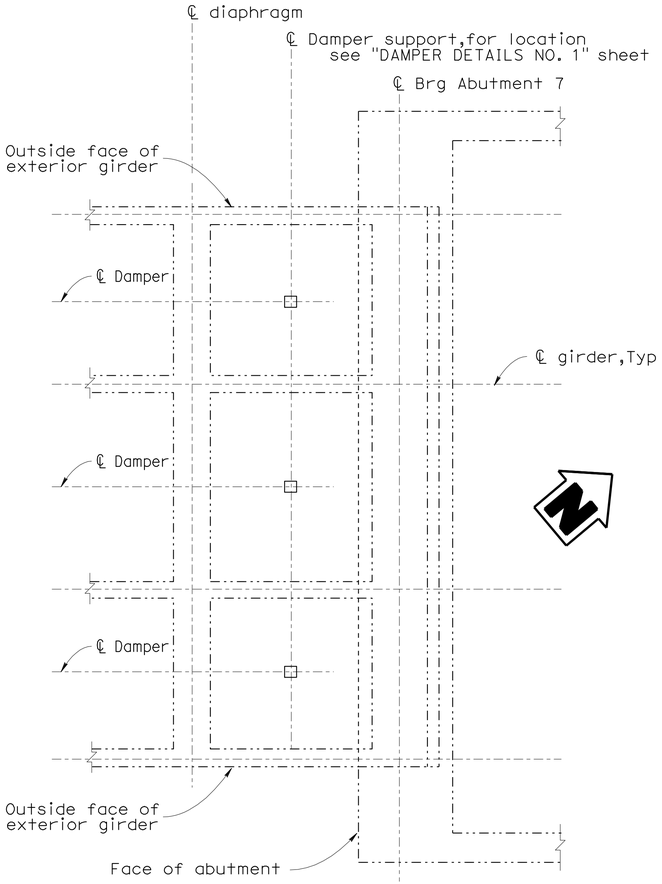


## PLAN

NO SCALE

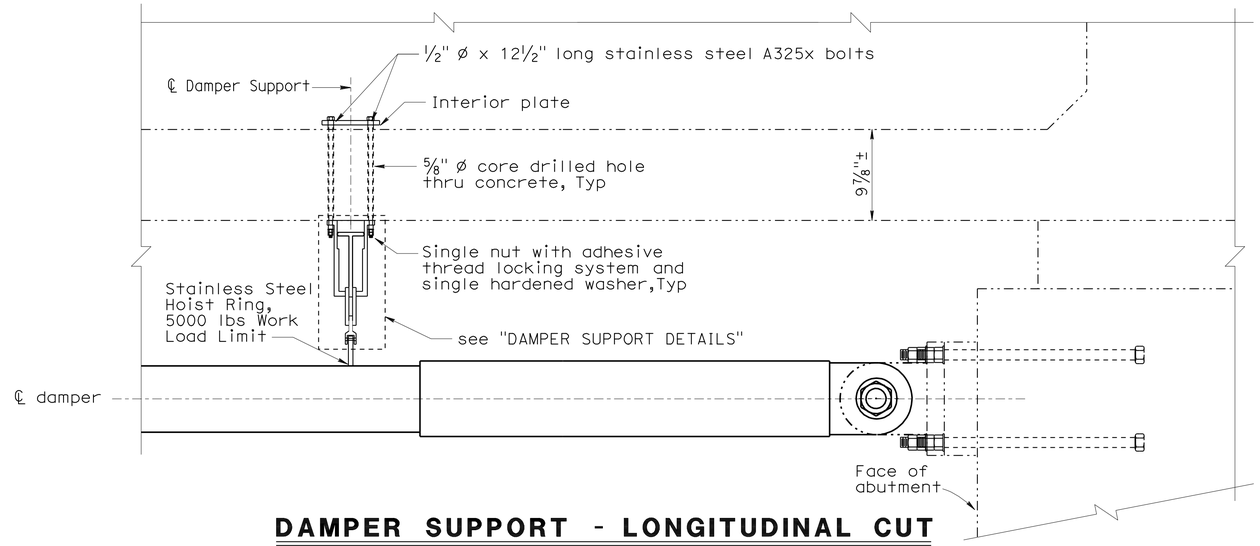


## DAMPER SUPPORT - LONGITUDINAL CUT

NO SCALE

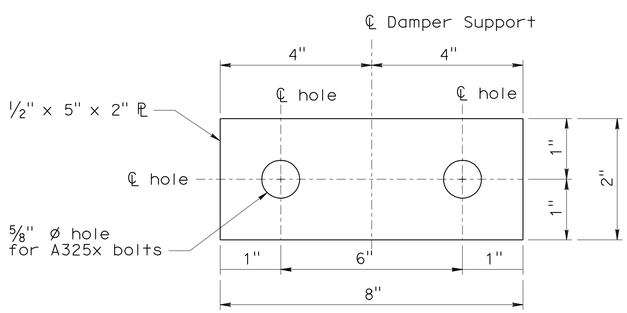


**PLAN**

## INTERIOR PLATE

NO SCALE

A36 Steel, hot dipped galvanized

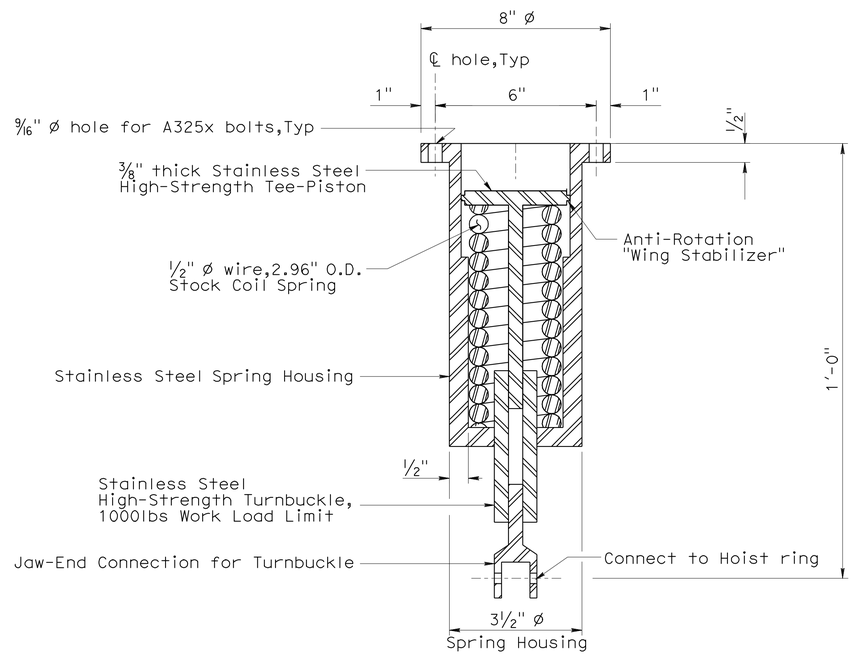


## DAMPER SUPPORT DETAILS

NO SCALE

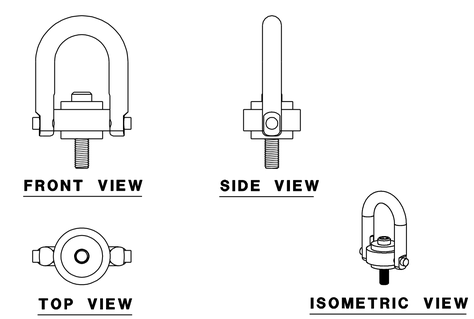


## HOIST RING

NO SCALE

Stainless Steel High-Strength

NOTE:
THE CONTRACTOR SHALL VERIFY ALL CONTROLLING FIELD DIMENSIONS BEFORE ORDERING OR FABRICATING ANY MATERIAL.

| | BY | CHECKED |
|---|---|---|
| DESIGN | Tony Brake | Ramesh Patel |
| DETAILS | Tom Dang | Tony Brake |
| QUANTITIES | Tony Brake | Ramesh Patel |

STATE OF CALIFORNIA
DEPARTMENT OF TRANSPORTATION

DIVISION OF MAINTENANCE
STRUCTURE MAINTENANCE DESIGN

BRIDGE NO. 55-0823
POST MILE 33.7

# ROUTE 5, 241 BRIDGES
# DAMPER DETAILS NO. 2

STRUCTURES MAINTENANCE DETAIL SHEET (ENGLISH) (REV. 10/25/05)

ORIGINAL SCALE IN INCHES FOR REDUCED PLANS 0 1 2 3

CU 12
EA 0L1201

DISREGARD PRINTS BEARING EARLIER REVISION DATES

REVISION DATES: 2-25-11 3-09-11

SHEET 12 OF 13

FILE => 12-011201-e-damperdt102.dgn

USERNAME => trcarol DATE PLOTTED => 17-MAR-2011 TIME PLOTTED => 07:21

| DIST | COUNTY | ROUTE | POST MILES TOTAL PROJECT | SHEET No | TOTAL SHEETS |
|---|---|---|---|---|---|
| 12 | Ora | 5,241 | Var | 28 | 28 |

REGISTERED CIVIL ENGINEER 03/09/11 DATE

3-14-11
PLANS APPROVAL DATE

REGISTERED PROFESSIONAL ENGINEER Tony D. Brake No. C57863 Exp. 06/30/12 CIVIL STATE OF CALIFORNIA

*The State of California or its officers or agents shall not be responsible for the accuracy or completeness of electronic copies of this plan sheet.*

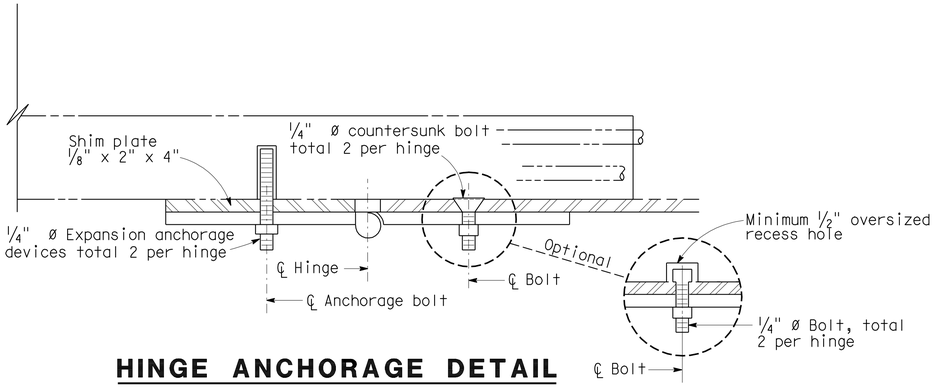


## HINGE ANCHORAGE DETAIL

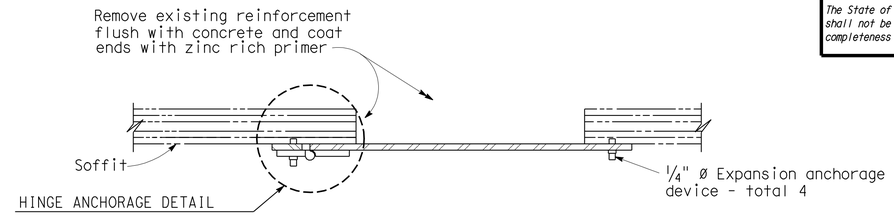


## SECTION A-A

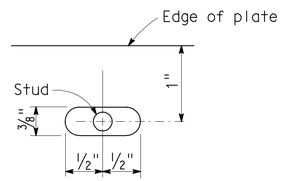


## DETAIL A

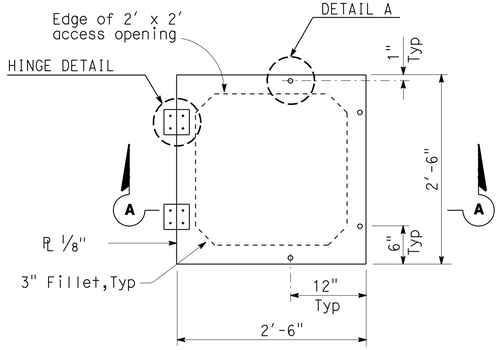


## PLAN

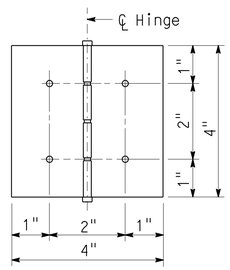


## HINGE DETAIL

**NOTES:**

1. Non-removable pin in hinge.
2. Hinge assembly to be galvanized, brass or stainless steel.
3. Use thread locking system for all hinge nuts.
4. Hinge assembly to be minimum 1/8" thick.

## SOFFIT ACCESS DOOR ASSEMBLY

Note: Soffit access door opening direction to be determined by the Engineer

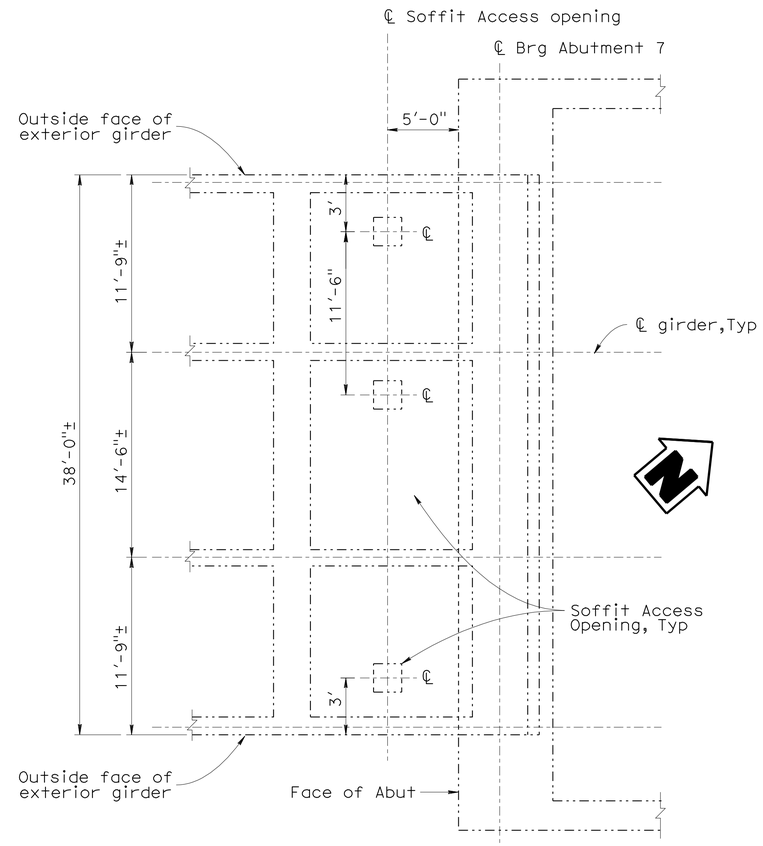


## PLAN

NO SCALE

Deck not shown for clarity.
Left bridge shown, right bridge similar.

NOTE:
THE CONTRACTOR SHALL VERIFY ALL CONTROLLING FIELD DIMENSIONS BEFORE ORDERING OR FABRICATING ANY MATERIAL.

| | BY | CHECKED |
|---|---|---|
| DESIGN | Tony Brake | Ramesh Patel |
| DETAILS | Tom Dang/Others | Tony Brake |
| QUANTITIES | Tony Brake | Ramesh Patel |

STATE OF CALIFORNIA
DEPARTMENT OF TRANSPORTATION

DIVISION OF MAINTENANCE
STRUCTURE MAINTENANCE DESIGN

BRIDGE NO. 55-0823
POST MILE 33.7

# ROUTE 5, 241 BRIDGES
# SOFFIT ACCESS OPENINGS

STRUCTURES MAINTENANCE DETAIL SHEET (ENGLISH) (REV. 10/25/05)

ORIGINAL SCALE IN INCHES FOR REDUCED PLANS 0 1 2 3

CU 12
EA 0L1201

DISREGARD PRINTS BEARING EARLIER REVISION DATES

REVISION DATES: 2-15-09 2-25-11

SHEET 13 OF 13

FILE => 12-011201-f-soffitopen.dgn

USERNAME => trcarol DATE PLOTTED => 17-MAR-2011 TIME PLOTTED => 07:22