ACSTP-P039(023)E

Dist	COUNTY	ROUTE	POST MILES TOTAL PROJECT	SHEET No.	TOTAL SHEETS
12	Ora	39	0.0/3.2	1	54

STATE OF CALIFORNIA
DEPARTMENT OF TRANSPORTATION

PROJECT PLANS FOR CONSTRUCTION ON
STATE HIGHWAY

IN ORANGE COUNTY
IN HUNTINGTON BEACH
FROM ROUTE 1 TO ELLIS AVENUE

TO BE SUPPLEMENTED BY STANDARD PLANS DATED MAY 2006

INDEX OF PLANS

SHEET No.	DESCRIPTION
1	TITLE AND LOCATION MAP
2	TYPICAL CROSS SECTIONS
3-9	LAYOUTS
10-11	CONSTRUCTION DETAILS
12-18	UTILITY PLANS
19	CONSTRUCTION AREA SIGNS
20-26	PAVEMENT DELINEATION AND SIGN PLANS
27	PAVEMENT DELINEATION DETAILS
28-35	PAVEMENT DELINEATION QUANTITIES
36-37	SIGN DETAILS AND QUANTITIES
38	SUMMARY OF QUANTITIES
39-45	INDUCTIVE LOOP DETECTORS
46-54	REVISED STANDARD PLANS

THE STANDARD PLANS LIST APPLICABLE TO THIS CONTRACT IS INCLUDED IN THE NOTICE TO BIDDERS AND SPECIAL PROVISIONS BOOK.

LOCATION MAP

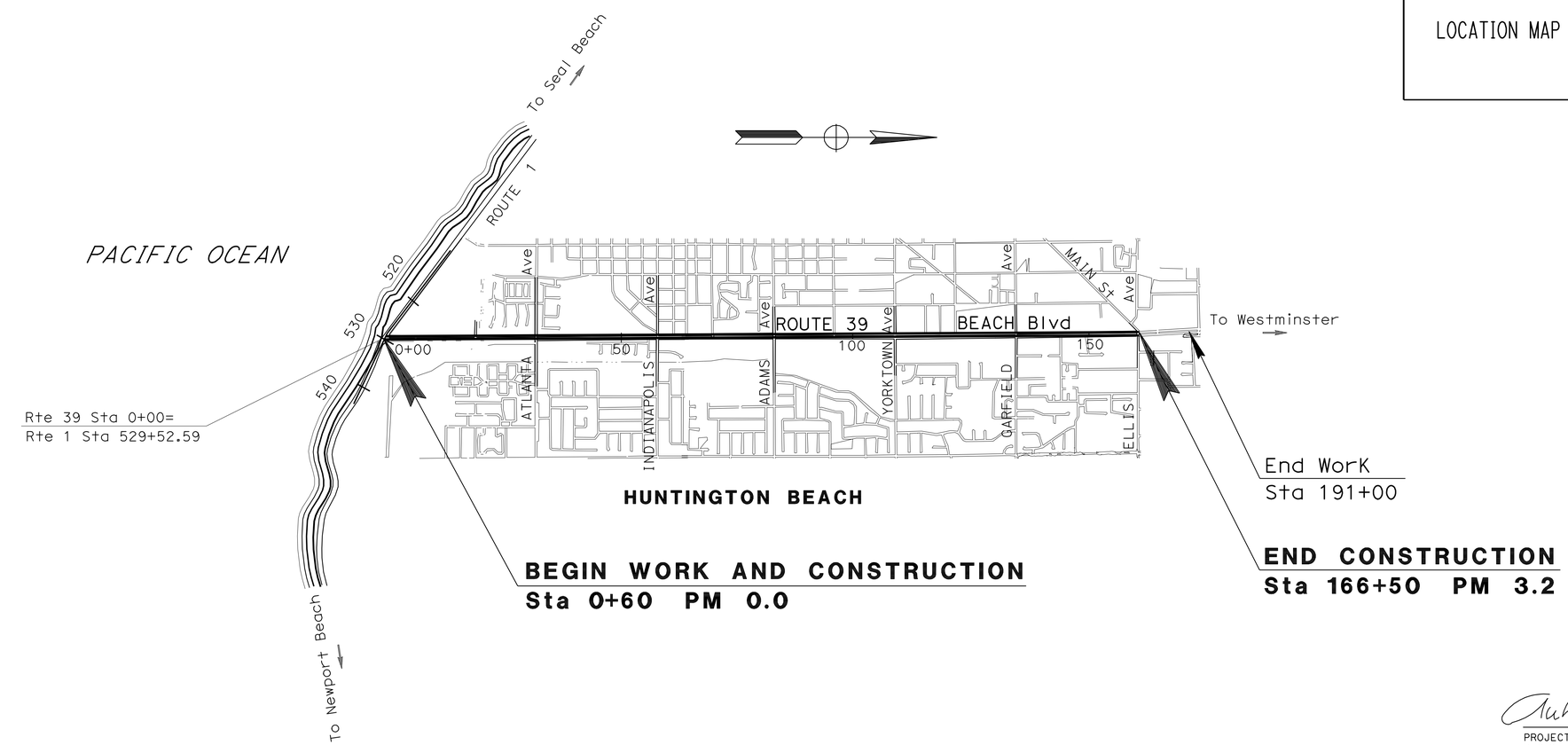

NO SCALE

THE CONTRACTOR SHALL POSSESS THE CLASS (OR CLASSES) OF LICENSE AS SPECIFIED IN THE "NOTICE TO BIDDERS."

Anh Tran 08-15-10
PROJECT ENGINEER DATE
REGISTERED CIVIL ENGINEER

December 6, 2010
PLANS APPROVAL DATE

REGISTERED PROFESSIONAL ENGINEER
ANH P. TRAN
No. C56206
Exp. 12-31-10
CIVIL
STATE OF CALIFORNIA

THE STATE OF CALIFORNIA OR ITS OFFICERS OR AGENTS SHALL NOT BE RESPONSIBLE FOR THE ACCURACY OR COMPLETENESS OF SCANNED COPIES OF THIS PLAN SHEET.

CONTRACT No.	12-0L0804
PROJECT ID	1200020019

PROJECT MANAGER: VINH PHAM
DESIGN ENGINEER: ANH P. TRAN

LAST REVISION 07-20-10
DATE PLOTTED => 24-MAR-2011
TIME PLOTTED => 13:33

Dist	COUNTY	ROUTE	POST MILES TOTAL PROJECT	SHEET No.	TOTAL SHEETS
12	Ora	39	0.0/3.2	2	54

REGISTERED CIVIL ENGINEER 08-15-10 DATE

12-6-10
PLANS APPROVAL DATE

REGISTERED PROFESSIONAL ENGINEER ANH P. TRAN No. C56206 Exp. 12-31-10 CIVIL STATE OF CALIFORNIA

THE STATE OF CALIFORNIA OR ITS OFFICERS OR AGENTS SHALL NOT BE RESPONSIBLE FOR THE ACCURACY OR COMPLETENESS OF SCANNED COPIES OF THIS PLAN SHEET.

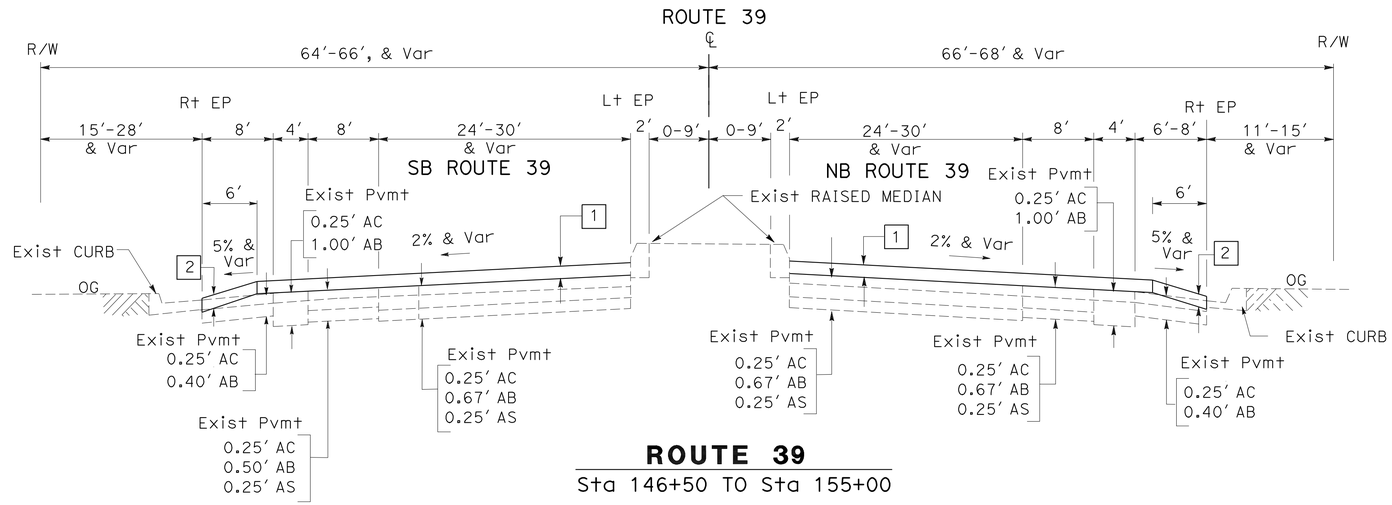

ROUTE 39
Sta 146+50 TO Sta 155+00

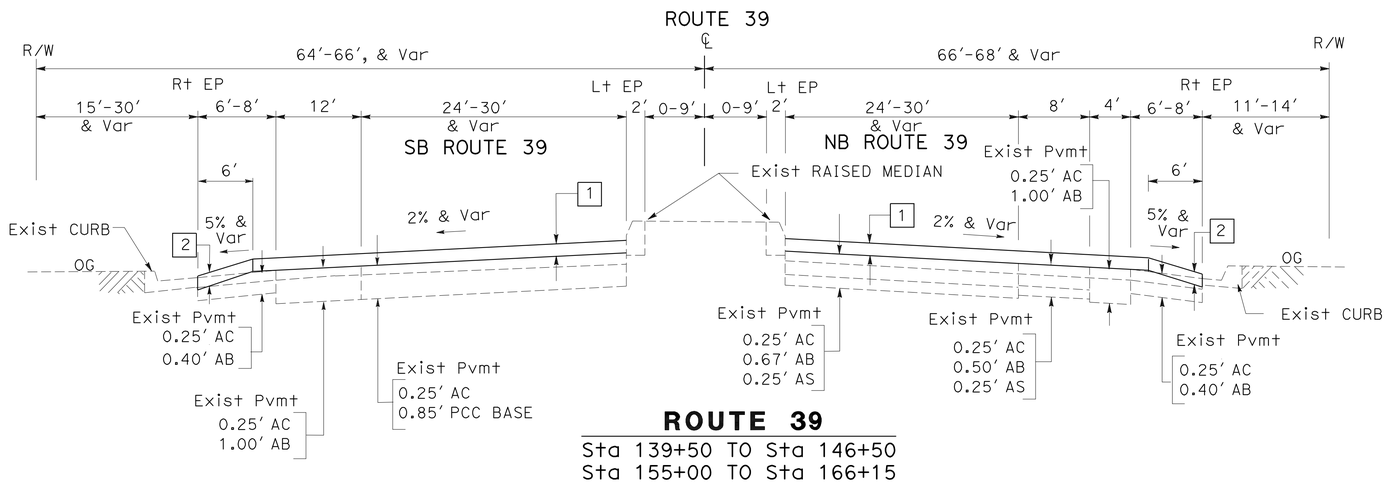

ROUTE 39
Sta 139+50 TO Sta 146+50
Sta 155+00 TO Sta 166+15

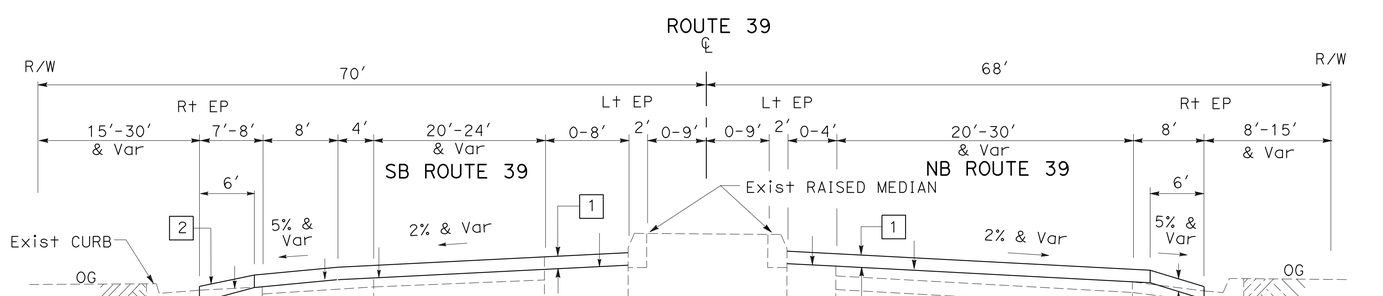

ROUTE 39
Sta 0+22.46 TO Sta 139+50

STRUCTURAL SECTION TYPES

1	0.1' RHMA - G
2	0.09' COLD PLANE AC Pvmt 0.1' RHMA - G
3	0.1' COLD PLANE AC Pvmt 0.1' RHMA - G

ABBREVIATION:

RHMA - G RUBBERIZED HOT MIX ASPHALT (GAP GRADED)

NOTES:

1. DIMENSIONS OF THE STRUCTURAL SECTIONS ARE SUBJECT TO TOLERANCES SPECIFIED IN THE STANDARD SPECIFICATIONS.
2. SUPERELEVATION AS SHOWN OR AS DIRECTED BY THE ENGINEER.
3. RUBBERIZED HOT MIX ASPHALT SHALL NOT BE APPLIED ON CONCRETE PAVEMENTS AND CURBS.
4. EXISTING UTILITY FACILITIES HAVE NOT BEEN PLOTTED ON THIS SHEET.
5. FOR LIMITS OF STRUCTURAL SECTIONS, SEE CONSTRUCTION DETAILS AND SUMMARY OF QUANTITIES.
6. FOR LOCATIONS OF ADJUST MANHOLE TO GRADE AND ADJUST WATER VALVE COVER TO GRADE, SEE SHEET Q-1.

TYPICAL CROSS SECTIONS

NO SCALE

X-1

REVISED BY	DATE REVISED
ANH TRAN	07-20-10

CALCULATED-DESIGNED BY: ANH TRAN
CHECKED BY: PHAT TRAN

FUNCTIONAL SUPERVISOR: MASSOUD TAJIK

STATE OF CALIFORNIA - DEPARTMENT OF TRANSPORTATION
Caltrans
MAINTENANCE

LAST REVISION 07-20-10 | DATE PLOTTED => 09-DEC-2010 | TIME PLOTTED => 16:01

Dist	COUNTY	ROUTE	POST MILES TOTAL PROJECT	SHEET No.	TOTAL SHEETS
12	Ora	39	0.0/3.2	3	54

Anh Tran 08-15-10
REGISTERED CIVIL ENGINEER DATE

12-6-10
PLANS APPROVAL DATE

REGISTERED PROFESSIONAL ENGINEER
ANH P. TRAN
No. C56206
Exp. 12-31-10
CIVIL
STATE OF CALIFORNIA

THE STATE OF CALIFORNIA OR ITS OFFICERS OR AGENTS SHALL NOT BE RESPONSIBLE FOR THE ACCURACY OR COMPLETENESS OF SCANNED COPIES OF THIS PLAN SHEET.

NOTES:

1. FOR ACCURATE RIGHT OF WAY DATA, CONTACT RIGHT OF WAY ENGINEERING AT THE DISTRICT OFFICE.
2. LOCATION OF SURVEY MONUMENTS SHOWN ARE APPROXIMATE.

LEGEND:

STRUCTURAL SECTION TYPE

Exist SURVEY MONUMENT

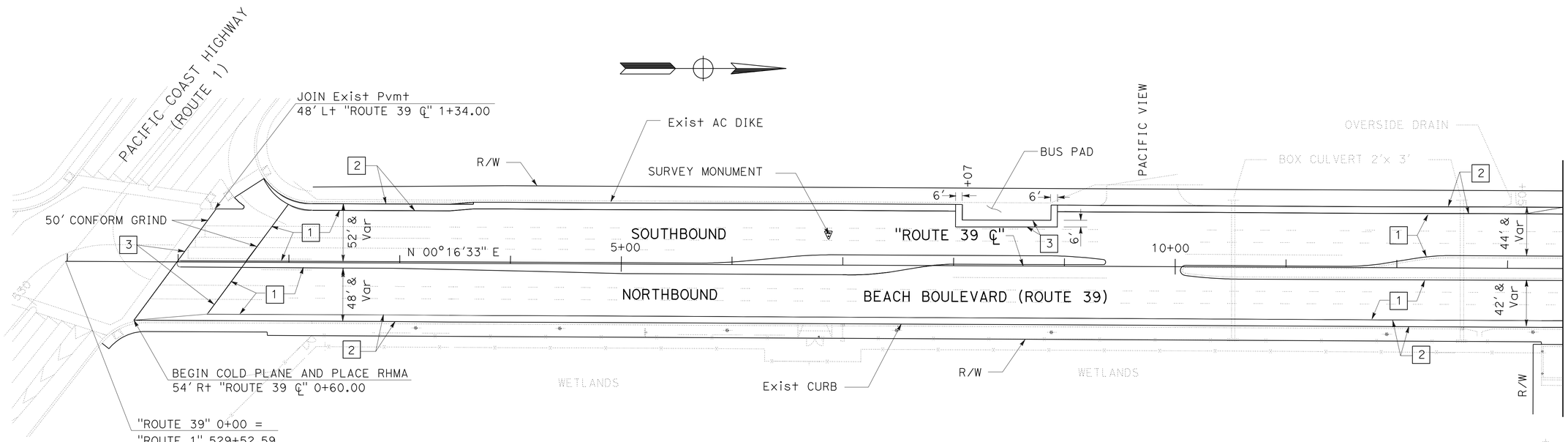

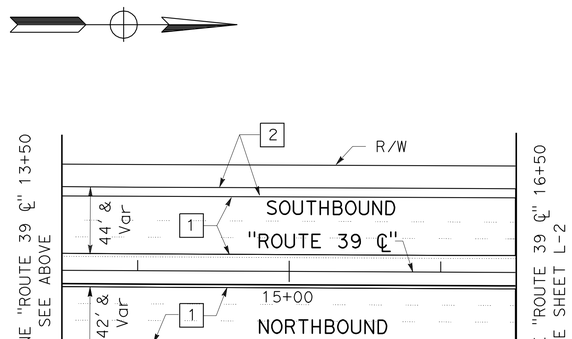

LAYOUT

SCALE: 1" = 50'

L-1

REVISED BY	DATE REVISED
ANH TRAN	07-20-10

CALCULATED-DESIGNED BY: ANH TRAN
CHECKED BY: PHAT TRAN
FUNCTIONAL SUPERVISOR: MASSOUD TAJIK

STATE OF CALIFORNIA - DEPARTMENT OF TRANSPORTATION
Caltrans
MAINTENANCE

LAST REVISION 07-20-10
DATE PLOTTED => 07-DEC-2010
TIME PLOTTED => 10:11

Dist	COUNTY	ROUTE	POST MILES TOTAL PROJECT	SHEET No.	TOTAL SHEETS
12	Ora	39	0.0/3.2	4	54

REGISTERED CIVIL ENGINEER 08-15-10 DATE

12-6-10
PLANS APPROVAL DATE

REGISTERED PROFESSIONAL ENGINEER
ANH P. TRAN
No. C56206
Exp. 12-31-10
CIVIL
STATE OF CALIFORNIA

THE STATE OF CALIFORNIA OR ITS OFFICERS OR AGENTS SHALL NOT BE RESPONSIBLE FOR THE ACCURACY OR COMPLETENESS OF SCANNED COPIES OF THIS PLAN SHEET.

NOTE:

FOR ACCURATE RIGHT OF WAY DATA, CONTACT RIGHT OF WAY ENGINEERING AT THE DISTRICT OFFICE.

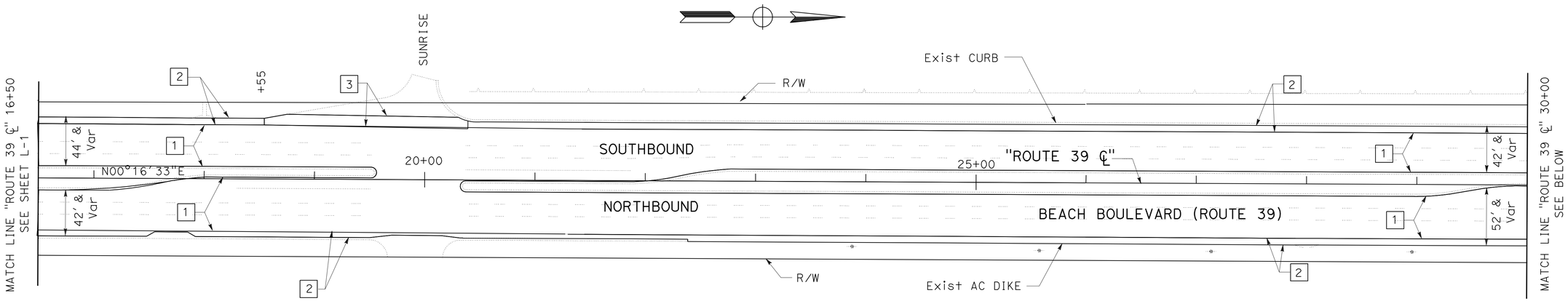

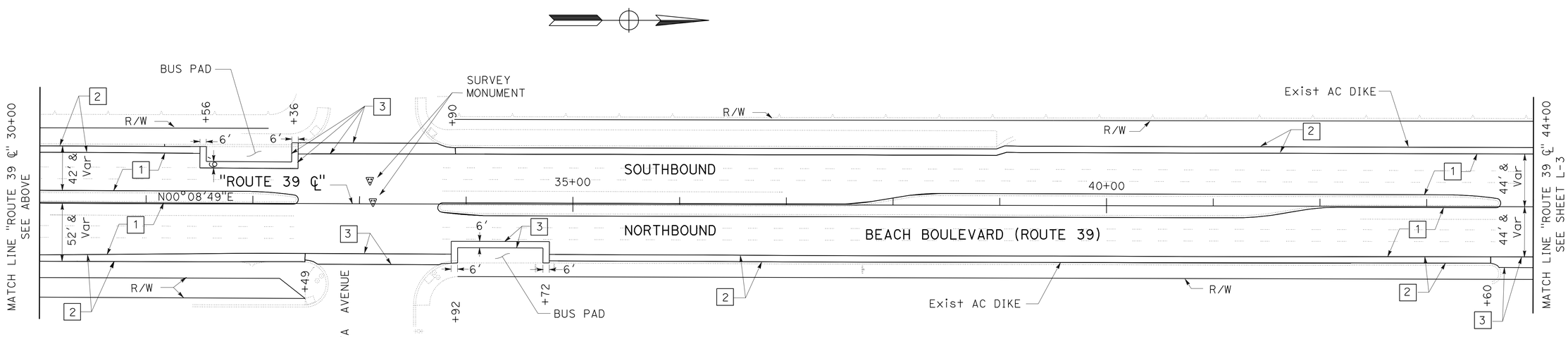

LAYOUT

SCALE: 1" = 50'

L-2

STATE OF CALIFORNIA - DEPARTMENT OF TRANSPORTATION
Caltrans MAINTENANCE

FUNCTIONAL SUPERVISOR: MASSOUD TAJIK

CALCULATED-DESIGNED BY: ANH TRAN
CHECKED BY: PHAT TRAN
REVISED BY: ANH TRAN
DATE REVISED: 07-20-10

LAST REVISION 07-20-10
DATE PLOTTED => 10-DEC-2010
TIME PLOTTED => 09:13

Dist	COUNTY	ROUTE	POST MILES TOTAL PROJECT	SHEET No.	TOTAL SHEETS
12	Ora	39	0.0/3.2	5	54

REGISTERED CIVIL ENGINEER DATE 08-15-10

12-6-10
PLANS APPROVAL DATE

REGISTERED PROFESSIONAL ENGINEER ANH P. TRAN No. C56206 Exp. 12-31-10 CIVIL STATE OF CALIFORNIA

THE STATE OF CALIFORNIA OR ITS OFFICERS OR AGENTS SHALL NOT BE RESPONSIBLE FOR THE ACCURACY OR COMPLETENESS OF SCANNED COPIES OF THIS PLAN SHEET.

NOTE:

FOR ACCURATE RIGHT OF WAY DATA, CONTACT RIGHT OF WAY ENGINEERING AT THE DISTRICT OFFICE.

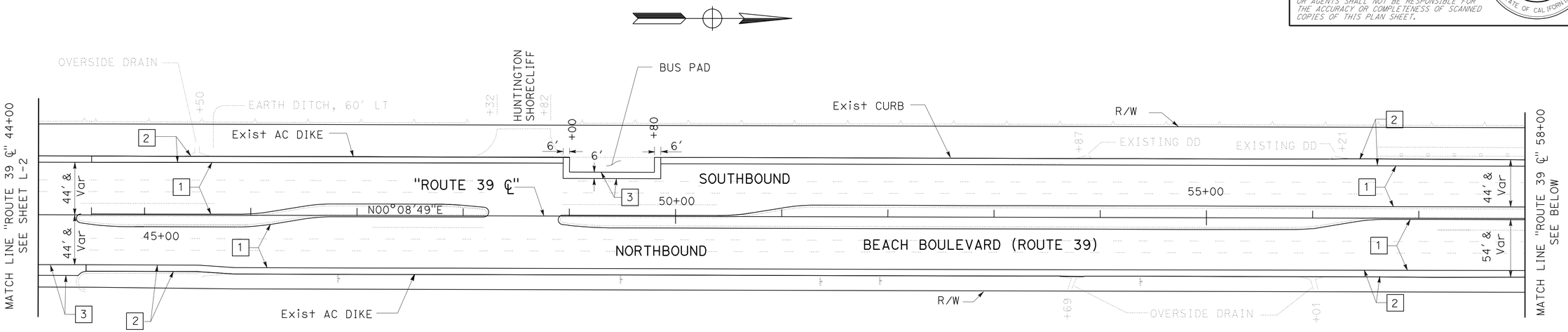

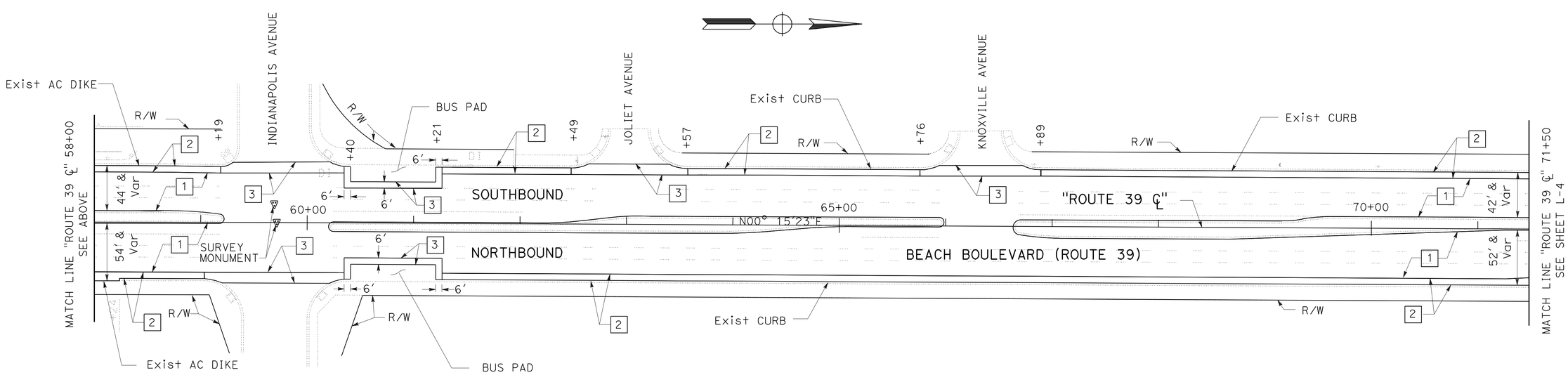

LAYOUT

SCALE: 1" = 50'

L-3

REVISED BY	DATE REVISED
ANH TRAN	07-20-10

CALCULATED-DESIGNED BY ANH TRAN
CHECKED BY PHAT TRAN
FUNCTIONAL SUPERVISOR MASSOUD TAJIK

STATE OF CALIFORNIA - DEPARTMENT OF TRANSPORTATION
Caltrans® MAINTENANCE

LAST REVISION 07-20-10
DATE PLOTTED => 07-DEC-2010
TIME PLOTTED => 10:11

Dist	COUNTY	ROUTE	POST MILES TOTAL PROJECT	SHEET No.	TOTAL SHEETS
12	Ora	39	0.0/3.2	6	54

Anh Tran 08-15-10
REGISTERED CIVIL ENGINEER DATE

12-6-10
PLANS APPROVAL DATE

REGISTERED PROFESSIONAL ENGINEER
ANH P. TRAN
No. C56206
Exp. 12-31-10
CIVIL
STATE OF CALIFORNIA

THE STATE OF CALIFORNIA OR ITS OFFICERS OR AGENTS SHALL NOT BE RESPONSIBLE FOR THE ACCURACY OR COMPLETENESS OF SCANNED COPIES OF THIS PLAN SHEET.

NOTE:

FOR ACCURATE RIGHT OF WAY DATA, CONTACT
RIGHT OF WAY ENGINEERING AT THE DISTRICT OFFICE.

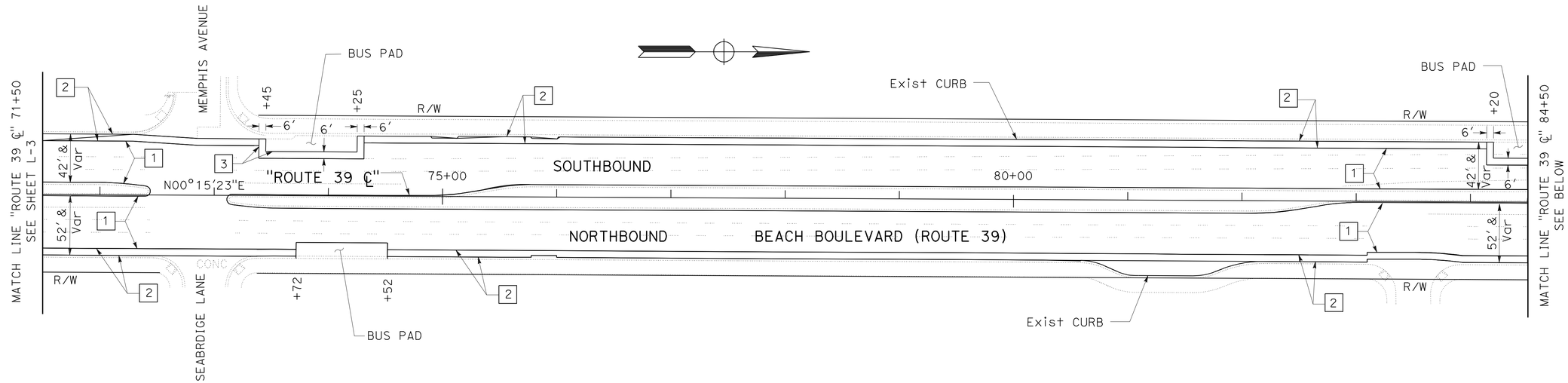

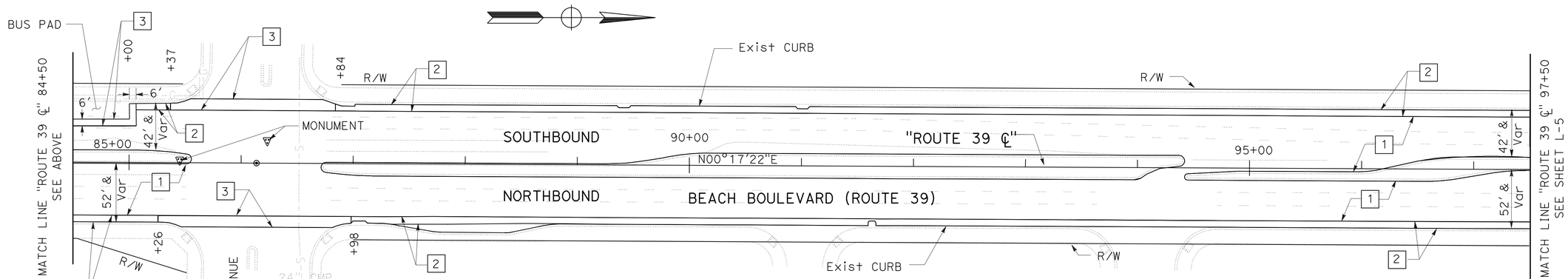

LAYOUT

SCALE: 1" = 50'

L-4

REVISED BY	DATE REVISED
ANH TRAN	07-20-10

CALCULATED-DESIGNED BY: ANH TRAN
CHECKED BY: PHAT TRAN
FUNCTIONAL SUPERVISOR: MASSOUD TAJIK

STATE OF CALIFORNIA - DEPARTMENT OF TRANSPORTATION
Caltrans® MAINTENANCE

LAST REVISION 07-20-10
DATE PLOTTED => 06-DEC-2010
TIME PLOTTED => 17:51

Dist	COUNTY	ROUTE	POST MILES TOTAL PROJECT	SHEET No.	TOTAL SHEETS
12	Ora	39	0.0/3.2	7	54

REGISTERED CIVIL ENGINEER 08-15-10 DATE

12-6-10
PLANS APPROVAL DATE

REGISTERED PROFESSIONAL ENGINEER
ANH P. TRAN
No. C56206
Exp. 12-31-10
CIVIL
STATE OF CALIFORNIA

THE STATE OF CALIFORNIA OR ITS OFFICERS OR AGENTS SHALL NOT BE RESPONSIBLE FOR THE ACCURACY OR COMPLETENESS OF SCANNED COPIES OF THIS PLAN SHEET.

NOTE:

FOR ACCURATE RIGHT OF WAY DATA, CONTACT RIGHT OF WAY ENGINEERING AT THE DISTRICT OFFICE.

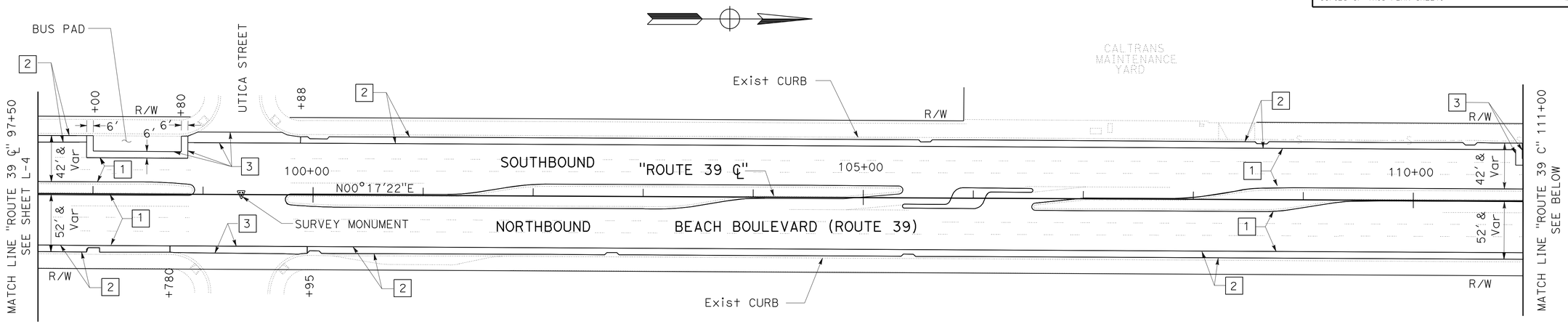

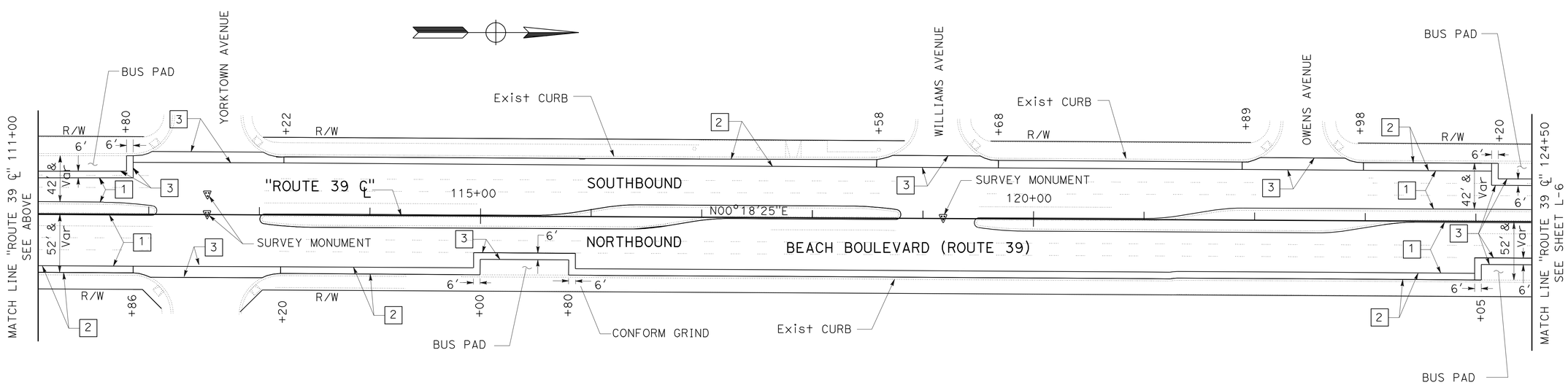

LAYOUT

SCALE: 1" = 50'

L-5

REVISED BY	DATE REVISED
ANH TRAN	07-20-10

CALCULATED-DESIGNED BY	CHECKED BY
ANH TRAN	PHAT TRAN

FUNCTIONAL SUPERVISOR: MASSOUD TAJIK

STATE OF CALIFORNIA - DEPARTMENT OF TRANSPORTATION
Caltrans® MAINTENANCE

LAST REVISION 07-20-10 | DATE PLOTTED => 09-DEC-2010 | TIME PLOTTED => 16:01

Dist	COUNTY	ROUTE	POST MILES TOTAL PROJECT	SHEET No.	TOTAL SHEETS
12	Ora	39	0.0/3.2	8	54

REGISTERED CIVIL ENGINEER 08-15-10 DATE

12-6-10
PLANS APPROVAL DATE

REGISTERED PROFESSIONAL ENGINEER
ANH P. TRAN
No. C56206
Exp. 12-31-10
CIVIL
STATE OF CALIFORNIA

THE STATE OF CALIFORNIA OR ITS OFFICERS OR AGENTS SHALL NOT BE RESPONSIBLE FOR THE ACCURACY OR COMPLETENESS OF SCANNED COPIES OF THIS PLAN SHEET.

NOTE:

FOR ACCURATE RIGHT OF WAY DATA, CONTACT
RIGHT OF WAY ENGINEERING AT THE DISTRICT OFFICE.

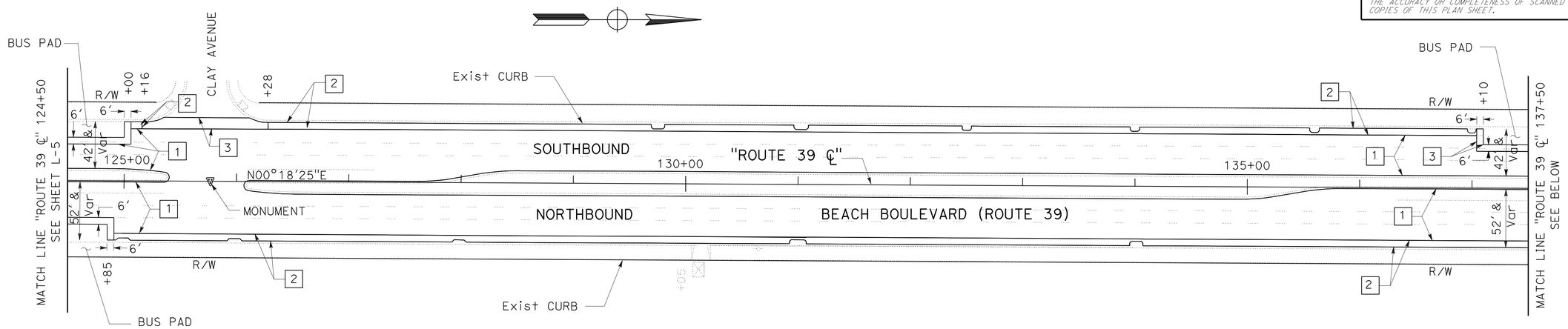

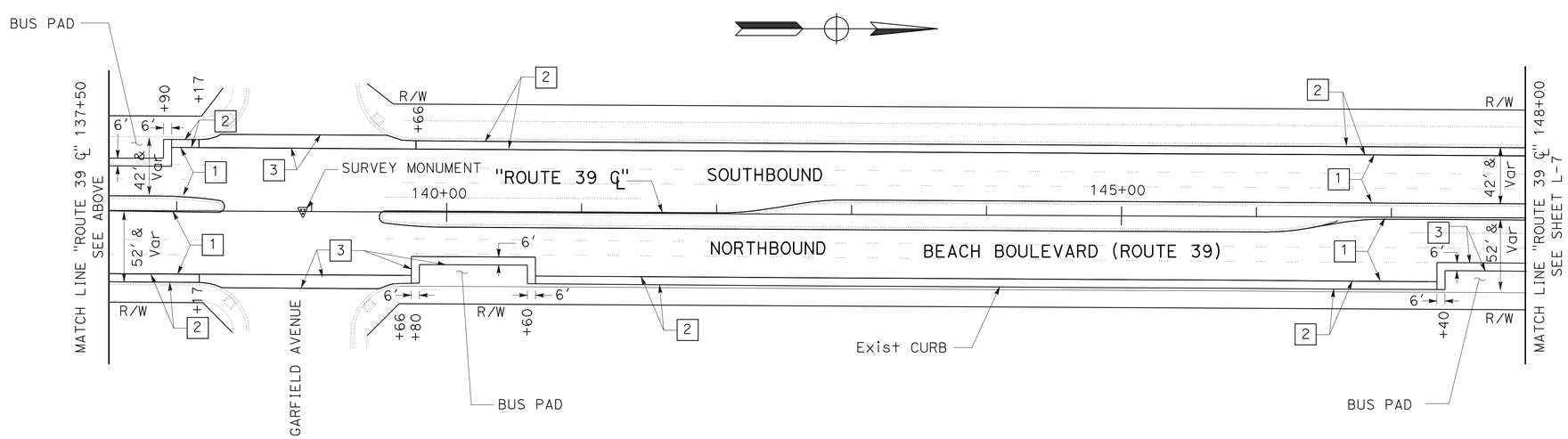

LAYOUT

SCALE: 1" = 50'

L-6

STATE OF CALIFORNIA - DEPARTMENT OF TRANSPORTATION
Caltrans® **MAINTENANCE**

FUNCTIONAL SUPERVISOR: MASSOUD TAJIK

CALCULATED-DESIGNED BY: ANH TRAN
CHECKED BY: PHAT TRAN
REVISED BY: ANH TRAN
DATE REVISED: 07-20-10

LAST REVISION 07-20-10
DATE PLOTTED => 09-DEC-2010
TIME PLOTTED => 16:01

Dist	COUNTY	ROUTE	POST MILES TOTAL PROJECT	SHEET No.	TOTAL SHEETS
12	Ora	39	0.0/3.2	9	54

REGISTERED CIVIL ENGINEER DATE 08-15-10

12-6-10
PLANS APPROVAL DATE

REGISTERED PROFESSIONAL ENGINEER ANH P. TRAN No. C56206 Exp. 12-31-10 CIVIL STATE OF CALIFORNIA

THE STATE OF CALIFORNIA OR ITS OFFICERS OR AGENTS SHALL NOT BE RESPONSIBLE FOR THE ACCURACY OR COMPLETENESS OF SCANNED COPIES OF THIS PLAN SHEET.

NOTE:

FOR ACCURATE RIGHT OF WAY DATA, CONTACT

RIGHT OF WAY ENGINEERING AT THE DISTRICT OFFICE.

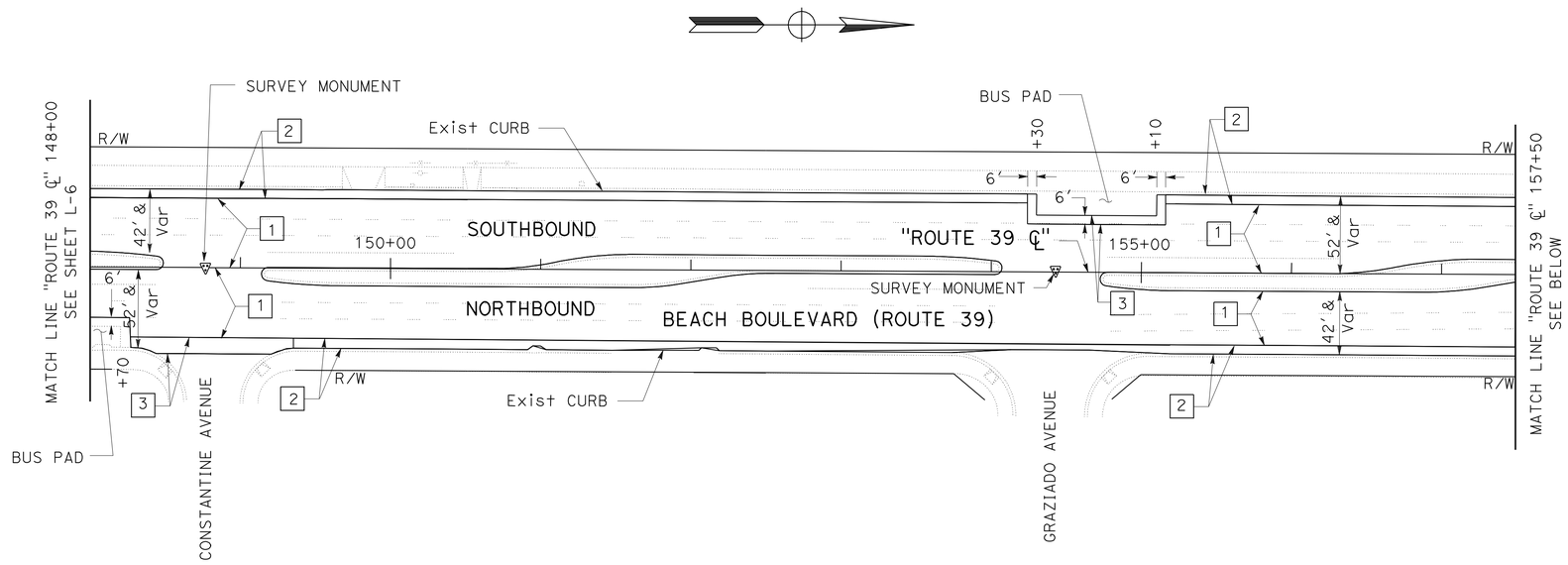

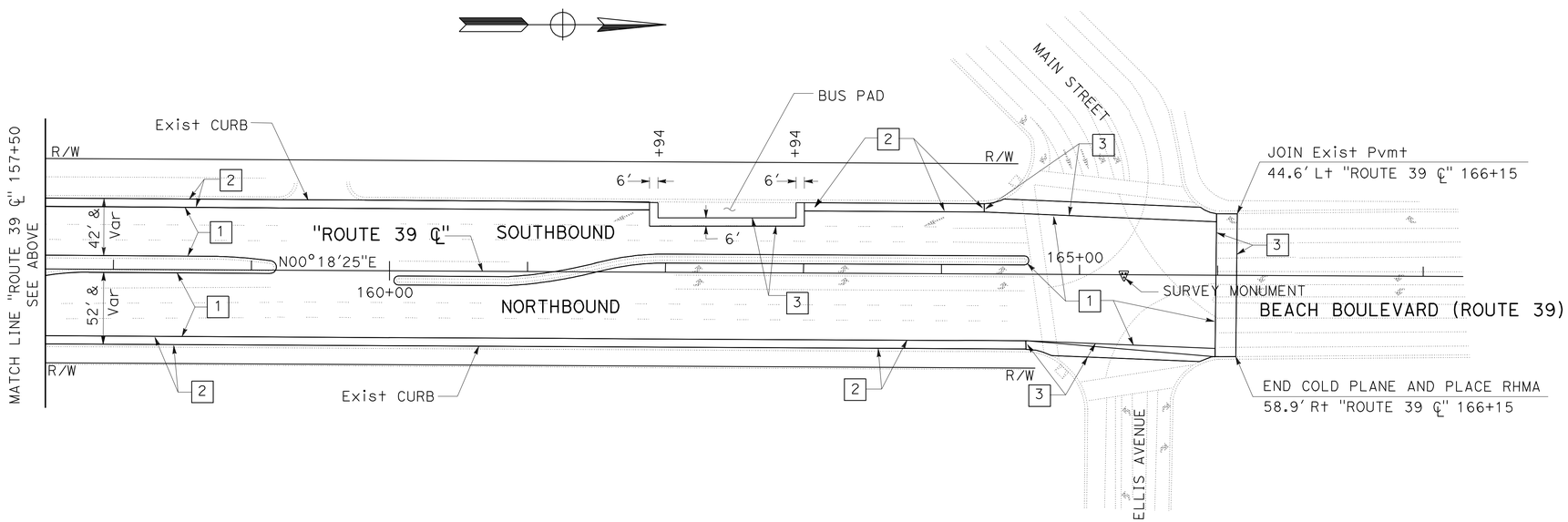

LAYOUT

SCALE: 1" = 50'

L-7

STATE OF CALIFORNIA - DEPARTMENT OF TRANSPORTATION
Caltrans MAINTENANCE

FUNCTIONAL SUPERVISOR: MASSOUD TAJIK

CALCULATED-DESIGNED BY: ANH TRAN
CHECKED BY: PHAT TRAN

REVISED BY: ANH TRAN
DATE REVISED: 07-20-10

LAST REVISION 07-20-10 | DATE PLOTTED => 07-DEC-2010 | TIME PLOTTED => 10:43

Dist	COUNTY	ROUTE	POST MILES TOTAL PROJECT	SHEET No.	TOTAL SHEETS
12	Ora	39	0.0/3.2	10	54

REGISTERED CIVIL ENGINEER DATE 08-15-10

PLANS APPROVAL DATE 12-6-10

REGISTERED PROFESSIONAL ENGINEER ANH P. TRAN No. C56206 Exp. 12-31-10 CIVIL STATE OF CALIFORNIA

THE STATE OF CALIFORNIA OR ITS OFFICERS OR AGENTS SHALL NOT BE RESPONSIBLE FOR THE ACCURACY OR COMPLETENESS OF SCANNED COPIES OF THIS PLAN SHEET.

LEGEND:

1 STRUCTURAL SECTION TYPE

DIRECTION OF TRAFFIC

COLD PLANE

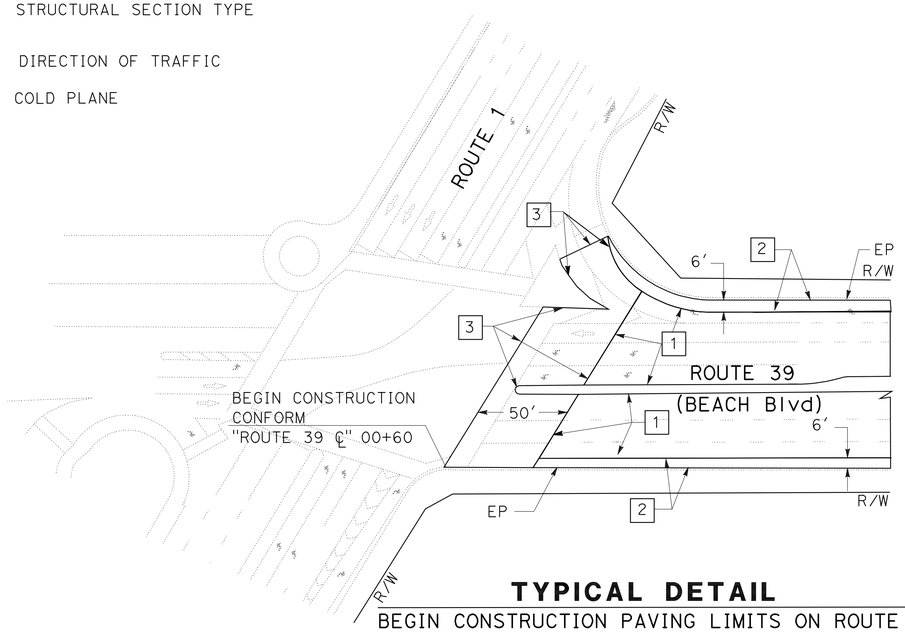

TYPICAL DETAIL

BEGIN CONSTRUCTION PAVING LIMITS ON ROUTE 39

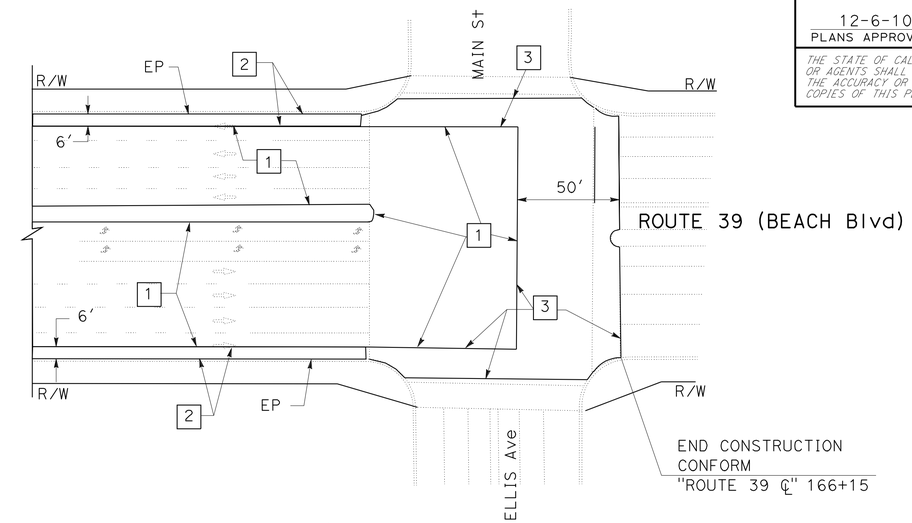

TYPICAL DETAIL

END CONSTRUCTION PAVING LIMITS ON ROUTE 39

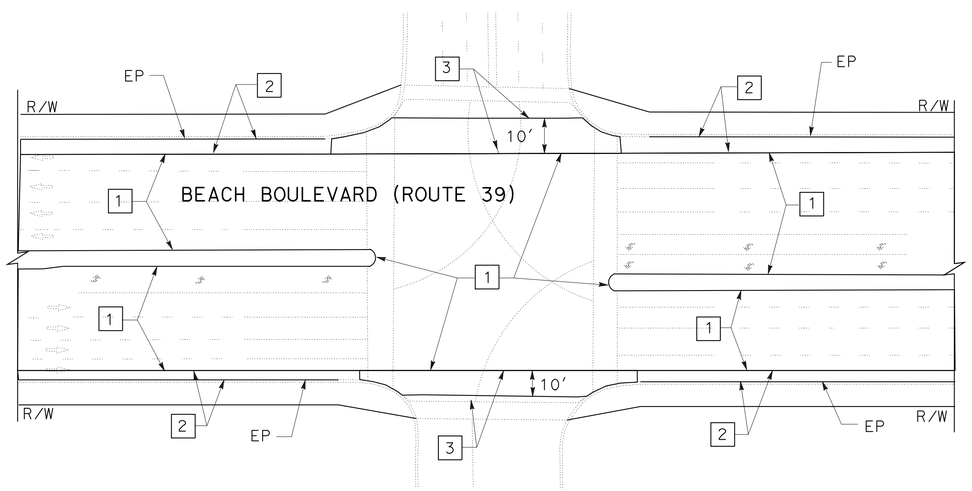

TYPICAL PAVING DETAIL ON ROUTE 39

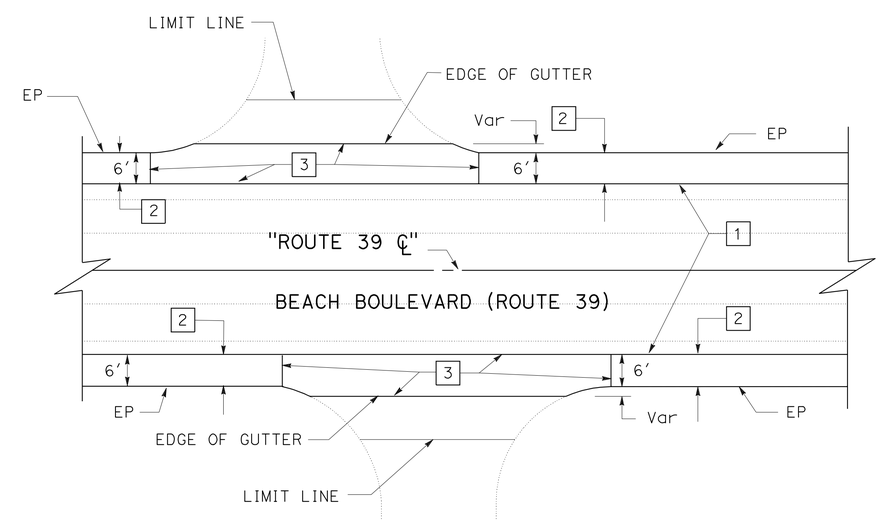

LIMIT OF PAVING DETAIL FOR PRIVATE DRIVEWAY APPROACHES

CONSTRUCTION DETAILS

NO SCALE

C-1

REVISED BY	DATE REVISED
ANH TRAN	07-20-10

CALCULATED-DESIGNED BY	CHECKED BY
ANH TRAN	PHAT TRAN

FUNCTIONAL SUPERVISOR: MASSOUD TAJIK

STATE OF CALIFORNIA - DEPARTMENT OF TRANSPORTATION

Caltrans® MAINTENANCE

LAST REVISION 07-20-10 | DATE PLOTTED => 07-DEC-2010 TIME PLOTTED => 08:09

Dist	COUNTY	ROUTE	POST MILES TOTAL PROJECT	SHEET No.	TOTAL SHEETS
12	Ora	39	0.0/3.2	11	54

REGISTERED CIVIL ENGINEER DATE 10-19-10

12-6-10
PLANS APPROVAL DATE

REGISTERED PROFESSIONAL ENGINEER
ANH P. TRAN
No. C56206
Exp. 12-31-10
CIVIL
STATE OF CALIFORNIA

THE STATE OF CALIFORNIA OR ITS OFFICERS OR AGENTS SHALL NOT BE RESPONSIBLE FOR THE ACCURACY OR COMPLETENESS OF SCANNED COPIES OF THIS PLAN SHEET.

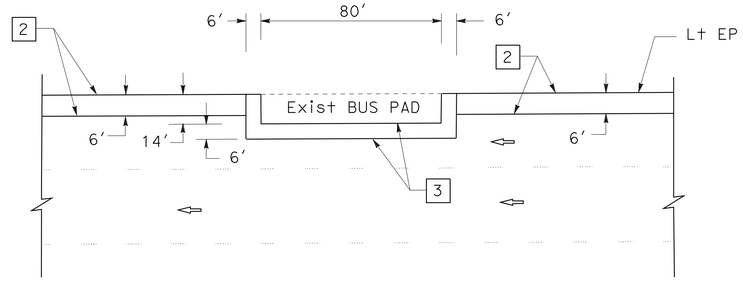

DETAIL E
PAVING LIMITS AT BUS PAD

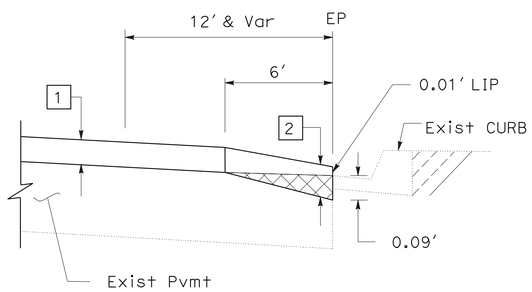

DETAIL B
CONFORM DETAIL AT Exist CURBS

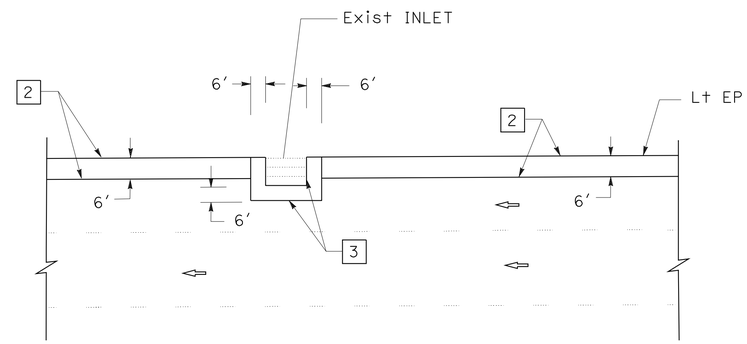

DETAIL D
PAVING LIMITS AT Exist INLETS

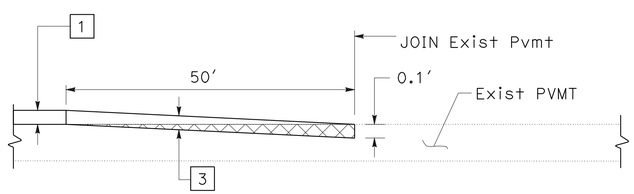

DETAIL A
CONFORM DETAIL AT BEGIN AND END CONSTRUCTION

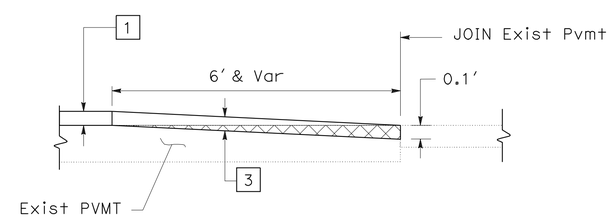

DETAIL C
CONFORM DETAIL AT PRIVATE DRIVEWAY APPROACHES

CONSTRUCTION DETAILS

NO SCALE

C-2

ANH TRAN	10-18-10
REVISED BY	DATE REVISED
ANH TRAN	PHAT TRAN
CALCULATED-DESIGNED BY	CHECKED BY
FUNCTIONAL SUPERVISOR	MASSOUD TAJIK

STATE OF CALIFORNIA - DEPARTMENT OF TRANSPORTATION
Caltrans
MAINTENANCE

LAST REVISION 10-19-10
DATE PLOTTED => 09-DEC-2010
TIME PLOTTED => 16:01

Dist	COUNTY	ROUTE	POST MILES TOTAL PROJECT	SHEET No.	TOTAL SHEETS
12	Ora	39	0.0/3.2	12	54

REGISTERED CIVIL ENGINEER 08-15-10 DATE

12-6-10
PLANS APPROVAL DATE

REGISTERED PROFESSIONAL ENGINEER
ANH P. TRAN
No. C56206
Exp. 12-31-10
CIVIL
STATE OF CALIFORNIA

THE STATE OF CALIFORNIA OR ITS OFFICERS OR AGENTS SHALL NOT BE RESPONSIBLE FOR THE ACCURACY OR COMPLETENESS OF SCANNED COPIES OF THIS PLAN SHEET.

NOTE:

1. LOCATION OF UTILITY COVERS SHOWN ARE APPROXIMATE.
2. FOR ACCURATE RIGHT OF WAY DATA, CONTACT RIGHT OF WAY ENGINEERING AT THE DISTRICT OFFICE.

LEGEND:

- ○ GAS VENT COVER (RESET UTILITY COVER)
- ⊙ MANHOLE (RESET UTILITY COVER)
- ⊗ WATER VALVE (RESET UTILITY COVER)

ABBREVIATIONS:

CITY OF HB	CITY OF HUNTINGTON BEACH
OCSD	ORANGE COUNTY SANITATION DISTRICT
SCE	SOUTHERN CALIFORNIA EDISON
SCG	SOUTHERN CALIFORNIA GAS

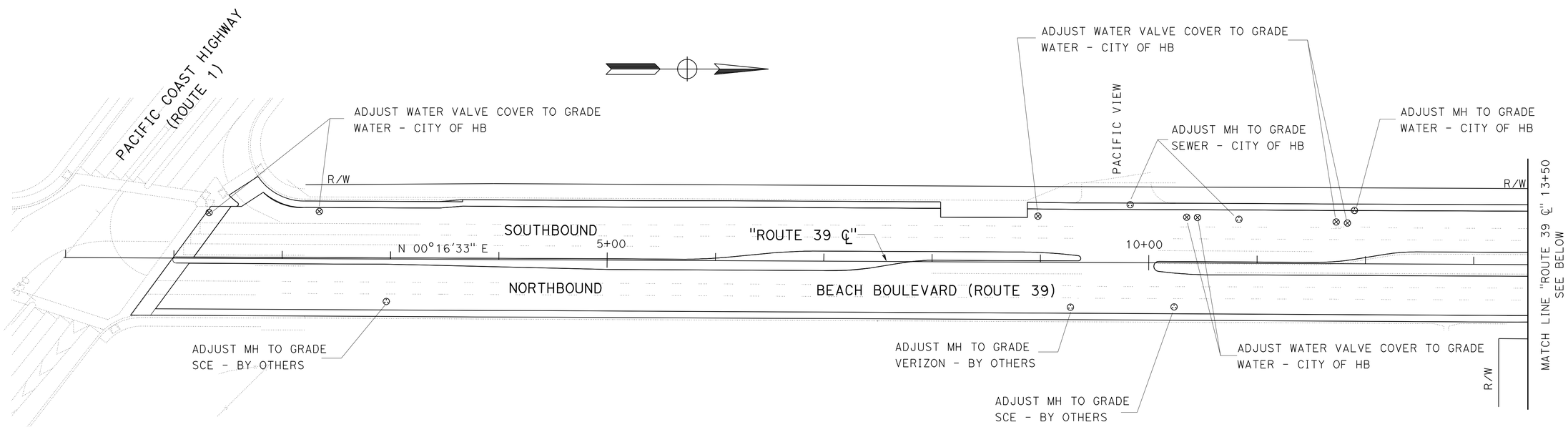

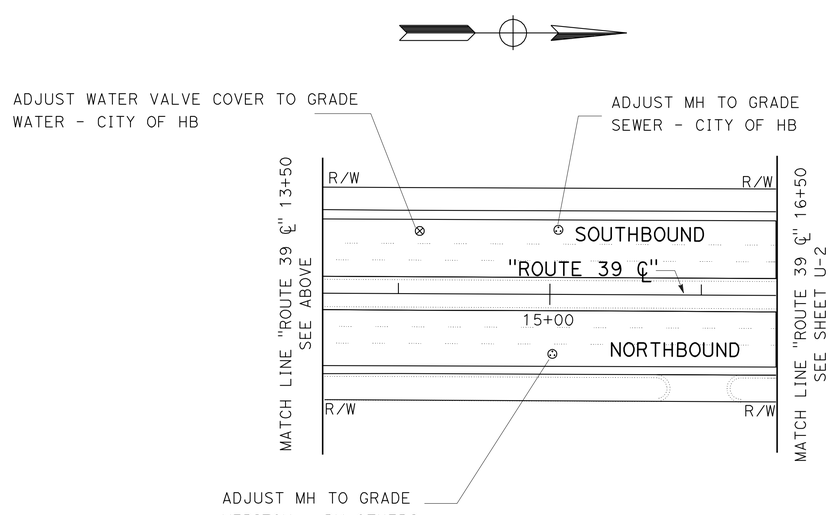

UTILITY PLAN

SCALE: 1" = 50'

THIS PLAN ACCURATE FOR UTILITY INFORMATION ONLY.

U-1

REVISED BY	DATE REVISED
ANH TRAN	07-20-10

CALCULATED-DESIGNED BY: ANH TRAN
CHECKED BY: PHAT TRAN
FUNCTIONAL SUPERVISOR: MASSOUD TAJIK

STATE OF CALIFORNIA - DEPARTMENT OF TRANSPORTATION
Caltrans
MAINTENANCE

LAST REVISION 07-20-10 | DATE PLOTTED => 07-DEC-2010 TIME PLOTTED => 08:09

Dist	COUNTY	ROUTE	POST MILES TOTAL PROJECT	SHEET No.	TOTAL SHEETS
12	Ora	39	0.0/3.2	13	54

REGISTERED CIVIL ENGINEER DATE 08-15-10

12-6-10
PLANS APPROVAL DATE

REGISTERED PROFESSIONAL ENGINEER
ANH P. TRAN
No. C56206
Exp. 12-31-10
CIVIL
STATE OF CALIFORNIA

THE STATE OF CALIFORNIA OR ITS OFFICERS OR AGENTS SHALL NOT BE RESPONSIBLE FOR THE ACCURACY OR COMPLETENESS OF SCANNED COPIES OF THIS PLAN SHEET.

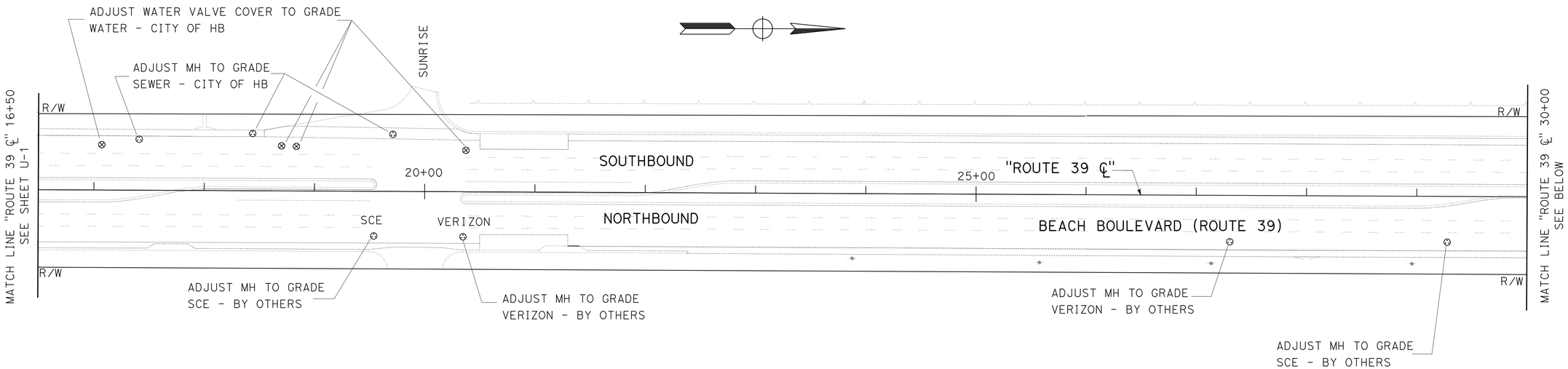

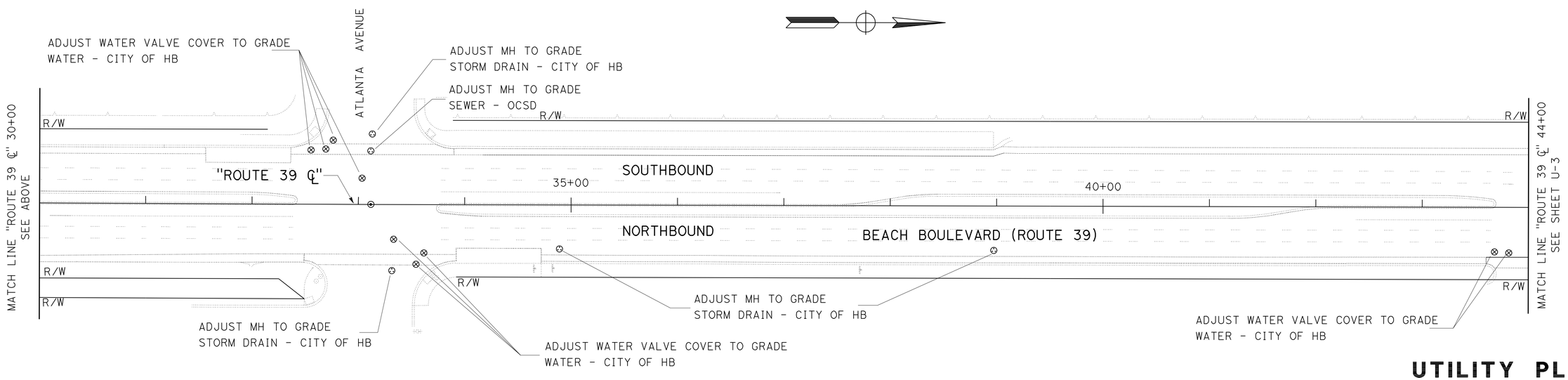

UTILITY PLAN

SCALE: 1" = 50'

THIS PLAN ACCURATE FOR UTILITY INFORMATION ONLY.

U-2

REVISED BY	DATE REVISED
ANH TRAN	07-20-10

CALCULATED-DESIGNED BY: ANH TRAN
CHECKED BY: PHAT TRAN
FUNCTIONAL SUPERVISOR: MASSOUD TAJIK

STATE OF CALIFORNIA - DEPARTMENT OF TRANSPORTATION
Caltrans® MAINTENANCE

LAST REVISION 07-20-10
DATE PLOTTED => 07-DEC-2010
TIME PLOTTED => 08:09

Dist	COUNTY	ROUTE	POST MILES TOTAL PROJECT	SHEET No.	TOTAL SHEETS
12	Ora	39	0.0/3.2	14	54

REGISTERED CIVIL ENGINEER 08-15-10 DATE

12-6-10
PLANS APPROVAL DATE

REGISTERED PROFESSIONAL ENGINEER
ANH P. TRAN
No. C56206
Exp. 12-31-10
CIVIL
STATE OF CALIFORNIA

THE STATE OF CALIFORNIA OR ITS OFFICERS OR AGENTS SHALL NOT BE RESPONSIBLE FOR THE ACCURACY OR COMPLETENESS OF SCANNED COPIES OF THIS PLAN SHEET.

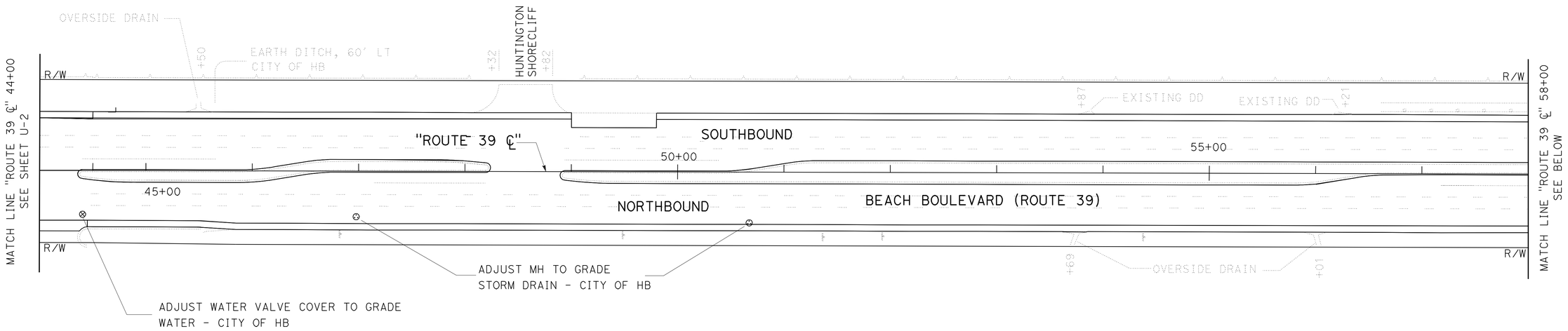

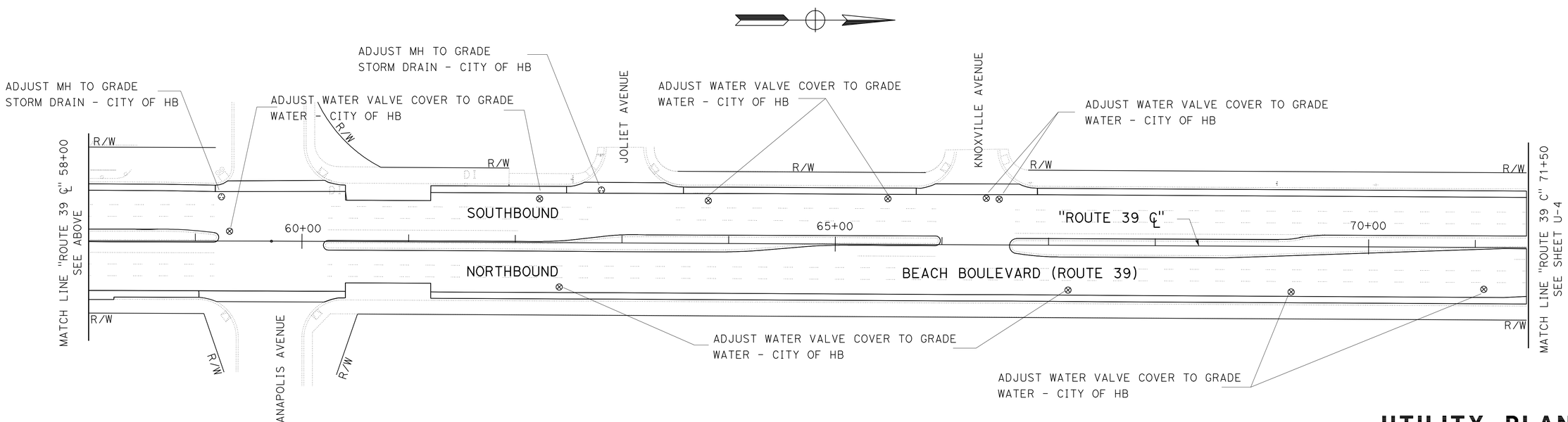

UTILITY PLAN

SCALE: 1" = 50'

U-3

THIS PLAN ACCURATE FOR UTILITY INFORMATION ONLY.

REVISED BY	DATE REVISED
ANH TRAN	07-20-10

CALCULATED-DESIGNED BY: ANH TRAN
CHECKED BY: PHAT TRAN
FUNCTIONAL SUPERVISOR: MASSOUD TAJIK

STATE OF CALIFORNIA - DEPARTMENT OF TRANSPORTATION
Caltrans® MAINTENANCE

LAST REVISION 07-20-10
DATE PLOTTED => 07-DEC-2010
TIME PLOTTED => 08:09

Dist	COUNTY	ROUTE	POST MILES TOTAL PROJECT	SHEET No.	TOTAL SHEETS
12	Ora	39	0.0/3.2	15	54

REGISTERED CIVIL ENGINEER DATE 08-15-10

12-6-10
PLANS APPROVAL DATE

REGISTERED PROFESSIONAL ENGINEER
ANH P. TRAN
No. C56206
Exp. 12-31-10
CIVIL
STATE OF CALIFORNIA

THE STATE OF CALIFORNIA OR ITS OFFICERS OR AGENTS SHALL NOT BE RESPONSIBLE FOR THE ACCURACY OR COMPLETENESS OF SCANNED COPIES OF THIS PLAN SHEET.

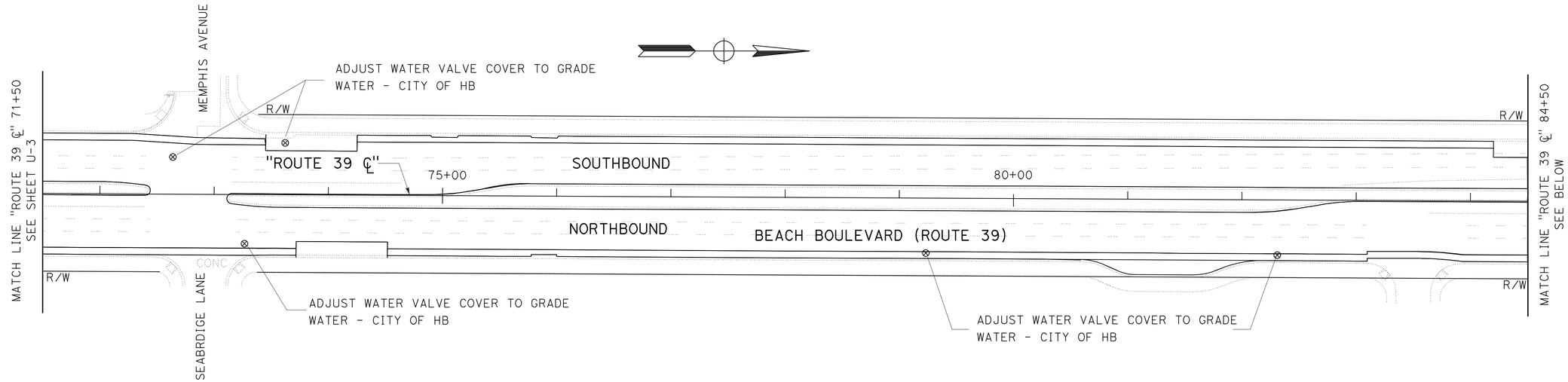

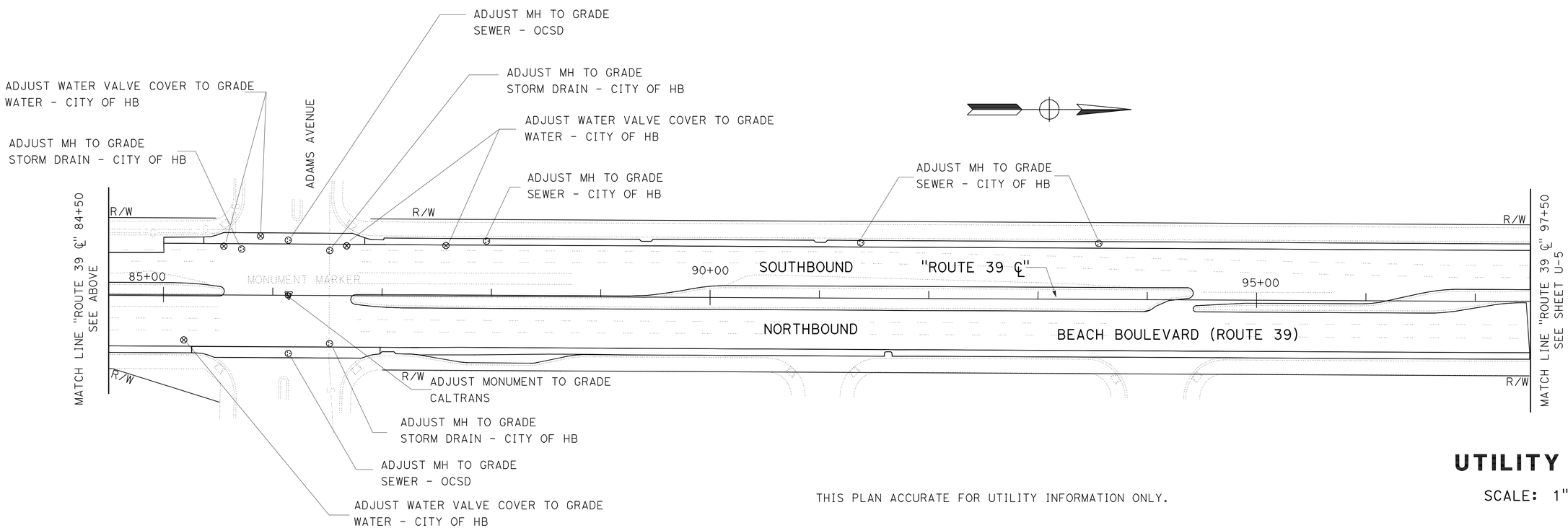

THIS PLAN ACCURATE FOR UTILITY INFORMATION ONLY.

UTILITY PLAN

SCALE: 1" = 50'

U-4

REVISED BY	DATE REVISED
ANH TRAN	07-20-10

CALCULATED-DESIGNED BY: ANH TRAN
CHECKED BY: PHAT TRAN
FUNCTIONAL SUPERVISOR: MASSOUD TAJIK

STATE OF CALIFORNIA - DEPARTMENT OF TRANSPORTATION
Caltrans® MAINTENANCE

LAST REVISION 07-20-10
DATE PLOTTED => 07-DEC-2010
TIME PLOTTED => 08:09

Dist	COUNTY	ROUTE	POST MILES TOTAL PROJECT	SHEET No.	TOTAL SHEETS
12	Ora	39	0.0/3.2	16	54

REGISTERED CIVIL ENGINEER DATE 08-15-10

12-6-10
PLANS APPROVAL DATE

REGISTERED PROFESSIONAL ENGINEER
ANH P. TRAN
No. C56206
Exp. 12-31-10
CIVIL
STATE OF CALIFORNIA

THE STATE OF CALIFORNIA OR ITS OFFICERS OR AGENTS SHALL NOT BE RESPONSIBLE FOR THE ACCURACY OR COMPLETENESS OF SCANNED COPIES OF THIS PLAN SHEET.

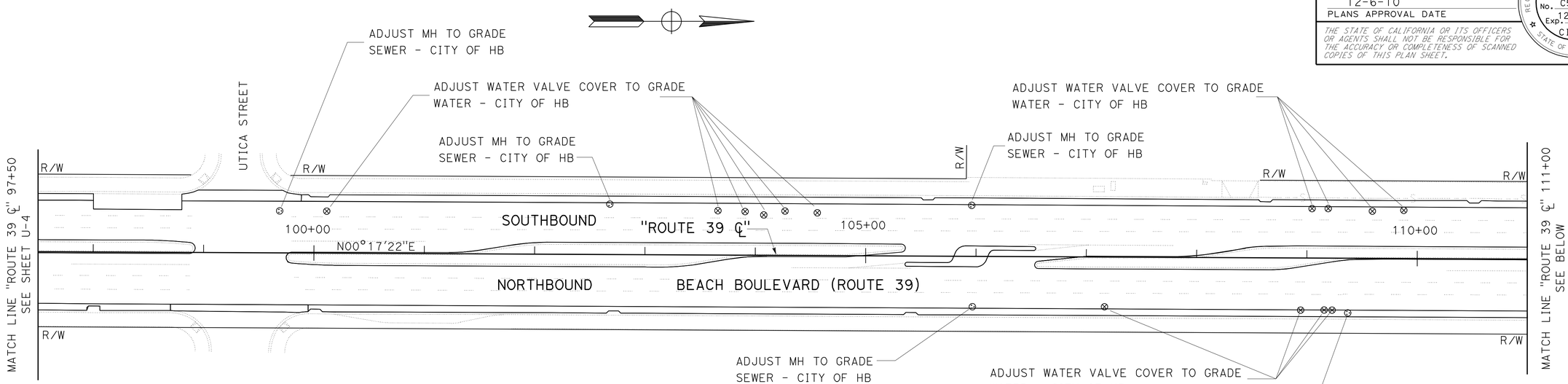

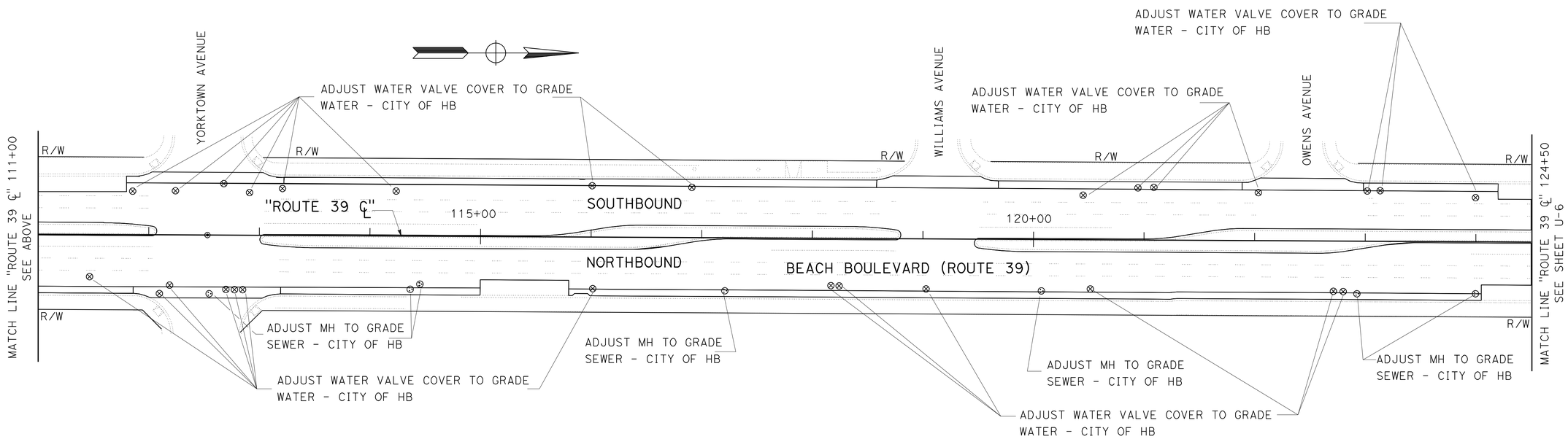

UTILITY PLAN

SCALE: 1" = 50'

THIS PLAN ACCURATE FOR UTILITY INFORMATION ONLY.

U-5

REVISED BY	DATE REVISED
ANH TRAN	07-20-10

CALCULATED-DESIGNED BY: ANH TRAN
CHECKED BY: PHAT TRAN

FUNCTIONAL SUPERVISOR: MASSOUD TAJIK

STATE OF CALIFORNIA - DEPARTMENT OF TRANSPORTATION
Caltrans® MAINTENANCE

LAST REVISION 07-20-10
DATE PLOTTED => 07-DEC-2010
TIME PLOTTED => 08:09

Dist	COUNTY	ROUTE	POST MILES TOTAL PROJECT	SHEET No.	TOTAL SHEETS
12	Ora	39	0.0/3.2	17	54

REGISTERED CIVIL ENGINEER 08-15-10 DATE

12-6-10
PLANS APPROVAL DATE

REGISTERED PROFESSIONAL ENGINEER
ANH P. TRAN
No. C56206
Exp. 12-31-10
CIVIL
STATE OF CALIFORNIA

THE STATE OF CALIFORNIA OR ITS OFFICERS OR AGENTS SHALL NOT BE RESPONSIBLE FOR THE ACCURACY OR COMPLETENESS OF SCANNED COPIES OF THIS PLAN SHEET.

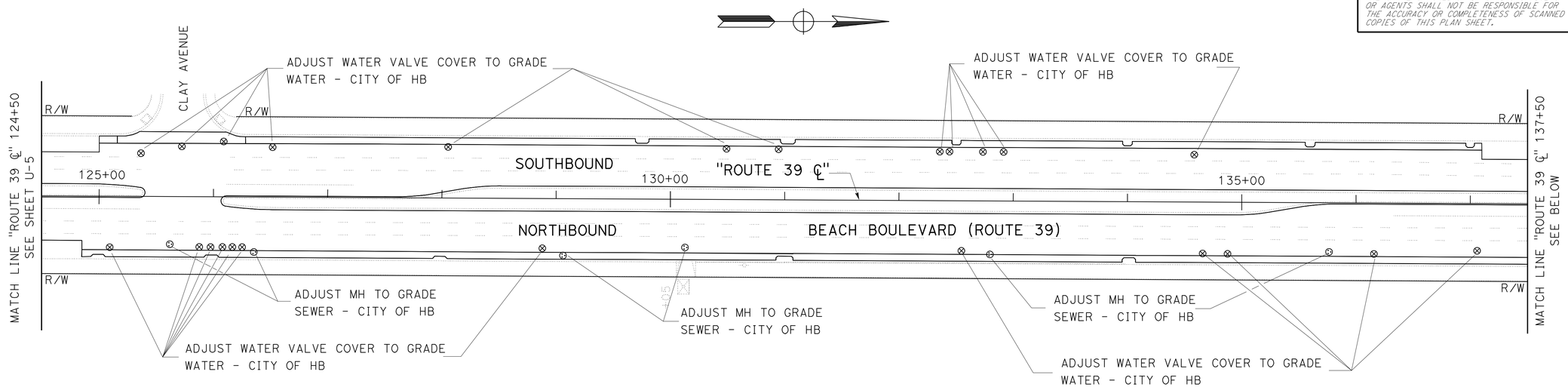

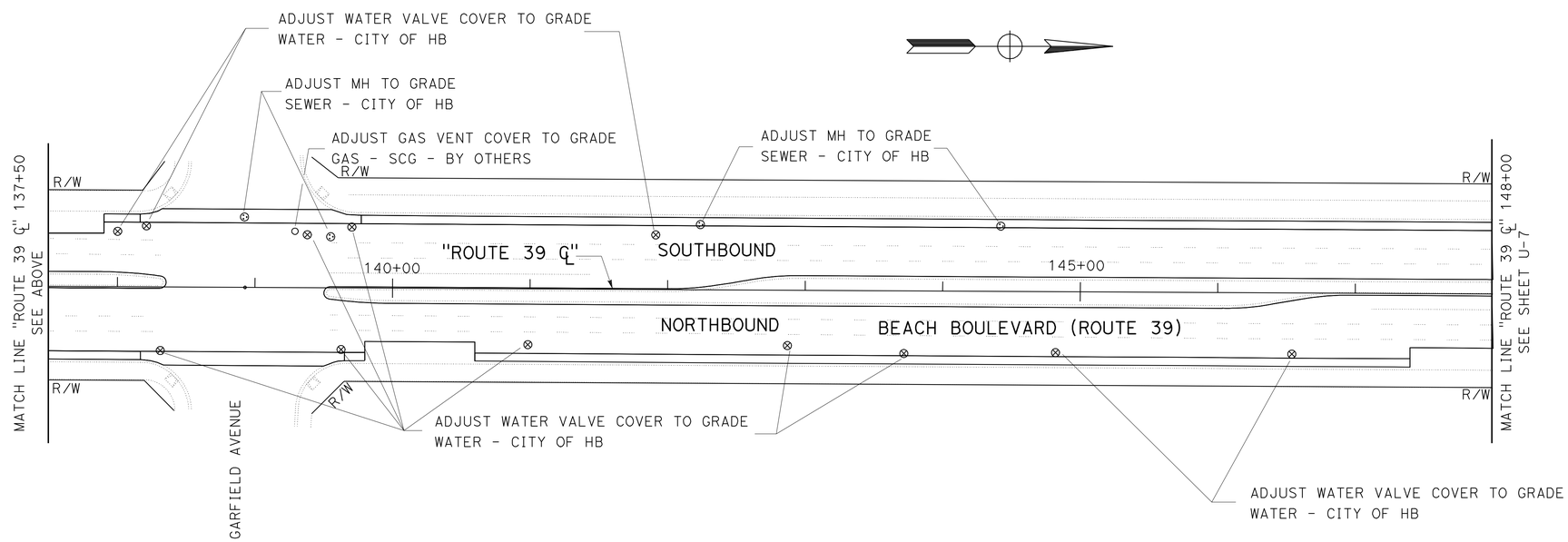

UTILITY PLAN

SCALE: 1" = 50'

THIS PLAN ACCURATE FOR UTILITY INFORMATION ONLY.

U-6

REVISED BY	DATE REVISED
ANH TRAN	07-20-10

CALCULATED-DESIGNED BY: ANH TRAN
CHECKED BY: PHAT TRAN
FUNCTIONAL SUPERVISOR: MASSOUD TAJIK

STATE OF CALIFORNIA - DEPARTMENT OF TRANSPORTATION
Caltrans
MAINTENANCE

LAST REVISION 07-20-10
DATE PLOTTED => 07-DEC-2010
TIME PLOTTED => 08:10

Dist	COUNTY	ROUTE	POST MILES TOTAL PROJECT	SHEET No.	TOTAL SHEETS
12	Ora	39	0.0/3.2	18	54

REGISTERED CIVIL ENGINEER 08-15-10 DATE

12-6-10
PLANS APPROVAL DATE

REGISTERED PROFESSIONAL ENGINEER
ANH P. TRAN
No. C56206
Exp. 12-31-10
CIVIL
STATE OF CALIFORNIA

THE STATE OF CALIFORNIA OR ITS OFFICERS OR AGENTS SHALL NOT BE RESPONSIBLE FOR THE ACCURACY OR COMPLETENESS OF SCANNED COPIES OF THIS PLAN SHEET.

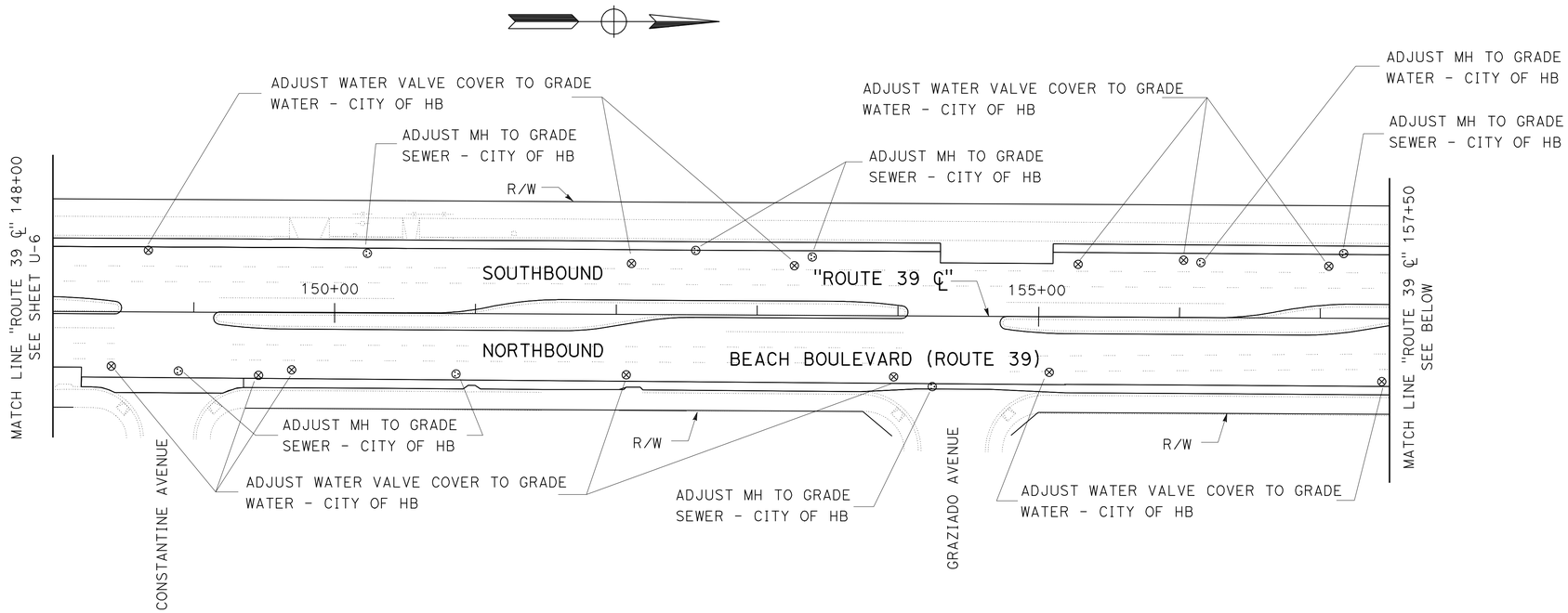

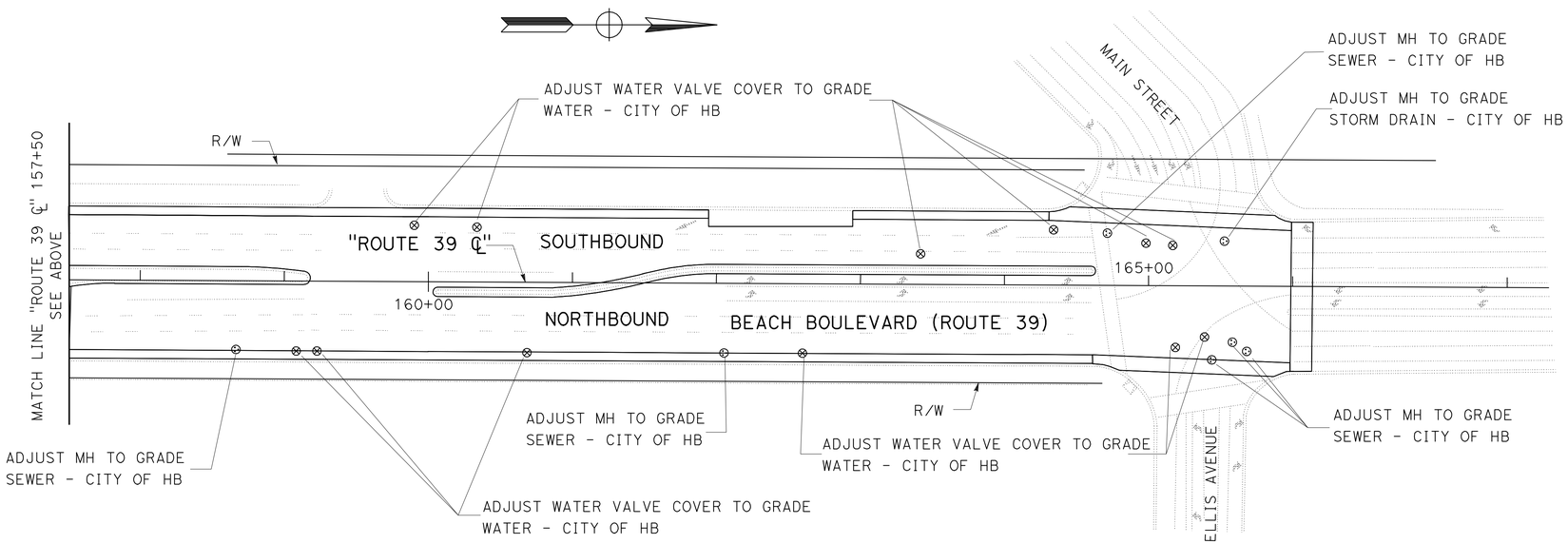

UTILITY PLAN

SCALE: 1" = 50'

THIS PLAN ACCURATE FOR UTILITY INFORMATION ONLY.

U-7

REVISED BY	DATE REVISED
ANH TRAN	07-20-10

CALCULATED-DESIGNED BY: ANH TRAN
CHECKED BY: PHAT TRAN
FUNCTIONAL SUPERVISOR: MASSOUD TAJIK

STATE OF CALIFORNIA - DEPARTMENT OF TRANSPORTATION
Caltrans® MAINTENANCE

LAST REVISION 07-20-10 | DATE PLOTTED => 07-DEC-2010 | TIME PLOTTED => 08:23

Dist	COUNTY	ROUTE	POST MILES TOTAL PROJECT	SHEET No.	TOTAL SHEETS
12	Ora	39	0.0/3.2	19	54

Anh Tran 08-15-10
REGISTERED CIVIL ENGINEER DATE

12-6-10
PLANS APPROVAL DATE

REGISTERED PROFESSIONAL ENGINEER
ANH P. TRAN
No. C56206
Exp. 12-31-10
CIVIL
STATE OF CALIFORNIA

THE STATE OF CALIFORNIA OR ITS OFFICERS OR AGENTS SHALL NOT BE RESPONSIBLE FOR THE ACCURACY OR COMPLETENESS OF SCANNED COPIES OF THIS PLAN SHEET.

NOTES:

SIGN LOCATIONS SHOWN ARE APPROXIMATE. EXACT LOCATIONS TO BE DETERMINED BY THE ENGINEER.

LEGEND:

◇ CONSTRUCTION AREA SIGN

CONSTRUCTION AREA SIGN, 2 POSTS

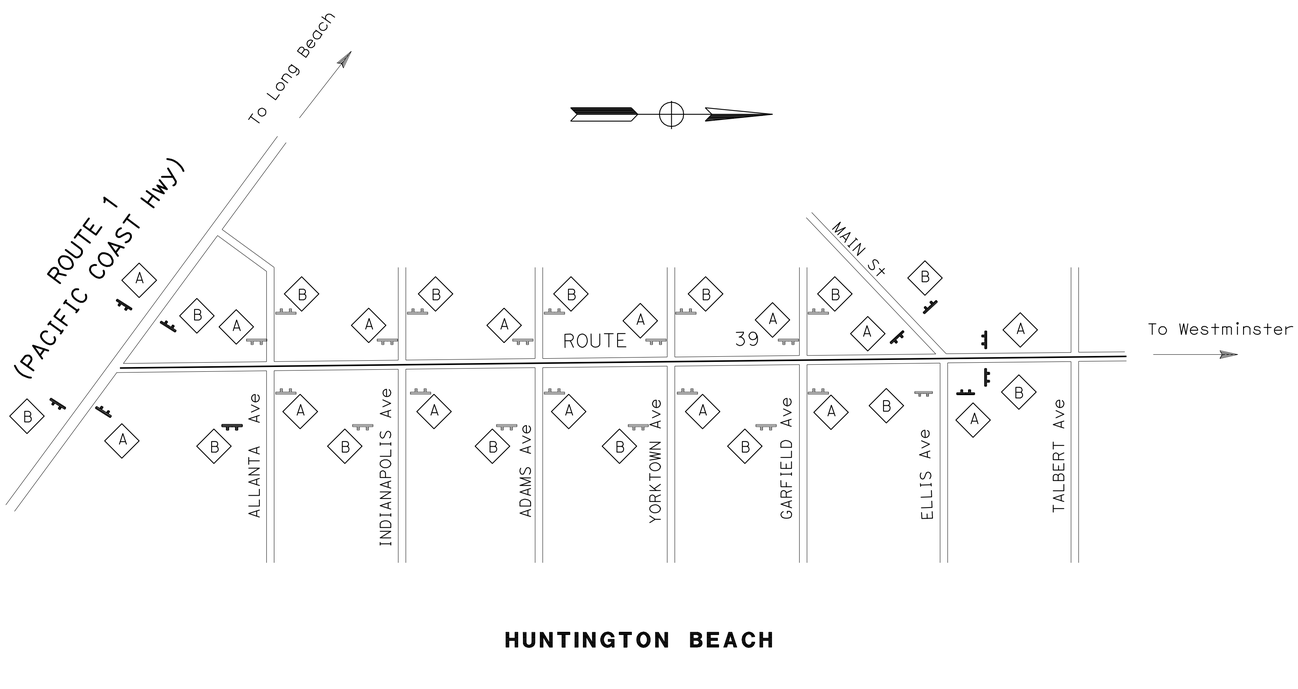

CONSTRUCTION AREA SIGNS (STATIONARY MOUNTED)

SIGN No.	TYPE	PANEL SIZE	SIGN MESSAGE	No. OF POST AND SIZE	No. OF SIGNS
A	W20-1	72" x 72"	ROAD WORK AHEAD	2 - 6" x 6"	15
B	G20-2	60" x 24"	END ROAD WORK	2 - 4" x 6"	15

CONSTRUCTION AREA SIGNS

NO SCALE

THIS PLAN ACCURATE FOR CONSTRUCTION AREA SIGNS WORK ONLY.

CS-1

REVISED BY	DATE REVISED
ANH TRAN	07-20-10

CALCULATED-DESIGNED BY: ANH TRAN
CHECKED BY: PHAT TRAN
FUNCTIONAL SUPERVISOR: MASSOUD TAJIK

STATE OF CALIFORNIA - DEPARTMENT OF TRANSPORTATION
Caltrans
MAINTENANCE

LAST REVISION 07-20-10 | DATE PLOTTED => 07-DEC-2010 | TIME PLOTTED => 10:36

Dist	COUNTY	ROUTE	POST MILES TOTAL PROJECT	SHEET No.	TOTAL SHEETS
12	Ora	39	0.0/3.2	20	54

REGISTERED CIVIL ENGINEER 08-15-10 DATE

12-6-10
PLANS APPROVAL DATE

REGISTERED PROFESSIONAL ENGINEER ANH P. TRAN No. C56206 Exp. 12-31-10 CIVIL STATE OF CALIFORNIA

THE STATE OF CALIFORNIA OR ITS OFFICERS OR AGENTS SHALL NOT BE RESPONSIBLE FOR THE ACCURACY OR COMPLETENESS OF SCANNED COPIES OF THIS PLAN SHEET.

NOTES:

1. EXISTING PAVEMENT DELINEATION SHALL BE REMOVED AND REPLACED AT THE SAME LOCATION.
2. EXACT LOCATION OF PAVEMENT MARKINGS SHALL BE DETERMINED BY THE ENGINEER.
3. FOR ACCURATE RIGHT OF WAY DATA, CONTACT RIGHT OF WAY ENGINEERING AT THE DISTRICT OFFICE.
4. EXISTING UITILITY FACILITIES HAVE NOT BEEN PLOTTED ON PORTIONS OF THESE PLANS.
5. EXACT LOCATIONS AND POSITION OF ROADSIDE SIGNS TO BE DETERMINED BY THE ENGINEER.
6. PLACE PARKING SPACES AT EXISTING LOCATIONS OR AS DIRECTED BY THE ENGINEER, FOR DETAIL C, SEE SHEET PDD-1.

LEGEND:

- (No.) PAVEMENT DELINEATION DETAIL
- CHANGE IN PAVEMENT DELINEATION DETAIL
- SIGN IDENTIFICATION
- ROADSIDE SIGN (ONE POST)
- ROADSIDE SIGN (TWO POSTS)

ABBREVIATION:

IS ROADSIDE SIGN ONE POST OR TWO POSTS

ISP INSTALL ROADSIDE SIGN PANEL ON EXISTING POST

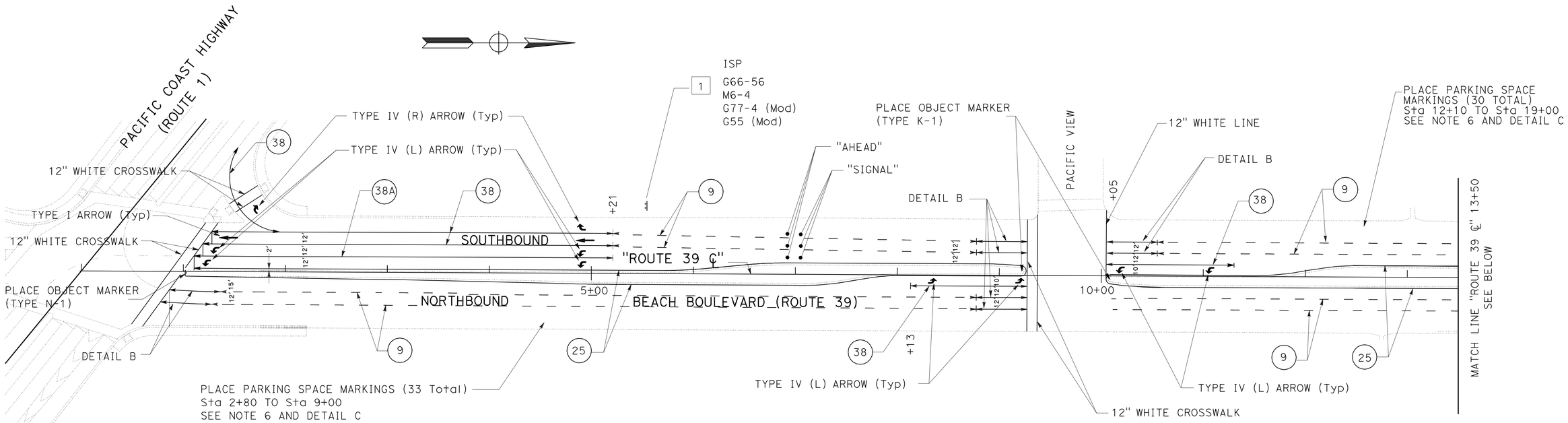

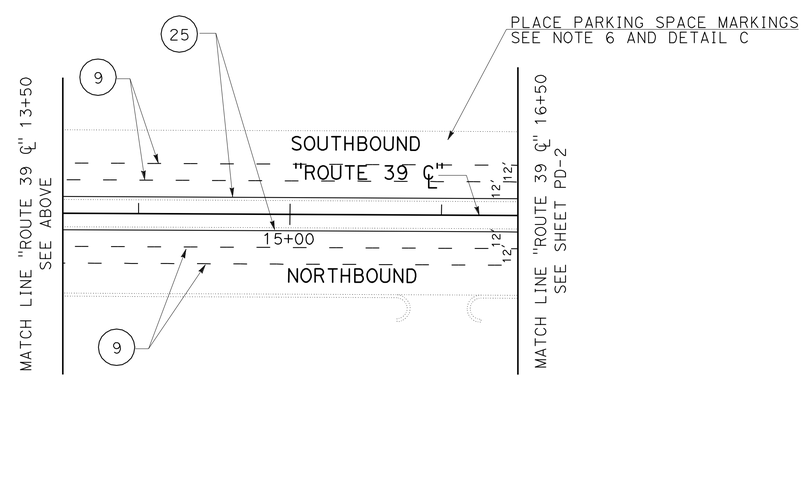

PAVEMENT DELINEATION AND SIGN PLAN

SCALE: 1" = 50'

THIS PLAN ACURATE FOR PAVEMENT DELINEATION AND SIGN WORK ONLY.

PD-1

REVISED BY	DATE REVISED
ANH TRAN	08-02-10

CALCULATED-DESIGNED BY: ANH TRAN
CHECKED BY: PHAT TRAN
FUNCTIONAL SUPERVISOR: MASSOUD TAJIK

STATE OF CALIFORNIA - DEPARTMENT OF TRANSPORTATION
Caltrans® MAINTENANCE

LAST REVISION 08-02-10 | DATE PLOTTED => 07-DEC-2010 | TIME PLOTTED => 10:57

Dist	COUNTY	ROUTE	POST MILES TOTAL PROJECT	SHEET No.	TOTAL SHEETS
12	Ora	39	0.0/3.2	21	54

REGISTERED CIVIL ENGINEER 08-15-10 DATE

12-6-10
PLANS APPROVAL DATE

REGISTERED PROFESSIONAL ENGINEER
ANH P. TRAN
No. C56206
Exp. 12-31-10
CIVIL
STATE OF CALIFORNIA

THE STATE OF CALIFORNIA OR ITS OFFICERS OR AGENTS SHALL NOT BE RESPONSIBLE FOR THE ACCURACY OR COMPLETENESS OF SCANNED COPIES OF THIS PLAN SHEET.

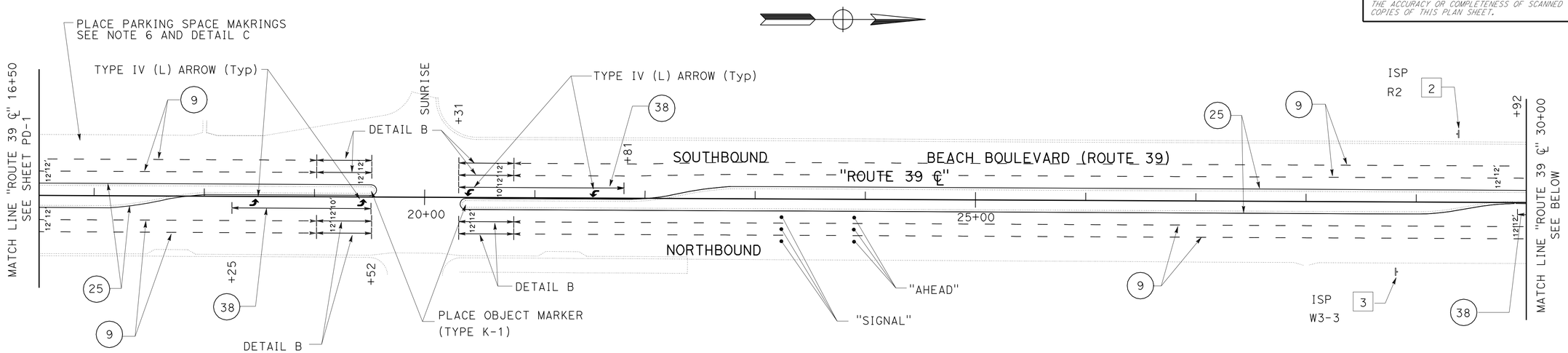

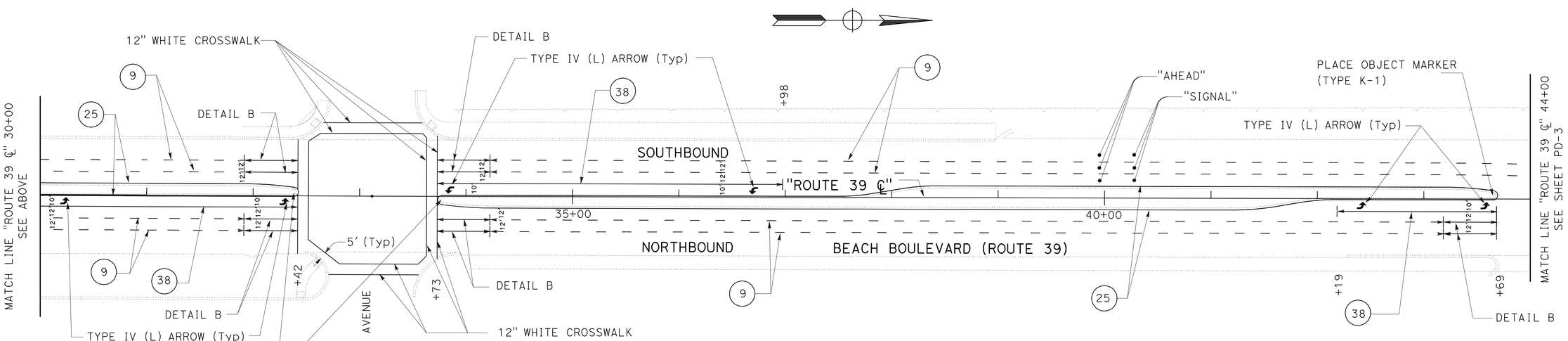

PAVEMENT DELINEATION AND SIGN PLAN

SCALE: 1" = 50'

THIS PLAN ACURATE FOR PAVEMENT DELINEATION AND SIGN WORK ONLY.

PD-2

ANH TRAN	08-02-10
REVISED BY	DATE REVISED
ANH TRAN	PHAT TRAN
CALCULATED-DESIGNED BY	CHECKED BY
FUNCTIONAL SUPERVISOR	MASSOUD TAJIK

STATE OF CALIFORNIA - DEPARTMENT OF TRANSPORTATION
Caltrans
MAINTENANCE

LAST REVISION 08-02-10
DATE PLOTTED => 07-DEC-2010
TIME PLOTTED => 10:57

Dist	COUNTY	ROUTE	POST MILES TOTAL PROJECT	SHEET No.	TOTAL SHEETS
12	Ora	39	0.0/3.2	22	54

REGISTERED CIVIL ENGINEER 08-15-10 DATE

12-6-10
PLANS APPROVAL DATE

REGISTERED PROFESSIONAL ENGINEER
ANH P. TRAN
No. C56206
Exp. 12-31-10
CIVIL
STATE OF CALIFORNIA

THE STATE OF CALIFORNIA OR ITS OFFICERS OR AGENTS SHALL NOT BE RESPONSIBLE FOR THE ACCURACY OR COMPLETENESS OF SCANNED COPIES OF THIS PLAN SHEET.

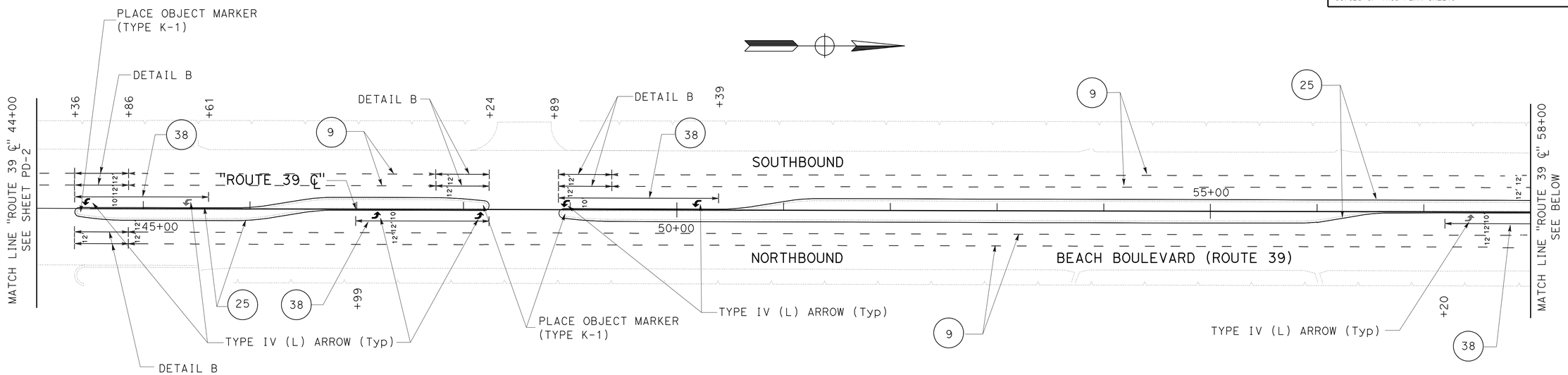

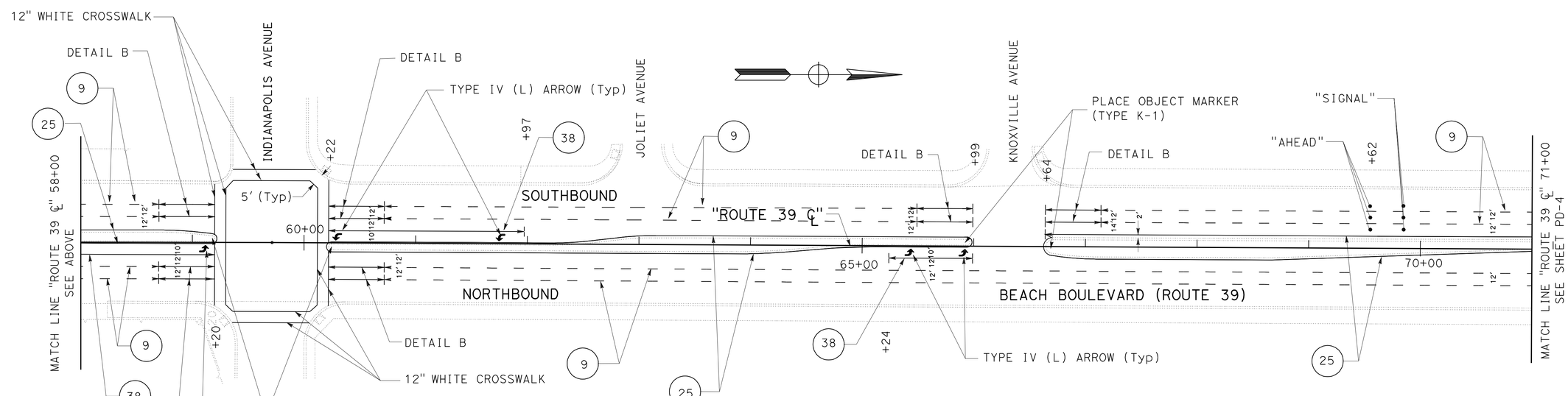

PAVEMENT DELINEATION AND SIGN PLAN

SCALE: 1" = 50'

THIS PLAN ACURATE FOR PAVEMENT DELINEATION AND SIGN WORK ONLY.

PD-3

REVISED BY	DATE REVISED
ANH TRAN	06-16-10

CALCULATED-DESIGNED BY: ANH TRAN
CHECKED BY: PHAT TRAN

FUNCTIONAL SUPERVISOR: MASSOUD TAJIK

STATE OF CALIFORNIA - DEPARTMENT OF TRANSPORTATION
Caltrans
MAINTENANCE

LAST REVISION 08-02-10
DATE PLOTTED => 07-DEC-2010
TIME PLOTTED => 10:57

Dist	COUNTY	ROUTE	POST MILES TOTAL PROJECT	SHEET No.	TOTAL SHEETS
12	Ora	39	0.0/3.2	23	54

REGISTERED CIVIL ENGINEER 08-15-10 DATE

12-6-10
PLANS APPROVAL DATE

REGISTERED PROFESSIONAL ENGINEER
ANH P. TRAN
No. C56206
Exp. 12-31-10
CIVIL
STATE OF CALIFORNIA

THE STATE OF CALIFORNIA OR ITS OFFICERS OR AGENTS SHALL NOT BE RESPONSIBLE FOR THE ACCURACY OR COMPLETENESS OF SCANNED COPIES OF THIS PLAN SHEET.

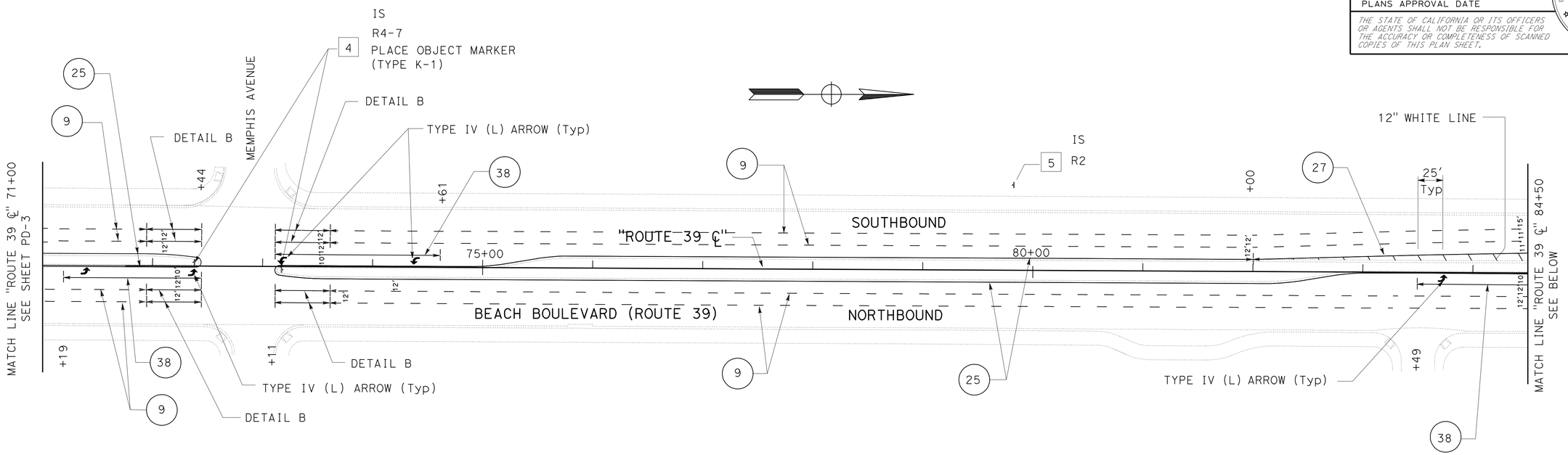

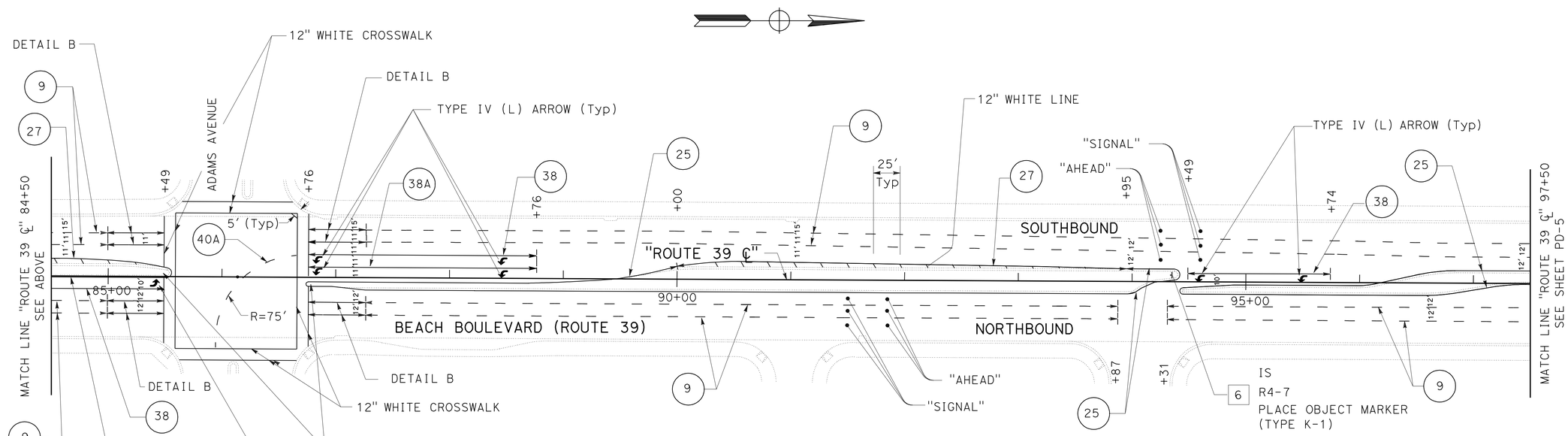

PAVEMENT DELINEATION AND SIGN PLAN

SCALE: 1" = 50'

PD-4

THIS PLAN ACURATE FOR PAVEMENT DELINEATION AND SIGN WORK ONLY.

REVISED BY	DATE REVISED
ANH TRAN	07-20-10

CALCULATED-DESIGNED BY	CHECKED BY
ANH TRAN	PHAT TRAN

FUNCTIONAL SUPERVISOR: MASSOUD TAJIK

STATE OF CALIFORNIA - DEPARTMENT OF TRANSPORTATION
Caltrans® MAINTENANCE

LAST REVISION 07-20-10 | DATE PLOTTED => 07-DEC-2010 | TIME PLOTTED => 10:57

Dist	COUNTY	ROUTE	POST MILES TOTAL PROJECT	SHEET No.	TOTAL SHEETS
12	Ora	39	0.0/3.2	24	54

REGISTERED CIVIL ENGINEER 08-15-10 DATE

12-6-10
PLANS APPROVAL DATE

REGISTERED PROFESSIONAL ENGINEER
ANH P. TRAN
No. C56206
Exp. 12-31-10
CIVIL
STATE OF CALIFORNIA

THE STATE OF CALIFORNIA OR ITS OFFICERS OR AGENTS SHALL NOT BE RESPONSIBLE FOR THE ACCURACY OR COMPLETENESS OF SCANNED COPIES OF THIS PLAN SHEET.

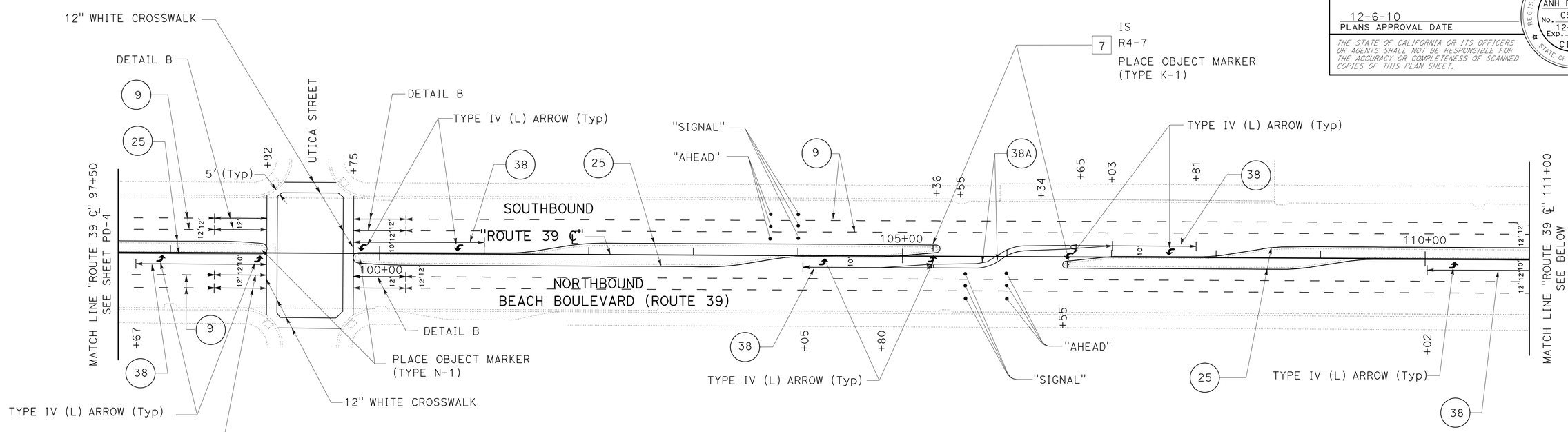

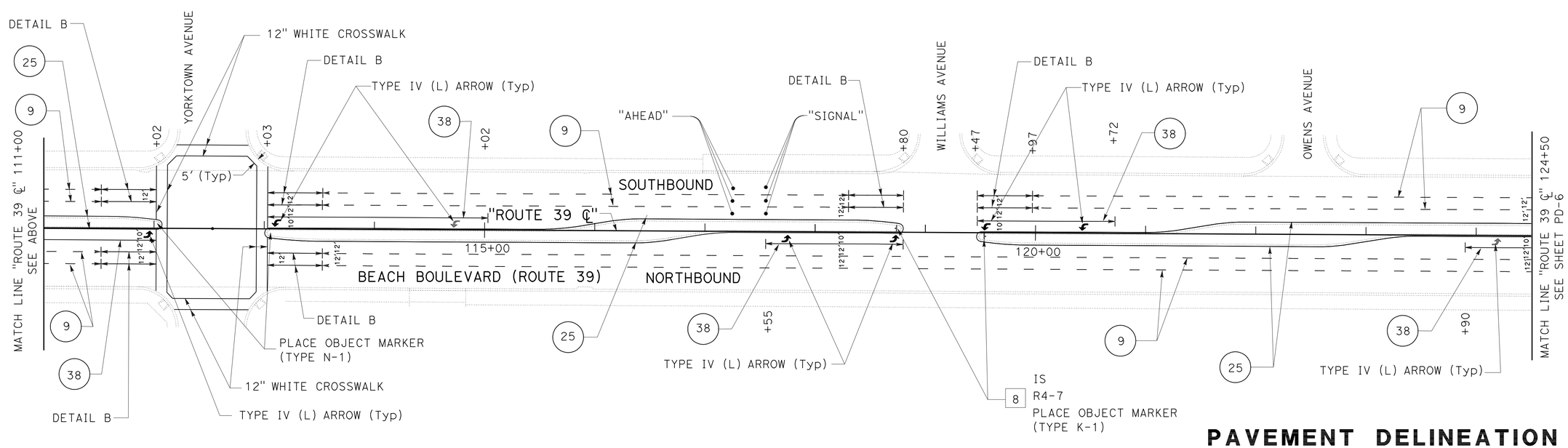

PAVEMENT DELINEATION AND SIGN PLAN

SCALE: 1" = 50'

THIS PLAN ACURATE FOR PAVEMENT DELINEATION AND SIGN WORK ONLY.

PD-5

REVISED BY	ANH TRAN
DATE REVISED	08-02-10
CALCULATED-DESIGNED BY	ANH TRAN
CHECKED BY	PHAT TRAN
FUNCTIONAL SUPERVISOR	MASSOUD TAJIK

STATE OF CALIFORNIA - DEPARTMENT OF TRANSPORTATION
Caltrans
MAINTENANCE

LAST REVISION 08-02-10
DATE PLOTTED => 07-DEC-2010
TIME PLOTTED => 10:57

Dist	COUNTY	ROUTE	POST MILES TOTAL PROJECT	SHEET No.	TOTAL SHEETS
12	Ora	39	0.0/3.2	25	54

REGISTERED CIVIL ENGINEER 08-15-10 DATE

12-6-10
PLANS APPROVAL DATE

REGISTERED PROFESSIONAL ENGINEER
ANH P. TRAN
No. C56206
Exp. 12-31-10
CIVIL
STATE OF CALIFORNIA

THE STATE OF CALIFORNIA OR ITS OFFICERS OR AGENTS SHALL NOT BE RESPONSIBLE FOR THE ACCURACY OR COMPLETENESS OF SCANNED COPIES OF THIS PLAN SHEET.

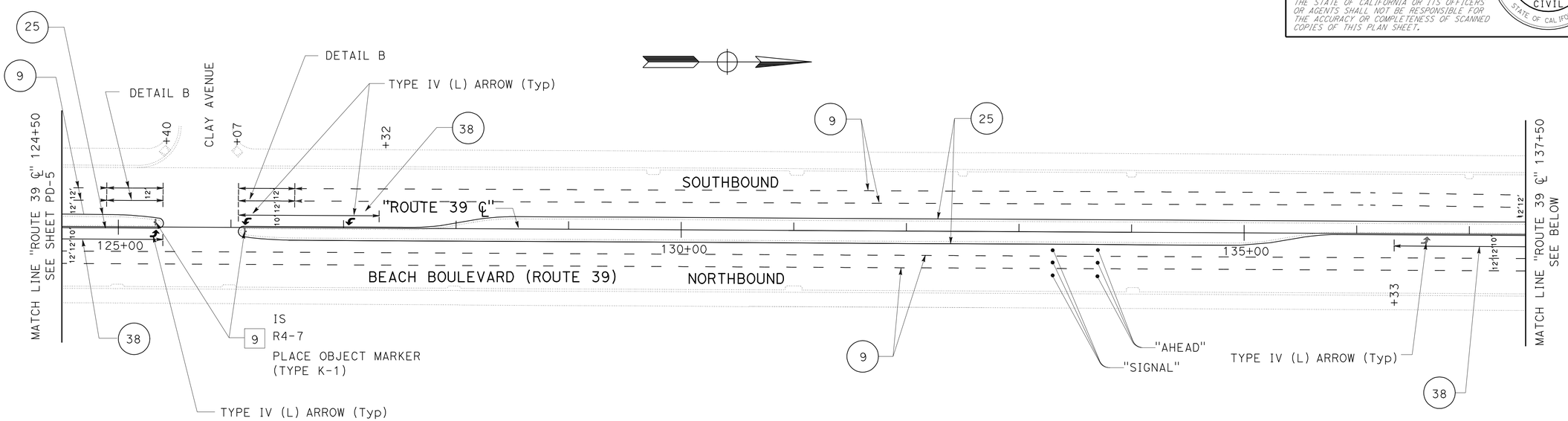

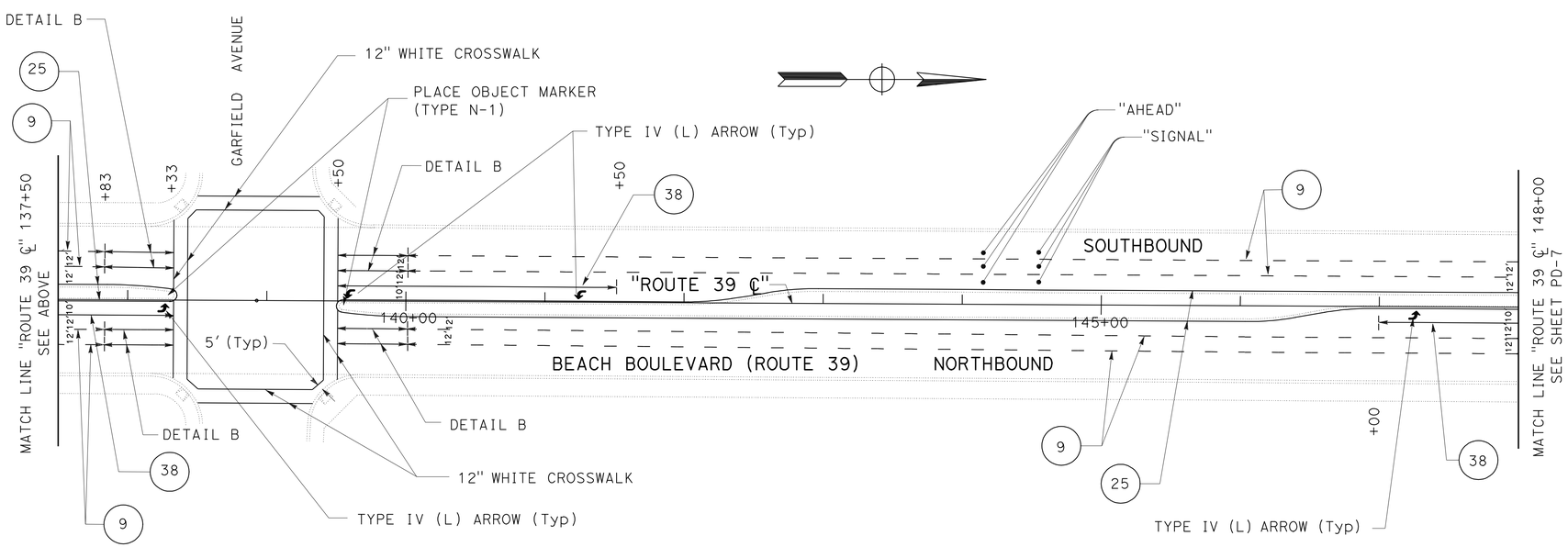

PAVEMENT DELINEATION AND SIGN PLAN

SCALE: 1" = 50'

THIS PLAN ACURATE FOR PAVEMENT DELINEATION AND SIGN WORK ONLY.

PD-6

ANH TRAN	07-20-10
REVISED BY	DATE REVISED
ANH TRAN	PHAT TRAN
CALCULATED-DESIGNED BY	CHECKED BY
FUNCTIONAL SUPERVISOR	MASSOUD TAJIK

STATE OF CALIFORNIA - DEPARTMENT OF TRANSPORTATION
Caltrans
MAINTENANCE

LAST REVISION 07-20-10
DATE PLOTTED => 07-DEC-2010
TIME PLOTTED => 10:57

Dist	COUNTY	ROUTE	POST MILES TOTAL PROJECT	SHEET No.	TOTAL SHEETS
12	Ora	39	0.0/3.2	26	54

REGISTERED CIVIL ENGINEER 08-15-10 DATE

12-6-10
PLANS APPROVAL DATE

REGISTERED PROFESSIONAL ENGINEER
ANH P. TRAN
No. C56206
Exp. 12-31-10
CIVIL
STATE OF CALIFORNIA

THE STATE OF CALIFORNIA OR ITS OFFICERS OR AGENTS SHALL NOT BE RESPONSIBLE FOR THE ACCURACY OR COMPLETENESS OF SCANNED COPIES OF THIS PLAN SHEET.

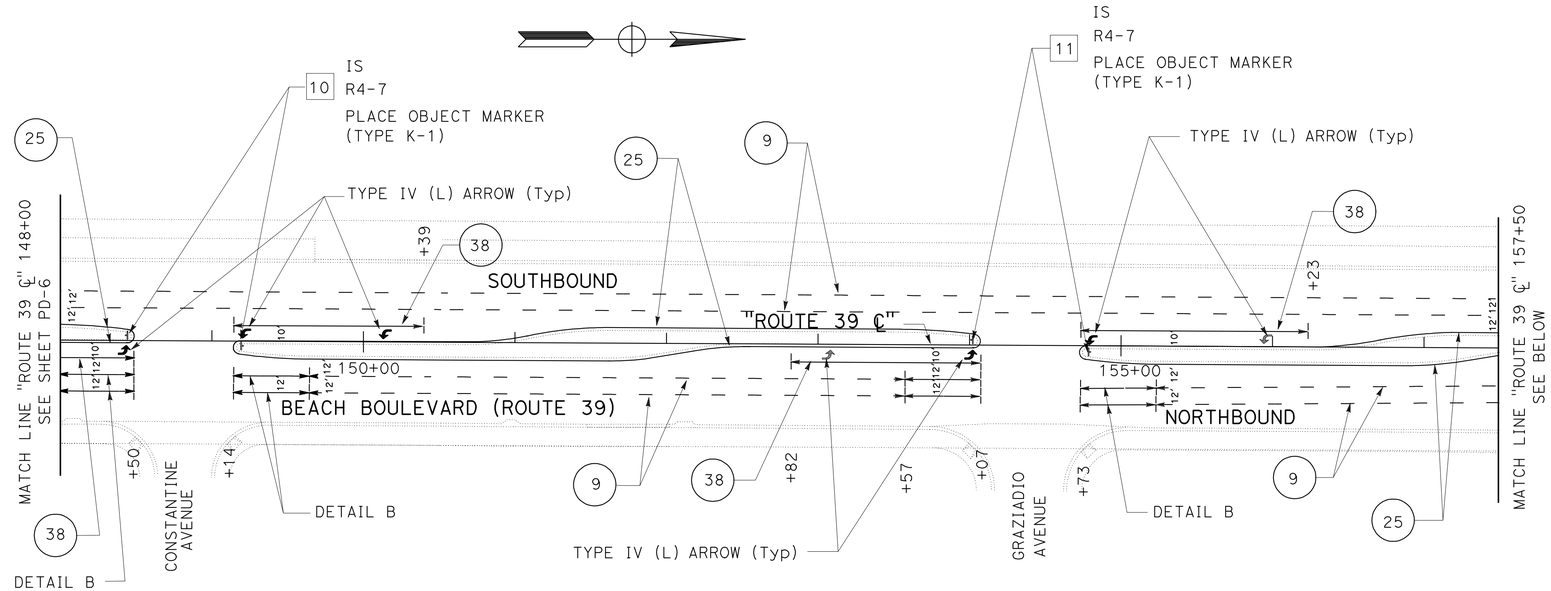

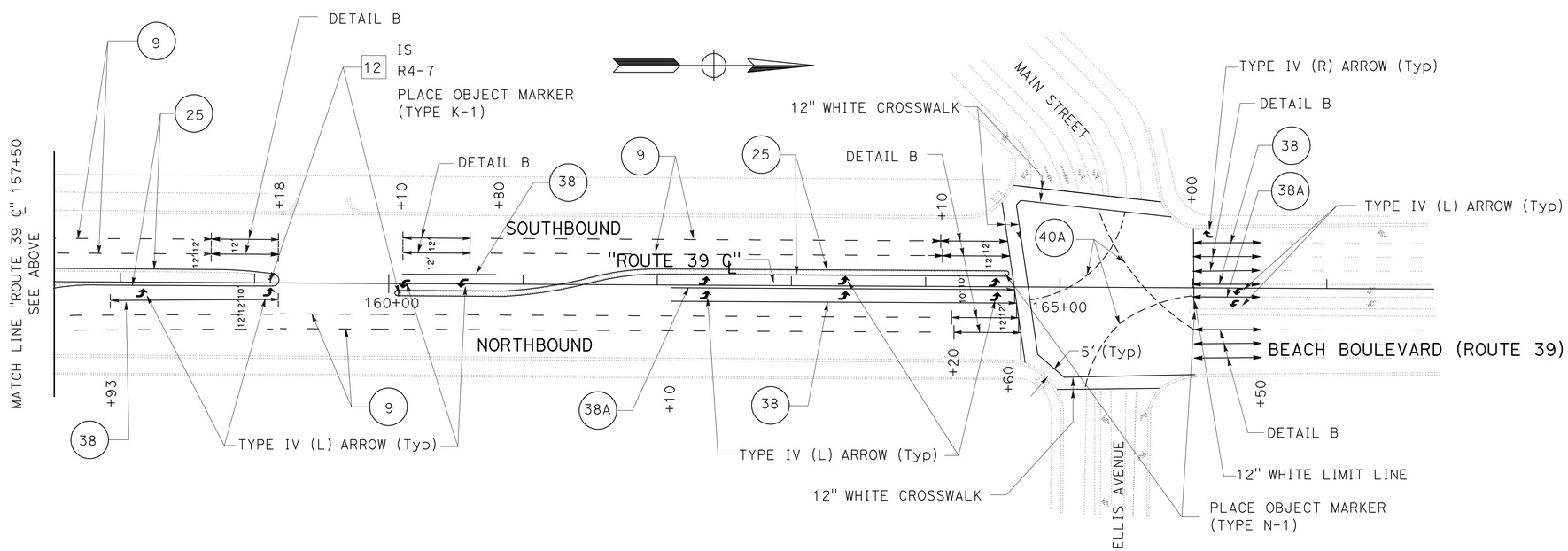

PAVEMENT DELINEATION AND SIGN PLAN

SCALE: 1" = 50'

THIS PLAN ACURATE FOR PAVEMENT DELINEATION AND SIGN WORK ONLY.

PD-7

REVISED BY	DATE REVISED
ANH TRAN	08-02-10

CALCULATED-DESIGNED BY: ANH TRAN
CHECKED BY: PHAT TRAN

FUNCTIONAL SUPERVISOR: MASSOUD TAJIK

STATE OF CALIFORNIA - DEPARTMENT OF TRANSPORTATION
Caltrans® MAINTENANCE

LAST REVISION 08-02-10
DATE PLOTTED => 07-DEC-2010
TIME PLOTTED => 10:57

Dist	COUNTY	ROUTE	POST MILES TOTAL PROJECT	SHEET No.	TOTAL SHEETS
12	Ora	39	0.0/3.2	27	54

REGISTERED CIVIL ENGINEER 09-30-10 DATE

12-6-10
PLANS APPROVAL DATE

REGISTERED PROFESSIONAL ENGINEER
ANH P. TRAN
No. C56206
Exp. 12-31-10
CIVIL
STATE OF CALIFORNIA

THE STATE OF CALIFORNIA OR ITS OFFICERS OR AGENTS SHALL NOT BE RESPONSIBLE FOR THE ACCURACY OR COMPLETENESS OF SCANNED COPIES OF THIS PLAN SHEET.

NOTES:

1. MINIMUM PARKING STALL DIMENSION IS 20′ x 8′.

LEGEND:

⇨ DIRECTION OF TRAFFIC

◨ TYPE G ONE-WAY CLEAR RETROREFLECTIVE MARKER

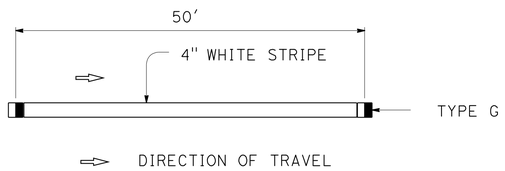

DETAIL B

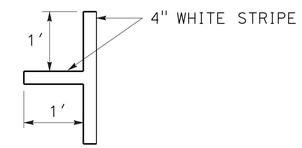

DETAIL D

STALL MARKING AT END SPACE

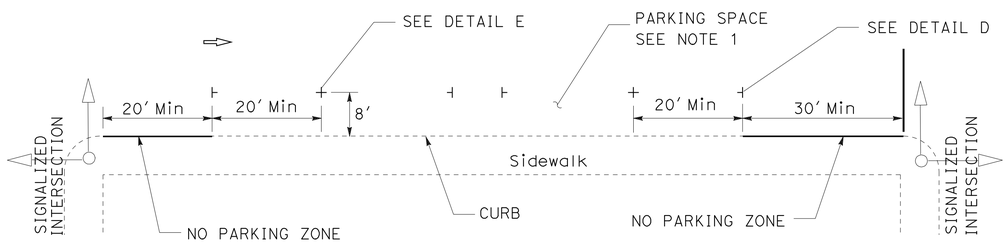

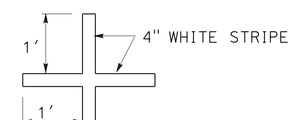

DETAIL E

TYPICAL STALL MARKING

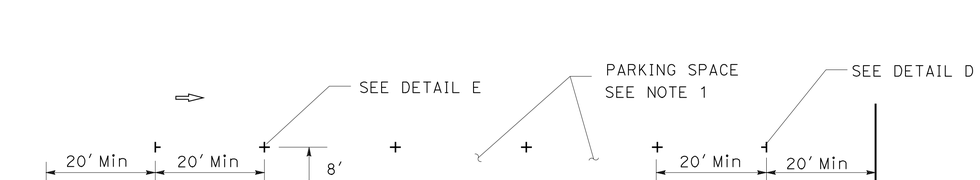

DETAIL C

TYPICAL PARKING SPACE MARKING

PAVEMENT DELINEATION DETAILS

NO SCALE

PDD-1

REVISED BY	DATE REVISED
ANH TRAN	09-22-10

CALCULATED-DESIGNED BY	CHECKED BY
ANH TRAN	PHAT TRAN

FUNCTIONAL SUPERVISOR: MASSOUD TAJIK

STATE OF CALIFORNIA - DEPARTMENT OF TRANSPORTATION

Caltrans® MAINTENANCE

LAST REVISION 09-22-10 | DATE PLOTTED => 07-DEC-2010 | TIME PLOTTED => 08:24

Dist	COUNTY	ROUTE	POST MILES TOTAL PROJECT	SHEET No.	TOTAL SHEETS
12	Ora	39	0.0/3.2	28	54

REGISTERED CIVIL ENGINEER 08-15-10 DATE

12-6-10
PLANS APPROVAL DATE

REGISTERED PROFESSIONAL ENGINEER ANH P. TRAN No. C56206 Exp. 12-31-10 CIVIL STATE OF CALIFORNIA

THE STATE OF CALIFORNIA OR ITS OFFICERS OR AGENTS SHALL NOT BE RESPONSIBLE FOR THE ACCURACY OR COMPLETENESS OF SCANNED COPIES OF THIS PLAN SHEET.

SHEET No.	LOCATION	DIRECTION	THERMOPLASTIC TRAFFIC STRIPE 4" DETAIL 9 BROKEN WHITE (17-7)	THERMOPLASTIC TRAFFIC STRIPE 4" DETAIL B SOLID WHITE	THERMOPLASTIC TRAFFIC STRIPE 4" DETAIL 25 SOLID YELLOW	THERMOPLASTIC TRAFFIC STRIPE 4" DETAIL 27 SOLID YELLOW	THERMOPLASTIC TRAFFIC STRIPE 8" DETAIL 38 SOLID WHITE	THERMOPLASTIC TRAFFIC STRIPE 8" DETAIL 38A SOLID WHITE	DETAIL 40A (N)	PAVEMENT MARKER (NON-REFLECTIVE) (TYPE A)	PAVEMENT MARKER (RETROREFLECTIVE) (TYPE G)	PAVEMENT MARKER (RETROREFLECTIVE) (TYPE H)	THERMOPLASTIC PAVEMENT MARKING TYPE I ARROW	THERMOPLASTIC PAVEMENT MARKING TYPE IV ARROW	THERMOPLASTIC PAVEMENT MARKING SIGNAL	THERMOPLASTIC PAVEMENT MARKING AHEAD	THERMOPLASTIC PAVEMENT MARKING 12" WHITE LINE	THERMOPLASTIC PAVEMENT MARKING PARKING STALL	OBJECT MARKER TYPE K-1	OBJECT MARKER TYPE N-1	REMOVE THERMOPLASTIC TRAFFIC STRIPE	REMOVE THERMOPLASTIC PAVEMENT MARKING	REMOVE PAVEMENT MARKER	REMOVE YELLOW THERMOPLASTIC TRAFFIC STRIPE (HAZARDOUS WASTE)
			LF	LF	LF	LF	LF	LF	LF	EA	EA	EA	SQFT	SQFT	SQFT	SQFT	SQFT	SQFT	EA	EA	LF	SQFT	EA	LF
PD-1	Sta 0+50 TO Sta 1+35	NB & SB															260			1		260		
	Sta 0+50 TO Sta 1+35	NB & SB		100							4										100		4	
	Sta 1+00 TO Sta 9+30	NB			1680							36						412				412	36	1680
	Sta 1+00 TO Sta 8+80	NB	1560								36										1560		36	
	Sta 8+13 TO Sta 9+30	NB					125				7			30							125	30	7	
	Sta 8+80 TO Sta 9+30	NB		100							4										100		4	
	Sta 9+27 TO Sta 9+38	NB															230					230		
	Sta 9+27 TO Sta 10+10	NB															230		2			230		
	Sta 10+05 TO Sta 16+50	NB & SB			1400							30											30	1400
	Sta 10+05 TO Sta 16+50	NB	1290								30										1290		30	
	Sta 1+00 TO Sta 5+21	SB					910	425			40		28	90			70				1335	188	40	
	Sta 5+21 TO Sta 8+80	SB	720								16				96	93					720	189	16	
	Sta 8+80 TO Sta 9+30	SB		100							4										100		4	
	Sta 10+05	SB															70					70		
	Sta 10+05 TO Sta 10+55	SB		100							4										100		4	
	Sta 10+05 TO Sta 11+30	SB					125				7			30							125	30	7	
	Sta 10+55 TO Sta 16+50	SB	1190								28							308			1190	308	28	
PD-2	Sta 16+50 TO Sta 19+52	NB & SB			620							14											14	620
	Sta 16+50 TO Sta 19+02	NB	504								14										504	30	14	
	Sta 18+27 TO Sta 19+52	NB					125				7			30							125		7	
	Sta 19+02 TO Sta 19+52	NB		100							4										100		4	
	Sta 20+31 TO Sta 32+42	NB & SB			2425							52											52	2425
	Sta 20+34 TO Sta 20+81	NB		100							4										100		4	
	Sta 20+81 TO Sta 31+92	NB	2222								48										2222		48	
	Sta 29+92 TO Sta 32+42	NB					250					12									250		12	
SUBTOTAL			7486	6725			1960				401		1977						3		10046	1977	401	6125

(N) NOT A SEPARATE PAY ITEM, FOR INFORMATION ONLY.

PAVEMENT DELINEATION QUANTITIES
PDQ-1

STATE OF CALIFORNIA - DEPARTMENT OF TRANSPORTATION
Caltrans® MAINTENANCE

FUNCTIONAL SUPERVISOR: MASSOUD TAJIK
CALCULATED-DESIGNED BY: ANH TRAN
CHECKED BY: PHAT TRAN
REVISED BY: ANH TRAN
DATE REVISED: 07-20-10

LAST REVISION 07-20-10
DATE PLOTTED => 07-DEC-2010
TIME PLOTTED => 08:35

Dist	COUNTY	ROUTE	POST MILES TOTAL PROJECT	SHEET No.	TOTAL SHEETS
12	Ora	39	0.0/3.2	29	54

REGISTERED CIVIL ENGINEER 08-15-10 DATE

12-6-10
PLANS APPROVAL DATE

REGISTERED PROFESSIONAL ENGINEER ANH P. TRAN No. C56206 Exp. 12-31-10 CIVIL STATE OF CALIFORNIA

THE STATE OF CALIFORNIA OR ITS OFFICERS OR AGENTS SHALL NOT BE RESPONSIBLE FOR THE ACCURACY OR COMPLETENESS OF SCANNED COPIES OF THIS PLAN SHEET.

SHEET No.	LOCATION	DIRECTION	THERMOPLASTIC TRAFFIC STRIPE 4" DETAIL 9 BROKEN WHITE (17-7)	THERMOPLASTIC TRAFFIC STRIPE 4" DETAIL B SOLID WHITE	THERMOPLASTIC TRAFFIC STRIPE 4" DETAIL 25 SOLID YELLOW	THERMOPLASTIC TRAFFIC STRIPE 4" DETAIL 27 SOLID YELLOW	THERMOPLASTIC TRAFFIC STRIPE 8" DETAIL 38 SOLID WHITE	THERMOPLASTIC TRAFFIC STRIPE 8" DETAIL 38A SOLID WHITE	DETAIL 40A (N)	PAVEMENT MARKER (NON-REFLECTIVE) (TYPE A)	PAVEMENT MARKER (RETROREFLECTIVE) (TYPE G)	PAVEMENT MARKER (RETROREFLECTIVE) (TYPE H)	THERMOPLASTIC PAVEMENT MARKING TYPE I ARROW	THERMOPLASTIC PAVEMENT MARKING TYPE IV ARROW	THERMOPLASTIC PAVEMENT MARKING SIGNAL	THERMOPLASTIC PAVEMENT MARKING AHEAD	THERMOPLASTIC PAVEMENT MARKING 12" WHITE LINE	THERMOPLASTIC PAVEMENT MARKING PARKING STALL	OBJECT MARKER TYPE K-1	OBJECT MARKER TYPE N-1	REMOVE THERMOPLASTIC TRAFFIC STRIPE	REMOVE THERMOPLASTIC PAVEMENT MARKING	REMOVE PAVEMENT MARKER	REMOVE YELLOW THERMOPLASTIC TRAFFIC STRIPE (HAZARDOUS WASTE)
			LF	LF	LF	LF	LF	LF	LF	EA	EA	EA	SQFT	SQFT	SQFT	SQFT	SQFT	SQFT	EA	EA	LF	SQFT	EA	LF
PD-2	Sta 31+92 TO Sta 32+42	NB		100							4			30							100	30	4	
	Sta 32+42 TO Sta 33+73	NB & SB															800					800		
	Sta 33+73 TO Sta 43+69	NB & SB			2005							43											43	2005
	Sta 33+73 TO Sta 34+23	NB		100							4										100		4	
	Sta 34+23 TO Sta 43+19	NB	1792								40										1792		40	
	Sta 42+44 TO Sta 43+69	NB					125				6			30							125	30	6	
	Sta 43+19 TO Sta 42+69	NB		100							4										100		4	
	Sunrise to Atlanta Avenue	NB & SB																	2	2				
	Sta 16+50 TO Sta 19+50	SB																104						
	Sta 16+50 TO Sta 19+02	SB	504								12										504		12	
	Sta 19+02 TO Sta 19+52	SB		100							4										100		4	
	Sta 20+31 TO Sta 20+81	SB		100							4										100		4	
	Sta 20+31 TO Sta 21+81	SB					150				7			30							150	30	7	
	Sta 20+81 TO Sta 31+92	SB	2222								48										2222		48	
	Sta 31+92 TO Sta 32+42	SB		100							4										100		4	
	Sta 33+73 TO Sta 34+23	SB		100							4										100		4	
	Sta 33+73 TO Sta 36+98	SB					325				15			30							325	30	15	
	Sta 34+23 TO Sta 44+00	SB	1954								42				96	93			1		1954	189	42	
PD-3	Sta 44+36 TO Sta 48+24	NB & SB			790							17							1				17	790
	Sta 44+36 TO Sta 44+86	NB		100							4										100		4	
	Sta 44+86 TO Sta 58+70	NB	2768								60								2		2768		60	
	Sta 46+99 TO Sta 48+84	NB					125				6			30							125	30	6	
	Sta 48+89 TO Sta 59+20	NB			2090							45											45	2090
	Sta 57+20 TO Sta 59+20	NB					400				9			30							400	30	9	
	Sta 58+70 TO Sta 59+20	NB		100							4										100		4	
SUBTOTAL			9240	5785			1125				386		1273						8		11265	1273	386	4885

(N) NOT A SEPARATE PAY ITEM, FOR INFORMATION ONLY.

PAVEMENT DELINEATION QUANTITIES
PDQ-2

REVISED BY	DATE REVISED
ANH TRAN	07-20-10

CALCULATED-DESIGNED BY: ANH TRAN
CHECKED BY: PHAT TRAN
FUNCTIONAL SUPERVISOR: MASSOUD TAJIK

STATE OF CALIFORNIA - DEPARTMENT OF TRANSPORTATION
Caltrans
MAINTENANCE

LAST REVISION 07-20-10 | DATE PLOTTED => 09-DEC-2010 | TIME PLOTTED => 16:01

Dist	COUNTY	ROUTE	POST MILES TOTAL PROJECT	SHEET No.	TOTAL SHEETS
12	Ora	39	0.0/3.2	30	54

REGISTERED CIVIL ENGINEER DATE 08-15-10

12-6-10
PLANS APPROVAL DATE

REGISTERED PROFESSIONAL ENGINEER ANH P. TRAN No. C56206 Exp. 12-31-10 CIVIL STATE OF CALIFORNIA

THE STATE OF CALIFORNIA OR ITS OFFICERS OR AGENTS SHALL NOT BE RESPONSIBLE FOR THE ACCURACY OR COMPLETENESS OF SCANNED COPIES OF THIS PLAN SHEET.

SHEET No.	LOCATION	DIRECTION	THERMOPLASTIC TRAFFIC STRIPE 4" DETAIL 9 BROKEN WHITE (17-7)	4" DETAIL B SOLID WHITE	4" DETAIL 25 SOLID YELLOW	4" DETAIL 27 SOLID YELLOW	8" DETAIL 38 SOLID WHITE	8" DETAIL 38A SOLID WHITE	DETAIL 40A (N)	PAVEMENT MARKER (NON-REFLECTIVE) (TYPE A)	PAVEMENT MARKER (RETROREFLECTIVE) (TYPE G)	(TYPE H)	THERMOPLASTIC PAVEMENT MARKING TYPE I ARROW	TYPE IV ARROW	SIGNAL	AHEAD	12" WHITE LINE	PARKING STALL	OBJECT MARKER TYPE K-1	TYPE N-1	REMOVE THERMOPLASTIC TRAFFIC STRIPE	REMOVE THERMOPLASTIC PAVEMENT MARKING	REMOVE PAVEMENT MARKER	REMOVE YELLOW THERMOPLASTIC TRAFFIC STRIPE (HAZARDOUS WASTE)
			LF	LF	LF	LF	LF	LF	LF	EA	EA	EA	SQFT	SQFT	SQFT	SQFT	SQFT	SQFT	EA	EA	LF	SQFT	EA	LF
PD-3	Sta 59+20 TO Sta 60+22	NB																		2		760		
	Sta 60+22 TO Sta 65+99	NB & SB			1170							26											26	1170
	Sta 60+22 TO Sta 60+72	NB		100							4										100		4	
	Sta 60+72 TO Sta 71+00	NB	2056								46										2056		46	
	Sta 65+24 TO Sta 65+99	NB					75				4			30					1		75	30	4	
	Sta 66+64 TO Sta 71+00	NB & SB			844							19							1				19	844
	Sta 44+00 TO Sta 44+36	SB	72								4										72		4	
	Sta 44+36 TO Sta 44+86	SB		100							4										100		4	
	Sta 44+36 TO Sta 45+61	SB					125				6			30							125	30	6	
	Sta 44+86 TO Sta 47+74	SB	580								14										580		14	
	Sta 47+74 TO Sta 48+24	SB		100							4										100		4	
	Sta 48+29 TO Sta 49+39	SB		100							4										100		4	
	Sta 48+89 TO Sta 50+39	SB					150				7			30							150	30	7	
	Sta 49+39 TO Sta 59+20	SB	1970								44										1970		44	
	Sta 58+70 TO Sta 59+20	SB		100							4										100		4	
	Sta 60+22 TO Sta 60+72	SB		100							4										100		4	
	Sta 60+22 TO Sta 61+97	SB					175				8			30							175	30	8	
	Sta 60+72 TO Sta 65+49	SB	960								22										960		22	
	Sta 65+49 TO Sta 65+99	SB		100							4										100		4	
	Sta 66+64 TO Sta 67+14	SB		100							4										100		4	
	Sta 67+14 TO Sta 71+00	SB	772								18				96	93					772	189	18	
SUBTOTAL			6410	2814			525				250		1069						4		7735	1069	250	2014

(N) NOT A SEPARATE PAY ITEM, FOR INFORMATION ONLY.

PAVEMENT DELINEATION QUANTITIES
PDQ-3

REVISED BY	DATE REVISED
ANH TRAN	07-20-10

CALCULATED-DESIGNED BY: ANH TRAN
CHECKED BY: PHAT TRAN
FUNCTIONAL SUPERVISOR: MASSOUD TAJIK

STATE OF CALIFORNIA - DEPARTMENT OF TRANSPORTATION
Caltrans MAINTENANCE

LAST REVISION 07-20-10 | DATE PLOTTED => 07-DEC-2010 | TIME PLOTTED => 08:35

Dist	COUNTY	ROUTE	POST MILES TOTAL PROJECT	SHEET No.	TOTAL SHEETS
12	Ora	39	0.0/3.2	31	54

Anh Tran 08-15-10
REGISTERED CIVIL ENGINEER DATE

12-6-10
PLANS APPROVAL DATE

REGISTERED PROFESSIONAL ENGINEER
ANH P. TRAN
No. C56206
Exp. 12-31-10
CIVIL
STATE OF CALIFORNIA

THE STATE OF CALIFORNIA OR ITS OFFICERS OR AGENTS SHALL NOT BE RESPONSIBLE FOR THE ACCURACY OR COMPLETENESS OF SCANNED COPIES OF THIS PLAN SHEET.

SHEET No.	LOCATION	DIRECTION	THERMOPLASTIC TRAFFIC STRIPE 4" DETAIL 9 BROKEN WHITE (17-7)	4" DETAIL B SOLID WHITE	4" DETAIL 25 SOLID YELLOW	4" DETAIL 27 SOLID YELLOW	8" DETAIL 38 SOLID WHITE	8" DETAIL 38A SOLID WHITE	DETAIL 40A (N)	PAVEMENT MARKER (NON-REFLECTIVE) (TYPE A)	PAVEMENT MARKER (RETROREFLECTIVE) (TYPE G)	(TYPE H)	THERMOPLASTIC PAVEMENT MARKING TYPE I ARROW	TYPE IV ARROW	SIGNAL	AHEAD	12" WHITE LINE	PARKING STALL	OBJECT MARKER TYPE K-1	TYPE N-1	REMOVE THERMOPLASTIC TRAFFIC STRIPE	REMOVE THERMOPLASTIC PAVEMENT MARKING	REMOVE PAVEMENT MARKER	REMOVE YELLOW THERMOPLASTIC TRAFFIC STRIPE (HAZARDOUS WASTE)
			LF	LF	LF	LF	LF	LF	LF	EA	EA	EA	SQFT	SQFT	SQFT	SQFT	SQFT	SQFT	EA	EA	LF	SQFT	EA	LF
PD-4	Sta 71+00 TO Sta 72+44	NB & SB			294							7											7	294
	Sta 71+00 TO Sta 71+94	NB	188								6										188		6	
	Sta 71+19 TO Sta 72+44	NB					125				6			30							125	30	6	
	Sta 71+94 TO Sta 72+44	NB		100							4								1		100		4	
	Sta 73+11 TO Sta 85+49	NB & SB			2149							46							1				46	2149
	Sta 73+11 TO Sta 73+61	NB & SB		100							4										100		4	
	Sta 73+61 TO Sta 84+99	NB	2276								50										2276		50	
	Sta 83+49 TO Sta 84+49	NB					100				5			30							100	30	5	
	Sta 84+49 TO Sta 85+49	NB		100							4										100		4	
	Sta 85+49 TO Sta 86+76	NB & SB							120	31							900			2		900	31	
	Sta 86+76 TO Sta 97+50	NB & SB			1780							38											38	1780
	Sta 86+76 TO Sta 87+26	NB		100							4										100		4	
	Sta 87+26 TO Sta 93+87	NB	1322								30				96	93					1322	189	30	
	Sta 94+31 TO Sta 97+50	NB	638								14										638		14	
	Sta 71+00 TO Sta 71+94	SB	188								6										188		6	
	Sta 71+94 TO Sta 72+44	SB		100							4										100		4	
	Sta 73+11 TO Sta 73+61	SB		100							4										100		4	
	Sta 73+11 TO Sta 74+61	SB					200				10			30							200	30	10	
	Sta 73+61 TO Sta 84+49	SB	2276								50										2276		50	
	Sta 82+00 TO Sta 85+49	SB				350						8					110					110	8	350
	Sta 84+99 TO Sta 85+49	SB		100							4										100		4	
	Sta 86+76 TO Sta 87+26	SB		100							4										100		4	
	Sta 86+76 TO Sta 88+76	SB					200	200			9			60							400	60	9	
	Sta 87+26 TO Sta 97+50	SB	2048								46				96	93			1		2048	189	46	
SUBTOTAL			8936	5373			825		120	31	363		1538						5		10561	1538	394	4573

(N) NOT A SEPARATE PAY ITEM, FOR INFORMATION ONLY.

PAVEMENT DELINEATION QUANTITIES
PDQ-4

STATE OF CALIFORNIA - DEPARTMENT OF TRANSPORTATION
Caltrans MAINTENANCE

FUNCTIONAL SUPERVISOR: MASSOUD TAJIK
CALCULATED-DESIGNED BY: ANH TRAN
CHECKED BY: PHAT TRAN
REVISED BY: ANH TRAN
DATE REVISED: 07-20-10

LAST REVISION 07-20-10
DATE PLOTTED => 09-DEC-2010
TIME PLOTTED => 16:01

Dist	COUNTY	ROUTE	POST MILES TOTAL PROJECT	SHEET No.	TOTAL SHEETS
12	Ora	39	0.0/3.2	32	54

REGISTERED CIVIL ENGINEER 08-15-10 DATE

12-6-10
PLANS APPROVAL DATE

REGISTERED PROFESSIONAL ENGINEER ANH P. TRAN No. C56206 Exp. 12-31-10 CIVIL STATE OF CALIFORNIA

THE STATE OF CALIFORNIA OR ITS OFFICERS OR AGENTS SHALL NOT BE RESPONSIBLE FOR THE ACCURACY OR COMPLETENESS OF SCANNED COPIES OF THIS PLAN SHEET.

SHEET No.	LOCATION	DIRECTION	THERMOPLASTIC TRAFFIC STRIPE 4" DETAIL 9 BROKEN WHITE (17-7)	4" DETAIL B SOLID WHITE	4" DETAIL 25 SOLID YELLOW	4" DETAIL 27 SOLID YELLOW	8" DETAIL 38 SOLID WHITE	8" DETAIL 38A SOLID WHITE	DETAIL 40A (N)	PAVEMENT MARKER (NON-REFLECTIVE) (TYPE A)	PAVEMENT MARKER (RETROREFLECTIVE) (TYPE G)	(TYPE H)	THERMOPLASTIC PAVEMENT MARKING TYPE I ARROW	TYPE IV ARROW	SIGNAL	AHEAD	12" WHITE LINE	PARKING STALL	OBJECT MARKER TYPE K-1	TYPE N-1	REMOVE THERMOPLASTIC TRAFFIC STRIPE	REMOVE THERMOPLASTIC PAVEMENT MARKING	REMOVE PAVEMENT MARKER	REMOVE YELLOW THERMOPLASTIC TRAFFIC STRIPE (HAZARDOUS WASTE)
			LF	LF	LF	LF	LF	LF	LF	EA	EA	EA	SQFT	SQFT	SQFT	SQFT	SQFT	SQFT	EA	EA	LF	SQFT	EA	LF
PD-4	Sta 90+00 TO Sta 93+95	SB				395						9					80					80	9	395
	Sta 94+49 TO Sta 95+74	SB					125				6			30							125	30	6	
PD-5	Sta 97+50 TO Sta 98+92	NB & SB			291							7											7	291
	Sta 97+50 TO Sta 98+42	NB	184								6										184		6	
	Sta 97+67 TO Sta 98+92	NB					125				6			30							125	30	6	
	Sta 98+42 TO Sta 98+92	NB		100							4										100		4	
	Sta 98+92 TO Sta 99+75	NB & SB															700					700		
	Sta 99+75 TO Sta 105+36	NB & SB			1135							25								2			25	1135
	Sta 99+75 TO Sta 100+25	NB & SB		100							4										100		4	
	Sta 100+25 TO Sta 111+52	NB	2254								50								2		2254		50	
	Sta 104+05 TO Sta 105+36	NB					175				8			30							175	30	8	
	Sta 105+36 TO Sta 106+65	NB & SB						260			8				96	93					260	189		
	Sta 106+65 TO Sta 112+02	NB & SB			1120							25											25	1120
	Sta 110+02 TO Sta 112+02	NB					200				9			30							200	30	9	
	Sta 110+52 TO Sta 112+02	NB		100							4										100		4	
	Sta 112+02 TO Sta 113+03	NB & SB															760			2		760		
	Sta 113+03 TO Sta 118+80	NB & SB			1172							26											26	1172
	Sta 113+03 TO Sta 113+53	NB		100							4										100		4	
	Sta 113+53 TO Sta 124+50	NB	2194								48										2194		48	
	Sta 117+55 TO Sta 118+80	NB					125				6			30					1		125	30	6	
	Sta 119+47 TO Sta 124+50	NB & SB			1014							22							1				22	1014
	Sta 123+90 TO Sta 124+50	NB					60				4			15							60	15	4	
	SUBTOTAL		4632	5527			1070				281		1894						8		6102	1894	273	5127

(N) NOT A SEPARATE PAY ITEM, FOR INFORMATION ONLY.

PAVEMENT DELINEATION QUANTITIES
PDQ-5

STATE OF CALIFORNIA - DEPARTMENT OF TRANSPORTATION
Caltrans® MAINTENANCE

FUNCTIONAL SUPERVISOR: MASSOUD TAJIK
CALCULATED-DESIGNED BY: ANH TRAN
CHECKED BY: PHAT TRAN
REVISED BY: ANH TRAN
DATE REVISED: 06-16-10

LAST REVISION 07-20-10 | DATE PLOTTED => 07-DEC-2010 | TIME PLOTTED => 08:35

Dist	COUNTY	ROUTE	POST MILES TOTAL PROJECT	SHEET No.	TOTAL SHEETS
12	Ora	39	0.0/3.2	33	54

REGISTERED CIVIL ENGINEER 08-15-10 DATE

12-6-10
PLANS APPROVAL DATE

REGISTERED PROFESSIONAL ENGINEER
ANH P. TRAN
No. C56206
Exp. 12-31-10
CIVIL
STATE OF CALIFORNIA

THE STATE OF CALIFORNIA OR ITS OFFICERS OR AGENTS SHALL NOT BE RESPONSIBLE FOR THE ACCURACY OR COMPLETENESS OF SCANNED COPIES OF THIS PLAN SHEET.

SHEET No.	LOCATION	DIRECTION	THERMOPLASTIC TRAFFIC STRIPE DETAIL 9 4" BROKEN WHITE (17-7)	DETAIL B 4" SOLID WHITE	DETAIL 25 4" SOLID YELLOW	DETAIL 27 4" SOLID YELLOW	DETAIL 38 8" SOLID WHITE	DETAIL 38A 8" SOLID WHITE	DETAIL 40A (N)	PAVEMENT MARKER (NON-REFLECTIVE) (TYPE A)	PAVEMENT MARKER (RETROREFLECTIVE) (TYPE G)	(TYPE H)	THERMOPLASTIC PAVEMENT MARKING TYPE I ARROW	TYPE IV ARROW	SIGNAL	AHEAD	12" WHITE LINE	PARKING STALL	OBJECT MARKER TYPE K-1	TYPE N-1	REMOVE THERMOPLASTIC TRAFFIC STRIPE	REMOVE THERMOPLASTIC PAVEMENT MARKING	REMOVE PAVEMENT MARKER	REMOVE YELLOW THERMOPLASTIC TRAFFIC STRIPE (HAZARDOUS WASTE)
			LF	LF	LF	LF	LF	LF	LF	EA	EA	EA	SQFT	SQFT	SQFT	SQFT	SQFT	SQFT	EA	EA	LF	SQFT	EA	LF
PD-5	Sta 97+50 TO Sta 98+42	SB	184								6										184		6	
	Sta 98+42 TO Sta 98+92	SB		100							4										100		4	
	Sta 99+75 TO Sta 100+25	SB		100							4										100		4	
	Sta 99+75 TO Sta 101+00	SB					125				6			30							125	30	6	
	Sta 100+25 TO Sta 111+52	SB	2254								50				96	93					2254	189	50	
	Sta 106+65 TO Sta 107+81	SB					175				8			30							175	30	8	
	Sta 110+52 TO Sta 112+02	SB		100							4										100		4	
	Sta 113+03 TO Sta 113+53	SB		100							4										100		4	
	Sta 113+03 TO Sta 115+02	SB					200				9			30							200	30	9	
	Sta 113+53 TO Sta 118+30	SB	954								22				96	93					954	189	22	
	Sta 118+30 TO Sta 118+80	SB		100							4										100		4	
	Sta 119+47 TO Sta 119+97	SB		100							4										100		4	
	Sta 119+47 TO Sta 120+72	SB					125				6			30							125	30	6	
	Sta 119+97 TO Sta 124+50	SB	906								22										906		22	
PD-6	Sta 124+50 TO Sta 125+40	NB & SB			186							5											5	186
	Sta 124+50 TO Sta 125+40	NB					90				5			15					2		90	15	5	
	Sta 124+50 TO Sta 137+83	NB	2666								58				96	93					2666	189	58	
	Sta 126+07 TO Sta 138+83	NB & SB			2471							53											53	2471
	Sta 136+33 TO Sta 137+83	NB					200				9			30							200	30	9	
	Sta 137+83 TO Sta 138+33	NB		100							4										100		4	
	Sta 138+33 TO Sta 139+50	NB & SB															840			2		840		
	Sta 139+50 TO Sta 148+00	NB & SB			1707							37											37	1707
	Sta 139+50 TO Sta 140+00	NB		100							4										100		4	
	Sta 140+00 TO Sta 148+00	NB	1600								30										1600		30	
	Sta 147+00 TO Sta 148+00	NB					100				5			15							100	15	5	
SUBTOTAL			8564	5164			1015				363		1587						4		10379	1587	363	4364

(N) NOT A SEPARATE PAY ITEM, FOR INFORMATION ONLY.

PAVEMENT DELINEATION QUANTITIES
PDQ-6

STATE OF CALIFORNIA - DEPARTMENT OF TRANSPORTATION
Caltrans MAINTENANCE

FUNCTIONAL SUPERVISOR: MASSOUD TAJIK
CALCULATED-DESIGNED BY: ANH TRAN
CHECKED BY: PHAT TRAN
REVISED BY: ANH TRAN
DATE REVISED: 07-20-10

LAST REVISION DATE PLOTTED => 07-DEC-2010
TIME PLOTTED => 08:35

Dist	COUNTY	ROUTE	POST MILES TOTAL PROJECT	SHEET No.	TOTAL SHEETS
12	Ora	39	0.0/3.2	34	54

REGISTERED CIVIL ENGINEER 08-15-10 DATE

12-6-10
PLANS APPROVAL DATE

REGISTERED PROFESSIONAL ENGINEER ANH P. TRAN No. C56206 Exp. 12-31-10 CIVIL STATE OF CALIFORNIA

THE STATE OF CALIFORNIA OR ITS OFFICERS OR AGENTS SHALL NOT BE RESPONSIBLE FOR THE ACCURACY OR COMPLETENESS OF SCANNED COPIES OF THIS PLAN SHEET.

SHEET No.	LOCATION	DIRECTION	THERMOPLASTIC TRAFFIC STRIPE 4" DETAIL 9 BROKEN WHITE (17-7)	4" DETAIL B SOLID WHITE	4" DETAIL 25 SOLID YELLOW	4" DETAIL 27 SOLID YELLOW	8" DETAIL 38 SOLID WHITE	8" DETAIL 38A SOLID WHITE	DETAIL 40A (N)	PAVEMENT MARKER (NON-REFLECTIVE) (TYPE A)	PAVEMENT MARKER (RETROREFLECTIVE) (TYPE G)	(TYPE H)	THERMOPLASTIC PAVEMENT MARKING TYPE I ARROW	TYPE IV ARROW	SIGNAL	AHEAD	12" WHITE LINE	PARKING STALL	OBJECT MARKER TYPE K-1	TYPE N-1	REMOVE THERMOPLASTIC TRAFFIC STRIPE	REMOVE THERMOPLASTIC PAVEMENT MARKING	REMOVE PAVEMENT MARKER	REMOVE YELLOW THERMOPLASTIC TRAFFIC STRIPE (HAZARDOUS WASTE)
			LF	LF	LF	LF	LF	LF	LF	EA	EA	EA	SQFT	SQFT	SQFT	SQFT	SQFT	SQFT	EA	EA	LF	SQFT	EA	LF
PD-6	Sta 124+50 TO Sta 124+90	SB	80								4										80		4	
	Sta 124+90 TO Sta 125+40	SB		100							4										100		4	
	Sta 126+07 TO Sta 126+57	SB		100							4										100		4	
	Sta 126+07 TO Sta 127+32	SB					125				6			30							125	30	6	
	Sta 126+57 TO Sta 137+83	SB	2252								50										2252		50	
	Sta 137+83 TO Sta 138+33	SB		100							4										100		4	
	Sta 139+50 TO Sta 140+00	SB		100							4										100		4	
	Sta 139+50 TO Sta 141+50	SB					200				9			30							200	30	9	
	Sta 140+00 TO Sta 148+00	SB	1600								36				96	93					1600	189	36	
PD-7	Sta 148+00 TO Sta 148+50	NB & SB			104							3							1				3	104
	Sta 148+00 TO Sta 148+50	NB		100			50				7			15							150	15	7	
	Sta 149+14 TO Sta 154+07	NB & SB			1000							43							1				43	1000
	Sta 149+14 TO Sta 149+64	NB		100							4										100		4	
	Sta 149+64 TO Sta 153+57	NB	786								18										786		18	
	Sta 152+82 TO Sta 154+07	NB					125				6			30							125	30	6	
	Sta 153+57 TO Sta 154+07	NB		100							4								1		100		4	
	Sta 154+73 TO Sta 159+18	NB & SB			910							20							1				20	910
	Sta 154+73 TO Sta 155+23	NB		100							4										100		4	
	Sta 155+23 TO Sta 164+20	NB	1794								40								2		1794		40	
	Sta 157+93 TO Sta 159+18	NB					125				6			30							125	30	6	
	Sta 160+10 TO Sta 164+60	NB & SB			925							20											20	925
	Sta 162+10 TO Sta 164+60	NB					250	250			12			90							500	90	12	
SUBTOTAL			6512	3739			1125				308		414						6		8437	414	308	2939

(N) NOT A SEPARATE PAY ITEM, FOR INFORMATION ONLY.

PAVEMENT DELINEATION QUANTITIES
PDQ-7

STATE OF CALIFORNIA - DEPARTMENT OF TRANSPORTATION
Caltrans
MAINTENANCE

FUNCTIONAL SUPERVISOR: MASSOUD TAJIK
CALCULATED-DESIGNED BY: ANH TRAN
CHECKED BY: PHAT TRAN
REVISED BY: ANH TRAN
DATE REVISED: 07-20-10

LAST REVISION 07-20-10 DATE PLOTTED => 07-DEC-2010 TIME PLOTTED => 08:35

Dist	COUNTY	ROUTE	POST MILES TOTAL PROJECT	SHEET No.	TOTAL SHEETS
12	Ora	39	0.0/3.2	35	54

REGISTERED CIVIL ENGINEER DATE 08-15-10

12-6-10
PLANS APPROVAL DATE

REGISTERED PROFESSIONAL ENGINEER ANH P. TRAN No. C56206 Exp. 12-31-10 CIVIL STATE OF CALIFORNIA

THE STATE OF CALIFORNIA OR ITS OFFICERS OR AGENTS SHALL NOT BE RESPONSIBLE FOR THE ACCURACY OR COMPLETENESS OF SCANNED COPIES OF THIS PLAN SHEET.

SHEET No.	LOCATION	DIRECTION	THERMOPLASTIC TRAFFIC STRIPE 4" DETAIL 9 BROKEN WHITE (17-7)	THERMOPLASTIC TRAFFIC STRIPE 4" DETAIL B SOLID WHITE	THERMOPLASTIC TRAFFIC STRIPE 4" DETAIL 25 SOLID YELLOW	THERMOPLASTIC TRAFFIC STRIPE 4" DETAIL 27 SOLID YELLOW	THERMOPLASTIC TRAFFIC STRIPE 8" DETAIL 38 SOLID WHITE	THERMOPLASTIC TRAFFIC STRIPE 8" DETAIL 38A SOLID WHITE	DETAIL 40A (N)	PAVEMENT MARKER (NON-REFLECTIVE) (TYPE A)	PAVEMENT MARKER (RETROREFLECTIVE) (TYPE G)	PAVEMENT MARKER (RETROREFLECTIVE) (TYPE H)	THERMOPLASTIC PAVEMENT MARKING TYPE I ARROW	THERMOPLASTIC PAVEMENT MARKING TYPE IV ARROW	THERMOPLASTIC PAVEMENT MARKING SIGNAL	THERMOPLASTIC PAVEMENT MARKING AHEAD	THERMOPLASTIC PAVEMENT MARKING 12" WHITE LINE	THERMOPLASTIC PAVEMENT MARKING PARKING STALL	OBJECT MARKER TYPE K-1	OBJECT MARKER TYPE N-1	REMOVE THERMOPLASTIC TRAFFIC STRIPE	REMOVE THERMOPLASTIC PAVEMENT MARKING	REMOVE PAVEMENT MARKER	REMOVE YELLOW THERMOPLASTIC TRAFFIC STRIPE (HAZARDOUS WASTE)
			LF	LF	LF	LF	LF	LF	LF	EA	EA	EA	SQFT	SQFT	SQFT	SQFT	SQFT	SQFT	EA	EA	LF	SQFT	EA	LF
PD-7	Sta 164+20 TO Sta 164+70	NB		100							4										100		4	
	Sta 164+60 TO Sta 166+00	NB & SB							340	86							740			2		740	86	
	Sta 166+00 TO Sta 166+50	NB		150							6										150		6	
	Sta 148+00 TO Sta 157+68	SB	1936								42										1936		42	
	Sta 149+14 TO Sta 150+39	SB					125				4			30							125	30	4	
	Sta 154+73 TO Sta 156+23	SB					150				4			30							150	30	4	
	Sta 157+68 TO Sta 158+18	SB		100							4										100		4	
	Sta 160+10 TO Sta 160+60	SB		100							4										100		4	
	Sta 160+10 TO Sta 160+80	SB					70				3			30							70	30	3	
	Sta 160+60 TO Sta 164+10	SB	700								18										700		18	
	Sta 164+10 TO Sta 164+60	SB		100							4										100		4	
	Sta 106+00 TO Sta 166+50	SB		100			100	50			7			45							250	45	7	
SUBTOTAL			2636	650			495		340	86	100		875						2		3781	875	186	
SUBTOTAL SHEET PDQ-1			7486	6725			1960				401		1977						3		10046	1977	401	6125
SUBTOTAL SHEET PDQ-2			9240	5785			1125				386		1273						8		11265	1273	386	4885
SUBTOTAL SHEET PDQ-3			6410	2814			525				250		1069						4		7735	1069	250	2014
SUBTOTAL SHEET PDQ-4			8936	5373			825		120	31	363		1538						5		10561	1538	394	4573
SUBTOTAL SHEET PDQ-5			4632	5527			1070				281		1894						8		6102	1894	273	5127
SUBTOTAL SHEET PDQ-6			8564	5164			1015				363		1587						4		10379	1587	363	4364
SUBTOTAL SHEET PDQ-7			6512	3739			1125				308		414						6		8437	414	308	2939
TOTAL			54416	35777			8140		460	117	2452		10627						40		68306	10627	2561	30027

(N) NOT A SEPARATE PAY ITEM, FOR INFORMATION ONLY.

PAVEMENT DELINEATION QUANTITIES
PDQ-8

REVISED BY	DATE REVISED
ANH TRAN	07-20-10

CALCULATED-DESIGNED BY: ANH TRAN
CHECKED BY: PHAT TRAN
FUNCTIONAL SUPERVISOR: MASSOUD TAJIK

STATE OF CALIFORNIA - DEPARTMENT OF TRANSPORTATION
Caltrans
MAINTENANCE

LAST REVISION 07-20-10
DATE PLOTTED => 09-DEC-2010
TIME PLOTTED => 16:01

Dist	COUNTY	ROUTE	POST MILES TOTAL PROJECT	SHEET No.	TOTAL SHEETS
12	Ora	39	0.0/3.2	36	54

Anh Tran 08-15-10
REGISTERED CIVIL ENGINEER DATE

12-6-10
PLANS APPROVAL DATE

REGISTERED PROFESSIONAL ENGINEER
ANH P. TRAN
No. C56206
Exp. 12-31-10
CIVIL
STATE OF CALIFORNIA

THE STATE OF CALIFORNIA OR ITS OFFICERS OR AGENTS SHALL NOT BE RESPONSIBLE FOR THE ACCURACY OR COMPLETENESS OF SCANNED COPIES OF THIS PLAN SHEET.

G55 (Mod)

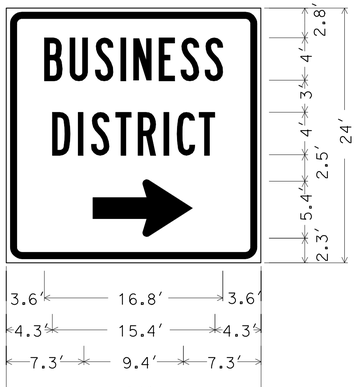

1.5" Radius, 0.6" Border, 0.4" Indent, Black on Green;
[BUSINESS] White B 95} spacing;
[DISTRICT] White B;
Standard Arrow Custom 9.4" X 5.4" 180{ White;

G77-4 (Mod)

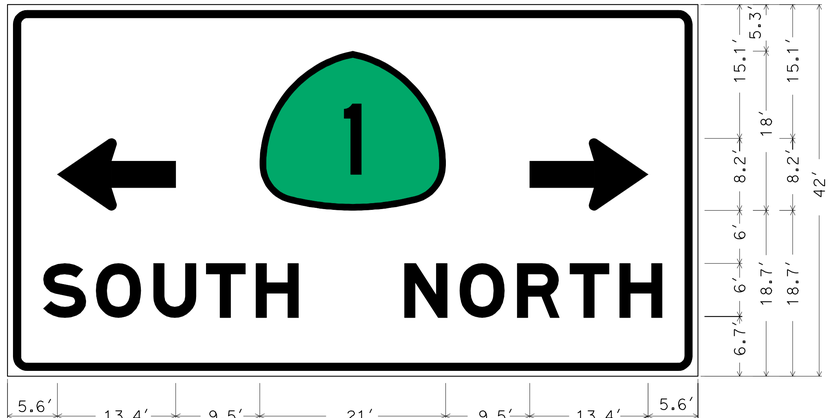

2.3" Radius, 0.9" Border, 0.6" Indent, White on Green;
Standard Arrow Custom 13.4" X 8.1" 180{ White;
Standard Arrow Custom 13.4" X 8.1" 0{ White; [SOUTH NORTH] White E Mod 95} spacing;

SIGN DETAILS

NO SCALE

SD-1

REVISED BY	DATE REVISED
ANH TRAN	07-20-10

CALCULATED-DESIGNED BY: ANH TRAN
CHECKED BY: PHAT TRAN
FUNCTIONAL SUPERVISOR: MASSOUD TAJIK

STATE OF CALIFORNIA - DEPARTMENT OF TRANSPORTATION
Caltrans®
MAINTENANCE

LAST REVISION 07-20-10 | DATE PLOTTED => 07-DEC-2010 | TIME PLOTTED => 08:32

Dist	COUNTY	ROUTE	POST MILES TOTAL PROJECT	SHEET No.	TOTAL SHEETS
12	Ora	39	0.0/3.2	37	54

Anh Tran 08-15-10
REGISTERED CIVIL ENGINEER DATE

12-6-10
PLANS APPROVAL DATE

REGISTERED PROFESSIONAL ENGINEER
ANH P. TRAN
No. C56206
Exp. 12-31-10
CIVIL
STATE OF CALIFORNIA

THE STATE OF CALIFORNIA OR ITS OFFICERS OR AGENTS SHALL NOT BE RESPONSIBLE FOR THE ACCURACY OR COMPLETENESS OF SCANNED COPIES OF THIS PLAN SHEET.

ROADSIDE SIGN QUANTITIES

SHEET No.	SIGN No.	SIGN CODE	PANEL SIZE W x D	SIGN AREA	ROADSIDE SIGN			SIGN LOCATION
					ONE POST (4" x 6")	REMOVE SIGN PANEL (N)	INSTALL (ON EXISTING POST)	
			INCH x INCH	SQFT	EA	EA	EA	
PD-1	1	G66-56	48 x 30	10.00		1	4	NORTH OF PCH
		M6-4	21 x 15	2.20		1		
		G77-4 (Mod)	78 x 42	22.75		1		
		G55 (Mod)	24 x 24	4.00		1		
PD-2	2	R2 (50)	36 x 48	12.00		1	1	ATLANTA AVENUE
	3	W3-3	48 x 48	16.00		1	1	
PD-4	4	R4-7	36 x 48	12.00	2			MEMPHIS AVENUE
	5	R2 (50)	36 x 48	12.00	1			ADAMS AVENUE
	6	R4-7	36 x 48	12.00	1			Sta 94+31
PD-5	7	R4-7	36 x 48	12.00	2			Sta 105+36 & Sta 106+65
	8	R4-7	36 x 48	12.00	2			WILLIAMS AVENUE
PD-6	9	R4-7	36 x 48	12.00	2			CLAY AVENUE
PD-7	10	R4-7	36 x 48	12.00	2			CONSTANTINE AVENUE
	11	R4-7	36 x 48	12.00	2			GRAZIADIO AVENUE
	12	R4-7	36 x 48	12.00	2			Sta 159+16 & Sta 160+10
TOTAL					16	6	6	

(N) NOT A SEPARATE PAY ITEM, FOR INFORMATION ONLY.

ABBREVIATIONS:

B - BLACK
BL - BLUE
G - GREEN
R - RED
W - WHITE
Y - YELLOW

MATERIAL SUMMARY - CONTRACTOR FURNISHED SIGN

SHEET No.	SIGN No.	SIGN CODE	PANEL SIZE W x D	SIGN AREA	SINGLE FACED	BACKGROUND		LEGEND		GRAFFITI FILM		SINGLE SHEET ALUMINUM SIGN			SIGN LOCATION
												UNFRAMED		FRAMED	
						SHEETING COLOR	RETRO-REFLECTIVE	SHEETING COLOR	RETRO-REFLECTIVE	STANDARD	PREMIUM	0.063"	0.080"	0.080"	
			INCH x INCH	SQFT								SQFT	SQFT	SQFT	
PD-1	1	G66-56	48 x 30	10.00	X	BL	III	W	X		X		10.00		NORTH OF PCH
		M6-4	21 x 15	2.20	X	BL	III	W	X		X	2.20			
		G77-4 (Mod)	78 x 42	22.75	X	G	IV	W	X		X			22.75	
		G55 (Mod)	24 x 24	4.00	X	G	IV	W	X		X	4.00			
PD-2	2	R2 (50)	36 x 48	12.00	X	W	III	B	X		X		12.00		ATLANTA AVENUE
	3	W3-3	48 x 48	16.00	X	Y	IX	R/G/B	X		X		16.00		ATLANTA AVENUE
PD-4	4	R4-7	36 x 48	12.00	X	W	III	B	X		X		12.00		MEMPHIS AVENUE
	5	R2 (50)	36 x 48	12.00	X	W	III	B	X		X		12.00		ADAMS AVENUE
	6	R4-7	36 x 48	12.00	X	W	III	B	X		X		12.00		Sta 94+31 (FACING SB TRAFFIC)
PD-5	7	R4-7	36 x 48	12.00	X	W	III	B	X		X		12.00		Sta 105+36 & Sta 106+65
	8	R4-7	36 x 48	12.00	X	W	III	B	X		X		12.00		WILLIAMS AVENUE
PD-6	9	R4-7	36 x 48	12.00	X	W	III	B	X		X		12.00		CLAY AVENUE
PD-7	10	R4-7	36 x 48	12.00	X	W	III	B	X		X		12.00		CONSTANTINE AVENUE
	11	R4-7	36 x 48	12.00	X	W	III	B	X		X		12.00		GRAZIADIO AVENUE
	12	R4-7	36 x 48	12.00	X	W	III	B	X		X		12.00		Sta 159+16 & Sta 160+10
TOTAL												6.20	146.00	22.75	

SIGN QUANTITIES
SQ-1

REVISED BY: ANH TRAN — DATE REVISED: 08-02-10
ANH TRAN — PHAT TRAN
CALCULATED-DESIGNED BY — CHECKED BY
FUNCTIONAL SUPERVISOR: MASSOUD TAJIK
STATE OF CALIFORNIA - DEPARTMENT OF TRANSPORTATION
Caltrans® MAINTENANCE

LAST REVISION 08-02-10 — DATE PLOTTED => 07-DEC-2010 — TIME PLOTTED => 08:32

Dist	COUNTY	ROUTE	POST MILES TOTAL PROJECT	SHEET No.	TOTAL SHEETS
12	Ora	39	0.0/3.2	38	54

REGISTERED CIVIL ENGINEER 08-15-10 DATE

12-6-10
PLANS APPROVAL DATE

REGISTERED PROFESSIONAL ENGINEER ANH P. TRAN No. C56206 Exp. 12-31-10 CIVIL STATE OF CALIFORNIA

THE STATE OF CALIFORNIA OR ITS OFFICERS OR AGENTS SHALL NOT BE RESPONSIBLE FOR THE ACCURACY OR COMPLETENESS OF SCANNED COPIES OF THIS PLAN SHEET.

DIRECTION	SHEET No.	UTILITY LOCATION FROM	UTILITY LOCATION TO	ADJUST DRAIN MANHOLE TO GRADE (0.1") EA	ADJUST SEWER MANHOLE TO GRADE (0.1") EA	ADJUST WATER MANHOLE TO GRADE (0.1") EA	ADJUST UTILITY MANHOLE TO GRADE (0.1") (N) EA	ADJUST WATER VALVE COVER TO GRADE (0.1") EA	ADJUST GAS VENT COVER TO GRADE (0.1") (N) EA	ADJUST MONUMENT COVER TO GRADE (0.1") EA	OWNER
NORTHBOUND ROUTE 39	L-1									1	CALTRANS
	L-2									2	
	L-3									2	
	L-4									2	
	L-5									4	
	L-6									2	
	L-7									3	
	U-1 THRU U-2	ROUTE 1 (PCH)	ATLANTA Ave				4				SCE
							4				VERIZON
				1				3			CITY OF HB
	U-2 THRU U-3	ATLANTA Ave	INDIANAPOLIS Ave	4				3			CITY OF HB
	U-3 THRU U-4	INDIANAPOLIS Ave	ADAMS Ave	1				8			CITY OF HB
					1						OCSD
	U-4 THRU U-5	ADAMS Ave	UTICA St								
	U-5	UTICA St	YORKTOWN Ave		3			10			CITY OF HB
	U-5 THRU U-6	YORKTOWN Ave	GARFIELD Ave		12			20			CITY OF HB
	U-6 THRU U-7	GARFIELD Ave	ELLIS Ave		8			18			CITY OF HB
SOUTHBOUND ROUTE 39	U-7 THRU U-6	ELLIS Ave	GARFIELD Ave						1		SCG
				1	7	1		14			CITY OF HB
	U-6 THRU U-5	GARFIELD Ave	YORKTOWN Ave		2			25			CITY OF HB
	U-5	YORKTOWN Ave	UTICA St		2			15			CITY OF HB
	U-5 THRU U-4	UTICA St	ADAMS Ave		4			1			CITY OF HB
	U-4 THRU U-3	ADAMS Ave	INDIANAPOLIS Ave	3				10			CITY OF HB
					1						OCSD
	U-3 THRU U-2	INDIANAPOLIS Ave	ATLANTA Ave	1				1			CITY OF HB
	U-2 THRU U-1	ATLANTA Ave	ROUTE 1 (PCH)	1	5	1		16			CITY OF HB
					1						OCSD
			TOTAL	60			8	144	1	16	

(N) NOT A SEPARATE PAY ITEM, FOR INFORMATION ONLY.

TEMPORARY WATER POLLUTION CONTROL QUANTITIES

TEMPORARY DRAINAGE INLET PROTECTION (N)
EA
66

(N) NOT A SEPARATE PAY ITEM, FOR INFORMATION ONLY.

PAVEMENT STRUCTURAL SECTION

SHEET No.	LOCATION	STRUCTURAL SECTION	RUBBERIZED HOT MIX ASPHALT (GAP GRADED) TON	COLD PLANE ASPHALT CONCRETE PAVEMENT SQYD	TACK COAT TON
L-1	Sta 0+60 to Sta 16+50	1	980		8
		2	140	2150	
		3	20	280	
L-2	Sta 16+50 to Sta 44+00	1	1690		14
		2	220	3400	
		3	40	620	
L-3	Sta 44+00 to Sta 71+50	1	1550		15
		2	230	3500	
		3	25	610	
L-4	Sta 71+50 to Sta 97+50	1	1660		13
		2	250	3700	
		3	30	370	
L-5	Sta 97+50 to Sta 124+50	1	1670		14
		2	210	3200	
		3	50	800	
L-6	Sta 124+50 to Sta 148+00	1	1390		12
		2	180	3000	
		3	30	500	
L-7	Sta 148+00 to Sta 165+65	1	1160		10
		2	135	2100	
		3	45	700	
		TOTAL	11705	24930	86

SUMMARY OF QUANTITIES

Q-1

REVISED BY	DATE REVISED
ANH TRAN	08-03-10

CALCULATED-DESIGNED BY	CHECKED BY
ANH TRAN	PHAT TRAN

FUNCTIONAL SUPERVISOR: MASSOUD TAJIK

STATE OF CALIFORNIA - DEPARTMENT OF TRANSPORTATION
Caltrans MAINTENANCE

LAST REVISION 08-03-10 | DATE PLOTTED => 07-DEC-2010 | TIME PLOTTED => 08:32

Dist	COUNTY	ROUTE	POST MILES TOTAL PROJECT	SHEET No.	TOTAL SHEETS
12	Ora	39	0.0/3.2	39	54

REGISTERED ELECTRICAL ENGINEER 08-15-10 DATE

12-6-10
PLANS APPROVAL DATE

REGISTERED PROFESSIONAL ENGINEER S. SHAHRIARI No. E13485 Exp. 9-30-10 ELECTRICAL STATE OF CALIFORNIA

THE STATE OF CALIFORNIA OR ITS OFFICERS OR AGENTS SHALL NOT BE RESPONSIBLE FOR THE ACCURACY OR COMPLETENESS OF SCANNED COPIES OF THIS PLAN SHEET.

PROJECT NOTES: (SHEETS E-1 TO E-7)

1. EXISTING MODEL 170 CONTROLLER IN 334 CABINET.
2. AB EXISTING LOOPS WHERE NEW LOOPS ARE CUT.
3. SC NEW LOOP WIRES TO EXISTING dlc.
4. THE LOCATION OF LOOPS SHOWN ARE APPROXIMATE. THE CONTRACTOR SHALL VERIFY EXACT LOCATION OF EXISTING LOOPS PRIOR TO CUTTING NEW LOOPS AND REUSE EXISTING CONDUIT STUB OUT.
5. ALL LOOPS SHALL BE INSTALLED AFTER THE FINAL PAVEMENT AND PAVEMENT DELINEATION.

NOTE:

FOR ACCURATE RIGHT OF WAY DATA, CONTACT RIGHT OF WAY ENGINEERING AT THE DISTRICT OFFICE.

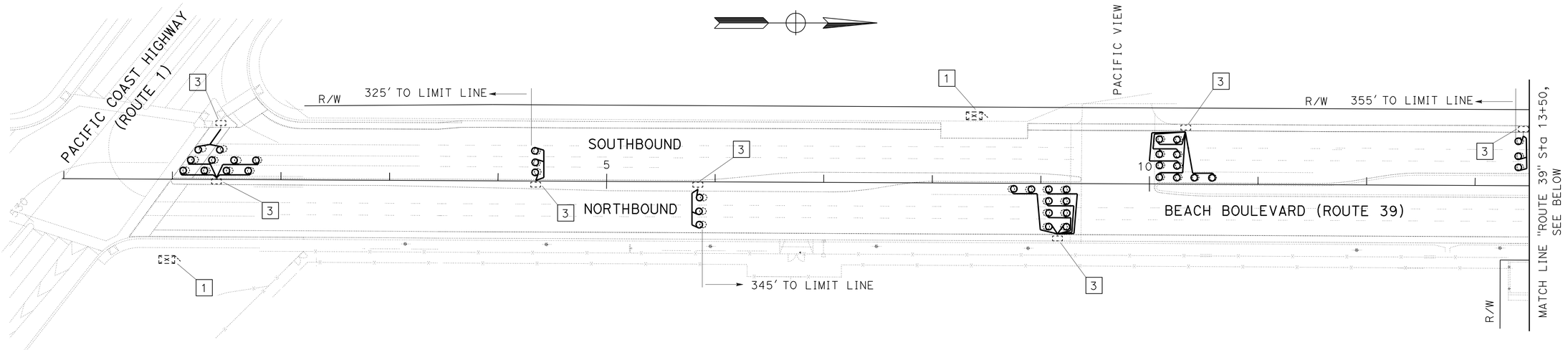

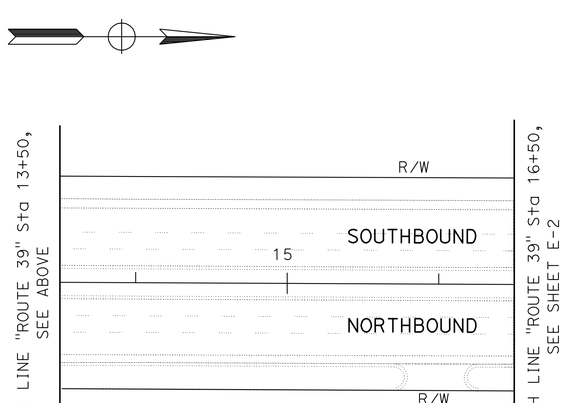

THIS PLAN IS ACCURATE FOR ELECTRICAL WORK ONLY.

INDUCTIVE LOOP DETECTOR

SCALE: 1" = 50'

E-1

STATE OF CALIFORNIA - DEPARTMENT OF TRANSPORTATION
Caltrans ELECTRICAL DESIGN

FUNCTIONAL SUPERVISOR: SHAHRAM SHAHRIARI
CALCULATED-DESIGNED BY: BARJESH KUMAR
CHECKED BY: VANESSA TRUONG
REVISED BY
DATE REVISED

LAST REVISION 08-05-10 | DATE PLOTTED => 07-DEC-2010 | TIME PLOTTED => 08:32

Dist	COUNTY	ROUTE	POST MILES TOTAL PROJECT	SHEET No.	TOTAL SHEETS
12	Org	39	0.0/3.2	40	54

08-15-10
REGISTERED ELECTRICAL ENGINEER DATE

12-6-10
PLANS APPROVAL DATE

REGISTERED PROFESSIONAL ENGINEER
S. SHAHRIARI
No. E13485
Exp. 9-30-10
ELECTRICAL
STATE OF CALIFORNIA

THE STATE OF CALIFORNIA OR ITS OFFICERS OR AGENTS SHALL NOT BE RESPONSIBLE FOR THE ACCURACY OR COMPLETENESS OF SCANNED COPIES OF THIS PLAN SHEET.

NOTE:

FOR ACCURATE RIGHT OF WAY DATA, CONTACT RIGHT OF WAY ENGINEERING AT THE DISTRICT OFFICE.

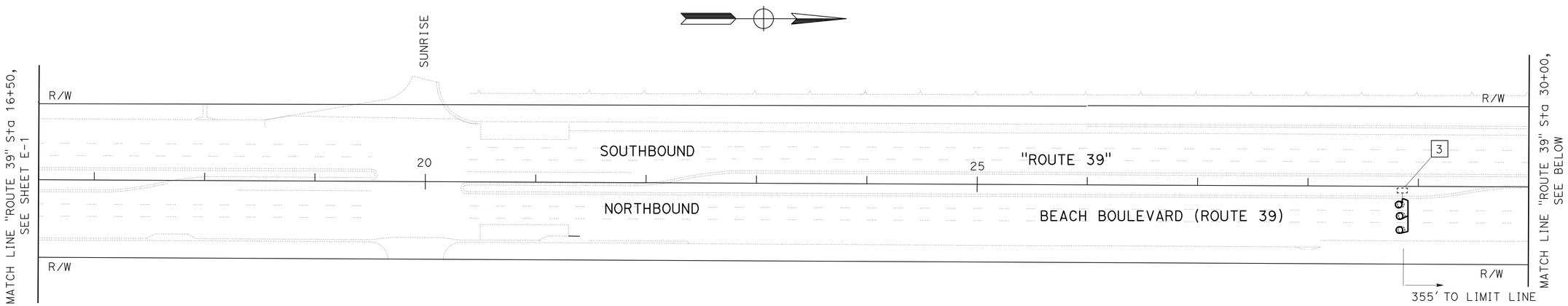

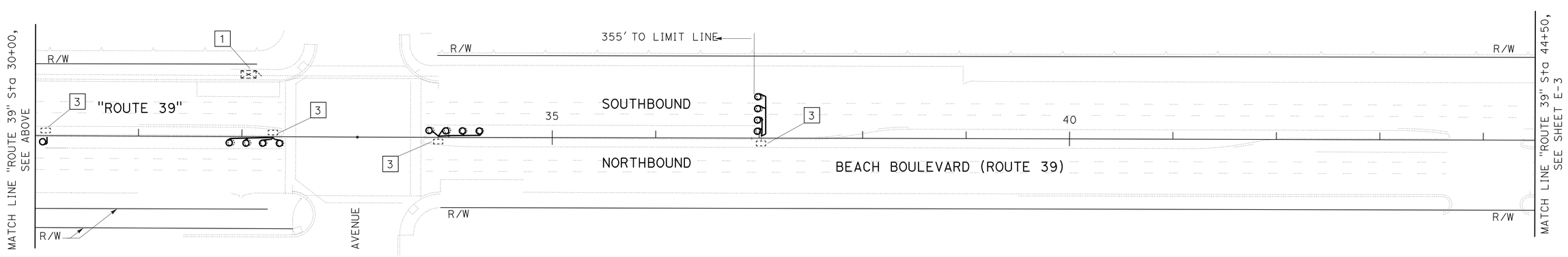

INDUCTIVE LOOP DETECTOR

SCALE: 1" = 50'

E-2

THIS PLAN IS ACCURATE FOR ELECTRICAL WORK ONLY.

STATE OF CALIFORNIA - DEPARTMENT OF TRANSPORTATION
Caltrans® ELECTRICAL DESIGN

FUNCTIONAL SUPERVISOR: SHAHRAM SHAHRIARI
CALCULATED-DESIGNED BY: BARJESH KUMAR
CHECKED BY: VANESSA TRUONG
REVISED BY
DATE REVISED

LAST REVISION 08-05-10
DATE PLOTTED => 07-DEC-2010
TIME PLOTTED => 08:48

Dist	COUNTY	ROUTE	POST MILES TOTAL PROJECT	SHEET No.	TOTAL SHEETS
12	Ora	39	0.0/3.2	41	54

08-15-10
REGISTERED ELECTRICAL ENGINEER DATE

12-6-10
PLANS APPROVAL DATE

REGISTERED PROFESSIONAL ENGINEER
S. SHAHRIARI
No. E13485
Exp. 9-30-10
ELECTRICAL
STATE OF CALIFORNIA

THE STATE OF CALIFORNIA OR ITS OFFICERS OR AGENTS SHALL NOT BE RESPONSIBLE FOR THE ACCURACY OR COMPLETENESS OF SCANNED COPIES OF THIS PLAN SHEET.

NOTE:

FOR ACCURATE RIGHT OF WAY DATA, CONTACT RIGHT OF WAY ENGINEERING AT THE DISTRICT OFFICE.

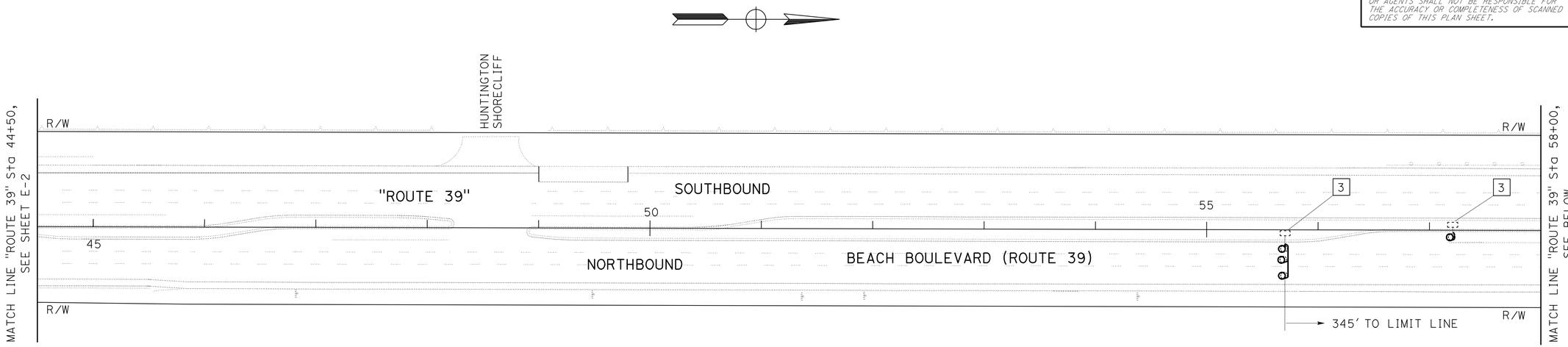

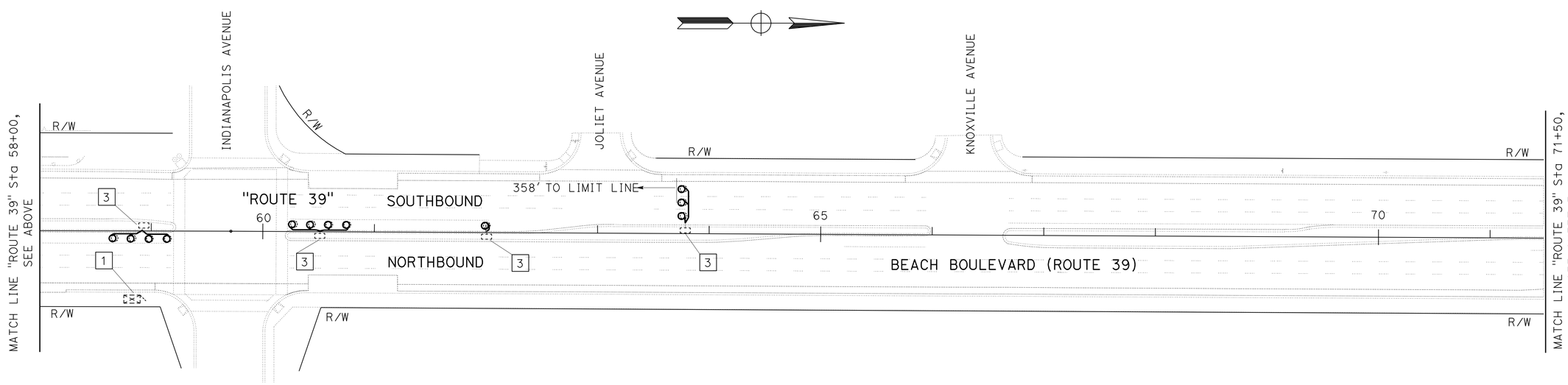

INDUCTIVE LOOP DETECTOR

SCALE: 1" = 50'

E-3

THIS PLAN IS ACCURATE FOR ELECTRICAL WORK ONLY.

STATE OF CALIFORNIA - DEPARTMENT OF TRANSPORTATION
Caltrans® **ELECTRICAL DESIGN**

FUNCTIONAL SUPERVISOR: SHAHRAM SHAHRIARI
CALCULATED-DESIGNED BY: BARJESH KUMAR
CHECKED BY: VANESSA TRUONG
REVISED BY
DATE REVISED

LAST REVISION 08-05-10
DATE PLOTTED => 07-DEC-2010
TIME PLOTTED => 08:48

Dist	COUNTY	ROUTE	POST MILES TOTAL PROJECT	SHEET No.	TOTAL SHEETS
12	Ora	39	0.0/3.2	42	54

REGISTERED ELECTRICAL ENGINEER 08-15-10 DATE

12-6-10
PLANS APPROVAL DATE

REGISTERED PROFESSIONAL ENGINEER
S. SHAHRIARI
No. E13485
Exp. 9-30-10
ELECTRICAL
STATE OF CALIFORNIA

THE STATE OF CALIFORNIA OR ITS OFFICERS OR AGENTS SHALL NOT BE RESPONSIBLE FOR THE ACCURACY OR COMPLETENESS OF SCANNED COPIES OF THIS PLAN SHEET.

NOTE:

FOR ACCURATE RIGHT OF WAY DATA, CONTACT RIGHT OF WAY ENGINEERING AT THE DISTRICT OFFICE.

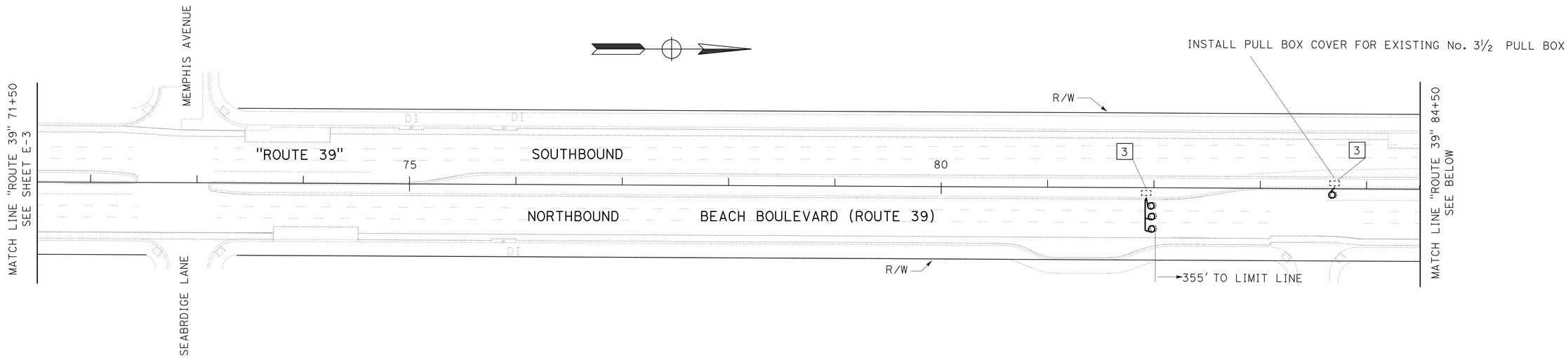

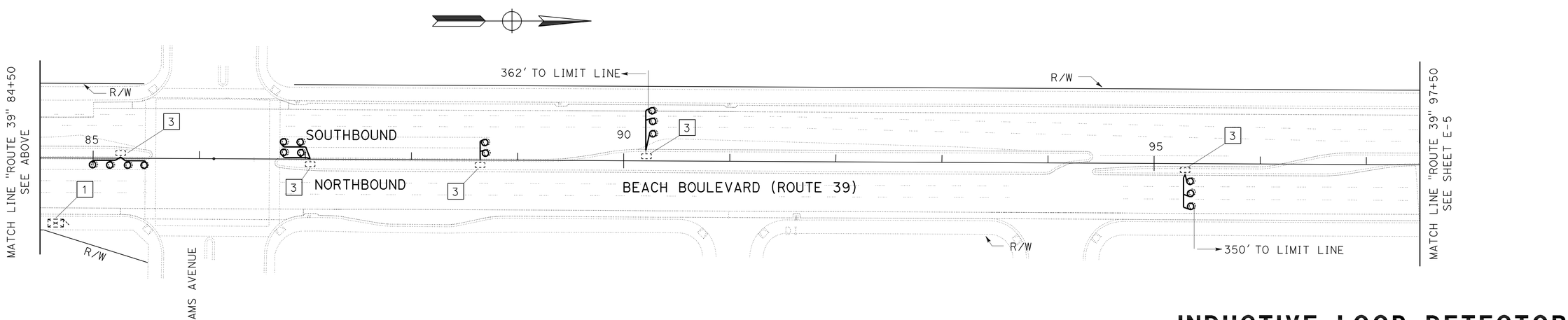

THIS PLAN IS ACCURATE FOR ELECTRICAL WORK ONLY.

INDUCTIVE LOOP DETECTOR

SCALE: 1" = 50'

E-4

STATE OF CALIFORNIA - DEPARTMENT OF TRANSPORTATION
Caltrans® ELECTRICAL DESIGN

FUNCTIONAL SUPERVISOR: SHAHRAM SHAHRIARI
CALCULATED-DESIGNED BY: BARJESH KUMAR
CHECKED BY: VANESSA TRUONG
REVISED BY
DATE REVISED

LAST REVISION 08-05-10
DATE PLOTTED => 07-DEC-2010
TIME PLOTTED => 10:49

Dist	COUNTY	ROUTE	POST MILES TOTAL PROJECT	SHEET No.	TOTAL SHEETS
12	Ora	39	0.0/3.2	43	54

08-15-10
REGISTERED ELECTRICAL ENGINEER DATE

12-6-10
PLANS APPROVAL DATE

REGISTERED PROFESSIONAL ENGINEER
S. SHAHRIARI
No. E13485
Exp. 9-30-10
ELECTRICAL
STATE OF CALIFORNIA

THE STATE OF CALIFORNIA OR ITS OFFICERS OR AGENTS SHALL NOT BE RESPONSIBLE FOR THE ACCURACY OR COMPLETENESS OF SCANNED COPIES OF THIS PLAN SHEET.

NOTE:

FOR ACCURATE RIGHT OF WAY DATA, CONTACT RIGHT OF WAY ENGINEERING AT THE DISTRICT OFFICE.

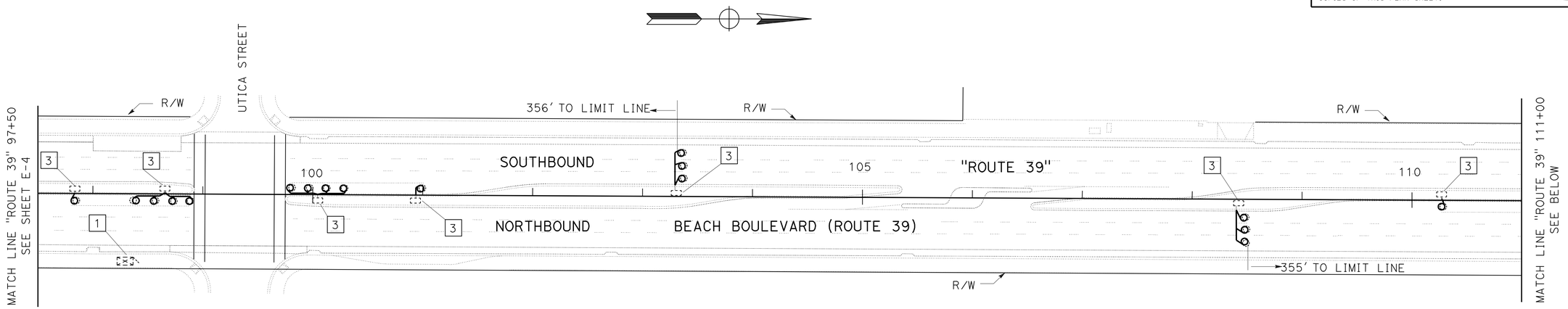

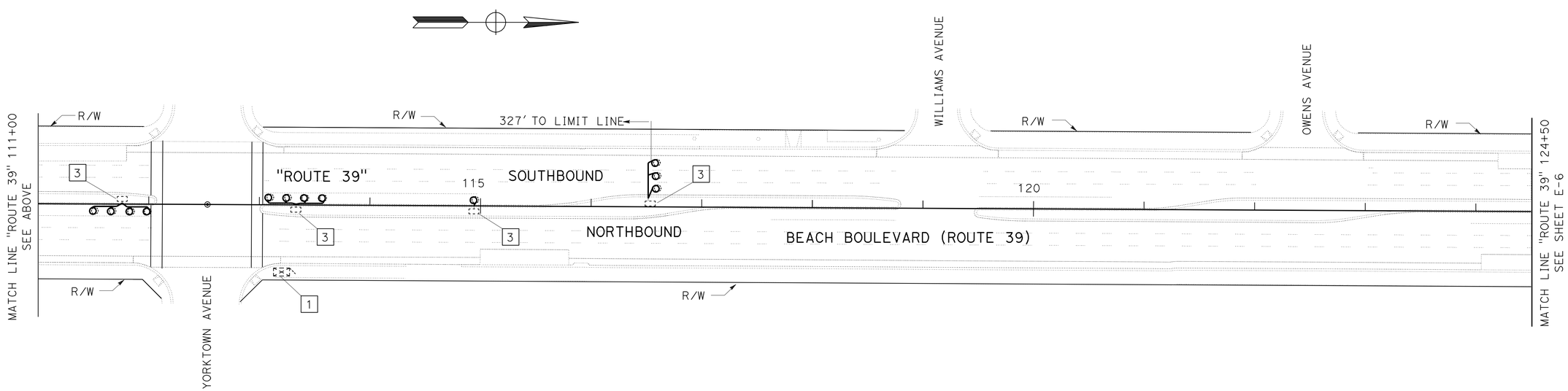

INDUCTIVE LOOP DETECTOR

SCALE: 1" = 50'

E-5

THIS PLAN IS ACCURATE FOR ELECTRICAL WORK ONLY.

STATE OF CALIFORNIA - DEPARTMENT OF TRANSPORTATION
Caltrans® **ELECTRICAL DESIGN**

FUNCTIONAL SUPERVISOR: SHAHRAM SHAHRIARI
CALCULATED-DESIGNED BY: BARJESH KUMAR
CHECKED BY: VANESSA TRUONG
REVISED BY
DATE REVISED

LAST REVISION 08-05-10
DATE PLOTTED => 07-DEC-2010
TIME PLOTTED => 10:49

Dist	COUNTY	ROUTE	POST MILES TOTAL PROJECT	SHEET No.	TOTAL SHEETS
12	Ora	39	0.0/3.2	44	54

08-15-10
REGISTERED ELECTRICAL ENGINEER DATE

12-6-10
PLANS APPROVAL DATE

REGISTERED PROFESSIONAL ENGINEER
S. SHAHRIARI
No. E13485
Exp. 9-30-10
ELECTRICAL
STATE OF CALIFORNIA

THE STATE OF CALIFORNIA OR ITS OFFICERS OR AGENTS SHALL NOT BE RESPONSIBLE FOR THE ACCURACY OR COMPLETENESS OF SCANNED COPIES OF THIS PLAN SHEET.

NOTE:

FOR ACCURATE RIGHT OF WAY DATA, CONTACT RIGHT OF WAY ENGINEERING AT THE DISTRICT OFFICE.

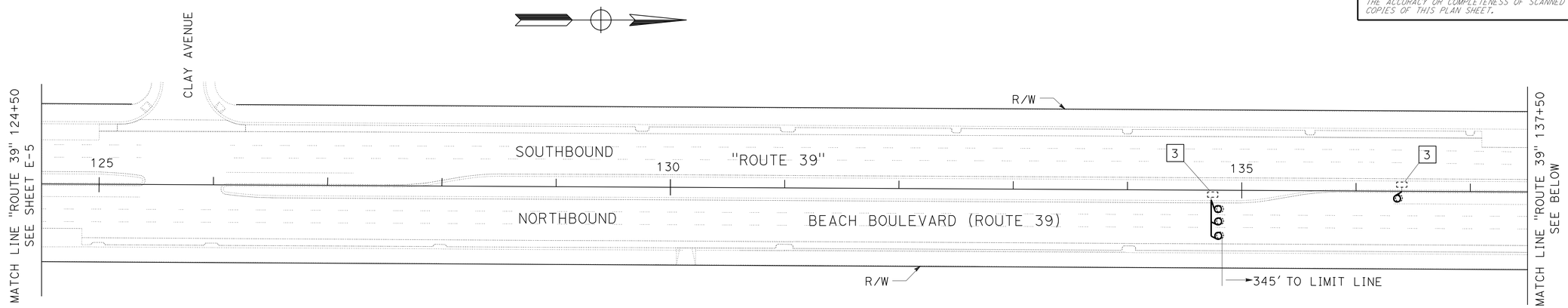

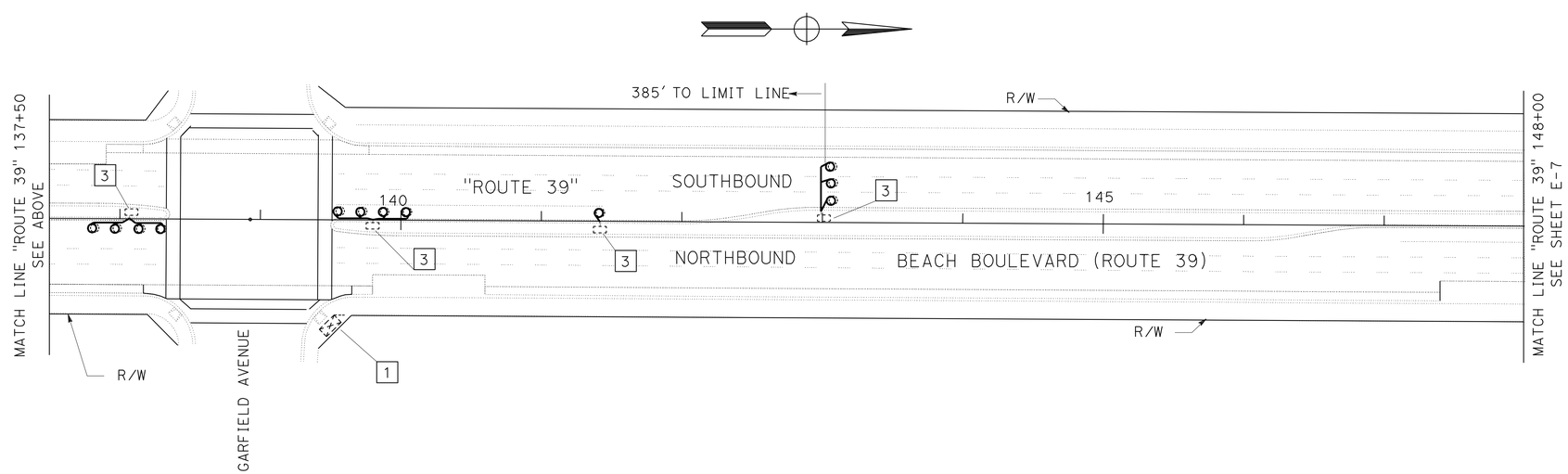

THIS PLAN IS ACCURATE FOR ELECTRICAL WORK ONLY.

INDUCTIVE LOOP DETECTOR

SCALE: 1" = 50'

E-6

STATE OF CALIFORNIA - DEPARTMENT OF TRANSPORTATION
Caltrans® **ELECTRICAL DESIGN**

FUNCTIONAL SUPERVISOR: SHAHRAM SHAHRIARI

CALCULATED-DESIGNED BY: BARJESH KUMAR
CHECKED BY: VANESSA TRUONG

REVISED BY | DATE REVISED

LAST REVISION 08-05-10 | DATE PLOTTED => 07-DEC-2010 | TIME PLOTTED => 10:50

Dist	COUNTY	ROUTE	POST MILES TOTAL PROJECT	SHEET No.	TOTAL SHEETS
12	Ora	39	0.0/3.2	45	54

08-15-10
REGISTERED ELECTRICAL ENGINEER DATE

12-6-10
PLANS APPROVAL DATE

REGISTERED PROFESSIONAL ENGINEER
S. SHAHRIARI
No. E13485
Exp. 9-30-10
ELECTRICAL
STATE OF CALIFORNIA

THE STATE OF CALIFORNIA OR ITS OFFICERS OR AGENTS SHALL NOT BE RESPONSIBLE FOR THE ACCURACY OR COMPLETENESS OF SCANNED COPIES OF THIS PLAN SHEET.

NOTE:

FOR ACCURATE RIGHT OF WAY DATA, CONTACT RIGHT OF WAY ENGINEERING AT THE DISTRICT OFFICE.

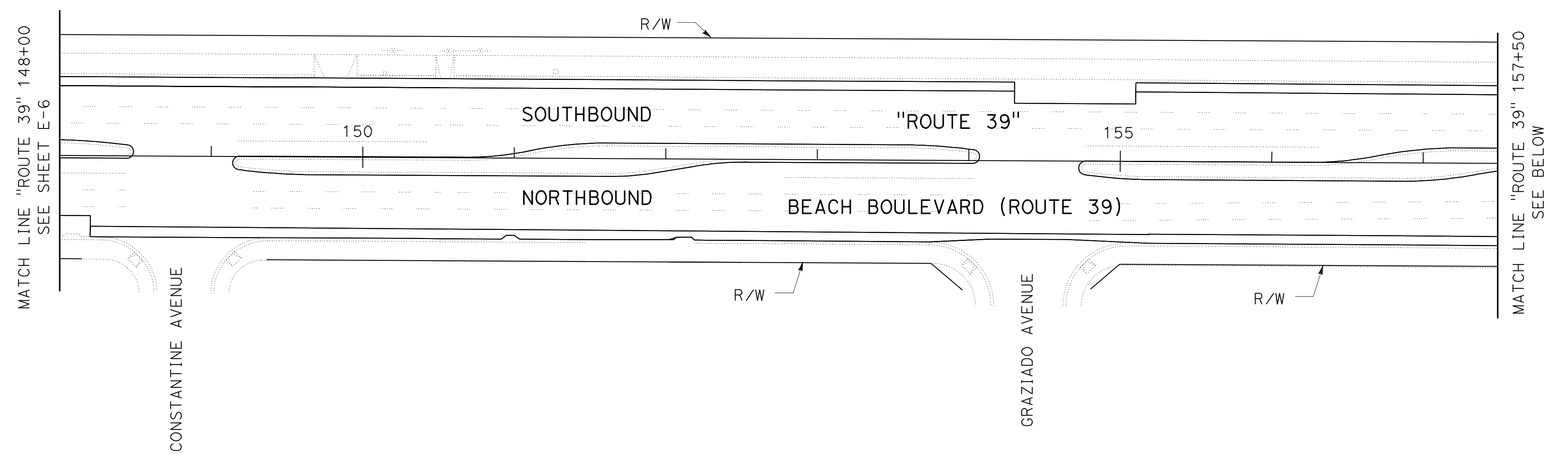

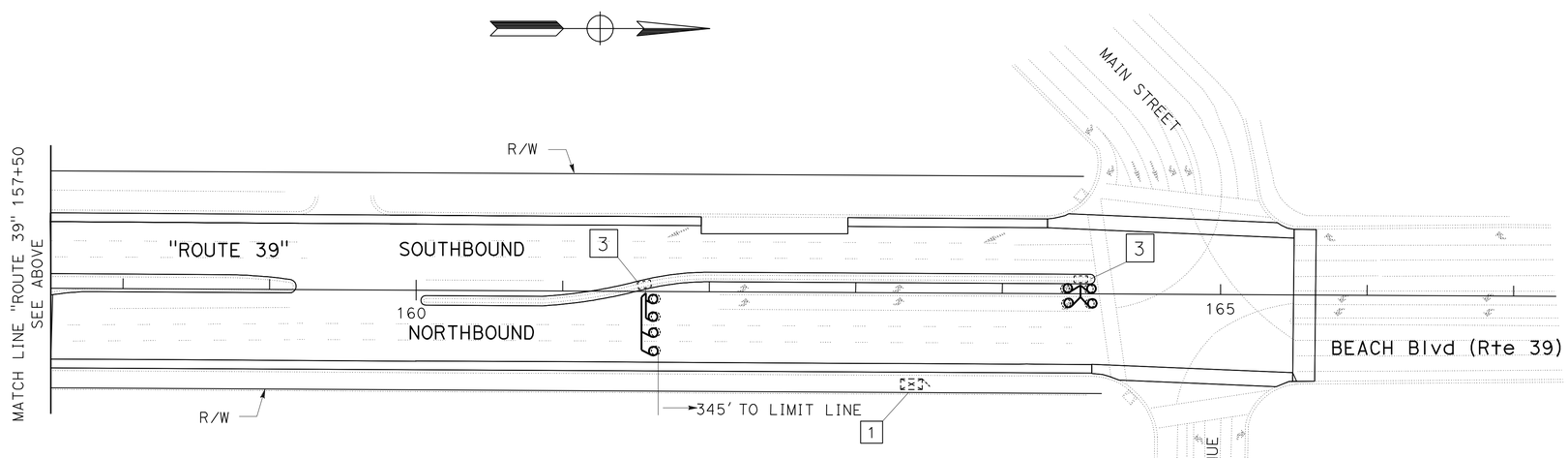

THIS PLAN IS ACCURATE FOR ELECTRICAL WORK ONLY.

INDUCTIVE LOOP DETECTOR

SCALE: 1" = 50'

E-7

STATE OF CALIFORNIA - DEPARTMENT OF TRANSPORTATION
Caltrans® ELECTRICAL DESIGN

FUNCTIONAL SUPERVISOR: SHAHRAM SHAHRIARI
CALCULATED-DESIGNED BY: BARJESH KUMAR
CHECKED BY: VANESSA TRUONG
REVISED BY
DATE REVISED

LAST REVISION 08-05-10
DATE PLOTTED => 07-DEC-2010
TIME PLOTTED => 10:49

DIST	COUNTY	ROUTE	POST MILES TOTAL PROJECT	SHEET NO.	TOTAL SHEETS
12	Ora	39	0.0/3.2	46	54

REGISTERED CIVIL ENGINEER

June 6, 2008
PLANS APPROVAL DATE

REGISTERED PROFESSIONAL ENGINEER
Donald E. Howe
No. C46402
Exp. 3-31-09
CIVIL
STATE OF CALIFORNIA

The State of California or its officers or agents shall not be responsible for the accuracy or completeness of electronic copies of this plan sheet.

To accompany plans dated 12-6-10

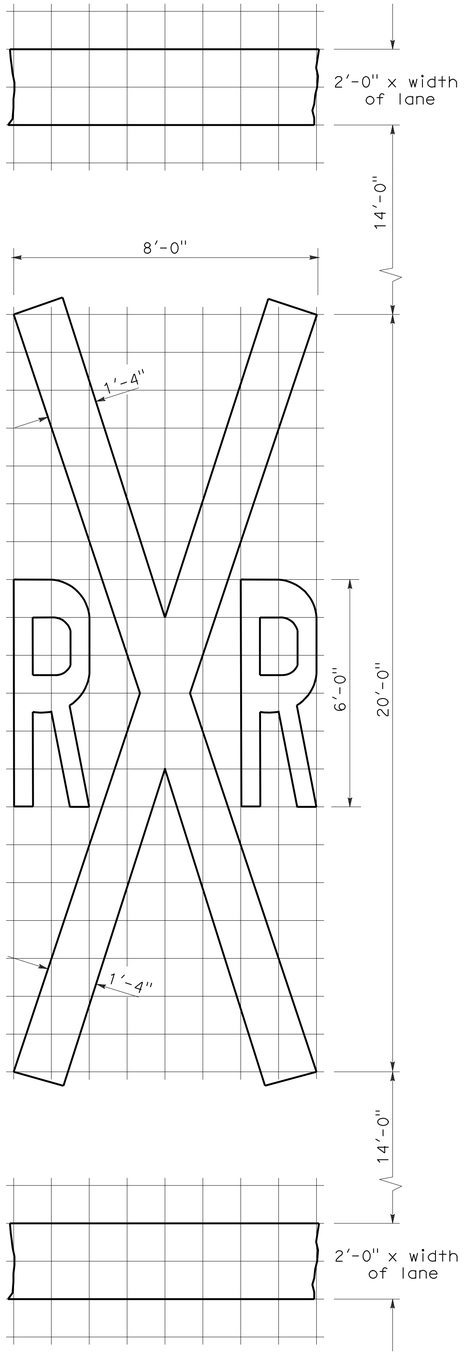

RAILROAD CROSSING SYMBOL

✳70 sq ft DOES NOT INCLUDE THE 2'-0" x VARIABLE WIDTH TRANSVERSE LINES.

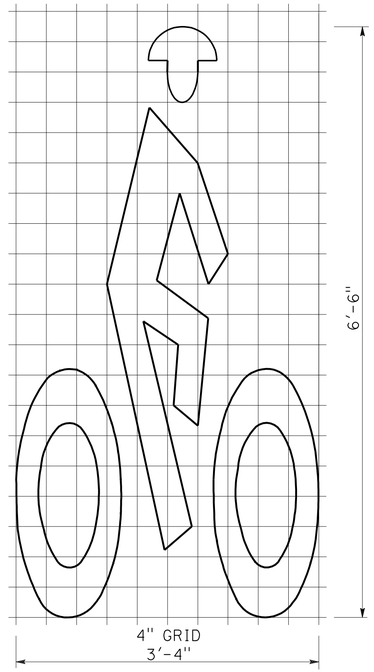

BIKE LANE SYMBOL

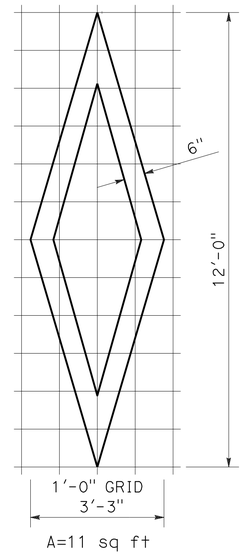

DIAMOND SYMBOL

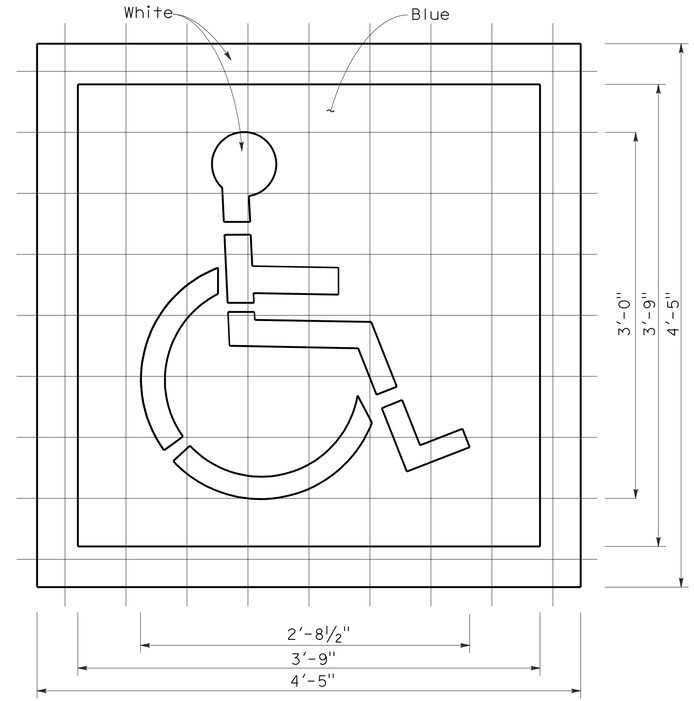

INTERNATIONAL SYMBOL OF ACCESSIBILITY MARKING

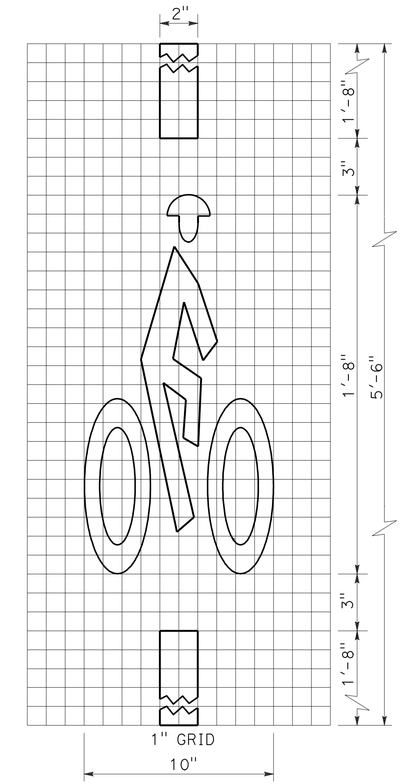

BICYCLE LOOP DETECTOR SYMBOL

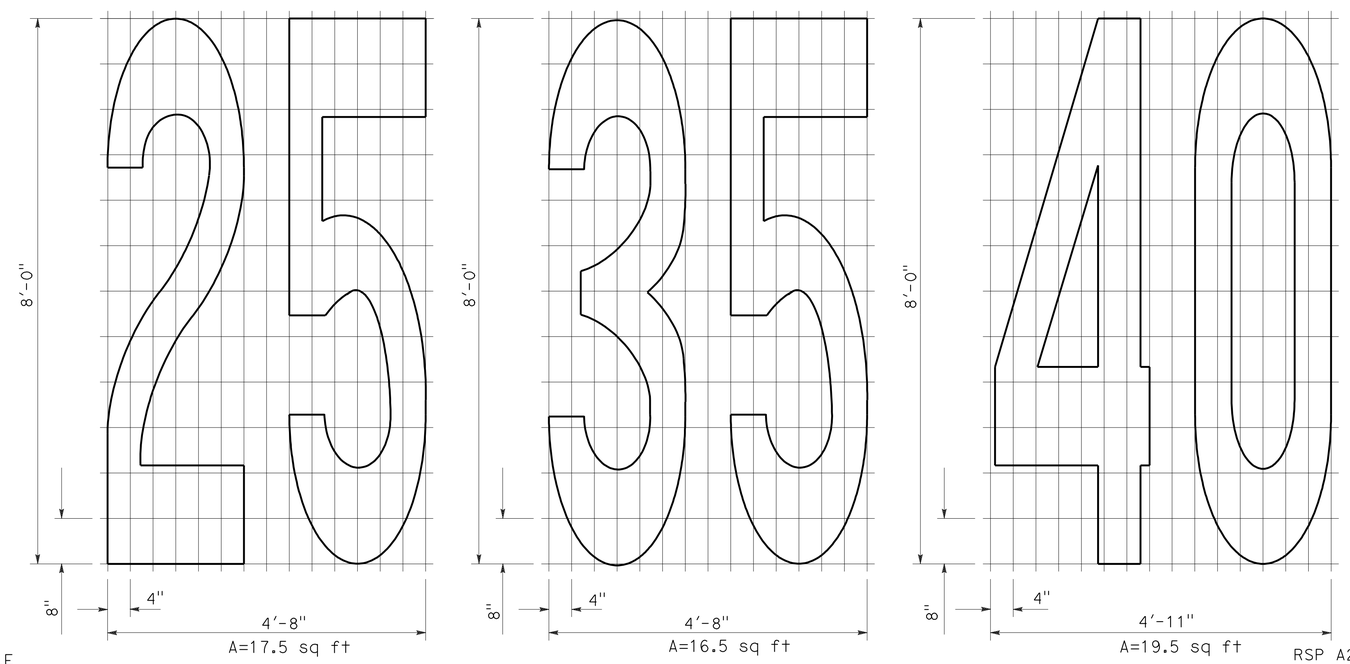

NUMERALS

NOTE:

1. Minor variations in dimensions may be accepted by the Engineer.

STATE OF CALIFORNIA
DEPARTMENT OF TRANSPORTATION

PAVEMENT MARKINGS SYMBOLS AND NUMERALS

NO SCALE

RSP A24C DATED JUNE 6, 2008 SUPERSEDES STANDARD PLAN A24C DATED MAY 1, 2006 - PAGE 11 OF THE STANDARD PLANS BOOK DATED MAY 2006.

REVISED STANDARD PLAN RSP A24C

2006 REVISED STANDARD PLAN RSP A24C

5-27-08

DIST	COUNTY	ROUTE	POST MILES TOTAL PROJECT	SHEET NO.	TOTAL SHEETS
12	Ora	39	0.0/3.2	47	54

Mark S. Turner
PROFESSIONAL LAND SURVEYOR

June 30, 2006
PLANS APPROVAL DATE

LICENSED LAND SURVEYOR
Mark S. Turner
No. 6228
Exp. 3-31-08
STATE OF CALIFORNIA

The State of California or its officers or agents shall not be responsible for the accuracy or completeness of electronic copies of this plan sheet.

To accompany plans dated 12-6-10

2006 REVISED STANDARD PLAN RSP A74

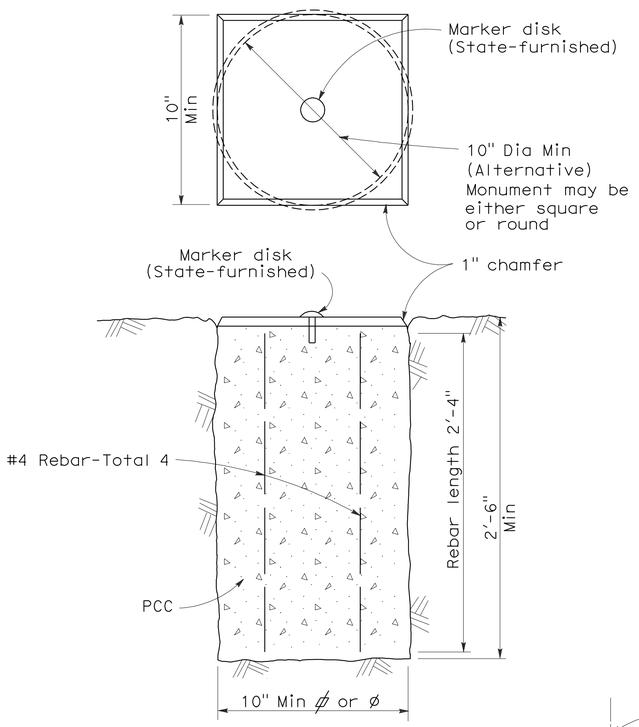

TYPE A

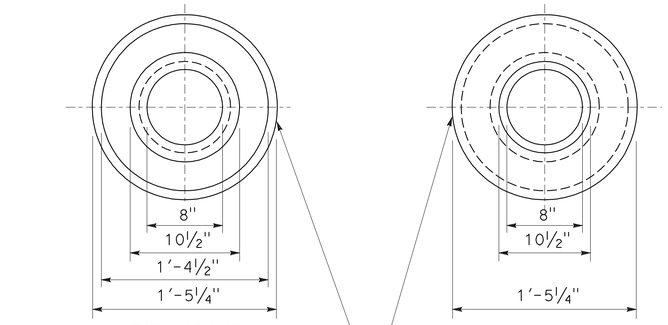

TOP VIEW OF
MONUMENT OF WELL RING

BOTTOM VIEW OF
MONUMENT OF WELL RING

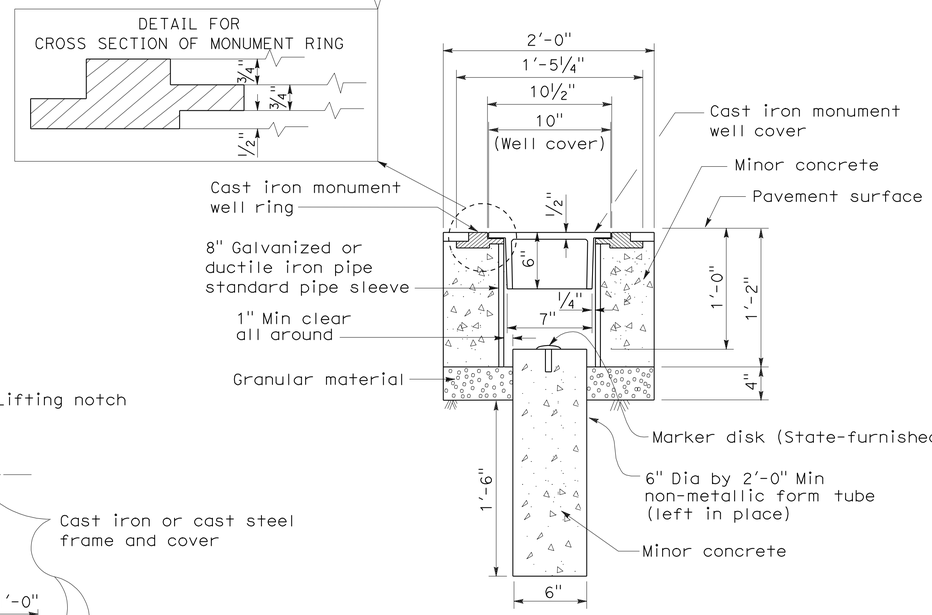

TYPE B

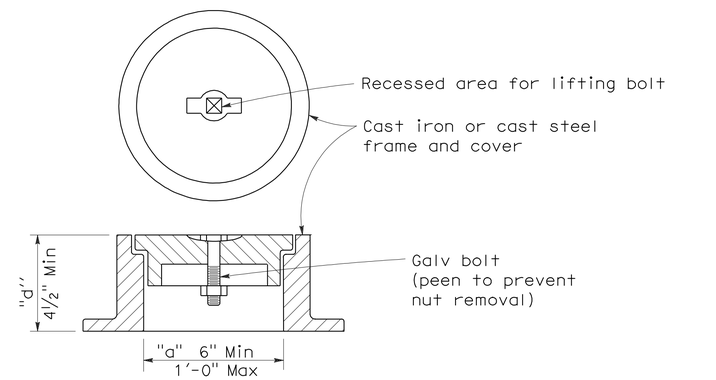

NOTES:

1. The configuration of the cast iron or cast steel frame and cover may vary from that shown.
2. Frame shall be embedded in the concrete a minimum of 3".
3. Type D monument shall be either Alternative No. 1 or Alternative No. 2 at the contractor's option.
4. All portland cement concrete shall be Class 2 or minor concrete with 1" maximum aggregate.

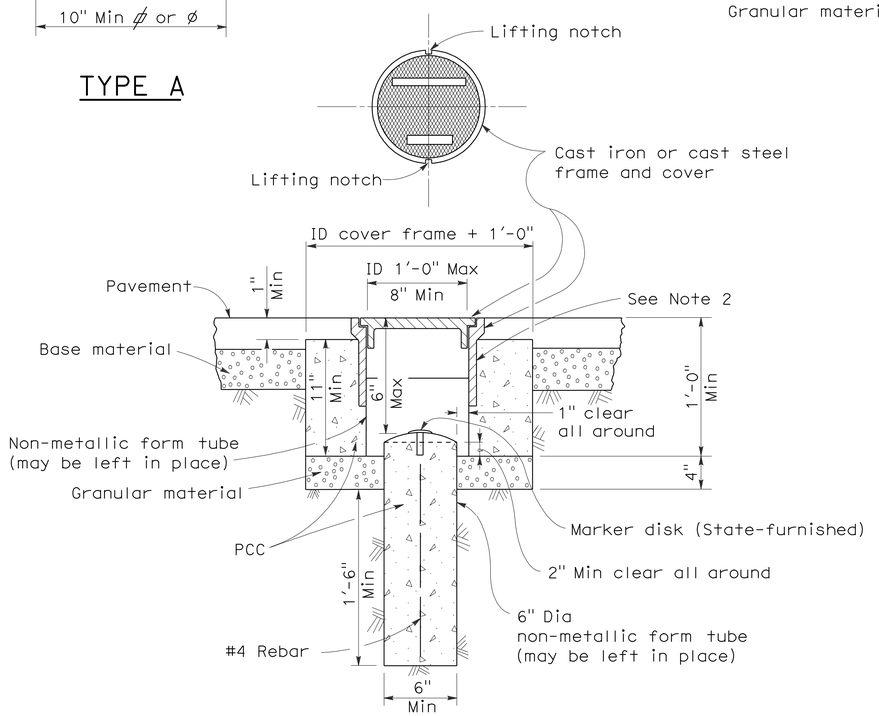

TYPE D
Alternative No. 1

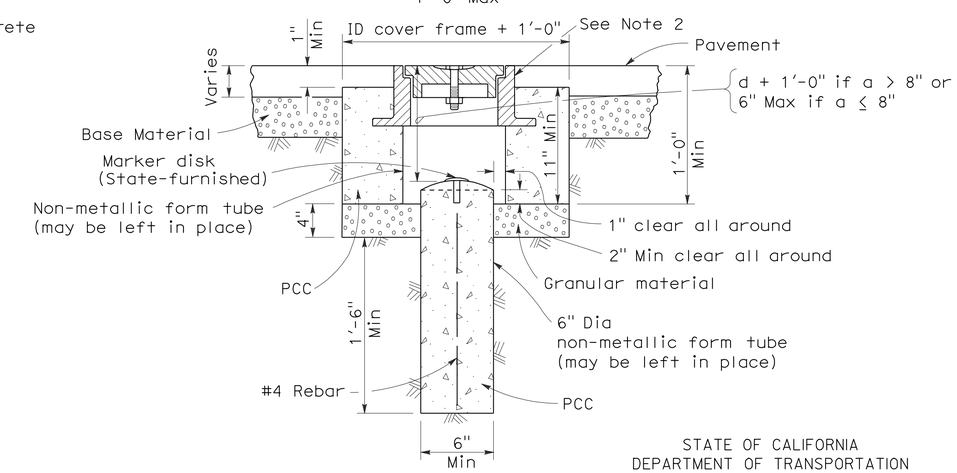

TYPE D
Alternative No. 2

STATE OF CALIFORNIA
DEPARTMENT OF TRANSPORTATION

SURVEY MONUMENTS

NO SCALE

RSP A74 DATED JUNE 30, 2006 SUPERSEDES STANDARD PLAN DATED MAY 1, 2006 - PAGE 28 OF THE STANDARD PLANS BOOK DATED MAY 2006.

REVISED STANDARD PLAN RSP A74

5-24-06

DIST	COUNTY	ROUTE	POST MILES TOTAL PROJECT	SHEET NO.	TOTAL SHEETS
12	Ora	39	0.0/3.2	48	54

Randell D. Hiatt
REGISTERED CIVIL ENGINEER

June 6, 2008
PLANS APPROVAL DATE

REGISTERED PROFESSIONAL ENGINEER
Randell D. Hiatt
No. C50200
Exp. 6-30-09
CIVIL
STATE OF CALIFORNIA

The State of California or its officers or agents shall not be responsible for the accuracy or completeness of electronic copies of this plan sheet.

To accompany plans dated 12-6-10

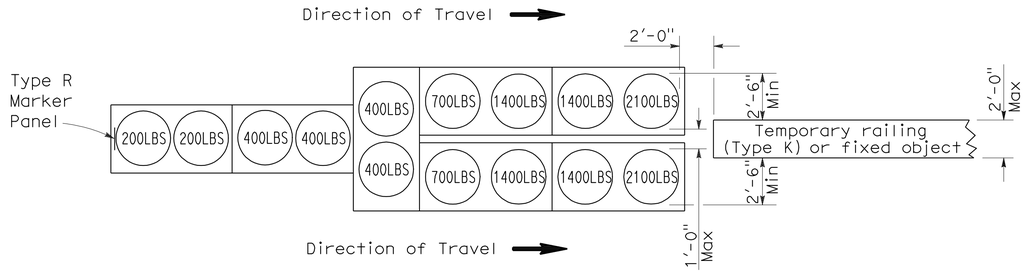

ARRAY 'TU14'

Approach speed 45 mph or more

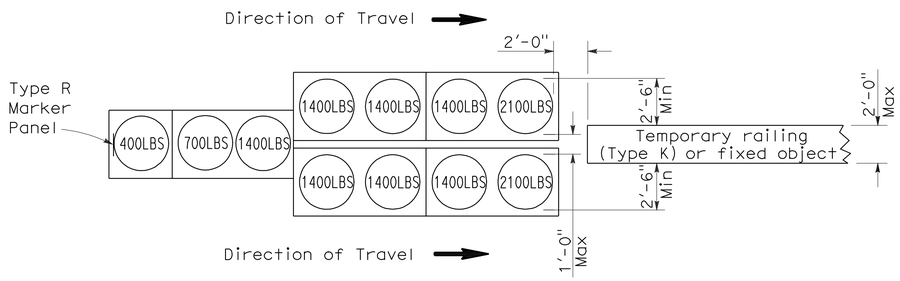

ARRAY 'TU11'

Approach speed less than 45 mph

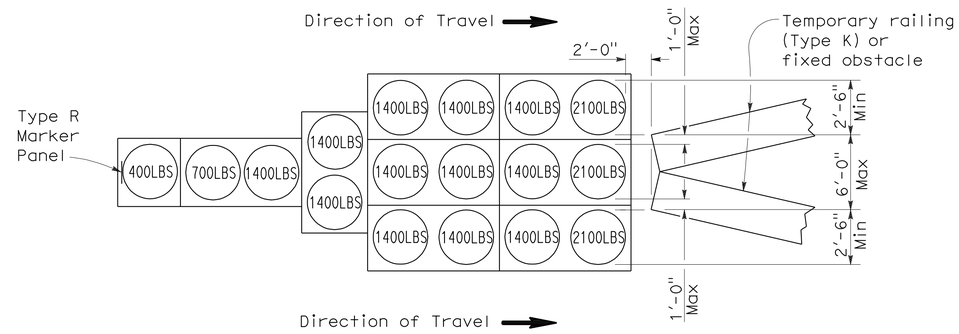

ARRAY 'TU17'

Approach speed less than 45 mph

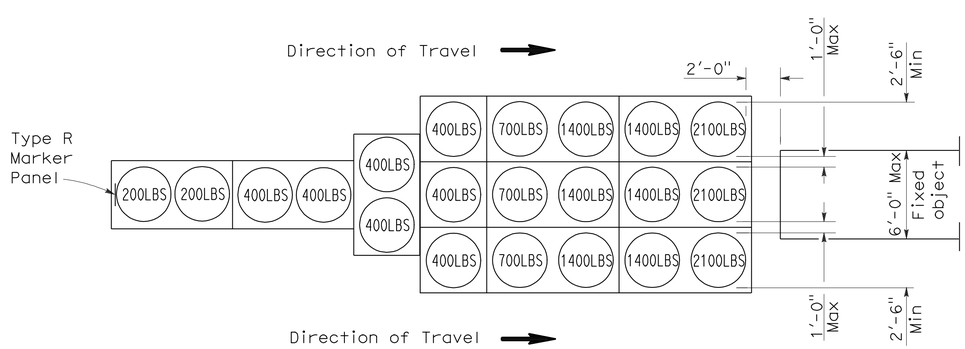

ARRAY 'TU21'

Approach speed 45 mph or more

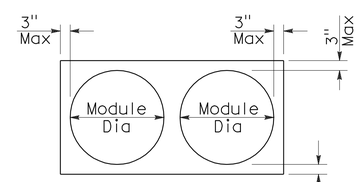

PLAN

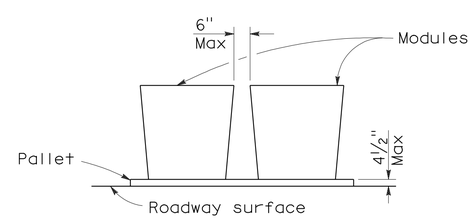

ELEVATION

CRASH CUSHION PALLET DETAIL

See Note 7

NOTES:

1. (XXX) Indicates sand filled module location and weight of sand in pounds for each module. Module spacing is based on the greater diameter of the module.
2. All sand weights are nominal.
3. Temporary crash cushion arrays shall not encroach on the traveled way.
4. Place the top of Type R marker panel 1" below the module lid.
5. Refer to Standard Plan A73B for marker details.
6. Approach speeds indicated conform to NCHRP 350 Report criteria.
7. Use of pallets is optional.

STATE OF CALIFORNIA
DEPARTMENT OF TRANSPORTATION

TEMPORARY CRASH CUSHION, SAND FILLED (UNIDIRECTIONAL)

NO SCALE

RSP T1A DATED JUNE 6, 2008 SUPERSEDES STANDARD PLAN T1A
DATED MAY 1, 2006 - PAGE 211 OF THE STANDARD PLANS BOOK DATED MAY 2006.

REVISED STANDARD PLAN RSP T1A

2006 REVISED STANDARD PLAN RSP T1A

DIST	COUNTY	ROUTE	POST MILES TOTAL PROJECT	SHEET NO.	TOTAL SHEETS
12	Ora	39	0.0/3.2	49	54

Randell D. Hiatt
REGISTERED CIVIL ENGINEER

June 6, 2008
PLANS APPROVAL DATE

REGISTERED PROFESSIONAL ENGINEER
Randell D. Hiatt
No. C50200
Exp. 6-30-09
CIVIL
STATE OF CALIFORNIA

The State of California or its officers or agents shall not be responsible for the accuracy or completeness of electronic copies of this plan sheet.

To accompany plans dated 12-6-10

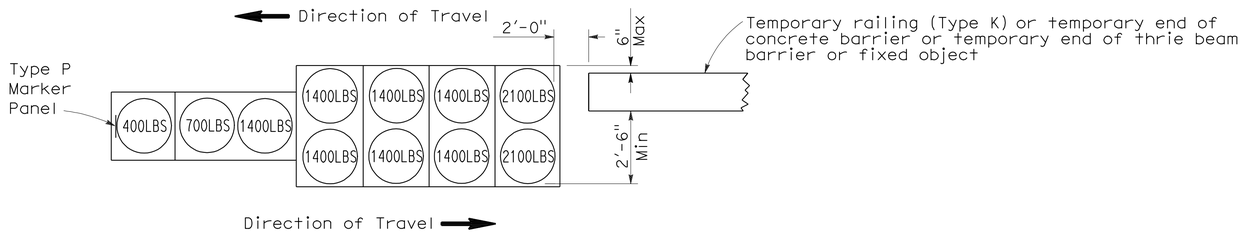

ARRAY 'TB11'

Approach speed less than 45 mph

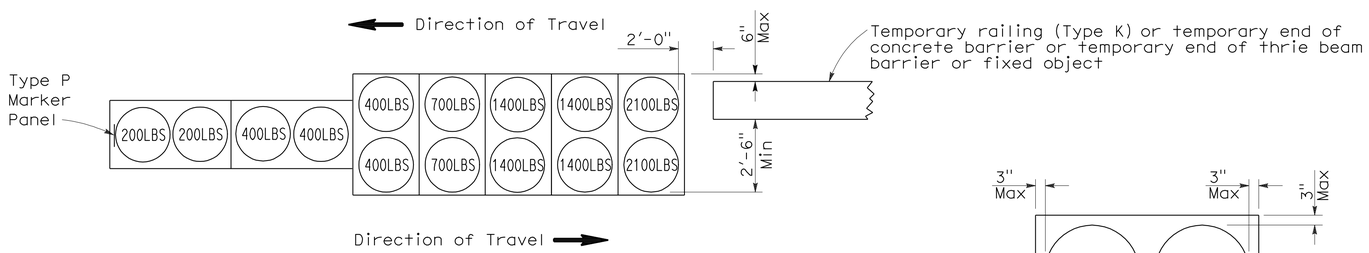

ARRAY 'TB14'

Approach speed 45 mph or more

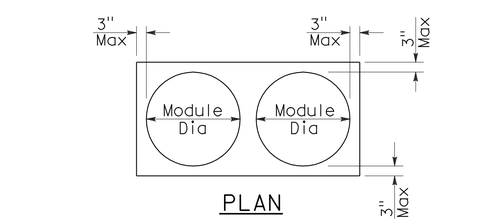

PLAN

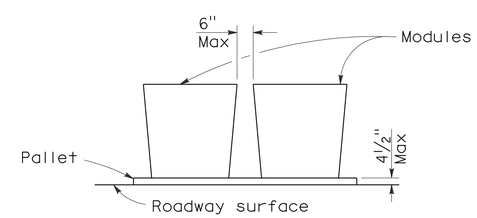

ELEVATION

CRASH CUSHION PALLET DETAIL

See Note 7

NOTES:

1. (XXX) Indicates sand filled module location and weight of sand in pounds for each module. Module spacing is based on the greater diameter of the module.
2. All sand weights are nominal.
3. Temporary crash cushion arrays shall not encroach on the traveled way.
4. Place the Type P marker panel so that the bottom of the panel rests upon the pallet.
5. Refer to Standard Plan A73B for marker details.
6. Approach speeds indicated conform to NCHRP 350 Report criteria.
7. Use of pallets is optional.

STATE OF CALIFORNIA
DEPARTMENT OF TRANSPORTATION

TEMPORARY CRASH CUSHION, SAND FILLED (BIDIRECTIONAL)

NO SCALE

RSP T1B DATED JUNE 6, 2008 SUPERSEDES STANDARD PLAN T1B
DATED MAY 1, 2006 - PAGE 212 OF THE STANDARD PLANS BOOK DATED MAY 2006.

REVISED STANDARD PLAN RSP T1B

2006 REVISED STANDARD PLAN RSP T1B

DIST	COUNTY	ROUTE	POST MILES TOTAL PROJECT	SHEET NO.	TOTAL SHEETS
12	Ora	39	0.0/3.2	50	54

Randell D. Hiatt
REGISTERED CIVIL ENGINEER

June 6, 2008
PLANS APPROVAL DATE

REGISTERED PROFESSIONAL ENGINEER
Randell D. Hiatt
No. C50200
Exp. 6-30-09
CIVIL
STATE OF CALIFORNIA

The State of California or its officers or agents shall not be responsible for the accuracy or completeness of electronic copies of this plan sheet.

To accompany plans dated 12-6-10

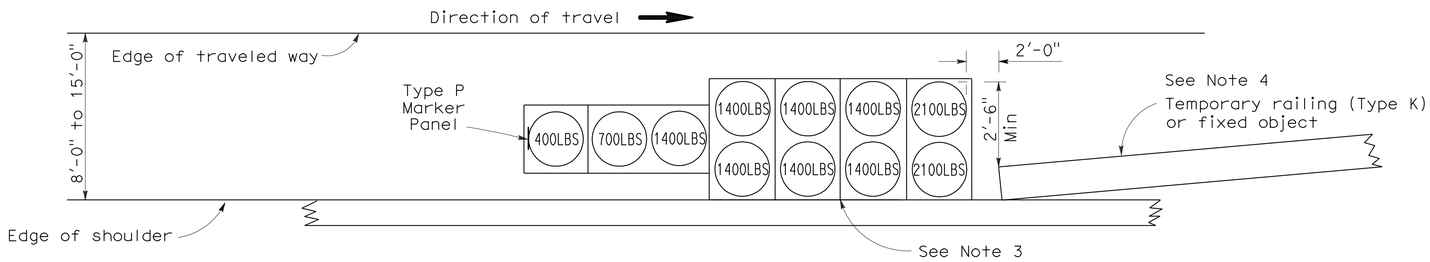

ARRAY 'TS11'

Approach speed less than 45 mph
See Note 9

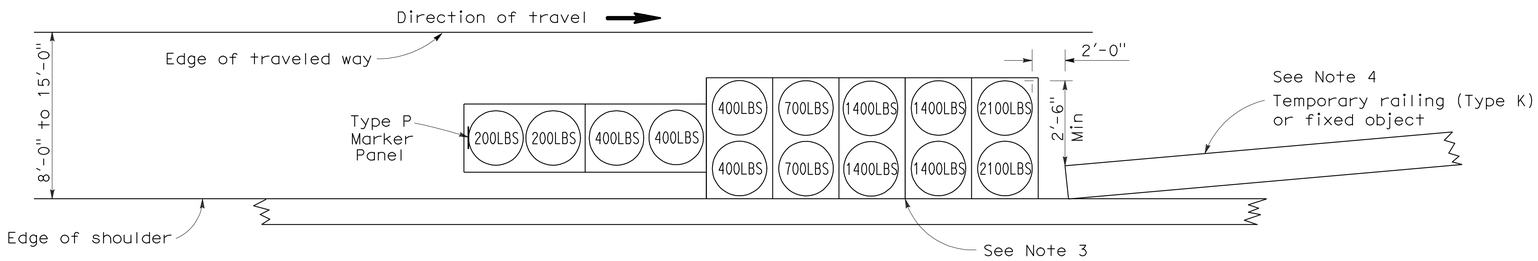

ARRAY 'TS14'

Approach speed 45 mph or more
See Note 9

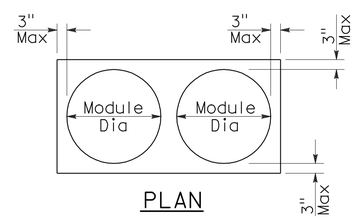

PLAN

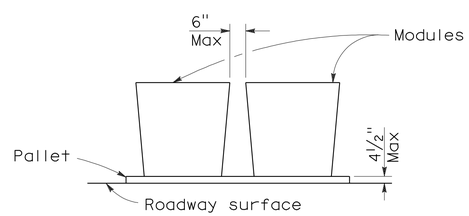

ELEVATION

CRASH CUSHION PALLET DETAIL

See Note 11

NOTES:

1. (XXX) Indicates sand filled module location and weight of sand in pounds for each module. Module spacing is based on the greater diameter of the module.
2. All sand weights are nominal.
3. The temporary crash cushion arrays shown on this plan shall be used only in locations where there will be traffic on one side of the temporary crash cushion array.
4. If the fixed object or approach end of the temporary railing is less than 15'-0" from the edge of traveled way, a temporary crash cushion is required in a construction or work zone.
5. Temporary crash cushion arrays shall not encroach on the traveled way.
6. Arrays for median shoulders shall conform to details shown on this plan for outside shoulders.
7. Place the Type P marker panel so that the bottom of the panel rests upon the pallet and faces traffic.
8. Refer to Standard Plan A73B for marker details.
9. For shoulder widths less than 8'-0", appropriate approved crash cushion protection, other than sand filled modules, shall be provided at fixed objects and at approach ends of temporary railing. The specific type of crash cushion shall be as shown on the project plans or as specified in the Special Provisions, or if not shown on the project plans or specified in the Special Provisions, shall be as approved by the Engineer.
10. Approach speeds indicated conform to NCHRP 350 Report criteria.
11. Use of pallets is optional.

STATE OF CALIFORNIA
DEPARTMENT OF TRANSPORTATION

TEMPORARY CRASH CUSHION, SAND FILLED (SHOULDER INSTALLATIONS)

NO SCALE

RSP T2 DATED JUNE 6, 2008 SUPERSEDES STANDARD PLAN T2
DATED MAY 1, 2006 - PAGE 213 OF THE STANDARD PLANS BOOK DATED MAY 2006.

REVISED STANDARD PLAN RSP T2

2006 REVISED STANDARD PLAN RSP T2

DIST	COUNTY	ROUTE	POST MILES TOTAL PROJECT	SHEET NO.	TOTAL SHEETS
12	Ora	39	0.0/3.2	51	54

REGISTERED ELECTRICAL ENGINEER

October 5, 2007
PLANS APPROVAL DATE

REGISTERED PROFESSIONAL ENGINEER Jeffery G. McRae No. E14512 Exp. 6-30-08 ELECTRICAL STATE OF CALIFORNIA

The State of California or its officers or agents shall not be responsible for the accuracy or completeness of electronic copies of this plan sheet.

To accompany plans dated 12-6-10

2006 REVISED STANDARD PLAN RSP ES-1A

ELECTROLIERS

STANDARD TYPES
15, 15D
15 STRUCTURE
21, 21D STRUCTURE
30
31
32
35
36-20A

High mast light pole

Double Arm lighting standard

Existing electrolier

Electrolier foundation (Future installation)

NOTES:

1. Luminaires shall be 310 W HPS when installed on Type 21, 21D, 30, 31, 32, 35 and 36-20A Standards, unless otherwise specified. Luminaires shall be 200 W HPS when installed on other type standards or poles, unless otherwise specified.
2. Luminaires shall be the cutoff type, ANSI Type Ⅲ medium cutoff lighting distribution, unless otherwise specified.
3. Variations noted adjacent to symbol on project plans.

Electrolier (see project notes or project plans)

Luminaire on wood pole

STANDARD NOTES:

- AB — Abandon. If applied to conduit, remove conductors.
- BC — Install pull box in existing conduit run.
- BP — Pedestrian barricade, type as indicated on plan.
- CB — Install conduit into existing pull box.
- CC — Connect new and existing conduit. Remove existing conductors and install conductors as indicated.
- CF — Conduit to remain for future use. Remove conductors. Install pull wire or rope.
- DH — Detector handhole.
- FA — Foundation to be abandoned.
- IS — Install sign on signal mast arm.
- NS — No slip base on standard.
- PEC — Photoelectric control.
- PEU — Photoelectric unit.
- RC — Equipment or material to be removed and become the property of the Contractor.
- RE — Remove electrolier, fuses and ballast. Tape ends of conductors.
- RL — Relocate equipment.
- RR — Remove and reuse equipment.
- RS — Remove and salvage equipment.
- SC — Splice new to existing conductors.
- SD — Service disconnect.
- SF — Standard to remain for future use. Remove luminaire, pole conductors, fuses and ballast.
- TSP — Telephone service point.

ABBREVIATIONS AND EQUIPMENT DESIGNATIONS

PROPOSED	EXISTING	
BBS	bbs	Battery backup system
BC	bc	Bolt circle
C	C	Conduit
CCTV	cctv	Closed circuit television
CKT	ckt	Circuit
CMS	cms	Changeable message sign
DLC	dlc	Loop detector lead-in cable
EMS	ems	Extinguishable message sign
EVC	evc	Emergency vehicle cable
EVD	evd	Emergency vehicle detector
FB	fb	Flashing beacon
FBCA	fbca	Flashing beacon control assembly
FBS	fbs	Flashing beacon with slip base
FO	fo	Fiber optic
G	G	Ground (Equipment Grounding Conductor)
GFCI	GFCI	Ground fault circuit interrupt
HAR	har	Highway advisory radio
HEX	hex	Hexagonal
HPS	hps	High pressure sodium
IISNS	iisns	Internally illuminated street name sign
ISL	isl	Induction sign lighting
LED	led	Light emitting diode
LMA	lma	Luminaire mast arm
LPS	lps	Low pressure sodium
LTG	ltg	Lighting
LUM	lum	Luminaire
MAT	mat	Mast arm mounting vehicle signal faces, top attachment
MAS	mas	Mast arm mounting vehicle signal faces, side attachment
MAS-4A	mas-4A	Mast arm mounting vehicle signal faces, side attachment - 4 signal section
MAS-4B	mas-4B	
MAS-4C	mas-4C	
MAS-5A	mas-5A	Mast arm mounting vehicle signal faces, side attachment - 5 signal section
MAS-5B	mas-5B	
MC	mc	Mercury contactor
M/M	m/m	Multiple to multiple transformer
MT	mt	Conduit with pull wire or rope only
MTG	mtg	Mounting
	mv	Mercury vapor lighting fixture
N	N	Neutral (Grounded Conductor)
NC	NC	Normally closed
NO	NO	Normally open
PB	pb	Pull box
PEC	pec	Photoelectric control (Type Ⅰ, Ⅱ, Ⅲ, Ⅳ or Ⅴ as shown)
PED	ped	Pedestrian
PEU	peu	Photoelectric unit
PPB	ppb	Pedestrian push button
RL		Relocated equipment
RM	rm	Ramp metering
SB	sb	Slip base
SIC	sic	Signal interconnect cable
SIG	sig	Signal
SMA	sma	Signal mast arm
SNS	sns	Street name sign
SP	sp	Service point
TDC	tdc	Telephone demarcation cabinet
TMS	tms	Traffic monitoring station
TOS	tos	Traffic Operations System
VEH	veh	Vehicle
XFMR	xfmr	Transformer
COMM	comm	Communication
RWIS	rwis	Roadway weather information system

SOFFIT AND WALL MOUNTED LUMINAIRES

Pendant, 70 W HPS unless otherwise specified.

Flush, 70 W HPS unless otherwise specified.

Wall surface, 70 W HPS unless otherwise specified.

Existing soffit or wall luminaire to remain unmodified.

Existing soffit or wall luminaire to be modified as specified.

NOTE:

Arrow indicates "street side" of luminaire.

STATE OF CALIFORNIA
DEPARTMENT OF TRANSPORTATION

ELECTRICAL SYSTEMS (SYMBOLS AND ABBREVIATIONS)

NO SCALE

RSP ES-1A DATED OCTOBER 5, 2007 SUPERSEDES STANDARD PLAN ES-1A DATED MAY 1, 2006 - PAGE 400 OF THE STANDARD PLANS BOOK DATED MAY 2006.

REVISED STANDARD PLAN RSP ES-1A

DIST	COUNTY	ROUTE	POST MILES TOTAL PROJECT	SHEET NO.	TOTAL SHEETS
12	Ora	39	0.0/3.2	52	54

REGISTERED ELECTRICAL ENGINEER

October 5, 2007
PLANS APPROVAL DATE

REGISTERED PROFESSIONAL ENGINEER
Jeffery G. McRae
No. E14512
Exp. 6-30-08
ELECTRICAL
STATE OF CALIFORNIA

The State of California or its officers or agents shall not be responsible for the accuracy or completeness of electronic copies of this plan sheet.

To accompany plans dated 12-6-10

CONDUIT

PROPOSED	EXISTING	
		Lighting Conduit, unless otherwise indicated or noted
		Traffic signal conduit
C	c	Communication conduit
T	t	Telephone conduit
F	f	Fire alarm conduit
FO	fo	Fiber optic conduit
		Conduit termination (RSP ES-9A C)
R	r	Conduit riser in/on structure or service pole

SERVICE EQUIPMENT

PROPOSED	EXISTING	
OH	oh	Overhead lines
U	U	Wood pole "U" indicates utility owned
		Pole guy with anchor
		Utility transformer - ground mounted
III		Service equipment enclosure type
		Service equipment enclosure door indicates front of enclosure
T	t	Telephone demarcation cabinet

POLE-MOUNTED SERVICE DESIGNATION

Type of installation

TYPE H SERVICE - 28'-10" ← Pole height above grade

ILLUMINATED OVERHEAD SIGN

PROPOSED	EXISTING	
		Overhead sign - Single post
		Overhead sign - Two post
		Overhead sign - Mounted on structure
		Overhead sign with electrolier

SIGNAL EQUIPMENT

PROPOSED	EXISTING	
		Pedestrian signal face
		Pedestrian push button post
		Pedestrian barricade
		Vehicle signal face (with backplate, 3-Section: red, yellow and green)
		Vehicle signal face with angle visors
PV	PV	Modifications of basic symbols: "L" indicates all non-arrow sections louvered "LG" indicates louvered green section only "PV" indicates 12" programmed visibility sections "8" indicates all 8" sections (only when specified)
		Type 15TS and Vehicle signal face
		Vehicle signal face with red, yellow and green left arrow sections
		Vehicle signal face with red and yellow sections and up green arrow
		Vehicle signal face (5 Section) with red, yellow and green sections and yellow and green right arrows
		Type 1 Standard and attached vehicle signal faces
		Standard with signal mast arm only and attached vehicle signal faces and internally illuminated street name sign
		Type 33 Standard, Left-turn vehicle signal face and sign
		Standard with luminaire and signal mast arms and attached vehicle signal faces
		Cantilever flashing beacon Type 9 Frame, with a sign unless otherwise specified or indicated
		Type 15-FBS Standard with two vehicle signal face sections with lens, backplate and visor with a sign
R	Y	Flashing beacon. One vehicle signal face section with lens, backplate and visor. "R" indicates red indication, "Y" indicates yellow indication
		Controller assembly. Door indicates front of cabinet

SIGNAL EQUIPMENT Cont

PROPOSED	EXISTING	
		Guard post
		Type 1 Standard with "Meter On" sign
		Emergency Vehicle detector

NOTES:

1. All signal sections shall be 12" unless shown otherwise.
2. Signal heads shall be provided with backplates unless shown otherwise.
3. Signal indication shall be LED.

STATE OF CALIFORNIA
DEPARTMENT OF TRANSPORTATION

ELECTRICAL SYSTEMS (SYMBOLS AND ABBREVIATIONS)

NO SCALE

RSP ES-1B DATED OCTOBER 5, 2007 SUPERCEDES STANDARD PLAN ES-1B
DATED MAY 1, 2006 - PAGE 401 OF THE STANDARD PLANS BOOK DATED MAY 2006.

REVISED STANDARD PLAN RSP ES-1B

2006 REVISED STANDARD PLAN RSP ES-1B

DIST	COUNTY	ROUTE	POST MILES TOTAL PROJECT	SHEET NO.	TOTAL SHEETS
12	Ora	39	0.0/3.2	53	54

REGISTERED ELECTRICAL ENGINEER

October 5, 2007
PLANS APPROVAL DATE

REGISTERED PROFESSIONAL ENGINEER Jeffery G. McRae No. E14512 Exp. 6-30-08 ELECTRICAL STATE OF CALIFORNIA

The State of California or its officers or agents shall not be responsible for the accuracy or completeness of electronic copies of this plan sheet.

To accompany plans dated 12-6-10

EQUIPMENT IDENTIFICATION

ILLUMINATED SIGN IDENTIFICATION NUMBER:

Sign No. 12345

10 ISL SCI 1.0

- Sign number - Place on post or structure
- Transformer rating (kVA)
- Lighting control type
- Number and type of fixtures

Do NOT place on standard or structure

ELECTROLIER OR EQUIPMENT IDENTIFICATION NUMBER:

12345 - 15'-0"

- Mast arm length, if shown. Do not place on standard or structure.
- Equipment number - Place on standard or structure. Existing equipment numbers are shown in parenthesis

CONDUIT AND CONDUCTOR IDENTIFICATION:

1½"C, 2#10, 15#14, 2 DLC

- Number and size of conductors and cables
- Size of conduit in inches

Ø1, Ø2, Ø2P, etc.	Traffic phase identification for signal faces, detectors and phase diagrams
1 2 3	Project note numbers
A B C	Equipment description, installation or item numbers
1 2 3	Conduit run numbers

SIGNAL AND LIGHTING STANDARD (TYPICAL DESIGNATION):

19A - 3 - 100

- Wind velocity = 100 mph
- Case 3 arm loading
- Standard type
- Standard Plan sheet number
- Detail number or letter

MISCELLANEOUS EQUIPMENT

PROPOSED	EXISTING	
CMS	cms	Changeable message sign
		Closed circuit television camera
		Highway advisory radio pole and antenna
EMS	ems	Extinguishable message sign
M V	m v	Detection device M = Microwave sensor V = Video image sensor

WIRING DIAGRAM LEGEND

P	Pole
CB	Circuit breaker
A	Ampere
V	Volt
M	Metered
UM	Unmetered
NB	Neutral bus
GB	Ground bus
G	Equipment grounding conductor
N	Grounded conductor (Neutral)

- External conductor
- Conductor or bus
- Tie point
- Contactor coil
- Contactor, Contact NO
- Terminal blocks
- Contactor, Contact NC
- Enclosure bond
- Grounding electrode
- Circuit breaker
- Receptacle

PULL BOXES

PROPOSED EXISTING

Pull box-No. 5 unless otherwise indicated or noted.

3 9A(21)

Pull box-Additional designations or descriptions

3	= No. 3½ pull box
5	= No. 5 pull box
6	= No. 6 pull box
7	= No. 7 (Ceiling pull box)
8	= No. 8 (Pendant soffit pull box)
9	= No. 9 pull box
9A	= No. 9A pull box

(C)	= Communications pull box
(E)	= Pull box with extension
(S)	= Sprinkler control pull box
(21)	= Anchor bolts and conduit for future installation of Type 21 Standard
(T)	= Traffic pull box

VEHICLE DETECTORS

5 J 9 U

- Vehicle detector designation
- U = Upper
  L = Lower
- Slot number in input file
- Input file (I or J)
- Phase

PROPOSED EXISTING

	Type A detector loop. Outline of sawcut shown.
	Type B detector loop. Outline of sawcut shown.
	Type C detector loop. Outline of sawcut shown.
	Type D detector loop. Outline of sawcut shown.
	Type E detector loop. Outline of sawcut shown.
	Type Q detector loop. Outline of sawcut shown.
	Magnetic detector
DH dh	Detector handhole
	Microwave or video detection zone

STATE OF CALIFORNIA
DEPARTMENT OF TRANSPORTATION

ELECTRICAL SYSTEMS (SYMBOLS AND ABBREVIATIONS)

NO SCALE

RSP ES-1C DATED OCTOBER 5, 2007 SUPERCEDES STANDARD PLAN ES-1C DATED MAY 1, 2006 - PAGE 402 OF THE STANDARD PLANS BOOK DATED MAY 2006.

REVISED STANDARD PLAN RSP ES-1C

2006 REVISED STANDARD PLAN RSP ES-1C

DIST	COUNTY	ROUTE	POST MILES TOTAL PROJECT	SHEET NO.	TOTAL SHEETS
12	Ora	39	0.0/3.2	54	54

REGISTERED ELECTRICAL ENGINEER

October 5, 2007
PLANS APPROVAL DATE

REGISTERED PROFESSIONAL ENGINEER Jeffery G. McRae No. E14512 Exp. 6-30-08 ELECTRICAL STATE OF CALIFORNIA

The State of California or its officers or agents shall not be responsible for the accuracy or completeness of electronic copies of this plan sheet.

To accompany plans dated 12-6-10

LOOP INSTALLATION PROCEDURE

1. Loops shall be centered in lanes.
2. Saw slots in pavement for loop conductors as shown in details.
3. Distance between side of loop and a lead-in saw cut from adjacent detectors shall be 2'-0" minimum. Distance between lead-in saw cuts shall be 6" minimum.
4. Bottom of saw slot shall be smooth with no sharp edges.
5. Slots shall be washed until clean, blown out and thoroughly dried before installing loop conductors.
6. Adjacent loops on the same sensor unit channel shall be wound in opposite directions.
7. Identify and tag loop circuit pairs in the pull box with loop number, start (S) and finish (F) of conductor. Identify and tag lead-in-cable with sensor number and phase.
8. Install loop conductor in slot using a 3/16" to 1/4" thick wood paddle. Hold loop conductors with wood paddles (at the bottom of the sawed slot) during sealant placement.
9. No more than 2 twisted pairs shall be installed in one sawed slot.
10. Allow additional 5'-0" of slack length of conductor for the lead-in run to pull box.
11. The additional length of each conductor for each loop shall be twisted together into a pair (6 turns per 3'-4" minimum) before being placed in the slot and conduit leading to pull box.
12. Test each loop circuit for continuity, circuit resistance and insulation resistance at the pull box before filling slots.
13. Fill slots as shown in details.
14. Splice loop conductors to lead-in-cable. Splices shall be soldered.
15. End of lead-in-cable and Type 2 loop conductor shall be waterproofed prior to installing in conduit to prevent moisture from entering the cable.
16. Lead-in-cable shall not be spliced between the pull box and the controller cabinet terminals.
17. Test each loop circuit for continuity, circuit resistance and insulation resistance at the controller cabinet location.
18. Where loop conductors are not to be spliced to a lead-in-cable, the ends of the conductors shall be taped and waterproofed with electrical insulating coating.

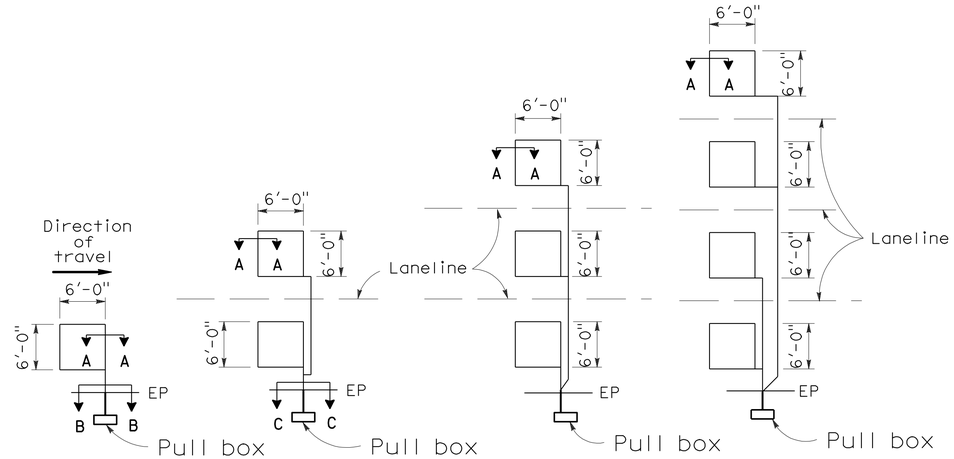

TYPE 1A INSTALLATION | TYPE 2A INSTALLATION | TYPE 3A INSTALLATION | TYPE 4A INSTALLATION

SAWCUT DETAILS

(Type A loop detector configurations illustrated)

1. 1A thru 4A = 1 Type A loop configuration in each lane.
2. 1B thru 4B = 1 Type B loop configuration in each lane.
3. 1C = 1 Type C loop configuration entering lanes as required.
4. 1D thru 4D = 1 Type D loop configuration in each lane.
5. 1E thru 4E = 1 Type E loop configuration in each lane.
6. 1Q thru 4Q = 1 Type Q loop configuration in each lane. (Use Type A, B, C, D, E or Q loop detector configurations only when specified or shown on plans)

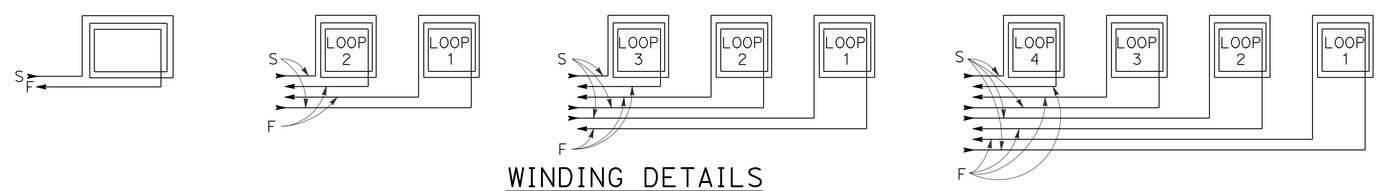

WINDING DETAILS

See Notes 6 and 7

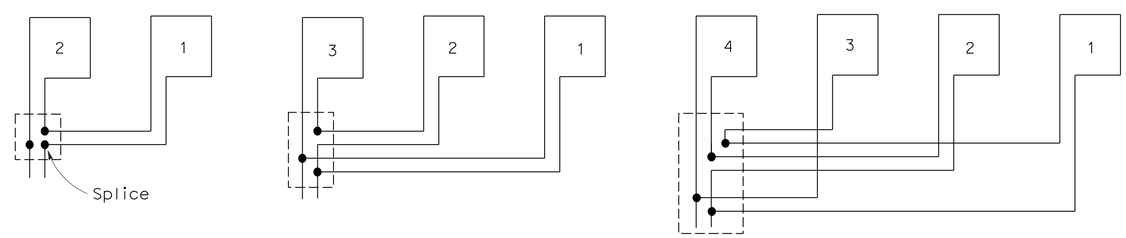

TYPICAL LOOP CONNECTIONS

(Dashed lines represent the pull box)

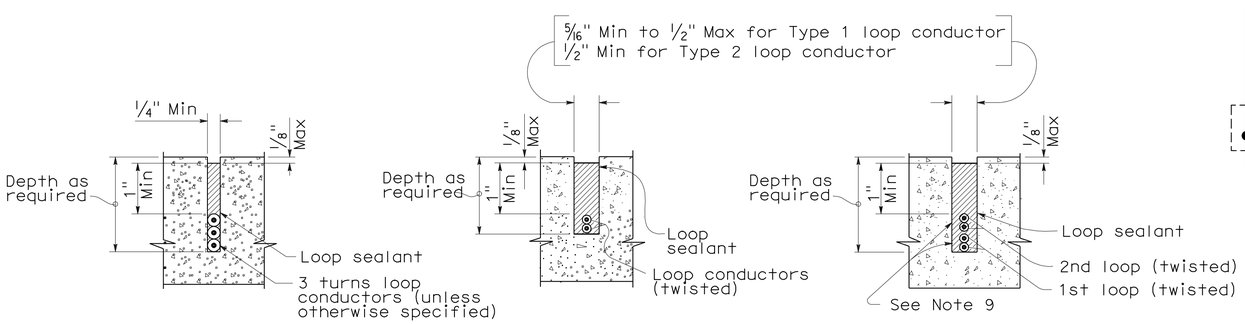

SECTION A-A | SECTION B-B | SECTION C-C

SLOT DETAILS - TYPE 1 AND TYPE 2 LOOP CONDUCTOR

STATE OF CALIFORNIA
DEPARTMENT OF TRANSPORTATION

ELECTRICAL SYSTEMS (DETECTORS)

NO SCALE

RSP ES-5A DATED OCTOBER 5, 2007 SUPERCEDES STANDARD PLAN ES-5A DATED MAY 1, 2006 - PAGE 423 OF THE STANDARD PLANS BOOK DATED MAY 2006.

REVISED STANDARD PLAN RSP ES-5A

2006 REVISED STANDARD PLAN RSP ES-5A