Dist	COUNTY	ROUTE	POST MILES TOTAL PROJECT	SHEET No.	TOTAL SHEETS
12	Ora	5,73	Var	1	13

INDEX OF PLANS

SHEET No.	DESCRIPTION
1	TITLE AND LOCATION MAP
2	CONSTRUCTION AREA S:
3-4	TRAFFIC HANDLING PLANS, DETAILS AND QUANTITIES
5-7	REVISED AND NEW STANDARD PLANS
STRUCTURE PLANS	
8-13	ROUTE 5, 73 BRIDGES

THE STANDARD PLANS LIST APPLICABLE TO THIS CONTRACT IS INCLUDED IN THE NOTICE TO BIDDERS AND SPECIAL PROVISIONS BOOK.

STATE OF CALIFORNIA

DEPARTMENT OF TRANSPORTATION

PROJECT PLANS FOR CONSTRUCTION ON

STATE HIGHWAY

IN ORANGE COUNTY

AT VARIOUS LOCATIONS

TO BE SUPPLEMENTED BY STANDARD PLANS DATED MAY 2006

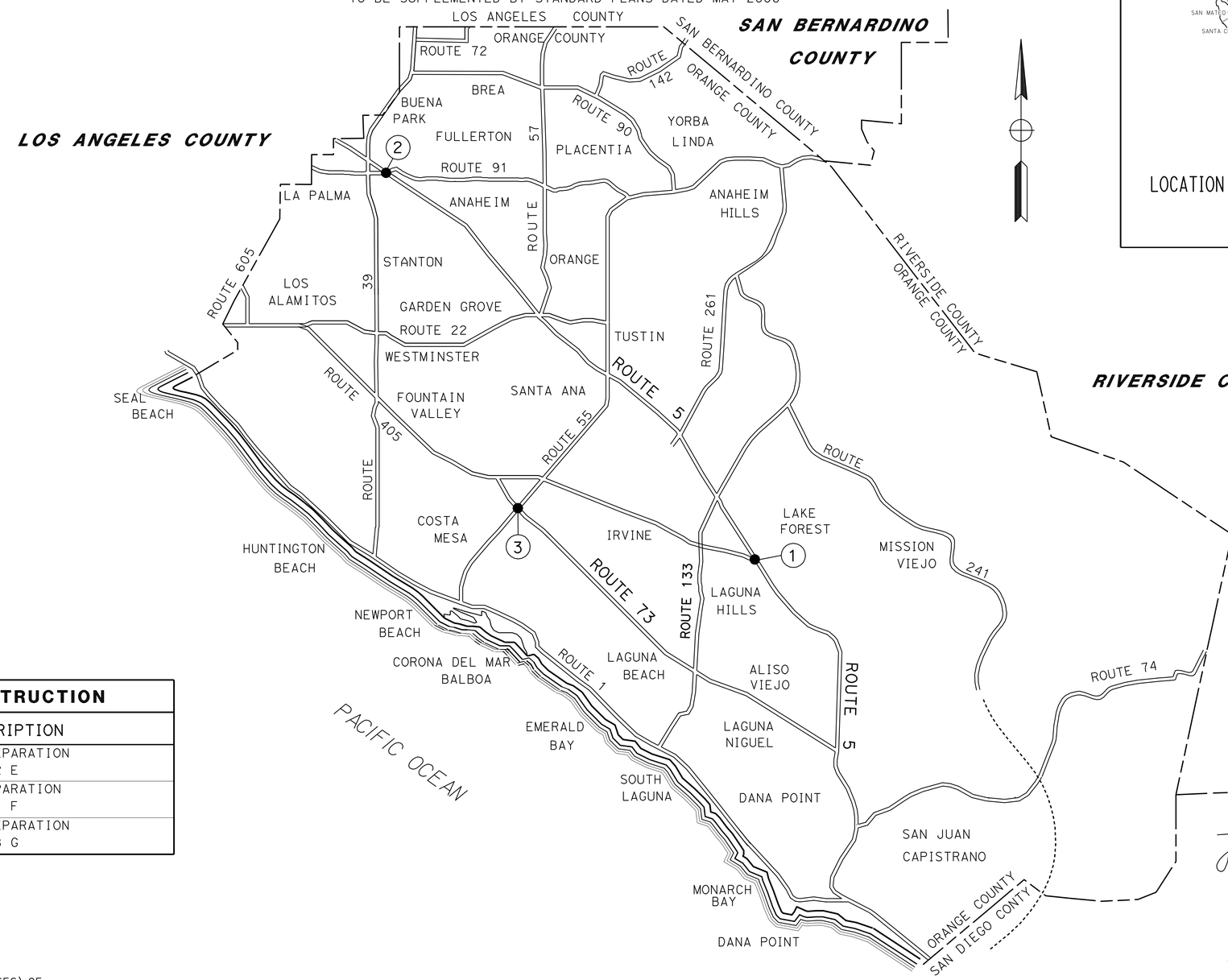

LOCATION MAP

Caltrans

LOCATIONS OF CONSTRUCTION			
Loc	Rte	PM	DESCRIPTION
1	5	20.7	ROUTE 5/405 SEPARATION Br No. 55-0822 E
2	5	42.0	ROUTE 5/91 SEPARATION Br No. 55-0831 F
3	73	26.6	ROUTE 73/55 SEPARATION Br No. 55-1028 G

THE CONTRACTOR SHALL POSSESS THE CLASS (OR CLASSES) OF LICENSE AS SPECIFIED IN THE "NOTICE TO BIDDERS."

NO SCALE

Joseph Tran 12-10-09
PROJECT ENGINEER DATE
REGISTERED CIVIL ENGINEER

REGISTERED PROFESSIONAL ENGINEER
JOSEPH TRAN
No. C59283
Exp. 6.30.11
CIVIL
STATE OF CALIFORNIA

January 19, 2010
PLANS APPROVAL DATE

THE STATE OF CALIFORNIA OR ITS OFFICERS OR AGENTS SHALL NOT BE RESPONSIBLE FOR THE ACCURACY OR COMPLETENESS OF SCANNED COPIES OF THIS PLAN SHEET.

PROJECT MANAGER MASSOUD TAJIK

DESIGN ENGINEER JOSEPH TRAN

LAST REVISION 12-10-09

DATE PLOTTED => 21-JAN-2010
TIME PLOTTED => 10:38

CONTRACT No. **12-0K6404**

Dist	COUNTY	ROUTE	POST MILES TOTAL PROJECT	SHEET No.	TOTAL SHEETS
12	Ora	5,73	Var	2	13

REGISTERED CIVIL ENGINEER — DATE: 12-10-09

1-19-10
PLANS APPROVAL DATE

REGISTERED PROFESSIONAL ENGINEER — JOSEPH TRAN — No. C59283 — Exp. 6.30.11 — CIVIL — STATE OF CALIFORNIA

THE STATE OF CALIFORNIA OR ITS OFFICERS OR AGENTS SHALL NOT BE RESPONSIBLE FOR THE ACCURACY OR COMPLETENESS OF ELECTRONIC COPIES OF THIS PLAN SHEET.

NOTES:

1. LOCATION OF CONSTRUCTION AREA SIGNS SHOWN ARE APPROXIMATE. EXACT LOCATIONS TO BE DETERMINED BY THE ENGINEER.
2. EXISTING UTILITY FACILITIES HAVE NOT BEEN PLOTTTED ON THESE PLANS.

LEGEND:

CONSTRUCTION AREA SIGN, 1-POST

(X) CONSTRUCTION AREA SIGN

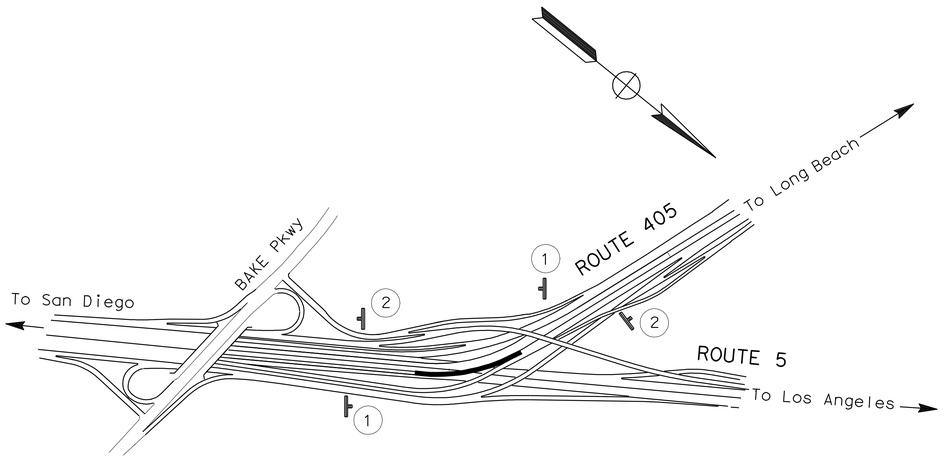

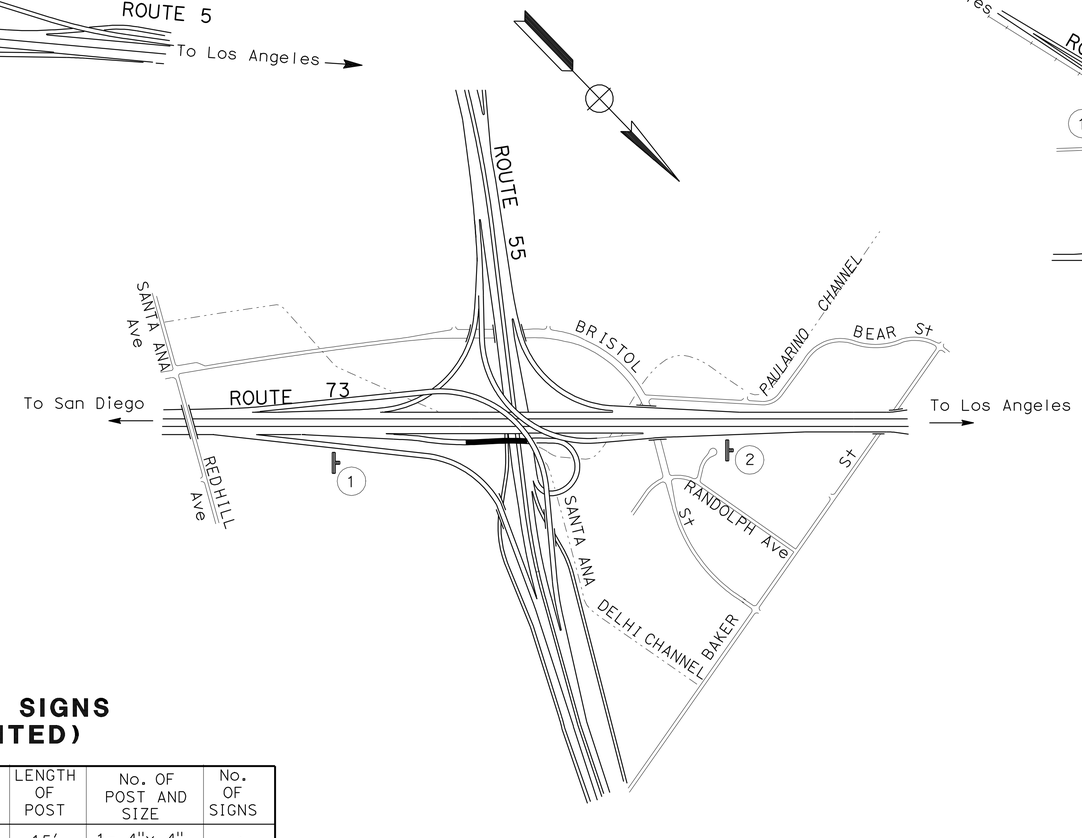

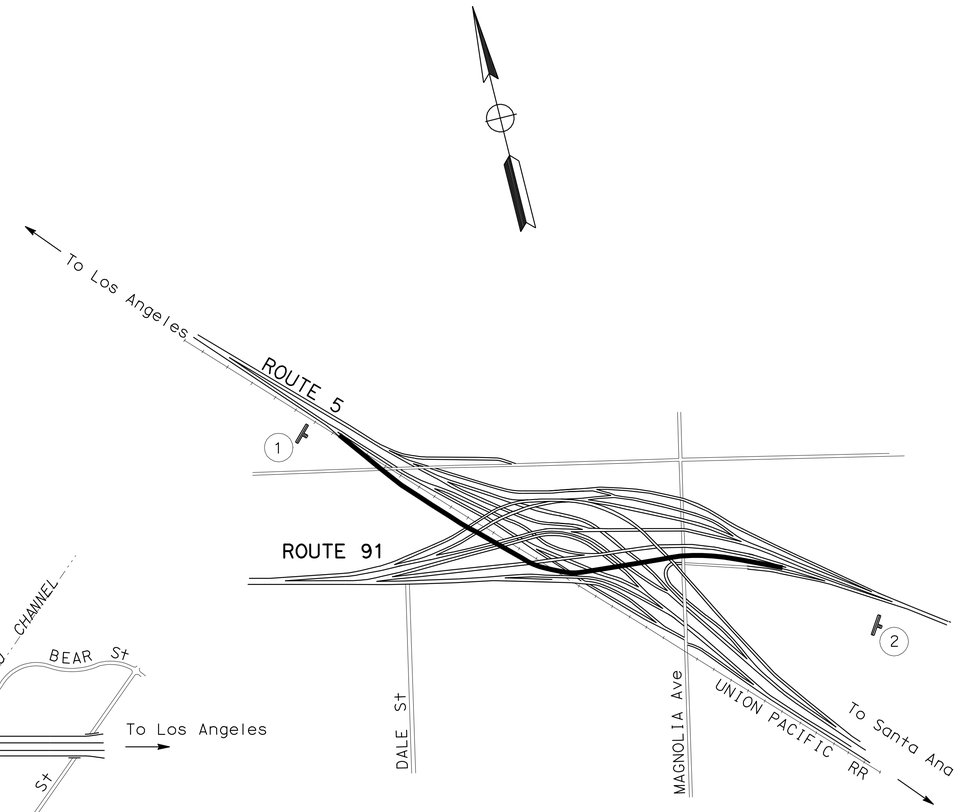

CONSTRUCTION AREA SIGNS (STATIONARY MOUNTED)

SIGN	SIGN CODE	PANEL SIZE	SIGN MESSAGE	LENGTH OF POST	No. OF POST AND SIZE	No. OF SIGNS
1	W20-1	30" x 30"	ROAD WORK AHEAD	15'	1- 4"x 4"	4
2	G20-2	36" x 18"	END ROAD WORK	13'	1- 4"x 4"	4

* FOR ADDITIONAL QUANTITIES OF CONSTRUCTION AREA SIGNS, SEE SHEET TH-2

THIS PLAN ACCURATE FOR CONSTRUCTION AREA SIGN WORK ONLY

CONSTRUCTION AREA SIGNS

NO SCALE

CS-1

REVISED BY	DATE REVISED

CALCULATED-DESIGNED BY: JOSEPH TRAN
CHECKED BY: AHMED A ABBAS
FUNCTIONAL SUPERVISOR: MASSOUD TAJIK
STATE OF CALIFORNIA - DEPARTMENT OF TRANSPORTATION
MAINTENANCE
Caltrans

LAST REVISION 06-03-09 | DATE PLOTTED => 21-JAN-2010 | TIME PLOTTED => 08:13

Dist	COUNTY	ROUTE	POST MILES TOTAL PROJECT	SHEET No.	TOTAL SHEETS
12	Ora	5,73	Var	3	13

12-10-09
REGISTERED CIVIL ENGINEER DATE

1-19-10
PLANS APPROVAL DATE

REGISTERED PROFESSIONAL ENGINEER JOSEPH TRAN No. C59283 Exp. 6.30.11 CIVIL STATE OF CALIFORNIA

THE STATE OF CALIFORNIA OR ITS OFFICERS OR AGENTS SHALL NOT BE RESPONSIBLE FOR THE ACCURACY OR COMPLETENESS OF ELECTRONIC COPIES OF THIS PLAN SHEET.

LEGEND:

→ DIRECTION OF TRAVEL

CONNECTOR CLOSED

PCMS-X PORTABLE CHANGEABLE MESSAGE SIGN

CLOSURES:

SB ROUTE 5 TO EB ROUTE 91 CONNECTOR

DETOURS:

EXIT MAGNOLIA Ave OFF-RAMP AND LEFT ON MAGNOLIA Ave

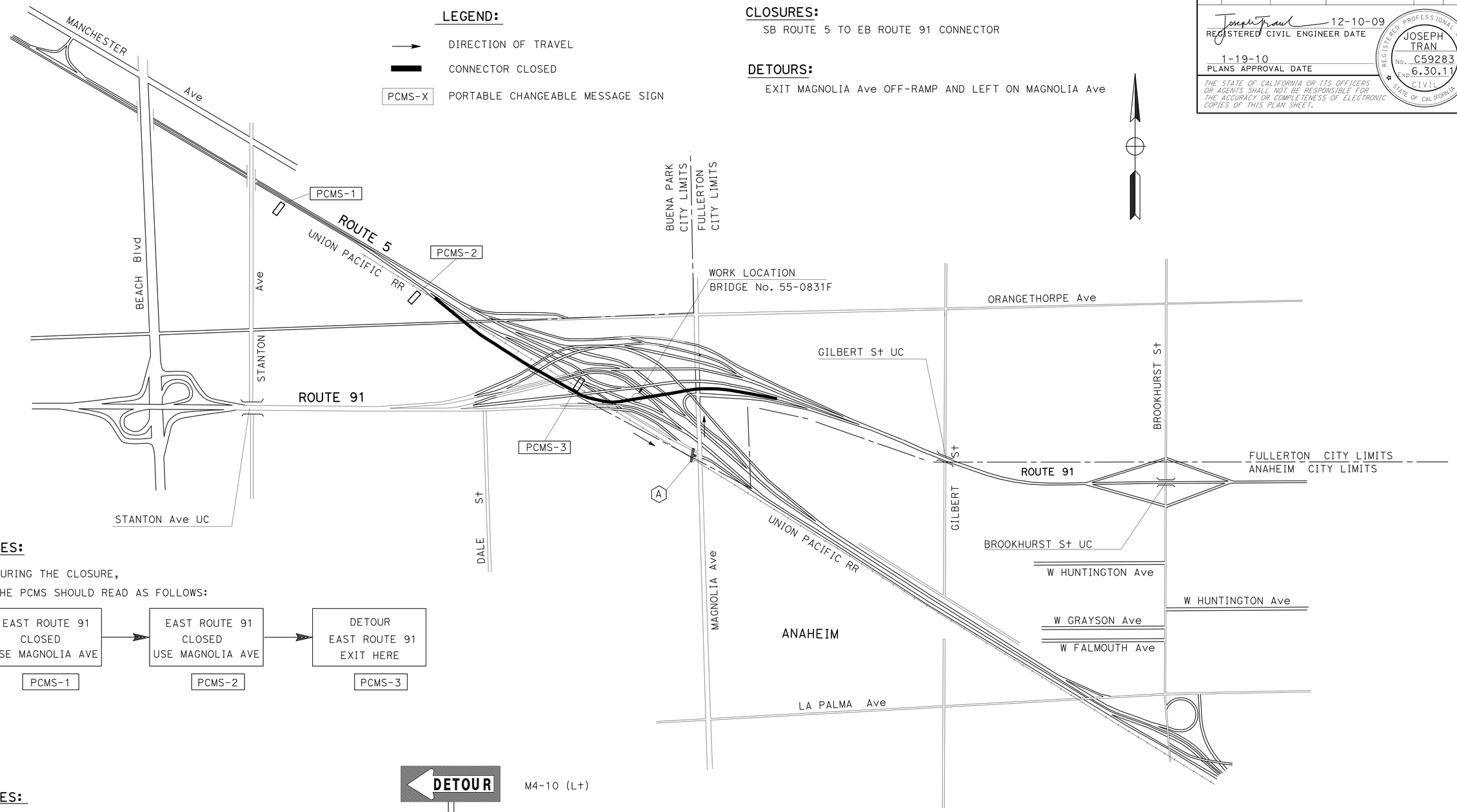

NOTES:

DURING THE CLOSURE,

THE PCMS SHOULD READ AS FOLLOWS:

PCMS-1	→	PCMS-2	→	PCMS-3
EAST ROUTE 91 CLOSED USE MAGNOLIA AVE		EAST ROUTE 91 CLOSED USE MAGNOLIA AVE		DETOUR EAST ROUTE 91 EXIT HERE

NOTES:

1. LOCATIONS OF CONSTRUCTION AREA SIGNS (DETOUR) AND PCMS SHOWN ARE APPROXIMATE. EXACT LOCATIONS WILL BE DETERMINED BY THE ENGINEER.
2. MESSAGE TO BE DISPLAYED ON THE PCMS SHALL BE AS SHOWN ON THE PLANS OR AS DIRECTED BY THE ENGINEER.
3. EXISTING UTILITY FACILITIES HAVE NOT BEEN PLOTTTED ON THESE PLANS.
4. FOR ADDITIONAL QUANTITIES OF CONSTRUCTION AREA SIGNS, SEE SHEET CS-1

M4-10 (Lt)

G28-2 (CA)

M3-2

LOCATION

S5/E91 CONNECTOR - Br No. 55-0831F

THIS PLAN ACCURATE FOR TRAFFIC HANDLING ONLY

TRAFFIC HANDLING PLAN (DETOUR)

NO SCALE

TH-1

STATE OF CALIFORNIA - DEPARTMENT OF TRANSPORTATION
MAINTENANCE
Caltrans

FUNCTIONAL SUPERVISOR: MASSOUD TAJIK

CALCULATED-DESIGNED BY: JOSEPH TRAN
CHECKED BY: AHMED A ABBAS

REVISED BY: L HUYNH
DATE REVISED: 8/28/07

LAST REVISION 01-03-09
DATE PLOTTED => 21-JAN-2010
TIME PLOTTED => 08:13

Dist	COUNTY	ROUTE	POST MILES TOTAL PROJECT	SHEET No.	TOTAL SHEETS
12	Ora	5,73	Var	4	13

12-10-09
REGISTERED CIVIL ENGINEER DATE

1-19-10
PLANS APPROVAL DATE

REGISTERED PROFESSIONAL ENGINEER JOSEPH TRAN No. C59283 EXP. 6.30.11 CIVIL STATE OF CALIFORNIA

THE STATE OF CALIFORNIA OR ITS OFFICERS OR AGENTS SHALL NOT BE RESPONSIBLE FOR THE ACCURACY OR COMPLETENESS OF ELECTRONIC COPIES OF THIS PLAN SHEET.

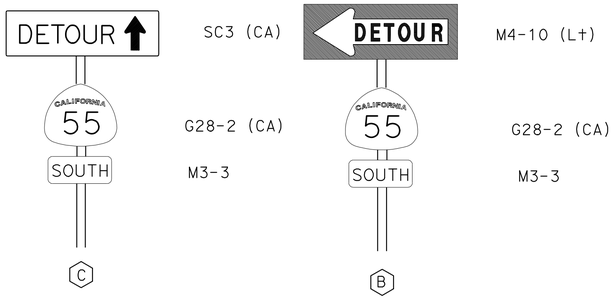

CLOSURES:

NB ROUTE 73 TO SB ROUTE 55 CONNECTOR

DETOURS:

EXIT BEAR ST OFF-RAMP, LEFT ON BEAR ST, AND TAKE SB ROUTE 73 ON-RAMP

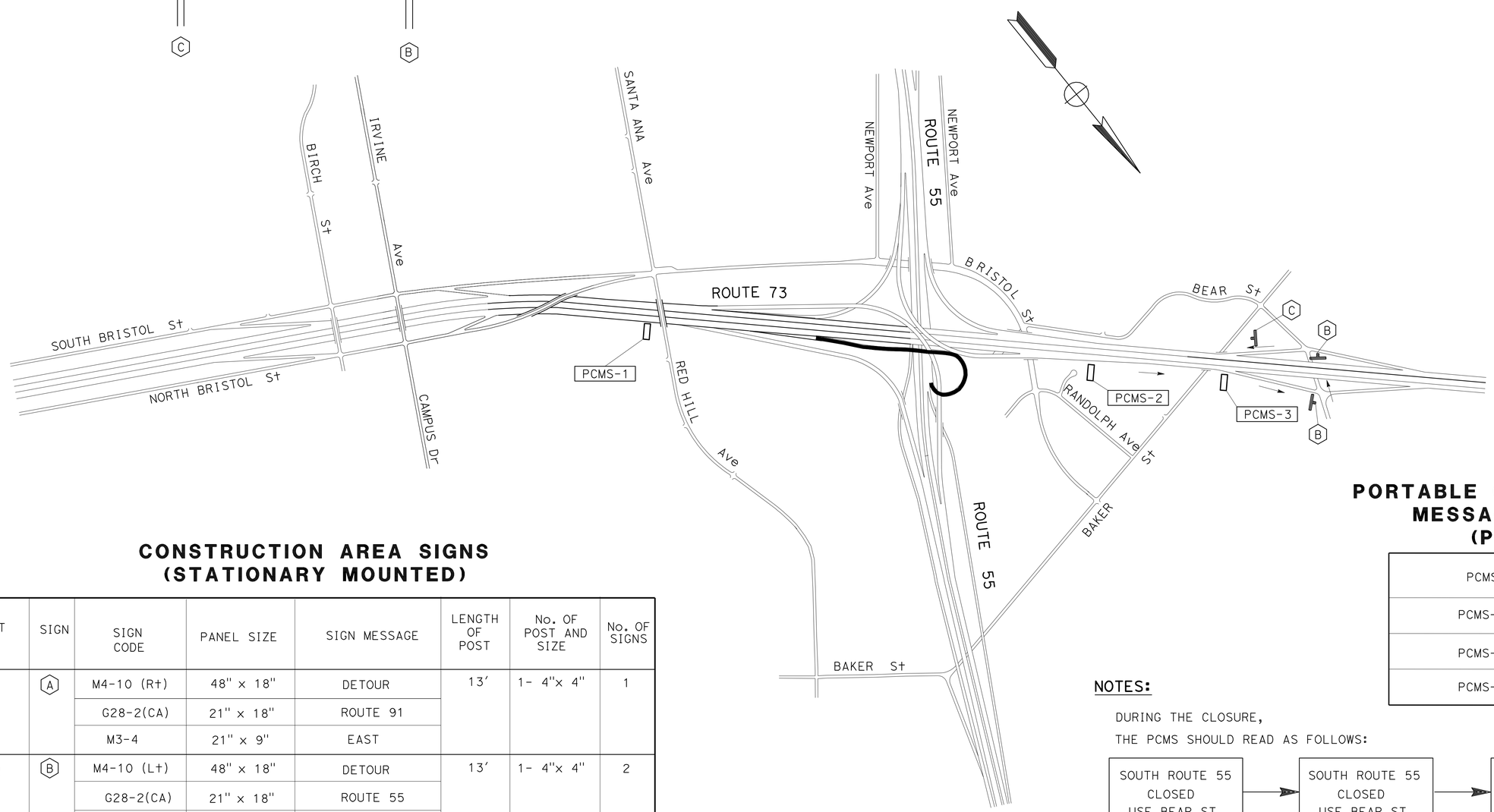

PORTABLE CHANGEABLE MESSAGE SIGNS (PCMS)

PCMS	No. OF SIGNS
PCMS-1	2
PCMS-2	2
PCMS-3	2

CONSTRUCTION AREA SIGNS (STATIONARY MOUNTED)

SHEET No.	SIGN	SIGN CODE	PANEL SIZE	SIGN MESSAGE	LENGTH OF POST	No. OF POST AND SIZE	No. OF SIGNS
TH-1	A	M4-10 (R+)	48" x 18"	DETOUR	13′	1- 4"x 4"	1
		G28-2(CA)	21" x 18"	ROUTE 91			
		M3-4	21" x 9"	EAST			
TH-2	B	M4-10 (L+)	48" x 18"	DETOUR	13′	1- 4"x 4"	2
		G28-2(CA)	21" x 18"	ROUTE 55			
		M3-1	21" x 9"	SOUTH			
TH-2	C	SC3	48" x 18"	DETOUR	13′	1- 4"x 4"	1
		G28-2(CA)	21" x 18"	ROUTE 55			
		M3-4	21" x 9"	SOUTH			

* FOR ADDITIONAL QUANTITIES OF CONSTRUCTION AREA SIGNS, SEE SHEET CS-1

NOTES:

DURING THE CLOSURE,
THE PCMS SHOULD READ AS FOLLOWS:

PCMS-1	→	PCMS-2	→	PCMS-3
SOUTH ROUTE 55 CLOSED USE BEAR ST		SOUTH ROUTE 55 CLOSED USE BEAR ST		DETOUR SOUTH ROUTE 55 EXIT HERE

LOCATION

N73/S55 CONNECTOR - Br No. 55-1028G

THIS PLAN ACCURATE FOR TRAFFIC HANDLING ONLY

TRAFFIC HANDLING PLAN (DETOUR)

NO SCALE

TH-2

REVISED BY	DATE REVISED
L HUYNH	8/28/07

CALCULATED-DESIGNED BY	CHECKED BY
JOSEPH TRAN	AHMED A ABBAS

FUNCTIONAL SUPERVISOR: MASSOUD TAJIK

STATE OF CALIFORNIA - DEPARTMENT OF TRANSPORTATION
MAINTENANCE
Caltrans

LAST REVISION 01-03-09 | DATE PLOTTED => 21-JAN-2010 | TIME PLOTTED => 08:13

DIST	COUNTY	ROUTE	POST MILES TOTAL PROJECT	SHEET NO.	TOTAL SHEETS
12	Ora	5,73	Var	5	13

Randell D. Hiatt
REGISTERED CIVIL ENGINEER

June 6, 2008
PLANS APPROVAL DATE

REGISTERED PROFESSIONAL ENGINEER
Randell D. Hiatt
No. C50200
Exp. 6-30-09
CIVIL
STATE OF CALIFORNIA

The State of California or its officers or agents shall not be responsible for the accuracy or completeness of electronic copies of this plan sheet.

To accompany plans dated 1-19-10

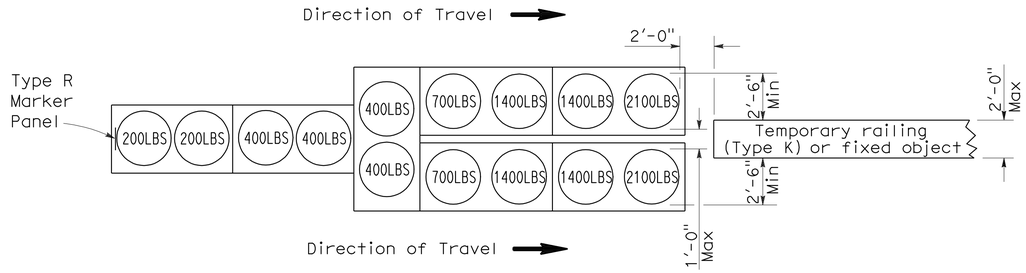

ARRAY 'TU14'

Approach speed 45 mph or more

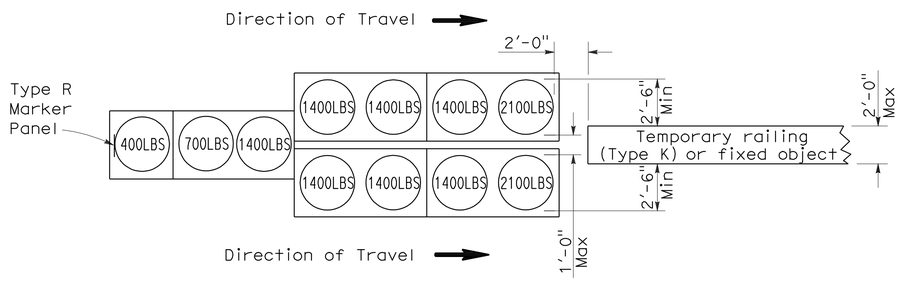

ARRAY 'TU11'

Approach speed less than 45 mph

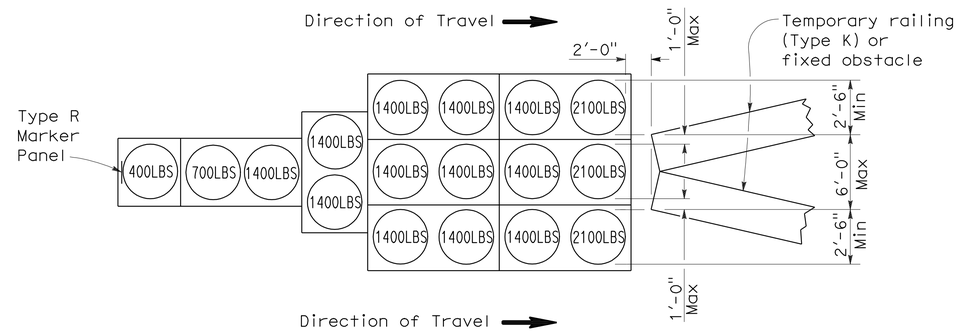

ARRAY 'TU17'

Approach speed less than 45 mph

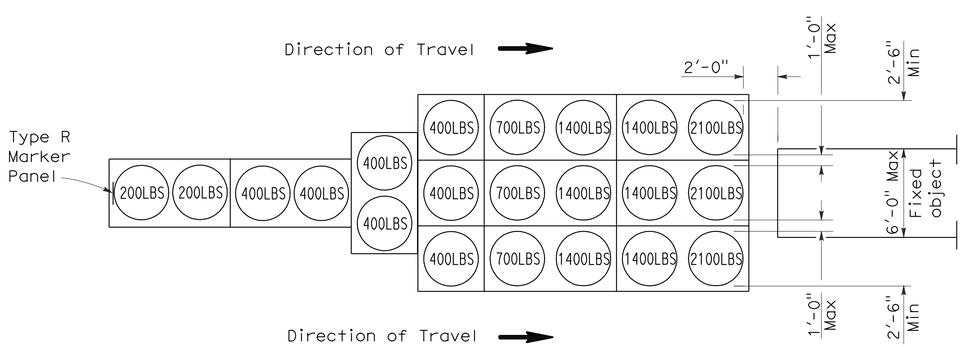

ARRAY 'TU21'

Approach speed 45 mph or more

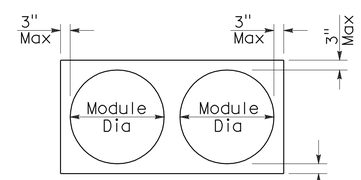

PLAN

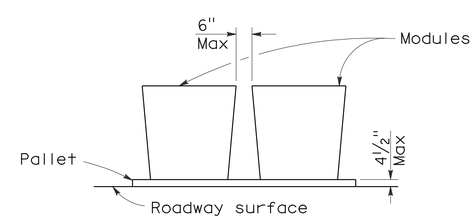

ELEVATION

CRASH CUSHION PALLET DETAIL

See Note 7

NOTES:

1. (XXX) Indicates sand filled module location and weight of sand in pounds for each module. Module spacing is based on the greater diameter of the module.
2. All sand weights are nominal.
3. Temporary crash cushion arrays shall not encroach on the traveled way.
4. Place the top of Type R marker panel 1" below the module lid.
5. Refer to Standard Plan A73B for marker details.
6. Approach speeds indicated conform to NCHRP 350 Report criteria.
7. Use of pallets is optional.

STATE OF CALIFORNIA
DEPARTMENT OF TRANSPORTATION

TEMPORARY CRASH CUSHION, SAND FILLED (UNIDIRECTIONAL)

NO SCALE

RSP T1A DATED JUNE 6, 2008 SUPERSEDES STANDARD PLAN T1A
DATED MAY 1, 2006 - PAGE 211 OF THE STANDARD PLANS BOOK DATED MAY 2006.

REVISED STANDARD PLAN RSP T1A

2006 REVISED STANDARD PLAN RSP T1A

DIST	COUNTY	ROUTE	POST MILES TOTAL PROJECT	SHEET NO.	TOTAL SHEETS
12	Ora	5,73	Var	6	13

Randell D. Hiatt
REGISTERED CIVIL ENGINEER

June 6, 2008
PLANS APPROVAL DATE

REGISTERED PROFESSIONAL ENGINEER
Randell D. Hiatt
No. C50200
Exp. 6-30-09
CIVIL
STATE OF CALIFORNIA

The State of California or its officers or agents shall not be responsible for the accuracy or completeness of electronic copies of this plan sheet.

To accompany plans dated 1-19-10

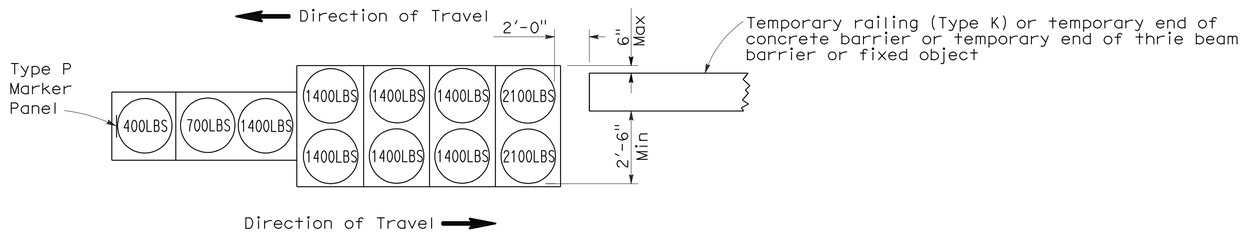

ARRAY 'TB11'

Approach speed less than 45 mph

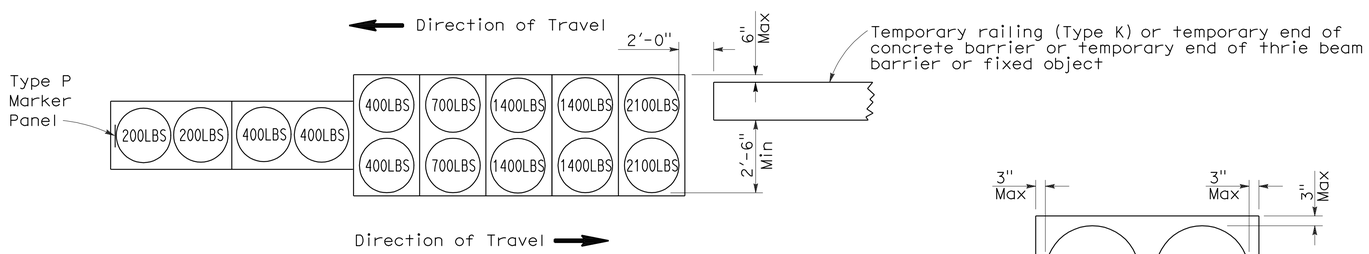

ARRAY 'TB14'

Approach speed 45 mph or more

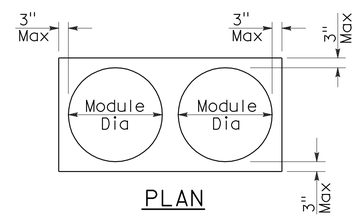

PLAN

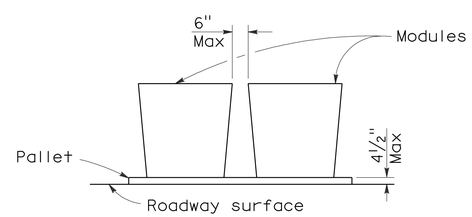

ELEVATION

CRASH CUSHION PALLET DETAIL

See Note 7

NOTES:

1. (XXX) Indicates sand filled module location and weight of sand in pounds for each module. Module spacing is based on the greater diameter of the module.
2. All sand weights are nominal.
3. Temporary crash cushion arrays shall not encroach on the traveled way.
4. Place the Type P marker panel so that the bottom of the panel rests upon the pallet.
5. Refer to Standard Plan A73B for marker details.
6. Approach speeds indicated conform to NCHRP 350 Report criteria.
7. Use of pallets is optional.

STATE OF CALIFORNIA
DEPARTMENT OF TRANSPORTATION

TEMPORARY CRASH CUSHION, SAND FILLED (BIDIRECTIONAL)

NO SCALE

RSP T1B DATED JUNE 6, 2008 SUPERSEDES STANDARD PLAN T1B
DATED MAY 1, 2006 - PAGE 212 OF THE STANDARD PLANS BOOK DATED MAY 2006.

REVISED STANDARD PLAN RSP T1B

2006 REVISED STANDARD PLAN RSP T1B

5-15-08

DIST	COUNTY	ROUTE	POST MILES TOTAL PROJECT	SHEET NO.	TOTAL SHEETS
12	Ora	5,73	Var	7	13

Randell D. Hiatt
REGISTERED CIVIL ENGINEER

June 6, 2008
PLANS APPROVAL DATE

REGISTERED PROFESSIONAL ENGINEER
Randell D. Hiatt
No. C50200
Exp. 6-30-09
CIVIL
STATE OF CALIFORNIA

The State of California or its officers or agents shall not be responsible for the accuracy or completeness of electronic copies of this plan sheet.

To accompany plans dated 1-19-10

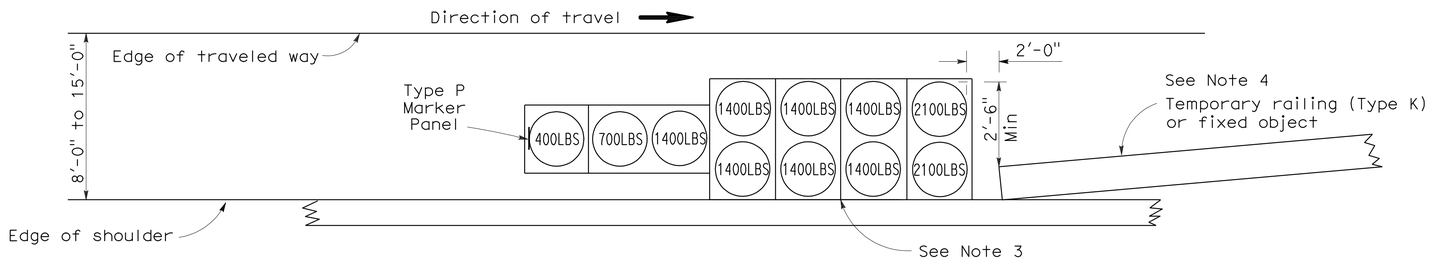

ARRAY 'TS11'

Approach speed less than 45 mph
See Note 9

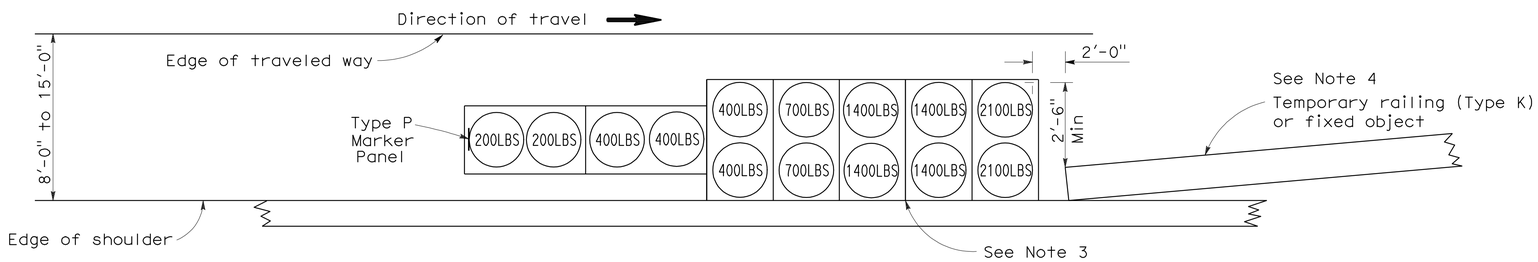

ARRAY 'TS14'

Approach speed 45 mph or more
See Note 9

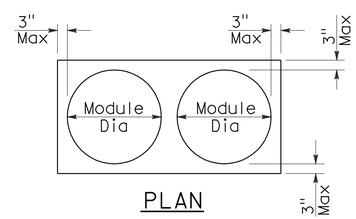

PLAN

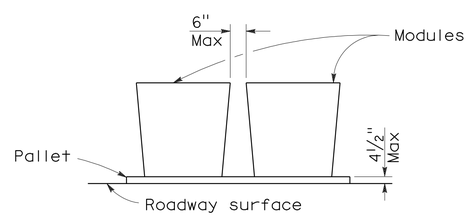

ELEVATION

CRASH CUSHION PALLET DETAIL

See Note 11

NOTES:

1. (XXX) Indicates sand filled module location and weight of sand in pounds for each module. Module spacing is based on the greater diameter of the module.
2. All sand weights are nominal.
3. The temporary crash cushion arrays shown on this plan shall be used only in locations where there will be traffic on one side of the temporary crash cushion array.
4. If the fixed object or approach end of the temporary railing is less than 15'-0" from the edge of traveled way, a temporary crash cushion is required in a construction or work zone.
5. Temporary crash cushion arrays shall not encroach on the traveled way.
6. Arrays for median shoulders shall conform to details shown on this plan for outside shoulders.
7. Place the Type P marker panel so that the bottom of the panel rests upon the pallet and faces traffic.
8. Refer to Standard Plan A73B for marker details.
9. For shoulder widths less than 8'-0", appropriate approved crash cushion protection, other than sand filled modules, shall be provided at fixed objects and at approach ends of temporary railing. The specific type of crash cushion shall be as shown on the project plans or as specified in the Special Provisions, or if not shown on the project plans or specified in the Special Provisions, shall be as approved by the Engineer.
10. Approach speeds indicated conform to NCHRP 350 Report criteria.
11. Use of pallets is optional.

STATE OF CALIFORNIA
DEPARTMENT OF TRANSPORTATION

TEMPORARY CRASH CUSHION, SAND FILLED (SHOULDER INSTALLATIONS)

NO SCALE

RSP T2 DATED JUNE 6, 2008 SUPERSEDES STANDARD PLAN T2
DATED MAY 1, 2006 - PAGE 213 OF THE STANDARD PLANS BOOK DATED MAY 2006.

REVISED STANDARD PLAN RSP T2

2006 REVISED STANDARD PLAN RSP T2

5-15-08

DIST	COUNTY	ROUTE	POST MILES TOTAL PROJECT	SHEET No	TOTAL SHEETS
12	Ora	5,73	Var	8	13

REGISTERED CIVIL ENGINEER 10/27/09 DATE

1-19-10
PLANS APPROVAL DATE

REGISTERED PROFESSIONAL ENGINEER Tony D. Brake No. C57863 Exp. 06/30/10 CIVIL STATE OF CALIFORNIA

The State of California or its officers or agents shall not be responsible for the accuracy or completeness of electronic copies of this plan sheet.

INDEX TO PLANS

SHEET NO.	TITLE
1	GENERAL PLAN NO. 1
2	GENERAL PLAN NO. 2
3	JOINT SEAL DETAILS NO. 1
4	JOINT SEAL DETAILS NO. 2
5	TEMPORARY STEEL DECKING
6	JOINT SEAL ASSEMBLY (MAXIMUM MOVEMENT RATING = 4")

STANDARD PLANS DATED MAY 2006

SHEET NO.	TITLE
A10A	ACRONYMS AND ABBREVIATIONS (SHEET 1 OF 2)
A10B	ACRONYMS AND ABBREVIATIONS (SHEET 2 OF 2)
A10C	SYMBOLS (SHEET 1 OF 2)
A10D	SYMBOLS (SHEET 2 OF 2)

STANDARD PLAN SHEET NO.

DETAIL NO.

LEGEND:

Indicates existing.

Indicates direction of traffic.

Indicates location of removal and placement of new joint seal.

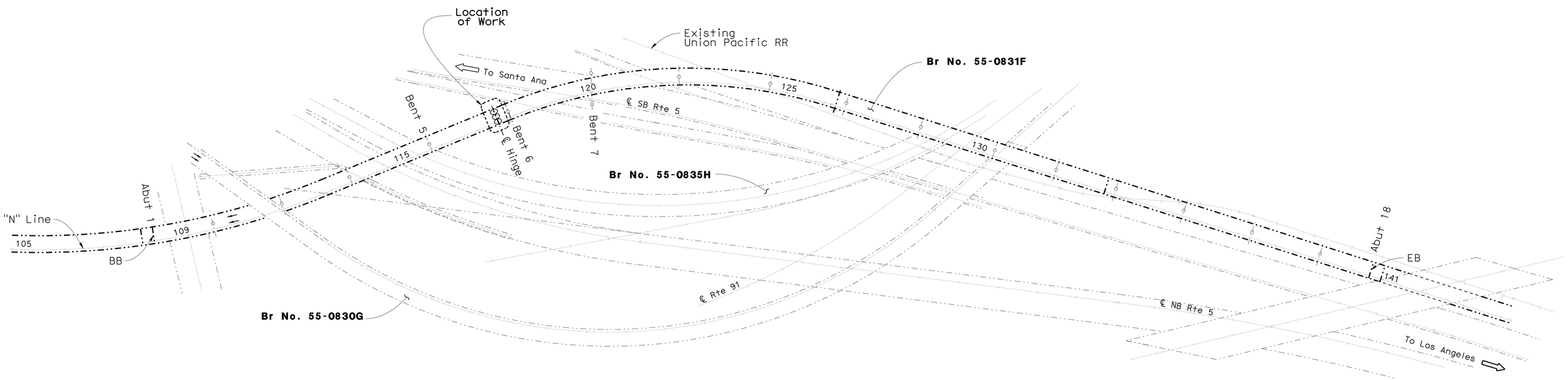

S5-E91 CONN OH & OC

Br No. 55-0831F, Rte 5, PM 42.01
1" = 125'

S5-E91 CONN OH & OC BRIDGE NO. 55-0831F

QUANTITIES

TEMPORARY DECKING	LUMP SUM
BRIDGE REMOVAL (PORTION), LOCATION A	LUMP SUM
STRUCTURAL CONCRETE, BRIDGE	10 CY
JOINT SEAL ASSEMBLY (MR 5")	40 LF
BAR REINFORCING STEEL (BRIDGE)	530 LB

NOTE:
THE CONTRACTOR SHALL VERIFY ALL CONTROLLING FIELD DIMENSIONS BEFORE ORDERING OR FABRICATING ANY MATERIAL.

TONY D. BRAKE
DESIGN ENGINEER

	BY	CHECKED
DESIGN	Tony Brake	HongTien Tran
DETAILS	Tom Dang	Tony Brake
QUANTITIES	Tony Brake	HongTien Tran

LOAD FACTOR DESIGN — LIVE LOADING: HS20-44 AND ALTERNATIVE AND PERMIT DESIGN LOAD

	BY	CHECKED
LAYOUT	Tom Dang	Tony Brake
SPECIFICATIONS	Theresa Nedwick	PLANS AND SPECS COMPARED Theresa Nedwick

STATE OF CALIFORNIA
DEPARTMENT OF TRANSPORTATION

DIVISION OF MAINTENANCE
STRUCTURE MAINTENANCE DESIGN

CU 12
EA 0K6401

BRIDGE NO. Various
POST MILE Varies

ROUTE 5, 73 BRIDGES
GENERAL PLAN NO. 1

STRUCTURES MAINTENANCE GENERAL PLAN SHEET (ENGLISH) (REV. 10/25/05)

ORIGINAL SCALE IN INCHES FOR REDUCED PLANS 0 1 2 3

DISREGARD PRINTS BEARING EARLIER REVISION DATES

REVISION DATES: 4-01-09 9-14-09

SHEET 01 OF 06

FILE => 12-0K6401-a-gp01.dgn

USERNAME => trmikesi DATE PLOTTED => 21-JAN-2010 TIME PLOTTED => 08:14

DIST	COUNTY	ROUTE	POST MILES TOTAL PROJECT	SHEET No	TOTAL SHEETS
12	Ora	5,73	Var	9	13

REGISTERED CIVIL ENGINEER 10/27/09 DATE

1-19-10
PLANS APPROVAL DATE

REGISTERED PROFESSIONAL ENGINEER Tony D. Brake No. C57863 Exp. 06/30/10 CIVIL STATE OF CALIFORNIA

The State of California or its officers or agents shall not be responsible for the accuracy or completeness of electronic copies of this plan sheet.

LEGEND:

Indicates existing.

Indicates direction of traffic.

Indicates location of removal and placement of new joint seal.

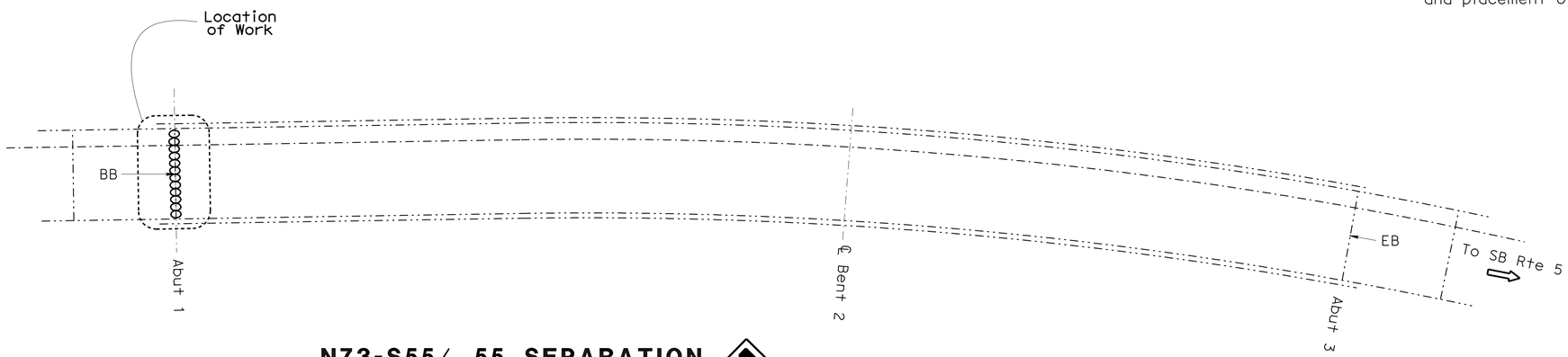

N73-S55/ 55 SEPARATION

Br No. 55-1028G, Rte 73, PM R.26.57
1" = 20'

N73-S55/55 SEPARATION BRIDGE NO. 55-1028G

QUANTITIES

BRIDGE REMOVAL (PORTION), LOCATION B	LUMP	SUM
STRUCTURAL CONCRETE, BRIDGE	3	CY
JOINT SEAL ASSEMBLY (MR 3")	27	LF
BAR REINFORCING STEEL (BRIDGE)	425	LB

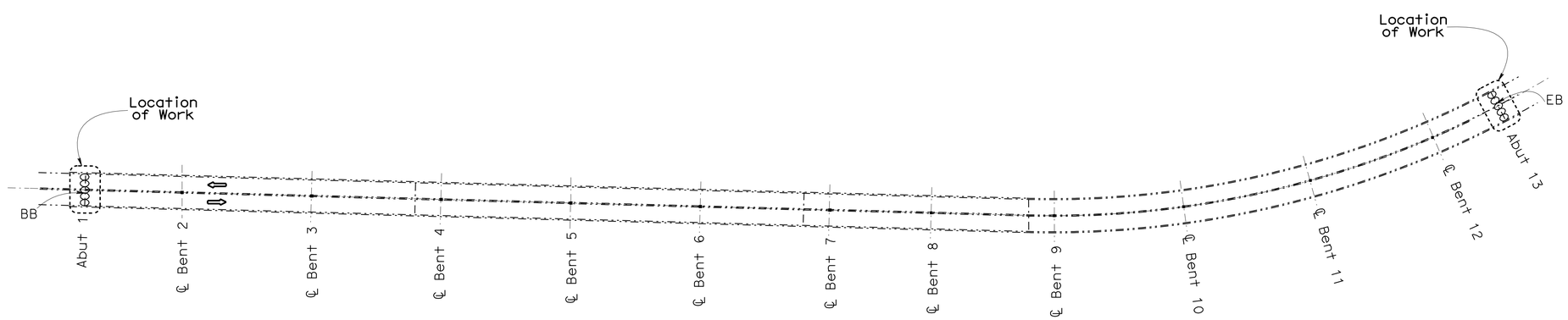

5-405 HOV/S5 SEPARATION

Br No. 55-0822E, Rte 5, PM 20.74
1" = 100'

5-405 HOV/S5 SEPARATION BRIDGE NO. 55-0822E

QUANTITIES

BRIDGE REMOVAL (PORTION), LOCATION C	LUMP	SUM
STRUCTURAL CONCRETE, BRIDGE	10	CY
JOINT SEAL ASSEMBLY (MR 3")	102	LF
BAR REINFORCING STEEL (BRIDGE)	3,237	LB

NOTE:
THE CONTRACTOR SHALL VERIFY ALL CONTROLLING FIELD DIMENSIONS BEFORE ORDERING OR FABRICATING ANY MATERIAL.

TONY D. BRAKE
DESIGN ENGINEER

	BY	CHECKED			
DESIGN	Tony Brake	HongTien Tran	LOAD FACTOR DESIGN	LIVE LOADING: HS20-44 AND ALTERNATIVE AND PERMIT DESIGN LOAD	
DETAILS	Tom Dang	Tony Brake	LAYOUT	Tom Dang	Tony Brake
QUANTITIES	Tony Brake	HongTien Tran	SPECIFICATIONS	Theresa Nedwick	PLANS AND SPECS COMPARED Theresa Nedwick

STATE OF CALIFORNIA
DEPARTMENT OF TRANSPORTATION

DIVISION OF MAINTENANCE
STRUCTURE MAINTENANCE DESIGN

BRIDGE NO. Various
POST MILE Varies

ROUTE 5, 73 BRIDGES
GENERAL PLAN NO. 2

STRUCTURES MAINTENANCE GENERAL PLAN SHEET (ENGLISH) (REV. 10/25/05)

ORIGINAL SCALE IN INCHES FOR REDUCED PLANS 0 1 2 3

CU 12
EA 0K6401

DISREGARD PRINTS BEARING EARLIER REVISION DATES

REVISION DATES 4-01-09 9-14-09

SHEET 02 OF 06

FILE => 12-0k6401-a-gp02.dgn

USERNAME => trmikesl DATE PLOTTED => 21-JAN-2010 TIME PLOTTED => 08:14

DIST	COUNTY	ROUTE	POST MILES TOTAL PROJECT	SHEET No	TOTAL SHEETS
12	Ora	5,73	Var	10	13

REGISTERED CIVIL ENGINEER 10/27/09 DATE

1-19-10
PLANS APPROVAL DATE

REGISTERED PROFESSIONAL ENGINEER Tony D. Brake No. C57863 Exp. 06/30/10 CIVIL STATE OF CALIFORNIA

The State of California or its officers or agents shall not be responsible for the accuracy or completeness of electronic copies of this plan sheet.

LEGEND:

- Indicates existing.
- Indicates new structure.
- Indicates concrete removal limits. Preserve existing reinf.
- Indicates new PCC.

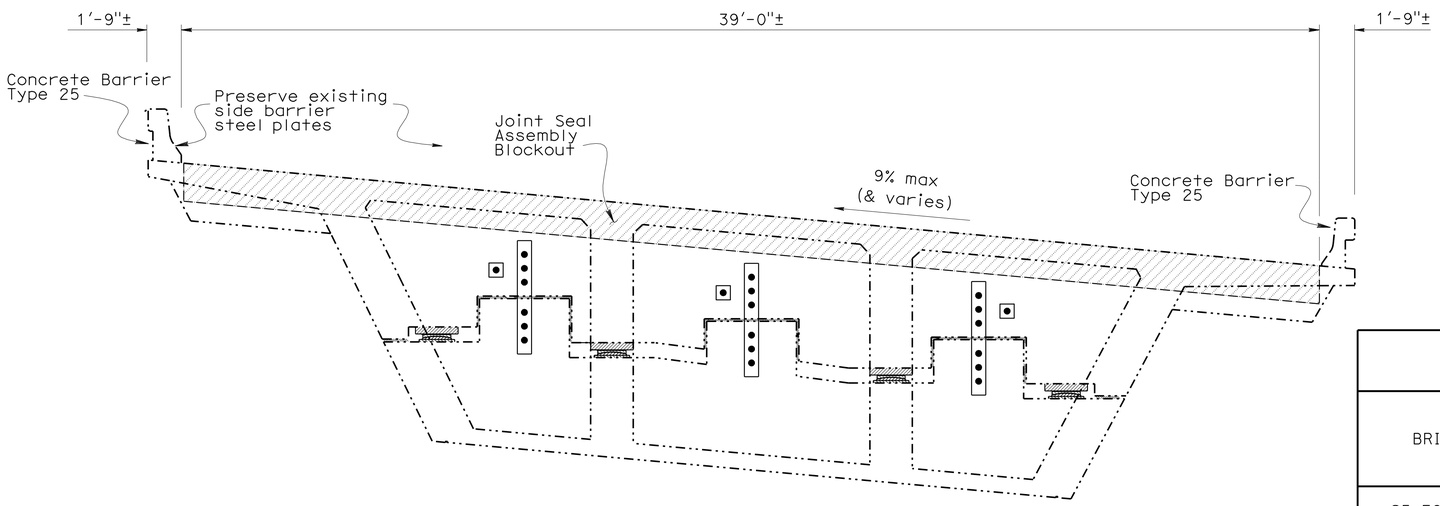

ELEVATION SECTION @ HINGE

Br No. 55-0831F
NO SCALE

JOINT SEAL TABLE

BRIDGE LOCATION	BRIDGE NUMBER	JOINT SEAL LOCATION	MINIMUM "MR" (inches)	Skew	"a" Dimension		
					Winter	Spring/Fall	Summer
S5-E91 CONN OH & OC	55-0831F	Span 5, Hinge	5"	0°	5¼"	4"	2¾"
N73-S55/55 SEP	55-1028G	Abut 1	3"	0°	1½"	1¼"	¾"
5-405HOV/S5 SEP	55-0822E	Abut 1	3"	0°	1¾"	1"	1¼"
		Abut 13	3"	0°	2"	1"	1½"

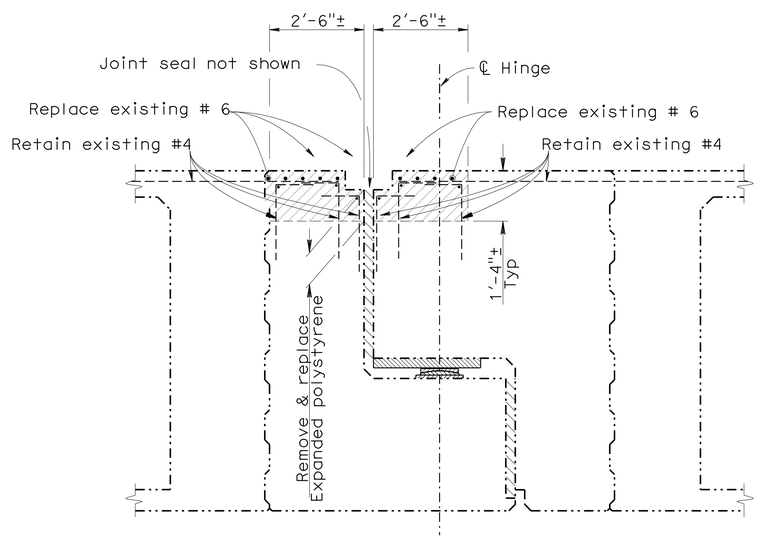

EXISTING

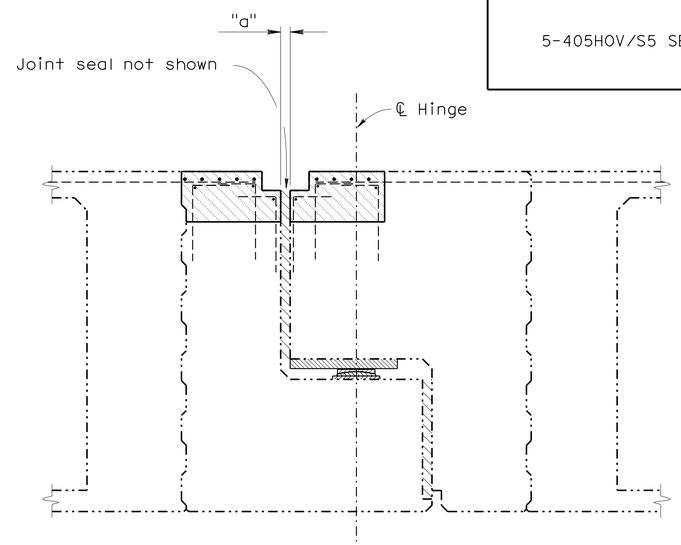

RECONSTRUCTION

PARTIAL SECTION - HINGE

Br No. 55-0831F
NO SCALE

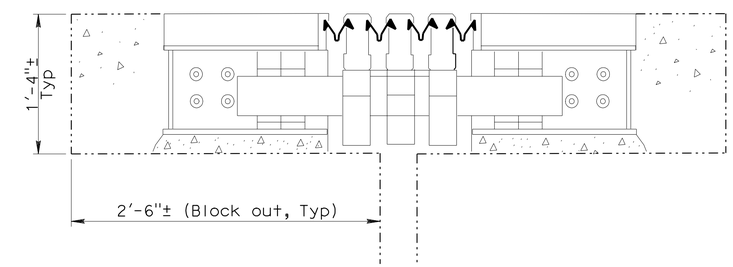

JOINT SEAL REMOVAL

Br No. 55-0831F
NO SCALE

NOTE:
THE CONTRACTOR SHALL VERIFY ALL CONTROLLING FIELD DIMENSIONS BEFORE ORDERING OR FABRICATING ANY MATERIAL.

NOTES:

1. For Joint Seal removal at Br No. 55-0831F, see "TEMPORARY STEEL DECKING" sheet.
2. For Joint Seal Detail at Br No. 55-1028G & Br No. 55-0822E, see "JOINT SEAL ASSEMBLY (MAXIMUM MOVEMENT RATING =4") sheet.

	BY	CHECKED
DESIGN	Tony Brake	HongTien Tran
DETAILS	Tom Dang	Tony Brake
QUANTITIES	Tony Brake	HongTien Tran

STATE OF CALIFORNIA
DEPARTMENT OF TRANSPORTATION

DIVISION OF MAINTENANCE
STRUCTURE MAINTENANCE DESIGN

BRIDGE NO. Various
POST MILE Varies

ROUTE 5, 73 BRIDGES
JOINT SEAL DETAILS NO. 1

STRUCTURES MAINTENANCE DETAIL SHEET (ENGLISH) (REV. 10/25/05)

ORIGINAL SCALE IN INCHES FOR REDUCED PLANS 0 1 2 3

CU 12
EA 0K6401

DISREGARD PRINTS BEARING EARLIER REVISION DATES

REVISION DATES: 4-01-09 9-14-09 10-27-09

SHEET 03 OF 06

FILE => 12-0K6401-b-jtsdt101.dgn

USERNAME => trmikesl DATE PLOTTED => 21-JAN-2010 TIME PLOTTED => 08:14

DIST	COUNTY	ROUTE	POST MILES TOTAL PROJECT	SHEET No	TOTAL SHEETS
12	Ora	5,73	Var	11	13

REGISTERED CIVIL ENGINEER 10/27/09 DATE

1-19-10
PLANS APPROVAL DATE

REGISTERED PROFESSIONAL ENGINEER Tony D. Brake No. C57863 Exp. 06/30/10 CIVIL STATE OF CALIFORNIA

The State of California or its officers or agents shall not be responsible for the accuracy or completeness of electronic copies of this plan sheet.

LEGEND:

Indicates existing.

Indicates new structure.

Indicates concrete removal limits. Preserve existing reinf.

Indicates new PCC.

TEMPORARY DECKING DESIGN LOADING:

1. Moment demand per foot = 3800 lbs-ft/ft
2. For steel plate systems:
   a. anchor bolt shear per foot = 2700 lbs/ft
   b. anchor bolt tension = 4225 lbs
   c. maximum anchor bolt spacing = 1.0 ft

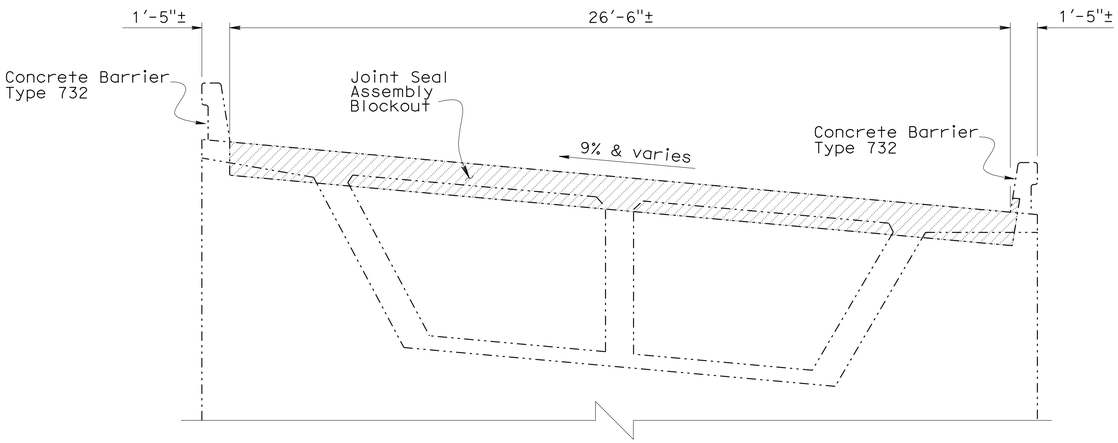

TYPICAL SECTION

Br No. 55-1028G
3/8" = 1'-0"

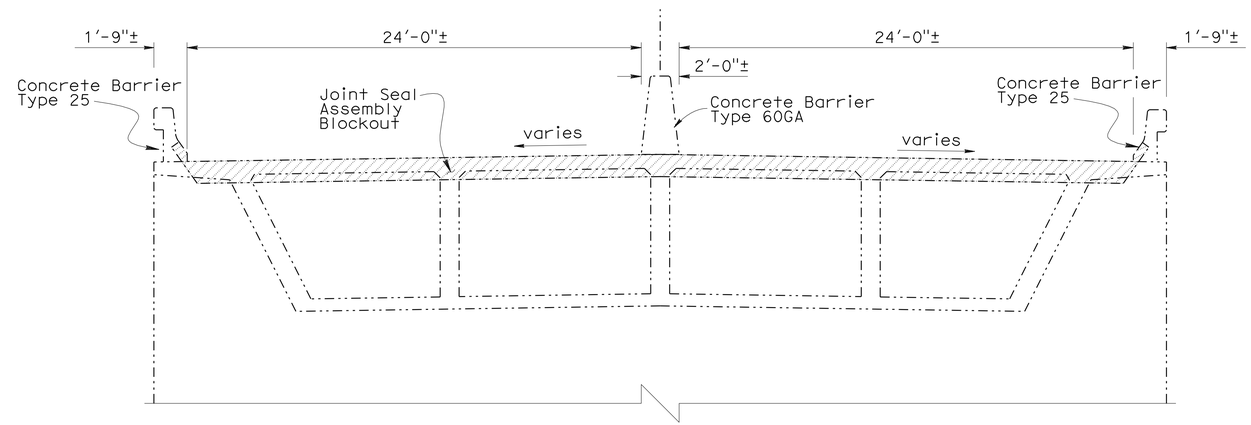

TYPICAL SECTION

Br No. 55-0822E
1/4" = 1'-0"

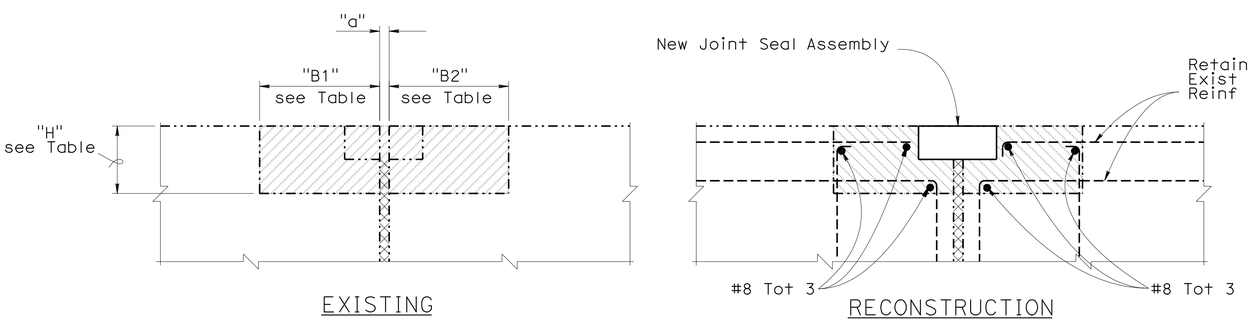

JOINT SEAL ASSEMBLY REPLACEMENT

NO SCALE

NOTE:
THE CONTRACTOR SHALL VERIFY ALL CONTROLLING FIELD DIMENSIONS BEFORE ORDERING OR FABRICATING ANY MATERIAL.

JOINT SEAL ASSEMBLY DIMENSIONS

BRIDGE NUMBER	JOINT SEAL LOCATION	"B1"	"B2"	"H"
55-1028G	Abut 1	0'-11"	1'-3"	1'-2"
55-0822E	Abut 1	0'-11½"	1'-1"	1'-2"
	Abut 13	0'-11½"	1'-1"	1'-2"

For "a" dimensions, see "JOINT SEAL DETAILS NO. 1" sheet.

DESIGN	BY Tony Brake	CHECKED HongTien Tran	
DETAILS	BY Tom Dang	CHECKED Tony Brake	
QUANTITIES	BY Tony Brake	CHECKED HongTien Tran	

STATE OF CALIFORNIA
DEPARTMENT OF TRANSPORTATION

DIVISION OF MAINTENANCE
STRUCTURE MAINTENANCE DESIGN

BRIDGE NO. Various
POST MILE Varies

ROUTE 5, 73 BRIDGES
JOINT SEAL DETAILS NO. 2

STRUCTURES MAINTENANCE DETAIL SHEET (ENGLISH) (REV. 10/25/05)

ORIGINAL SCALE IN INCHES FOR REDUCED PLANS 0 1 2 3

CU 12
EA 0K6401

DISREGARD PRINTS BEARING EARLIER REVISION DATES

REVISION DATES: 4-06-09 9-14-09 10-27-09

SHEET 04 OF 06

FILE => 12-0K6401-b-jtsdt102.dgn

USERNAME => trmikesi DATE PLOTTED => 21-JAN-2010 TIME PLOTTED => 08:15

DIST	COUNTY	ROUTE	POST MILES TOTAL PROJECT	SHEET No	TOTAL SHEETS
12	Ora	5,73	Var	12	13

REGISTERED CIVIL ENGINEER 10/27/09 DATE

1-19-10
PLANS APPROVAL DATE

REGISTERED PROFESSIONAL ENGINEER Tony D. Brake No. C57863 Exp. 06/30/10 CIVIL STATE OF CALIFORNIA

The State of California or its officers or agents shall not be responsible for the accuracy or completeness of electronic copies of this plan sheet.

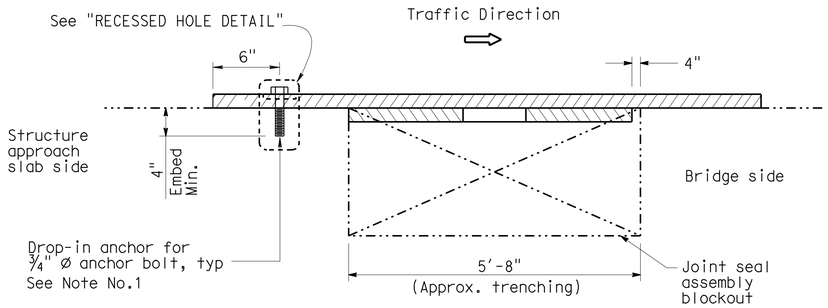

ELEVATION
NO SCALE

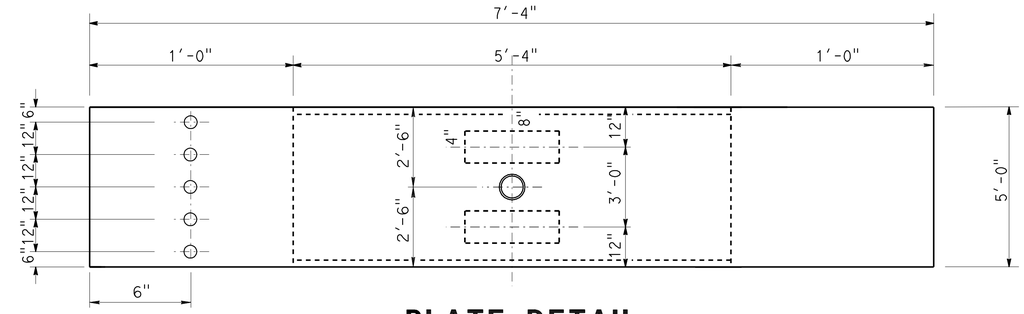

PLATE DETAIL
(PLAN VIEW)
NO SCALE

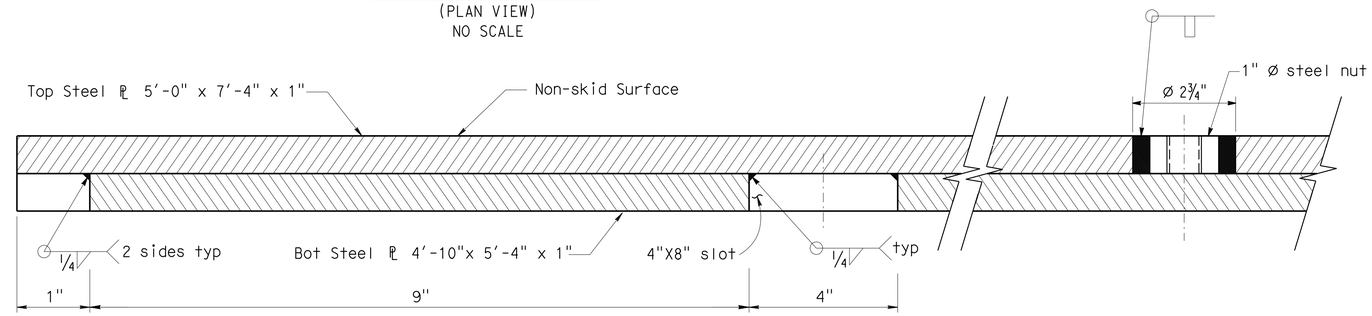

SECTION A-A (PARTIAL)
NO SCALE

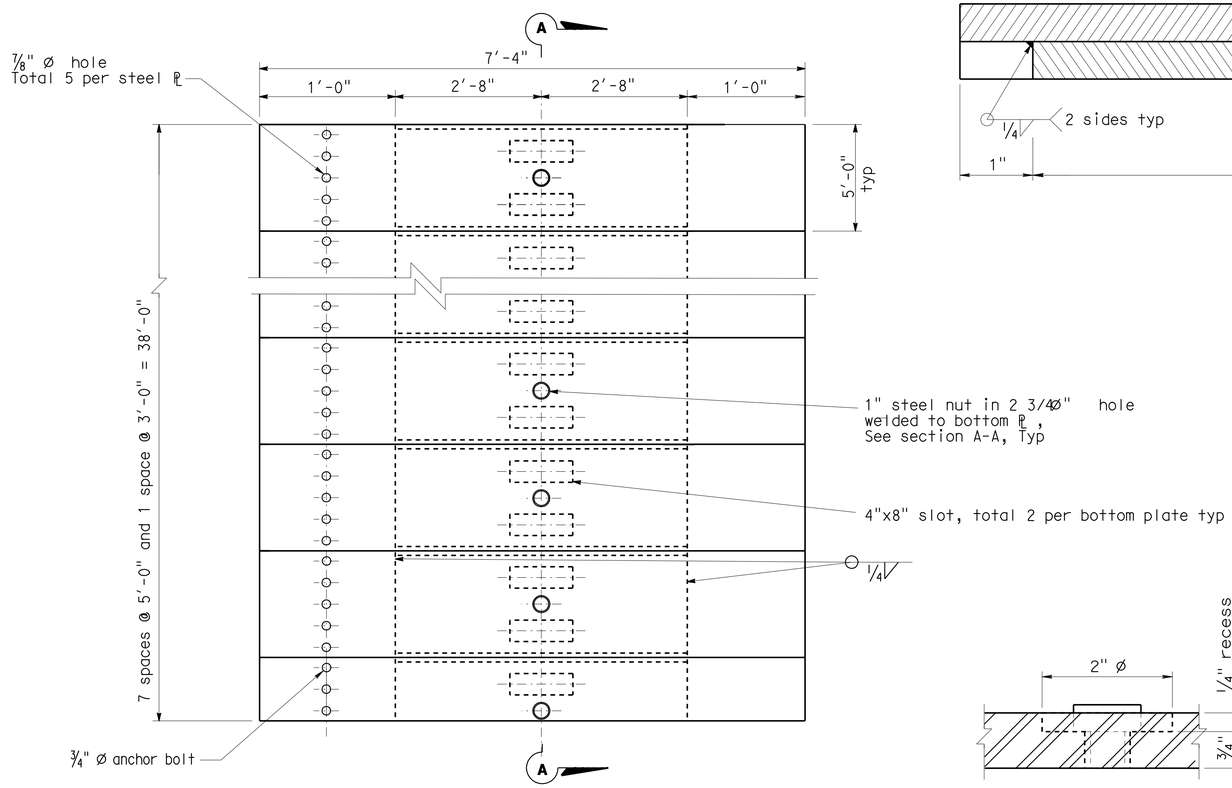

PLAN VIEW
NO SCALE
(Br No. 55-0831F)

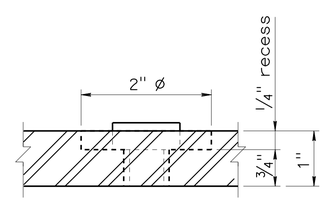

RECESSED HOLED DETAIL
NO SCALE

NOTES:

1. Use Simpson, Helti, Redheads, or equivalent drop-in anchor systems. Refer to manufactures' catalogs for specifications and installation procedures.
2. Steel plates shall conform to the requirements of ASTM Designation A36.

LEGEND:

—·—·— Indicates existing

NOTE:
THE CONTRACTOR SHALL VERIFY ALL CONTROLLING FIELD DIMENSIONS BEFORE ORDERING OR FABRICATING ANY MATERIAL.

	BY	CHECKED
DESIGN	Tony Brake	HongTien Tran
DETAILS	Clayton Tom/Tom Dang	Tony Brake
QUANTITIES	Tony Brake	HongTien Tran

STATE OF CALIFORNIA
DEPARTMENT OF TRANSPORTATION

DIVISION OF MAINTENANCE
STRUCTURE MAINTENANCE DESIGN

BRIDGE NO. 55-0831F
POST MILE 42.01

ROUTE 5, 73 BRIDGES
TEMPORARY STEEL DECKING

STRUCTURES MAINTENANCE DETAIL SHEET (ENGLISH) (REV. 10/25/05)

ORIGINAL SCALE IN INCHES FOR REDUCED PLANS 0 1 2 3

CU 12
EA 0K6401

DISREGARD PRINTS BEARING EARLIER REVISION DATES → 4-04-09 9-14-09 10-22-09

REVISION DATES

SHEET 05 OF 06

FILE => 12-0k6401-c-tempstldk.dgn

USERNAME => trmikesl DATE PLOTTED => 21-JAN-2010 TIME PLOTTED => 08:15

DIST	COUNTY	ROUTE	POST MILES TOTAL PROJECT	SHEET No	TOTAL SHEETS
12	Ora	5,73	Var	13	13

REGISTERED CIVIL ENGINEER 10/27/09 DATE

1-19-10
PLANS APPROVAL DATE

The State of California or its officers or agents shall not be responsible for the accuracy or completeness of electronic copies of this plan sheet.

REGISTERED PROFESSIONAL ENGINEER — Tony D. Brake No. C57863 Exp. 06/30/10 CIVIL — STATE OF CALIFORNIA

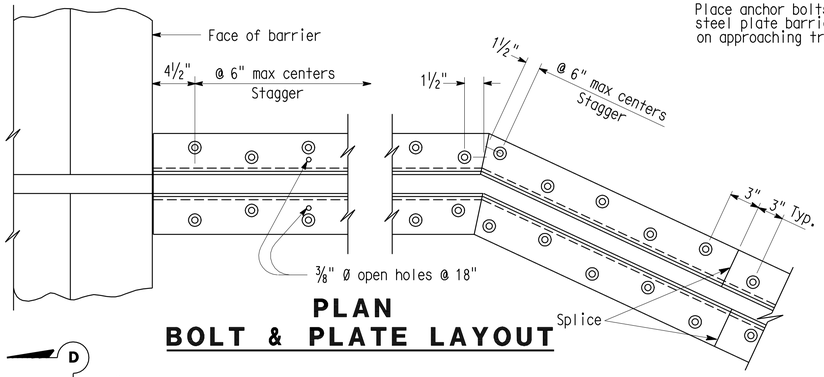

PLAN
BOLT & PLATE LAYOUT

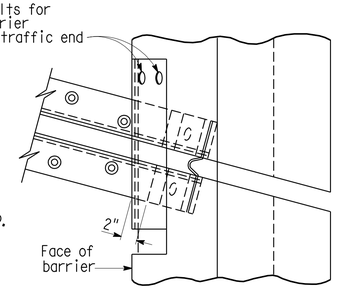

SKEW ≤ 20°

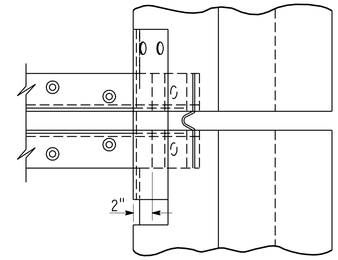

SKEW > 20°

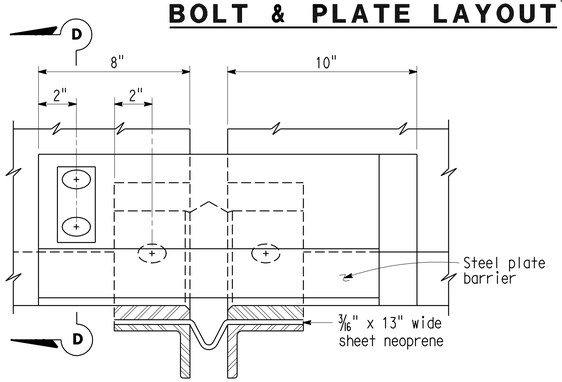

VIEW B-B

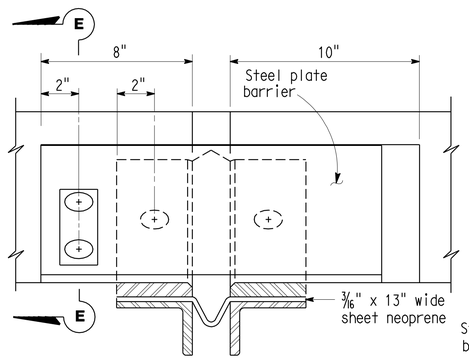

VIEW C-C

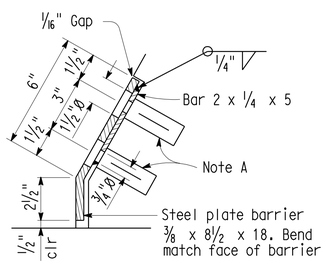

SECTION D-D

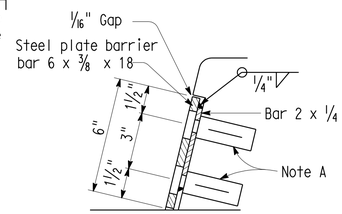

SECTION E-E

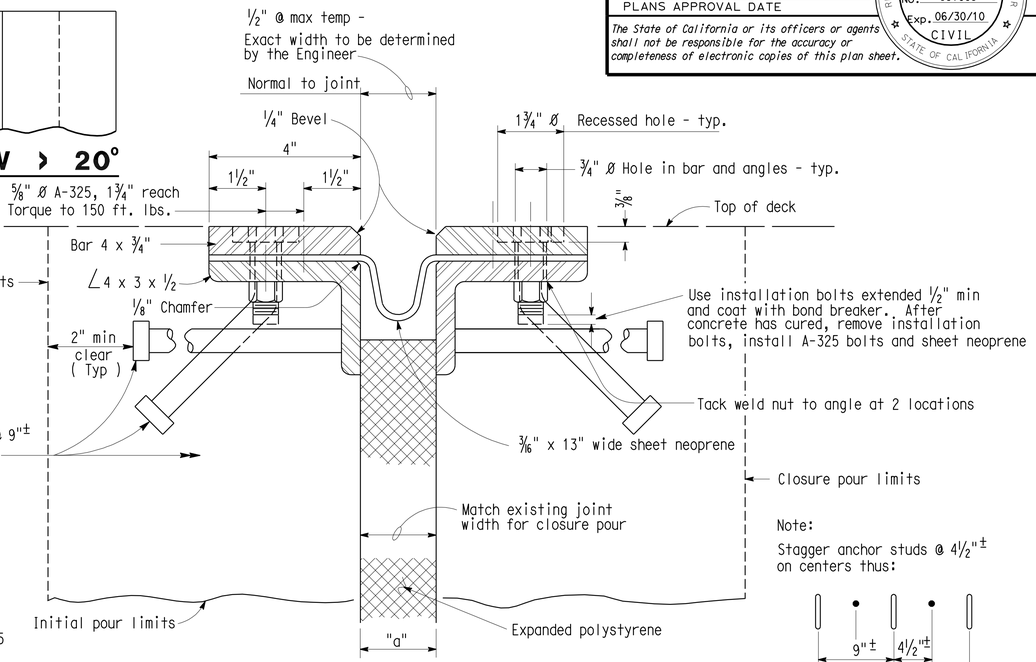

SECTION A-A

Note:
Stagger anchor studs @ 4½"± on centers thus:

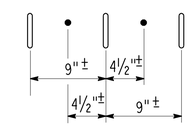

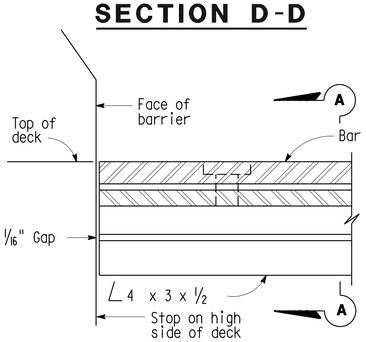

HIGH SIDE BARRIER DETAIL

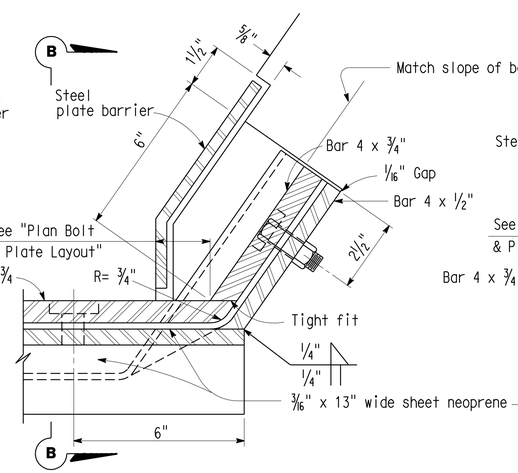

LOW SIDE BARRIER DETAIL
(See Note B)

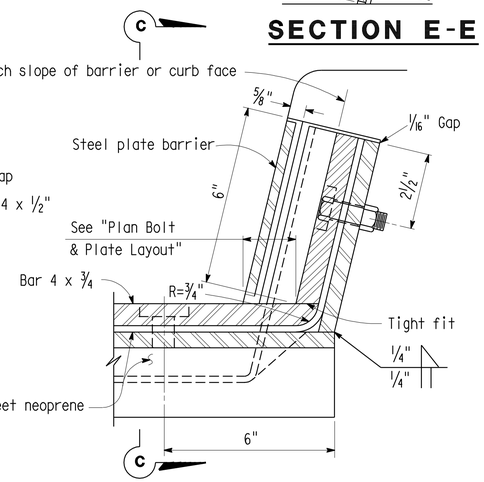

SIDEWALK DETAIL
(See Note B)

NOTES:

Full penetration butt welds may be substituted for fillet welds on all anchor studs.

Alternate types of anchor studs may be permitted subject to the approval by the Engineer.

Joint seal assembly to be used in conjunction with closure pour. (See other sheets for limits). Closure pour shall not be placed until final deck surface is within the tolerance specified.

Use joint at crown of roadway, at any change in transverse slope in deck and at changes in horizontal direction. Place other joints at or near lanes. All metal parts to be painted or galvanized after fabrication.

Sheet neoprene shall be fabricated in one continuous piece or joints shall be vulcanized. Neoprene shall be fabricated to bend around corners. 1" holes in neoprene sheets shall be drilled or punched so that the neoprene is not distorted at the time of installation.

NOTE A

Insert assembly or expansion anchorage for ⅝" x 1¾" A-325 bolt.

NOTE B

Use the Sidewalk Detail at all sidewalk joints. Use the Barrier Detail at both sides if the roadway is crowned or if the difference in elevation between the ends of the seal is 0.5' or less.

NOTE:
THE CONTRACTOR SHALL VERIFY ALL CONTROLLING FIELD DIMENSIONS BEFORE ORDERING OR FABRICATING ANY MATERIAL.

	BY	CHECKED
DESIGN	Tony Brake	HongTien Tran
DETAILS	Tom Dang/others	Tony Brake
QUANTITIES	Tony Brake	HongTien Tran

STATE OF CALIFORNIA
DEPARTMENT OF TRANSPORTATION

DIVISION OF MAINTENANCE
STRUCTURE MAINTENANCE DESIGN

BRIDGE NO. Various
POST MILE Varies

ROUTE 5, 73 BRIDGES
JOINT SEAL ASSEMBLY (MAXIMUM MOVEMENT RATING = 4'')

STRUCTURES MAINTENANCE DETAIL SHEET (ENGLISH) (REV. 10/25/05)

ORIGINAL SCALE IN INCHES FOR REDUCED PLANS 0 1 2 3

CU 12
EA 0K6401

DISREGARD PRINTS BEARING EARLIER REVISION DATES — REVISION DATES 4-06-09 9-14-09 10-27-09

SHEET 06 OF 06

FILE => 12-0K6401-d-jtsa4in.dgn

USERNAME => ttmikes; DATE PLOTTED => 21-JAN-2010 TIME PLOTTED => 08:15