Dist	COUNTY	ROUTE	POST MILES TOTAL PROJECT	SHEET No.	TOTAL SHEETS
12	Ora	74	0.0/1.1, 3.0/13.3	1	37

STP-P074(054)E

STATE OF CALIFORNIA
DEPARTMENT OF TRANSPORTATION

PROJECT PLANS FOR CONSTRUCTION ON
STATE HIGHWAY
IN ORANGE COUNTY
IN SAN JUAN CAPISTRANO AND COUNTY OF ORANGE
ON ROUTE 74 FROM ROUTE 5 TO CALLE ENTRADERO AND
0.37 MILE EAST OF LA PATA AVENUE TO SAN JUAN CANYON BRIDGE

INDEX OF PLANS

SHEET No.	DESCRIPTION
1	TITLE AND LOCATION MAP
2-3	TYPICAL CROSS SECTIONS
4-9	CONSTRUCTION DETAILS
10	CONSTRUCTION AREA SIGNS
11	TRAFFIC HANDLING PLAN (TEMPORARY PAVEMENT DELINEATION QUANTITIES)
12-16	PAVEMENT DELINEATION DETAILS AND QUANTITIES
17-18	SUMMARY OF QUANTITIES
19-21	ELECTRICAL PLANS
22-37	REVISED AND NEW STANDARD PLANS

THE STANDARD PLANS LIST APPLICABLE TO THIS CONTRACT IS INCLUDED IN THE NOTICE TO BIDDERS AND SPECIAL PROVISIONS BOOK.

TO BE SUPPLEMENTED BY STANDARD PLANS DATED MAY 2006

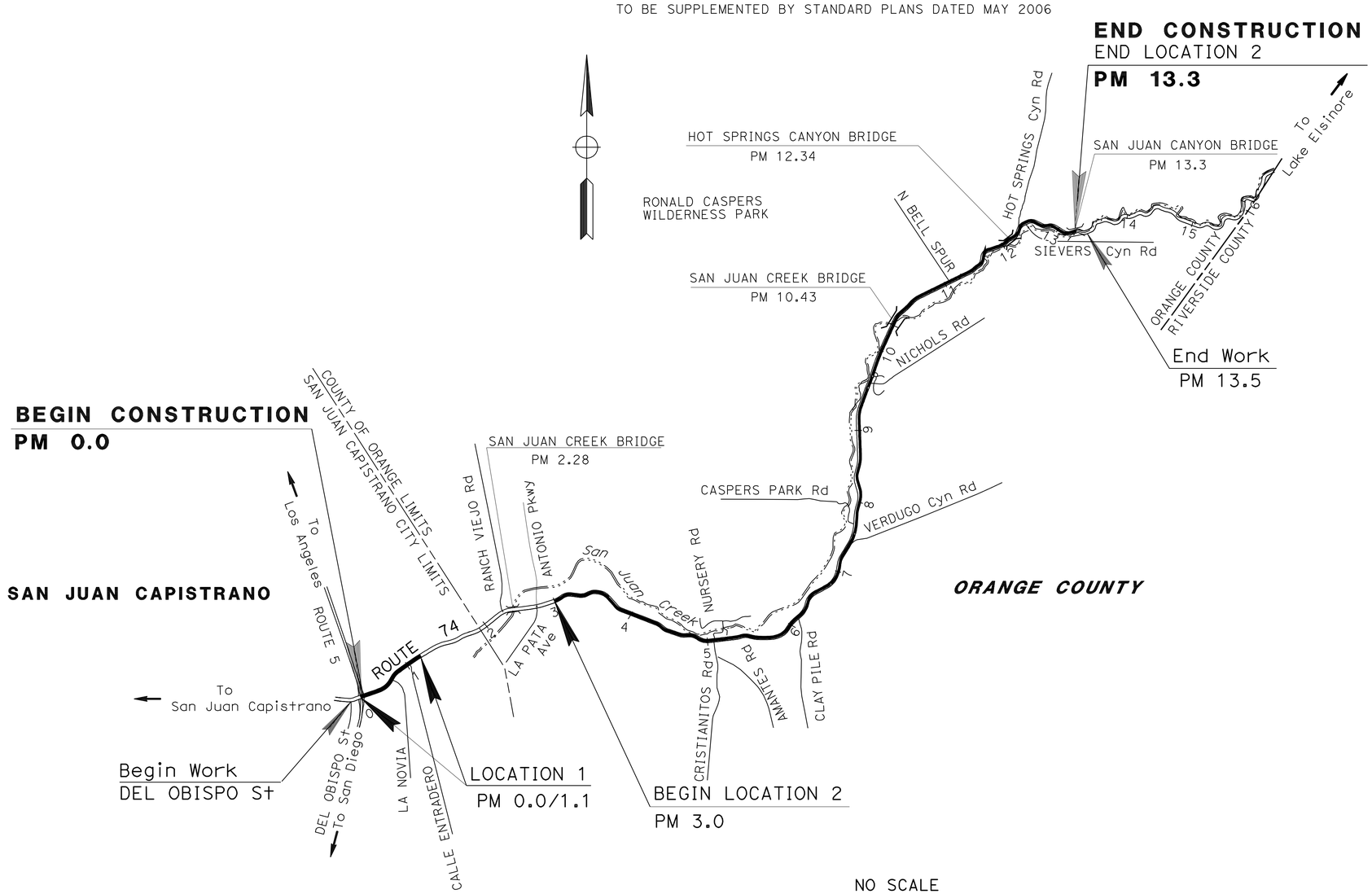

LOCATION MAP

Caltrans

PROJECT MANAGER AHMED ABOU-ABDOU

DESIGN ENGINEER JOSEPH H. Y. LEE

03/21/11
PROJECT ENGINEER REGISTERED CIVIL ENGINEER — DATE

REGISTERED PROFESSIONAL ENGINEER
JOSEPH H.Y. LEE
No. C59058
Exp. 06/30/2011
CIVIL
STATE OF CALIFORNIA

May 23, 2011
PLANS APPROVAL DATE

THE STATE OF CALIFORNIA OR ITS OFFICERS OR AGENTS SHALL NOT BE RESPONSIBLE FOR THE ACCURACY OR COMPLETENESS OF SCANNED COPIES OF THIS PLAN SHEET.

CONTRACT No.	12-0J4304
PROJECT ID	1200020044

LAST REVISION 03-10-11 DATE PLOTTED => 14-SEP-2011 TIME PLOTTED => 05:45

THE CONTRACTOR SHALL POSSESS THE CLASS (OR CLASSES) OF LICENSE AS SPECIFIED IN THE "NOTICE TO BIDDERS."

Dist	COUNTY	ROUTE	POST MILES TOTAL PROJECT	SHEET No.	TOTAL SHEETS
12	Ora	74	0.0/1.1, 3.0/13.3	2	37

REGISTERED CIVIL ENGINEER 05/09/11 DATE

5-23-11
PLANS APPROVAL DATE

REGISTERED PROFESSIONAL ENGINEER
JOSEPH H.Y. LEE
No. C59058
Exp. 06/30/2011
CIVIL
STATE OF CALIFORNIA

THE STATE OF CALIFORNIA OR ITS OFFICERS OR AGENTS SHALL NOT BE RESPONSIBLE FOR THE ACCURACY OR COMPLETENESS OF SCANNED COPIES OF THIS PLAN SHEET.

NOTES:

1. DIMENSIONS OF THE STRUCTURAL SECTIONS ARE SUBJECT TO TOLERANCES SPECIFIED IN THE STANDARD SPECIFICATIONS.
2. SUPERELEVATION AS SHOWN OR AS DIRECTED BY THE ENGINEER.
3. EXISTING UTILITIES HAVE NOT BEEN PLOTTED ON THESE PLANS.
4. SEE CONSTRUCTION DETAILS SHEETS FOR SHOULDER BACKING, SAFETY EDGES, ROLLED PAVEMENT EDGES AND COLD PLANE DETAILS.
5. SEE SHEET PDD-2 FOR RUMBLE STRIP DETAILS.
6. PROTECT IN PLACE EXISTING TRAFFIC SIGNS.
7. FOR ACCURATE RIGHT OF WAY DATA, CONTACT RIGHT OF WAY ENGINEERING AT THE DISTRICT OFFICE.

ABBREVIATIONS:

RAC	RUBBERIZED ASPHALT CONCRETE
RHMA	RUBBERIZED HOT MIX ASPHALT
HMA	HOT MIX ASPHALT

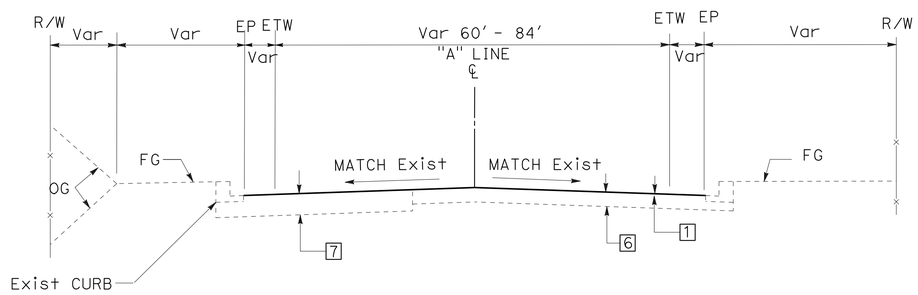

LOCATION 1 ROUTE 74

PM 0.1 TO 1.1

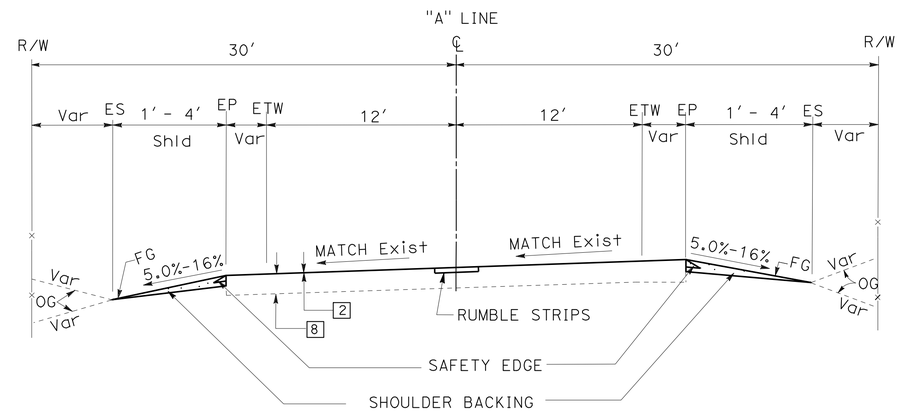

LOCATION 2 ROUTE 74

PM 3.0 TO 5.3, 10.0 TO 11.3 and 12.0 TO 13.3

TYPICAL STRUCTURAL SECTIONS

1 — COLD PLANE AC 0.20'
0.20' RHMA-G

2 — COLD PLANE AC 0.10'
0.20' RHMA-G

3 — 0.10' RHMA-G

4 — COLD PLANE AC 0.10'
0.10' RHMA-O
0.10' RHMA-G

5 — REMOVE 0.75' Exist
0.20' RHMA-G
0.65' HMA (TYPE A)

6 — Exist
0.20' RAC (TYPE D)
0.15' AC (TYPE B)

7 — Exist
0.20' RAC (TYPE D)
1.65' AC (TYPE B)

8 — Exist
0.5' - 0.85' AC
VARIES AB

TYPICAL CROSS SECTIONS

NO SCALE

X-1

REVISED BY	DATE REVISED

CALCULATED-DESIGNED BY	CHECKED BY
QUAN TRINH	JOSEPH H.Y. LEE

FUNCTIONAL SUPERVISOR: MILI LIM STAMATION

STATE OF CALIFORNIA - DEPARTMENT OF TRANSPORTATION
Caltrans
DESIGN

LAST REVISION 03-10-11 | DATE PLOTTED => 26-MAY-2011 | TIME PLOTTED => 06:36

Dist	COUNTY	ROUTE	POST MILES TOTAL PROJECT	SHEET No.	TOTAL SHEETS
12	Ora	74	0.0/1.1, 3.0/13.3	3	37

REGISTERED CIVIL ENGINEER 05/09/11 DATE

5-23-11
PLANS APPROVAL DATE

REGISTERED PROFESSIONAL ENGINEER
JOSEPH H.Y. LEE
No. C59058
Exp. 06/30/2011
CIVIL
STATE OF CALIFORNIA

THE STATE OF CALIFORNIA OR ITS OFFICERS OR AGENTS SHALL NOT BE RESPONSIBLE FOR THE ACCURACY OR COMPLETENESS OF SCANNED COPIES OF THIS PLAN SHEET.

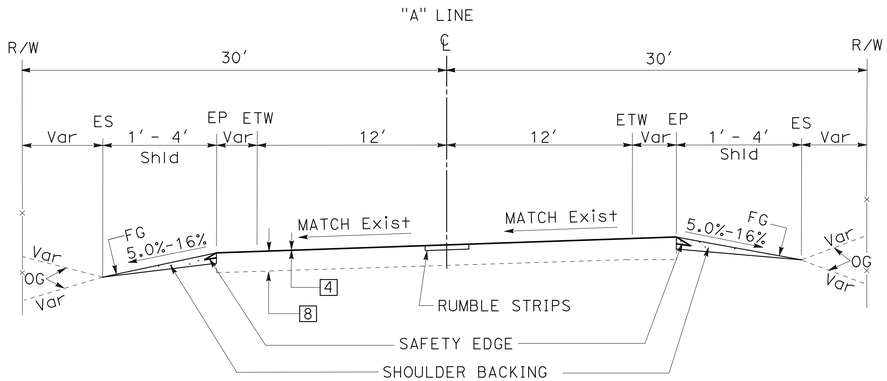

LOCATION 2 ROUTE 74

PM 11.7 TO 12.0

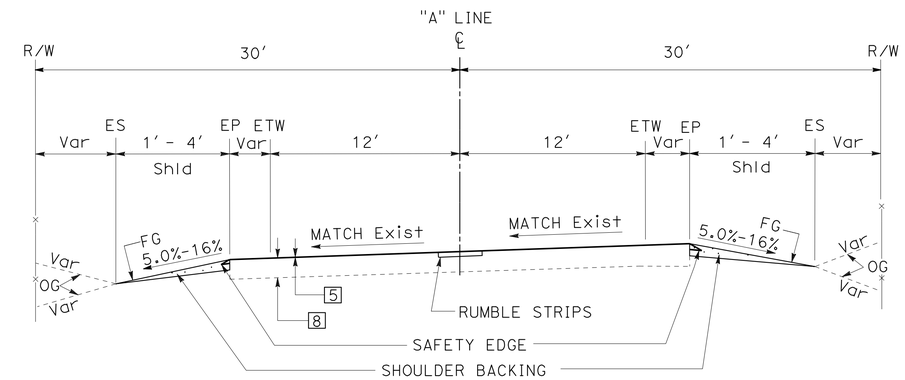

LOCATION 2 ROUTE 74

PM 11.3 TO 11.7

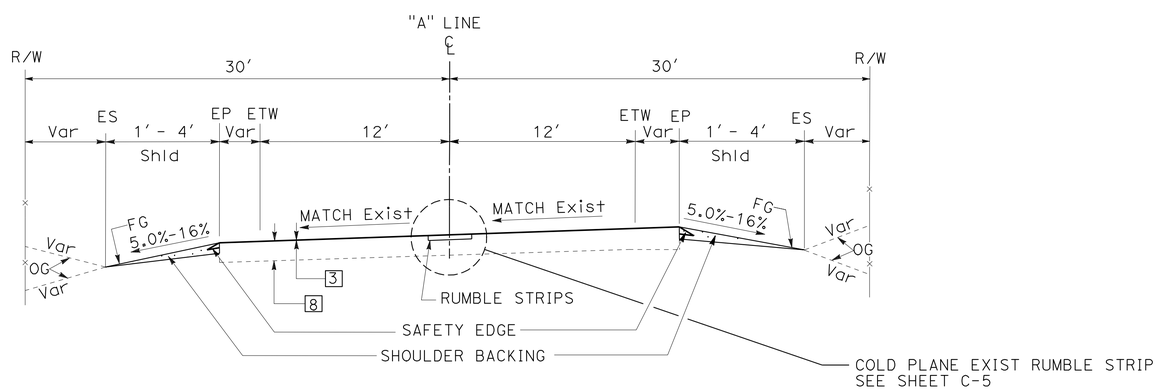

LOCATION 2 ROUTE 74

PM 5.3 TO 10.0

TYPICAL CROSS SECTIONS

NO SCALE

X-2

STATE OF CALIFORNIA - DEPARTMENT OF TRANSPORTATION
Caltrans® **DESIGN**

FUNCTIONAL SUPERVISOR: MILI LIM STAMATION

CALCULATED-DESIGNED BY: QUAN TRINH
CHECKED BY: JOSEPH H. Y. LEE

REVISED BY | DATE REVISED

LAST REVISION 12-08-10
DATE PLOTTED => 26-MAY-2011
TIME PLOTTED => 08:40

Dist	COUNTY	ROUTE	POST MILES TOTAL PROJECT	SHEET No.	TOTAL SHEETS
12	Ora	74	0.0/1.1, 3.0/13.3	4	37

REGISTERED CIVIL ENGINEER 05/09/11 DATE

5-23-11
PLANS APPROVAL DATE

REGISTERED PROFESSIONAL ENGINEER JOSEPH H.Y. LEE No. C59058 Exp. 06/30/2011 CIVIL STATE OF CALIFORNIA

THE STATE OF CALIFORNIA OR ITS OFFICERS OR AGENTS SHALL NOT BE RESPONSIBLE FOR THE ACCURACY OR COMPLETENESS OF SCANNED COPIES OF THIS PLAN SHEET.

LEGEND:

- [X] STRUCTURAL SECTION TYPE
- (X) CURB RAMP
- (X) MAINTENANCE VEHICLE PULLOUT (MVP)
- (X) MBGR (WOOD POST)
- (X) (E) POTHOLE LOCATION

ABBREVIATIONS:

SCG SOUTHERN CALIFORNIA GAS

CURB RAMP TYPE

CURB RAMP	TYPE	CURB RAMP	TYPE
1	CASE A	8	CASE C
2	CASE A	9	CASE A
3	CASE A	10	CASE C
4	CASE A	11	CASE A
5	CASE C	12	CASE A
6	CASE C	13	CASE C
7	CASE C		

NOTE: FOR CURB RAMP DETAILS SEE C-4

EXIST POTHOLE LOCATIONS

POTHOLE No.	UTILITY TYPE - OWNER	NORTHING	EASTING	Elev	DEPTH (Ft)
1	8" GAS - SCG	2133448.87	6154863.22	324.11	4.67
2	8" GAS - SCG	2133487.84	6154748.48	325.65	4.17
3	8" GAS - SCG	2134437.31	6151986.62	286.02	4.42
4	8" GAS - SCG	2134475.86	6151886.86	285.00	4.75
5	8" GAS - SCG	2136459.59	6148156.39	337.56	4.25
6	8" GAS - SCG	2136259.23	6146472.99	284.81	4.42

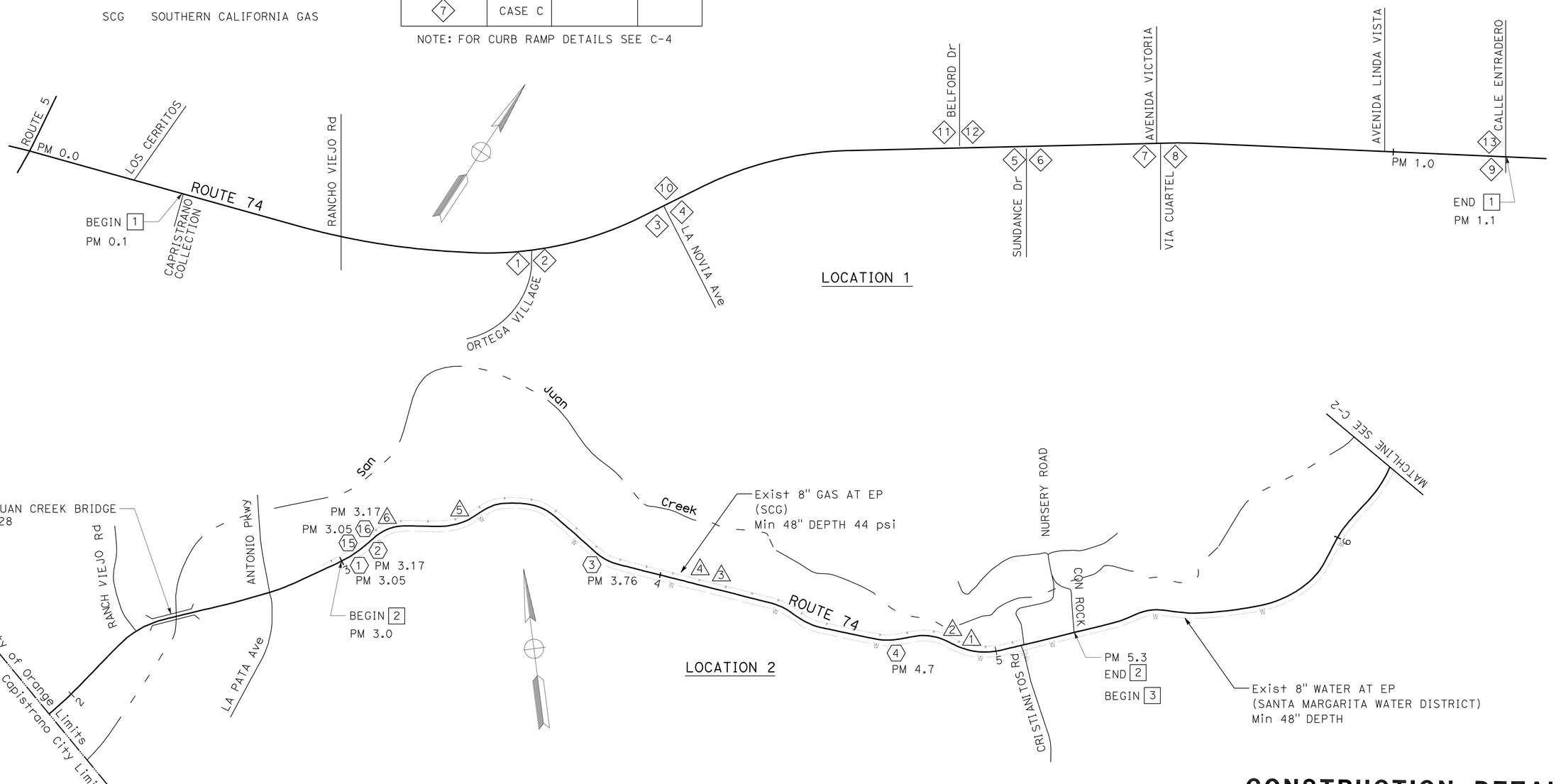

CONSTRUCTION DETAILS

NO SCALE

C-1

STATE OF CALIFORNIA - DEPARTMENT OF TRANSPORTATION
Caltrans
DESIGN

FUNCTIONAL SUPERVISOR: MILI LIM STAMATION
CALCULATED-DESIGNED BY: QUAN TRINH
CHECKED BY: JOSEPH H. Y. LEE
REVISED BY
DATE REVISED

LAST REVISION 03-10-11
DATE PLOTTED => 25-MAY-2011
TIME PLOTTED => 08:40

Dist	COUNTY	ROUTE	POST MILES TOTAL PROJECT	SHEET No.	TOTAL SHEETS
12	Ora	74	0.0/1.1, 3.0/13.3	5	37

REGISTERED CIVIL ENGINEER 05/09/11 DATE

5-23-11
PLANS APPROVAL DATE

REGISTERED PROFESSIONAL ENGINEER
JOSEPH H.Y. LEE
No. C59058
Exp. 06/30/2011
CIVIL
STATE OF CALIFORNIA

THE STATE OF CALIFORNIA OR ITS OFFICERS OR AGENTS SHALL NOT BE RESPONSIBLE FOR THE ACCURACY OR COMPLETENESS OF SCANNED COPIES OF THIS PLAN SHEET.

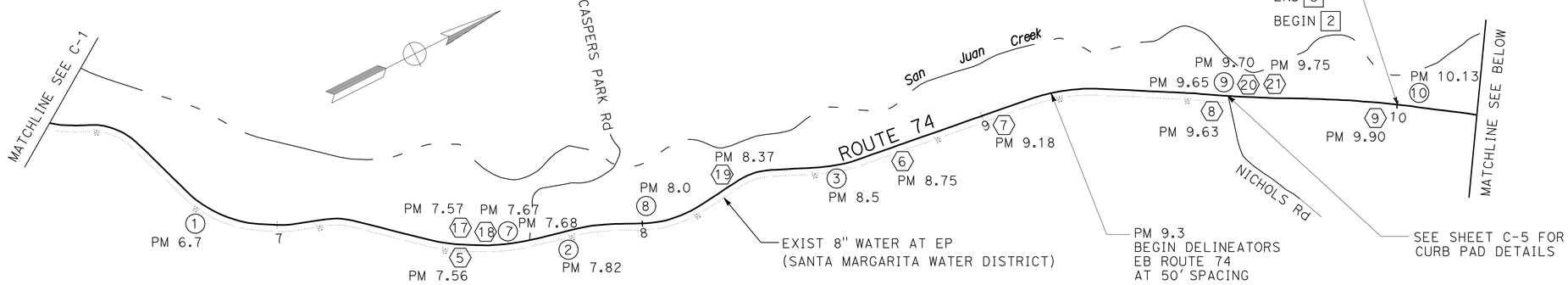

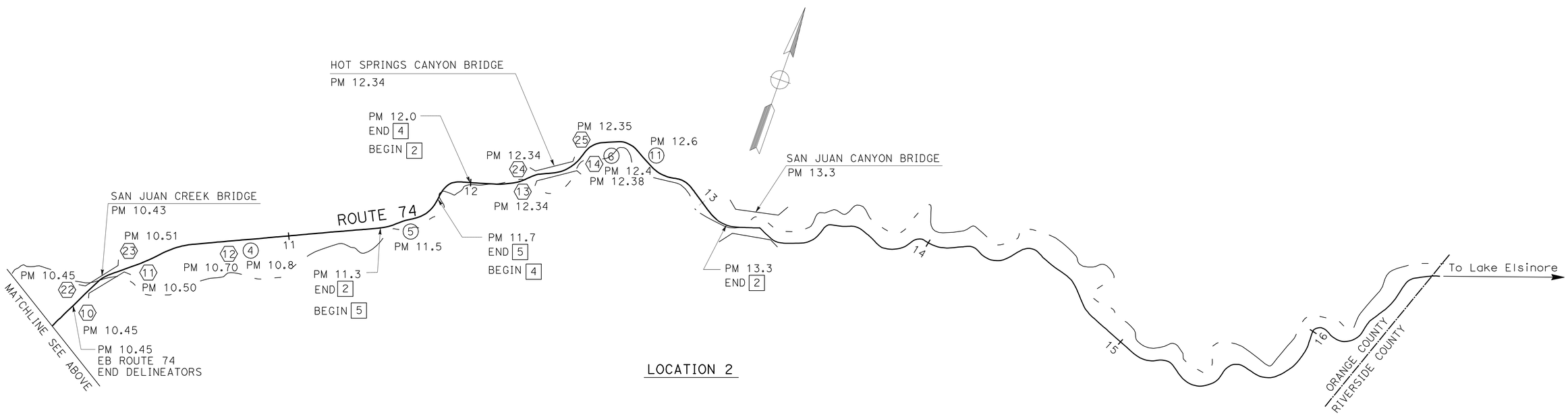

LOCATION 2

CONSTRUCTION DETAILS

NO SCALE

C-2

STATE OF CALIFORNIA - DEPARTMENT OF TRANSPORTATION
Caltrans
DESIGN

FUNCTIONAL SUPERVISOR: MILI LIM STAMATION
CALCULATED-DESIGNED BY: QUAN TRINH
CHECKED BY: JOSEPH H. Y. LEE
REVISED BY
DATE REVISED

LAST REVISION 03-10-11
DATE PLOTTED => 26-MAY-2011
TIME PLOTTED => 08:40

Dist	COUNTY	ROUTE	POST MILES TOTAL PROJECT	SHEET No.	TOTAL SHEETS
12	Ora	74	0.0/1.1, 3.0/13.3	6	37

REGISTERED CIVIL ENGINEER 03/21/11 DATE

5-23-11
PLANS APPROVAL DATE

REGISTERED PROFESSIONAL ENGINEER JOSEPH H.Y. LEE No. C59058 Exp.06/30/2011 CIVIL STATE OF CALIFORNIA

THE STATE OF CALIFORNIA OR ITS OFFICERS OR AGENTS SHALL NOT BE RESPONSIBLE FOR THE ACCURACY OR COMPLETENESS OF SCANNED COPIES OF THIS PLAN SHEET.

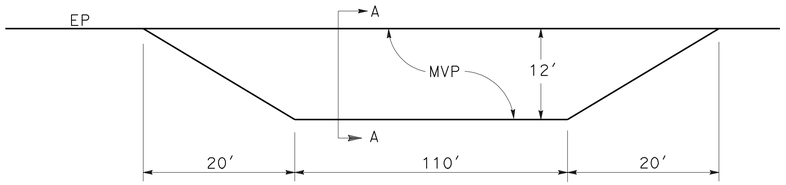

LAYOUT

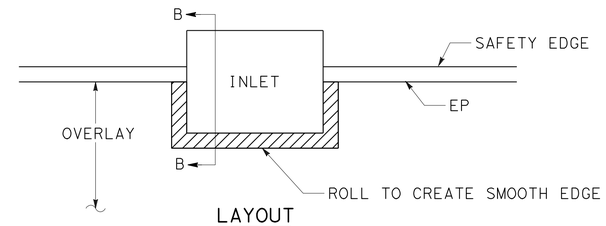

LAYOUT

ABBREVIATIONS:

CP	CATCH POINT
HP	HINGE POINT

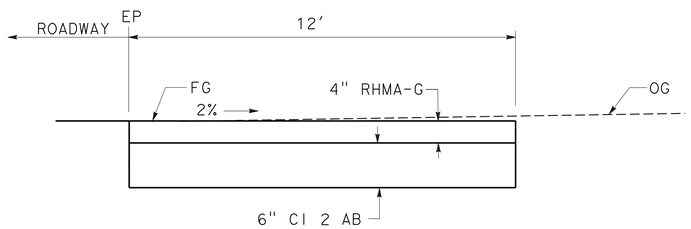

SECTION A-A

MAINTENANCE VEHICLE PULLOUT (MVP)

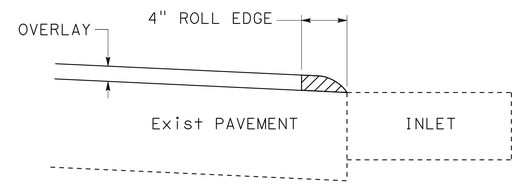

SECTION B-B

ROLLED PAVEMENT EDGE

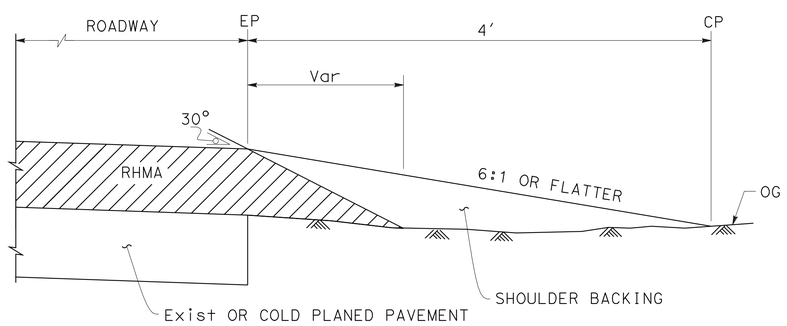

SAFETY EDGE CASE A

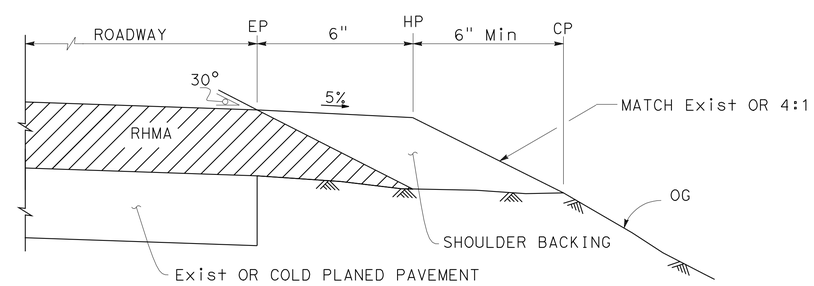

SAFETY EDGE CASE B

NOTES:

1. THE AREA ADJACENT TO THE PAVEMENT MUST BE GRADED TO THE SAME PLANE AND ELEVATION OF THE COLD PLANED PAVEMENT PRIOR TO PLACING SAFETY EDGE. THE WIDTH OF THE GRADING SHOULD BE AT LEAST THE PLANNED WIDTH OF THE SAFETY EDGE PLUS 0.25 FT TO ALLOW THE PAVER END GATE SKI TO RIDE ON THE SURFACE BEING PAVED.

2. USE CASE A WHEN ADJACENT UNPAVED SHOULDER WIDTH IS 4 Ft OR GREATER. USE CASE B WHEN ADJACENT UNPAVED SHOULDER WIDTH IS LESS THAN 4 Ft.

CONSTRUCTION DETAILS

NO SCALE

C-3

STATE OF CALIFORNIA - DEPARTMENT OF TRANSPORTATION
Caltrans® DESIGN

FUNCTIONAL SUPERVISOR: MILI LIM STAMATION
CALCULATED-DESIGNED BY: QUAN TRINH
CHECKED BY: JOSEPH H. Y. LEE
REVISED BY / DATE REVISED

LAST REVISION 03-10-11
DATE PLOTTED => 26-MAY-2011
TIME PLOTTED => 06:36

Dist	COUNTY	ROUTE	POST MILES TOTAL PROJECT	SHEET No.	TOTAL SHEETS
12	Ora	74	0.0/1.1, 3.0/13.3	7	37

REGISTERED CIVIL ENGINEER 03/21/11 DATE

5-23-11
PLANS APPROVAL DATE

REGISTERED PROFESSIONAL ENGINEER
JOSEPH H.Y. LEE
No. C59058
Exp.06/30/2011
CIVIL
STATE OF CALIFORNIA

THE STATE OF CALIFORNIA OR ITS OFFICERS OR AGENTS SHALL NOT BE RESPONSIBLE FOR THE ACCURACY OR COMPLETENESS OF SCANNED COPIES OF THIS PLAN SHEET.

NOTE:

FOR ADDITIONAL CURB RAMP DETAILS SEE STANDARD PLANS A88A.

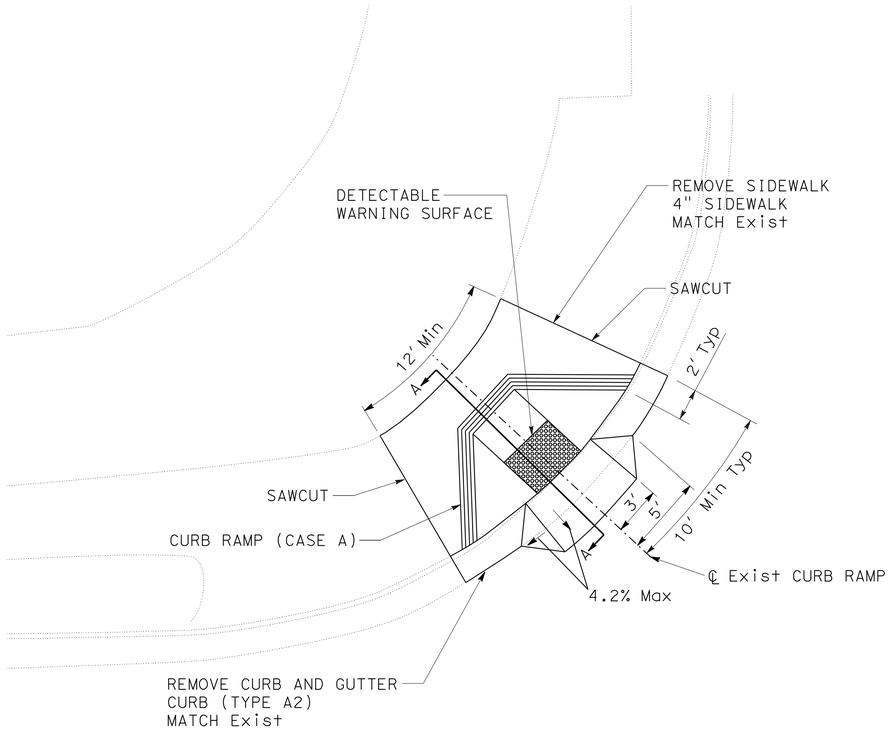

CURB RAMP DETAIL (CASE A)

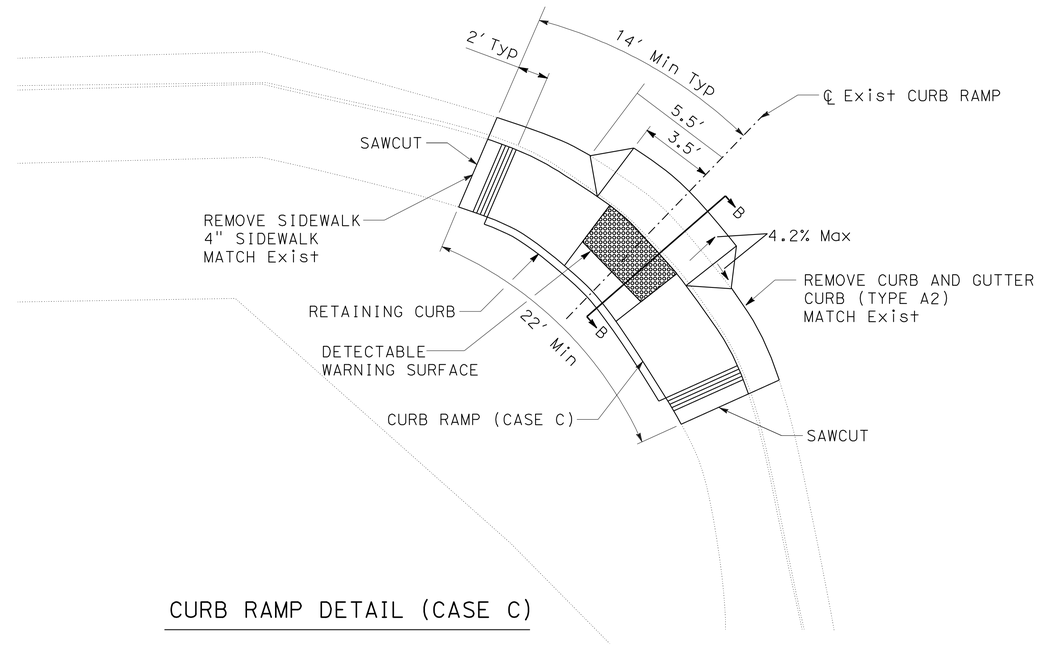

CURB RAMP DETAIL (CASE C)

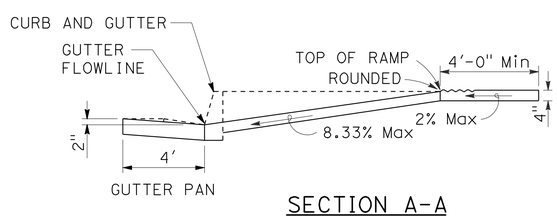

SECTION A-A

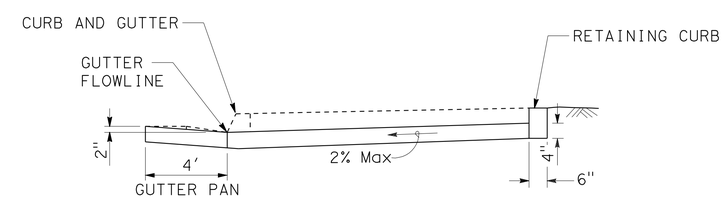

SECTION B-B

CONSTRUCTION DETAILS

NO SCALE

C-4

STATE OF CALIFORNIA - DEPARTMENT OF TRANSPORTATION
Caltrans DESIGN

FUNCTIONAL SUPERVISOR: MILI LIM STAMATION
CALCULATED-DESIGNED BY: QUAN TRINH
CHECKED BY: JOSEPH H. Y. LEE
REVISED BY / DATE REVISED

LAST REVISION 03-10-11
DATE PLOTTED => 26-MAY-2011
TIME PLOTTED => 06:36

Dist	COUNTY	ROUTE	POST MILES TOTAL PROJECT	SHEET No.	TOTAL SHEETS
12	Ora	74	0.0/1.1, 3.0/13.3	8	37

REGISTERED CIVIL ENGINEER 03/21/11 DATE

5-23-11
PLANS APPROVAL DATE

REGISTERED PROFESSIONAL ENGINEER JOSEPH H.Y. LEE No. C59058 Exp. 06/30/2011 CIVIL STATE OF CALIFORNIA

THE STATE OF CALIFORNIA OR ITS OFFICERS OR AGENTS SHALL NOT BE RESPONSIBLE FOR THE ACCURACY OR COMPLETENESS OF SCANNED COPIES OF THIS PLAN SHEET.

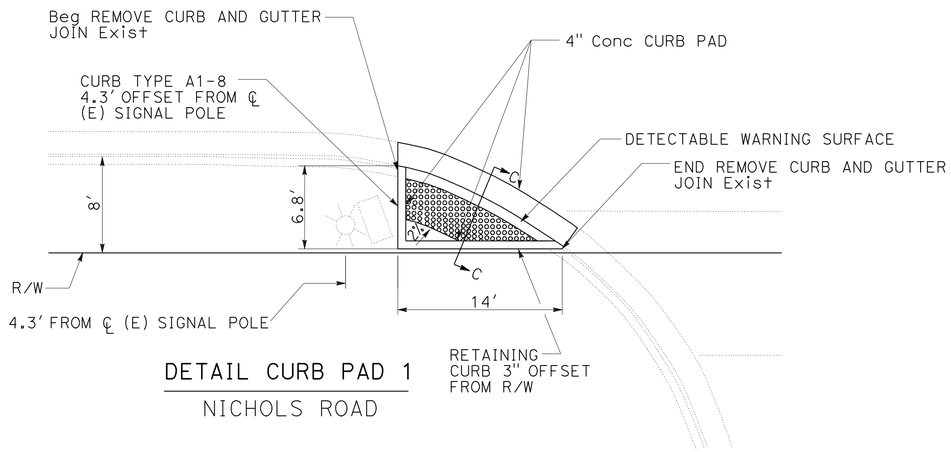

DETAIL CURB PAD 1

NICHOLS ROAD

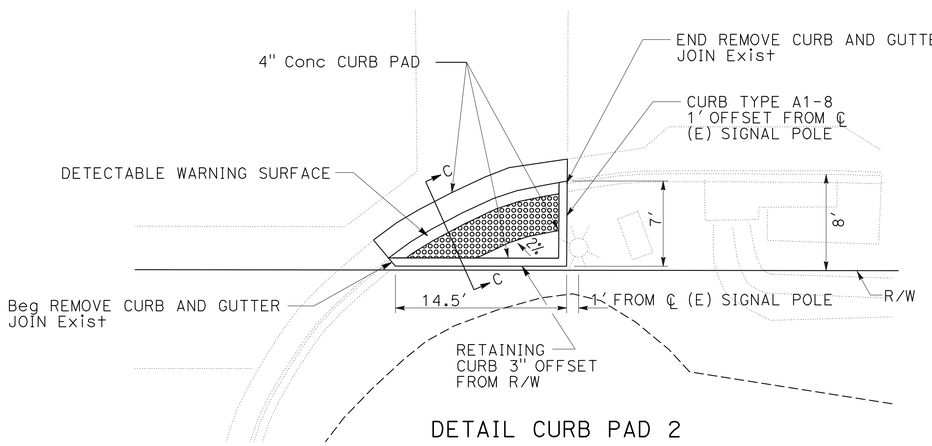

DETAIL CURB PAD 2

NICHOLS ROAD

SECTION C-C

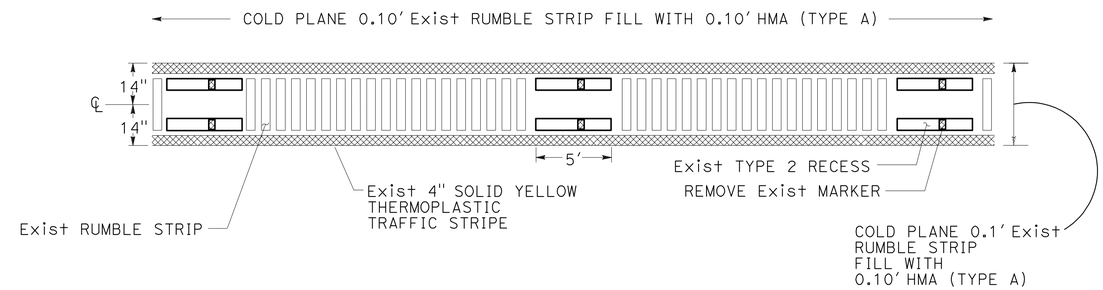

PLAN

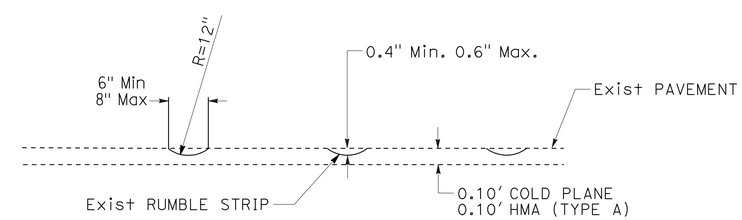

ELEVATION

COLD PLANE Exist RUMBLE STRIP

PM 5.3 TO PM 10.0

CONSTRUCTION DETAILS

NO SCALE

C-5

STATE OF CALIFORNIA - DEPARTMENT OF TRANSPORTATION
Caltrans® DESIGN

FUNCTIONAL SUPERVISOR: MILI LIM STAMATION
CALCULATED-DESIGNED BY: QUAN TRINH
CHECKED BY: JOSEPH H. Y. LEE
REVISED BY
DATE REVISED

LAST REVISION 03-10-11
DATE PLOTTED => 26-MAY-2011
TIME PLOTTED => 06:36

Dist	COUNTY	ROUTE	POST MILES TOTAL PROJECT	SHEET No.	TOTAL SHEETS
12	Ora	74	0.0/1.1, 3.0/13.3	9	37

REGISTERED CIVIL ENGINEER 03/21/11 DATE

5-23-11
PLANS APPROVAL DATE

REGISTERED PROFESSIONAL ENGINEER
JOSEPH H.Y. LEE
No. C59058
Exp. 06/30/2011
CIVIL
STATE OF CALIFORNIA

THE STATE OF CALIFORNIA OR ITS OFFICERS OR AGENTS SHALL NOT BE RESPONSIBLE FOR THE ACCURACY OR COMPLETENESS OF SCANNED COPIES OF THIS PLAN SHEET.

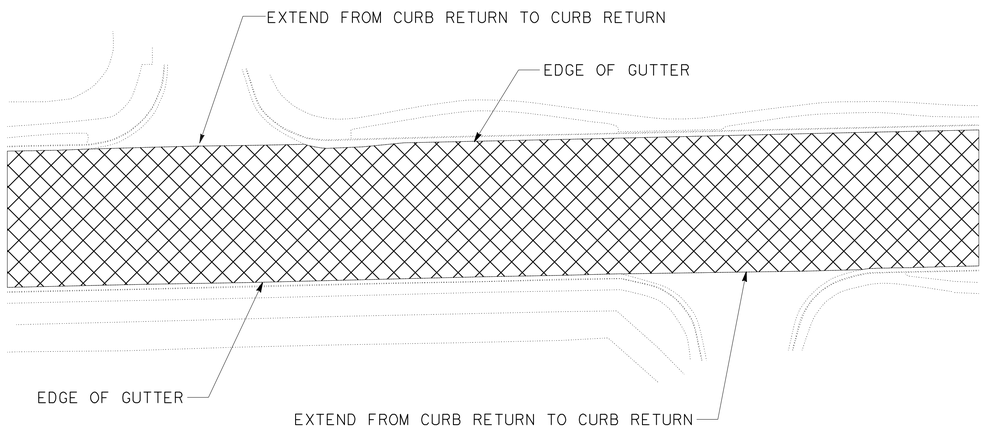

TYPICAL COLD PLANE LIMITS
LOCATION 1

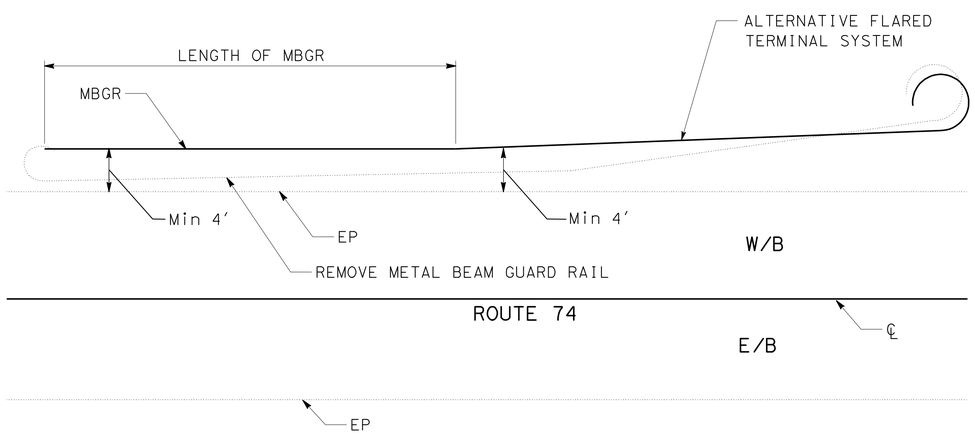

TYPICAL RELOCATE METAL BEAM GUARD RAIL

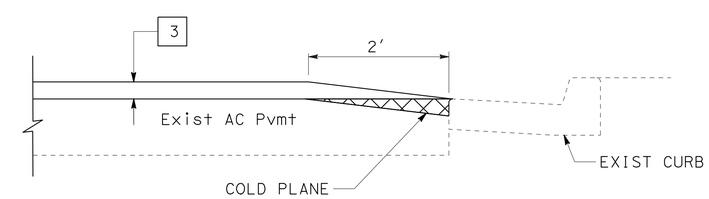

EDGE TRANSITION AT CURB
LOCATION 2

CONSTRUCTION DETAILS

NO SCALE

C-6

STATE OF CALIFORNIA - DEPARTMENT OF TRANSPORTATION
Caltrans® DESIGN

FUNCTIONAL SUPERVISOR: MILI LIM STAMATION

CALCULATED-DESIGNED BY: QUAN TRINH
CHECKED BY: JOSEPH H. Y. LEE

REVISED BY | DATE REVISED

LAST REVISION 03-10-11
DATE PLOTTED => 25-MAY-2011
TIME PLOTTED => 10:59

Dist	COUNTY	ROUTE	POST MILES TOTAL PROJECT	SHEET No.	TOTAL SHEETS
12	Ora	74	0.0/1.1, 3.0/13.3	10	37

REGISTERED CIVIL ENGINEER 03/21/11 DATE

5-23-11
PLANS APPROVAL DATE

REGISTERED PROFESSIONAL ENGINEER JOSEPH H.Y. LEE No. C59058 Exp. 06/30/2011 CIVIL STATE OF CALIFORNIA

THE STATE OF CALIFORNIA OR ITS OFFICERS OR AGENTS SHALL NOT BE RESPONSIBLE FOR THE ACCURACY OR COMPLETENESS OF SCANNED COPIES OF THIS PLAN SHEET.

NOTES:

1. SIGN LOCATIONS SHOWN ARE APPROXIMATE. EXACT SIGN LOCATIONS TO BE DETERMINED BY THE ENGINEER.
2. EXISTING UTILITY FACILITIES HAVE NOT BEEN PLOTTED ON THESE PLANS.

LEGEND:

(x) CONSTRUCTION AREA SIGN

SIGN (2 - POST)

SIGN (1 - POST)

[E] PORTABLE CHANGEABLE MESSAGE SIGN

STATIONARY MOUNTED CONSTRUCTION AREA SIGN

SIGN No.	SIGN CODE	PANEL SIZE	SIGN MESSAGE	POST AND SIZE	No. OF SIGNS
(A)	W20-1	48" x 48"	ROAD WORK AHEAD	1-4" x 6"	9
(B)	G20-2	36" x 18"	END ROAD WORK	1-4" x 4"	4
(C)	C40A	48" x 48"	TRAFFIC FINES DOUBLED IN WORK ZONES	1-4" x 4"	4
(D)	SC-1 (TYPE 1)	90" x 60"	CONSTRUCTION PROJECT INFORMATION SIGN	2-6" x 8"	2

PORTABLE CHANGEABLE MESSAGE SIGN (PCMS)

SIGN SYMBOL	SIGN MESSAGE	No. OF SIGNS
		EA
[E]	EXACT MESSAGE TO BE DETERMINED BY THE ENGINEER	8

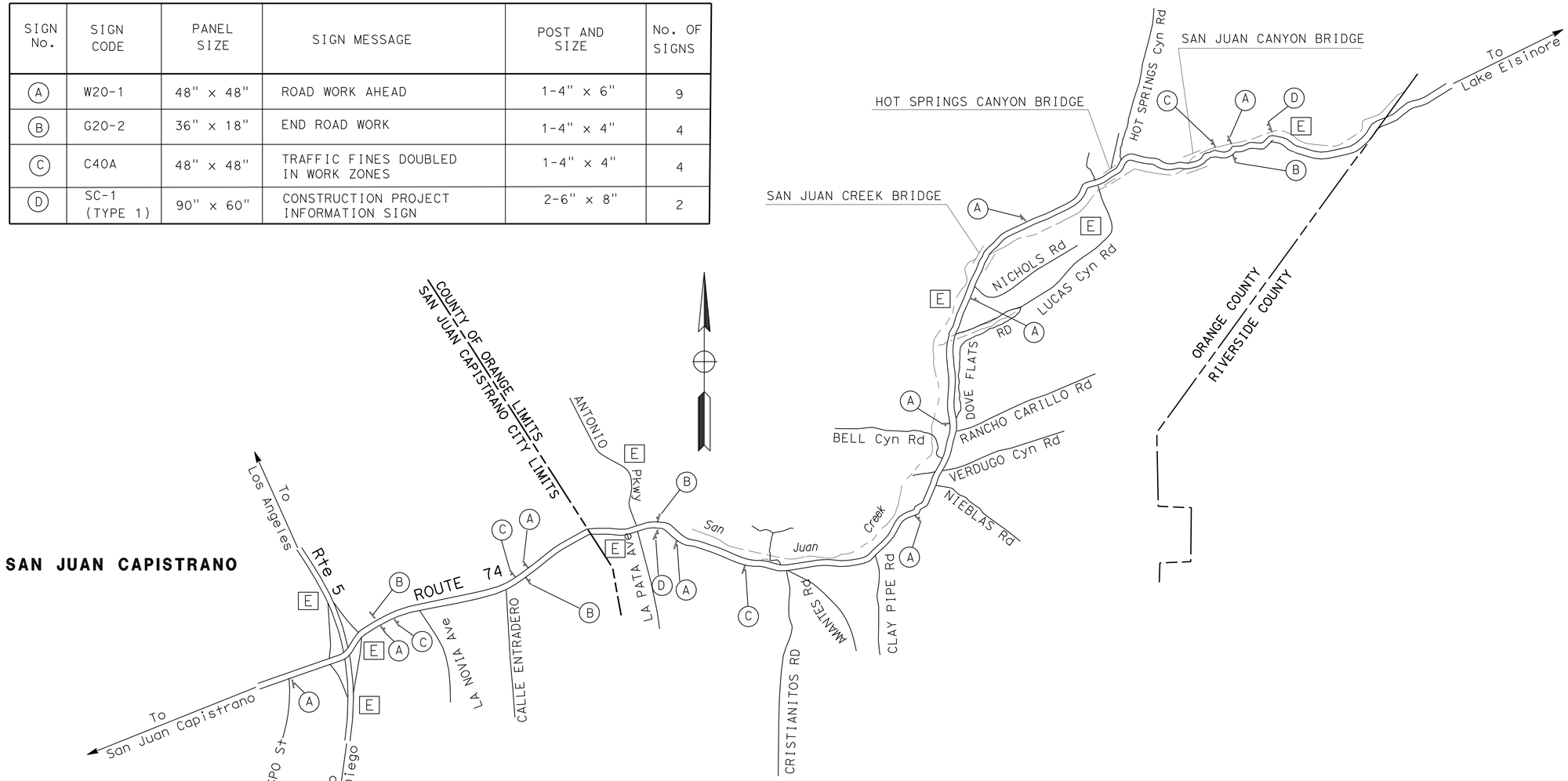

THIS PLAN ACCURATE FOR CONSTRUCTION AREA SIGN ONLY

CONSTRUCTION AREA SIGNS

NO SCALE

CS-1

STATE OF CALIFORNIA - DEPARTMENT OF TRANSPORTATION
Caltrans DESIGN

FUNCTIONAL SUPERVISOR: MILI LIM STAMATION

CALCULATED-DESIGNED BY: QUAN TRINH
CHECKED BY: JOSEPH H. Y. LEE

REVISED BY | DATE REVISED

LAST REVISION 12-01-10 | DATE PLOTTED => 26-MAY-2011 | TIME PLOTTED => 06:36

Dist	COUNTY	ROUTE	POST MILES TOTAL PROJECT	SHEET No.	TOTAL SHEETS
12	Ora	74	0.0/1.1, 3.0/13.3	11	37

REGISTERED CIVIL ENGINEER 03/21/11 DATE

5-23-11
PLANS APPROVAL DATE

REGISTERED PROFESSIONAL ENGINEER
JOSEPH H.Y. LEE
No. C59058
Exp. 06/30/2011
CIVIL
STATE OF CALIFORNIA

THE STATE OF CALIFORNIA OR ITS OFFICERS OR AGENTS SHALL NOT BE RESPONSIBLE FOR THE ACCURACY OR COMPLETENESS OF SCANNED COPIES OF THIS PLAN SHEET.

NOTES:

1. TEMPORARY TRAFFIC STRIPE (PAINT) WITHOUT ANY PAVEMENT MARKERS SHALL BE USED FOR TEMPORARY PAVEMENT DELINEATION.
2. TEMPORARY PAVEMENT DELINEATION SHALL REPLACE OBLITERATED PAVEMENT AT THE SAME LOCATION AS FOR:
   a: DETAIL 6 SHALL BE APPLIED FOR DETAILS 6, 19 AND 32.
   b: DETAIL 28 SHALL BE APPLIED FOR DETAILS 9 AND 37B.
   c: 4" SOLID WHITE SHALL BE APPLIED FOR DETAILS 27B, 38 AND 38A.
   d: 4" SOLID YELLOW SHALL BE APPLIED FOR DETAILS 22, 22 Mod AND 29.
3. NO TEMPORARY PAVEMENT DELINEATION SHALL BE PLACED ON CONCRETE PAVEMENT.

TEMPORARY PAVEMENT DELINEATION QUANTITIES

LOCATION DESCRIPTION	LIMITS	TEMPORARY TRAFFIC STRIPE (PAINT)			
		4"			
		YELLOW BROKEN DETAIL 6	WHITE BROKEN DETAIL 8	YELLOW SOLID	WHITE SOLID
	PM	LF	LF	LF	LF
CAPISTRANO COLLECTION TO CALLE ENTRADERO	0.1 TO 1.1	8,235	9,759	10,305	3,106
0.37 MILE EAST OF LA PATA Ave TO SAN JUAN BRIDGE	3.0 TO 13.3	5,598	150	51,833	109,392
SUB-TOTAL		13,833	9,909	62,138	112,498
TOTAL		198,378			

TRAFFIC HANDLING PLAN (TEMPORARY PAVEMENT DELINEATION QUANTITIES)

THQ-1

STATE OF CALIFORNIA - DEPARTMENT OF TRANSPORTATION
Caltrans DESIGN

FUNCTIONAL SUPERVISOR: MILI LIM STAMATION
CALCULATED-DESIGNED BY: QUAN TRINH
CHECKED BY: JOSEPH H.Y. LEE
REVISED BY
DATE REVISED

LAST REVISION 03-10-11
DATE PLOTTED => 25-MAY-2011
TIME PLOTTED => 11:06

Dist	COUNTY	ROUTE	POST MILES TOTAL PROJECT	SHEET No.	TOTAL SHEETS
12	Ora	74	0.0/1.1, 3.0/13.3	12	37

REGISTERED CIVIL ENGINEER 03/21/11 DATE

5-23-11
PLANS APPROVAL DATE

REGISTERED PROFESSIONAL ENGINEER JOSEPH H.Y. LEE No. C59058 Exp. 06/30/2011 CIVIL STATE OF CALIFORNIA

THE STATE OF CALIFORNIA OR ITS OFFICERS OR AGENTS SHALL NOT BE RESPONSIBLE FOR THE ACCURACY OR COMPLETENESS OF SCANNED COPIES OF THIS PLAN SHEET.

NOTE: STRIPES SHALL BE THERMOPLASTIC UNLESS OTHERWISE NOTED.

LEGEND

(XX) PAVEMENT DELINEATION TYPE

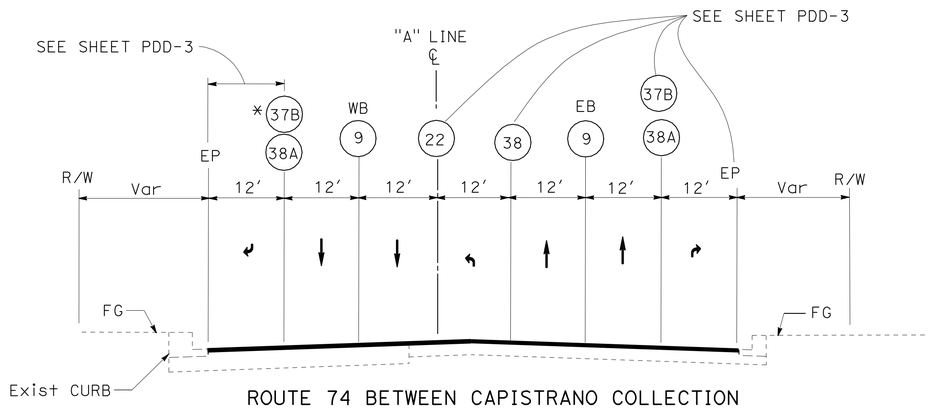

ROUTE 74 BETWEEN CAPISTRANO COLLECTION & RANCHO VIEJO ROAD INTERSECTION

* (37B) ONLY AT CAPISTRANO COLLECTION

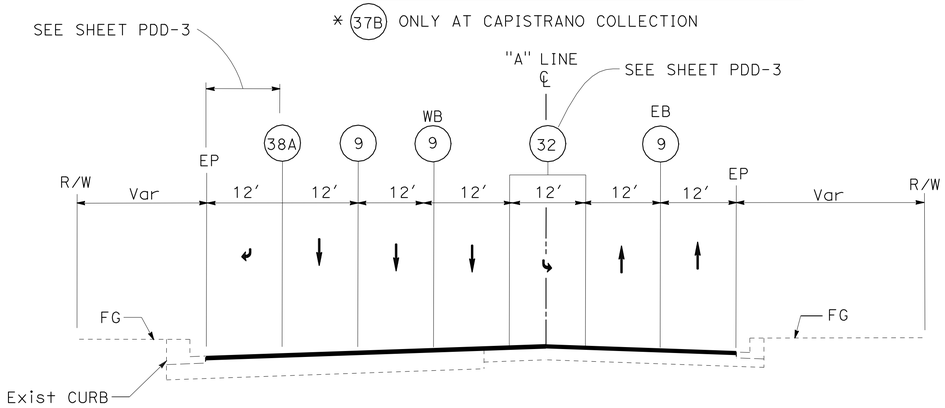

ROUTE 74 & RANCHO VIEJO ROAD INTERSECTION

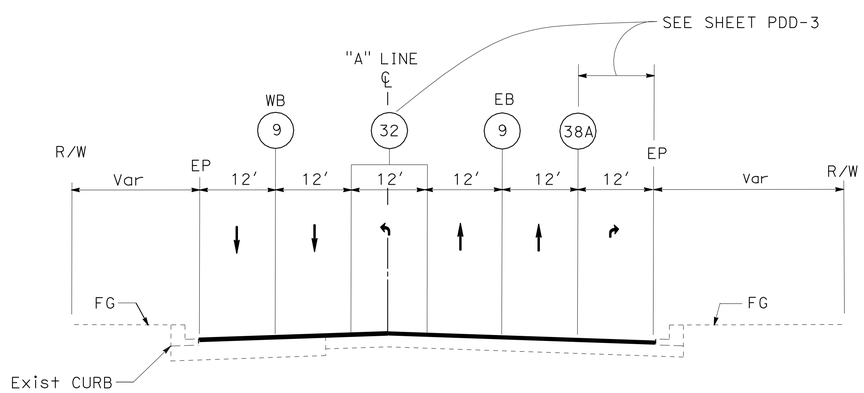

ROUTE 74 AT LA NOVIA Ave, BELFORD Dr, VIA CUARTEL/ AVENIDA VICTORIA & CALLE ENTRADERO INTERSECTIONS

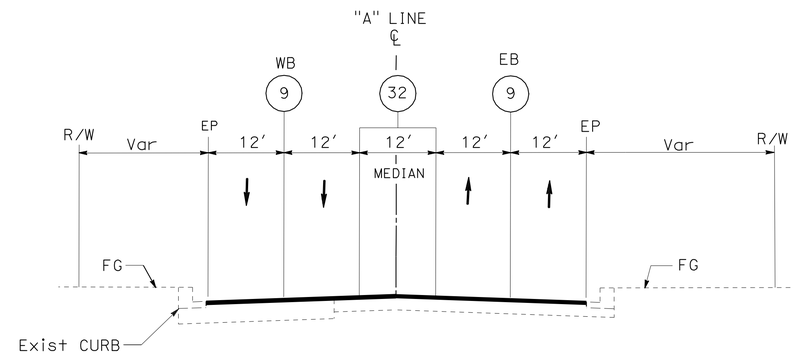

ROUTE 74 TYPICAL MIDSECTION

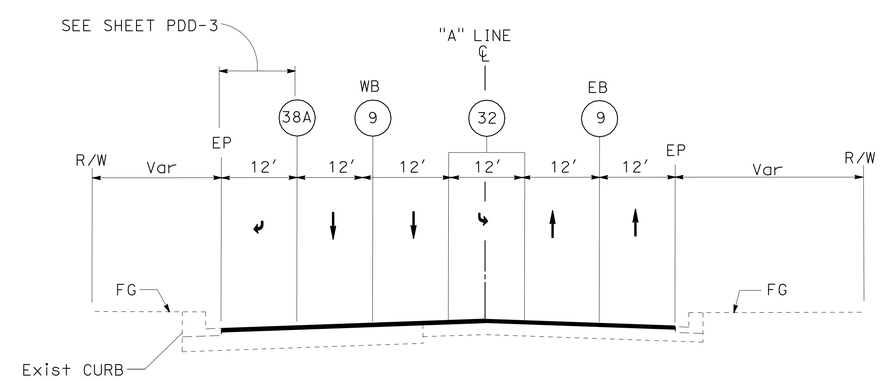

ROUTE 74 AT LA NOVIA Ave, SUNDANCE Ave & CALLE ENTRADERO INTERSECTIONS

LOCATION 1

PAVEMENT DELINEATION DETAILS

NO SCALE

THIS PLAN IS ACCURATE FOR PAVEMENT DELINEATION WORK ONLY

PDD-1

STATE OF CALIFORNIA - DEPARTMENT OF TRANSPORTATION
Caltrans® DESIGN
FUNCTIONAL SUPERVISOR: MILI LIM STAMATION
CALCULATED-DESIGNED BY: QUAN TRINH
CHECKED BY: JOSEPH H. Y. LEE
REVISED BY
DATE REVISED

LAST REVISION 03-10-11
DATE PLOTTED => 25-MAY-2011
TIME PLOTTED => 11:13

Dist	COUNTY	ROUTE	POST MILES TOTAL PROJECT	SHEET No.	TOTAL SHEETS
12	Ora	74	0.0/1.1, 3.0/13.3	13	37

REGISTERED CIVIL ENGINEER 03/21/11 DATE

5-23-11
PLANS APPROVAL DATE

REGISTERED PROFESSIONAL ENGINEER JOSEPH H.Y. LEE No. C59058 Exp. 06/30/2011 CIVIL STATE OF CALIFORNIA

THE STATE OF CALIFORNIA OR ITS OFFICERS OR AGENTS SHALL NOT BE RESPONSIBLE FOR THE ACCURACY OR COMPLETENESS OF SCANNED COPIES OF THIS PLAN SHEET.

NOTE:

REMOVE EXISTING YELLOW THERMOPLASTIC TRAFFIC STRIPE AND MARKERS PRIOR TO CONSTRUCTING THE CENTERLINE RUMBLE STRIP (GROUND-IN) OR APPLYING THERMOPLASTIC TRAFFIC STRIPE WITH GLASS BEADS.

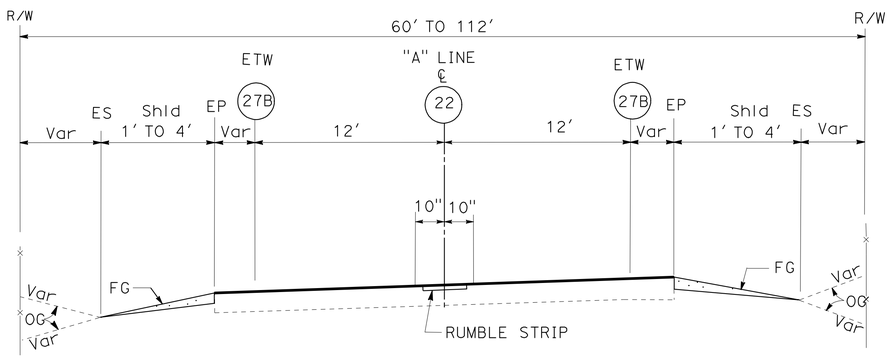

TYPICAL

LOCATION 2

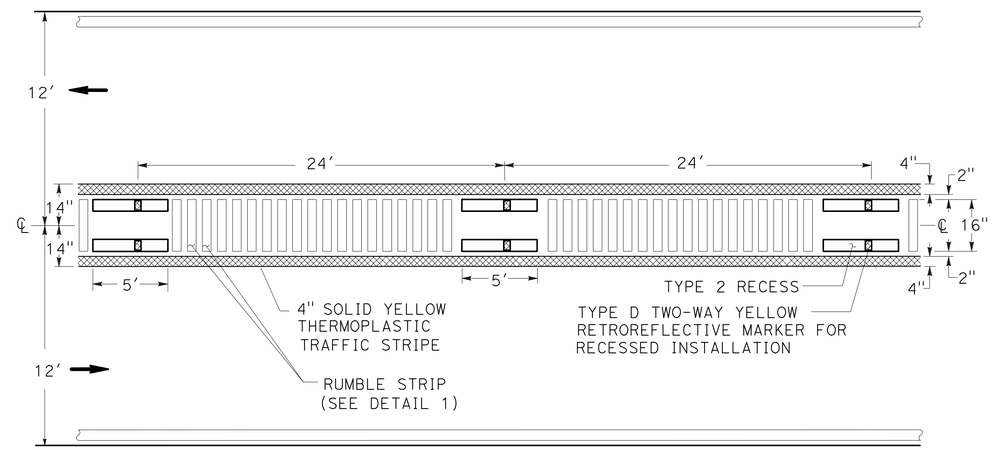

DETAIL 22 Mod (RECESS)
PM 3.1 TO PM 5.1, PM 5.24 TO PM 7.6,
PM 7.72 TO PM 9.6 & PM 13.1 TO PM 13.3

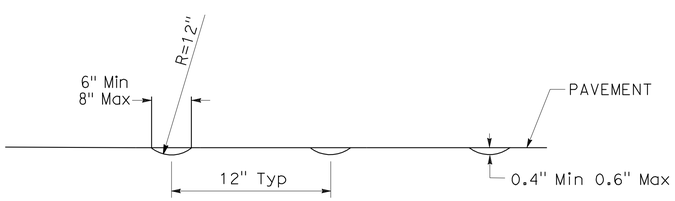

ELEVATION

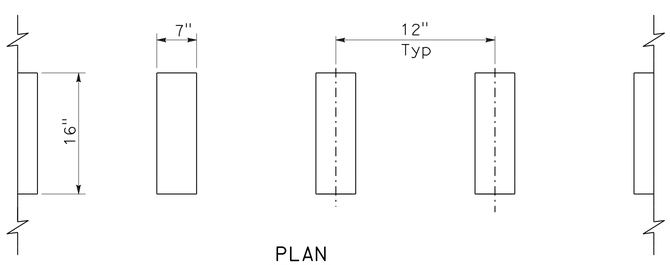

PLAN

CENTERLINE RUMBLE STRIPS (GROUND-IN INDENTATIONS) DETAIL 1

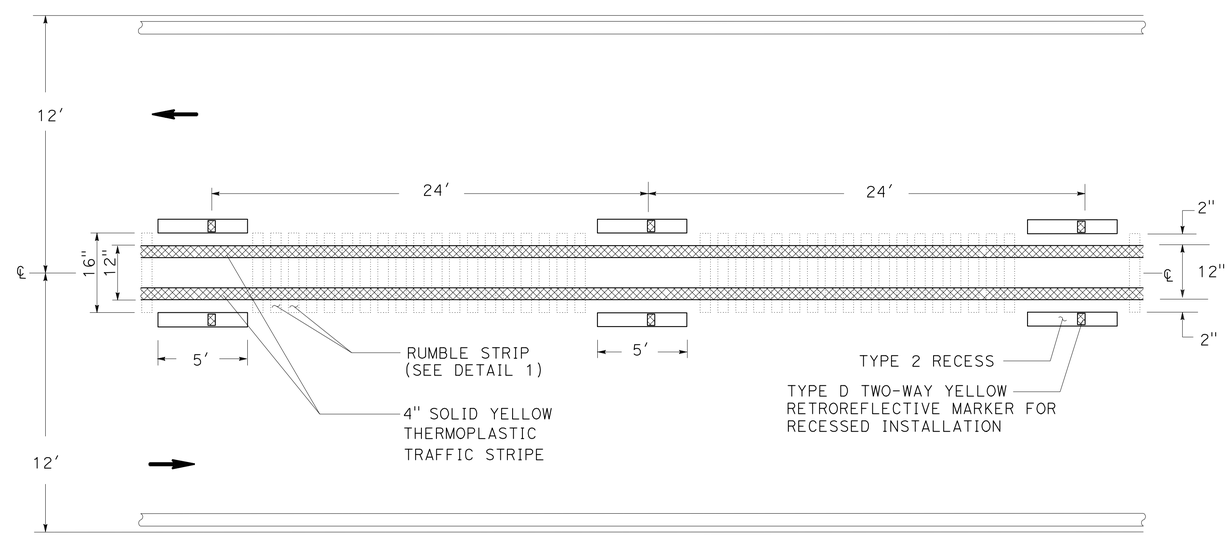

DETAIL 22 Mod (RECESS)
PM 9.8 TO PM 9.88, PM 10.51 TO PM 11.07,
PM 11.55 TO PM 12.36, & PM 12.39 TO 13.1

PAVEMENT DELINEATION DETAILS

NO SCALE

PDD-2

THIS PLAN IS ACCURATE FOR PAVEMENT DELINEATION WORK ONLY

STATE OF CALIFORNIA - DEPARTMENT OF TRANSPORTATION
Caltrans® DESIGN

FUNCTIONAL SUPERVISOR: MILI LIM STAMATION
CALCULATED-DESIGNED BY: QUAN TRINH
CHECKED BY: JOSEPH H. Y. LEE
REVISED BY
DATE REVISED

LAST REVISION 03-10-11
DATE PLOTTED => 26-MAY-2011
TIME PLOTTED => 06:36

Dist	COUNTY	ROUTE	POST MILES TOTAL PROJECT	SHEET No.	TOTAL SHEETS
12	Ora	74	0.0/1.1, 3.0/13.3	14	37

REGISTERED CIVIL ENGINEER 03/21/11 DATE

5-23-11
PLANS APPROVAL DATE

REGISTERED PROFESSIONAL ENGINEER
JOSEPH H.Y. LEE
No. C59058
Exp. 06/30/2011
CIVIL
STATE OF CALIFORNIA

THE STATE OF CALIFORNIA OR ITS OFFICERS OR AGENTS SHALL NOT BE RESPONSIBLE FOR THE ACCURACY OR COMPLETENESS OF SCANNED COPIES OF THIS PLAN SHEET.

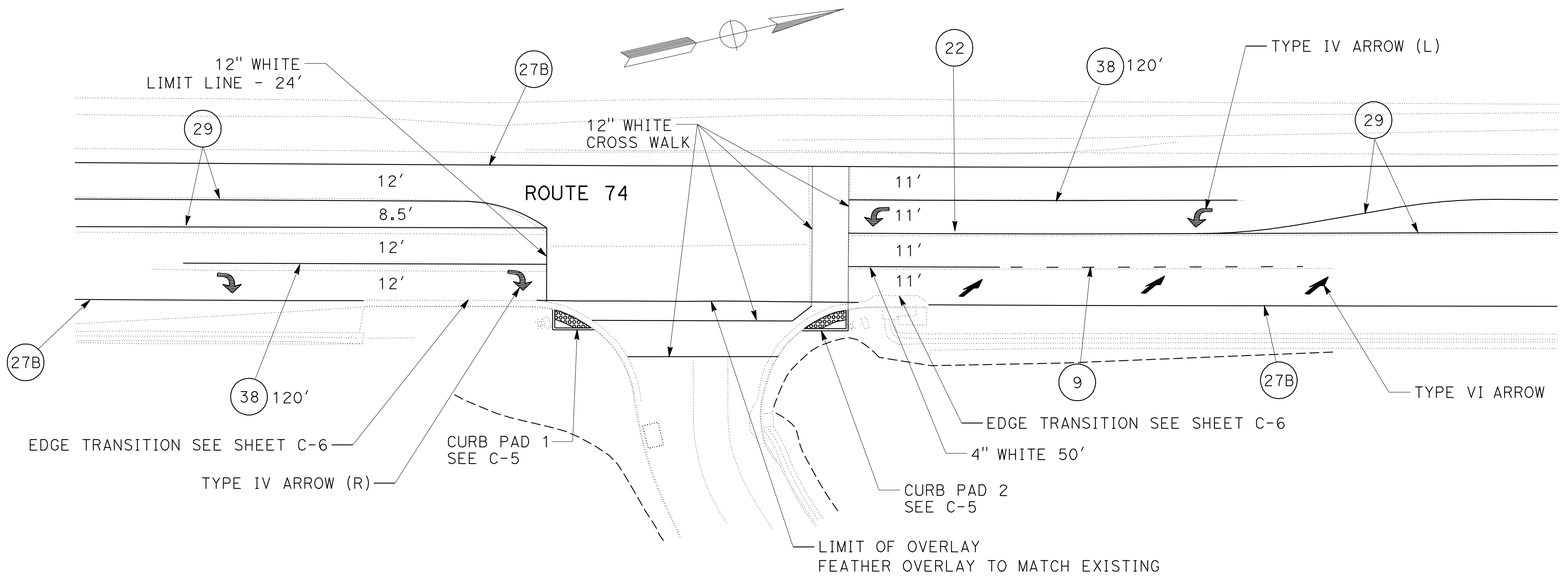

NICHOLS ROAD

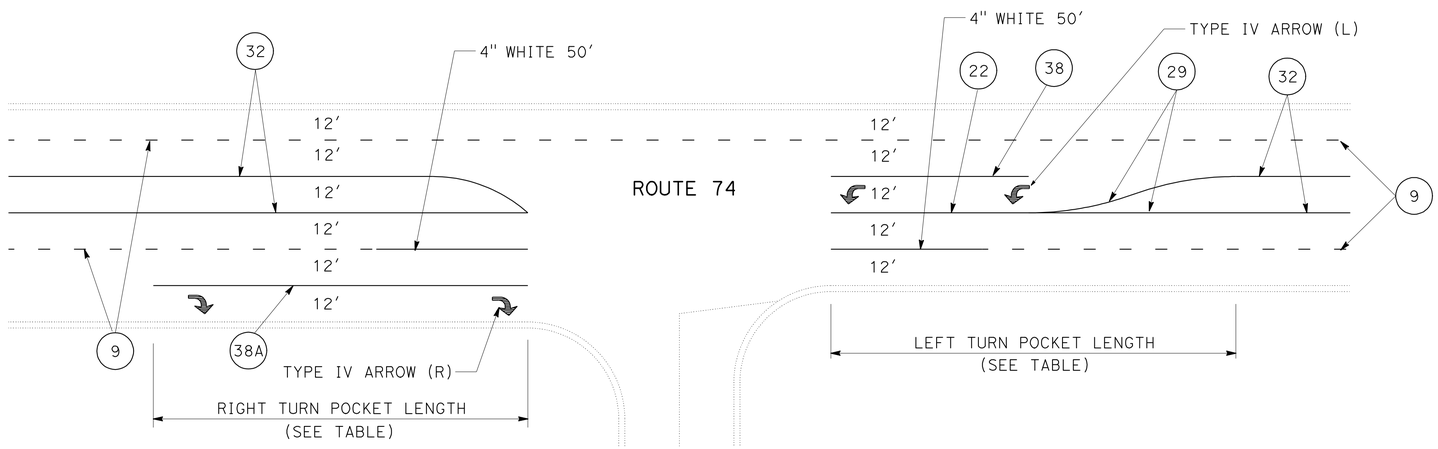

TYPICAL INTERSECTION
STRIPING WITH LEFT/RIGHT TURN POCKETS

LEFT TURN POCKET		
LOCATION	DIRECTION	LENGTH
CAPRISTRANO COLLECTION	WB 74	100
RANCHO VIEJO Rd	EB 74	200
RANCHO VIEJO Rd	WB 74	240
LA NOVIA Ave	WB 74	140
BELFORD Dr	EB 74	250
SUNDANCE Dr	WB 74	280
VIA CUARTEL / AVENIDA VICTORIA	EB 74	260
VIA CUARTEL	WB 74	250
CALLE ENTRADERO	EB 74	190
CON ROCK ENTRANCE	EB 74	200
CASPERS PARK Rd	EB 74	100

RIGHT TURN POCKET		
LOCATION	DIRECTION	LENGTH
RANCHO VIEJO Rd	EB 74	200
RANCHO VIEJO Rd	WB 74	600
ORTEGA ANIMAL HOSPITAL	WB 74	140
LA NOVIA Ave	EB 74	130
CON ROCK ENTRANCE	WB 74	200
CASPERS PARK Rd	WB 74	100

THIS PLAN IS ACCURATE FOR PAVEMENT DELINEATION WORK ONLY

PAVEMENT DELINEATION DETAILS

NO SCALE

PDD-3

STATE OF CALIFORNIA - DEPARTMENT OF TRANSPORTATION
Caltrans® DESIGN

FUNCTIONAL SUPERVISOR: MILI LIM STAMATION
CALCULATED-DESIGNED BY: QUAN TRINH
CHECKED BY: JOSEPH H. Y. LEE
REVISED BY
DATE REVISED

LAST REVISION 03-10-11
DATE PLOTTED => 26-MAY-2011
TIME PLOTTED => 06:36

Dist	COUNTY	ROUTE	POST MILES TOTAL PROJECT	SHEET No.	TOTAL SHEETS
12	Ora	74	0.0/1.1, 3.0/13.3	15	37

05/09/11
REGISTERED CIVIL ENGINEER DATE

5-23-11
PLANS APPROVAL DATE

REGISTERED PROFESSIONAL ENGINEER
JOSEPH H.Y. LEE
No. C59058
Exp. 06/30/2011
CIVIL
STATE OF CALIFORNIA

THE STATE OF CALIFORNIA OR ITS OFFICERS OR AGENTS SHALL NOT BE RESPONSIBLE FOR THE ACCURACY OR COMPLETENESS OF SCANNED COPIES OF THIS PLAN SHEET.

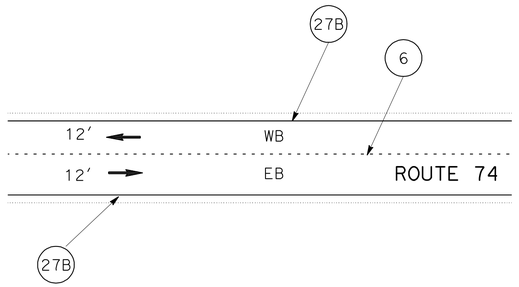

DETAIL 6 PM 10.0 TO PM 10.26 &
PM 11.23 TO PM 11.40

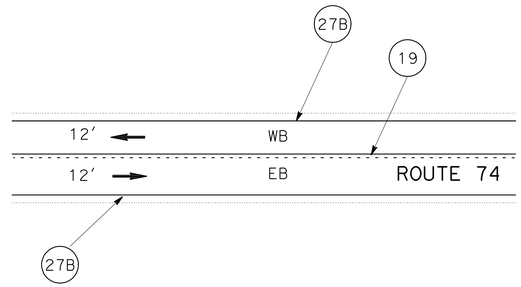

DETAIL 19 PM 9.88 TO PM 10.0 &
PM 11.07 TO PM 11.23

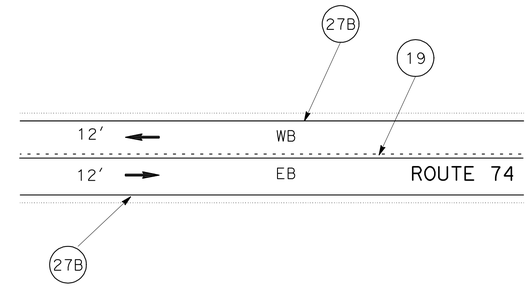

DETAIL 19 PM 10.26 TO PM 10.44 &
PM 11.40 TO PM 11.55

LOCATION 2

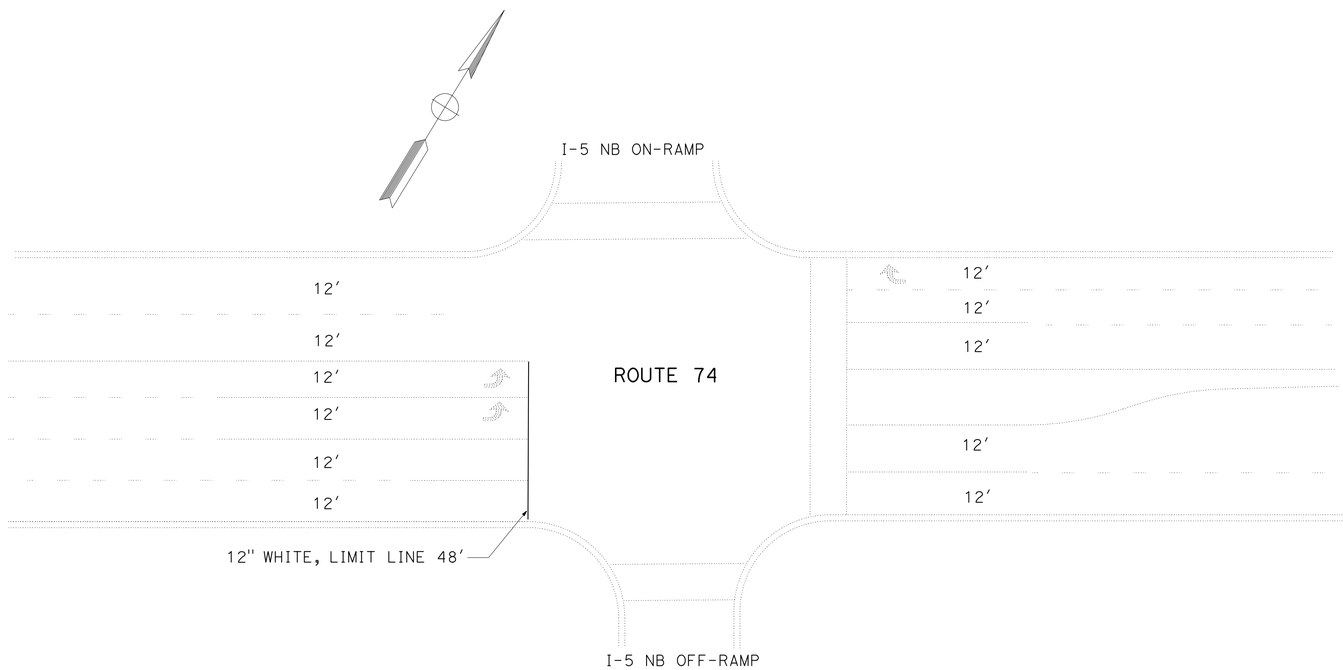

ROUTE 74 AT ROUTE 5

THIS PLAN IS ACCURATE FOR PAVEMENT DELINEATION WORK ONLY

PAVEMENT DELINEATION DETAILS

NO SCALE

PDD-4

STATE OF CALIFORNIA - DEPARTMENT OF TRANSPORTATION
Caltrans® DESIGN

FUNCTIONAL SUPERVISOR: MILI LIM STAMATION
CALCULATED-DESIGNED BY: QUAN TRINH
CHECKED BY: JOSEPH H. Y. LEE
REVISED BY
DATE REVISED

LAST REVISION 05-06-11
DATE PLOTTED => 26-MAY-2011
TIME PLOTTED => 06:36

Dist	COUNTY	ROUTE	POST MILES TOTAL PROJECT	SHEET No.	TOTAL SHEETS
12	Ora	74	0.0/1.1, 3.0/13.3	16	37

REGISTERED CIVIL ENGINEER 03/21/11 DATE

5-23-11
PLANS APPROVAL DATE

REGISTERED PROFESSIONAL ENGINEER
JOSEPH H.Y. LEE
No. C59058
Exp. 06/30/2011
CIVIL
STATE OF CALIFORNIA

THE STATE OF CALIFORNIA OR ITS OFFICERS OR AGENTS SHALL NOT BE RESPONSIBLE FOR THE ACCURACY OR COMPLETENESS OF SCANNED COPIES OF THIS PLAN SHEET.

PAVEMENT DELINEATION QUANTITIES

LOCATION DESCRIPTION	LIMITS	THERMOPLASTIC TRAFFIC STRIPE 4"											THERMOPLASTIC TRAFFIC STRIPE 8"			PAVEMENT MARKER RETROREFLECTIVE RECESSED			PAVEMENT MARKER RETROREFLECTIVE		PAINT PAVEMENT MARKING					REMOVE PAVEMENT MARKER	REMOVE PAVEMENT MARKING
		WHITE (BROKEN 17-7) DETAIL 9	YELLOW (BROKEN 36-12) DETAIL 6	YELLOW (BROKEN 36-12) DETAIL 19	YELLOW (BROKEN 36-12) DETAIL 32	SOLID WHITE	SOLID YELLOW DETAIL 19	SOLID YELLOW DETAIL 22	SOLID YELLOW DETAIL 22 Mod	SOLID WHITE DETAIL 27B	SOLID YELLOW DETAIL 29	SOLID YELLOW DETAIL 32	WHITE (BROKEN 12-3) DETAIL 37B	SOLID WHITE DETAIL 38	SOLID WHITE DETAIL 38A	TYPE D DETAIL 6,19, 22, 22 Mod, 29	TYPE G DETAIL 9, 38	TYPE H DETAIL 19	TYPE D DETAIL 22, 29, 32	TYPE G DETAIL 9, 37B, 38	ARROWS TYPE IV	ARROWS TYPE VI	CROSSWALK	LIMIT LINE	WORDS *		
	PM	LF	LF	LF	LF	LF	LF	LF	LF	LF	LF	LF	LF	LF	LF	EA	EA	EA	EA	EA	SQFT	SQFT	SQFT	SQFT	SQFT	EA	SQFT
ROUTE 5 NB OFF-RAMP TO CALLE ENTRADERO	0.0 TO 1.1	9,239			2,745	700		600			1,470	2,745	520	1,274	1,070				466	285	375		300	184	153	751	48
0.37 MILE EAST OF LA PATA Ave TO SAN JUAN BRIDGE (LOCATION 2)	3.0 TO 13.3	150	2,271	3,327		50	3,327	424	43,912	108,768	2,630			200	300	4,072	27	144			180	126	144	24		4,243	
	SUB-TOTAL	9,389	2,271	3,327	2,745	750	3,327	1,024	43,912	108,768	4,100	2,745	520	1,474	1,370	4,072	27	144	466	285	555	126	444	208	153	4,994	48
	TOTAL	9,389	8,343			164,626							520	2,844		4,243			751		1,486					4,994	48

NOTE: ALL MARKERS IN LOCATION 2 ARE RECESSED PAVEMENT MARKERS.

* WORDS "KEEP CLEAR" OCCUR AT ROUTE 74 AND CAPISTRANO COLLECTION DRIVEWAY.

PAVEMENT DELINEATION QUANTITIES
PDQ-1

CALCULATED-DESIGNED BY: MONICA BENAVIDES
CHECKED BY: JOSEPH H. Y. LEE
REVISED BY
DATE REVISED
FUNCTIONAL SUPERVISOR: MILI LIM STAMATION

STATE OF CALIFORNIA - DEPARTMENT OF TRANSPORTATION
Caltrans DESIGN

LAST REVISION 03-02-11
DATE PLOTTED => 26-MAY-2011
TIME PLOTTED => 06:36

Dist	COUNTY	ROUTE	POST MILES TOTAL PROJECT	SHEET No.	TOTAL SHEETS
12	Ora	74	0.0/1.1, 3.0/13.3	17	37

REGISTERED CIVIL ENGINEER 03/21/11 DATE

5-23-11
PLANS APPROVAL DATE

REGISTERED PROFESSIONAL ENGINEER JOSEPH H.Y. LEE No. C59058 Exp. 06/30/2011 CIVIL STATE OF CALIFORNIA

THE STATE OF CALIFORNIA OR ITS OFFICERS OR AGENTS SHALL NOT BE RESPONSIBLE FOR THE ACCURACY OR COMPLETENESS OF SCANNED COPIES OF THIS PLAN SHEET.

NOTES:

1. POST MILE INDICATES BEGINNING LOCATION OF END TREATMENT.
2. MBGR LENGTH SHALL FOLLOW DIRECTION OF TRAVEL.
3. GUARD RAILING DELINEATORS AT 12.5' (SEE A77C4 STANDARD PLANS).
4. OBJECT MARKER SHALL BE INSTALLED AT EXPOSED END OF TERMINAL SYSTEM.
5. REFER TO SHEETS C-1 AND C-2 FOR LOCATION OF MBGR.
6. EXACT LOCATION OF MBGR TO BE DETERMINED BY THE ENGINEER.
7. HMA (TYPE A) QUANTITIES FOR DIKES ARE INCLUDED UNDER HMA (TYPE A) QUANTITIES ON SHEET Q-2.

METAL BEAM GUARD RAILING

LOCATION	POST MILE	MBGR (WOOD POST)	REMOVE MBGR	ALTERNATIVE FLARED TERMINAL SYSTEM	TRANSITION RAILING (TYPE WB)	PLACE HMA DIKE (TYPE F)	PLACE HMA DIKE (TYPE C)	GUARD RAILING DELINEATOR (TYPE E)	OBJECT MARKER (TYPE P)	COMMMENTS
		LF	LF	EA	EA	LF	LF	EA	EA	
1	3.05	180	280	2		212	38	23	2	TYPE 11E LAYOUT
2	3.17	55	155	2				13	2	RELOCATE MBGR SEE C-6 TYPE 11E LAYOUT
3	3.76	61	161	2				13	2	TYPE 11E LAYOUT
4	4.70	230	330	2				27	2	TYPE 11E LAYOUT
5	7.56	75						6		EXTEND Exist MBGR
6	8.75	25		1				6	1	TYPE 11B LAYOUT
7	9.18	25		1				6	1	TYPE 11B LAYOUT
8	9.63	235						19		EXTEND Exist MBGR
9	9.90	25		1				6	1	TYPE 11B LAYOUT
10	10.45		68	1	1			6	1	TYPE 12B LAYOUT
11	10.50		40	1	1	37	38	6	1	TYPE 12B LAYOUT
12	10.70	25	65	1				6	1	TYPE 11B LAYOUT
13	12.34		70	1	1	62	38	6	1	TYPE 12B LAYOUT
14	12.38		68	1	1			6	1	TYPE 12B LAYOUT
15	3.05	200	300	2				24	2	TYPE 11E LAYOUT
16	3.17	65	165	2				14	2	RELOCATE MBGR SEE C-6 TYPE 11E LAYOUT
17	7.57	25	56	1				6	1	TYPE 11B LAYOUT
18	7.67	25	30	1				6	1	TYPE 11B LAYOUT
19	8.37	25		1				6	1	TYPE 11B LAYOUT
20	9.70	165	265	2				22	2	TYPE 11E LAYOUT
21	9.75	25	65	1				6	1	TYPE 11B LAYOUT
22	10.45		77	1	1			6	1	TYPE 12B LAYOUT
23	10.51		53	1	1			6	1	TYPE 12B LAYOUT
24	12.34		69	1	1	31	38	6	1	TYPE 12B LAYOUT
25	12.35		70	1	1	462	38	6	1	TYPE 12B LAYOUT
	TOTAL	1,466	2,367	30	8	804	190	257	30	

TEMPORARY WATER POLLUTION CONTROL QUANTITIES

LOCATION		TEMPORARY DRAINAGE INLET PROTECTION	
POST MILE		TYPE 6A	TYPE 6B
		EA	EA
EB	0.56		1
	0.78	1	
	0.86		1
	1.29		1
WB	0.56		1
	0.64		1
	0.86	1	
	0.97		1
	1.08		1
	1.29		1
	1.33		1
	1.36		1
SUB-TOTAL		2	10
TOTAL		12	

SUMMARY OF QUANTITIES
Q-1

STATE OF CALIFORNIA - DEPARTMENT OF TRANSPORTATION
Caltrans DESIGN

FUNCTIONAL SUPERVISOR: MILI LIM STAMATION
CALCULATED-DESIGNED BY: QUAN TRINH
CHECKED BY: JOSEPH H. Y. LEE
REVISED BY
DATE REVISED

LAST REVISION 12-01-10
DATE PLOTTED => 26-MAY-2011
TIME PLOTTED => 06:36

Dist	COUNTY	ROUTE	POST MILES TOTAL PROJECT	SHEET No.	TOTAL SHEETS
12	Ora	74	0.0/1.1, 3.0/13.3	18	37

REGISTERED CIVIL ENGINEER 03/21/11 DATE

5-23-11
PLANS APPROVAL DATE

REGISTERED PROFESSIONAL ENGINEER JOSEPH H.Y. LEE No. C59058 Exp. 06/30/2011 CIVIL STATE OF CALIFORNIA

THE STATE OF CALIFORNIA OR ITS OFFICERS OR AGENTS SHALL NOT BE RESPONSIBLE FOR THE ACCURACY OR COMPLETENESS OF SCANNED COPIES OF THIS PLAN SHEET.

ROADWAY QUANTITIES

LOCATION (POST MILE)	RHMA (GAP GRADED)	RHMA (OPEN GRADED)	HOT MIX ASPHALT (TYPE A)	COLD PLANE ASPHALT CONCRETE PAVEMENT (0.20' MAXIMUM)	COLD PLANE ASPHALT CONCRETE PAVEMENT (0.10' MAXIMUM)	CLASS 2 AGGREGATE BASE	ROADWAY EXCAVATION	ASPHALTIC EMULSION (PAINT BINDER)	REMOVE CONCRETE (CURB, GUTTER, AND SIDEWALK)	MINOR CONCRETE (CURB, SIDEWALK, AND CURB RAMP)	CURB RAMP DETECTABLE WARNING SURFACE (N)	CENTERLINE RUMBLE STRIP (RHMA, GROUND-IN INDENTATIONS)	DELINEATOR (CLASS I) FLEXIBLE POST (TYPE F)
	TON	TON	TON	SQYD	SQYD	CY	CY	TON	CY	CY	SQFT	LF	EA
0.1 TO 1.00	4,040			29,920				7	51	83	260		
3.00 TO 5.30	5,465		3		40,480			9				11,616	
5.30 TO 10.00	4,840		248		3,585			16	2	5	60	22,704	74
10.00 TO 11.30	2,677				19,829			4				10,256	48
11.30 TO 11.70	824		2,662				2,020	4					
11.70 TO 12.00	309	230			4,576			3					
12.00 TO 13.30	2,677		9		19,829			4					
MVP (11 Tot)			364			256	513	1					
TOTAL	20,832	230	3,286	29,920	88,299	256	2,533	48	53	88	320	44,576	122

(N) - NOT A SEPARATE PAY ITEM, FOR INFORMATION ONLY.

SHOULDER BACKING QUANTITIES

IMPORTED MATERIAL (SHOULDER BACKING)							
4 Ft WIDTH				1 Ft WIDTH			
EAST BOUND ROUTE 74		WEST BOUND ROUTE 74		EAST BOUND ROUTE 74		WEST BOUND ROUTE 74	
LOCATION (POST MILE)	TON	LOCATION (POST MILE)	TON	LOCATION (POST MILE)	TON	LOCATION (POST MILE)	TON
5.284 TO 5.459	64.68	6.047 TO 6.373	120.49	3.000 TO 5.284	211.04	3.000 TO 6.047	281.54
6.196 TO 6.929	270.92	6.678 TO 6.803	46.20	5.459 TO 6.196	68.09	6.373 TO 6.678	28.18
7.467 TO 7.949	178.15	6.846 TO 7.503	242.83	6.929 TO 7.467	49.71	6.803 TO 6.846	3.97
7.998 TO 8.085	32.15	7.621 TO 8.020	147.47	7.949 TO 7.998	4.53	7.503 TO 7.621	10.90
8.421 TO 8.521	36.96	8.189 TO 9.068	324.87	8.085 TO 8.421	31.05	8.020 TO 8.189	15.61
8.631 TO 8.703	26.60	9.122 TO 10.378	464.22	8.521 TO 8.631	10.16	9.068 TO 9.122	4.99
8.907 TO 8.973	24.39	10.477 TO 11.801	489.35	8.703 TO 8.907	18.85	10.378 TO 10.477	9.15
9.081 TO 9.233	56.17	12.050 TO 12.107	21.06	8.973 TO 9.081	9.98	11.801 TO 12.050	23.00
9.300 TO 9.467	61.72	12.442 TO 12.484	15.52	9.233 TO 9.300	6.19	12.107 TO 12.442	30.95
9.835 TO 10.129	108.66	12.574 TO 12.778	75.40	9.467 TO 9.835	34.00	12.484 TO 12.574	8.31
10.201 TO 10.362	59.50			10.129 TO 10.201	6.65	12.778 TO 13.300	48.23
10.618 TO 10.792	64.31			10.362 TO 10.618	23.65		
10.893 TO 11.221	121.23			10.792 TO 10.893	9.33		
11.259 TO 11.536	102.38			11.221 TO 11.259	3.51		
12.214 TO 12.257	15.89			11.536 TO 12.214	62.64		
12.447 TO 12.766	117.90			12.257 TO 12.447	17.56		
				12.766 TO 13.300	49.34		
SUB-TOTAL	1,341.61		1,947.41		616.28		464.83
TOTAL	4,370.13						

SUMMARY OF QUANTITIES
Q-2

STATE OF CALIFORNIA - DEPARTMENT OF TRANSPORTATION
Caltrans DESIGN

FUNCTIONAL SUPERVISOR: MILI LIM STAMATION
CALCULATED-DESIGNED BY: QUAN TRINH
CHECKED BY: JOSEPH H. Y. LEE
REVISED BY
DATE REVISED

LAST REVISION 03-10-11
DATE PLOTTED =>
TIME PLOTTED =>

Dist	COUNTY	ROUTE	POST MILES TOTAL PROJECT	SHEET No.	TOTAL SHEETS
12	Ora	74	0.0/1.1, 3.0/13.3	19	37

REGISTERED ELECTRICAL ENGINEER 03/21/11 DATE

5-23-11
PLANS APPROVAL DATE

REGISTERED PROFESSIONAL ENGINEER
SHAHRAM SHAHRIARI
No. E13485
Exp. 9/30/12
ELECTRICAL
STATE OF CALIFORNIA

THE STATE OF CALIFORNIA OR ITS OFFICERS OR AGENTS SHALL NOT BE RESPONSIBLE FOR THE ACCURACY OR COMPLETENESS OF SCANNED COPIES OF THIS PLAN SHEET.

NOTE:
FOR ACCURATE RIGHT OF WAY DATA, CONTACT RIGHT OF WAY ENGINEERING AT THE DISTRICT OFFICE.

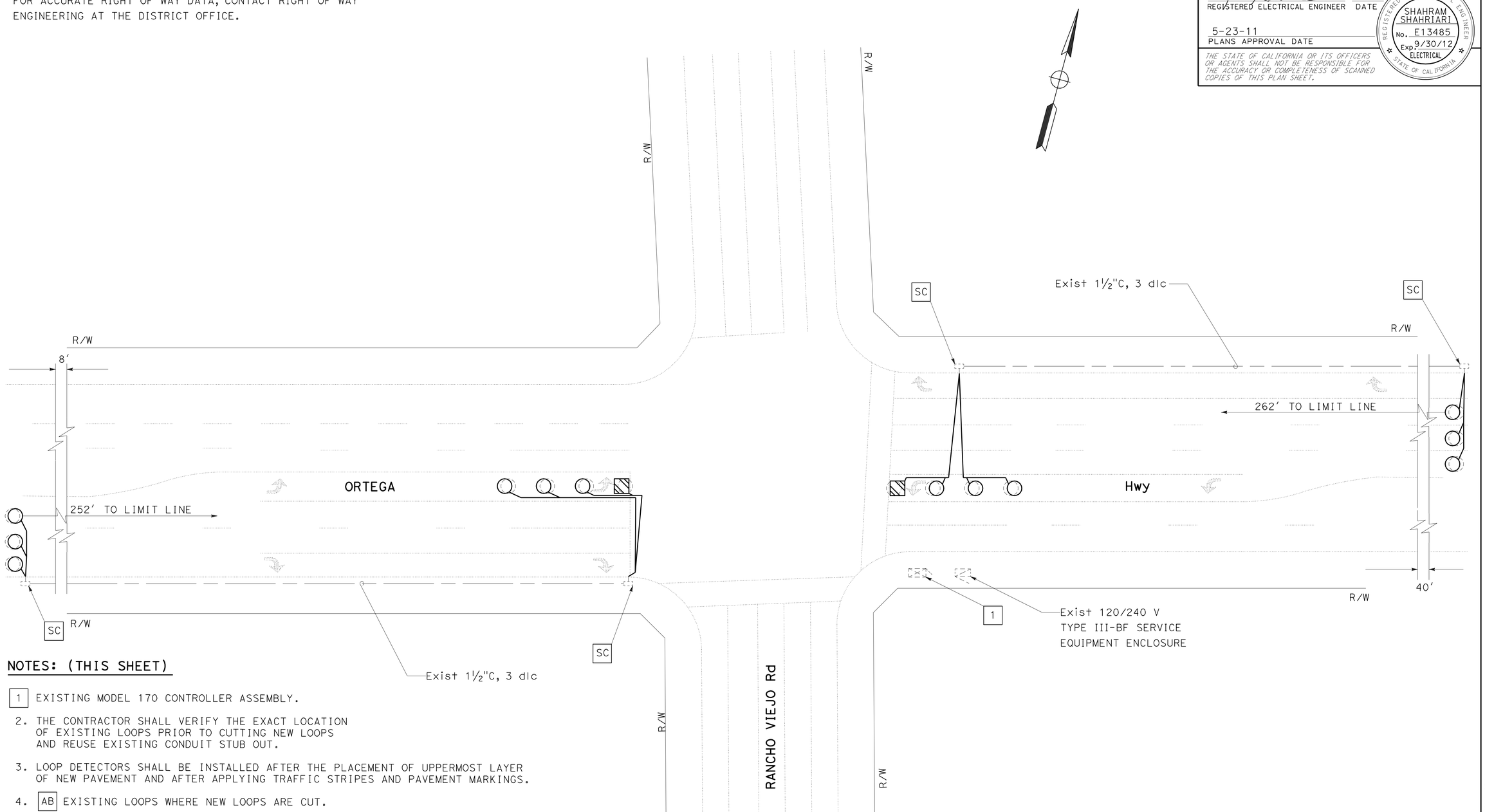

NOTES: (THIS SHEET)

1 EXISTING MODEL 170 CONTROLLER ASSEMBLY.

2. THE CONTRACTOR SHALL VERIFY THE EXACT LOCATION OF EXISTING LOOPS PRIOR TO CUTTING NEW LOOPS AND REUSE EXISTING CONDUIT STUB OUT.

3. LOOP DETECTORS SHALL BE INSTALLED AFTER THE PLACEMENT OF UPPERMOST LAYER OF NEW PAVEMENT AND AFTER APPLYING TRAFFIC STRIPES AND PAVEMENT MARKINGS.

4. AB EXISTING LOOPS WHERE NEW LOOPS ARE CUT.

INDUCTIVE LOOP DETECTOR
NO SCALE

THIS PLAN IS ACCURATE FOR ELECTRICAL WORK ONLY.

E-1

STATE OF CALIFORNIA - DEPARTMENT OF TRANSPORTATION
Caltrans
ELECTRICAL DESIGN

FUNCTIONAL SUPERVISOR: SHAHRAM SHAHRIARI
CALCULATED-DESIGNED BY: FRANCIS M. ALVIAR
CHECKED BY: VANESSA V. TRUONG
REVISED BY
DATE REVISED

LAST REVISION 03-03-11
DATE PLOTTED => 25-MAY-2011
TIME PLOTTED => 08:28

Dist	COUNTY	ROUTE	POST MILES TOTAL PROJECT	SHEET No.	TOTAL SHEETS
12	Org	74	0.0/1.1, 3.0/13.3	20	37

REGISTERED ELECTRICAL ENGINEER 03/21/11 DATE

5-23-11
PLANS APPROVAL DATE

REGISTERED PROFESSIONAL ENGINEER SHAHRAM SHAHRIARI No. E13485 Exp. 9/30/12 ELECTRICAL STATE OF CALIFORNIA

THE STATE OF CALIFORNIA OR ITS OFFICERS OR AGENTS SHALL NOT BE RESPONSIBLE FOR THE ACCURACY OR COMPLETENESS OF SCANNED COPIES OF THIS PLAN SHEET.

NOTE:
FOR ACCURATE RIGHT OF WAY DATA, CONTACT RIGHT OF WAY ENGINEERING AT THE DISTRICT OFFICE.

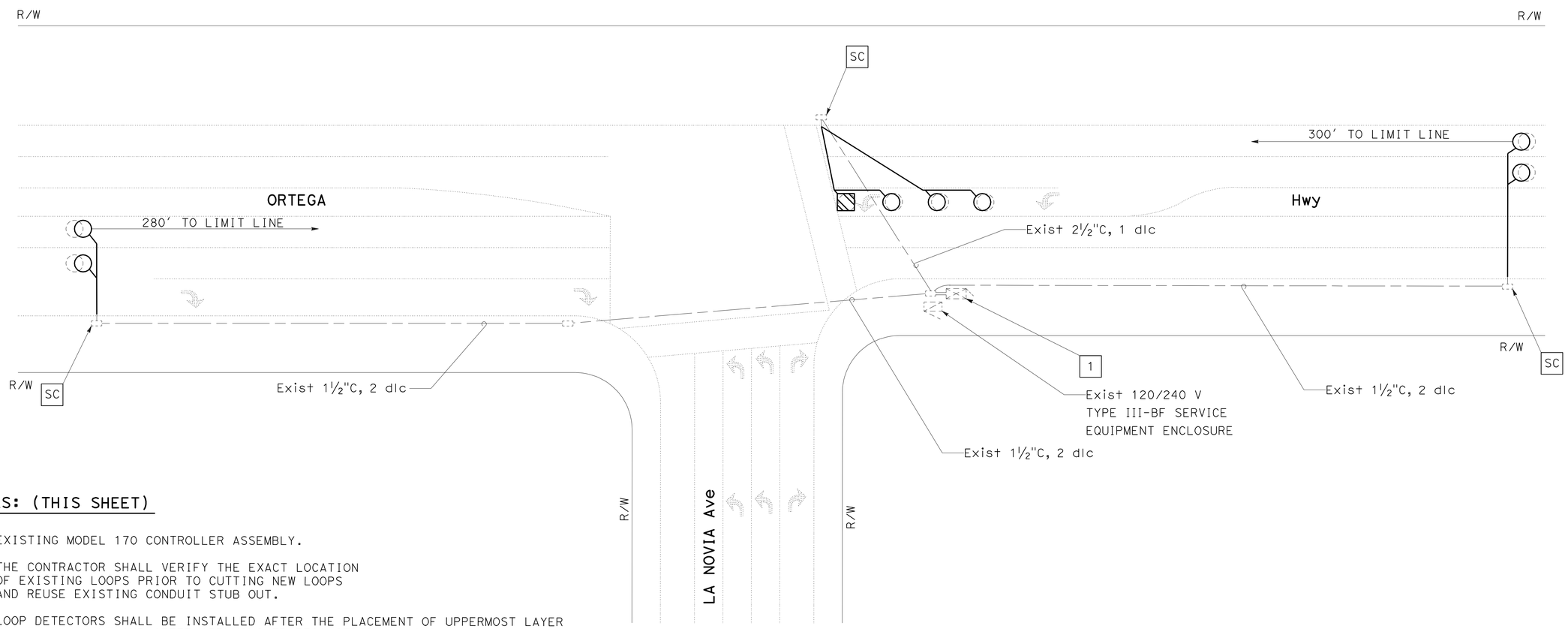

NOTES: (THIS SHEET)

1 EXISTING MODEL 170 CONTROLLER ASSEMBLY.

2. THE CONTRACTOR SHALL VERIFY THE EXACT LOCATION OF EXISTING LOOPS PRIOR TO CUTTING NEW LOOPS AND REUSE EXISTING CONDUIT STUB OUT.

3. LOOP DETECTORS SHALL BE INSTALLED AFTER THE PLACEMENT OF UPPERMOST LAYER OF NEW PAVEMENT AND AFTER APPLYING TRAFFIC STRIPES AND PAVEMENT MARKINGS.

4. AB EXISTING LOOPS WHERE NEW LOOPS ARE CUT.

INDUCTIVE LOOP DETECTOR
NO SCALE

THIS PLAN IS ACCURATE FOR ELECTRICAL WORK ONLY.

E-2

STATE OF CALIFORNIA - DEPARTMENT OF TRANSPORTATION
Caltrans
ELECTRICAL DESIGN

FUNCTIONAL SUPERVISOR: SHAHRAM SHAHRIARI
CALCULATED-DESIGNED BY: FRANCIS M. ALVIAR
CHECKED BY: VANESSA V. TRUONG
REVISED BY
DATE REVISED

LAST REVISION DATE PLOTTED => 25-MAY-2011
03-03-11 TIME PLOTTED => 08:29

Dist	COUNTY	ROUTE	POST MILES TOTAL PROJECT	SHEET No.	TOTAL SHEETS
12	Ora	74	0.0/1.1, 3.0/13.3	21	37

REGISTERED ELECTRICAL ENGINEER 03/21/11 DATE

5-23-11
PLANS APPROVAL DATE

REGISTERED PROFESSIONAL ENGINEER
SHAHRAM SHAHRIARI
No. E13485
Exp. 9/30/12
ELECTRICAL
STATE OF CALIFORNIA

THE STATE OF CALIFORNIA OR ITS OFFICERS OR AGENTS SHALL NOT BE RESPONSIBLE FOR THE ACCURACY OR COMPLETENESS OF SCANNED COPIES OF THIS PLAN SHEET.

NOTE:
FOR ACCURATE RIGHT OF WAY DATA, CONTACT RIGHT OF WAY ENGINEERING AT THE DISTRICT OFFICE.

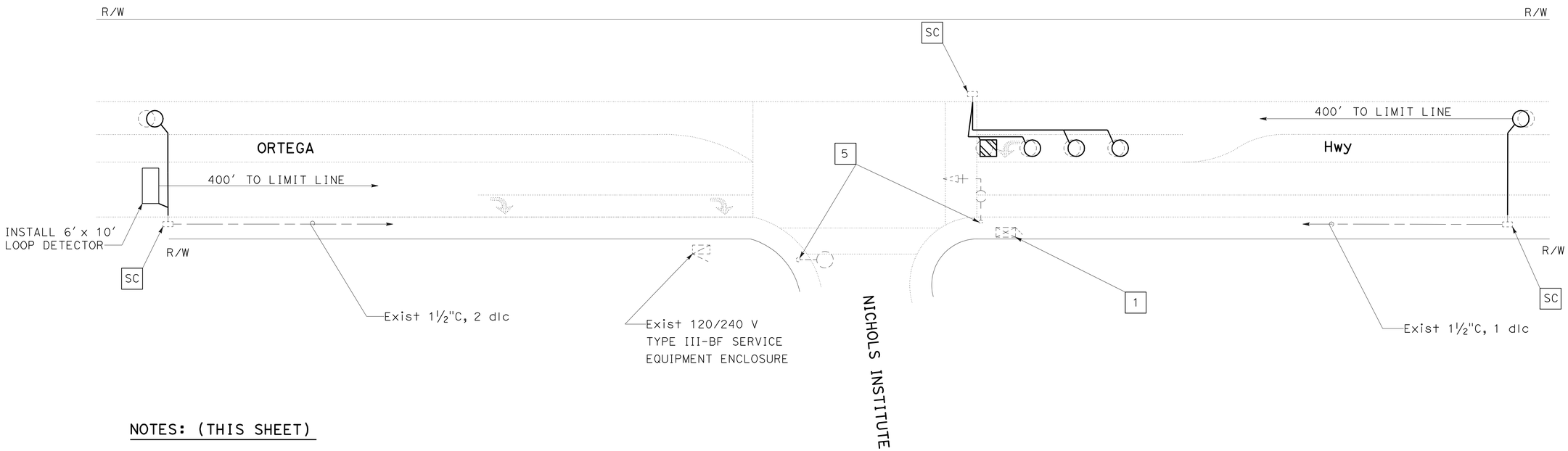

NOTES: (THIS SHEET)

1 EXISTING MODEL 170 CONTROLLER ASSEMBLY.

2. THE CONTRACTOR SHALL VERIFY THE EXACT LOCATION OF EXISTING LOOPS PRIOR TO CUTTING NEW LOOPS AND REUSE EXISTING CONDUIT STUB OUT.

3. LOOP DETECTORS SHALL BE INSTALLED AFTER THE PLACEMENT OF UPPERMOST LAYER OF NEW PAVEMENT AND AFTER APPLYING TRAFFIC STRIPES AND PAVEMENT MARKINGS.

4. AB EXISTING LOOPS WHERE NEW LOOPS ARE CUT.

5 RC EXISTING PPB. INSTALL PPB AT NEW HEIGHT. REFER TO ES-7A.

INDUCTIVE LOOP DETECTOR PEDESTRIAN PUSH BUTTON

NO SCALE

THIS PLAN IS ACCURATE FOR ELECTRICAL WORK ONLY.

E-3

STATE OF CALIFORNIA - DEPARTMENT OF TRANSPORTATION
Caltrans® ELECTRICAL DESIGN

FUNCTIONAL SUPERVISOR: SHAHRAM SHAHRIARI
CALCULATED-DESIGNED BY: FRANCIS M. ALVIAR
CHECKED BY: VANESSA V. TRUONG
REVISED BY
DATE REVISED

LAST REVISION 03-03-11
DATE PLOTTED => 25-MAY-2011
TIME PLOTTED => 08:29

Dist	COUNTY	ROUTE	POST MILES TOTAL PROJECT	SHEET No.	TOTAL SHEETS
12	Ora	74	0.0/1.1, 3.0/13.3	22	37

Randell D. Hiatt
REGISTERED CIVIL ENGINEER

May 20, 2011
PLANS APPROVAL DATE

REGISTERED PROFESSIONAL ENGINEER
Randell D. Hiatt
No. C50200
Exp. 6-30-11
CIVIL
STATE OF CALIFORNIA

The State of California or its officers or agents shall not be responsible for the accuracy or completeness of electronic copies of this plan sheet.

To accompany plans dated 5-23-11

NOTES:

1. When necessary to place dike in front of face of guard railing, only Type C dike may be used. For dike details, see Standard Plan A87B.
2. For standard railing post embedment, see Standard Plans A77C3.
3. Guard railing delineation to be used where shown on the Project Plans.
4. When dike or curb is placed under guard railing, the maximum height of the dike or curb shall be 4". Mountable dike should not be used. For dike and curb details, see Standard Plans A87A and A87B.
5. For details of typical distance between the face of rail and hinge point, see Standard Plan A77C3.
6. For steel line posts, use 1/4 - 20 self-tapping screws in 0.22" diameter holes or 1/4" bolts in 9/32" diameter holes.

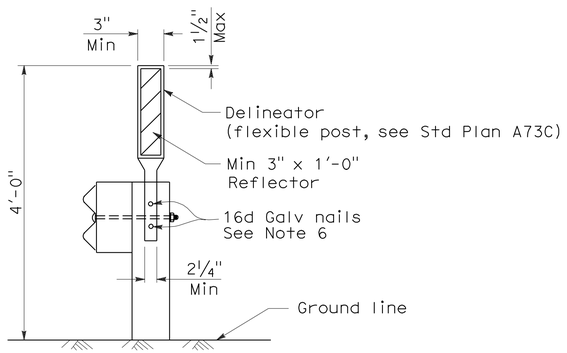

GUARD RAILING DELINEATION

See Note 3

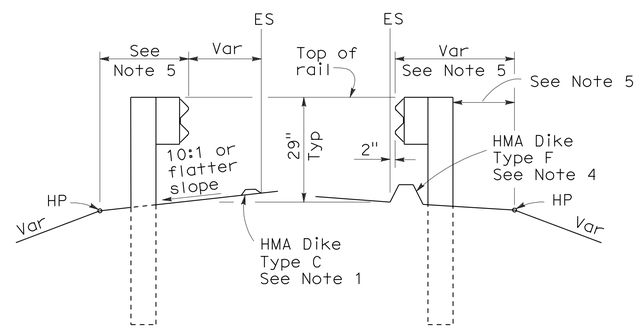

DIKE POSITIONING

See Note 1

STATE OF CALIFORNIA
DEPARTMENT OF TRANSPORTATION

METAL BEAM GUARD RAILING TYPICAL RAILING DELINEATION AND DIKE POSITIONING DETAILS

NO SCALE

RSP A77C4 DATED MAY 20, 2011 SUPERSEDES RSP A77C4 DATED JUNE 6, 2008 AND STANDARD PLAN A77C4 DATED MAY 1, 2006 - PAGE 47 OF THE STANDARD PLANS BOOK DATED MAY 2006.

REVISED STANDARD PLAN RSP A77C4

2006 REVISED STANDARD PLAN RSP A77C4

3-10-11

DIST	COUNTY	ROUTE	POST MILES TOTAL PROJECT	SHEET NO.	TOTAL SHEETS
12	Ora	74	0.0/1.1, 3.0/13.3	23	37

Randell D. Hiatt
REGISTERED CIVIL ENGINEER

June 6, 2008
PLANS APPROVAL DATE

REGISTERED PROFESSIONAL ENGINEER Randell D. Hiatt No. C50200 Exp. 6-30-09 CIVIL STATE OF CALIFORNIA

The State of California or its officers or agents shall not be responsible for the accuracy or completeness of electronic copies of this plan sheet.

To accompany plans dated 5-23-11

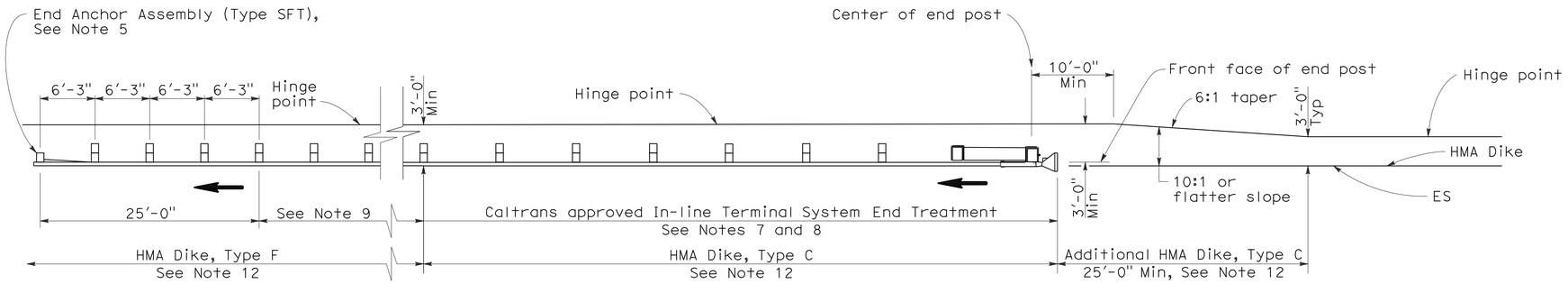

TYPE 11A LAYOUT

(EMBANKMENT GUARD INSTALLATION WITH IN-LINE END TREATMENT AT TRAFFIC APPROACH END OF RAILING)
See Note 6

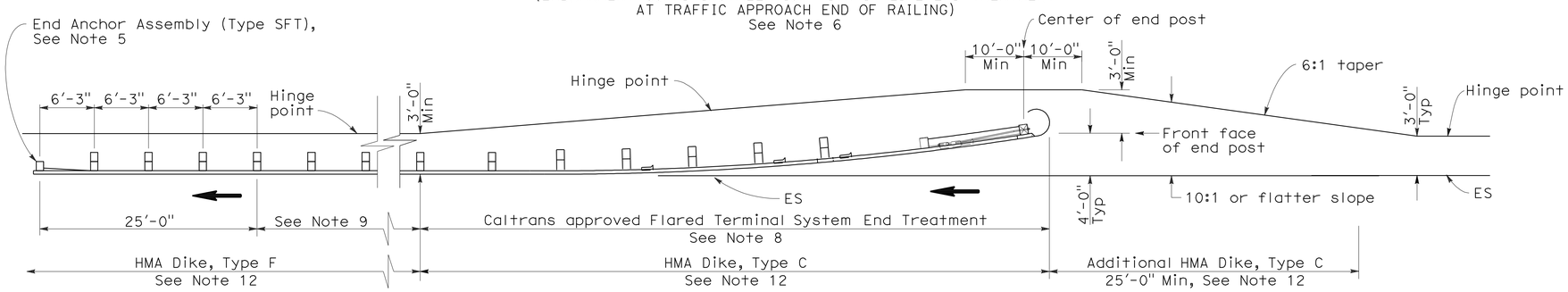

TYPE 11B LAYOUT

(EMBANKMENT GUARD RAILING INSTALLATION WITH FLARED END TREATMENT AT TRAFFIC APPROACH END OF RAILING)
See Note 6

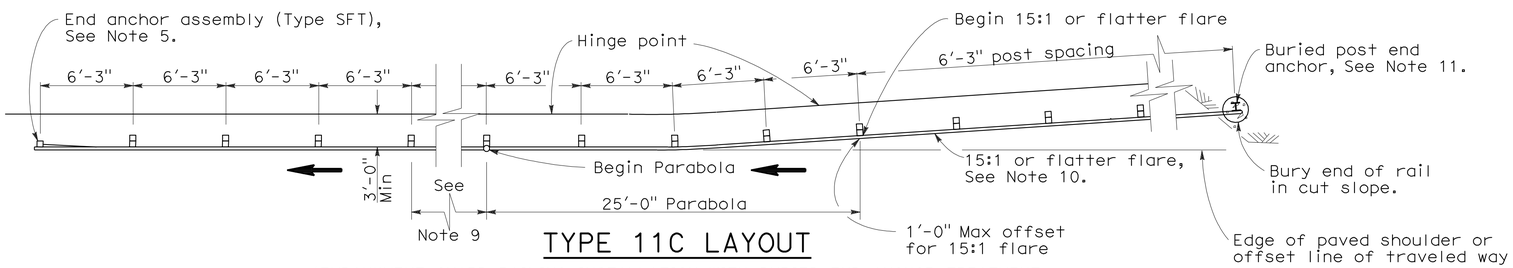

TYPE 11C LAYOUT

(EMBANKMENT GUARD RAILING INSTALLATION WITH BURIED END ANCHOR TREATMENT AT TRAFFIC APPROACH END OF RAILING)
See Notes 6 and 12

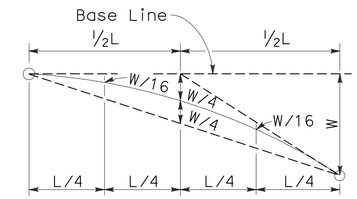

TYPICAL PARABOLIC LAYOUT

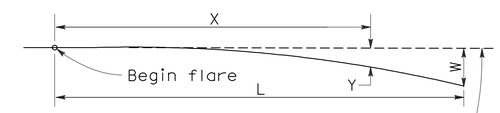

Base Line (Edge of paved shoulder or offset line of edge of traveled way)

$$Y = \frac{WX^2}{L^2}$$

Y = Offset from base line
W = Maximum offset
X = Distance along base line
L = Length of flare

PARABOLIC FLARE OFFSETS

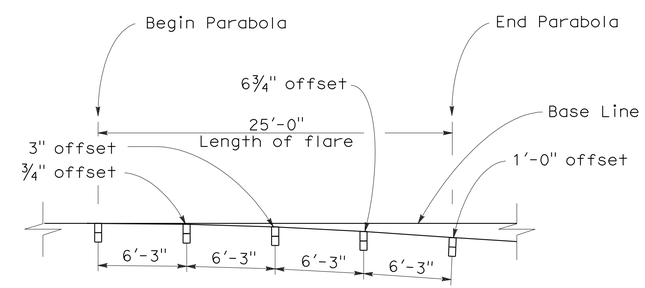

TYPICAL FLARE OFFSETS FOR 1 FOOT MAX END OFFSET

NOTES:

1. Line post, blocks and hardware to be used are shown on Standard Plans A77A1, A77A2, A77B1, A77C1, and A77C2.
2. Guard rail post spacing to be 6'-3" center to center, except as otherwise noted.
3. Except as noted, line posts are 6" x 8" x 6'-0" wood with 6" x 8" x 1'-2" wood blocks. W6 x 9 steel posts, 6'-0" in length, with 6" x 8" x 1'-2" notched wood blocks or recycled plastic blocks may be used for 6" x 8" x 6'-0" wood post with 6" x 8" x 1'-2" wood blocks where applicable and when specified.
4. Direction of adjacent traffic indicated by ⟶.
5. For End Anchor Assembly (Type SFT) details, see Standard Plan A77H1.
6. Layout Types 11A, 11B or 11C are typically used where guard railing is recommended to shield embankment slopes and a crashworthy end treatment is required for only one direction of traffic.
7. In-line Terminal System End Treatments are used where site conditions will not accommodate a flared end treatment.
8. The type of terminal system end treatment to be used will be shown on the Project Plans.
9. Dependent on site conditions (embankment height and side slope), construction of additional guard railing (length equal to multiples of 12'-6" with 6'-3" post spacing) may be advisable.
10. The 15:1 or flatter flare used with buried end anchors is based on the edge of the paved shoulder or offset line of edge of the traveled way. The length of guard railing within the 15:1 or flatter flare is based on site conditions and should be a length equal to multiples of 12'-6".
11. For details of the buried post end anchor used with Type 11C Layout, see Standard Plan A77I2.
12. Where placement of dike is required with guard railing installations, see Revised Standard Plan RSP A77C4 for dike positioning details.

STATE OF CALIFORNIA
DEPARTMENT OF TRANSPORTATION

METAL BEAM GUARD RAILING TYPICAL LAYOUTS FOR EMBANKMENTS

NO SCALE

RSP A77E1 DATED JUNE 6, 2008 SUPERSEDES STANDARD PLAN A77E1 DATED MAY 1, 2006 - PAGE 48 OF THE STANDARD PLANS BOOK DATED MAY 2006.

REVISED STANDARD PLAN RSP A77E1

2006 REVISED STANDARD PLAN RSP A77E1

12-10-07

DIST	COUNTY	ROUTE	POST MILES TOTAL PROJECT	SHEET NO.	TOTAL SHEETS
12	Ora	74	0.0/1.1, 3.0/13.3	24	37

Randell D. Hiatt
REGISTERED CIVIL ENGINEER

June 6, 2008
PLANS APPROVAL DATE

REGISTERED PROFESSIONAL ENGINEER
Randell D. Hiatt
No. C50200
Exp. 6-30-09
CIVIL
STATE OF CALIFORNIA

The State of California or its officers or agents shall not be responsible for the accuracy or completeness of electronic copies of this plan sheet.

To accompany plans dated 5-23-11

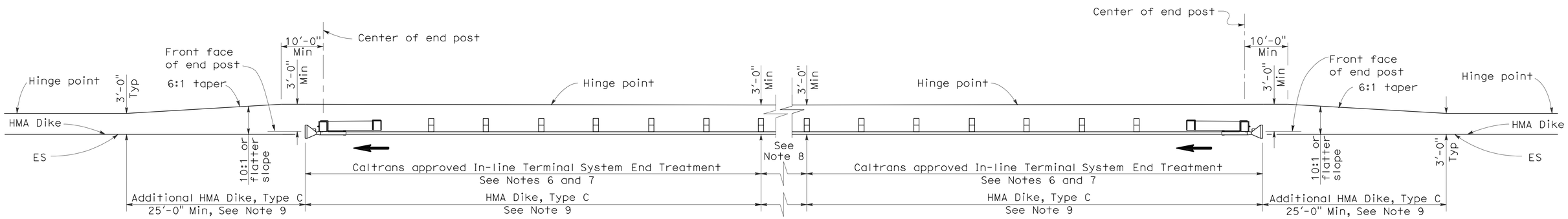

TYPE 11D LAYOUT

(EMBANKMENT GUARD RAILING INSTALLATION WITH IN-LINE END TREATMENT AT EACH END OF RAILING)
See Note 5

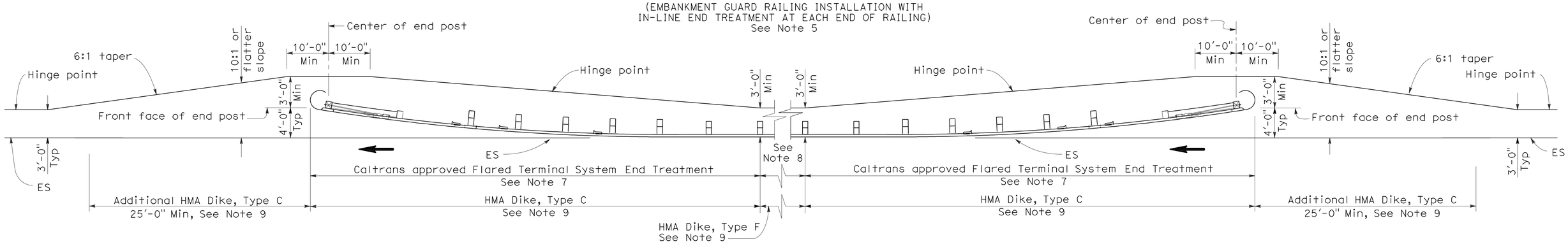

TYPE 11E LAYOUT

(EMBANKMENT GUARD RAILING INSTALLATION WITH FLARED END TREATMENT AT EACH END OF RAILING)
See Note 5

NOTES:

1. Line post, blocks and hardware to be used are shown on Standard Plans A77A1, A77A2, A77B1, A77C1 and A77C2.
2. Guard rail post spacing to be 6'-3" center to center, except as otherwise noted.
3. Except as noted, line posts are 6" x 8" x 6'-0" wood with 6" x 8" x 1'-2" wood blocks, W6 x 9 steel posts, 6'-0" in length, with 6" x 8" x 1'-2" notched wood blocks or plastic blocks may be used for 6" x 8" x 6'-0" wood post with 6" x 8" x 1'-2" wood blocks where applicable and when specified.
4. Direction of adjacent traffic indicated by ⟶.
5. Layout Types 11D through 11L, shown on the A77E Series of Revised Standard Plans, are typically used where guard railing is recommended to shield embankment slopes and a crashworthy end treatment is required for both directions of traffic.
6. In-line Terminal System End Treatments are used where site conditions will not accommodate a flared end treatment.
7. The type of terminal system end treatment to be used will be shown on the Project Plans.
8. Dependent on site conditions (embankment height and side slope), construction of additional guard railing (length equal to multiples of 12'-6" with 6'-3" post spacing) may be advisable.
9. Where placement of dike is required with guard railing installations, see Revised Standard Plan RSP A77C4 for dike positioning details.

STATE OF CALIFORNIA
DEPARTMENT OF TRANSPORTATION

METAL BEAM GUARD RAILING TYPICAL LAYOUTS FOR EMBANKMENTS

NO SCALE

RSP A77E2 DATED JUNE 6, 2008 SUPERSEDES STANDARD PLAN A77E2
DATED MAY 1, 2006 - PAGE 49 OF THE STANDARD PLANS BOOK DATED MAY 2006.

REVISED STANDARD PLAN RSP A77E2

2006 REVISED STANDARD PLAN RSP A77E2

12-10-07

DIST	COUNTY	ROUTE	POST MILES TOTAL PROJECT	SHEET NO.	TOTAL SHEETS
12	Ora	74	0.0/1.1, 3.0/13.3	25	37

Randell D. Hiatt
REGISTERED CIVIL ENGINEER

June 6, 2008
PLANS APPROVAL DATE

REGISTERED PROFESSIONAL ENGINEER
Randell D. Hiatt
No. C50200
Exp. 6-30-09
CIVIL
STATE OF CALIFORNIA

The State of California or its officers or agents shall not be responsible for the accuracy or completeness of electronic copies of this plan sheet.

To accompany plans dated 5-23-11

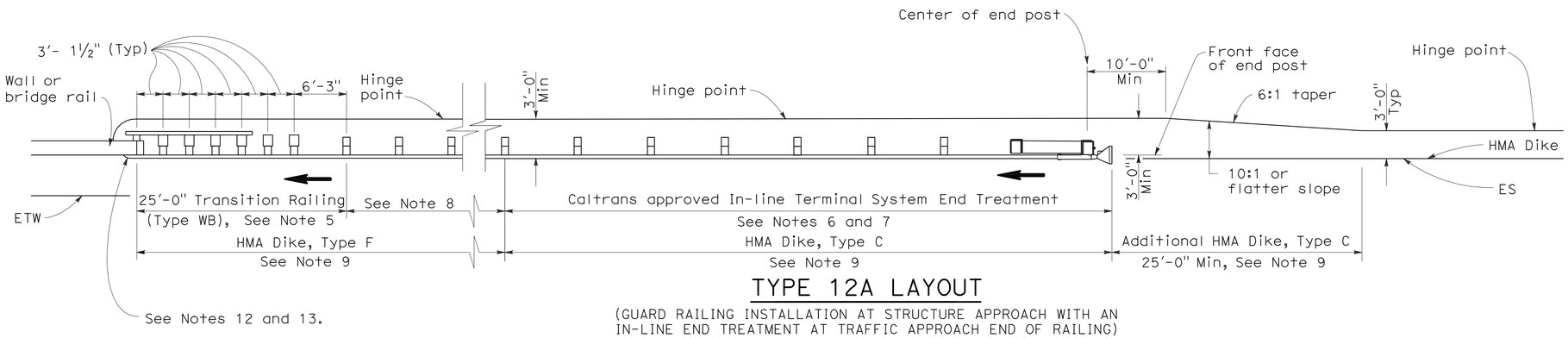

TYPE 12A LAYOUT

(GUARD RAILING INSTALLATION AT STRUCTURE APPROACH WITH AN IN-LINE END TREATMENT AT TRAFFIC APPROACH END OF RAILING)
See Notes 10

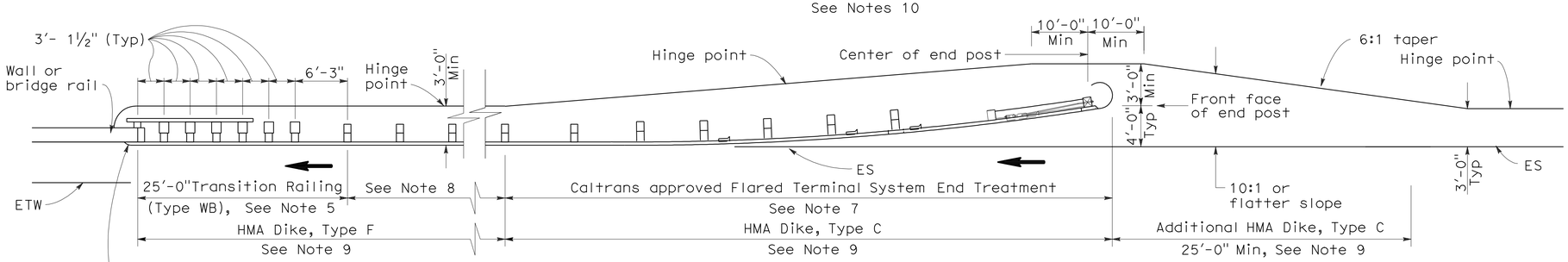

TYPE 12B LAYOUT

(GUARD RAILING INSTALLATION AT STRUCTURE APPROACH WITH A FLARED END TREATMENT AT TRAFFIC APPROACH END OF RAILING)
See Notes 10

NOTES:

1. Line post, blocks and hardware to be used are shown on Standard Plans A77A1, A77A2, A77B1, A77C1 and A77C2.
2. Guard rail post spacing to be 6'-3" center to center, except as otherwise noted.
3. Except as noted, line posts are 6" x 8" x 6'-0" wood with 6" x 8" x 1'-2" wood blocks. W6 x 9 steel posts, 6'-0" in length, with 6" x 8" x 1'-2" notched wood blocks or plastic blocks may be used for 6" x 8" x 6'-0" wood posts with 6" x 8" x 1'-2" wood blocks where applicable and when specified.
4. Direction of adjacent traffic indicated by ➡.
5. For Transition Railing (Type WB) details for Types 12A and 12B Layouts, see Standard Plan A77J4.
6. In-line Terminal System End Treatments are used where site conditions will not accommodate a flared end treatment.
7. The type of terminal system end treatment to be used will be shown on the Project Plans.
8. Dependent on site conditions (embankment height, side slopes, or other fixed objects), it may be advisable to construct additional guard railing (a length equal to multiples of 12'-6" with 6'-3" post spacing) between the transition railing and end treatment.
9. Where placement of dike is required with guard railing installations, see Revised Standard Plan RSP A77C4 for dike positioning details.
10. Type 12A or Type 12B Layouts are typically used:
    a. To the right of approaching traffic, at the end of a structure, on two-lane conventional highway where the roadbed width across the structure is less than 40 feet.
    b. To the left of approaching traffic, at the end of a structure, on two-lane conventional highway where the roadbed width across the structure is less than 40 feet.
    c. To the right of approaching traffic at the end of each structure on multilane freeways or expressways with separate adjacent or parallel bridges.
    d. To the right of approaching traffic at the end of the structure on multilane freeways or expressways with decked median on the bridge.
11. See Revised Standard Plan RSP A77F3 for typical layout used left of approaching traffic at the ends of each structure on multilane freeways or expressways with separate adjacent or parallel bridges.
12. For additional details of typical connections to bridge rail, see Connection Detail AA on Revised Standard Plans RSP A77J1 and RSP A77J2 and Connection Detail FF on Standard Plans A77K1 and A77K2.
13. For additional details of a typical connection to walls or abutments, see Standard Plan A77J3.

STATE OF CALIFORNIA
DEPARTMENT OF TRANSPORTATION

METAL BEAM GUARD RAILING TYPICAL LAYOUTS FOR STRUCTURE APPROACH

NO SCALE

RSP A77F1 DATED JUNE 6, 2008 SUPERSEDES STANDARD PLAN A77F1
DATED MAY 1, 2006 - PAGE 54 OF THE STANDARD PLANS BOOK DATED MAY 2006.

REVISED STANDARD PLAN RSP A77F1

2006 REVISED STANDARD PLAN RSP A77F1

Dist	COUNTY	ROUTE	POST MILES TOTAL PROJECT	SHEET No.	TOTAL SHEETS
12	Ora	74	0.0/1.1, 3.0/13.3	26	37

Randell D. Hiatt
REGISTERED CIVIL ENGINEER

May 20, 2011
PLANS APPROVAL DATE

REGISTERED PROFESSIONAL ENGINEER
Randell D. Hiatt
No. C50200
Exp. 6-30-11
CIVIL
STATE OF CALIFORNIA

The State of California or its officers or agents shall not be responsible for the accuracy or completeness of electronic copies of this plan sheet.

To accompany plans dated 5-23-11

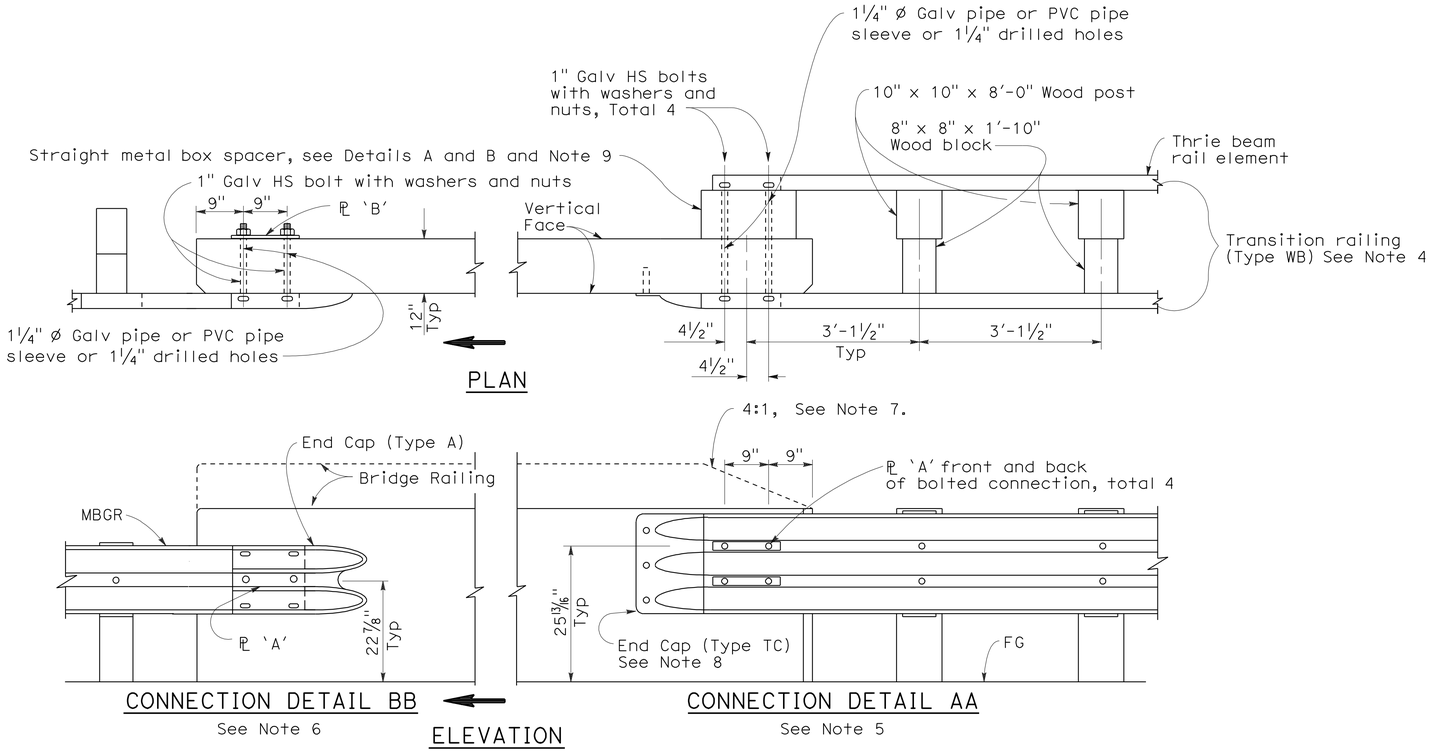

GUARD RAILING CONNECTION TO BRIDGE RAILING WITHOUT SIDEWALK

NOTES:

1. See Revised Standard Plan RSP A77J2 for additional connection details to bridges without sidewalks.
2. Additional details of posts, blocks and hardware are shown on Standard Plan A77B1, A77C1 and A77C2.
3. Direction of adjacent traffic indicated by ➡.
4. For additional details of Transition Railing (Type WB), see Standard Plan A77J4. Transition Railing (Type WB) transitions the 12 gage w-beam standard railing section of guard railing to a heavier gage nested thrie beam railing section which is connected to the concrete bridge railing.
5. For typical use of Connection Detail AA, see Layout Types 12A and 12B on Revised Standard Plan RSP A77F1, Layout Types 12C and 12D on Standard Plan A77F2, and Layout Type 12E on Revised Standard Plan RSP A77F3.
6. For typical use of Connection Detail BB, see Layout Type 12D (structure departure railing connection) on Standard Plan A77F2 and Layout Type 12DD on Standard Plan A77F5.
7. Where the height of the bridge railing exceeds the height of the thrie beam railing by more than 1" at Connection Detail AA, taper the top of the end of the bridge railing at 4:1 to match the top elevation of the thrie beam rail.
8. For details of End Cap (Type TC), see Standard Plan A77J4.
9. See Standard Plan A77J4 for additional details regarding depth dimension for straight metal box spacer.

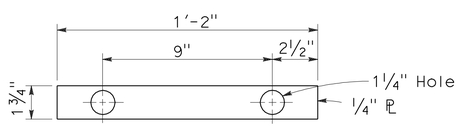

PLATE 'A'

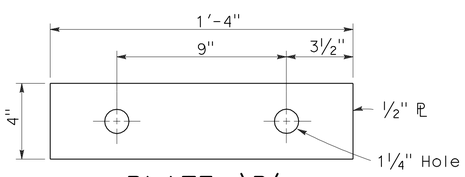

PLATE 'B'
(For backside of connection BB)

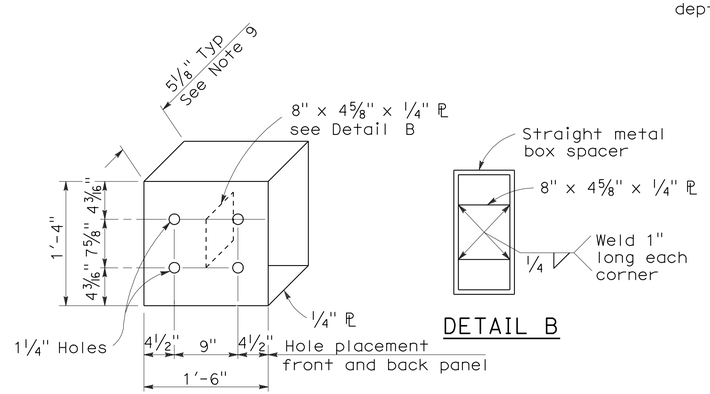

DETAIL A

DETAIL B

STRAIGHT METAL BOX SPACER

STATE OF CALIFORNIA
DEPARTMENT OF TRANSPORTATION

METAL BEAM GUARD RAILING CONNECTIONS TO BRIDGE RAILINGS WITHOUT SIDEWALKS DETAILS No.1

NO SCALE

RSP A77J1 DATED MAY 20, 2011 SUPERSEDES RSP A77J1 DATED JUNE 6, 2008 AND STANDARD PLAN A77J1 DATED MAY 1, 2006 - PAGE 72 OF THE STANDARD PLANS BOOK DATED MAY 2006.

REVISED STANDARD PLAN RSP A77J1

2006 REVISED STANDARD PLAN RSP A77J1

3-10-11

Dist	COUNTY	ROUTE	POST MILES TOTAL PROJECT	SHEET No.	TOTAL SHEETS
12	Ora	74	0.0/1.1, 3.0/13.3	27	37

Randell D. Hiatt
REGISTERED CIVIL ENGINEER

May 20, 2011
PLANS APPROVAL DATE

REGISTERED PROFESSIONAL ENGINEER Randell D. Hiatt No. C50200 Exp. 6-30-11 CIVIL STATE OF CALIFORNIA

To accompany plans dated 5-23-11

The State of California or its officers or agents shall not be responsible for the accuracy or completeness of electronic copies of this plan sheet.

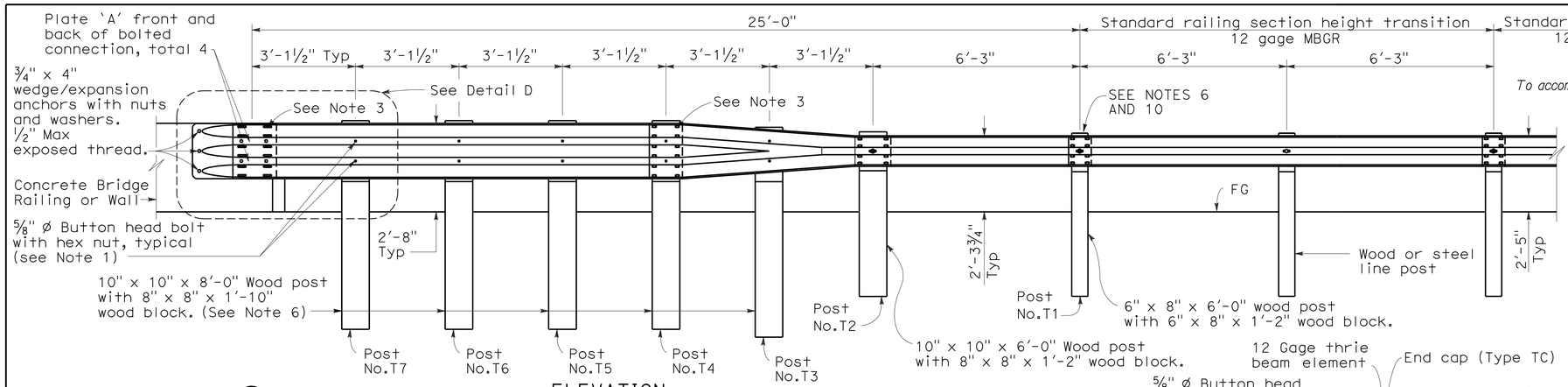

ELEVATION

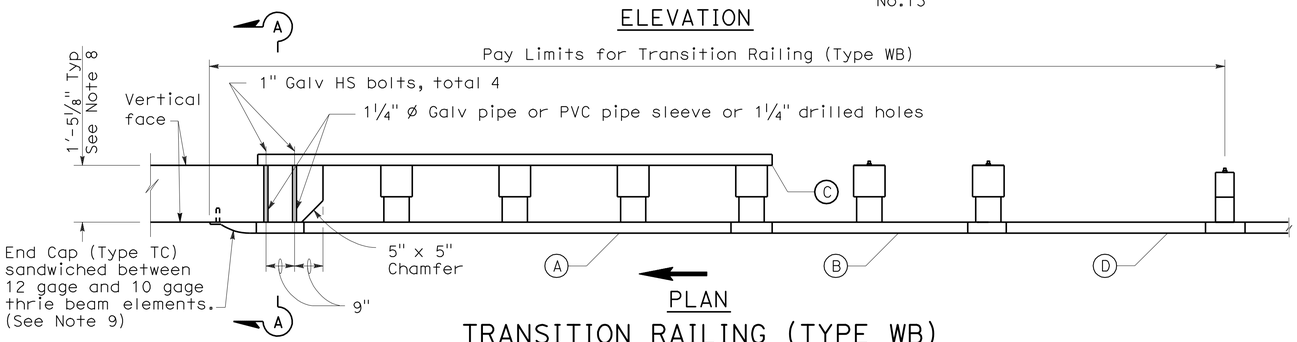

PLAN

TRANSITION RAILING (TYPE WB)

(No Blockout Attachment)

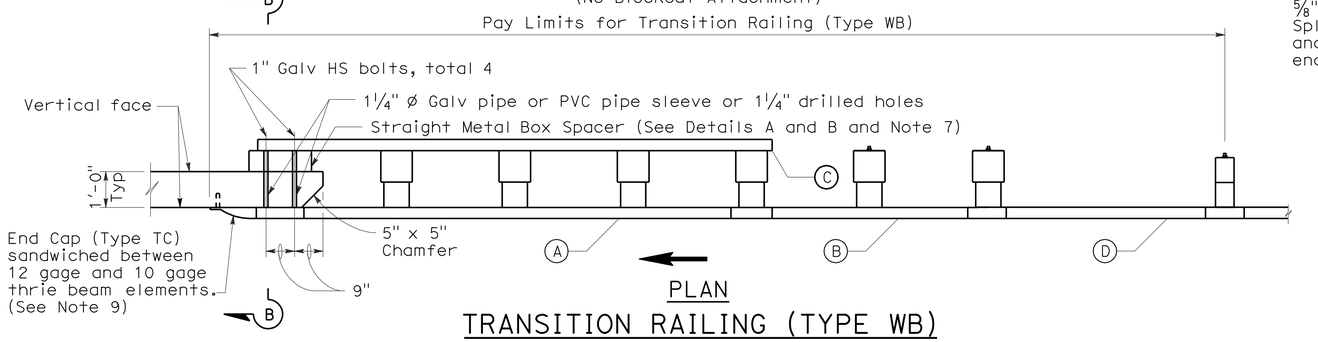

PLAN

TRANSITION RAILING (TYPE WB)

(Blockout Attachment)

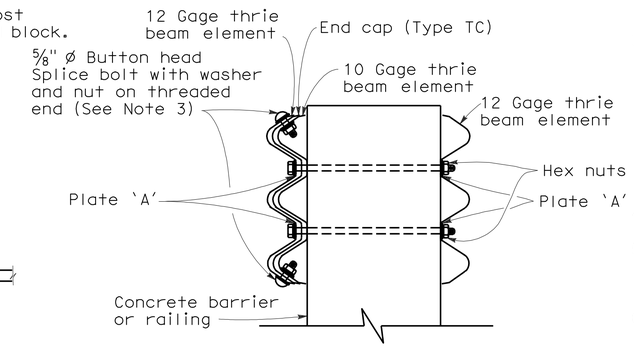

SECTION A-A

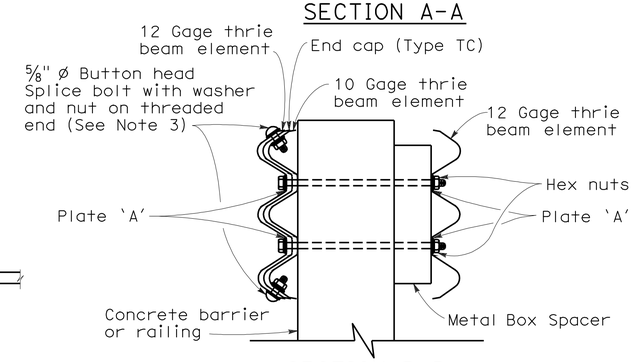

SECTION B-B

NOTES:

1. Use ⅝" ø Button head bolts and hex nuts for connections to posts. No washer on rail face for bolted connections to post.
2. The nested rail elements, end cap, and 'W' beam to thrie beam element may be spliced together prior to bolting the elements to the wood post and concrete barrier or railing.
3. Exterior splice bolt holes for rail element splices at Post No. T4 and the connection to the concrete barrier or railing shall be the standard 29/32" x 1⅛" slot size. Interior splice bolt holes at these locations may be increased up to 1¼" ø. Only the top 2 and the bottom 2 splice bolts with washers and nuts are required for rail splices at Post No. T4 and the connection to the concrete barrier or railing.
4. Direction of adjacent traffic indicated by ➡.
5. The top elevation of Posts No. T2 through No. T7 shall not project more than 1" above the top elevation of the rail element.
6. Typically, the railing connected to Transition Railing (Type WB) will be either standard railing section of metal beam guard railing with height transition ratio of 120:1 or an approved Caltrans end treatment attached to Post No. T1.
7. The depth of the metal box spacer varies from the 5⅛" to 1½" and is dependent on the width of the concrete railing or wall. The combined dimension for the depth of the metal box spacer plus the width of railing or wall is typically 17⅛". Where the space between the backside of the concrete railing or wall and the rear thrie beam element is less than 1½", metal plates similar to Plate 'A' are to be used as spacers.
8. Where the width of the concrete railing or wall is greater than 17⅛", wood blocks are to be used to fill the space created between the backside of Posts No. T4 through No. T7 and the rear thrie beam element. These wood blocks shall be 8" in width and 1'-2" in length. The dimension between the front thrie beam element and the rear thrie beam element is to match the width of the concrete railing or wall.
9. End cap may be installed over 12 gage and 10 gage thrie beam elements where transition railing is installed on the departure end of bridge railing.
10. Conform standard railing section height to 2'-3¾" at Post No. T1 using height transition ratio of 120:1.

LEGEND

(A) Nested thrie beam elements (one 12 gage element nested over one 10 gage element).

(B) One 10 gage "W" beam to thrie beam element.

(C) One 12 gage thrie beam element.

(D) One 10 gage "W" beam rail element (7'-3½" length)

10 gage = 0.135" thick

12 gage = 0.108" thick

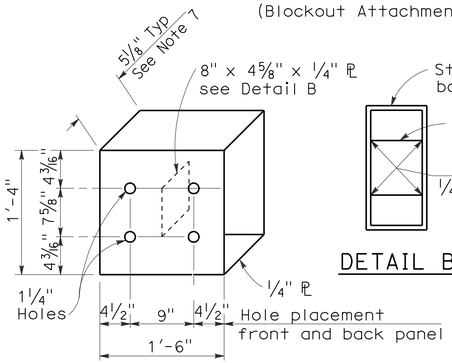

DETAIL A

STRAIGHT METAL BOX SPACER

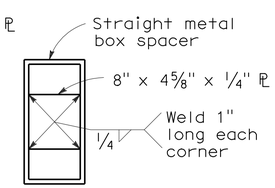

DETAIL B

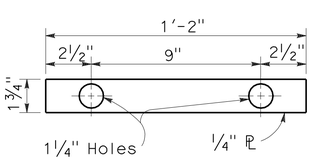

DETAIL C

PLATE 'A'

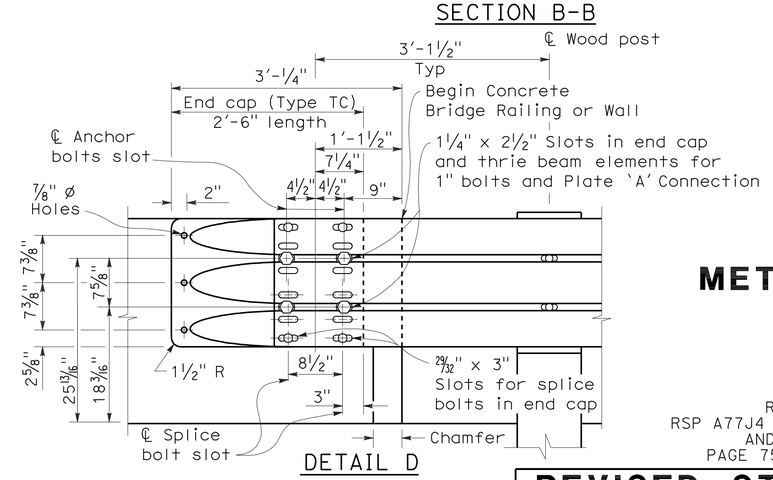

DETAIL D

STATE OF CALIFORNIA
DEPARTMENT OF TRANSPORTATION

METAL BEAM GUARD RAILING TRANSITION RAILING (TYPE WB)

NO SCALE

RSP A77J4 DATED MAY 20, 2011 SUPERSEDES
RSP A77J4 DATED JUNE 5, 2009, RSP A77J4 DATED JUNE 6, 2008
AND STANDARD PLAN A77J4 DATED MAY 1, 2006 -
PAGE 75 OF THE STANDARD PLANS BOOK DATED MAY 2006.

REVISED STANDARD PLAN RSP A77J4

2006 REVISED STANDARD PLAN RSP A77J4

5-14-09

DIST	COUNTY	ROUTE	POST MILES TOTAL PROJECT	SHEET NO.	TOTAL SHEETS
12	Ora	74	0.0/1.1, 3.0/13.3	28	37

REGISTERED CIVIL ENGINEER

November 17, 2006
PLANS APPROVAL DATE

REGISTERED PROFESSIONAL ENGINEER Michael Janzen No. 44788 Exp. 03-31-08 CIVIL STATE OF CALIFORNIA

The State of California or its officers or agents shall not be responsible for the accuracy or completeness of electronic copies of this plan sheet.

To accompany plans dated 5-23-11

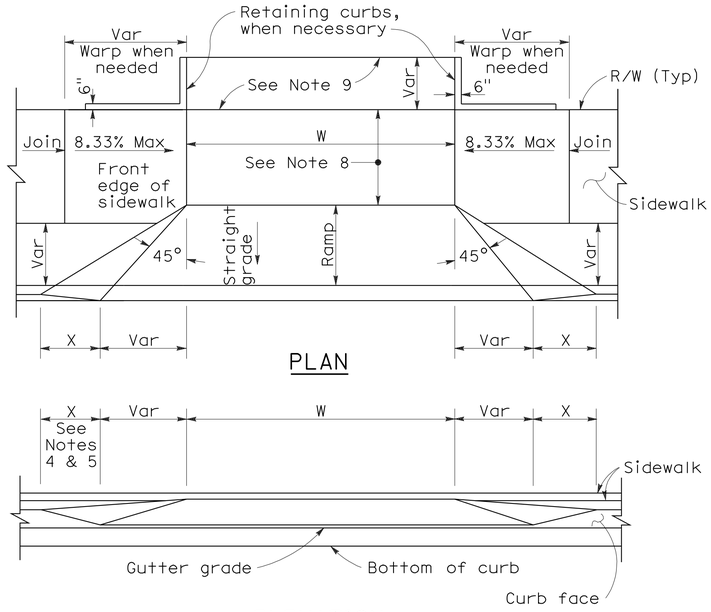

PLAN

ELEVATION

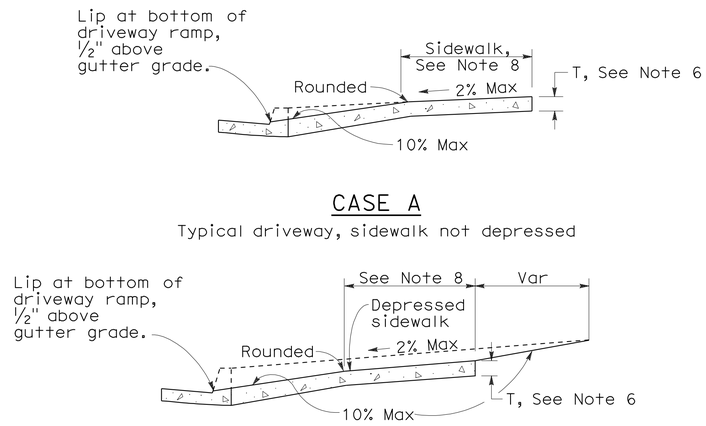

CASE A

Typical driveway, sidewalk not depressed

CASE B

Driveway with depressed sidewalk

SECTIONS

CURB QUANTITIES

TYPE	CUBIC YARDS PER LINEAR FOOT
A1-6	0.02585
A1-8	0.03084
A2-6	0.05903
A2-8	0.06379
A3-6	0.01036
A3-8	0.01435
B1-4	0.02185
B1-6	0.02930
B2-4	0.05515
B2-6	0.06171
B3-4	0.00641
B3-6	0.01074
B4	0.05709
D-4	0.04083
D-6	0.06804
E	0.06661

TABLE A

CURB TYPE	DIMENSIONS "H1"	"H2"	"W1"	"W2"
A1-6	1'-2"	6"	7½"	1½"
A1-8	1'-4"	8"	8"	2"
A2-6	1'-0"	6"	2'-7½"	1½"
A2-8	1'-2"	8"	2'-8"	2"
A3-6	6"	5"	7¼"	1¼"
A3-8	8"	7"	7¾"	1¾"
B1-4	1'-0"	4"	7½"	2½"
B1-6	1'-2"	6"	9"	4"
B2-4	10"	4"	2'-7½"	2½"
B2-6	1'-0"	6"	2'-9"	4"
B3-4	4"	3"	7"	2"
B3-6	6"	5"	8½"	3½"
D-4	10"	4"	1'-6"	1'-1"
D-6	1'-0"	6"	2'-2"	1'-8"

DRIVEWAYS

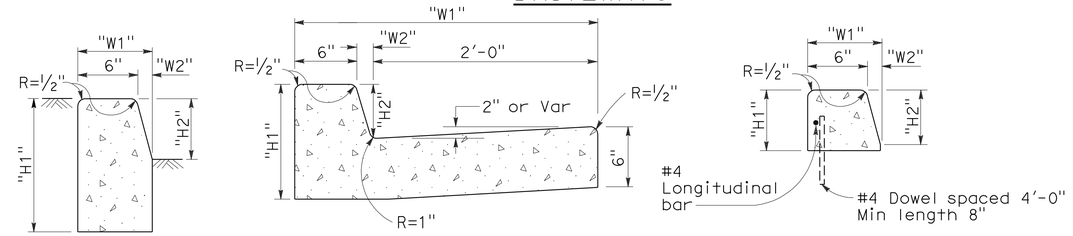

TYPE A1 CURBS
See Table A

TYPE A2 CURBS
See Table A

TYPE A3 CURBS
Superimposed on existing pavement
See Table A

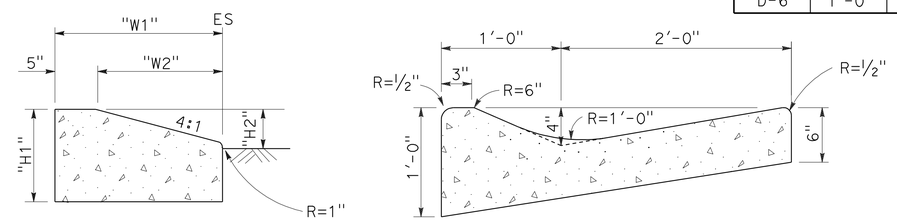

TYPE D CURBS
See Table A

TYPE E CURB

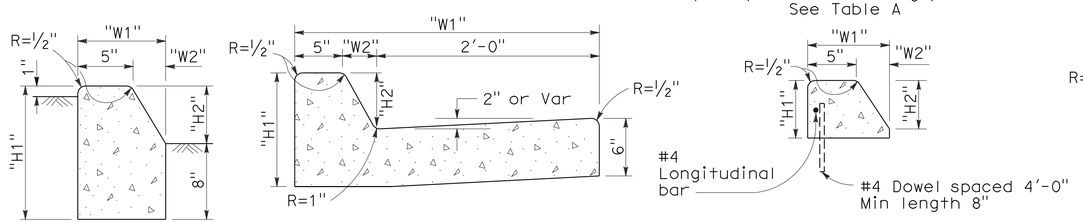

TYPE B1 CURBS
See Table A

TYPE B2 CURBS
See Table A

TYPE B3 CURBS
Superimposed on existing pavement
See Table A

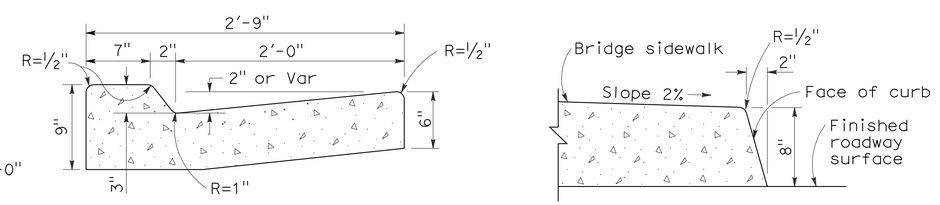

TYPE B4 CURBS

TYPE H CURB
On Bridges

CURBS

NOTES:

1. Case A driveway section typically applies.
2. Use Case B driveway section when ramp slopes would exceed 10% in Case A.
3. Use Case B driveway section when sidewalk cross slope would exceed 2% in Case A.
4. X=3'-0" except for curb heights over 10" where 4:1 slopes shall be used on curb slope.
5. X is a variable when sidewalk is located where wheelchairs may traverse the surface. Slopes shall not exceed 8.33%.
6. Sidewalk and ramp thickness "T" at driveway shall be 4" for residental and 6" for commercial.
7. Difference in slope of the driveway ramp and the slope of a line between the gutter and a point on the roadway 5'-0" from gutter line shall not exceed 15%. Reduce driveway ramp slope, not gutter slope, where required.
8. Minimum width of clear passageway for sidewalk shall be 4'-0".
9. Retaining curbs and acquisition of construction easement may be necessary for narrow sidewalks or curb heights in excess of 6".
10. Across the pedestrian route at curb ramp locations, the gutter pan slope shall not exceed 1" of depth for each 2'-0" of width.

STATE OF CALIFORNIA
DEPARTMENT OF TRANSPORTATION

CURBS AND DRIVEWAYS

NO SCALE

RSP A87A DATED NOVEMBER 17, 2006 SUPERSEDES STANDARD PLAN A87A DATED MAY 1, 2006 - PAGE 113 OF THE STANDARD PLANS BOOK DATED MAY 2006.

REVISED STANDARD PLAN RSP A87A

2006 REVISED STANDARD PLAN RSP A87A

10-25-06

DIST	COUNTY	ROUTE	POST MILES TOTAL PROJECT	SHEET NO.	TOTAL SHEETS
12	Ora	74	0.0/1.1, 3.0/13.3	29	37

REGISTERED CIVIL ENGINEER

September 1, 2006
PLANS APPROVAL DATE

REGISTERED PROFESSIONAL ENGINEER — Hector David Cordova — No. C41957 — Exp. 3-31-08 — CIVIL — STATE OF CALIFORNIA

The State of California or its officers or agents shall not be responsible for the accuracy or completeness of electronic copies of this plan sheet.

To accompany plans dated 5-23-11

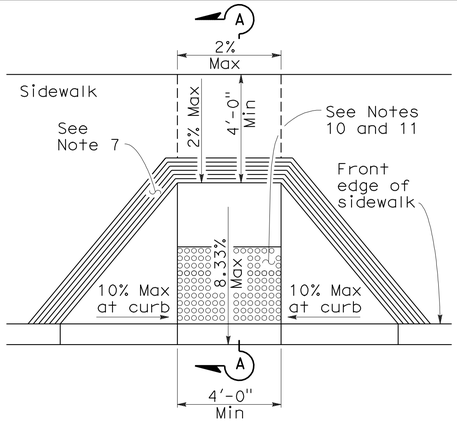

CASE A

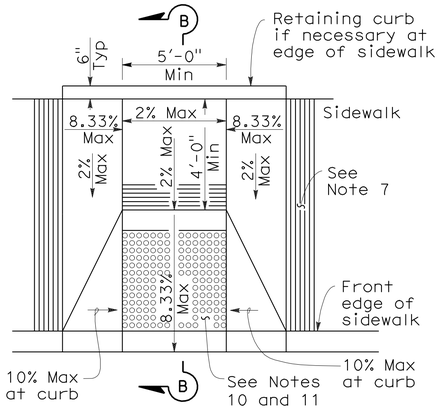

CASE B

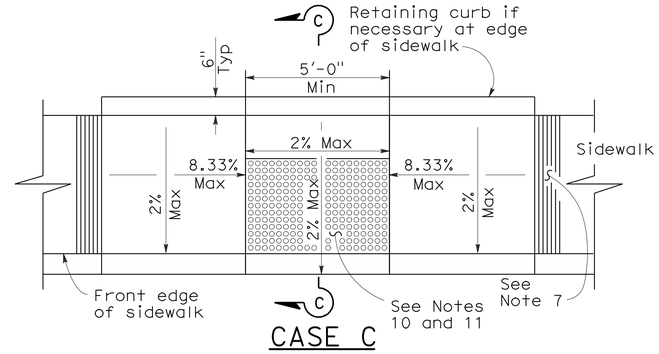

CASE C

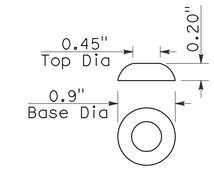

RAISED TRUNCATED DOME

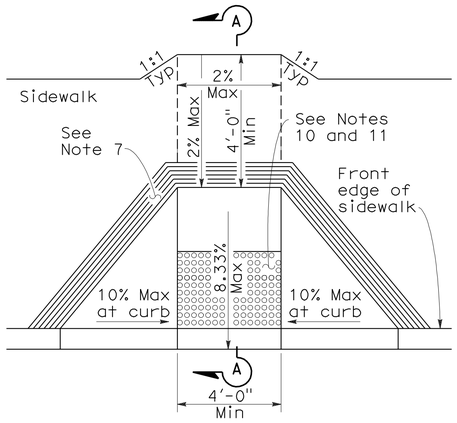

CASE D

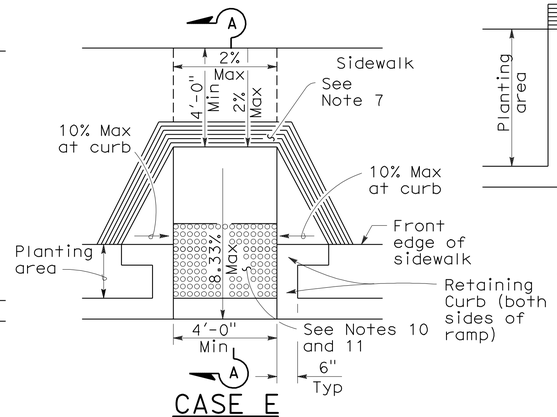

CASE E

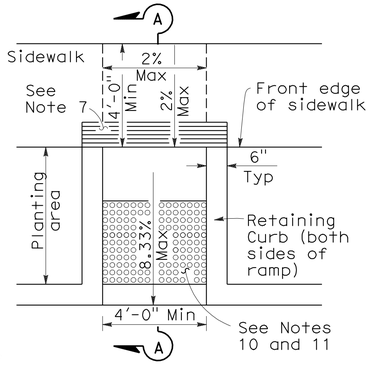

CASE F

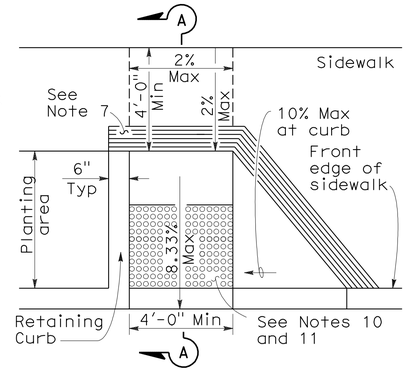

CASE G

See Note 4

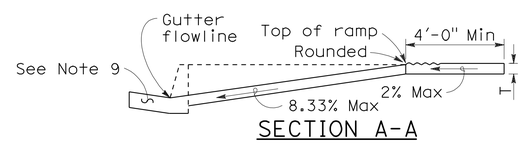

SECTION A-A

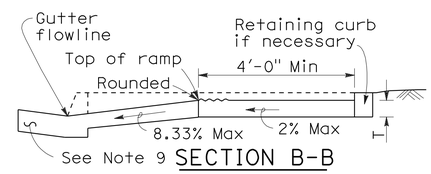

SECTION B-B

Depress entire sidewalk as required

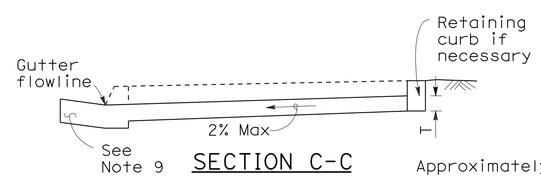

SECTION C-C

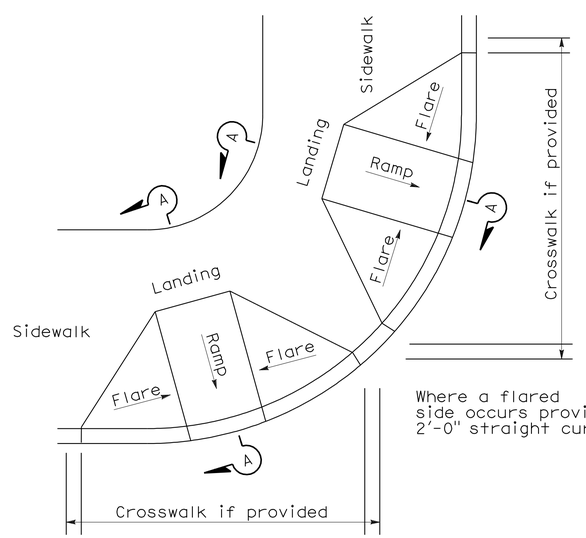

DETAIL A

TYPICAL TWO-RAMP CORNER INSTALLATION

See Note 1

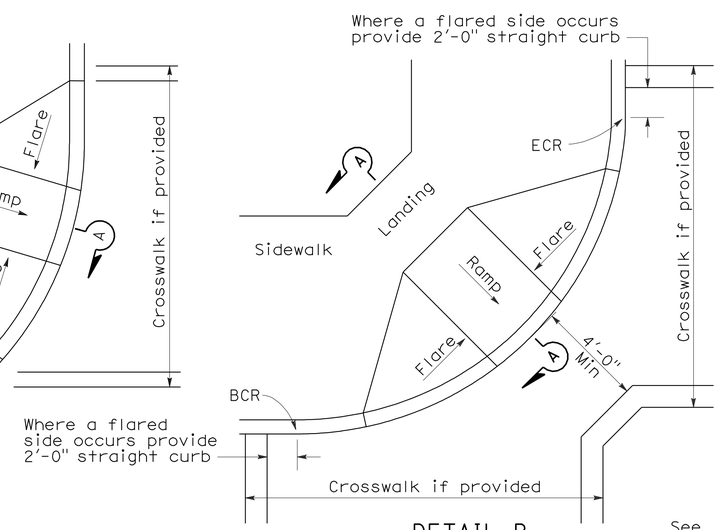

DETAIL B

TYPICAL ONE-RAMP CORNER INSTALLATION

See Notes 1 and 3

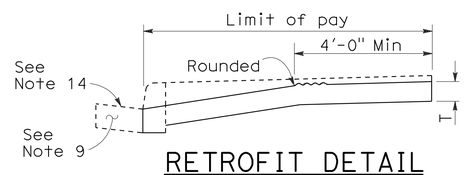

RETROFIT DETAIL

Existing curb and sidewalk

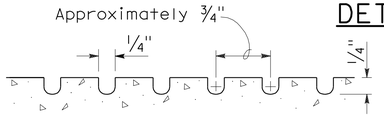

GROOVING DETAIL

NOTES:

1. As site conditions dictate, Case A through Case G curb ramps may be used for corner installations similar to those shown in Detail A and Detail B. The case of curb ramps used in Detail A do not have to be the same. Case A through Case G curb ramps also may be used at mid block locations, as site conditions dictate.
2. If distance from curb to back of sidewalk is too short to accommodate ramp and 4'-0" platform (landing) as shown in Case A, the sidewalk may be depressed longitudinally as in Case B, or C or may be widened as in Case D.
3. When ramp is located in center of curb return, crosswalk configuration must be similar to that shown for Detail B.
4. As site conditions dictate, the retaining curb side and the flared side of the Case G ramp shall be constructed in reversed position.
5. If located on a curve, the sides of the ramp need not be parallel, but the minimum width of the ramp shall be 4'-0".
6. Side slope of ramp flares vary uniformly from a maximum of 10% at curb to conform with longitudinal sidewalk slope adjacent to top of the ramp, except in Case C and Case F.
7. The curb ramp shall be outlined, as shown, with a 1'-0" wide border with 1/4" grooves approximately 3/4" on center. See grooving detail.
8. Transitions from ramps and landing to walks, gutters or streets shall be flush and free of abrupt changes.
9. Maximum slopes of adjoining gutters, the road surface immediately adjacent to the curb ramp or accessible route shall not exceed 5 percent within 4'-0" of the top and bottom of the curb ramp.
10. Curb ramps shall have a detectable warning surface that extends the full width and 3'-0" depth of the ramp. Detectable Warning Surfaces shall conform to the details on this plan and the requirements in the Special Provisions.
11. The edge of the detectable warning surface nearest the street shall be between 6" and 8" from the gutter flowline.
12. Sidewalk and ramp thickness, "T", shall be 3 1/2" minimum.
13. Utility pull boxes, manholes, vaults and all other utility facilities within the boundaries of the curb ramp will be relocated or adjusted to grade by the owner prior to, or in conjunction with, curb ramp construction.
14. For retrofit conditions, removal and replacement of curb apron will be at the Contractor's option, unless otherwise shown on project plans.

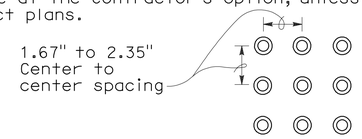

RAISED TRUNCATED DOME PATTERN (IN-LINE)

DETECTABLE WARNING SURFACE

See Note 10

STATE OF CALIFORNIA
DEPARTMENT OF TRANSPORTATION

CURB RAMP DETAILS

NO SCALE

RSP A88A DATED SEPTEMBER 1, 2006 SUPERSEDES STANDARD PLAN A88A DATED MAY 1, 2006 - PAGE 115 OF THE STANDARD PLANS BOOK DATED MAY 2006.

REVISED STANDARD PLAN RSP A88A

2006 REVISED STANDARD PLAN RSP A88A

8-3-06

DIST	COUNTY	ROUTE	POST MILES TOTAL PROJECT	SHEET NO.	TOTAL SHEETS
12	Ora	74	0.0/1.1, 3.0/13.3	30	37

Randell D. Hiatt
REGISTERED CIVIL ENGINEER

June 6, 2008
PLANS APPROVAL DATE

REGISTERED PROFESSIONAL ENGINEER
Randell D. Hiatt
No. C50200
Exp. 6-30-09
CIVIL
STATE OF CALIFORNIA

The State of California or its officers or agents shall not be responsible for the accuracy or completeness of electronic copies of this plan sheet.

To accompany plans dated 5-23-11

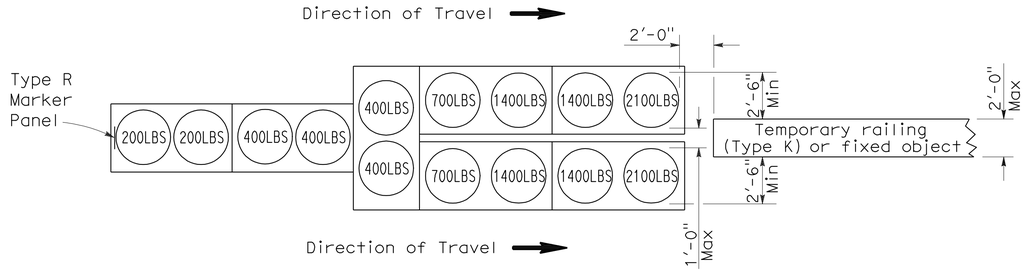

ARRAY 'TU14'

Approach speed 45 mph or more

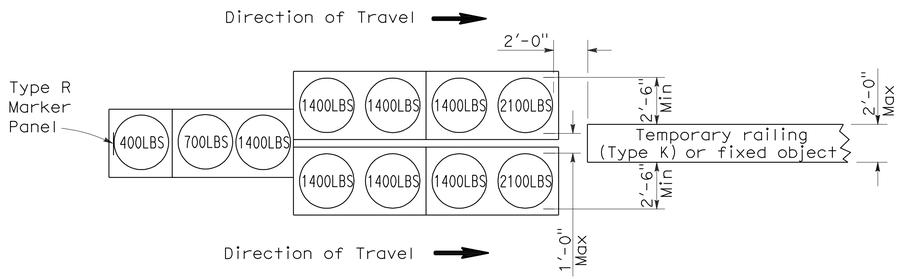

ARRAY 'TU11'

Approach speed less than 45 mph

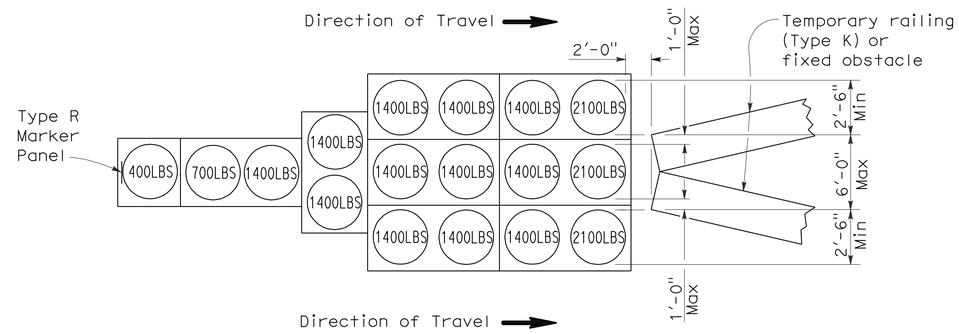

ARRAY 'TU17'

Approach speed less than 45 mph

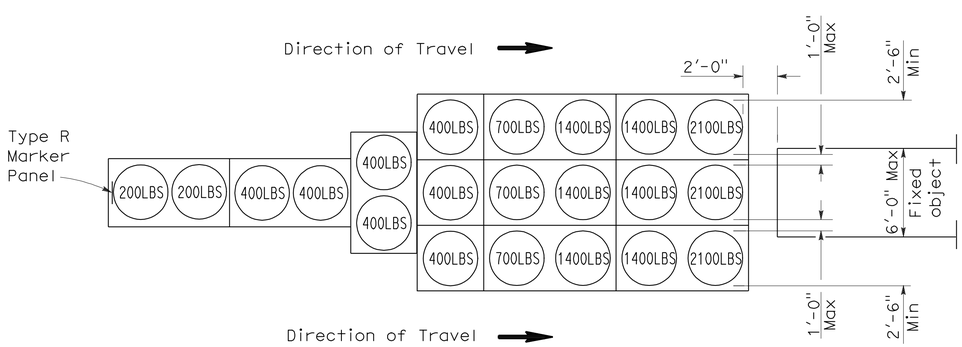

ARRAY 'TU21'

Approach speed 45 mph or more

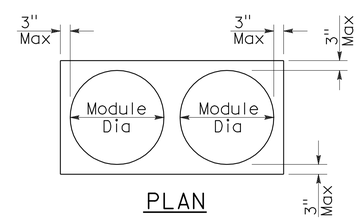

PLAN

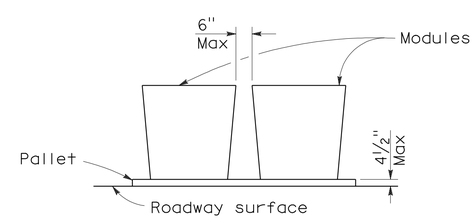

ELEVATION

CRASH CUSHION PALLET DETAIL

See Note 7

NOTES:

1. (XXX) Indicates sand filled module location and weight of sand in pounds for each module. Module spacing is based on the greater diameter of the module.
2. All sand weights are nominal.
3. Temporary crash cushion arrays shall not encroach on the traveled way.
4. Place the top of Type R marker panel 1" below the module lid.
5. Refer to Standard Plan A73B for marker details.
6. Approach speeds indicated conform to NCHRP 350 Report criteria.
7. Use of pallets is optional.

STATE OF CALIFORNIA
DEPARTMENT OF TRANSPORTATION

TEMPORARY CRASH CUSHION, SAND FILLED (UNIDIRECTIONAL)

NO SCALE

RSP T1A DATED JUNE 6, 2008 SUPERSEDES STANDARD PLAN T1A DATED MAY 1, 2006 - PAGE 211 OF THE STANDARD PLANS BOOK DATED MAY 2006.

REVISED STANDARD PLAN RSP T1A

2006 REVISED STANDARD PLAN RSP T1A

5-15-08

DIST	COUNTY	ROUTE	POST MILES TOTAL PROJECT	SHEET NO.	TOTAL SHEETS
12	Ora	74	0.0/1.1, 3.0/13.3	31	37

Randell D. Hiatt
REGISTERED CIVIL ENGINEER

June 6, 2008
PLANS APPROVAL DATE

REGISTERED PROFESSIONAL ENGINEER
Randell D. Hiatt
No. C50200
Exp. 6-30-09
CIVIL
STATE OF CALIFORNIA

The State of California or its officers or agents shall not be responsible for the accuracy or completeness of electronic copies of this plan sheet.

To accompany plans dated 5-23-11

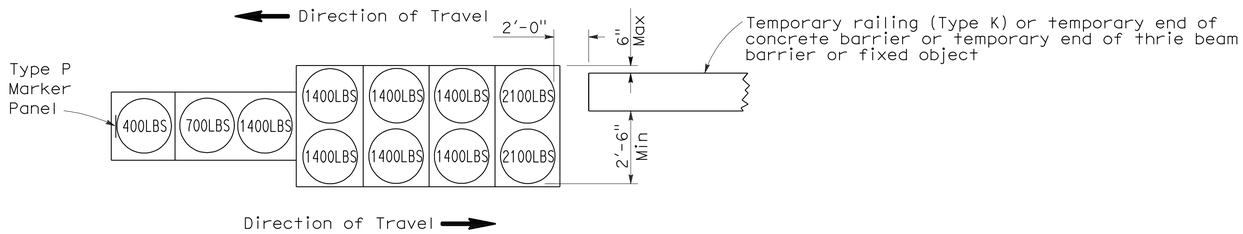

ARRAY 'TB11'

Approach speed less than 45 mph

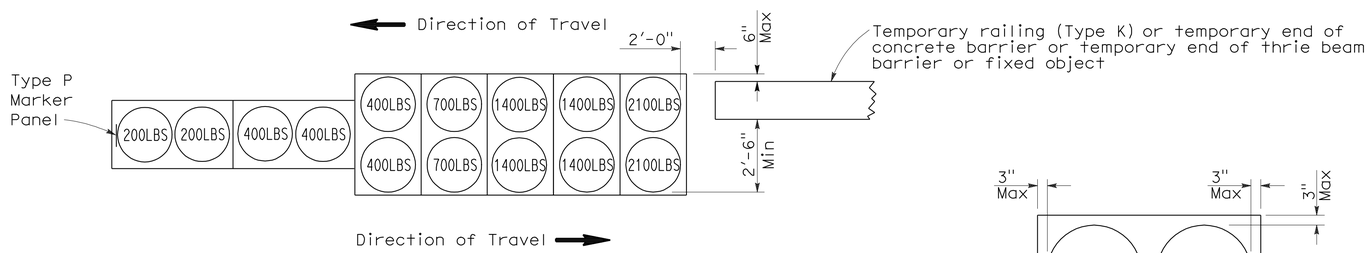

ARRAY 'TB14'

Approach speed 45 mph or more

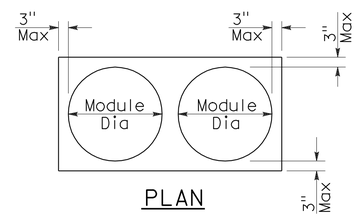

PLAN

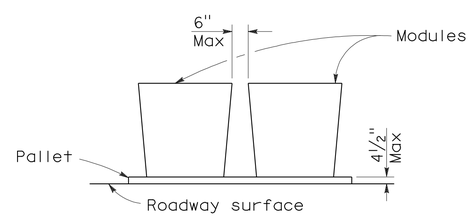

ELEVATION

CRASH CUSHION PALLET DETAIL

See Note 7

NOTES:

1. (XXX) Indicates sand filled module location and weight of sand in pounds for each module. Module spacing is based on the greater diameter of the module.
2. All sand weights are nominal.
3. Temporary crash cushion arrays shall not encroach on the traveled way.
4. Place the Type P marker panel so that the bottom of the panel rests upon the pallet.
5. Refer to Standard Plan A73B for marker details.
6. Approach speeds indicated conform to NCHRP 350 Report criteria.
7. Use of pallets is optional.

STATE OF CALIFORNIA
DEPARTMENT OF TRANSPORTATION

TEMPORARY CRASH CUSHION, SAND FILLED (BIDIRECTIONAL)

NO SCALE

RSP T1B DATED JUNE 6, 2008 SUPERSEDES STANDARD PLAN T1B
DATED MAY 1, 2006 - PAGE 212 OF THE STANDARD PLANS BOOK DATED MAY 2006.

REVISED STANDARD PLAN RSP T1B

2006 REVISED STANDARD PLAN RSP T1B

5-15-08

DIST	COUNTY	ROUTE	POST MILES TOTAL PROJECT	SHEET NO.	TOTAL SHEETS
12	Ora	74	0.0/1.1, 3.0/13.3	32	37

Randell D. Hiatt
REGISTERED CIVIL ENGINEER

June 6, 2008
PLANS APPROVAL DATE

REGISTERED PROFESSIONAL ENGINEER
Randell D. Hiatt
No. C50200
Exp. 6-30-09
CIVIL
STATE OF CALIFORNIA

The State of California or its officers or agents shall not be responsible for the accuracy or completeness of electronic copies of this plan sheet.

To accompany plans dated 5-23-11

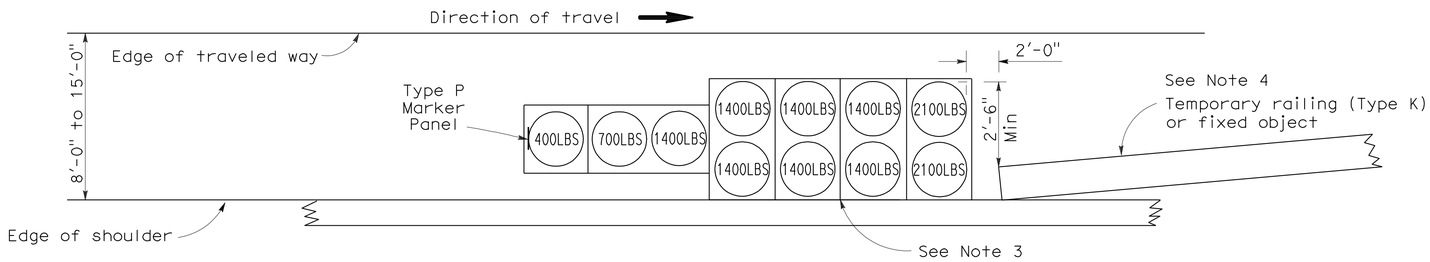

ARRAY 'TS11'

Approach speed less than 45 mph
See Note 9

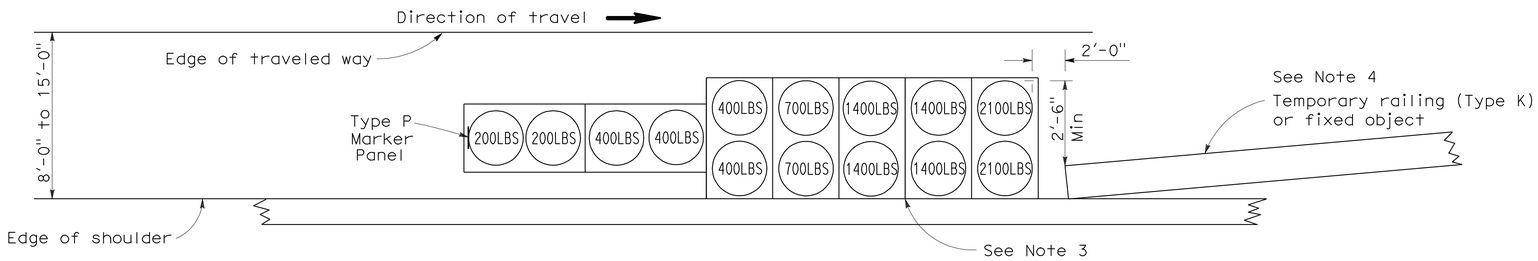

ARRAY 'TS14'

Approach speed 45 mph or more
See Note 9

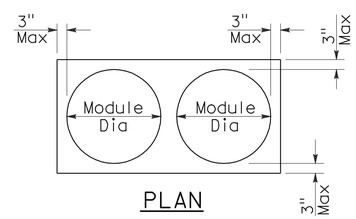

PLAN

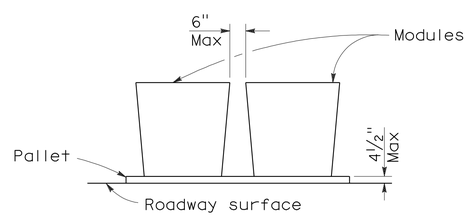

ELEVATION

CRASH CUSHION PALLET DETAIL

See Note 11

NOTES:

1. (XXX) Indicates sand filled module location and weight of sand in pounds for each module. Module spacing is based on the greater diameter of the module.
2. All sand weights are nominal.
3. The temporary crash cushion arrays shown on this plan shall be used only in locations where there will be traffic on one side of the temporary crash cushion array.
4. If the fixed object or approach end of the temporary railing is less than 15'-0" from the edge of traveled way, a temporary crash cushion is required in a construction or work zone.
5. Temporary crash cushion arrays shall not encroach on the traveled way.
6. Arrays for median shoulders shall conform to details shown on this plan for outside shoulders.
7. Place the Type P marker panel so that the bottom of the panel rests upon the pallet and faces traffic.
8. Refer to Standard Plan A73B for marker details.
9. For shoulder widths less than 8'-0", appropriate approved crash cushion protection, other than sand filled modules, shall be provided at fixed objects and at approach ends of temporary railing. The specific type of crash cushion shall be as shown on the project plans or as specified in the Special Provisions, or if not shown on the project plans or specified in the Special Provisions, shall be as approved by the Engineer.
10. Approach speeds indicated conform to NCHRP 350 Report criteria.
11. Use of pallets is optional.

STATE OF CALIFORNIA
DEPARTMENT OF TRANSPORTATION

TEMPORARY CRASH CUSHION, SAND FILLED (SHOULDER INSTALLATIONS)

NO SCALE

RSP T2 DATED JUNE 6, 2008 SUPERSEDES STANDARD PLAN T2
DATED MAY 1, 2006 - PAGE 213 OF THE STANDARD PLANS BOOK DATED MAY 2006.

REVISED STANDARD PLAN RSP T2

2006 REVISED STANDARD PLAN RSP T2

5-15-08

DIST	COUNTY	ROUTE	POST MILES TOTAL PROJECT	SHEET NO.	TOTAL SHEETS
12	Ora	74	0.0/1.1, 3.0/13.3	33	37

LICENSED LANDSCAPE ARCHITECT

August 15, 2008
PLANS APPROVAL DATE

The State of California or its officers or agents shall not be responsible for the accuracy or completeness of electronic copies of this plan sheet.

LICENSED LANDSCAPE ARCHITECT — Robert B. Schott — Signature — 11-04-08 Renewal Date — 08-11-08 Date — STATE OF CALIFORNIA

To accompany plans dated 5-23-11

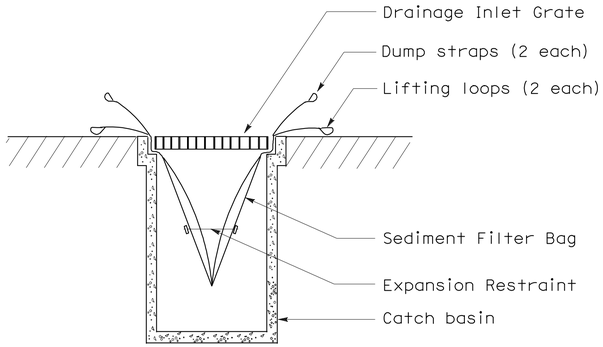

SECTION B-B

SEDIMENT FILTER BAG DETAIL

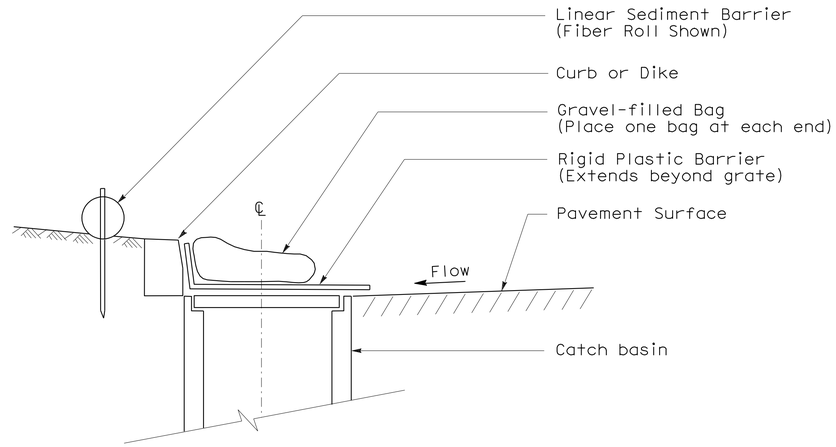

SECTION

TEMPORARY DRAINAGE INLET PROTECTION (TYPE 6A) (CATCH BASIN WITH GRATE)

NOTES:

1. See Standard Plan T51 for Temporary Silt Fence.
2. Dimensions may vary to fit field conditions.

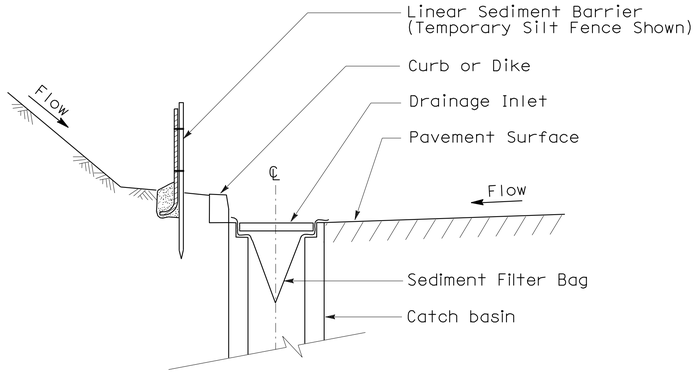

SECTION A-A

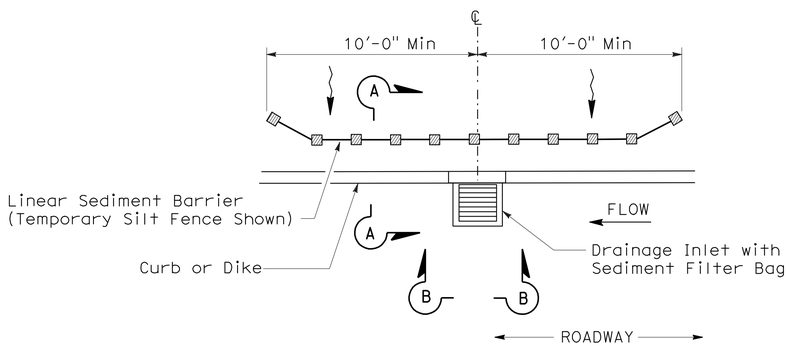

PLAN

TEMPORARY DRAINAGE INLET PROTECTION (TYPE 5) (SEDIMENT FILTER BAG)

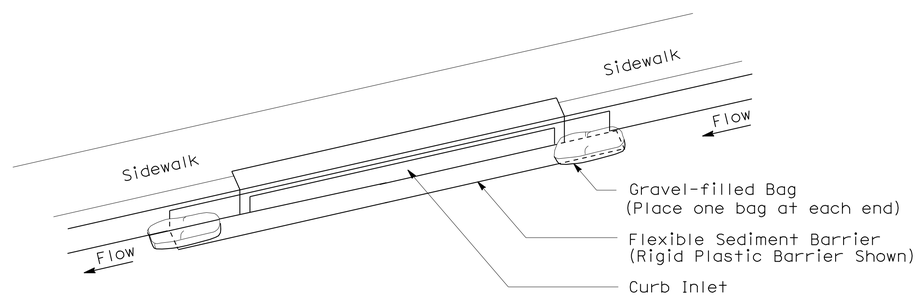

PERSPECTIVE

TEMPORARY DRAINAGE INLET PROTECTION (TYPE 6B) (CURB INLET WITHOUT GRATE)

STATE OF CALIFORNIA
DEPARTMENT OF TRANSPORTATION

TEMPORARY WATER POLLUTION CONTROL DETAILS (TEMPORARY DRAINAGE INLET PROTECTION)

NO SCALE

NSP T64 DATED AUGUST 15, 2008 SUPPLEMENTS
THE STANDARD PLANS BOOK DATED MAY 2006.

NEW STANDARD PLAN NSP T64

2006 NEW STANDARD PLAN NSP T64

DIST	COUNTY	ROUTE	POST MILES TOTAL PROJECT	SHEET NO.	TOTAL SHEETS
12	Ora	74	0.0/1.1, 3.0/13.3	34	37

REGISTERED ELECTRICAL ENGINEER

October 5, 2007
PLANS APPROVAL DATE

REGISTERED PROFESSIONAL ENGINEER Jeffery G. McRae No. E14512 Exp. 6-30-08 ELECTRICAL STATE OF CALIFORNIA

The State of California or its officers or agents shall not be responsible for the accuracy or completeness of electronic copies of this plan sheet.

To accompany plans dated 5-23-11

2006 REVISED STANDARD PLAN RSP ES-1A

ELECTROLIERS

STANDARD TYPES
15, 15D
15 STRUCTURE
21, 21D STRUCTURE
30
31
32
35
36-20A

High mast light pole

Double Arm lighting standard

Existing electrolier

Electrolier foundation (Future installation)

NOTES:

1. Luminaires shall be 310 W HPS when installed on Type 21, 21D, 30, 31, 32, 35 and 36-20A Standards, unless otherwise specified. Luminaires shall be 200 W HPS when installed on other type standards or poles, unless otherwise specified.
2. Luminaires shall be the cutoff type, ANSI Type Ⅲ medium cutoff lighting distribution, unless otherwise specified.
3. Variations noted adjacent to symbol on project plans.

Electrolier (see project notes or project plans)

Luminaire on wood pole

STANDARD NOTES:

- AB Abandon. If applied to conduit, remove conductors.
- BC Install pull box in existing conduit run.
- BP Pedestrian barricade, type as indicated on plan.
- CB Install conduit into existing pull box.
- CC Connect new and existing conduit. Remove existing conductors and install conductors as indicated.
- CF Conduit to remain for future use. Remove conductors. Install pull wire or rope.
- DH Detector handhole.
- FA Foundation to be abandoned.
- IS Install sign on signal mast arm.
- NS No slip base on standard.
- PEC Photoelectric control.
- PEU Photoelectric unit.
- RC Equipment or material to be removed and become the property of the Contractor.
- RE Remove electrolier, fuses and ballast. Tape ends of conductors.
- RL Relocate equipment.
- RR Remove and reuse equipment.
- RS Remove and salvage equipment.
- SC Splice new to existing conductors.
- SD Service disconnect.
- SF Standard to remain for future use. Remove luminaire, pole conductors, fuses and ballast.
- TSP Telephone service point.

ABBREVIATIONS AND EQUIPMENT DESIGNATIONS

PROPOSED	EXISTING	
BBS	bbs	Battery backup system
BC	bc	Bolt circle
C	C	Conduit
CCTV	cctv	Closed circuit television
CKT	ckt	Circuit
CMS	cms	Changeable message sign
DLC	dlc	Loop detector lead-in cable
EMS	ems	Extinguishable message sign
EVC	evc	Emergency vehicle cable
EVD	evd	Emergency vehicle detector
FB	fb	Flashing beacon
FBCA	fbca	Flashing beacon control assembly
FBS	fbs	Flashing beacon with slip base
FO	fo	Fiber optic
G	G	Ground (Equipment Grounding Conductor)
GFCI	GFCI	Ground fault circuit interrupt
HAR	har	Highway advisory radio
HEX	hex	Hexagonal
HPS	hps	High pressure sodium
IISNS	iisns	Internally illuminated street name sign
ISL	isl	Induction sign lighting
LED	led	Light emitting diode
LMA	lma	Luminaire mast arm
LPS	lps	Low pressure sodium
LTG	ltg	Lighting
LUM	lum	Luminaire
MAT	mat	Mast arm mounting vehicle signal faces, top attachment
MAS	mas	Mast arm mounting vehicle signal faces, side attachment
MAS-4A	mas-4A	Mast arm mounting vehicle signal faces, side attachment - 4 signal section
MAS-4B	mas-4B	
MAS-4C	mas-4C	
MAS-5A	mas-5A	Mast arm mounting vehicle signal faces, side attachment - 5 signal section
MAS-5B	mas-5B	
MC	mc	Mercury contactor
M/M	m/m	Multiple to multiple transformer
MT	mt	Conduit with pull wire or rope only
MTG	mtg	Mounting
	mv	Mercury vapor lighting fixture
N	N	Neutral (Grounded Conductor)
NC	NC	Normally closed
NO	NO	Normally open
PB	pb	Pull box
PEC	pec	Photoelectric control (Type Ⅰ, Ⅱ, Ⅲ, Ⅳ or Ⅴ as shown)
PED	ped	Pedestrian
PEU	peu	Photoelectric unit
PPB	ppb	Pedestrian push button
RL		Relocated equipment
RM	rm	Ramp metering
SB	sb	Slip base
SIC	sic	Signal interconnect cable
SIG	sig	Signal
SMA	sma	Signal mast arm
SNS	sns	Street name sign
SP	sp	Service point
TDC	tdc	Telephone demarcation cabinet
TMS	tms	Traffic monitoring station
TOS	tos	Traffic Operations System
VEH	veh	Vehicle
XFMR	xfmr	Transformer
COMM	comm	Communication
RWIS	rwis	Roadway weather information system

SOFFIT AND WALL MOUNTED LUMINAIRES

Pendant, 70 W HPS unless otherwise specified.

Flush, 70 W HPS unless otherwise specified.

Wall surface, 70 W HPS unless otherwise specified.

Existing soffit or wall luminaire to remain unmodified.

Existing soffit or wall luminaire to be modified as specified.

NOTE:

Arrow indicates "street side" of luminaire.

STATE OF CALIFORNIA
DEPARTMENT OF TRANSPORTATION

ELECTRICAL SYSTEMS (SYMBOLS AND ABBREVIATIONS)

NO SCALE

RSP ES-1A DATED OCTOBER 5, 2007 SUPERSEDES STANDARD PLAN ES-1A DATED MAY 1, 2006 - PAGE 400 OF THE STANDARD PLANS BOOK DATED MAY 2006.

REVISED STANDARD PLAN RSP ES-1A

DIST	COUNTY	ROUTE	POST MILES TOTAL PROJECT	SHEET NO.	TOTAL SHEETS
12	Ora	74	0.0/1.1, 3.0/13.3	35	37

REGISTERED ELECTRICAL ENGINEER

October 5, 2007
PLANS APPROVAL DATE

REGISTERED PROFESSIONAL ENGINEER
Jeffery G. McRae
No. E14512
Exp. 6-30-08
ELECTRICAL
STATE OF CALIFORNIA

The State of California or its officers or agents shall not be responsible for the accuracy or completeness of electronic copies of this plan sheet.

To accompany plans dated 5-23-11

CONDUIT

PROPOSED	EXISTING	
		Lighting Conduit, unless otherwise indicated or noted
		Traffic signal conduit
C	c	Communication conduit
T	t	Telephone conduit
F	f	Fire alarm conduit
FO	fo	Fiber optic conduit
		Conduit termination (RSP ES-9A C)
R	r	Conduit riser in/on structure or service pole

SERVICE EQUIPMENT

PROPOSED	EXISTING	
OH	oh	Overhead lines
U	U	Wood pole "U" indicates utility owned
		Pole guy with anchor
		Utility transformer - ground mounted
III		Service equipment enclosure type
		Service equipment enclosure door indicates front of enclosure
T	t	Telephone demarcation cabinet

POLE-MOUNTED SERVICE DESIGNATION

Type of installation

TYPE H SERVICE - 28'-10"

Pole height above grade

ILLUMINATED OVERHEAD SIGN

PROPOSED	EXISTING	
		Overhead sign - Single post
		Overhead sign - Two post
		Overhead sign - Mounted on structure
		Overhead sign with electrolier

SIGNAL EQUIPMENT

PROPOSED	EXISTING	
		Pedestrian signal face
		Pedestrian push button post
		Pedestrian barricade
		Vehicle signal face (with backplate, 3-Section: red, yellow and green)
		Vehicle signal face with angle visors
PV	PV	Modifications of basic symbols: "L" indicates all non-arrow sections louvered "LG" indicates louvered green section only "PV" indicates 12" programmed visibility sections "8" indicates all 8" sections (only when specified)
		Type 15TS and Vehicle signal face
		Vehicle signal face with red, yellow and green left arrow sections
		Vehicle signal face with red and yellow sections and up green arrow
		Vehicle signal face (5 Section) with red, yellow and green sections and yellow and green right arrows
		Type 1 Standard and attached vehicle signal faces
		Standard with signal mast arm only and attached vehicle signal faces and internally illuminated street name sign
		Type 33 Standard, Left-turn vehicle signal face and sign
		Standard with luminaire and signal mast arms and attached vehicle signal faces
		Cantilever flashing beacon Type 9 Frame, with a sign unless otherwise specified or indicated
		Type 15-FBS Standard with two vehicle signal face sections with lens, backplate and visor with a sign
R	Y	Flashing beacon. One vehicle signal face section with lens, backplate and visor. "R" indicates red indication, "Y" indicates yellow indication
		Controller assembly. Door indicates front of cabinet

SIGNAL EQUIPMENT Cont

PROPOSED	EXISTING	
		Guard post
		Type 1 Standard with "Meter On" sign
		Emergency Vehicle detector

NOTES:

1. All signal sections shall be 12" unless shown otherwise.
2. Signal heads shall be provided with backplates unless shown otherwise.
3. Signal indication shall be LED.

STATE OF CALIFORNIA
DEPARTMENT OF TRANSPORTATION

ELECTRICAL SYSTEMS (SYMBOLS AND ABBREVIATIONS)

NO SCALE

RSP ES-1B DATED OCTOBER 5, 2007 SUPERCEDES STANDARD PLAN ES-1B
DATED MAY 1, 2006 - PAGE 401 OF THE STANDARD PLANS BOOK DATED MAY 2006.

REVISED STANDARD PLAN RSP ES-1B

2006 REVISED STANDARD PLAN RSP ES-1B

DIST	COUNTY	ROUTE	POST MILES TOTAL PROJECT	SHEET NO.	TOTAL SHEETS
12	Ora	74	0.0/1.1, 3.0/13.3	36	37

REGISTERED ELECTRICAL ENGINEER

October 5, 2007
PLANS APPROVAL DATE

REGISTERED PROFESSIONAL ENGINEER Jeffery G. McRae No. E14512 Exp. 6-30-08 ELECTRICAL STATE OF CALIFORNIA

The State of California or its officers or agents shall not be responsible for the accuracy or completeness of electronic copies of this plan sheet.

To accompany plans dated 5-23-11

EQUIPMENT IDENTIFICATION

ILLUMINATED SIGN IDENTIFICATION NUMBER:

Sign No. 12345 — Sign number - Place on post or structure

10 ISL SCI 1.0

- 1.0 — Transformer rating (kVA)
- SCI — Lighting control type
- ISL — Number and type of fixtures

Do NOT place on standard or structure

ELECTROLIER OR EQUIPMENT IDENTIFICATION NUMBER:

12345 - 15'-0"

- 15'-0" — Mast arm length, if shown. Do not place on standard or structure.
- 12345 — Equipment number - Place on standard or structure. Existing equipment numbers are shown in parenthesis

CONDUIT AND CONDUCTOR IDENTIFICATION:

1½"C, 2#10, 15#14, 2 DLC

- 2#10, 15#14, 2 DLC — Number and size of conductors and cables
- 1½"C — Size of conduit in inches

Ø1, Ø2, Ø2P, etc.	Traffic phase identification for signal faces, detectors and phase diagrams
1 2 3	Project note numbers
A B C	Equipment description, installation or item numbers
1 2 3	Conduit run numbers

SIGNAL AND LIGHTING STANDARD (TYPICAL DESIGNATION):

19A - 3 - 100

- 100 — Wind velocity = 100 mph
- 3 — Case 3 arm loading
- 19A — Standard type
- Standard Plan sheet number
- Detail number or letter

MISCELLANEOUS EQUIPMENT

PROPOSED	EXISTING	
CMS	cms	Changeable message sign
		Closed circuit television camera
		Highway advisory radio pole and antenna
EMS	ems	Extinguishable message sign
M V	m v	Detection device M = Microwave sensor V = Video image sensor

WIRING DIAGRAM LEGEND

P	Pole
CB	Circuit breaker
A	Ampere
V	Volt
M	Metered
UM	Unmetered
NB	Neutral bus
GB	Ground bus
G	Equipment grounding conductor
N	Grounded conductor (Neutral)

- External conductor
- Conductor or bus
- Tie point
- Contactor coil
- Contactor, Contact NO
- Terminal blocks
- Contactor, Contact NC
- Enclosure bond
- Grounding electrode
- Circuit breaker
- Receptacle

PULL BOXES

PROPOSED EXISTING

Pull box-No. 5 unless otherwise indicated or noted.

3 — 9A(21)

Pull box-Additional designations or descriptions

3 = No. 3½ pull box
5 = No. 5 pull box
6 = No. 6 pull box
7 = No. 7 (Ceiling pull box)
8 = No. 8 (Pendant soffit pull box)
9 = No. 9 pull box
9A = No. 9A pull box

(C) = Communications pull box
(E) = Pull box with extension
(S) = Sprinkler control pull box
(21) = Anchor bolts and conduit for future installation of Type 21 Standard
(T) = Traffic pull box

VEHICLE DETECTORS

5 J 9 U

- U = Upper, L = Lower
- Slot number in input file
- Input file (I or J)
- Phase

PROPOSED	EXISTING	
		Type A detector loop. Outline of sawcut shown.
		Type B detector loop. Outline of sawcut shown.
		Type C detector loop. Outline of sawcut shown.
		Type D detector loop. Outline of sawcut shown.
		Type E detector loop. Outline of sawcut shown.
		Type Q detector loop. Outline of sawcut shown.
		Magnetic detector
DH	dh	Detector handhole
		Microwave or video detection zone

STATE OF CALIFORNIA
DEPARTMENT OF TRANSPORTATION

ELECTRICAL SYSTEMS (SYMBOLS AND ABBREVIATIONS)

NO SCALE

RSP ES-1C DATED OCTOBER 5, 2007 SUPERCEDES STANDARD PLAN ES-1C DATED MAY 1, 2006 - PAGE 402 OF THE STANDARD PLANS BOOK DATED MAY 2006.

REVISED STANDARD PLAN RSP ES-1C

2006 REVISED STANDARD PLAN RSP ES-1C

DIST	COUNTY	ROUTE	POST MILES TOTAL PROJECT	SHEET NO.	TOTAL SHEETS
12	Ora	74	0.0/1.1, 3.0/13.3	37	37

REGISTERED ELECTRICAL ENGINEER

October 5, 2007
PLANS APPROVAL DATE

REGISTERED PROFESSIONAL ENGINEER Jeffery G. McRae No. E14512 Exp. 6-30-08 ELECTRICAL STATE OF CALIFORNIA

The State of California or its officers or agents shall not be responsible for the accuracy or completeness of electronic copies of this plan sheet.

To accompany plans dated 5-23-11

2006 REVISED STANDARD PLAN RSP ES-5A

LOOP INSTALLATION PROCEDURE

1. Loops shall be centered in lanes.
2. Saw slots in pavement for loop conductors as shown in details.
3. Distance between side of loop and a lead-in saw cut from adjacent detectors shall be 2'-0" minimum. Distance between lead-in saw cuts shall be 6" minimum.
4. Bottom of saw slot shall be smooth with no sharp edges.
5. Slots shall be washed until clean, blown out and thoroughly dried before installing loop conductors.
6. Adjacent loops on the same sensor unit channel shall be wound in opposite directions.
7. Identify and tag loop circuit pairs in the pull box with loop number, start (S) and finish (F) of conductor. Identify and tag lead-in-cable with sensor number and phase.
8. Install loop conductor in slot using a 3/16" to 1/4" thick wood paddle. Hold loop conductors with wood paddles (at the bottom of the sawed slot) during sealant placement.
9. No more than 2 twisted pairs shall be installed in one sawed slot.
10. Allow additional 5'-0" of slack length of conductor for the lead-in run to pull box.
11. The additional length of each conductor for each loop shall be twisted together into a pair (6 turns per 3'-4" minimum) before being placed in the slot and conduit leading to pull box.
12. Test each loop circuit for continuity, circuit resistance and insulation resistance at the pull box before filling slots.
13. Fill slots as shown in details.
14. Splice loop conductors to lead-in-cable. Splices shall be soldered.
15. End of lead-in-cable and Type 2 loop conductor shall be waterproofed prior to installing in conduit to prevent moisture from entering the cable.
16. Lead-in-cable shall not be spliced between the pull box and the controller cabinet terminals.
17. Test each loop circuit for continuity, circuit resistance and insulation resistance at the controller cabinet location.
18. Where loop conductors are not to be spliced to a lead-in-cable, the ends of the conductors shall be taped and waterproofed with electrical insulating coating.

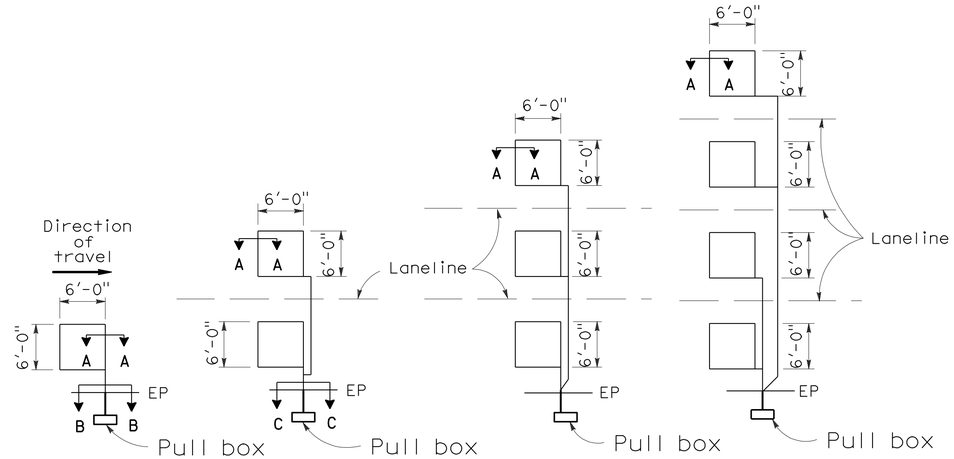

TYPE 1A INSTALLATION | TYPE 2A INSTALLATION | TYPE 3A INSTALLATION | TYPE 4A INSTALLATION

SAWCUT DETAILS

(Type A loop detector configurations illustrated)

1. 1A thru 4A = 1 Type A loop configuration in each lane.
2. 1B thru 4B = 1 Type B loop configuration in each lane.
3. 1C = 1 Type C loop configuration entering lanes as required.
4. 1D thru 4D = 1 Type D loop configuration in each lane.
5. 1E thru 4E = 1 Type E loop configuration in each lane.
6. 1Q thru 4Q = 1 Type Q loop configuration in each lane. (Use Type A, B, C, D, E or Q loop detector configurations only when specified or shown on plans)

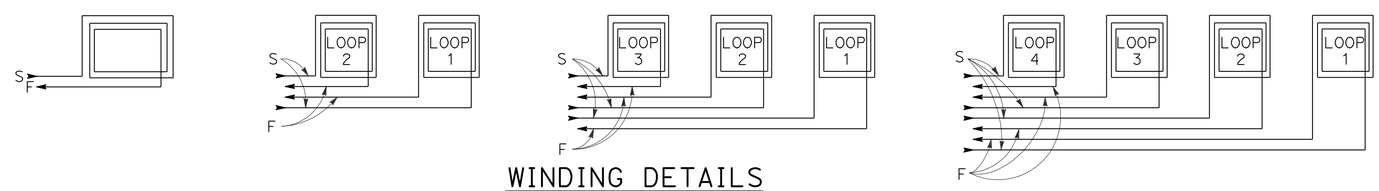

WINDING DETAILS

See Notes 6 and 7

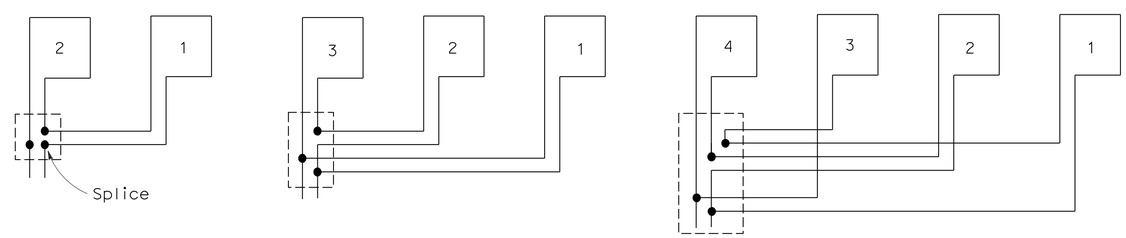

TYPICAL LOOP CONNECTIONS

(Dashed lines represent the pull box)

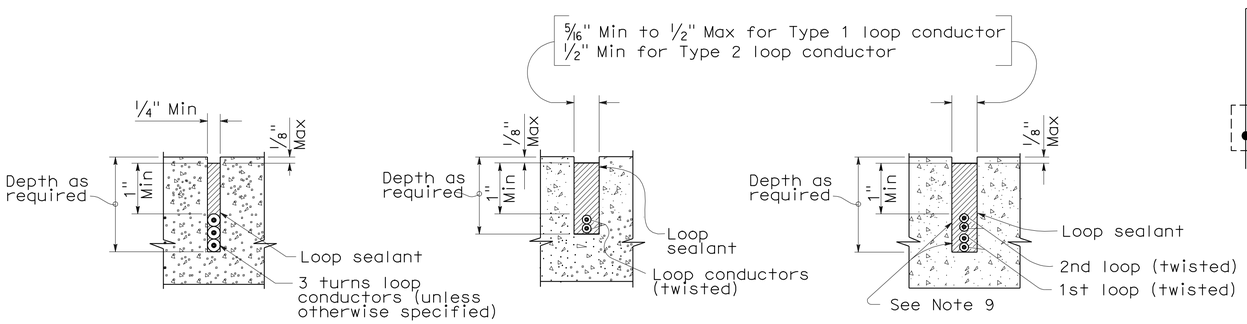

SECTION A-A | SECTION B-B | SECTION C-C

SLOT DETAILS - TYPE 1 AND TYPE 2 LOOP CONDUCTOR

STATE OF CALIFORNIA
DEPARTMENT OF TRANSPORTATION

ELECTRICAL SYSTEMS (DETECTORS)

NO SCALE

RSP ES-5A DATED OCTOBER 5, 2007 SUPERCEDES STANDARD PLAN ES-5A DATED MAY 1, 2006 - PAGE 423 OF THE STANDARD PLANS BOOK DATED MAY 2006.

REVISED STANDARD PLAN RSP ES-5A