HSNH-P055(050)E

| Dist | COUNTY | ROUTE | POST MILES TOTAL PROJECT | SHEET No. | TOTAL SHEETS |
|---|---|---|---|---|---|
| 12 | Ora | 55 | 16.0/16.8 | 1 | 52 |

STATE OF CALIFORNIA
# DEPARTMENT OF TRANSPORTATION

## PROJECT PLANS FOR CONSTRUCTION ON
# STATE HIGHWAY
## IN ORANGE COUNTY
## IN ORANGE
## FROM SOUTH OF MEATS AVENUE
## TO LINCOLN AVENUE/SANTIAGO BOULEVARD OFF-RAMP

TO BE SUPPLEMENTED BY STANDARD PLANS DATED MAY 2006

INDEX OF PLANS


| SHEET No. | DESCRIPTION |
|---|---|
| 1 | TITLE AND LOCATION MAP |
| 2-3 | TYPICAL CROSS SECTIONS |
| 4-6 | LAYOUTS |
| 7-8 | PROFILES AND SUPERELEVATION DIAGRAMS |
| 9-12 | CONSTRUCTION DETAILS |
| 13-15 | CONTOUR GRADING |
| 16-22 | DRAINAGE PLANS, PROFILES, DETAILS AND QUANTITIES |
| 23-25 | UTILITY PLANS |
| 26 | TRAFFIC HANDLING PLANS |
| 27 | DETOUR PLAN AND CONSTRUCTION AREA SIGNS |
| 28-33 | PAVEMENT DELINEATION AND SIGN PLANS |
| 34 | SUMMARY OF QUANTITIES |
| 35-39 | ELECTRICAL PLANS |
| 40-52 | REVISED AND NEW STANDARD PLANS |


THE STANDARD PLANS LIST APPLICABLE TO THIS CONTRACT IS INCLUDED IN THE NOTICE TO BIDDERS AND SPECIAL PROVISIONS BOOK.

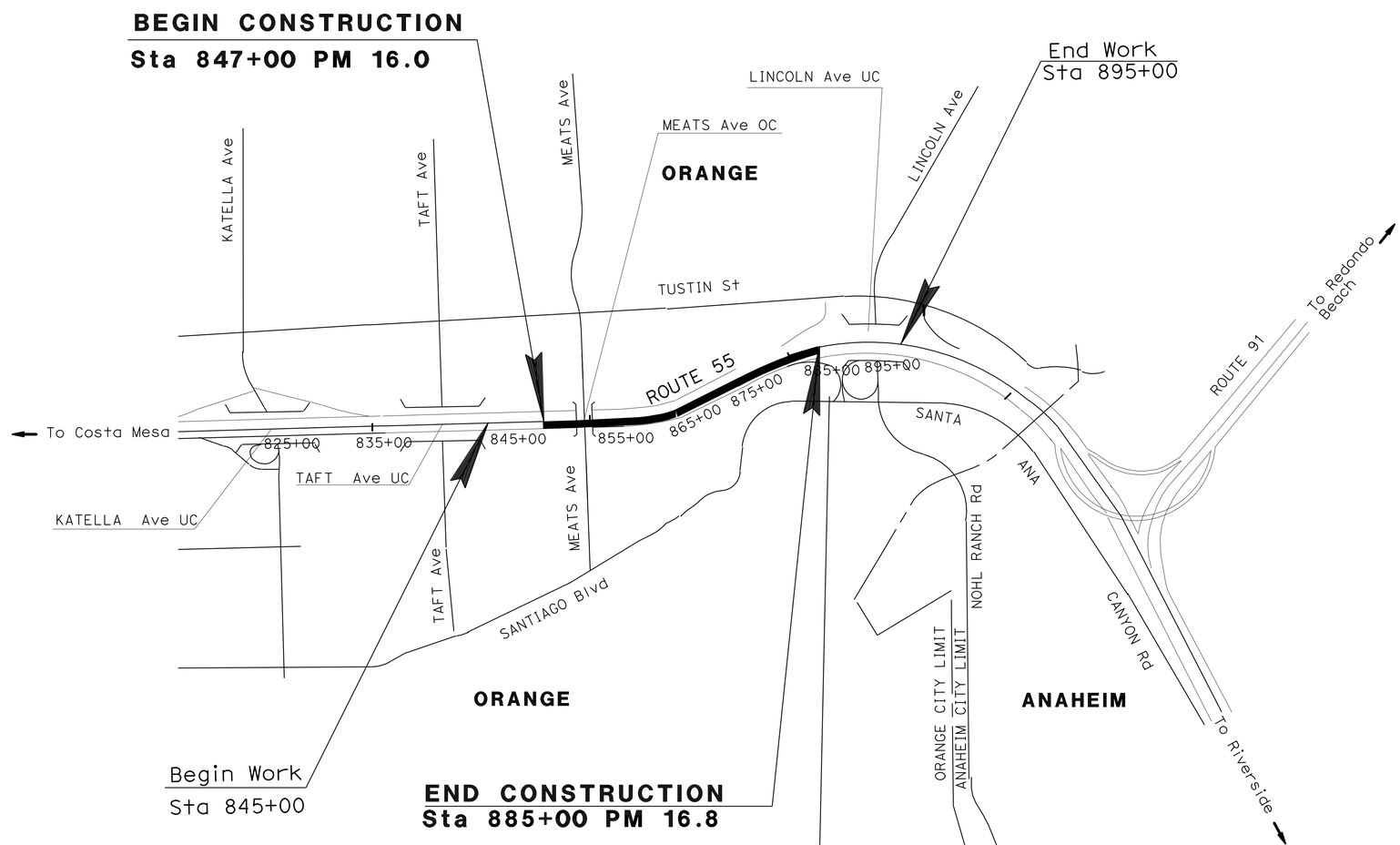


NO SCALE

LOCATION MAP

THE CONTRACTOR SHALL POSSESS THE CLASS (OR CLASSES) OF LICENSE AS SPECIFIED IN THE "NOTICE TO BIDDERS."

PROJECT ENGINEER REGISTERED CIVIL ENGINEER — DATE 04-15-09

May 11, 2009
PLANS APPROVAL DATE

REGISTERED PROFESSIONAL ENGINEER — TRANG LUONG No. C64430 Exp. 06/30/09 CIVIL — STATE OF CALIFORNIA

*THE STATE OF CALIFORNIA OR ITS OFFICERS OR AGENTS SHALL NOT BE RESPONSIBLE FOR THE ACCURACY OR COMPLETENESS OF SCANNED COPIES OF THIS PLAN SHEET.*

PROJECT MANAGER: BOB BAZARGAN
DESIGN ENGINEER: TRANG LUONG

CONTRACT No. 12-0H9504

LAST REVISION 04-13-09 | DATE PLOTTED => 26-AUG-2009 | TIME PLOTTED => 10:24

| Dist | COUNTY | ROUTE | POST MILES TOTAL PROJECT | SHEET No. | TOTAL SHEETS |
|---|---|---|---|---|---|
| 12 | Ora | 55 | 16.0/16.8 | 2 | 52 |

REGISTERED CIVIL ENGINEER DATE 04-15-09

5-11-09
PLANS APPROVAL DATE

REGISTERED PROFESSIONAL ENGINEER TRANG LUONG No. C64430 Exp. 06/30/09 CIVIL STATE OF CALIFORNIA

*THE STATE OF CALIFORNIA OR ITS OFFICERS OR AGENTS SHALL NOT BE RESPONSIBLE FOR THE ACCURACY OR COMPLETENESS OF SCANNED COPIES OF THIS PLAN SHEET.*

## NOTES:

1 DIMENSIONS OF THE STRUCTURAL SECTIONS ARE SUBJECT TO TOLERANCES SPECIFIED IN THE STANDARD SPECIFICATIONS.

2. SUPERELEVATIONS AS SHOWN OR AS DIRECTED BY THE ENGINEER.

3. FOR EXACT LOCATIONS OF DIKES, MISC AREAS, BARRIER AND GUARDRAILS, SEE LAYOUT PLAN SHEETS.

4. SEE LAYOUT PLAN SHEETS FOR EXACT LOCATION AND TYPE OF CONCRETE BARRIER.

## ABBREVIATIONS:

HMAOG : HOT MIX ASPHALT (OPEN GRADED)

HMA: HOT MIX ASPHALT

PG: PROFILE GRADE

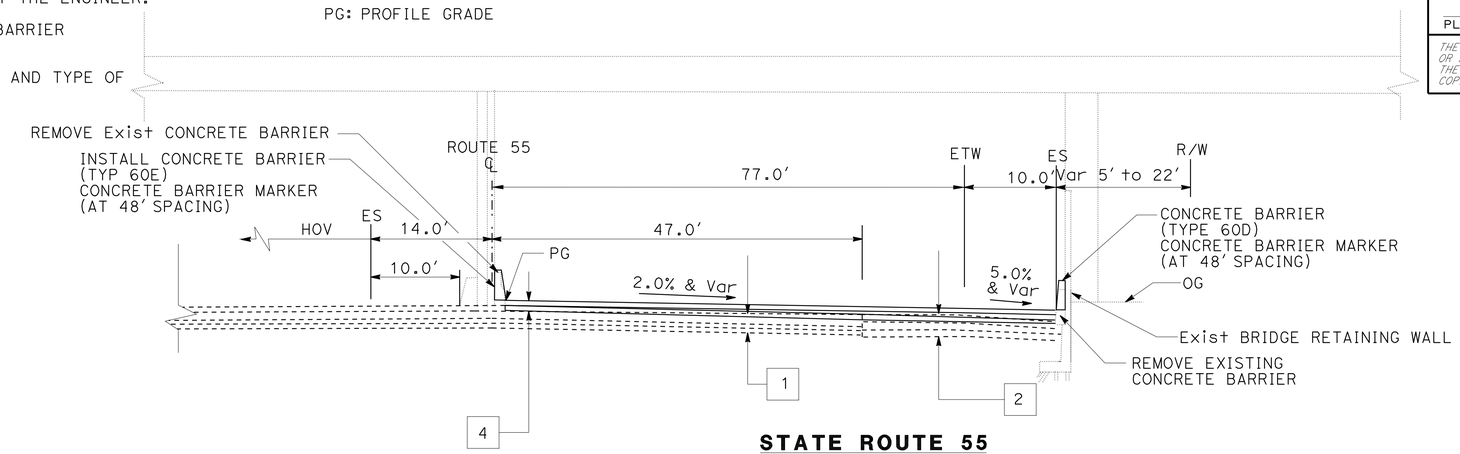


**STATE ROUTE 55**
NB
Sta 851+52.00 TO Sta 852+73.00 (MEATS Ave OC)

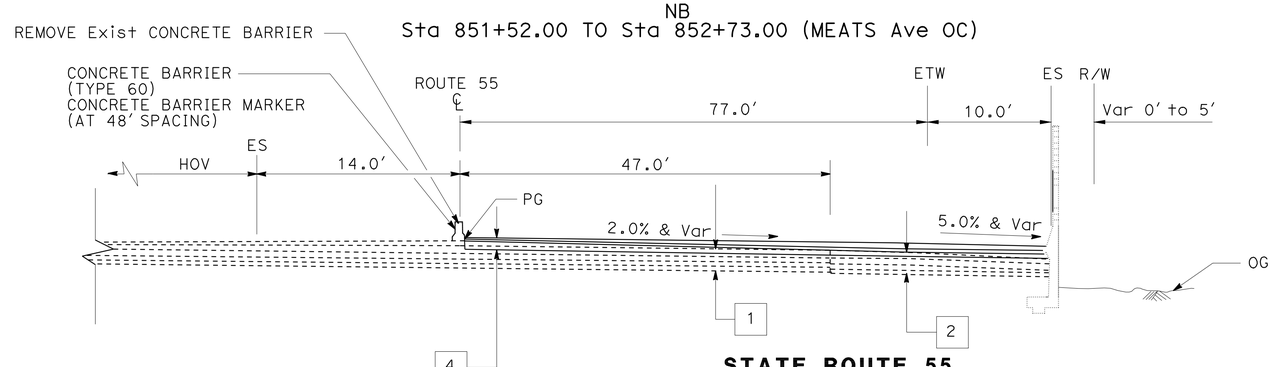


**STATE ROUTE 55**
NB
Sta 849+00.00 TO Sta 851+52.00

## STRUCTURAL SECTIONS

1 Exist
0.35' AC
0.67' PCC
0.33' CTB
0.22' AB
0.83' AS

2 Exist
0.89' & VAR AC (TYPE B)
0.34' ATPB
0.49' AB (CLASS 2)
0.94' AS (CLASS 4)

3 REMOVE 0.1' Exist OGAC
0.2' COLD PLANE
0.1' HMAOG
0.2' HMA (TYPE A)

4 REMOVE 0.1' OGAC
0.2' COLD PLANE
0.1' HMAOG
Var 0' to 1.15' HMA (TYPE A)

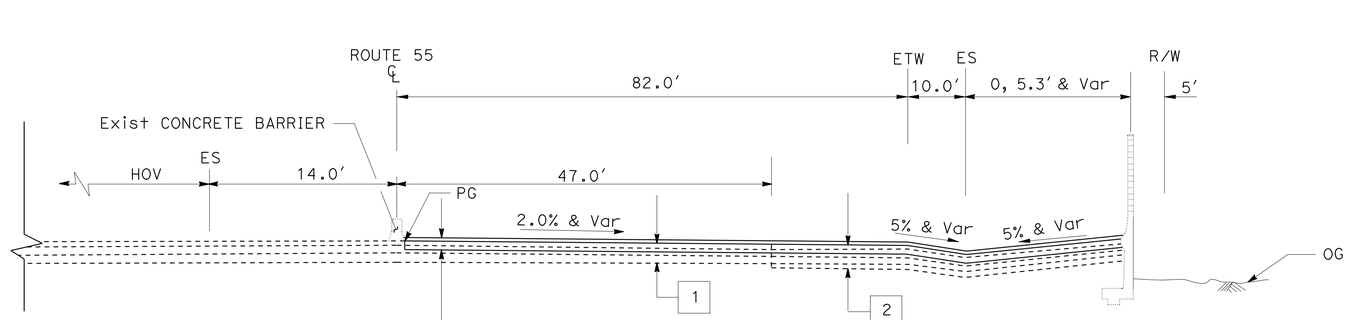


**STATE ROUTE 55**
NB
Sta 847+00.00 TO Sta 849+00.00

# TYPICAL CROSS SECTIONS

NO SCALE

**X-1**

STATE OF CALIFORNIA - DEPARTMENT OF TRANSPORTATION
Caltrans® DESIGN DIVISION

FUNCTIONAL SUPERVISOR: ADEL MALEK
CALCULATED-DESIGNED BY: TRANG LUONG
CHECKED BY: ADEL MALEK
REVISED BY
DATE REVISED

LAST REVISION 04-13-09
DATE PLOTTED => 26-AUG-2009
TIME PLOTTED => 10:25

| Dist | COUNTY | ROUTE | POST MILES TOTAL PROJECT | SHEET No. | TOTAL SHEETS |
|---|---|---|---|---|---|
| 12 | Ora | 55 | 16.0/16.8 | 3 | 52 |

REGISTERED CIVIL ENGINEER 04-15-09 DATE

5-11-09
PLANS APPROVAL DATE

REGISTERED PROFESSIONAL ENGINEER
TRANG LUONG
No. C64430
Exp. 06/30/09
CIVIL
STATE OF CALIFORNIA

*THE STATE OF CALIFORNIA OR ITS OFFICERS OR AGENTS SHALL NOT BE RESPONSIBLE FOR THE ACCURACY OR COMPLETENESS OF SCANNED COPIES OF THIS PLAN SHEET.*

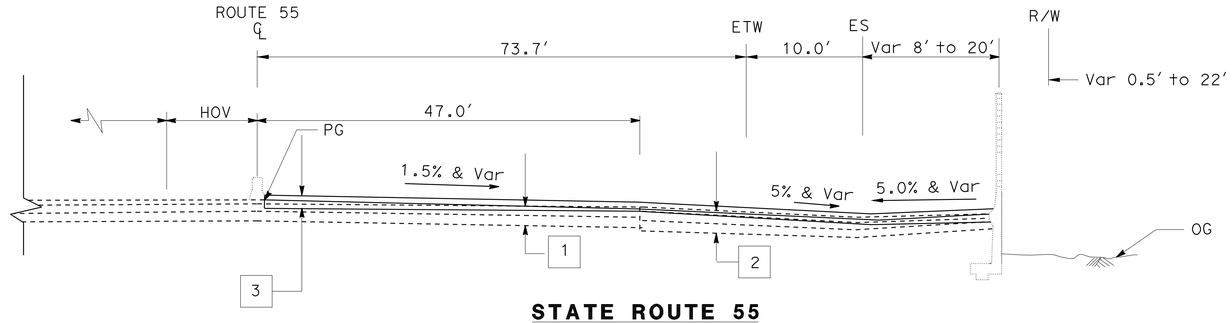


**STATE ROUTE 55**
NB
Sta 877+00.00 TO STA 885+00.00

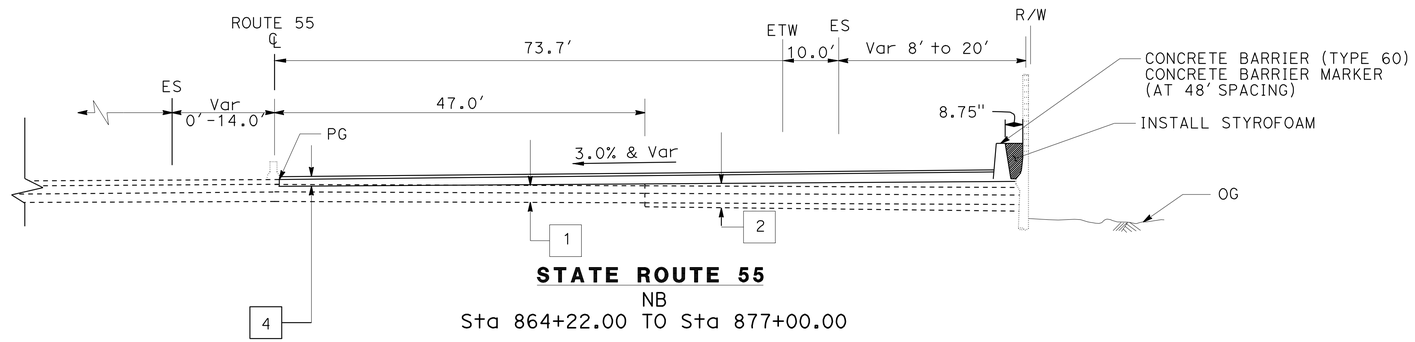


**STATE ROUTE 55**
NB
Sta 864+22.00 TO Sta 877+00.00

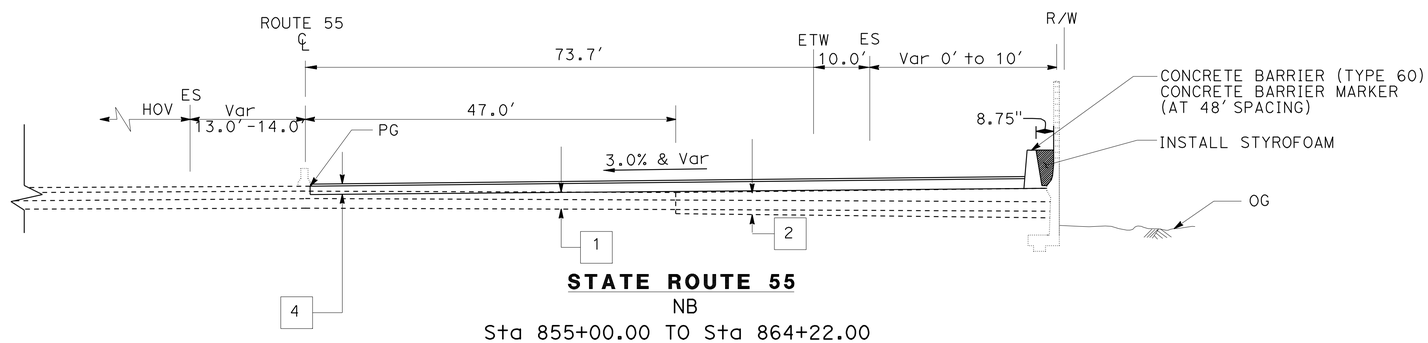


**STATE ROUTE 55**
NB
Sta 855+00.00 TO Sta 864+22.00

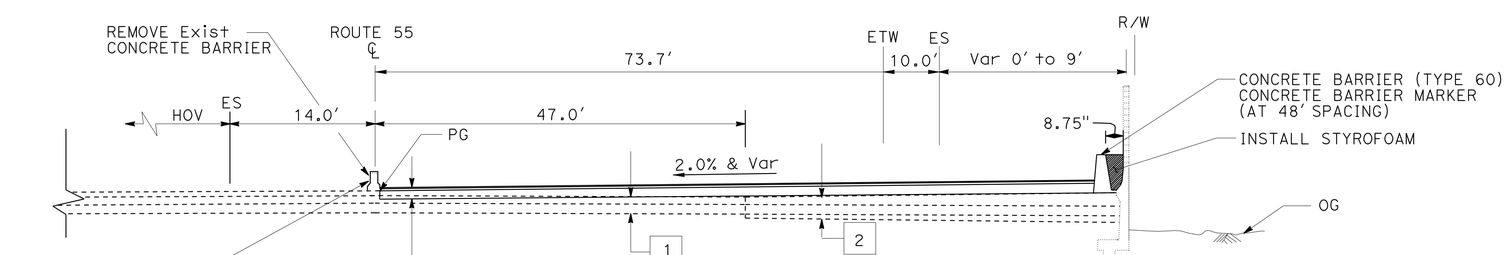


**STATE ROUTE 55**
NB
Sta 852+73.00 TO Sta 855+00

# TYPICAL CROSS SECTIONS

NO SCALE

**X-2**

STATE OF CALIFORNIA - DEPARTMENT OF TRANSPORTATION
Caltrans®
DESIGN DIVISION

FUNCTIONAL SUPERVISOR: ADEL MALEK
CALCULATED-DESIGNED BY: TRANG LUONG
CHECKED BY: ADEL MALEK
REVISED BY
DATE REVISED

LAST REVISION 04-13-09
DATE PLOTTED => 26-AUG-2009
TIME PLOTTED => 10:25

| Dist | COUNTY | ROUTE | POST MILES TOTAL PROJECT | SHEET No. | TOTAL SHEETS |
|---|---|---|---|---|---|
| 12 | Ora | 55 | 16.0/16.8 | 4 | 52 |

REGISTERED CIVIL ENGINEER 04-15-09 DATE

5-11-09
PLANS APPROVAL DATE

REGISTERED PROFESSIONAL ENGINEER TRANG LUONG No. C64430 Exp. 06/30/09 CIVIL STATE OF CALIFORNIA

*THE STATE OF CALIFORNIA OR ITS OFFICERS OR AGENTS SHALL NOT BE RESPONSIBLE FOR THE ACCURACY OR COMPLETENESS OF SCANNED COPIES OF THIS PLAN SHEET.*

## NOTES:

1. FOR COMPLETE RIGHT OF WAY AND ACCURATE ACCESS DATA SEE RIGHT OF WAY RECORD MAPS AT DISTRICT OFFICE.
2. ALL DIMENSIONS SHOWN ARE TO FACE OF CURB OR DIKE AT THE FLOW LINES, UNLESS OTHERWISE NOTED ON THE PLANS.

## LEGENDS

- DIRECTION OF TRAFFIC ARROW
- CURVE NUMBER
- CORRECT SUPERELEVATION 3
- AC OVERLAY 4
- INSTALL TEMPORARY DRAIN INLET PROTECTION
- X STRUCTURAL SECTION (SEE SHEETS X-1, X-2)

## ABBREVIATIONS:

HMA: HOT MIX ASPHALT (TYPE A)

HMAOG: HOT MIX ASPHALT (OPEN GRADED)

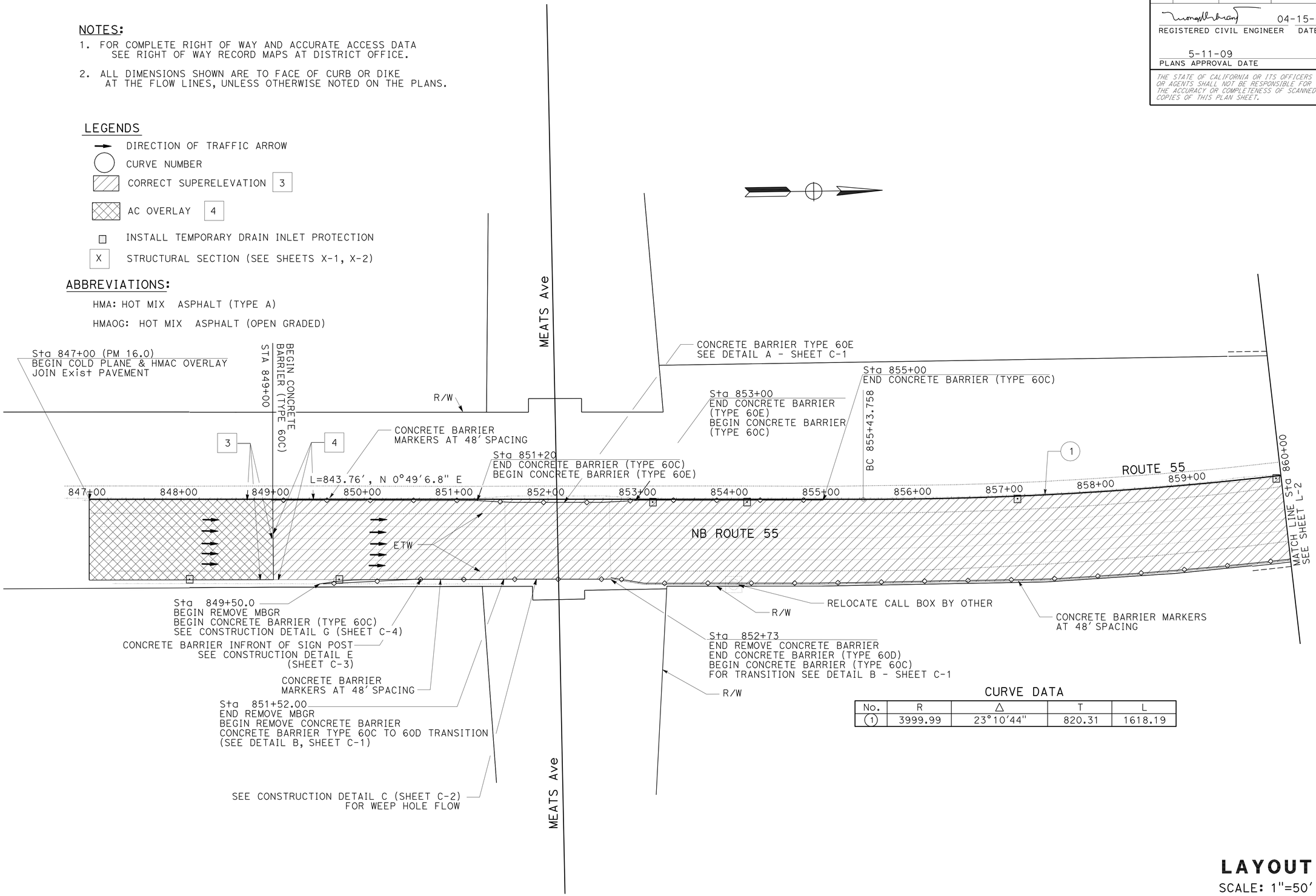


## CURVE DATA

| No. | R | Δ | T | L |
|---|---|---|---|---|
| 1 | 3999.99 | 23°10'44" | 820.31 | 1618.19 |

# LAYOUT

SCALE: 1"=50'

L-1

STATE OF CALIFORNIA - DEPARTMENT OF TRANSPORTATION
Caltrans
DESIGN DIVISION

FUNCTIONAL SUPERVISOR: ADEL MALEK

CALCULATED-DESIGNED BY: TRANG LUONG
CHECKED BY: ADEL MALEK

REVISED BY
DATE REVISED

LAST REVISION 04-13-09
DATE PLOTTED => 26-AUG-2009
TIME PLOTTED => 10:25

| Dist | COUNTY | ROUTE | POST MILES TOTAL PROJECT | SHEET No. | TOTAL SHEETS |
|---|---|---|---|---|---|
| 12 | Ora | 55 | 16.0/16.8 | 5 | 52 |

REGISTERED CIVIL ENGINEER 04-15-09 DATE

5-11-09
PLANS APPROVAL DATE

REGISTERED PROFESSIONAL ENGINEER TRANG LUONG No. C64430 Exp.06/30/09 CIVIL STATE OF CALIFORNIA

*THE STATE OF CALIFORNIA OR ITS OFFICERS OR AGENTS SHALL NOT BE RESPONSIBLE FOR THE ACCURACY OR COMPLETENESS OF SCANNED COPIES OF THIS PLAN SHEET.*

NOTE:

1. FOR COMPLETE RIGHT OF WAY AND ACCURATE ACCESS DATA SEE RIGHT OF WAY RECORD MAPS AT DISTRICT OFFICE.

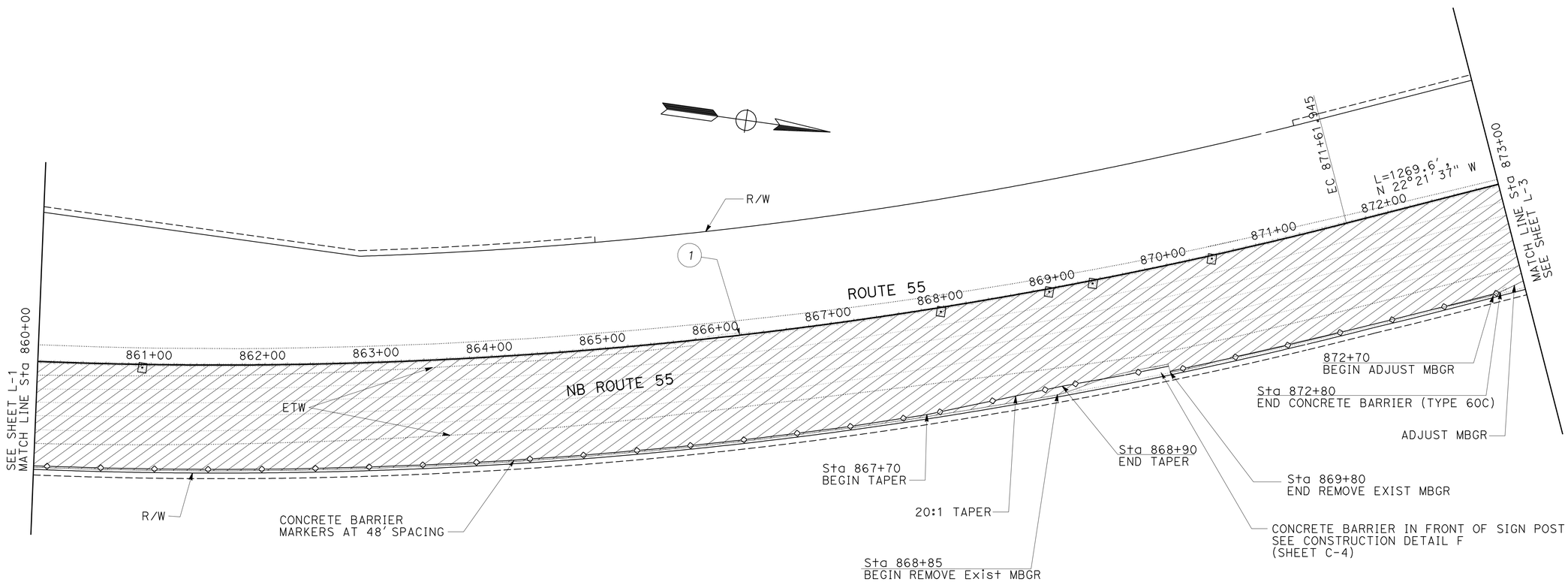


CURVE DATA

| No. | R | Δ | T | L |
|---|---|---|---|---|
| 1 | 3999.99 | 23°10'44" | 820.31 | 1618.19 |

# LAYOUT

SCALE: 1"=50'

L-2

STATE OF CALIFORNIA - DEPARTMENT OF TRANSPORTATION
Caltrans® DESIGN DIVISION

FUNCTIONAL SUPERVISOR: ADEL MALEK
CALCULATED-DESIGNED BY: TRANG LUONG
CHECKED BY: ADEL MALEK
REVISED BY
DATE REVISED

LAST REVISION 04-13-09 | DATE PLOTTED => 26-AUG-2009 | TIME PLOTTED => 10:25

| Dist | COUNTY | ROUTE | POST MILES TOTAL PROJECT | SHEET No. | TOTAL SHEETS |
|---|---|---|---|---|---|
| 12 | Ora | 55 | 16.0/16.8 | 6 | 52 |

REGISTERED CIVIL ENGINEER 04-15-09 DATE

5-11-09
PLANS APPROVAL DATE

REGISTERED PROFESSIONAL ENGINEER TRANG LUONG No. C64430 Exp. 06/30/09 CIVIL STATE OF CALIFORNIA

*THE STATE OF CALIFORNIA OR ITS OFFICERS OR AGENTS SHALL NOT BE RESPONSIBLE FOR THE ACCURACY OR COMPLETENESS OF SCANNED COPIES OF THIS PLAN SHEET.*

NOTE:

1. FOR COMPLETE RIGHT OF WAY AND ACCURATE ACCESS DATA SEE RIGHT OF WAY RECORD MAPS AT DISTRICT OFFICE.

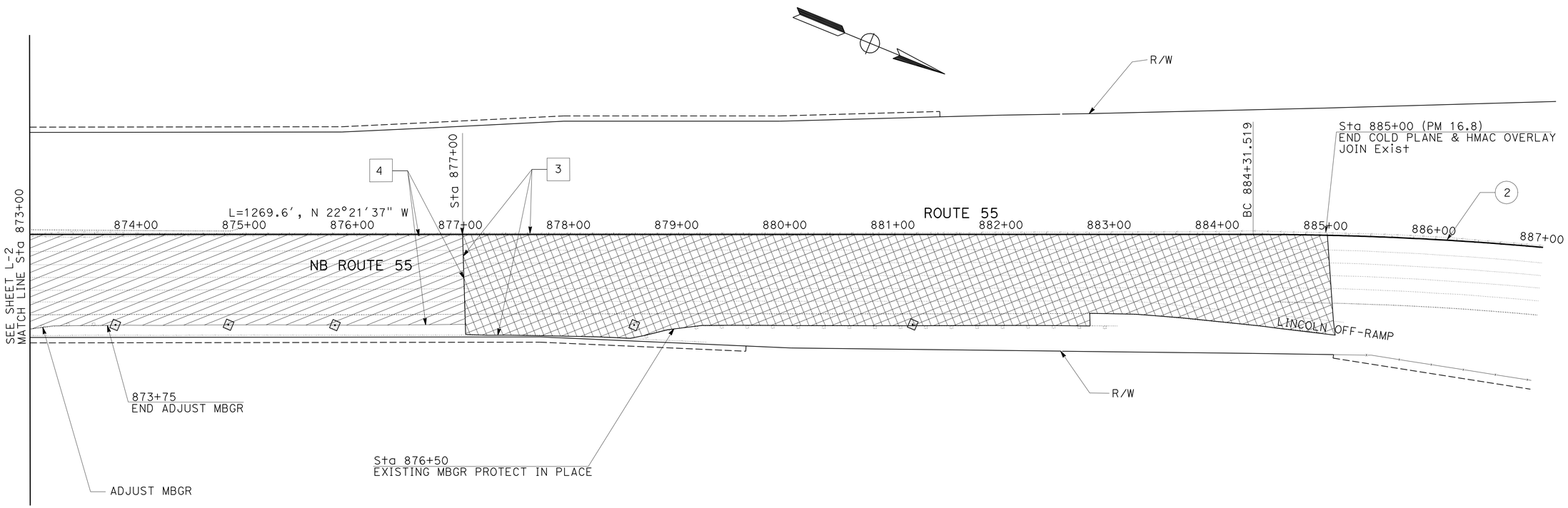


CURVE DATA

| No. | R | Δ | T | L |
|---|---|---|---|---|
| 2 | 3000.01 | 68°6'4" | 2027.38 | 3565.77 |

# LAYOUT

SCALE: 1"=50'

L-3

| | |
|---|---|
| TRANG LUONG | TL |
| ADEL MALEK | 4/3/2009 |
| ADEL MALEK | |
| | |

REVISED BY / DATE REVISED

CALCULATED-DESIGNED BY / CHECKED BY

FUNCTIONAL SUPERVISOR

STATE OF CALIFORNIA - DEPARTMENT OF TRANSPORTATION

Caltrans DESIGN DIVISION

LAST REVISION 04-14-09 DATE PLOTTED => 26-AUG-2009 TIME PLOTTED => 10:25

| Dist | COUNTY | ROUTE | POST MILES TOTAL PROJECT | SHEET No. | TOTAL SHEETS |
|---|---|---|---|---|---|
| 12 | Ora | 55 | 16.0/16.8 | 7 | 52 |

REGISTERED CIVIL ENGINEER 04-15-09 DATE

5-11-09
PLANS APPROVAL DATE

REGISTERED PROFESSIONAL ENGINEER TRANG LUONG No. C64430 Exp.06/30/09 CIVIL STATE OF CALIFORNIA

*THE STATE OF CALIFORNIA OR ITS OFFICERS OR AGENTS SHALL NOT BE RESPONSIBLE FOR THE ACCURACY OR COMPLETENESS OF SCANNED COPIES OF THIS PLAN SHEET.*

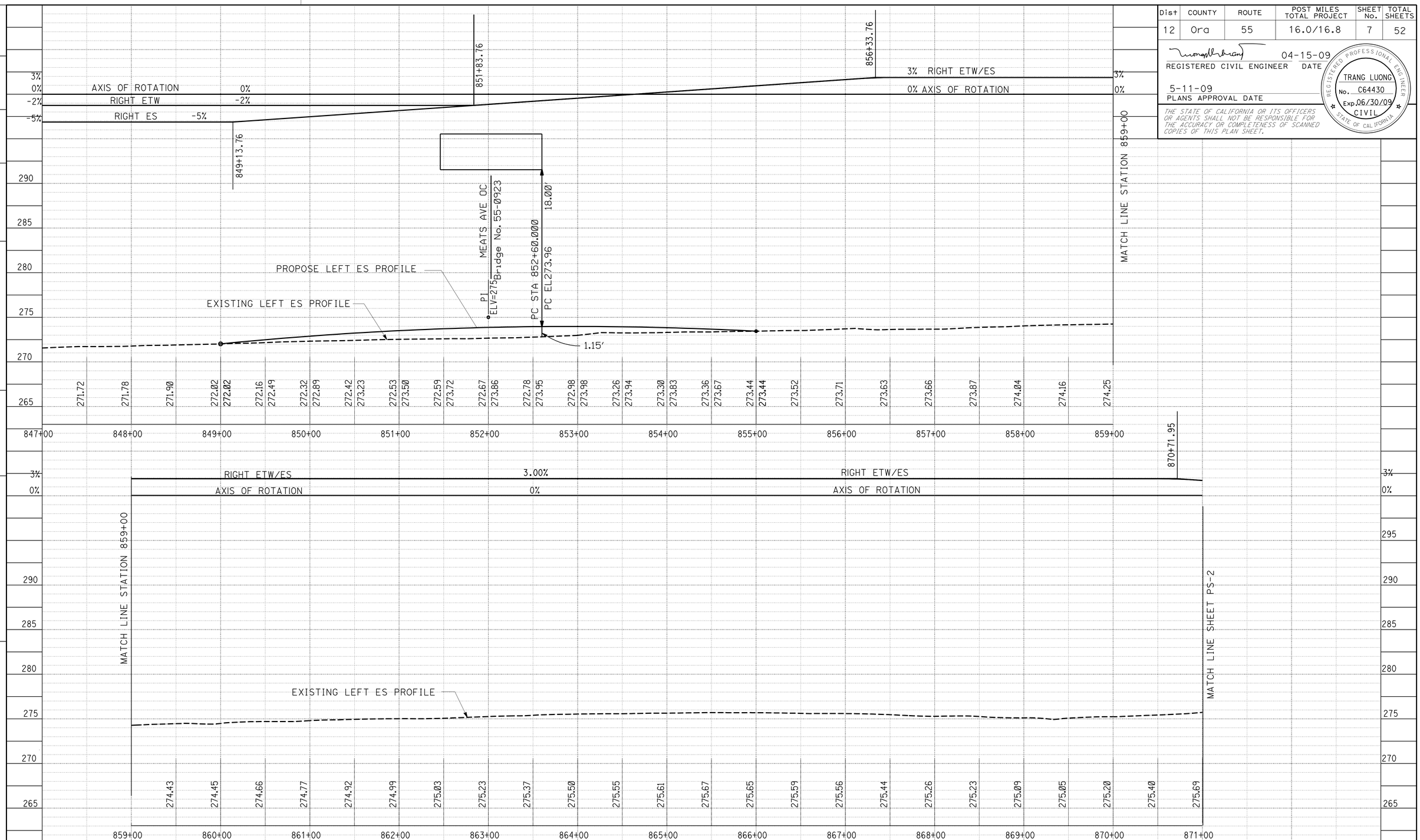


SCALE
VERTICAL: 1"=10'
HORIZONTAL: 1"=100'

# PROFILE AND SUPERELEVATION DIAGRAM
## PS-1

| STATION | | TOTAL |
|---|---|---|
| CY | Exc | |
| | Emb | |

| | | |
|---|---|---|
| TRANG LUONG | ADEL MALEK | TL |
| CALCULATED-DESIGNED BY | CHECKED BY | REVISED BY |
| FUNCTIONAL SUPERVISOR | ADEL MALEK | 4/3/2009 DATE REVISED |

STATE OF CALIFORNIA - DEPARTMENT OF TRANSPORTATION
Caltrans DESIGN DIVISION

LAST REVISION 04-14-09 | DATE PLOTTED => 26-AUG-2009 | TIME PLOTTED => 10:25

| Dist | COUNTY | ROUTE | POST MILES TOTAL PROJECT | SHEET No. | TOTAL SHEETS |
|---|---|---|---|---|---|
| 12 | Ora | 55 | 16.0/16.8 | 8 | 52 |

REGISTERED CIVIL ENGINEER 04-15-09 DATE

5-11-09
PLANS APPROVAL DATE

REGISTERED PROFESSIONAL ENGINEER
TRANG LUONG
No. C64430
Exp. 06/30/09
CIVIL
STATE OF CALIFORNIA

*THE STATE OF CALIFORNIA OR ITS OFFICERS OR AGENTS SHALL NOT BE RESPONSIBLE FOR THE ACCURACY OR COMPLETENESS OF SCANNED COPIES OF THIS PLAN SHEET.*

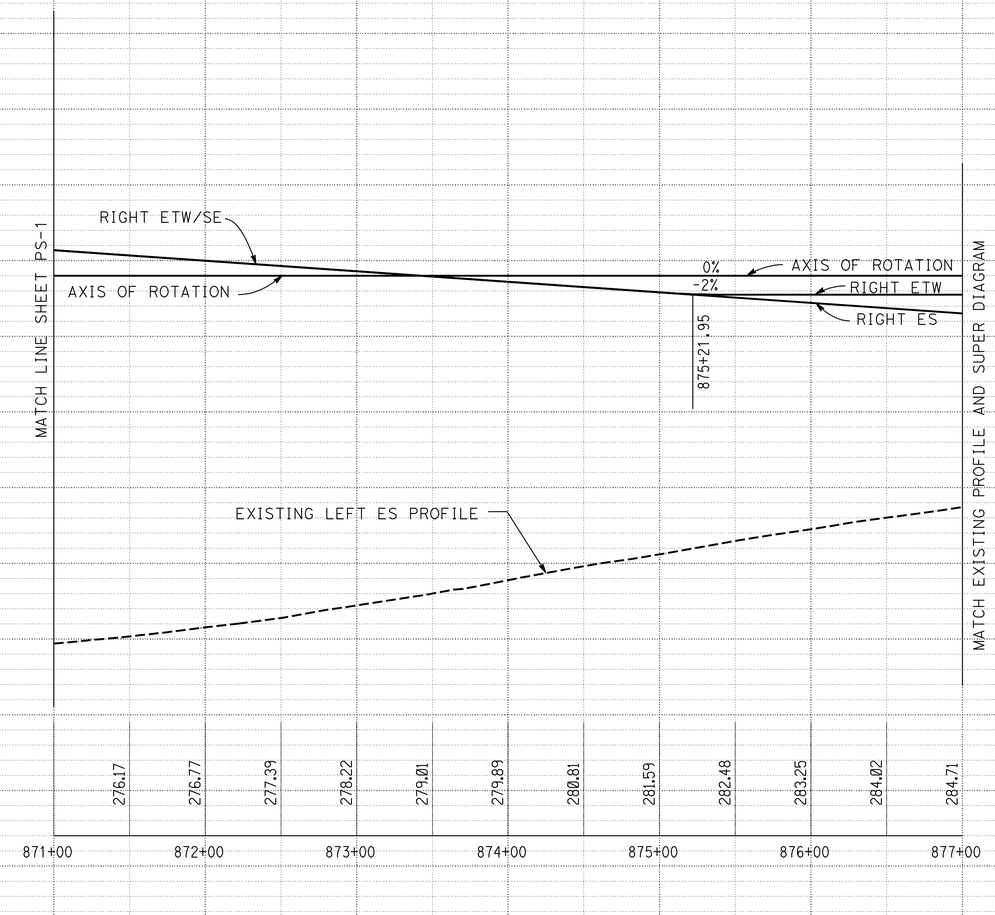


SCALE
VERTICAL: 1"=10'
HORIZONTAL: 1"=100'

# PROFILE AND SUPERELEVATION DIAGRAM

PS-2

| STATION | | TOTAL |
|---|---|---|
| CY | Exc | |
| | Emb | |

STATE OF CALIFORNIA - DEPARTMENT OF TRANSPORTATION
Caltrans DESIGN DIVISION

FUNCTIONAL SUPERVISOR: ADEL MALEK
CALCULATED-DESIGNED BY: TRANG LUONG
CHECKED BY: ADEL MALEK
REVISED BY: TL
DATE REVISED: 4/3/2009

LAST REVISION 04-14-09
DATE PLOTTED => 26-AUG-2009
TIME PLOTTED => 10:25

| Dist | COUNTY | ROUTE | POST MILES TOTAL PROJECT | SHEET No. | TOTAL SHEETS |
|---|---|---|---|---|---|
| 12 | Ora | 55 | 16.0/16.8 | 9 | 52 |

REGISTERED CIVIL ENGINEER 04-15-09 DATE

5-11-09
PLANS APPROVAL DATE

REGISTERED PROFESSIONAL ENGINEER TRANG LUONG No. C64430 Exp. 06/30/09 CIVIL STATE OF CALIFORNIA

*THE STATE OF CALIFORNIA OR ITS OFFICERS OR AGENTS SHALL NOT BE RESPONSIBLE FOR THE ACCURACY OR COMPLETENESS OF SCANNED COPIES OF THIS PLAN SHEET.*

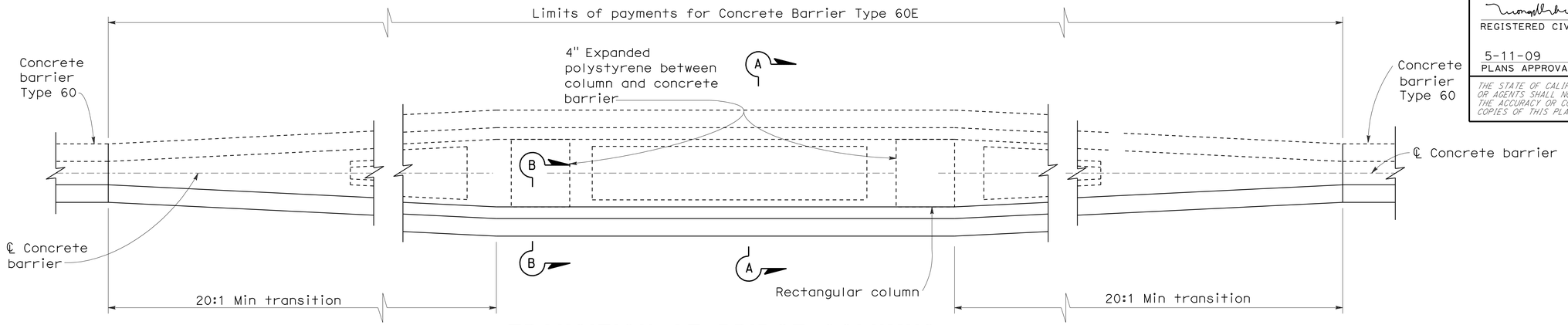


## TRANSITION AT BRIDGE COLUMNS

CONCRETE BARRIER (TYPE 60E)

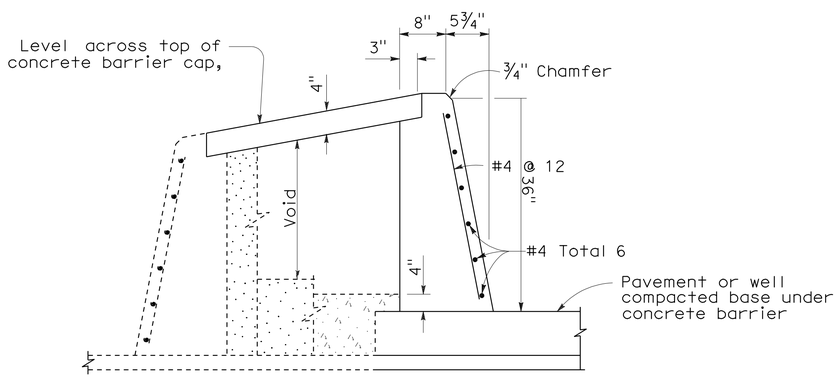


SECTION A-A

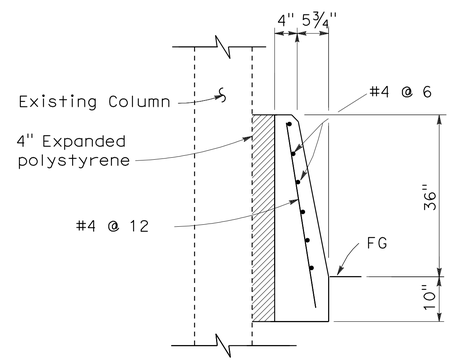


SECTION B-B

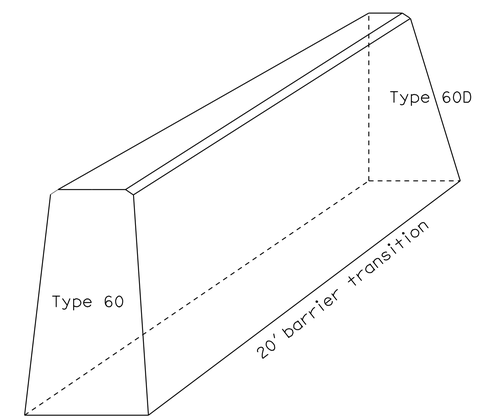


ISOMETRIC VIEW

## DETAIL A- CONCRETE BARRIER (TYPE 60E)

## DETAIL B - CONCRETE BARRIER TRANSITION -TYPE 60 TO TYPE 60D

NOTES:

1. See Standard Plan A76A for Concrete Barrier (Type 60).
2. Adjust height of concrete barrier wall on low side of offset or superelevated roadways to provide level grade across top of concrete barrier cap.

## CONSTRUCTION DETAILS

NO SCALE

C-1

STATE OF CALIFORNIA - DEPARTMENT OF TRANSPORTATION
Caltrans DESIGN DIVISION

FUNCTIONAL SUPERVISOR: ADEL MALEK
CALCULATED-DESIGNED BY: TRANG LUONG
CHECKED BY: ADEL MALEK
REVISED BY: TL
DATE REVISED: 4/3/2009

LAST REVISION 04-14-09
DATE PLOTTED => 26-AUG-2009
TIME PLOTTED => 10:26

| Dist | COUNTY | ROUTE | POST MILES TOTAL PROJECT | SHEET No. | TOTAL SHEETS |
|---|---|---|---|---|---|
| 12 | Ora | 55 | 16.0/16.8 | 10 | 52 |

REGISTERED CIVIL ENGINEER 04-15-09 DATE

5-11-09
PLANS APPROVAL DATE

REGISTERED PROFESSIONAL ENGINEER TRANG LUONG No. C64430 Exp. 06/30/09 CIVIL STATE OF CALIFORNIA

*THE STATE OF CALIFORNIA OR ITS OFFICERS OR AGENTS SHALL NOT BE RESPONSIBLE FOR THE ACCURACY OR COMPLETENESS OF SCANNED COPIES OF THIS PLAN SHEET.*

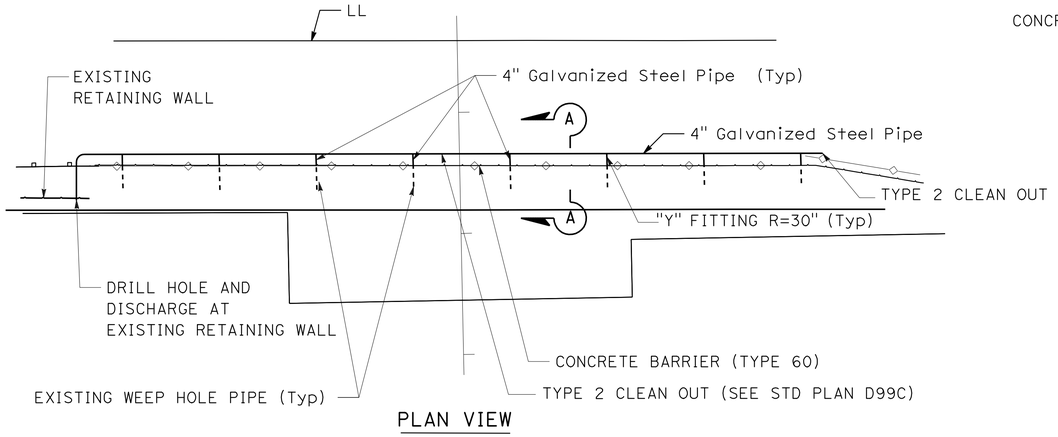


PLAN VIEW

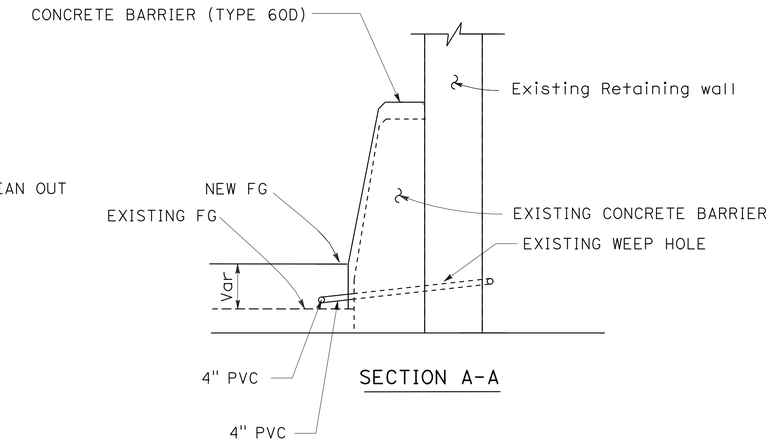


SECTION A-A

## DETAIL C: RETAINING WALL WEEP HOLE FLOW ALTERNATE

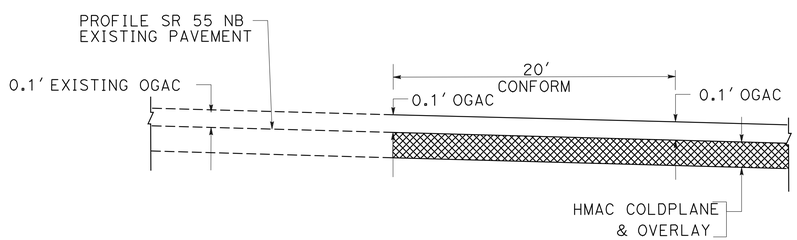


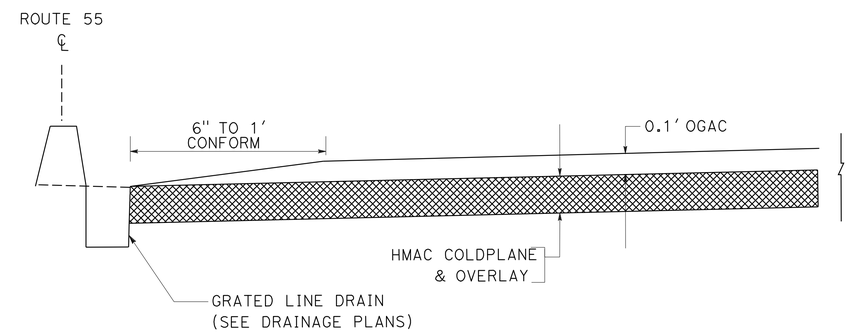


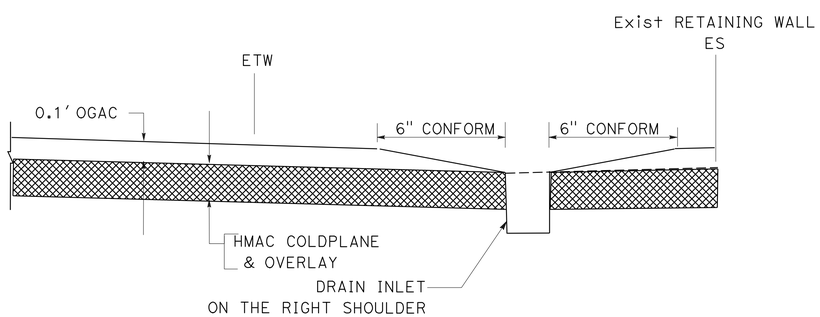


SECTION B-B

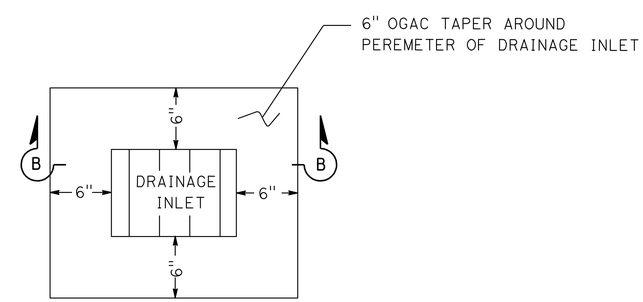


PLAN VIEW

## DETAIL D: OGAC OVERLAY CONFORM DETAILS

# CONSTRUCTION DETAILS

NO SCALE

C-2

STATE OF CALIFORNIA - DEPARTMENT OF TRANSPORTATION
Caltrans® DESIGN DIVISION

FUNCTIONAL SUPERVISOR: ADEL MALEK
CALCULATED-DESIGNED BY: TRANG LUONG
CHECKED BY: ADEL MALEK
REVISED BY: TL
DATE REVISED: 4/3/2009

LAST REVISION 04-14-09 | DATE PLOTTED => 26-AUG-2009 | TIME PLOTTED => 10:26

| Dist | COUNTY | ROUTE | POST MILES TOTAL PROJECT | SHEET No. | TOTAL SHEETS |
|---|---|---|---|---|---|
| 12 | Ora | 55 | 16.0/16.8 | 11 | 52 |

REGISTERED CIVIL ENGINEER 04-15-09 DATE

5-11-09
PLANS APPROVAL DATE

REGISTERED PROFESSIONAL ENGINEER
TRANG LUONG
No. C64430
Exp. 06/30/09
CIVIL
STATE OF CALIFORNIA

*THE STATE OF CALIFORNIA OR ITS OFFICERS OR AGENTS SHALL NOT BE RESPONSIBLE FOR THE ACCURACY OR COMPLETENESS OF SCANNED COPIES OF THIS PLAN SHEET.*

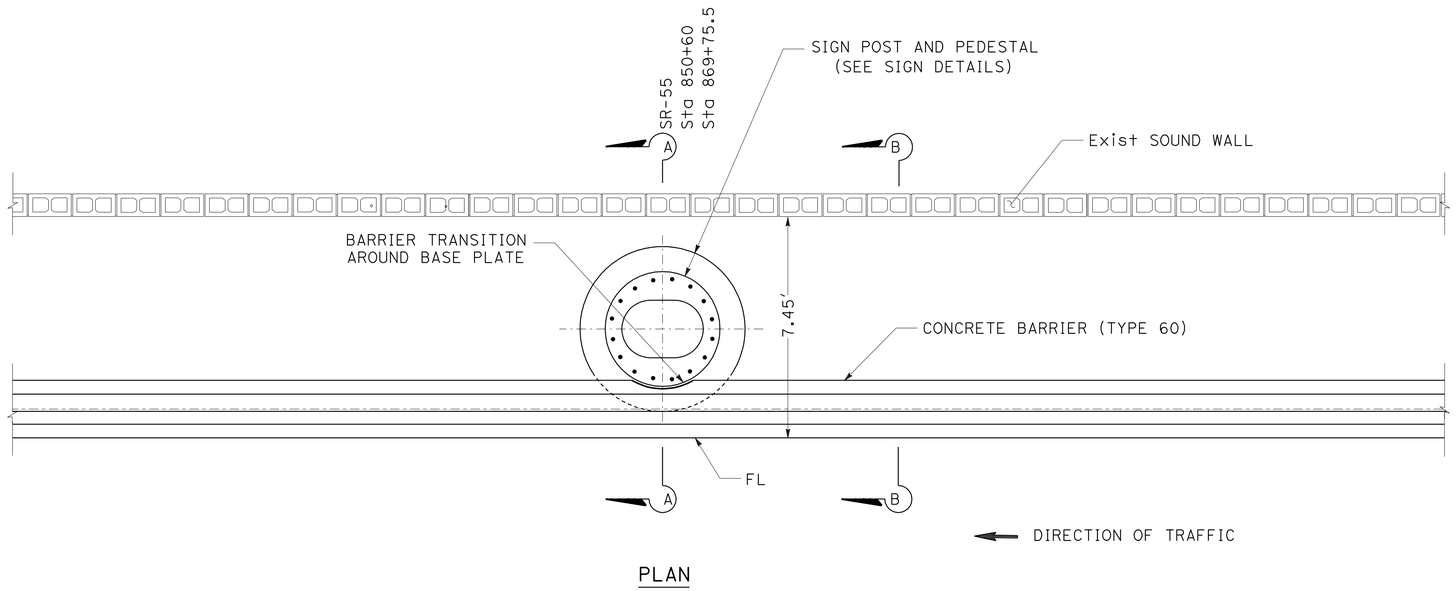


PLAN

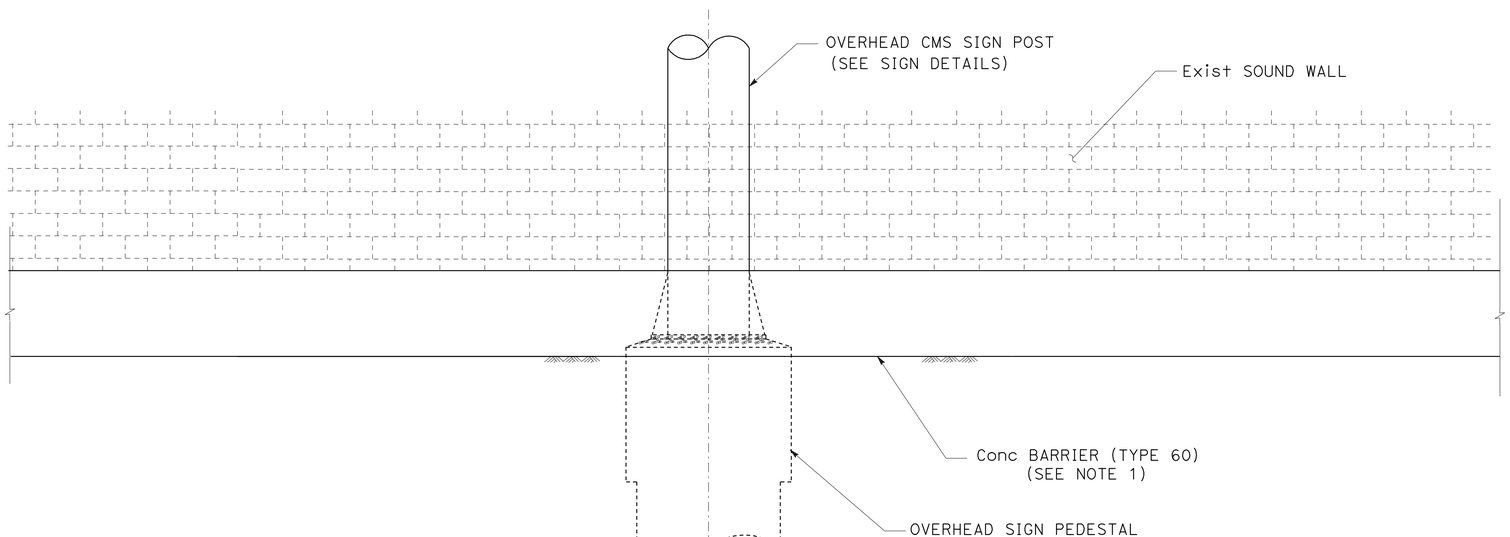


ELEVATION

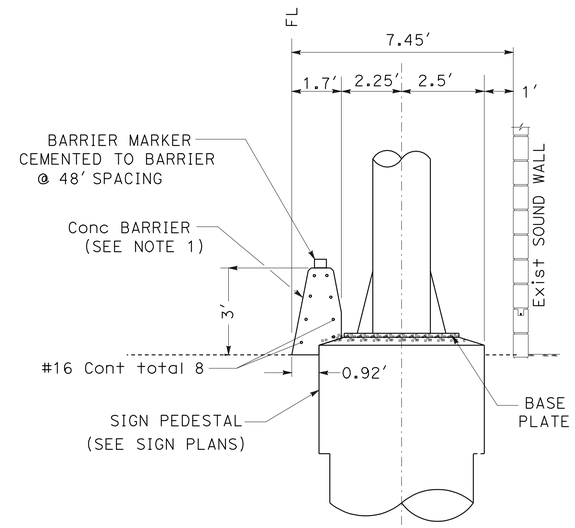


SECTION A-A

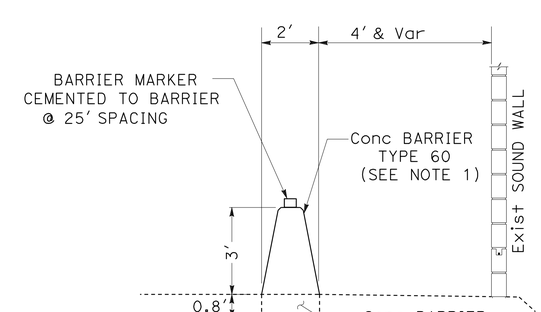


SECTION B-B

NOTE:

1. SEE STANDARD PLAN A76A & A76B FOR BARRIER DETAILS NOT SHOWN.

## DETAIL E: CONCRETE BARRIER INFRONT OF CMS SIGN A

## CONSTRUCTION DETAILS

NO SCALE

C-3

| REVISED BY | DATE REVISED |
|---|---|
| TL | 4/3/2009 |

TRANG LUONG — ADEL MALEK
CALCULATED-DESIGNED BY — CHECKED BY
FUNCTIONAL SUPERVISOR: ADEL MALEK

STATE OF CALIFORNIA - DEPARTMENT OF TRANSPORTATION
Caltrans
DESIGN DIVISION

LAST REVISION 04-14-09 | DATE PLOTTED => 26-AUG-2009 | TIME PLOTTED => 10:26

| Dist | COUNTY | ROUTE | POST MILES TOTAL PROJECT | SHEET No. | TOTAL SHEETS |
|---|---|---|---|---|---|
| 12 | Ora | 55 | 16.0/16.8 | 12 | 52 |

REGISTERED CIVIL ENGINEER DATE 04-15-09

5-11-09
PLANS APPROVAL DATE

REGISTERED PROFESSIONAL ENGINEER TRANG LUONG No. C64430 Exp.06/30/09 CIVIL STATE OF CALIFORNIA

*THE STATE OF CALIFORNIA OR ITS OFFICERS OR AGENTS SHALL NOT BE RESPONSIBLE FOR THE ACCURACY OR COMPLETENESS OF SCANNED COPIES OF THIS PLAN SHEET.*

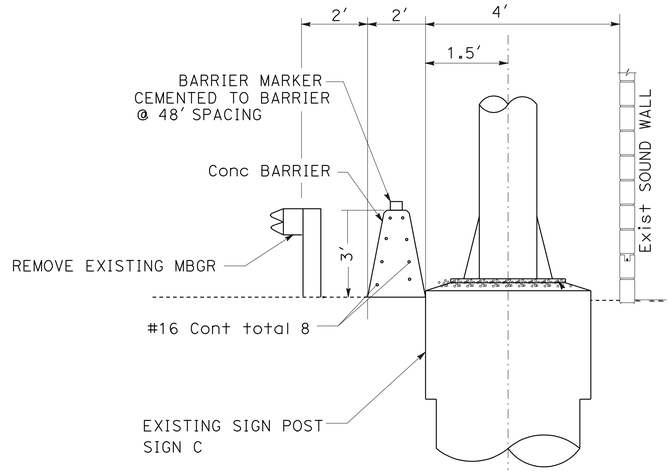


## DETAIL F: CONCRETE BARRIER INFRONT OF EXISTING SIGN C

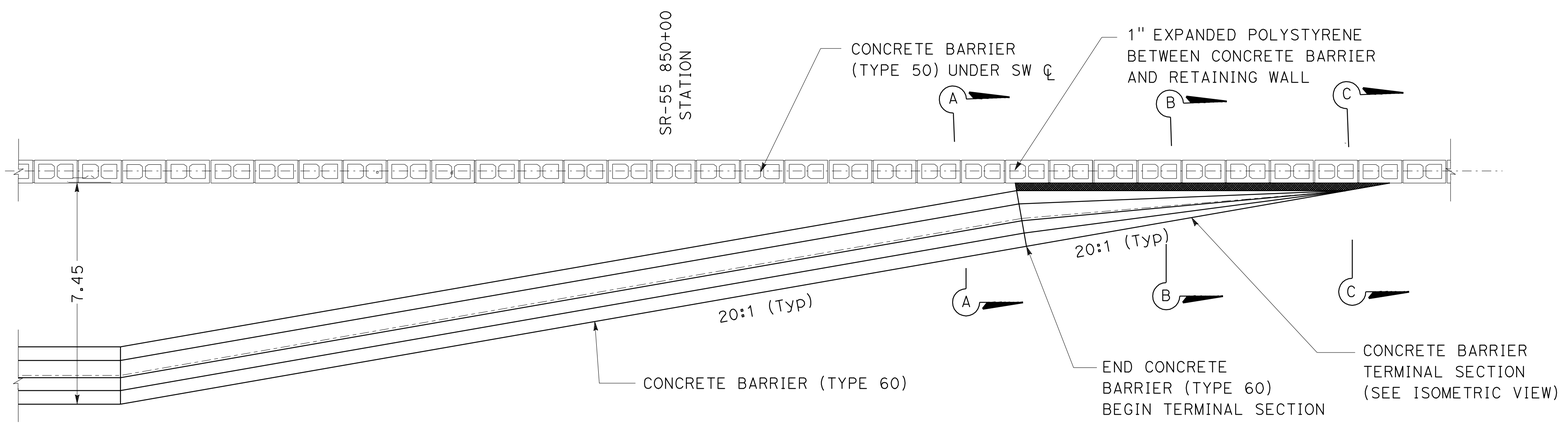


PLAN

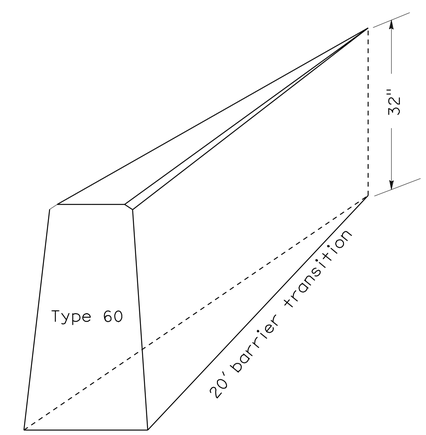


ISOMETRIC VIEW

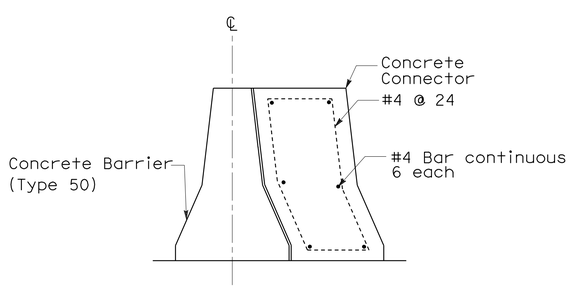


SECTION A-A

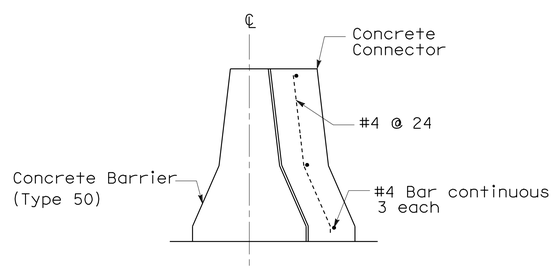


SECTION B-B

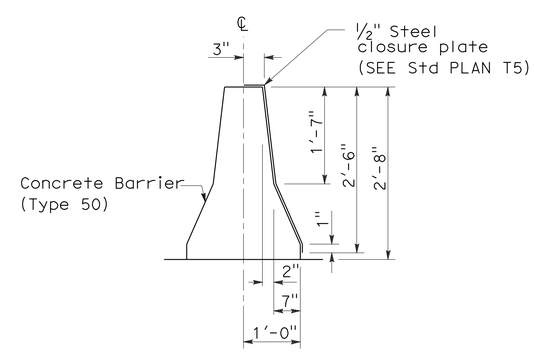


SECTION C-C

## DETAIL G: CONCRETE BARRIER (TYPE 60C) TERMINAL SECTION

# CONSTRUCTION DETAILS

NO SCALE

C-4

STATE OF CALIFORNIA - DEPARTMENT OF TRANSPORTATION
DESIGN DIVISION

FUNCTIONAL SUPERVISOR: ADEL MALEK
CALCULATED-DESIGNED BY: TRANG LUONG
CHECKED BY: ADEL MALEK
REVISED BY: TL
DATE REVISED: 4/3/2009

LAST REVISION 04-14-09 | DATE PLOTTED => 26-AUG-2009 | TIME PLOTTED => 10:26

| Dist | COUNTY | ROUTE | POST MILES TOTAL PROJECT | SHEET No. | TOTAL SHEETS |
|---|---|---|---|---|---|
| 12 | Ora | 55 | 16.0/16.8 | 13 | 52 |

REGISTERED CIVIL ENGINEER 04-15-09 DATE

5-11-09
PLANS APPROVAL DATE

REGISTERED PROFESSIONAL ENGINEER
TRANG LUONG
No. C64430
Exp. 06/30/09
CIVIL
STATE OF CALIFORNIA

*THE STATE OF CALIFORNIA OR ITS OFFICERS OR AGENTS SHALL NOT BE RESPONSIBLE FOR THE ACCURACY OR COMPLETENESS OF SCANNED COPIES OF THIS PLAN SHEET.*

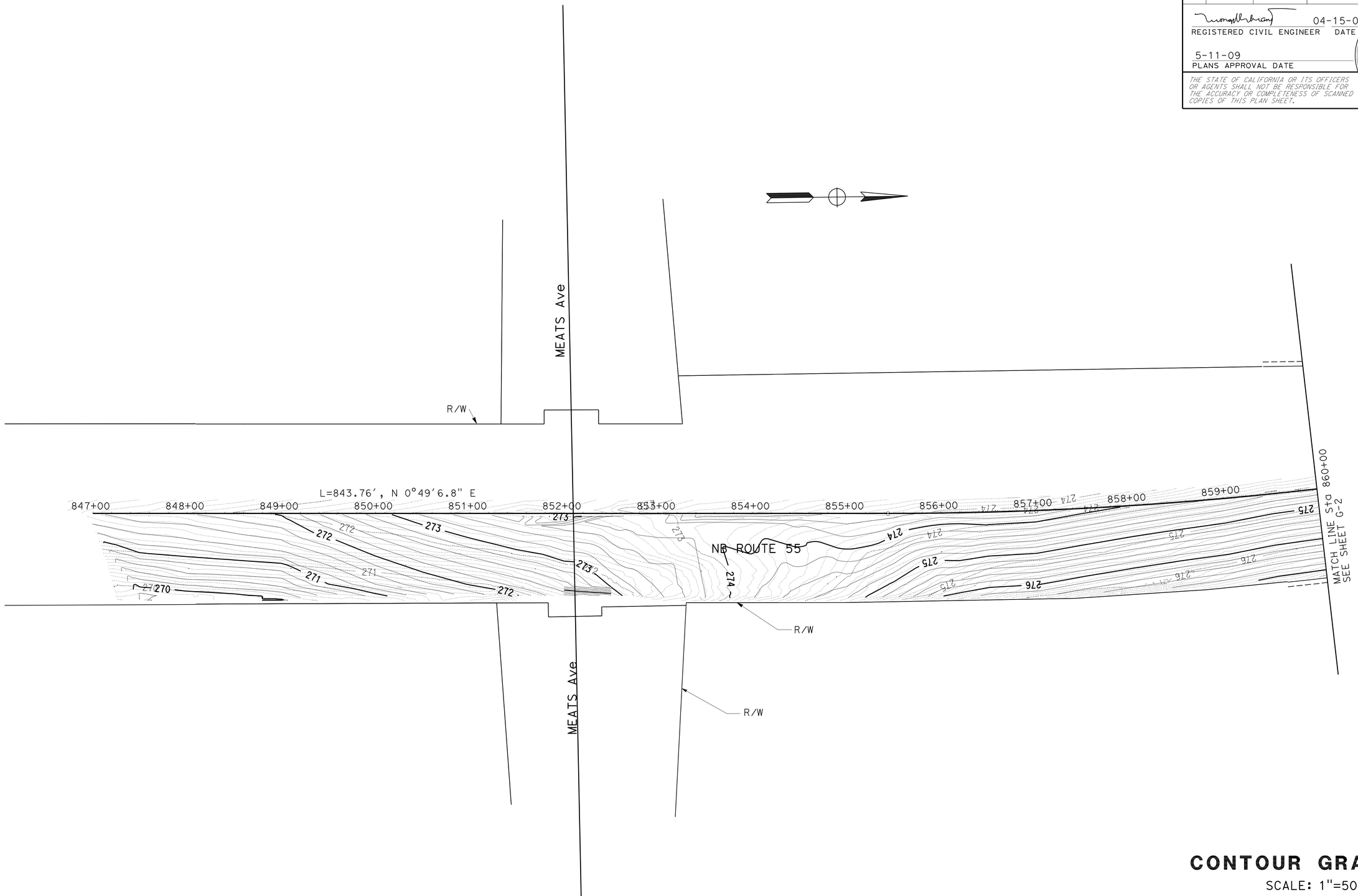


# CONTOUR GRADING

SCALE: 1"=50'

THIS PLAN IS ACCURATE FOR CONTOUR GRADING ONLY

G-1

STATE OF CALIFORNIA - DEPARTMENT OF TRANSPORTATION
Caltrans
DESIGN DIVISION

FUNCTIONAL SUPERVISOR: ADEL MALEK
CALCULATED-DESIGNED BY: TRANG LUONG
CHECKED BY: ADEL MALEK
REVISED BY
DATE REVISED

LAST REVISION 04-14-09
DATE PLOTTED => 26-AUG-2009
TIME PLOTTED => 10:26

BORDER LAST REVISED 4/11/2008
RELATIVE BORDER SCALE IS IN INCHES 0 1 2 3
USERNAME => trmikesl
DGN FILE => c0h950ha001.dgn
CU 12241
EA 0H9501

| Dist | COUNTY | ROUTE | POST MILES TOTAL PROJECT | SHEET No. | TOTAL SHEETS |
|---|---|---|---|---|---|
| 12 | Ora | 55 | 16.0/16.8 | 14 | 52 |

REGISTERED CIVIL ENGINEER 04-15-09 DATE

5-11-09
PLANS APPROVAL DATE

REGISTERED PROFESSIONAL ENGINEER
TRANG LUONG
No. C64430
Exp. 06/30/09
CIVIL
STATE OF CALIFORNIA

*THE STATE OF CALIFORNIA OR ITS OFFICERS OR AGENTS SHALL NOT BE RESPONSIBLE FOR THE ACCURACY OR COMPLETENESS OF SCANNED COPIES OF THIS PLAN SHEET.*

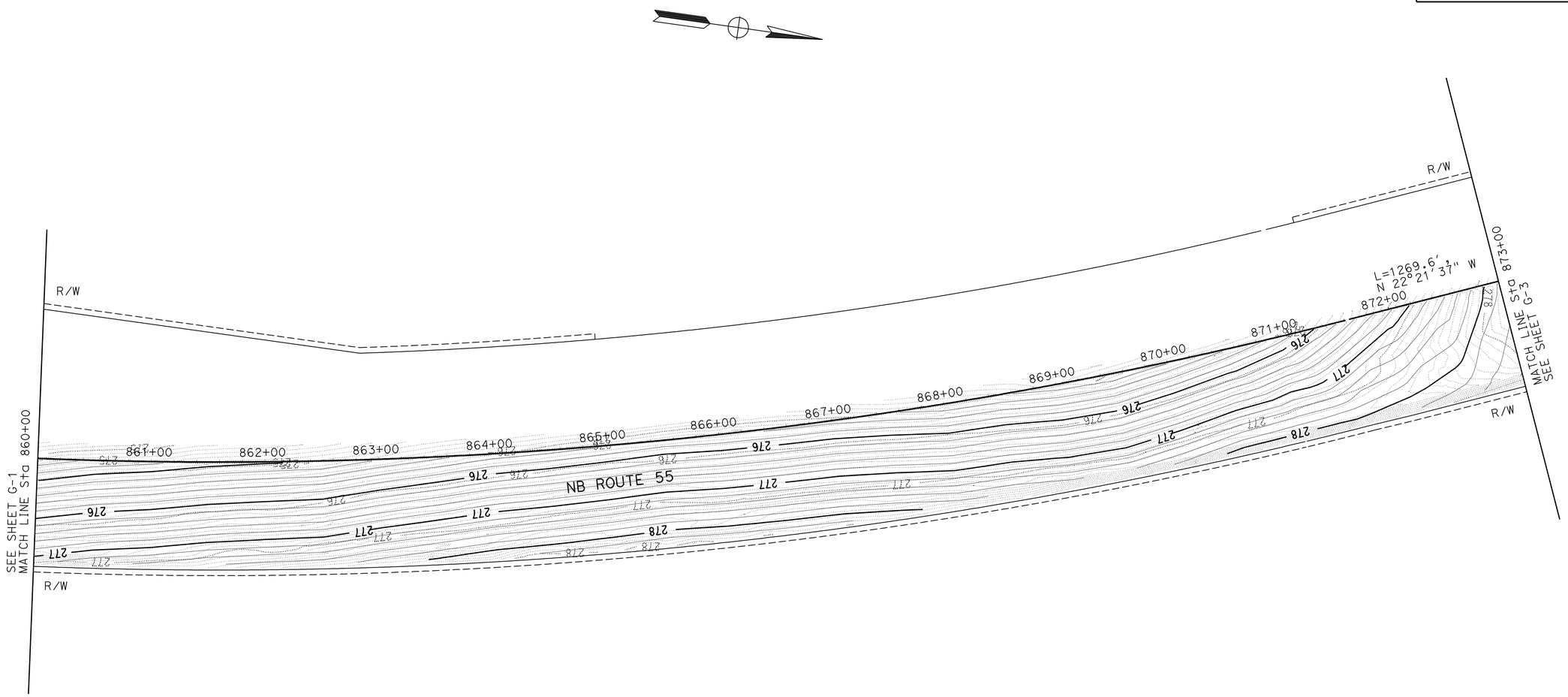


# CONTOUR GRADING

SCALE: 1"=50'

G-2

THIS PLAN IS ACCURATE FOR CONTOUR GRADING ONLY

STATE OF CALIFORNIA - DEPARTMENT OF TRANSPORTATION
Caltrans
DESIGN DIVISION

FUNCTIONAL SUPERVISOR: ADEL MALEK
CALCULATED-DESIGNED BY: TRANG LUONG
CHECKED BY: ADEL MALEK
REVISED BY
DATE REVISED

LAST REVISION 04-14-09
DATE PLOTTED => 26-AUG-2009
TIME PLOTTED => 10:26

| Dist | COUNTY | ROUTE | POST MILES TOTAL PROJECT | SHEET No. | TOTAL SHEETS |
|---|---|---|---|---|---|
| 12 | Ora | 55 | 16.0/16.8 | 15 | 52 |

REGISTERED CIVIL ENGINEER 04-15-09 DATE

5-11-09
PLANS APPROVAL DATE

REGISTERED PROFESSIONAL ENGINEER
TRANG LUONG
No. C64430
Exp. 06/30/09
CIVIL
STATE OF CALIFORNIA

*THE STATE OF CALIFORNIA OR ITS OFFICERS OR AGENTS SHALL NOT BE RESPONSIBLE FOR THE ACCURACY OR COMPLETENESS OF SCANNED COPIES OF THIS PLAN SHEET.*

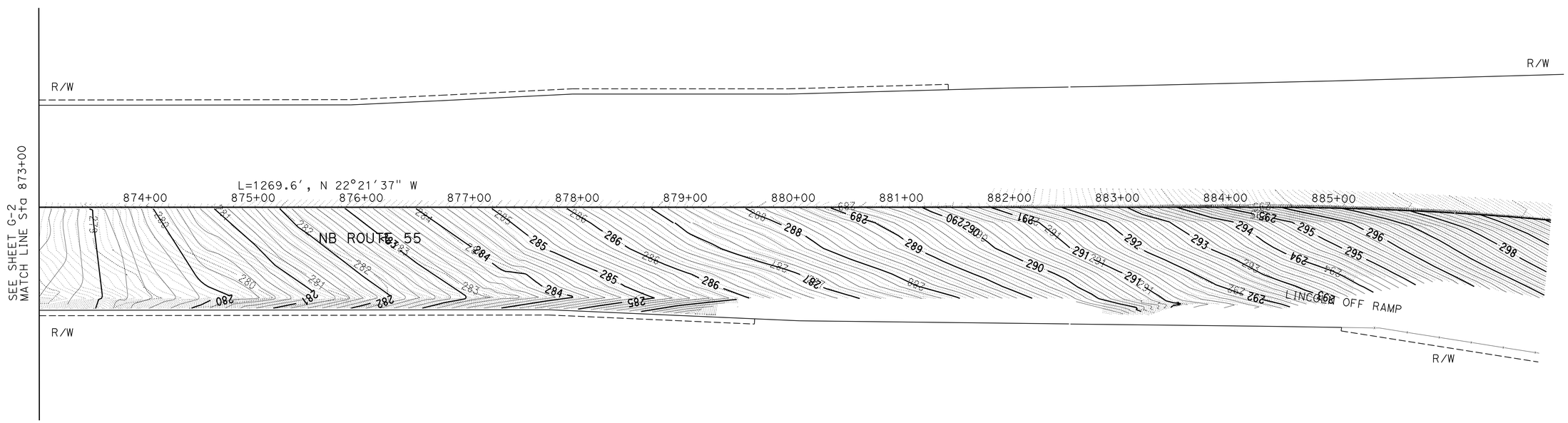


# CONTOUR GRADING

SCALE: 1"=50'

G-3

THIS PLAN IS ACCURATE FOR CONTOUR GRADING ONLY

STATE OF CALIFORNIA - DEPARTMENT OF TRANSPORTATION
Caltrans® DESIGN DIVISION

FUNCTIONAL SUPERVISOR: ADEL MALEK

CALCULATED-DESIGNED BY: TRANG LUONG
CHECKED BY: ADEL MALEK

REVISED BY
DATE REVISED

LAST REVISION 04-14-09
DATE PLOTTED => 26-AUG-2009
TIME PLOTTED => 10:27

| Dist | COUNTY | ROUTE | POST MILES TOTAL PROJECT | SHEET No. | TOTAL SHEETS |
|---|---|---|---|---|---|
| 12 | Ora | 55 | 16.0/16.8 | 16 | 52 |

REGISTERED CIVIL ENGINEER 04-15-09 DATE

5-11-09
PLANS APPROVAL DATE

REGISTERED PROFESSIONAL ENGINEER PHI DINH No. C61179 Exp 06/30/09 CIVIL STATE OF CALIFORNIA

*THE STATE OF CALIFORNIA OR ITS OFFICERS OR AGENTS SHALL NOT BE RESPONSIBLE FOR THE ACCURACY OR COMPLETENESS OF SCANNED COPIES OF THIS PLAN SHEET.*

## LEGEND:

⟨×⟩ DRAINAGE SYSTEM No.

(×) DRAINAGE UNIT No.

## ABBREVIATIONS:

GLD = GRATED LINE DRAIN

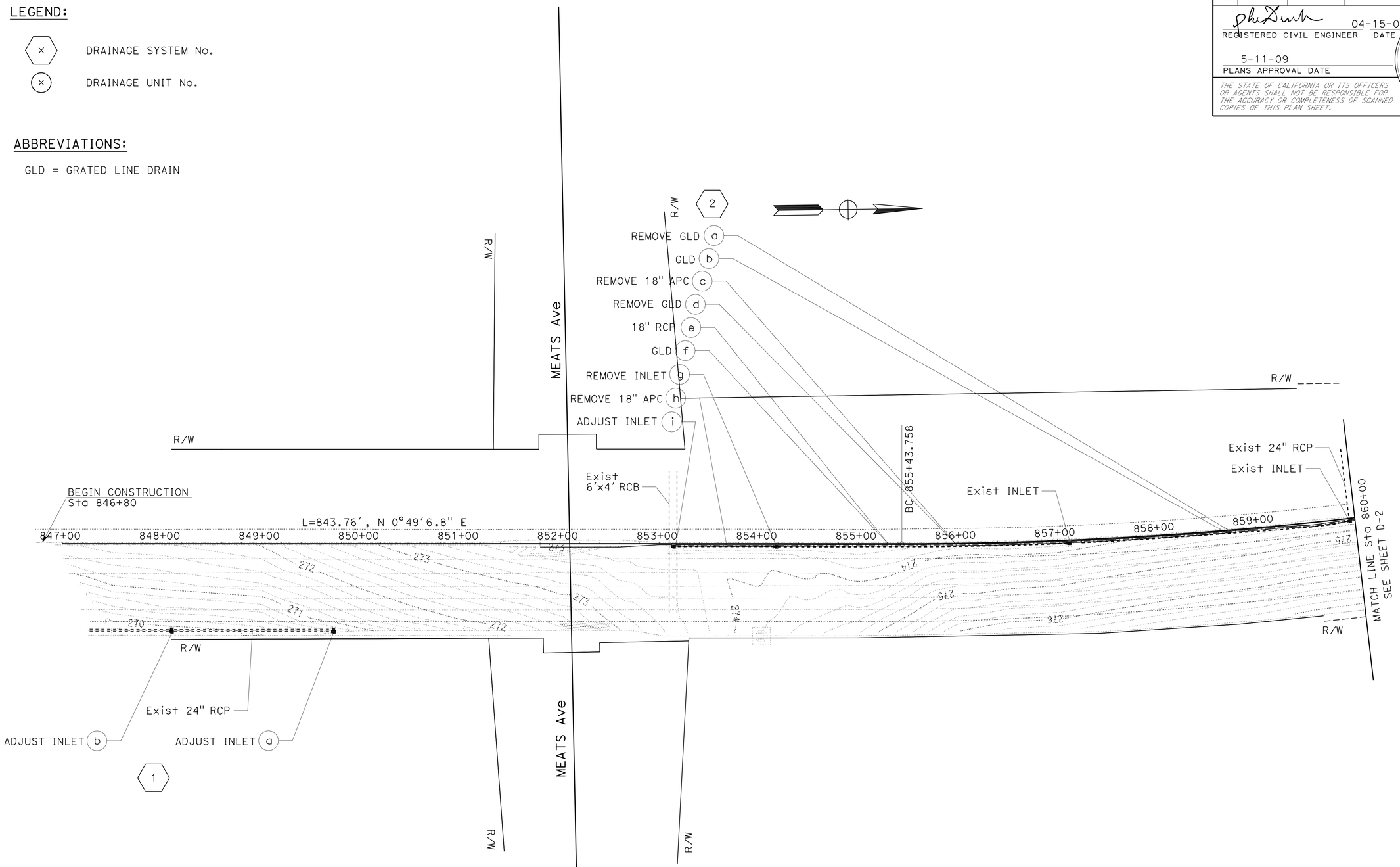


THIS PLAN ACCURATE FOR DRAINAGE WORK ONLY

# DRAINAGE PLAN

SCALE: 1"=50'

**D-1**

| | | | |
|---|---|---|---|
| STATE OF CALIFORNIA - DEPARTMENT OF TRANSPORTATION | FUNCTIONAL SUPERVISOR | CALCULATED-DESIGNED BY | PHI DINH |
| Caltrans | ROGER KAO | CHECKED BY | TAN NGUYEN |
| HYDRAULICS | | REVISED BY | PHI DINH |
| | | DATE REVISED | 4/13/09 |

LAST REVISION 04-14-09 DATE PLOTTED => 26-AUG-2009 TIME PLOTTED => 10:27

| Dist | COUNTY | ROUTE | POST MILES TOTAL PROJECT | SHEET No. | TOTAL SHEETS |
|---|---|---|---|---|---|
| 12 | Ora | 55 | 16.0/16.8 | 17 | 52 |

REGISTERED CIVIL ENGINEER 04-15-09 DATE

5-11-09
PLANS APPROVAL DATE

REGISTERED PROFESSIONAL ENGINEER
PHI DINH
No. C61179
Exp. 06/30/09
CIVIL
STATE OF CALIFORNIA

*THE STATE OF CALIFORNIA OR ITS OFFICERS OR AGENTS SHALL NOT BE RESPONSIBLE FOR THE ACCURACY OR COMPLETENESS OF SCANNED COPIES OF THIS PLAN SHEET.*

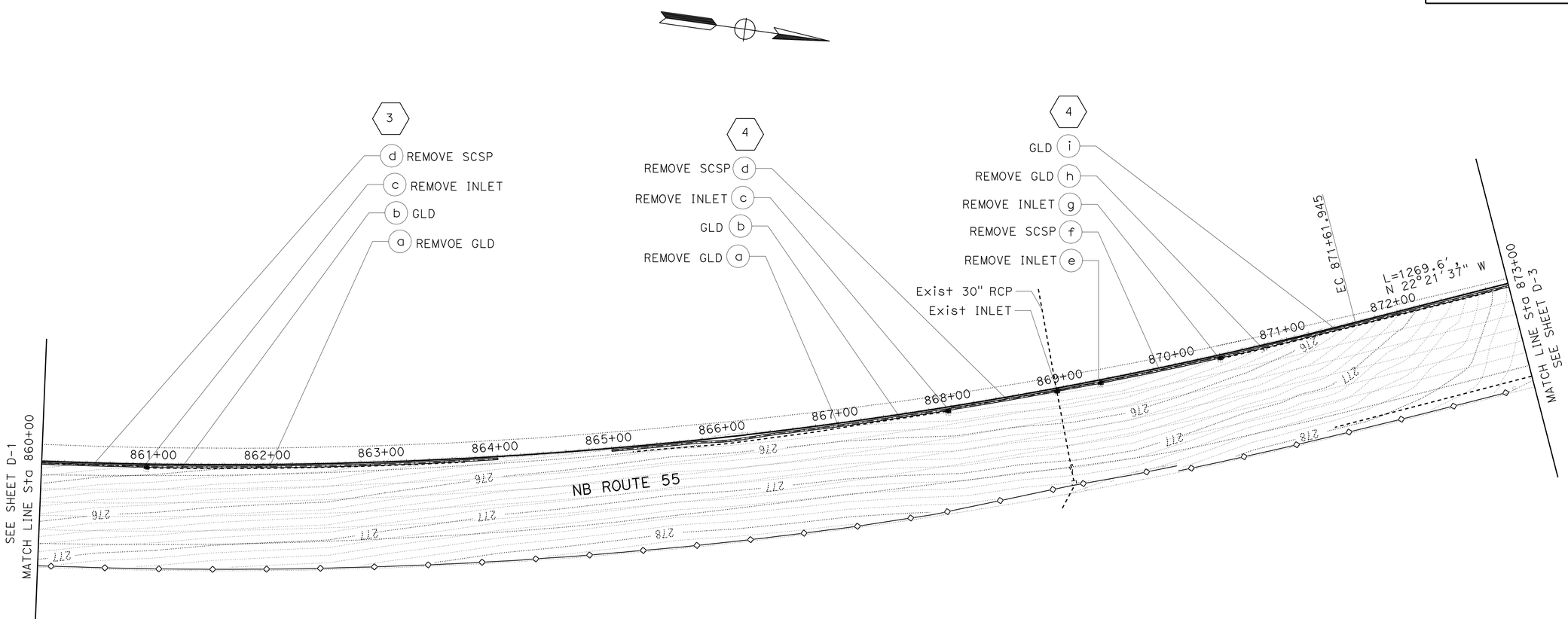


THIS PLAN ACCURATE FOR DRAINAGE WORK ONLY

# DRAINAGE PLAN

SCALE: 1"=50'

**D-2**

| | |
|---|---|
| PHI DINH | 4/13/09 |
| TAN NGUYEN | |
| | |
| ROGER KAO | |

REVISED BY / DATE REVISED
CALCULATED-DESIGNED BY / CHECKED BY
FUNCTIONAL SUPERVISOR

STATE OF CALIFORNIA - DEPARTMENT OF TRANSPORTATION
Caltrans
HYDRAULICS

LAST REVISION 4-14-09
DATE PLOTTED => 26-AUG-2009
TIME PLOTTED => 10:27

| Dist | COUNTY | ROUTE | POST MILES TOTAL PROJECT | SHEET No. | TOTAL SHEETS |
|---|---|---|---|---|---|
| 12 | Ora | 55 | 16.0/16.8 | 18 | 52 |

REGISTERED CIVIL ENGINEER DATE 04-15-09

5-11-09
PLANS APPROVAL DATE

REGISTERED PROFESSIONAL ENGINEER
PHI DINH
No. C61179
Exp 06/30/09
CIVIL
STATE OF CALIFORNIA

*THE STATE OF CALIFORNIA OR ITS OFFICERS OR AGENTS SHALL NOT BE RESPONSIBLE FOR THE ACCURACY OR COMPLETENESS OF SCANNED COPIES OF THIS PLAN SHEET.*

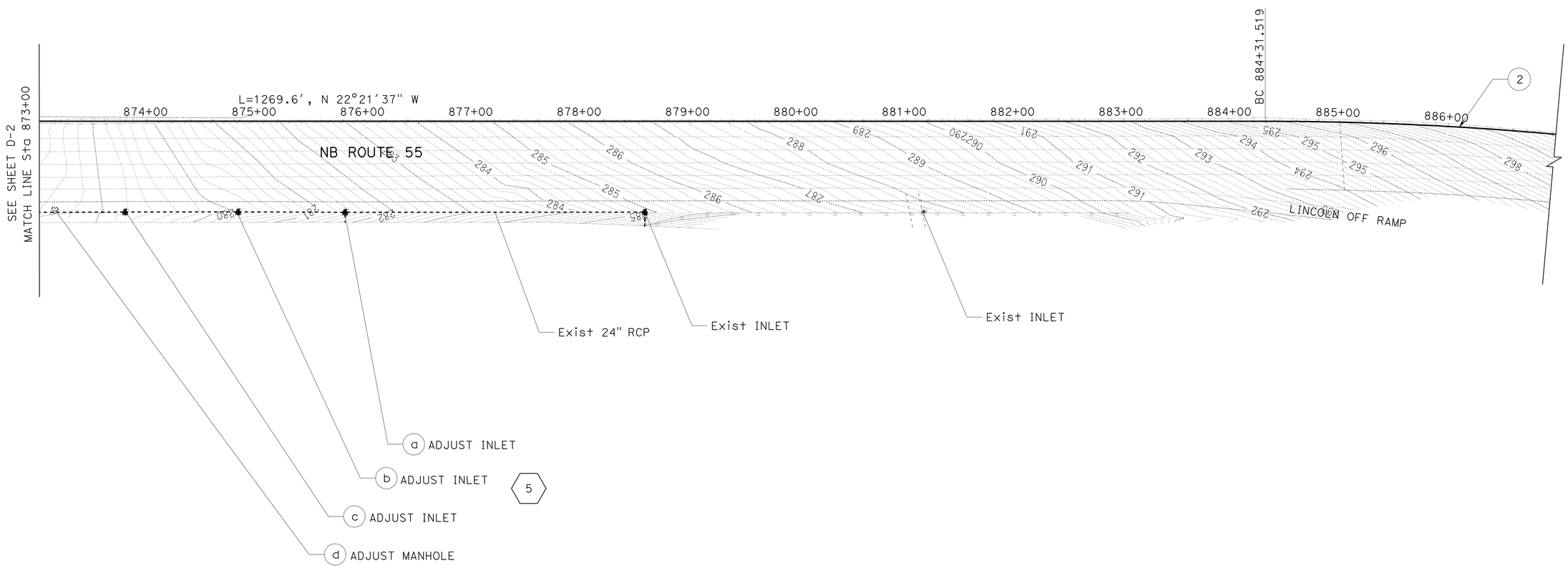


THIS PLAN ACCURATE FOR DRAINAGE WORK ONLY

# DRAINAGE PLAN

SCALE: 1"=50'

**D-3**

STATE OF CALIFORNIA - DEPARTMENT OF TRANSPORTATION
Caltrans
HYDRAULICS

FUNCTIONAL SUPERVISOR: ROGER KAO
CALCULATED-DESIGNED BY: PHI DINH
CHECKED BY: TAN NGUYEN
REVISED BY: PHI DINH
DATE REVISED: 4/13/09

LAST REVISION 4-14-09
DATE PLOTTED => 26-AUG-2009
TIME PLOTTED => 10:27

| Dist | COUNTY | ROUTE | POST MILES TOTAL PROJECT | SHEET No. | TOTAL SHEETS |
|---|---|---|---|---|---|
| 12 | Ora | 55 | 16.0/16.8 | 19 | 52 |

REGISTERED CIVIL ENGINEER 04-15-09 DATE

5-11-09
PLANS APPROVAL DATE

REGISTERED PROFESSIONAL ENGINEER PHI DINH No. C61179 Exp 06/30/09 CIVIL STATE OF CALIFORNIA

*THE STATE OF CALIFORNIA OR ITS OFFICERS OR AGENTS SHALL NOT BE RESPONSIBLE FOR THE ACCURACY OR COMPLETENESS OF SCANNED COPIES OF THIS PLAN SHEET.*

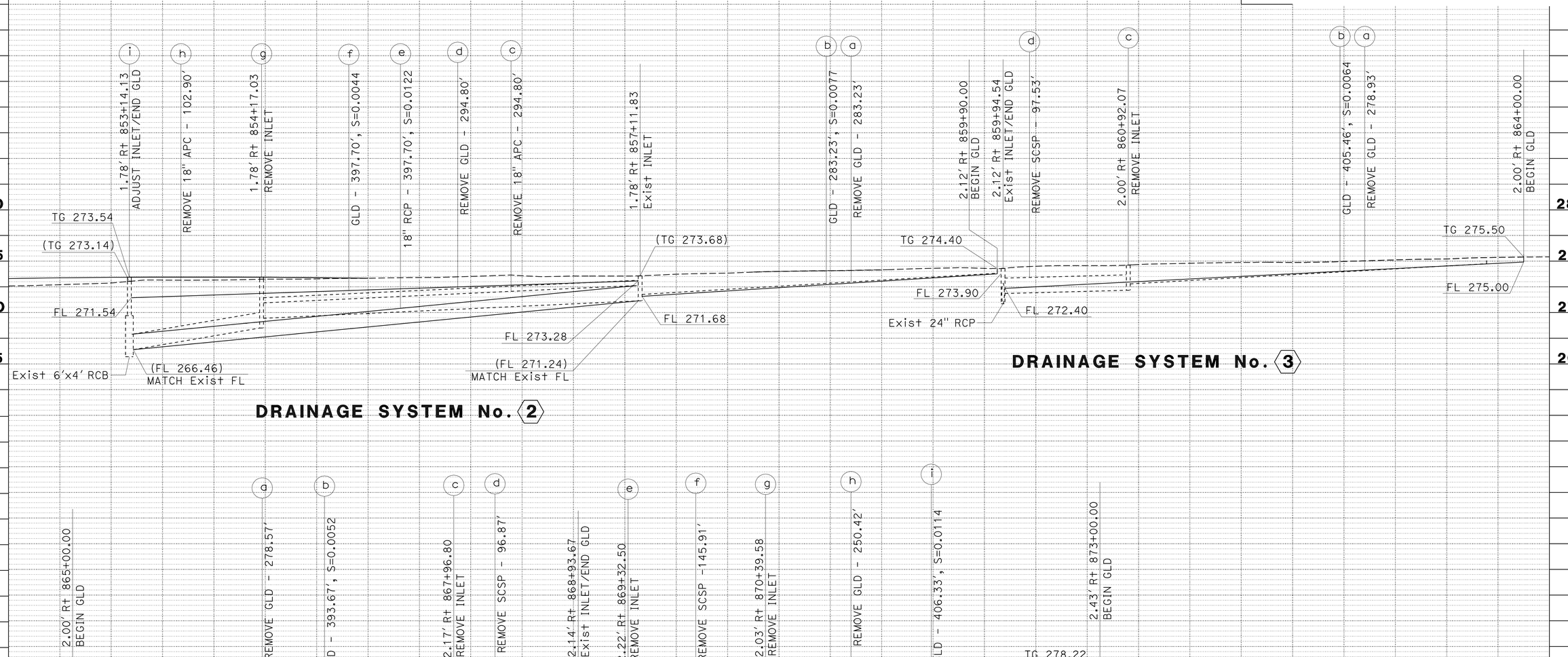


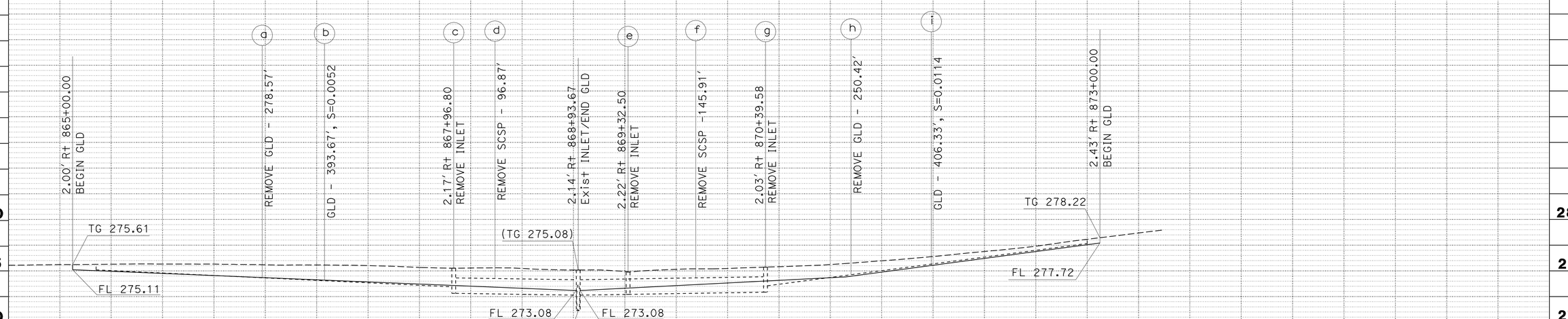


DRAINAGE SYSTEM No. 4

## DRAINAGE PROFILES

SCALE: Horz 1"=40'
Vert 1"=5'

DP-1

| Station. | | |
|---|---|---|
| CY | Exc | |
| | Emb | |

STATE OF CALIFORNIA - DEPARTMENT OF TRANSPORTATION
Caltrans
HYDRAULICS

FUNCTIONAL SUPERVISOR: ROGER KAO

| CALCULATED-DESIGNED BY | CHECKED BY | REVISED BY | DATE REVISED |
|---|---|---|---|
| PHI DINH | TAN NGUYEN | PHI DINH | 4/13/09 |

LAST REVISION 04-14-09 | DATE PLOTTED => 26-AUG-2009 | TIME PLOTTED => 10:27

| Dist | COUNTY | ROUTE | POST MILES TOTAL PROJECT | SHEET No. | TOTAL SHEETS |
|---|---|---|---|---|---|
| 12 | Ora | 55 | 16.0/16.8 | 20 | 52 |

REGISTERED CIVIL ENGINEER 04-15-09 DATE

5-11-09
PLANS APPROVAL DATE

REGISTERED PROFESSIONAL ENGINEER PHI DINH No. C61179 Exp. 06/30/09 CIVIL STATE OF CALIFORNIA

*THE STATE OF CALIFORNIA OR ITS OFFICERS OR AGENTS SHALL NOT BE RESPONSIBLE FOR THE ACCURACY OR COMPLETENESS OF SCANNED COPIES OF THIS PLAN SHEET.*

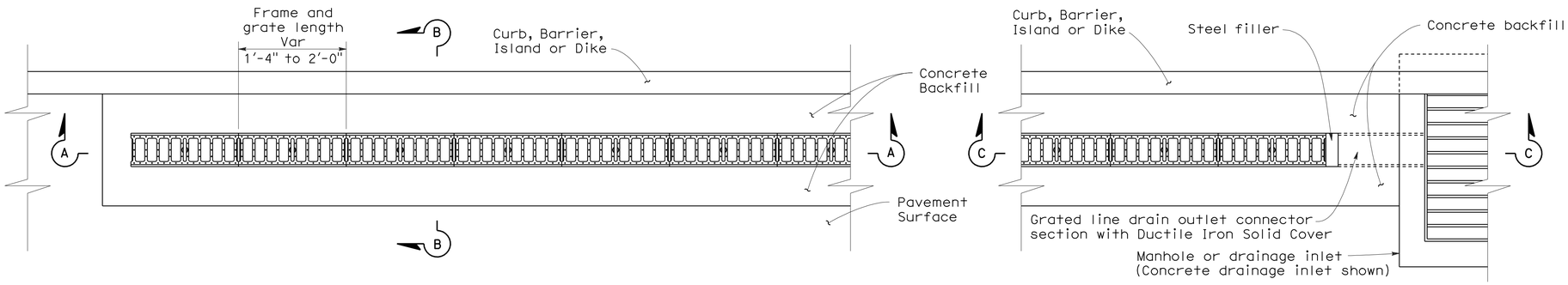


## GRATED LINE DRAIN PLAN

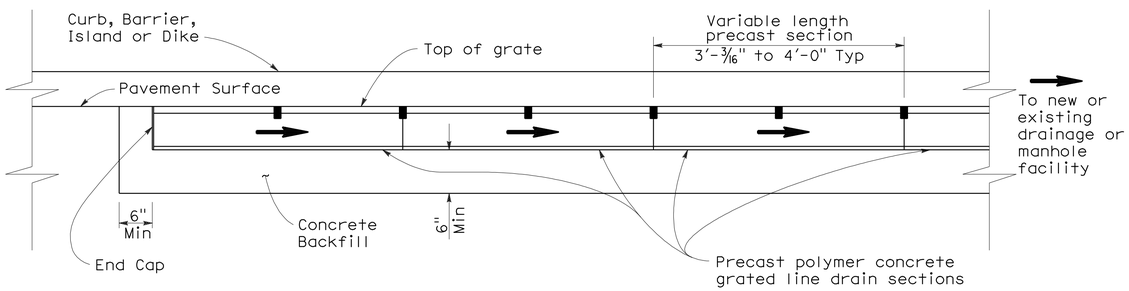


## SECTION A-A

(See Note 1)

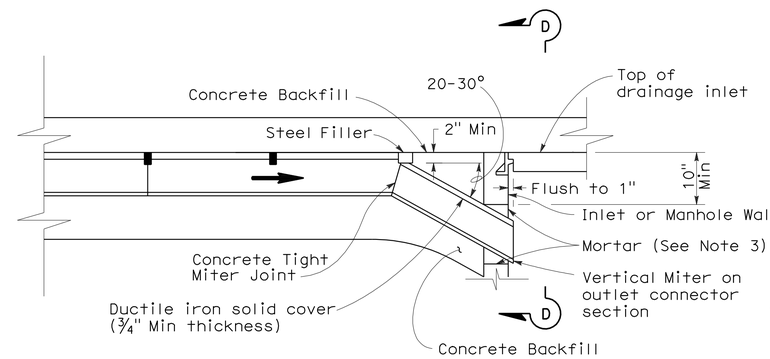


## SECTION C-C

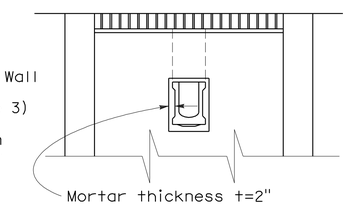


## SECTION D-D

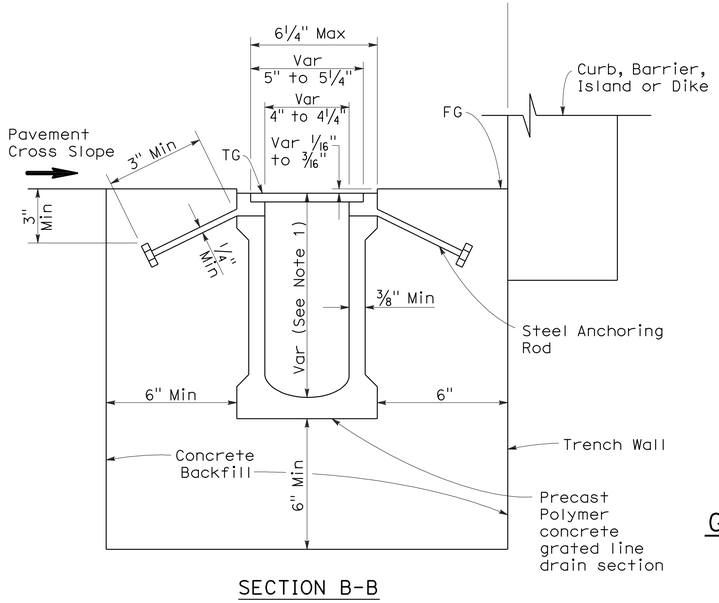


## SECTION B-B

(Precast grated line drain with non-integral frame)
See Note 6

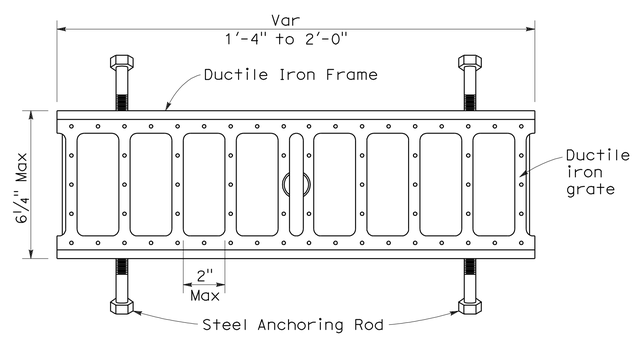


## GRATED LINE DRAIN FRAME AND GRATE DETAIL

See Notes 4, 5, 6 and 7

## NOTES:

1. Precast polymer concrete drain sections are available in non-sloped uniform depth sections 4 7/16" to 24" or in 0.6 percent pre-sloped sections with graduated depths from 4 7/16" to 24". See Project Plans for trench sections to be installed.
2. Nominal dimensions shown. Allowable tolerance ± 2% .
3. For GMP inlet connection, field joint sealed with a pliable mixture of sand, portland cement and emulsified asphalt (mixture of 1 part portland cement, 3-5 parts sand and 1½ part SSI emulsified asphalt).
4. Within designated pedestrian paths of travel, the maximum grate opening in the direction of pedestrian traffic shall be ½".
5. Grate patterns may vary from detail shown. See Special Provisions for requirements.
6. Steel anchoring rods not used when frame is integral with polymer concrete grated line drain section.
7. 3/16" maximum gap between adjacent gratings.
8. Removable grates shall be installed at the beginning and every 50 feet of grated line drain. See Special Provisions for additional requirements.

# DRAINAGE DETAILS
# GRATED LINE DRAIN

NO SCALE

**DD-1**

| REVISED BY | DATE REVISED |
|---|---|
| PHI DINH | 4/13/09 |

| CALCULATED-DESIGNED BY | CHECKED BY |
|---|---|
| PHI DINH | TAN NGUYEN |

FUNCTIONAL SUPERVISOR: ROGER KAO

STATE OF CALIFORNIA - DEPARTMENT OF TRANSPORTATION
Caltrans® HYDRAULICS

LAST REVISION 04-14-09 | DATE PLOTTED => 26-AUG-2009 | TIME PLOTTED => 10:27

| Dist | COUNTY | ROUTE | POST MILES TOTAL PROJECT | SHEET No. | TOTAL SHEETS |
|---|---|---|---|---|---|
| 12 | Ora | 55 | 16.0/16.8 | 21 | 52 |

REGISTERED CIVIL ENGINEER 04-15-09 DATE

5-11-09
PLANS APPROVAL DATE

REGISTERED PROFESSIONAL ENGINEER
PHI DINH
No. C61179
Exp. 06/30/09
CIVIL
STATE OF CALIFORNIA

*THE STATE OF CALIFORNIA OR ITS OFFICERS OR AGENTS SHALL NOT BE RESPONSIBLE FOR THE ACCURACY OR COMPLETENESS OF SCANNED COPIES OF THIS PLAN SHEET.*

NOTES:

ALTERNATIVE DESIGNS FOR GRATED LINE DRAINS AND/OR SIDEWALL EXTENSIONS ARE ACCEPTABLE UPON APPROVAL OF THE ENGINEER.

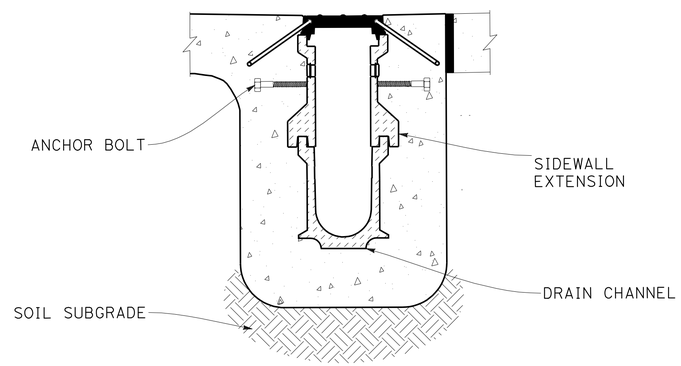


**TYPICAL SIDEWALL EXTENSION**

# DRAINAGE DETAILS GRATED LINE DRAIN

NO SCALE

**DD-2**

| | |
|---|---|
| REVISED BY | PHI DINH |
| DATE REVISED | 4/13/09 |
| CALCULATED-DESIGNED BY | PHI DINH |
| CHECKED BY | TAN NGUYEN |
| FUNCTIONAL SUPERVISOR | ROGER KAO |

STATE OF CALIFORNIA - DEPARTMENT OF TRANSPORTATION
Caltrans
HYDRAULICS

LAST REVISION 04-14-09
DATE PLOTTED => 26-AUG-2009
TIME PLOTTED => 10:28

| Dist | COUNTY | ROUTE | POST MILES TOTAL PROJECT | SHEET No. | TOTAL SHEETS |
|---|---|---|---|---|---|
| 12 | Ora | 55 | 16.0/16.8 | 22 | 52 |

REGISTERED CIVIL ENGINEER 04-15-09 DATE

5-11-09
PLANS APPROVAL DATE

REGISTERED PROFESSIONAL ENGINEER PHI DINH No. C61179 Exp. 06/30/09 CIVIL STATE OF CALIFORNIA

*THE STATE OF CALIFORNIA OR ITS OFFICERS OR AGENTS SHALL NOT BE RESPONSIBLE FOR THE ACCURACY OR COMPLETENESS OF SCANNED COPIES OF THIS PLAN SHEET.*

## ABBREVIATIONS:

S = STANDARD JOINT TYPE
Bet = BETWEEN

| DRAINAGE SYSTEM No. ⬡ | DRAINAGE UNIT ○ | GRATED LINE DRAIN (WITH EXTENSIONS) FT | 18" REINFORCED CONCRETE PIPE FT | PIPE JOINT CLASSIFICATION | ADJUST INLET EA | ADJUST MANHOLE EA | REMOVE GRATED LINE DRAIN (WITH EXTENSIONS) FT | REMOVE CULVERT FT | REMOVE SLOTTED PIPE FT | REMOVE INLET EA | MAXIMUM COVER FT | DESCRIPTION | STATION | DRAINAGE PLAN SHEET No. | DRAINAGE SYSTEM No. ⬡ | DRAINAGE UNIT ○ |
|---|---|---|---|---|---|---|---|---|---|---|---|---|---|---|---|---|
| 1 | a | | | | 1 | | | | | | | ADJUST INLET | 87.34′ Rt 848+29.34 | D-1 | 1 | a |
| | b | | | | 1 | | | | | | | ADJUST INLET | 87.38′ Rt 849+72.44 | | | b |
| | | | | | | | | | | | | | | | | |
| 2 | a | | | | | | 283.23 | | | | | REMOVE GRATED LINE DRAIN | Bet 2.53′ Rt 859+90.00 & 3.22′ Rt 857+11.83 | D-1 | 2 | a |
| | b | 283.23 | | | | | | | | | | GRATED LINE DRAIN | Bet 2.12′ Rt 859+90.00 & 1.78′ Rt 857+11.83 | | | b |
| | c | | | | | | | 294.80 | | | | REMOVE 18" APC CULVERT | Bet 3.11′ Rt 857+11.83 & 3.23′ Rt 854+17.03 | | | c |
| | d | | | | | | 294.80 | | | | | REMOVE GRATED LINE DRAIN | Bet 3.11′ Rt 857+11.83 & 3.23′ Rt 854+17.03 | | | d |
| | e | | 397.70 | S | | | | | | | 5.5 | 18" REINFORCED CONCRETE PIPE | Bet 1.78′ Rt 857+11.83 & 1.78′ Rt 853+14.13 | | | e |
| | f | 397.70 | | | | | | | | | | GRATED LINE DRAIN | Bet 1.78′ Rt 857+11.83 & 1.78′ Rt 853+14.13 | | | f |
| | g | | | | | | | | | 1 | | REMOVE INLET | 1.78′ Rt 854+17.03 | | | g |
| | h | | | | | | | 102.90 | | | | REMOVE 18" APC CULVERT | Bet 1.78′ Rt 857+11.83 & 1.78′ Rt 853+14.13 | | | h |
| | i | | | | 1 | | | | | | | ADJUST INLET | 1.78′ Rt 853+14.13 | | | i |
| | | | | | | | | | | | | | | | | |
| 3 | a | | | | | | 278.93 | | | | | REMOVE GRATED LINE DRAIN | Bet 3.20′ Rt 863+71.00 & 3.38′ Rt 860+92.07 | D-2 | 3 | a |
| | b | 405.46 | | | | | | | | | | GRATED LINE DRAIN | Bet 2.00′ Rt 864+00.00 & 2.12′ Rt 859+94.54 | | | b |
| | c | | | | | | | | | 1 | | REMOVE INLET | 2.00′ Rt 860+92.07 | | | c |
| | d | | | | | | | | 97.53 | | | REMOVE SLOTTED CORRUGATED STEEL PIPE | Bet 1.64′ Rt 860+02.07 & 1.38′ Rt 859+94.54 | | | d |
| | | | | | | | | | | | | | | | | |
| 4 | a | | | | | | 278.57 | | | | | REMOVE GRATED LINE DRAIN | Bet 4.67′ Rt 865+18.23 & 3.52′ Rt 867+96.80 | D-2 | 4 | a |
| | b | 393.67 | | | | | | | | | | GRATED LINE DRAIN | Bet 2.00′ Rt 865+00.00 & 2.14′ Rt 868+93.67 | | | b |
| | c | | | | | | | | | 1 | | REMOVE INLET | 2.17′ Rt 867+96.80 | | | c |
| | d | | | | | | | | 96.87 | | | REMOVE SLOTTED CORRUGATED STEEL PIPE | Bet 1.44′ Rt 867+96.80 & 1.65′ Rt 868+93.67 | | | d |
| | e | | | | | | | | | 1 | | REMOVE INLET | 2.22′ Rt 869+32.50 | | | e |
| | f | | | | | | | | 145.91 | | | REMOVE SLOTTED CORRUGATED STEEL PIPE | Bet 1.65′ Rt 868+93.67 & 1.35′ Rt 870+39.58 | | | f |
| | g | | | | | | | | | 1 | | REMOVE INLET | 2.03′ Rt 870+39.58 | | | g |
| | h | | | | | | 250.42 | | | | | REMOVE GRATED LINE DRAIN | Bet 3.45′ Rt 870+39.58 & 3.18′ Rt 872+90.00 | | | h |
| | i | 406.33 | | | | | | | | | | GRATED LINE DRAIN | Bet 2.14′ Rt 868+93.67 & 2.43′ Rt 873+00.00 | | | i |
| | | | | | | | | | | | | | | | | |
| 5 | a | | | | 1 | | | | | | | ADJUST INLET | 83.98′ Rt 875+82.56 | D-3 | 5 | a |
| | b | | | | 1 | | | | | | | ADJUST INLET | 83.70′ Rt 874+83.56 | | | b |
| | c | | | | 1 | | | | | | | ADJUST INLET | 83.74′ Rt 873+79.19 | | | c |
| | d | | | | | 1 | | | | | | ADJUST MANHOLE | 81.81′ Rt 873+14.36 | | | d |
| | | | | | | | | | | | | | | | | |
| TOTAL | | 1886.39 | 397.70 | | 6 | 1 | 1385.95 | 397.70 | 340.31 | 5 | | | | | | |

# DRAINAGE QUANTITIES

DQ-1

| CALCULATED-DESIGNED BY | PHI DINH | REVISED BY | PHI DINH |
|---|---|---|---|
| CHECKED BY | TAN NGUYEN | DATE REVISED | 4/13/09 |

FUNCTIONAL SUPERVISOR ROGER KAO

STATE OF CALIFORNIA - DEPARTMENT OF TRANSPORTATION
Caltrans
HYDRAULICS

LAST REVISION 04-14-09 DATE PLOTTED => 26-AUG-2009 TIME PLOTTED => 10:28

| Dist | COUNTY | ROUTE | POST MILES TOTAL PROJECT | SHEET No. | TOTAL SHEETS |
|---|---|---|---|---|---|
| 12 | Ora | 55 | 16.0/16.8 | 23 | 52 |

REGISTERED CIVIL ENGINEER 04-15-09 DATE

5-11-09
PLANS APPROVAL DATE

REGISTERED PROFESSIONAL ENGINEER TRANG LUONG No. C64430 Exp. 06/30/09 CIVIL STATE OF CALIFORNIA

*THE STATE OF CALIFORNIA OR ITS OFFICERS OR AGENTS SHALL NOT BE RESPONSIBLE FOR THE ACCURACY OR COMPLETENESS OF SCANNED COPIES OF THIS PLAN SHEET.*

## NOTES:

1. LOCATIONS OF UTILITIES SHOWN ON THESE PLANS ARE APPROXIMATE AND SHALL BE VERIFIED BY THE CONTRACTOR PRIOR TO CONSTRUCTION.
2. UTILITY OWNERSHIP ON THIS PROJECT:

   GAS - SOUTHERN CALIFORNIA GAS COMPANY (g)
   WATER - CITY OF ORANGE (w)
   ELECTRIC - SOUTHERN CALIFORNIA EDISION OVERHEAD POWER LINES (oh)

   CABLE - TIME WARNER CABLE/SOUTHER CALIFORNIA OVERHEAD POWER LINES (oh-e)

   TELEPHONE - PAC BELL TELEPHONE (t)
   SEWER - CITY OF ORANGE SEWER LINES (s).

   THIS PLAN ACCURATE FOR UTILITIES ONLY.

## ABBREVIATIONS:

HP: HIGH PRESSURE GAS / HIGH RISK.

OCSD: ORANGE COUNTY SEWER DEPARTMENT.

Pre. Abned: PREVIOUSLY ABANDONED

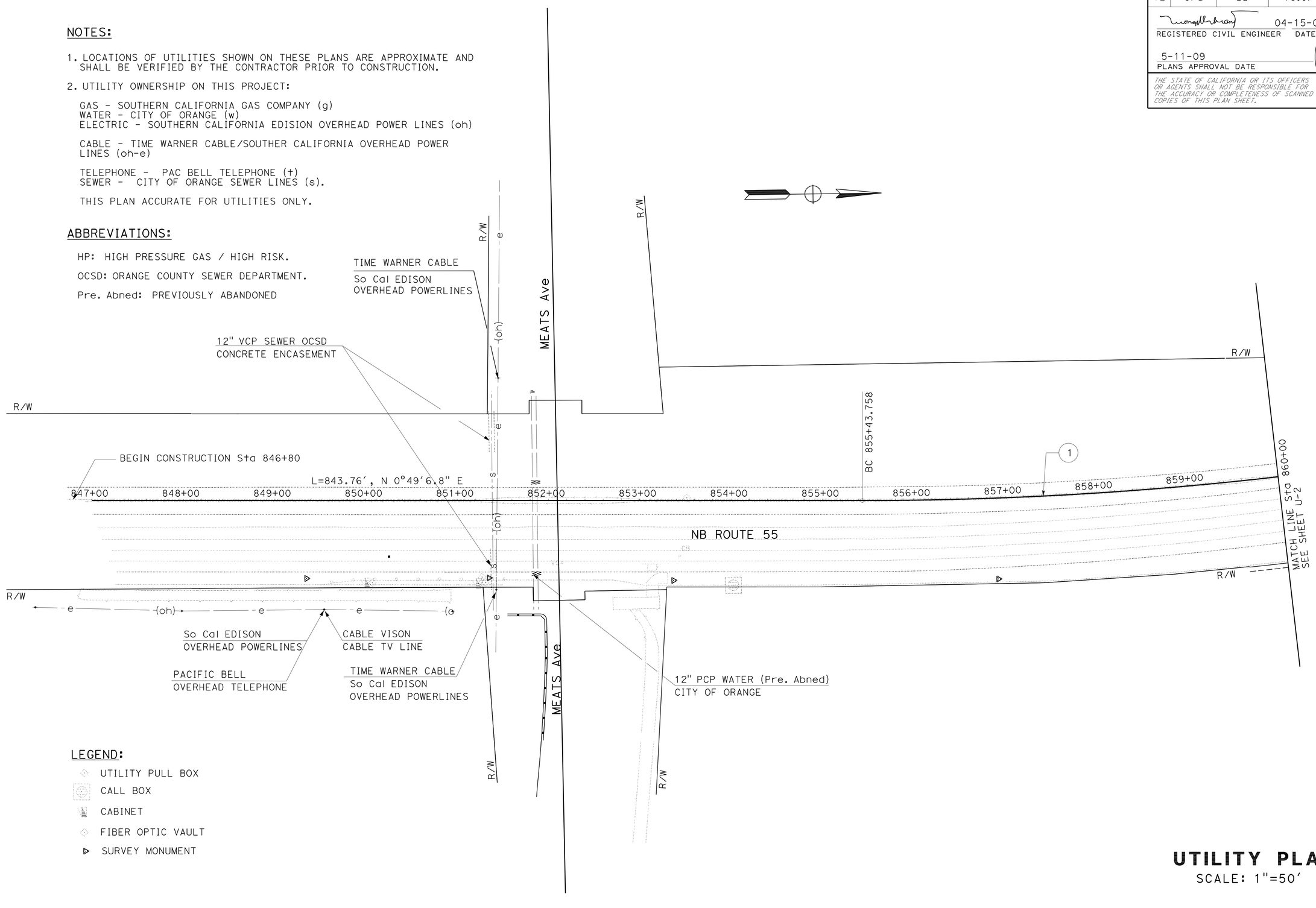


## LEGEND:

- UTILITY PULL BOX
- CALL BOX
- CABINET
- FIBER OPTIC VAULT
- SURVEY MONUMENT

# UTILITY PLAN

SCALE: 1"=50'

THIS PLAN IS ACCURATE FOR UTILITIES ONLY

U-1

STATE OF CALIFORNIA - DEPARTMENT OF TRANSPORTATION
Caltrans® DESIGN DIVISION

FUNCTIONAL SUPERVISOR: ADEL MALEK
CALCULATED-DESIGNED BY: TRANG LUONG
CHECKED BY: ADEL MALEK
REVISED BY
DATE REVISED

LAST REVISION 04-14-09 DATE PLOTTED => 26-AUG-2009 TIME PLOTTED => 10:28

| Dist | COUNTY | ROUTE | POST MILES TOTAL PROJECT | SHEET No. | TOTAL SHEETS |
|---|---|---|---|---|---|
| 12 | Ora | 55 | 16.0/16.8 | 24 | 52 |

REGISTERED CIVIL ENGINEER 04-15-09 DATE

5-11-09
PLANS APPROVAL DATE

REGISTERED PROFESSIONAL ENGINEER
TRANG LUONG
No. C64430
Exp. 06/30/09
CIVIL
STATE OF CALIFORNIA

*THE STATE OF CALIFORNIA OR ITS OFFICERS OR AGENTS SHALL NOT BE RESPONSIBLE FOR THE ACCURACY OR COMPLETENESS OF SCANNED COPIES OF THIS PLAN SHEET.*

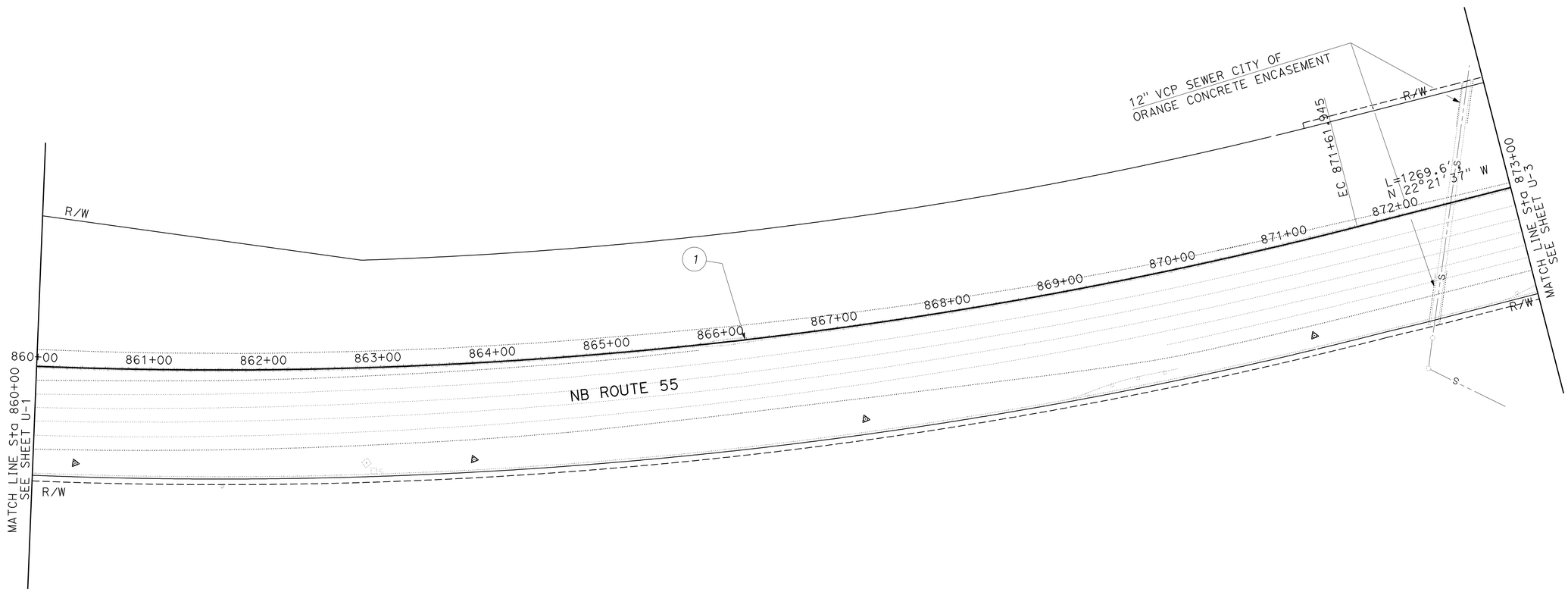


# UTILITY PLAN

SCALE: 1"=50'

U-2

THIS PLAN IS ACCURATE FOR UTILITIES ONLY

STATE OF CALIFORNIA - DEPARTMENT OF TRANSPORTATION
Caltrans
DESIGN DIVISION

FUNCTIONAL SUPERVISOR: ADEL MALEK
CALCULATED-DESIGNED BY: TRANG LUONG
CHECKED BY: ADEL MALEK
REVISED BY
DATE REVISED

LAST REVISION 04-14-09
DATE PLOTTED => 26-AUG-2009
TIME PLOTTED => 10:28

| Dist | COUNTY | ROUTE | POST MILES TOTAL PROJECT | SHEET No. | TOTAL SHEETS |
|---|---|---|---|---|---|
| 12 | Ora | 55 | 16.0/16.8 | 25 | 52 |

REGISTERED CIVIL ENGINEER 04-15-09 DATE

5-11-09
PLANS APPROVAL DATE

REGISTERED PROFESSIONAL ENGINEER
TRANG LUONG
No. C64430
Exp. 06/30/09
CIVIL
STATE OF CALIFORNIA

*THE STATE OF CALIFORNIA OR ITS OFFICERS OR AGENTS SHALL NOT BE RESPONSIBLE FOR THE ACCURACY OR COMPLETENESS OF SCANNED COPIES OF THIS PLAN SHEET.*

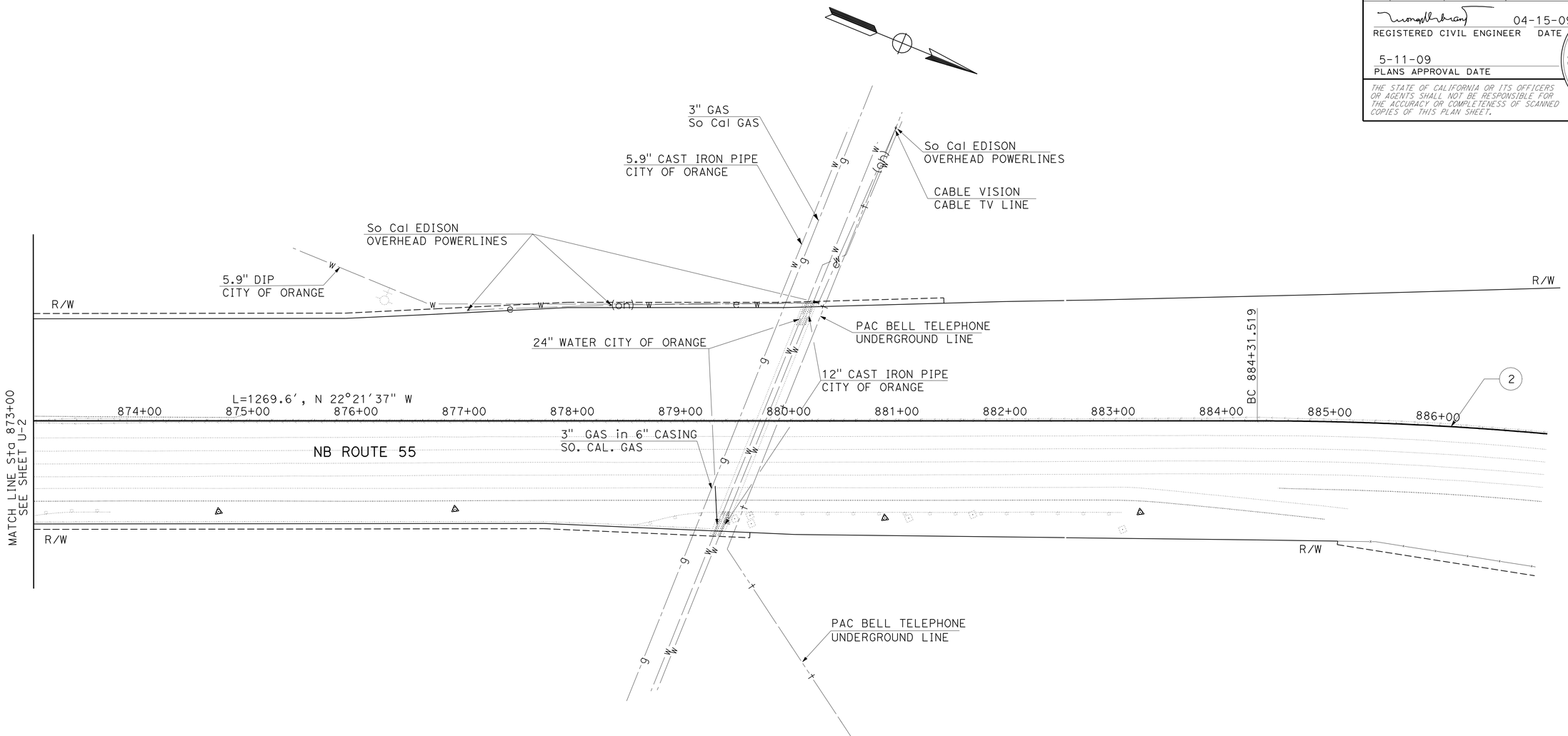


THIS PLAN IS ACCURATE FOR UTILITIES ONLY

# UTILITY PLAN

SCALE: 1"=50'

U-3

| REVISED BY | DATE REVISED |
|---|---|
| | |

| CALCULATED-DESIGNED BY | CHECKED BY |
|---|---|
| TRANG LUONG | ADEL MALEK |

FUNCTIONAL SUPERVISOR: ADEL MALEK

STATE OF CALIFORNIA - DEPARTMENT OF TRANSPORTATION
Caltrans
DESIGN DIVISION

LAST REVISION 04-14-09
DATE PLOTTED => 26-AUG-2009
TIME PLOTTED => 10:28

| Dist | COUNTY | ROUTE | POST MILES TOTAL PROJECT | SHEET No. | TOTAL SHEETS |
|---|---|---|---|---|---|
| 12 | Ora | 55 | 16.0/16.8 | 26 | 52 |

REGISTERED CIVIL ENGINEER 04-15-09 DATE

5-11-09
PLANS APPROVAL DATE

REGISTERED PROFESSIONAL ENGINEER TRANG LUONG No. C64430 Exp. 06/30/09 CIVIL STATE OF CALIFORNIA

*THE STATE OF CALIFORNIA OR ITS OFFICERS OR AGENTS SHALL NOT BE RESPONSIBLE FOR THE ACCURACY OR COMPLETENESS OF SCANNED COPIES OF THIS PLAN SHEET.*

NOTE:

LOCATION OF SIGNS SHOWN ARE APPROXIMATELY

EXACT LOCATION WILL BE DETERMINED BY ENGINEER

LEGENDS:

CONSTRUCTION AREA SIGN No.

CHANNELIZER (SURFACE MOUNTED)

TEMPORARY CRASH CUSHION ARRAY "TS14"

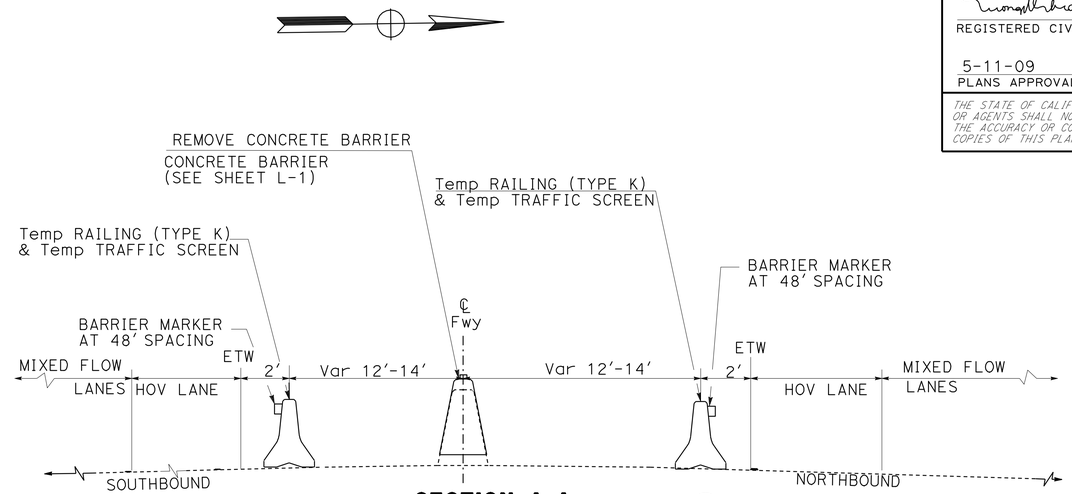


**SECTION A-A**
(NO SCALE)

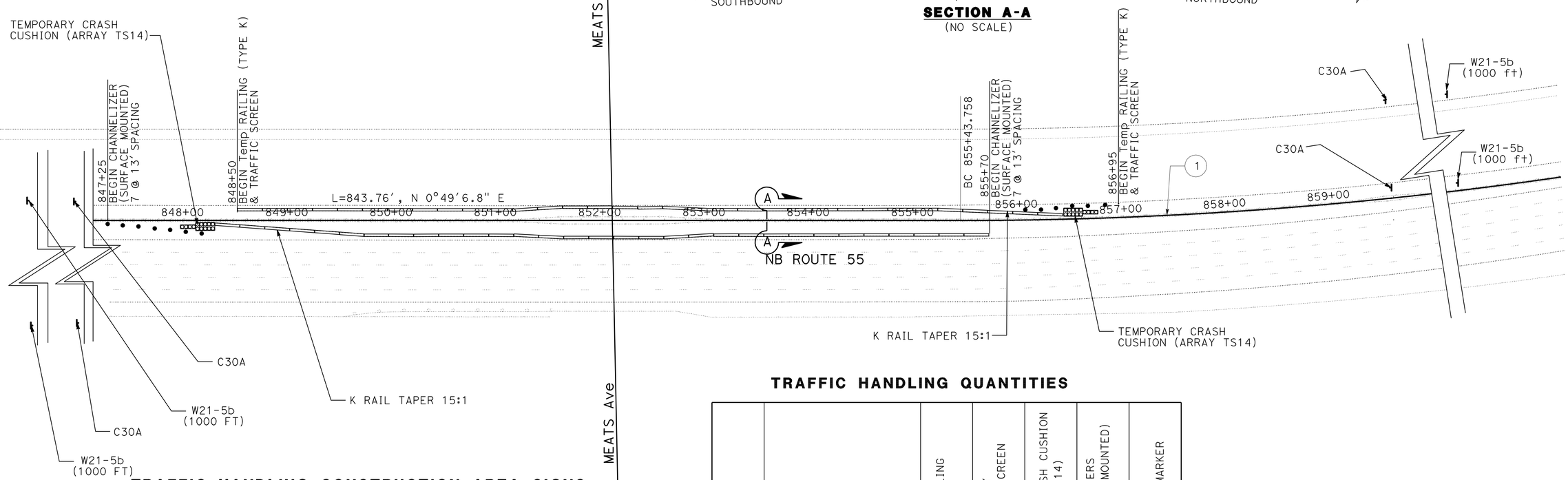


## TRAFFIC HANDLING CONSTRUCTION AREA SIGNS

| SIGN TYPE | SIGN MESSAGE | PANEL SIGN | No. OF SIGN |
|---|---|---|---|
| C30A (CA) | SHOULDER CLOSED | 36" X 36" | 4 |
| W21-5b | SHOULDER CLOSED 1000 FT | 915" X 915" | 4 |

## TRAFFIC HANDLING QUANTITIES

| SHEET No. | "ALIGNMENT" STATION LIMITS | Temp RAILING (TYPE K) | TEMPORARY TRAFFIC SCREEN | Temp CRASH CUSHION (ARRAY TS14) | CHANNELIZERS (SURFACE MOUNTED) | CONCRETE BARRIER MARKER |
|---|---|---|---|---|---|---|
| | | LF | LF | EA | EA | EA |
| TH-1 | "NB SR-55 " Sta 847+00 TO 860+00 | 1443 | 1443 | 2 | 14 | 31 |
| TOTAL | | 1443 | 1443 | 2 | 14 | 31 |

# TRAFFIC HANDLING AND QUANTITIES PLAN

SCALE: 1"=50'

**TH-1**

THIS PLAN ACCURATE FOR TRAFFIC HANDLING WORK ONLY

STATE OF CALIFORNIA - DEPARTMENT OF TRANSPORTATION
Caltrans® DESIGN DIVISION

FUNCTIONAL SUPERVISOR: ADEL MALEK
CALCULATED-DESIGNED BY: TRANG LUONG
CHECKED BY: ADEL MALEK
REVISED BY
DATE REVISED

LAST REVISION 04-14-09 DATE PLOTTED => 26-AUG-2009 TIME PLOTTED => 10:28

| Dist | COUNTY | ROUTE | POST MILES TOTAL PROJECT | SHEET No. | TOTAL SHEETS |
|---|---|---|---|---|---|
| 12 | Ora | 55 | 16.0/16.8 | 27 | 52 |

REGISTERED CIVIL ENGINEER 04-15-09 DATE

5-11-09
PLANS APPROVAL DATE

REGISTERED PROFESSIONAL ENGINEER
TRANG LUONG
No. C64430
Exp. 06/30/09
CIVIL
STATE OF CALIFORNIA

*THE STATE OF CALIFORNIA OR ITS OFFICERS OR AGENTS SHALL NOT BE RESPONSIBLE FOR THE ACCURACY OR COMPLETENESS OF SCANNED COPIES OF THIS PLAN SHEET.*

## NOTES:

1. LOCATION OF DETOUR SIGNS SHOWN ARE APPROXIMATE. EXACT LOCATIONS WILL BE DETERMINED BY THE ENGINEER.
2. DURING THE NB RTE 55 CLOSURE, PCMS #1 MESSAGE SHOULD READ...

| LINCLN Ave /NOHL RCH RP CLOSED | AND | USE DETOUR |
|---|---|---|
| FIRST FRAME | | SECOND FRAME |

THE PCMS #2 MESSAGE SHOULD READ...

| LINCLN Ave /NOHL RCH DETOUR | AND | USE KATELLA Ave |
|---|---|---|
| FIRST FRAME | | SECOND FRAME |

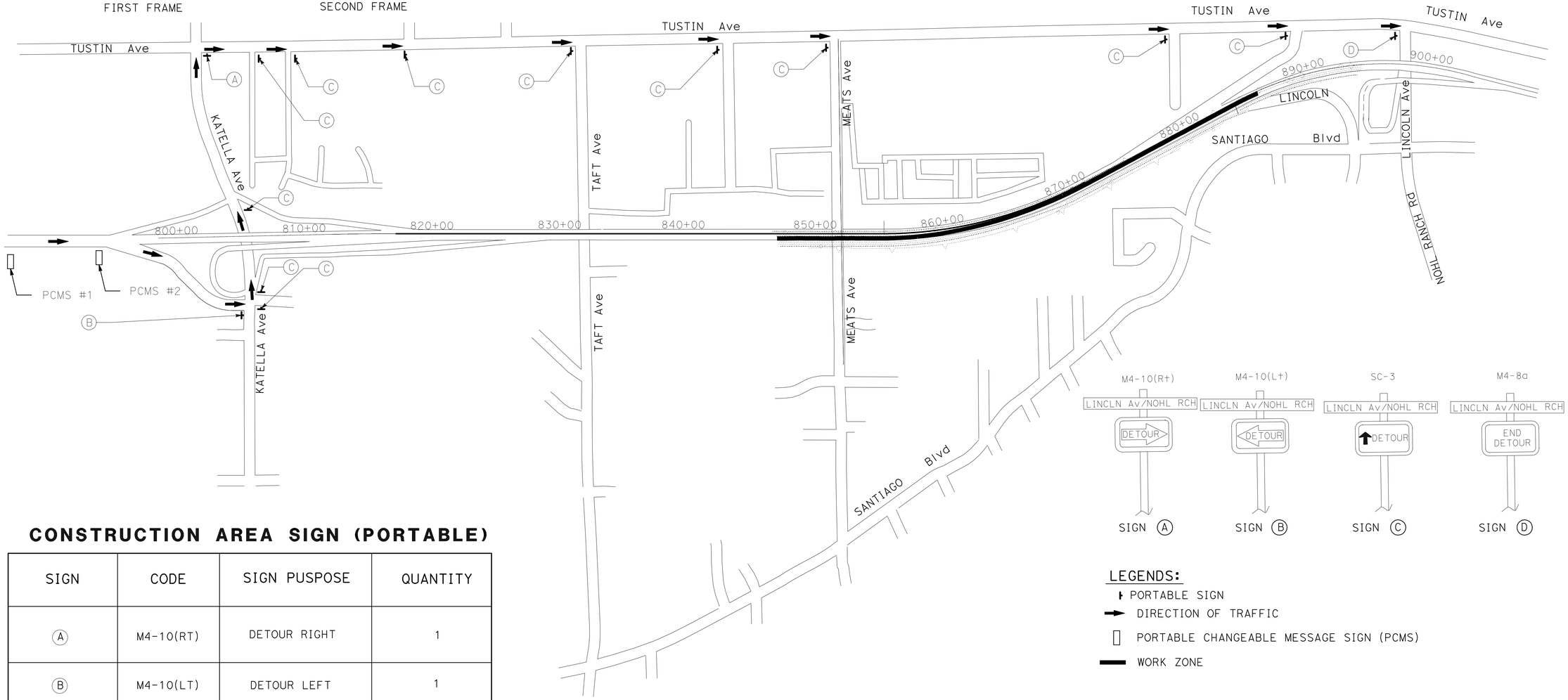


## CONSTRUCTION AREA SIGN (PORTABLE)

| SIGN | CODE | SIGN PUSPOSE | QUANTITY |
|---|---|---|---|
| A | M4-10(RT) | DETOUR RIGHT | 1 |
| B | M4-10(LT) | DETOUR LEFT | 1 |
| C | SC-3 | DETOUR STRAIGHT | 11 |
| D | M4-8a | DETOUR ENDED | 1 |

LEGENDS:

- PORTABLE SIGN
- DIRECTION OF TRAFFIC
- PORTABLE CHANGEABLE MESSAGE SIGN (PCMS)
- WORK ZONE

# DETOUR PLAN AND CONSTRUCTION AREA SIGNS

NO SCALE

**DE-1**

THIS PLAN IS ACCURATE FOR DETOUR LAYOUT ONLY

STATE OF CALIFORNIA - DEPARTMENT OF TRANSPORTATION
Caltrans
DESIGN DIVISION

FUNCTIONAL SUPERVISOR: ADEL MALEK
CALCULATED-DESIGNED BY
CHECKED BY
REVISED BY
DATE REVISED

LAST REVISION 04-15-09
DATE PLOTTED => 26-AUG-2009
TIME PLOTTED => 10:29

| Dist | COUNTY | ROUTE | POST MILES TOTAL PROJECT | SHEET No. | TOTAL SHEETS |
|---|---|---|---|---|---|
| 12 | Ora | 55 | 16.0/16.8 | 28 | 52 |

REGISTERED CIVIL ENGINEER 04-15-09 DATE

5-11-09
PLANS APPROVAL DATE

REGISTERED PROFESSIONAL ENGINEER
TRANG LUONG
No. C64430
Exp. 06/30/09
CIVIL
STATE OF CALIFORNIA

*THE STATE OF CALIFORNIA OR ITS OFFICERS OR AGENTS SHALL NOT BE RESPONSIBLE FOR THE ACCURACY OR COMPLETENESS OF SCANNED COPIES OF THIS PLAN SHEET.*

## ABBREVIATIONS:

PP: PROTECT IN PLACE.

RSP: REMOVE SIGN PANNEL.

ISP: INSTALL SIGN PANNEL AND DISPOSED EXISTING SIGN PANEL.

ISS: INSTALL SIGN STRUCTURE.

RSS: REMOVE SIGN STRUCTURE.

## LEGENDS:

(XX) PAVEMENT DELINEATION DETAIL No.

CHAGNE IN PAVEMENT DELINEATION No.

EXISTING SIGN STRUCTURE.

PROPOSED SIGN STRUCTURE.

DIRECTION OF TRAFFIC FLOW.

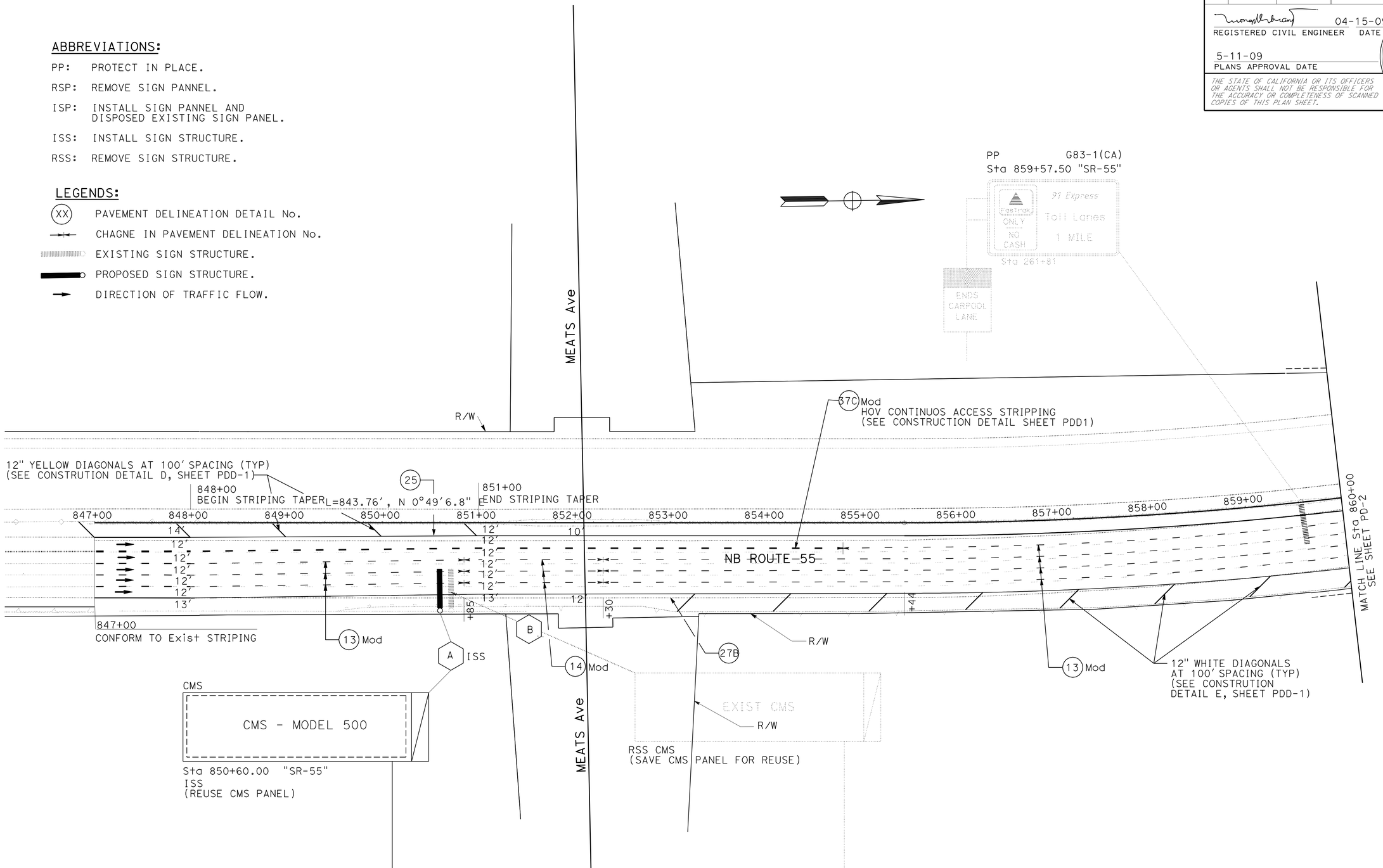


# PAVEMENT DELINEATION AND SIGN PLAN

SCALE: 1"=50'

**PD-1**

THIS PLAN IS ACCURATE FOR PAVEMENT DELINEATION & SIGN WORK ONLY

| REVISED BY | DATE REVISED |
|---|---|
| | |

TRANG LUONG — ADEL MALEK — CALCULATED-DESIGNED BY
CHECKED BY
FUNCTIONAL SUPERVISOR — ADEL MALEK

STATE OF CALIFORNIA - DEPARTMENT OF TRANSPORTATION
Caltrans
DESIGN DIVISION

LAST REVISION 04-14-09 DATE PLOTTED => 26-AUG-2009 TIME PLOTTED => 10:29

| Dist | COUNTY | ROUTE | POST MILES TOTAL PROJECT | SHEET No. | TOTAL SHEETS |
|---|---|---|---|---|---|
| 12 | Ora | 55 | 16.0/16.8 | 29 | 52 |

REGISTERED CIVIL ENGINEER DATE 04-15-09

5-11-09
PLANS APPROVAL DATE

REGISTERED PROFESSIONAL ENGINEER TRANG LUONG No. C64430 Exp. 06/30/09 CIVIL STATE OF CALIFORNIA

*THE STATE OF CALIFORNIA OR ITS OFFICERS OR AGENTS SHALL NOT BE RESPONSIBLE FOR THE ACCURACY OR COMPLETENESS OF SCANNED COPIES OF THIS PLAN SHEET.*

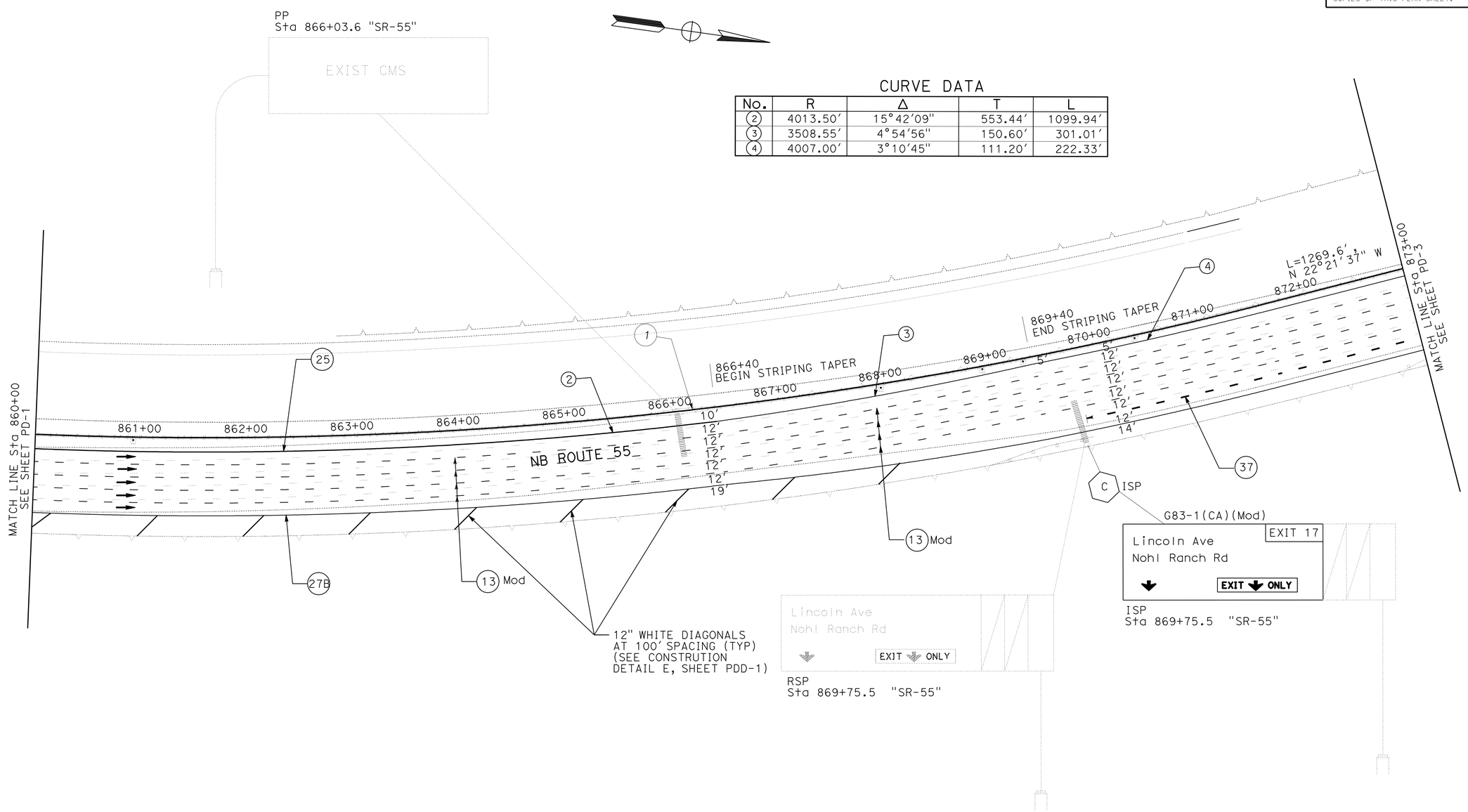


## CURVE DATA

| No. | R | Δ | T | L |
|---|---|---|---|---|
| 2 | 4013.50′ | 15°42′09" | 553.44′ | 1099.94′ |
| 3 | 3508.55′ | 4°54′56" | 150.60′ | 301.01′ |
| 4 | 4007.00′ | 3°10′45" | 111.20′ | 222.33′ |

# PAVEMENT DELINEATION AND SIGN PLAN

SCALE: 1"=50′

**PD-2**

THIS PLAN IS ACCURATE FOR PAVEMENT DELINEATION & SIGN WORK ONLY

STATE OF CALIFORNIA - DEPARTMENT OF TRANSPORTATION
Caltrans® DESIGN DIVISION

FUNCTIONAL SUPERVISOR: ADEL MALEK
CALCULATED-DESIGNED BY: TRANG LUONG
CHECKED BY: ADEL MALEK
REVISED BY
DATE REVISED

LAST REVISION 04-14-09
DATE PLOTTED => 26-AUG-2009
TIME PLOTTED => 10:29

| Dist | COUNTY | ROUTE | POST MILES TOTAL PROJECT | SHEET No. | TOTAL SHEETS |
|---|---|---|---|---|---|
| 12 | Ora | 55 | 16.0/16.8 | 30 | 52 |

REGISTERED CIVIL ENGINEER 04-15-09 DATE

5-11-09
PLANS APPROVAL DATE

REGISTERED PROFESSIONAL ENGINEER TRANG LUONG No. C64430 Exp. 06/30/09 CIVIL STATE OF CALIFORNIA

*THE STATE OF CALIFORNIA OR ITS OFFICERS OR AGENTS SHALL NOT BE RESPONSIBLE FOR THE ACCURACY OR COMPLETENESS OF SCANNED COPIES OF THIS PLAN SHEET.*

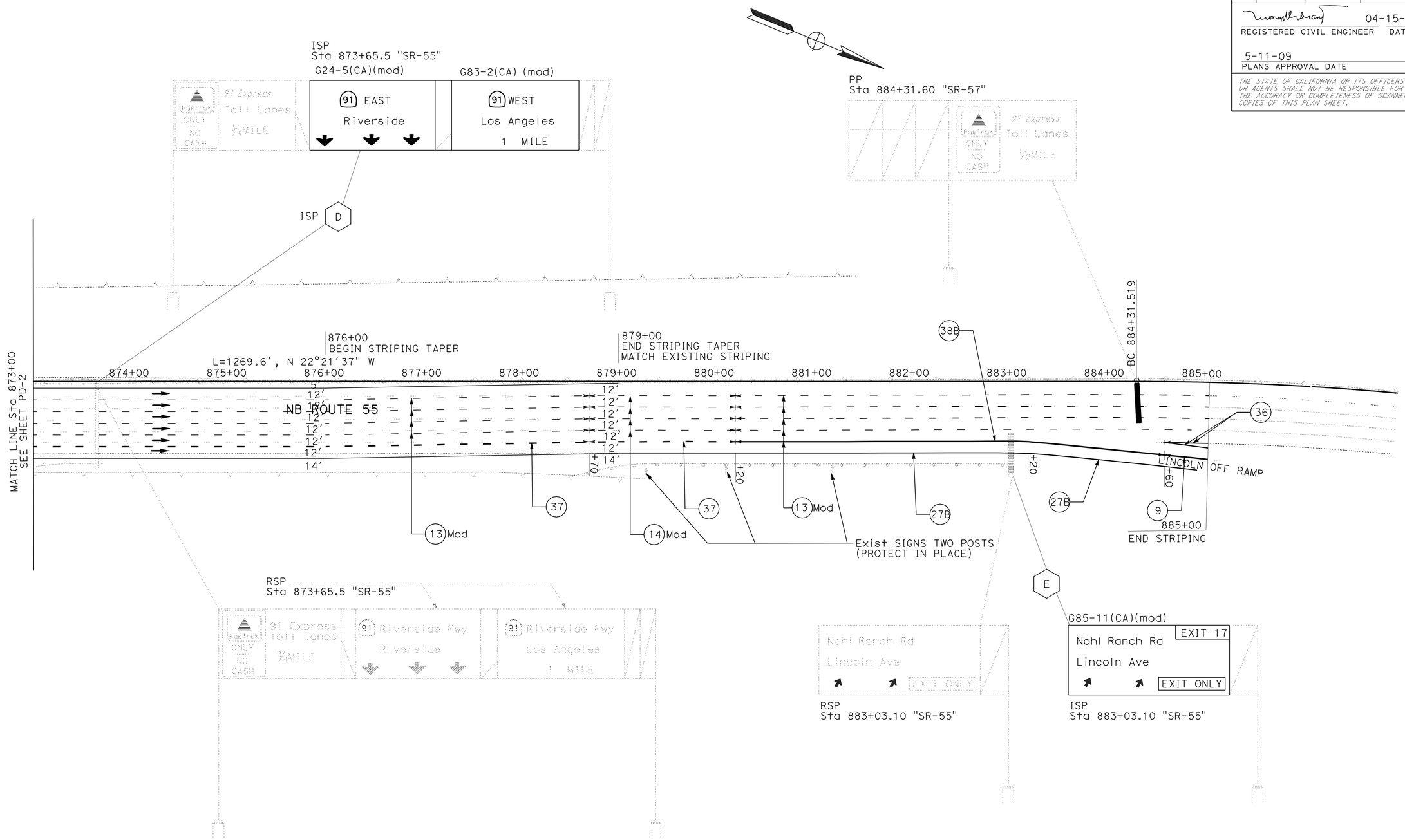


# PAVEMENT DELINEATION AND SIGN PLAN

SCALE: 1"=50'

**PD-3**

THIS PLAN IS ACCURATE FOR PAVEMENT DELINEATION & SIGN WORK ONLY

| REVISED BY | DATE REVISED |
|---|---|
| TRANG LUONG | ADEL MALEK |
| CALCULATED-DESIGNED BY | CHECKED BY |
| FUNCTIONAL SUPERVISOR | ADEL MALEK |

STATE OF CALIFORNIA - DEPARTMENT OF TRANSPORTATION
Caltrans
DESIGN DIVISION

LAST REVISION 04-14-09
DATE PLOTTED => 26-AUG-2009
TIME PLOTTED => 10:29

| Dist | COUNTY | ROUTE | POST MILES TOTAL PROJECT | SHEET No. | TOTAL SHEETS |
|---|---|---|---|---|---|
| 12 | Ora | 55 | 16.0/16.8 | 31 | 52 |

REGISTERED CIVIL ENGINEER 04-15-09 DATE

5-11-09
PLANS APPROVAL DATE

REGISTERED PROFESSIONAL ENGINEER
TRANG LUONG
No. C64430
Exp. 06/30/09
CIVIL
STATE OF CALIFORNIA

*THE STATE OF CALIFORNIA OR ITS OFFICERS OR AGENTS SHALL NOT BE RESPONSIBLE FOR THE ACCURACY OR COMPLETENESS OF SCANNED COPIES OF THIS PLAN SHEET.*

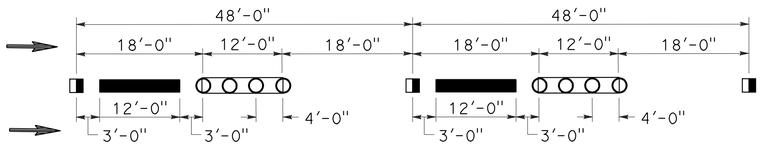


**DETAIL A: 13 Mod**

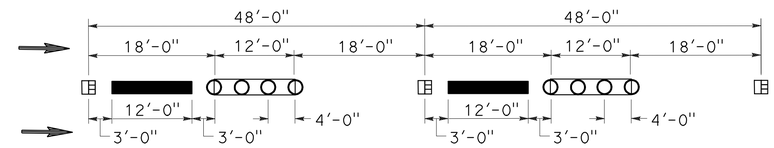


**DETAIL B: 14 Mod**

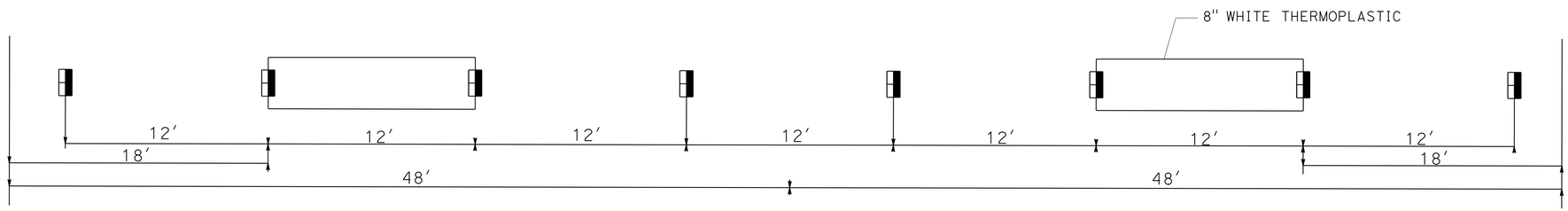


DETAIL C: 37C Mod
(FOR AC PAVEMENT)

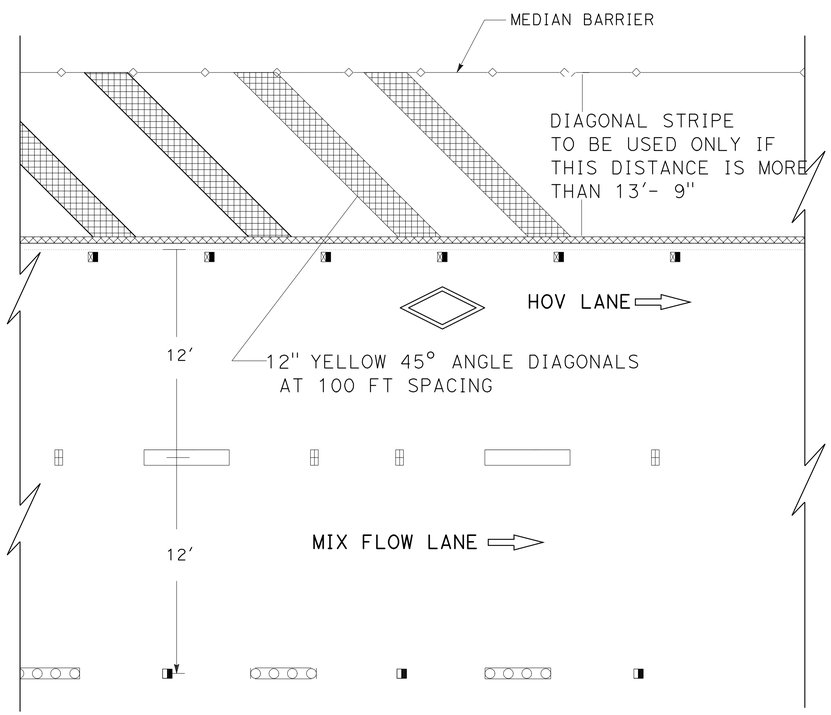


DETAIL D
DIAGONAL DETAIL FOR INSIDE SHOULDER

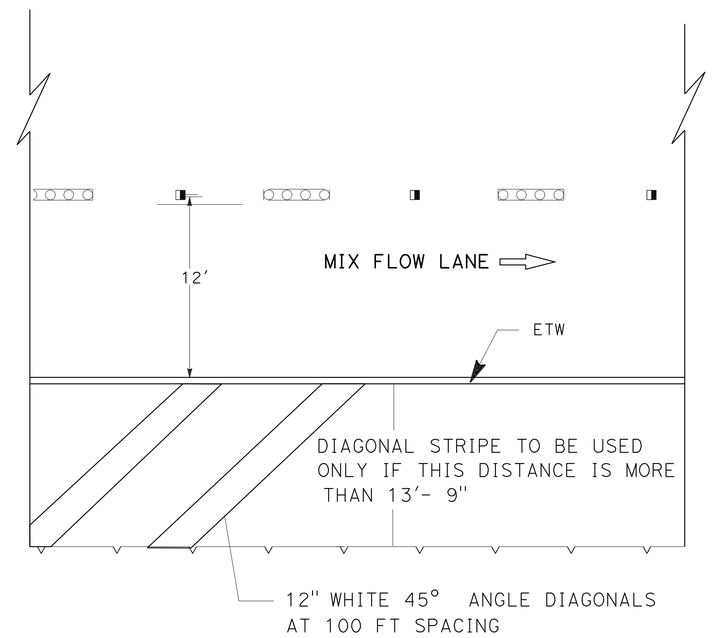


DETAIL E
DIAGONAL DETAIL FOR OUTSIDE SHOULDER

LEGENDS:

- TYPE H ONE-WAY YELLOW RETROREFLECTIVE MARKER
- TYPE G ONE-WAY CLEAR RETROREFLECTIVE MARKER
- TYPE C RED-CLEAR RETROREFLECTIVE MARKER
- TYPE A WHITE NON-REFLECTIVE MARKER
- 4" YELLOW THERMOPLASTIC TRAFFIC STRIPE
- 4" BLACK PAINT TRAFFIC STRIPE (2-COAT)
- 4" WHITE THERMOPLASTIC TRAFFIC STRIPE
- 12" THERMOPLASTIC YELLOW TRAFFIC STRIPE
- 12" THERMOPLASTIC WHITE TRAFFIC STRIPE
- DIRECTION OF TRAFFIC

# PAVEMENT DELINEATION DETAILS

NO SCALE

**PDD-1**

| REVISED BY | DATE REVISED |
|---|---|
| TL | 4/3/2009 |

CALCULATED-DESIGNED BY: TRANG LUONG
CHECKED BY: ADEL MALEK
FUNCTIONAL SUPERVISOR: ADEL MALEK

STATE OF CALIFORNIA - DEPARTMENT OF TRANSPORTATION
Caltrans® DESIGN DIVISION

LAST REVISION 04-14-09
DATE PLOTTED => 26-AUG-2009
TIME PLOTTED => 10:29

| Dist | COUNTY | ROUTE | POST MILES TOTAL PROJECT | SHEET No. | TOTAL SHEETS |
|---|---|---|---|---|---|
| 12 | Ora | 55 | 16.0/16.8 | 32 | 52 |

REGISTERED CIVIL ENGINEER 04-15-09 DATE

5-11-09
PLANS APPROVAL DATE

REGISTERED PROFESSIONAL ENGINEER TRANG LUONG No. C64430 Exp. 06/30/09 CIVIL STATE OF CALIFORNIA

*THE STATE OF CALIFORNIA OR ITS OFFICERS OR AGENTS SHALL NOT BE RESPONSIBLE FOR THE ACCURACY OR COMPLETENESS OF SCANNED COPIES OF THIS PLAN SHEET.*

## OVERHEAD SIGNS QUANTITIES

| SHEET No. | SIGN No. ⬡ | SIGN CODE OR TYPE | FURNISH SIGN STRUCTURE (TRUSS) | INSTALL SIGN STRUCTURE (TRUSS) | 60" CAST-IN-DRILLED-HOLE CONCRETE PILE (SIGN FOUNDATION) | REMOVE SIGN STRUCTURE | INSTALL SIGN PANEL ON EXISTING FRAME | REMARK |
|---|---|---|---|---|---|---|---|---|
| | | | LB | LB | LF | EA | SQFT | |
| PD-1 | A | CMS | 17082 | 17082 | 24 | | | REUSE CMS PANEL |
| | B | CMS | | | | 1 | | SAVE CMS PANEL FOR REUSE |
| PD-2 | C | G83-1(CA) (Mod) | | | | | 175 | |
| PD-3 | D | G24-5(CA) (Mod) | | | | | 290 | |
| | | G83-2(CA) (Mod) | | | | | 146.7 | |
| | E | G85-11(CA) (Mod) | | | | | 229.2 | |
| TOTAL | | | 17082 | 17082 | 24 | 1 | 840.9 | |

## MATERIAL SUMMARY CONTRACTOR FURNISHED SIGNS

| SHEET No. | SIGN No. ⬡ | SIGN CODE OR TYPE | PANNEL SIZE L x D (IN x IN) | SINGLE FACED | BACKGROUND SHEETING COLOR | BACKGROUND RETROREFLECTIVE ASTM TYPE | LEGEND SHEETING COLOR | LEGEND RETROREFLECTIVE ASTM TYPE | PROTECTIVE OVERLAY (PREMIUM) | OVERHEAD FURNISH LAMINATED SIGN PANNEL 1" TYPE A SQFT | DESCRIPTION (REMARKS) |
|---|---|---|---|---|---|---|---|---|---|---|---|
| PD-2 | D | G83-1 (CA) (Mod) | 252x100 | x | G | IV | W | IV | x | 175 | |
| PD-3 | E | G24-5 (CA) (Mod) | 348x120 | x | G | IV | W | IV | x | 290 | |
| | | G83-2 (CA) (Mod) | 192x110 | x | G | IV | W | IV | x | 146.7 | |
| | F | G85-11 (CA) (Mod) | 300x110 | x | G | IV | W | IV | x | 229.2 | |
| TOTAL | | | | | | | | | | 840.9 | |

## PAVEMENT DELINEATION QUANTITIES

| SHEET No. | NB SR-55 STATION | THERMOPLASTIC TRAFFIC STRIPE: DETAIL 25 4" SOLID YELLOW | DETAIL 27B 4" SOLID WHITE | DETAIL 13 Mod 4" WHITE BROKEN (36-12) | DETAIL 14 Mod 4" WHITE BROKEN (36-12) | DETAIL 9 4" WHITE BROKEN (17-7) | DETAIL 37 (HOV & AUX) 8" WHITE BROKEN (12-3) | DETAIL 38B 8" SOLID WHITE | DETAIL 36 8" SOLID WHITE | PAINT TRAFFIC STRIPE 2-COAT: DETAIL 13 Mod & 14 Mod 4" BLACK BROKEN (36-12) | THERMOPLASTIC PAVEMENT MARKING: 12" SOLID DIAGONAL YELLOW | 12" SOLID DIAGONAL WHITE | PAVEMENT MARKER: NON-REFLECTIVE TYPE A | RETROFLECTIVE TYPE H | RETROFLECTIVE TYPE G | RED CLEAR RETROFLECTIVE TYPE C | REMOVE: THERMOPLASTIC YELLOW TRAFFIC STRIPE | THERMOPLASTIC TRAFFIC STRIPE | THERMOPLASTIC YELLOW PAVEMENT MARKING | PAVEMENT MARKER |
|---|---|---|---|---|---|---|---|---|---|---|---|---|---|---|---|---|---|---|---|---|
| | | LF | LF | LF | LF | LF | LF | LF | LF | LF | SQFT | SQFT | EA | EA | EA | EA | LF | LF | SQFT | EA |
| PD-1 | 847+00 TO 860+00 | 1300 | 1324 | 3562 | 459 | | 1307 | | | 4021 | 100 | 196 | 335 | 28 | 86 | 61 | 1300 | 6652 | 100 | 510 |
| PD-2 | 860+00 TO 873+00 | 1300 | 1324 | 5265 | | | 324 | | | 5265 | | 269 | 439 | 28 | 111 | 12 | 1300 | 6914 | | 590 |
| PD-3 | 873+00 TO 885+00 | 1200 | 1224 | 4329 | 633 | 140 | 744 | 480 | 280 | 4962 | | | 413 | 26 | 143 | 30 | 1200 | 7830 | | 612 |
| SUB TOTAL | | 3800 | 3873 | 13156 | 1092 | | | 480 | 280 | | 100 | 465 | | 82 | 340 | 103 | | | | |
| TOTAL | | 7673 | | 14248 | | 140 | 2375 | 760 | | 14248 | 565 | | 1187 | 525 | | | 3800 | 21396 | 100 | 1712 |

# PAVEMENT DELINEATION AND SIGN QUANTITIES

PDQ-1

| TL | 4/3/2009 |
|---|---|
| REVISED BY | DATE REVISED |
| TRANG LUONG | ADEL MALEK |
| CALCULATED-DESIGNED BY | CHECKED BY |
| FUNCTIONAL SUPERVISOR | ADEL MALEK |

STATE OF CALIFORNIA - DEPARTMENT OF TRANSPORTATION
Caltrans® DESIGN DIVISION

LAST REVISION 04-14-09 | DATE PLOTTED => 26-AUG-2009 TIME PLOTTED => 10:29

| Dist | COUNTY | ROUTE | POST MILES TOTAL PROJECT | SHEET No. | TOTAL SHEETS |
|---|---|---|---|---|---|
| 12 | Ora | 55 | 16.0/16.8 | 33 | 52 |

REGISTERED CIVIL ENGINEER 04-15-09 DATE

5-11-09
PLANS APPROVAL DATE

REGISTERED PROFESSIONAL ENGINEER TRANG LUONG No. C64430 Exp.06/30/09 CIVIL STATE OF CALIFORNIA

*THE STATE OF CALIFORNIA OR ITS OFFICERS OR AGENTS SHALL NOT BE RESPONSIBLE FOR THE ACCURACY OR COMPLETENESS OF SCANNED COPIES OF THIS PLAN SHEET.*

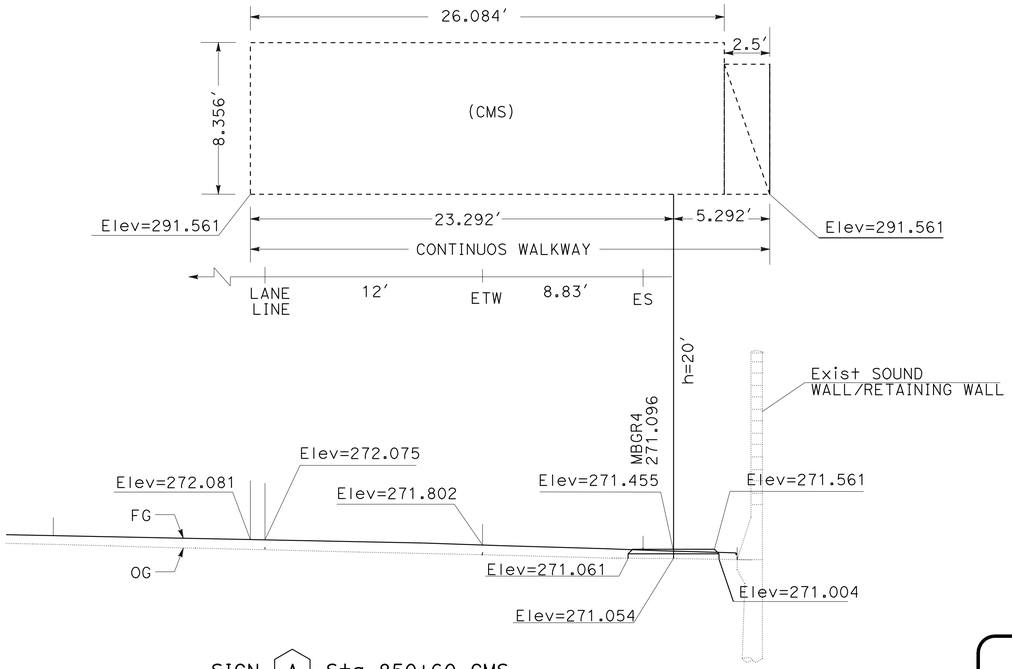


SIGN (A) Sta 850+60 CMS
TRUSS (UNBALANCED BUTTERFLY)

FNBT - LINE "A" STA 850+60
(REUSED CMS PANEL)

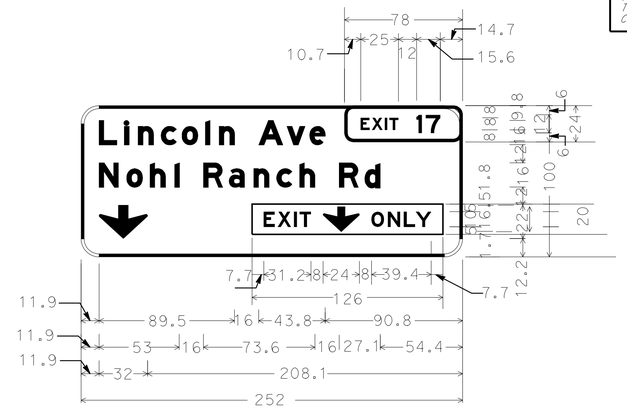


SIGN (D) - Sta 869+75.5

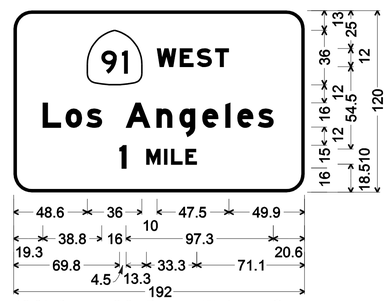


12.0" Radius, 2.0" Border, White on Green;
[WEST] E Mod; [Los Angeles] E Mod;
[1] E Mod [ ] E [MILE] E Mod;

SIGN (E) - Sta 874+00
G83 (CA) (Mod)

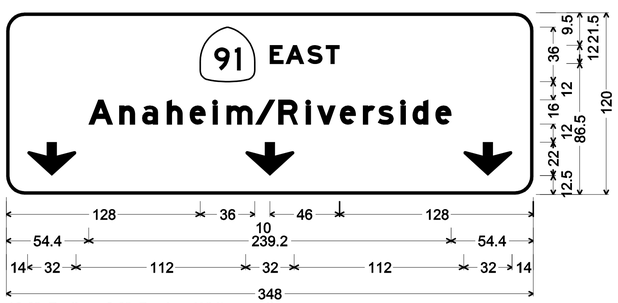


12.0" Radius, 2.0" Border, White on Green;
[EAST] E Mod; [Anaheim/Riverside] E Mod; Down Arrow 22.0" 270°;
Down Arrow 22.0" 270°; Down Arrow 22.0" 270°;

SIGN (E) - Sta 874+00
G24 (CA) (Mod)

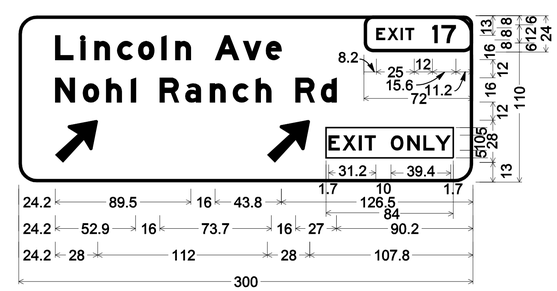


SIGN (F) - Sta 883+03.10
G85-11 (CA) (Mod)

# SIGN DETAILS

NO SCALE

**SD-1**

STATE OF CALIFORNIA - DEPARTMENT OF TRANSPORTATION
Caltrans® DESIGN DIVISION

FUNCTIONAL SUPERVISOR: ADEL MALEK
CALCULATED-DESIGNED BY: TRANG LUONG
CHECKED BY: ADEL MALEK
REVISED BY: TL
DATE REVISED: 4/3/2009

LAST REVISION 04-14-09 DATE PLOTTED => 26-AUG-2009 TIME PLOTTED => 10:30

| Dist | COUNTY | ROUTE | POST MILES TOTAL PROJECT | SHEET No. | TOTAL SHEETS |
|---|---|---|---|---|---|
| 12 | Ora | 55 | 16.0/16.8 | 34 | 52 |

REGISTERED CIVIL ENGINEER 04-15-09 DATE

5-11-09
PLANS APPROVAL DATE

REGISTERED PROFESSIONAL ENGINEER TRANG LUONG No. C64430 Exp. 06/30/09 CIVIL STATE OF CALIFORNIA

*THE STATE OF CALIFORNIA OR ITS OFFICERS OR AGENTS SHALL NOT BE RESPONSIBLE FOR THE ACCURACY OR COMPLETENESS OF SCANNED COPIES OF THIS PLAN SHEET.*

# ROADWAY QUANTITIES

| SHEET No. | STATION LIMITS | RELOCATE CALL BOX (N) | ADJUST MONUMENT COVER | REMOVE METAL BEAM GUARD RAILING | ADJUST METAL BEAM GUARD RAILING | COLD PLANE ASPHALT CONCRETE PAVEMENT | REMOVE CONCRETE BARRIER | HOT MIX ASPHALT (OPEN GRADED) | HOT MIX ASPHALT (TYPE A) | TACK COAT | CONCRETE BARRIER (TYPE 60C) | CONCRETE BARRIER (TYPE 60D) | CONCRETE BARRIER (TYPE 60E) | CONCRETE BARRIER MARKER |
|---|---|---|---|---|---|---|---|---|---|---|---|---|---|---|
| | | EA | EA | FT | FT | SQYD | FT | TON | TON | TON | FT | FT | FT | EA |
| L-1 | "NB SR-55 " Sta 847+00 TO 860+00 | 1 | 4 | 210 | | 14444 | 721 | 845 | 2140 | 5.8 | 1397 | 157 | 216 | 38 |
| L-2 | "NB SR-55 " Sta 860+00 TO 873+00 | | 4 | 110 | 30 | 14444 | | 845 | 217 | 5.8 | 1366 | | | 30 |
| L-3 | "NB SR-55 " Sta 873+00 TO 885+00 | | 4 | | 80 | 13334 | | 780 | 1741 | 5.3 | | | | |
| TOTAL | | 1 | 12 | 320 | 110 | 42222 | 721 | 2470 | 4095 | 16.9 | 2763 | 157 | 216 | 68 |

(N) NOT A SEPARATE PAY ITEM, FOR INFORMATION ONLY.

# TEMPORARY DRAINAGE INLET PROTECTION QUANTITIES

| SHEET No. | APROXIMATE STATION | APPROXIMATE OFFSET DISTANCE (LEFT/RIGHT) | TYPE OF TEMPORARY DRAINAGE INLET PROTECTION | QUANTITIES (EA) |
|---|---|---|---|---|
| L-1 | 848+10 | 85 (Rt) | 3B | 1 |
| | 849+70 | 85 (Rt) | 3B | 1 |
| | 853+10 | 2 (Rt) | 3B | 1 |
| | 854+15 | 2 (Rt) | 3B | 1 |
| | 857+10 | 2 (Rt) | 3B | 1 |
| | 859+90 | 2 (Rt) | 3B | 1 |
| L-2 | 860+90 | 2 (Rt) | 3B | 1 |
| | 867+95 | 2 (Rt) | 3B | 1 |
| | 868+90 | 2 (Rt) | 3B | 1 |
| | 869+30 | 2 (Rt) | 3B | 1 |
| | 870+40 | 2 (Rt) | 3B | 1 |
| L-3 | 873+80 | 80 (Rt) | 3B | 1 |
| | 874+85 | 80 (Rt) | 3B | 1 |
| | 875+80 | 80 (Rt) | 3B | 1 |
| | 878+60 | 80 (Rt) | 3B | 1 |
| | 881+10 | 80 (Rt) | 3B | 1 |
| TOTAL | | | | 16 |

# TEMPORARY CONCRETE WASHOUT (PORTABLE)

| | TEMPORARY CONCRETE WASHOUT (PORTABLE) |
|---|---|
| | EA |
| TOTAL | 2 |

# SUMMARY OF QUANTITIES

Q-1

| CALCULATED-DESIGNED BY | TRANG LUONG | REVISED BY | TL |
|---|---|---|---|
| CHECKED BY | ADEL MALEK | DATE REVISED | 4/3/2009 |
| FUNCTIONAL SUPERVISOR | ADEL MALEK | | |

STATE OF CALIFORNIA - DEPARTMENT OF TRANSPORTATION
Caltrans DESIGN DIVISION

LAST REVISION 04-14-09 | DATE PLOTTED => 26-AUG-2009 | TIME PLOTTED => 10:30

| Dist | COUNTY | ROUTE | POST MILES TOTAL PROJECT | SHEET No. | TOTAL SHEETS |
|---|---|---|---|---|---|
| 12 | Ora | 55 | 16.0/16.8 | 35 | 52 |

Vanessa Van Truong 04-15-09
REGISTERED ELECTRICAL ENGINEER DATE

5-11-09
PLANS APPROVAL DATE

REGISTERED PROFESSIONAL ENGINEER V.V. TRUONG No. E13983 Exp. 6/30/10 ELECTRICAL STATE OF CALIFORNIA

*THE STATE OF CALIFORNIA OR ITS OFFICERS OR AGENTS SHALL NOT BE RESPONSIBLE FOR THE ACCURACY OR COMPLETENESS OF SCANNED COPIES OF THIS PLAN SHEET.*

NOTE: FOR COMPLETE RIGHT OF WAY AND ACCURATE ACCESS DATA, SEE RIGHT OF WAY RECORD MAPS AT DISTRICT OFFICE.

## ABBREVIATIONS:

| | |
|---|---|
| TYPE A CABLE | 36 SINGLEMODE FIBER OPTIC CABLE |
| TYPE B CABLE | 72 SINGLEMODE FIBER OPTIC CABLE |
| TYPE C CABLE | 72 SINGLEMODE FIBER OPTIC CABLE |
| TYPE D CABLE | 12 SINGLEMODE FIBER OPTIC CABLE |

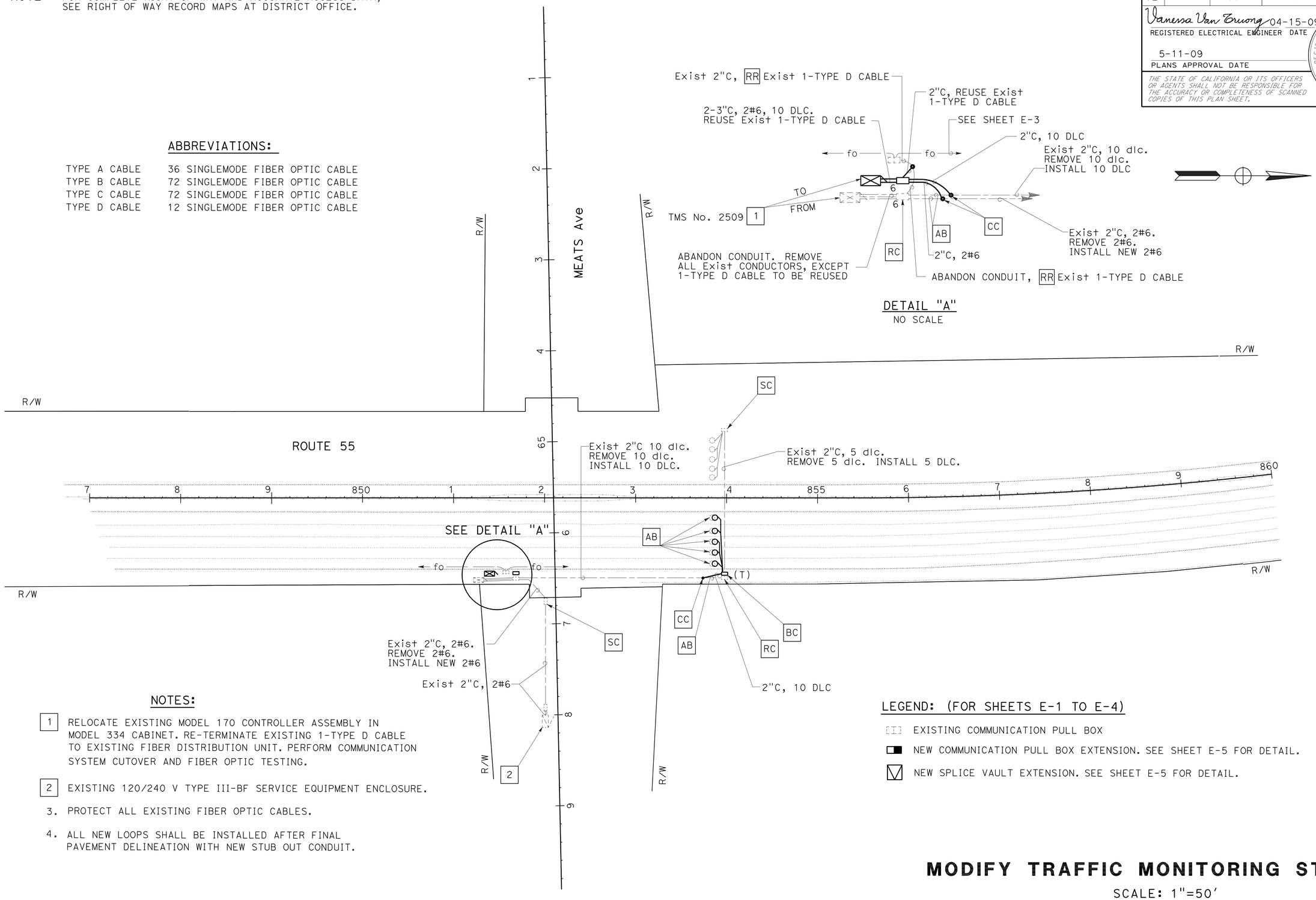


## NOTES:

1. RELOCATE EXISTING MODEL 170 CONTROLLER ASSEMBLY IN MODEL 334 CABINET. RE-TERMINATE EXISTING 1-TYPE D CABLE TO EXISTING FIBER DISTRIBUTION UNIT. PERFORM COMMUNICATION SYSTEM CUTOVER AND FIBER OPTIC TESTING.
2. EXISTING 120/240 V TYPE III-BF SERVICE EQUIPMENT ENCLOSURE.
3. PROTECT ALL EXISTING FIBER OPTIC CABLES.
4. ALL NEW LOOPS SHALL BE INSTALLED AFTER FINAL PAVEMENT DELINEATION WITH NEW STUB OUT CONDUIT.

## LEGEND: (FOR SHEETS E-1 TO E-4)

- EXISTING COMMUNICATION PULL BOX
- NEW COMMUNICATION PULL BOX EXTENSION. SEE SHEET E-5 FOR DETAIL.
- NEW SPLICE VAULT EXTENSION. SEE SHEET E-5 FOR DETAIL.

# MODIFY TRAFFIC MONITORING STATION

SCALE: 1"=50'

THIS PLAN IS ACCURATE FOR ELECTRICAL WORK ONLY

E-1

STATE OF CALIFORNIA - DEPARTMENT OF TRANSPORTATION
Caltrans ELECTRICAL DESIGN

FUNCTIONAL SUPERVISOR: SHAHRAM SHAHRIARI
CALCULATED-DESIGNED BY: FRANCIS M. ALVIAR
CHECKED BY: VANESSA V. TRUONG
REVISED BY / DATE REVISED

LAST REVISION 04-15-09
DATE PLOTTED => 26-AUG-2009
TIME PLOTTED => 10:30

| Dist | COUNTY | ROUTE | POST MILES TOTAL PROJECT | SHEET No. | TOTAL SHEETS |
|---|---|---|---|---|---|
| 12 | Ora | 55 | 16.0/16.8 | 36 | 52 |

Vanessa Van Truong 04-15-09
REGISTERED ELECTRICAL ENGINEER DATE

5-11-09
PLANS APPROVAL DATE

REGISTERED PROFESSIONAL ENGINEER V.V.TRUONG No. E13983 Exp. 6/30/10 ELECTRICAL STATE OF CALIFORNIA

*THE STATE OF CALIFORNIA OR ITS OFFICERS OR AGENTS SHALL NOT BE RESPONSIBLE FOR THE ACCURACY OR COMPLETENESS OF SCANNED COPIES OF THIS PLAN SHEET.*

**NOTE:** FOR COMPLETE RIGHT OF WAY AND ACCURATE ACCESS DATA, SEE RIGHT OF WAY RECORD MAPS AT DISTRICT OFFICE.




DETAIL "B"
NO SCALE




Type III-BF service equipment enclosure

EXISTING CIRCUIT BREAKER DETAIL

(ID No.12-55-055-016.200)

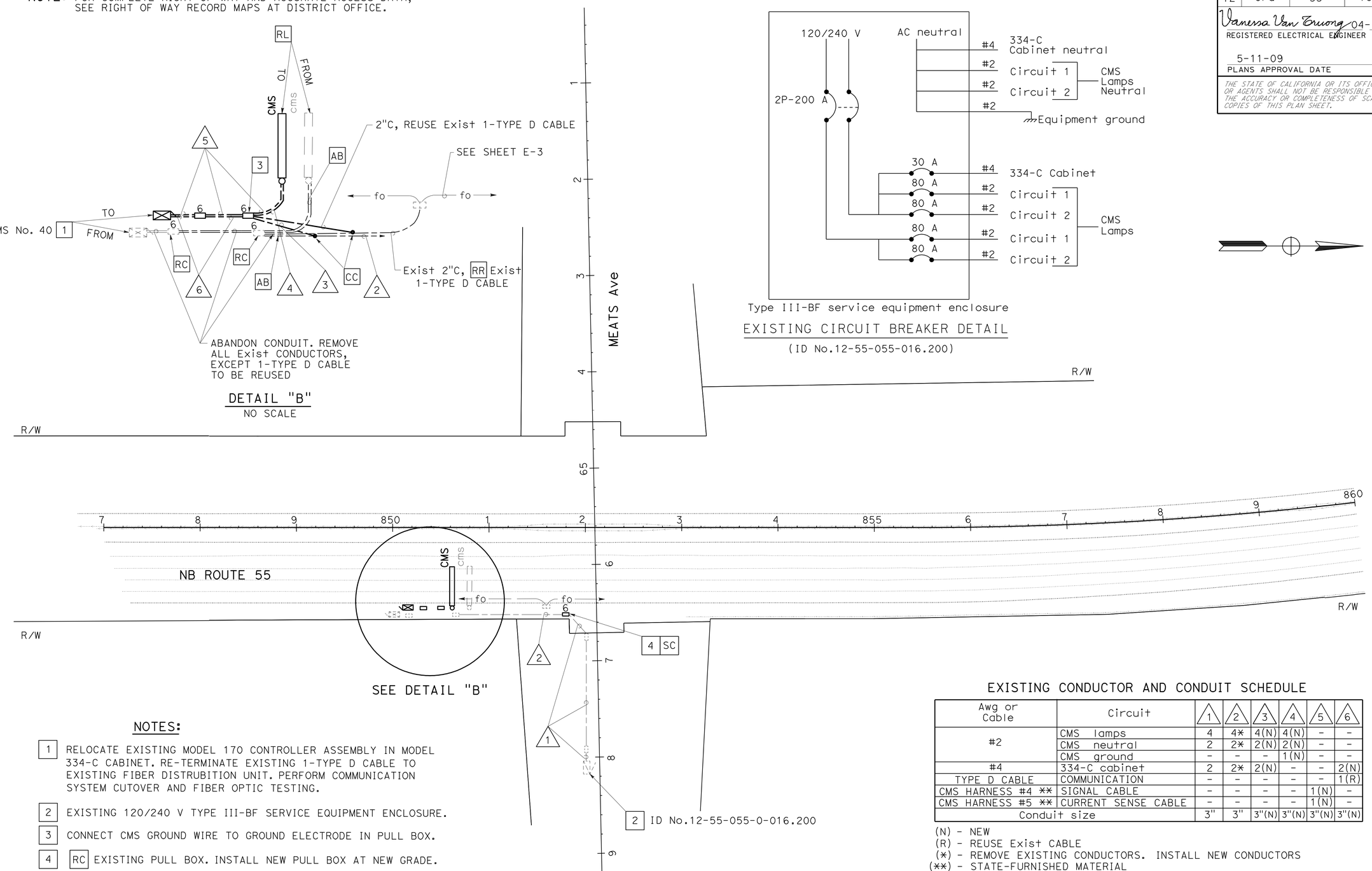


## NOTES:

1. RELOCATE EXISTING MODEL 170 CONTROLLER ASSEMBLY IN MODEL 334-C CABINET. RE-TERMINATE EXISTING 1-TYPE D CABLE TO EXISTING FIBER DISTRUBITION UNIT. PERFORM COMMUNICATION SYSTEM CUTOVER AND FIBER OPTIC TESTING.
2. EXISTING 120/240 V TYPE III-BF SERVICE EQUIPMENT ENCLOSURE.
3. CONNECT CMS GROUND WIRE TO GROUND ELECTRODE IN PULL BOX.
4. RC EXISTING PULL BOX. INSTALL NEW PULL BOX AT NEW GRADE.
5. PROTECT ALL EXISTING FIBER OPTIC CABLES.
6. NEW CMS LOCATION SHALL BE WITHIN 50 FEET OF THE CONTROLLER CABINET.
7. FOR LEGEND AND ABBREVIATIONS SEE SHEET E-1.

EXISTING CONDUCTOR AND CONDUIT SCHEDULE

| Awg or Cable | Circuit | 1 | 2 | 3 | 4 | 5 | 6 |
|---|---|---|---|---|---|---|---|
| #2 | CMS lamps | 4 | 4* | 4(N) | 4(N) | - | - |
| | CMS neutral | 2 | 2* | 2(N) | 2(N) | - | - |
| | CMS ground | - | - | - | 1(N) | - | - |
| #4 | 334-C cabinet | 2 | 2* | 2(N) | - | - | 2(N) |
| TYPE D CABLE | COMMUNICATION | - | - | - | - | - | 1(R) |
| CMS HARNESS #4 ** | SIGNAL CABLE | - | - | - | - | 1(N) | - |
| CMS HARNESS #5 ** | CURRENT SENSE CABLE | - | - | - | - | 1(N) | - |
| Conduit size | | 3" | 3" | 3"(N) | 3"(N) | 3"(N) | 3"(N) |

(N) - NEW
(R) - REUSE Exist CABLE
(*) - REMOVE EXISTING CONDUCTORS. INSTALL NEW CONDUCTORS
(**) - STATE-FURNISHED MATERIAL

# MODIFY CHANGEABLE MESSAGE SIGN SYSTEM

SCALE: 1"=50'

THIS PLAN IS ACCURATE FOR ELECTRICAL WORK ONLY

**E-2**

STATE OF CALIFORNIA - DEPARTMENT OF TRANSPORTATION
Caltrans ELECTRICAL DESIGN

FUNCTIONAL SUPERVISOR: SHAHRAM SHAHRIARI
CALCULATED-DESIGNED BY: FRANCIS M. ALVIAR
CHECKED BY: VANESSA V. TRUONG
REVISED BY / DATE REVISED

LAST REVISION 04-15-09
DATE PLOTTED => 26-AUG-2009
TIME PLOTTED => 10:30

| Dist | COUNTY | ROUTE | POST MILES TOTAL PROJECT | SHEET No. | TOTAL SHEETS |
|---|---|---|---|---|---|
| 12 | Ora | 55 | 16.0/16.8 | 37 | 52 |

Vanessa Van Truong 04-15-09
REGISTERED ELECTRICAL ENGINEER DATE

5-11-09
PLANS APPROVAL DATE

REGISTERED PROFESSIONAL ENGINEER V.V.TRUONG No. E13983 Exp.6/30/10 ELECTRICAL STATE OF CALIFORNIA

*THE STATE OF CALIFORNIA OR ITS OFFICERS OR AGENTS SHALL NOT BE RESPONSIBLE FOR THE ACCURACY OR COMPLETENESS OF SCANNED COPIES OF THIS PLAN SHEET.*

**NOTE:** FOR COMPLETE RIGHT OF WAY AND ACCURATE ACCESS DATA, SEE RIGHT OF WAY RECORD MAPS AT DISTRICT OFFICE.

## NOTES (FOR SHEETS E-3 TO E-4)

1. PROTECT Exist SPLICE VAULT IN PLACE. REMOVE Exist SPLICE VAULT COVER. INSTALL NEW SPLICE VAULT EXTENSION WITH NEW SPLICE VAULT COVER. SEE SHEET E-5 FOR DETAILS.

2. PROTECT Exist COMMUNICATION PULL BOX IN PLACE. REMOVE Exist PULL BOX COVER. INSTALL NEW COMMUNICATION PULL BOX EXTENSION WITH NEW COMMUNICATION PULL BOX COVER. SEE SHEET E-5 FOR DETAILS.

3. FOR LEGEND AND ABBREVIATION SEE SHEET E-1.

## EXISTING CONDUCTOR AND CONDUIT SCHEDULE (FOR SHEETS E-3 TO E-4)

| CONDUCTOR TYPE | 1 | 2 | 3 |
|---|---|---|---|
| TYPE A CABLE | 1 | - | 1 |
| TYPE B CABLE | 1 | - | 1 |
| TYPE C CABLE | 1 | - | 1 |
| TYPE D CABLE | - | - | 2 |
| PULL ROPE | 1 | 4 | - |
| CONDUIT SIZE | 4" | 4" | 4" |

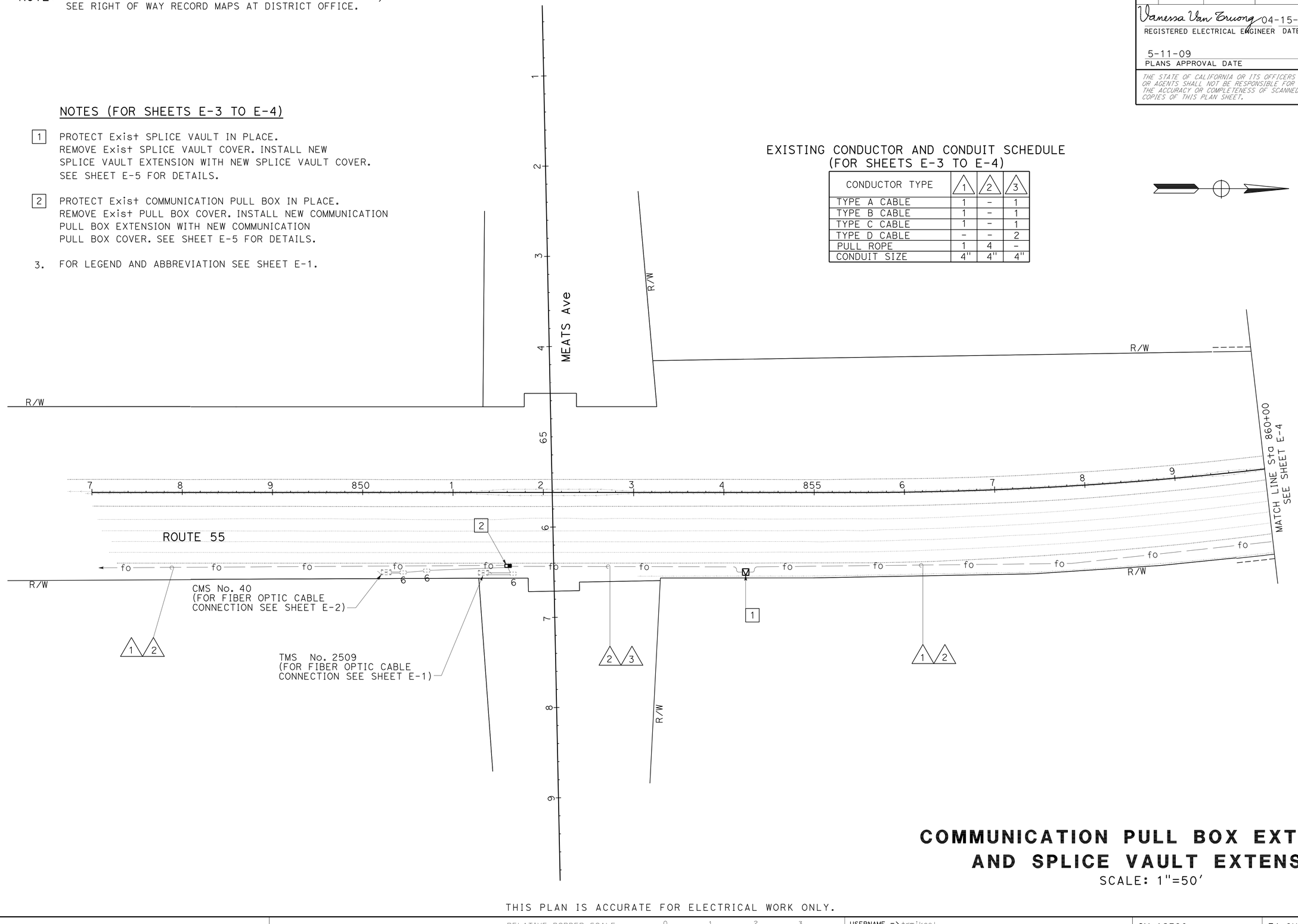


# COMMUNICATION PULL BOX EXTENSION AND SPLICE VAULT EXTENSION

SCALE: 1"=50'

E-3

THIS PLAN IS ACCURATE FOR ELECTRICAL WORK ONLY.

STATE OF CALIFORNIA - DEPARTMENT OF TRANSPORTATION
Caltrans ELECTRICAL DESIGN

FUNCTIONAL SUPERVISOR: SHAHRAM SHAHRIARI
CALCULATED-DESIGNED BY: FRANCIS M. ALVIAR
CHECKED BY: VANESSA V. TRUONG
REVISED BY / DATE REVISED

LAST REVISION 04-15-09 | DATE PLOTTED => 26-AUG-2009 | TIME PLOTTED => 10:30

BORDER LAST REVISED 4/11/2008 | RELATIVE BORDER SCALE IS IN INCHES 0 1 2 3 | USERNAME => trmikesl | DGN FILE => c0h950ua003.dgn | CU 12390 | EA 0H9501

| Dist | COUNTY | ROUTE | POST MILES TOTAL PROJECT | SHEET No. | TOTAL SHEETS |
|---|---|---|---|---|---|
| 12 | Ora | 55 | 16.0/16.8 | 38 | 52 |

Vanessa Van Truong 04-15-09
REGISTERED ELECTRICAL ENGINEER DATE

5-11-09
PLANS APPROVAL DATE

REGISTERED PROFESSIONAL ENGINEER
V.V.TRUONG
No. E13983
Exp.6/30/10
ELECTRICAL
STATE OF CALIFORNIA

*THE STATE OF CALIFORNIA OR ITS OFFICERS OR AGENTS SHALL NOT BE RESPONSIBLE FOR THE ACCURACY OR COMPLETENESS OF SCANNED COPIES OF THIS PLAN SHEET.*

NOTE: FOR COMPLETE RIGHT OF WAY AND ACCURATE ACCESS DATA, SEE RIGHT OF WAY RECORD MAPS AT DISTRICT OFFICE.

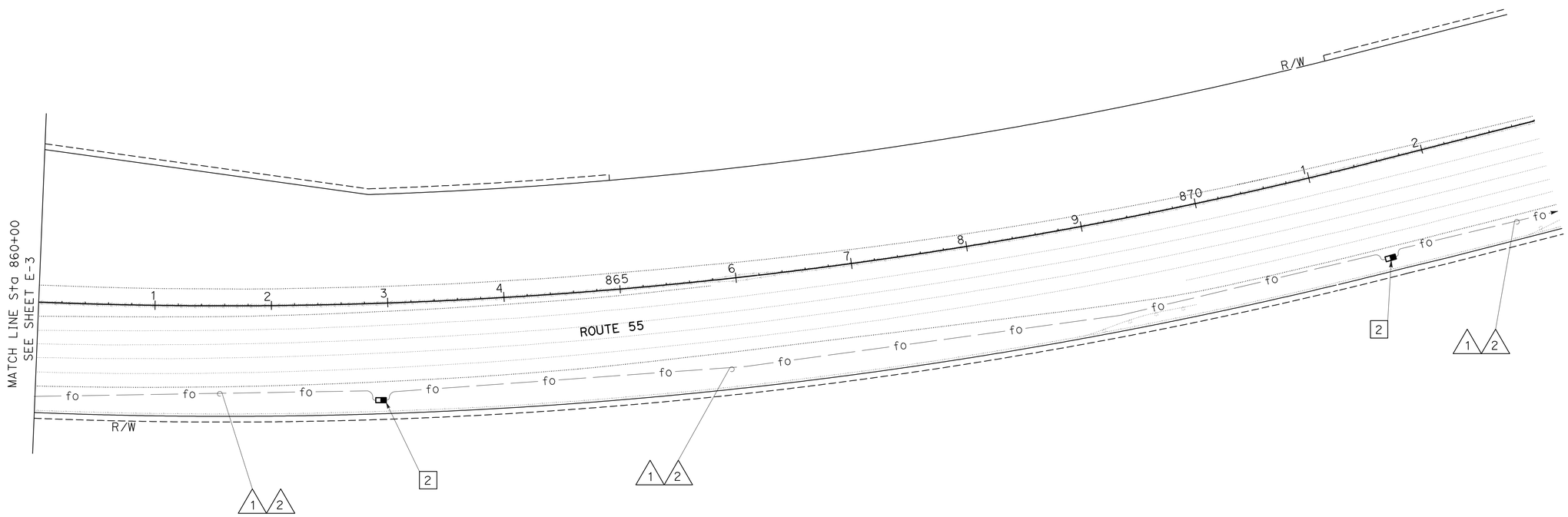


FOR LEGEND, AND ABBREVIATIONS SEE SHEET E-1
FOR CONDUCTOR AND CONDUIT SCHEDULE SEE SHEET E-3

# COMMUNICATION PULL BOX EXTENSION AND SPLICE VAULT EXTENSION

SCALE: 1"=50'

THIS PLAN IS ACCURATE FOR ELECTRICAL WORK ONLY.

**E-4**

STATE OF CALIFORNIA - DEPARTMENT OF TRANSPORTATION
Caltrans
ELECTRICAL DESIGN

FUNCTIONAL SUPERVISOR: SHAHRAM SHAHRIARI
CALCULATED-DESIGNED BY: FRANCIS M. ALVIAR
CHECKED BY: VANESSA V. TRUONG
REVISED BY
DATE REVISED

LAST REVISION 04-15-09
DATE PLOTTED => 26-AUG-2009
TIME PLOTTED => 10:30

| Dist | COUNTY | ROUTE | POST MILES TOTAL PROJECT | SHEET No. | TOTAL SHEETS |
|---|---|---|---|---|---|
| 12 | Ora | 55 | 16.0/16.8 | 39 | 52 |

Vanessa Van Truong 04-15-09
REGISTERED ELECTRICAL ENGINEER DATE

5-11-09
PLANS APPROVAL DATE

REGISTERED PROFESSIONAL ENGINEER V.V.TRUONG No. E13983 Exp. 6/30/10 ELECTRICAL STATE OF CALIFORNIA

*THE STATE OF CALIFORNIA OR ITS OFFICERS OR AGENTS SHALL NOT BE RESPONSIBLE FOR THE ACCURACY OR COMPLETENESS OF SCANNED COPIES OF THIS PLAN SHEET.*

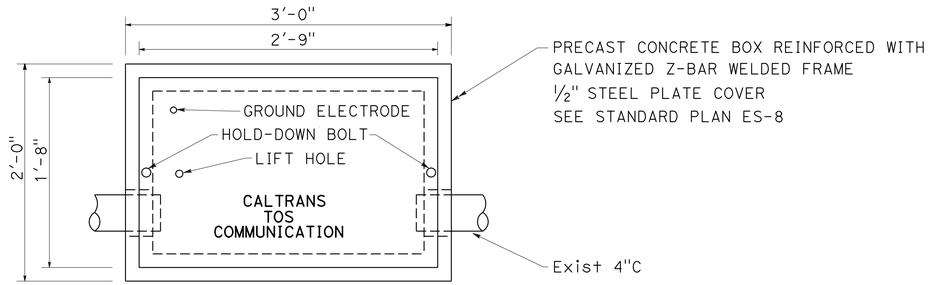


COMMUNICATION PULL BOX

TOP VIEW

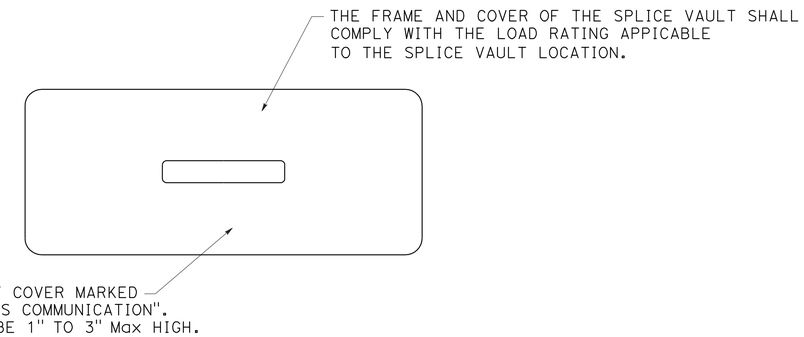


SPLICE VAULT

TOP VIEW

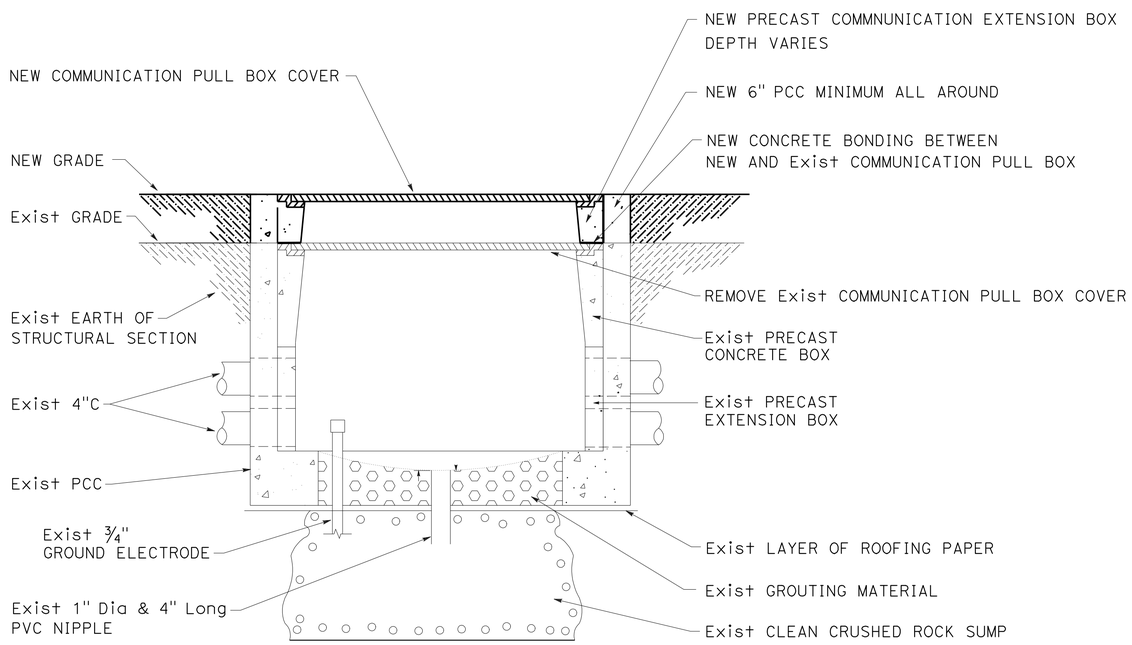


COMMUNICATION PULL BOX

SIDE VIEW

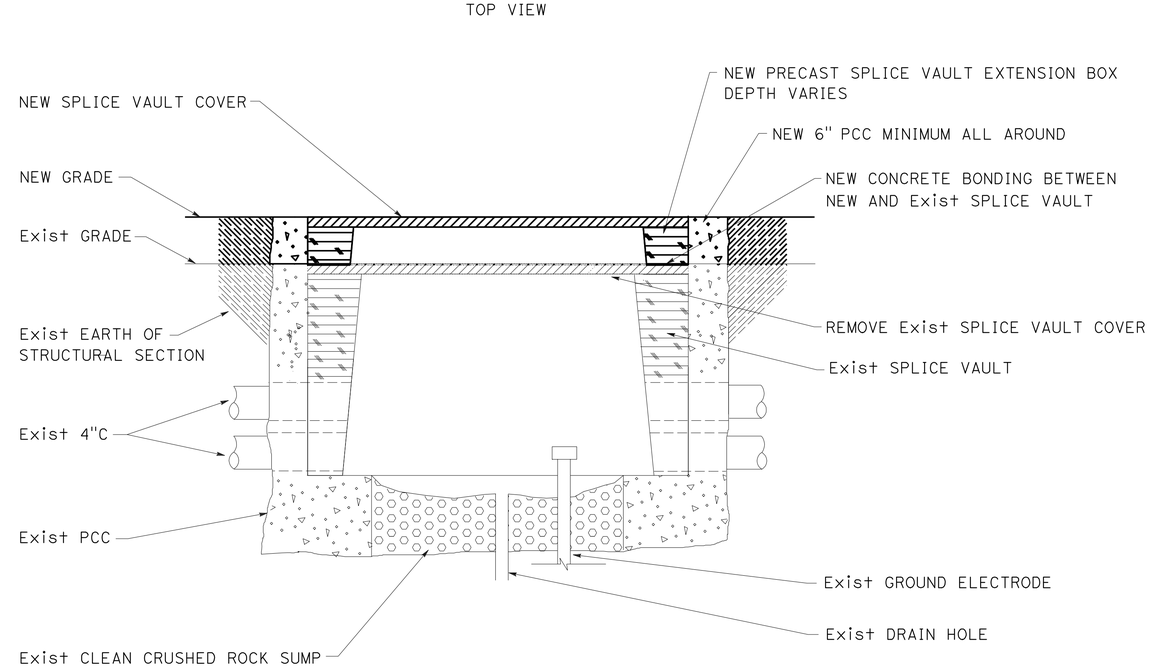


SPLICE VAULT

SIDE VIEW

# COMMUNICATION PULL BOX EXTENSION AND SPLICE VAULT EXTENSION (DETAILS)

NO SCALE

THIS PLAN IS ACCURATE FOR ELECTRICAL WORK ONLY

E-5

STATE OF CALIFORNIA - DEPARTMENT OF TRANSPORTATION
Caltrans ELECTRICAL DESIGN

FUNCTIONAL SUPERVISOR: SHAHRAM SHAHRIARI
CALCULATED-DESIGNED BY: FRANCIS M. ALVIAR
CHECKED BY: VANESSA V. TRUONG
REVISED BY / DATE REVISED

LAST REVISION 04-15-09
DATE PLOTTED => 26-AUG-2009
TIME PLOTTED => 10:31

| DIST | COUNTY | ROUTE | POST MILES TOTAL PROJECT | SHEET NO. | TOTAL SHEETS |
|---|---|---|---|---|---|
| 12 | Ora | 55 | 16.0/16.8 | 40 | 52 |

REGISTERED CIVIL ENGINEER

June 6, 2008
PLANS APPROVAL DATE

REGISTERED PROFESSIONAL ENGINEER Donald E. Howe No. C46402 Exp. 3-31-09 CIVIL STATE OF CALIFORNIA

*The State of California or its officers or agents shall not be responsible for the accuracy or completeness of electronic copies of this plan sheet.*

*To accompany plans dated* 5-11-09

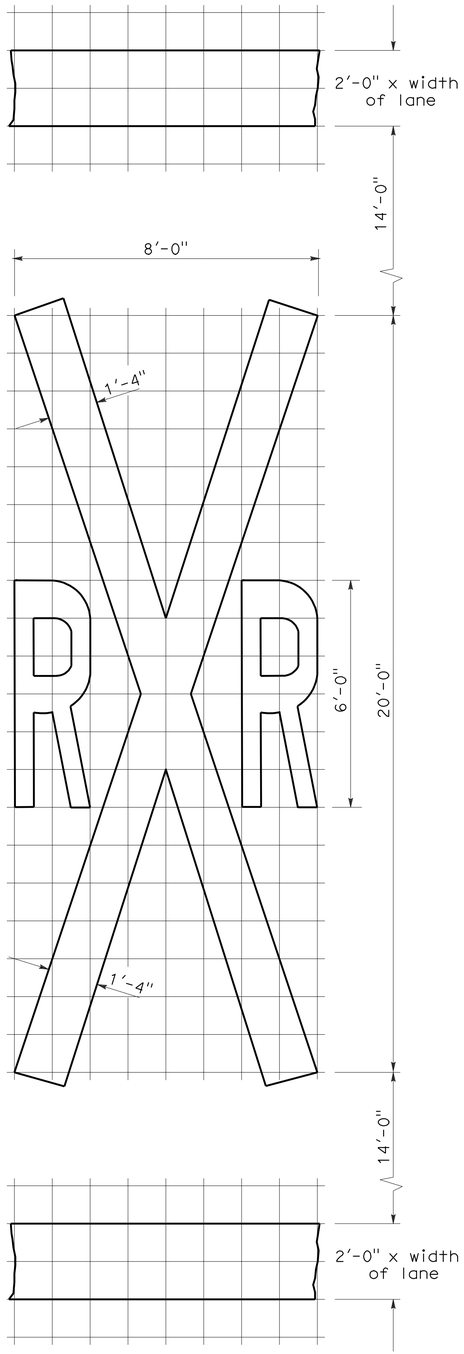


RAILROAD CROSSING SYMBOL

✳70 sq ft DOES NOT INCLUDE THE 2'-0" x VARIABLE WIDTH TRANSVERSE LINES.

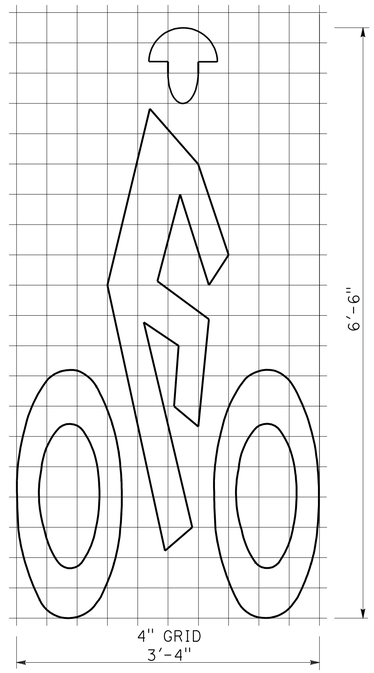


BIKE LANE SYMBOL

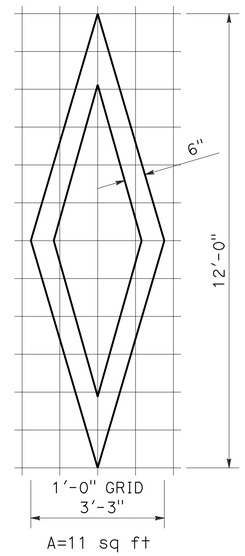


DIAMOND SYMBOL

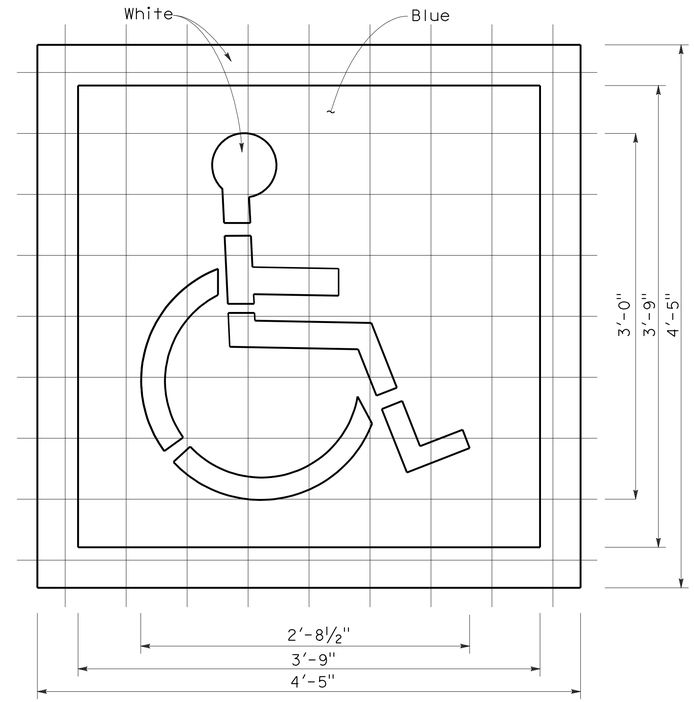


INTERNATIONAL SYMBOL OF ACCESSIBILITY MARKING

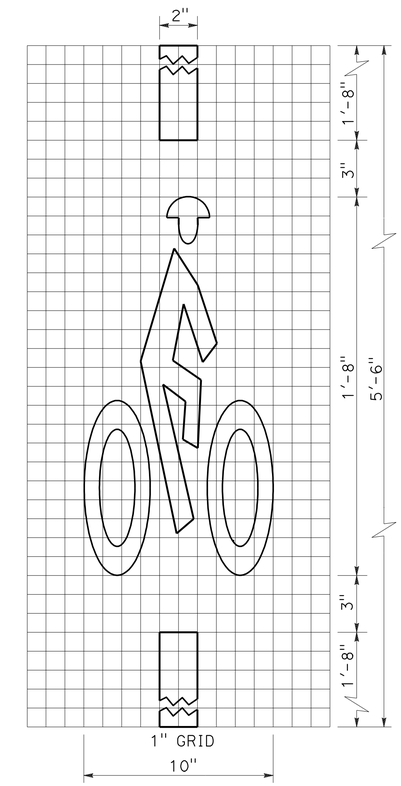


BICYCLE LOOP DETECTOR SYMBOL

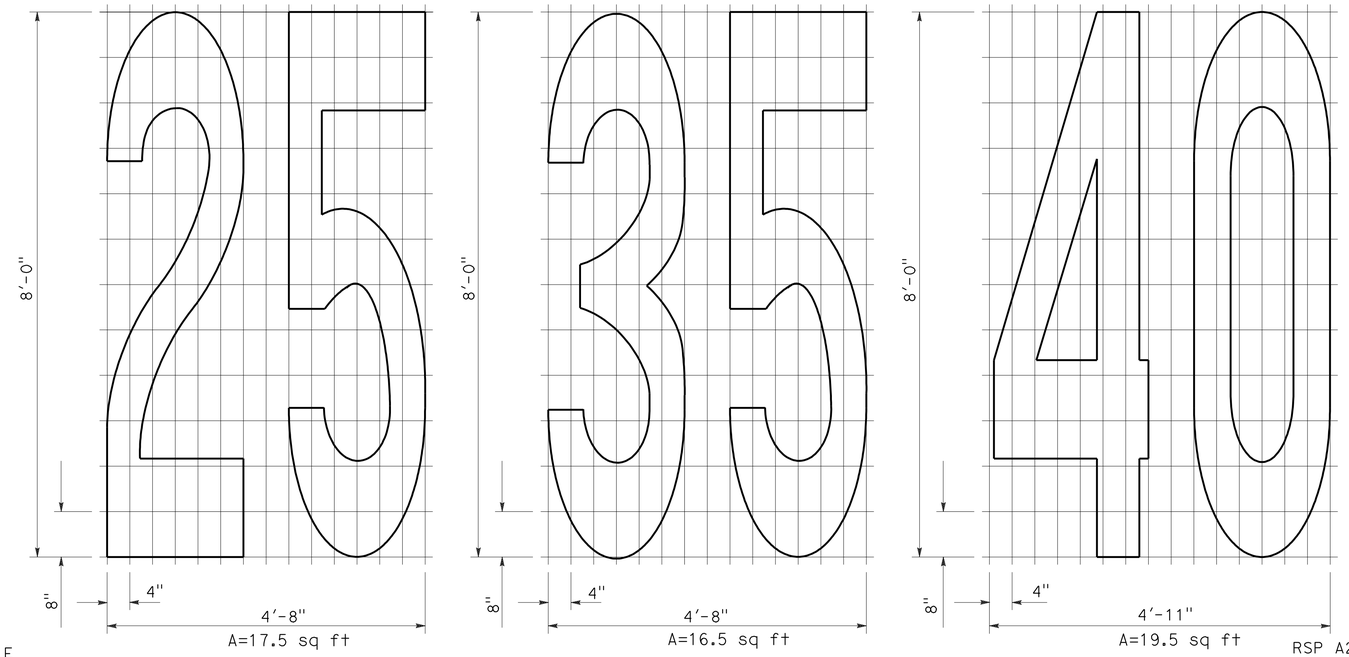


NUMERALS

NOTE:

1. Minor variations in dimensions may be accepted by the Engineer.

STATE OF CALIFORNIA
DEPARTMENT OF TRANSPORTATION

# PAVEMENT MARKINGS SYMBOLS AND NUMERALS

NO SCALE

RSP A24C DATED JUNE 6, 2008 SUPERSEDES STANDARD PLAN A24C DATED MAY 1, 2006 - PAGE 11 OF THE STANDARD PLANS BOOK DATED MAY 2006.

**REVISED STANDARD PLAN RSP A24C**

**2006 REVISED STANDARD PLAN RSP A24C**

5-27-08

| DIST | COUNTY | ROUTE | POST MILES TOTAL PROJECT | SHEET NO. | TOTAL SHEETS |
|---|---|---|---|---|---|
| 12 | Ora | 55 | 16.0/16.8 | 41 | 52 |

REGISTERED CIVIL ENGINEER

November 17, 2006
PLANS APPROVAL DATE

REGISTERED PROFESSIONAL ENGINEER Dallas Forester No. C37765 Exp. 12-31-06 CIVIL STATE OF CALIFORNIA

*The State of California or its officers or agents shall not be responsible for the accuracy or completeness of electronic copies of this plan sheet.*

*To accompany plans dated* 5-11-09

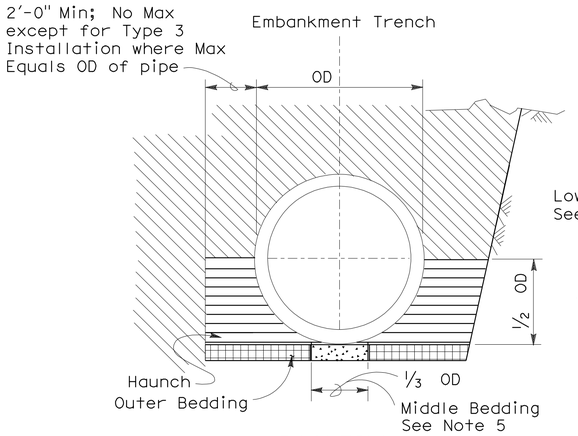


BACKFILL

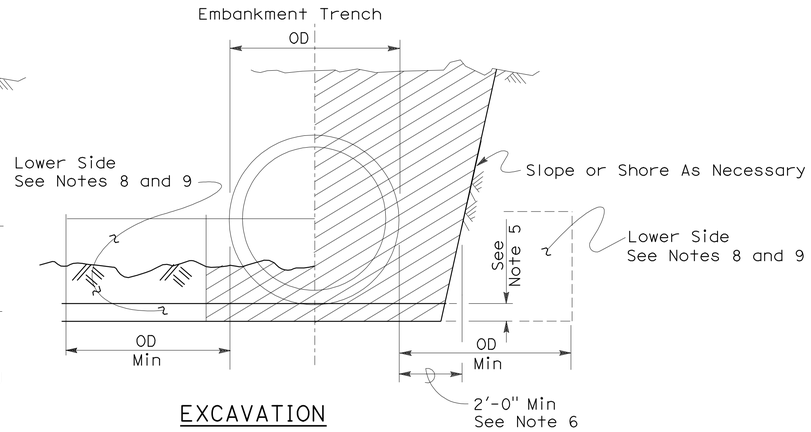


EXCAVATION

Roadway Embankment

Structure Backfill (Culvert) See Note 6

Structure Backfill (Culvert) See Note 6

Loose Backfill

Excavation Structure (Culvert)

## TYPE 1 INSTALLATION:

The haunch and outer bedding shall be compacted to a minimum 90 percent relative compaction. In addition, the minimum sand equivalent in these areas shall be 30 and the maximum percentage passing the 75 $\mu$m sieve size shall be 12.

## TYPE 2 INSTALLATION:

The haunch and outer bedding shall be compacted to a minimum 90 percent relative compaction. In addition, the minimum sand equivalent in these areas shall be 25.

## TYPE 3 INSTALLATION:

The haunch and outer bedding shall be compacted to a minimum 85 percent relative compaction. 90 percent relative compaction will be required where the fill over the pipe is less than 4'-0" or 1/2 OD.

## NOTES:

1. Unless otherwise shown on the plans or specified in the special provision, the Contractor shall have the option of selecting the class of RCP and the type of installation to be used, provided the height of cover does not exceed the value shown for the RCP selected.
   Example: 24" RCP culvert with maximum cover of 19'-0" the options are:
   a) Class III or stronger with Installation Type 1.
   b) Class III Special or stronger with Installation Type 2.
   c) Class IV Special or stronger with Installation Type 3.
   Cover is defined as the maximum vertical distance from top of the pipe to finished grade within the length of any given culvert.
2. The class of RCP and Installation Type selected shall be the same throughout the length of any given culvert.
3. The "length of any culvert" is defined as the culvert between:
   a) Successive drainage structure (inlets, junction boxes, headwalls, etc.).
   b) A drainage structure and the inlet or outlet end of the culvert.
   c) The inlet and outlet end of the culvert when there are no intervening drainage structures.
4. Oval and arch shaped RCP shall not be used.
5. 1/25 OD Min, not less than 3".
6. Slurry cement backfill may be substituted for backfill in the outer bedding and haunch areas. If slurry is used the outer and middle beddings shall be omitted. Prior to installation the soil under the middle 1/3 of the outside diameter of the pipe shall be softened by scarifying or other means to a minimum depth of 1/25 OD, but not less than 3". Where slurry cement backfill is used clear distance to trench wall may be reduced as set forth in Section 19-3.062 of the Standard Specifications.
7. Backfill shall be placed full width of excavation except where dimensions are shown for backfill width or thickness. Dimensions shown are minimums.
8. Lower side shall be suitable material as determined by the Engineer. Otherwise it shall be considered unsuitable as set forth in Section 19-2.02 of the Standard Specifications. See Note 9.
9. Where the pipe is placed in a trench, if the trench walls are sloped at 5 vertical to 1 horizontal or steeper for at least 90 percent of the trench height or up to not less than 12" from the grading plane, the firmness of the soil in the lower side need not be considered.
10. Non-reinforced precast concrete pipe sizes 3'-0" or smaller may be placed under installation Types 1, 2 or 3.

### INSTALLATION TYPE 1

| MINIMUM CLASS AND D-LOAD | COVER | |
|---|---|---|
| | 108" Dia AND SMALLER | OVER 108" Dia |
| Class II 1000D | 14.9' | 12.9' |
| Class III 1350D | 15.0' - 20.9' | 13.0' - 18.9' |
| Class III Special 1700D | 21.0' - 26.9' | 19.0' - 24.9' |
| Class IV 2000D | 27.0' - 31.9' | 25.0' - 29.9' |
| Class IV Special 2500D | 32.0' - 40.9' | 30.0' - 38.9' |
| Class V 3000D | 41.0' - 49.9' | 39.0' - 46.9' |
| Class V Special 3600D | 50.0' - 59.0' | 47.0' - 58.0' |

### INSTALLATION TYPE 2

| MINIMUM CLASS AND D-LOAD | COVER |
|---|---|
| Class II 1000D | 9.9' |
| Class III 1350D | 10.0'- 14.9' |
| Class III Special 1700D | 15.0' - 19.9' |
| Class IV 2000D | 20.0' - 24.9' |
| Class IV Special 2500D | 25.0' - 31.9' |
| Class V 3000D | 32.0' - 38.9' |
| Class V Special 3600D | 39.0' - 47.0' |

### INSTALLATION TYPE 3

| MINIMUM CLASS AND D-LOAD | COVER | |
|---|---|---|
| | 48" Dia AND SMALLER | OVER 48" Dia |
| Class II 1000D | 7.9' | 5.9' |
| Class III 1350D | 8.0' - 10.9' | 6.0' - 8.9' |
| Class III Special 1700D | 11.0' - 14.9' | 9.0' - 12.9' |
| Class IV 2000D | 15.0' - 17.9' | 13.0' - 15.9' |
| Class IV Special 2500D | 18.0' - 21.9' | 16.0' - 19.9' |
| Class V 3000D | 22.0' - 26.9' | 20.0' - 24.9' |
| Class V Special 3600D | 30.0' - 33.0' | 25.0' - 31.0' |

STATE OF CALIFORNIA
DEPARTMENT OF TRANSPORTATION

# EXCAVATION AND BACKFILL CONCRETE PIPE CULVERTS

NO SCALE

RSP A62DA DATED NOVEMBER 17, 2006 SUPERSEDES STANDARD PLAN A62DA DATED MAY 1, 2006 - PAGE 20 OF THE STANDARD PLANS BOOK DATED MAY 2006.

**REVISED STANDARD PLAN RSP A62DA**

**2006 REVISED STANDARD PLAN RSP A62DA**

10-26-06

| DIST | COUNTY | ROUTE | POST MILES TOTAL PROJECT | SHEET NO. | TOTAL SHEETS |
|---|---|---|---|---|---|
| 12 | Ora | 55 | 16.0/16.8 | 42 | 52 |

Mark S. Turner
PROFESSIONAL LAND SURVEYOR

June 30, 2006
PLANS APPROVAL DATE

LICENSED LAND SURVEYOR
Mark S. Turner
No. 6228
Exp. 3-31-08
STATE OF CALIFORNIA

*The State of California or its officers or agents shall not be responsible for the accuracy or completeness of electronic copies of this plan sheet.*

*To accompany plans dated* 5-11-09

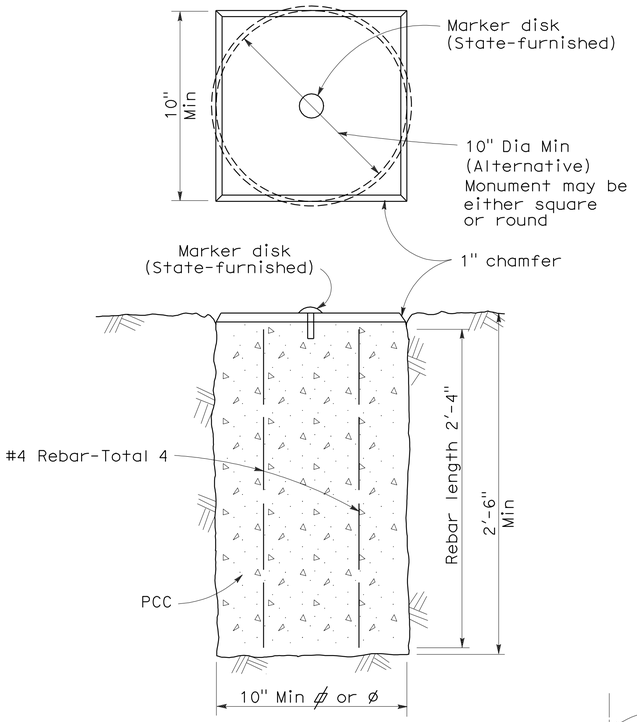


TYPE A

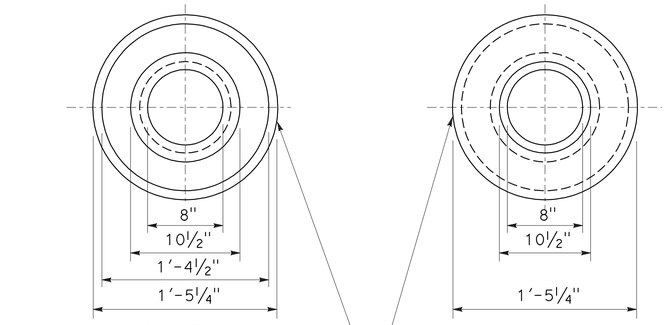


TOP VIEW OF
MONUMENT OF WELL RING

BOTTOM VIEW OF
MONUMENT OF WELL RING

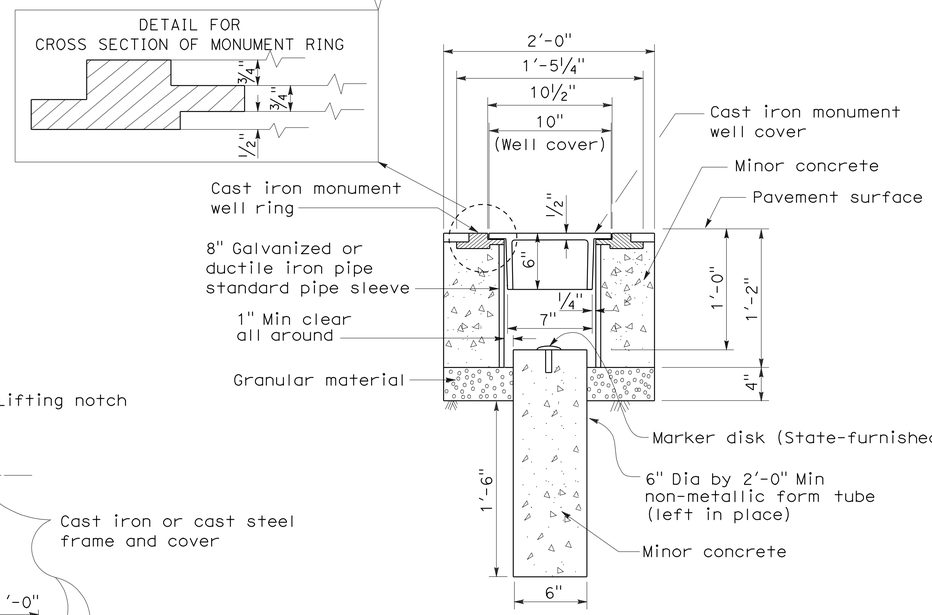


TYPE B

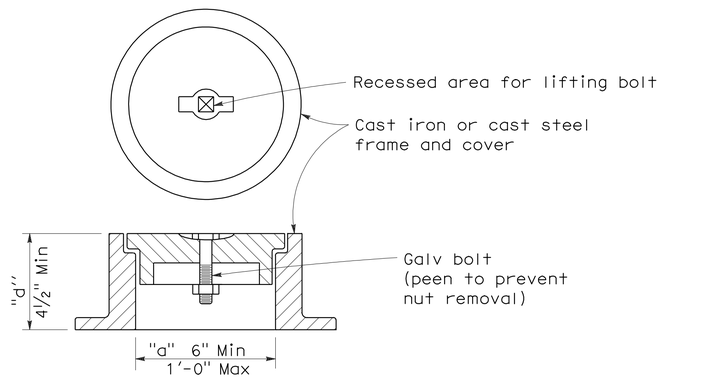


## NOTES:

1. The configuration of the cast iron or cast steel frame and cover may vary from that shown.
2. Frame shall be embedded in the concrete a minimum of 3".
3. Type D monument shall be either Alternative No. 1 or Alternative No. 2 at the contractor's option.
4. All portland cement concrete shall be Class 2 or minor concrete with 1" maximum aggregate.

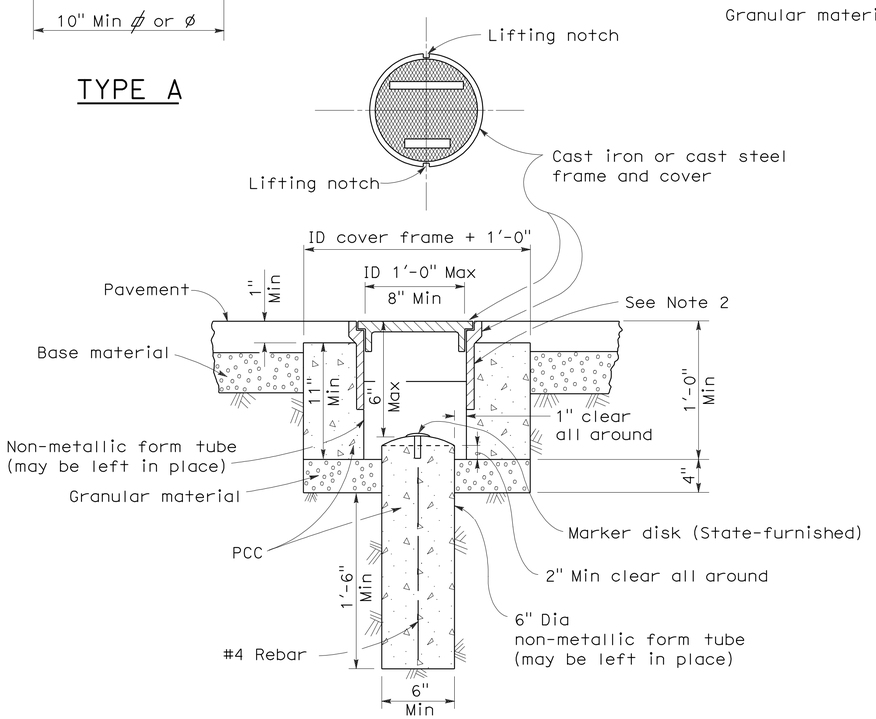


TYPE D
Alternative No. 1

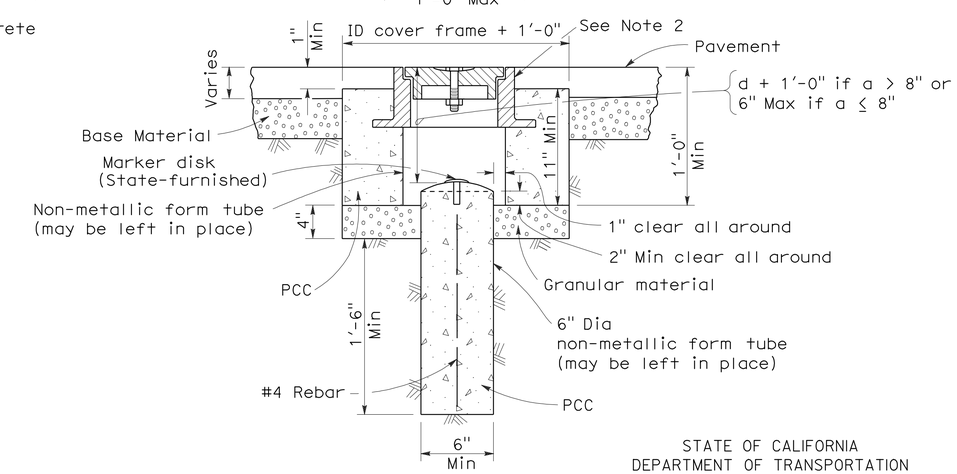


TYPE D
Alternative No. 2

STATE OF CALIFORNIA
DEPARTMENT OF TRANSPORTATION

# SURVEY MONUMENTS

NO SCALE

RSP A74 DATED JUNE 30, 2006 SUPERSEDES STANDARD PLAN DATED MAY 1, 2006 - PAGE 28 OF THE STANDARD PLANS BOOK DATED MAY 2006.

**REVISED STANDARD PLAN RSP A74**

**2006 REVISED STANDARD PLAN RSP A74**

5-24-06

| DIST | COUNTY | ROUTE | POST MILES TOTAL PROJECT | SHEET NO. | TOTAL SHEETS |
|---|---|---|---|---|---|
| 12 | Ora | 55 | 16.0/16.8 | 43 | 52 |

Randell D. Hiatt
REGISTERED CIVIL ENGINEER

June 6, 2008
PLANS APPROVAL DATE

REGISTERED PROFESSIONAL ENGINEER Randell D. Hiatt No. C50200 Exp. 6-30-09 CIVIL STATE OF CALIFORNIA

*The State of California or its officers or agents shall not be responsible for the accuracy or completeness of electronic copies of this plan sheet.*

*To accompany plans dated* 5-11-09

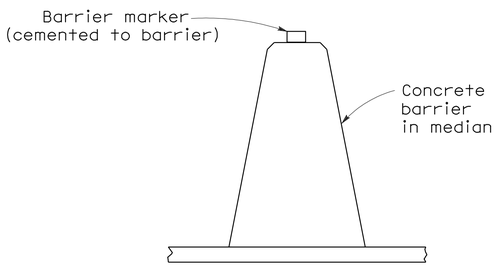


## CONCRETE BARRIER TYPE 60 DELINEATION

See Notes 7 and 8

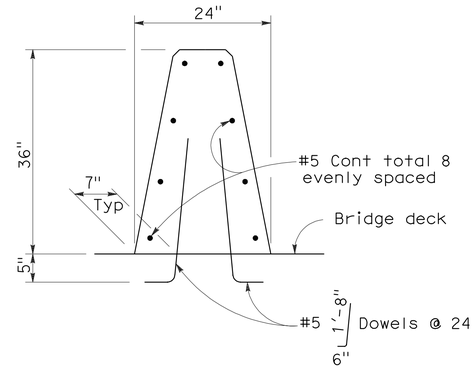


## CONCRETE BARRIER TYPE 60A

Details similar to Type 60 except as noted.

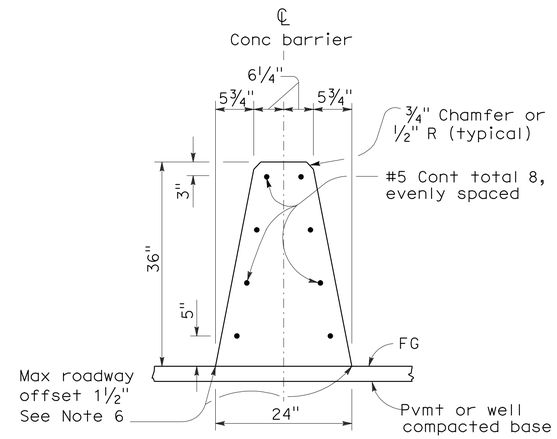


## CONCRETE BARRIER TYPE 60

### NOTES:

1. See Standard Plan A76B for details of Concrete Barrier Type 60 end anchors, connection to structures and transitions to Concrete Barrier Type 50 and Concrete Barrier Type 60S.
2. See Standard Plan A76C for Concrete Barrier Type 60 transitions at bridge column and sign pedestals.
3. Where glare screen is required on Concrete Barrier Type 60, use Concrete Barrier Type 60G.
4. Where the concrete barrier is added to the face of existing concrete structure, match existing weep holes.
5. Expansion joints in concrete barrier shall be located at all deck, pavement and principal wall joints. Expansion joint filler material shall be the same size as joint or ½" minimum.
6. Where roadway offset is greater than 1½", see Concrete Barrier Type 60C.
7. Barrier delineation to be used when required by the Special Provisions.
8. Spacing of barrier markers to match spacing of raised pavement markers on the adjacent median edgeline pavement delineation.
9. Reinforcing stirrup not required for roadway offsets less than 1'-0".
10. For roadway surfaces offset greater than 1½" to 3", no rebars required. For roadway surfaces offset greater than 3" to 8" use two #4 rebars at 3" above the lower roadway surface. For roadway surfaces offset greater than 8" to 12", use two #4 rebars at 3" above the lower roadway surface and two #4 rebars at 8" above the lower roadway surface. For roadway surfaces offset greater than 12" to 36", use two #4 rebars at 3" above the lower roadway surface and two #4 rebars at every 8" increment vertical spacing above the first two #4 rebars.

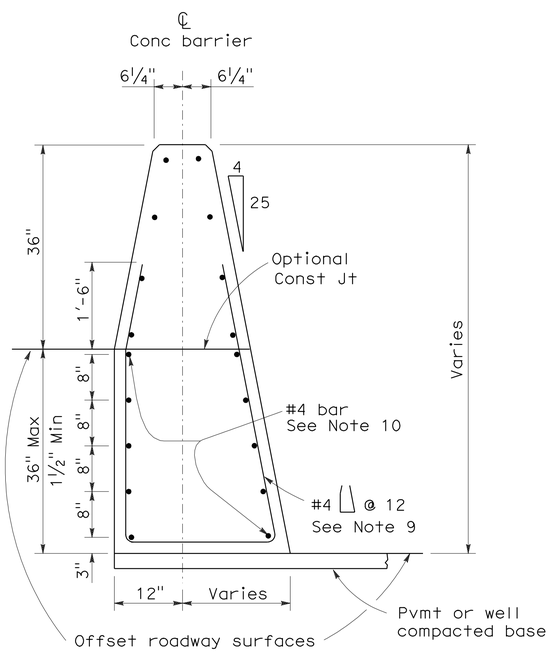


## CONCRETE BARRIER TYPE 60C

Details similar to Type 60 except as noted.
Concrete barrier end anchor when necessary.
36" roadway surfaces offset shown.

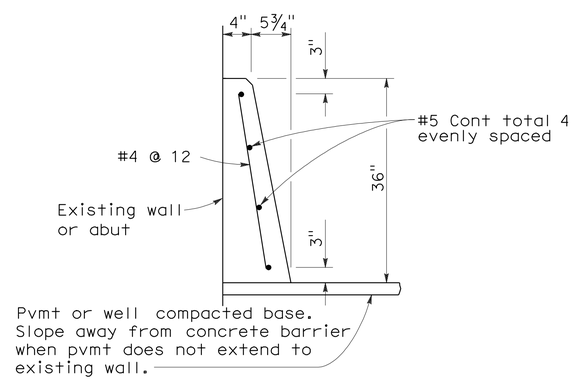


## CONCRETE BARRIER TYPE 60D

STATE OF CALIFORNIA
DEPARTMENT OF TRANSPORTATION

# CONCRETE BARRIER TYPE 60

NO SCALE

RSP A76A DATED JUNE 6, 2008 SUPERSEDES STANDARD PLAN A76A
DATED MAY 1, 2006 - PAGE 29 OF THE STANDARD PLANS BOOK DATED MAY 2006.

**REVISED STANDARD PLAN RSP A76A**

**2006 REVISED STANDARD PLAN RSP A76A**

5-21-08

| DIST | COUNTY | ROUTE | POST MILES TOTAL PROJECT | SHEET NO. | TOTAL SHEETS |
|---|---|---|---|---|---|
| 12 | Ora | 55 | 16.0/16.8 | 44 | 52 |

Randell D. Hiatt
REGISTERED CIVIL ENGINEER

June 6, 2008
PLANS APPROVAL DATE

REGISTERED PROFESSIONAL ENGINEER
Randell D. Hiatt
No. C50200
Exp. 6-30-09
CIVIL
STATE OF CALIFORNIA

*The State of California or its officers or agents shall not be responsible for the accuracy or completeness of electronic copies of this plan sheet.*

*To accompany plans dated* 5-11-09

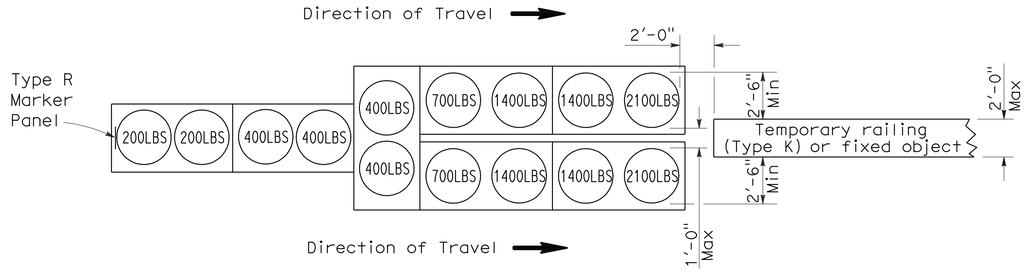


## ARRAY 'TU14'

Approach speed 45 mph or more

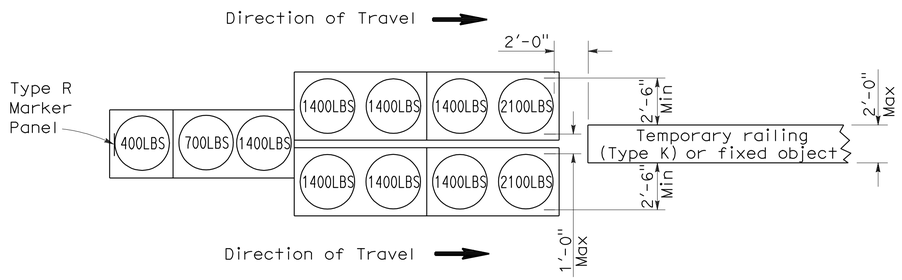


## ARRAY 'TU11'

Approach speed less than 45 mph

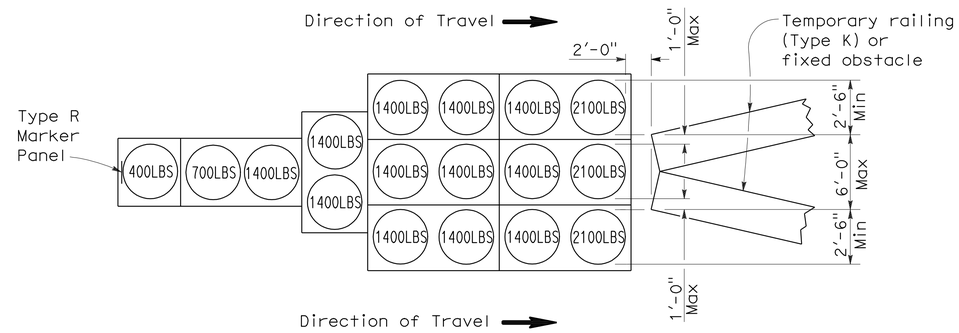


## ARRAY 'TU17'

Approach speed less than 45 mph

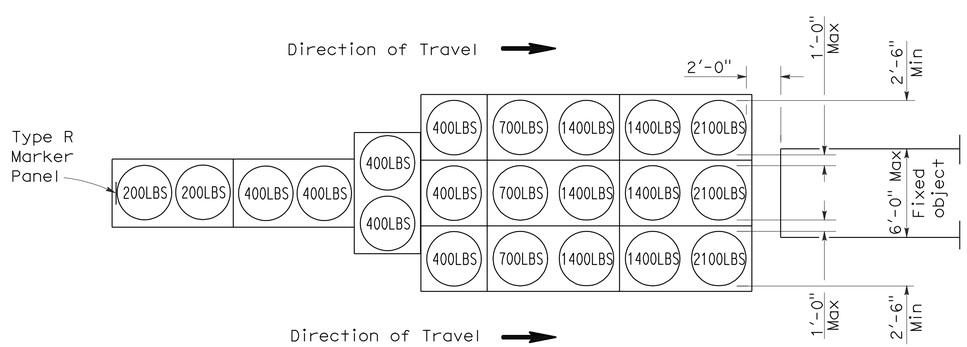


## ARRAY 'TU21'

Approach speed 45 mph or more

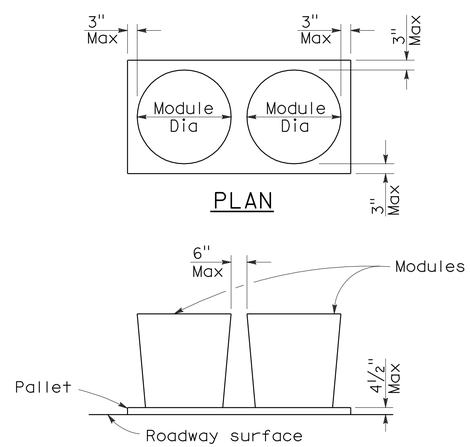


## ELEVATION

## CRASH CUSHION PALLET DETAIL

See Note 7

## NOTES:

1. (XXX) Indicates sand filled module location and weight of sand in pounds for each module. Module spacing is based on the greater diameter of the module.
2. All sand weights are nominal.
3. Temporary crash cushion arrays shall not encroach on the traveled way.
4. Place the top of Type R marker panel 1" below the module lid.
5. Refer to Standard Plan A73B for marker details.
6. Approach speeds indicated conform to NCHRP 350 Report criteria.
7. Use of pallets is optional.

STATE OF CALIFORNIA
DEPARTMENT OF TRANSPORTATION

# TEMPORARY CRASH CUSHION, SAND FILLED (UNIDIRECTIONAL)

NO SCALE

RSP T1A DATED JUNE 6, 2008 SUPERSEDES STANDARD PLAN T1A
DATED MAY 1, 2006 - PAGE 211 OF THE STANDARD PLANS BOOK DATED MAY 2006.

**REVISED STANDARD PLAN RSP T1A**

**2006 REVISED STANDARD PLAN RSP T1A**



5-15-08

| DIST | COUNTY | ROUTE | POST MILES TOTAL PROJECT | SHEET NO. | TOTAL SHEETS |
|---|---|---|---|---|---|
| 12 | Ora | 55 | 16.0/16.8 | 45 | 52 |

Randell D. Hiatt
REGISTERED CIVIL ENGINEER

June 6, 2008
PLANS APPROVAL DATE

REGISTERED PROFESSIONAL ENGINEER
Randell D. Hiatt
No. C50200
Exp. 6-30-09
CIVIL
STATE OF CALIFORNIA

*The State of California or its officers or agents shall not be responsible for the accuracy or completeness of electronic copies of this plan sheet.*

*To accompany plans dated* 5-11-09

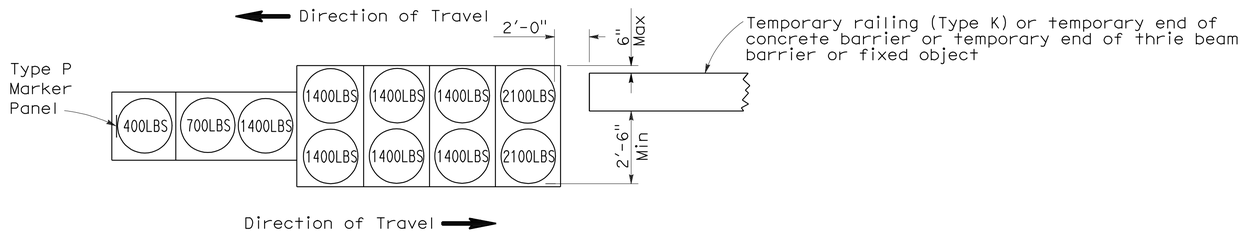


## ARRAY 'TB11'

Approach speed less than 45 mph

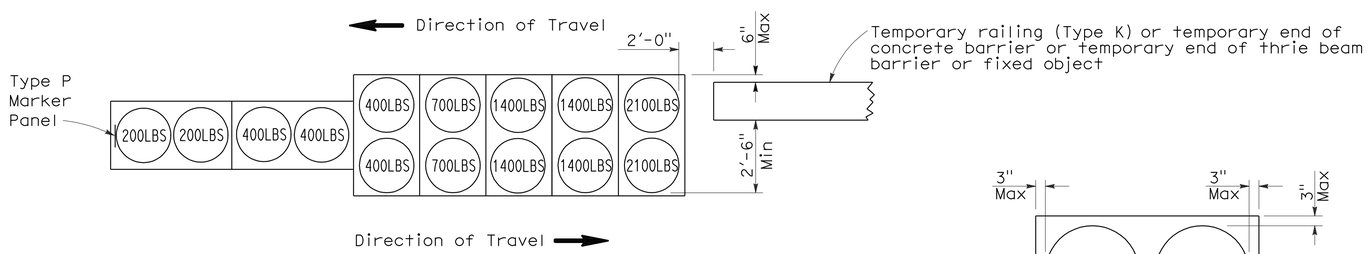


## ARRAY 'TB14'

Approach speed 45 mph or more

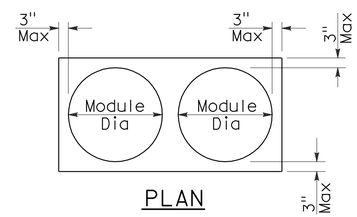


## PLAN

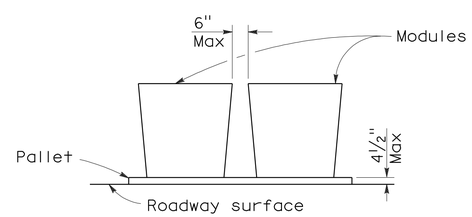


## ELEVATION

## CRASH CUSHION PALLET DETAIL

See Note 7

## NOTES:

1. (XXX) Indicates sand filled module location and weight of sand in pounds for each module. Module spacing is based on the greater diameter of the module.
2. All sand weights are nominal.
3. Temporary crash cushion arrays shall not encroach on the traveled way.
4. Place the Type P marker panel so that the bottom of the panel rests upon the pallet.
5. Refer to Standard Plan A73B for marker details.
6. Approach speeds indicated conform to NCHRP 350 Report criteria.
7. Use of pallets is optional.

STATE OF CALIFORNIA
DEPARTMENT OF TRANSPORTATION

# TEMPORARY CRASH CUSHION, SAND FILLED (BIDIRECTIONAL)

NO SCALE

RSP T1B DATED JUNE 6, 2008 SUPERSEDES STANDARD PLAN T1B
DATED MAY 1, 2006 - PAGE 212 OF THE STANDARD PLANS BOOK DATED MAY 2006.

**REVISED STANDARD PLAN RSP T1B**

**2006 REVISED STANDARD PLAN RSP T1B**



5-15-08

| DIST | COUNTY | ROUTE | POST MILES TOTAL PROJECT | SHEET NO. | TOTAL SHEETS |
|---|---|---|---|---|---|
| 12 | Ora | 55 | 16.0/16.8 | 46 | 52 |

Randell D. Hiatt
REGISTERED CIVIL ENGINEER

June 6, 2008
PLANS APPROVAL DATE

REGISTERED PROFESSIONAL ENGINEER
Randell D. Hiatt
No. C50200
Exp. 6-30-09
CIVIL
STATE OF CALIFORNIA

*The State of California or its officers or agents shall not be responsible for the accuracy or completeness of electronic copies of this plan sheet.*

*To accompany plans dated* 5-11-09

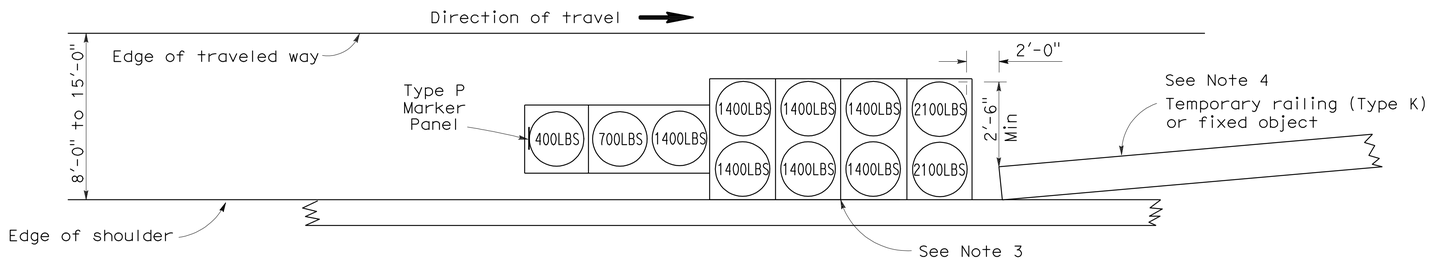


## ARRAY 'TS11'

Approach speed less than 45 mph
See Note 9

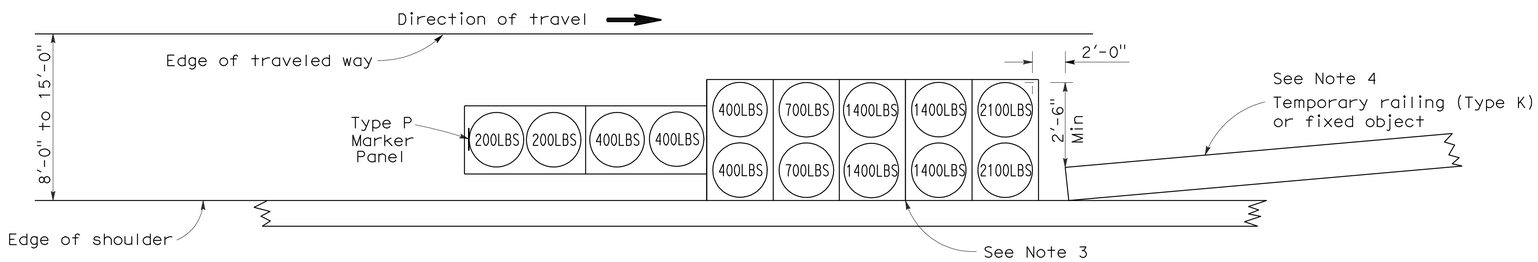


## ARRAY 'TS14'

Approach speed 45 mph or more
See Note 9

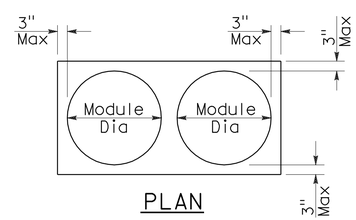


PLAN

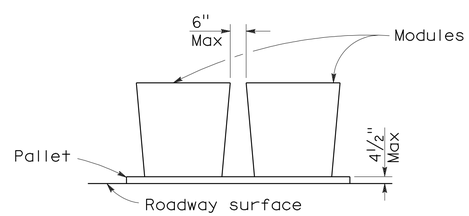


ELEVATION

## CRASH CUSHION PALLET DETAIL

See Note 11

## NOTES:

1. (XXX) Indicates sand filled module location and weight of sand in pounds for each module. Module spacing is based on the greater diameter of the module.
2. All sand weights are nominal.
3. The temporary crash cushion arrays shown on this plan shall be used only in locations where there will be traffic on one side of the temporary crash cushion array.
4. If the fixed object or approach end of the temporary railing is less than 15'-0" from the edge of traveled way, a temporary crash cushion is required in a construction or work zone.
5. Temporary crash cushion arrays shall not encroach on the traveled way.
6. Arrays for median shoulders shall conform to details shown on this plan for outside shoulders.
7. Place the Type P marker panel so that the bottom of the panel rests upon the pallet and faces traffic.
8. Refer to Standard Plan A73B for marker details.
9. For shoulder widths less than 8'-0", appropriate approved crash cushion protection, other than sand filled modules, shall be provided at fixed objects and at approach ends of temporary railing. The specific type of crash cushion shall be as shown on the project plans or as specified in the Special Provisions, or if not shown on the project plans or specified in the Special Provisions, shall be as approved by the Engineer.
10. Approach speeds indicated conform to NCHRP 350 Report criteria.
11. Use of pallets is optional.

STATE OF CALIFORNIA
DEPARTMENT OF TRANSPORTATION

# TEMPORARY CRASH CUSHION, SAND FILLED (SHOULDER INSTALLATIONS)

NO SCALE

RSP T2 DATED JUNE 6, 2008 SUPERSEDES STANDARD PLAN T2
DATED MAY 1, 2006 - PAGE 213 OF THE STANDARD PLANS BOOK DATED MAY 2006.

**REVISED STANDARD PLAN RSP T2**

**2006 REVISED STANDARD PLAN RSP T2**



5-15-08

| DIST | COUNTY | ROUTE | POST MILES TOTAL PROJECT | SHEET NO. | TOTAL SHEETS |
|---|---|---|---|---|---|
| 12 | Ora | 55 | 16.0/16.8 | 47 | 52 |

REGISTERED CIVIL ENGINEER

November 17, 2006
PLANS APPROVAL DATE

REGISTERED PROFESSIONAL ENGINEER
Greg W. Edwards
No. C36386
Exp. 6-30-08
CIVIL
STATE OF CALIFORNIA

*The State of California or its officers or agents shall not be responsible for the accuracy or completeness of electronic copies of this plan sheet.*

*To accompany plans dated* 5-11-09

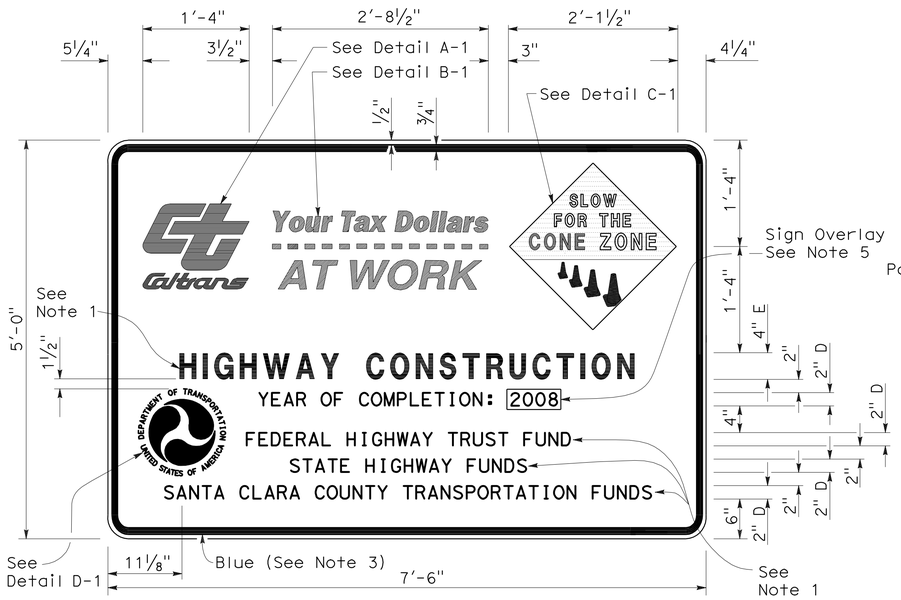


TYPE 1

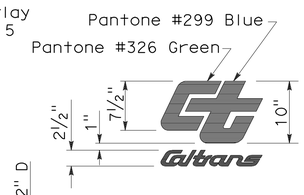


DETAIL A-1

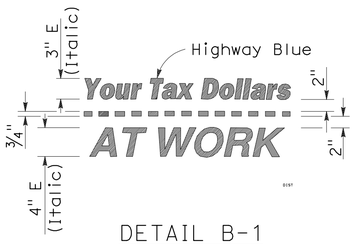


DETAIL B-1
(See Note 3)

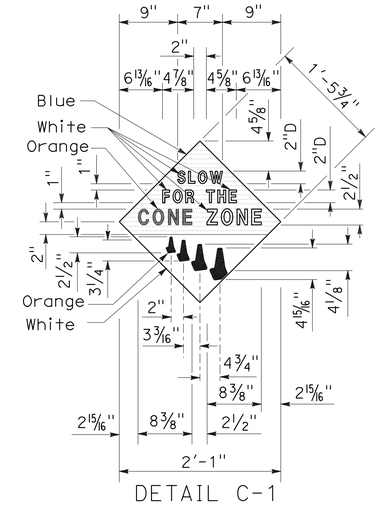


DETAIL C-1
(See Note 4)

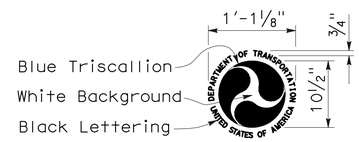


DETAIL D-1
(See Note 6)

## NOTES:

1. The sign messages shown for type of project and fund types are examples only. See the Special Provisions for the applicable type of project and fund type messages to be used.
2. Except as otherwise shown, the legend of sign shall be black on a white background (non-reflective).
3. The border of the signs and details "B-1" and "B-2" shall be blue (non-reflective).
4. The diamond in details "C-1" and "C-2" shall be blue for the background of message, " SLOW FOR THE CONE ZONE", and white background for the orange cones. The color and type of font for the "SLOW FOR THE CONE ZONE" message shall be: "SLOW" white D; "FOR THE" white D; "CONE" orange Arial font; "ZONE" white Arial font.
5. Year of completion of project construction shown on the overlay is an example only. See the Special Provisions.
6. Use when the Project involves Federal Highway Trust Fund.

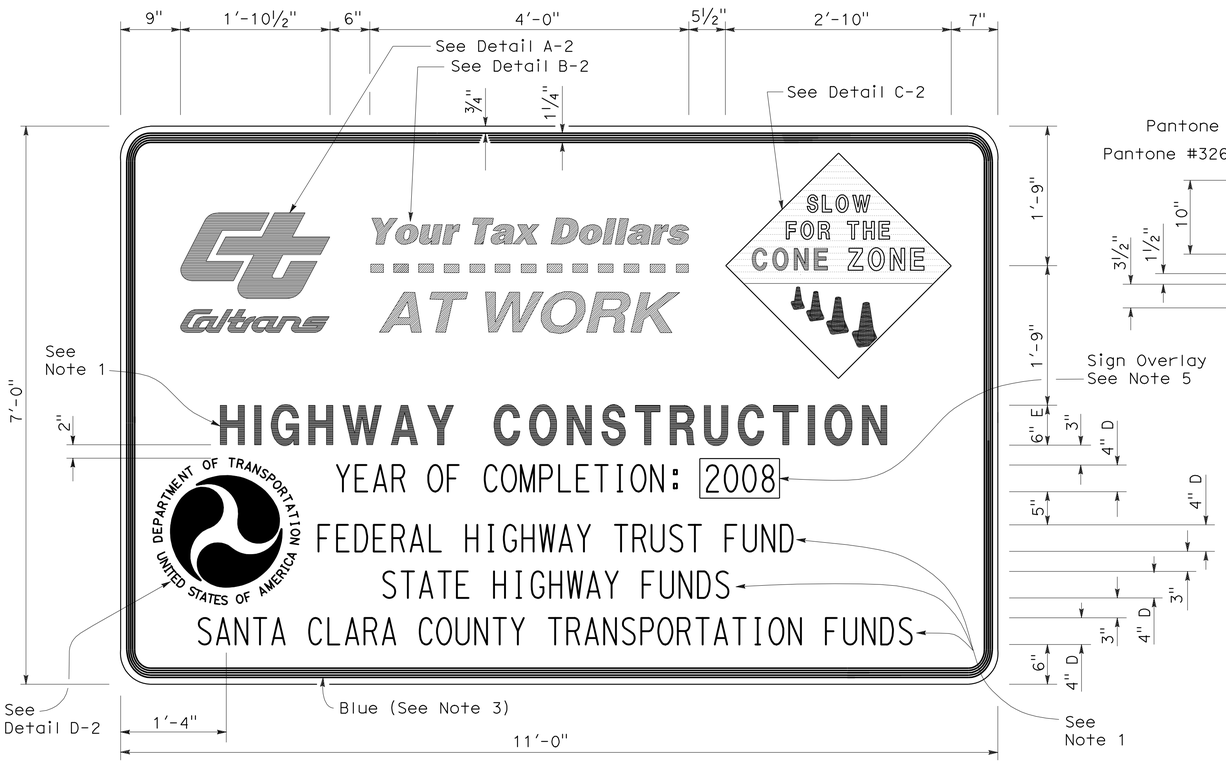


TYPE 2

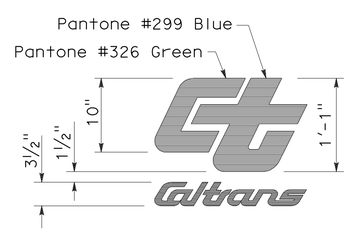


DETAIL A-2

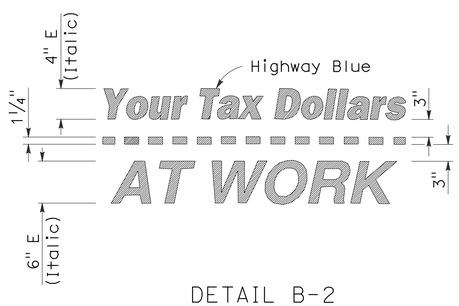


DETAIL B-2
(See Note 3)

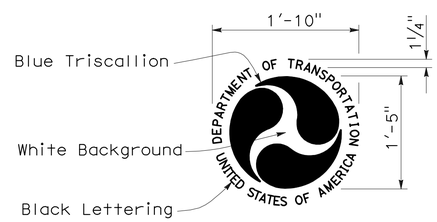


DETAIL D-2
(See Note 6)

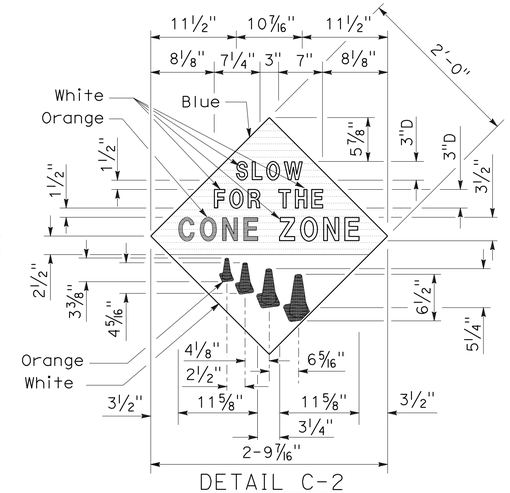


DETAIL C-2
(See Note 4)

STATE OF CALIFORNIA
DEPARTMENT OF TRANSPORTATION

# CONSTRUCTION PROJECT FUNDING IDENTIFICATION SIGNS

NO SCALE

RSP T7 DATED NOVEMBER 17, 2006 SUPERSEDES STANDARD PLAN T7
DATED MAY 1, 2006 - PAGE 217 OF THE STANDARD PLANS BOOK DATED MAY 2006.

**REVISED STANDARD PLAN RSP T7**

**2006 REVISED STANDARD PLAN RSP T7**

9-7-06

| DIST | COUNTY | ROUTE | POST MILES TOTAL PROJECT | SHEET NO. | TOTAL SHEETS |
|---|---|---|---|---|---|
| 12 | Ora | 55 | 16.0/16.8 | 48 | 52 |

Robert B Schott
LICENSED LANDSCAPE ARCHITECT

August 15, 2008
PLANS APPROVAL DATE

LICENSED LANDSCAPE ARCHITECT Robert B. Schott 3625 Signature 11-04-08 Renewal Date 08-11-08 Date STATE OF CALIFORNIA

*The State of California or its officers or agents shall not be responsible for the accuracy or completeness of electronic copies of this plan sheet.*

*To accompany plans dated* 5-11-09

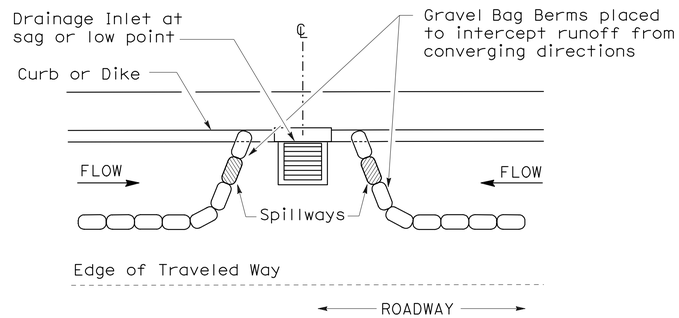


PLAN

## CONFIGURATION FOR SAG POINT INLET (GRAVEL BAG BERM)

## GRAVEL BAG BERM (TYPE 3A) SPACING TABLE

| SLOPE OF ROADWAY (PERCENT) | 1 to 3.9 | 4 to 5.9 | 6 to 7.9 | 8 to 10 | 10+ |
|---|---|---|---|---|---|
| INTERVAL BETWEEN BERM | 100′ | 75′ | 50′ | 25′ | 12′ |

For slope of less than 1%, install barriers only if erosion/sediment is prevalent

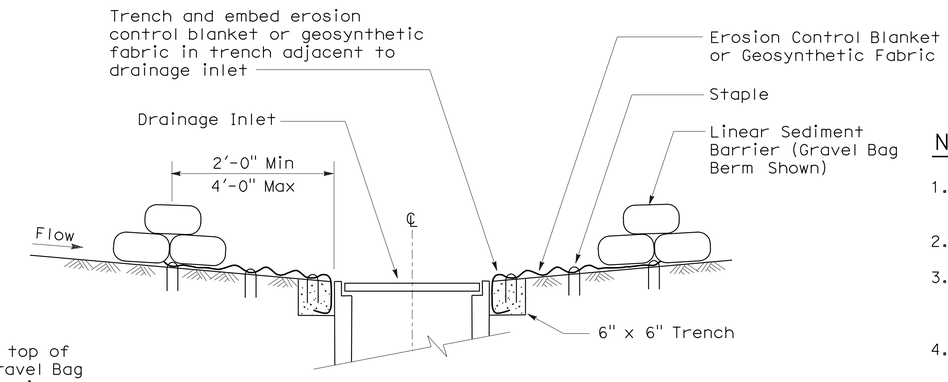


SECTION A-A

## NOTES:

1. Place safety cones adjacent to drainage inlet protection.
2. Dimensions may vary to fit field conditions.
3. Install a minimum of 3 gravel bag berms upstream of each drainage inlet to be protected.
4. Position erosion control blanket or geosynthetic fabric at edge of concrete apron and secure in trench.
5. Erosion control blanket or geosynthetic fabric is not required if the area adjacent to the drainage inlet is vegetated or paved.

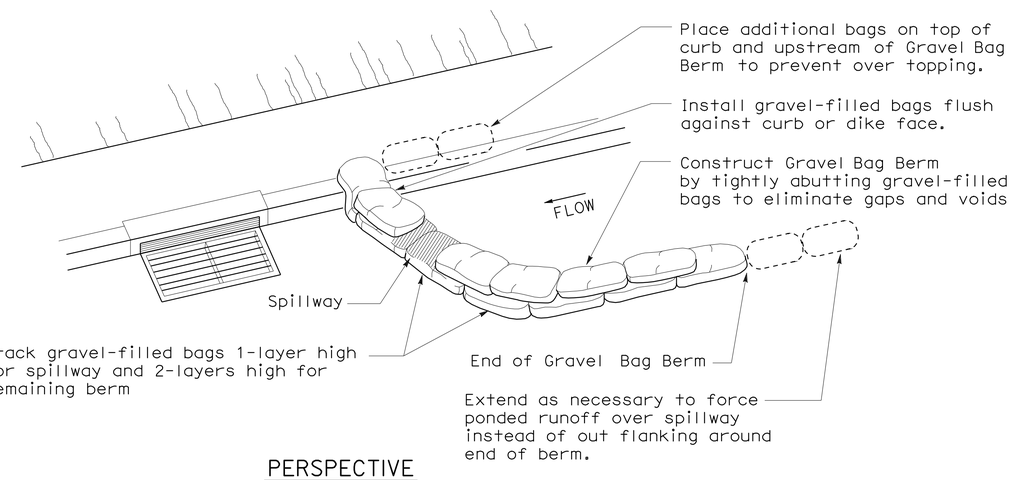


PERSPECTIVE

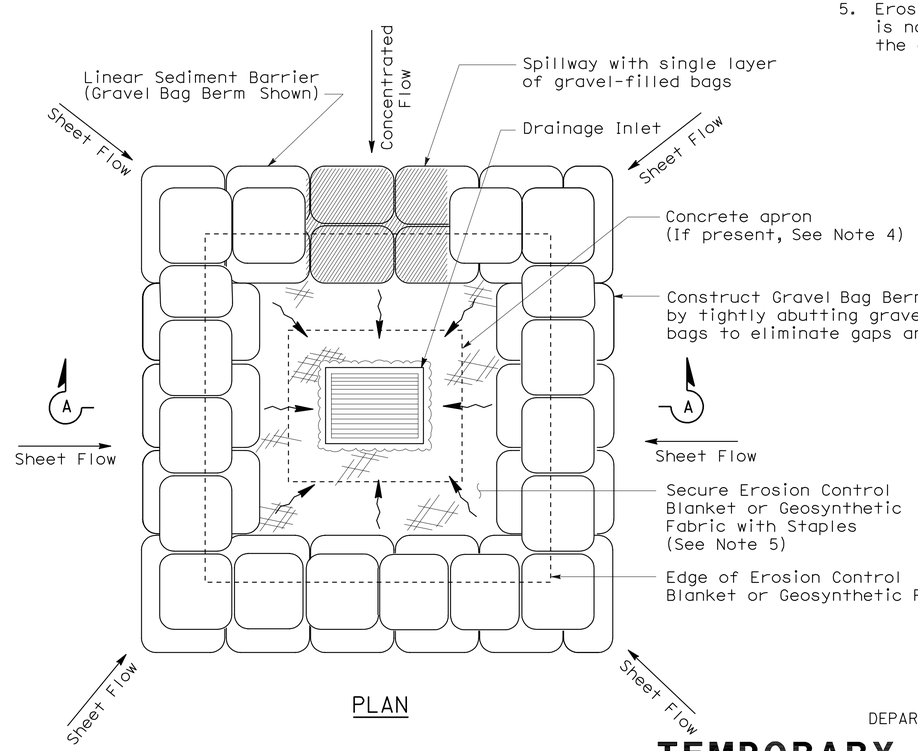


PLAN

## TEMPORARY DRAINAGE INLET PROTECTION (TYPE 3B)

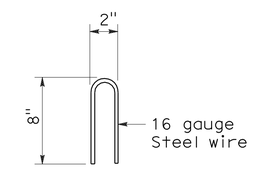


STAPLE DETAIL

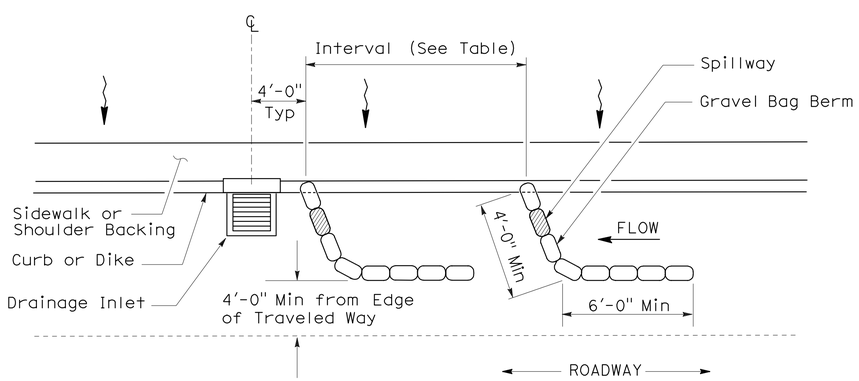


PLAN

## TEMPORARY DRAINAGE INLET PROTECTION (TYPE 3A) (GRAVEL BAG BERM)

STATE OF CALIFORNIA
DEPARTMENT OF TRANSPORTATION

# TEMPORARY WATER POLLUTION CONTROL DETAILS (TEMPORARY DRAINAGE INLET PROTECTION)

NO SCALE

NSP T62 DATED AUGUST 15, 2008 SUPPLEMENTS THE STANDARD PLANS BOOK DATED MAY 2006.

**NEW STANDARD PLAN NSP T62**

**2006 NEW STANDARD PLAN NSP T62**

7-11-08

| DIST | COUNTY | ROUTE | POST MILES TOTAL PROJECT | SHEET NO. | TOTAL SHEETS |
|---|---|---|---|---|---|
| 12 | Ora | 55 | 16.0/16.8 | 49 | 52 |

REGISTERED ELECTRICAL ENGINEER

October 5, 2007
PLANS APPROVAL DATE

REGISTERED PROFESSIONAL ENGINEER Jeffery G. McRae No. E14512 Exp. 6-30-08 ELECTRICAL STATE OF CALIFORNIA

*The State of California or its officers or agents shall not be responsible for the accuracy or completeness of electronic copies of this plan sheet.*

*To accompany plans dated* 5-11-09

# ELECTROLIERS

| STANDARD TYPES |
|---|
| 15, 15D |
| 15 STRUCTURE |
| 21, 21D STRUCTURE |
| 30 |
| 31 |
| 32 |
| 35 |
| 36-20A |

High mast light pole

Double Arm lighting standard

Existing electrolier

Electrolier foundation (Future installation)

## NOTES:

1. Luminaires shall be 310 W HPS when installed on Type 21, 21D, 30, 31, 32, 35 and 36-20A Standards, unless otherwise specified. Luminaires shall be 200 W HPS when installed on other type standards or poles, unless otherwise specified.
2. Luminaires shall be the cutoff type, ANSI Type III medium cutoff lighting distribution, unless otherwise specified.
3. Variations noted adjacent to symbol on project plans.

Electrolier (see project notes or project plans)

Luminaire on wood pole

# STANDARD NOTES:

- AB — Abandon. If applied to conduit, remove conductors.
- BC — Install pull box in existing conduit run.
- BP — Pedestrian barricade, type as indicated on plan.
- CB — Install conduit into existing pull box.
- CC — Connect new and existing conduit. Remove existing conductors and install conductors as indicated.
- CF — Conduit to remain for future use. Remove conductors. Install pull wire or rope.
- DH — Detector handhole.
- FA — Foundation to be abandoned.
- IS — Install sign on signal mast arm.
- NS — No slip base on standard.
- PEC — Photoelectric control.
- PEU — Photoelectric unit.
- RC — Equipment or material to be removed and become the property of the Contractor.
- RE — Remove electrolier, fuses and ballast. Tape ends of conductors.
- RL — Relocate equipment.
- RR — Remove and reuse equipment.
- RS — Remove and salvage equipment.
- SC — Splice new to existing conductors.
- SD — Service disconnect.
- SF — Standard to remain for future use. Remove luminaire, pole conductors, fuses and ballast.
- TSP — Telephone service point.

# ABBREVIATIONS AND EQUIPMENT DESIGNATIONS

| PROPOSED | EXISTING | |
|---|---|---|
| BBS | bbs | Battery backup system |
| BC | bc | Bolt circle |
| C | C | Conduit |
| CCTV | cctv | Closed circuit television |
| CKT | ckt | Circuit |
| CMS | cms | Changeable message sign |
| DLC | dlc | Loop detector lead-in cable |
| EMS | ems | Extinguishable message sign |
| EVC | evc | Emergency vehicle cable |
| EVD | evd | Emergency vehicle detector |
| FB | fb | Flashing beacon |
| FBCA | fbca | Flashing beacon control assembly |
| FBS | fbs | Flashing beacon with slip base |
| FO | fo | Fiber optic |
| G | G | Ground (Equipment Grounding Conductor) |
| GFCI | GFCI | Ground fault circuit interrupt |
| HAR | har | Highway advisory radio |
| HEX | hex | Hexagonal |
| HPS | hps | High pressure sodium |
| IISNS | iisns | Internally illuminated street name sign |
| ISL | isl | Induction sign lighting |
| LED | led | Light emitting diode |
| LMA | lma | Luminaire mast arm |
| LPS | lps | Low pressure sodium |
| LTG | ltg | Lighting |
| LUM | lum | Luminaire |
| MAT | mat | Mast arm mounting vehicle signal faces, top attachment |
| MAS | mas | Mast arm mounting vehicle signal faces, side attachment |
| MAS-4A | mas-4A | Mast arm mounting vehicle signal faces, side attachment - 4 signal section |
| MAS-4B | mas-4B | |
| MAS-4C | mas-4C | |
| MAS-5A | mas-5A | Mast arm mounting vehicle signal faces, side attachment - 5 signal section |
| MAS-5B | mas-5B | |
| MC | mc | Mercury contactor |
| M/M | m/m | Multiple to multiple transformer |
| MT | mt | Conduit with pull wire or rope only |
| MTG | mtg | Mounting |
| | mv | Mercury vapor lighting fixture |
| N | N | Neutral (Grounded Conductor) |
| NC | NC | Normally closed |
| NO | NO | Normally open |
| PB | pb | Pull box |
| PEC | pec | Photoelectric control (Type I, II, III, IV or V as shown) |
| PED | ped | Pedestrian |
| PEU | peu | Photoelectric unit |
| PPB | ppb | Pedestrian push button |
| RL | | Relocated equipment |
| RM | rm | Ramp metering |
| SB | sb | Slip base |
| SIC | sic | Signal interconnect cable |
| SIG | sig | Signal |
| SMA | sma | Signal mast arm |
| SNS | sns | Street name sign |
| SP | sp | Service point |
| TDC | tdc | Telephone demarcation cabinet |
| TMS | tms | Traffic monitoring station |
| TOS | tos | Traffic Operations System |
| VEH | veh | Vehicle |
| XFMR | xfmr | Transformer |
| COMM | comm | Communication |
| RWIS | rwis | Roadway weather information system |

# SOFFIT AND WALL MOUNTED LUMINAIRES

Pendant, 70 W HPS unless otherwise specified.

Flush, 70 W HPS unless otherwise specified.

Wall surface, 70 W HPS unless otherwise specified.

Existing soffit or wall luminaire to remain unmodified.

Existing soffit or wall luminaire to be modified as specified.

## NOTE:

Arrow indicates "street side" of luminaire.

STATE OF CALIFORNIA
DEPARTMENT OF TRANSPORTATION

# ELECTRICAL SYSTEMS (SYMBOLS AND ABBREVIATIONS)

NO SCALE

RSP ES-1A DATED OCTOBER 5, 2007 SUPERSEDES STANDARD PLAN ES-1A DATED MAY 1, 2006 - PAGE 400 OF THE STANDARD PLANS BOOK DATED MAY 2006.

**REVISED STANDARD PLAN RSP ES-1A**

**2006 REVISED STANDARD PLAN RSP ES-1A**

| DIST | COUNTY | ROUTE | POST MILES TOTAL PROJECT | SHEET NO. | TOTAL SHEETS |
|---|---|---|---|---|---|
| 12 | Ora | 55 | 16.0/16.8 | 50 | 52 |

REGISTERED ELECTRICAL ENGINEER

October 5, 2007
PLANS APPROVAL DATE

REGISTERED PROFESSIONAL ENGINEER Jeffery G. McRae No. E14512 Exp. 6-30-08 ELECTRICAL STATE OF CALIFORNIA

*The State of California or its officers or agents shall not be responsible for the accuracy or completeness of electronic copies of this plan sheet.*

*To accompany plans dated* 5-11-09

## CONDUIT

| PROPOSED | EXISTING | |
|---|---|---|
| | | Lighting Conduit, unless otherwise indicated or noted |
| | | Traffic signal conduit |
| C | c | Communication conduit |
| T | t | Telephone conduit |
| F | f | Fire alarm conduit |
| FO | fo | Fiber optic conduit |
| | | Conduit termination (RSP ES-9A C) |
| R | r | Conduit riser in/on structure or service pole |

## SERVICE EQUIPMENT

| PROPOSED | EXISTING | |
|---|---|---|
| OH | oh | Overhead lines |
| U | U | Wood pole "U" indicates utility owned |
| | | Pole guy with anchor |
| | | Utility transformer - ground mounted |
| III | | Service equipment enclosure type |
| | | Service equipment enclosure door indicates front of enclosure |
| T | t | Telephone demarcation cabinet |

## POLE-MOUNTED SERVICE DESIGNATION

Type of installation

TYPE H SERVICE - 28'-10" ← Pole height above grade

## ILLUMINATED OVERHEAD SIGN

| PROPOSED | EXISTING | |
|---|---|---|
| | | Overhead sign - Single post |
| | | Overhead sign - Two post |
| | | Overhead sign - Mounted on structure |
| | | Overhead sign with electrolier |

## SIGNAL EQUIPMENT

| PROPOSED | EXISTING | |
|---|---|---|
| | | Pedestrian signal face |
| | | Pedestrian push button post |
| | | Pedestrian barricade |
| | | Vehicle signal face (with backplate, 3-Section: red, yellow and green) |
| | | Vehicle signal face with angle visors |
| PV | PV | Modifications of basic symbols: "L" indicates all non-arrow sections louvered "LG" indicates louvered green section only "PV" indicates 12" programmed visibility sections "8" indicates all 8" sections (only when specified) |
| | | Type 15TS and Vehicle signal face |
| | | Vehicle signal face with red, yellow and green left arrow sections |
| | | Vehicle signal face with red and yellow sections and up green arrow |
| | | Vehicle signal face (5 Section) with red, yellow and green sections and yellow and green right arrows |
| | | Type 1 Standard and attached vehicle signal faces |
| | | Standard with signal mast arm only and attached vehicle signal faces and internally illuminated street name sign |
| | | Type 33 Standard, Left-turn vehicle signal face and sign |
| | | Standard with luminaire and signal mast arms and attached vehicle signal faces |
| | | Cantilever flashing beacon Type 9 Frame, with a sign unless otherwise specified or indicated |
| | | Type 15-FBS Standard with two vehicle signal face sections with lens, backplate and visor with a sign |
| R | Y | Flashing beacon. One vehicle signal face section with lens, backplate and visor. "R" indicates red indication, "Y" indicates yellow indication |
| | | Controller assembly. Door indicates front of cabinet |

## SIGNAL EQUIPMENT Cont

| PROPOSED | EXISTING | |
|---|---|---|
| | | Guard post |
| | | Type 1 Standard with "Meter On" sign |
| | | Emergency Vehicle detector |

## NOTES:

1. All signal sections shall be 12" unless shown otherwise.
2. Signal heads shall be provided with backplates unless shown otherwise.
3. Signal indication shall be LED.

STATE OF CALIFORNIA
DEPARTMENT OF TRANSPORTATION

# ELECTRICAL SYSTEMS (SYMBOLS AND ABBREVIATIONS)

NO SCALE

RSP ES-1B DATED OCTOBER 5, 2007 SUPERCEDES STANDARD PLAN ES-1B DATED MAY 1, 2006 - PAGE 401 OF THE STANDARD PLANS BOOK DATED MAY 2006.

**REVISED STANDARD PLAN RSP ES-1B**

**2006 REVISED STANDARD PLAN RSP ES-1B**

7-10-07

| DIST | COUNTY | ROUTE | POST MILES TOTAL PROJECT | SHEET NO. | TOTAL SHEETS |
|---|---|---|---|---|---|
| 12 | Ora | 55 | 16.0/16.8 | 51 | 52 |

REGISTERED ELECTRICAL ENGINEER

October 5, 2007
PLANS APPROVAL DATE

*The State of California or its officers or agents shall not be responsible for the accuracy or completeness of electronic copies of this plan sheet.*

REGISTERED PROFESSIONAL ENGINEER
Jeffery G. McRae
No. E14512
Exp. 6-30-08
ELECTRICAL
STATE OF CALIFORNIA

*To accompany plans dated* 5-11-09

# EQUIPMENT IDENTIFICATION

## ILLUMINATED SIGN IDENTIFICATION NUMBER:

Sign No. 12345
10 ISL SCI 1.0

- Sign number - Place on post or structure
- Transformer rating (kVA)
- Lighting control type
- Number and type of fixtures

Do NOT place on standard or structure

## ELECTROLIER OR EQUIPMENT IDENTIFICATION NUMBER:

12345 - 15'-0"

- Mast arm length, if shown. Do not place on standard or structure.
- Equipment number - Place on standard or structure. Existing equipment numbers are shown in parenthesis

## CONDUIT AND CONDUCTOR IDENTIFICATION:

1½"C, 2#10, 15#14, 2 DLC

- Number and size of conductors and cables
- Size of conduit in inches

| | |
|---|---|
| Ø1, Ø2, Ø2P, etc. | Traffic phase identification for signal faces, detectors and phase diagrams |
| 1 2 3 | Project note numbers |
| A B C | Equipment description, installation or item numbers |
| 1 2 3 | Conduit run numbers |

## SIGNAL AND LIGHTING STANDARD (TYPICAL DESIGNATION):

19A - 3 - 100

- Wind velocity = 100 mph
- Case 3 arm loading
- Standard type
- Standard Plan sheet number
- Detail number or letter

## MISCELLANEOUS EQUIPMENT

| PROPOSED | EXISTING | |
|---|---|---|
| CMS | cms | Changeable message sign |
| | | Closed circuit television camera |
| | | Highway advisory radio pole and antenna |
| EMS | ems | Extinguishable message sign |
| M V | m v | Detection device<br>M = Microwave sensor<br>V = Video image sensor |

## WIRING DIAGRAM LEGEND

| | |
|---|---|
| P | Pole |
| CB | Circuit breaker |
| A | Ampere |
| V | Volt |
| M | Metered |
| UM | Unmetered |
| NB | Neutral bus |
| GB | Ground bus |
| G | Equipment grounding conductor |
| N | Grounded conductor (Neutral) |

- External conductor
- Conductor or bus
- Tie point
- Contactor coil
- Contactor, Contact NO
- Terminal blocks
- Contactor, Contact NC
- Enclosure bond
- Grounding electrode
- Circuit breaker
- Receptacle

## PULL BOXES

PROPOSED EXISTING

Pull box-No. 5 unless otherwise indicated or noted.

3 9A(21)

Pull box-Additional designations or descriptions

| | |
|---|---|
| 3 | = No. 3½ pull box |
| 5 | = No. 5 pull box |
| 6 | = No. 6 pull box |
| 7 | = No. 7 (Ceiling pull box) |
| 8 | = No. 8 (Pendant soffit pull box) |
| 9 | = No. 9 pull box |
| 9A | = No. 9A pull box |

(C) = Communications pull box
(E) = Pull box with extension
(S) = Sprinkler control pull box
(21) = Anchor bolts and conduit for future installation of Type 21 Standard
(T) = Traffic pull box

## VEHICLE DETECTORS

5 J 9 U

- U = Upper
- L = Lower
- Slot number in input file
- Input file (I or J)
- Phase

PROPOSED EXISTING

| | |
|---|---|
| | Type A detector loop. Outline of sawcut shown. |
| | Type B detector loop. Outline of sawcut shown. |
| | Type C detector loop. Outline of sawcut shown. |
| | Type D detector loop. Outline of sawcut shown. |
| | Type E detector loop. Outline of sawcut shown. |
| | Type Q detector loop. Outline of sawcut shown. |
| | Magnetic detector |
| DH dh | Detector handhole |
| | Microwave or video detection zone |

STATE OF CALIFORNIA
DEPARTMENT OF TRANSPORTATION

# ELECTRICAL SYSTEMS (SYMBOLS AND ABBREVIATIONS)

NO SCALE

RSP ES-1C DATED OCTOBER 5, 2007 SUPERCEDES STANDARD PLAN ES-1C DATED MAY 1, 2006 - PAGE 402 OF THE STANDARD PLANS BOOK DATED MAY 2006.

**REVISED STANDARD PLAN RSP ES-1C**

**2006 REVISED STANDARD PLAN RSP ES-1C**

7-10-07

| DIST | COUNTY | ROUTE | POST MILES TOTAL PROJECT | SHEET NO. | TOTAL SHEETS |
|---|---|---|---|---|---|
| 12 | Ora | 55 | 16.0/16.8 | 52 | 52 |

REGISTERED ELECTRICAL ENGINEER

October 5, 2007
PLANS APPROVAL DATE

REGISTERED PROFESSIONAL ENGINEER Jeffery G. McRae No. E14512 Exp. 6-30-08 ELECTRICAL STATE OF CALIFORNIA

*The State of California or its officers or agents shall not be responsible for the accuracy or completeness of electronic copies of this plan sheet.*

*To accompany plans dated* 5-11-09

# LOOP INSTALLATION PROCEDURE

1. Loops shall be centered in lanes.
2. Saw slots in pavement for loop conductors as shown in details.
3. Distance between side of loop and a lead-in saw cut from adjacent detectors shall be 2'-0" minimum. Distance between lead-in saw cuts shall be 6" minimum.
4. Bottom of saw slot shall be smooth with no sharp edges.
5. Slots shall be washed until clean, blown out and thoroughly dried before installing loop conductors.
6. Adjacent loops on the same sensor unit channel shall be wound in opposite directions.
7. Identify and tag loop circuit pairs in the pull box with loop number, start (S) and finish (F) of conductor. Identify and tag lead-in-cable with sensor number and phase.
8. Install loop conductor in slot using a 3/16" to 1/4" thick wood paddle. Hold loop conductors with wood paddles (at the bottom of the sawed slot) during sealant placement.
9. No more than 2 twisted pairs shall be installed in one sawed slot.
10. Allow additional 5'-0" of slack length of conductor for the lead-in run to pull box.
11. The additional length of each conductor for each loop shall be twisted together into a pair (6 turns per 3'-4" minimum) before being placed in the slot and conduit leading to pull box.
12. Test each loop circuit for continuity, circuit resistance and insulation resistance at the pull box before filling slots.
13. Fill slots as shown in details.
14. Splice loop conductors to lead-in-cable. Splices shall be soldered.
15. End of lead-in-cable and Type 2 loop conductor shall be waterproofed prior to installing in conduit to prevent moisture from entering the cable.
16. Lead-in-cable shall not be spliced between the pull box and the controller cabinet terminals.
17. Test each loop circuit for continuity, circuit resistance and insulation resistance at the controller cabinet location.
18. Where loop conductors are not to be spliced to a lead-in-cable, the ends of the conductors shall be taped and waterproofed with electrical insulating coating.

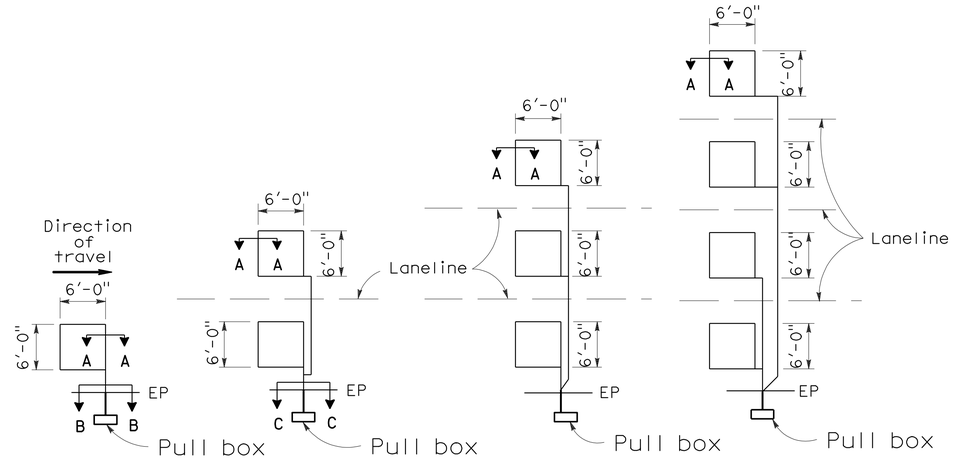


TYPE 1A INSTALLATION | TYPE 2A INSTALLATION | TYPE 3A INSTALLATION | TYPE 4A INSTALLATION

## SAWCUT DETAILS

(Type A loop detector configurations illustrated)

1. 1A thru 4A = 1 Type A loop configuration in each lane.
2. 1B thru 4B = 1 Type B loop configuration in each lane.
3. 1C = 1 Type C loop configuration entering lanes as required.
4. 1D thru 4D = 1 Type D loop configuration in each lane.
5. 1E thru 4E = 1 Type E loop configuration in each lane.
6. 1Q thru 4Q = 1 Type Q loop configuration in each lane. (Use Type A, B, C, D, E or Q loop detector configurations only when specified or shown on plans)

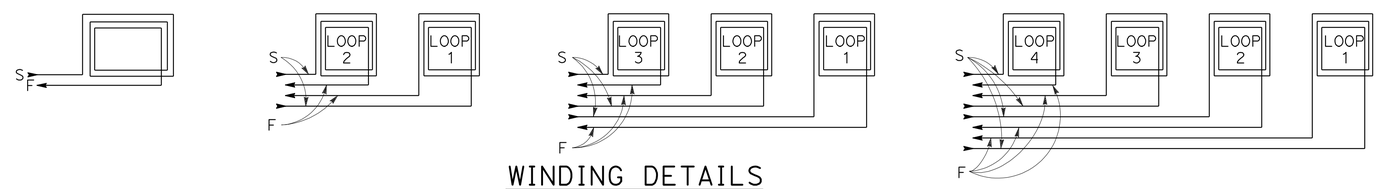


## WINDING DETAILS

See Notes 6 and 7

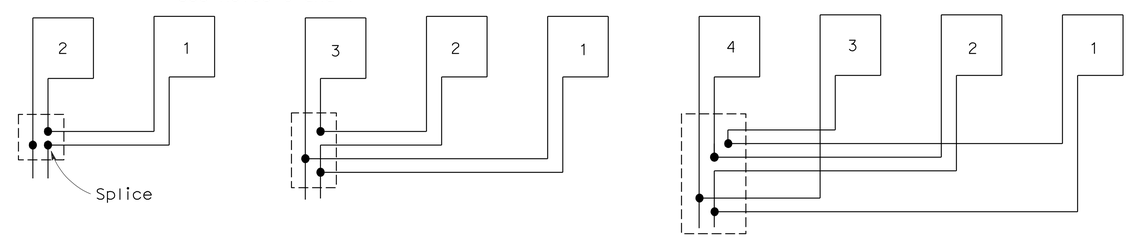


## TYPICAL LOOP CONNECTIONS

(Dashed lines represent the pull box)

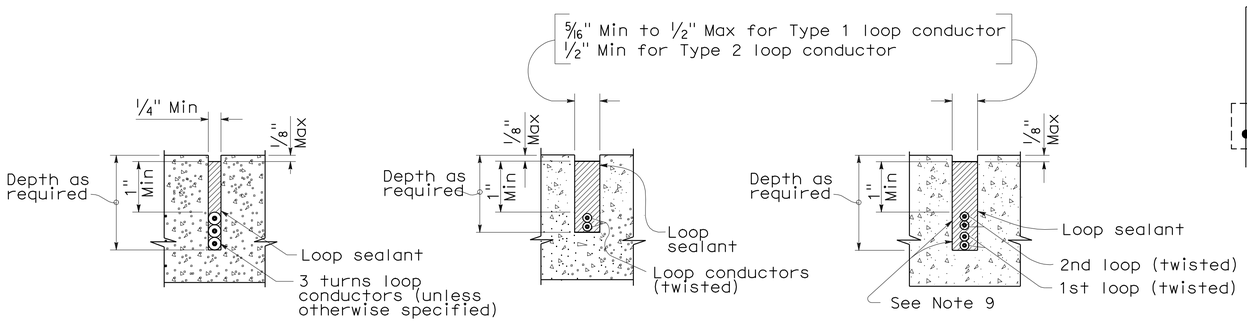


SECTION A-A | SECTION B-B | SECTION C-C

## SLOT DETAILS - TYPE 1 AND TYPE 2 LOOP CONDUCTOR

STATE OF CALIFORNIA
DEPARTMENT OF TRANSPORTATION

# ELECTRICAL SYSTEMS (DETECTORS)

NO SCALE

RSP ES-5A DATED OCTOBER 5, 2007 SUPERCEDES STANDARD PLAN ES-5A DATED MAY 1, 2006 - PAGE 423 OF THE STANDARD PLANS BOOK DATED MAY 2006.

**REVISED STANDARD PLAN RSP ES-5A**

**2006 REVISED STANDARD PLAN RSP ES-5A**

8-17-07