FOR ACCURATE RIGHT OF WAY AND ACCESS DATA,
CONTACT RIGHT OF WAY ENGINEERING AT THE DISTRICT OFFICE.

Dist	COUNTY	LOCATION CODE	POST MILES TOTAL PROJECT	SHEET No.	TOTAL SHEETS
12	Ora	91	9.1/15.1	701	949

REGISTERED ELECTRICAL ENGINEER — DATE 10-29-10

10-25-10
PLANS APPROVAL DATE

THE STATE OF CALIFORNIA OR ITS OFFICERS OR AGENTS SHALL NOT BE RESPONSIBLE FOR THE ACCURACY OR COMPLETENESS OF SCANNED COPIES OF THIS PLAN SHEET.

REGISTERED PROFESSIONAL ENGINEER — JOANNE VO No. E 16748 Exp. 9/30/12 ELECTRICAL — STATE OF CALIFORNIA

CONDUCTOR AND CONDUIT SCHEDULE

AWG	CIRCUIT	1	2	3	4	5	6	7*	8	9	10	11	12	13	14	15	16	17*	18	19	20
DLC	SURVEILLANCE				16N	16N	16N		16N							16N			16N	16N	
	DEMAND					1N	2N		2N										1N	1N	
	PASSAGE					1N	2N		2N										1N	1N	
	COUNT			2N	2N	2N	2N		3N								1N		1N	1N	
	QUEUE		2N						2N					1R/1N	1N				1N	1N	
#14	SPARE						3N		3N										3N	3N	
	RAMP SIGNAL						3N		3N										3N	3N	
	METER ON SIGN	2N	2N						2N				2E	2E	2N				2N	2N	
#10	SIGNAL COMMON						1N		1N										1N	1N	
#8	SERVICE		2N						2N	4E	2E	2N	2E	2E	2N				2N	2N	
12 SINGLEMODE FO								1E	1E									1E		1E	
#14 LOOP WIRE																					16N
CONDUIT SIZE		1½"N	2"N	1½"N	2½"N	3½"N	4"N	4"E	2-3"E	2"E	2"E	2"N	2"E	2"E	2"N	2½"N	1½"N	2"E	4"N	2-3"N	2"N

E: EXISTING CONDUIT OR CONDUCTOR. N: NEW CONDUIT OR CONDUCTOR. *: SEE SHEET E-95 FOR FOC REFERENCE.
R: RC EXISTING CONDUIT OR CONDUCTOR.

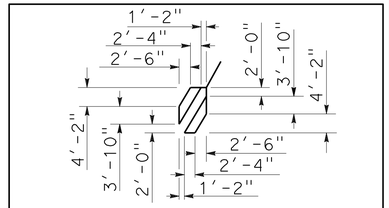

TYPICAL TYPE D-MODIFIED LOOP AT THE INSIDE LANE OF THE CURVE ON-RAMP

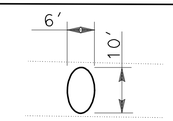

TYPICAL TYPE E-MODIFIED LOOP AT THE INSIDE LANE OF THE CURVE ON-RAMP
(FOR SHEET E-126 TO E-133)

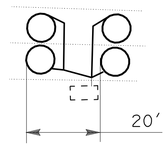

TYPICAL DOUBLE LOOP AT MAINLINE
(FOR SHEET E-126 TO E-137)

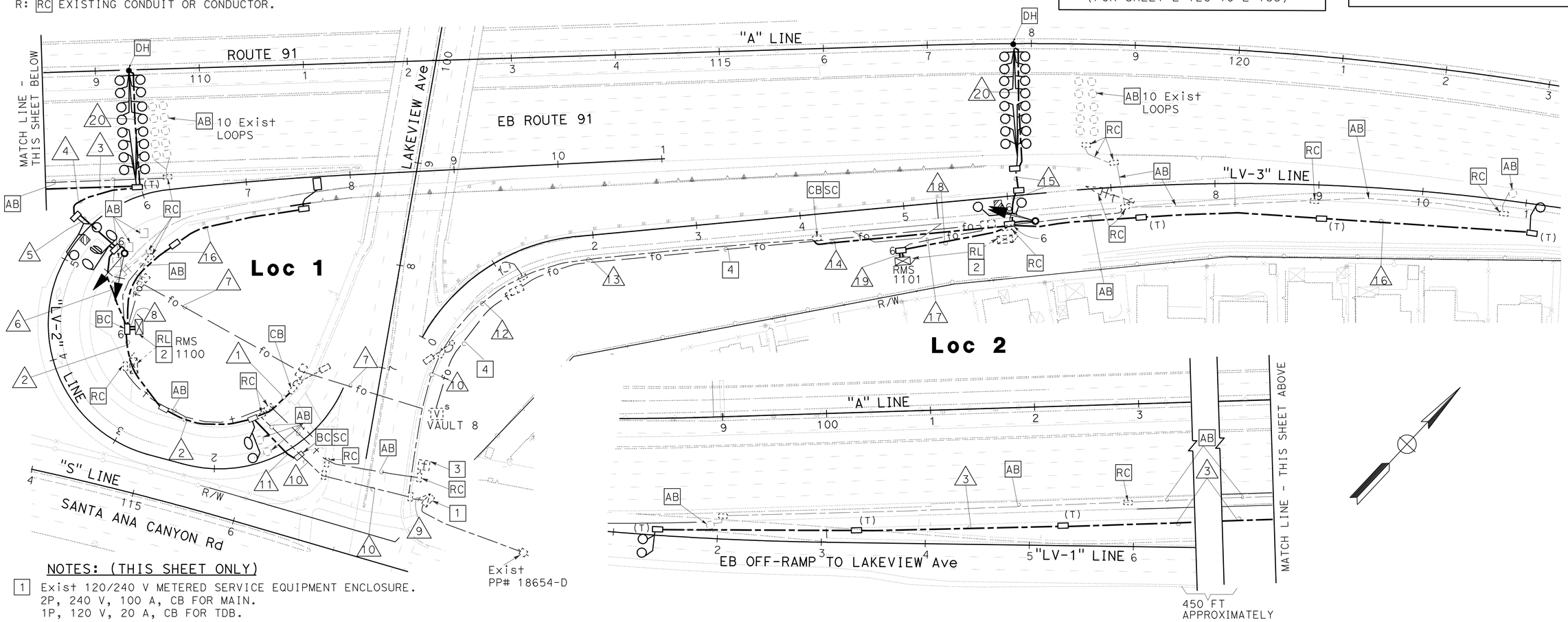

NOTES: (THIS SHEET ONLY)

1. Exist 120/240 V METERED SERVICE EQUIPMENT ENCLOSURE.
   2P, 240 V, 100 A, CB FOR MAIN.
   1P, 120 V, 20 A, CB FOR TDB.
   2-1P, 120 V, 30 A, CB FOR RAMP.
2. EXISTING MODEL 334 CONTROLLER CABINET.
3. RC EXISTING TELEPHONE DEMARCATION CABINET. REMOVE FOUNDATION COMPLETELY.
4. SEE EXISTING foc IN SHEET E-95.
5. SEE SHEET E-133 FOR RMS DETAILS.

THIS PLAN IS ACCURATE FOR ELECTRICAL WORK ONLY.

RAMP METERING SYSTEM (LOCATION 1 AND 2)

SCALE: 1" = 50'

E-126

STATE OF CALIFORNIA - DEPARTMENT OF TRANSPORTATION
Caltrans® ELECTRICAL DESIGN

FUNCTIONAL SUPERVISOR: SHAHRAM SHAHRIARI
CALCULATED-DESIGNED BY: JOANNE VO
CHECKED BY: SHAHRAM SHAHRIARI
REVISED BY / DATE REVISED

LAST REVISION 10-13-10 | DATE PLOTTED => 16-DEC-2010 | TIME PLOTTED => 17:12

FOR ACCURATE RIGHT OF WAY AND ACCESS DATA,
CONTACT RIGHT OF WAY ENGINEERING AT THE DISTRICT OFFICE.

Dist	COUNTY	ROUTE	POST MILES TOTAL PROJECT	SHEET No.	TOTAL SHEETS
12	Ora	91	9.1/15.1	702	949

REGISTERED ELECTRICAL ENGINEER 08-12-10 DATE

10-25-10
PLANS APPROVAL DATE

REGISTERED PROFESSIONAL ENGINEER
JOANNE VO
No. E 16748
Exp. 9/30/12
ELECTRICAL
STATE OF CALIFORNIA

THE STATE OF CALIFORNIA OR ITS OFFICERS OR AGENTS SHALL NOT BE RESPONSIBLE FOR THE ACCURACY OR COMPLETENESS OF SCANNED COPIES OF THIS PLAN SHEET.

CONDUCTOR AND CONDUIT SCHEDULE

AWG	CIRCUIT	1	2	3	4	5	6	7	8	19	9	10	11	12	13	14	15	16	17	18
DLC	SURVEILLANCE		14N	14N		14N			14N								14N	14N	14N	14N
	DEMAND			1N		2N			2N									1N	2N	2N
	PASSAGE			1N		2N			2N									1N	2N	2N
	COUNT	2N	2N	2N	1N	3N			3N						1N				1N	1N
	QUEUE							2N	2N				2R/2N	2N						2N
#14	SPARE					3N			3N									3N	6N	6N
	RAMP SIGNAL					3N			3N									3N	6N	6N
	METER ON SIGN						2E	2N	2N			2E	2R/2N	2N						2N
#10	SIGNAL COMMON					1N			1N									1N	2N	2N
#2	SERVICE							2N	2N		2E					2N	2N	2N	2N	2N
#14	LOOP WIRE									12N						12N				
4#18	TELEPHONE CABLE										2R	1R	1R	1R						
#12	POWER TELEPHONE BOX						2R				2R									
	CONDUIT SIZE	1½"N	2½"N	3"N	1½"N	4"N	2"E	3"N	2-3"N	2"N	2½"E	2"E	2"E	2"N	1½"N	2"N	2"N	3"N	4"N	2-3"N

E: EXISTING CONDUIT OR CONDUCTOR. N: NEW CONDUIT OR CONDUCTOR. R: REMOVE CONDUIT OR CONDUCTOR.

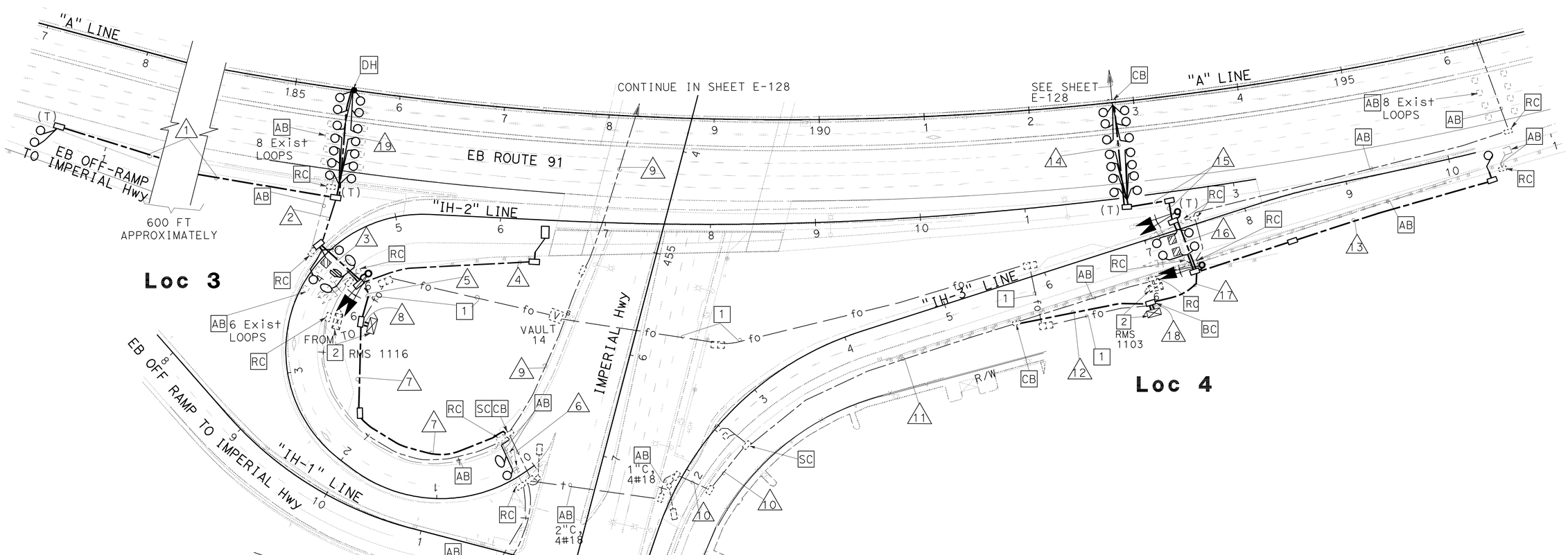

NOTES: (THIS SHEET ONLY)

1. SEE SHEET E-103 FOR COMMUNICATION SYSTEM REFERENCE.
2. RL EXISTING MODEL 334 CONTROLLER CABINET.
3. RC EXISTING TELEPHONE DEMARCATION CABINET.
4. SEE SHEET E-126 AND E-133 FOR RMS DETAILS.

THIS PLAN IS ACCURATE FOR ELECTRICAL WORK ONLY.

RAMP METERING SYSTEM (LOCATION 3 AND 4)

SCALE: 1" = 50'

E-127

STATE OF CALIFORNIA - DEPARTMENT OF TRANSPORTATION
Caltrans® ELECTRICAL DESIGN

FUNCTIONAL SUPERVISOR: S. SHAHRIARI
CALCULATED-DESIGNED BY: JOANNE VO
CHECKED BY: S. SHAHRIARI
REVISED BY
DATE REVISED

LAST REVISION 10-13-10
DATE PLOTTED => 17-DEC-2010
TIME PLOTTED => 09:57

Dist	COUNTY	LOCATION CODE	POST MILES TOTAL PROJECT	SHEET No.	TOTAL SHEETS
12	Ora	91	9.1/15.1	703	949

REGISTERED ELECTRICAL ENGINEER 10-29-10 DATE

PLANS APPROVAL DATE 10-25-10

REGISTERED PROFESSIONAL ENGINEER JOANNE VO No. E 16748 Exp. 9/30/12 ELECTRICAL STATE OF CALIFORNIA

THE STATE OF CALIFORNIA OR ITS OFFICERS OR AGENTS SHALL NOT BE RESPONSIBLE FOR THE ACCURACY OR COMPLETENESS OF SCANNED COPIES OF THIS PLAN SHEET.

FOR ACCURATE RIGHT OF WAY AND ACCESS DATA,
CONTACT RIGHT OF WAY ENGINEERING AT THE DISTRICT OFFICE.

NOTES: (THIS SHEET ONLY)

1. Exist 120/240 V METERED SERVICE IN TYPE III-CF EQUIPMENT ENCLOSURE.
   2P, 120 V, 100 A, CB FOR MAIN.
   1P, 120 V, 20 A, CB FOR TDB.
   2-1P, 120 V, 30 A, CB FOR RAMP.
2. RL EXISTING MODEL 334 ASSEMBLY.
3. SEE SHEET E-103 FOR COMMUNICATION LINE REFERENCE.
4. SEE SHEET E-127 FOR CONTINUITY.
5. SEE SHEET E-126 AND E-133 FOR RMS DETAILS.

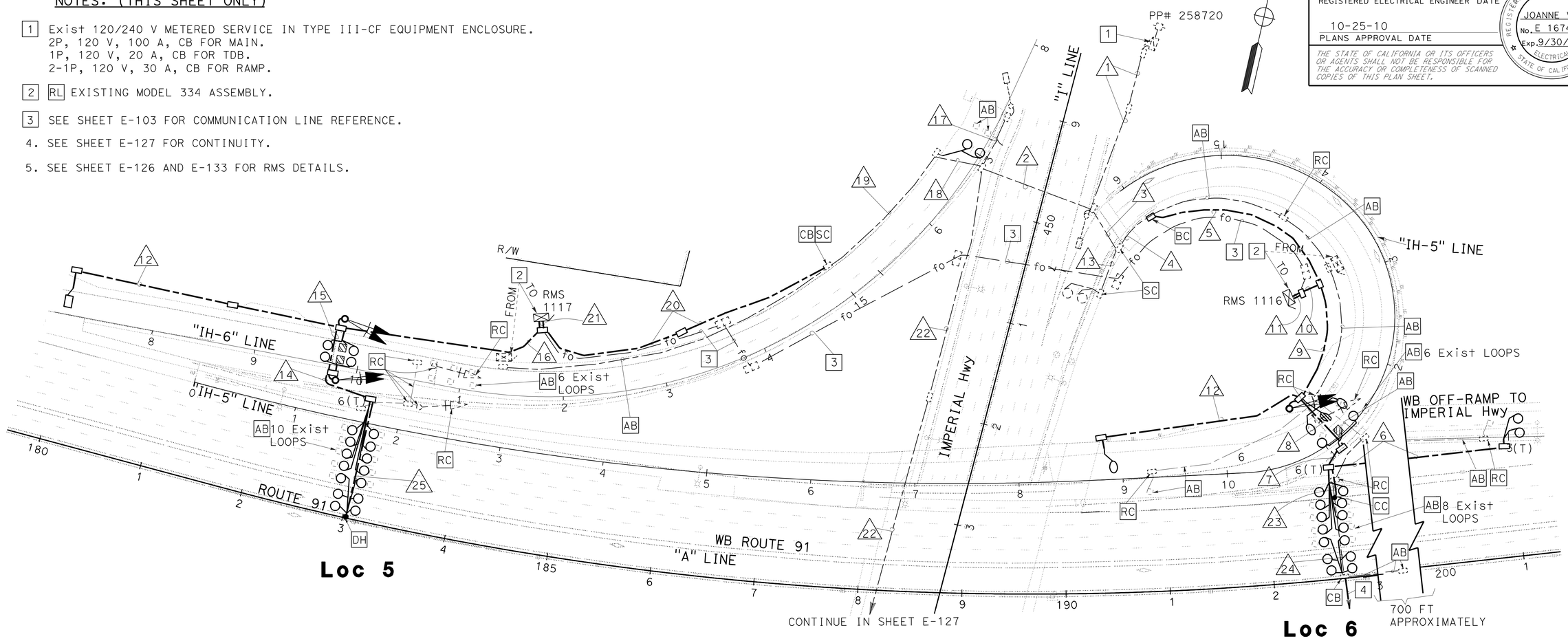

CONDUCTOR AND CONDUIT SCHEDULE

AWG	CIRCUIT	1	2	3	4	5	6	7	8	9	10	11	12	13	25	14	15	16	17	18	19	20	21	22	23	24
DLC	SURVEILLANCE							14N	14N	14N	14N	14N				14N	14N	14N					14N			
	DEMAND								1N	2N	2N	2N					1N	2N					2N			
	PASSAGE								1N	2N	2N	2N					1N	2N					2N			
	COUNT						2N	2N	2N	3N	3N	3N	1N					1N					1N			
	QUEUE				2R/2N	2N					2N	2N		2R/2N							2R/2N	2N	2N			
#14	SPARE									3N	3N	3N					3N	6N					6N			
	RAMP SIGNAL									3N	3N	3N					3N	6N					6N			
	METER ON SIGN			2E	2R/2N	2N					2N	2N							2E	2E	2E	2N	2N			
#10	SIGNAL COMMON				1N	1N				1N	1N	1N					1N	2N					2N			
#2	SERVICE	8E	4E	4E	4R/4N	4N		2N	2N	2N	2N	2N								2E	2E	2N	2N	2E	2N	2R/2N
LOOP WIRE															12N										12N	12N
4#18 TELEPHONE CABLE			1R	1R	1R															1R	1R			1R		
#12	POWER TELEPHONE BOX	2R	2R																					2R		8R
	CONDUIT SIZE	2"E	2"E	2"E	2"E	2"N	1½"N	2"N	2½"N	3"N	4"N	2-3"N	1½"N	1½"E	2"N	2"N	3"N	4"N	1½"E	2"E	2"E	2"N	2-3"N	2½"E	2"N	2"E

E: EXISTING CONDUIT OR CONDUCTOR. N: NEW CONDUIT OR CONDUCTOR. R: REMOVE CONDUIT OR CONDUCTOR.

THIS PLAN IS ACCURATE FOR ELECTRICAL WORK ONLY.

RAMP METERING SYSTEM (LOCATION 5 AND 6)

SCALE: 1" = 50'

E-128

REVISED BY	DATE REVISED
JOANNE VO	SHAHRAM SHAHRIARI

CALCULATED-DESIGNED BY	CHECKED BY

FUNCTIONAL SUPERVISOR: SHAHRAM SHAHRIARI

STATE OF CALIFORNIA - DEPARTMENT OF TRANSPORTATION
Caltrans® ELECTRICAL DESIGN

LAST REVISION 10-13-10 DATE PLOTTED => 17-DEC-2010 TIME PLOTTED => 09:57

Dist	COUNTY	LOCATION CODE	POST MILES TOTAL PROJECT	SHEET No.	TOTAL SHEETS
12	Ora	91	9.1/15.1	704	949

REGISTERED ELECTRICAL ENGINEER 10-29-10 DATE

10-25-10
PLANS APPROVAL DATE

REGISTERED PROFESSIONAL ENGINEER JOANNE VO No. E 16748 Exp. 9/30/12 ELECTRICAL STATE OF CALIFORNIA

THE STATE OF CALIFORNIA OR ITS OFFICERS OR AGENTS SHALL NOT BE RESPONSIBLE FOR THE ACCURACY OR COMPLETENESS OF SCANNED COPIES OF THIS PLAN SHEET.

FOR ACCURATE RIGHT OF WAY AND ACCESS DATA,
CONTACT RIGHT OF WAY ENGINEERING AT THE DISTRICT OFFICE.

NOTES: (THIS SHEET ONLY)

1. Exist 120/240 V TYPE III-CF METERED SERVICE EQUIPMENT ENCLOSURE.
   ID No. 12-55-091-0-014.441
   2P, 240 V, 100 A, CB FOR MAIN.
   2-1P, 120 V, 30 A, CB FOR RAMP.
2. EXISTING MODEL 334 CONTROLLER CABINET.
3. RC ALL EXISTING 4#18 TELEPHONE CABLE.
4. SEE SHEET E-115 FOR COMMUNICATION LINE REFERENCE.
5. SEE SHEET E-126 AND E-133 FOR RMS DETAILS.

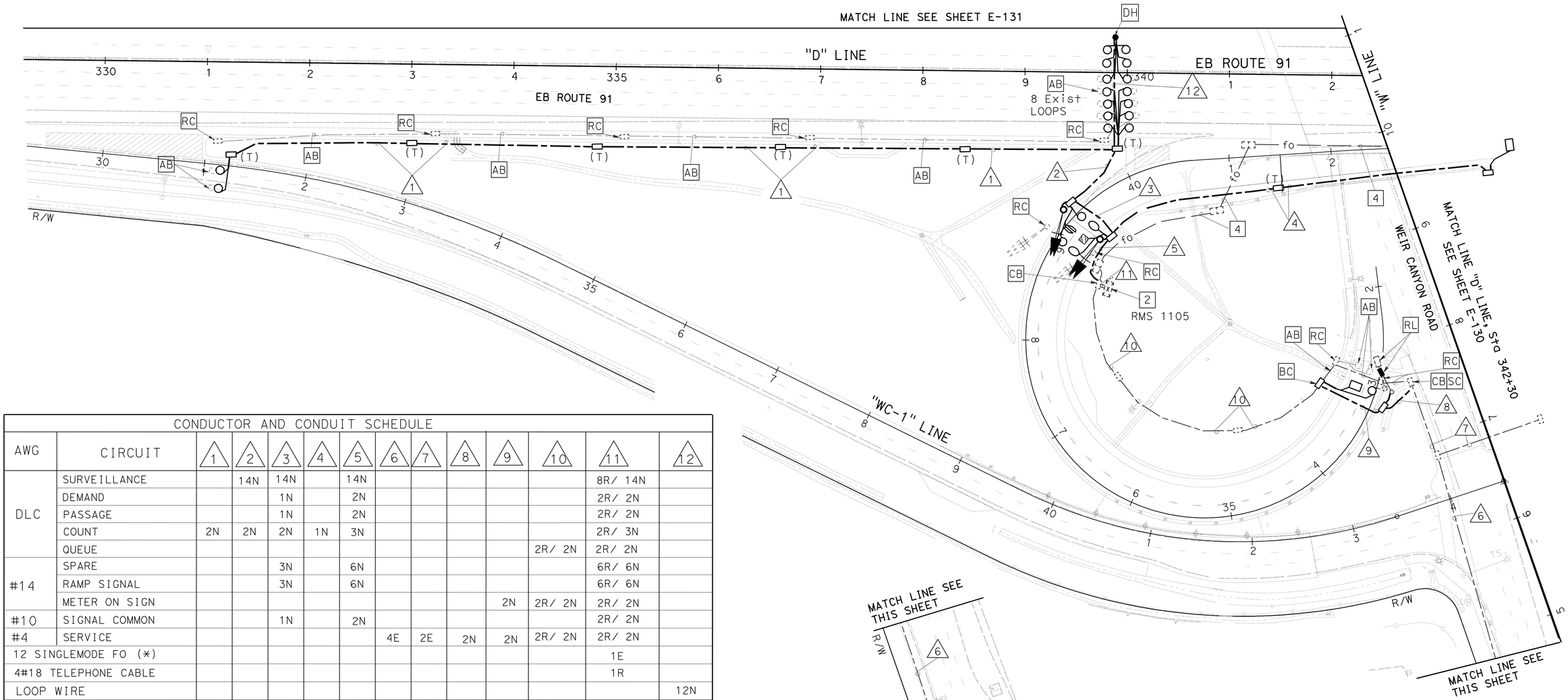

CONDUCTOR AND CONDUIT SCHEDULE													
AWG	CIRCUIT	1	2	3	4	5	6	7	8	9	10	11	12
DLC	SURVEILLANCE		14N	14N		14N						8R/ 14N	
	DEMAND			1N		2N						2R/ 2N	
	PASSAGE			1N		2N						2R/ 2N	
	COUNT	2N	2N	2N	1N	3N						2R/ 3N	
	QUEUE										2R/ 2N	2R/ 2N	
#14	SPARE			3N		6N						6R/ 6N	
	RAMP SIGNAL			3N		6N						6R/ 6N	
	METER ON SIGN									2N	2R/ 2N	2R/ 2N	
#10	SIGNAL COMMON			1N		2N						2R/ 2N	
#4	SERVICE						4E	2E	2N	2N	2R/ 2N	2R/ 2N	
12 SINGLEMODE FO (*)												1E	
4#18 TELEPHONE CABLE												1R	
LOOP WIRE													12N
CONDUIT SIZE		1½"N	2½"N	3½"N	1½"N	4"N	2"E	2"E	1½"N	2"N	2"E	2-3"E	2"N

E: EXISTING CONDUIT OR CONDUCTOR.
R: REMOVE CONDUIT OR CONDUCTOR.
N: NEW CONDUIT OR CONDUCTOR.
(*): SEE SHEET E-115 FOR FOC REFERENCE.

RAMP METERING SYSTEM (LOCATION 7)

SCALE: 1" = 50'

E-129

THIS PLAN IS ACCURATE FOR ELECTRICAL WORK ONLY.

REVISED BY | DATE REVISED
JOANNE VO | SHAHRAM SHAHRIARI
CALCULATED-DESIGNED BY | CHECKED BY
FUNCTIONAL SUPERVISOR | SHAHRAM SHAHRIARI

STATE OF CALIFORNIA - DEPARTMENT OF TRANSPORTATION
Caltrans
ELECTRICAL DESIGN

LAST REVISION 10-13-10 | DATE PLOTTED => 17-DEC-2010 TIME PLOTTED => 09:57

Dist	COUNTY	LOCATION CODE	POST MILES TOTAL PROJECT	SHEET No.	TOTAL SHEETS
12	Ora	91	9.1/15.1	705	949

REGISTERED ELECTRICAL ENGINEER 10-29-10 DATE

10-25-10
PLANS APPROVAL DATE

REGISTERED PROFESSIONAL ENGINEER JOANNE VO No. E 16748 Exp. 9/30/12 ELECTRICAL STATE OF CALIFORNIA

THE STATE OF CALIFORNIA OR ITS OFFICERS OR AGENTS SHALL NOT BE RESPONSIBLE FOR THE ACCURACY OR COMPLETENESS OF SCANNED COPIES OF THIS PLAN SHEET.

FOR ACCURATE RIGHT OF WAY AND ACCESS DATA,
CONTACT RIGHT OF WAY ENGINEERING AT THE DISTRICT OFFICE.

CONDUCTOR AND CONDUIT SCHEDULE

AWG	CIRCUIT	1	2	3	4	5	6	7	8	9
DLC	SURVEILLANCE			16N			16N		16N	16N
	DEMAND			2N				1N	2N	2N
	PASSAGE			2N				1N	2N	2N
	COUNT			1N		1N			1N	1N
	QUEUE		2N	2N						2N
#14	SPARE			6N				3N	6N	6N
	RAMP SIGNAL			6N				3N	6N	6N
	METER ON SIGN		2N	2N						2N
#10	SIGNAL COMMON			2N				1N	2N	2N
#4	SERVICE	2E	2N	2N						2N
12 SINGLEMODE FO (*)				1E						1E
LOOP WIRE					16N					
CONDUIT SIZE		2"E	2"N	2-3"N	2"N	1½"N	2½"N	2"N	4"N	2-3"N

E: EXISTING CONDUIT OR CONDUCTOR.
R: REMOVE CONDUIT OR CONDUCTOR.
N: NEW CONDUIT OR CONDUCTOR.
(*): SEE SHEET E-115 AND E-117 FOR FOC REFERENCE.

MATCH LINE SEE SHEET E-131

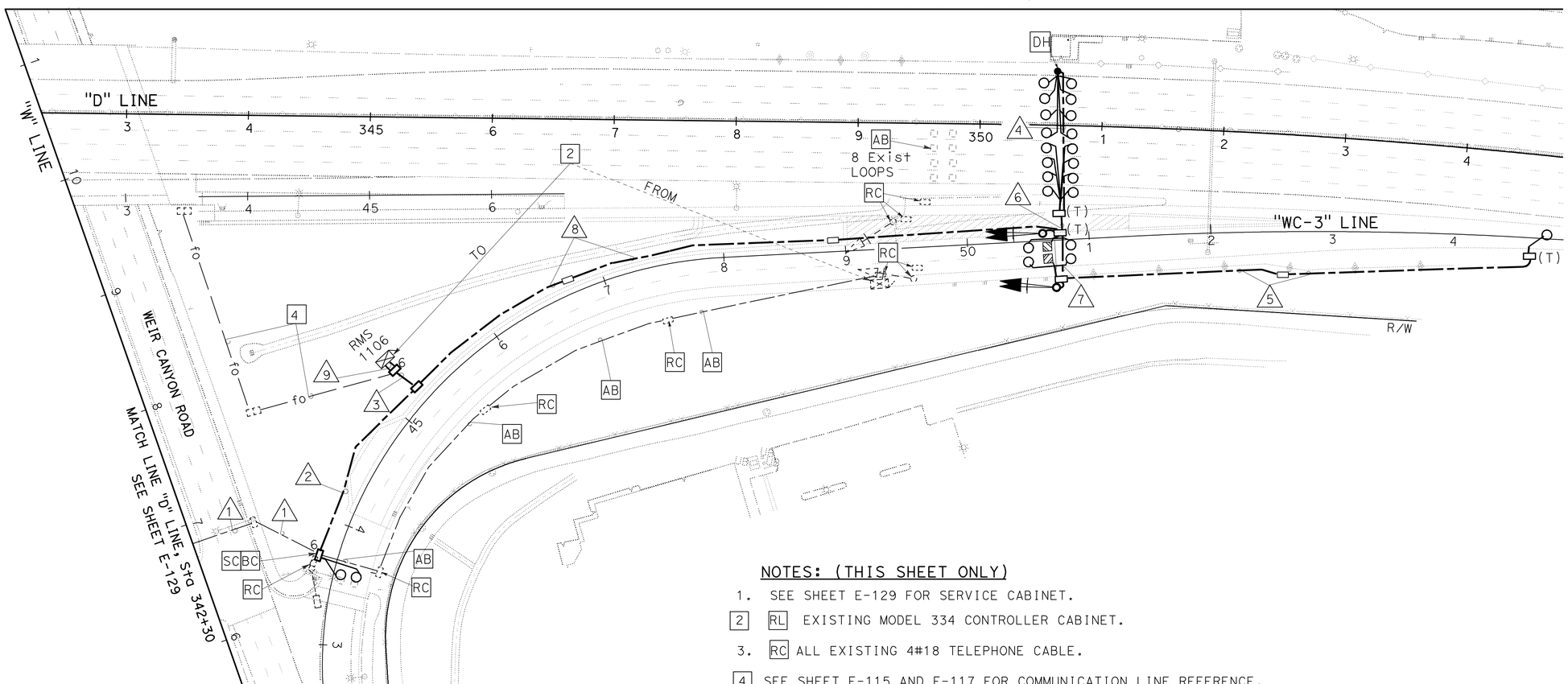

NOTES: (THIS SHEET ONLY)

1. SEE SHEET E-129 FOR SERVICE CABINET.
2. RL EXISTING MODEL 334 CONTROLLER CABINET.
3. RC ALL EXISTING 4#18 TELEPHONE CABLE.
4. SEE SHEET E-115 AND E-117 FOR COMMUNICATION LINE REFERENCE.
5. SEE SHEET E-126 AND E-133 FOR RMS DETAILS.

RAMP METERING SYSTEM (LOCATION 8)

SCALE: 1" = 50'

THIS PLAN IS ACCURATE FOR ELECTRICAL WORK ONLY.

E-130

STATE OF CALIFORNIA - DEPARTMENT OF TRANSPORTATION
Caltrans® ELECTRICAL DESIGN

FUNCTIONAL SUPERVISOR: SHAHRAM SHAHRIARI
CALCULATED-DESIGNED BY: JOANNE VO
CHECKED BY: SHAHRAM SHAHRIARI
REVISED BY / DATE REVISED

LAST REVISION 10-13-10 | DATE PLOTTED => 17-DEC-2010 | TIME PLOTTED => 13:24

BORDER LAST REVISED 4/11/2008 | RELATIVE BORDER SCALE IS IN INCHES 0 1 2 3 | USERNAME => trmnguye | DGN FILE => c0g330ua132.dgn | CU 12390 | EA 0G3301

Dist	COUNTY	LOCATION CODE	POST MILES TOTAL PROJECT	SHEET No.	TOTAL SHEETS
12	Ora	91	9.1/15.1	706	949

REGISTERED ELECTRICAL ENGINEER 10-29-10 DATE

10-25-10
PLANS APPROVAL DATE

REGISTERED PROFESSIONAL ENGINEER JOANNE VO No. E 16748 Exp. 9/30/12 ELECTRICAL STATE OF CALIFORNIA

THE STATE OF CALIFORNIA OR ITS OFFICERS OR AGENTS SHALL NOT BE RESPONSIBLE FOR THE ACCURACY OR COMPLETENESS OF SCANNED COPIES OF THIS PLAN SHEET.

FOR ACCURATE RIGHT OF WAY AND ACCESS DATA,
CONTACT RIGHT OF WAY ENGINEERING AT THE DISTRICT OFFICE.

CONDUCTOR AND CONDUIT SCHEDULE

AWG	CIRCUIT	1	2	3	4	5	6	7	8	9	10	11	12	13	14
DLC	SURVEILLANCE		14N	14N	14N	14N					14N				
	DEMAND			1N	2N	2N					2N				
	PASSAGE			1N	2N	2N					2N				
	COUNT	1N			1N	1N					1N				
	QUEUE					2N		2N	2R/2N	2N	2N				
#14	SPARE			3N	6N	6N					6N				
	RAMP SIGNAL			3N	6N	6N					6N				
	METER ON SIGN					2N	2N	2N	2R/2N	2N	2N	2N			
#10	SIGNAL COMMON			1N	2N	2N					2N				
#4	SERVICE					2N	2N	2N	2R/2N	2N	2N		2R/ 2N	2E	2E
12 SINGLEMODE FO (*)						1E					1E				
4#18 TELEPHONE CABLE									1R					2R	2R
#12	POWER TELEPHONE BOX													2R	
CONDUIT SIZE		1½"N	2"N	3"N	3"N	4"N	2"N	2"N	2"E	2"N	2-3"N	1"N	1"E	2"E	2"E

E: EXISTING CONDUIT OR CONDUCTOR.
R: REMOVE CONDUIT OR CONDUCTOR.
N: NEW CONDUIT OR CONDUCTOR.
(*): SEE SHEET E-115 FOR FOC REFERENCE.

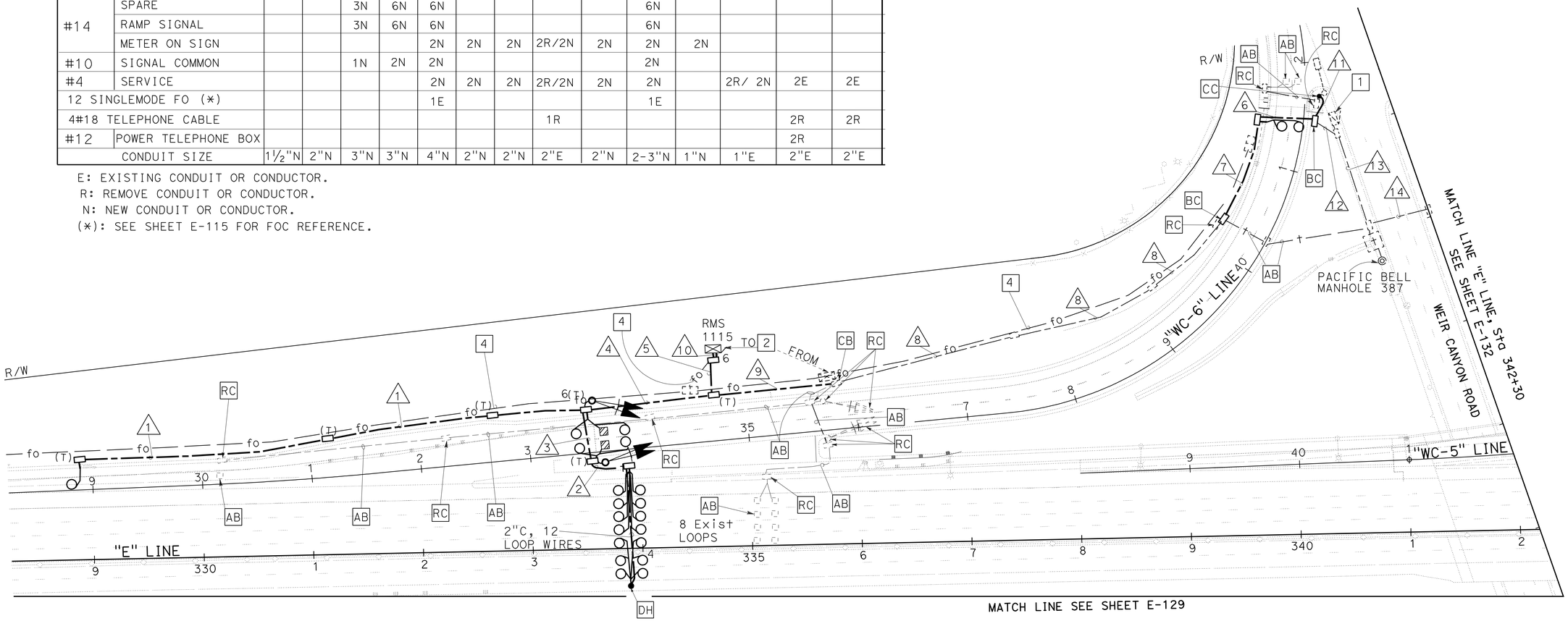

NOTES: (THIS SHEET ONLY)

1. Exist 120/240 V TYPE III-BF METERED SERVICE EQUIPMENT ENCLOSURE.
   ID No. 12-55-091-O-014.382
   2P, 240 V, 100 A, CB FOR MAIN.
   2-1P, 120 V, 30 A, CB FOR RAMP.

2. RL EXISTING MODEL 334 CONTROLLER CABINET.

3. SEE SHEET E-126 AND E-133 FOR RMS DETAILS.

4. SEE SHEET E-114 AND E-116 FOR FOC REFERENCE.

RAMP METERING SYSTEM (LOCATION 9)

SCALE: 1" = 50'

E-131

THIS PLAN IS ACCURATE FOR ELECTRICAL WORK ONLY.

STATE OF CALIFORNIA - DEPARTMENT OF TRANSPORTATION
Caltrans ELECTRICAL DESIGN

FUNCTIONAL SUPERVISOR: SHAHRAM SHAHRIARI
CALCULATED-DESIGNED BY: JOANNE VO
CHECKED BY: SHAHRAM SHAHRIARI
REVISED BY
DATE REVISED

LAST REVISION 10-13-10
DATE PLOTTED => 17-DEC-2010
TIME PLOTTED => 09:57

Dist	COUNTY	LOCATION CODE	POST MILES TOTAL PROJECT	SHEET No.	TOTAL SHEETS
12	Ora	91	9.1/15.1	707	949

REGISTERED ELECRICAL ENGINEER 10-29-10 DATE

10-25-10
PLANS APPROVAL DATE

REGISTERED PROFESSIONAL ENGINEER JOANNE VO No. E 16748 Exp. 9/30/12 ELECTRICAL STATE OF CALIFORNIA

THE STATE OF CALIFORNIA OR ITS OFFICERS OR AGENTS SHALL NOT BE RESPONSIBLE FOR THE ACCURACY OR COMPLETENESS OF SCANNED COPIES OF THIS PLAN SHEET.

FOR ACCURATE RIGHT OF WAY AND ACCESS DATA,
CONTACT RIGHT OF WAY ENGINEERING AT THE DISTRICT OFFICE.

NOTES: (THIS SHEET ONLY)

1. Exist 120/240 V TYPE III-CF METERED SERVICE EQUIPMENT ENCLOSURE. ID No. 12-55-091-0-014.382 SEE SHEET E-131.
2. EXISTING MODEL 334 CONTROLLER CABINET.
3. RC ALL EXISTING 4#18 TELEPHONE CABLE.
4. SEE SHEET E-116 FOR TYPE D FOC REFERENCE.
5. SEE SHEET E-126 AND E-133 FOR RMS DETAILS.

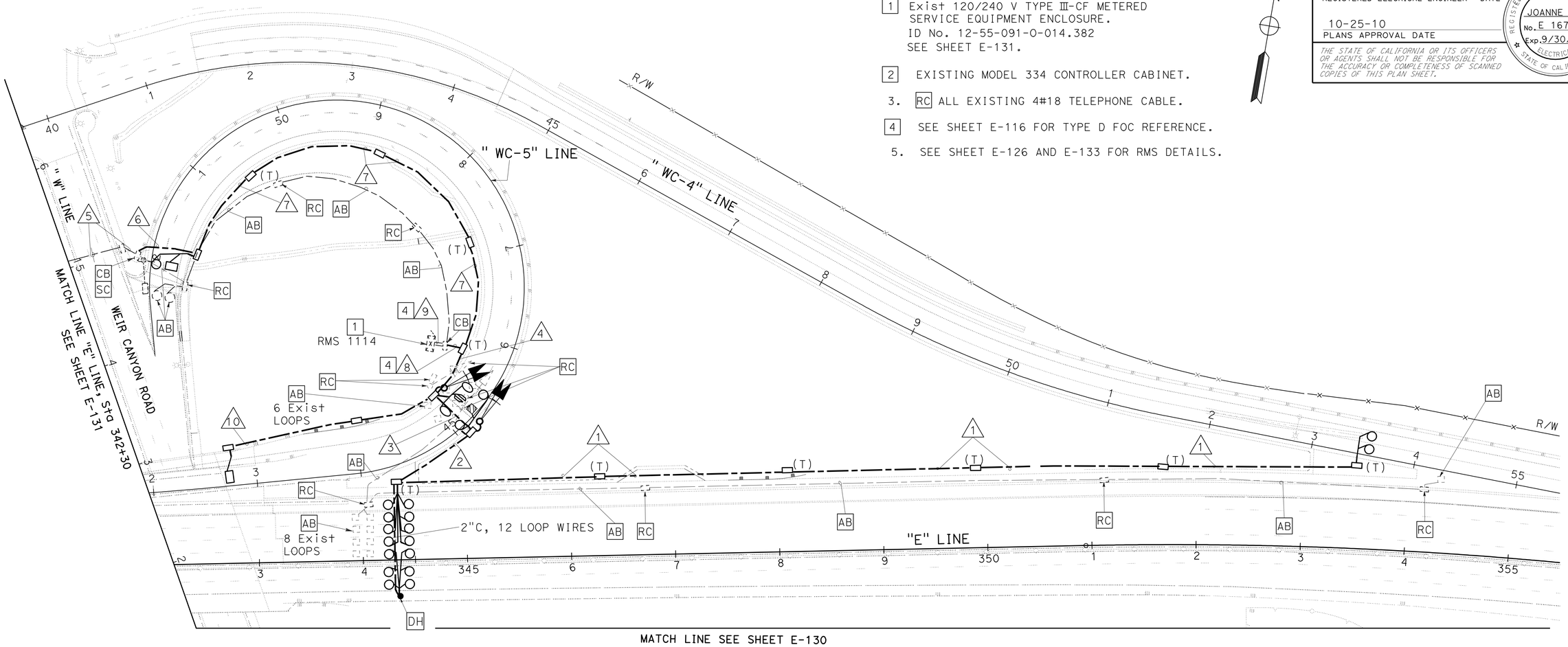

CONDUCTOR AND CONDUIT SCHEDULE											
AWG	CIRCUIT	1	2	3	4	5	6	7	8	9	10
DLC	SURVEILLANCE		14N	14N	14N				14N	10R/ 14N	
	DEMAND			1N	2N				2N	2R/ 2N	
	PASSAGE			1N	2N				2N	2R/ 2N	
	COUNT	2N	2N	2N	3N				3N	3R/ 3N	1N
	QUEUE							2N	2N	2R/ 2N	
#14	SPARE			3N	6N				6N	6R/ 6N	
	RAMP SIGNAL			3N	6N				6N	6R/ 6N	
	METER ON SIGN						2N	2N	2N	2R/ 2N	
#10	SIGNAL COMMON			1N	2N				2N	2R/ 2N	
#4	SERVICE					2E	2N	2N	2N	2R/ 2N	
12 SINGLEMODE FO (*)										1E	
4#18 TELEPHONE CABLE						2R				2R	
CONDUIT SIZE		1½"N	2½"N	3"N	3½"N	2"E	2"N	2"N	4"N	2-3"E	1½"N

E: EXISTING CONDUIT OR CONDUCTOR.
R: REMOVE CONDUIT OR CONDUCTOR.
N: NEW CONDUIT OR CONDUCTOR.
(*): SEE SHEET E-115 FOR FOC REFERENCE.

RAMP METERING SYSTEM (LOCATION 10)

SCALE: 1" = 50'

THIS PLAN IS ACCURATE FOR ELECTRICAL WORK ONLY.

E-132

STATE OF CALIFORNIA - DEPARTMENT OF TRANSPORTATION
Caltrans® ELECTRICAL DESIGN

FUNCTIONAL SUPERVISOR: SHAHRAM SHAHRIARI
CALCULATED-DESIGNED BY: JOANNE VO
CHECKED BY: SHAHRAM SHAHRIARI
REVISED BY
DATE REVISED

LAST REVISION 10-13-10
DATE PLOTTED => 17-DEC-2010
TIME PLOTTED => 09:57

Dist	COUNTY	ROUTE	POST MILES TOTAL PROJECT	SHEET No.	TOTAL SHEETS
12	Ora	91	9.1/15.1	708	949

REGISTERED ELECTRICAL ENGINEER 10-29-10 DATE

PLANS APPROVAL DATE 10-25-10

REGISTERED PROFESSIONAL ENGINEER JOANNE VO No. E 16748 Exp. 9/30/12 ELECTRICAL STATE OF CALIFORNIA

THE STATE OF CALIFORNIA OR ITS OFFICERS OR AGENTS SHALL NOT BE RESPONSIBLE FOR THE ACCURACY OR COMPLETENESS OF SCANNED COPIES OF THIS PLAN SHEET.

NOTES: (RAMP METERING SIGNAL)

A. TYPE 1-A STANDARD. INSTALL ANCHOR BOLTS WITH SLEEVE NUTS (SEE RSP ES-7B).

B. 3-SECTION, 12" SIGNAL HEAD (RED, YELLOW, GREEN). 18" X 12" ANGLED VISORS ARE REQUIRED WHERE SHOWN ON THE PLANS. TYPE TV-2-T POST-TOP MOUNTING.

C. 2-SECTION, 12" SIGNAL HEAD (RED, GREEN), 12" FULL CIRCLE VISORS. TYPE SV-1-T BRACKET MOUNTING ON SIDE OF STANDARD AWAY FROM TRAFFIC.

D. 1-SECTION, 12" SIGNAL HEAD (RED), 12" FULL CIRCLE VISOR. RED STATUS LIGHT FOR ENFORCEMENT.

E. BACKPLATE.

F. SIGN R89, SIGN R89-1, OR SIGN R89-2. MOUNTED ON BACK PLATE AND CENTER BETWEEN GREEN SECTION AND BOTTOM OF BACK PLATE AND SIDES. ATTACH WITH 1/4" ALUMINUM BLIND RIVETS OR GALVANIZED 1/4" X 3/4" BOLTS, HEX NUTS, PLAIN AND LOCK WASHERS.

G. FOR LIMIT LINE LOCATION, SEE PAVEMENT DELINEATION PLANS.

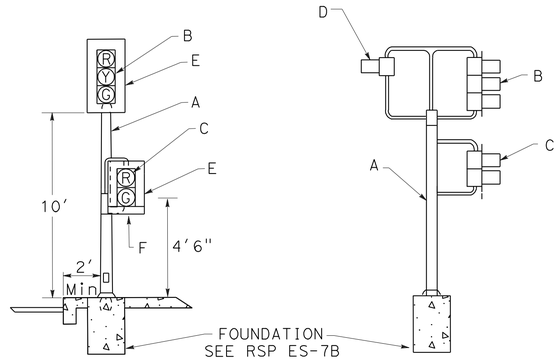

RAMP METERING SIGNAL
DETAIL A

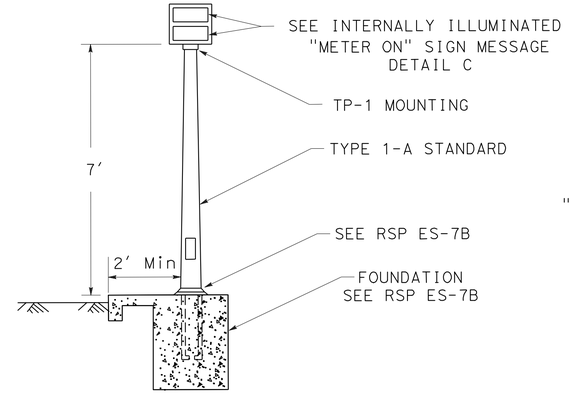

INTERNALLY ILLUMINATED
"METER ON" SIGN
DETAIL B

"METER" LETTERS 4 1/2" UPPER CASE, 1/2" STROKE
"ON" LETTERS 6" UPPER CASE, 1" STROKE

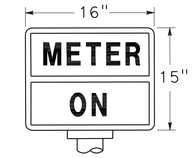

INTERNALLY ILLUMINATED
"METER ON" SIGN MESSAGE
DETAIL C

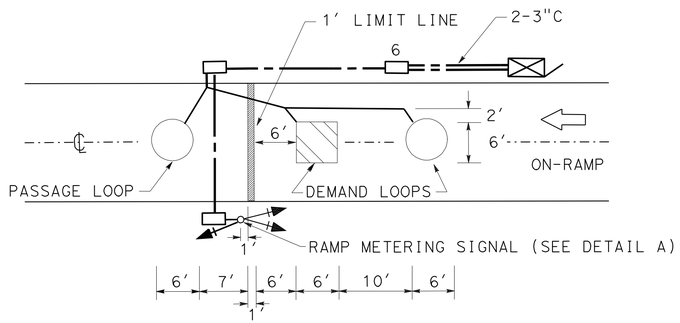

TYPICAL 1-LANE RAMP
METERING INSTALLATION
DETAIL D

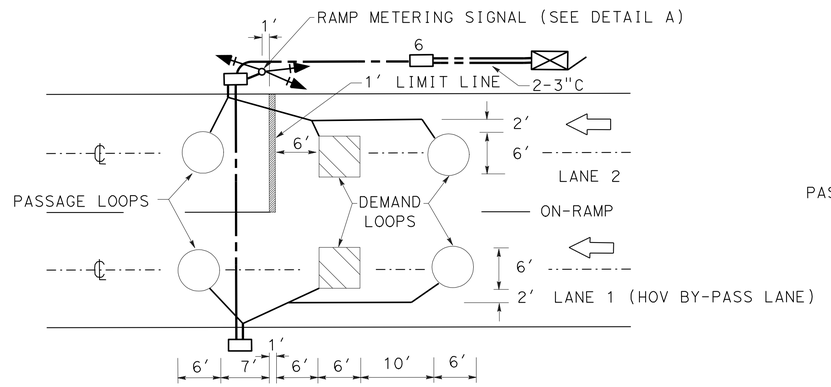

TYPICAL RAMP METERING INSTALLATION
WITH HIGH OCCUPANCY VEHICLE (HOV)
BY-PASS LANE
DETAIL E

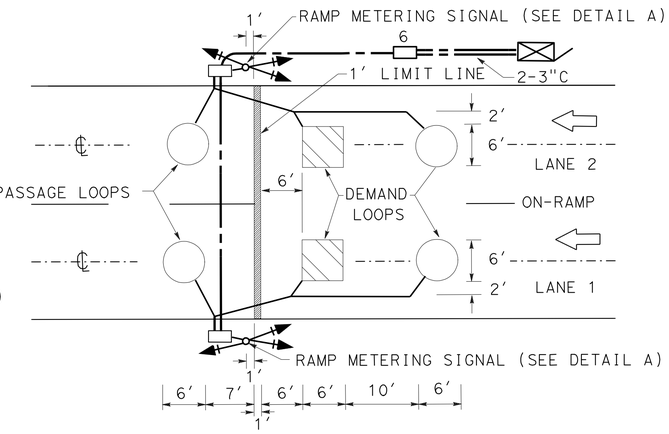

TYPICAL 2-LANE RAMP
METERING INSTALLATION
DETAIL F

NOTES: (LOOP DETECTOR)

a. SAW-CUT DEPTH TO ACCOMMODATE SPECIFIED NUMBER OF CONDUCTORS WITH A MINIMUM OF 1/2" FROM TOP OF WIRE TO PAVEMENT SURFACE (3 1/4" Max).

b. SLOT-SAW CUT DEPTH TO ACCOMMODATE 1" NON-METALLIC CONDUIT WITH 1/2" MINIMUM FROM TOP OF CONDUIT TO PAVEMENT SURFACE.

c. 1/2" MINIMUM BETWEEN TOP OF CONDUIT AND PAVEMENT SURFACE.

d. SAW-CUT WIDTH TO ACCOMODATE 1" NON-METALLIC CONDUIT WITH 1/8" CLEARANCE.

e. INDUCTIVE LOOP DETECTOR SAW-CUT.

f. 1" NON-METALLIC CONDUIT, 6" LONG, PLUG BOTH ENDS WITH CAULKING COMPOUND TO KEEP OUT EPOXY.

g. CONDUCTORS WITH 1/2" MINIMUM SLACK INSIDE CONDUIT.

h. SAW-CUT LENGTH OF SLOT 1/8" LONGER THAN CONDUIT.

i. SEE RSP ES-5A, ES-5B AND ES-5D FOR ADDITIONAL LOOP INSTALLATION PROCEDURE.

j. SPACING FOR MAINLINE DOUBLE LOOP IS 20' LEADING EDGE TO LEADING EDGE.

k. LOOP DETECTORS SHALL BE INSTALLED AFTER THE PLACEMENT OF UPPERMOST LAYER OF NEW PAVEMENT AND AFTER APPLYING TRAFFIC STRIPES AND PAVEMENT MARKINGS.

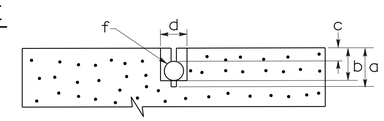

SECTION A-A

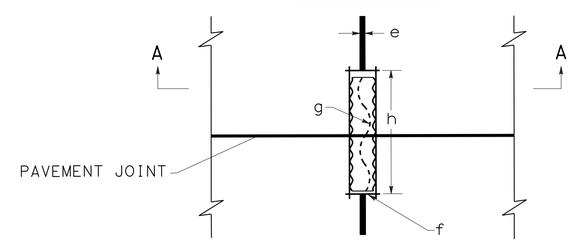

PLAN VIEW

TYPICAL LOOP LEAD-IN DETAIL AT PAVEMENT JOINT

LEGEND: (THIS SHEET ONLY)

RAMP METERING SIGNAL TO BE INSTALLED (SEE RAMP METERING SIGNAL DETAIL A).

METER-ON SIGN TO BE INSTALLED (SEE INTERNALLY ILLUMINATED "METER ON" SIGN DETAIL B).

STATE-FURNISHED MODEL 170E CONTROLLER IN MODEL 334 CONTROLLER CABINET TO BE INSTALLED. FOR FOUNDATION DETAILS SEE STANDARD PLANS ES-3C (FRONT DOOR SWING AS SHOWN).

THIS PLAN IS ACCURATE FOR ELECTRICAL WORK ONLY.

RAMP METERING SYSTEM
(ELECTRICAL DETAILS)

NO SCALE

E-133

REVISED BY | DATE REVISED
JOANNE VO | SHAHRAM SHAHRIARI
CALCULATED-DESIGNED BY | CHECKED BY
FUNCTIONAL SUPERVISOR: SHAHRAM SHAHRIARI

STATE OF CALIFORNIA - DEPARTMENT OF TRANSPORTATION
Caltrans® ELECTRICAL DESIGN

LAST REVISION 10-28-10 | DATE PLOTTED => 16-DEC-2010 | TIME PLOTTED => 17:12

DIST	COUNTY	ROUTE	POST MILE TOTAL PROJECT	SHEET No	TOTAL SHEETS
12	Ora	91	9.1/15.1	709	949

REGISTERED ELECTRICAL ENGINEER 08-12-10

10-25-10
PLANS APPROVAL DATE

REGISTERED PROFESSIONAL ENGINEER JOANNE VO No. E 16748 Exp. 9/30/12 ELECTRICAL STATE OF CALIFORNIA

The State of California or its officers or agents shall not be responsible for the accuracy or completeness of electronic copies of this plan sheet.

FOR ACCURATE RIGHT OF WAY AND ACCESS DATA,
CONTACT RIGHT OF WAY ENGINEERING AT THE DISTRICT OFFICE.

NOTES: (THIS SHEET ONLY)

1. EXISTING STEP DOWN TRANSFORMER CABINET, SEE SHEET E-68.
2. RELOCATE TWO EXISTING MODEL 170 CONTROLLER ASSEMBLIES AND ALL COMMUNICATION EQUIPMENT IN MODEL 334 CONTROLLER CABINET.

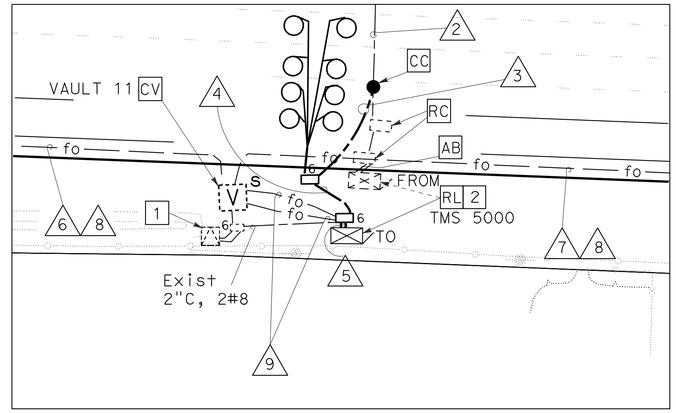

DETAIL A

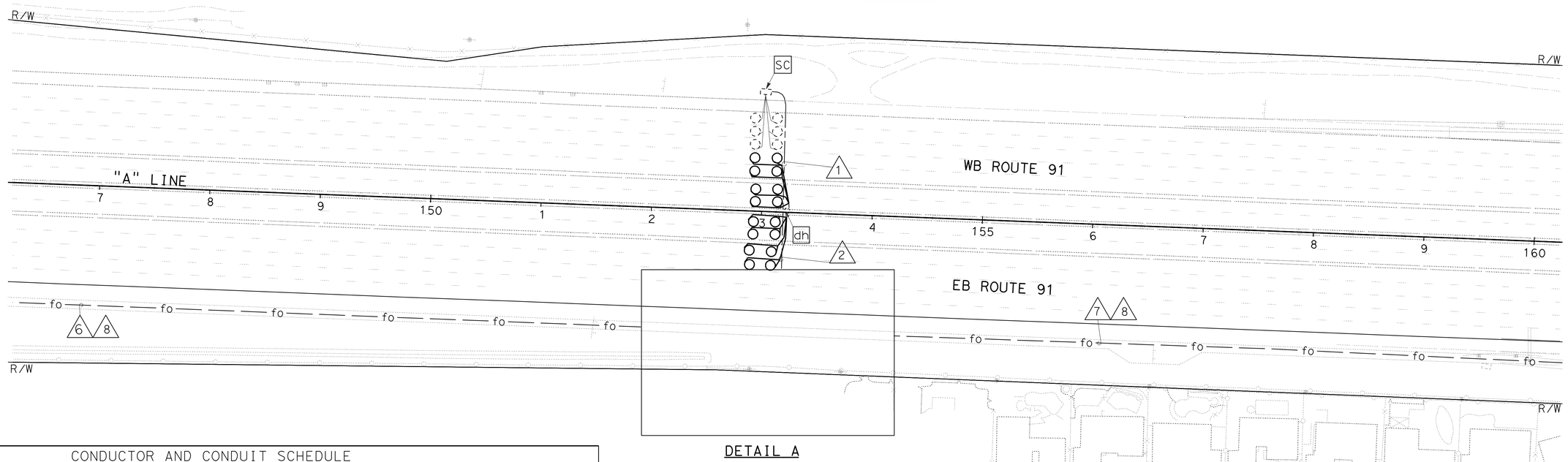

CONDUCTOR AND CONDUIT SCHEDULE										
AWG	CIRCUIT	1	2	3	4	5	6*	7*	8**	9
DLC	COUNT	6N / 6R	6N / 6R	6N	30N	30N	–	–	–	–
#6	SERVICE	–	–	–	–		–	4E		
#8	SERVICE	–			–	2E	–	–	–	–
#14	LOOP WIRE		32N/ 32R	32N						
FO	TYPE C	–	–	–	–	–	1E	1E	–	–
	TYPE D (***)	–	–	–	–	2E		–	–	1E
	CONDUIT SIZE	3"E	3"E	3"N	3"N	2-3"N	3"E	3"E	4"E	1½"E

N: NEW CONDUIT OR CABLE.
E: EXISTING CONDUIT OR CABLE.
R: REMOVE EXISTING CABLE.
*: SEE SHEET E-68 FOR OCTA FOC REFERENCE.
**: SEE SHEET E-99 FOR CALTRANS FOC REFERENCE.
***: SEE SHEET E-68 AND E-99 FOR FOC REFERENCE.

TRAFFIC MONITORING STATION
(LOCATION 1)

SCALE: 1" = 50'

THIS PLAN IS ACCURATE FOR ELECTRICAL WORK ONLY.

E-134

REVISED BY	DATE REVISED
JOANNE VO	VANESSA TRUONG
CALCULATED/DESIGNED BY	CHECKED BY
PROJECT ENGINEER	SHAHRAM SHAHRIARI

STATE OF CALIFORNIA - DEPARTMENT OF TRANSPORTATION
Caltrans
ELECTRICAL DESIGN

LAST REVISION 06-01-10 | DATE PLOTTED => 16-DEC-2010 | TIME PLOTTED => 17:12

FOR REDUCED PLANS ORIGINAL 0 20 40 60 80 | USERNAME => trlenard | DGN FILE => c0g330ua136.dgn | CU 12390 | EA 0G3301

FOR ACCURATE RIGHT OF WAY AND ACCESS DATA,
CONTACT RIGHT OF WAY ENGINEERING AT THE DISTRICT OFFICE.

DIST	COUNTY	ROUTE	POST MILE TOTAL PROJECT	SHEET No	TOTAL SHEETS
12	Ora	91	9.1/15.1	710	949

08-12-10
REGISTERED ELECTRICAL ENGINEER

10-25-10
PLANS APPROVAL DATE

REGISTERED PROFESSIONAL ENGINEER
JOANNE VO
No. E 16748
Exp. 9/30/12
ELECTRICAL
STATE OF CALIFORNIA

The State of California or its officers or agents shall not be responsible for the accuracy or completeness of electronic copies of this plan sheet.

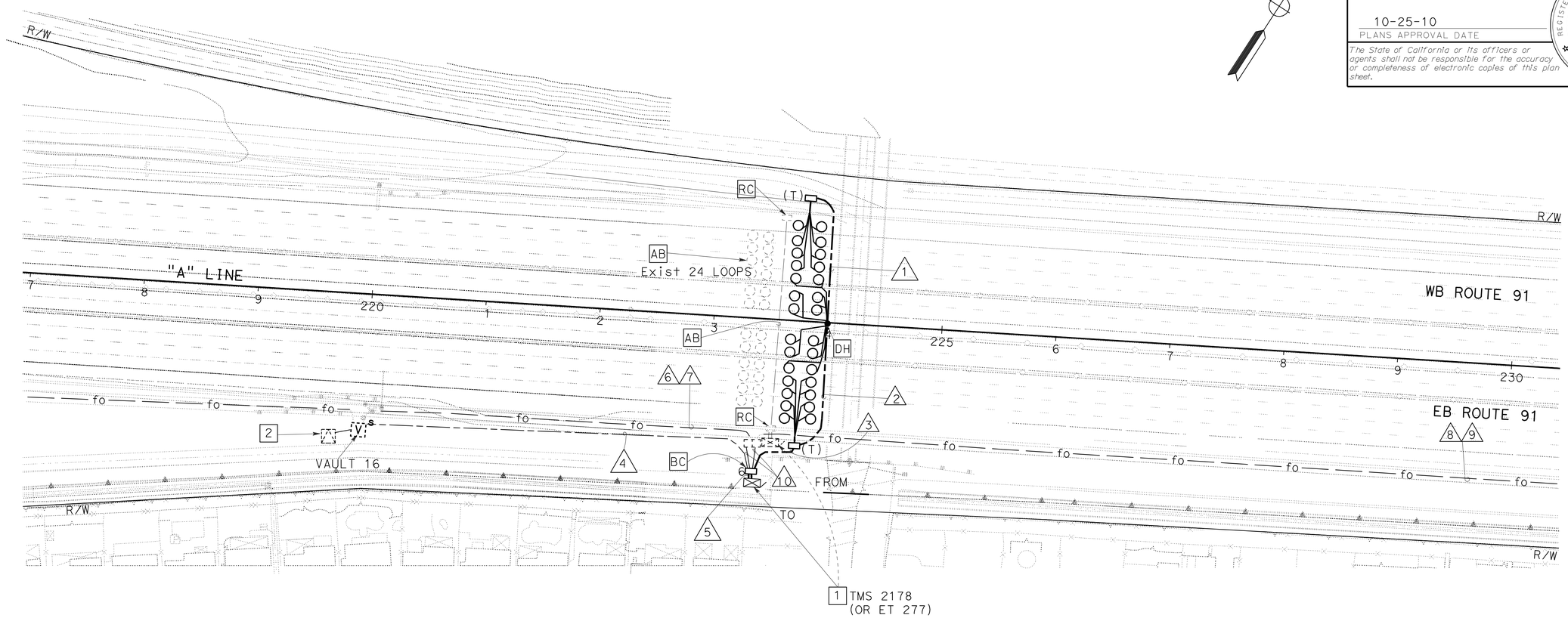

NOTES: (THIS SHEET ONLY)

1. RELOCATE TWO EXISTING MODEL 170 CONTROLLER ASSEMBLIES AND ALL COMMUNICATION EQUIPMENT IN MODEL 334 CONTROLLER CABINET.

2. EXISTING STEP DOWN TRANSFORMER CABINET, SEE SHEET E-74.

CONDUCTOR AND CONDUIT SCHEDULE

AWG	CIRCUIT	1	2	3	4*	5	6*	7**	8*	9**	10***
DLC	COUNT	8N	8N	28N	–	28N	–	–	–	–	–
#14	LOOP WIRE	–	24N	–	–	–	–	–	–	–	–
#8	SERVICE (*)	–	–	–	2E	2E	–	–	–	–	–
FO	TYPE C	–	–	–	–	–	1E	1E	1E	1E	
	TYPE D (***)	–	–	–	–	2E	1E	1E			1E
	CONDUIT SIZE	3"N	3"N	3"N	2"E	2-3"N	3"E	4"E	3"E	4"E	2"E

E: EXISTING CONDUIT OR CABLE.
N: NEW CONDUIT OR CABLE.
*: SEE REFERENCE IN SHEET E-74 AND E-75.
**: SEE REFERENCE IN SHEET E-105 AND E-106.
***: SEE REFERENCE IN SHEET E-75 AND E-106.

TRAFFIC MONITORING STATION
(LOCATION 2)

SCALE: 1" = 50'

THIS PLAN IS ACCURATE FOR ELECTRICAL WORK ONLY.

E-135

REVISED BY	DATE REVISED
JOANNE VO	VANESSA TRUONG
CALCULATED/DESIGNED BY	CHECKED BY

PROJECT ENGINEER
SHAHRAM SHAHRIARI

STATE OF CALIFORNIA - DEPARTMENT OF TRANSPORTATION
Caltrans
ELECTRICAL DESIGN

LAST REVISION 08-20-10
DATE PLOTTED => 17-DEC-2010
TIME PLOTTED => 09:57

FOR REDUCED PLANS ORIGINAL 0 20 40 60 80
USERNAME => trmikesl
DGN FILE => c0g330ua137.dgn
CU 12390
EA 0G3301

DIST	COUNTY	ROUTE	POST MILE TOTAL PROJECT	SHEET No	TOTAL SHEETS
12	Ora	91	9.1/15.1	711	949

08-12-10
REGISTERED ELECTRICAL ENGINEER

10-25-10
PLANS APPROVAL DATE

REGISTERED PROFESSIONAL ENGINEER
JOANNE VO
No. E 16748
Exp. 9/30/12
ELECTRICAL
STATE OF CALIFORNIA

The State of California or its officers or agents shall not be responsible for the accuracy or completeness of electronic copies of this plan sheet.

FOR ACCURATE RIGHT OF WAY AND ACCESS DATA,
CONTACT RIGHT OF WAY ENGINEERING AT THE DISTRICT OFFICE.

NOTES: (THIS SHEET ONLY)

1. RELOCATE EXISTING TWO MODEL 170 CONTROLLER ASSEMBLIES AND ALL COMMUNICATION EQUIPMENT IN MODEL 334 CONTROLLER CABINET.
2. EXISTING STEP DOWN TRANSFORMER, SEE SHEET E-77 FOR REFERENCE.

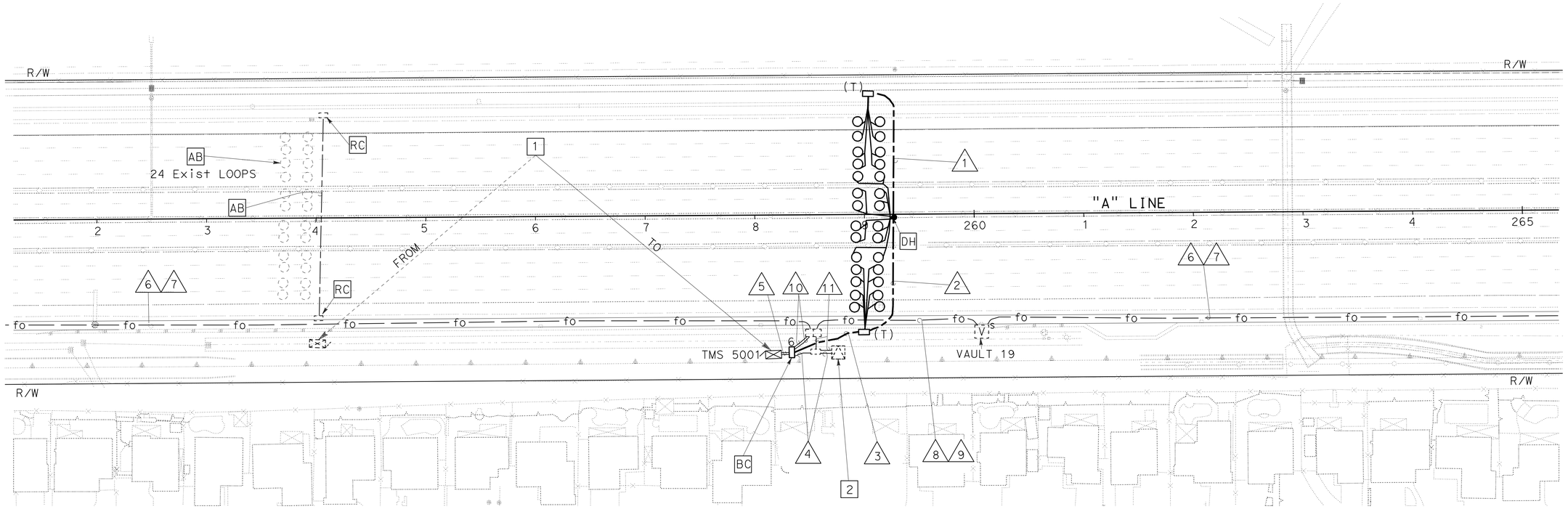

CONDUCTOR AND CONDUIT SCHEDULE

AWG	CIRCUIT	1	2	3	4 *	5 ***	6 *	7 **	8 *	9 **	10 ***	11 *
DLC	COUNT	8N	8N	28N	-	28N	-	-	-	-	-	-
#14	LOOP WIRE	-	24N	-	-	-	-	-	-	-	-	-
#8	SERVICE (*)	-	-	-	2E	2E	-	-	-	-	-	-
#6	SERVICE (*)						4E					4E
FO	TYPE C	-	-	-	-	-	1E	1E	1E	1E		
	TYPE D (***)	-	-	-	-	2E			1E	1E	2E	
	CONDUIT SIZE	3"N	3"N	3"N	2"E	2-3"N	3"E	4"E	3"E	4"E	2"E	2"E

(N): NEW CONDUIT OR CONDUCTOR
(E): EXISTING CONDUIT OR CONDUCTOR
(*): SEE REFERENCE IN SHEET E-77.
(**): SEE REFERENCE IN SHEET E-108.
(***): SEE REFERENCE IN SHEET E-77 AND E-108.

TRAFFIC MONITORING STATION
(LOCATION 3)

SCALE: 1" = 50'

THIS PLAN IS ACCURATE FOR ELECTRICAL WORK ONLY.

E-136

REVISED BY	DATE REVISED
JOANNE VO	VANESSA TRUONG
CALCULATED/DESIGNED BY	CHECKED BY
PROJECT ENGINEER	SHAHRAM SHAHRIARI

STATE OF CALIFORNIA - DEPARTMENT OF TRANSPORTATION
Caltrans
ELECTRICAL DESIGN

LAST REVISION 07-20-10
DATE PLOTTED => 17-DEC-2010
TIME PLOTTED => 09:57

DIST	COUNTY	ROUTE	POST MILE TOTAL PROJECT	SHEET No	TOTAL SHEETS
12	Ora	91	9.1/15.1	712	949

REGISTERED ELECTRICAL ENGINEER 08-12-10

10-25-10
PLANS APPROVAL DATE

REGISTERED PROFESSIONAL ENGINEER JOANNE VO No. E 16748 Exp. 9/30/12 ELECTRICAL STATE OF CALIFORNIA

The State of California or its officers or agents shall not be responsible for the accuracy or completeness of electronic copies of this plan sheet.

FOR ACCURATE RIGHT OF WAY AND ACCESS DATA,
CONTACT RIGHT OF WAY ENGINEERING AT THE DISTRICT OFFICE.

NOTES: (THIS SHEET ONLY)

1. RELOCATE TWO EXISTING MODEL 170 CONTROLLER ASSEMBLIES AND ALL COMMUNICATION EQUIPMENT IN MODEL 334 CONTROLLER CABINET. NEW FOUNDATION IS ON THE SLOPE.
2. EXISTING STEP DOWN TRANSFORMER, SEE SHEET E-79 FOR REFERENCE.

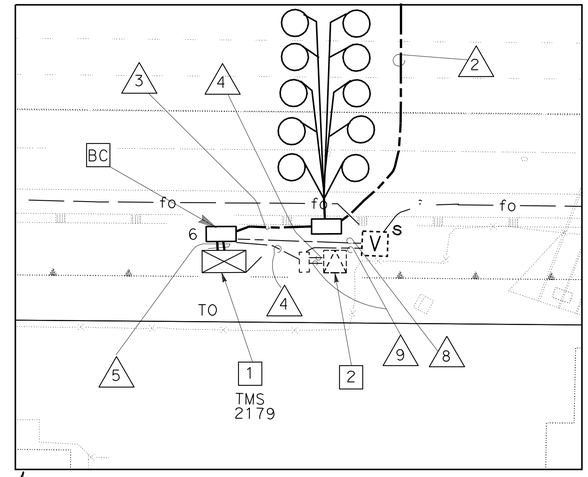

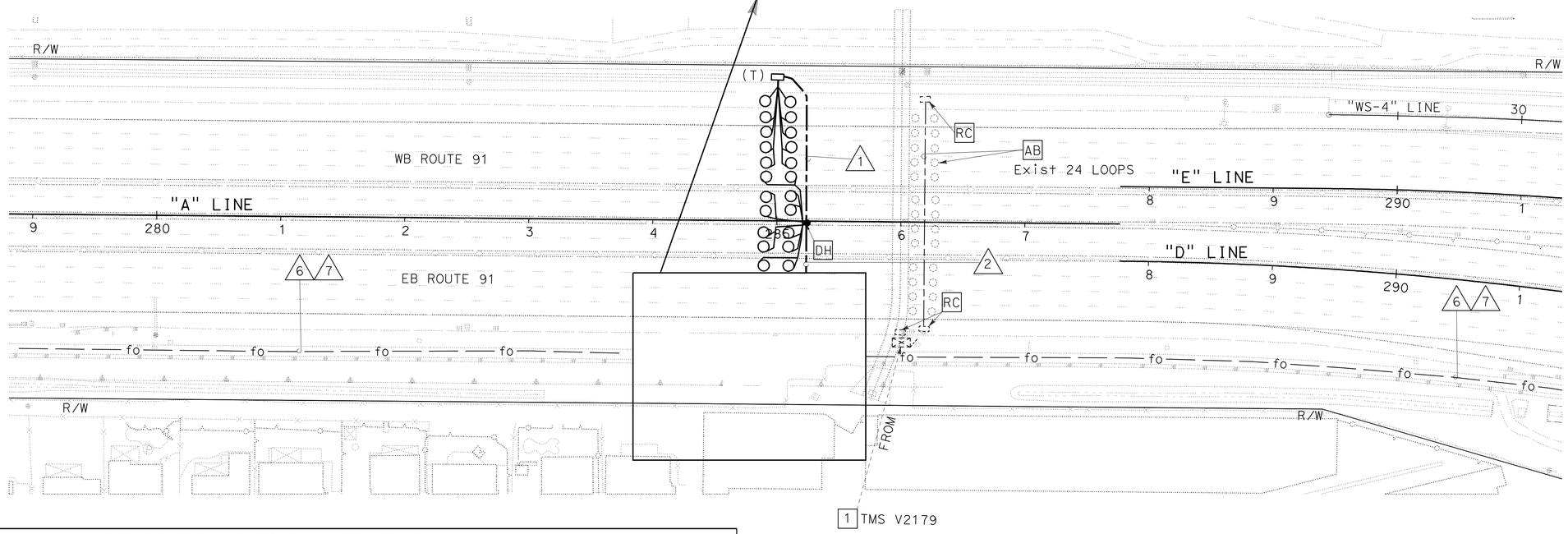

CONDUCTOR AND CONDUIT SCHEDULE										
AWG	CIRCUIT	1	2	3	4*	5***	6*	7**	8***	9*
DLC	COUNT	10N	10N	32N	–	32N	–	–	–	–
#14	LOOP WIRE	–	24N	–	–	–	–	–	–	–
#8	SERVICE	–	–	–	2E	2E	–	–	–	–
#6	SERVICE	–	–	–	–	–	4E	–	–	4E
FO	TYPE C	–	–	–	–	–	1E	1E	–	–
	TYPE D	–	–	–	–	2E	–	–	2E	–
	CONDUIT SIZE	3"N	3"N	3½"N	2"E	2-3"N	3"E	4"E	2"E	2"E

E: EXISTING CONDUIT OR CABLE.
N: NEW CONDUIT OR CABLE.
*: SEE REFERENCE IN SHEET E-79.
**: SEE REFERENCE IN SHEET E-110.
***: SEE REFERENCE IN SHEET E-79 AND E-110.

THIS PLAN IS ACCURATE FOR ELECTRICAL WORK ONLY.

TRAFFIC MONITORING STATION (LOCATION 4)

SCALE: 1" = 50'

E-137

REVISED BY	DATE REVISED
JOANNE VO	SHAHRAM SHAHRIARI
CALCULATED/DESIGNED BY	CHECKED BY
PROJECT ENGINEER	SHAHRAM SHAHRIARI

STATE OF CALIFORNIA - DEPARTMENT OF TRANSPORTATION
Caltrans
ELECTRICAL DESIGN

LAST REVISION 06-03-10 | DATE PLOTTED => 17-DEC-2010 | TIME PLOTTED => 09:58

FOR REDUCED PLANS ORIGINAL 0 20 40 60 80 | USERNAME => trmikesl | DGN FILE => c0g330ua139.dgn | CU 12390 | EA 0G3301

Dist	COUNTY	ROUTE	POST MILES TOTAL PROJECT	SHEET No.	TOTAL SHEETS
12	Ora	91	9.1/15.1	713	949

Vanessa Van Truong 08-12-10
REGISTERED ELECTRICAL ENGINEER DATE

10-25-10
PLANS APPROVAL DATE

REGISTERED PROFESSIONAL ENGINEER V.V. TRUONG No. E 13983 Exp. 6/30/12 ELECTRICAL STATE OF CALIFORNIA

THE STATE OF CALIFORNIA OR ITS OFFICERS OR AGENTS SHALL NOT BE RESPONSIBLE FOR THE ACCURACY OR COMPLETENESS OF SCANNED COPIES OF THIS PLAN SHEET.

FOR ACCURATE RIGHT OF WAY AND ACCESS DATA,
RIGHT OF WAY ENGINEERING AT THE DISTRICT OFFICE.

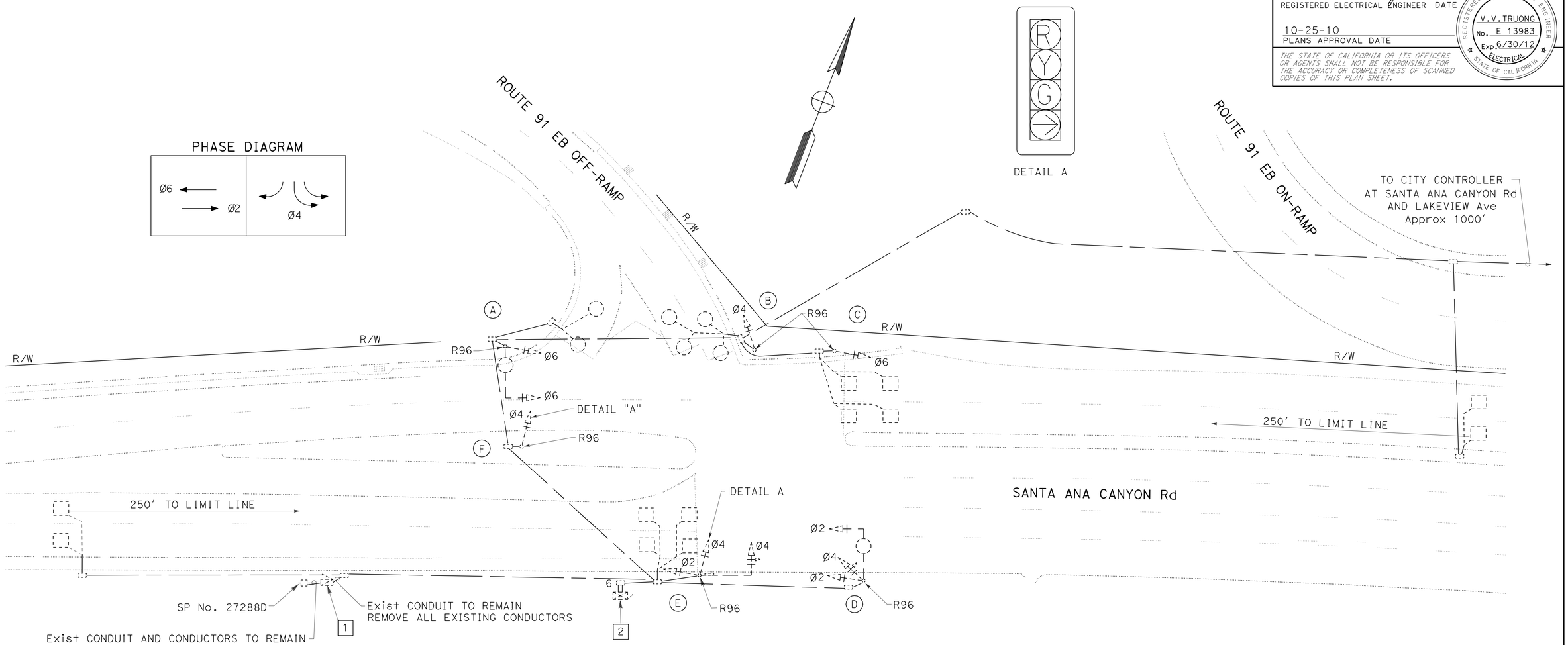

NOTES: (THIS SHEET ONLY)

1 RC EXISTING 120/240 V METERED SERVICE IN TYPE III-BF SERVICE EQUIPMENT ENCLOSURE.
REUSE EXISTING FOUNDATION.
100 A, 240 V, 2P, CB (MAIN)
40 A, 120 V, 1P, CB (SIGNAL)
30 A, 120 V, 1P, CB (LIGHTING)
15 A, 120 V, 1P, CB (IISNS)
ADDRESS: 4650 E SANTA ANA CANYON Rd.

2 RR EXISTING BBS. RC EXISTING MODEL 332 CONTROLLER CABINET.

3 RC ALL EXISTING PULL BOXES, SIGNAL STANDARD POLES, TRAFFIC SIGNAL HEADS, LUMINAIRES AND SIGNS ATTACHED ON STANDARD POLES.
AB EXISTING LOOP DETECTORS AND CONDUITS, UNLESS OTHERWISE NOTED.

EXISTING POLE AND EQUIPMENT SCHEDULE

	STANDARD			VEH SIG MTG		HPS LUM	IISNS
No.	Type	SMA	LMA	Mast Arm	Pole		
A	17-2-80	20'	12'	MAS	SV-1-T	200 W	
B	1-A	-	-	-	TV-1-T	-	
C	1-A	-	-	-	TV-1-T	-	
D	17-2-80	20'	12'	MAS	SV-2-TA	200 W	
E	16-2-80	20'	-	MAS	SV-2-TA	-	← LAKEVIEW
F	1-A	-	-	-	TV-1-T	-	

SIGNAL AND LIGHTING (LOCATION 1) (REMOVE)

SCALE: 1" = 20'

THIS PLAN IS ACCURATE FOR ELECTRICAL WORK ONLY.

E-138

STATE OF CALIFORNIA - DEPARTMENT OF TRANSPORTATION
Caltrans ELECTRICAL DESIGN
FUNCTIONAL SUPERVISOR: SHAHRAM SHAHRIARI
CALCULATED-DESIGNED BY: VANESSA TRUONG
CHECKED BY: ANTHONY FERNANDEZ
REVISED BY
DATE REVISED

LAST REVISION 07-30-10 | DATE PLOTTED => 16-DEC-2010 | TIME PLOTTED => 17:13

Dist	COUNTY	ROUTE	POST MILES TOTAL PROJECT	SHEET No.	TOTAL SHEETS
12	Ora	91	9.1/15.1	714	949

Vanessa Van Truong 08-12-10
REGISTERED ELECTRICAL ENGINEER DATE

10-25-10
PLANS APPROVAL DATE

REGISTERED PROFESSIONAL ENGINEER V.V. TRUONG No. E 13983 Exp. 6/30/12 ELECTRICAL STATE OF CALIFORNIA

THE STATE OF CALIFORNIA OR ITS OFFICERS OR AGENTS SHALL NOT BE RESPONSIBLE FOR THE ACCURACY OR COMPLETENESS OF SCANNED COPIES OF THIS PLAN SHEET.

NOTE: FOR ACCURATE RIGHT OF WAY AND ACCESS DATA, CONTACT RIGHT OF WAY ENGINEERING AT THE DISTRICT OFFICE.

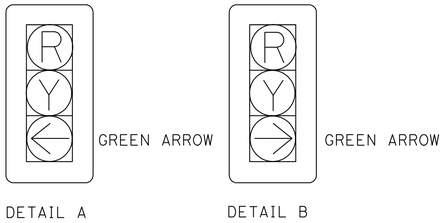

PHASE DIAGRAM

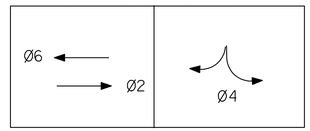

POLE AND EQUIPMENT SCHEDULE

	STANDARD			VEH SIG MTG		HPS LUM	IISNS
No.	TYPE	SMA	LMA	MAST ARM	POLE		
A	19-3-100	30′	12′	MAS	SV-2-TA	200 W	
B	15TS	-	12′	-	SV-2-TA	200 W	
C	17-3-100	20′	12′	MAS	SV-2-TA	200 W	
D	26-4-100	45′	12′	2-MAS	SV-2-TA	200 W(*)	← LAKEVIEW

(*) - LUMINAIRE ARM AT 90 DEGREE

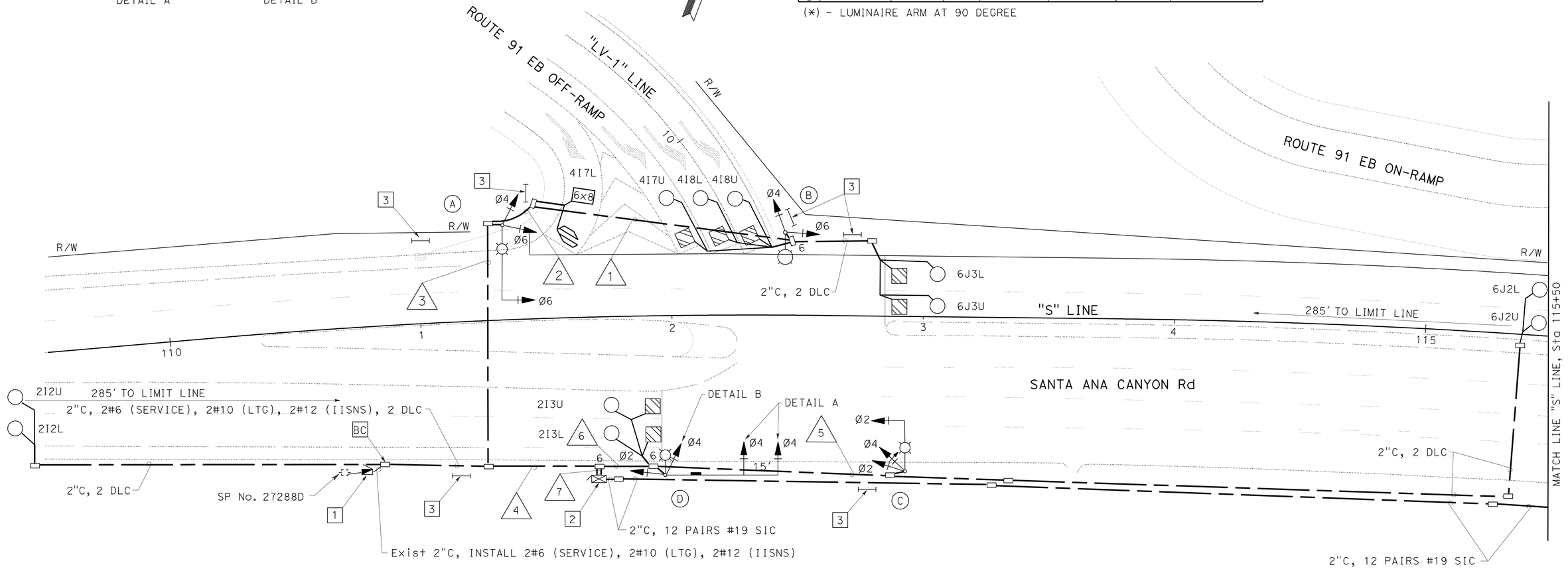

NOTES: (THIS SHEET ONLY)

1. INSTALL 120/240 V METERED SERVICE IN TYPE III-BF SERVICE EQUIPMENT ENCLOSURE. REUSE EXISTING FOUNDATION.
   100 A, 240 V, 2P, CB (MAIN)
   40 A, 120 V, 1P, CB (SIGNAL)
   30 A, 120 V, 1P, CB (LIGHTING)
   15 A, 120 V, 1P, CB (IISNS)
   15 A, 120 V, 1P, CB (PEC)
   ID No. 12-55-091-R-010.800
   ADDRESS: 4650 E SANTA ANA CANYON Rd
2. INSTALL STATE-FURNISHED MODEL 2070L CONTROLLER ASSEMBLY WITH MODEL 332 CONTROLLER CABINET. REINSTALL EXISTING BBS.
3. INSTALL TYPE 1 PEDESTRIAN BARRICADE WITH SIGN R9-3A AND SIGN R9-3B BACK TO BACK.

CONDUCTOR AND CONDUIT SCHEDULE

CONDUCTOR	CONDUCTOR RUN	1	2	3	4	5	6	7
12CSC	VEHICLE SIGNALS	2	2	4	4	2	4	8
#6	SERVICE				2			2
#10	LUMINAIRE	2	2	2	2	2	2	
#12	IISNS				2		2	
DLC	Ø2 DETECTOR				2		2	4
	Ø4 DETECTOR	3	4	4	4			4
	Ø6 DETECTOR	2	2	2	2	2	2	4
CONDUIT SIZE		3"	3"	4"	4"	3"	4"	2-4"

THIS PLAN IS ACCURATE FOR ELECTRICAL WORK ONLY.

SIGNAL AND LIGHTING (LOCATION 1)

SCALE: 1" = 20′

E-139

STATE OF CALIFORNIA - DEPARTMENT OF TRANSPORTATION
Caltrans
ELECTRICAL DESIGN

FUNCTIONAL SUPERVISOR: SHAHRAM SHAHRIARI
CALCULATED-DESIGNED BY: VANESSA TRUONG
CHECKED BY: ANTHONY FERNANDEZ
REVISED BY
DATE REVISED

LAST REVISION DATE PLOTTED => 16-DEC-2010
07-30-10 TIME PLOTTED => 17:13

FOR ACCURATE RIGHT OF WAY AND ACCESS DATA,
RIGHT OF WAY ENGINEERING AT THE DISTRICT OFFICE.

Dist	COUNTY	ROUTE	POST MILES TOTAL PROJECT	SHEET No.	TOTAL SHEETS
12	Ora	91	9.1/15.1	715	949

Vanessa Van Truong 08-12-10
REGISTERED ELECTRICAL ENGINEER DATE

10-25-10
PLANS APPROVAL DATE

REGISTERED PROFESSIONAL ENGINEER
V.V. TRUONG
No. E 13983
Exp. 6/30/12
ELECTRICAL
STATE OF CALIFORNIA

THE STATE OF CALIFORNIA OR ITS OFFICERS OR AGENTS SHALL NOT BE RESPONSIBLE FOR THE ACCURACY OR COMPLETENESS OF SCANNED COPIES OF THIS PLAN SHEET.

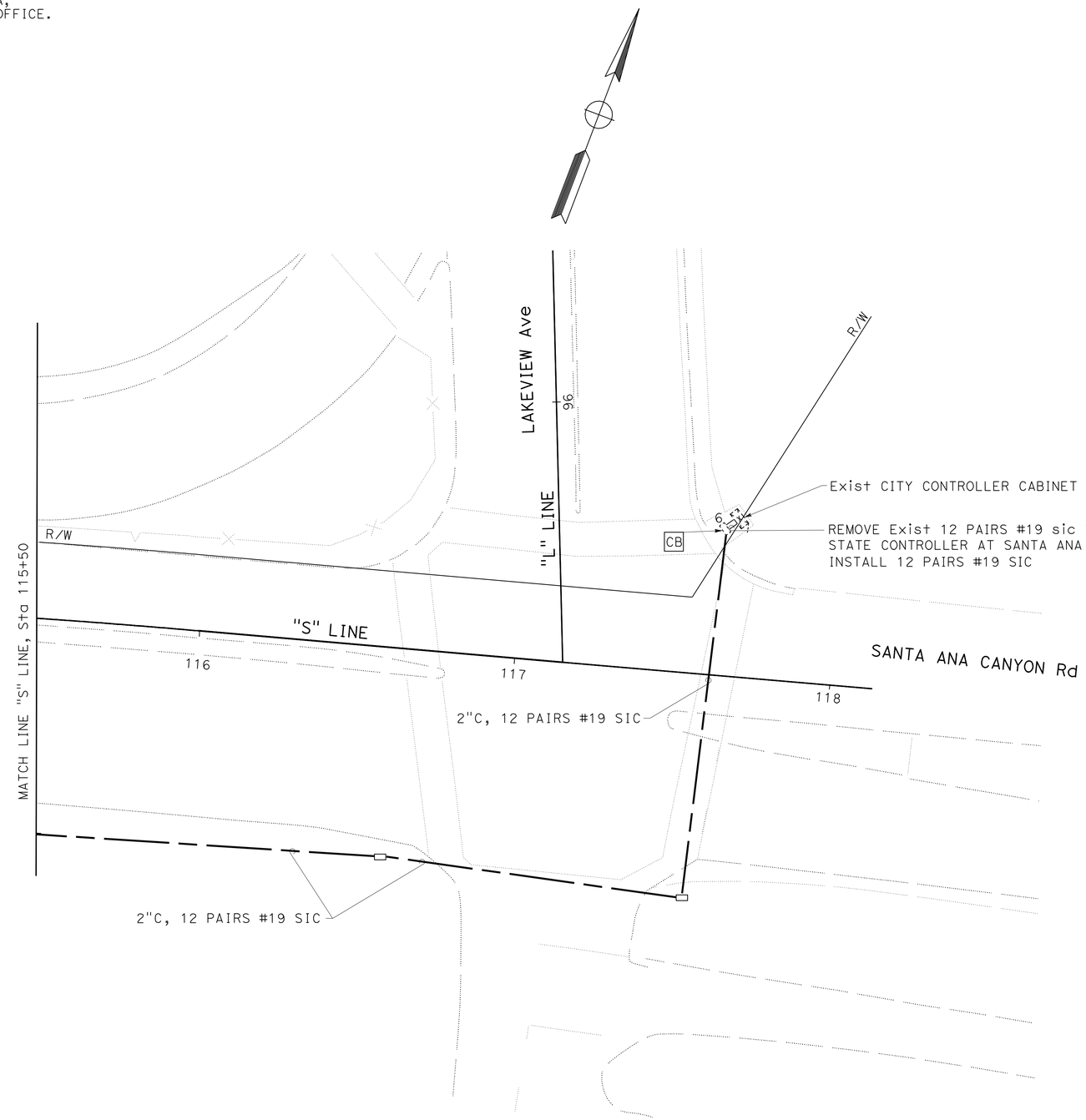

SIGNAL AND LIGHTING (LOCATION 1)

SCALE: 1" = 20'

THIS PLAN IS ACCURATE FOR ELECTRICAL WORK ONLY.

E-140

REVISED BY	
DATE REVISED	
CALCULATED-DESIGNED BY	VANESSA TRUONG
CHECKED BY	ANTHONY FERNANDEZ
FUNCTIONAL SUPERVISOR	SHAHRAM SHAHRIARI

STATE OF CALIFORNIA - DEPARTMENT OF TRANSPORTATION
Caltrans
ELECTRICAL DESIGN

LAST REVISION 07-30-10
DATE PLOTTED => 16-DEC-2010
TIME PLOTTED => 17:13

Dist	COUNTY	ROUTE	POST MILES TOTAL PROJECT	SHEET No.	TOTAL SHEETS
12	Ora	91	9.1/15.1	716	949

Vanessa Van Truong 08-12-10
REGISTERED ELECTRICAL ENGINEER DATE

10-25-10
PLANS APPROVAL DATE

REGISTERED PROFESSIONAL ENGINEER V.V. TRUONG No. E 13983 Exp. 6/30/12 ELECTRICAL STATE OF CALIFORNIA

THE STATE OF CALIFORNIA OR ITS OFFICERS OR AGENTS SHALL NOT BE RESPONSIBLE FOR THE ACCURACY OR COMPLETENESS OF SCANNED COPIES OF THIS PLAN SHEET.

FOR ACCURATE RIGHT OF WAY AND ACCESS DATA, CONTACT RIGHT OF WAY ENGINEERING AT THE DISTRICT OFFICE.

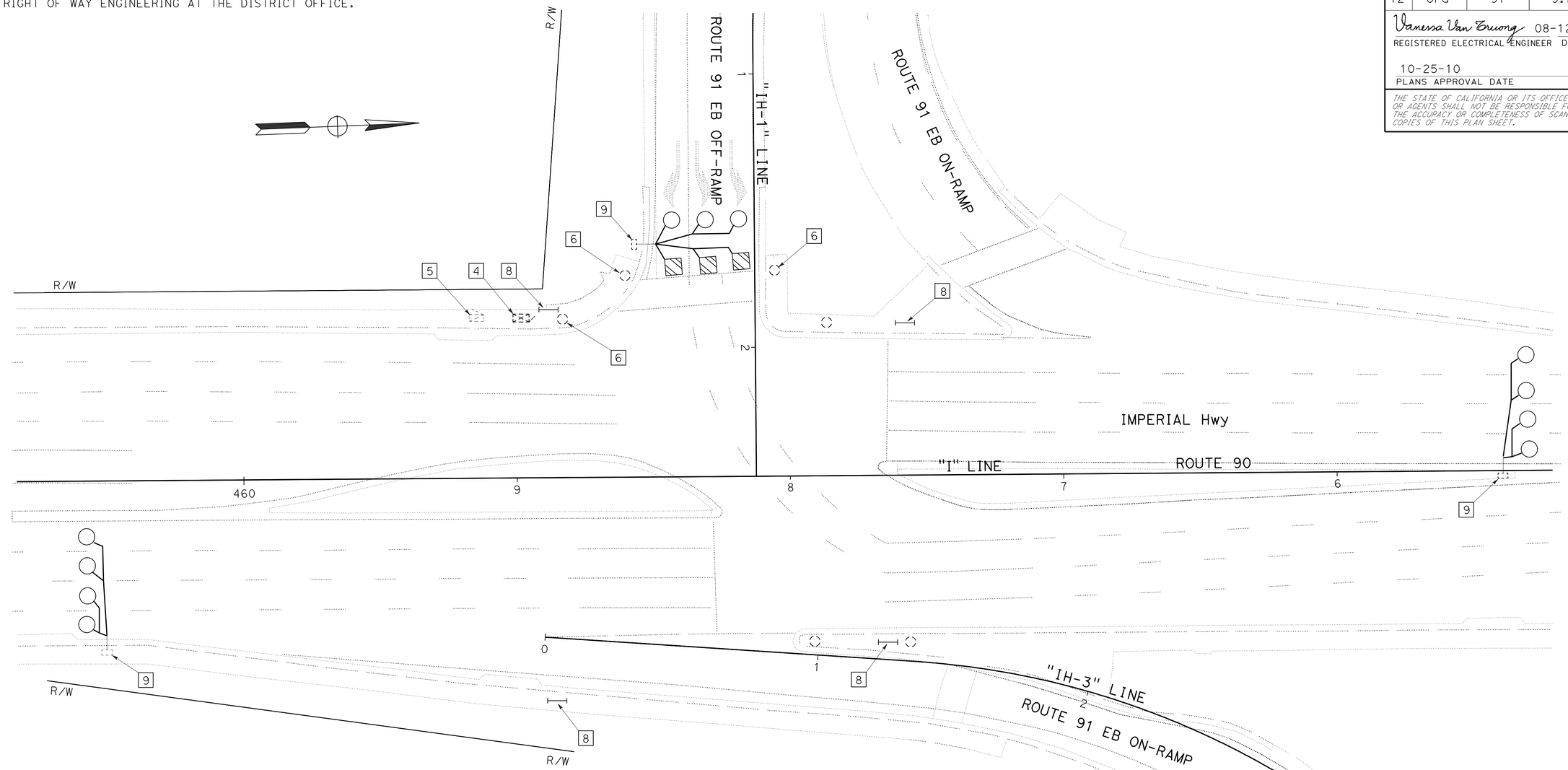

NOTES: (THIS SHEET ONLY)

1. THE CONTRACTOR SHALL VERIFY EXACT LOCATION OF EXISTING LOOPS PRIOR CUTTING NEW LOOPS AND REUSE EXISTING CONDUIT STUB OUT.
2. AB EXISTING LOOPS WHERE NEW LOOPS ARE CUT.
3. ALL NEW LOOPS SHALL BE INSTALLED AFTER FINAL PAVEMENT AND PAVEMENT DELINEATION AND SHALL BE CUT 1′ BEFORE LIMIT LINE.

4 EXISTING MODEL 170 CONTROLLER ASSEMBLY IN MODEL 332 CONTROLLER CABINET.

5 EXISTING 120/240 V METERED SERVICE IN TYPE III-BF SERVICE EQUIPMENT ENCLOSURE.

6 RC EXISTING PPB. INSTALL NEW PPB AT NEW HEIGHT. REFER TO ES-7A.

7 RC EXISTING SIGN R9-3A AND SIGN R9-3B.

8 INSTALL TYPE 1 PEDESTRIAN BARRICADE WITH SIGN R9-3A AND SIGN R9-3B BACK TO BACK.

9 SPLICE NEW LOOP WIRES TO EXISTING DLC.

SIGNAL AND LIGHTING (LOCATION 2)

SCALE: 1" = 20′

THIS PLAN IS ACCURATE FOR ELECTRICAL WORK ONLY.

E-141

STATE OF CALIFORNIA - DEPARTMENT OF TRANSPORTATION
Caltrans®
ELECTRICAL DESIGN

FUNCTIONAL SUPERVISOR: SHAHRAM SHAHRIARI
CALCULATED-DESIGNED BY: VANESSA TRUONG
CHECKED BY: ANTHONY FERNANDEZ
REVISED BY
DATE REVISED

LAST REVISION 07-30-10 | DATE PLOTTED => 16-DEC-2010 | TIME PLOTTED => 17:13

Dist	COUNTY	ROUTE	POST MILES TOTAL PROJECT	SHEET No.	TOTAL SHEETS
12	Ora	91	9.1/15.1	717	949

Vanessa Van Truong 08-12-10
REGISTERED ELECTRICAL ENGINEER DATE

10-25-10
PLANS APPROVAL DATE

REGISTERED PROFESSIONAL ENGINEER
V.V. TRUONG
No. E 13983
Exp. 6/30/12
ELECTRICAL
STATE OF CALIFORNIA

THE STATE OF CALIFORNIA OR ITS OFFICERS OR AGENTS SHALL NOT BE RESPONSIBLE FOR THE ACCURACY OR COMPLETENESS OF SCANNED COPIES OF THIS PLAN SHEET.

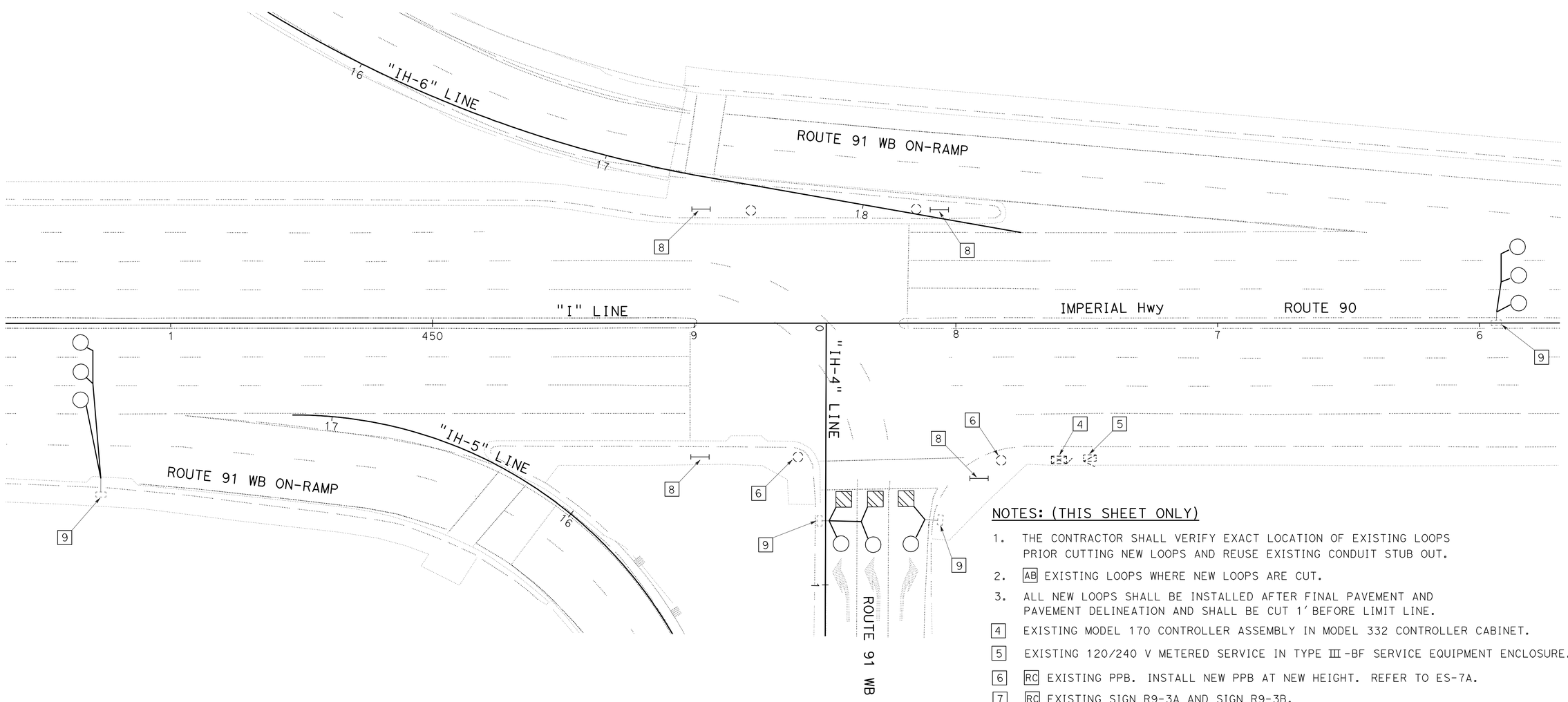

NOTES: (THIS SHEET ONLY)

1. THE CONTRACTOR SHALL VERIFY EXACT LOCATION OF EXISTING LOOPS PRIOR CUTTING NEW LOOPS AND REUSE EXISTING CONDUIT STUB OUT.
2. AB EXISTING LOOPS WHERE NEW LOOPS ARE CUT.
3. ALL NEW LOOPS SHALL BE INSTALLED AFTER FINAL PAVEMENT AND PAVEMENT DELINEATION AND SHALL BE CUT 1' BEFORE LIMIT LINE.

4 EXISTING MODEL 170 CONTROLLER ASSEMBLY IN MODEL 332 CONTROLLER CABINET.

5 EXISTING 120/240 V METERED SERVICE IN TYPE III-BF SERVICE EQUIPMENT ENCLOSURE.

6 RC EXISTING PPB. INSTALL NEW PPB AT NEW HEIGHT. REFER TO ES-7A.

7 RC EXISTING SIGN R9-3A AND SIGN R9-3B.

8 INSTALL TYPE 1 PEDESTRIAN BARRICADE WITH SIGN R9-3A AND SIGN R9-3B BACK TO BACK.

9 SPLICE NEW LOOP WIRES TO EXISTING DLC.

SIGNAL AND LIGHTING (LOCATION 3)

SCALE: 1" = 20'

THIS PLAN IS ACCURATE FOR ELECTRICAL WORK ONLY.

E-142

STATE OF CALIFORNIA - DEPARTMENT OF TRANSPORTATION
Caltrans® ELECTRICAL DESIGN

FUNCTIONAL SUPERVISOR: SHAHRAM SHAHRIARI
CALCULATED-DESIGNED BY: VANESSA TRUONG
CHECKED BY: ANTHONY FERNANDEZ
REVISED BY
DATE REVISED

LAST REVISION DATE PLOTTED => 16-DEC-2010
07-30-10 TIME PLOTTED => 17:13

Dist	COUNTY	ROUTE	POST MILES TOTAL PROJECT	SHEET No.	TOTAL SHEETS
12	Ora	91	9.1/15.1	718	949

Vanessa Van Truong 08-12-10
REGISTERED ELECTRICAL ENGINEER DATE

10-25-10
PLANS APPROVAL DATE

REGISTERED PROFESSIONAL ENGINEER V.V. TRUONG No. E 13983 Exp. 6/30/12 ELECTRICAL STATE OF CALIFORNIA

THE STATE OF CALIFORNIA OR ITS OFFICERS OR AGENTS SHALL NOT BE RESPONSIBLE FOR THE ACCURACY OR COMPLETENESS OF SCANNED COPIES OF THIS PLAN SHEET.

FOR ACCURATE RIGHT OF WAY AND ACCESS DATA, CONTACT RIGHT OF WAY ENGINEERING AT THE DISTRICT OFFICE.

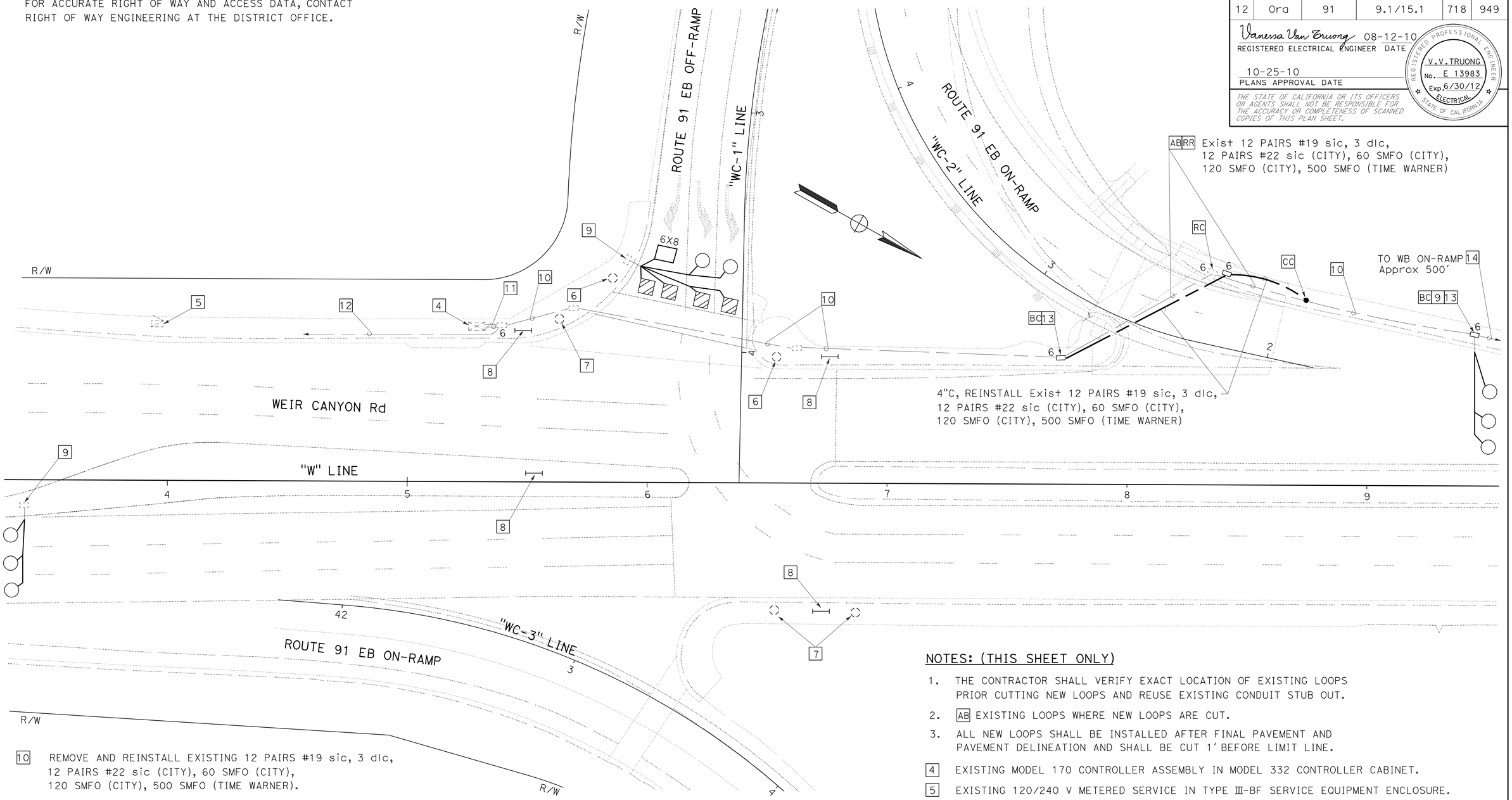

10 REMOVE AND REINSTALL EXISTING 12 PAIRS #19 sic, 3 dlc, 12 PAIRS #22 sic (CITY), 60 SMFO (CITY), 120 SMFO (CITY), 500 SMFO (TIME WARNER).

11 REMOVE AND REINSTALL EXISTING 12 PAIRS #19 sic, 3 dlc.

12 REMOVE AND REINSTALL EXISTING 12 PAIRS #22 (CITY), 60 SMFO (CITY), 120 SMFO (CITY), 500 SMFO (TIME WARNER). APPROXIMATELY 500' TO CITY CONTROLLER AT SANTA ANA CANYON Rd.

13 RC EXISTING PULL BOX. INSTALL NEW PULL BOX.

14 REMOVE AND REINSTALL EXISTING 12 PAIRS #19 sic, 12 PAIRS #22 sic (CITY), 60 SMFO (CITY), 120 SMFO (CITY), 500 SMFO (TIME WARNER).

NOTES: (THIS SHEET ONLY)

1. THE CONTRACTOR SHALL VERIFY EXACT LOCATION OF EXISTING LOOPS PRIOR CUTTING NEW LOOPS AND REUSE EXISTING CONDUIT STUB OUT.
2. AB EXISTING LOOPS WHERE NEW LOOPS ARE CUT.
3. ALL NEW LOOPS SHALL BE INSTALLED AFTER FINAL PAVEMENT AND PAVEMENT DELINEATION AND SHALL BE CUT 1' BEFORE LIMIT LINE.

4 EXISTING MODEL 170 CONTROLLER ASSEMBLY IN MODEL 332 CONTROLLER CABINET.

5 EXISTING 120/240 V METERED SERVICE IN TYPE III-BF SERVICE EQUIPMENT ENCLOSURE.

6 RC EXISTING PPB. INSTALL NEW PPB AT NEW HEIGHT. REFER TO ES-7A.

7 RC EXISTING SIGN R9-3A AND SIGN R9-3B.

8 INSTALL TYPE 1 PEDESTRIAN BARRICADE WITH SIGN R9-3A AND SIGN R9-3B BACK TO BACK.

9 SPLICE NEW LOOP WIRES TO EXISTING DLC.

SIGNAL AND LIGHTING (LOCATION 4)

SCALE: 1" = 20'

THIS PLAN IS ACCURATE FOR ELECTRICAL WORK ONLY.

E-143

REVISED BY | DATE REVISED
VANESSA TRUONG | ANTHONY FERNANDEZ
CALCULATED-DESIGNED BY | CHECKED BY
FUNCTIONAL SUPERVISOR: SHAHRAM SHAHRIARI

STATE OF CALIFORNIA - DEPARTMENT OF TRANSPORTATION
Caltrans
ELECTRICAL DESIGN

LAST REVISION 07-30-10 | DATE PLOTTED => 16-DEC-2010 | TIME PLOTTED => 17:13

Dist	COUNTY	ROUTE	POST MILES TOTAL PROJECT	SHEET No.	TOTAL SHEETS
12	Ora	91	9.1/15.1	719	949

Vanessa Van Truong 08-12-10
REGISTERED ELECTRICAL ENGINEER DATE

10-25-10
PLANS APPROVAL DATE

REGISTERED PROFESSIONAL ENGINEER V.V. TRUONG No. E 13983 Exp. 6/30/12 ELECTRICAL STATE OF CALIFORNIA

THE STATE OF CALIFORNIA OR ITS OFFICERS OR AGENTS SHALL NOT BE RESPONSIBLE FOR THE ACCURACY OR COMPLETENESS OF SCANNED COPIES OF THIS PLAN SHEET.

FOR ACCURATE RIGHT OF WAY AND ACCESS DATA, CONTACT RIGHT OF WAY ENGINEERING AT THE DISTRICT OFFICE.

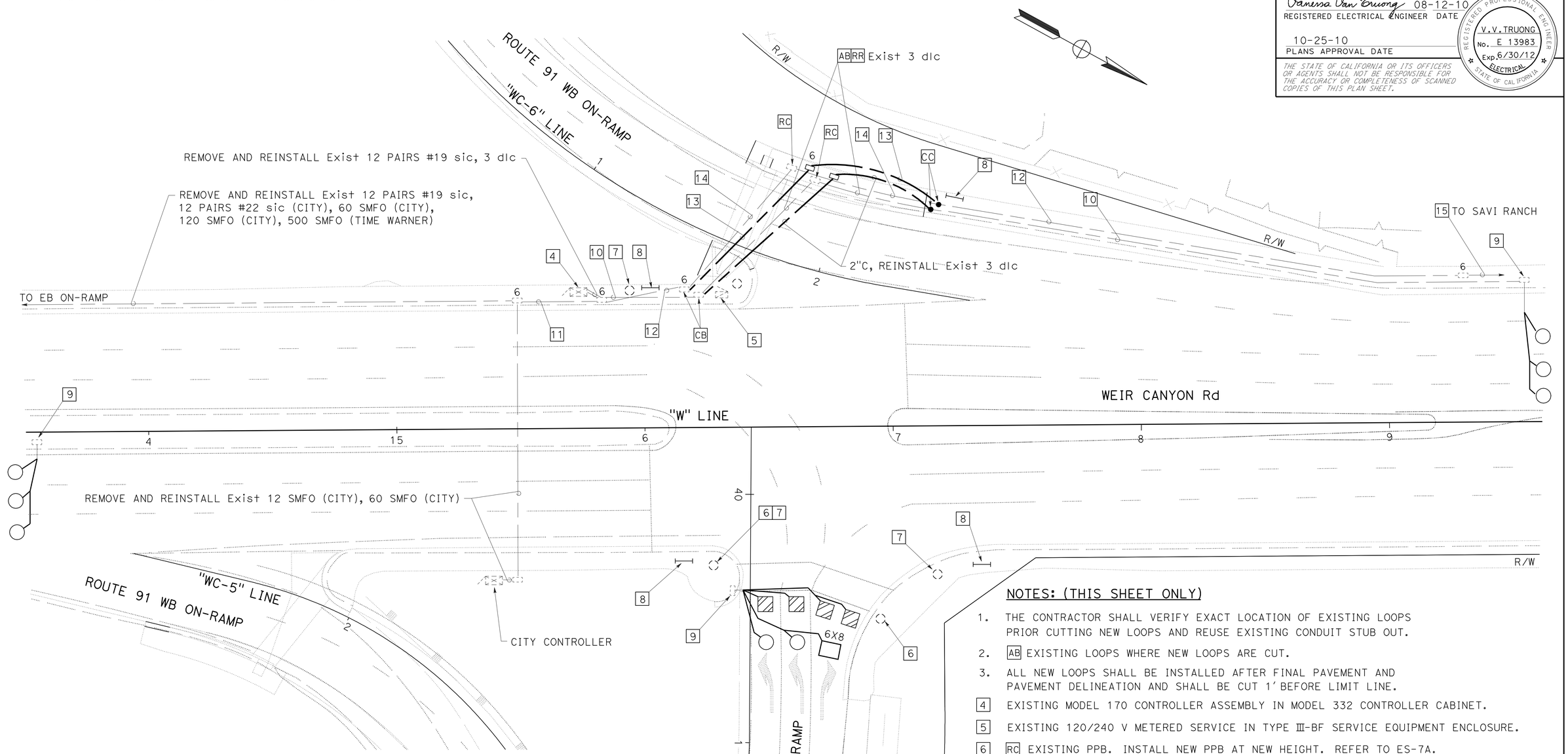

12 REMOVE AND REINSTALL EXISTING 12 PAIRS #22 sic (CITY), 12 SMFO (CITY), 120 SMFO (CITY), 500 SMFO (TIME WARNER).

13 INSTALL 4"C, REINSTALL EXISTING 12 PAIRS #22 sic (CITY), 12 SMFO (CITY), 120 SMFO (CITY), 500 SMFO (TIME WARNER).

14 AB RR EXISTING 12 PAIRS #22 sic (CITY), 12 SMFO (CITY), 120 SMFO (CITY), 500 SMFO (TIME WARNER).

15 EXISTING 2½"C, 12 PAIRS #22 sic (CITY), 12 SMFO (CITY), 120 SMFO (CITY), 500 SMFO (TIME WARNER).

NOTES: (THIS SHEET ONLY)

1. THE CONTRACTOR SHALL VERIFY EXACT LOCATION OF EXISTING LOOPS PRIOR CUTTING NEW LOOPS AND REUSE EXISTING CONDUIT STUB OUT.
2. AB EXISTING LOOPS WHERE NEW LOOPS ARE CUT.
3. ALL NEW LOOPS SHALL BE INSTALLED AFTER FINAL PAVEMENT AND PAVEMENT DELINEATION AND SHALL BE CUT 1' BEFORE LIMIT LINE.

4 EXISTING MODEL 170 CONTROLLER ASSEMBLY IN MODEL 332 CONTROLLER CABINET.

5 EXISTING 120/240 V METERED SERVICE IN TYPE III-BF SERVICE EQUIPMENT ENCLOSURE.

6 RC EXISTING PPB. INSTALL NEW PPB AT NEW HEIGHT. REFER TO ES-7A.

7 RC EXISTING SIGN R9-3A AND SIGN R9-3B.

8 INSTALL TYPE 1 PEDESTRIAN BARRICADE WITH SIGN R9-3A AND SIGN R9-3B BACK TO BACK.

9 SPLICE NEW LOOP WIRES TO EXISTING dlc.

10 REMOVE AND REINSTALL EXISTING 3 dlc.

11 REMOVE AND REINSTALL EXISTING 12 PAIRS #19 sic, 12 PAIRS #22 sic (CITY), 12 SMFO (CITY), 120 SMFO (CITY), 500 SMFO (TIME WARNER).

SIGNAL AND LIGHTING (LOCATION 5)

SCALE: 1" = 20'

THIS PLAN IS ACCURATE FOR ELECTRICAL WORK ONLY.

E-144

STATE OF CALIFORNIA - DEPARTMENT OF TRANSPORTATION
Caltrans
ELECTRICAL DESIGN

FUNCTIONAL SUPERVISOR: SHAHRAM SHAHRIARI
CALCULATED-DESIGNED BY: VANESSA TRUONG
CHECKED BY: ANTHONY FERNANDEZ
REVISED BY
DATE REVISED

LAST REVISION 07-30-10
DATE PLOTTED => 16-DEC-2010
TIME PLOTTED => 17:13

Dist	COUNTY	ROUTE	POST MILES TOTAL PROJECT	SHEET No.	TOTAL SHEETS
12	Ora	91	9.1/15.1	720	949

Vanessa Van Truong 08-12-10
REGISTERED ELECTRICAL ENGINEER DATE

10-25-10
PLANS APPROVAL DATE

REGISTERED PROFESSIONAL ENGINEER
V.V. TRUONG
No. E 13983
Exp. 6/30/12
ELECTRICAL
STATE OF CALIFORNIA

THE STATE OF CALIFORNIA OR ITS OFFICERS OR AGENTS SHALL NOT BE RESPONSIBLE FOR THE ACCURACY OR COMPLETENESS OF SCANNED COPIES OF THIS PLAN SHEET.

FOR ACCURATE RIGHT OF WAY AND ACCESS DATA, CONTACT
RIGHT OF WAY ENGINEERING AT THE DISTRICT OFFICE.

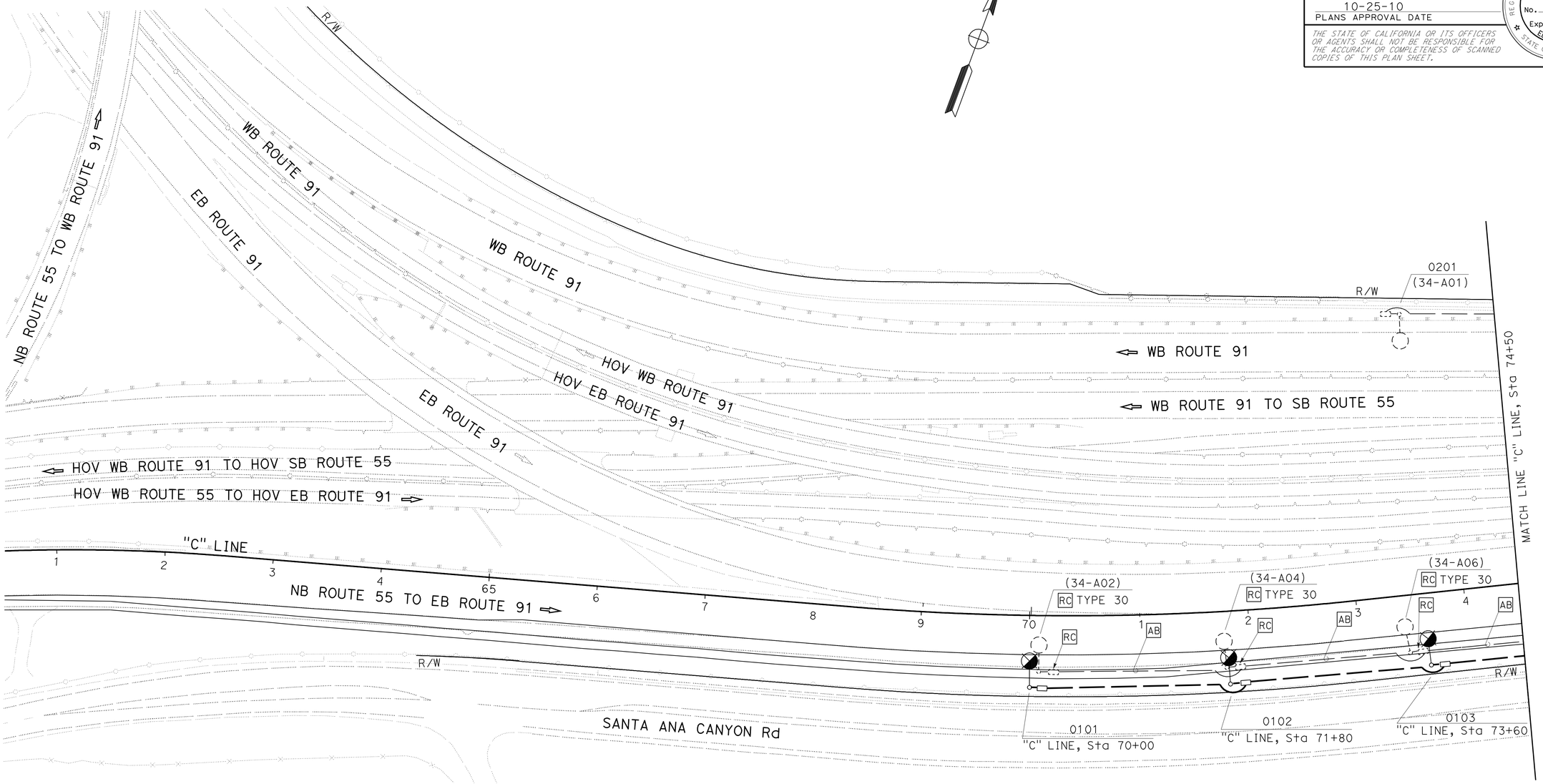

NOTES: (FOR SHEETS E-145 TO E-168)

1. ALL NEW CONDUIT SHALL BE 2"C, UNLESS OTHERWISE NOTED.
2. SEE WIRING DIAGRAM FOR NUMBER OF CONDUCTORS AND CONDUCTOR SIZES.
3. FOR NEW SIGNS, SEE SIGN PLANS FOR DETAILS AND LOCATIONS.
4. THE LEFT TWO NUMBERS OF AN ELECTROLIER IS THE CIRCUIT NUMBER.

FOR WIRING DIAGRAM SEE SHEET E-169

THIS PLAN IS ACCURATE FOR ELECTRICAL WORK ONLY.

LIGHTING AND SIGN ILLUMINATION

SCALE: 1" = 50'

E-145

STATE OF CALIFORNIA - DEPARTMENT OF TRANSPORTATION
Caltrans
ELECTRICAL DESIGN

FUNCTIONAL SUPERVISOR: SHAHRAM SHAHRIARI
CALCULATED-DESIGNED BY: VANESSA TRUONG
CHECKED BY: ANTHONY FERNANDEZ
REVISED BY
DATE REVISED

LAST REVISION 07-30-10
DATE PLOTTED => 16-DEC-2010
TIME PLOTTED => 17:13

Dist	COUNTY	ROUTE	POST MILES TOTAL PROJECT	SHEET No.	TOTAL SHEETS
12	Ora	91	9.1/15.1	721	949

Vanessa Van Truong 08-12-10
REGISTERED ELECTRICAL ENGINEER DATE

10-25-10
PLANS APPROVAL DATE

REGISTERED PROFESSIONAL ENGINEER
V.V. TRUONG
No. E 13983
Exp. 6/30/12
ELECTRICAL
STATE OF CALIFORNIA

THE STATE OF CALIFORNIA OR ITS OFFICERS OR AGENTS SHALL NOT BE RESPONSIBLE FOR THE ACCURACY OR COMPLETENESS OF SCANNED COPIES OF THIS PLAN SHEET.

FOR ACCURATE RIGHT OF WAY AND ACCESS DATA, CONTACT
RIGHT OF WAY ENGINEERING AT THE DISTRICT OFFICE.

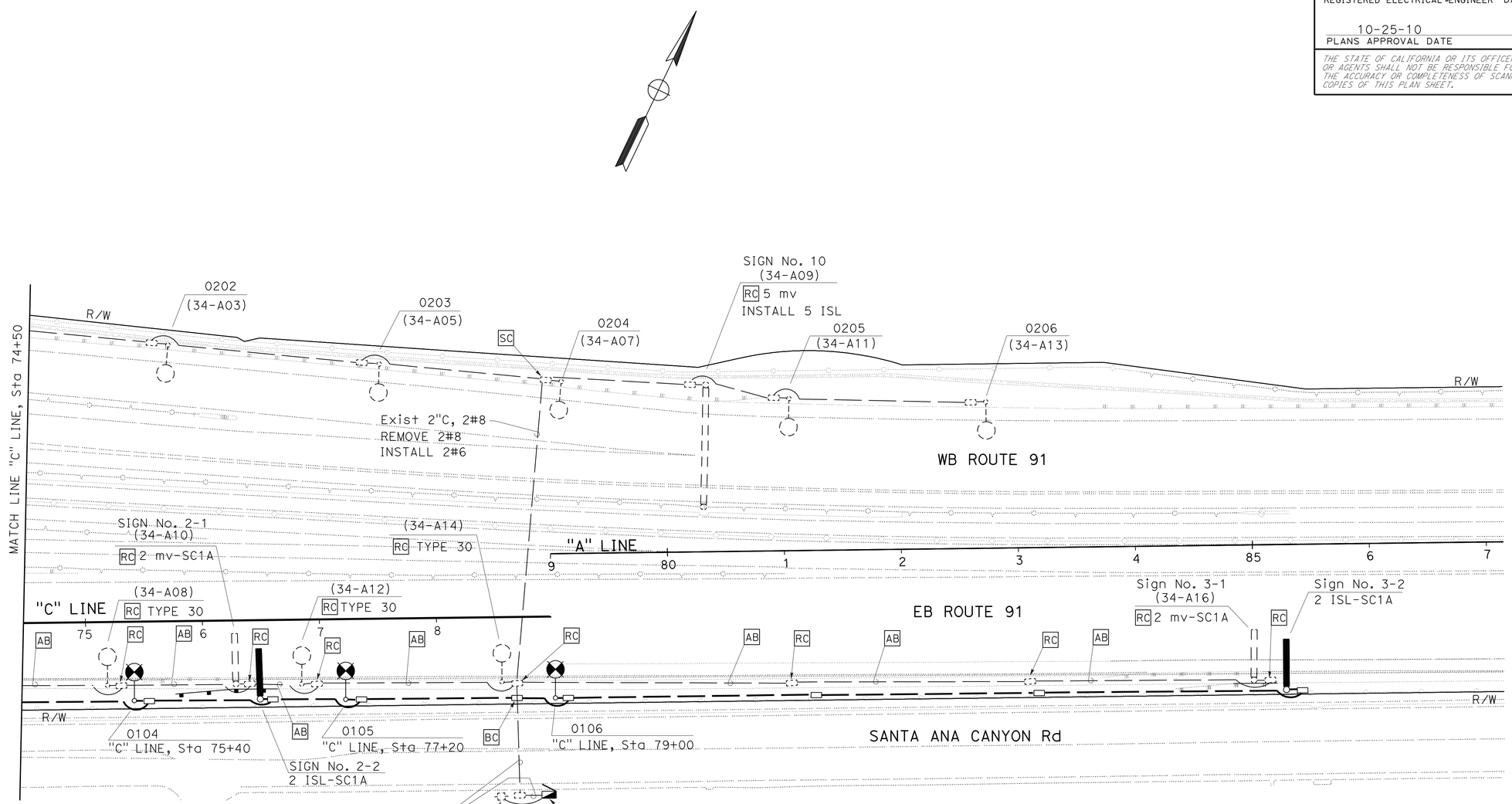

RC Exist 120/240 V METERED SERVICE IN TYPE III-BF
SERVICE EQUIPMENT ENCLOSURE
ID No. 12-55-091-0-009.784
40 A, 240 V, 2P, CB
40 A, 240 V, 2P, CB (SPARE)
30 A, 120 V, 1P, CB (SPARE)
INSTALL 120/240 V METERED SERVICE IN TYPE III-BF.
SERVICE EQUIPMENT ENCLOSURE TO Exist FOUNDATION. INSTALL TYPE V PEC.
ID No. 12-55-091-0-009.784
100 A, 240 V, 2P, CB (MAIN)
15 A, 120 V, 1P, CB (PEC)
30 A, 240 V, 2P, CB (CIRCUIT 1)
30 A, 240 V, 2P, CB (CIRCUIT 2)

FOR NOTES SEE SHEET E-145
FOR WIRING DIAGRAM SEE SHEET E-169

THIS PLAN IS ACCURATE FOR ELECTRICAL WORK ONLY.

LIGHTING AND SIGN ILLUMINATION

SCALE: 1" = 50'

E-146

STATE OF CALIFORNIA - DEPARTMENT OF TRANSPORTATION
Caltrans®
ELECTRICAL DESIGN

FUNCTIONAL SUPERVISOR: SHAHRAM SHAHRIARI
CALCULATED-DESIGNED BY: VANESSA TRUONG
CHECKED BY: ANTHONY FERNANDEZ
REVISED BY
DATE REVISED

LAST REVISION DATE PLOTTED => 16-DEC-2010
07-30-10 TIME PLOTTED => 17:13

Dist	COUNTY	ROUTE	POST MILES TOTAL PROJECT	SHEET No.	TOTAL SHEETS
12	Ora	91	9.1/15.1	722	949

Vanessa Van Truong 08-12-10
REGISTERED ELECTRICAL ENGINEER DATE

10-25-10
PLANS APPROVAL DATE

REGISTERED PROFESSIONAL ENGINEER
V.V. TRUONG
No. E 13983
Exp. 6/30/12
ELECTRICAL
STATE OF CALIFORNIA

THE STATE OF CALIFORNIA OR ITS OFFICERS OR AGENTS SHALL NOT BE RESPONSIBLE FOR THE ACCURACY OR COMPLETENESS OF SCANNED COPIES OF THIS PLAN SHEET.

FOR ACCURATE RIGHT OF WAY AND ACCESS DATA, CONTACT RIGHT OF WAY ENGINEERING AT THE DISTRICT OFFICE.

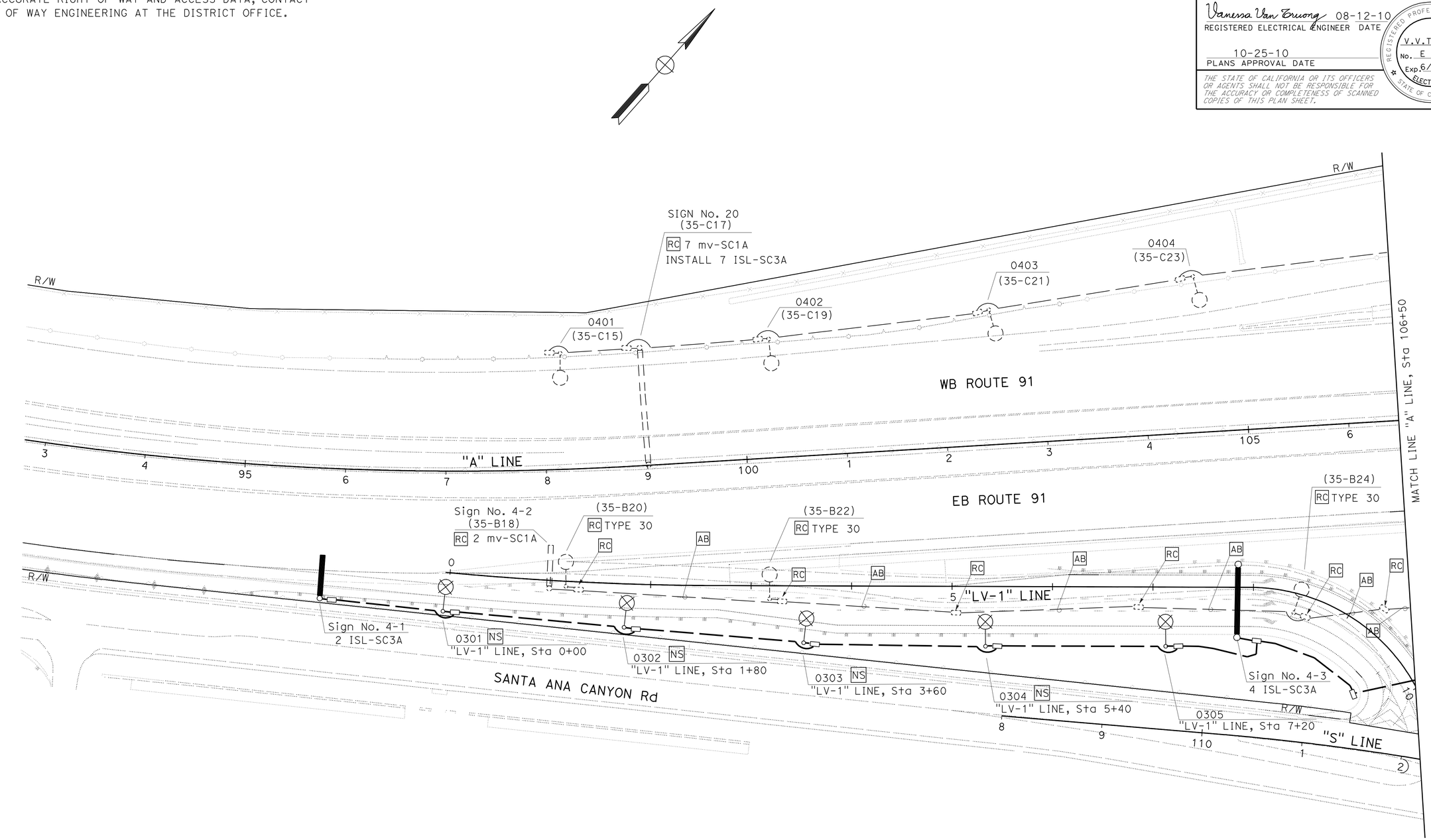

FOR NOTES SEE SHEET E-145
FOR WIRING DIAGRAM SEE SHEET E-170

THIS PLAN IS ACCURATE FOR ELECTRICAL WORK ONLY.

LIGHTING AND SIGN ILLUMINATION

SCALE: 1" = 50'

E-147

STATE OF CALIFORNIA - DEPARTMENT OF TRANSPORTATION
Caltrans
ELECTRICAL DESIGN

FUNCTIONAL SUPERVISOR: SHAHRAM SHAHRIARI
CALCULATED-DESIGNED BY: VANESSA TRUONG
CHECKED BY: ANTHONY FERNANDEZ
REVISED BY
DATE REVISED

LAST REVISION DATE PLOTTED => 16-DEC-2010
07-30-10 TIME PLOTTED => 17:13

Dist	COUNTY	ROUTE	POST MILES TOTAL PROJECT	SHEET No.	TOTAL SHEETS
12	Ora	91	9.1/15.1	723	949

Vanessa Van Truong 11-23-10
REGISTERED ELECTRICAL ENGINEER DATE

10-25-10
PLANS APPROVAL DATE

REGISTERED PROFESSIONAL ENGINEER V.V. TRUONG No. E 13983 Exp. 6/30/12 ELECTRICAL STATE OF CALIFORNIA

THE STATE OF CALIFORNIA OR ITS OFFICERS OR AGENTS SHALL NOT BE RESPONSIBLE FOR THE ACCURACY OR COMPLETENESS OF SCANNED COPIES OF THIS PLAN SHEET.

FOR ACCURATE RIGHT OF WAY AND ACCESS DATA, CONTACT RIGHT OF WAY ENGINEERING AT THE DISTRICT OFFICE.

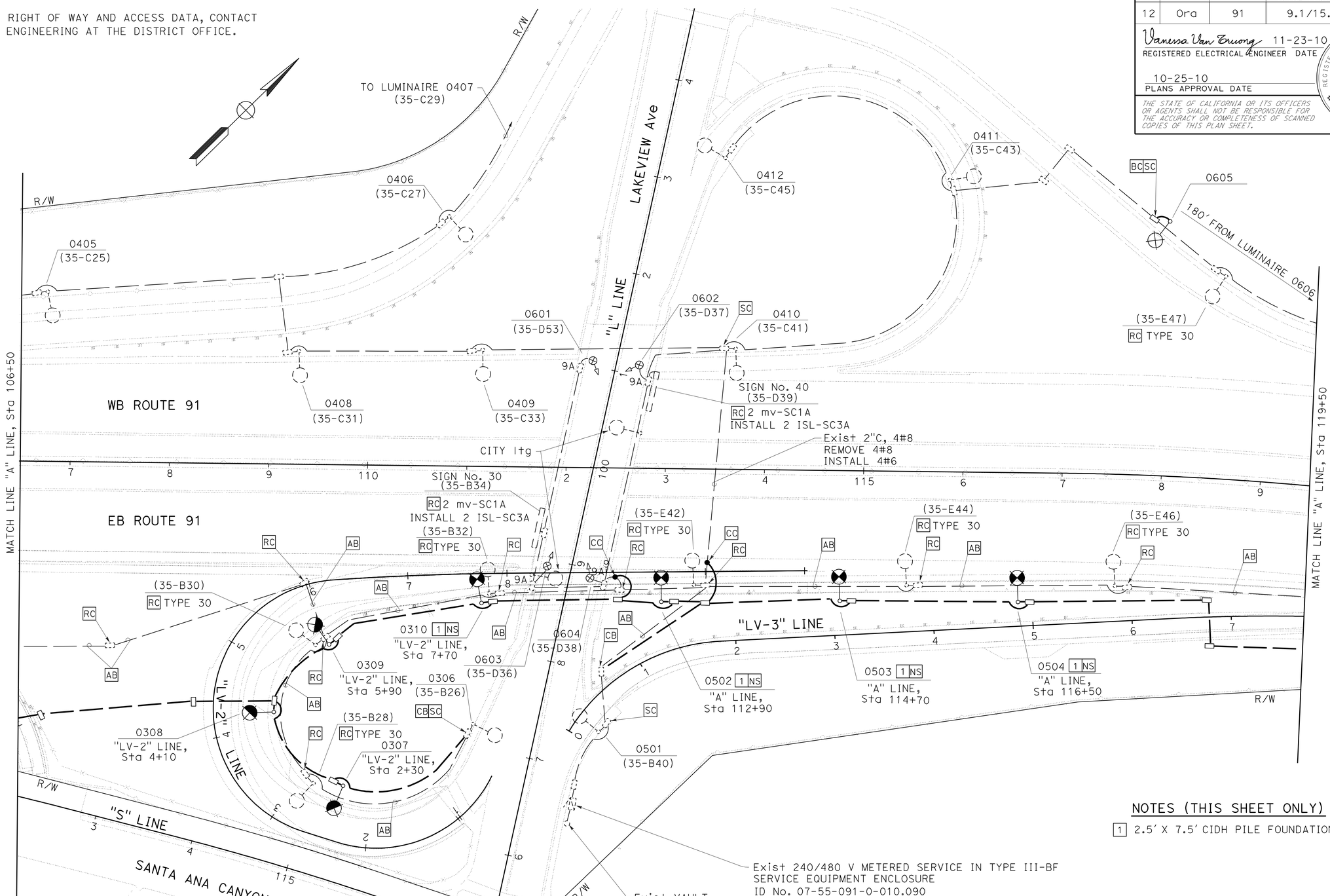

NOTES (THIS SHEET ONLY)

1 2.5' X 7.5' CIDH PILE FOUNDATION.

LIGHTING AND SIGN ILLUMINATION

SCALE: 1" = 50'

FOR NOTES SEE SHEET E-145
FOR WIRING DIAGRAM SEE SHEET E-170
THIS PLAN IS ACCURATE FOR ELECTRICAL WORK ONLY.

E-148

STATE OF CALIFORNIA - DEPARTMENT OF TRANSPORTATION
Caltrans® ELECTRICAL DESIGN

FUNCTIONAL SUPERVISOR: SHAHRAM SHAHRIARI
CALCULATED-DESIGNED BY: ANTHONY FERNANDEZ
CHECKED BY: VANESSA TRUONG
REVISED BY
DATE REVISED

LAST REVISION 11-22-10 | DATE PLOTTED => 16-DEC-2010 | TIME PLOTTED => 17:13

BORDER LAST REVISED 4/11/2008 | RELATIVE BORDER SCALE IS IN INCHES 0 1 2 3 | USERNAME => trlenard | DGN FILE => c0g330ua150.dgn | CU 12390 | EA 0G3301

Dist	COUNTY	ROUTE	POST MILES TOTAL PROJECT	SHEET No.	TOTAL SHEETS
12	Ora	91	9.1/15.1	724	949

Vanessa Van Truong 08-12-10
REGISTERED ELECTRICAL ENGINEER DATE

10-25-10
PLANS APPROVAL DATE

REGISTERED PROFESSIONAL ENGINEER
V.V. TRUONG
No. E 13983
Exp. 6/30/12
ELECTRICAL
STATE OF CALIFORNIA

THE STATE OF CALIFORNIA OR ITS OFFICERS OR AGENTS SHALL NOT BE RESPONSIBLE FOR THE ACCURACY OR COMPLETENESS OF SCANNED COPIES OF THIS PLAN SHEET.

FOR ACCURATE RIGHT OF WAY AND ACCESS DATA, CONTACT RIGHT OF WAY ENGINEERING AT THE DISTRICT OFFICE.

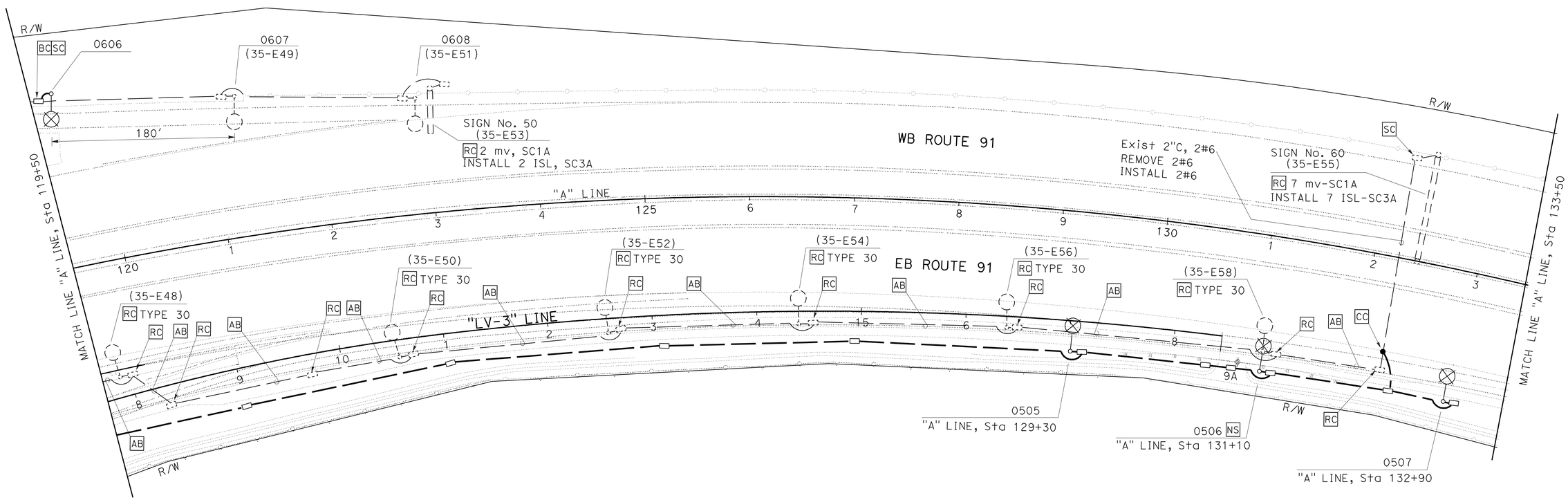

FOR NOTES SEE SHEET E-145
FOR WIRING DIAGRAM SEE SHEET E-170

THIS PLAN IS ACCURATE FOR ELECTRICAL WORK ONLY.

LIGHTING AND SIGN ILLUMINATION

SCALE: 1" = 50'

E-149

REVISED BY	DATE REVISED
VANESSA TRUONG	
CALCULATED-DESIGNED BY	CHECKED BY
ANTHONY FERNANDEZ	
FUNCTIONAL SUPERVISOR	
SHAHRAM SHAHRIARI	

STATE OF CALIFORNIA - DEPARTMENT OF TRANSPORTATION
Caltrans
ELECTRICAL DESIGN

LAST REVISION 07-30-10 | DATE PLOTTED => 16-DEC-2010 | TIME PLOTTED => 17:14

Dist	COUNTY	ROUTE	POST MILES TOTAL PROJECT	SHEET No.	TOTAL SHEETS
12	Ora	91	9.1/15.1	725	949

Vanessa Van Truong 08-12-10
REGISTERED ELECTRICAL ENGINEER DATE

10-25-10
PLANS APPROVAL DATE

REGISTERED PROFESSIONAL ENGINEER V.V. TRUONG No. E 13983 Exp. 6/30/12 ELECTRICAL STATE OF CALIFORNIA

THE STATE OF CALIFORNIA OR ITS OFFICERS OR AGENTS SHALL NOT BE RESPONSIBLE FOR THE ACCURACY OR COMPLETENESS OF SCANNED COPIES OF THIS PLAN SHEET.

FOR ACCURATE RIGHT OF WAY AND ACCESS DATA, CONTACT RIGHT OF WAY ENGINEERING AT THE DISTRICT OFFICE.

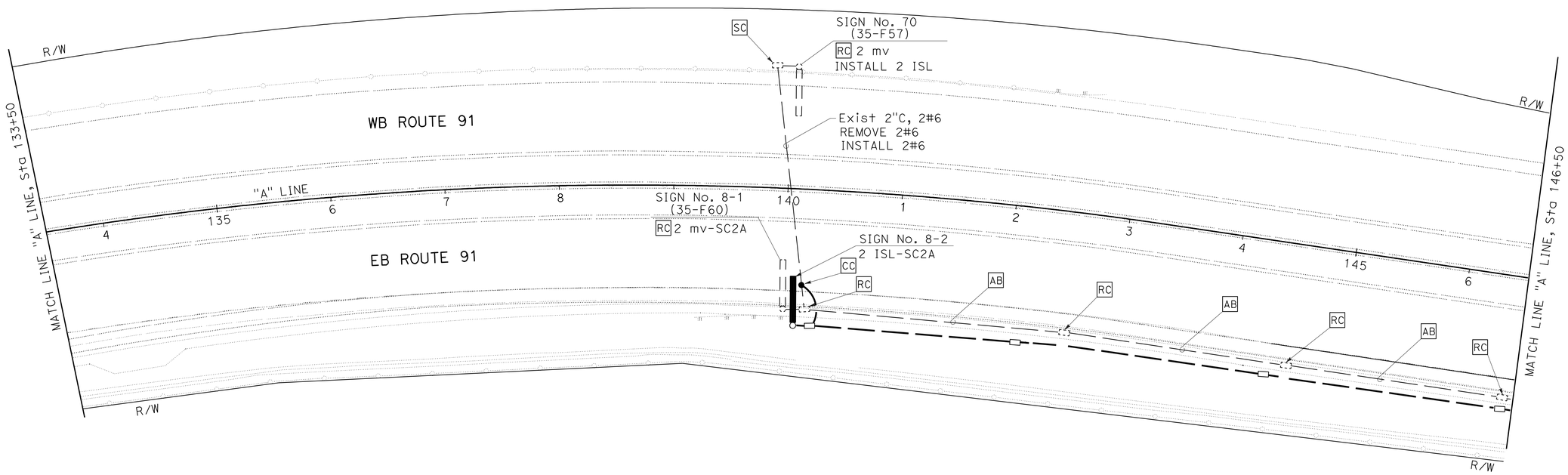

FOR NOTES SEE SHEET E-145

FOR WIRING DIAGRAM SEE SHEET E-171

THIS PLAN IS ACCURATE FOR ELECTRICAL WORK ONLY.

LIGHTING AND SIGN ILLUMINATION

SCALE: 1" = 50'

E-150

STATE OF CALIFORNIA - DEPARTMENT OF TRANSPORTATION
Caltrans® ELECTRICAL DESIGN

FUNCTIONAL SUPERVISOR: SHAHRAM SHAHRIARI
CALCULATED-DESIGNED BY: VANESSA TRUONG
CHECKED BY: ANTHONY FERNANDEZ
REVISED BY
DATE REVISED

LAST REVISION DATE PLOTTED => 16-DEC-2010
07-30-10 TIME PLOTTED => 17:14

FOR ACCURATE RIGHT OF WAY AND ACCESS DATA, CONTACT
RIGHT OF WAY ENGINEERING AT THE DISTRICT OFFICE.

Dist	COUNTY	ROUTE	POST MILES TOTAL PROJECT	SHEET No.	TOTAL SHEETS
12	Ora	91	9.1/15.1	726	949

Vanessa Van Truong 08-12-10
REGISTERED ELECTRICAL ENGINEER DATE

10-25-10
PLANS APPROVAL DATE

REGISTERED PROFESSIONAL ENGINEER
V.V. TRUONG
No. E 13983
Exp. 6/30/12
ELECTRICAL
STATE OF CALIFORNIA

THE STATE OF CALIFORNIA OR ITS OFFICERS OR AGENTS SHALL NOT BE RESPONSIBLE FOR THE ACCURACY OR COMPLETENESS OF SCANNED COPIES OF THIS PLAN SHEET.

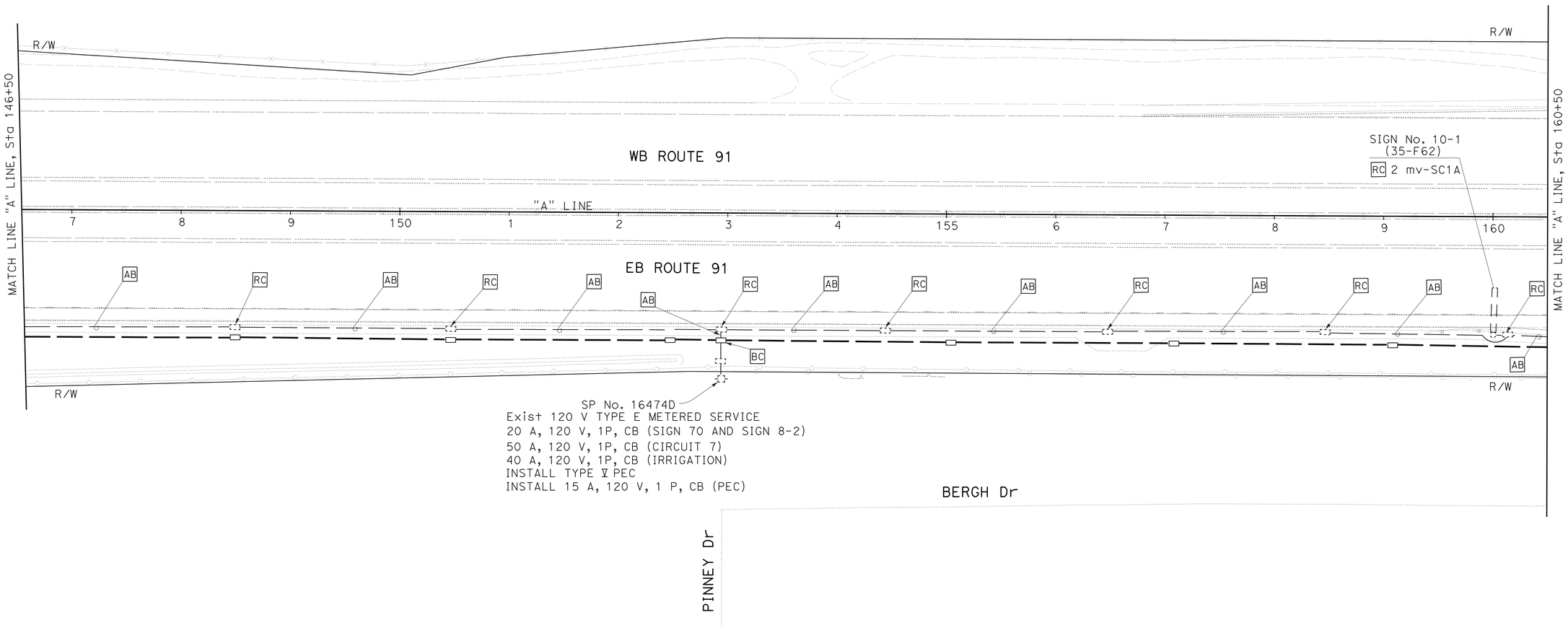

FOR NOTES SEE SHEET E-145
FOR WIRING DIAGRAM SEE SHEET E-171

THIS PLAN IS ACCURATE FOR ELECTRICAL WORK ONLY.

LIGHTING AND SIGN ILLUMINATION

SCALE: 1" = 50'

E-151

STATE OF CALIFORNIA - DEPARTMENT OF TRANSPORTATION
Caltrans
ELECTRICAL DESIGN

FUNCTIONAL SUPERVISOR: SHAHRAM SHAHRIARI
CALCULATED-DESIGNED BY: VANESSA TRUONG
CHECKED BY: ANTHONY FERNANDEZ
REVISED BY
DATE REVISED

LAST REVISION DATE PLOTTED => 16-DEC-2010
07-30-10 TIME PLOTTED => 17:14

Dist	COUNTY	ROUTE	POST MILES TOTAL PROJECT	SHEET No.	TOTAL SHEETS
12	Ora	91	9.1/15.1	727	949

Vanessa Van Truong 08-12-10
REGISTERED ELECTRICAL ENGINEER DATE

10-25-10
PLANS APPROVAL DATE

REGISTERED PROFESSIONAL ENGINEER V.V. TRUONG No. E 13983 Exp. 6/30/12 ELECTRICAL STATE OF CALIFORNIA

THE STATE OF CALIFORNIA OR ITS OFFICERS OR AGENTS SHALL NOT BE RESPONSIBLE FOR THE ACCURACY OR COMPLETENESS OF SCANNED COPIES OF THIS PLAN SHEET.

FOR ACCURATE RIGHT OF WAY AND ACCESS DATA, CONTACT
RIGHT OF WAY ENGINEERING AT THE DISTRICT OFFICE.

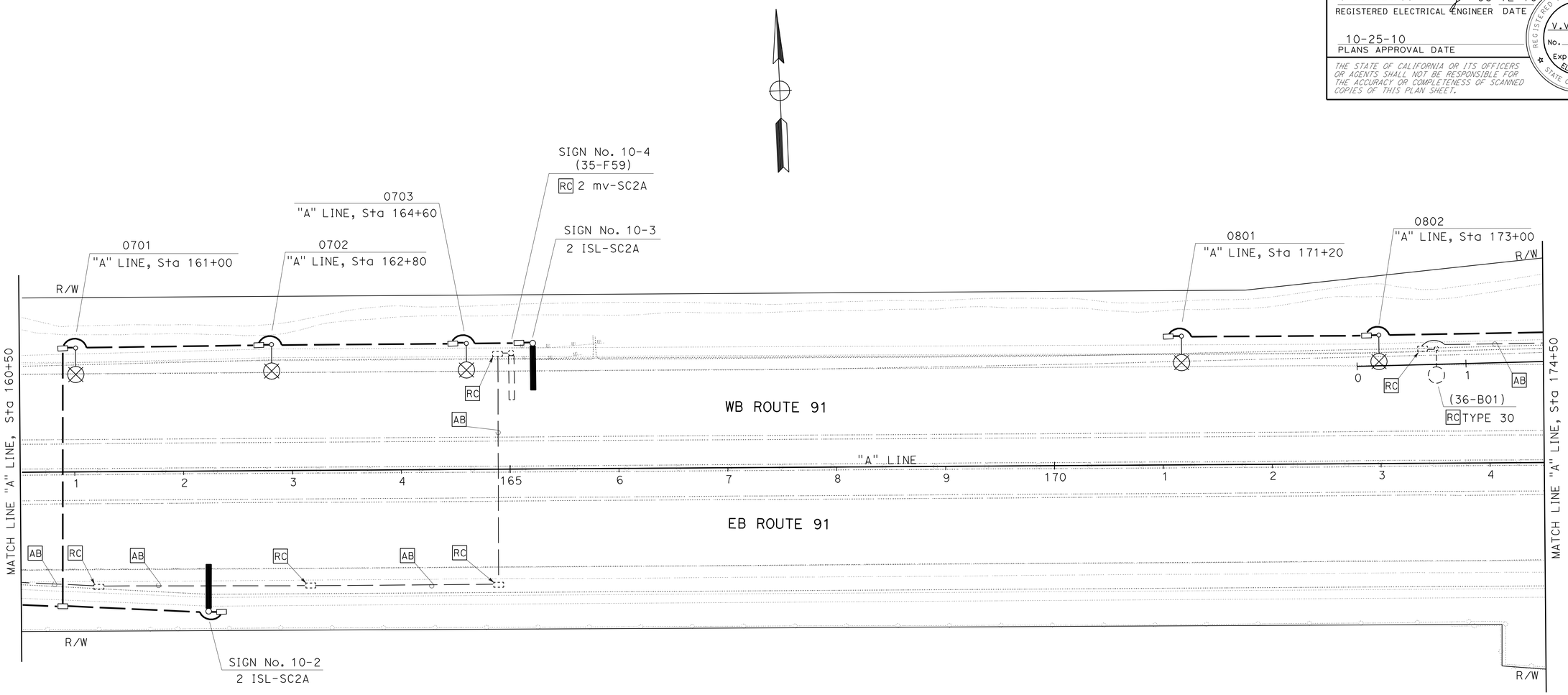

FOR NOTES SEE SHEET E-145
FOR WIRING DIAGRAM SEE SHEET E-171 AND 172

THIS PLAN IS ACCURATE FOR ELECTRICAL WORK ONLY.

LIGHTING AND SIGN ILLUMINATION

SCALE: 1" = 50'

E-152

STATE OF CALIFORNIA - DEPARTMENT OF TRANSPORTATION
Caltrans
ELECTRICAL DESIGN

FUNCTIONAL SUPERVISOR: SHAHRAM SHAHRIARI
CALCULATED-DESIGNED BY: VANESSA TRUONG
CHECKED BY: ANTHONY FERNANDEZ
REVISED BY
DATE REVISED

LAST REVISION 07-30-10
DATE PLOTTED => 16-DEC-2010
TIME PLOTTED => 17:14

Dist	COUNTY	ROUTE	POST MILES TOTAL PROJECT	SHEET No.	TOTAL SHEETS
12	Ora	91	9.1/15.1	728	949

Vanessa Van Truong 08-12-10
REGISTERED ELECTRICAL ENGINEER DATE

10-25-10
PLANS APPROVAL DATE

REGISTERED PROFESSIONAL ENGINEER
V.V. TRUONG
No. E 13983
Exp. 6/30/12
ELECTRICAL
STATE OF CALIFORNIA

THE STATE OF CALIFORNIA OR ITS OFFICERS OR AGENTS SHALL NOT BE RESPONSIBLE FOR THE ACCURACY OR COMPLETENESS OF SCANNED COPIES OF THIS PLAN SHEET.

FOR ACCURATE RIGHT OF WAY AND ACCESS DATA, CONTACT RIGHT OF WAY ENGINEERING AT THE DISTRICT OFFICE.

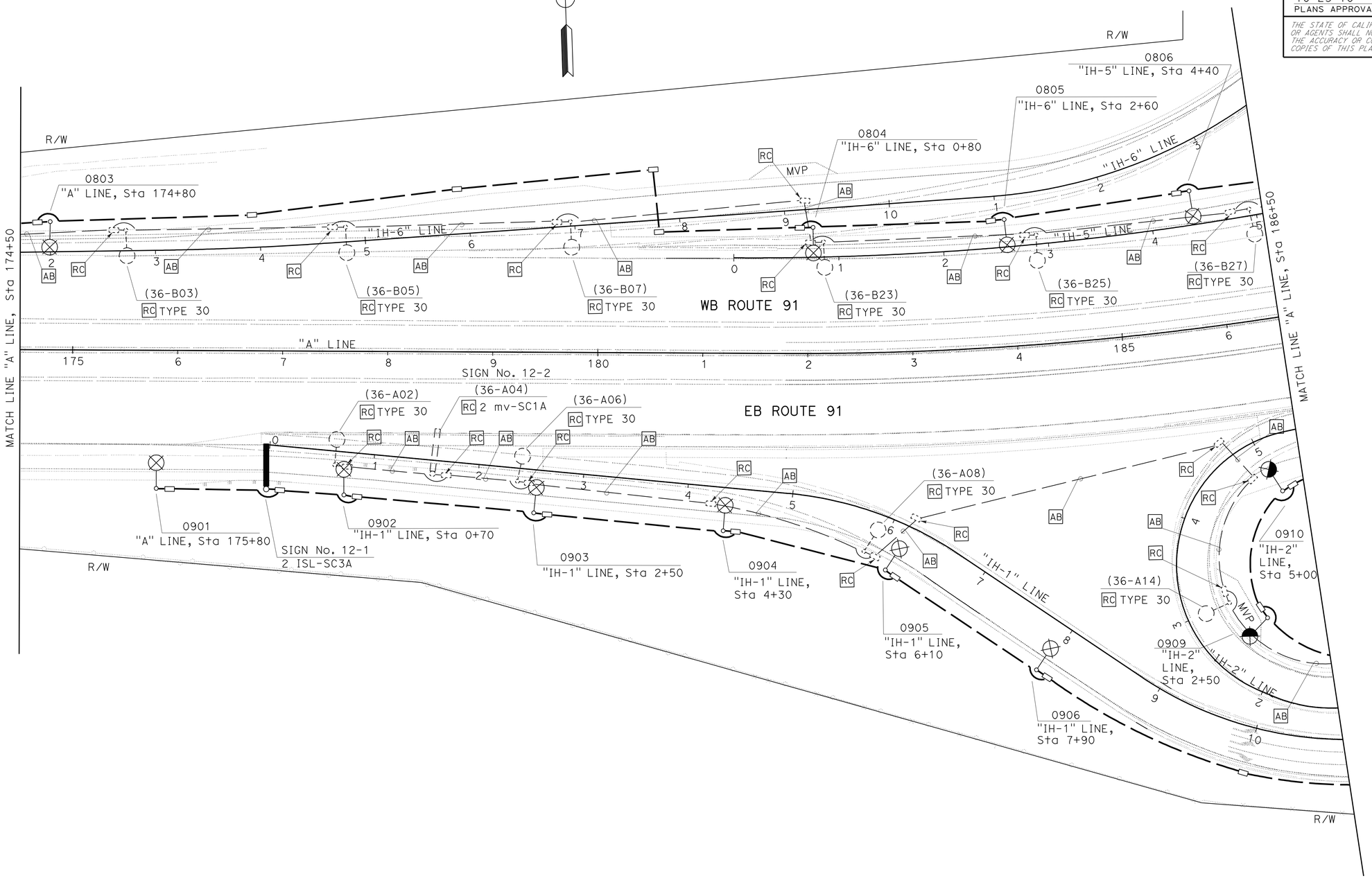

LIGHTING AND SIGN ILLUMINATION

SCALE: 1" = 50'

FOR NOTES SEE SHEET E-145
FOR WIRING DIAGRAM SEE SHEET E-172

THIS PLAN IS ACCURATE FOR ELECTRICAL WORK ONLY.

E-153

STATE OF CALIFORNIA - DEPARTMENT OF TRANSPORTATION
Caltrans®
ELECTRICAL DESIGN

FUNCTIONAL SUPERVISOR: SHAHRAM SHAHRIARI
CALCULATED-DESIGNED BY: VANESSA TRUONG
CHECKED BY: ANTHONY FERNANDEZ
REVISED BY
DATE REVISED

LAST REVISION: DATE PLOTTED => 16-DEC-2010
07-30-10 TIME PLOTTED => 17:14

FOR ACCURATE RIGHT OF WAY AND ACCESS DATA, CONTACT
RIGHT OF WAY ENGINEERING AT THE DISTRICT OFFICE.

Dist	COUNTY	ROUTE	POST MILES TOTAL PROJECT	SHEET No.	TOTAL SHEETS
12	Ora	91	9.1/15.1	729	949

Vanessa Van Truong 08-12-10
REGISTERED ELECTRICAL ENGINEER DATE

10-25-10
PLANS APPROVAL DATE

REGISTERED PROFESSIONAL ENGINEER
V.V. TRUONG
No. E 13983
Exp. 6/30/12
ELECTRICAL
STATE OF CALIFORNIA

THE STATE OF CALIFORNIA OR ITS OFFICERS OR AGENTS SHALL NOT BE RESPONSIBLE FOR THE ACCURACY OR COMPLETENESS OF SCANNED COPIES OF THIS PLAN SHEET.

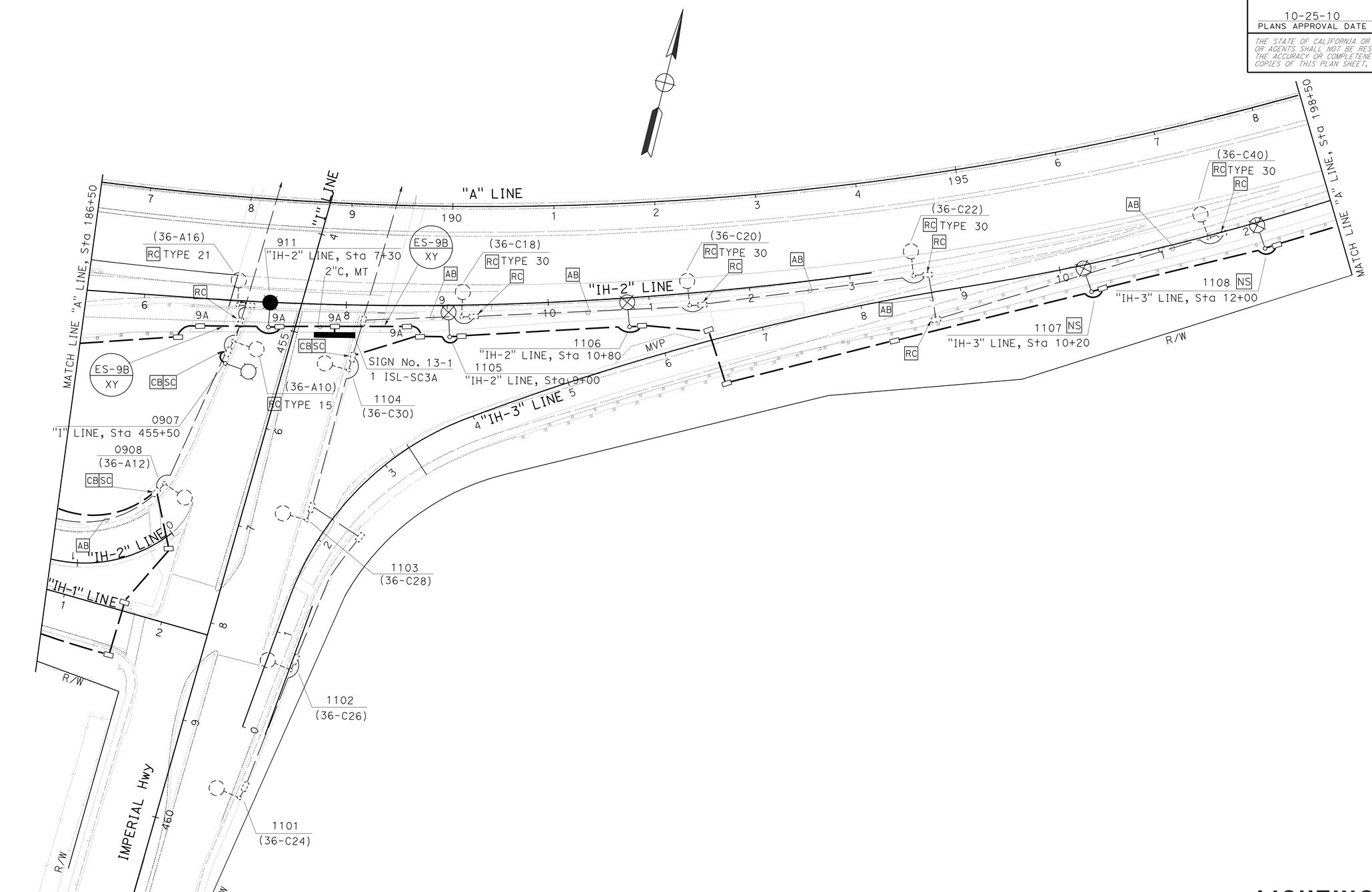

FOR NOTES SEE SHEET E-145
FOR WIRING DIAGRAM SEE SHEET E-172

THIS PLAN IS ACCURATE FOR ELECTRICAL WORK ONLY.

LIGHTING AND SIGN ILLUMINATION

SCALE: 1" = 50'

E-154

STATE OF CALIFORNIA - DEPARTMENT OF TRANSPORTATION
Caltrans
ELECTRICAL DESIGN

FUNCTIONAL SUPERVISOR: SHAHRAM SHAHRIARI
CALCULATED-DESIGNED BY: VANESSA TRUONG
CHECKED BY: ANTHONY FERNANDEZ
REVISED BY
DATE REVISED

LAST REVISION 07-30-10
DATE PLOTTED => 16-DEC-2010
TIME PLOTTED => 17:14

FOR ACCURATE RIGHT OF WAY AND ACCESS DATA, CONTACT
RIGHT OF WAY ENGINEERING AT THE DISTRICT OFFICE.

Dist	COUNTY	ROUTE	POST MILES TOTAL PROJECT	SHEET No.	TOTAL SHEETS
12	Ora	91	9.1/15.1	730	949

Vanessa Van Truong 08-12-10
REGISTERED ELECTRICAL ENGINEER DATE

10-25-10
PLANS APPROVAL DATE

REGISTERED PROFESSIONAL ENGINEER
V.V. TRUONG
No. E 13983
Exp. 6/30/12
ELECTRICAL
STATE OF CALIFORNIA

THE STATE OF CALIFORNIA OR ITS OFFICERS OR AGENTS SHALL NOT BE RESPONSIBLE FOR THE ACCURACY OR COMPLETENESS OF SCANNED COPIES OF THIS PLAN SHEET.

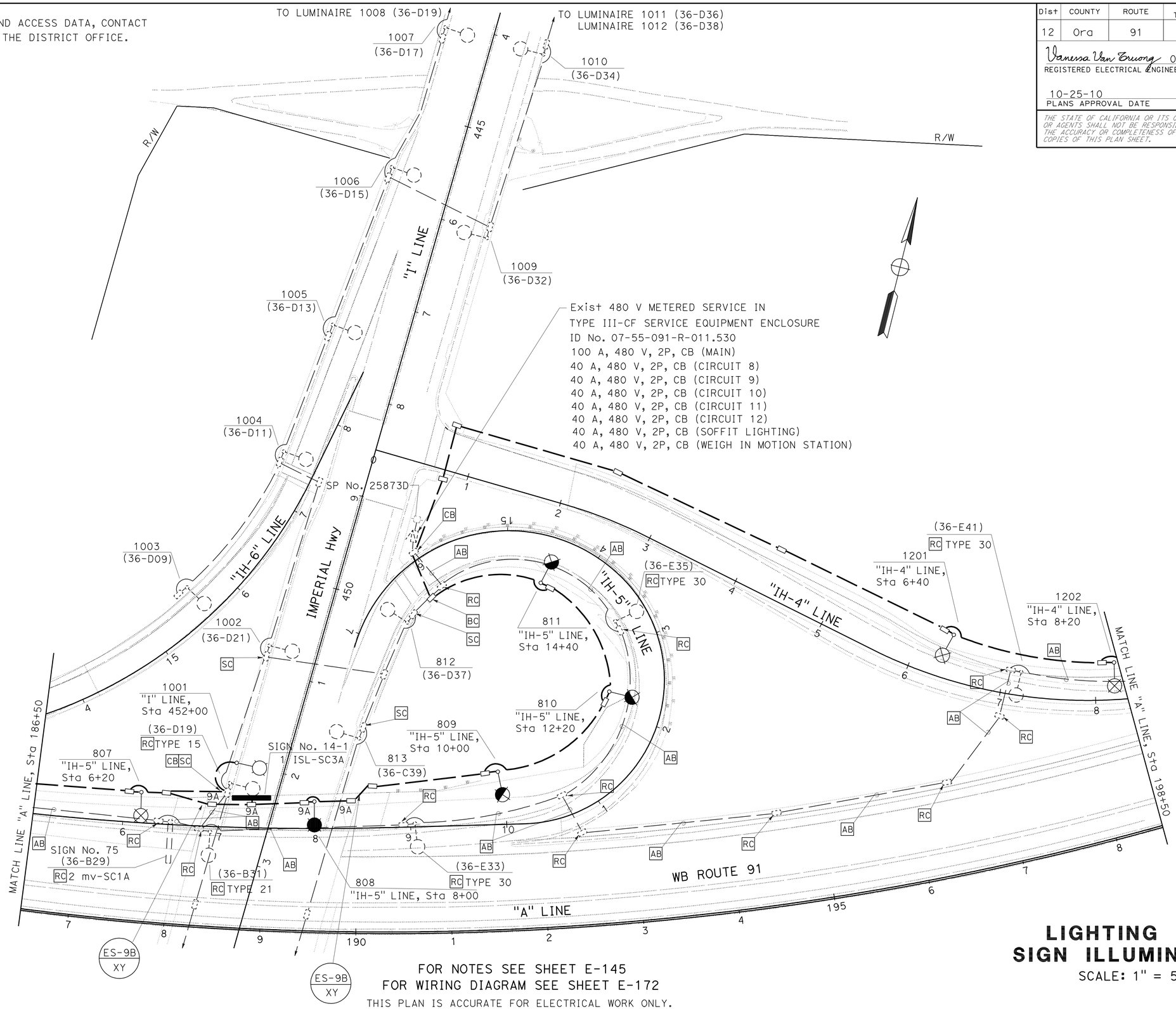

FOR NOTES SEE SHEET E-145
FOR WIRING DIAGRAM SEE SHEET E-172
THIS PLAN IS ACCURATE FOR ELECTRICAL WORK ONLY.

LIGHTING AND SIGN ILLUMINATION

SCALE: 1" = 50'

E-155

STATE OF CALIFORNIA - DEPARTMENT OF TRANSPORTATION
Caltrans
ELECTRICAL DESIGN

FUNCTIONAL SUPERVISOR: SHAHRAM SHAHRIARI
CALCULATED-DESIGNED BY: VANESSA TRUONG
CHECKED BY: ANTHONY FERNANDEZ
REVISED BY
DATE REVISED

LAST REVISION DATE PLOTTED => 16-DEC-2010
TIME PLOTTED => 17:14
07-30-10

FOR ACCURATE RIGHT OF WAY AND ACCESS DATA, CONTACT
RIGHT OF WAY ENGINEERING AT THE DISTRICT OFFICE.

Dist	COUNTY	ROUTE	POST MILES TOTAL PROJECT	SHEET No.	TOTAL SHEETS
12	Ora	91	9.1/15.1	731	949

Vanessa Van Truong 08-12-10
REGISTERED ELECTRICAL ENGINEER DATE

10-25-10
PLANS APPROVAL DATE

REGISTERED PROFESSIONAL ENGINEER
V.V. TRUONG
No. E 13983
Exp. 6/30/12
ELECTRICAL
STATE OF CALIFORNIA

THE STATE OF CALIFORNIA OR ITS OFFICERS OR AGENTS SHALL NOT BE RESPONSIBLE FOR THE ACCURACY OR COMPLETENESS OF SCANNED COPIES OF THIS PLAN SHEET.

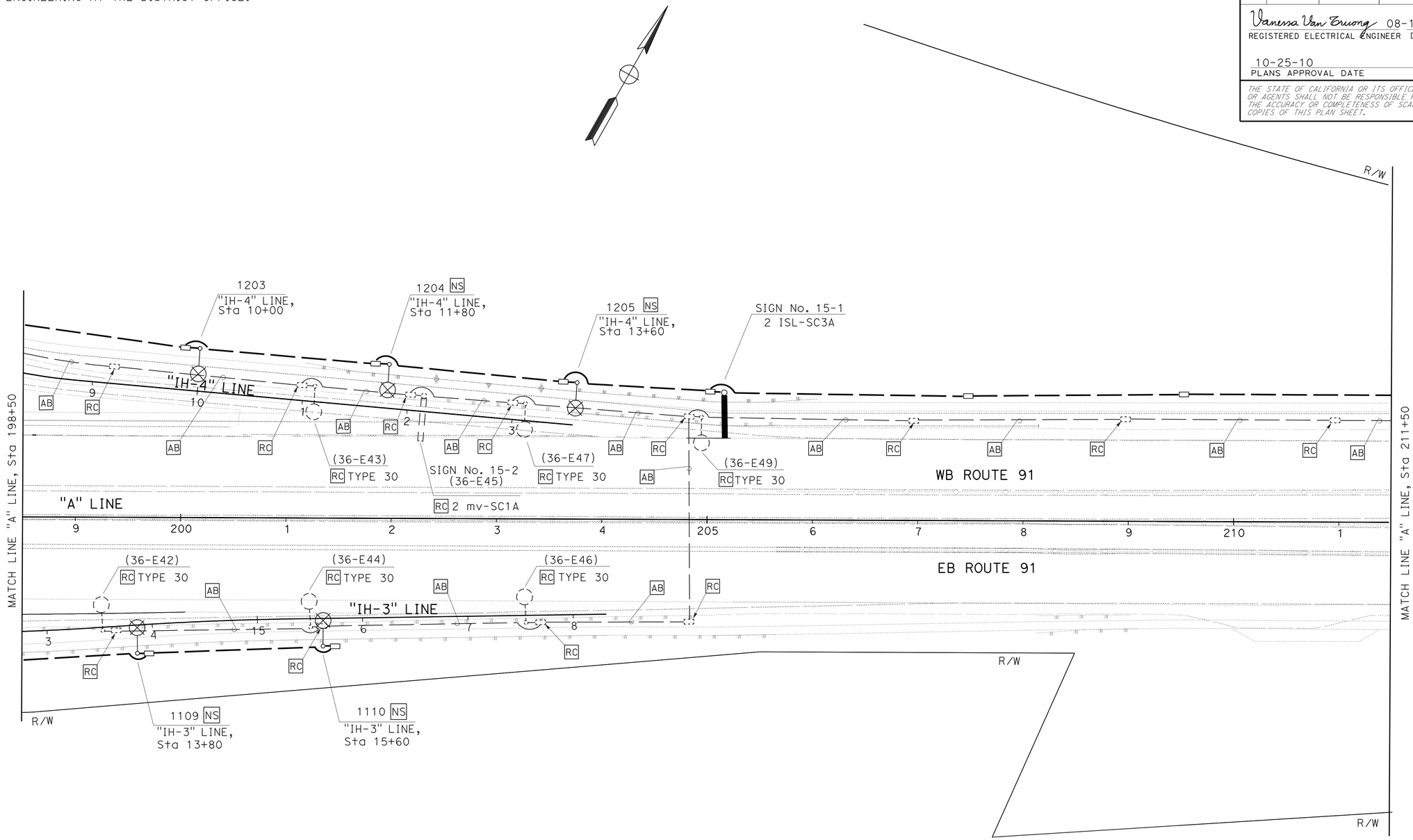

FOR NOTES SEE SHEET E-145
FOR WIRING DIAGRAM SEE SHEET E-172

THIS PLAN IS ACCURATE FOR ELECTRICAL WORK ONLY.

LIGHTING AND SIGN ILLUMINATION

SCALE: 1" = 50'

E-156

STATE OF CALIFORNIA - DEPARTMENT OF TRANSPORTATION
Caltrans
ELECTRICAL DESIGN

FUNCTIONAL SUPERVISOR: SHAHRAM SHAHRIARI
CALCULATED-DESIGNED BY: VANESSA TRUONG
CHECKED BY: ANTHONY FERNANDEZ
REVISED BY
DATE REVISED

LAST REVISION 07-30-10
DATE PLOTTED => 16-DEC-2010
TIME PLOTTED => 17:14

FOR ACCURATE RIGHT OF WAY AND ACCESS DATA, CONTACT
RIGHT OF WAY ENGINEERING AT THE DISTRICT OFFICE.

Dist	COUNTY	ROUTE	POST MILES TOTAL PROJECT	SHEET No.	TOTAL SHEETS
12	Ora	91	9.1/15.1	732	949

Vanessa Van Truong 08-12-10
REGISTERED ELECTRICAL ENGINEER DATE

10-25-10
PLANS APPROVAL DATE

REGISTERED PROFESSIONAL ENGINEER
V.V. TRUONG
No. E 13983
Exp. 6/30/12
ELECTRICAL
STATE OF CALIFORNIA

THE STATE OF CALIFORNIA OR ITS OFFICERS OR AGENTS SHALL NOT BE RESPONSIBLE FOR THE ACCURACY OR COMPLETENESS OF SCANNED COPIES OF THIS PLAN SHEET.

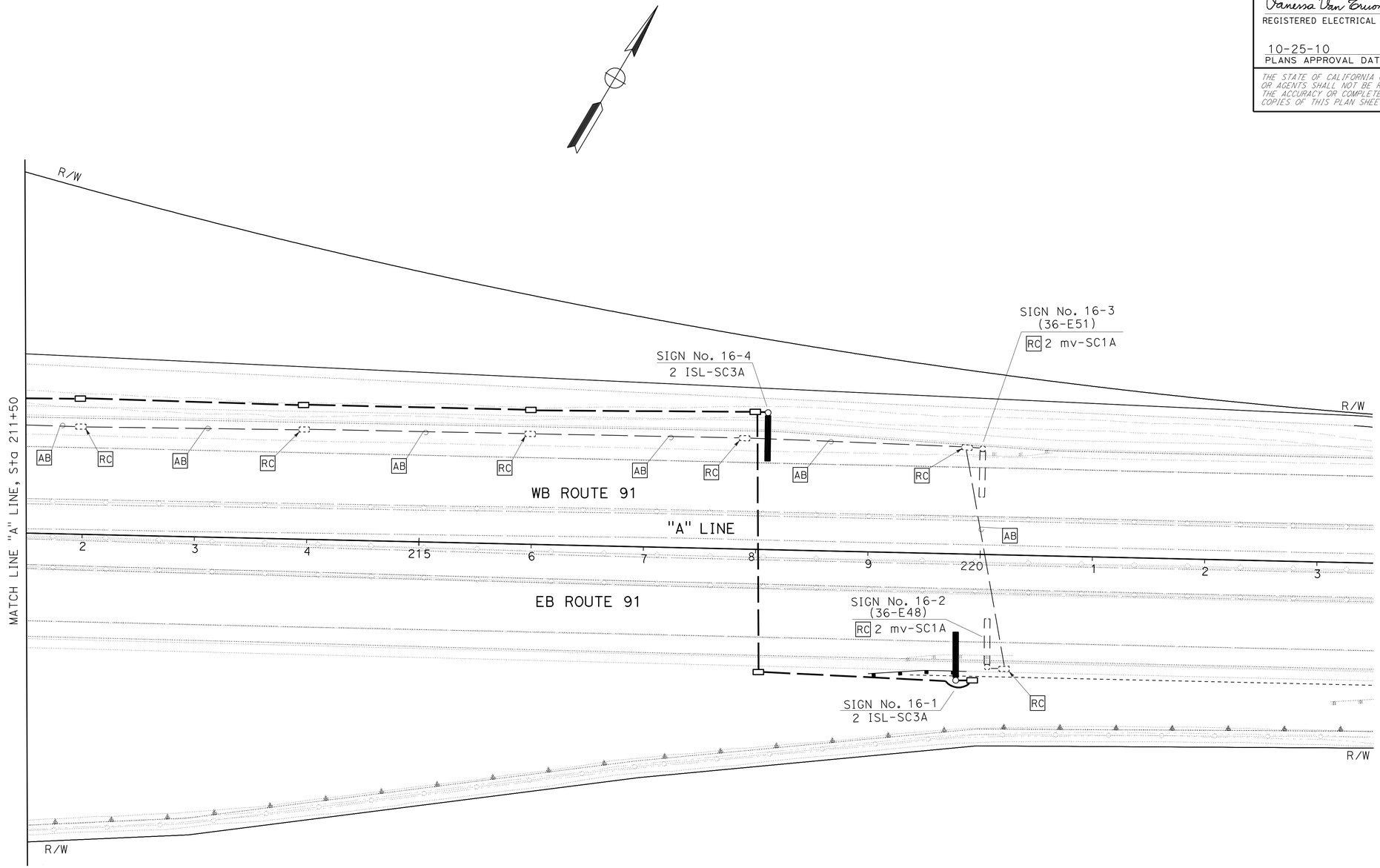

FOR NOTES SEE SHEET E-145
FOR WIRING DIAGRAM SEE SHEET E-172

THIS PLAN IS ACCURATE FOR ELECTRICAL WORK ONLY.

LIGHTING AND SIGN ILLUMINATION

SCALE: 1" = 50'

E-157

STATE OF CALIFORNIA - DEPARTMENT OF TRANSPORTATION
Caltrans® ELECTRICAL DESIGN

FUNCTIONAL SUPERVISOR: SHAHRAM SHAHRIARI
CALCULATED-DESIGNED BY: VANESSA TRUONG
CHECKED BY: ANTHONY FERNANDEZ
REVISED BY
DATE REVISED

LAST REVISION 07-30-10 | DATE PLOTTED => 16-DEC-2010 | TIME PLOTTED => 17:14

Dist	COUNTY	ROUTE	POST MILES TOTAL PROJECT	SHEET No.	TOTAL SHEETS
12	Ora	91	9.1/15.1	733	949

Vanessa Van Truong 08-12-10
REGISTERED ELECTRICAL ENGINEER DATE

10-25-10
PLANS APPROVAL DATE

REGISTERED PROFESSIONAL ENGINEER
V.V. TRUONG
No. E 13983
Exp. 6/30/12
ELECTRICAL
STATE OF CALIFORNIA

THE STATE OF CALIFORNIA OR ITS OFFICERS OR AGENTS SHALL NOT BE RESPONSIBLE FOR THE ACCURACY OR COMPLETENESS OF SCANNED COPIES OF THIS PLAN SHEET.

FOR ACCURATE RIGHT OF WAY AND ACCESS DATA, CONTACT RIGHT OF WAY ENGINEERING AT THE DISTRICT OFFICE.

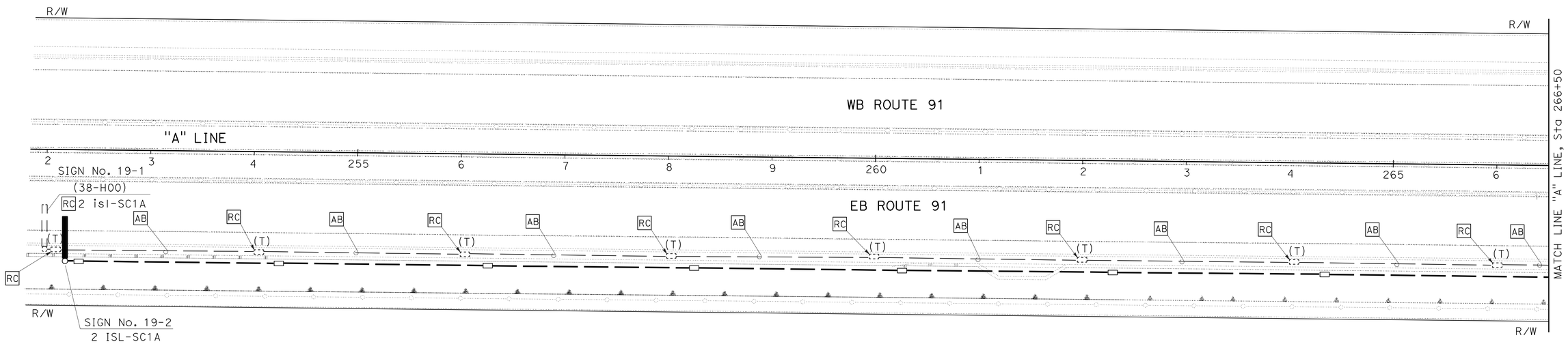

FOR NOTES SEE SHEET E-145
FOR WIRING DIAGRAM SEE SHEET E-173

THIS PLAN IS ACCURATE FOR ELECTRICAL WORK ONLY.

LIGHTING AND SIGN ILLUMINATION

SCALE: 1" = 50'

E-158

STATE OF CALIFORNIA - DEPARTMENT OF TRANSPORTATION
Caltrans
ELECTRICAL DESIGN

FUNCTIONAL SUPERVISOR: SHAHRAM SHAHRIARI
CALCULATED-DESIGNED BY: VANESSA TRUONG
CHECKED BY: ANTHONY FERNANDEZ
REVISED BY
DATE REVISED

LAST REVISION 07-30-10
DATE PLOTTED => 16-DEC-2010
TIME PLOTTED => 17:14

FOR ACCURATE RIGHT OF WAY AND ACCESS DATA, CONTACT
RIGHT OF WAY ENGINEERING AT THE DISTRICT OFFICE.

Dist	COUNTY	ROUTE	POST MILES TOTAL PROJECT	SHEET No.	TOTAL SHEETS
12	Ora	91	9.1/15.1	734	949

Vanessa Van Truong 08-12-10
REGISTERED ELECTRICAL ENGINEER DATE

10-25-10
PLANS APPROVAL DATE

REGISTERED PROFESSIONAL ENGINEER
V.V. TRUONG
No. E 13983
Exp. 6/30/12
ELECTRICAL
STATE OF CALIFORNIA

THE STATE OF CALIFORNIA OR ITS OFFICERS OR AGENTS SHALL NOT BE RESPONSIBLE FOR THE ACCURACY OR COMPLETENESS OF SCANNED COPIES OF THIS PLAN SHEET.

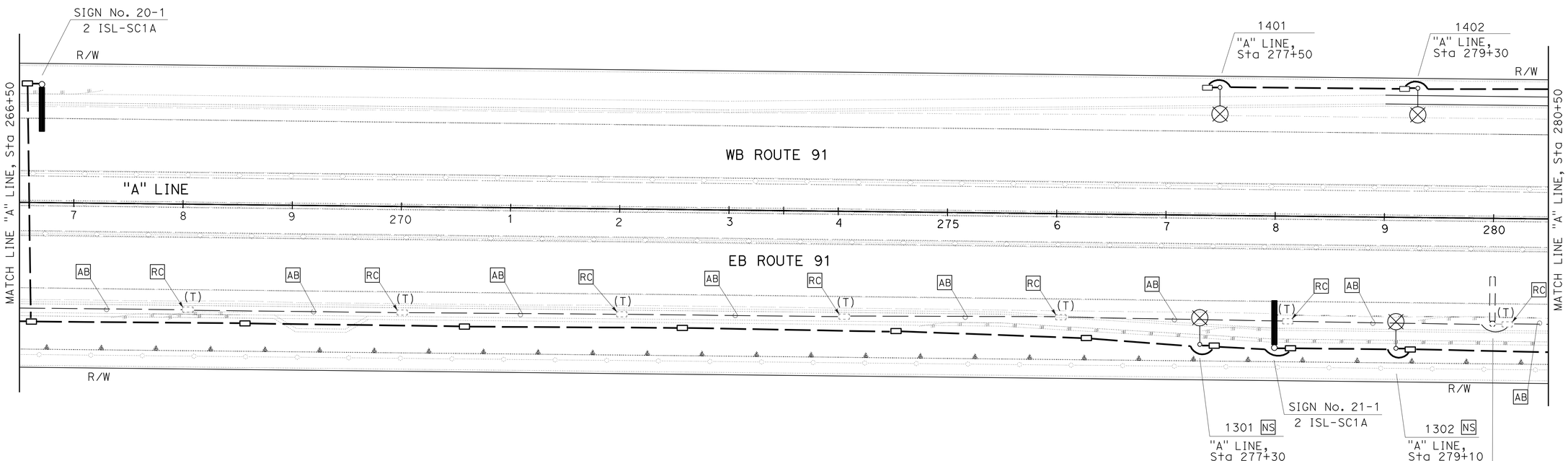

FOR NOTES SEE SHEET E-145
FOR WIRING DIAGRAM SEE SHEET E-173
THIS PLAN IS ACCURATE FOR ELECTRICAL WORK ONLY.

LIGHTING AND SIGN ILLUMINATION

SCALE: 1" = 50'

E-159

STATE OF CALIFORNIA - DEPARTMENT OF TRANSPORTATION
Caltrans
ELECTRICAL DESIGN

FUNCTIONAL SUPERVISOR: SHAHRAM SHAHRIARI
CALCULATED-DESIGNED BY: VANESSA TRUONG
CHECKED BY: ANTHONY FERNANDEZ
REVISED BY
DATE REVISED

LAST REVISION 07-30-10
DATE PLOTTED => 16-DEC-2010
TIME PLOTTED => 17:14

FOR ACCURATE RIGHT OF WAY AND ACCESS DATA, CONTACT
RIGHT OF WAY ENGINEERING AT THE DISTRICT OFFICE.

Dist	COUNTY	ROUTE	POST MILES TOTAL PROJECT	SHEET No.	TOTAL SHEETS
12	Ora	91	9.1/15.1	735	949

Vanessa Van Truong 08-12-10
REGISTERED ELECTRICAL ENGINEER DATE

10-25-10
PLANS APPROVAL DATE

REGISTERED PROFESSIONAL ENGINEER
V.V. TRUONG
No. E 13983
Exp. 6/30/12
ELECTRICAL
STATE OF CALIFORNIA

THE STATE OF CALIFORNIA OR ITS OFFICERS OR AGENTS SHALL NOT BE RESPONSIBLE FOR THE ACCURACY OR COMPLETENESS OF SCANNED COPIES OF THIS PLAN SHEET.

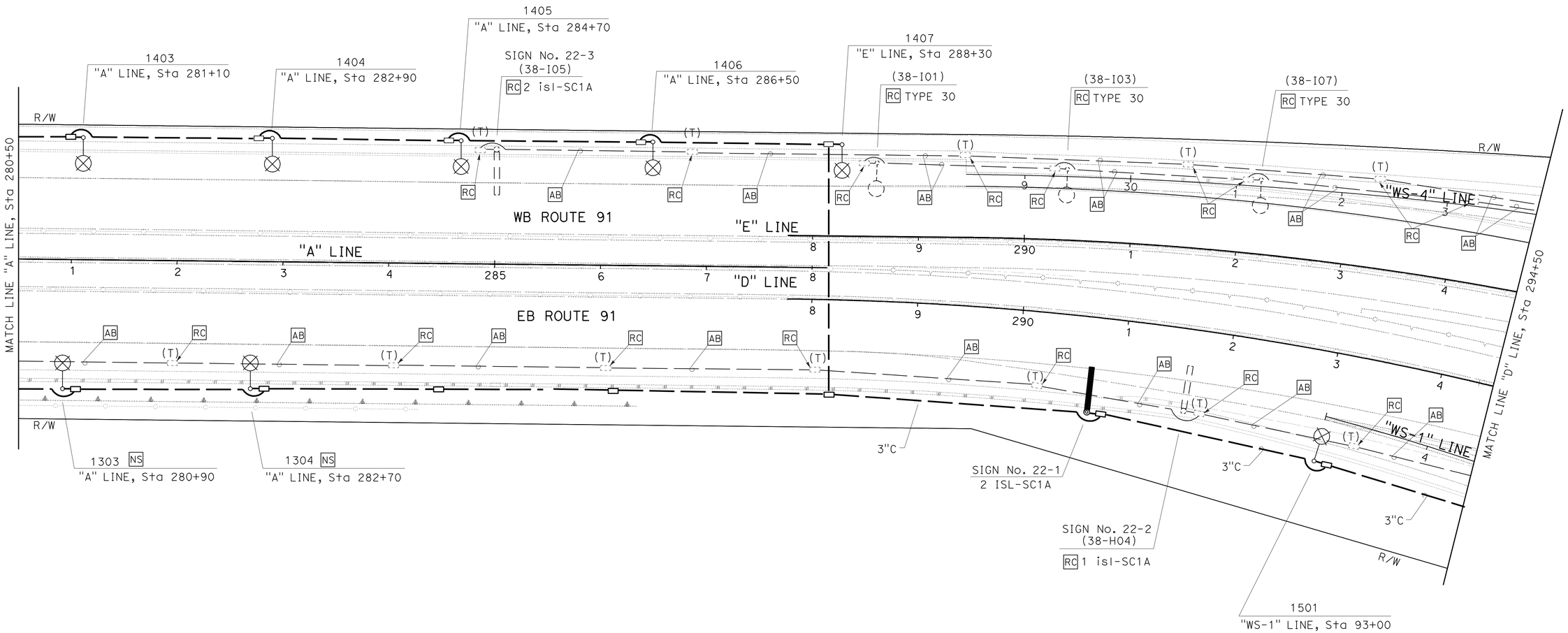

FOR NOTES SEE SHEET E-145
FOR WIRING DIAGRAM SEE SHEET E-173

THIS PLAN IS ACCURATE FOR ELECTRICAL WORK ONLY.

LIGHTING AND SIGN ILLUMINATION

SCALE: 1" = 50′

E-160

STATE OF CALIFORNIA - DEPARTMENT OF TRANSPORTATION
Caltrans®
ELECTRICAL DESIGN

FUNCTIONAL SUPERVISOR: SHAHRAM SHAHRIARI
CALCULATED-DESIGNED BY: VANESSA TRUONG
CHECKED BY: ANTHONY FERNANDEZ
REVISED BY
DATE REVISED

LAST REVISION 07-30-10
DATE PLOTTED => 17-DEC-2010
TIME PLOTTED => 09:58

FOR ACCURATE RIGHT OF WAY AND ACCESS DATA, CONTACT
RIGHT OF WAY ENGINEERING AT THE DISTRICT OFFICE.

Dist	COUNTY	ROUTE	POST MILES TOTAL PROJECT	SHEET No.	TOTAL SHEETS
12	Ora	91	9.1/15.1	736	949

Vanessa Van Truong 08-12-10
REGISTERED ELECTRICAL ENGINEER DATE

10-25-10
PLANS APPROVAL DATE

REGISTERED PROFESSIONAL ENGINEER V.V. TRUONG No. E 13983 Exp. 6/30/12 ELECTRICAL STATE OF CALIFORNIA

THE STATE OF CALIFORNIA OR ITS OFFICERS OR AGENTS SHALL NOT BE RESPONSIBLE FOR THE ACCURACY OR COMPLETENESS OF SCANNED COPIES OF THIS PLAN SHEET.

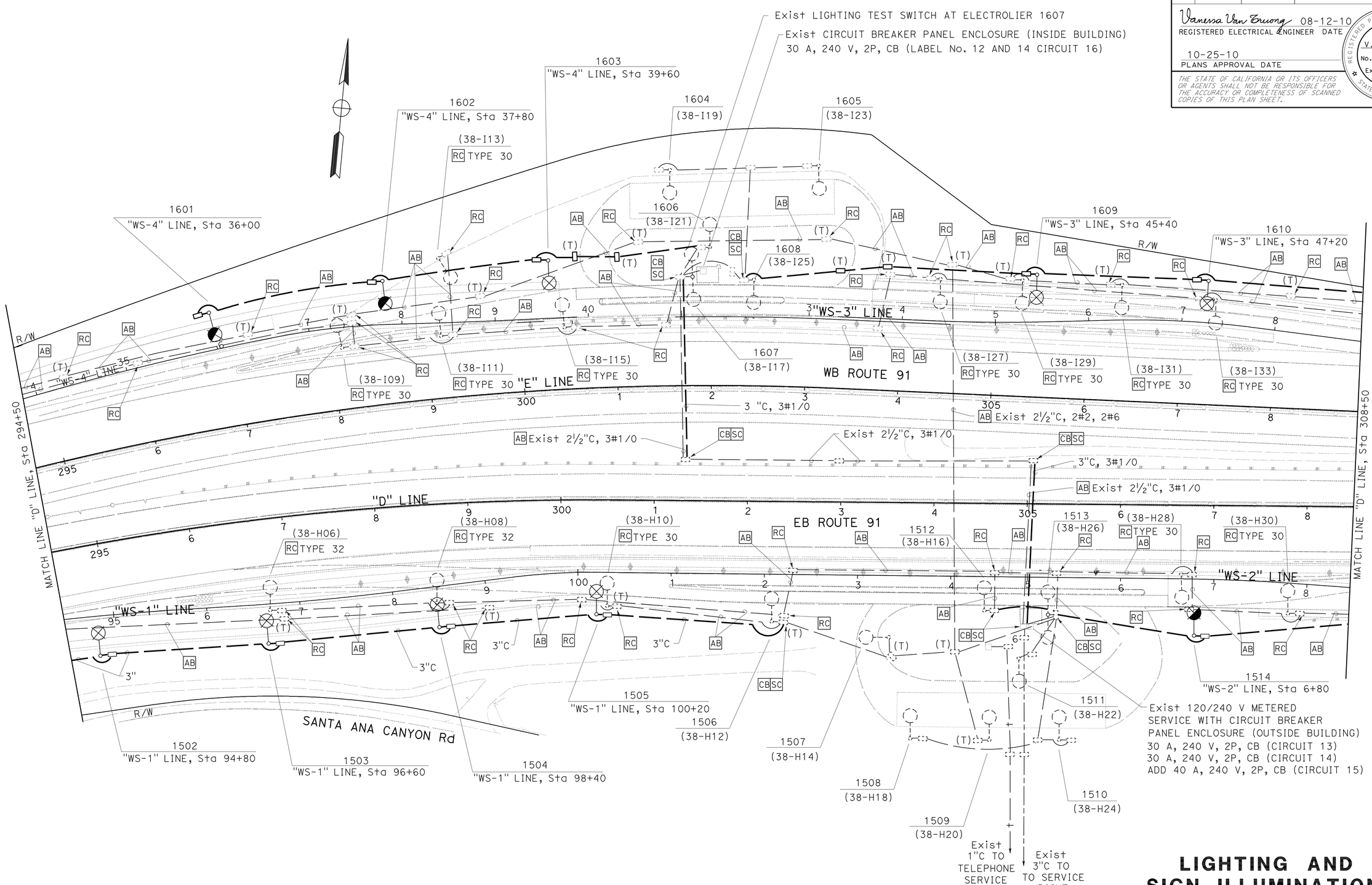

LIGHTING AND SIGN ILLUMINATION

SCALE: 1" = 50'

FOR NOTES SEE SHEET E-145
FOR WIRING DIAGRAM SEE SHEET E-173

THIS PLAN IS ACCURATE FOR ELECTRICAL WORK ONLY.

E-161

REVISED BY | DATE REVISED
VANESSA TRUONG | ANTHONY FERNANDEZ
CALCULATED-DESIGNED BY | CHECKED BY
FUNCTIONAL SUPERVISOR | SHAHRAM SHAHRIARI

STATE OF CALIFORNIA - DEPARTMENT OF TRANSPORTATION
Caltrans
ELECTRICAL DESIGN

LAST REVISION 07-30-10 | DATE PLOTTED => 16-DEC-2010 | TIME PLOTTED => 17:14

FOR ACCURATE RIGHT OF WAY AND ACCESS DATA, CONTACT
RIGHT OF WAY ENGINEERING AT THE DISTRICT OFFICE.

Dist	COUNTY	ROUTE	POST MILES TOTAL PROJECT	SHEET No.	TOTAL SHEETS
12	Ora	91	9.1/15.1	737	949

Vanessa Van Truong 08-12-10
REGISTERED ELECTRICAL ENGINEER DATE

10-25-10
PLANS APPROVAL DATE

REGISTERED PROFESSIONAL ENGINEER
V.V. TRUONG
No. E 13983
Exp. 6/30/12
ELECTRICAL
STATE OF CALIFORNIA

THE STATE OF CALIFORNIA OR ITS OFFICERS OR AGENTS SHALL NOT BE RESPONSIBLE FOR THE ACCURACY OR COMPLETENESS OF SCANNED COPIES OF THIS PLAN SHEET.

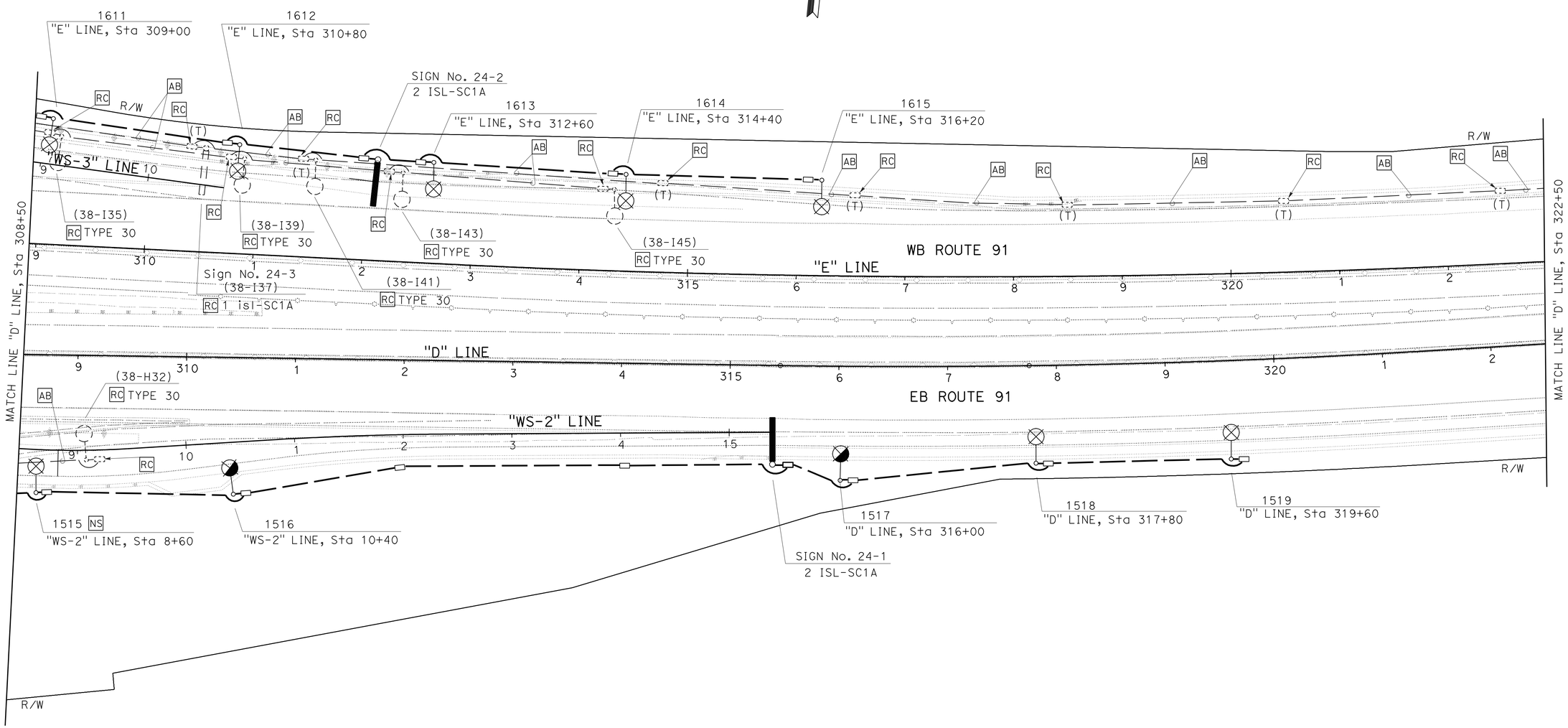

FOR NOTES SEE SHEET E-145
FOR WIRING DIAGRAM SEE SHEET E-173

THIS PLAN IS ACCURATE FOR ELECTRICAL WORK ONLY.

LIGHTING AND SIGN ILLUMINATION

SCALE: 1" = 50'

E-162

STATE OF CALIFORNIA - DEPARTMENT OF TRANSPORTATION
Caltrans
ELECTRICAL DESIGN

FUNCTIONAL SUPERVISOR: SHAHRAM SHAHRIARI
CALCULATED-DESIGNED BY: VANESSA TRUONG
CHECKED BY: ANTHONY FERNANDEZ
REVISED BY
DATE REVISED

LAST REVISION 07-30-10
DATE PLOTTED => 16-DEC-2010
TIME PLOTTED => 17:15

FOR ACCURATE RIGHT OF WAY AND ACCESS DATA, CONTACT
RIGHT OF WAY ENGINEERING AT THE DISTRICT OFFICE.

Dist	COUNTY	ROUTE	POST MILES TOTAL PROJECT	SHEET No.	TOTAL SHEETS
12	Ora	91	9.1/15.1	738	949

Vanessa Van Truong 08-12-10
REGISTERED ELECTRICAL ENGINEER DATE

10-25-10
PLANS APPROVAL DATE

REGISTERED PROFESSIONAL ENGINEER
V.V. TRUONG
No. E 13983
Exp. 6/30/12
ELECTRICAL
STATE OF CALIFORNIA

THE STATE OF CALIFORNIA OR ITS OFFICERS OR AGENTS SHALL NOT BE RESPONSIBLE FOR THE ACCURACY OR COMPLETENESS OF SCANNED COPIES OF THIS PLAN SHEET.

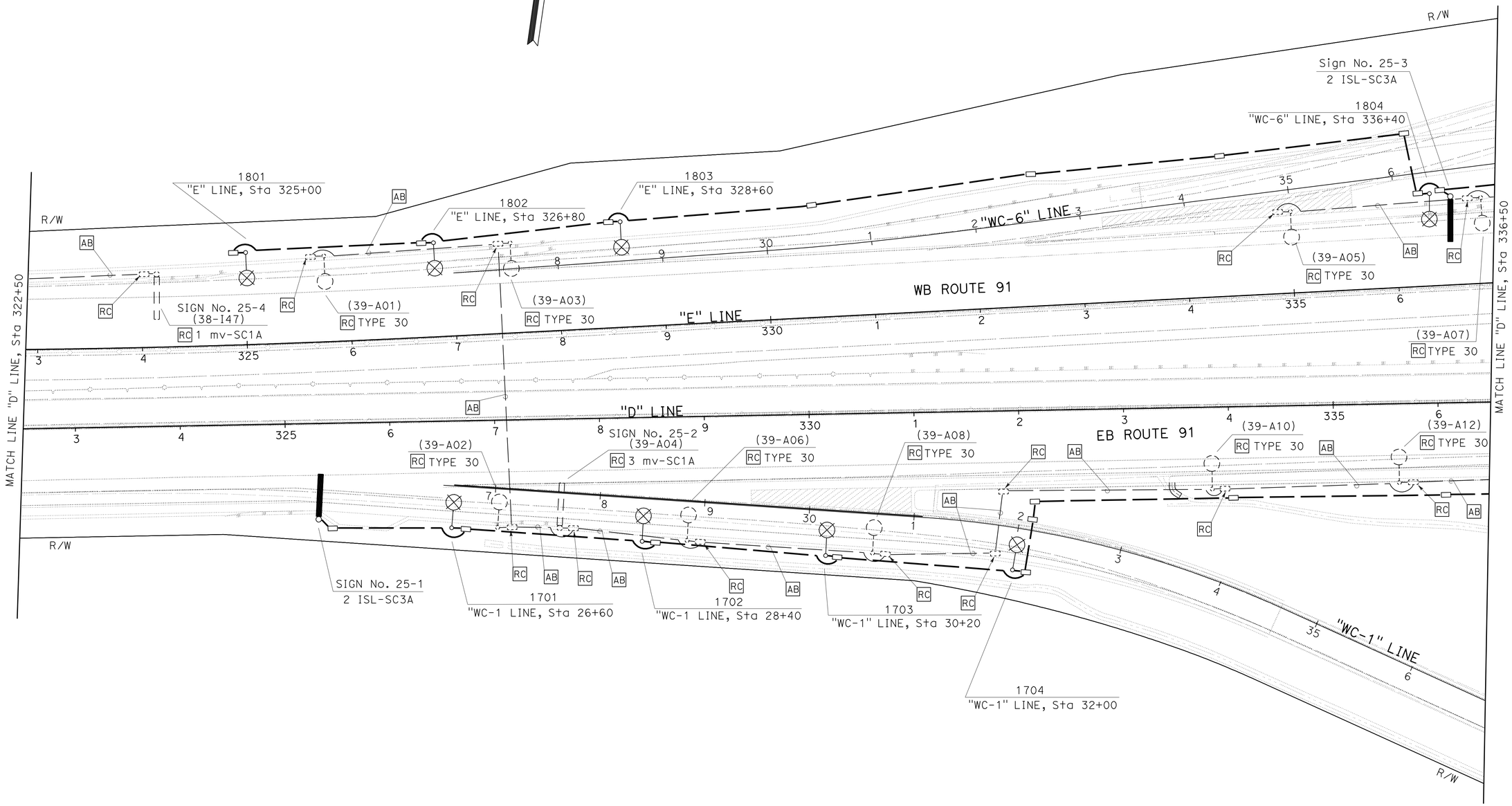

LIGHTING AND SIGN ILLUMINATION

SCALE: 1" = 50'

FOR NOTES SEE SHEET E-145
FOR WIRING DIAGRAM SEE SHEET E-173 AND E-174

THIS PLAN IS ACCURATE FOR ELECTRICAL WORK ONLY.

E-163

STATE OF CALIFORNIA - DEPARTMENT OF TRANSPORTATION
Caltrans
ELECTRICAL DESIGN

FUNCTIONAL SUPERVISOR: SHAHRAM SHAHRIARI
CALCULATED-DESIGNED BY: VANESSA TRUONG
CHECKED BY: SHAHRAM SHAHRIARI
REVISED BY
DATE REVISED

LAST REVISION 07-30-10
DATE PLOTTED => 16-DEC-2010
TIME PLOTTED => 17:15

FOR ACCURATE RIGHT OF WAY AND ACCESS DATA, CONTACT
RIGHT OF WAY ENGINEERING AT THE DISTRICT OFFICE.

Dist	COUNTY	ROUTE	POST MILES TOTAL PROJECT	SHEET No.	TOTAL SHEETS
12	Ora	91	9.1/15.1	739	949

Vanessa Van Truong 08-12-10
REGISTERED ELECTRICAL ENGINEER DATE

10-25-10
PLANS APPROVAL DATE

REGISTERED PROFESSIONAL ENGINEER
V.V. TRUONG
No. E 13983
Exp. 6/30/12
ELECTRICAL
STATE OF CALIFORNIA

THE STATE OF CALIFORNIA OR ITS OFFICERS OR AGENTS SHALL NOT BE RESPONSIBLE FOR THE ACCURACY OR COMPLETENESS OF SCANNED COPIES OF THIS PLAN SHEET.

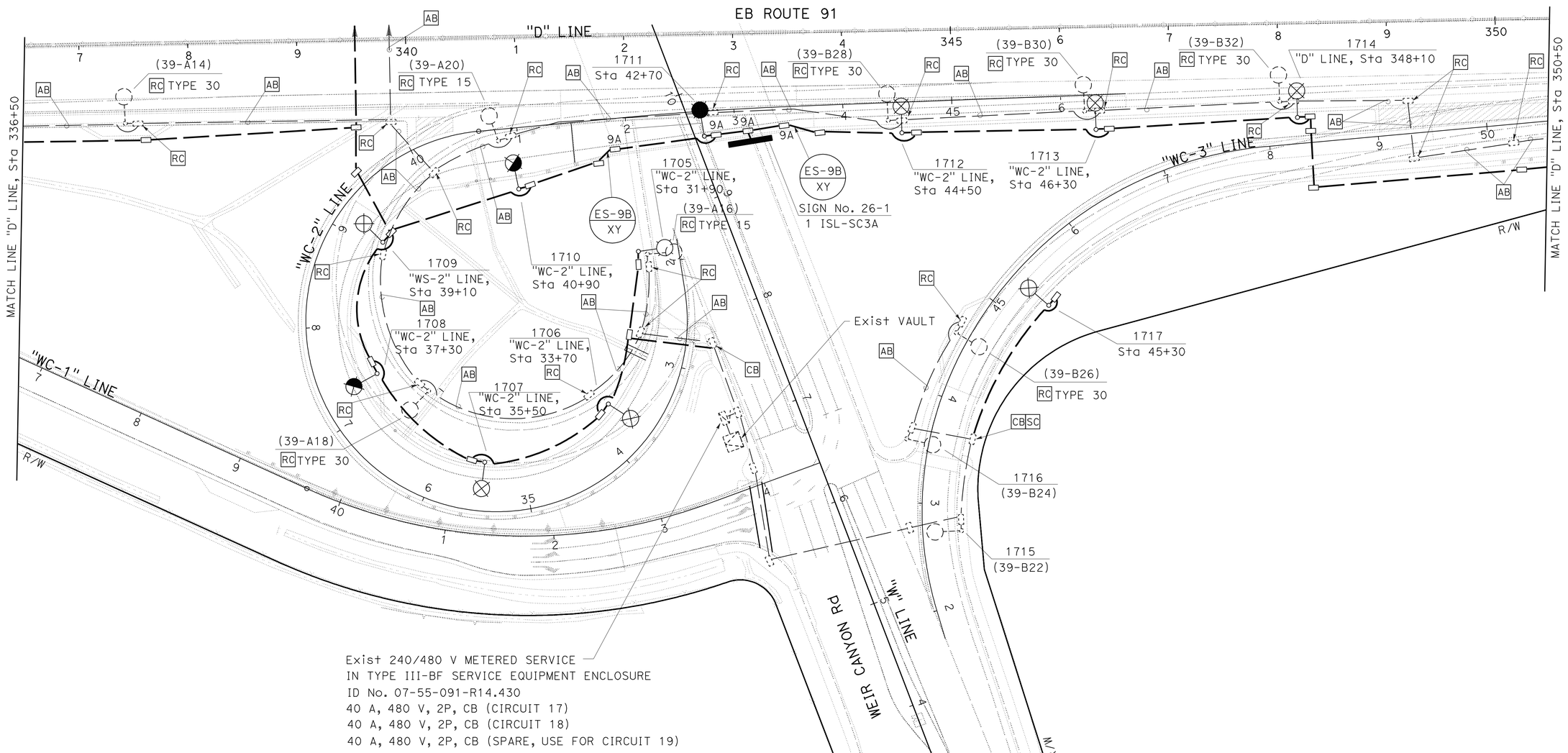

Exist 240/480 V METERED SERVICE
IN TYPE III-BF SERVICE EQUIPMENT ENCLOSURE
ID No. 07-55-091-R14.430
40 A, 480 V, 2P, CB (CIRCUIT 17)
40 A, 480 V, 2P, CB (CIRCUIT 18)
40 A, 480 V, 2P, CB (SPARE, USE FOR CIRCUIT 19)

FOR NOTES SEE SHEET E-145
FOR WIRING DIAGRAM SEE SHEET E-174
THIS PLAN IS ACCURATE FOR ELECTRICAL WORK ONLY.

LIGHTING AND SIGN ILLUMINATION

SCALE: 1" = 50'

E-164

STATE OF CALIFORNIA - DEPARTMENT OF TRANSPORTATION
Caltrans
ELECTRICAL DESIGN

FUNCTIONAL SUPERVISOR: SHAHRAM SHAHRIARI
CALCULATED-DESIGNED BY: VANESSA TRUONG
CHECKED BY: ANTHONY FERNANDEZ
REVISED BY
DATE REVISED

LAST REVISION 07-30-10
DATE PLOTTED => 16-DEC-2010
TIME PLOTTED => 17:15

FOR ACCURATE RIGHT OF WAY AND ACCESS DATA, CONTACT
RIGHT OF WAY ENGINEERING AT THE DISTRICT OFFICE.

Dist	COUNTY	ROUTE	POST MILES TOTAL PROJECT	SHEET No.	TOTAL SHEETS
12	Ora	91	9.1/15.1	740	949

Vanessa Van Truong 08-12-10
REGISTERED ELECTRICAL ENGINEER DATE

10-25-10
PLANS APPROVAL DATE

REGISTERED PROFESSIONAL ENGINEER
V.V. TRUONG
No. E 13983
Exp. 6/30/12
ELECTRICAL
STATE OF CALIFORNIA

THE STATE OF CALIFORNIA OR ITS OFFICERS OR AGENTS SHALL NOT BE RESPONSIBLE FOR THE ACCURACY OR COMPLETENESS OF SCANNED COPIES OF THIS PLAN SHEET.

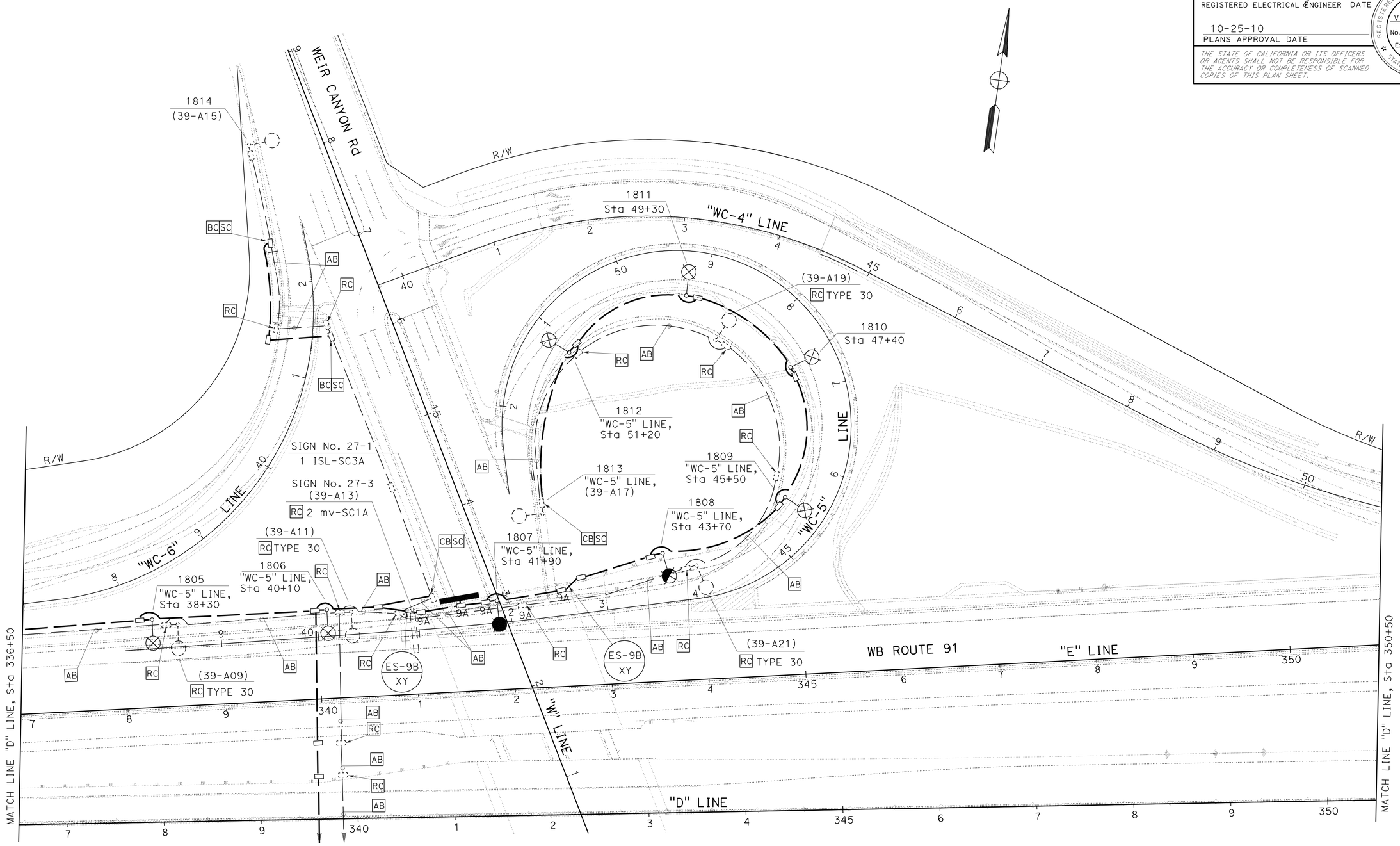

LIGHTING AND SIGN ILLUMINATION

SCALE: 1" = 50'

FOR NOTES SEE SHEET E-145
FOR WIRING DIAGRAM SEE SHEET E-174

THIS PLAN IS ACCURATE FOR ELECTRICAL WORK ONLY.

E-165

STATE OF CALIFORNIA - DEPARTMENT OF TRANSPORTATION
Caltrans®
ELECTRICAL DESIGN

FUNCTIONAL SUPERVISOR: SHAHRAM SHAHRIARI
CALCULATED-DESIGNED BY: VANESSA TRUONG
CHECKED BY: ANTHONY FERNANDEZ
REVISED BY
DATE REVISED

LAST REVISION DATE PLOTTED => 16-DEC-2010
TIME PLOTTED => 17:15
07-30-10

FOR ACCURATE RIGHT OF WAY AND ACCESS DATA, CONTACT
RIGHT OF WAY ENGINEERING AT THE DISTRICT OFFICE.

Dist	COUNTY	ROUTE	POST MILES TOTAL PROJECT	SHEET No.	TOTAL SHEETS
12	Ora	91	9.1/15.1	741	949

Vanessa Van Truong 08-12-10
REGISTERED ELECTRICAL ENGINEER DATE

10-25-10
PLANS APPROVAL DATE

REGISTERED PROFESSIONAL ENGINEER
V.V. TRUONG
No. E 13983
Exp. 6/30/12
ELECTRICAL
STATE OF CALIFORNIA

THE STATE OF CALIFORNIA OR ITS OFFICERS OR AGENTS SHALL NOT BE RESPONSIBLE FOR THE ACCURACY OR COMPLETENESS OF SCANNED COPIES OF THIS PLAN SHEET.

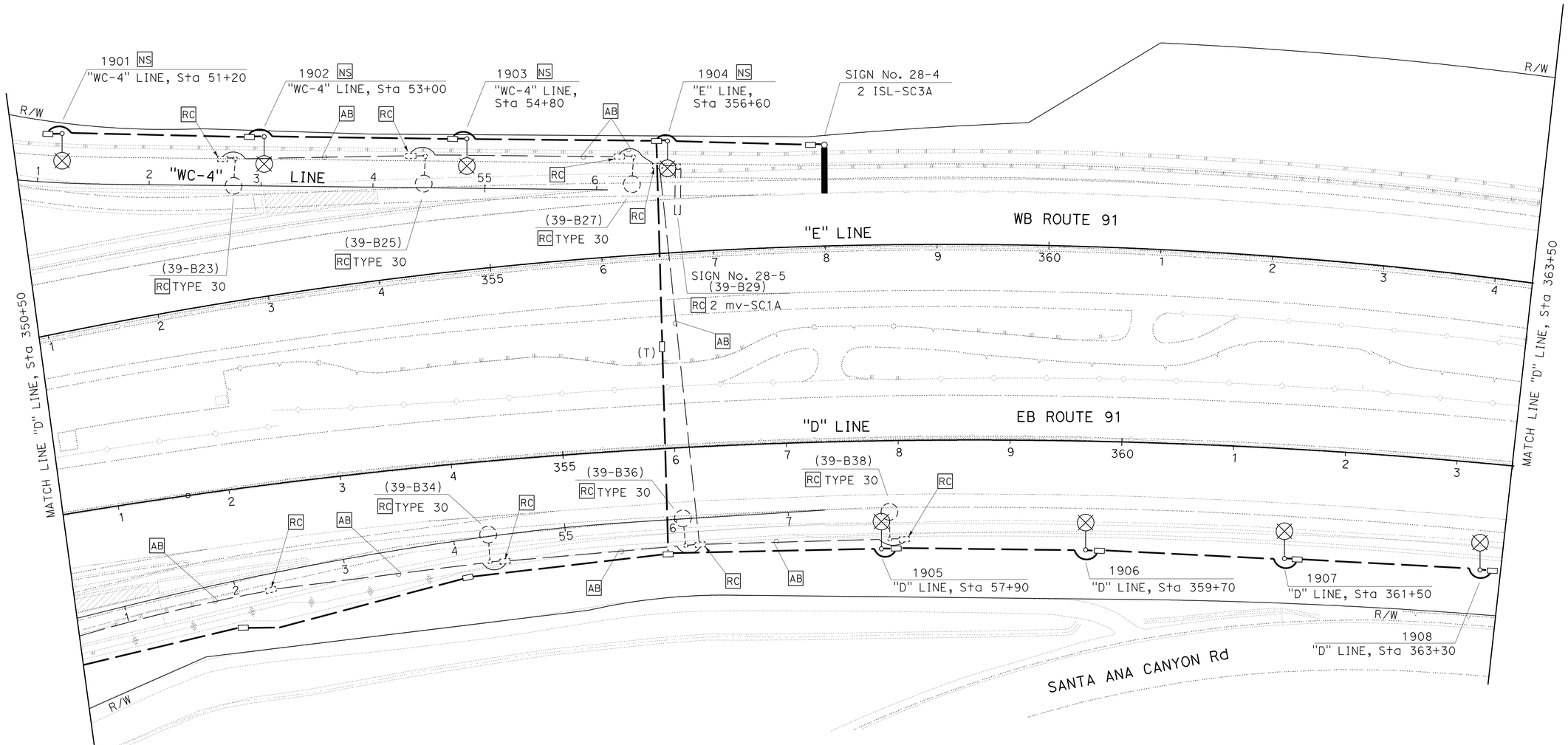

FOR NOTES SEE SHEET E-145
FOR WIRING DIAGRAM SEE SHEET E-174

THIS PLAN IS ACCURATE FOR ELECTRICAL WORK ONLY.

LIGHTING AND SIGN ILLUMINATION

SCALE: 1" = 50′

E-166

STATE OF CALIFORNIA - DEPARTMENT OF TRANSPORTATION
Caltrans® ELECTRICAL DESIGN

FUNCTIONAL SUPERVISOR: SHAHRAM SHAHRIARI
CALCULATED-DESIGNED BY: VANESSA TRUONG
CHECKED BY: ANTHONY FERNANDEZ
REVISED BY
DATE REVISED

LAST REVISION 07-30-10
DATE PLOTTED => 16-DEC-2010
TIME PLOTTED => 17:15

Dist	COUNTY	ROUTE	POST MILES TOTAL PROJECT	SHEET No.	TOTAL SHEETS
12	Ora	91	9.1/15.1	742	949

Vanessa Van Truong 08-12-10
REGISTERED ELECTRICAL ENGINEER DATE

10-25-10
PLANS APPROVAL DATE

REGISTERED PROFESSIONAL ENGINEER
V.V. TRUONG
No. E 13983
Exp. 6/30/12
ELECTRICAL
STATE OF CALIFORNIA

THE STATE OF CALIFORNIA OR ITS OFFICERS OR AGENTS SHALL NOT BE RESPONSIBLE FOR THE ACCURACY OR COMPLETENESS OF SCANNED COPIES OF THIS PLAN SHEET.

FOR ACCURATE RIGHT OF WAY AND ACCESS DATA, CONTACT RIGHT OF WAY ENGINEERING AT THE DISTRICT OFFICE.

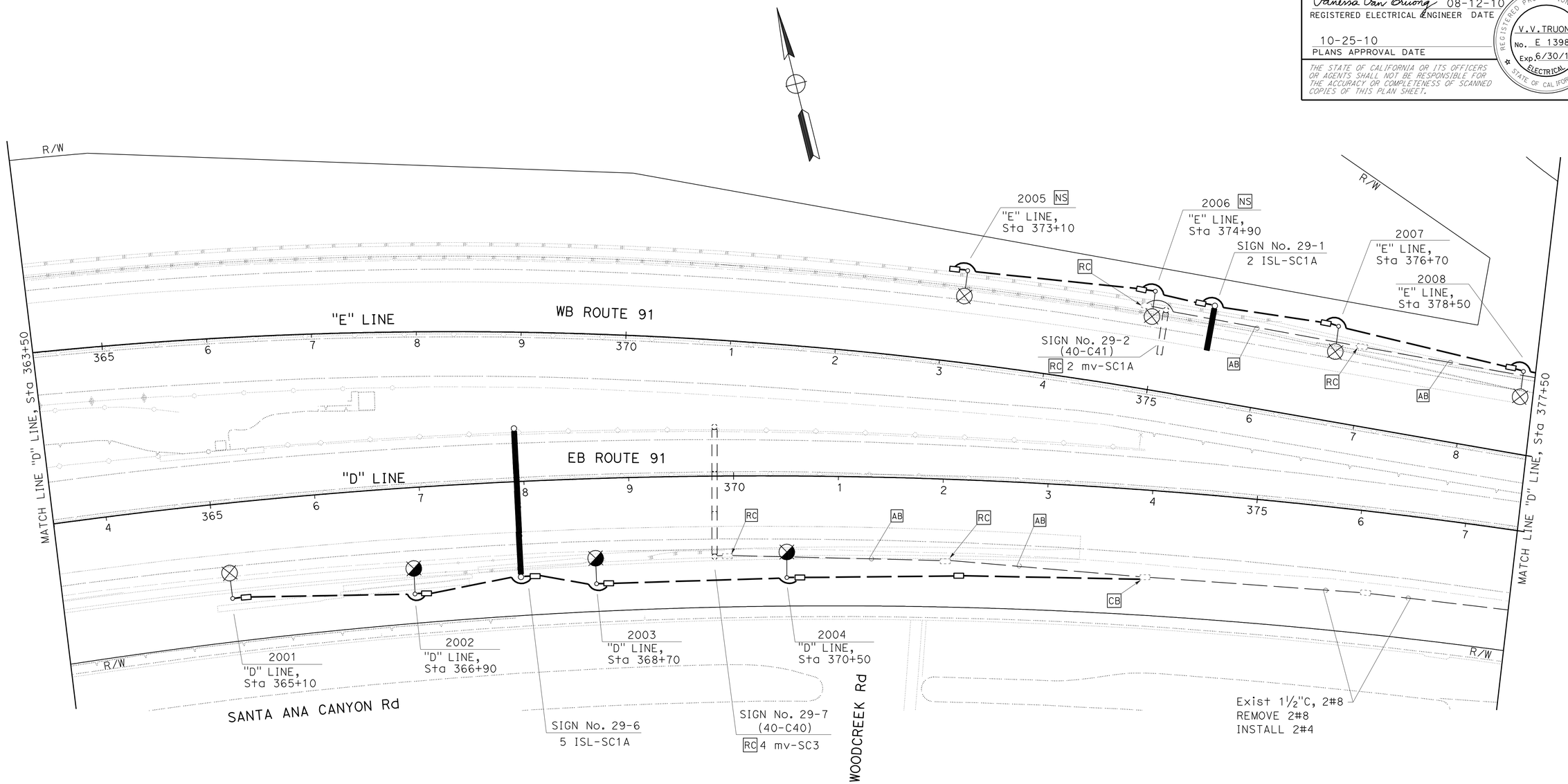

FOR NOTES SEE SHEET E-145
FOR WIRING DIAGRAM SEE SHEET E-175

THIS PLAN IS ACCURATE FOR ELECTRICAL WORK ONLY.

LIGHTING AND SIGN ILLUMINATION

SCALE: 1" = 50'

E-167

LAST REVISION 07-30-10 | DATE PLOTTED => 16-DEC-2010 | TIME PLOTTED => 17:15

STATE OF CALIFORNIA - DEPARTMENT OF TRANSPORTATION
Caltrans
ELECTRICAL DESIGN

FUNCTIONAL SUPERVISOR: SHAHRAM SHAHRIARI
CALCULATED-DESIGNED BY: VANESSA TRUONG
CHECKED BY: ANTHONY FERNANDEZ
REVISED BY
DATE REVISED

FOR ACCURATE RIGHT OF WAY AND ACCESS DATA, CONTACT
RIGHT OF WAY ENGINEERING AT THE DISTRICT OFFICE.

Dist	COUNTY	ROUTE	POST MILES TOTAL PROJECT	SHEET No.	TOTAL SHEETS
12	Ora	91	9.1/15.1	743	949

Vanessa Van Truong 08-12-10
REGISTERED ELECTRICAL ENGINEER DATE

10-25-10
PLANS APPROVAL DATE

REGISTERED PROFESSIONAL ENGINEER
V.V. TRUONG
No. E 13983
Exp. 6/30/12
ELECTRICAL
STATE OF CALIFORNIA

THE STATE OF CALIFORNIA OR ITS OFFICERS OR AGENTS SHALL NOT BE RESPONSIBLE FOR THE ACCURACY OR COMPLETENESS OF SCANNED COPIES OF THIS PLAN SHEET.

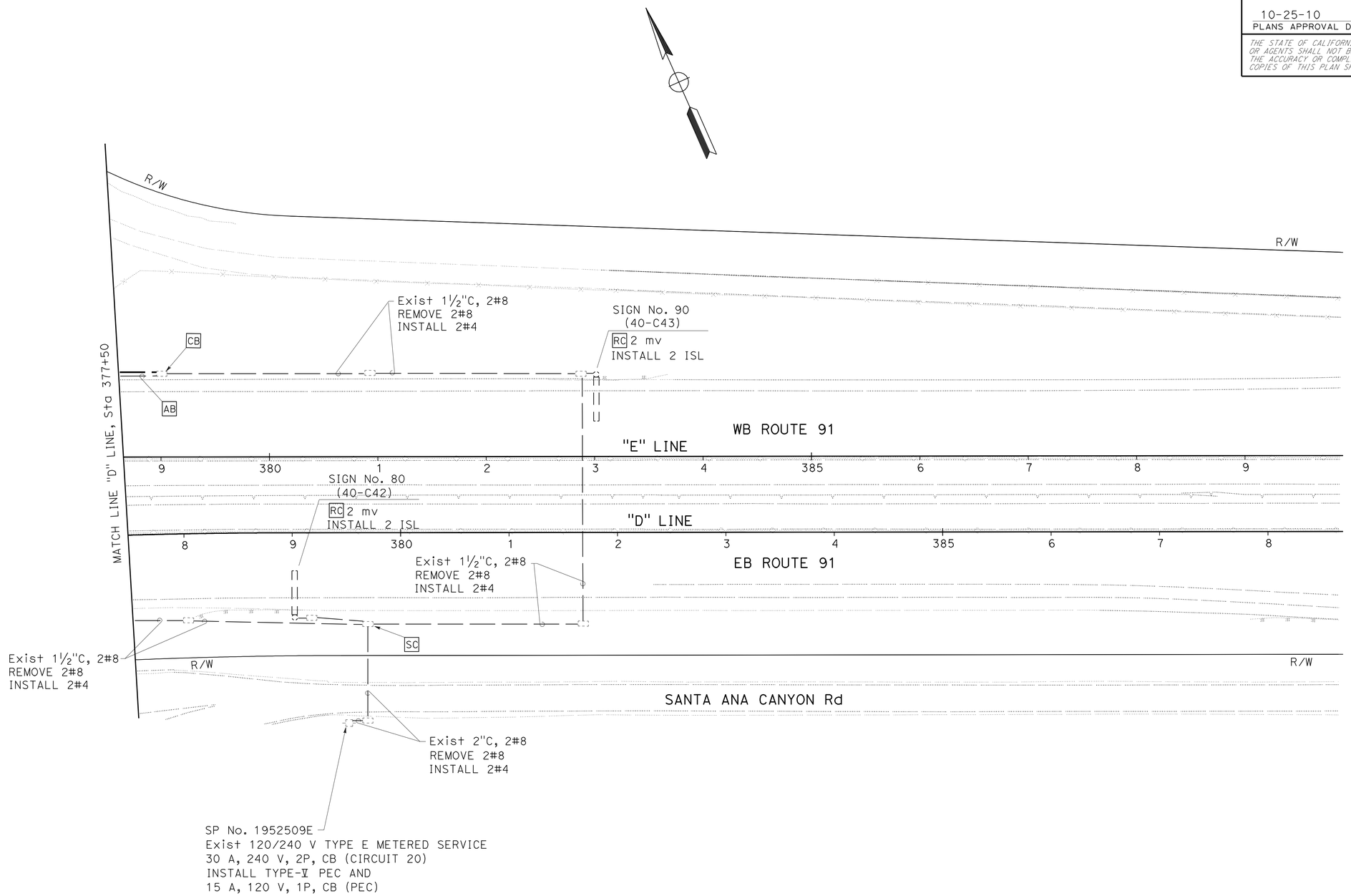

FOR NOTES SEE SHEET E-145
FOR WIRING DIAGRAM SEE SHEET E-175

THIS PLAN IS ACCURATE FOR ELECTRICAL WORK ONLY.

LIGHTING AND SIGN ILLUMINATION

SCALE: 1" = 50'

E-168

STATE OF CALIFORNIA - DEPARTMENT OF TRANSPORTATION
Caltrans
ELECTRICAL DESIGN

FUNCTIONAL SUPERVISOR: SHAHRAM SHAHRIARI
CALCULATED-DESIGNED BY: VANESSA TRUONG
CHECKED BY: ANTHONY FERNANDEZ
REVISED BY
DATE REVISED

LAST REVISION 07-30-10
DATE PLOTTED => 16-DEC-2010
TIME PLOTTED => 17:15

Dist	COUNTY	ROUTE	POST MILES TOTAL PROJECT	SHEET No.	TOTAL SHEETS
12	Ora	91	9.1/15.1	744	949

Vanessa Van Truong 08-12-10
REGISTERED ELECTRICAL ENGINEER DATE

10-25-10
PLANS APPROVAL DATE

REGISTERED PROFESSIONAL ENGINEER V.V. TRUONG No. E 13983 Exp 6/30/12 ELECTRICAL STATE OF CALIFORNIA

THE STATE OF CALIFORNIA OR ITS OFFICERS OR AGENTS SHALL NOT BE RESPONSIBLE FOR THE ACCURACY OR COMPLETENESS OF SCANNED COPIES OF THIS PLAN SHEET.

WIRING DIAGRAM LEGEND (FOR SHEET E-171 TO E-177)

- RC EXISTING CONDUCTORS
- RC EXISTING LAMP
- RC EXISTING SIGN LIGHTING EQUIPMENT
- RC EXISTING SIGN LIGHTING EQUIPMENT, INSTALL NEW SIGN LIGHTING EQUIPMENT
- EXISTING 2#6 CONDUCTORS TO REMAIN
- EXISTING LAMP TO REMAIN
- EXISTING SOFFIT LAMP TO REMAIN
- SPLICE
- NEW 2#6 AWG CONDUCTORS, UNLESS OTHERWISE NOTED
- NEW 200 W HPS LAMP
- NEW 310 W HPS LAMP
- NEW SIGN LIGHTING EQUIPMENT

NOTE: (FOR SHEETS E-169 TO E-175)

THE LEFT TWO NUMBERS OF AN ELECTROLIER IS THE CIRCUIT NUMBER.

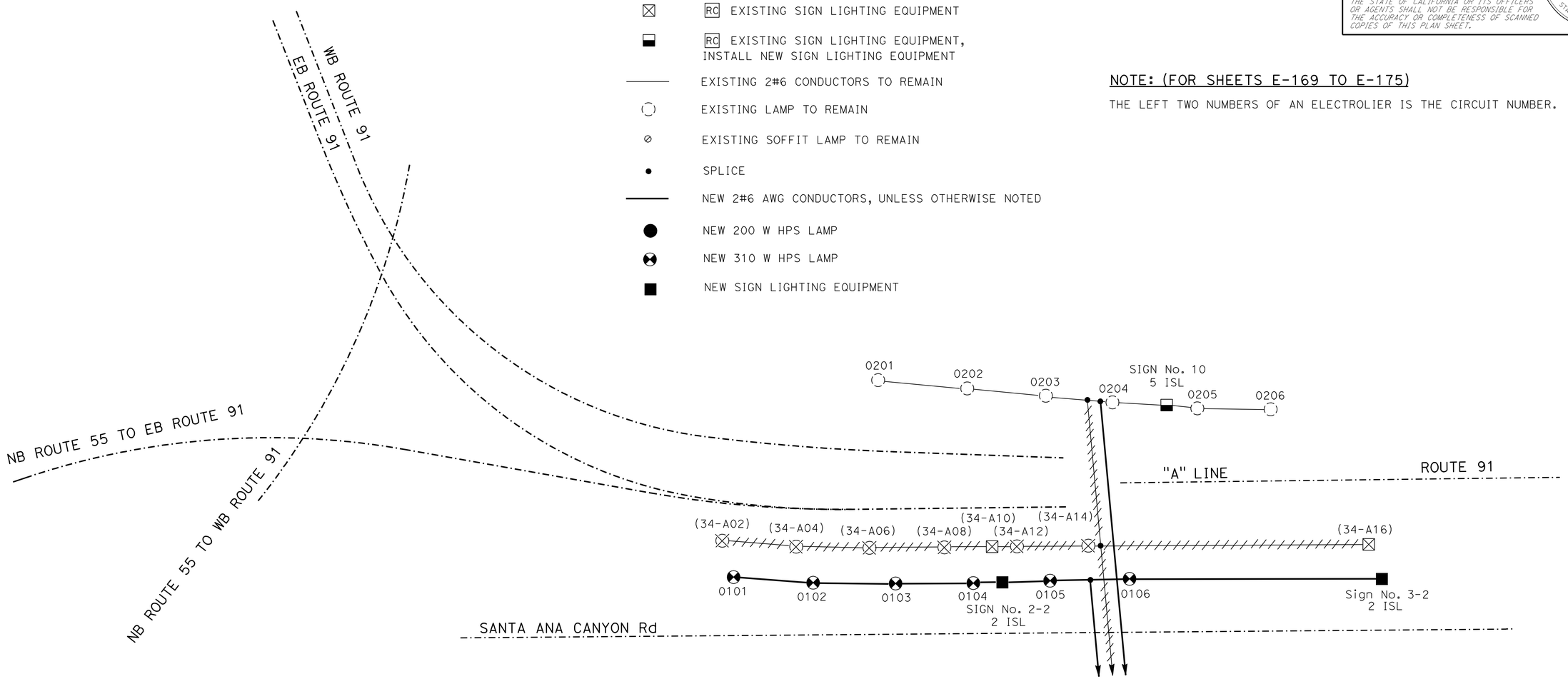

REMOVE EXISTING 120/240 V SERVICE
INSTALL NEW 120/240 V SERVICE
ID No. 12-55-091-0-009.784
30 A, 240 V, 2P, CB (CIRCUIT 1)
30 A, 240 V, 2P, CB (CIRCUIT 2)
15 A, 120 V, 1P, CB (PEC)

LIGHTING AND SIGN ILLUMINATION (WIRING DIAGRAM)

NO SCALE

THIS PLAN IS ACCURATE FOR ELECTRICAL WORK ONLY.

E-169

REVISED BY	DATE REVISED
VANESSA TRUONG	ANTHONY FERNANDEZ
CALCULATED-DESIGNED BY	CHECKED BY
FUNCTIONAL SUPERVISOR	SHAHRAM SHAHRIARI

STATE OF CALIFORNIA - DEPARTMENT OF TRANSPORTATION
Caltrans
ELECTRICAL DESIGN

LAST REVISION 07-30-10 | DATE PLOTTED => 16-DEC-2010 | TIME PLOTTED => 17:15

Dist	COUNTY	ROUTE	POST MILES TOTAL PROJECT	SHEET No.	TOTAL SHEETS
12	Ora	91	9.1/15.1	745	949

Vanessa Van Truong 11-23-10
REGISTERED ELECTRICAL ENGINEER DATE

10-25-10
PLANS APPROVAL DATE

REGISTERED PROFESSIONAL ENGINEER
V.V. TRUONG
No. E 13983
Exp. 6/30/12
ELECTRICAL
STATE OF CALIFORNIA

THE STATE OF CALIFORNIA OR ITS OFFICERS OR AGENTS SHALL NOT BE RESPONSIBLE FOR THE ACCURACY OR COMPLETENESS OF SCANNED COPIES OF THIS PLAN SHEET.

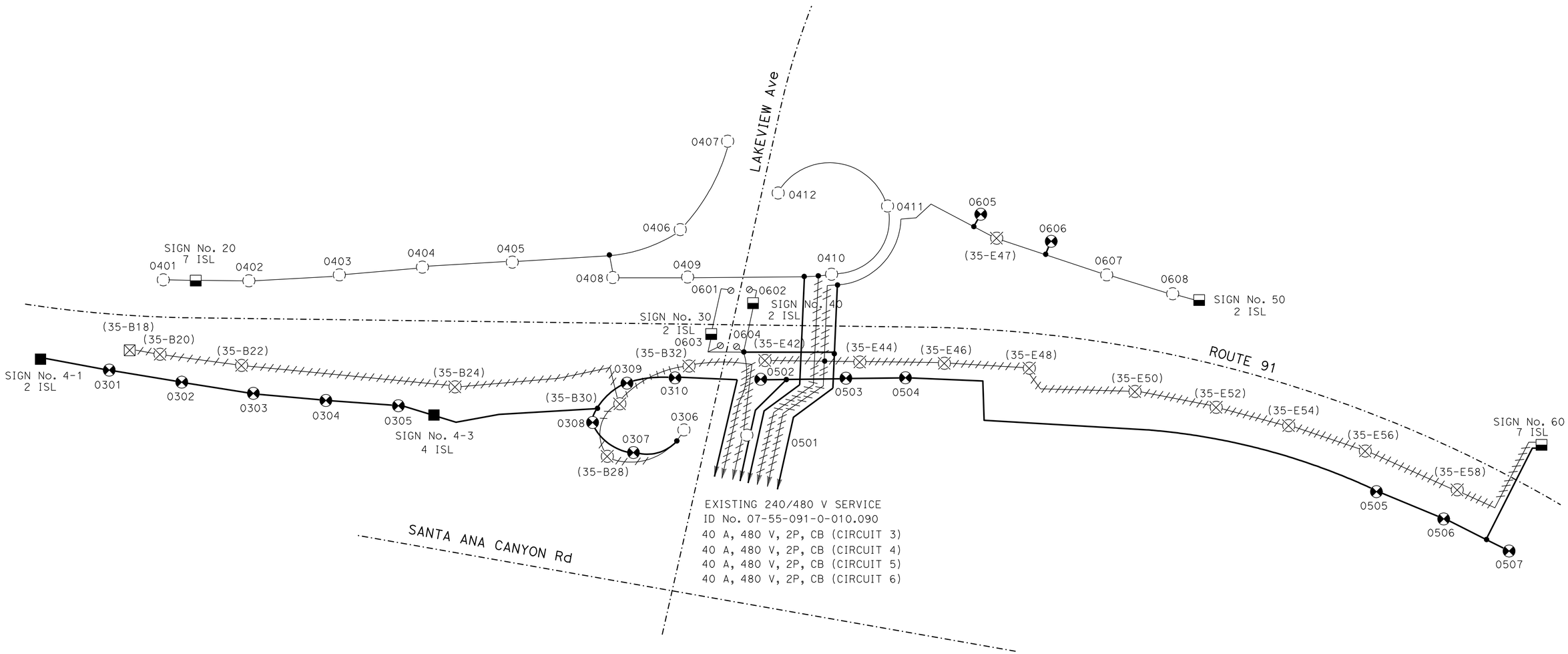

LIGHTING AND SIGN ILLUMINATION
(WIRING DIAGRAM)

NO SCALE

FOR WIRING DIAGRAM LEGEND SEE SHEET E-169

THIS PLAN IS ACCURATE FOR ELECTRICAL WORK ONLY.

E-170

STATE OF CALIFORNIA - DEPARTMENT OF TRANSPORTATION
Caltrans®
ELECTRICAL DESIGN

FUNCTIONAL SUPERVISOR: SHAHRAM SHAHRIARI
CALCULATED-DESIGNED BY: VANESSA TRUONG
CHECKED BY: ANTHONY FERNANDEZ
REVISED BY
DATE REVISED

LAST REVISION 11-22-10
DATE PLOTTED => 16-DEC-2010
TIME PLOTTED => 17:15

Dist	COUNTY	ROUTE	POST MILES TOTAL PROJECT	SHEET No.	TOTAL SHEETS
12	Ora	91	9.1/15.1	746	949

Vanessa Van Truong 08-12-10
REGISTERED ELECTRICAL ENGINEER DATE

10-25-10
PLANS APPROVAL DATE

REGISTERED PROFESSIONAL ENGINEER
V.V. TRUONG
No. E 13983
Exp. 6/30/12
ELECTRICAL
STATE OF CALIFORNIA

THE STATE OF CALIFORNIA OR ITS OFFICERS OR AGENTS SHALL NOT BE RESPONSIBLE FOR THE ACCURACY OR COMPLETENESS OF SCANNED COPIES OF THIS PLAN SHEET.

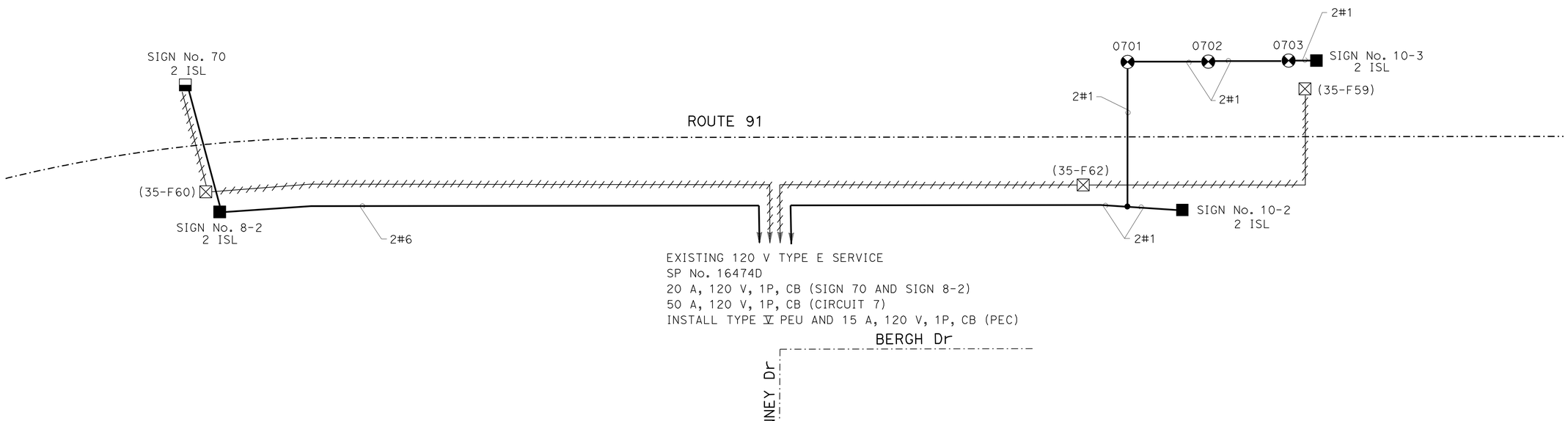

FOR WIRING DIAGRAM LEGEND SEE SHEET E-169

THIS PLAN IS ACCURATE FOR ELECTRICAL WORK ONLY.

LIGHTING AND SIGN ILLUMINATION (WIRING DIAGRAM)

NO SCALE

E-171

STATE OF CALIFORNIA - DEPARTMENT OF TRANSPORTATION
Caltrans® ELECTRICAL DESIGN

FUNCTIONAL SUPERVISOR: SHAHRAM SHAHRIARI

CALCULATED-DESIGNED BY: VANESSA TRUONG
CHECKED BY: ANTHONY FERNANDEZ

REVISED BY
DATE REVISED

LAST REVISION 07-30-10
DATE PLOTTED => 16-DEC-2010
TIME PLOTTED => 17:15

Dist	COUNTY	ROUTE	POST MILES TOTAL PROJECT	SHEET No.	TOTAL SHEETS
12	Ora	91	9.1/15.1	747	949

Vanessa Van Truong 08-12-10
REGISTERED ELECTRICAL ENGINEER DATE

10-25-10
PLANS APPROVAL DATE

REGISTERED PROFESSIONAL ENGINEER
V.V. TRUONG
No. E 13983
Exp. 6/30/12
ELECTRICAL
STATE OF CALIFORNIA

THE STATE OF CALIFORNIA OR ITS OFFICERS OR AGENTS SHALL NOT BE RESPONSIBLE FOR THE ACCURACY OR COMPLETENESS OF SCANNED COPIES OF THIS PLAN SHEET.

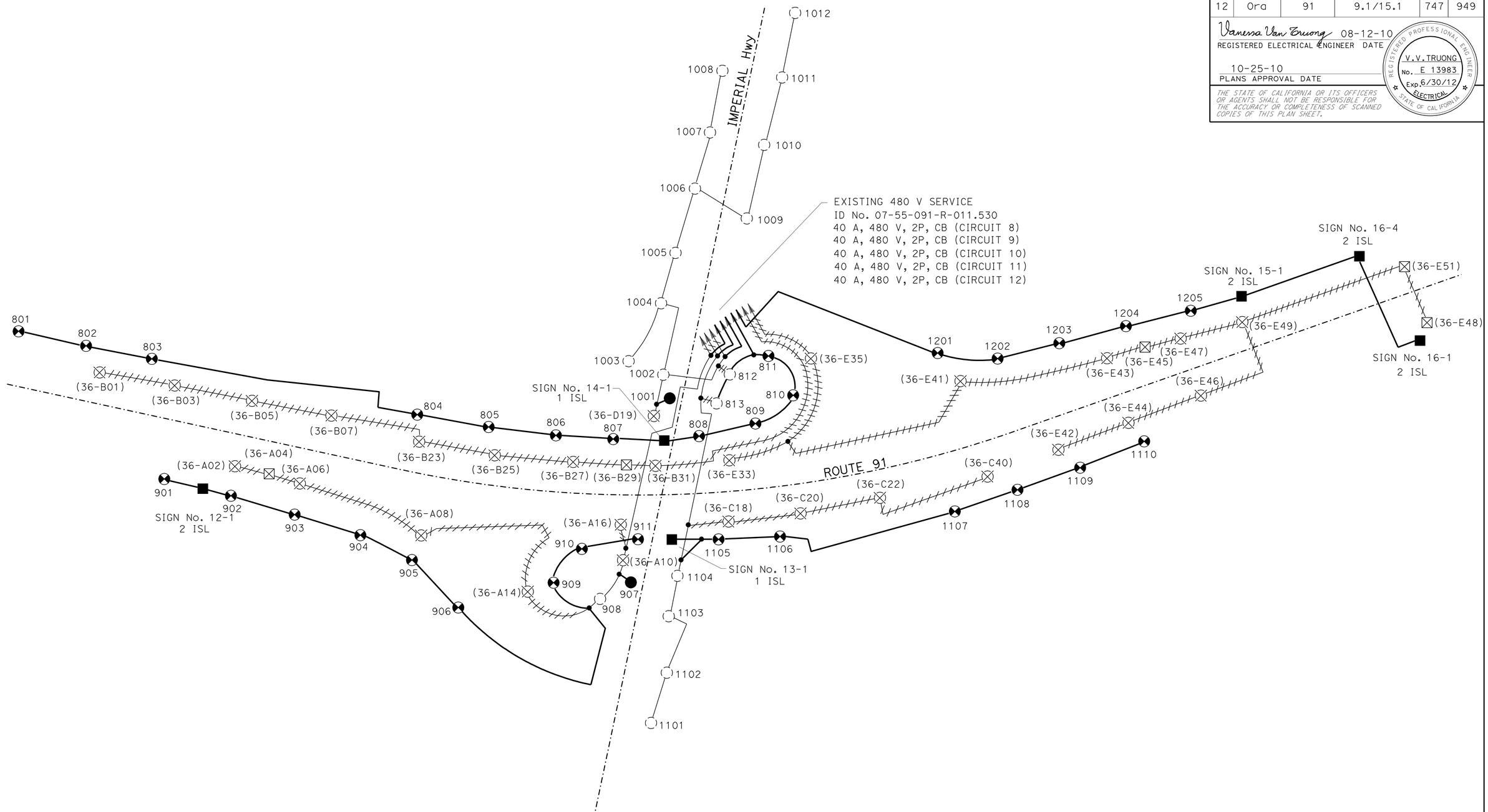

FOR WIRING DIAGRAM LEGEND SEE SHEET E-169

THIS PLAN IS ACCURATE FOR ELECTRICAL WORK ONLY.

LIGHTING AND SIGN ILLUMINATION (WIRING DIAGRAM)

NO SCALE

E-172

STATE OF CALIFORNIA - DEPARTMENT OF TRANSPORTATION
Caltrans®
ELECTRICAL DESIGN

FUNCTIONAL SUPERVISOR: SHAHRAM SHAHRIARI
CALCULATED-DESIGNED BY: VANESSA TRUONG
CHECKED BY: ANTHONY FERNANDEZ
REVISED BY
DATE REVISED

LAST REVISION: DATE PLOTTED => 16-DEC-2010
07-30-10 TIME PLOTTED => 17:15

Dist	COUNTY	ROUTE	POST MILES TOTAL PROJECT	SHEET No.	TOTAL SHEETS
12	Ora	91	9.1/15.1	748	949

Vanessa Van Truong 08-12-10
REGISTERED ELECTRICAL ENGINEER DATE

10-25-10
PLANS APPROVAL DATE

REGISTERED PROFESSIONAL ENGINEER
V.V. TRUONG
No. E 13983
Exp. 6/30/12
ELECTRICAL
STATE OF CALIFORNIA

THE STATE OF CALIFORNIA OR ITS OFFICERS OR AGENTS SHALL NOT BE RESPONSIBLE FOR THE ACCURACY OR COMPLETENESS OF SCANNED COPIES OF THIS PLAN SHEET.

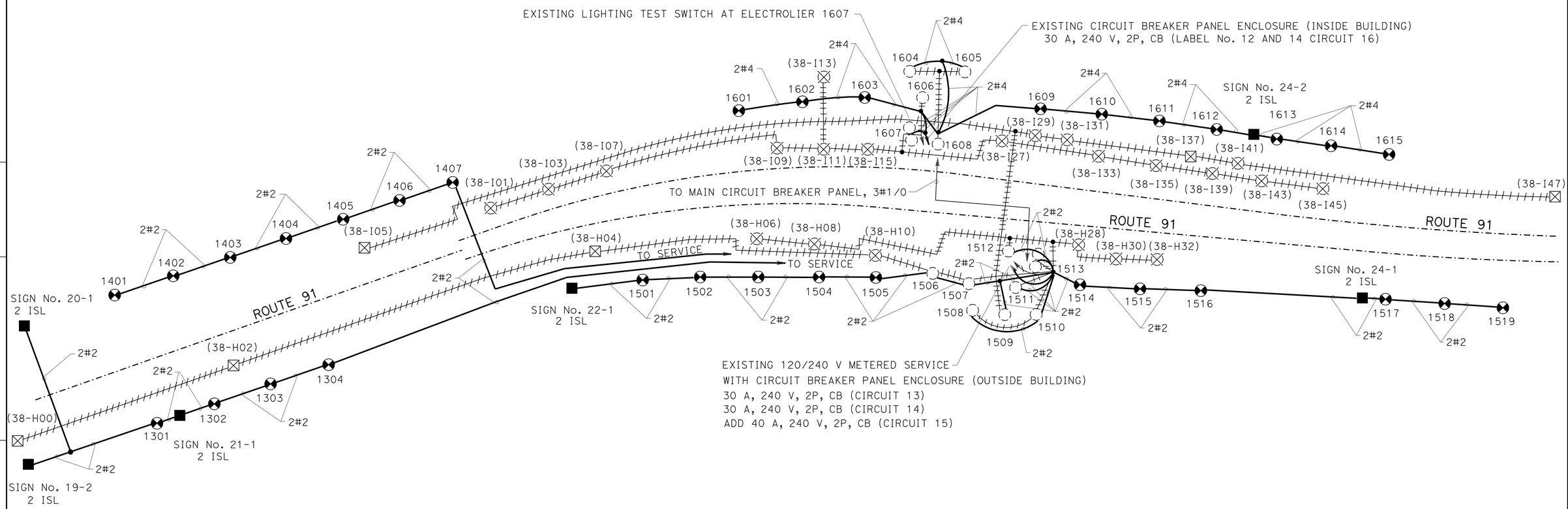

FOR WIRING DIAGRAM LEGEND SEE SHEET E-169

THIS PLAN IS ACCURATE FOR ELECTRICAL WORK ONLY.

LIGHTING AND SIGN ILLUMINATION
(WIRING DIAGRAM)

NO SCALE

E-173

STATE OF CALIFORNIA - DEPARTMENT OF TRANSPORTATION
Caltrans® **ELECTRICAL DESIGN**

FUNCTIONAL SUPERVISOR: SHAHRAM SHAHRIARI
CALCULATED-DESIGNED BY: VANESSA TRUONG
CHECKED BY: ANTHONY FERNANDEZ
REVISED BY
DATE REVISED

LAST REVISION DATE PLOTTED => 16-DEC-2010
07-30-10 TIME PLOTTED => 17:15

Dist	COUNTY	ROUTE	POST MILES TOTAL PROJECT	SHEET No.	TOTAL SHEETS
12	Ora	91	9.1/15.1	749	949

Vanessa Van Truong 08-12-10
REGISTERED ELECTRICAL ENGINEER DATE

10-25-10
PLANS APPROVAL DATE

REGISTERED PROFESSIONAL ENGINEER V.V. TRUONG No. E 13983 Exp. 6/30/12 ELECTRICAL STATE OF CALIFORNIA

THE STATE OF CALIFORNIA OR ITS OFFICERS OR AGENTS SHALL NOT BE RESPONSIBLE FOR THE ACCURACY OR COMPLETENESS OF SCANNED COPIES OF THIS PLAN SHEET.

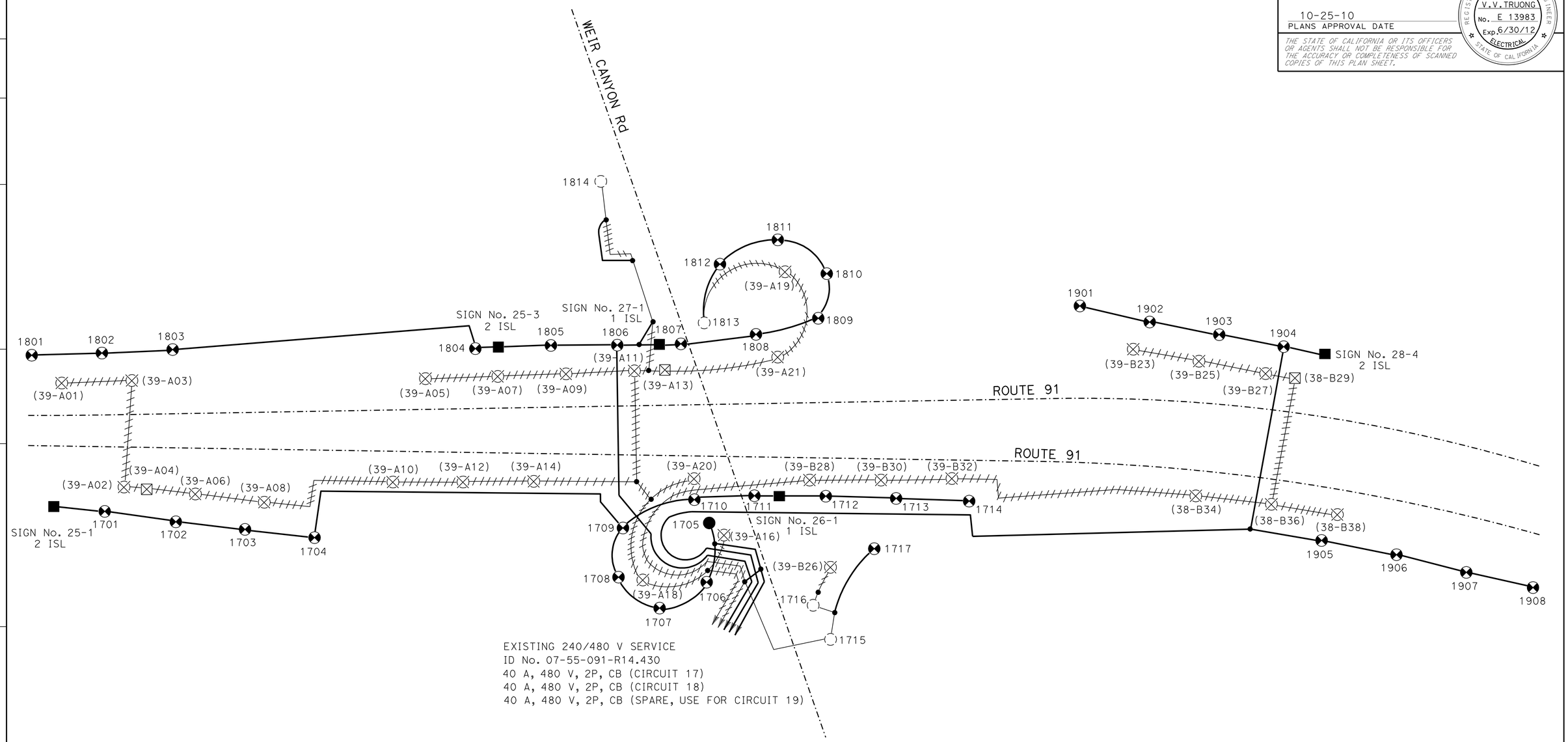

FOR WIRING DIAGRAM LEGEND SEE SHEET E-169

THIS PLAN IS ACCURATE FOR ELECTRICAL WORK ONLY.

LIGHTING AND SIGN ILLUMINATION
(WIRING DIAGRAM)

NO SCALE

E-174

STATE OF CALIFORNIA - DEPARTMENT OF TRANSPORTATION
Caltrans®
ELECTRICAL DESIGN

FUNCTIONAL SUPERVISOR: SHAHRAM SHAHRIARI
CALCULATED-DESIGNED BY: VANESSA TRUONG
CHECKED BY: ANTHONY FERNANDEZ
REVISED BY
DATE REVISED

LAST REVISION 07-30-10
DATE PLOTTED => 16-DEC-2010
TIME PLOTTED => 17:16

Dist	COUNTY	ROUTE	POST MILES TOTAL PROJECT	SHEET No.	TOTAL SHEETS
12	Ora	91	9.1/15.1	750	949

Vanessa Van Truong 08-12-10
REGISTERED ELECTRICAL ENGINEER DATE

10-25-10
PLANS APPROVAL DATE

REGISTERED PROFESSIONAL ENGINEER
V.V. TRUONG
No. E 13983
Exp. 6/30/12
ELECTRICAL
STATE OF CALIFORNIA

THE STATE OF CALIFORNIA OR ITS OFFICERS OR AGENTS SHALL NOT BE RESPONSIBLE FOR THE ACCURACY OR COMPLETENESS OF SCANNED COPIES OF THIS PLAN SHEET.

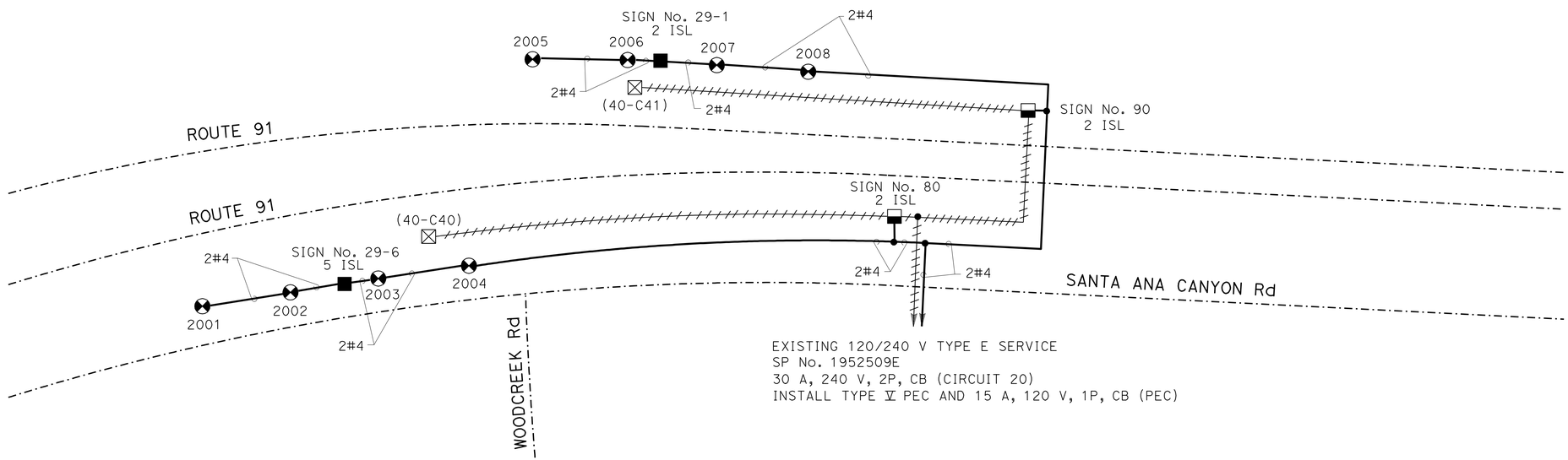

FOR WIRING DIAGRAM LEGEND SEE SHEET E-169

THIS PLAN IS ACCURATE FOR ELECTRICAL WORK ONLY.

LIGHTING AND SIGN ILLUMINATION (WIRING DIAGRAM)

NO SCALE

E-175

STATE OF CALIFORNIA - DEPARTMENT OF TRANSPORTATION
Caltrans® ELECTRICAL DESIGN

FUNCTIONAL SUPERVISOR: SHAHRAM SHAHRIARI
CALCULATED-DESIGNED BY: VANESSA TRUONG
CHECKED BY: ANTHONY FERNANDEZ
REVISED BY
DATE REVISED

LAST REVISION 07-30-10
DATE PLOTTED => 16-DEC-2010
TIME PLOTTED => 17:16

Dist	COUNTY	ROUTE	POST MILES TOTAL PROJECT	SHEET No.	TOTAL SHEETS
12	Ora	91	9.1/15.1	751	949

Vanessa Van Truong 08-12-10
REGISTERED ELECTRICAL ENGINEER DATE

10-25-10
PLANS APPROVAL DATE

REGISTERED PROFESSIONAL ENGINEER V.V. TRUONG No. E 13983 Exp. 6/30/12 ELECTRICAL STATE OF CALIFORNIA

THE STATE OF CALIFORNIA OR ITS OFFICERS OR AGENTS SHALL NOT BE RESPONSIBLE FOR THE ACCURACY OR COMPLETENESS OF SCANNED COPIES OF THIS PLAN SHEET.

FOR ACCURATE RIGHT OF WAY AND ACCESS DATA, CONTACT RIGHT OF WAY ENGINEERING AT THE DISTRICT OFFICE.

LEGEND:

- REMOVE EXISTING WALL MOUNTED LUMINAIRE
- INSTALL PENDANT SOFFIT LUMINAIRES WITH 70 W HPS AT APPROXIMATELY 50′ APART ON CENTER, SEE SHEET E-178 FOR DETAILS
- JB EXISTING JUNCTION BOX
- JB NEW JUNCTION BOX. SEE SHEET E-178 FOR DETAILS

NOTES:

1. STRAP 1"C EVERY 5′ TO EXISTING BRIDGE CEILING.
2. CONDUIT BETWEEN PENDANT SOFFIT LUMINAIRE AND JUNCTION BOX SHALL BE ¾" WITH 2#14.
3. SEE SHEET E-178 FOR DETAILS.

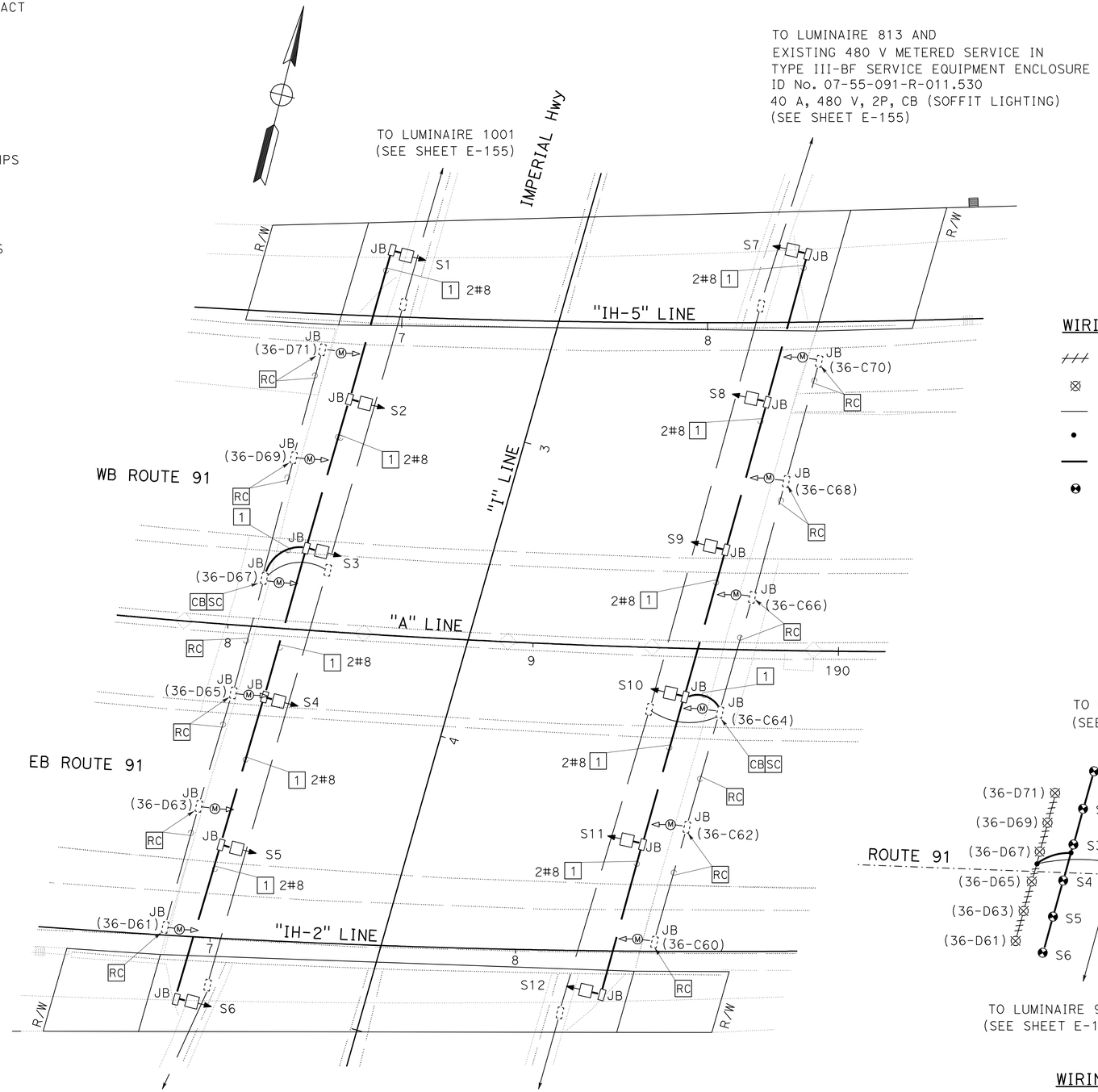

WIRING DIAGRAM LEGEND

- RC EXISTING CONDUCTORS
- RC EXISTING 100 W HPS LAMP
- EXISTING 2#8 AWG CONDUCTORS TO REMAIN
- SPLICE
- NEW 2#8 AWG CONDUCTORS
- NEW 70 W HPS LAMP

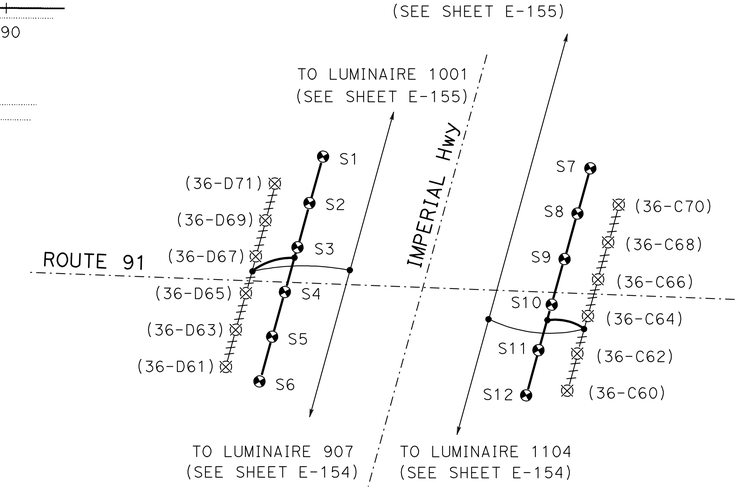

WIRING DIAGRAM
NO SCALE

LIGHTING

SCALE: 1" = 20′

THIS PLAN IS ACCURATE FOR ELECTRICAL WORK ONLY.

E-176

STATE OF CALIFORNIA - DEPARTMENT OF TRANSPORTATION
Caltrans® ELECTRICAL DESIGN

FUNCTIONAL SUPERVISOR: SHAHRAM SHAHRIARI
CALCULATED-DESIGNED BY: VANESSA TRUONG
CHECKED BY: ANTHONY FERNANDEZ
REVISED BY / DATE REVISED

LAST REVISION 07-30-10
DATE PLOTTED => 16-DEC-2010
TIME PLOTTED => 17:16

Dist	COUNTY	ROUTE	POST MILES TOTAL PROJECT	SHEET No.	TOTAL SHEETS
12	Ora	91	9.1/15.1	752	949

Vanessa Van Truong 08-12-10
REGISTERED ELECTRICAL ENGINEER DATE

10-25-10
PLANS APPROVAL DATE

REGISTERED PROFESSIONAL ENGINEER V.V. TRUONG No. E 13983 Exp. 6/30/12 ELECTRICAL STATE OF CALIFORNIA

THE STATE OF CALIFORNIA OR ITS OFFICERS OR AGENTS SHALL NOT BE RESPONSIBLE FOR THE ACCURACY OR COMPLETENESS OF SCANNED COPIES OF THIS PLAN SHEET.

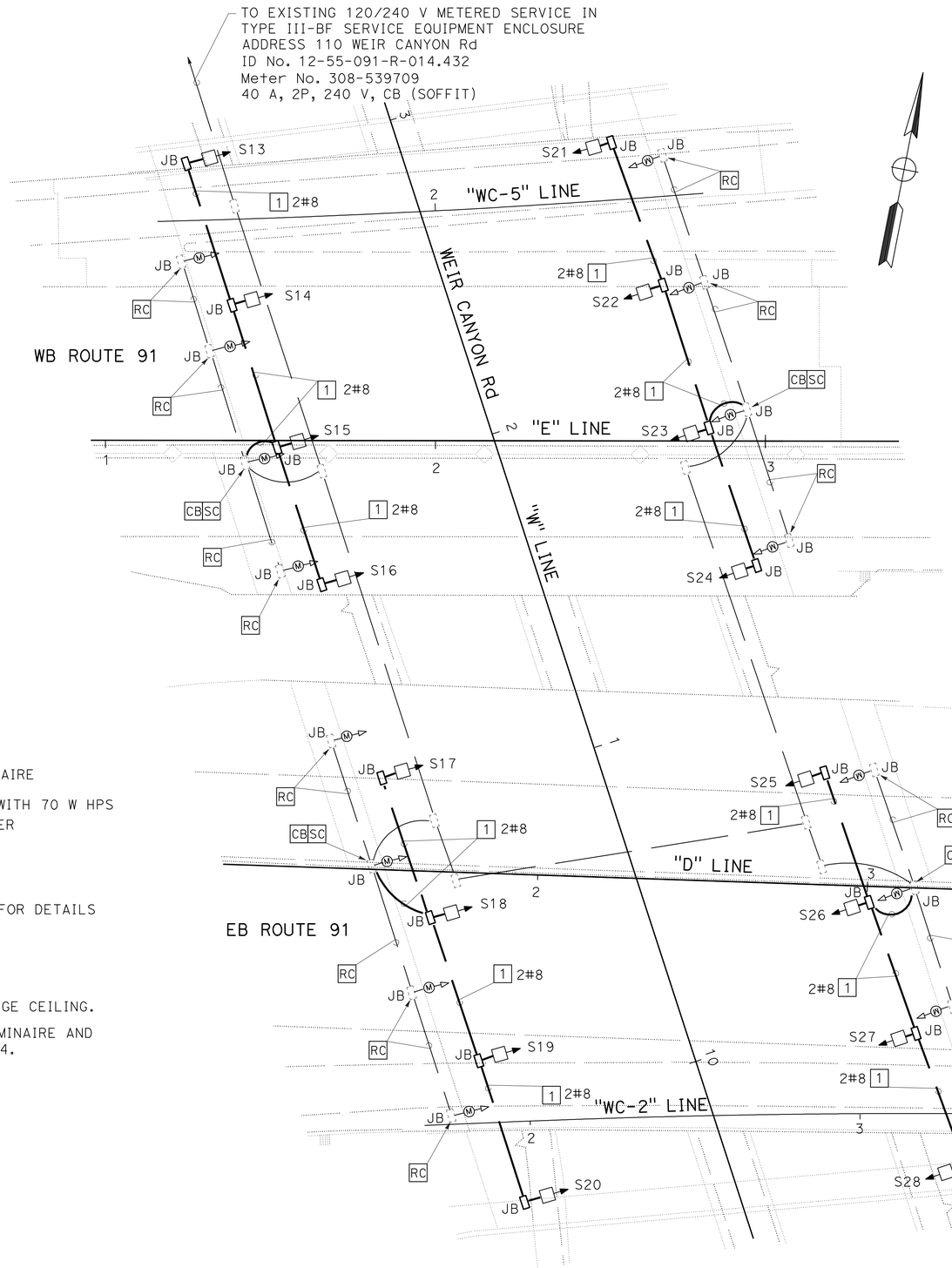

WIRING DIAGRAM LEGEND

- RC EXISTING CONDUCTORS
- RC EXISTING 100 W HPS LAMP
- EXISTING 2#8 AWG CONDUCTORS TO REMAIN
- SPLICE
- NEW 2#8 AWG CONDUCTORS
- NEW 70 W HPS LAMP

LEGEND

- REMOVE EXISTING WALL MOUNTED LUMINAIRE
- INSTALL PENDANT SOFFIT LUMINAIRES WITH 70 W HPS AT APPROXIMATELY 45′ APART ON CENTER SEE SHEET E-178 FOR DETAILS
- JB EXISTING JUNCTION BOX
- JB NEW JUNCTION BOX. SEE SHEET E-178 FOR DETAILS

NOTES:

1. STRAP 1"C EVERY 5′ TO EXISTING BRIDGE CEILING.
2. CONDUIT BETWEEN PENDANT SOFFIT LUMINAIRE AND JUNCTION BOX SHALL BE ¾" WITH 2#14.
3. SEE SHEET E-178 FOR DETAILS.

TO EXISTING 120/240 V METERED SERVICE IN
TYPE III-BF SERVICE EQUIPMENT ENCLOSURE
ADDRESS 110 WEIR CANYON Rd
ID No. 12-55-091-R-014.432
METER No. 308-539709
40 A, 2P, 240 V, CB (SOFFIT)

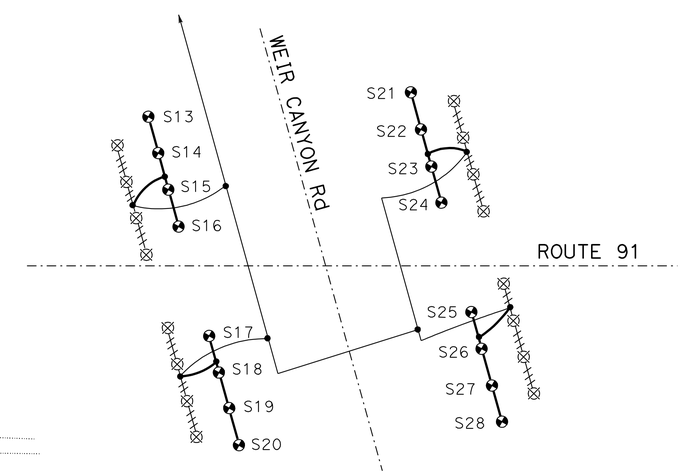

WIRING DIAGRAM
NO SCALE

LIGHTING (CITY STREET)

SCALE: 1" = 20′

THIS PLAN IS ACCURATE FOR ELECTRICAL WORK ONLY.

E-177

STATE OF CALIFORNIA - DEPARTMENT OF TRANSPORTATION
Caltrans ELECTRICAL DESIGN

FUNCTIONAL SUPERVISOR: SHAHRAM SHAHRIARI
CALCULATED-DESIGNED BY: VANESSA TRUONG
CHECKED BY: ANTHONY FERNANDEZ
REVISED BY / DATE REVISED

LAST REVISION 07-30-10 | DATE PLOTTED => 16-DEC-2010 | TIME PLOTTED => 17:16

Dist	COUNTY	ROUTE	POST MILES TOTAL PROJECT	SHEET No.	TOTAL SHEETS
12	Ora	91	9.1/15.1	753	949

Vanessa Van Truong 08-12-10
REGISTERED ELECTRICAL ENGINEER DATE

10-25-10
PLANS APPROVAL DATE

REGISTERED PROFESSIONAL ENGINEER
V.V. TRUONG
No. E 13983
Exp. 6/30/12
ELECTRICAL
STATE OF CALIFORNIA

THE STATE OF CALIFORNIA OR ITS OFFICERS OR AGENTS SHALL NOT BE RESPONSIBLE FOR THE ACCURACY OR COMPLETENESS OF SCANNED COPIES OF THIS PLAN SHEET.

NOTES:

1. HOLES FOR THE CONCRETE EXPANSION ANCHOR BOLT RECESS SHALL BE DRILLED WITH A NON-PERCUSSION TYPE DRILL. THE ANCHOR SHALL BE RELOCATED WHEN REINFORCING STEEL IS ENCOUNTERED AND THE ABANDONED HOLE SHALL BE FILLED WITH COLOR MATCHING PCC MORTAR.
2. NO DRILLING IS ALLOWED AT THE PRECAST GIRDERS. SEE STRUCTURE PLANS.
3. DEPTH OF RECESS SHALL BE ½" TO 1" DEEPER THAN THE LENGTH OF THE ANCHOR.
4. DISTANCE BETWEEN ANCHORS SHALL BE AT THE MINIMUM, TEN TIMES THE DIAMETER OF THE ANCHOR.
5. INSTALL PENDANT SOFFIT LUMINAIRES WITH GUARDS AND INTEGRAL BALLASTS.
6. INSTALL GALVANIZED ONE HOLE C-CLAMP, 7" (Max) OFF ENDS AND 5′ (Max) INTERVAL THEREAFTER.

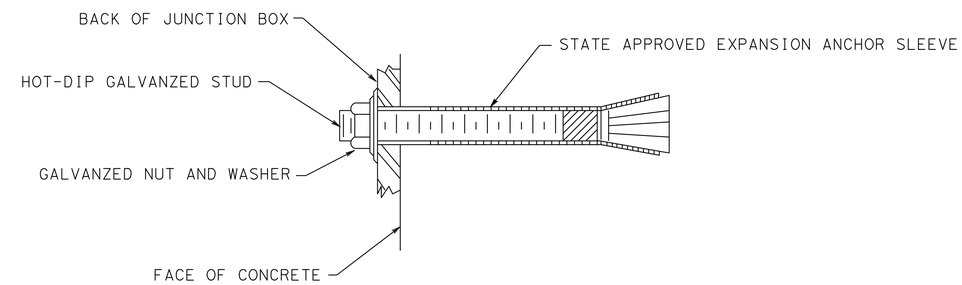

EXPANSION ANCHOR DETAIL

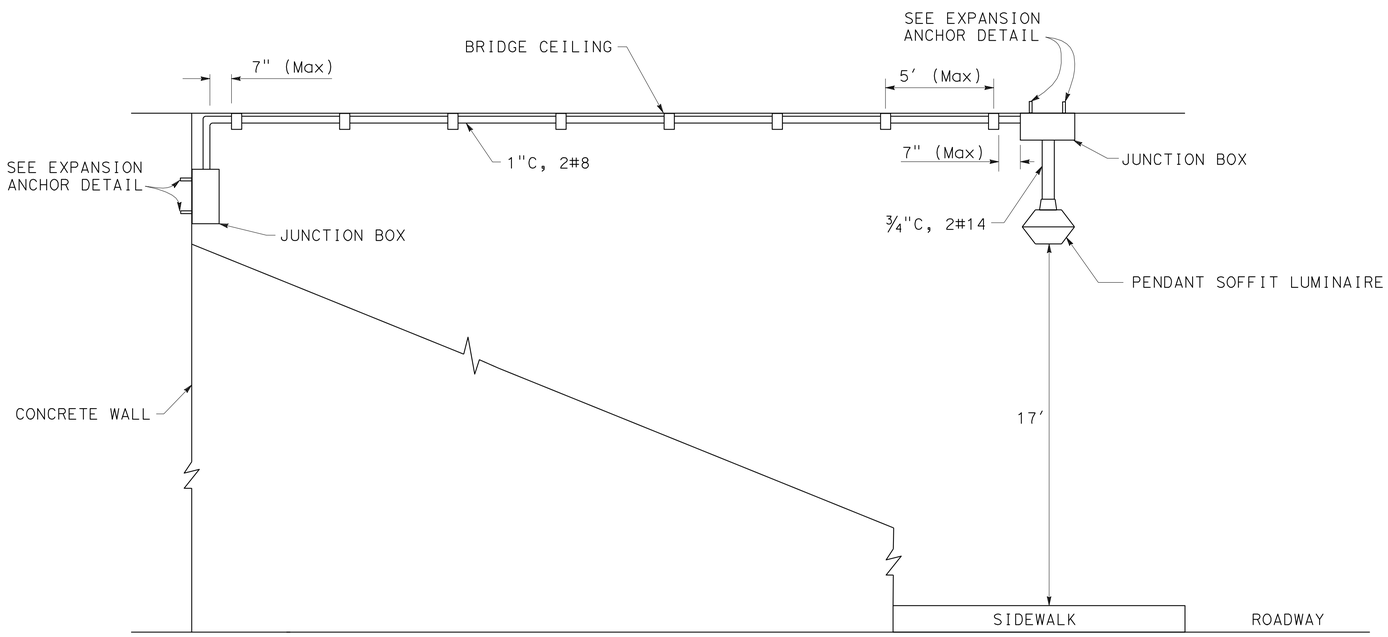

INSTALLATION DETAIL

THIS PLAN IS ACCURATE FOR ELECTRICAL WORK ONLY.

LIGHTING
(DETAILS)
NO SCALE

E-178

STATE OF CALIFORNIA - DEPARTMENT OF TRANSPORTATION
Caltrans
ELECTRICAL DESIGN

FUNCTIONAL SUPERVISOR: SHAHRAM SHAHRIARI
CALCULATED-DESIGNED BY: VANESSA TRUONG
CHECKED BY: ANTHONY FERNANDEZ
REVISED BY
DATE REVISED

LAST REVISION DATE PLOTTED => 16-DEC-2010
07-30-10 TIME PLOTTED => 17:16

Dist	COUNTY	ROUTE	POST MILES TOTAL PROJECT	SHEET No.	TOTAL SHEETS
12	Ora	91	9.1/15.1	754	949

Vanessa Van Truong 08-12-10
REGISTERED ELECTRICAL ENGINEER DATE

10-25-10
PLANS APPROVAL DATE

REGISTERED PROFESSIONAL ENGINEER
V.V. TRUONG
No. E 13983
Exp. 6/30/12
ELECTRICAL
STATE OF CALIFORNIA

THE STATE OF CALIFORNIA OR ITS OFFICERS OR AGENTS SHALL NOT BE RESPONSIBLE FOR THE ACCURACY OR COMPLETENESS OF SCANNED COPIES OF THIS PLAN SHEET.

FOR ACCURATE RIGHT OF WAY AND ACCESS DATA, CONTACT RIGHT OF WAY ENGINEERING AT THE DISTRICT OFFICE.

ABBREVIATION:

OCTA ORANGE COUNTY TRANSPORTATION AUTHORITY

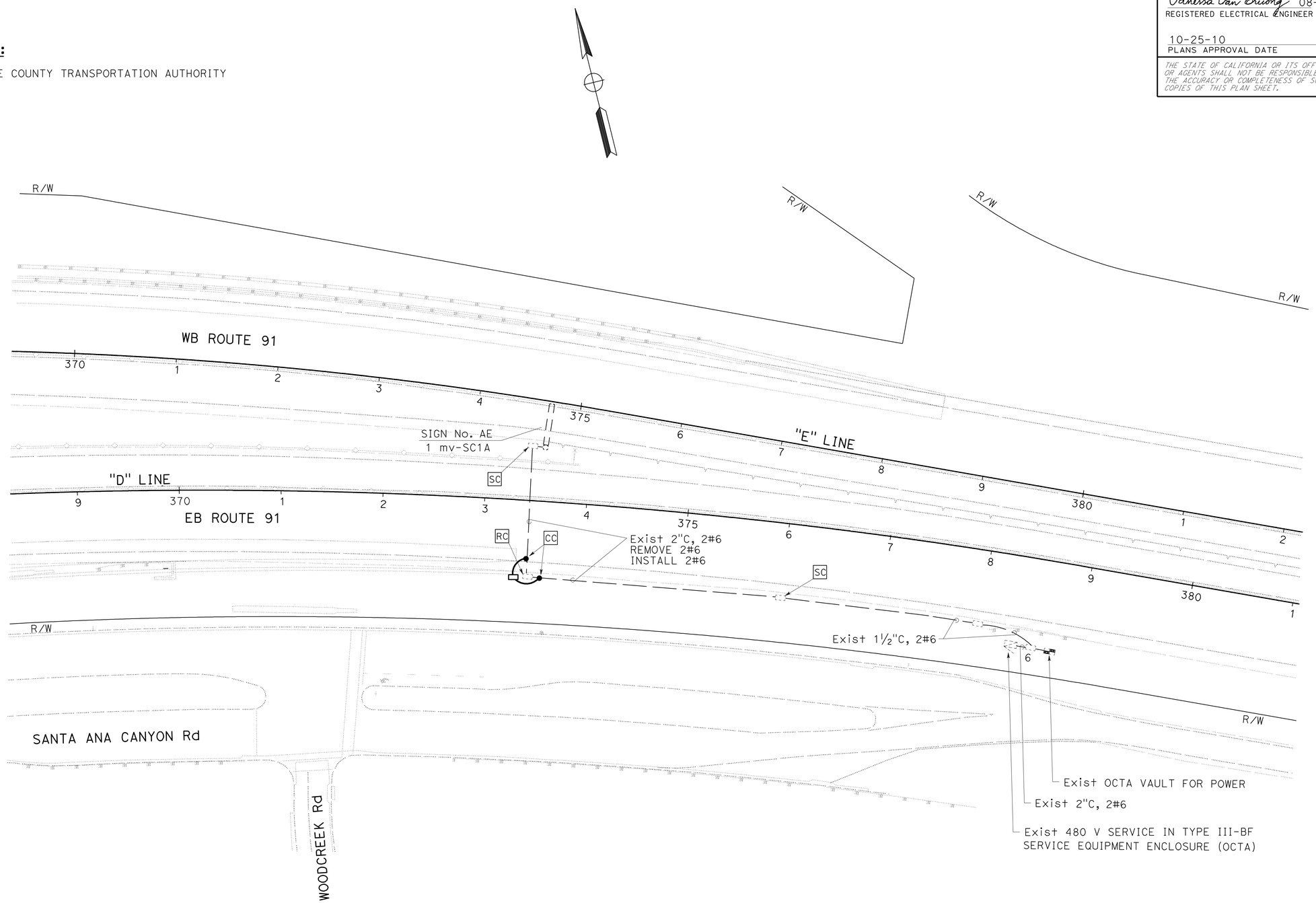

SIGN ILLUMINATION (OCTA)

SCALE: 1" = 50'

THIS PLAN IS ACCURATE FOR ELECTRICAL WORK ONLY.

E-179

STATE OF CALIFORNIA - DEPARTMENT OF TRANSPORTATION
Caltrans® **ELECTRICAL DESIGN**

FUNCTIONAL SUPERVISOR: SHAHRAM SHAHRIARI
CALCULATED-DESIGNED BY: VANESSA TRUONG
CHECKED BY: ANTHONY FERNANDEZ
REVISED BY
DATE REVISED

LAST REVISION 07-30-10
DATE PLOTTED => 16-DEC-2010
TIME PLOTTED => 17:16

Dist	COUNTY	ROUTE	POST MILES TOTAL PROJECT	SHEET No.	TOTAL SHEETS
12	Ora	91	9.1/15.1	755	949

Vanessa Van Truong 08-12-10
REGISTERED ELECTRICAL ENGINEER DATE

10-25-10
PLANS APPROVAL DATE

REGISTERED PROFESSIONAL ENGINEER
V.V. TRUONG
No. E 13983
Exp. 6/30/12
ELECTRICAL
STATE OF CALIFORNIA

THE STATE OF CALIFORNIA OR ITS OFFICERS OR AGENTS SHALL NOT BE RESPONSIBLE FOR THE ACCURACY OR COMPLETENESS OF SCANNED COPIES OF THIS PLAN SHEET.

FOR ACCURATE RIGHT OF WAY AND ACCESS DATA, CONTACT RIGHT OF WAY ENGINEERING AT THE DISTRICT OFFICE.

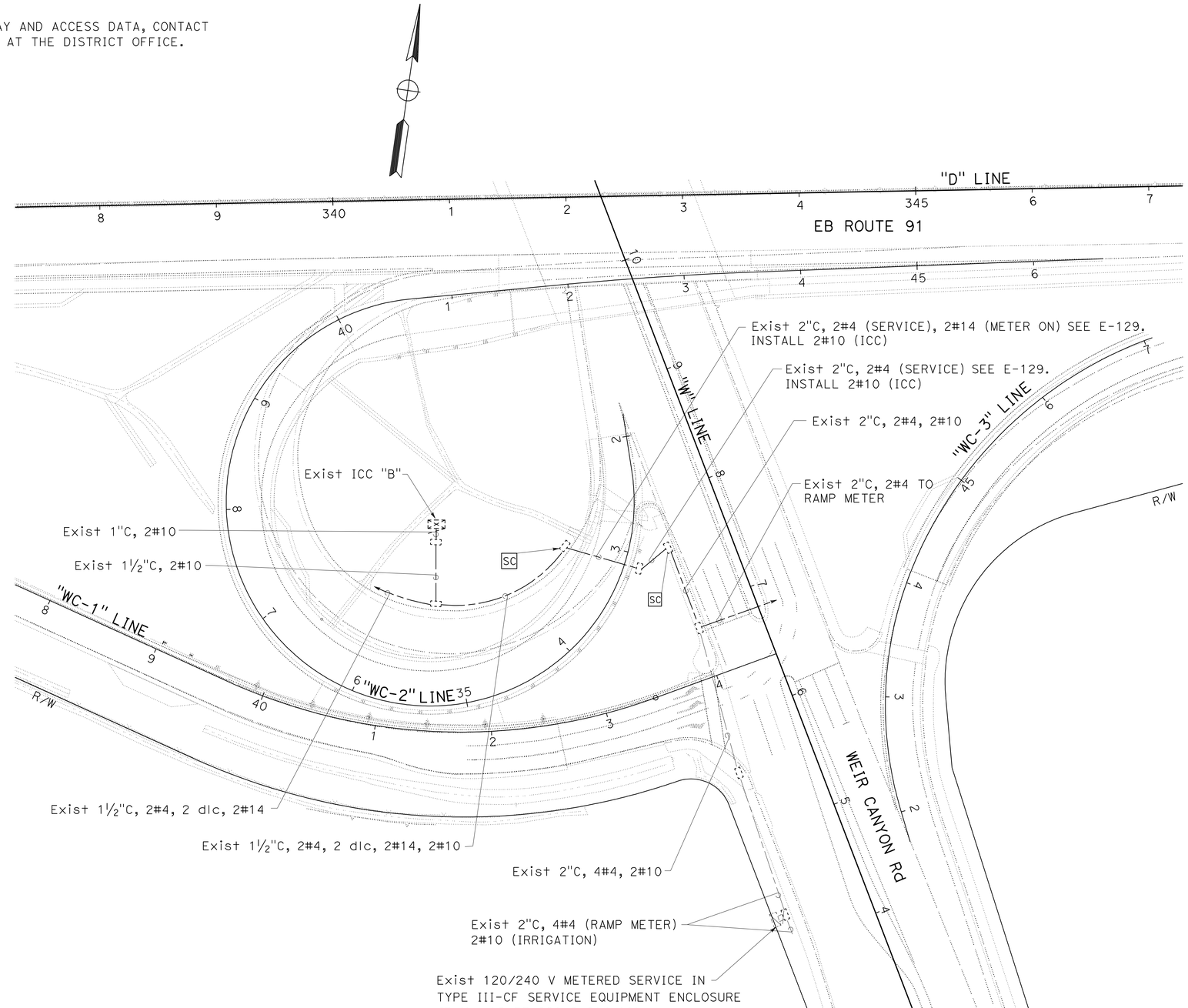

ELECTRIC SERVICE (IRRIGATION)

SCALE: 1" = 50'

THIS PLAN IS ACCURATE FOR ELECTRICAL WORK ONLY.

E-180

STATE OF CALIFORNIA - DEPARTMENT OF TRANSPORTATION
Caltrans®
ELECTRICAL DESIGN

FUNCTIONAL SUPERVISOR: SHAHRAM SHAHRIARI
CALCULATED-DESIGNED BY: VANESSA TRUONG
CHECKED BY: ANTHONY FERNANDEZ
REVISED BY
DATE REVISED

LAST REVISION 07-30-10
DATE PLOTTED => 16-DEC-2010
TIME PLOTTED => 17:16

Dist	COUNTY	ROUTE	POST MILES TOTAL PROJECT	SHEET No.	TOTAL SHEETS
12	Ora	91	9.1/15.1	756	949

REGISTERED ELECTRICAL ENGINEER 08-12-10 DATE

10-25-10
PLANS APPROVAL DATE

REGISTERED PROFESSIONAL ENGINEER S. SHAHRIARI No. E 13485 Exp. 9/30/10 ELECTRICAL STATE OF CALIFORNIA

THE STATE OF CALIFORNIA OR ITS OFFICERS OR AGENTS SHALL NOT BE RESPONSIBLE FOR THE ACCURACY OR COMPLETENESS OF SCANNED COPIES OF THIS PLAN SHEET.

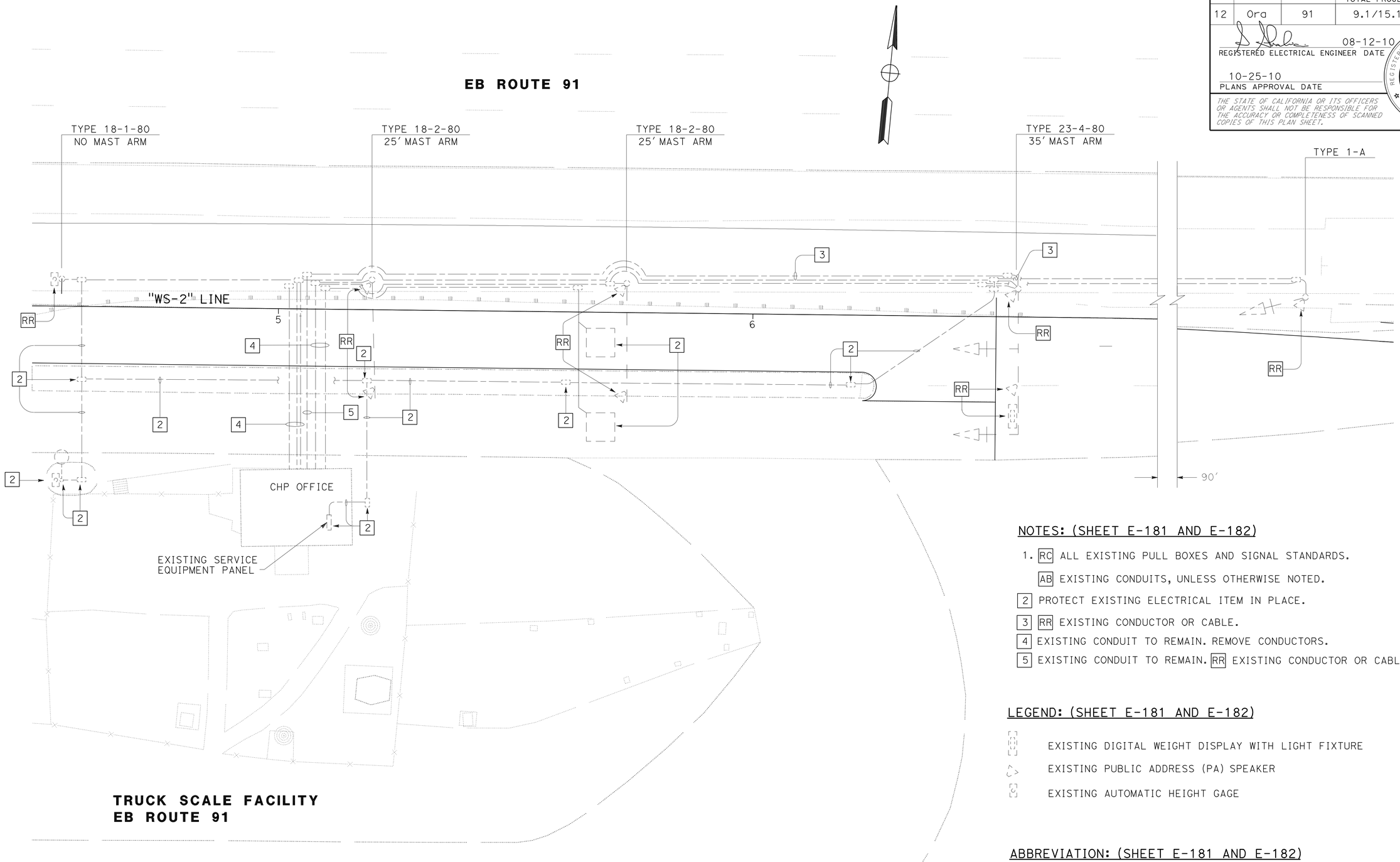

TRUCK SCALE FACILITY
EB ROUTE 91

NOTES: (SHEET E-181 AND E-182)

1. RC ALL EXISTING PULL BOXES AND SIGNAL STANDARDS.
   AB EXISTING CONDUITS, UNLESS OTHERWISE NOTED.
2. PROTECT EXISTING ELECTRICAL ITEM IN PLACE.
3. RR EXISTING CONDUCTOR OR CABLE.
4. EXISTING CONDUIT TO REMAIN. REMOVE CONDUCTORS.
5. EXISTING CONDUIT TO REMAIN. RR EXISTING CONDUCTOR OR CABLE.

LEGEND: (SHEET E-181 AND E-182)

EXISTING DIGITAL WEIGHT DISPLAY WITH LIGHT FIXTURE

EXISTING PUBLIC ADDRESS (PA) SPEAKER

EXISTING AUTOMATIC HEIGHT GAGE

ABBREVIATION: (SHEET E-181 AND E-182)

CHP CALIFORNIA HIGHWAY PATROL

WEIGH STATION BYPASS SYSTEM (REMOVE)

NO SCALE

E-181

THIS PLAN IS ACCURATE FOR ELECTRICAL WORK ONLY.

STATE OF CALIFORNIA - DEPARTMENT OF TRANSPORTATION
Caltrans® ELECTRICAL DESIGN

FUNCTIONAL SUPERVISOR: SHAHRAM SHAHRIARI
CALCULATED-DESIGNED BY: ANTHONY C FERNANDEZ
CHECKED BY: VANESSA TRUONG
REVISED BY / DATE REVISED

LAST REVISION 00-00-00
DATE PLOTTED => 16-DEC-2010
TIME PLOTTED => 17:16

Dist	COUNTY	ROUTE	POST MILES TOTAL PROJECT	SHEET No.	TOTAL SHEETS
12	Ora	91	9.1/15.1	757	949

08-12-10
REGISTERED ELECTRICAL ENGINEER DATE

10-25-10
PLANS APPROVAL DATE

REGISTERED PROFESSIONAL ENGINEER
S. SHAHRIARI
No. E 13485
Exp. 9/30/10
ELECTRICAL
STATE OF CALIFORNIA

THE STATE OF CALIFORNIA OR ITS OFFICERS OR AGENTS SHALL NOT BE RESPONSIBLE FOR THE ACCURACY OR COMPLETENESS OF SCANNED COPIES OF THIS PLAN SHEET.

TRUCK SCALE FACILITY
WB ROUTE 91

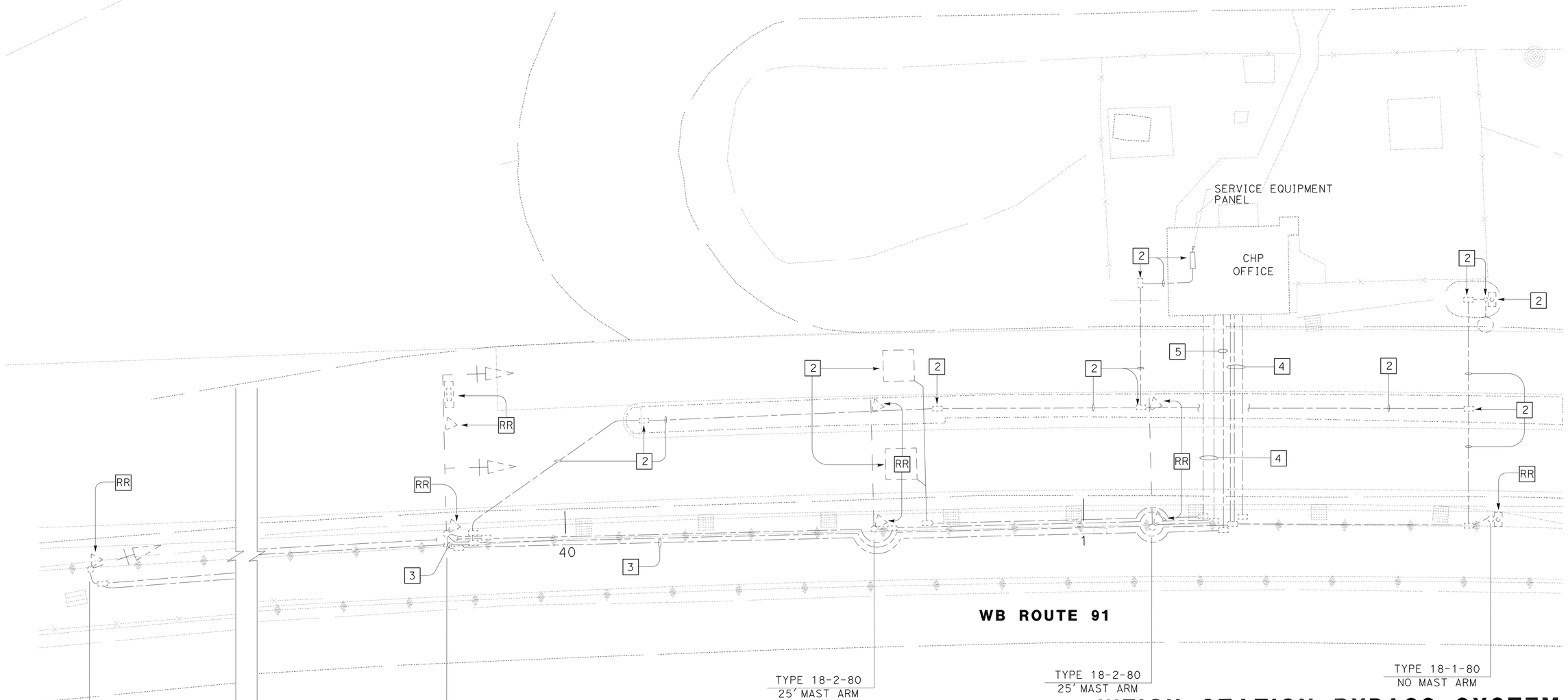

SEE SHEET E-181 FOR NOTES AND LEGEND ON THIS SHEET.
THIS PLAN IS ACCURATE FOR ELECTRICAL WORK ONLY.

WEIGH STATION BYPASS SYSTEM (REMOVE)

NO SCALE

E-182

STATE OF CALIFORNIA - DEPARTMENT OF TRANSPORTATION
Caltrans®
ELECTRICAL DESIGN

FUNCTIONAL SUPERVISOR: SHAHRAM SHAHRIARI
CALCULATED-DESIGNED BY: ANTHONY C FERNANDEZ
CHECKED BY: VANESSA TRUONG
REVISED BY
DATE REVISED

LAST REVISION 00-00-00
DATE PLOTTED => 16-DEC-2010
TIME PLOTTED => 17:16

Dist	COUNTY	ROUTE	POST MILES TOTAL PROJECT	SHEET No.	TOTAL SHEETS
12	Ora	91	9.1/15.1	758	949

08-12-10
REGISTERED ELECTRICAL ENGINEER DATE

10-25-10
PLANS APPROVAL DATE

REGISTERED PROFESSIONAL ENGINEER S.SHAHRIARI No. E 13485 Exp.9/30/10 ELECTRICAL STATE OF CALIFORNIA

THE STATE OF CALIFORNIA OR ITS OFFICERS OR AGENTS SHALL NOT BE RESPONSIBLE FOR THE ACCURACY OR COMPLETENESS OF SCANNED COPIES OF THIS PLAN SHEET.

NOTES: (SHEETS E-184 THRU E-197)

1. Exist 480 V METERED SERVICE IN TYPE III-CF SERVICE EQUIPMENT ENCLOSURE ID No. 07-55-091-R-011.530
   100 A, 480 V, 2P, CB (MAIN)
   40 A, 480 V, 2P, CB (CIRCUIT 8)
   40 A, 480 V, 2P, CB (CIRCUIT 9)
   40 A, 480 V, 2P, CB (CIRCUIT 10)
   40 A, 480 V, 2P, CB (CIRCUIT 11)
   40 A, 480 V, 2P, CB (CIRCUIT 12)
   40 A, 480 V, 2P, CB (SOFFIT LIGHTING)
   40 A, 480 V, 2P, CB (WEIGH IN MOTION STATION)
2. EXISTING 2"C, 2#6 (LIGHTING, SEE E-155 AND E-156). ADD 2#6.
3. EXISTING †dc TO REMAIN.
4. EXISTING 2"C, REMOVE EXISTING CABLES. INSTALL 2-4#18 SHIELDED TELEPHONE CABLE.
5. INSTALL 2"C, 2-4#18 SHIELDED TELEPHONE CABLE.
6. INSTALL 3"C, 2#6, 6#8.
7. INSTALL 3"C, 6#8.
8. WORK AND MATERIALS ARE INCLUDED IN THE CONTRACT LUMP SUM PAYMENT FOR WSB SYSTEM AT LOCATIONS INVOLVED.
9. RL EXISTING 480/240 V TYPE III-B SERVICE EQUIPMENT ENCLOSURE WITH 3 kVA STEP DOWN TRANSFORMER AND GROUNDING ELECTRODE.
10. INSTALL TYPE 28-5-100 (MODIFIED) STANDARD WITH 50' MAST ARM AND ROTATING POLE ASSEMBLY. (SEE SHEETS SES-1 TO SES-8).
11. INSTALL 3"C, 20#14 LOOP WIRES, 6 SLC, 4 STC.
12. INSTALL 3"C, 10 DLC, 6 SLC, 4 STC.
13. INSTALL 1½"C, 1 FOC.
14. INSTALL 2"C. RE-INSTALL EXISTING 2-AVI ANTENNA CABLES.
15. INSTALL 2"C. RE-INSTALL COMPUTER CABLE. (SEE NOTE 39).
16. EXISTING CONDUIT, ADD 1-FOC.
17. INSTALL 1½"C, 2#8.
18. INSTALL 1½"C, 4#8.
19. INSTALL 2-3"C, 2#8, 10 DLC, 6 SLC, 4 STC.
20. INSTALL 2-3"C, 2#8, 1-FOC, 2-4#18 SHIELDED TELEPHONE CABLE. RE-INSTALL 2-EXISTING AVI ANTENNA CABLES.
21. ALL EXISTING CONDUITS, DETECTOR LOOPS, WIM SCALES, AND EMBEDDED SENSORS SHALL BE AB AND ALL EXISTING PULL BOXES SHALL BE RC UNLESS OTHERWISE NOTED.
22. Exist 120/240 V SERVICE EQUIPMENT PANEL TO REMAIN.
23. RC EXISTING TYPE 29-5-80 STANDARD WITH ROTATING POLE ASSEMBLY.
24. RL EXISTING WIM SYSTEM EQUIPMENT CABINET ASSEMBLY.
25. RL EXISTING AVI AND ICN EQUIPMENT CABINET ASSEMBLY.
26. RL EXISTING AVI ANTENNA COMPLETE WITH MOUNTINGS AND CABLES.
27. RL EXISTING ICN ANTENNA COMPLETE WITH MOUNTINGS AND CABLE.
28. TO EXISTING LIGHTING AND SIGN ILLUMINATION PULLBOX (Approx 25').
29. EXISTING 1"C TO TELEPHONE SERVICE POINT.
30. EXISTING 3"C, 3#1/0 TO SERVICE POINT.
31. EXISTING 3"C, 3#1/0.
32. INSTALL 3"C, 4#18.
33. INSTALL 2"C, 4#18.
34. EXISTING 1½"C, RC 1-COMPUTER CABLE. INSTALL 1 FOC.
35. EXISTING 1½"C, 2#6. REMOVE 2#6, INSTALL NEW 2#6.
36. INSTALL 1½"C, 2#6.
37. INSTALL 3"C, 1 FOC.
38. INSTALL 3"C, 2#6.
39. REMOVE AND RE-USE EXISTING COMPUTER CABLE.
40. INSTALL 2"C. RE-INSTALL EXISTING 1-ICN AND 1-RF ANTENNA CABLE
41. INSTALL 2-3"C, 1-FOC. RE-INSTALL EXISTING 1-ICN AND 1-RF ANTENNA CABLE.
42. INSTALL 3"C, 8 LOOP WIRES, 4 STC.
43. INSTALL 2-3"C, 2#8, 1-FOC. RE-INSTALL EXISTING 2-AVI ANTENNA CABLES.
44. EXISTING WSB CONTROLLER CABINET ASSEMBLY WITH PAD WIM SYSTEM EQUIPMENT. REUSE WIM EQUIPMENT FROM WB WIM LOCATION AT "A" LINE, Sta 209+25 (SEE NOTE 8).
45. EXISTING WSB CONTROLLER CABINET ASSEMBLY WITH AVI SYSTEM EQUIPMENT.
46. INSTALL 2"C, 4#8.
47. EXISTING 2"C, 2-AVI ANTENNA CABLES.
48. EXISTING 2-3"C, 4 dlc, 4 SLC, 1-FOC, 2-AVI ANTENNA CABLES. REMOVE EXISTING 4 dlc, 4 SLC, 1-FOC. INSTALL 10 DLC, 6 SLC, 4 STC, 1-FOC.
49. EXISTING 1½"C, 2#6. REMOVE EXIST 2#6 AND INSTALL NEW 2#6.
50. SC NEW 2#10 TO EXISTING 2#10 FOR WEIGHT DISPLAY LIGHTING.
51. EXISTING CONDUIT AND CONDUCTORS TO REMAIN.
52. REMOVE EXISTING 2#12 AND INSTALL NEW 2#12 FOR HEIGHT GAGE TRANSMITTER.
53. EXISTING HEIGHT GAGE TRANSMITTER TO REMAIN.
54. RE-INSTALL EXISTING DIGITAL WEIGHT DISPLAY WITH LIGHT FIXTURE. RE-USE EXISTING MOUNTING ASSEMBLY. SEE SHEET SES-14.
55. RE-INSTALL EXISTING PUBLIC ADDRESS SPEAKER. RE-USE EXISTING MOUNTING ASSEMBLY. SEE SHEET SES-13.
56. RE-INSTALL EXISTING AUTOMATIC HEIGHT GAGE. RE-USE EXISTING MOUNTING ASSEMBLY. SEE DETAIL 1, ON SHEET SES-13.
57. INSTALL 1-SECTION, 12" SIGNAL HEAD (RED) WITH 12" FULL CIRCLE VISOR AND BACKPLATE. USE TYPE SV BRACKET MOUNTING. SEE DETAIL 2, ON SHEET SES-13.
58. RL EXISTING CCTV CAMERA EQUIPMENT INCLUDING MOUNTING ASSEMBLY.
59. INSTALL 1½"C, 2#10.
60. INSTALL 1½"C, 1-COAXIAL SIGNAL CABLE.
61. EXISTING 1½"C, 2-COAXIAL SIGNAL CABLE (cctv1 AND cctv3). REMOVE EXISTING 1-COAXIAL SIGNAL CABLE (cctv1), INSTALL NEW 1-COAXIAL SIGNAL CABLE (cctv1).
62. EXISTING ¾"C, 4#10.
63. SEE SHEET E-163 FOR REFERENCE.
64. EXISTING STANDARD WITH ROTATING POLE ASSEMBLY AND AVI ANTENNAS TO REMAIN.
65. EXISTING 120/240 V TYPE III-BF SERVICE EQUIPMENT ENCLOSURE. ID No. 12-55-091-014.382 (SCE).
66. EXISTING 2"C, 2#6, 4#18.
67. EXISTING 2"C, 2#6.
68. INSTALL 2"C, 2#6.
69. INSTALL 2"C, 1-FOC.
70. RL EXISTING RF ANTENNA COMPLETE WITH MOUNTINGS AND CABLE.
71. RE-INSTALL EXISTING WIM EQUIPMENT CABINET ASSEMBLY. SEE NOTE 24 ON SHEET E-188.
72. RE-INSTALL EXISTING AVI/ICN EQUIPMENT CABINETASSEMBLY. SEE NOTE 25 ON SHEET E-188.
73. RE-INSTALL EXISTING RF ANTENNA COMPLETE WITH MOUNTINGS AND CABLE. SEE NOTE 70 ON SHEET E-188.
74. RE-INSTALL EXISTING AVI ANTENNA COMPLETE WITH MOUNTINGS AND CABLES. SEE NOTE 26 ON SHEET E-188.
75. INSTALL 1½"C, 6#14, 1#8.
76. SEE NOTE 75 ON SHEET E-192 FOR CONTINUATION.
77. SEE NOTE 76 ON SHEET E-188 FOR CONTINUATION.
78. INSTALL 3"C, 4 DLC, 4 STC.
79. INSTALL 2-3"C, 2#8, 4 DLC, 4 STC.

LEGEND: (SHEETS E-190 AND E-197)

- EXISTING AVI ANTENNA
- EXISTING WIM SCALE
- EXISTING ICN ANTENNA
- EXISTING EMBEDDED AXLE SENSOR
- EXISTING LOOP DETECTOR
- EXISTING RF ANTENNA
- EXISTING SIGNAL STANDARD
- RELOCATED AVI ANTENNA
- NEW WIM SCALE
- RELOCATED ICN ANTENNA
- NEW EMBEDDED AXLE SENSOR
- EXISTING DIGITAL WEIGHT DISPLAY WITH LIGHT FIXTURE
- EXISTING PUBLIC ADDRESS (PA) SPEAKER
- EXISTING AUTOMATIC HEIGHT GAGE
- RELOCATED RF ANTENNA
- NEW SIGNAL STANDARD

ABBREVIATION:

SCE	SOUTHERN CALIFORNIA EDISON
STC	SCREENED TRANSMISSION CABLE
SLC	SCALE LEAD IN CABLE
WIM	WEIGH IN MOTION
WSB	WEIGH STATION BYPASS
ICN	IN CAB NOTIFICATION
AVI	AUTOMATIC VEHICLE IDENTIFICATION
FOC	FIBER OPTIC CONTROL CABLE
CHP	CALIFORNIA HIGHWAY PATROL

WEIGH STATION BYPASS SYSTEM

NO SCALE

THIS PLAN IS ACCURATE FOR ELECTRICAL WORK ONLY.

STATE OF CALIFORNIA - DEPARTMENT OF TRANSPORTATION
Caltrans®
ELECTRICAL DESIGN
FUNCTIONAL SUPERVISOR: SHAHRAM SHAHRIARI
CALCULATED-DESIGNED BY: ANTHONY C FERNANDEZ
CHECKED BY: VANESSA TRUONG
REVISED BY
DATE REVISED

E-183

LAST REVISION 00-00-00
DATE PLOTTED => 17-DEC-2010
TIME PLOTTED => 09:58

Dist	COUNTY	ROUTE	POST MILES TOTAL PROJECT	SHEET No.	TOTAL SHEETS
12	Ora	91	9.1/15.1	759	949

REGISTERED ELECTRICAL ENGINEER 08-12-10 DATE

10-25-10
PLANS APPROVAL DATE

REGISTERED PROFESSIONAL ENGINEER
S. SHAHRIARI
No. E 13485
Exp. 9/30/10
ELECTRICAL
STATE OF CALIFORNIA

THE STATE OF CALIFORNIA OR ITS OFFICERS OR AGENTS SHALL NOT BE RESPONSIBLE FOR THE ACCURACY OR COMPLETENESS OF SCANNED COPIES OF THIS PLAN SHEET.

FOR ACCURATE RIGHT OF WAY AND ACCESS DATA, CONTACT RIGHT OF WAY ENGINEERING AT THE DISTRICT OFFICE.

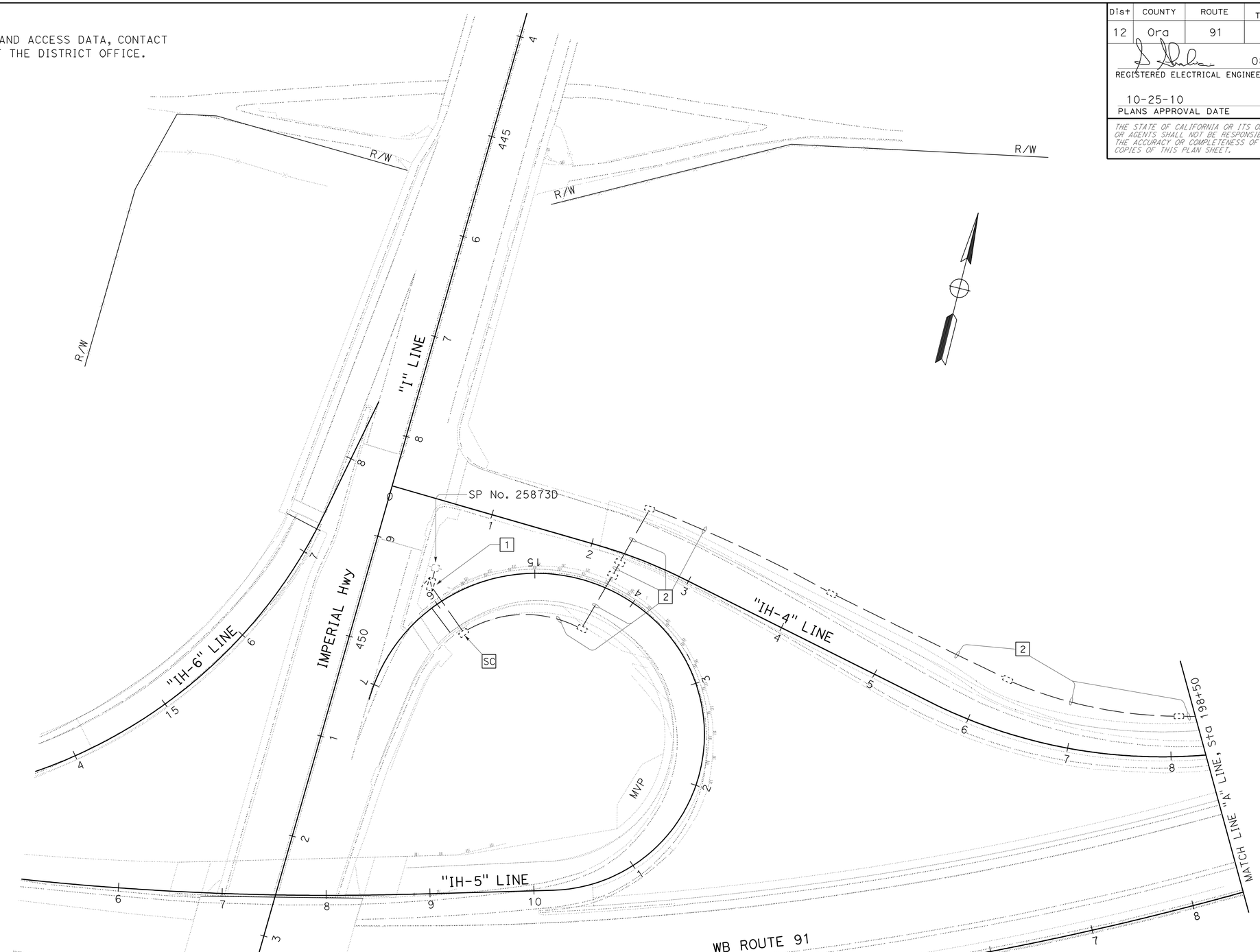

WEIGH STATION BYPASS SYSTEM

SCALE: 1" = 50'

FOR NOTES, SEE SHEET E-183.
THIS PLAN IS ACCURATE FOR ELECTRICAL WORK ONLY.

E-184

STATE OF CALIFORNIA - DEPARTMENT OF TRANSPORTATION
Caltrans®
ELECTRICAL DESIGN

FUNCTIONAL SUPERVISOR: SHAHRAM SHAHRIARI
CALCULATED-DESIGNED BY: ANTHONY C FERNANDEZ
CHECKED BY: VANESSA TRUONG
REVISED BY
DATE REVISED

LAST REVISION 00-00-00
DATE PLOTTED => 16-DEC-2010
TIME PLOTTED => 17:17

Dist	COUNTY	ROUTE	POST MILES TOTAL PROJECT	SHEET No.	TOTAL SHEETS
12	Ora	91	9.1/15.1	760	949

REGISTERED ELECTRICAL ENGINEER 08-12-10 DATE

10-25-10
PLANS APPROVAL DATE

REGISTERED PROFESSIONAL ENGINEER
S. SHAHRIARI
No. E 13485
Exp. 9/30/10
ELECTRICAL
STATE OF CALIFORNIA

THE STATE OF CALIFORNIA OR ITS OFFICERS OR AGENTS SHALL NOT BE RESPONSIBLE FOR THE ACCURACY OR COMPLETENESS OF SCANNED COPIES OF THIS PLAN SHEET.

FOR ACCURATE RIGHT OF WAY AND ACCESS DATA, CONTACT RIGHT OF WAY ENGINEERING AT THE DISTRICT OFFICE.

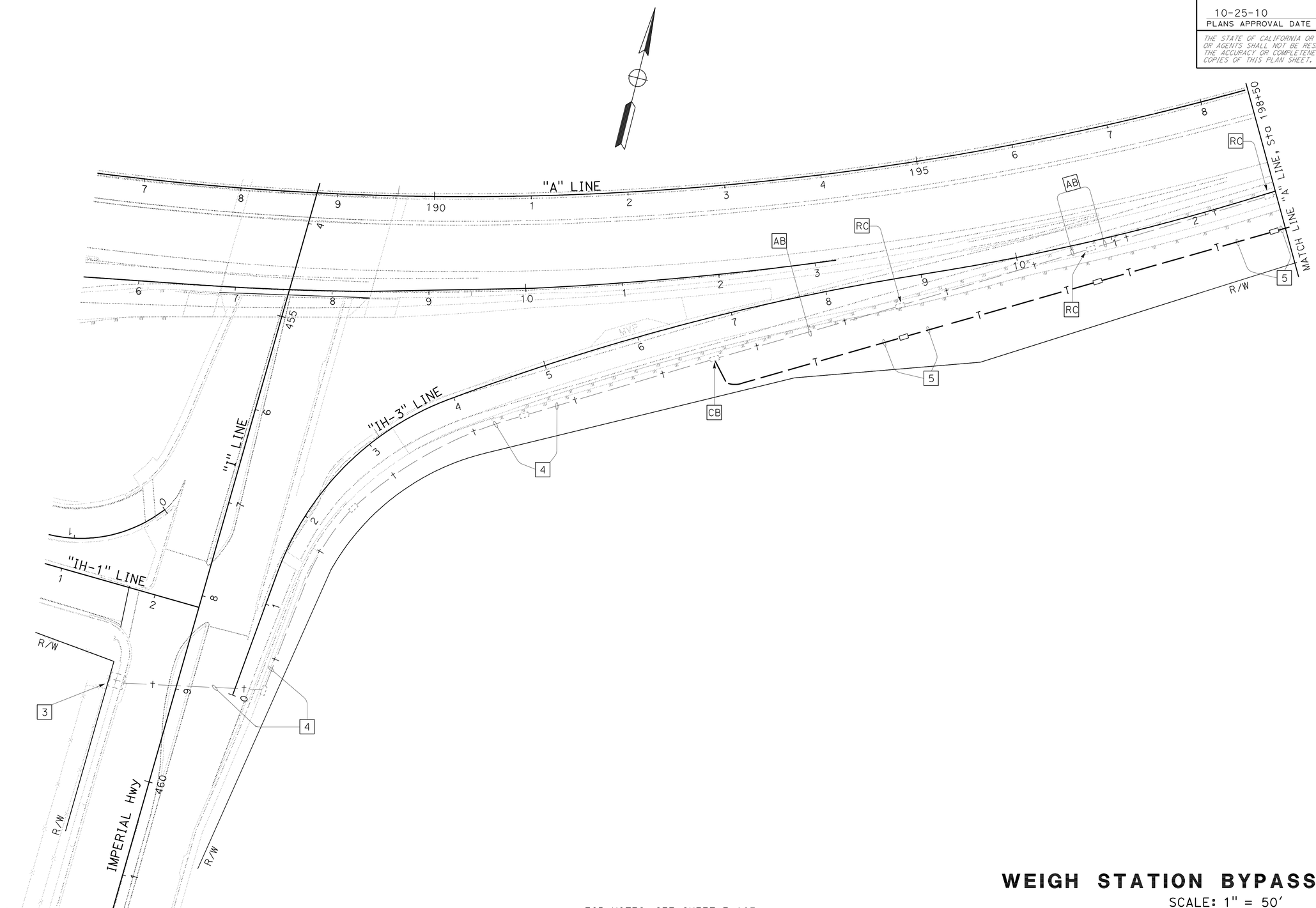

WEIGH STATION BYPASS SYSTEM

SCALE: 1" = 50'

FOR NOTES, SEE SHEET E-183.

THIS PLAN IS ACCURATE FOR ELECTRICAL WORK ONLY.

E-185

STATE OF CALIFORNIA - DEPARTMENT OF TRANSPORTATION
Caltrans
ELECTRICAL DESIGN

FUNCTIONAL SUPERVISOR: SHAHRAM SHAHRIARI
CALCULATED-DESIGNED BY: ANTHONY C FERNANDEZ
CHECKED BY: VANESSA TRUONG
REVISED BY
DATE REVISED

LAST REVISION 00-00-00
DATE PLOTTED => 16-DEC-2010
TIME PLOTTED => 17:17

Dist	COUNTY	ROUTE	POST MILES TOTAL PROJECT	SHEET No.	TOTAL SHEETS
12	Ora	91	9.1/15.1	761	949

REGISTERED ELECTRICAL ENGINEER 08-12-10 DATE

10-25-10
PLANS APPROVAL DATE

REGISTERED PROFESSIONAL ENGINEER S.SHAHRIARI No. E 13485 Exp.9/30/10 ELECTRICAL STATE OF CALIFORNIA

THE STATE OF CALIFORNIA OR ITS OFFICERS OR AGENTS SHALL NOT BE RESPONSIBLE FOR THE ACCURACY OR COMPLETENESS OF SCANNED COPIES OF THIS PLAN SHEET.

FOR ACCURATE RIGHT OF WAY AND ACCESS DATA, CONTACT RIGHT OF WAY ENGINEERING AT THE DISTRICT OFFICE.

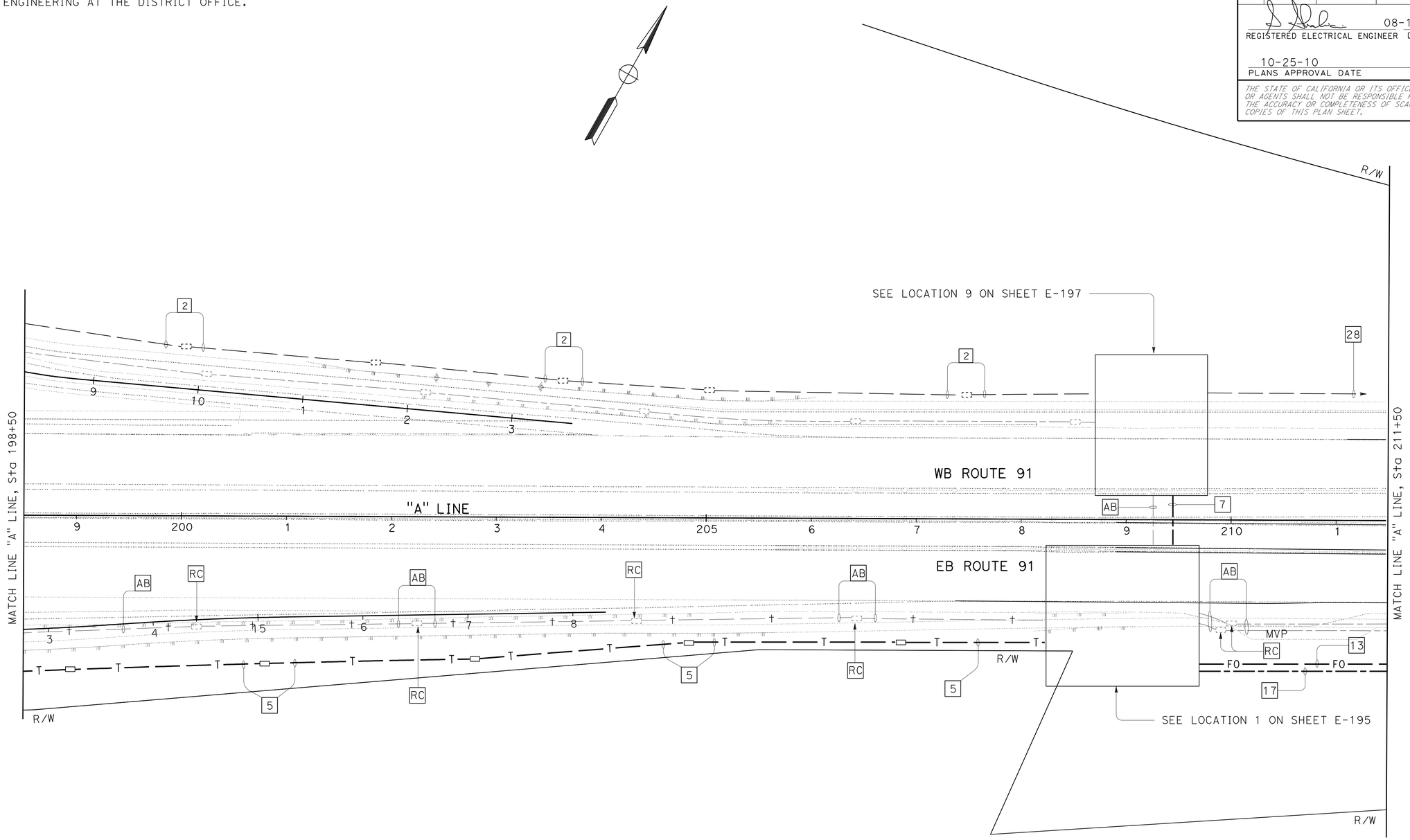

WEIGH STATION BYPASS SYSTEM

SCALE: 1" = 50'

FOR NOTES, SEE SHEET E-183.
THIS PLAN IS ACCURATE FOR ELECTRICAL WORK ONLY.

E-186

STATE OF CALIFORNIA - DEPARTMENT OF TRANSPORTATION
Caltrans
ELECTRICAL DESIGN

FUNCTIONAL SUPERVISOR: SHAHRAM SHAHRIARI
CALCULATED-DESIGNED BY: ANTHONY C FERNANDEZ
CHECKED BY: VANESSA TRUONG
REVISED BY
DATE REVISED

LAST REVISION 00-00-00
DATE PLOTTED => 16-DEC-2010
TIME PLOTTED => 17:17

FOR ACCURATE RIGHT OF WAY AND ACCESS DATA, CONTACT
RIGHT OF WAY ENGINEERING AT THE DISTRICT OFFICE.

Dist	COUNTY	ROUTE	POST MILES TOTAL PROJECT	SHEET No.	TOTAL SHEETS
12	Ora	91	9.1/15.1	762	949

REGISTERED ELECTRICAL ENGINEER 08-12-10 DATE

10-25-10
PLANS APPROVAL DATE

REGISTERED PROFESSIONAL ENGINEER
S.SHAHRIAR
No. E 13485
Exp.9/30/10
ELECTRICAL
STATE OF CALIFORNIA

THE STATE OF CALIFORNIA OR ITS OFFICERS OR AGENTS SHALL NOT BE RESPONSIBLE FOR THE ACCURACY OR COMPLETENESS OF SCANNED COPIES OF THIS PLAN SHEET.

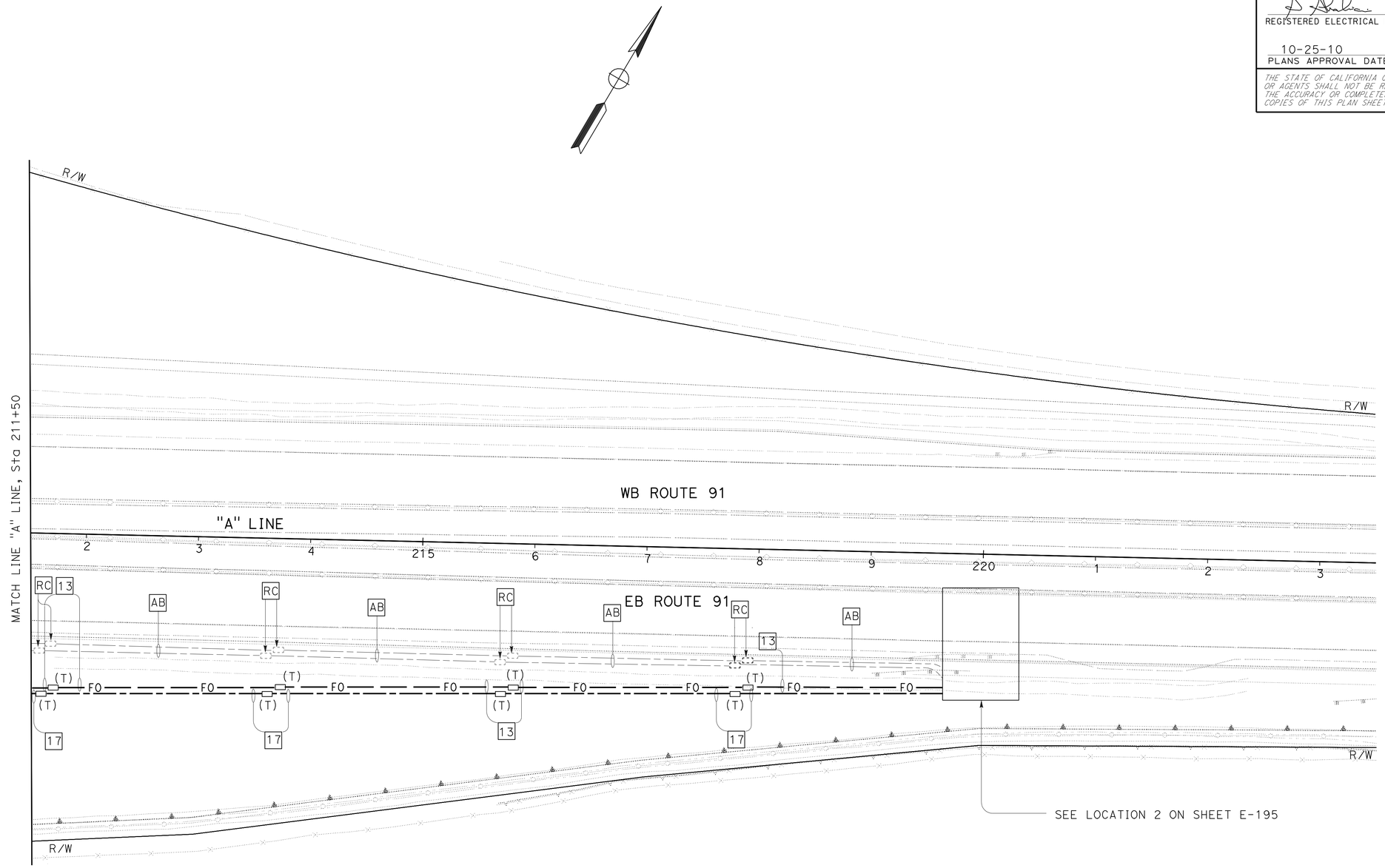

WEIGH STATION BYPASS SYSTEM

SCALE: 1" = 50'

FOR NOTES, SEE SHEET E-183.
THIS PLAN IS ACCURATE FOR ELECTRICAL WORK ONLY.

E-187

STATE OF CALIFORNIA - DEPARTMENT OF TRANSPORTATION
Caltrans®
ELECTRICAL DESIGN

FUNCTIONAL SUPERVISOR: SHAHRAM SHAHRIARI
CALCULATED-DESIGNED BY: ANTHONY C FERNANDEZ
CHECKED BY: VANESSA TRUONG
REVISED BY
DATE REVISED

LAST REVISION 00-00-00
DATE PLOTTED => 16-DEC-2010
TIME PLOTTED => 17:17

FOR ACCURATE RIGHT OF WAY AND ACCESS DATA, CONTACT
RIGHT OF WAY ENGINEERING AT THE DISTRICT OFFICE.

Dist	COUNTY	ROUTE	POST MILES TOTAL PROJECT	SHEET No.	TOTAL SHEETS
12	Ora	91	9.1/15.1	763	949

REGISTERED ELECTRICAL ENGINEER 08-12-10 DATE

10-25-10
PLANS APPROVAL DATE

REGISTERED PROFESSIONAL ENGINEER S.SHAHRIARI No. E 13485 Exp.9/30/10 ELECTRICAL STATE OF CALIFORNIA

THE STATE OF CALIFORNIA OR ITS OFFICERS OR AGENTS SHALL NOT BE RESPONSIBLE FOR THE ACCURACY OR COMPLETENESS OF SCANNED COPIES OF THIS PLAN SHEET.

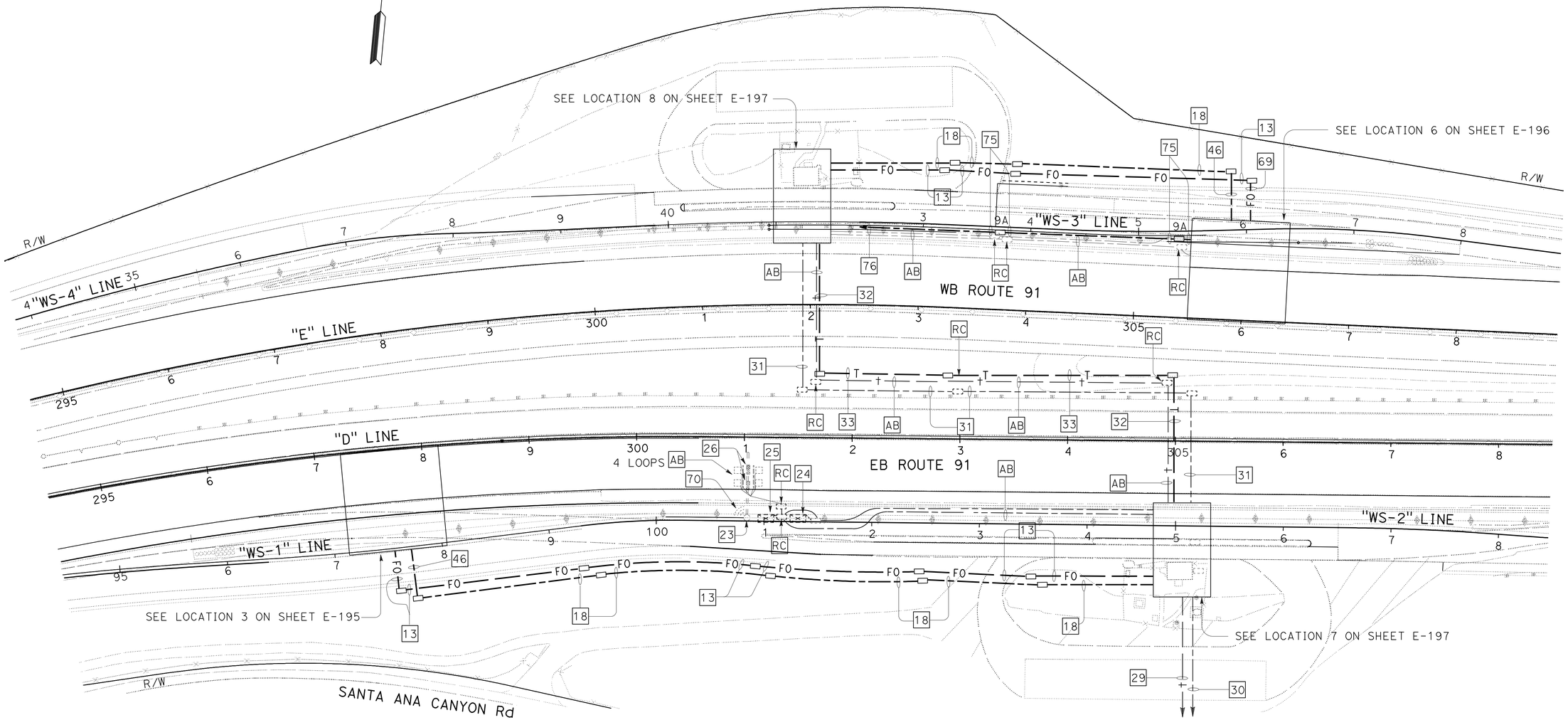

FOR NOTES, SEE SHEET E-183.
THIS PLAN IS ACCURATE FOR ELECTRICAL WORK ONLY.

WEIGH STATION BYPASS SYSTEM

SCALE: 1" = 50'

E-188

STATE OF CALIFORNIA - DEPARTMENT OF TRANSPORTATION
Caltrans® **ELECTRICAL DESIGN**

FUNCTIONAL SUPERVISOR: SHAHRAM SHAHRIARI
CALCULATED-DESIGNED BY: ANTHONY C FERNANDEZ
CHECKED BY: VANESSA TRUONG
REVISED BY / DATE REVISED

LAST REVISION 00-00-00 | DATE PLOTTED => 16-DEC-2010 | TIME PLOTTED => 17:17

BORDER LAST REVISED 4/11/2008 | RELATIVE BORDER SCALE IS IN INCHES 0 1 2 3 | USERNAME => trlenard | DGN FILE => c0g330ua190.dgn | CU 12390 | EA 0G3301

FOR ACCURATE RIGHT OF WAY AND ACCESS DATA, CONTACT
RIGHT OF WAY ENGINEERING AT THE DISTRICT OFFICE.

Dist	COUNTY	ROUTE	POST MILES TOTAL PROJECT	SHEET No.	TOTAL SHEETS
12	Ora	91	9.1/15.1	764	949

REGISTERED ELECTRICAL ENGINEER 08-12-10 DATE

10-25-10
PLANS APPROVAL DATE

REGISTERED PROFESSIONAL ENGINEER
S.SHAHRIARI
No. E 13485
Exp.9/30/10
ELECTRICAL
STATE OF CALIFORNIA

THE STATE OF CALIFORNIA OR ITS OFFICERS OR AGENTS SHALL NOT BE RESPONSIBLE FOR THE ACCURACY OR COMPLETENESS OF SCANNED COPIES OF THIS PLAN SHEET.

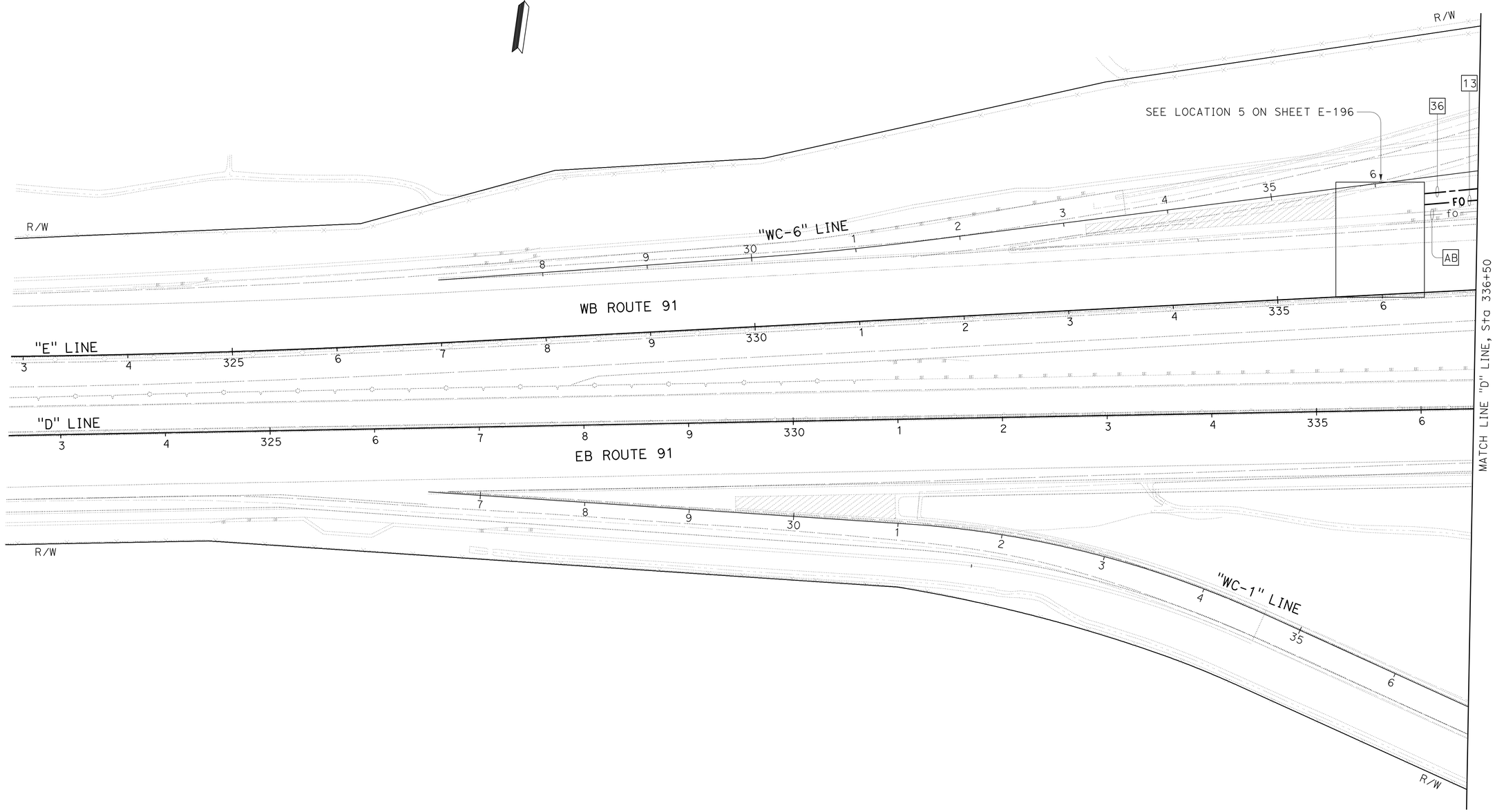

WEIGH STATION BYPASS SYSTEM

SCALE: 1" = 50'

FOR NOTES, SEE SHEET E-183.
THIS PLAN IS ACCURATE FOR ELECTRICAL WORK ONLY.

E-189

STATE OF CALIFORNIA - DEPARTMENT OF TRANSPORTATION
Caltrans
ELECTRICAL DESIGN

FUNCTIONAL SUPERVISOR: SHAHRAM SHAHRIARI
CALCULATED-DESIGNED BY: ANTHONY C FERNANDEZ
CHECKED BY: VANESSA TRUONG
REVISED BY
DATE REVISED

LAST REVISION 00-00-00
DATE PLOTTED => 16-DEC-2010
TIME PLOTTED => 17:17

FOR ACCURATE RIGHT OF WAY AND ACCESS DATA, CONTACT
RIGHT OF WAY ENGINEERING AT THE DISTRICT OFFICE.

Dist	COUNTY	ROUTE	POST MILES TOTAL PROJECT	SHEET No.	TOTAL SHEETS
12	Ora	91	9.1/15.1	765	949

08-12-10
REGISTERED ELECTRICAL ENGINEER DATE

10-25-10
PLANS APPROVAL DATE

REGISTERED PROFESSIONAL ENGINEER
S. SHAHRIARI
No. E 13485
Exp. 9/30/10
ELECTRICAL
STATE OF CALIFORNIA

THE STATE OF CALIFORNIA OR ITS OFFICERS OR AGENTS SHALL NOT BE RESPONSIBLE FOR THE ACCURACY OR COMPLETENESS OF SCANNED COPIES OF THIS PLAN SHEET.

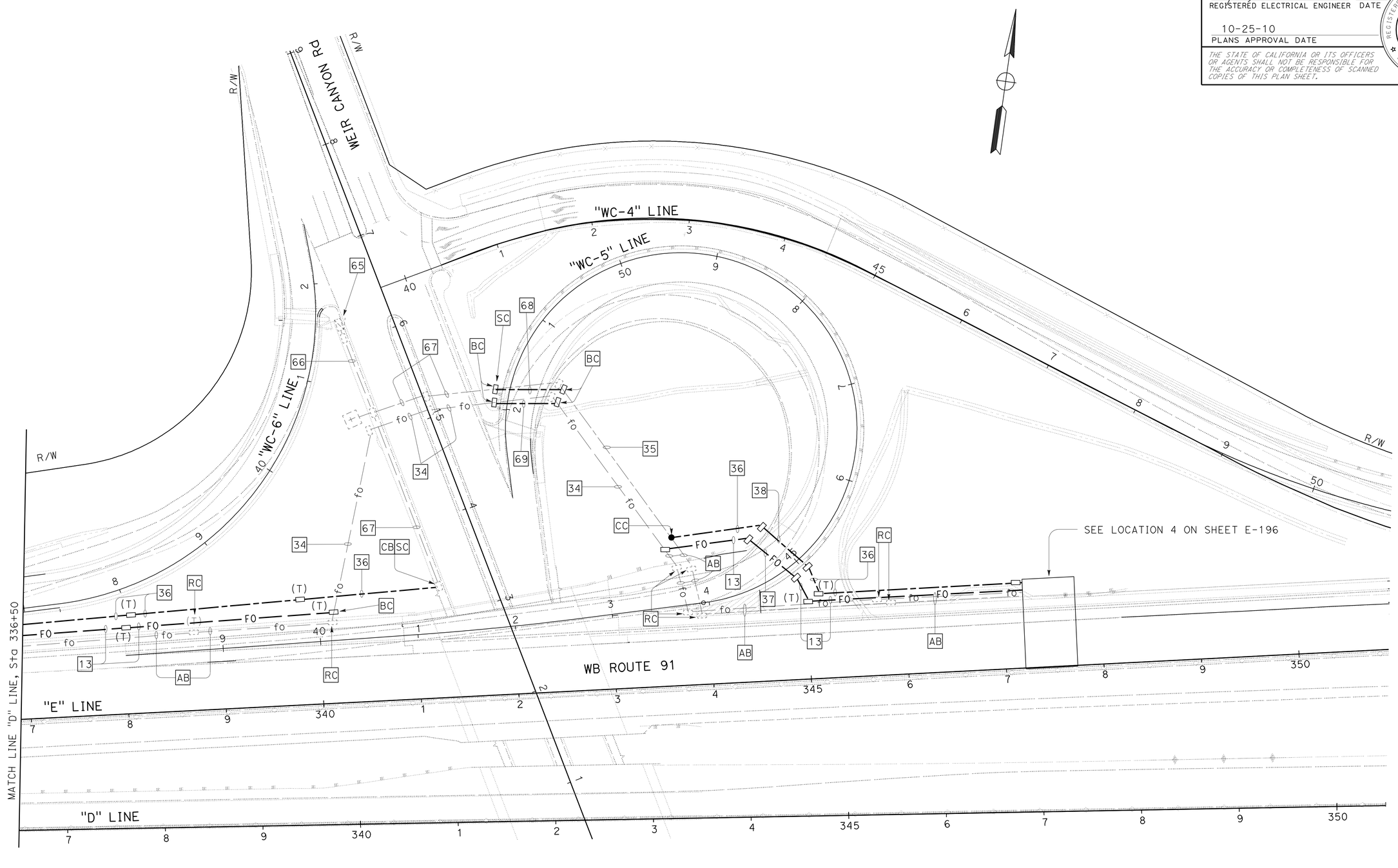

WEIGH STATION BYPASS SYSTEM

SCALE: 1" = 50'

FOR NOTES, SEE SHEET E-183.
THIS PLAN IS ACCURATE FOR ELECTRICAL WORK ONLY.

E-190

STATE OF CALIFORNIA - DEPARTMENT OF TRANSPORTATION
Caltrans®
ELECTRICAL DESIGN

FUNCTIONAL SUPERVISOR: SHAHRAM SHAHRIARI
CALCULATED-DESIGNED BY: ANTHONY C FERNANDEZ
CHECKED BY: VANESSA TRUONG
REVISED BY
DATE REVISED

LAST REVISION 00-00-00
DATE PLOTTED => 16-DEC-2010
TIME PLOTTED => 17:17

Dist	COUNTY	ROUTE	POST MILES TOTAL PROJECT	SHEET No.	TOTAL SHEETS
12	Ora	91	9.1/15.1	766	949

REGISTERED ELECTRICAL ENGINEER 08-12-10 DATE

10-25-10
PLANS APPROVAL DATE

REGISTERED PROFESSIONAL ENGINEER S. SHAHRIARI No. E 13485 Exp. 9/30/10 ELECTRICAL STATE OF CALIFORNIA

THE STATE OF CALIFORNIA OR ITS OFFICERS OR AGENTS SHALL NOT BE RESPONSIBLE FOR THE ACCURACY OR COMPLETENESS OF SCANNED COPIES OF THIS PLAN SHEET.

EB ROUTE 91

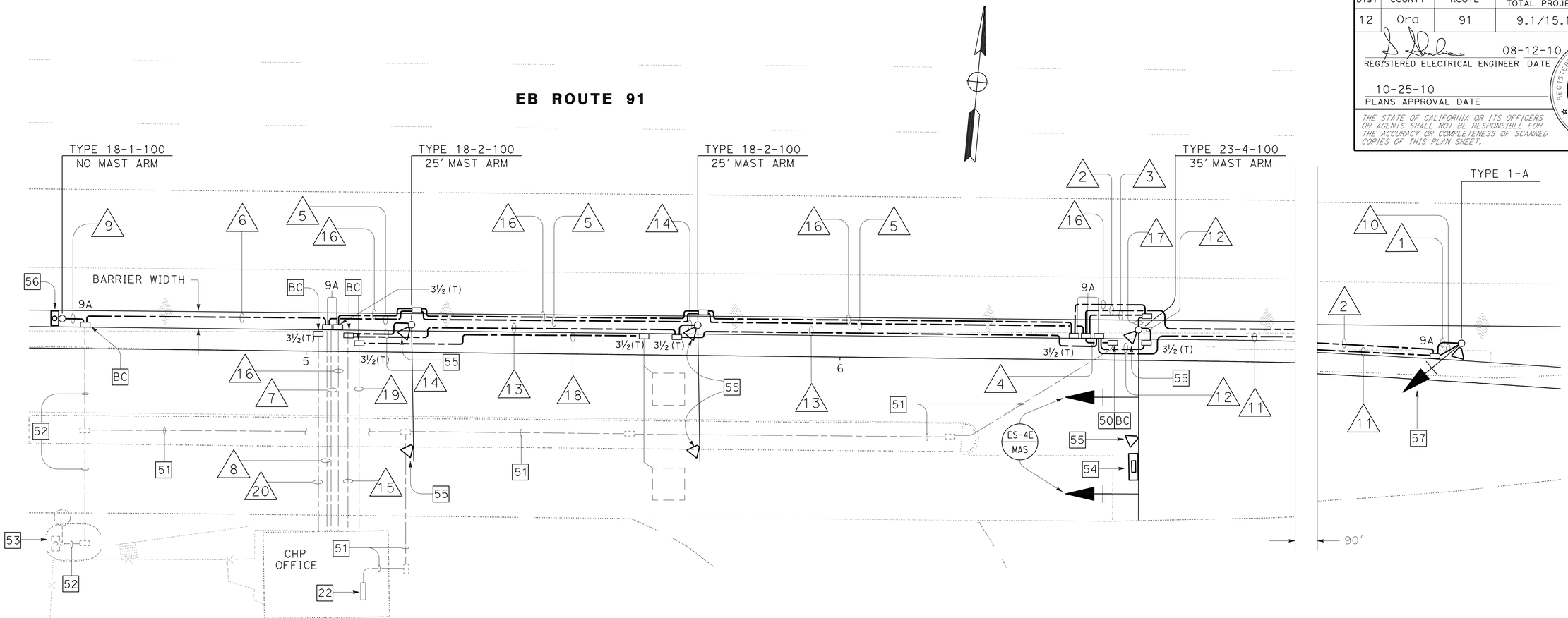

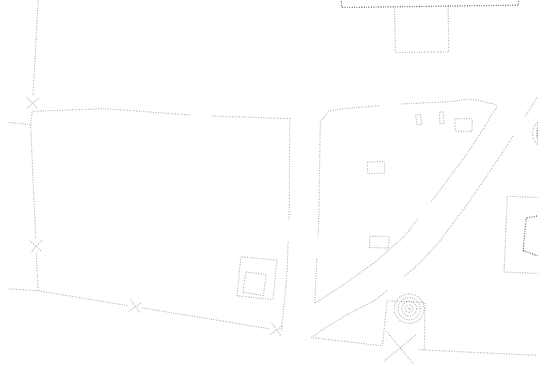

TRUCK SCALE FACILITY
EB ROUTE 91

CONDUCTOR AND CONDUIT SCHEDULE

CONDUCTOR	CONDUCTOR RUN	1	2	3	4	5	6	7	8	9	10	11	12	13	14	15	16	17	18	19	20
#12	EXIT SIGNAL	2	2			2			2												
CABLE	EXIT SPEAKER										1	1		1		1					
#12	EMPTY LANE SIGNAL			4		4			4									4			
#12	SCALE LANE SIGNAL			4		4			4									4			
#12	SCALE LANE WEIGHT DISPLAY "POWER"			3		3			3									3			
CABLE	SCALE LANE WEIGHT DISPLAY "SIGNAL"																1E	1E			
CABLE	EMPTY LANE SPEAKERS												1	1	1	1					
CABLE	SCALE LANE SPEAKERS												1	1	1	1					
CABLE	EMPTY LANE LOOP "LEAD-IN"																		1	1	
CABLE	SCALE LANE LOOP "LEAD-IN"																		1	1	
#12	HEIGHT GAGE TRANSMITTER AND RECEIVER						4	4		2											
#10	WEIGHT DISPLAY LIGHT (120 V)			2	2													2			
PULL ROPE	FUTURE																				1
#8	EQUIPMENT GROUNDING CONDUCTOR	1	1			1	1		1	1	1	1		1	1	1		1			
	CONDUIT SIZE	1"	1½"	1½"	1"	1½"	1"	¾" E	1" E	1"	1"	1"	1"	1½"	1½"	1½" E	1"	1½"	1½"	1½" E	1" E

NOTE: ALL CONDUITS AND CONDUCTORS ARE NEW UNLESS OTHERWISE NOTED.
E - EXISTING CONDUIT TO REMAIN OR CONDUCTOR TO BE RE-USED.

FOR NOTES, SEE SHEET E-183.
THIS PLAN IS ACCURATE FOR ELECTRICAL WORK ONLY.

WEIGH STATION BYPASS SYSTEM

NO SCALE

E-191

STATE OF CALIFORNIA - DEPARTMENT OF TRANSPORTATION
Caltrans® ELECTRICAL DESIGN

FUNCTIONAL SUPERVISOR: SHAHRAM SHAHRIARI
CALCULATED-DESIGNED BY: ANTHONY C FERNANDEZ
CHECKED BY: VANESSA TRUONG
REVISED BY / DATE REVISED

LAST REVISION 00-00-00 | DATE PLOTTED => 17-DEC-2010 | TIME PLOTTED => 09:56

Dist	COUNTY	ROUTE	POST MILES TOTAL PROJECT	SHEET No.	TOTAL SHEETS
12	Ora	91	9.1/15.1	767	949

REGISTERED ELECTRICAL ENGINEER 08-12-10 DATE

10-25-10
PLANS APPROVAL DATE

REGISTERED PROFESSIONAL ENGINEER S. SHAHRIARI No. E 13485 Exp. 9/30/10 ELECTRICAL STATE OF CALIFORNIA

THE STATE OF CALIFORNIA OR ITS OFFICERS OR AGENTS SHALL NOT BE RESPONSIBLE FOR THE ACCURACY OR COMPLETENESS OF SCANNED COPIES OF THIS PLAN SHEET.

CONDUCTOR AND CONDUIT SCHEDULE

CONDUCTOR	CONDUCTOR RUN	1	2	3	4	5	6	7	8	9	10	11	12	13	14	15	16	17	18	19	20
#12	EXIT SIGNAL	2	2			2			2												
CABLE	EXIT SPEAKER										1	1		1		1					
#12	EMPTY LANE SIGNAL			4		4			4									4			
#12	SCALE LANE SIGNAL			4		4			4									4			
#12	SCALE LANE WEIGHT DISPLAY "POWER"			3		3			3									3			
CABLE	SCALE LANE WEIGHT DISPLAY "SIGNAL"														1E		1E	1E			
CABLE	EMPTY LANE SPEAKERS												1	1		1					
CABLE	SCALE LANE SPEAKERS												1	1		1					
CABLE	EMPTY LANE LOOP "LEAD-IN"																		1	1	
CABLE	SCALE LANE LOOP "LEAD-IN"																		1	1	
#12	HEIGHT GAGE TRANSMITTER AND RECEIVER						4	4		2											
#10	WEIGHT DISPLAY LIGHT (120 V)			2	2													2			
#14	ENTRANCE SIGNAL AND MESSAGE INDICATOR																				6
#8	EQUIPMENT GROUNDING CONDUCTOR	1	1			1	1	1		1	1	1		1	1	1		1			1
	CONDUIT SIZE	1"	1½"	1½"	1"	1½"	1"	¾" E	1" E	1"	1"	1"	1"	1½"	1½" E	1½" E	1"	1½"	1½"	1" E	1" E

NOTE:

ALL CONDUITS AND CONDUCTORS ARE NEW UNLESS OTHERWISE NOTED.

LEGEND:

E - EXISTING CONDUIT TO REMAIN OR CONDUCTOR TO BE RE-USED.

TRUCK SCALE FACILITY
WB ROUTE 91

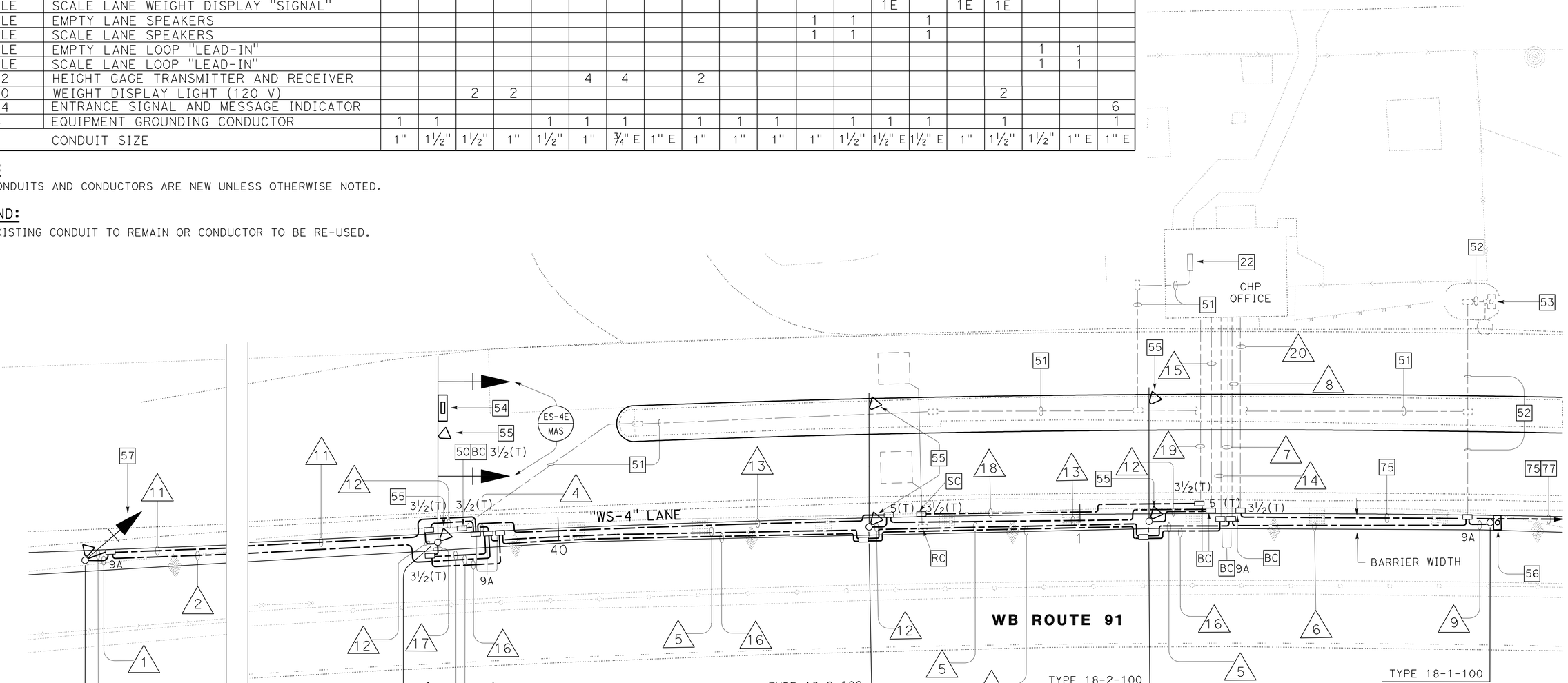

WEIGH STATION BYPASS SYSTEM

NO SCALE

FOR NOTES AND LEGEND, SEE SHEET E-183.
THIS PLAN IS ACCURATE FOR ELECTRICAL WORK ONLY.

E-192

STATE OF CALIFORNIA - DEPARTMENT OF TRANSPORTATION
Caltrans® ELECTRICAL DESIGN

FUNCTIONAL SUPERVISOR: SHAHRAM SHAHRIARI
CALCULATED-DESIGNED BY: ANTHONY C FERNANDEZ
CHECKED BY: VANESSA TRUONG
REVISED BY / DATE REVISED

LAST REVISION 00-00-00 | DATE PLOTTED => 16-DEC-2010 | TIME PLOTTED => 17:17

FOR ACCURATE RIGHT OF WAY AND ACCESS DATA, CONTACT
RIGHT OF WAY ENGINEERING AT THE DISTRICT OFFICE.

Dist	COUNTY	ROUTE	POST MILES TOTAL PROJECT	SHEET No.	TOTAL SHEETS
12	Ora	91	9.1/15.1	768	949

08-12-10
REGISTERED ELECTRICAL ENGINEER DATE

10-25-10
PLANS APPROVAL DATE

REGISTERED PROFESSIONAL ENGINEER
S.SHAHRIARI
No. E 13485
Exp.9/30/10
ELECTRICAL
STATE OF CALIFORNIA

THE STATE OF CALIFORNIA OR ITS OFFICERS OR AGENTS SHALL NOT BE RESPONSIBLE FOR THE ACCURACY OR COMPLETENESS OF SCANNED COPIES OF THIS PLAN SHEET.

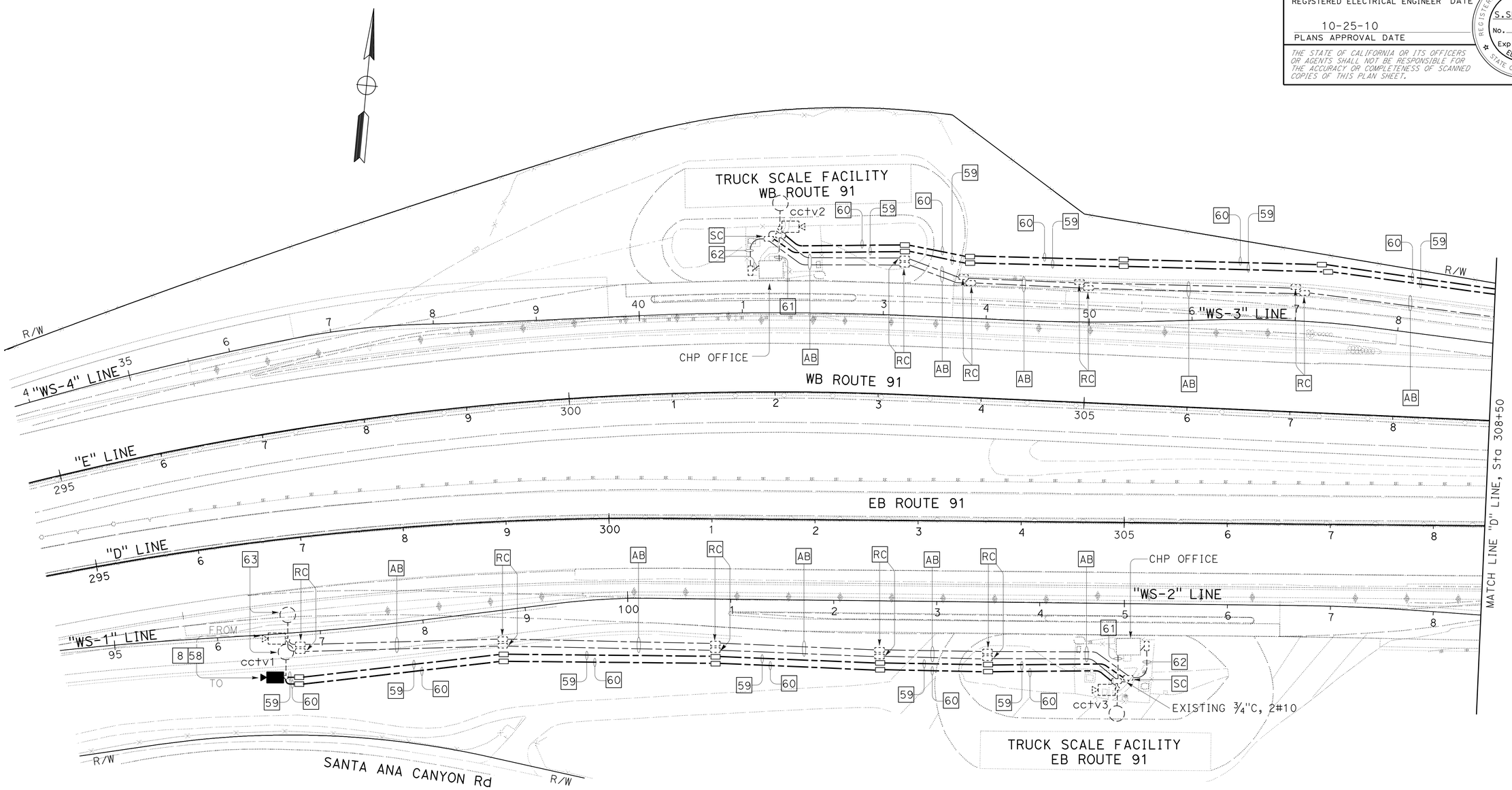

WEIGH STATION BYPASS SYSTEM

SCALE: 1" = 50'

E-193

FOR NOTES, SEE SHEET E-183.
THIS PLAN IS ACCURATE FOR ELECTRICAL WORK ONLY.

STATE OF CALIFORNIA - DEPARTMENT OF TRANSPORTATION
Caltrans®
ELECTRICAL DESIGN

FUNCTIONAL SUPERVISOR: SHAHRAM SHAHRIARI
CALCULATED-DESIGNED BY: ANTHONY C FERNANDEZ
CHECKED BY: VANESSA TRUONG
REVISED BY
DATE REVISED

LAST REVISION: DATE PLOTTED => 16-DEC-2010
00-00-00 TIME PLOTTED => 17:17

FOR ACCURATE RIGHT OF WAY AND ACCESS DATA, CONTACT
RIGHT OF WAY ENGINEERING AT THE DISTRICT OFFICE.

Dist	COUNTY	ROUTE	POST MILES TOTAL PROJECT	SHEET No.	TOTAL SHEETS
12	Ora	91	9.1/15.1	769	949

REGISTERED ELECTRICAL ENGINEER 08-12-10 DATE

10-25-10
PLANS APPROVAL DATE

REGISTERED PROFESSIONAL ENGINEER
S.SHAHRIARI
No. E 13485
Exp.9/30/10
ELECTRICAL
STATE OF CALIFORNIA

THE STATE OF CALIFORNIA OR ITS OFFICERS OR AGENTS SHALL NOT BE RESPONSIBLE FOR THE ACCURACY OR COMPLETENESS OF SCANNED COPIES OF THIS PLAN SHEET.

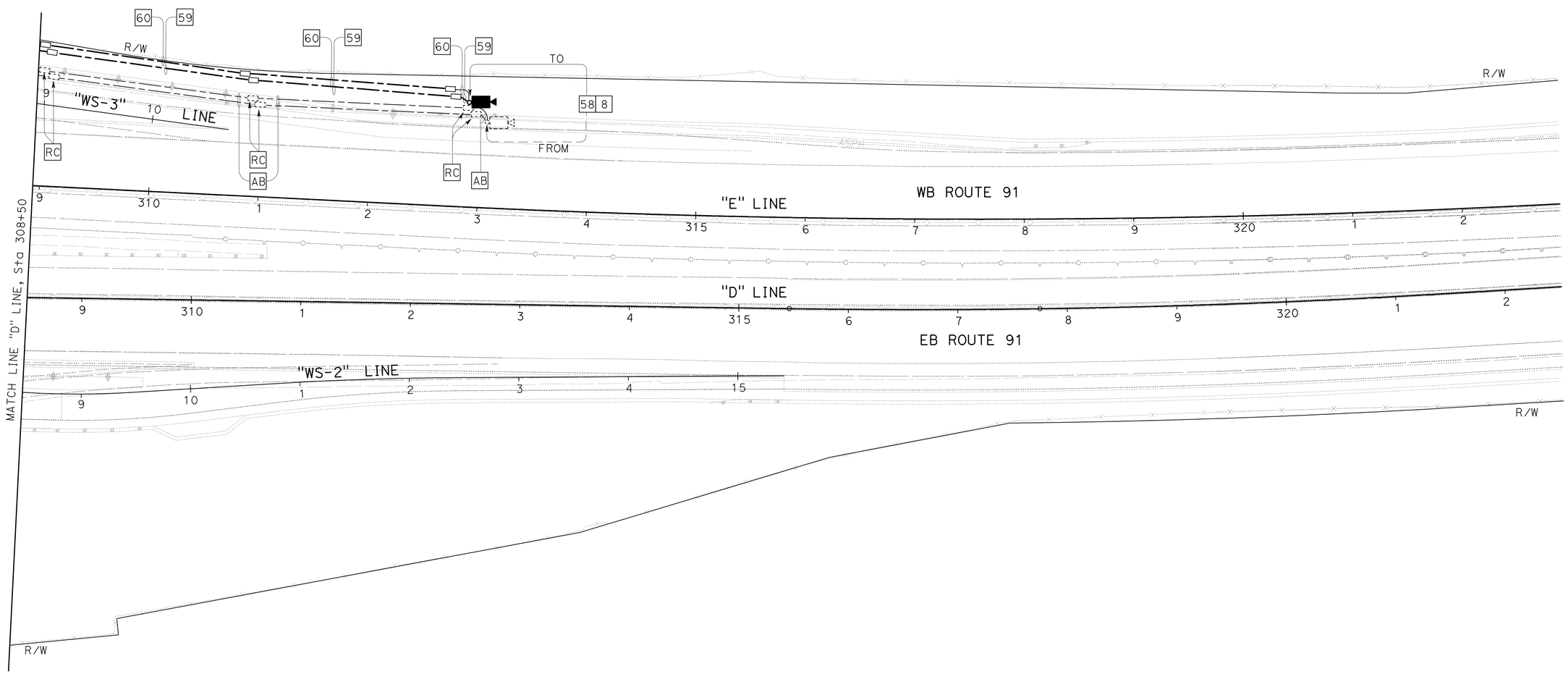

WEIGH STATION BYPASS SYSTEM

SCALE: 1" = 50'

E-194

FOR NOTES, SEE SHEET E-183.
THIS PLAN IS ACCURATE FOR ELECTRICAL WORK ONLY.

STATE OF CALIFORNIA - DEPARTMENT OF TRANSPORTATION
Caltrans® ELECTRICAL DESIGN

FUNCTIONAL SUPERVISOR: SHAHRAM SHAHRIARI
CALCULATED-DESIGNED BY: ANTHONY C FERNANDEZ
CHECKED BY: VANESSA TRUONG
REVISED BY
DATE REVISED

LAST REVISION 00-00-00
DATE PLOTTED => 16-DEC-2010
TIME PLOTTED => 17:17

Dist	COUNTY	ROUTE	POST MILES TOTAL PROJECT	SHEET No.	TOTAL SHEETS
12	Ora	91	9.1/15.1	770	949

REGISTERED ELECTRICAL ENGINEER 08-12-10 DATE

10-25-10
PLANS APPROVAL DATE

REGISTERED PROFESSIONAL ENGINEER S.SHAHRIARI No. E 13485 Exp.9/30/10 ELECTRICAL STATE OF CALIFORNIA

THE STATE OF CALIFORNIA OR ITS OFFICERS OR AGENTS SHALL NOT BE RESPONSIBLE FOR THE ACCURACY OR COMPLETENESS OF SCANNED COPIES OF THIS PLAN SHEET.

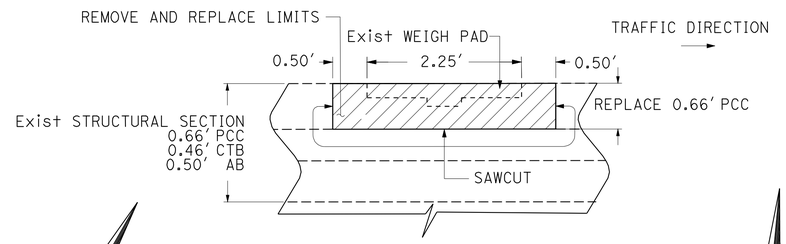

PAVEMENT REMOVAL AND REPLACEMENT

DETAIL A

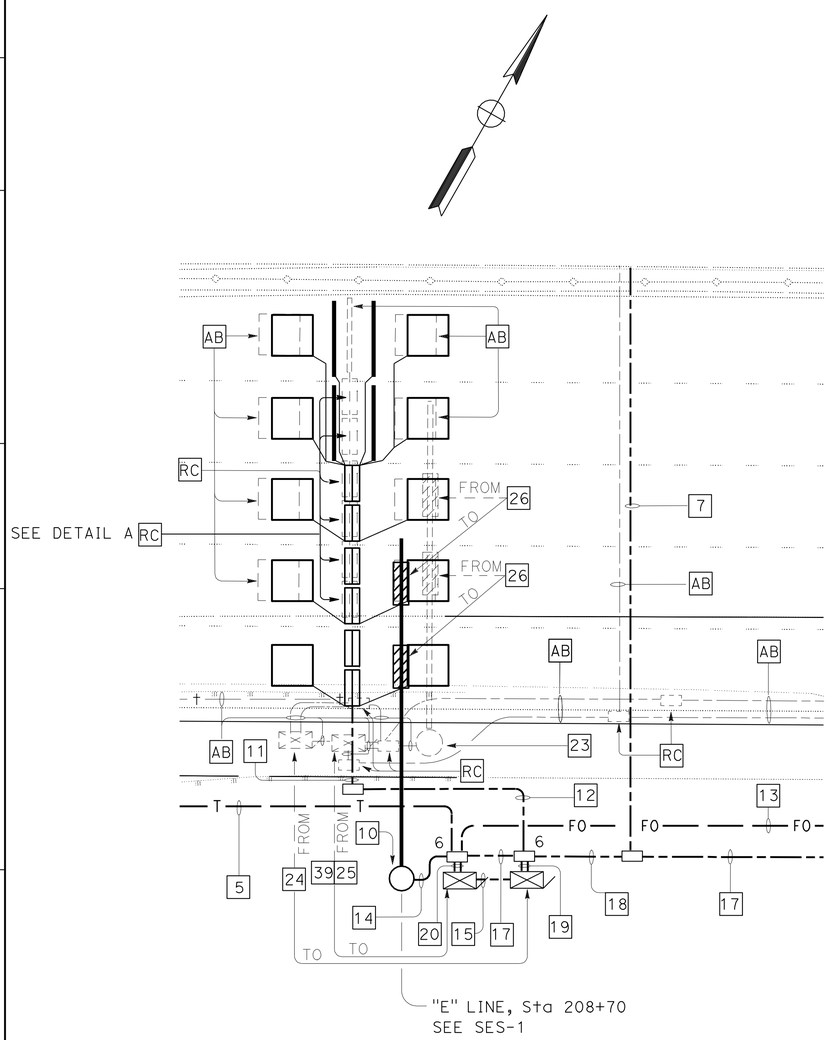

LOCATION 1

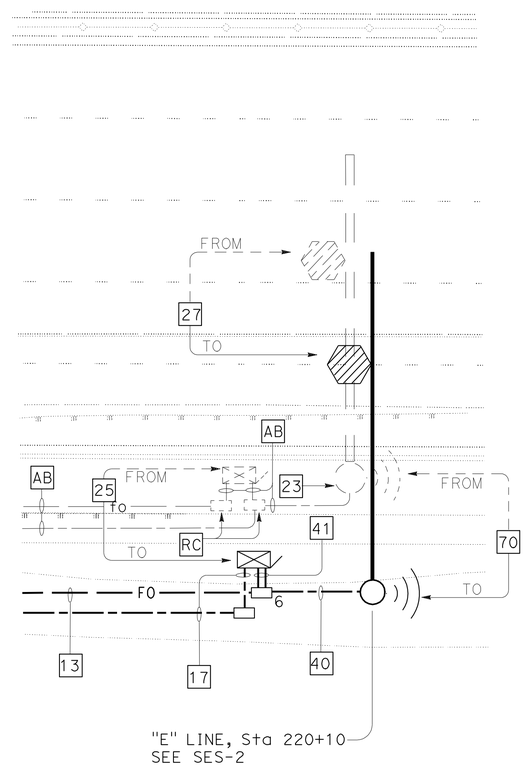

LOCATION 2

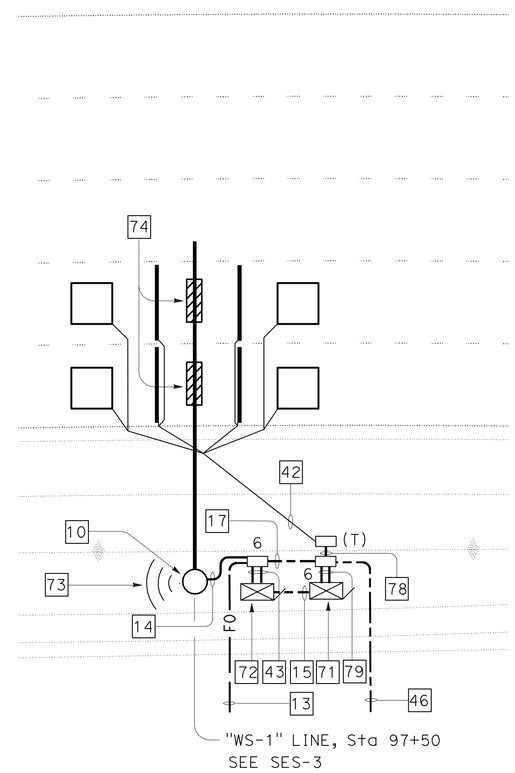

LOCATION 3

WEIGH STATION BYPASS SYSTEM
(DETAILS)
NO SCALE

FOR NOTES AND LEGEND, SEE SHEET E-183.
THIS PLAN IS ACCURATE FOR ELECTRICAL WORK ONLY.

E-195

STATE OF CALIFORNIA - DEPARTMENT OF TRANSPORTATION
Caltrans
ELECTRICAL DESIGN

FUNCTIONAL SUPERVISOR: SHAHRAM SHAHRIARI
CALCULATED-DESIGNED BY: ANTHONY C FERNANDEZ
CHECKED BY: VANESSA TRUONG
REVISED BY
DATE REVISED

LAST REVISION 00-00-00
DATE PLOTTED => 16-DEC-2010
TIME PLOTTED => 17:17

Dist	COUNTY	ROUTE	POST MILES TOTAL PROJECT	SHEET No.	TOTAL SHEETS
12	Ora	91	9.1/15.1	771	949

08-12-10
REGISTERED ELECTRICAL ENGINEER DATE

10-25-10
PLANS APPROVAL DATE

REGISTERED PROFESSIONAL ENGINEER S.SHAHRIARI No. E 13485 Exp.9/30/10 ELECTRICAL STATE OF CALIFORNIA

THE STATE OF CALIFORNIA OR ITS OFFICERS OR AGENTS SHALL NOT BE RESPONSIBLE FOR THE ACCURACY OR COMPLETENESS OF SCANNED COPIES OF THIS PLAN SHEET.

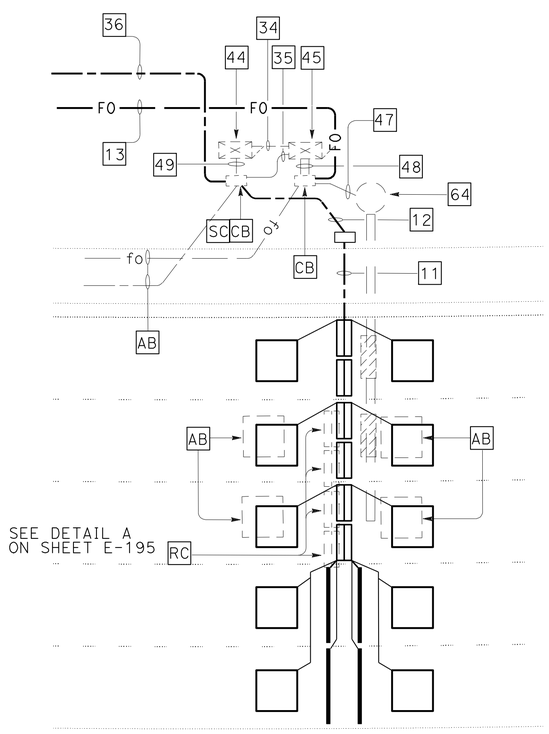

LOCATION 4

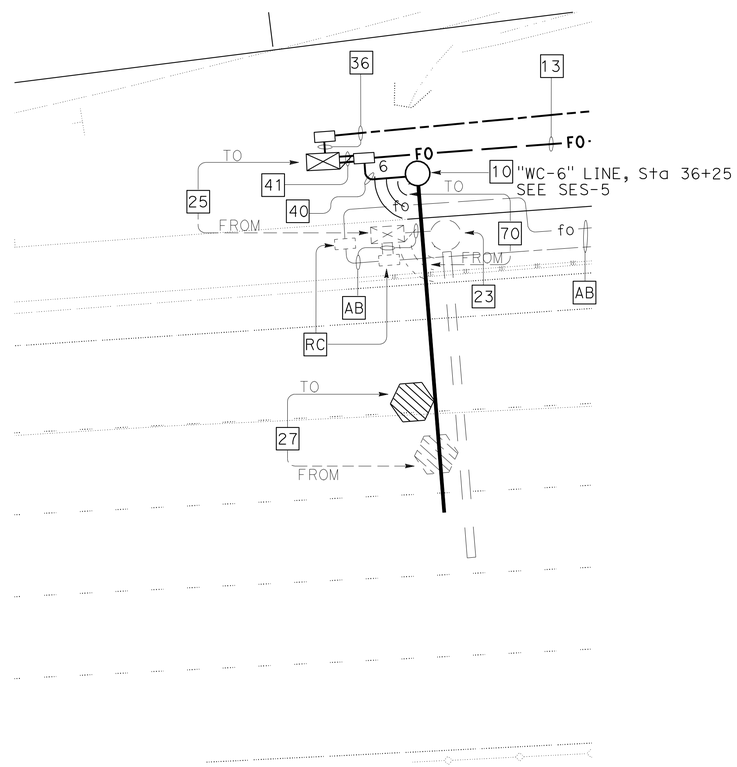

LOCATION 5

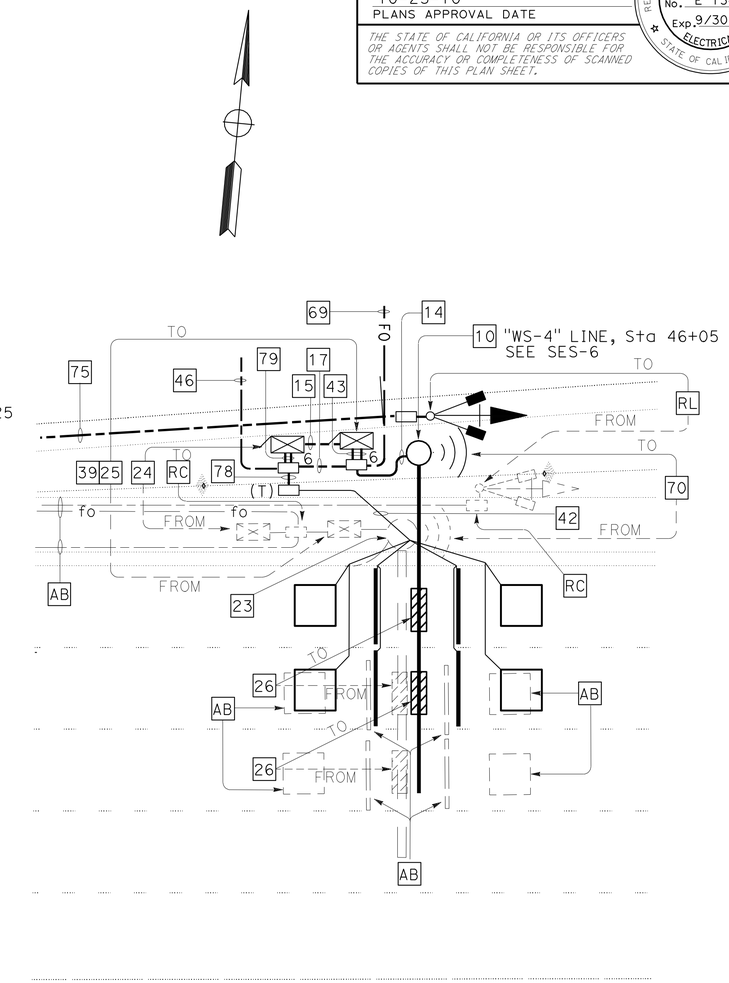

LOCATION 6

WEIGH STATION BYPASS SYSTEM
(DETAILS)
NO SCALE

FOR NOTES AND LEGEND, SEE SHEET E-183.
THIS PLAN IS ACCURATE FOR ELECTRICAL WORK ONLY.

E-196

REVISED BY	DATE REVISED

CALCULATED-DESIGNED BY: ANTHONY C FERNANDEZ
CHECKED BY: VANESSA TRUONG
FUNCTIONAL SUPERVISOR: SHAHRAM SHAHRIARI

STATE OF CALIFORNIA - DEPARTMENT OF TRANSPORTATION
Caltrans
ELECTRICAL DESIGN

LAST REVISION 00-00-00
DATE PLOTTED => 16-DEC-2010
TIME PLOTTED => 17:17

Dist	COUNTY	ROUTE	POST MILES TOTAL PROJECT	SHEET No.	TOTAL SHEETS
12	Ora	91	9.1/15.1	772	949

REGISTERED ELECTRICAL ENGINEER 08-12-10 DATE

10-25-10
PLANS APPROVAL DATE

REGISTERED PROFESSIONAL ENGINEER S.SHAHRIARI No. E 13485 Exp.9/30/10 ELECTRICAL STATE OF CALIFORNIA

THE STATE OF CALIFORNIA OR ITS OFFICERS OR AGENTS SHALL NOT BE RESPONSIBLE FOR THE ACCURACY OR COMPLETENESS OF SCANNED COPIES OF THIS PLAN SHEET.

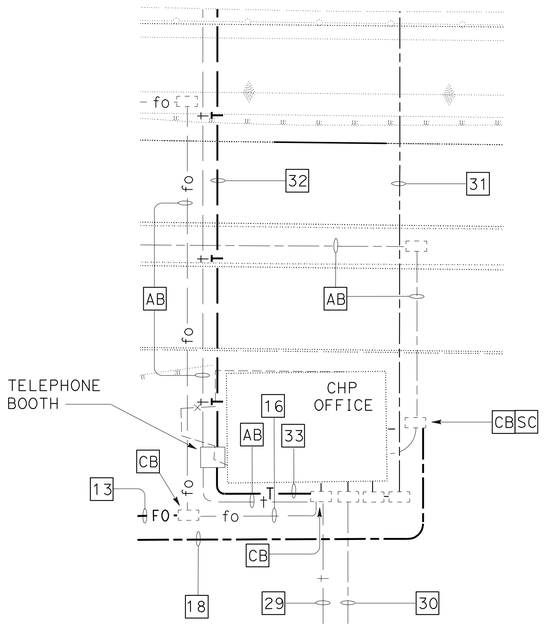

LOCATION 7

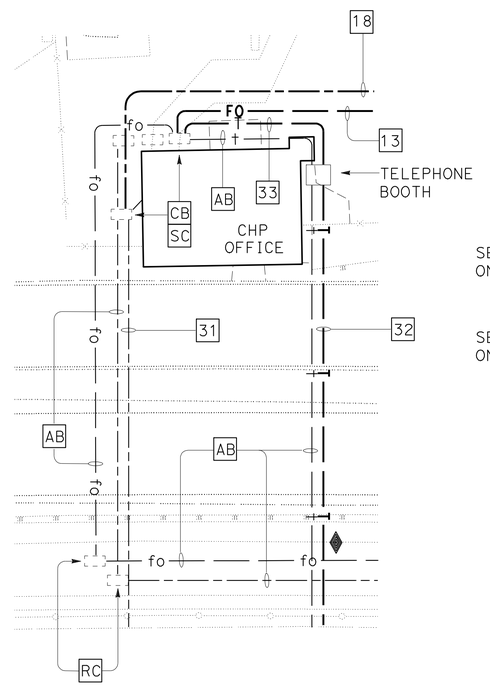

LOCATION 8

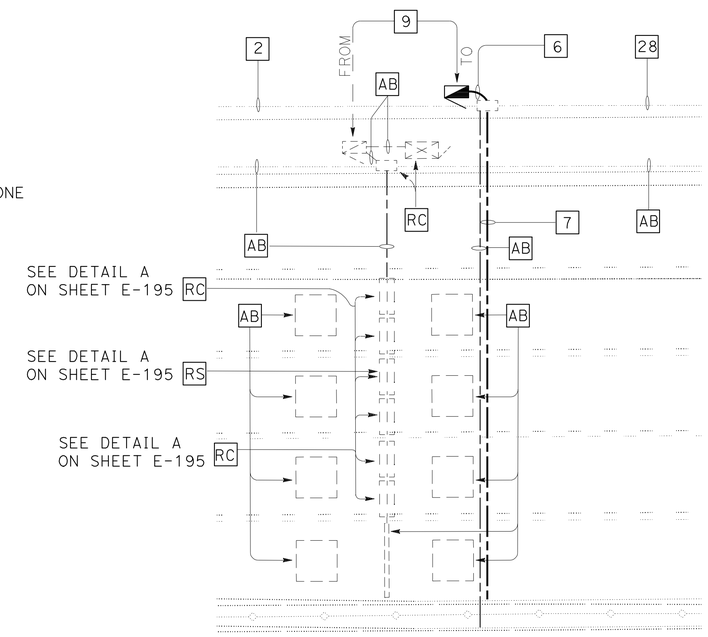

LOCATION 9

WEIGH STATION BYPASS SYSTEM
(DETAILS)
NO SCALE

E-197

FOR NOTES AND LEGEND, SEE SHEET E-183.
THIS PLAN IS ACCURATE FOR ELECTRICAL WORK ONLY.

STATE OF CALIFORNIA - DEPARTMENT OF TRANSPORTATION
Caltrans®
ELECTRICAL DESIGN

FUNCTIONAL SUPERVISOR: SHAHRAM SHAHRIARI
CALCULATED-DESIGNED BY: ANTHONY C FERNANDEZ
CHECKED BY: VANESSA TRUONG
REVISED BY
DATE REVISED

LAST REVISION 00-00-00
DATE PLOTTED => 16-DEC-2010
TIME PLOTTED => 17:18

Dist	COUNTY	ROUTE	POST MILES TOTAL PROJECT	SHEET No.	TOTAL SHEETS
12	Ora	91	9.1/15.1	773	949

REGISTERED ELECTRICAL ENGINEER 10-21-10 DATE

10-25-10
PLANS APPROVAL DATE

REGISTERED PROFESSIONAL ENGINEER S. SHAHRIARI No. E 13485 Exp. 9/30/12 ELECTRICAL STATE OF CALIFORNIA

THE STATE OF CALIFORNIA OR ITS OFFICERS OR AGENTS SHALL NOT BE RESPONSIBLE FOR THE ACCURACY OR COMPLETENESS OF SCANNED COPIES OF THIS PLAN SHEET.

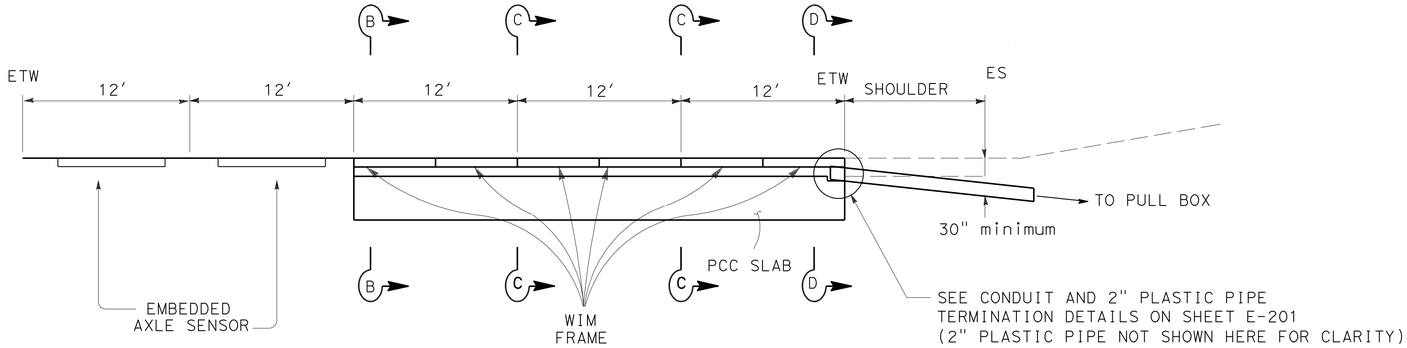

SECTION A-A

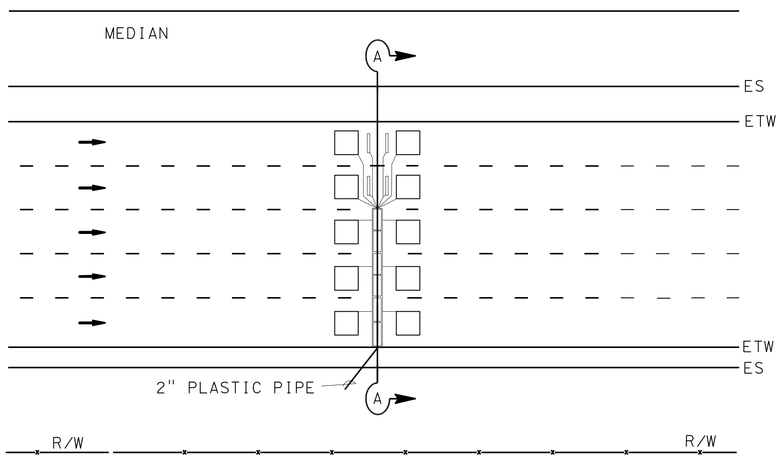

TYPICAL INSTALLATION DETAIL

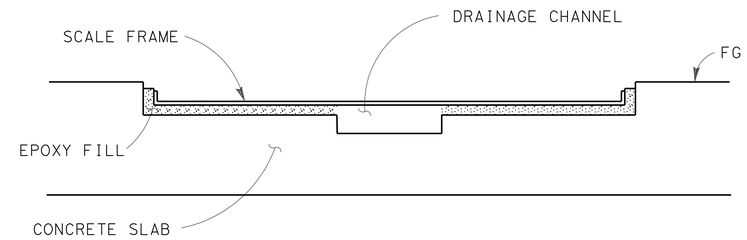

SECTION B-B

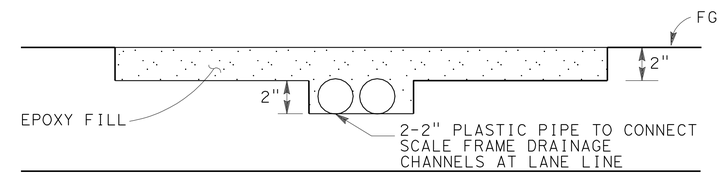

SECTION C-C

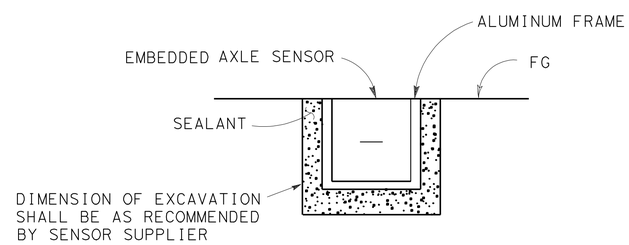

SECTION F-F

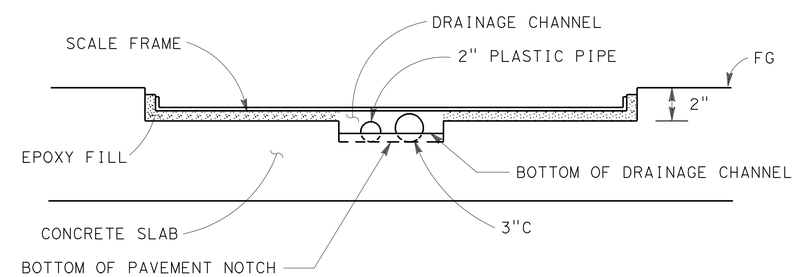

SECTION D-D

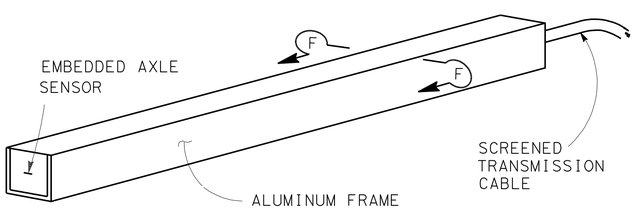

TYPICAL EMBEDDED AXLE SENSOR

NOTES: (THIS SHEET ONLY)

1. THE EXACT LOCATION OF THE WIM SCALES WILL BE DETERMINED BY THE ENGINEER. THE ENGINEER WILL VERIFY THE FINAL LOCATION OF THE WIM SCALES PRIOR TO THE CONTRACTOR PERFORMING ANY WORK IN THE TRAVELED WAY OR SHOULDERS.
2. EDGE DRAIN OUTLET SHALL CONFORM TO TYPE C OUTLET WITH OUTLET COVER AS SHOWN ON STANDARD PLAN D99B EXCEPT THAT PIPE SHALL BE 2".
3. WIM SCALE SHALL MATCH EXISTING ROADWAY PROFILE AND CROSS-SLOPE.
4. EXACT CONFIGURATION AND INSTALLATION PROCEDURES OF SCALE FRAME AND LOOP DETECTORS SHALL CONFORM TO THE REQUIREMENTS OF THE WIM SUPPLIER.

WEIGH STATION BYPASS SYSTEM
(DETAILS)
NO SCALE

THIS PLAN IS ACCURATE FOR ELECTRICAL WORK ONLY.

E-198

STATE OF CALIFORNIA - DEPARTMENT OF TRANSPORTATION
Caltrans® ELECTRICAL DESIGN

FUNCTIONAL SUPERVISOR: SHAHRAM SHAHRIARI
CALCULATED-DESIGNED BY: ANTHONY C FERNANDEZ
CHECKED BY: VANESSA TRUONG
REVISED BY / DATE REVISED

LAST REVISION 00-00-00 | DATE PLOTTED => 16-DEC-2010 | TIME PLOTTED => 17:18

Dist	COUNTY	ROUTE	POST MILES TOTAL PROJECT	SHEET No.	TOTAL SHEETS
12	Ora	91	9.1/15.1	774	949

10-21-10
REGISTERED ELECTRICAL ENGINEER DATE

10-25-10
PLANS APPROVAL DATE

REGISTERED PROFESSIONAL ENGINEER S. SHAHRIARI No. E 13485 Exp. 9/30/12 ELECTRICAL STATE OF CALIFORNIA

THE STATE OF CALIFORNIA OR ITS OFFICERS OR AGENTS SHALL NOT BE RESPONSIBLE FOR THE ACCURACY OR COMPLETENESS OF SCANNED COPIES OF THIS PLAN SHEET.

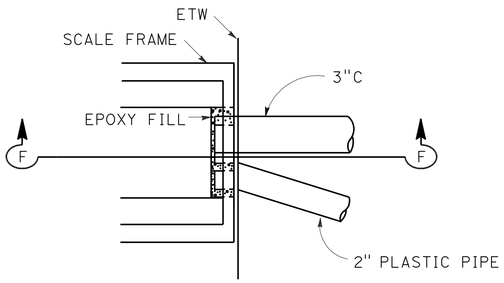

PLAN VIEW

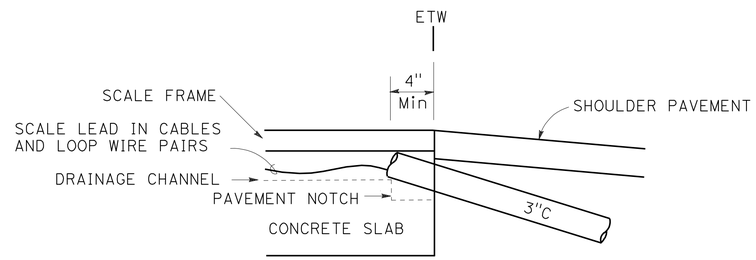

SECTION F-F

CONDUIT AND 2" PLASTIC PIPE TERMINATION DETAILS

NOTES:

1. NON-METALLIC BUSHING SHALL BE USED AT ROADWAY END OF CONDUIT.
2. TAPE WIRE 3" EACH SIDE OF ROADWAY BUSHING.
3. INSTALL DUCT SEAL COMPOUND TO EACH END OF ROADWAY CONDUIT. BEFORE INSTALLING EPOXY, OR OTHER APPROVED MATERIALS.
4. END OF 3"C AND 2" PLASTIC PIPE RESTS ON BOTTOM OF PAVEMENT NOTCH; 3"C BOTTOM MUST BE ABOVE 2" PLASTIC PIPE BOTTOM.

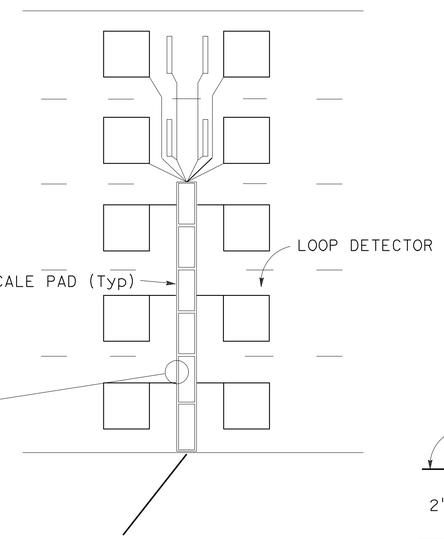

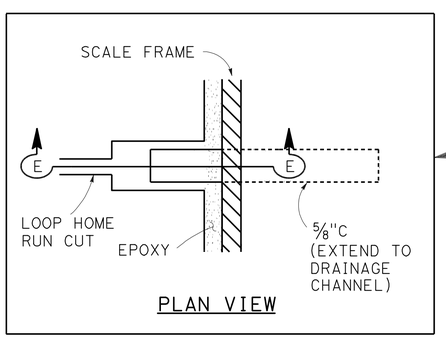

PLAN VIEW

LOOP HOME RUN DETAILS

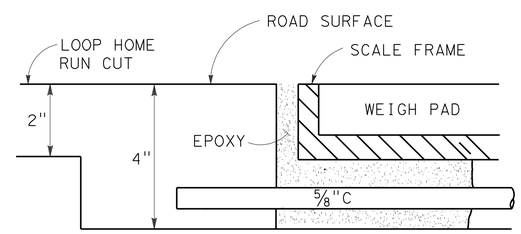

SECTION E-E

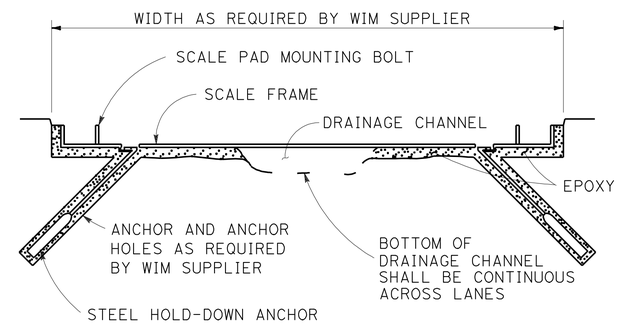

SCALE FRAME INSTALLATION DETAIL
(TYPICAL)

WEIGH STATION BYPASS SYSTEM
(DETAILS)
NO SCALE

THIS PLAN IS ACCURATE FOR ELECTRICAL WORK ONLY.

E-199

STATE OF CALIFORNIA - DEPARTMENT OF TRANSPORTATION
Caltrans® ELECTRICAL DESIGN

FUNCTIONAL SUPERVISOR: SHAHRAM SHAHRIARI
CALCULATED-DESIGNED BY: ANTHONY C FERNANDEZ
CHECKED BY: VANESSA TRUONG
REVISED BY
DATE REVISED

LAST REVISION 00-00-00 | DATE PLOTTED => 16-DEC-2010 | TIME PLOTTED => 17:18

Dist	COUNTY	ROUTE	POST MILES TOTAL PROJECT	SHEET No.	TOTAL SHEETS
12	Ora	91	9.1/15.1	775	949

REGISTERED ELECTRICAL ENGINEER 08-12-10 DATE

10-25-10
PLANS APPROVAL DATE

REGISTERED PROFESSIONAL ENGINEER S.SHAHRIARI No. E 13485 Exp.9/30/10 ELECTRICAL STATE OF CALIFORNIA

THE STATE OF CALIFORNIA OR ITS OFFICERS OR AGENTS SHALL NOT BE RESPONSIBLE FOR THE ACCURACY OR COMPLETENESS OF SCANNED COPIES OF THIS PLAN SHEET.

FOR COMPLETE RIGHT OF WAY AND ACCURATE ACCESS DATA, SEE RIGHT OF WAY MAPS AT DISTRICT OFFICE

NOTES: (SHEET E-200 AND E-201)

1. RL EXISTING EMS ON NEW POST.
2. AB EXISTING 1"C. REMOVE AND REUSE EXISTING 3#4 CONDUCTORS.
3. INSTALL 1½"C AND INSTALL EXISTING 3#4.
4. RC ALL EXISTING PULL BOXES.

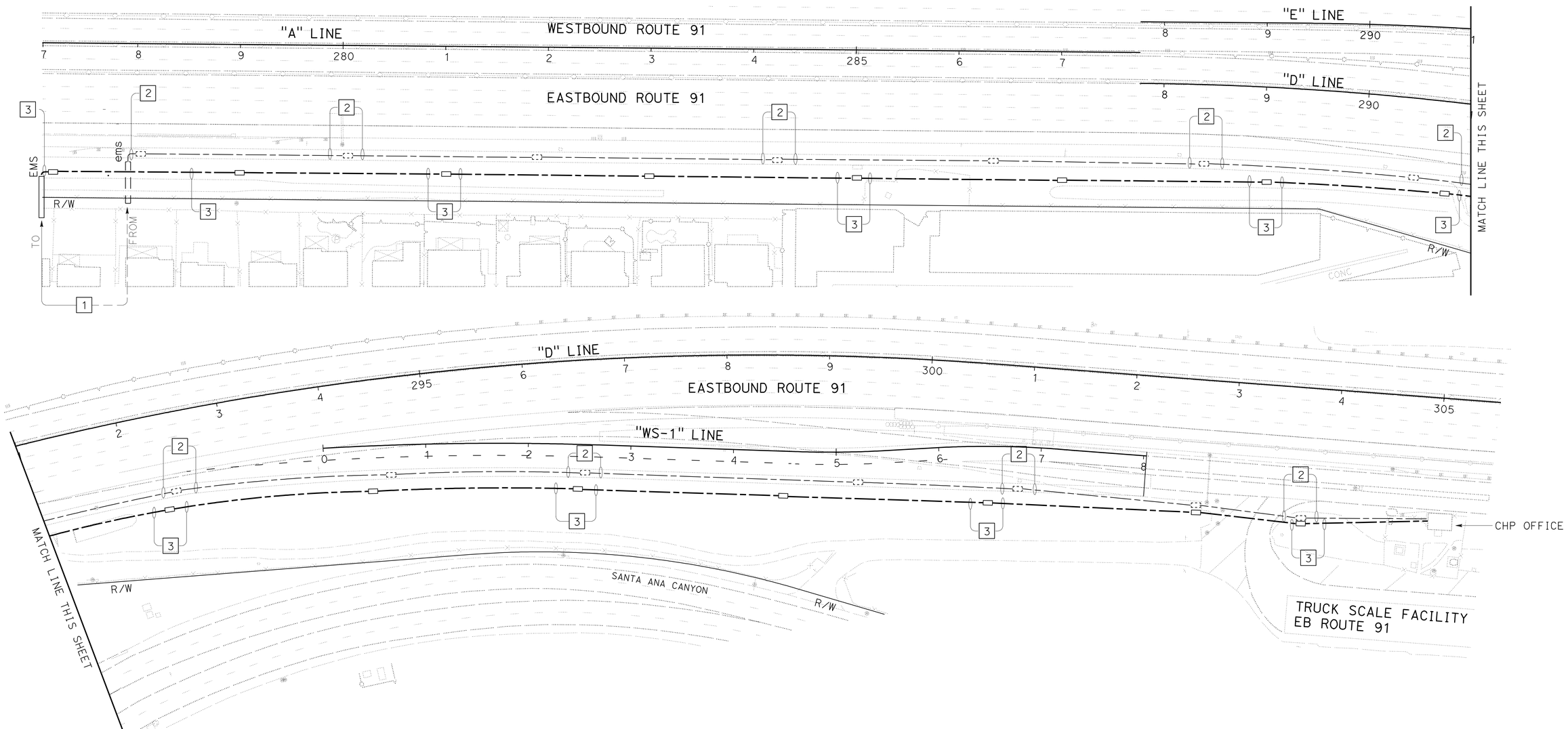

EXTINGUISHABLE MESSAGE SIGN (LOCATION 1)

SCALE: 1" = 50'

E-200

THIS PLAN IS ACCURATE FOR ELECTRICAL WORK ONLY.

STATE OF CALIFORNIA - DEPARTMENT OF TRANSPORTATION
Caltrans
ELECTRICAL DESIGN

FUNCTIONAL SUPERVISOR: SHAHRAM SHAHRIARI
CALCULATED-DESIGNED BY: ANTHONY C FERNANDEZ
CHECKED BY: BARJESH KUMAR
REVISED BY
DATE REVISED

LAST REVISION 00-00-00
DATE PLOTTED => 16-DEC-2010
TIME PLOTTED => 17:18

BORDER LAST REVISED 4/11/2008
RELATIVE BORDER SCALE IS IN INCHES 0 1 2 3
USERNAME => trlenard
DGN FILE => c0G330ua203.dgn
CU 12390
EA 0G3301

FOR COMPLETE RIGHT OF WAY AND ACCURATE ACCESS DATA, SEE RIGHT OF WAY MAPS AT DISTRICT OFFICE

Dist	COUNTY	ROUTE	POST MILES TOTAL PROJECT	SHEET No.	TOTAL SHEETS
12	Ora	91	9.1/15.1	776	949

REGISTERED ELECTRICAL ENGINEER 08-12-10 DATE

10-25-10
PLANS APPROVAL DATE

REGISTERED PROFESSIONAL ENGINEER S.SHAHRIARI No. E 13485 Exp.9/30/10 ELECTRICAL STATE OF CALIFORNIA

THE STATE OF CALIFORNIA OR ITS OFFICERS OR AGENTS SHALL NOT BE RESPONSIBLE FOR THE ACCURACY OR COMPLETENESS OF SCANNED COPIES OF THIS PLAN SHEET.

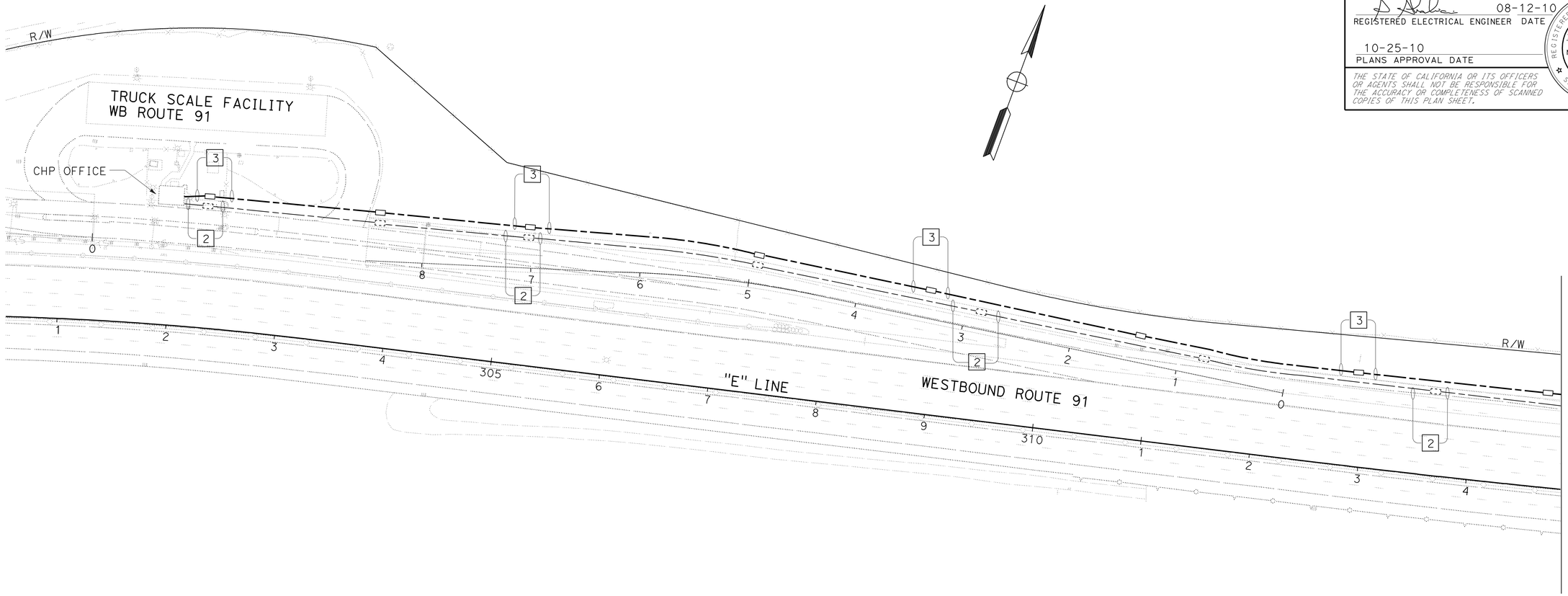

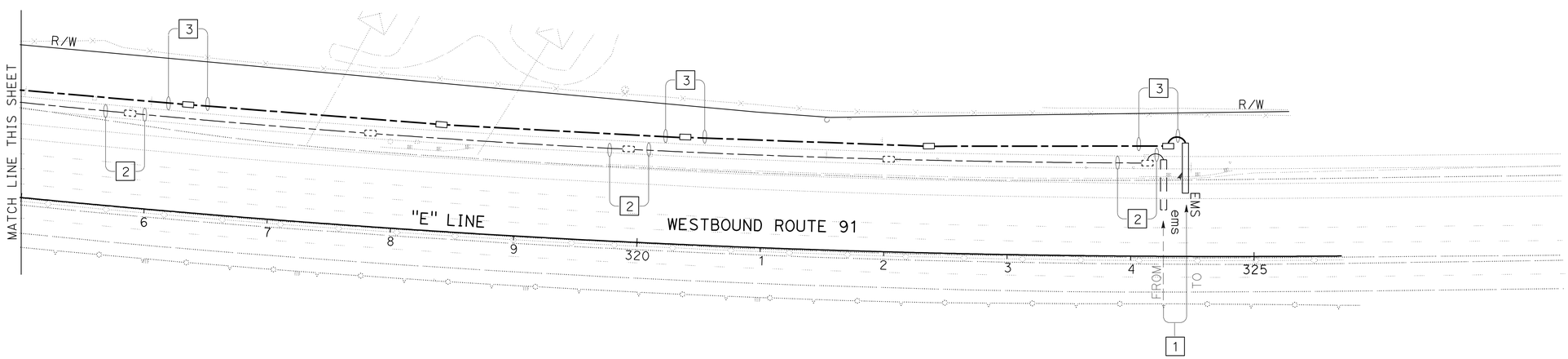

EXTINGUISHABLE MESSAGE SIGN (LOCATION 2)

SCALE: 1" = 50'

FOR NOTES, SEE SHEET E-200.
THIS PLAN IS ACCURATE FOR ELECTRICAL WORK ONLY.

E-201

STATE OF CALIFORNIA - DEPARTMENT OF TRANSPORTATION
Caltrans
ELECTRICAL DESIGN

FUNCTIONAL SUPERVISOR: SHAHRAM SHAHRIARI
CALCULATED-DESIGNED BY: BARJESH KUMAR
CHECKED BY: ANTHONY C FERNANDEZ
REVISED BY / DATE REVISED

LAST REVISION 00-00-00 | DATE PLOTTED => 16-DEC-2010 | TIME PLOTTED => 17:18

DIST	COUNTY	ROUTE	POST MILES TOTAL PROJECT	SHEET No	TOTAL SHEETS
12	Ora	91	9.1/15.1	777	949

Eliseo Lopez 5/27/10
REGISTERED CIVIL ENGINEER DATE

10-25-10
PLANS APPROVAL DATE

REGISTERED PROFESSIONAL ENGINEER ELISEO LOPEZ No. C72910 Exp. 12/31/10 CIVIL STATE OF CALIFORNIA

The State of California or its officers or agents shall not be responsible for the accuracy or completeness of electronic copies of this plan sheet.

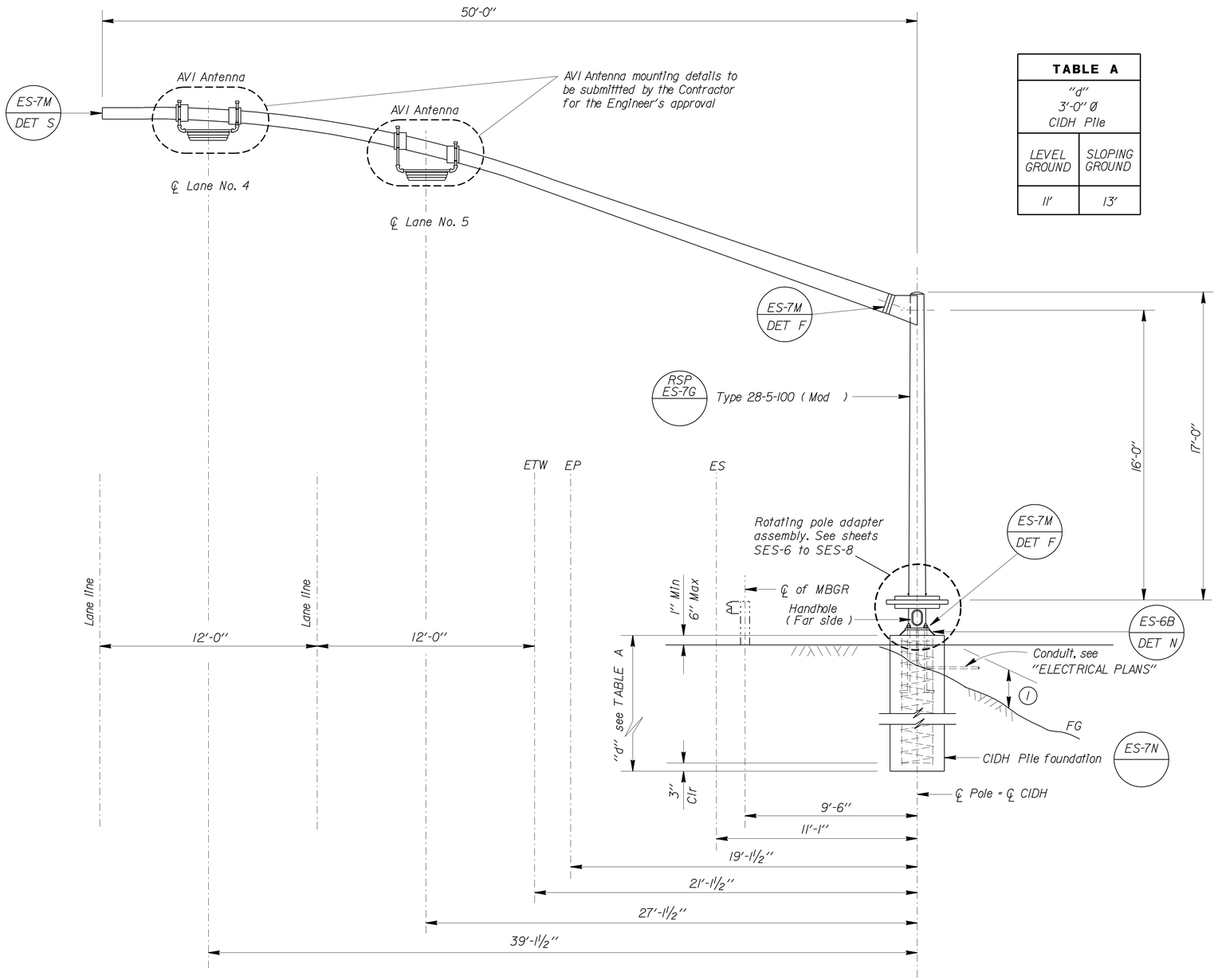

TABLE A	
"d" 3'-0" Ø CIDH Pile	
LEVEL GROUND	SLOPING GROUND
11'	13'

1 1'-3" Max for sloped finished grade

ELEVATION
TYPE 28-5-100 (MOD)
LOCATION 1

NO SCALE

ABBREVIATIONS:

AVI = Automatic Vehicle Identification

GENERAL NOTES:

SPECIFICATIONS

Design : AASHTO Standard Specifications for Structural Supports for Highway Signs, Luminaires and Traffic Signals, dated 2001.

LOADING

Wind Loading : 100 mph

UNIT STRESSES FOR TYPE 28-5-100 (Mod)

Structural Steel : fy = 48,000 psi tapered steel tube
fy = 36,000 psi unless otherwise noted

Anchor bolts = A307 unless otherwise noted

Reinforced Concrete : f'c = 3,600 psi
fy = 60,000 psi

NOTES:

1. For Type 28-5-100 (Mod) details not shown, see 2006 Revised Standard Plan ES-7G.
2. All steel shall be galvanized after fabrication.
3. During pole erection, the post shall be raked as necessary with the use of leveling nuts to provide a plumb pole axis.
4. The foundation shall be treated as level ground condition if the slope inclination is flatter than 4H : 1V.
5. For details not shown, see 2006 "STANDARD PLANS" and 2006 "REVISED STANDARD PLANS".
6. The Engineer to determine final location of rotating pole.
7. For mounting location of AVI Antennas, see "ELECTRICAL PLANS".
8. Foundation design is based on 2001 AASHTO article 13.6 Broms' approximate procedure assuming a cohesionless material. The angle of internal friction used is 30 degrees and unit weight of soil used is 120 lbs/ft³.

NOTE:
THE CONTRACTOR SHALL VERIFY ALL CONTROLLING FIELD DIMENSIONS BEFORE ORDERING OR FABRICATING ANY MATERIAL.

BRANCH CHIEF Jeffrey B Woody

	BY	CHECKED
DESIGN	ELISEO LOPEZ	K.C. LIU
DETAILS	R. YEE	K.C. LIU
QUANTITIES	ELISEO LOPEZ	K.C. LIU

STATE OF CALIFORNIA
DEPARTMENT OF TRANSPORTATION

DIVISION OF ENGINEERING SERVICES
DESIGN AND TECHNICAL SERVICES
SPECIAL DESIGNS BRANCH
A

BRIDGE NO.
POST MILE 9.1/15.1

WEIGH STATION BYPASS SYSTEM
ROTATING POLE LAYOUT

SES-1

(ENGLISH) SPECIAL DESIGNS BRANCH BORDER SHEET (REV. 7-1-09)

ORIGINAL SCALE IN INCHES FOR REDUCED PLANS 0 1 2 3

CU 12390
EA 0G3301

DISREGARD PRINTS BEARING EARLIER REVISION DATES

REVISION DATES 4/27/10 5/17/10 5/25/10 5/27/10

SHEET OF

FILE => 2010sd/12-0G3301/sesl.dgn ses-1.dgn

USERNAME => frostrk DATE PLOTTED => 16-DEC-2010 TIME PLOTTED => 16:53

DIST	COUNTY	ROUTE	POST MILES TOTAL PROJECT	SHEET No	TOTAL SHEETS
12	Ora	91	9.1/15.1	778	949

Eliseo Lopez 5/27/10
REGISTERED CIVIL ENGINEER DATE

10-25-10
PLANS APPROVAL DATE

REGISTERED PROFESSIONAL ENGINEER ELISEO LOPEZ No. C72910 Exp. 12/31/10 CIVIL STATE OF CALIFORNIA

The State of California or its officers or agents shall not be responsible for the accuracy or completeness of electronic copies of this plan sheet.

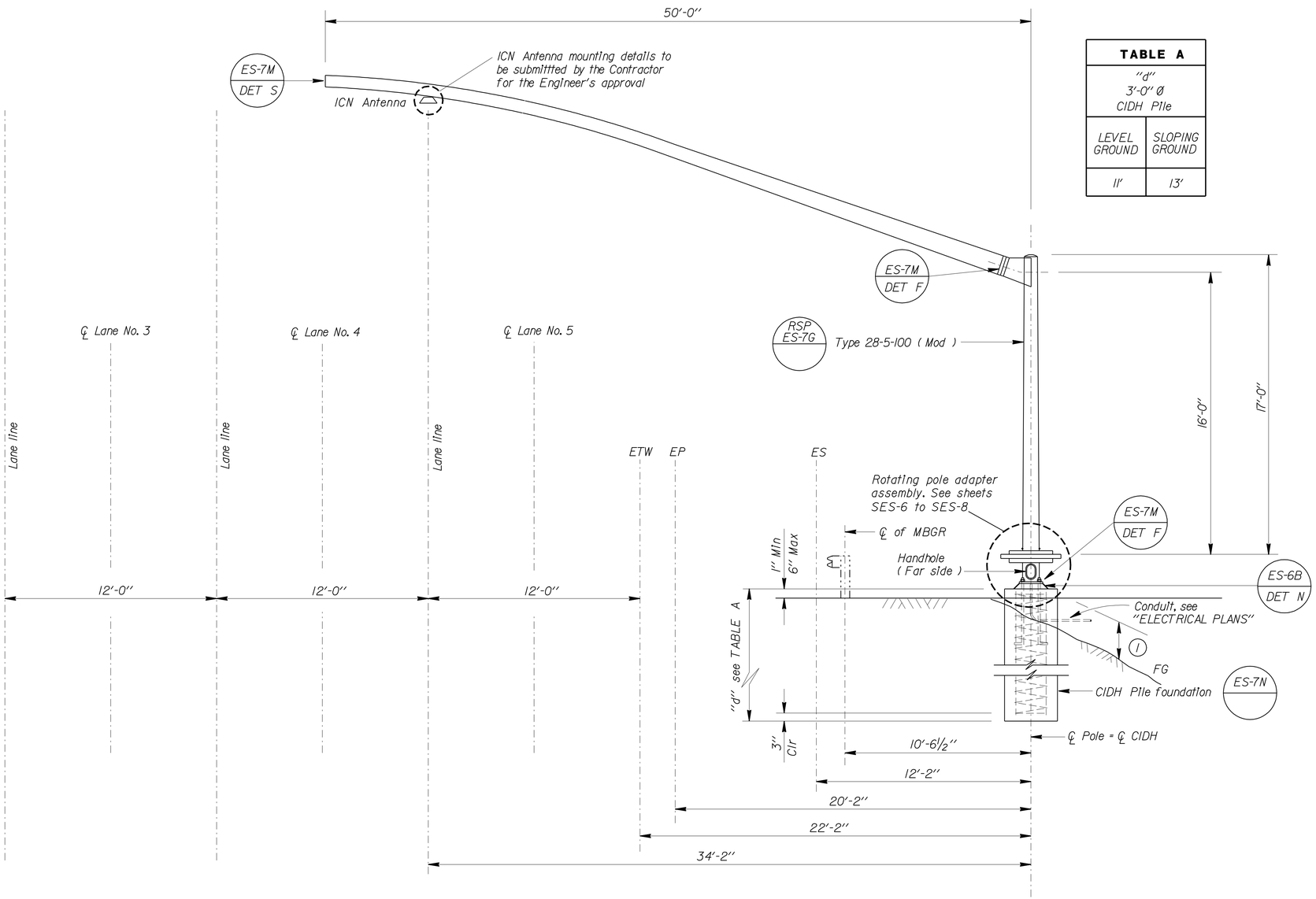

TABLE A	
"d" 3'-0" Ø CIDH Pile	
LEVEL GROUND	SLOPING GROUND
11'	13'

ABBREVIATIONS:

ICN = In Cab Notification

GENERAL NOTES:

SPECIFICATIONS

Design : AASHTO Standard Specifications for Structural Supports for Highway Signs, Luminaires and Traffic Signals, dated 2001.

LOADING

Wind Loading : 100 mph

UNIT STRESSES FOR TYPE 28-5-100 (MOD)

Structural Steel : fy = 48,000 psi tapered steel tube
fy = 36,000 psi unless otherwise noted

Anchor bolts = A307 unless otherwise noted

Reinforced Concrete : f'c = 3,600 psi
fy = 60,000 psi

NOTES:

1. For Type 28-5-100 (Mod) details not shown, see 2006 Revised Standard Plan ES-7G.
2. All steel shall be galvanized after fabrication.
3. During pole erection, the post shall be raked as necessary with the use of leveling nuts to provide a plumb pole axis.
4. The foundation shall be treated as level ground condition if the slope inclination is flatter than 4H : 1V.
5. For details not shown, see 2006 "STANDARD PLANS" and 2006 "REVISED STANDARD PLANS".
6. The Engineer to determine final location of rotating pole.
7. For mounting location of ICN Antenna, see "ELECTRICAL PLANS".
8. Foundation design is based on 2001 AASHTO article 13.6 Broms' approximate procedure assuming a cohesionless material. The angle of internal friction used is 30 degrees and unit weight of soil used is 120 lbs/ft³.

(1) 1'-3" Max for sloped finished grade

ELEVATION
TYPE 28-5-100 (MOD)
LOCATION 2

NOTE:
THE CONTRACTOR SHALL VERIFY ALL CONTROLLING FIELD DIMENSIONS BEFORE ORDERING OR FABRICATING ANY MATERIAL.

NO SCALE

BRANCH CHIEF Jeffrey B Woody

	BY	CHECKED
DESIGN	ELISEO LOPEZ	K.C. LIU
DETAILS	R. YEE	K.C. LIU
QUANTITIES	ELISEO LOPEZ	K.C. LIU

STATE OF CALIFORNIA
DEPARTMENT OF TRANSPORTATION

DIVISION OF ENGINEERING SERVICES
DESIGN AND TECHNICAL SERVICES
SPECIAL DESIGNS BRANCH A

BRIDGE NO.
POST MILE 9.1/15.1

WEIGH STATION BYPASS SYSTEM
ROTATING POLE LAYOUT

SES-2

(ENGLISH) SPECIAL DESIGNS BRANCH BORDER SHEET (REV. 7-1-09)

ORIGINAL SCALE IN INCHES FOR REDUCED PLANS 0 1 2 3

CU 12390
EA 0G3301

DISREGARD PRINTS BEARING EARLIER REVISION DATES

REVISION DATES 4/27/10 5/21/10 5/25/10 5/27/10

SHEET OF

FILE => 2010sd/12-0G3301/ses2.dgn ses-2.dgn

USERNAME => trstrk DATE PLOTTED => 16-DEC-2010 TIME PLOTTED => 17:00

DIST	COUNTY	ROUTE	POST MILES TOTAL PROJECT	SHEET No	TOTAL SHEETS
12	Ora	91	9.1/15.1	779	949

Eliseo Lopez 5/27/10
REGISTERED CIVIL ENGINEER DATE

10-25-10
PLANS APPROVAL DATE

REGISTERED PROFESSIONAL ENGINEER ELISEO LOPEZ No. C72910 Exp. 12/31/10 CIVIL STATE OF CALIFORNIA

The State of California or its officers or agents shall not be responsible for the accuracy or completeness of electronic copies of this plan sheet.

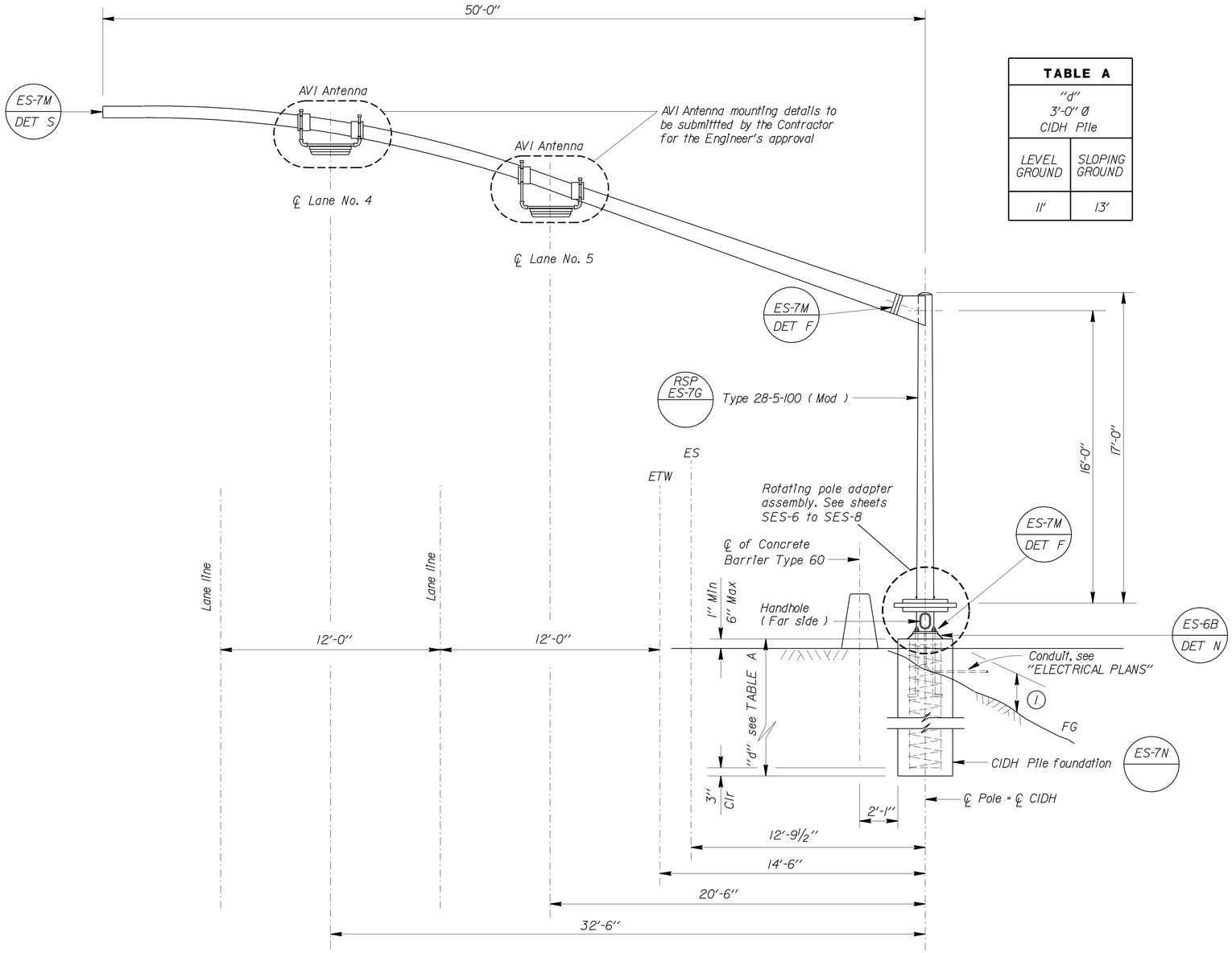

TABLE A	
"d" 3'-0" Ø CIDH Pile	
LEVEL GROUND	SLOPING GROUND
11'	13'

1 1'-3" Max for sloped finished grade

ELEVATION
TYPE 28-5-100 (MOD)
LOCATION 3

NOTE:
THE CONTRACTOR SHALL VERIFY ALL CONTROLLING FIELD DIMENSIONS BEFORE ORDERING OR FABRICATING ANY MATERIAL.

ABBREVIATIONS:

AVI = Automatic Vehicle Identification

GENERAL NOTES:

SPECIFICATIONS

Design : AASHTO Standard Specifications for Structural Supports for Highway Signs, Luminaires and Traffic Signals, dated 2001.

LOADING

Wind Loading : 100 mph

UNIT STRESSES FOR TYPE 28-5-100 (MOD)

Structural Steel : fy = 48,000 psi tapered steel tube
fy = 36,000 psi unless otherwise noted

Anchor bolts = A307 unless otherwise noted

Reinforced Concrete : f'c = 3,600 psi
fy = 60,000 psi

NOTES:

1. For Type 28-5-100 (Mod) details not shown, see 2006 Revised Standard Plan ES-7G.
2. All steel shall be galvanized after fabrication.
3. During pole erection, the post shall be raked as necessary with the use of leveling nuts to provide a plumb pole axis.
4. The foundation shall be treated as level ground condition if the slope inclination is flatter than 4H : 1V.
5. For details not shown, see 2006 "STANDARD PLANS" and 2006 "REVISED STANDARD PLANS".
6. The Engineer to determine final location of rotating pole.
7. For mounting location of AVI Antennas, see "ELECTRICAL PLANS".
8. Foundation design is based on 2001 AASHTO article 13.6 Broms' approximate procedure assuming a cohesionless material. The angle of internal friction used is 30 degrees and unit weight of soil used is 120 lbs/ft³.

NO SCALE

BRANCH CHIEF Jeffrey B. Woody

	BY	CHECKED
DESIGN	ELISEO LOPEZ	K.C. LIU
DETAILS	R. YEE	K.C. LIU
QUANTITIES	ELISEO LOPEZ	K.C. LIU

STATE OF CALIFORNIA
DEPARTMENT OF TRANSPORTATION

DIVISION OF ENGINEERING SERVICES
DESIGN AND TECHNICAL SERVICES
SPECIAL DESIGNS BRANCH
A

BRIDGE NO.
POST MILE 9.1/15.1

WEIGH STATION BYPASS SYSTEM
ROTATING POLE LAYOUT

SES-3

(ENGLISH) SPECIAL DESIGNS BRANCH BORDER SHEET (REV. 7-1-09)

ORIGINAL SCALE IN INCHES FOR REDUCED PLANS 0 1 2 3

CU 12390
EA 0G3301

DISREGARD PRINTS BEARING EARLIER REVISION DATES

REVISION DATES: 4/13/10 5/11/10 5/25/10 5/27/10

SHEET OF

FILE => 2010sd/12-0G3301/ses3.dgn ses-3.dgn

USERNAME => trstrk DATE PLOTTED => 16-DEC-2010 TIME PLOTTED => 17:00

DIST	COUNTY	ROUTE	POST MILES TOTAL PROJECT	SHEET No	TOTAL SHEETS
12	Ora	91	9.1/15.1	780	949

Eliseo Lopez 5/27/10
REGISTERED CIVIL ENGINEER DATE

10-25-10
PLANS APPROVAL DATE

REGISTERED PROFESSIONAL ENGINEER ELISEO LOPEZ No. C72910 Exp. 12/31/10 CIVIL STATE OF CALIFORNIA

The State of California or its officers or agents shall not be responsible for the accuracy or completeness of electronic copies of this plan sheet.

TABLE A	
"d" 3'-0" Ø CIDH Pile	
LEVEL GROUND	SLOPING GROUND
11'	13'

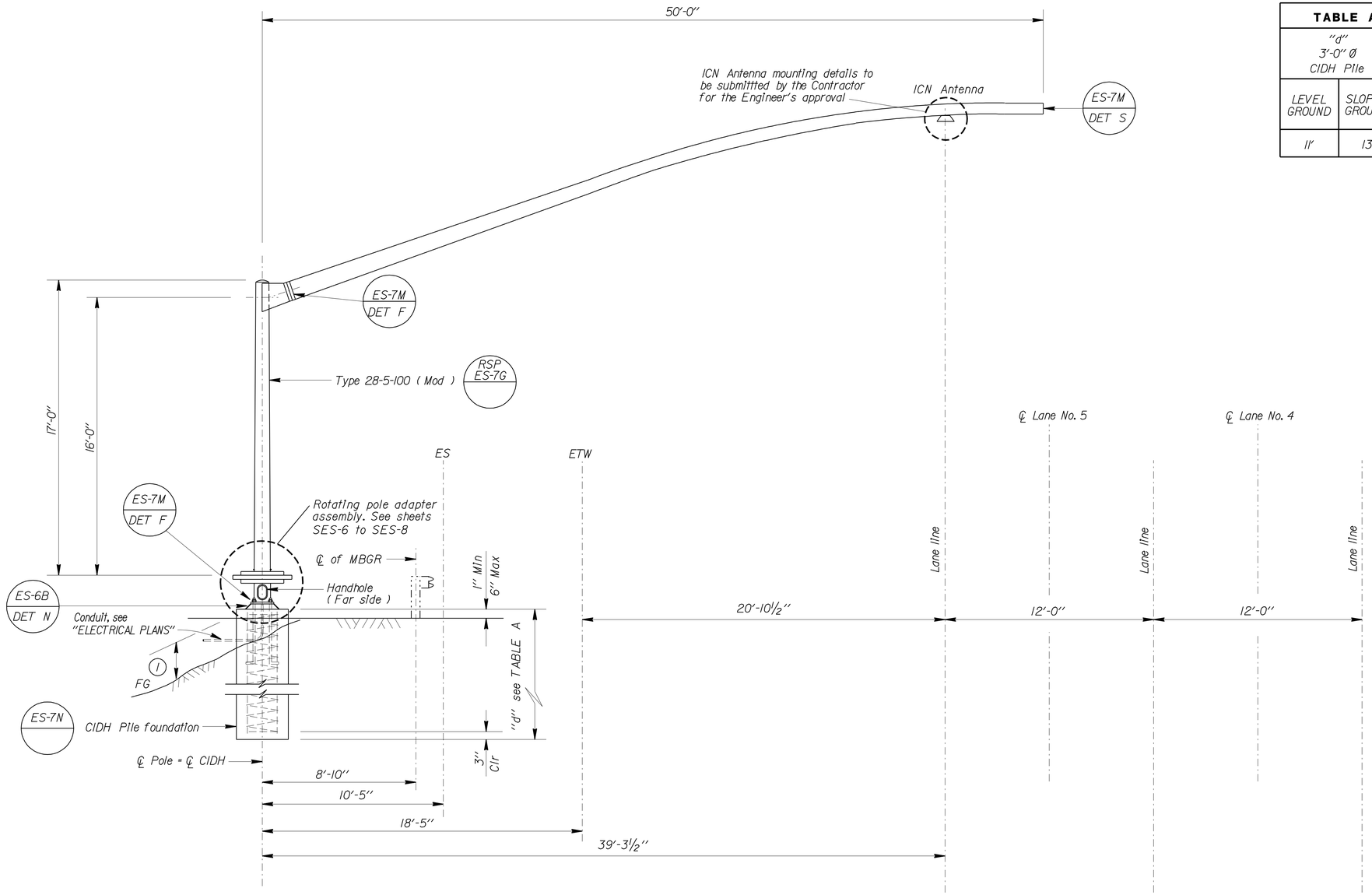

1 1'-3" Max for sloped finished grade

ELEVATION
TYPE 28-5-100 (MOD)
LOCATION 5

ABBREVIATIONS:

ICN = In Cab Notification

GENERAL NOTES:

SPECIFICATIONS

Design : AASHTO Standard Specifications for Structural Supports for Highway Signs, Luminaires and Traffic Signals, dated 2001.

LOADING

Wind Loading : 100 mph

UNIT STRESSES FOR TYPE 28-5-100 (MOD)

Structural Steel : fy = 48,000 psi tapered steel tube
fy = 36,000 psi unless otherwise noted

Anchor bolts = A307 unless otherwise noted

Reinforced Concrete : f'c = 3,600 psi
fy = 60,000 psi

NOTES:

1. For Type 28-5-100 (Mod) details not shown, see 2006 Revised Standard Plan ES-7G.
2. All steel shall be galvanized after fabrication.
3. During pole erection, the post shall be raked as necessary with the use of leveling nuts to provide a plumb pole axis.
4. The foundation shall be treated as level ground condition if the slope inclination is flatter than 4H : 1V.
5. For details not shown, see 2006 "STANDARD PLANS" and 2006 "REVISED STANDARD PLANS".
6. The Engineer to determine final location of rotating pole.
7. For mounting location of ICN Antenna, see "ELECTRICAL PLANS".
8. Foundation design is based on 2001 AASHTO article 13.6 Broms' approximate procedure assuming a cohesionless material. The angle of internal friction used is 30 degrees and unit weight of soil used is 120 lbs/ft³.

NOTE:
THE CONTRACTOR SHALL VERIFY ALL CONTROLLING FIELD DIMENSIONS BEFORE ORDERING OR FABRICATING ANY MATERIAL.

NO SCALE

BRANCH CHIEF Jeffrey B Woody

	BY	CHECKED
DESIGN	ELISEO LOPEZ	K.C. LIU
DETAILS	R. YEE	K.C. LIU
QUANTITIES	ELISEO LOPEZ	K.C. LIU

STATE OF CALIFORNIA
DEPARTMENT OF TRANSPORTATION

DIVISION OF ENGINEERING SERVICES
DESIGN AND TECHNICAL SERVICES
SPECIAL DESIGNS BRANCH A

BRIDGE NO.
POST MILE 9.1/15.1

WEIGH STATION BYPASS SYSTEM
ROTATING POLE LAYOUT

SES-4

SHEET OF

(ENGLISH) SPECIAL DESIGNS BRANCH BORDER SHEET (REV. 7-1-09)

ORIGINAL SCALE IN INCHES FOR REDUCED PLANS 0 1 2 3

CU 12390
EA 0G3301

DISREGARD PRINTS BEARING EARLIER REVISION DATES

REVISION DATES 4/19/10 5/13/10 5/25/10 5/27/10

FILE => 2010sd/12-0G3301/ses4.dgn ses-4.dgn

USERNAME => trstrk DATE PLOTTED => 16-DEC-2010 TIME PLOTTED => 17:00

DIST	COUNTY	ROUTE	POST MILES TOTAL PROJECT	SHEET No	TOTAL SHEETS
12	Ora	91	9.1/15.1	781	949

Eliseo Lopez 5/27/10
REGISTERED CIVIL ENGINEER DATE

10-25-10
PLANS APPROVAL DATE

REGISTERED PROFESSIONAL ENGINEER ELISEO LOPEZ No. C72910 Exp. 12/31/10 CIVIL STATE OF CALIFORNIA

The State of California or its officers or agents shall not be responsible for the accuracy or completeness of electronic copies of this plan sheet.

TABLE A	
"d" 3'-0" Ø CIDH Pile	
LEVEL GROUND	SLOPING GROUND
11'	13'

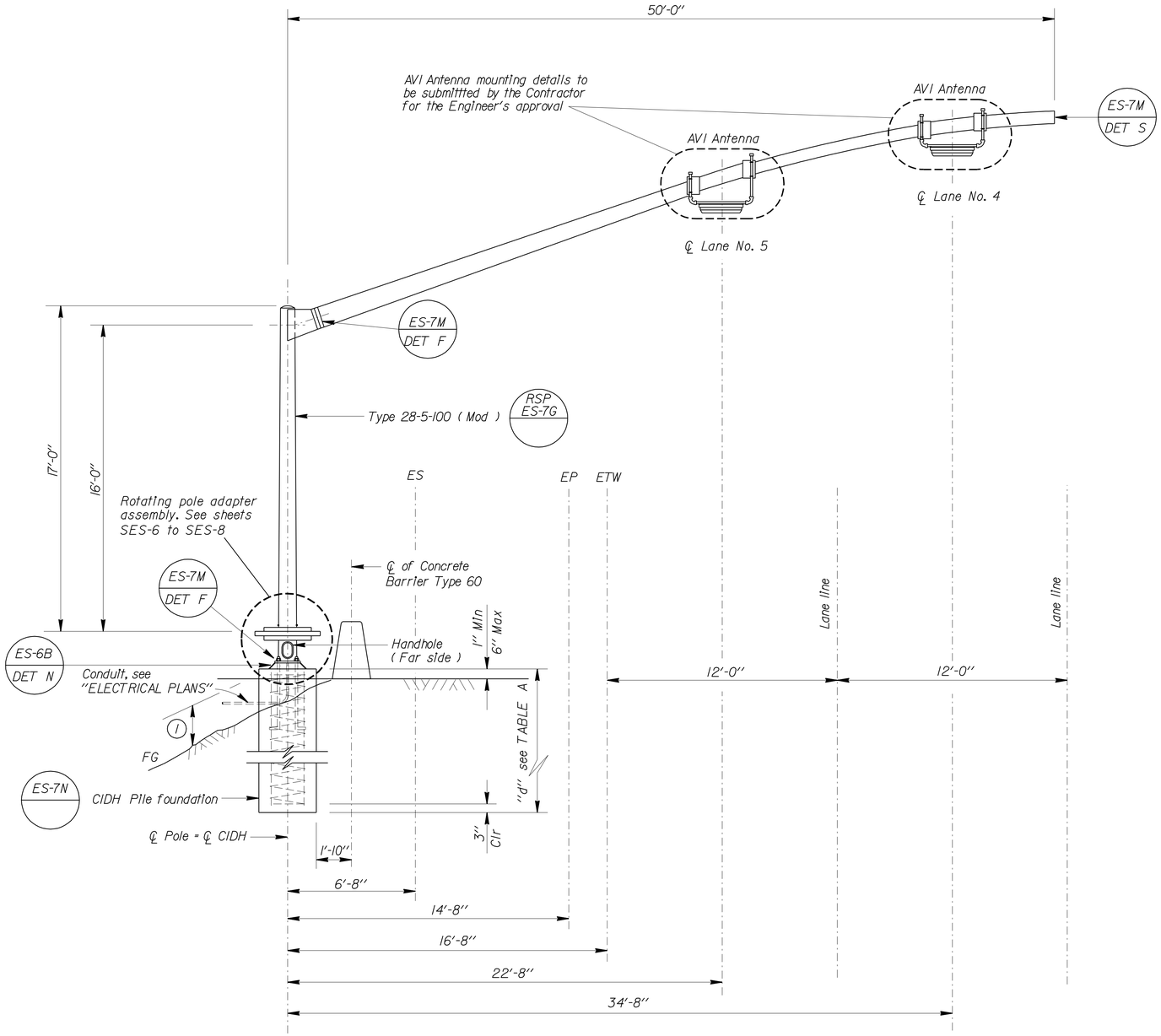

1 1'-3" Max for sloped finished grade

ELEVATION
TYPE 28-5-100 (MOD)
LOCATION 6

NOTE:
THE CONTRACTOR SHALL VERIFY ALL CONTROLLING FIELD DIMENSIONS BEFORE ORDERING OR FABRICATING ANY MATERIAL.

ABBREVIATIONS:

AVI = Automatic Vehicle Identification

GENERAL NOTES:

SPECIFICATIONS

Design : AASHTO Standard Specifications for Structural Supports for Highway Signs, Luminaires and Traffic Signals, dated 2001.

LOADING

Wind Loading : 100 mph

UNIT STRESSES FOR TYPE 28-5-100 (MOD)

Structural Steel : fy = 48,000 psi tapered steel tube
fy = 36,000 psi unless otherwise noted

Anchor bolts = A307 unless otherwise noted

Reinforced Concrete : f'c = 3,600 psi
fy = 60,000 psi

NOTES:

1. For Type 28-5-100 (Mod) details not shown, see 2006 Revised Standard Plan ES-7G.
2. All steel shall be galvanized after fabrication.
3. During pole erection, the post shall be raked as necessary with the use of leveling nuts to provide a plumb pole axis.
4. The foundation shall be treated as level ground condition if the slope inclination is flatter than 4H : 1V.
5. For details not shown, see 2006 "STANDARD PLANS" and 2006 "REVISED STANDARD PLANS".
6. The Engineer to determine final location of rotating pole.
7. For mounting location of AVI Antennas, see "ELECTRICAL PLANS".
8. Foundation design is based on 2001 AASHTO article 13.6 Broms' approximate procedure assuming a cohesionless material. The angle of internal friction used is 30 degrees and unit weight of soil used is 120 lbs/ft³.

NO SCALE

BRANCH CHIEF Jeffrey B Woody

	BY	CHECKED
DESIGN	ELISEO LOPEZ	K.C. LIU
DETAILS	R. YEE	K.C. LIU
QUANTITIES	ELISEO LOPEZ	K.C. LIU

STATE OF CALIFORNIA
DEPARTMENT OF TRANSPORTATION

DIVISION OF ENGINEERING SERVICES
DESIGN AND TECHNICAL SERVICES
SPECIAL DESIGNS BRANCH A

BRIDGE NO.
POST MILE 9.1/15.1

WEIGH STATION BYPASS SYSTEM
ROTATING POLE LAYOUT

SES-5

(ENGLISH) SPECIAL DESIGNS BRANCH BORDER SHEET (REV. 7-1-09)

ORIGINAL SCALE IN INCHES FOR REDUCED PLANS 0 1 2 3

CU 12390
EA 0G3301

DISREGARD PRINTS BEARING EARLIER REVISION DATES

REVISION DATES: 4/20/10 5/4/10 5/25/10 5/27/10

SHEET OF

FILE => 2010sd/12-0G3301/ses5.dgn ses-5.dgn

USERNAME => trstrk DATE PLOTTED => 16-DEC-2010 TIME PLOTTED => 17:00

DIST	COUNTY	ROUTE	POST MILES TOTAL PROJECT	SHEET No	TOTAL SHEETS
12	Ora	91	9.1/15.1	782	949

Eliseo Lopez 5/27/10
REGISTERED CIVIL ENGINEER DATE

10-25-10
PLANS APPROVAL DATE

REGISTERED PROFESSIONAL ENGINEER ELISEO LOPEZ No. C72910 Exp. 12/31/10 CIVIL STATE OF CALIFORNIA

The State of California or its officers or agents shall not be responsible for the accuracy or completeness of electronic copies of this plan sheet.

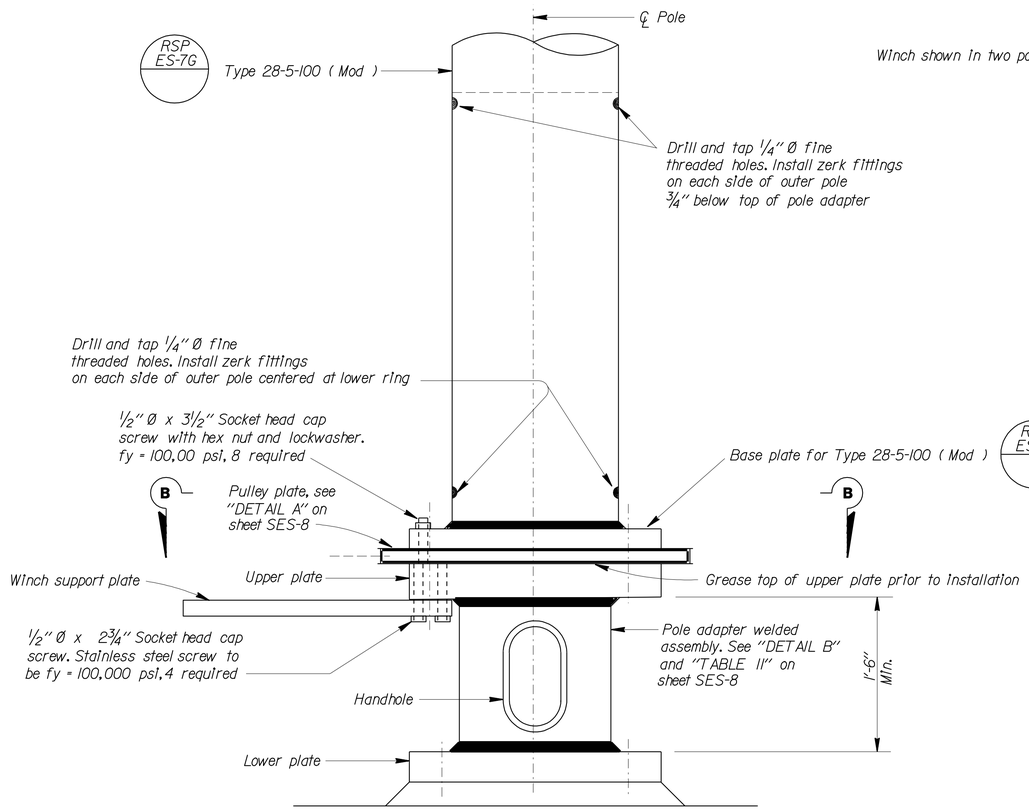

ROTATING POLE ASSEMBLY

(Some fasteners not shown)

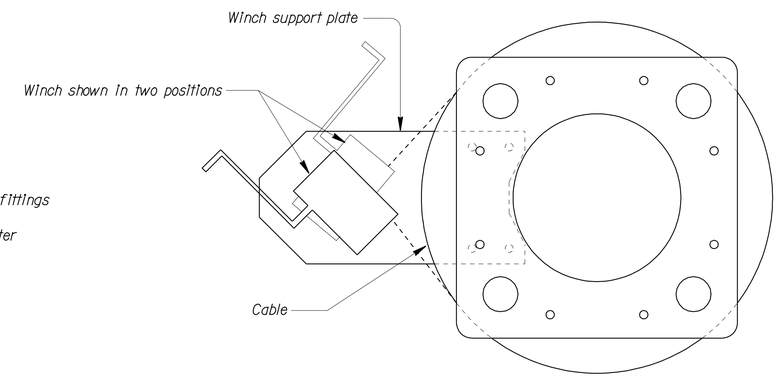

SECTION B-B

Showing winch and winch support plate position

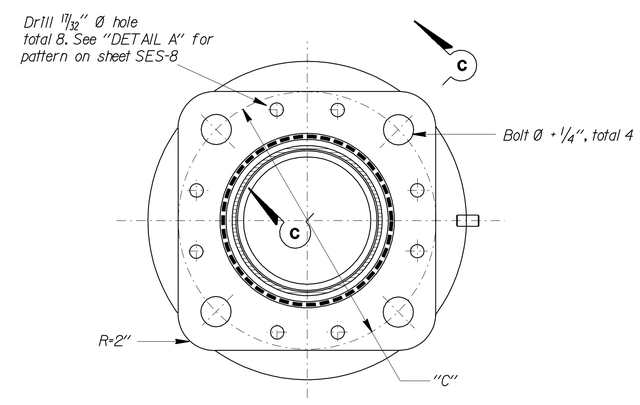

SECTION B-B

(Bolts and nuts not shown)

DESIGN NOTES:

Design : AASHTO Standard Specifications for Structural Supports for Highway Signs, Luminaires and Traffic Signals dated 2001.

Type 28-5-100 (Mod) to be used with rotating pole.

LOADING

Wind Loading : 100 mph

UNIT STRESSES FOR ROTATING POLE ADAPTER ASSEMBLY

fy = 48,000 psi Steel tube
fy = 48,000 psi Structural steel unless otherwise noted

GENERAL NOTES:

1. Washer assembly consists of two fiber, two flat and lock washers.
2. All steel shall be galvanized after fabrication unless otherwise noted.

NOTES:

A. See "SECTION C-C" on sheet SES-8.

B. For C dimension, see "TABLE I" on sheet SES-7.

C. For details not shown, see 2006 "STANDARD PLANS and 2006 "REVISED STANDARD PLANS".

NOTE:
THE CONTRACTOR SHALL VERIFY ALL CONTROLLING FIELD DIMENSIONS BEFORE ORDERING OR FABRICATING ANY MATERIAL.

NO SCALE

BRANCH CHIEF Jeffrey B Woody

	BY	CHECKED
DESIGN	ELISEO LOPEZ	K.C. LIU
DETAILS	R. YEE	K.C. LIU
QUANTITIES	ELISEO LOPEZ	K.C. LIU

STATE OF CALIFORNIA
DEPARTMENT OF TRANSPORTATION

DIVISION OF ENGINEERING SERVICES
DESIGN AND TECHNICAL SERVICES
SPECIAL DESIGNS BRANCH A

BRIDGE NO.
POST MILE 9.1/15.1

WEIGH STATION BYPASS SYSTEM
ROTATING POLE ADAPTER ASSEMBLY DETAILS No. 1

SES-6

(ENGLISH) SPECIAL DESIGNS BRANCH BORDER SHEET (REV. 7-1-09)

ORIGINAL SCALE IN INCHES FOR REDUCED PLANS 0 1 2 3

CU 12390
EA 0G3301

DISREGARD PRINTS BEARING EARLIER REVISION DATES 5/27/10

REVISION DATES 5/27/10

SHEET OF

FILE => 2010sd/12-0G3301/ses6.dgn ses-6.dgn

USERNAME => tfstfk DATE PLOTTED => 16-DEC-2010 TIME PLOTTED => 17:00

DIST	COUNTY	ROUTE	POST MILES TOTAL PROJECT	SHEET No	TOTAL SHEETS
12	Ora	91	9.1/15.1	783	949

Eliseo Lopez 5/27/10
REGISTERED CIVIL ENGINEER DATE

10-25-10
PLANS APPROVAL DATE

REGISTERED PROFESSIONAL ENGINEER ELISEO LOPEZ No. C72910 Exp. 12/31/10 CIVIL STATE OF CALIFORNIA

The State of California or its officers or agents shall not be responsible for the accuracy or completeness of electronic copies of this plan sheet.

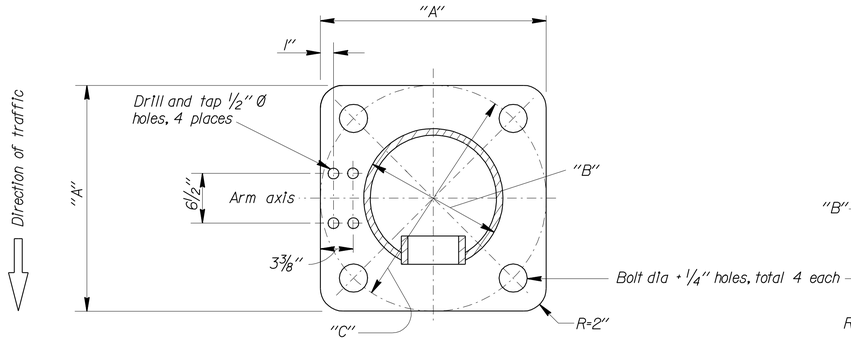

SECTION D-D

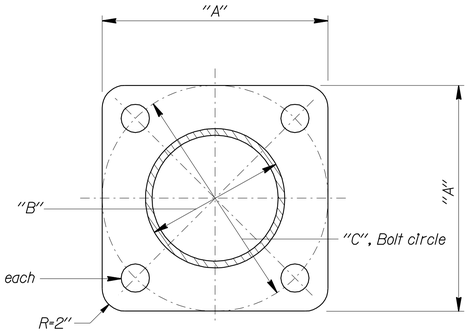

SECTION E-E

UPPER AND LOWER PLATE

TABLE I

SIGNAL & LIGHTING STANDARD (MOD)	UPPER & LOWER PLATE DIMENSIONS		
	"A"	"B"	"C"
TYPE 28-5-100	21"	12 3/4"	21"

NOTE:

See "DETAIL B" on sheet SES-8 for "SECTION D-D" and "SECTION E-E" of Upper and Lower Plate.

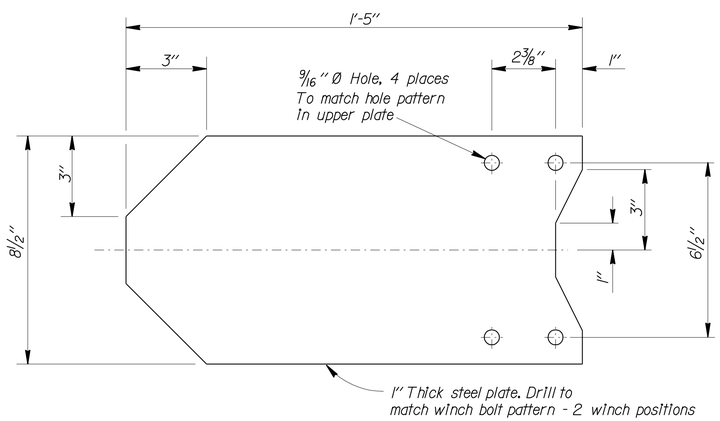

WINCH SUPPORT PLATE

NOTE:
THE CONTRACTOR SHALL VERIFY ALL CONTROLLING FIELD DIMENSIONS BEFORE ORDERING OR FABRICATING ANY MATERIAL.

NO SCALE

BRANCH CHIEF Jeffrey B Wrody

	BY	CHECKED
DESIGN	ELISEO LOPEZ	K.C. LIU
DETAILS	R. YEE	K.C. LIU
QUANTITIES	ELISEO LOPEZ	K.C. LIU

STATE OF CALIFORNIA
DEPARTMENT OF TRANSPORTATION

DIVISION OF ENGINEERING SERVICES
DESIGN AND TECHNICAL SERVICES
SPECIAL DESIGNS BRANCH A

BRIDGE NO.
POST MILE 9.1/15.1

WEIGH STATION BYPASS SYSTEM
ROTATING POLE ADAPTER ASSEMBLY DETAILS No. 2

SES-7

(ENGLISH) SPECIAL DESIGNS BRANCH BORDER SHEET (REV. 7-1-09)

ORIGINAL SCALE IN INCHES FOR REDUCED PLANS 0 1 2 3

CU 12390
EA 0G3301

DISREGARD PRINTS BEARING EARLIER REVISION DATES → ~~5/14/10~~ ~~5/26/10~~ 5/27/10

REVISION DATES | SHEET | OF

FILE => 2010sd/12-0G3301/ses7.dgn ses-7.dgn

USERNAME => trstrk DATE PLOTTED => 16-DEC-2010 TIME PLOTTED => 17:00

DIST	COUNTY	ROUTE	POST MILES TOTAL PROJECT	SHEET No	TOTAL SHEETS
12	Ora	91	9.1/15.1	784	949

Eliseo Lopez 5/27/10
REGISTERED CIVIL ENGINEER DATE

10-25-10
PLANS APPROVAL DATE

REGISTERED PROFESSIONAL ENGINEER ELISEO LOPEZ No. C72910 Exp. 12/31/10 CIVIL STATE OF CALIFORNIA

The State of California or its officers or agents shall not be responsible for the accuracy or completeness of electronic copies of this plan sheet.

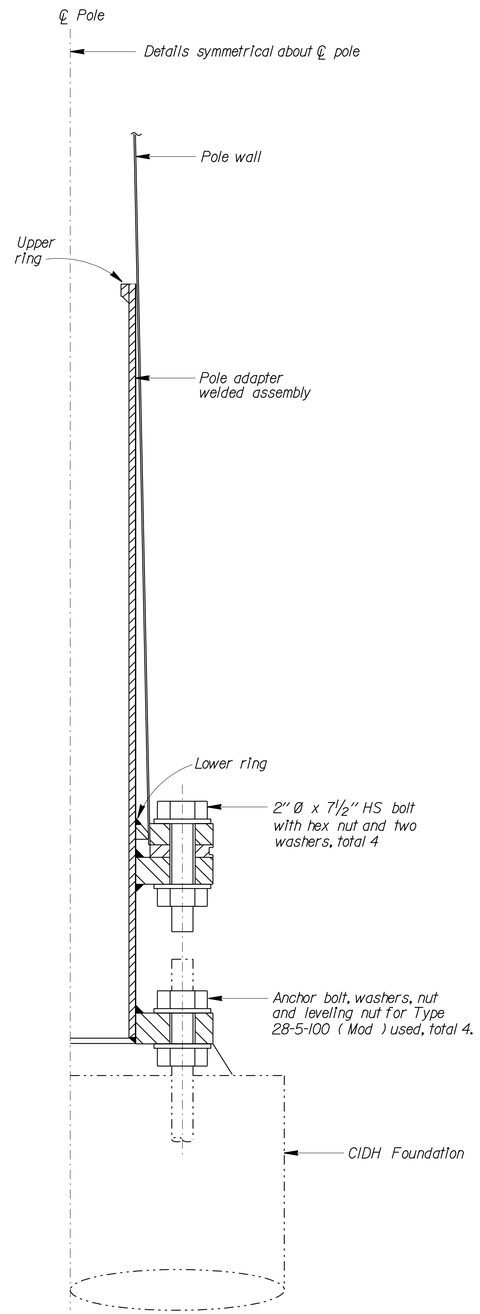

SECTION C-C

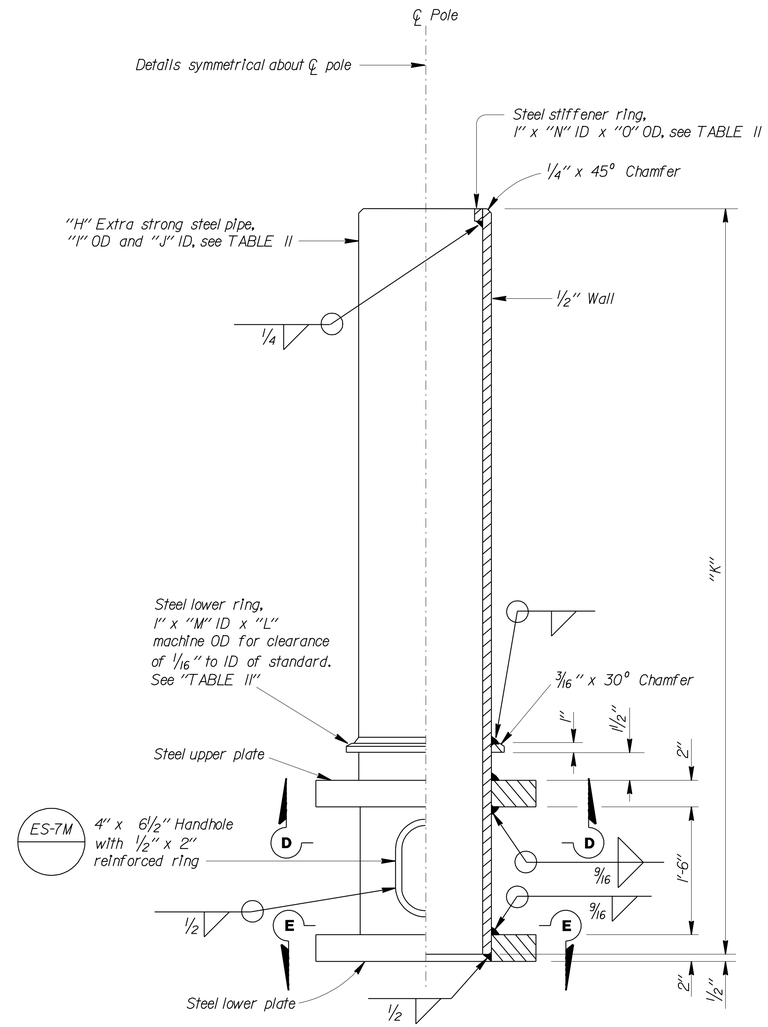

DETAIL B
POLE ADAPTER WELDED ASSEMBLY

See "SECTION D-D" and "SECTION E-E" on sheet SES-7

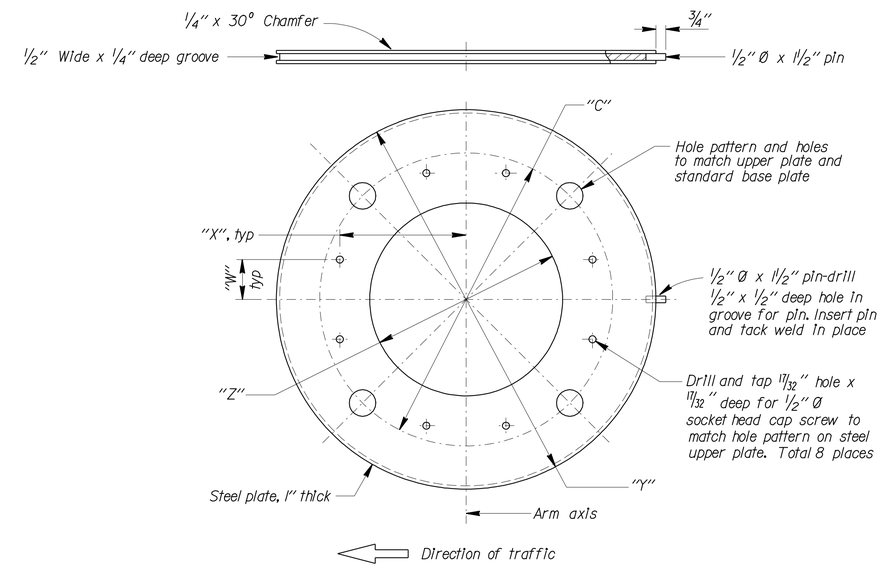

DETAIL A
PULLEY PLATE

TABLE III

SIGNAL & LIGHTING STANDARD (MOD)	PULLEY PLATE DIMENSIONS			
	"W"	"X"	"Y"	"Z"
TYPE 28-5-100	3"	9½"	28½"	14½"

TABLE II

SIGNAL & LIGHTING STANDARD (MOD)	POLE ADAPTER WELDED ASSEMBLY							
	PIPE				LOWER RING		STIFFENER RING	
	"H"	"I" (OD)	"J" (ID)	"K"	"L" (OD)	"M" (ID)	"N" (ID)	"O" (OD)
TYPE 28-5-100	12"	12¾"	11¾"	5'-0"	13¼"	12¾"	10¾"	11¾"

ID = Inside diameter
OD = Outside diameter

NOTE:
THE CONTRACTOR SHALL VERIFY ALL CONTROLLING FIELD DIMENSIONS BEFORE ORDERING OR FABRICATING ANY MATERIAL.

NO SCALE

BRANCH CHIEF Jeffrey B Woody

	BY	CHECKED
DESIGN	ELISEO LOPEZ	K.C. LIU
DETAILS	R. YEE	K.C. LIU
QUANTITIES	ELISEO LOPEZ	K.C. LIU

STATE OF CALIFORNIA
DEPARTMENT OF TRANSPORTATION

DIVISION OF ENGINEERING SERVICES
DESIGN AND TECHNICAL SERVICES
SPECIAL DESIGNS BRANCH
A

BRIDGE NO.
POST MILE 9.1/15.1

WEIGH STATION BYPASS SYSTEM
ROTATING POLE ADAPTER ASSEMBLY DETAILS No. 3

SES-8

(ENGLISH) SPECIAL DESIGNS BRANCH BORDER SHEET (REV. 7-1-09)

ORIGINAL SCALE IN INCHES FOR REDUCED PLANS 0 1 2 3

CU 12390
EA 0G3301

DISREGARD PRINTS BEARING EARLIER REVISION DATES
REVISION DATES 5/27/10 5/26/10 5/27/10
SHEET OF

FILE => 2010sd/12-0G3301/ses8.dgn ses-8.dgn

USERNAME => testtrk DATE PLOTTED => 16-DEC-2010 TIME PLOTTED => 17:01

DIST	COUNTY	ROUTE	POST MILES TOTAL PROJECT	SHEET No	TOTAL SHEETS
12	Ora	91	9.1/15.1	785	949

Stan P Johnson 12-10-10
REGISTERED CIVIL ENGINEER DATE

10-25-10
PLANS APPROVAL DATE

REGISTERED PROFESSIONAL ENGINEER Stan Johnson No. C57793 Exp. 3-31-12 CIVIL STATE OF CALIFORNIA

The State of California or its officers or agents shall not be responsible for the accuracy or completeness of electronic copies of this plan sheet.

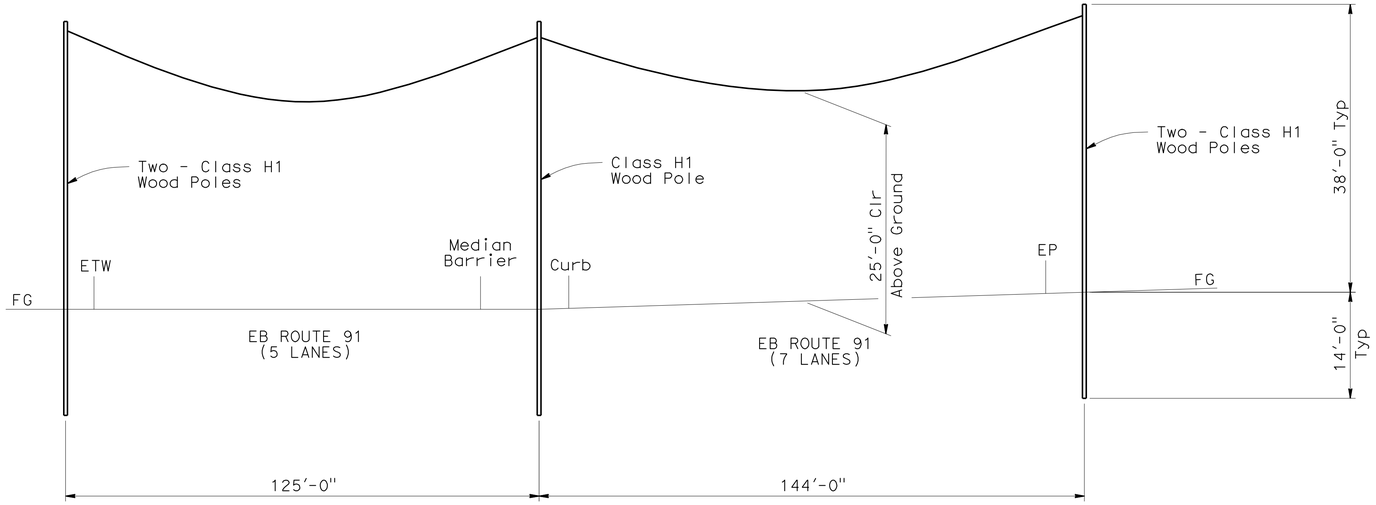

ELEVATION "A" LINE, Sta 82+20

No Scale

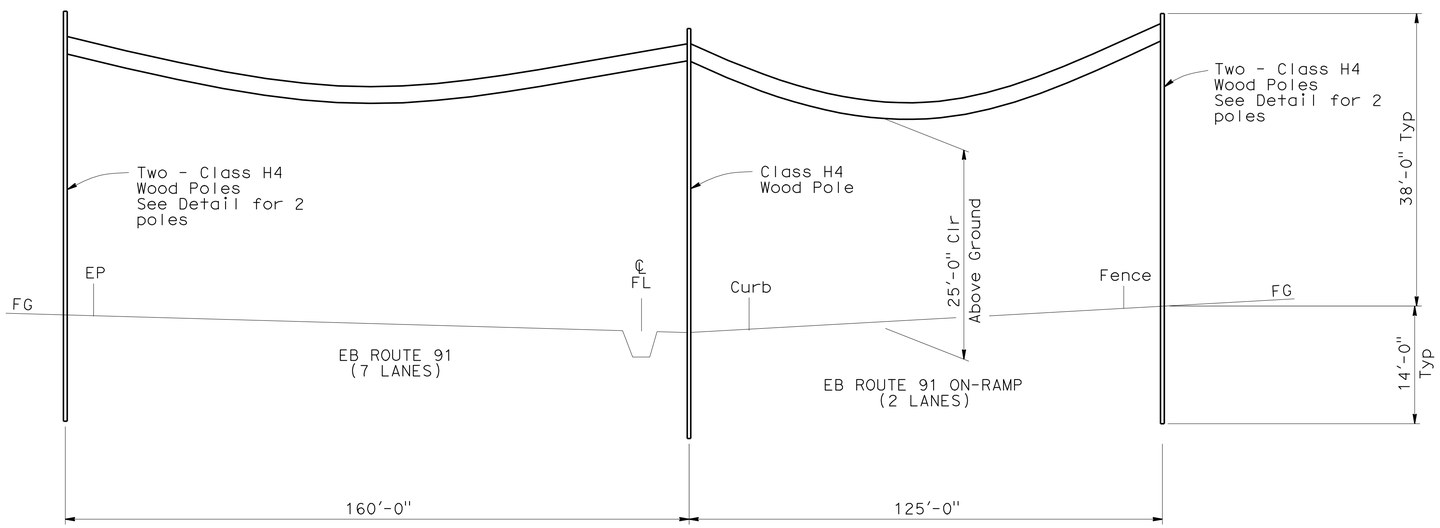

ELEVATION "D" LINE, Sta 347+80

No Scale

NOTE:
THE CONTRACTOR SHALL VERIFY ALL CONTROLLING FIELD DIMENSIONS BEFORE ORDERING OR FABRICATING ANY MATERIAL.

ABBREVIATIONS:

WVDS - Wireless Vehicle Detection System

GENERAL NOTES:

SPECIFICATIONS

Design: AASHTO Standard Specifications for Structural Supports for Highway Signs, Luminaires and Traffic Signals dated 2001.

LOADING

Wind Loadings: 100 MPH

UNIT STRESSES

Timber Poles: Fb = 1850 Tapered treated round pole
Fv = 110 psi ASTM D2899 Standard
E = 1500 x 10^3 psi

TREATMENT

To conform with Section 86 Standard Specifications

SPECIFICATIONS

Caltrans Standard Specifications May 2006

NOTES:

1. Relocated attachment bracketing by manufacturer shall conform to the 2001 AASHTO "Standard Specifications for Structural Supports, Highway Signs, Luminaires and Traffic Signals" as amended by 2006 Interim.
2. All attachments shall be mounted with stainless steel straps or other manufacturers methods without drilling holes in pole. Drilling through pole shall require Engineer's approval.
3. Unless otherwise specified, alternative sections require approval by the Engineer.
4. For attachment details and pole locations, refer to Electrical Sheets.
5. Foundation design is based on AASHTO 2001 article 13.6 Broms' approximate procedure assuming a cohessionless material. The angle of internal friction used is 30 degrees and unit weight of soil used is 120 lb/ft^3.
6. Span dimensions are subject to field verification.
7. If pole is located on a steep slope add 2 feet extra for embedment.
8. For details not shown, see "2006 STANDARD PLANS" and "2006 REVISED STANDARD PLANS".
9. For guy and anchoring see details.

No Scale

BRANCH CHIEF Jeffrey B Woody	DESIGN	BY S JOHNSON	CHECKED T MARCHENKO
	DETAILS	BY D W JUSTICE Jr	CHECKED T MARCHENKO
	QUANTITIES	BY T MARCHENKO	CHECKED E LOPEZ

STATE OF CALIFORNIA
DEPARTMENT OF TRANSPORTATION

DIVISION OF ENGINEERING SERVICES
DESIGN AND TECHNICAL SERVICES
SPECIAL DESIGNS BRANCH A

BRIDGE NO.
POST MILE

COMMUNICATION SYSTEM - OCTA
ELEVATIONS

SES-9

(ENGLISH) SPECIAL DESIGNS BRANCH BORDER SHEET (REV. 7-1-09)

ORIGINAL SCALE IN INCHES FOR REDUCED PLANS 0 1 2 3

CU 12
EA 0G3301

DISREGARD PRINTS BEARING EARLIER REVISION DATES 12-10-10

REVISION DATES | SHEET | OF

FILE => spec_des_br_prj/2010sd/12-0G3301/12-0g3301_ses9.dgn

USERNAME => trstrk DATE PLOTTED => 16-DEC-2010 TIME PLOTTED => 17:01

DIST	COUNTY	ROUTE	POST MILES TOTAL PROJECT	SHEET No	TOTAL SHEETS
12	Ora	91	9.1/15.1	786	949

Stan P Johnson 12-10-10
REGISTERED CIVIL ENGINEER DATE

10-25-10
PLANS APPROVAL DATE

REGISTERED PROFESSIONAL ENGINEER Stan Johnson No. C57793 Exp. 3-31-12 CIVIL STATE OF CALIFORNIA

The State of California or its officers or agents shall not be responsible for the accuracy or completeness of electronic copies of this plan sheet.

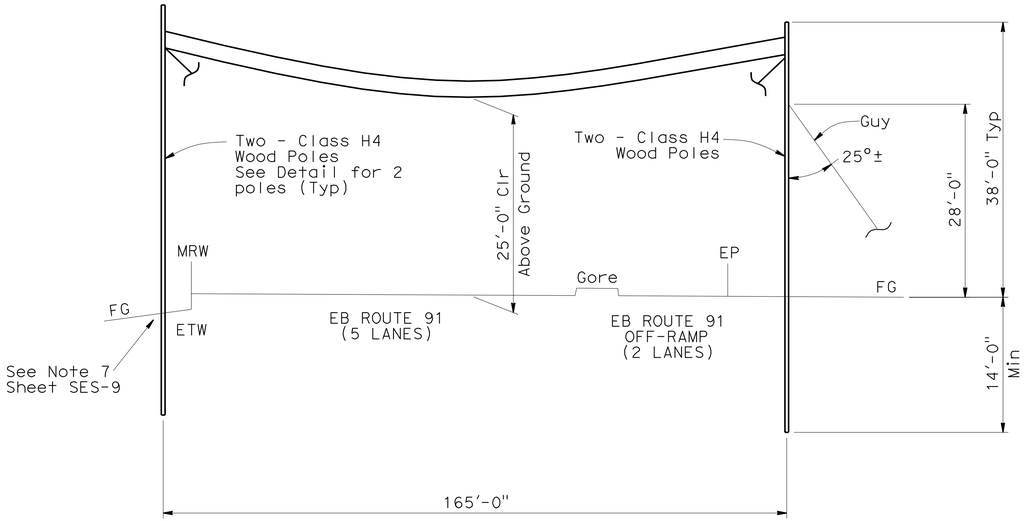

ELEVATION Sta 327+80

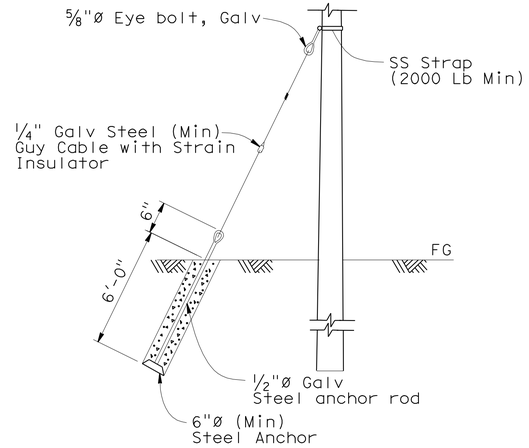

GUY WIRE INSTALLATION DETAIL

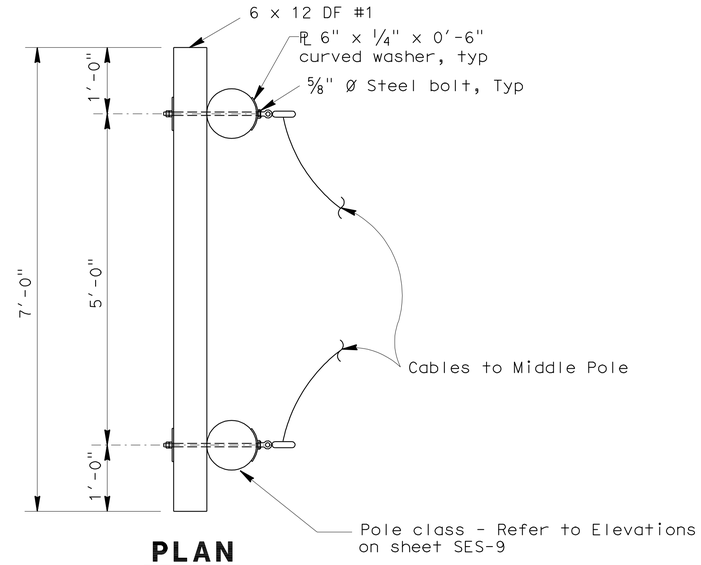

PLAN

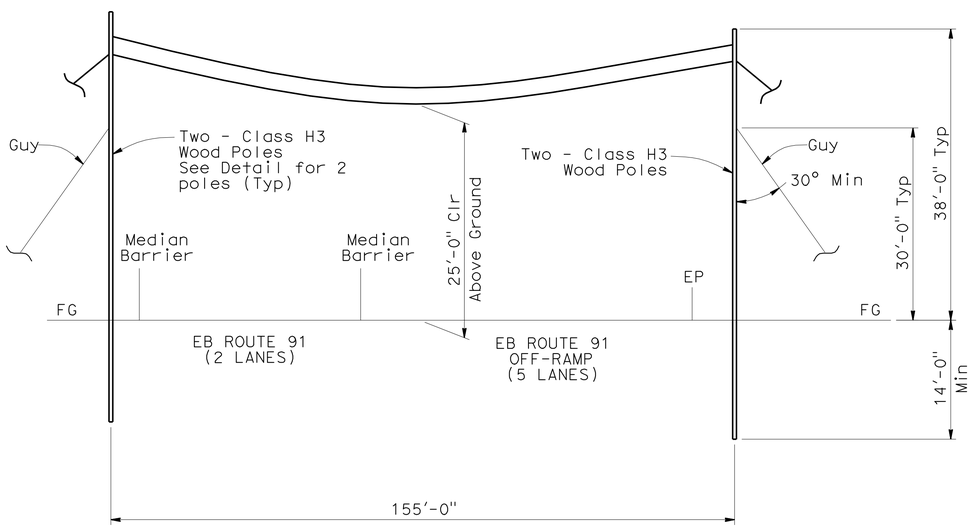

ELEVATION Sta 368+00

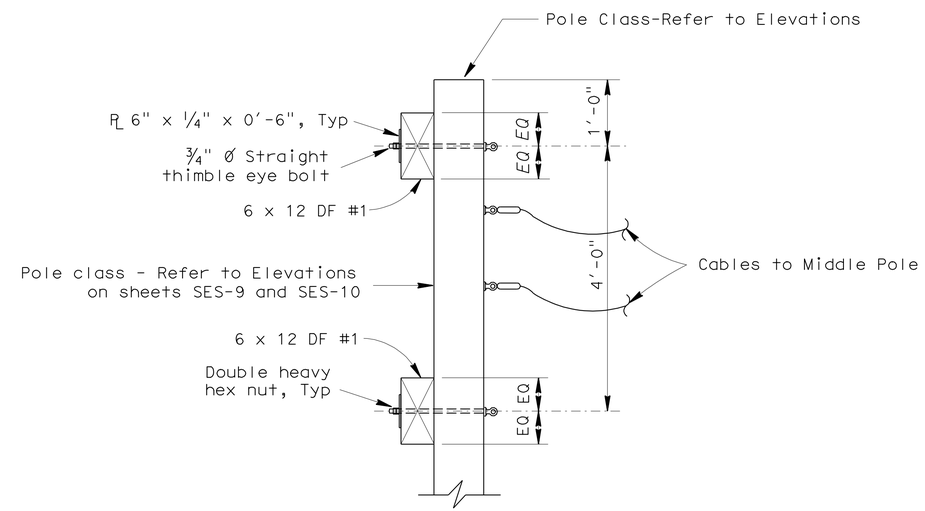

ELEVATION

DOUBLE POLE DETAIL

NO SCALE

NOTE:
THE CONTRACTOR SHALL VERIFY ALL CONTROLLING FIELD DIMENSIONS BEFORE ORDERING OR FABRICATING ANY MATERIAL.

BRANCH CHIEF Jeffrey B Woody

	BY	CHECKED
DESIGN	S JOHNSON	T MARCHENKO
DETAILS	D W JUSTICE Jr	T MARCHENKO
QUANTITIES	T MARCHENKO	E LOPEZ

STATE OF CALIFORNIA
DEPARTMENT OF TRANSPORTATION

DIVISION OF ENGINEERING SERVICES
DESIGN AND TECHNICAL SERVICES
SPECIAL DESIGNS BRANCH A

BRIDGE NO.
POST MILE

COMMUNICATION SYSTEM-OCTA (TEMPORARY)
ELEVATIONS AND DETAILS

SES-10

(ENGLISH) SPECIAL DESIGNS BRANCH BORDER SHEET (REV. 7-1-09)

ORIGINAL SCALE IN INCHES FOR REDUCED PLANS 0 1 2 3

CU 12
EA 0G3301

DISREGARD PRINTS BEARING EARLIER REVISION DATES

REVISION DATES: 12-10-10 12-14-10

SHEET OF

FILE => spec_des_br_prj/2010sd/12-0G3301/12-0g3301_ses10.dgn

USERNAME => friehard DATE PLOTTED => 17-DEC-2010 TIME PLOTTED => 12:50

DIST	COUNTY	ROUTE	POST MILES TOTAL PROJECT	SHEET No	TOTAL SHEETS
12	Ora	91	9.1/15.1	787	949

Stan P Johnson 12-10-10
REGISTERED CIVIL ENGINEER DATE

10-25-10
PLANS APPROVAL DATE

REGISTERED PROFESSIONAL ENGINEER
Stan Johnson
No. C57793
Exp. 3-31-12
CIVIL
STATE OF CALIFORNIA

The State of California or its officers or agents shall not be responsible for the accuracy or completeness of electronic copies of this plan sheet.

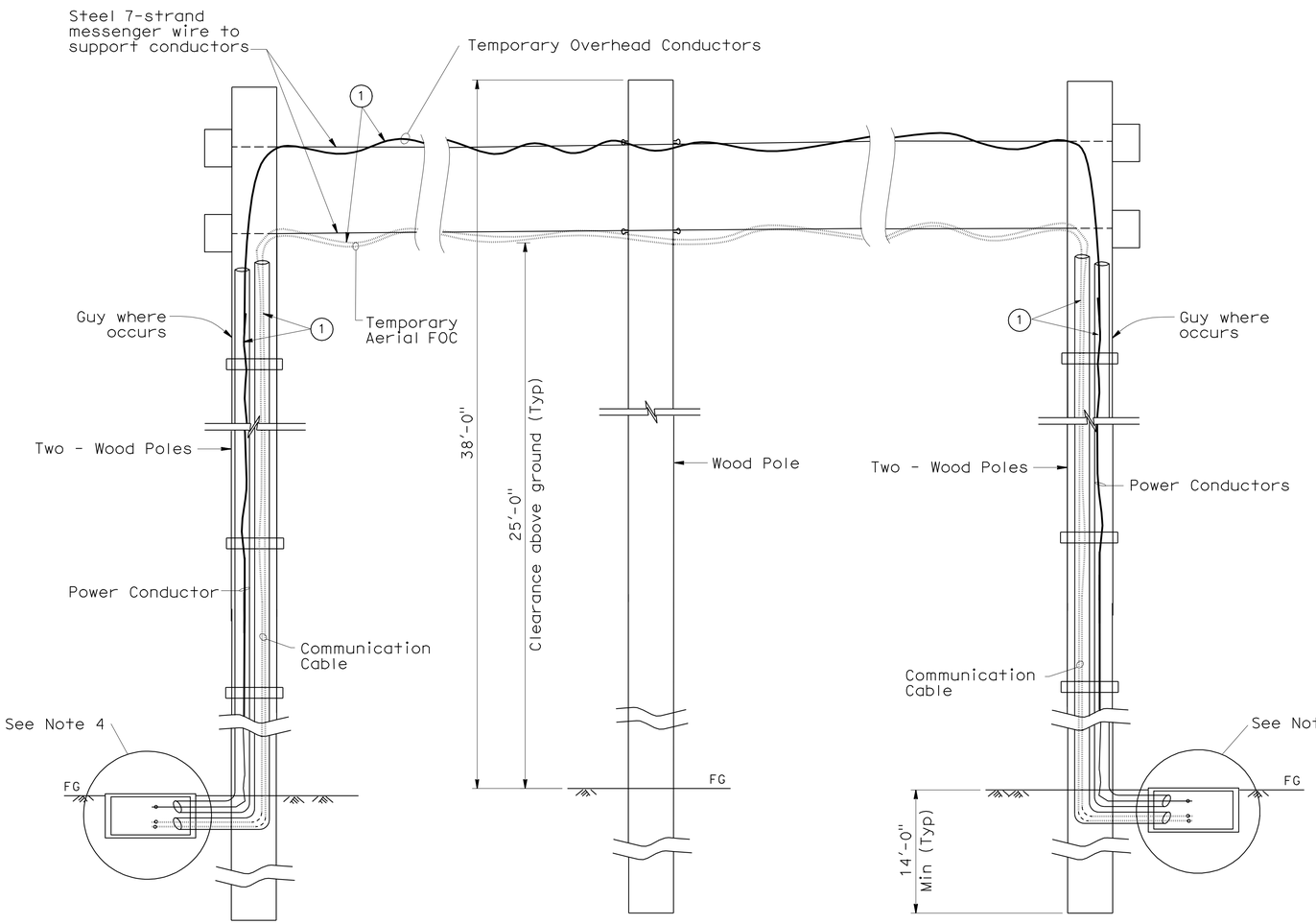

DETAIL A

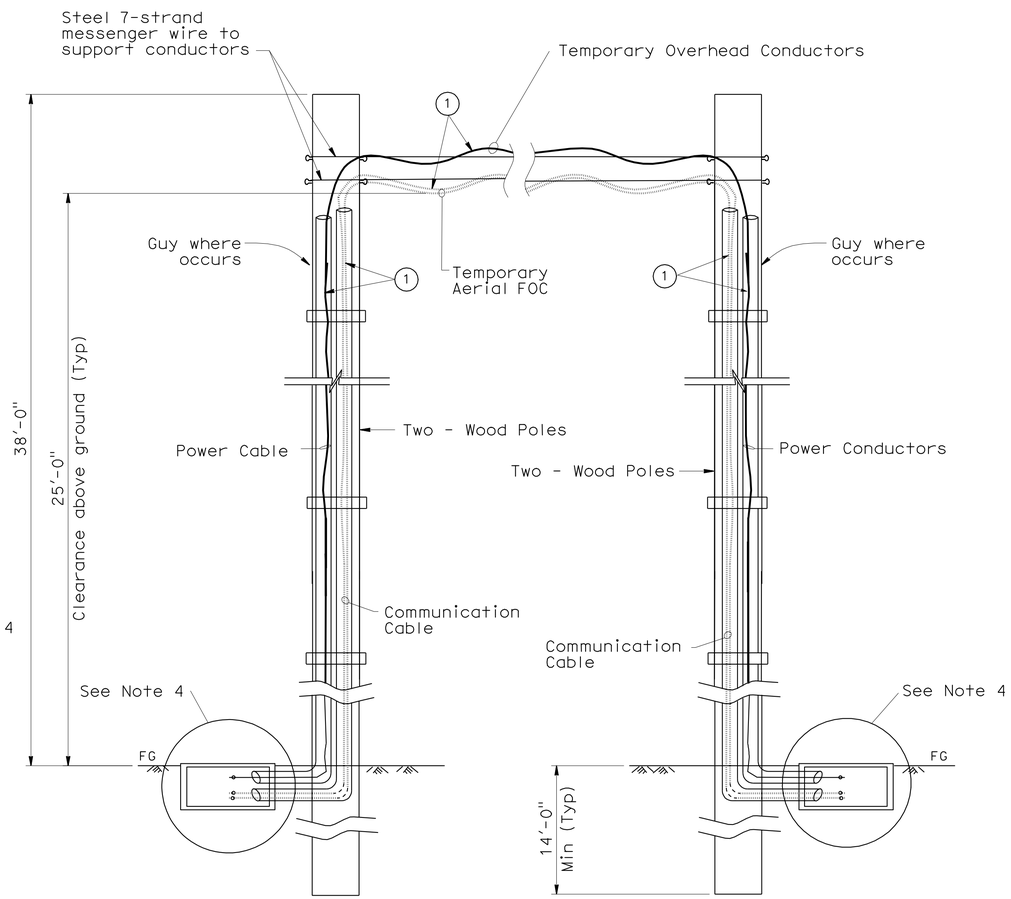

DETAIL B

NOTES: (THIS SHEET ONLY)

1. Communication cable and power cable split for two poles.
2. For two pole details refer to Sheet SES-12.
3. 5% sag typical
4. See electrical sheets.
5. All attachments shall be mounted without boring or grooving the pole.

NOTE:
THE CONTRACTOR SHALL VERIFY ALL CONTROLLING FIELD DIMENSIONS BEFORE ORDERING OR FABRICATING ANY MATERIAL.

BRANCH CHIEF Jeffrey B Woody	DESIGN	BY S JOHNSON	CHECKED T MARCHENKO
	DETAILS	BY D W JUSTICE Jr	CHECKED T MARCHENKO
	QUANTITIES	BY T MARCHENKO	CHECKED E LOPEZ

STATE OF CALIFORNIA
DEPARTMENT OF TRANSPORTATION

DIVISION OF ENGINEERING SERVICES
DESIGN AND TECHNICAL SERVICES
SPECIAL DESIGNS BRANCH A

BRIDGE NO. N/A
POST MILE

COMMUNICATION SYSTEM - OCTA CABLE CROSSING MAINLINE DETAIL

SES-11

(ENGLISH) SPECIAL DESIGNS BRANCH BORDER SHEET (REV. 7-1-09)

ORIGINAL SCALE IN INCHES FOR REDUCED PLANS 0 1 2 3

CU 12
EA 0G3301

DISREGARD PRINTS BEARING EARLIER REVISION DATES 12-10-10 12-14-10

REVISION DATES | SHEET | OF

FILE => spec_des_br_prj/2010sd/12-0G3301 12-0g3301_ses11.dgn

USERNAME => ttrlenord DATE PLOTTED => 17-DEC-2010 TIME PLOTTED => 12:50

DIST	COUNTY	ROUTE	POST MILES TOTAL PROJECT	SHEET No	TOTAL SHEETS
12	Ord	91	9.1/15.1	788	949

REGISTERED CIVIL ENGINEER — DATE 12/10/10

10-25-10
PLANS APPROVAL DATE

REGISTERED PROFESSIONAL ENGINEER — Stan Johnson — No. 57793 — Exp. 3-31-12 — CIVIL — STATE OF CALIFORNIA

The State of California or its officers or agents shall not be responsible for the accuracy or completeness of electronic copies of this plan sheet.

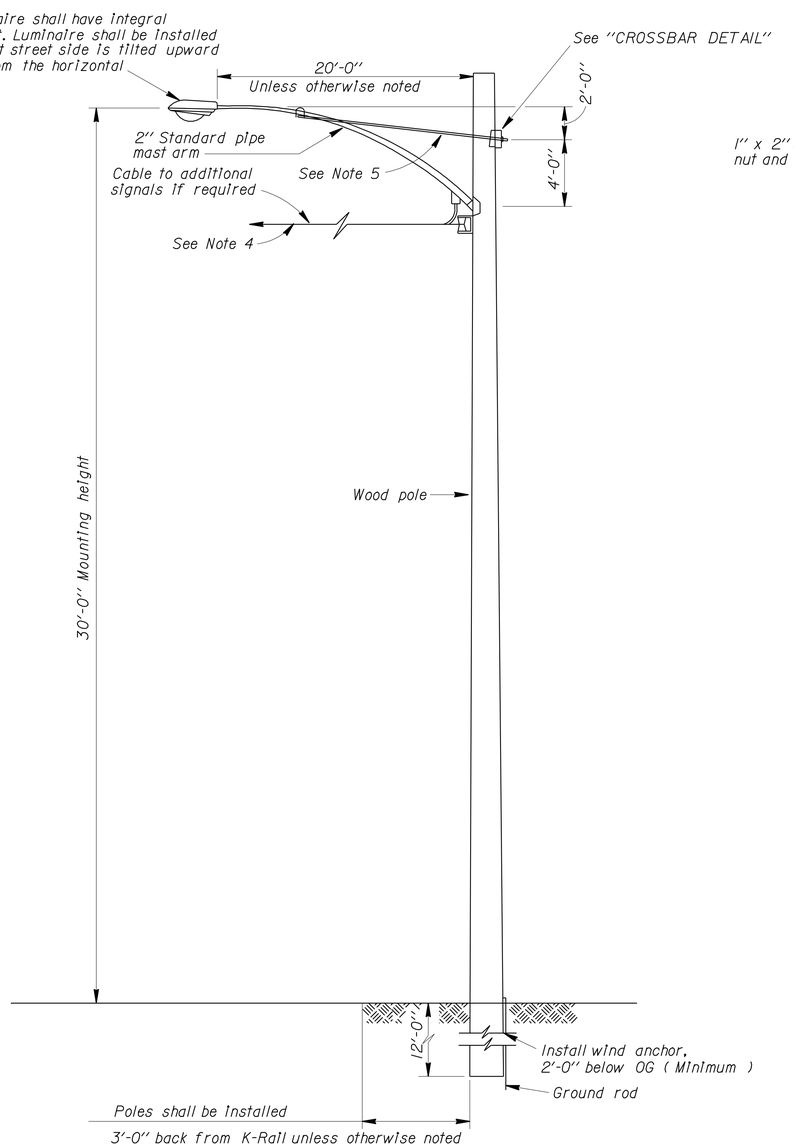

TYPICAL LUMINAIRE MOUNTING DETAIL ON WOOD POLE

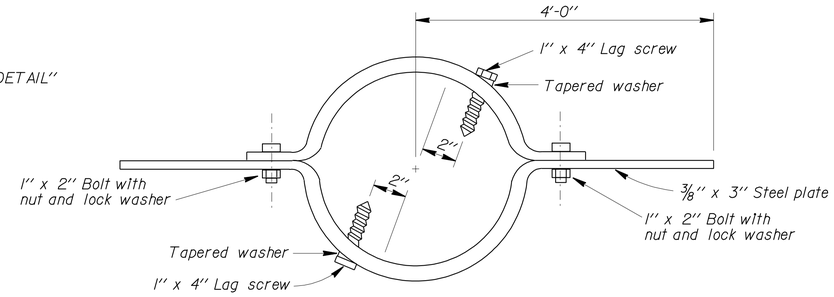

WIND ANCHOR

To be installed perpendicular to mast arms and 2'-0" minimum below grade

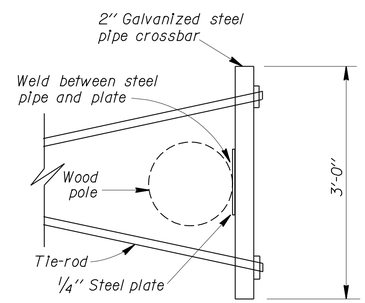

CROSSBAR DETAIL

NOTES:

1. All overhead cables shall be slack spanned with 25'-0" minimum overhead clearance.
2. No spare conductors required except as noted.
3. Wood poles shall be breast blocked, guyed or raked where necessary.
4. Cable shall be suspended from span-wire as follows:
   A) Main run 3/8" span-wire
5. Pipe tie-rods shall be 3/4" for mast arms with 5/8" round bolt tips on each end.
6. Overhead line construction not specifically covered hereon shall conform with the provisions of General Order No. 95 of Public Utilities Commission.

NOTE:
THE CONTRACTOR SHALL VERIFY ALL CONTROLLING FIELD DIMENSIONS BEFORE ORDERING OR FABRICATING ANY MATERIAL.

NO SCALE

BRANCH CHIEF Jeffrey B Woody

	BY	CHECKED
DESIGN	TAMARA MARCHENKO	K.C. LIU
DETAILS	R. YEE	TAMARA MARCHENKO
QUANTITIES		

STATE OF CALIFORNIA
DEPARTMENT OF TRANSPORTATION

DIVISION OF ENGINEERING SERVICES
DESIGN AND TECHNICAL SERVICES
SPECIAL DESIGNS BRANCH A

BRIDGE NO.
POST MILE 9.1/15.1

LIGHTING - TEMPORARY POLE DETAILS

SES-12

(ENGLISH) SPECIAL DESIGNS BRANCH BORDER SHEET (REV. 7-1-09)

ORIGINAL SCALE IN INCHES FOR REDUCED PLANS 0 1 2 3

UNIT: 3620
PROJECT NUMBER & PHASE: 1200000140-1
CONTRACT NO.: 12-0G3301

DISREGARD PRINTS BEARING EARLIER REVISION DATES — REVISION DATES 12/10/10 12/10/10 12/10/10

SHEET OF

FILE => /2010sd/12-0G3301/ses12.dgn

USERNAME => trlenard DATE PLOTTED => 17-DEC-2010 TIME PLOTTED => 12:50

DIST	COUNTY	ROUTE	POST MILES TOTAL PROJECT	SHEET No	TOTAL SHEETS
12	Ord	91	9.1/15.1	789	949

REGISTERED CIVIL ENGINEER — DATE 12/10/10

10-25-10
PLANS APPROVAL DATE

REGISTERED PROFESSIONAL ENGINEER — TAMARA MARCHENKO — No. C76837 — Exp. 12/31/12 — CIVIL — STATE OF CALIFORNIA

The State of California or its officers or agents shall not be responsible for the accuracy or completeness of electronic copies of this plan sheet.

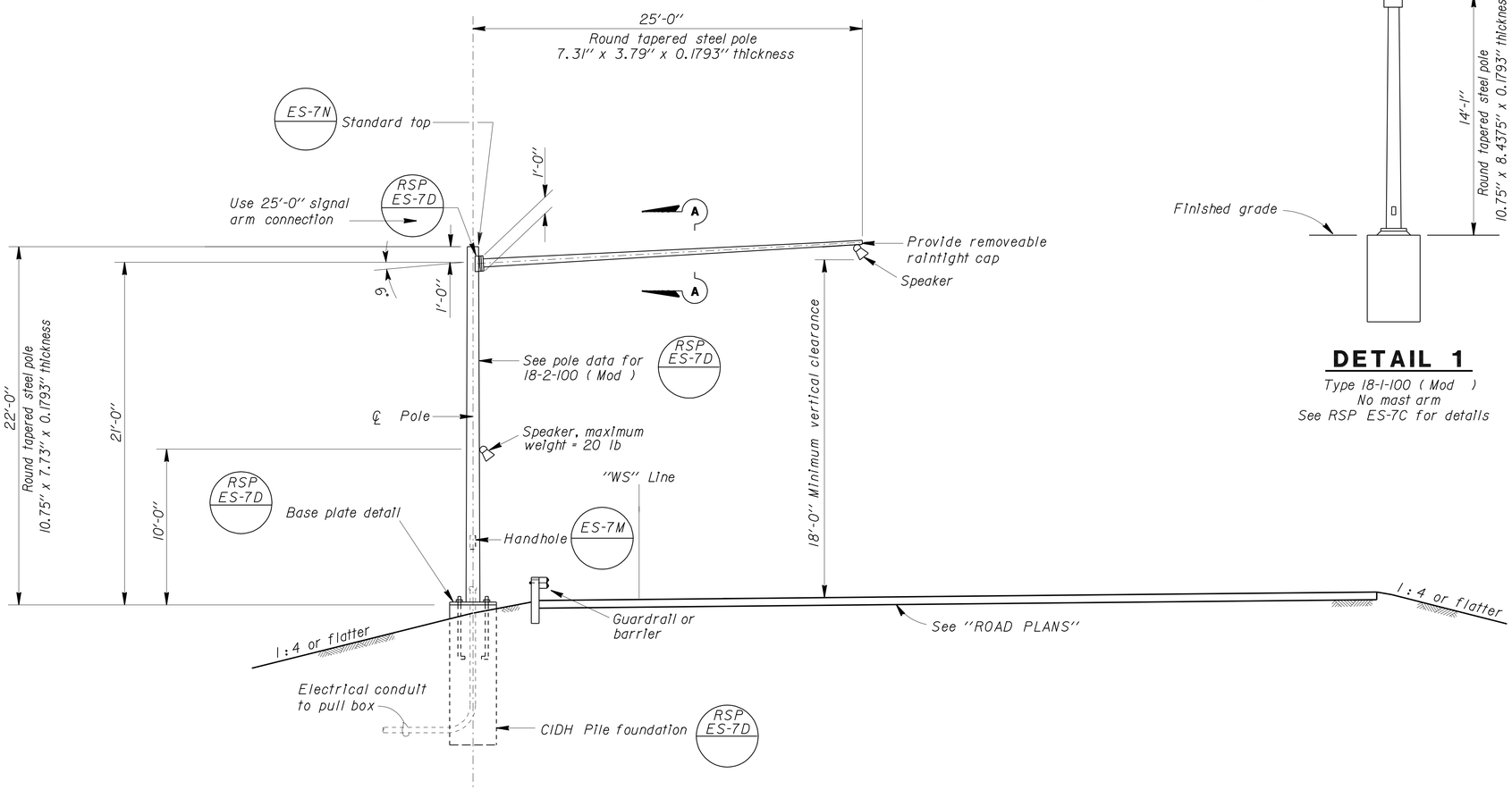

ELEVATION

Signal standard 18-2-100 (Mod)
5 Locations along "WS" Line - Refer to Electrical Sheets

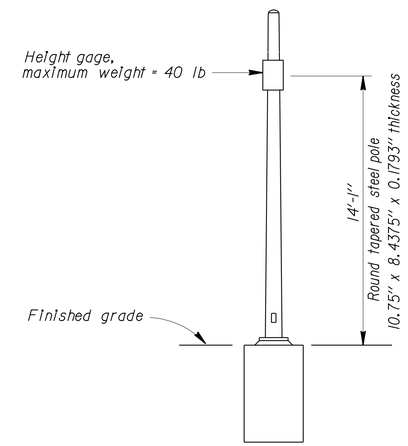

DETAIL 1

Type 18-1-100 (Mod)
No mast arm
See RSP ES-7C for details

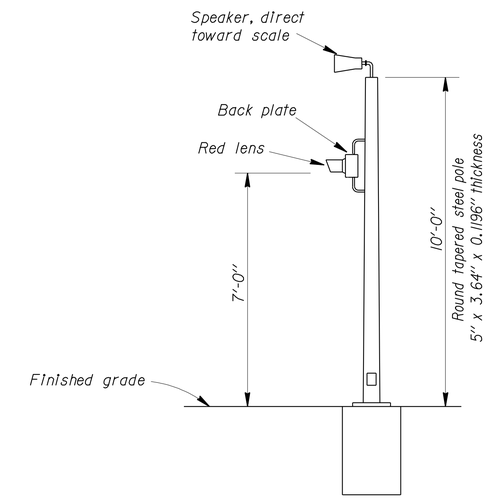

DETAIL 2

Type 1-A (Mod)
See RSP ES-7B for details

NOTES:

1. See sheet SES-14 for general notes, details and Standard Plans.
2. In locations where structure occurs at barrier, cut barrier and provide cover plates per detail on construction detail sheet C-34.
3. Existing mountings for speakers and height gage shall be re-used or replace in like kind.
4. Attachments of hardware and methods shall conform to the recommendations of the manufacturer of the attachments and shall conform to the 2001 AASHTO "Standard Specifications for Structural Supports, Highway Signs, Luminaires and Traffic Signals" as amended by 2002 Interim.
   All attachments shall be mounted with stainless steel straps or other manufacturer's method without drilling holes in pole.
   Drilling through pole shall require Engineer's approval.
   2 Inch (Max) chase nipple, one per attachment is allowable without Engineer's approval.

NOTE:
THE CONTRACTOR SHALL VERIFY ALL CONTROLLING FIELD DIMENSIONS BEFORE ORDERING OR FABRICATING ANY MATERIAL.

NO SCALE

BRANCH CHIEF — Jeffrey B Wooddy

	BY	CHECKED
DESIGN	TAMARA MARCHENKO	K.C. LIU
DETAILS	R. YEE	TAMARA MARCHENKO
QUANTITIES		

STATE OF CALIFORNIA
DEPARTMENT OF TRANSPORTATION

DIVISION OF ENGINEERING SERVICES
DESIGN AND TECHNICAL SERVICES
SPECIAL DESIGNS BRANCH — A

BRIDGE NO.
POST MILE 9.1/15.1

WEIGH STATION BYPASS SYSTEM
SCALE TRAFFIC SIGNAL POLE DETAILS

SES-13

(ENGLISH) SPECIAL DESIGNS BRANCH BORDER SHEET (REV. 7-1-09)

ORIGINAL SCALE IN INCHES FOR REDUCED PLANS 0 1 2 3

UNIT: 3620
PROJECT NUMBER & PHASE: 1200000140-1
CONTRACT NO.: 12-0G3301

DISREGARD PRINTS BEARING EARLIER REVISION DATES — REVISION DATES 12/10/10 12/10/10 12/10/10 12/10/10 — SHEET — OF

FILE => /2010sd/12-0G3301/ses13.dgn

USERNAME => trstrk DATE PLOTTED => 16-DEC-2010 TIME PLOTTED => 17:01

DIST	COUNTY	ROUTE	POST MILES TOTAL PROJECT	SHEET No	TOTAL SHEETS
12	Ord	91	9.1/15.1	790	949

REGISTERED CIVIL ENGINEER 12/10/10 DATE

10-25-10
PLANS APPROVAL DATE

REGISTERED PROFESSIONAL ENGINEER TAMARA MARCHENKO No. C76837 Exp. 12/31/12 CIVIL STATE OF CALIFORNIA

The State of California or its officers or agents shall not be responsible for the accuracy or completeness of electronic copies of this plan sheet.

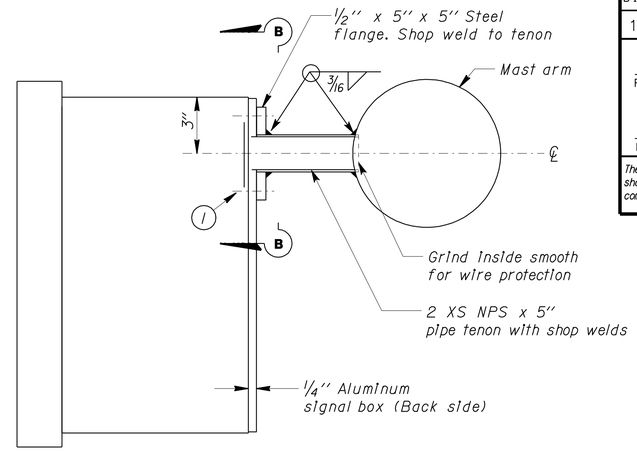

SECTION A-A

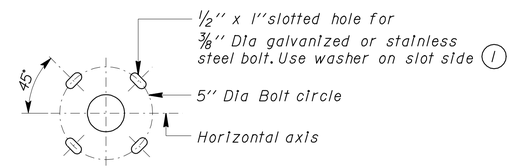

SECTION B-B

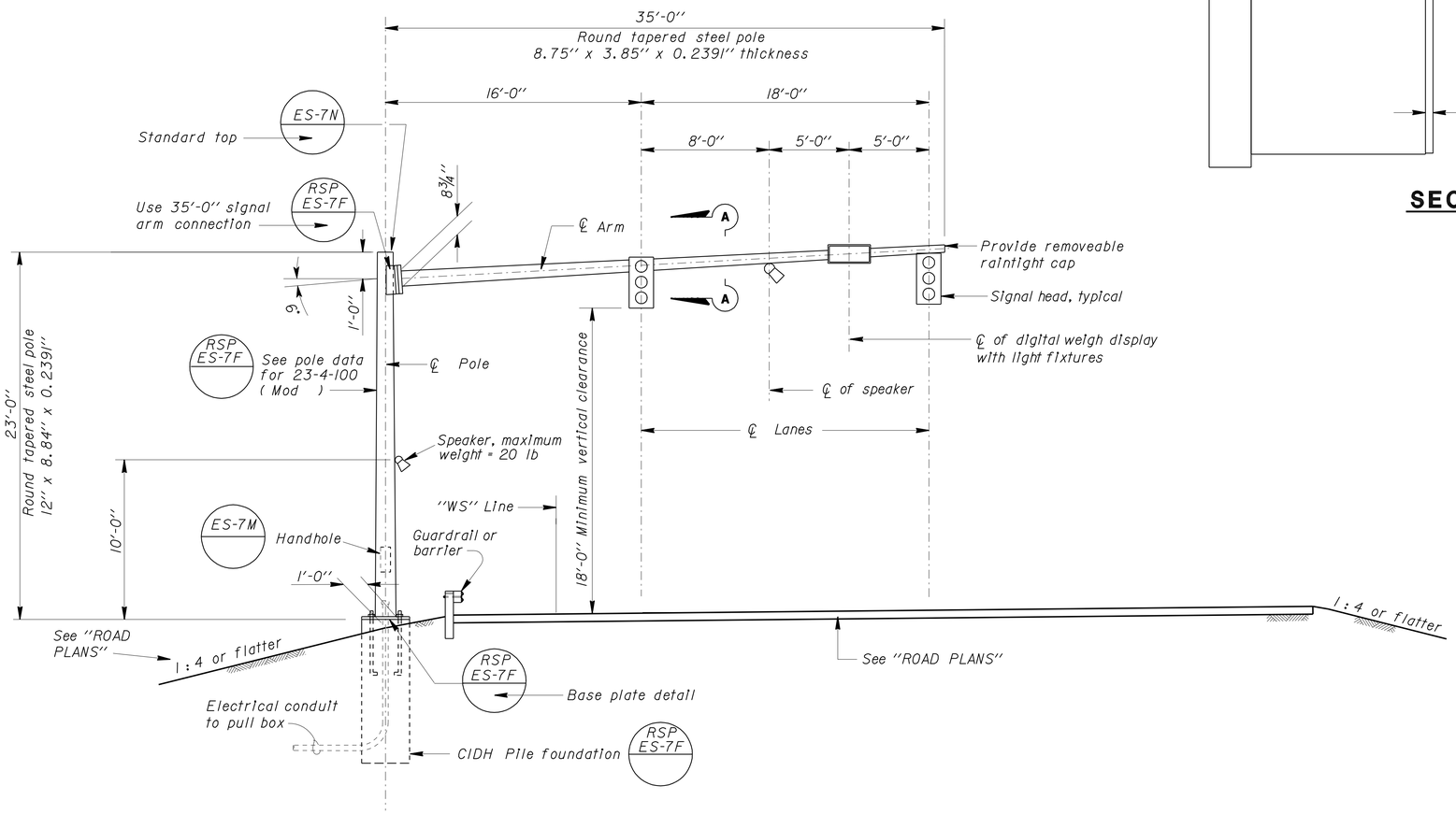

ELEVATION

EB ''WS'' Line Sta 106 + 55
WB ''WS'' Line Sta 39 + 80
Signal standard 23-4-100 (Mod)

GENERAL NOTES:

1. Finish: Galvanize all steel.
2. Minimum yield strength of tube is 48,000 psi.
3. For details not shown, see ''2006 STANDARD PLANS'', and ''REVISED STANDARD PLANS''.
4. For pole location, see Electrical Plans.
5. See Standard Plans for attachments to mount.
6. Attachment of hardware and methods shall conform to the recommendations of the manufacturer of the attachments and shall conform to the 2001 AASHTO ''Standard Specifications for Structural Supports, Highway Signs, Luminaires and Traffic Signals'' as amended by 2002 Interim.
   All attachments shall be mounted with stainless steel straps or other manufacturer's method without drilling holes in pole.
   Drilling through pole shall require Engineer's approval.
   2 Inch (Max) chase nipple, one per attachment is allowable without Engineer's approval.

NOTE:

1 Bolt holes inside signal to be pre-drilled with 7/16'' diameter holes.

NOTE:
THE CONTRACTOR SHALL VERIFY ALL CONTROLLING FIELD DIMENSIONS BEFORE ORDERING OR FABRICATING ANY MATERIAL.

NO SCALE

BRANCH CHIEF Jeffrey B Woody

	BY	CHECKED
DESIGN	TAMARA MARCHENKO	K.C. LIU
DETAILS	R. YEE	TAMARA MARCHENKO
QUANTITIES		

STATE OF CALIFORNIA
DEPARTMENT OF TRANSPORTATION

DIVISION OF ENGINEERING SERVICES
DESIGN AND TECHNICAL SERVICES
SPECIAL DESIGNS BRANCH A

BRIDGE NO.
POST MILE 9.1/15.1

WEIGH STATION BYPASS SYSTEM
SCALE TRAFFIC SIGNAL POLE DETAILS

SES-14

(ENGLISH) SPECIAL DESIGNS BRANCH BORDER SHEET (REV. 7-1-09)

ORIGINAL SCALE IN INCHES FOR REDUCED PLANS 0 1 2 3

UNIT: 3620
PROJECT NUMBER & PHASE: 1200000140-1 CONTRACT NO.: 12-0G3301

DISREGARD PRINTS BEARING EARLIER REVISION DATES

REVISION DATES 12/10/10 12/10/10 12/10/10 12/10/10

SHEET OF

FILE => /2010sd/12-0G3301/ses-14.dgn

USERNAME => trlenard DATE PLOTTED => 17-DEC-2010 TIME PLOTTED => 07:43

DIST	COUNTY	ROUTE	POST MILES TOTAL PROJECT	SHEET NO.	TOTAL SHEETS
12	Ora	91	9.1/15.1	791	949

REGISTERED CIVIL ENGINEER

June 6, 2008
PLANS APPROVAL DATE

REGISTERED PROFESSIONAL ENGINEER
Donald E. Howe
No. C46402
Exp. 3-31-09
CIVIL
STATE OF CALIFORNIA

The State of California or its officers or agents shall not be responsible for the accuracy or completeness of electronic copies of this plan sheet.

To accompany plans dated 10-25-10

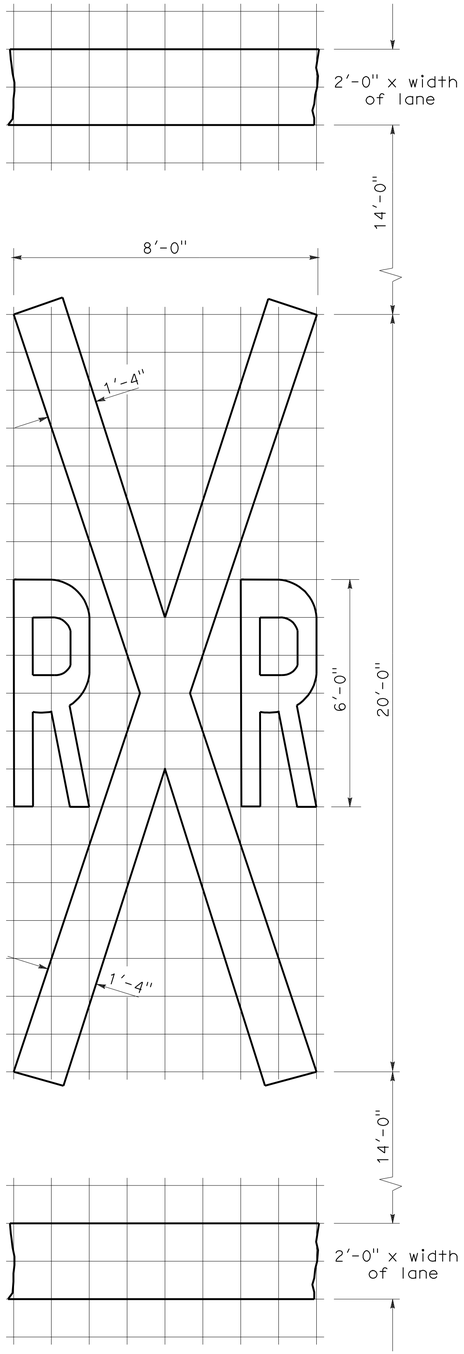

1'-0" GRID
A=70 sq ft ✳

RAILROAD CROSSING SYMBOL

✳70 sq ft DOES NOT INCLUDE THE 2'-0" x VARIABLE WIDTH TRANSVERSE LINES.

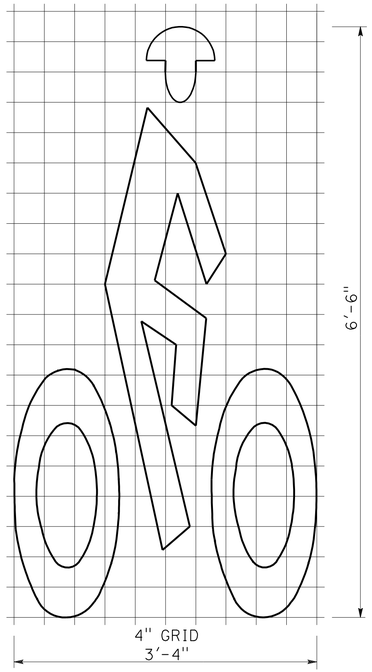

A=7 sq ft

BIKE LANE SYMBOL

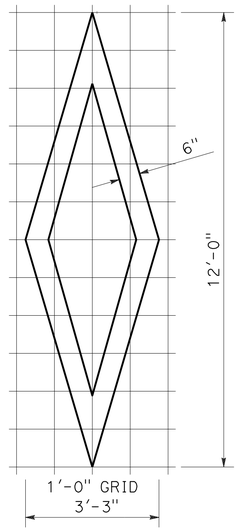

A=11 sq ft

DIAMOND SYMBOL

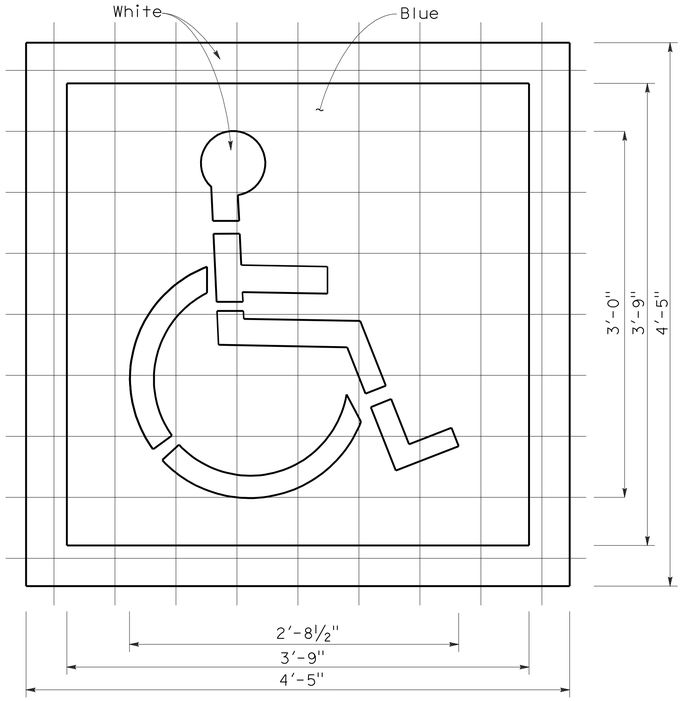

6" GRID
A (White) =9 sq ft
A (Blue) =14 sq ft

INTERNATIONAL SYMBOL OF ACCESSIBILITY MARKING

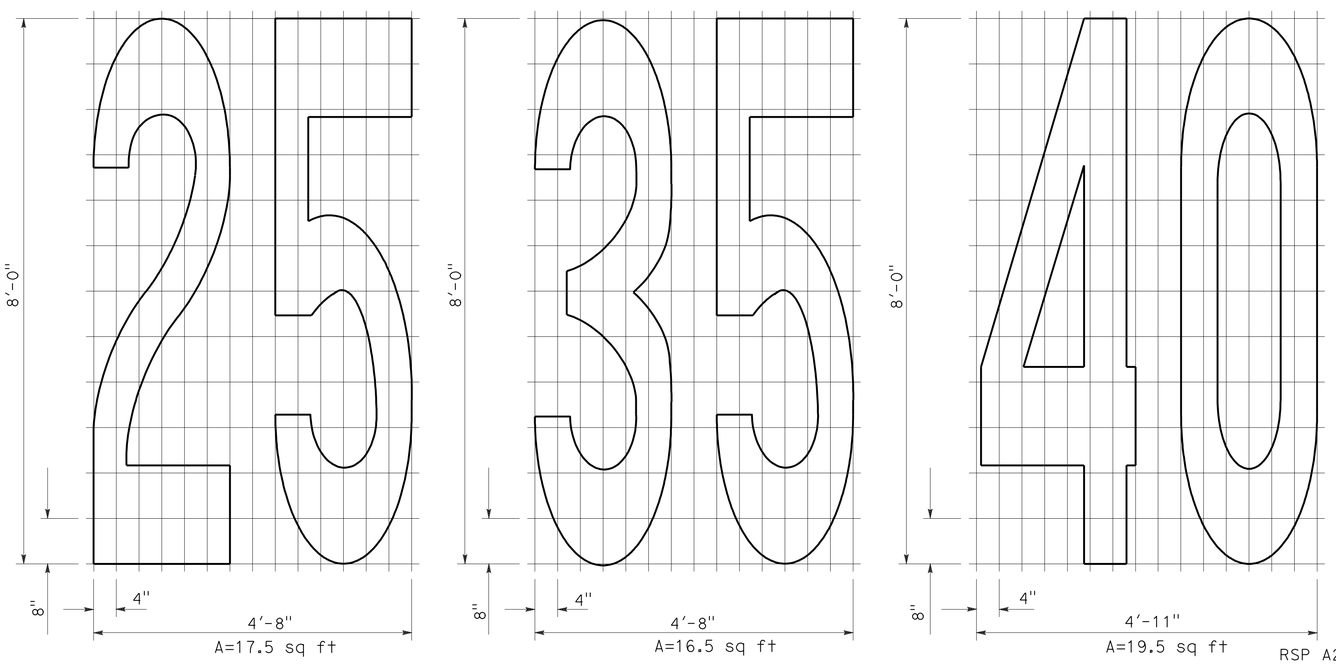

A=17.5 sq ft
A=16.5 sq ft
A=19.5 sq ft

NUMERALS

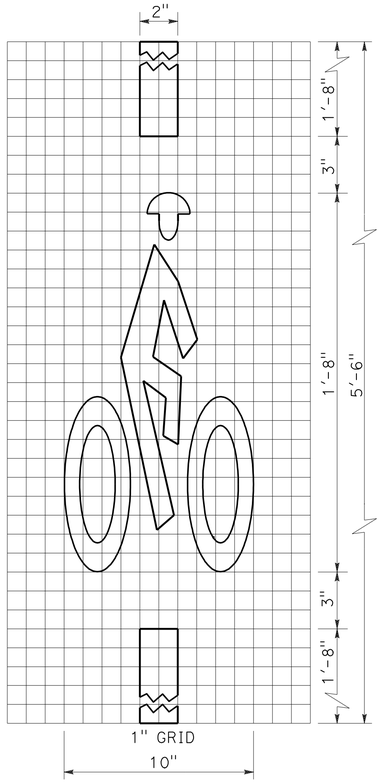

A=2 sq ft

BICYCLE LOOP DETECTOR SYMBOL

NOTE:

1. Minor variations in dimensions may be accepted by the Engineer.

STATE OF CALIFORNIA
DEPARTMENT OF TRANSPORTATION

PAVEMENT MARKINGS SYMBOLS AND NUMERALS

NO SCALE

RSP A24C DATED JUNE 6, 2008 SUPERSEDES STANDARD PLAN A24C DATED MAY 1, 2006 - PAGE 11 OF THE STANDARD PLANS BOOK DATED MAY 2006.

REVISED STANDARD PLAN RSP A24C

2006 REVISED STANDARD PLAN RSP A24C

5-27-08

DIST	COUNTY	ROUTE	POST MILES TOTAL PROJECT	SHEET NO.	TOTAL SHEETS
12	Ora	91	9.1/15.1	792	949

REGISTERED CIVIL ENGINEER

November 17, 2006
PLANS APPROVAL DATE

REGISTERED PROFESSIONAL ENGINEER Dallas Forester No. C37765 Exp. 12-31-06 CIVIL STATE OF CALIFORNIA

The State of California or its officers or agents shall not be responsible for the accuracy or completeness of electronic copies of this plan sheet.

To accompany plans dated 10-25-10

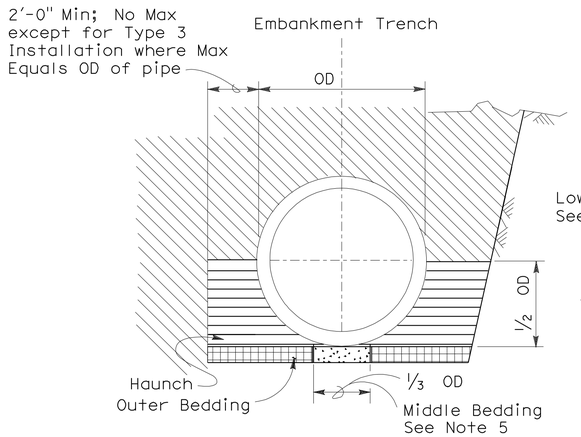

BACKFILL

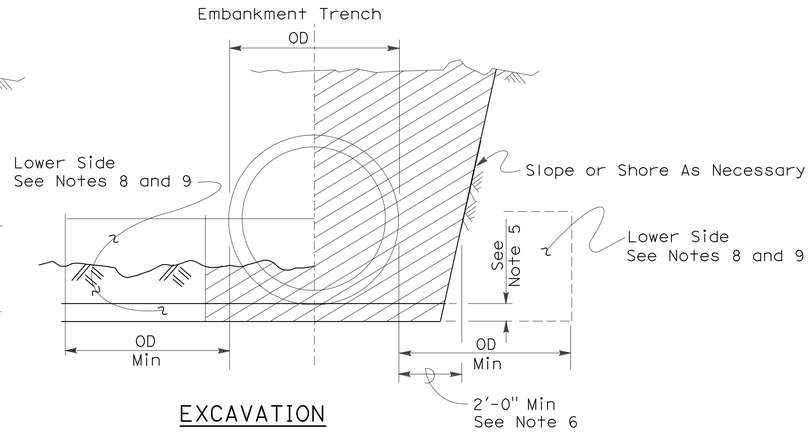

EXCAVATION

Roadway Embankment

Structure Backfill (Culvert) See Note 6

Structure Backfill (Culvert) See Note 6

Loose Backfill

Excavation Structure (Culvert)

TYPE 1 INSTALLATION:

The haunch and outer bedding shall be compacted to a minimum 90 percent relative compaction. In addition, the minimum sand equivalent in these areas shall be 30 and the maximum percentage passing the 75 μm sieve size shall be 12.

TYPE 2 INSTALLATION:

The haunch and outer bedding shall be compacted to a minimum 90 percent relative compaction. In addition, the minimum sand equivalent in these areas shall be 25.

TYPE 3 INSTALLATION:

The haunch and outer bedding shall be compacted to a minimum 85 percent relative compaction. 90 percent relative compaction will be required where the fill over the pipe is less than 4'-0" or 1/2 OD.

NOTES:

1. Unless otherwise shown on the plans or specified in the special provision, the Contractor shall have the option of selecting the class of RCP and the type of installation to be used, provided the height of cover does not exceed the value shown for the RCP selected.
   Example: 24" RCP culvert with maximum cover of 19'-0" the options are:
   a) Class III or stronger with Installation Type 1.
   b) Class III Special or stronger with Installation Type 2.
   c) Class IV Special or stronger with Installation Type 3.
   Cover is defined as the maximum vertical distance from top of the pipe to finished grade within the length of any given culvert.
2. The class of RCP and Installation Type selected shall be the same throughout the length of any given culvert.
3. The "length of any culvert" is defined as the culvert between:
   a) Successive drainage structure (inlets, junction boxes, headwalls, etc.).
   b) A drainage structure and the inlet or outlet end of the culvert.
   c) The inlet and outlet end of the culvert when there are no intervening drainage structures.
4. Oval and arch shaped RCP shall not be used.
5. 1/25 OD Min, not less than 3".
6. Slurry cement backfill may be substituted for backfill in the outer bedding and haunch areas. If slurry is used the outer and middle beddings shall be omitted. Prior to installation the soil under the middle 1/3 of the outside diameter of the pipe shall be softened by scarifying or other means to a minimum depth of 1/25 OD, but not less than 3". Where slurry cement backfill is used clear distance to trench wall may be reduced as set forth in Section 19-3.062 of the Standard Specifications.
7. Backfill shall be placed full width of excavation except where dimensions are shown for backfill width or thickness. Dimensions shown are minimums.
8. Lower side shall be suitable material as determined by the Engineer. Otherwise it shall be considered unsuitable as set forth in Section 19-2.02 of the Standard Specifications. See Note 9.
9. Where the pipe is placed in a trench, if the trench walls are sloped at 5 vertical to 1 horizontal or steeper for at least 90 percent of the trench height or up to not less than 12" from the grading plane, the firmness of the soil in the lower side need not be considered.
10. Non-reinforced precast concrete pipe sizes 3'-0" or smaller may be placed under installation Types 1, 2 or 3.

INSTALLATION TYPE 1

MINIMUM CLASS AND D-LOAD	COVER	
	108" Dia AND SMALLER	OVER 108" Dia
Class II 1000D	14.9'	12.9'
Class III 1350D	15.0' - 20.9'	13.0' - 18.9'
Class III Special 1700D	21.0' - 26.9'	19.0' - 24.9'
Class IV 2000D	27.0' - 31.9'	25.0' - 29.9'
Class IV Special 2500D	32.0' - 40.9'	30.0' - 38.9'
Class V 3000D	41.0' - 49.9'	39.0' - 46.9'
Class V Special 3600D	50.0' - 59.0'	47.0' - 58.0'

INSTALLATION TYPE 2

MINIMUM CLASS AND D-LOAD	COVER
Class II 1000D	9.9'
Class III 1350D	10.0'- 14.9'
Class III Special 1700D	15.0' - 19.9'
Class IV 2000D	20.0' - 24.9'
Class IV Special 2500D	25.0' - 31.9'
Class V 3000D	32.0' - 38.9'
Class V Special 3600D	39.0' - 47.0'

INSTALLATION TYPE 3

MINIMUM CLASS AND D-LOAD	COVER	
	48" Dia AND SMALLER	OVER 48" Dia
Class II 1000D	7.9'	5.9'
Class III 1350D	8.0' - 10.9'	6.0' - 8.9'
Class III Special 1700D	11.0' - 14.9'	9.0' - 12.9'
Class IV 2000D	15.0' - 17.9'	13.0' - 15.9'
Class IV Special 2500D	18.0' - 21.9'	16.0' - 19.9'
Class V 3000D	22.0' - 26.9'	20.0' - 24.9'
Class V Special 3600D	30.0' - 33.0'	25.0' - 31.0'

STATE OF CALIFORNIA
DEPARTMENT OF TRANSPORTATION

EXCAVATION AND BACKFILL CONCRETE PIPE CULVERTS

NO SCALE

RSP A62DA DATED NOVEMBER 17, 2006 SUPERSEDES STANDARD PLAN A62DA DATED MAY 1, 2006 - PAGE 20 OF THE STANDARD PLANS BOOK DATED MAY 2006.

REVISED STANDARD PLAN RSP A62DA

2006 REVISED STANDARD PLAN RSP A62DA

10-26-06

DIST	COUNTY	ROUTE	POST MILES TOTAL PROJECT	SHEET NO.	TOTAL SHEETS
12	Ora	91	9.1/15.1	793	949

Randell D. Hiatt
REGISTERED CIVIL ENGINEER

June 6, 2008
PLANS APPROVAL DATE

REGISTERED PROFESSIONAL ENGINEER
Randell D. Hiatt
No. C50200
Exp. 6-30-09
CIVIL
STATE OF CALIFORNIA

The State of California or its officers or agents shall not be responsible for the accuracy or completeness of electronic copies of this plan sheet.

To accompany plans dated 10-25-10

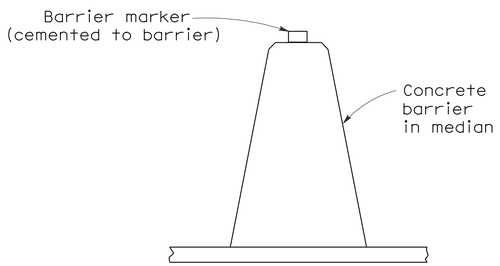

CONCRETE BARRIER TYPE 60 DELINEATION

See Notes 7 and 8

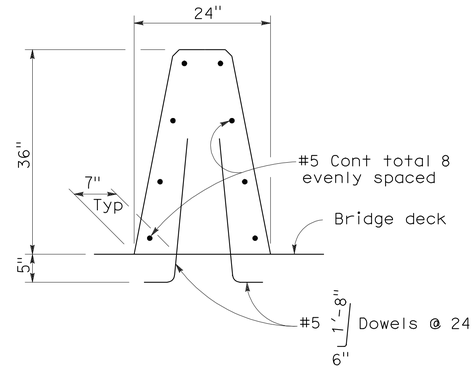

CONCRETE BARRIER TYPE 60A

Details similar to Type 60 except as noted.

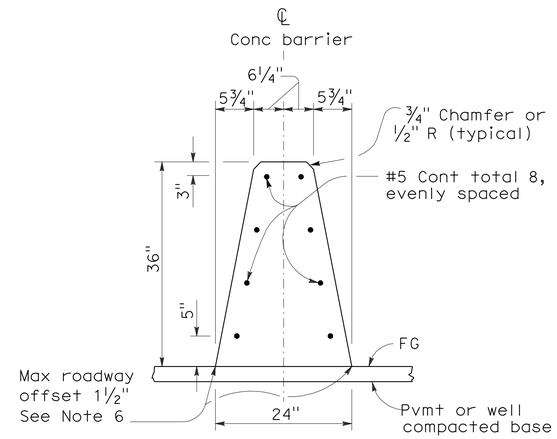

CONCRETE BARRIER TYPE 60

NOTES:

1. See Standard Plan A76B for details of Concrete Barrier Type 60 end anchors, connection to structures and transitions to Concrete Barrier Type 50 and Concrete Barrier Type 60S.
2. See Standard Plan A76C for Concrete Barrier Type 60 transitions at bridge column and sign pedestals.
3. Where glare screen is required on Concrete Barrier Type 60, use Concrete Barrier Type 60G.
4. Where the concrete barrier is added to the face of existing concrete structure, match existing weep holes.
5. Expansion joints in concrete barrier shall be located at all deck, pavement and principal wall joints. Expansion joint filler material shall be the same size as joint or ½" minimum.
6. Where roadway offset is greater than 1½", see Concrete Barrier Type 60C.
7. Barrier delineation to be used when required by the Special Provisions.
8. Spacing of barrier markers to match spacing of raised pavement markers on the adjacent median edgeline pavement delineation.
9. Reinforcing stirrup not required for roadway offsets less than 1'-0".
10. For roadway surfaces offset greater than 1½" to 3", no rebars required. For roadway surfaces offset greater than 3" to 8" use two #4 rebars at 3" above the lower roadway surface. For roadway surfaces offset greater than 8" to 12", use two #4 rebars at 3" above the lower roadway surface and two #4 rebars at 8" above the lower roadway surface. For roadway surfaces offset greater than 12" to 36", use two #4 rebars at 3" above the lower roadway surface and two #4 rebars at every 8" increment vertical spacing above the first two #4 rebars.

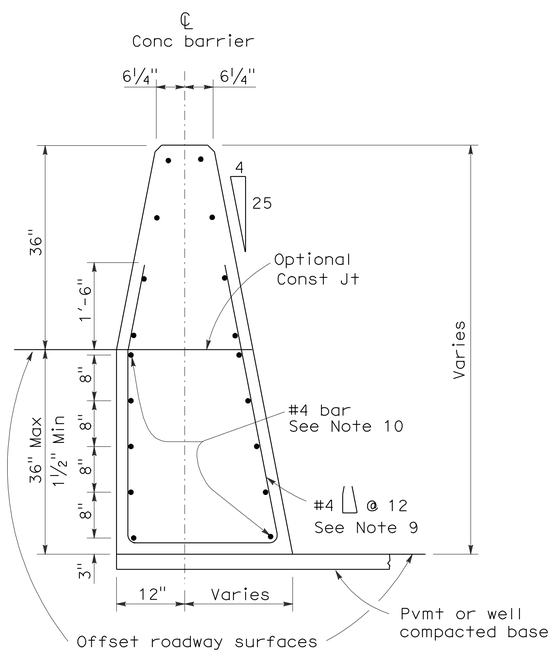

CONCRETE BARRIER TYPE 60C

Details similar to Type 60 except as noted.
Concrete barrier end anchor when necessary.
36" roadway surfaces offset shown.

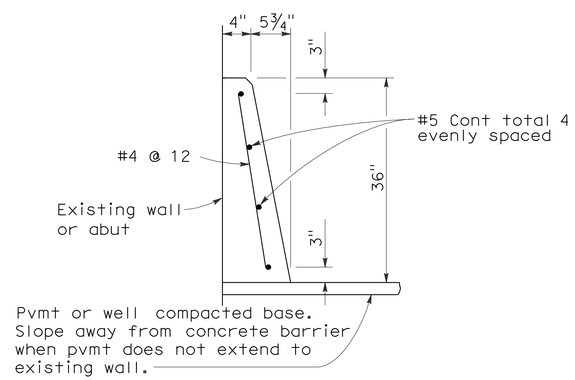

CONCRETE BARRIER TYPE 60D

STATE OF CALIFORNIA
DEPARTMENT OF TRANSPORTATION

CONCRETE BARRIER TYPE 60

NO SCALE

RSP A76A DATED JUNE 6, 2008 SUPERSEDES STANDARD PLAN A76A
DATED MAY 1, 2006 - PAGE 29 OF THE STANDARD PLANS BOOK DATED MAY 2006.

REVISED STANDARD PLAN RSP A76A

2006 REVISED STANDARD PLAN RSP A76A

5-21-08

DIST	COUNTY	ROUTE	POST MILES TOTAL PROJECT	SHEET NO.	TOTAL SHEETS
12	Ora	91	9.1/15.1	794	949

Randell D. Hiatt
REGISTERED CIVIL ENGINEER

June 6, 2008
PLANS APPROVAL DATE

REGISTERED PROFESSIONAL ENGINEER
Randell D. Hiatt
No. C50200
Exp. 6-30-09
CIVIL
STATE OF CALIFORNIA

The State of California or its officers or agents shall not be responsible for the accuracy or completeness of electronic copies of this plan sheet.

To accompany plans dated 10-25-10

NOTES:

1. When necessary to place dike in front of face of guard railing, only Type C dike may be used. For dike details, see Standard Plan A87B.
2. For standard railing post embedment, see Standard Plans A77C3.
3. Guard railing delineation to be used where shown on the Project Plans.
4. When dike or curb is placed under guard railing, the maximum height of the dike or curb shall be 4". Mountable dike should not be used. For dike and curb details, see Revised Standard Plans RSP A87A and Standard Plan A87B.
5. For details of typical distance between the face of rail and hinge point, see Standard Plan A77C3.

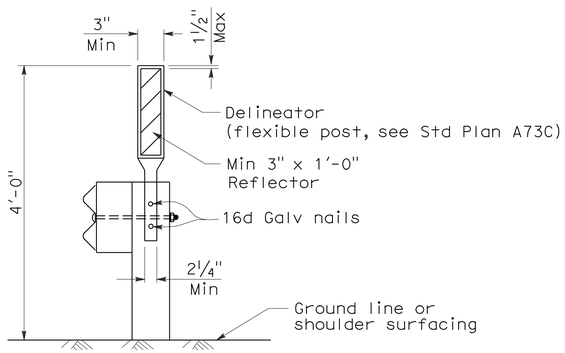

GUARD RAILING DELINEATION

See Note 3

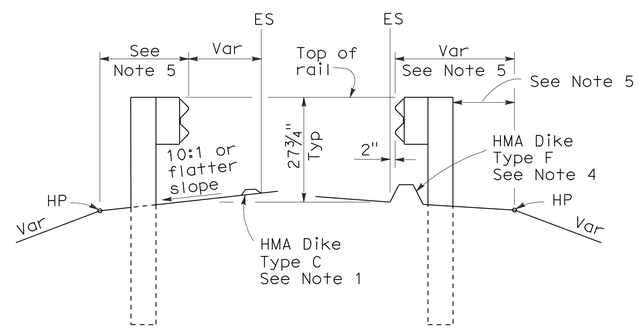

DIKE POSITIONING

See Note 1

STATE OF CALIFORNIA
DEPARTMENT OF TRANSPORTATION

METAL BEAM GUARD RAILING TYPICAL RAILING DELINEATION AND DIKE POSITIONING DETAILS

NO SCALE

RSP A77C4 DATED JUNE 6, 2008 SUPERSEDES STANDARD PLAN A77C4
DATED MAY 1, 2006 - PAGE 47 OF THE STANDARD PLANS BOOK DATED MAY 2006.

REVISED STANDARD PLAN RSP A77C4

2006 REVISED STANDARD PLAN RSP A77C4

12-10-07

DIST	COUNTY	ROUTE	POST MILES TOTAL PROJECT	SHEET NO.	TOTAL SHEETS
12	Ora	91	9.1/15.1	795	949

Randell D. Hiatt
REGISTERED CIVIL ENGINEER

June 6, 2008
PLANS APPROVAL DATE

REGISTERED PROFESSIONAL ENGINEER Randell D. Hiatt No. C50200 Exp. 6-30-09 CIVIL STATE OF CALIFORNIA

The State of California or its officers or agents shall not be responsible for the accuracy or completeness of electronic copies of this plan sheet.

To accompany plans dated 10-25-10

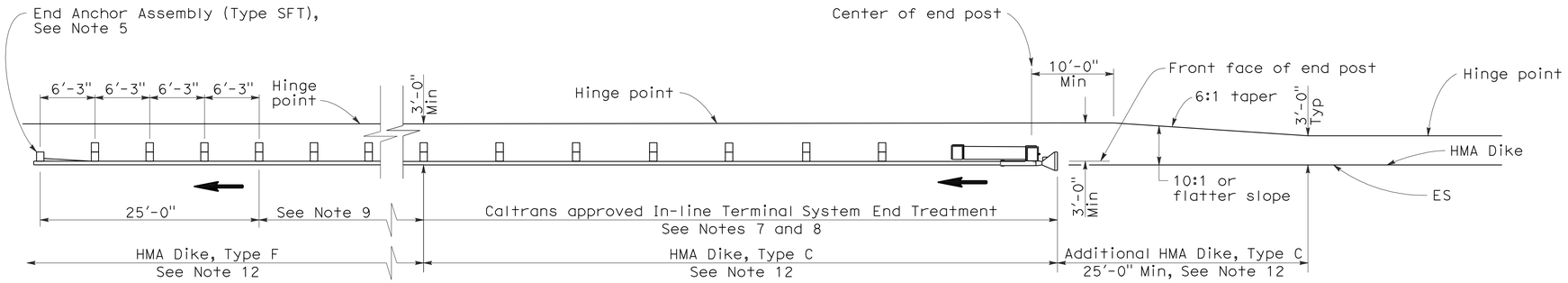

TYPE 11A LAYOUT

(EMBANKMENT GUARD INSTALLATION WITH IN-LINE END TREATMENT AT TRAFFIC APPROACH END OF RAILING)
See Note 6

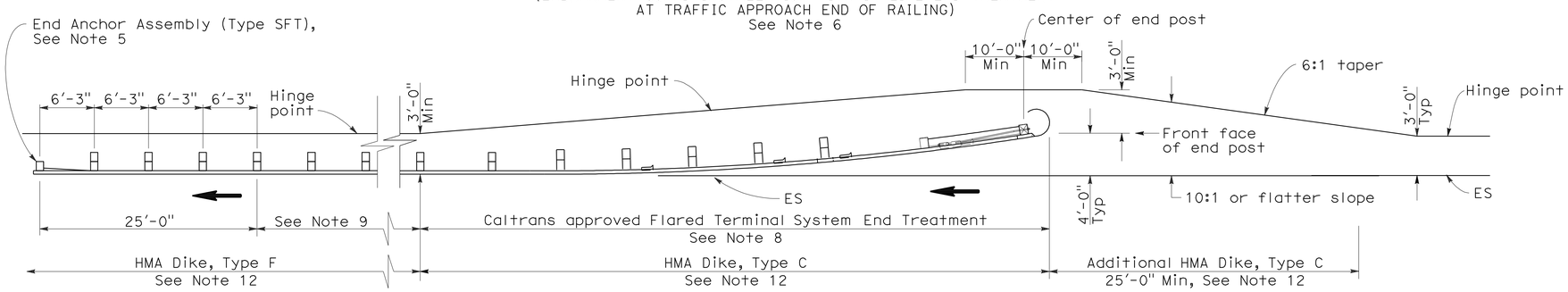

TYPE 11B LAYOUT

(EMBANKMENT GUARD RAILING INSTALLATION WITH FLARED END TREATMENT AT TRAFFIC APPROACH END OF RAILING)
See Note 6

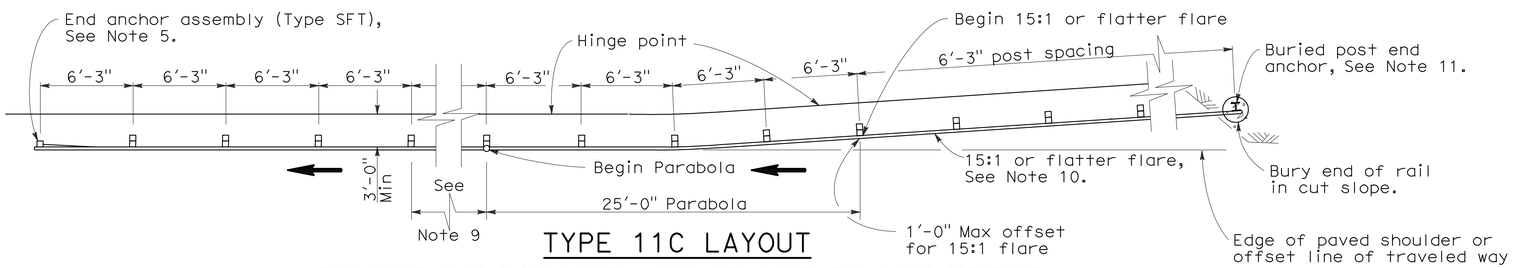

TYPE 11C LAYOUT

(EMBANKMENT GUARD RAILING INSTALLATION WITH BURIED END ANCHOR TREATMENT AT TRAFFIC APPROACH END OF RAILING)
See Notes 6 and 12

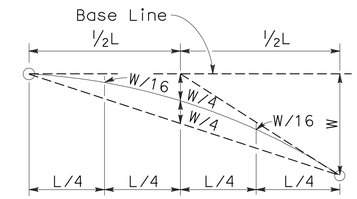

TYPICAL PARABOLIC LAYOUT

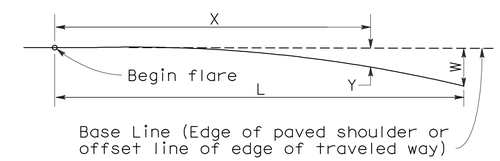

$$Y = \frac{WX^2}{L^2}$$

Y = Offset from base line
W = Maximum offset
X = Distance along base line
L = Length of flare

PARABOLIC FLARE OFFSETS

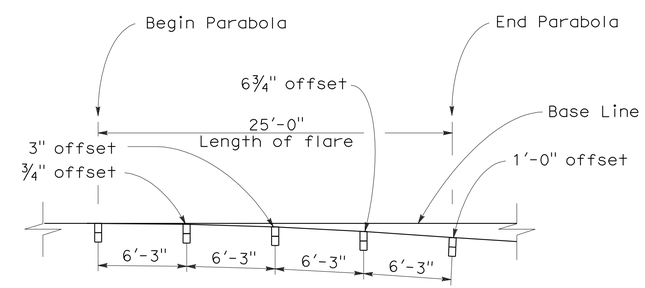

TYPICAL FLARE OFFSETS FOR 1 FOOT MAX END OFFSET

NOTES:

1. Line post, blocks and hardware to be used are shown on Standard Plans A77A1, A77A2, A77B1, A77C1, and A77C2.
2. Guard rail post spacing to be 6'-3" center to center, except as otherwise noted.
3. Except as noted, line posts are 6" x 8" x 6'-0" wood with 6" x 8" x 1'-2" wood blocks. W6 x 9 steel posts, 6'-0" in length, with 6" x 8" x 1'-2" notched wood blocks or recycled plastic blocks may be used for 6" x 8" x 6'-0" wood post with 6" x 8" x 1'-2" wood blocks where applicable and when specified.
4. Direction of adjacent traffic indicated by ⟶.
5. For End Anchor Assembly (Type SFT) details, see Standard Plan A77H1.
6. Layout Types 11A, 11B or 11C are typically used where guard railing is recommended to shield embankment slopes and a crashworthy end treatment is required for only one direction of traffic.
7. In-line Terminal System End Treatments are used where site conditions will not accommodate a flared end treatment.
8. The type of terminal system end treatment to be used will be shown on the Project Plans.
9. Dependent on site conditions (embankment height and side slope), construction of additional guard railing (length equal to multiples of 12'-6" with 6'-3" post spacing) may be advisable.
10. The 15:1 or flatter flare used with buried end anchors is based on the edge of the paved shoulder or offset line of edge of the traveled way. The length of guard railing within the 15:1 or flatter flare is based on site conditions and should be a length equal to multiples of 12'-6".
11. For details of the buried post end anchor used with Type 11C Layout, see Standard Plan A77I2.
12. Where placement of dike is required with guard railing installations, see Revised Standard Plan RSP A77C4 for dike positioning details.

STATE OF CALIFORNIA
DEPARTMENT OF TRANSPORTATION

METAL BEAM GUARD RAILING TYPICAL LAYOUTS FOR EMBANKMENTS

NO SCALE

RSP A77E1 DATED JUNE 6, 2008 SUPERSEDES STANDARD PLAN A77E1
DATED MAY 1, 2006 - PAGE 48 OF THE STANDARD PLANS BOOK DATED MAY 2006.

REVISED STANDARD PLAN RSP A77E1

2006 REVISED STANDARD PLAN RSP A77E1

12-10-07

DIST	COUNTY	ROUTE	POST MILES TOTAL PROJECT	SHEET NO.	TOTAL SHEETS
12	Ora	91	9.1/15.1	796	949

Randell D. Hiatt
REGISTERED CIVIL ENGINEER

June 6, 2008
PLANS APPROVAL DATE

REGISTERED PROFESSIONAL ENGINEER
Randell D. Hiatt
No. C50200
Exp. 6-30-09
CIVIL
STATE OF CALIFORNIA

The State of California or its officers or agents shall not be responsible for the accuracy or completeness of electronic copies of this plan sheet.

To accompany plans dated 10-25-10

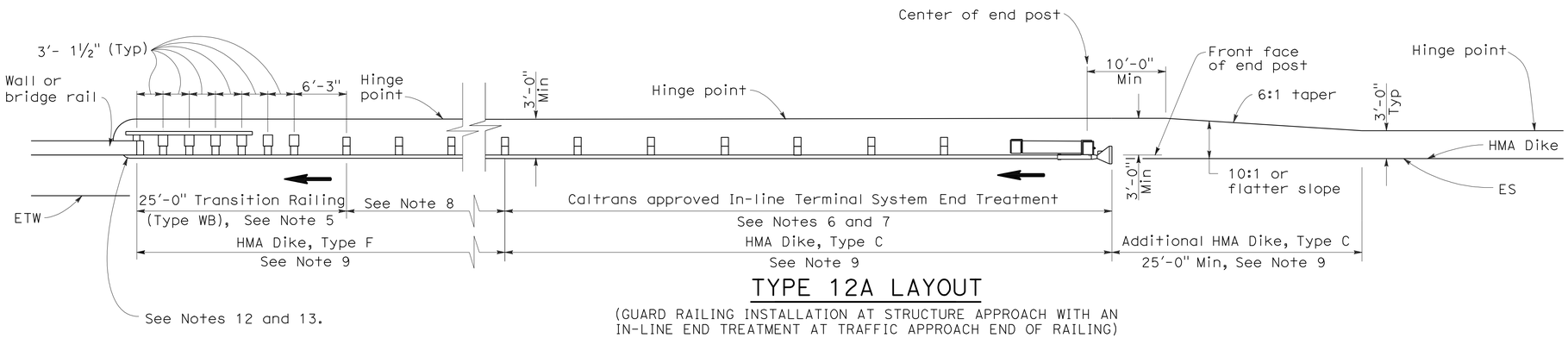

TYPE 12A LAYOUT

(GUARD RAILING INSTALLATION AT STRUCTURE APPROACH WITH AN IN-LINE END TREATMENT AT TRAFFIC APPROACH END OF RAILING)
See Notes 10

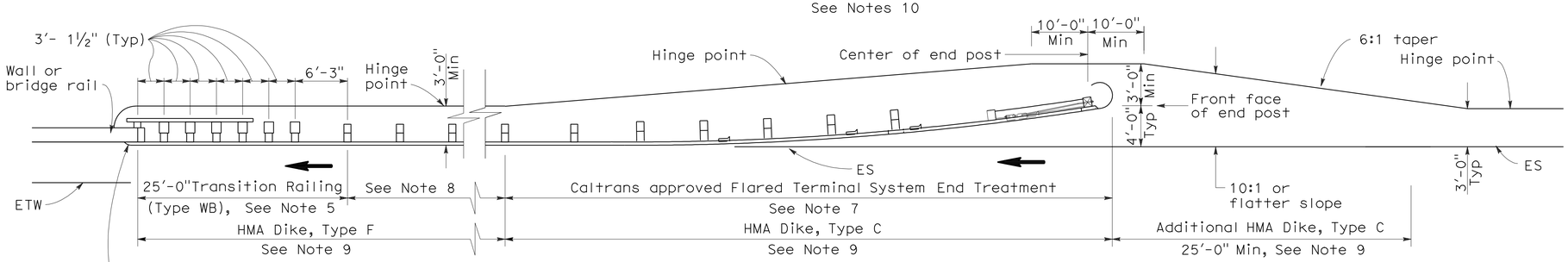

TYPE 12B LAYOUT

(GUARD RAILING INSTALLATION AT STRUCTURE APPROACH WITH A FLARED END TREATMENT AT TRAFFIC APPROACH END OF RAILING)
See Notes 10

NOTES:

1. Line post, blocks and hardware to be used are shown on Standard Plans A77A1, A77A2, A77B1, A77C1 and A77C2.
2. Guard rail post spacing to be 6'-3" center to center, except as otherwise noted.
3. Except as noted, line posts are 6" x 8" x 6'-0" wood with 6" x 8" x 1'-2" wood blocks. W6 x 9 steel posts, 6'-0" in length, with 6" x 8" x 1'-2" notched wood blocks or plastic blocks may be used for 6" x 8" x 6'-0" wood posts with 6" x 8" x 1'-2" wood blocks where applicable and when specified.
4. Direction of adjacent traffic indicated by ➡.
5. For Transition Railing (Type WB) details for Types 12A and 12B Layouts, see Standard Plan A77J4.
6. In-line Terminal System End Treatments are used where site conditions will not accommodate a flared end treatment.
7. The type of terminal system end treatment to be used will be shown on the Project Plans.
8. Dependent on site conditions (embankment height, side slopes, or other fixed objects), it may be advisable to construct additional guard railing (a length equal to multiples of 12'-6" with 6'-3" post spacing) between the transition railing and end treatment.
9. Where placement of dike is required with guard railing installations, see Revised Standard Plan RSP A77C4 for dike positioning details.
10. Type 12A or Type 12B Layouts are typically used:
    a. To the right of approaching traffic, at the end of a structure, on two-lane conventional highway where the roadbed width across the structure is less than 40 feet.
    b. To the left of approaching traffic, at the end of a structure, on two-lane conventional highway where the roadbed width across the structure is less than 40 feet.
    c. To the right of approaching traffic at the end of each structure on multilane freeways or expressways with separate adjacent or parallel bridges.
    d. To the right of approaching traffic at the end of the structure on multilane freeways or expressways with decked median on the bridge.
11. See Revised Standard Plan RSP A77F3 for typical layout used left of approaching traffic at the ends of each structure on multilane freeways or expressways with separate adjacent or parallel bridges.
12. For additional details of typical connections to bridge rail, see Connection Detail AA on Revised Standard Plans RSP A77J1 and RSP A77J2 and Connection Detail FF on Standard Plans A77K1 and A77K2.
13. For additional details of a typical connection to walls or abutments, see Standard Plan A77J3.

STATE OF CALIFORNIA
DEPARTMENT OF TRANSPORTATION

METAL BEAM GUARD RAILING TYPICAL LAYOUTS FOR STRUCTURE APPROACH

NO SCALE

RSP A77F1 DATED JUNE 6, 2008 SUPERSEDES STANDARD PLAN A77F1
DATED MAY 1, 2006 - PAGE 54 OF THE STANDARD PLANS BOOK DATED MAY 2006.

REVISED STANDARD PLAN RSP A77F1

2006 REVISED STANDARD PLAN RSP A77F1

DIST	COUNTY	ROUTE	POST MILES TOTAL PROJECT	SHEET NO.	TOTAL SHEETS
12	Ora	91	9.1/15.1	797	949

Randell D. Hiatt
REGISTERED CIVIL ENGINEER

June 6, 2008
PLANS APPROVAL DATE

REGISTERED PROFESSIONAL ENGINEER
Randell D. Hiatt
No. C50200
Exp. 6-30-09
CIVIL
STATE OF CALIFORNIA

The State of California or its officers or agents shall not be responsible for the accuracy or completeness of electronic copies of this plan sheet.

To accompany plans dated 10-25-10

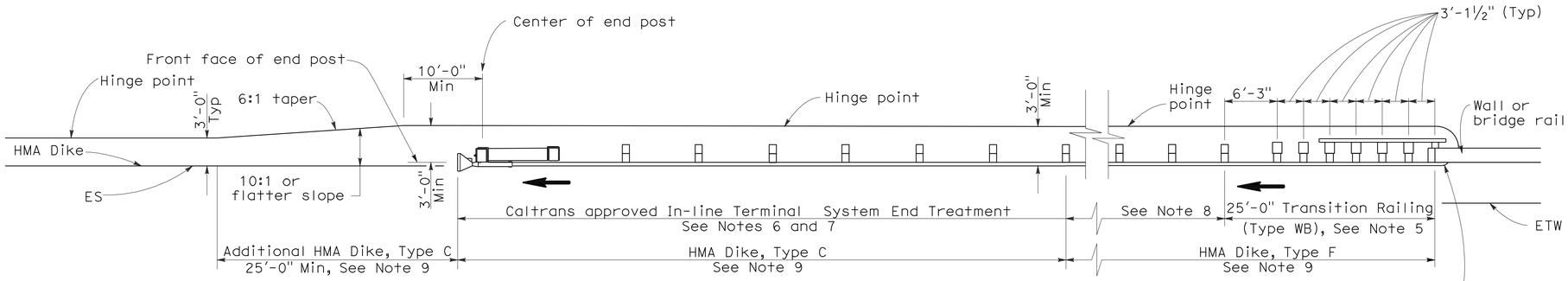

TYPE 12AA LAYOUT

(GUARD RAILING INSTALLATION AT STRUCTURE DEPARTURE WITH AN IN-LINE END TREATMENT AT TRAILING END OF RAILING)
See Notes 9 and 10

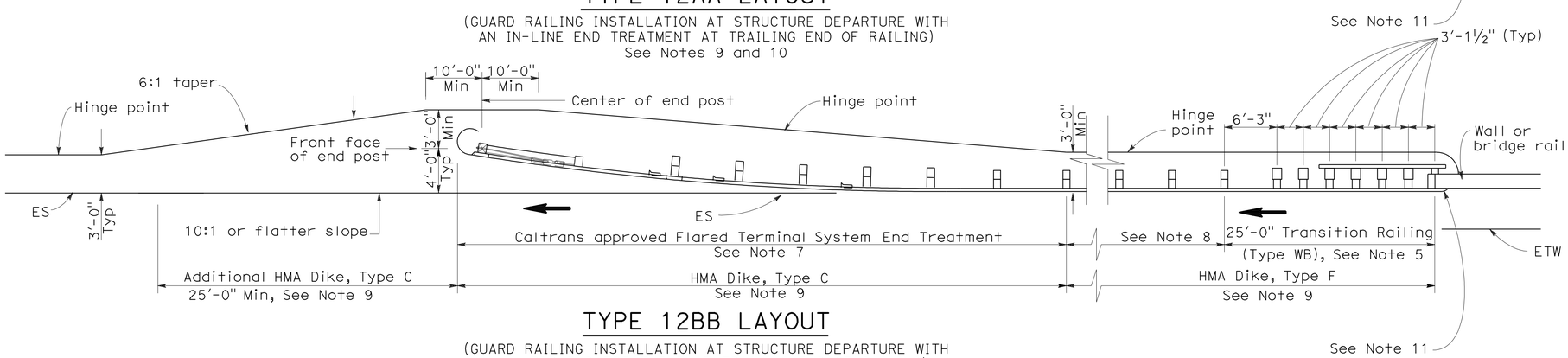

TYPE 12BB LAYOUT

(GUARD RAILING INSTALLATION AT STRUCTURE DEPARTURE WITH A FLARED END TREATMENT AT TRAILING END OF RAILING)
See Notes 9 and 10

NOTES:

1. Line post, blocks and hardware to be used are shown on Standard Plans A77A1, A77A2, A77B1, A77C1 and A77C2.
2. Guard rail post spacing to be 6'-3" center to center, except as otherwise noted.
3. Except as noted, line posts are 6" x 8" x 6'-0" wood with 6" x 8" x 1'-2" wood blocks. W6 x 9 steel posts, 6'-0" in length, with 6" x 8" x 1-2" notched wood blocks or notched recycled plastic blocks may be used for 6" x 8" x 6'-0" wood posts with 6" x 8" x 1'-2" wood blocks where applicable and when specified.
4. Direction of adjacent traffic indicated by ⟶.
5. For Transition Railing (Type WB) details for Types 12AA and 12BB Layouts, see Standard Plan A77J4.
6. In-line Terminal System Treatments are used where site conditions will not accommodate a flared end treatment.
7. The type of terminal system to be used will be shown on the Project Plans.
8. Dependent on site conditions (embankment height, side slopes, other fixed objects), it may be advisable to construct additional guard railing (a length equal to multiples of 12'-6" with 6'-3" post spacing) between the transition railing and end treatments.
9. Where placement of dike is required with guard railing installations, see Revised Standard Plan RSP A77C4 for dike positioning details.
10. Type 12AA or Type 12BB Layouts are typically used to the right of traffic departing a structure on two-way conventional highways where the roadbed width across the structure is less than 40 feet.
11. For additional details of typical connections to bridge rail, see Connection Detail CC on Revised Standard Plan RSP A77J2 and Connection Detail HH on Standard Plans A77k2.

STATE OF CALIFORNIA
DEPARTMENT OF TRANSPORTATION

METAL BEAM GUARD RAILING TYPICAL LAYOUTS FOR STRUCTURE DEPARTURE

NO SCALE

RSP A77F4 DATED JUNE 6, 2008 SUPERSEDES STANDARD PLAN A77F4
DATED MAY 1, 2006 - PAGE 57 OF THE STANDARD PLANS BOOK DATED MAY 2006.

REVISED STANDARD PLAN RSP A77F4

2006 REVISED STANDARD PLAN RSP A77F4

12-10-07

DIST	COUNTY	ROUTE	POST MILES TOTAL PROJECT	SHEET NO.	TOTAL SHEETS
12	Ora	91	9.1/15.1	798	949

Randell D. Hiatt
REGISTERED CIVIL ENGINEER

June 6, 2008
PLANS APPROVAL DATE

REGISTERED PROFESSIONAL ENGINEER
Randell D. Hiatt
No. C50200
Exp. 6-30-09
CIVIL
STATE OF CALIFORNIA

The State of California or its officers or agents shall not be responsible for the accuracy or completeness of electronic copies of this plan sheet.

To accompany plans dated 10-25-10

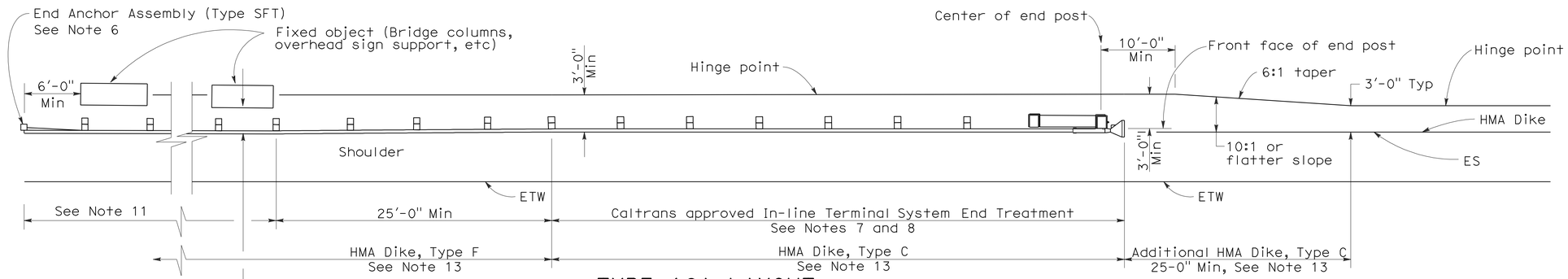

TYPE 16A LAYOUT

(GUARD RAILING INSTALLATION AT ROADSIDE FIXED OBJECT OR OBJECTS WITH AN IN-LINE END TREATMENT AT TRAFFIC APPROACH END OF RAILING)
See Notes 12 and 13

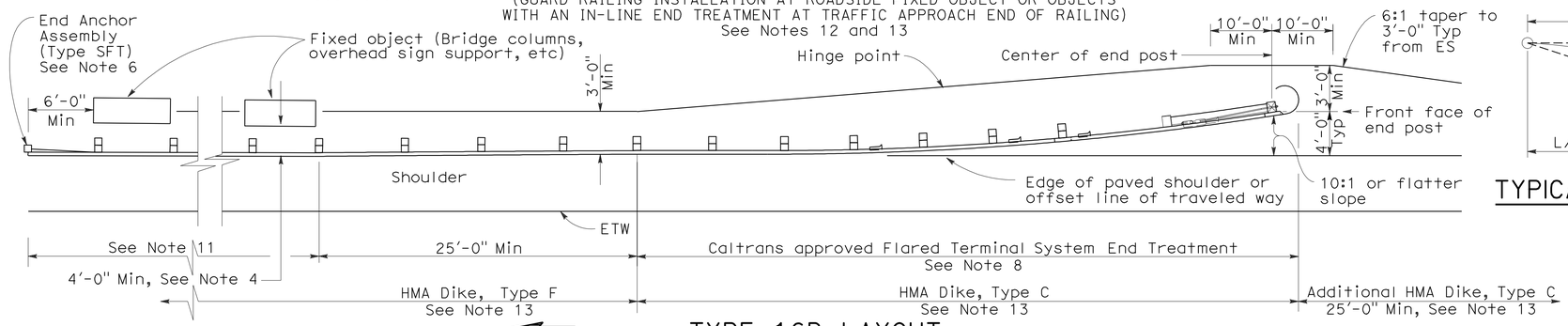

TYPE 16B LAYOUT

(GUARD RAILING INSTALLATION AT ROADSIDE FIXED OBJECT OR OBJECTS WITH A FLARED END TREATMENT AT TRAFFIC APPROACH END OF RAILING)
See Notes 12 and 13

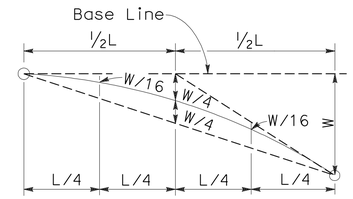

TYPICAL PARABOLIC LAYOUT

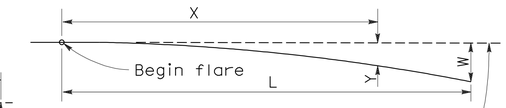

Base Line (Edge of paved shoulder or offset line of edge of traveled way)

$$Y = \frac{WX^2}{L^2}$$

Y = Offset from base line
W = Maximum offset
X = Distance along base line
L = Length of flare

PARABOLIC FLARE OFFSETS

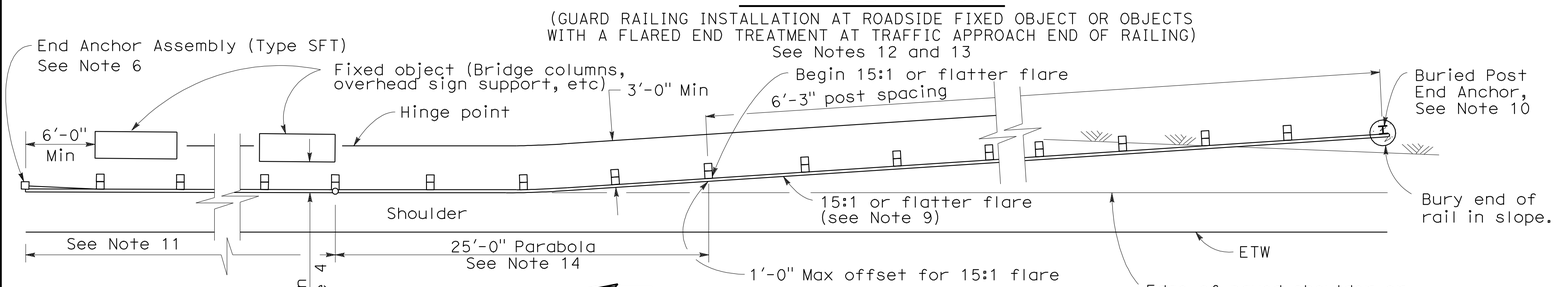

TYPE 16C LAYOUT

(GUARD RAILING INSTALLATION AT ROADSIDE FIXED OBJECT OR OBJECTS WITH A BURIED END ANCHOR TREATMENT AT TRAFFIC APPROACH END OF RAILING)
See Notes 12 and 13

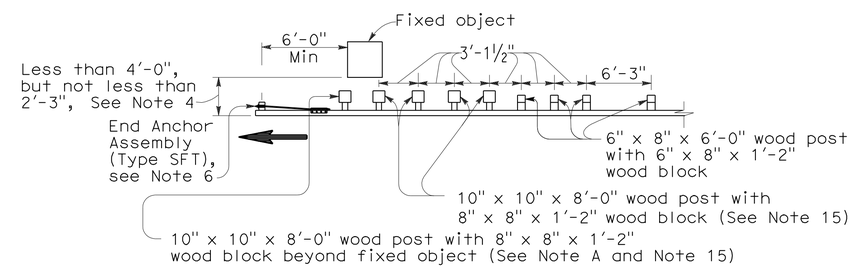

NOTE A: For a series of fixed objects (bridge columns, overhead sign supports, etc.) additional 10" x 10" x 8'-0" wood post with 8" x 8" x 1'-2" wood blocks at 3'-1½" center to center spacing are to be used between fixed objects.

STRENGTHENED RAILING SECTIONS FOR FIXED OBJECT

Use strengthened railing sections with Types 16A, 16B or 16C Layouts where minimum clearance between the face of the guard railing and fixed object(s) is less than 4'-0", but not less than 2'-3". See Note 4

NOTES:

1. Line post, blocks and hardware to be used are shown on Revised Standard Plans A77A1, A77A2, A77B1, A77C1 and A77C2.
2. Guard railing post spacing to be 6'-3" center to center, except as otherwise noted.
3. Except as noted, line posts are 6" x 8" x 6'-0" wood with 6" x 8" x 1'-2" wood blocks. W6 x 9 steel posts, 6'-0" in length, with 6" x 8" x 1'-2" notched wood blocks or notched recycled plastic blocks may be used for 6" x 8" x 6'-0" wood line posts with 6" x 8" x 1'-2" wood blocks where applicable and when specified.
4. A 4'-0" minimum clearance is required between the face of the railing and the face of a fixed object located directly behind standard guard railing sections with post spacing of 6'-3". Construct guard railing as shown in the detail "Strengthened Railing Sections for Fixed Objects" on this plan, where the clearance between the face of the railing and the face of a fixed object is less than 4'-0", but not less than 2'-3". Where the clearance is less than 2'-3", a concrete wall or barrier should be constructed to shield the fixed object(s).
5. Direction of adjacent traffic indicated by ⟶.
6. For End Anchor Assembly (Type SFT) details, see Standard Plan A77H1.
7. In-line Terminal System End Treatments are used where site conditions will not accommodate a flared end treatment.
8. The type of terminal system to be used will be shown on the Project Plans.
9. The 15:1 or flatter flare used with Type 16C Layout is based on the edge of the paved shoulder or offset line of edge of the traveled way. The length of guard railing within the 15:1 or flatter flare is based on site conditions and should be a length equal to multiples of 12'-6".
10. For details of the Buried Post End Anchor used with Type 16C Layout, see Standard Plan A77I2.
11. As site conditions dictate, construct additional guard railing to shield fixed object(s). Additional guard railing length equal to multiples of 12'-6". Post spacing at 6'-3" except as specified in Note 4.
12. Layout Types 16A, 16B or 16C are typically used where guard railing is recommended to shield roadside fixed object(s) and a crashworthy end treatment is required for only one direction of traffic.
13. Where placement of dike is required with guard railing, see Revised Standard Plan RSP A77C4 for dike positioning details.
14. For typical flare offsets for 25'-0" length parabola with maximum offset of 1'-0", see Revised Standard Plan RSP A77E1.
15. W6 x 15 steel post, 8'-0" in length, with 8" x 8" x 1'-2" notched wood block or notched recycled plastic blocks may be used in place of the 10" x 10" x 8'-0" wood post with 8" x 8" x 1'-2" wood block shown in the "Strengthened Railing Sections Detail".

STATE OF CALIFORNIA
DEPARTMENT OF TRANSPORTATION

METAL BEAM GUARD RAILING TYPICAL LAYOUTS FOR ROADSIDE FIXED OBJECTS

NO SCALE

RSP A77G3 DATED JUNE 6, 2008 SUPERSEDES STANDARD PLAN A77G3 DATED MAY 1, 2006 - PAGE 61 OF THE STANDARD PLANS BOOK DATED MAY 2006.

REVISED STANDARD PLAN RSP A77G3

2006 REVISED STANDARD PLAN RSP A77G3

12-10-07

DIST	COUNTY	ROUTE	POST MILES TOTAL PROJECT	SHEET NO.	TOTAL SHEETS
12	Ora	91	9.1/15.1	799	949

Randell D. Hiatt
REGISTERED CIVIL ENGINEER

June 6, 2008
PLANS APPROVAL DATE

REGISTERED PROFESSIONAL ENGINEER
Randell D. Hiatt
No. C50200
Exp. 6-30-09
CIVIL
STATE OF CALIFORNIA

The State of California or its officers or agents shall not be responsible for the accuracy or completeness of electronic copies of this plan sheet.

To accompany plans dated 10-25-10

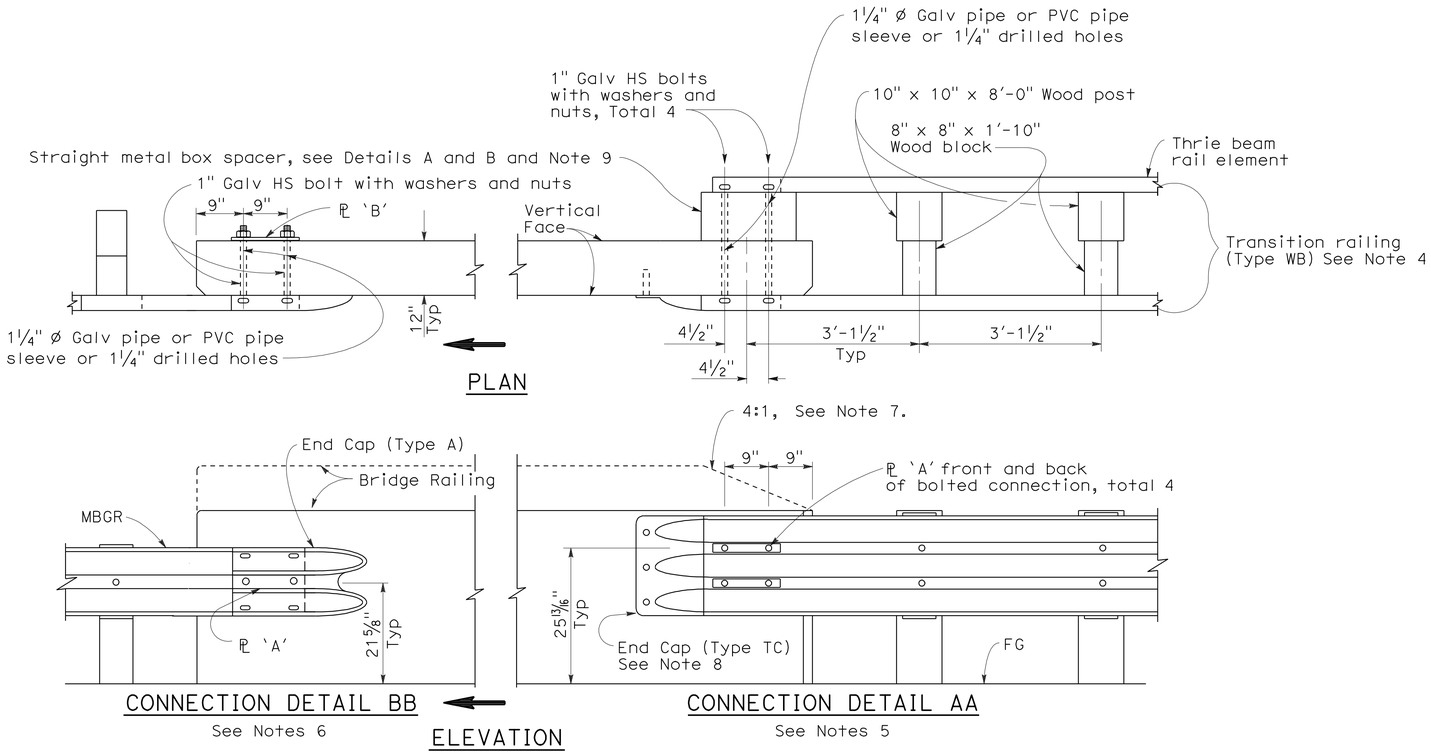

GUARD RAILING CONNECTION TO BRIDGE RAILING WITHOUT SIDEWALK

NOTES:

1. See Revised Standard Plan RSP A77J2 for additional connection details to bridges without sidewalks.
2. Additional details of posts, blocks and hardware are shown on Standard Plan A77B1, A77C1 and A77C2.
3. Direction of adjacent traffic indicated by ➡.
4. For additional details of Transition Railing (Type WB), see Standard Plan A77J4. Transition Railing (Type WB) transitions the 12 gage w-beam standard railing section of guard railing to a heavier gage nested thrie beam railing section which is connected to the concrete bridge railing.
5. For typical use of Connection Detail AA, see Layout Types 12A and 12B on Revised Standard Plan RSP A77F1, Layout Types 12C and 12D on Standard Plan A77F2, and Layout Type 12E on Revised Standard Plan RSP A77F3.
6. For typical use of Connection Detail BB, see Layout Type 12D (structure departure railing connection) on Standard Plan A77F2 and Layout Type 12DD on Standard Plan A77F5.
7. Where the height of the bridge railing exceeds the height of the thrie beam railing by more than 1" at Connection Detail AA, taper the top of the end of the bridge railing at 4:1 to match the top elevation of the thrie beam rail.
8. For details of End Cap (Type TC), see Standard Plan A77J4.
9. See Standard Plan A77J4 for additional details regarding depth dimension for straight metal box spacer.

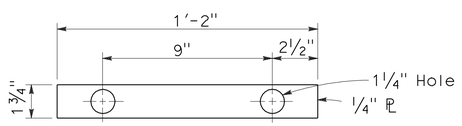

PLATE 'A'

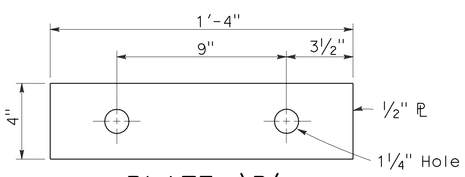

PLATE 'B'
(For backside of connection BB)

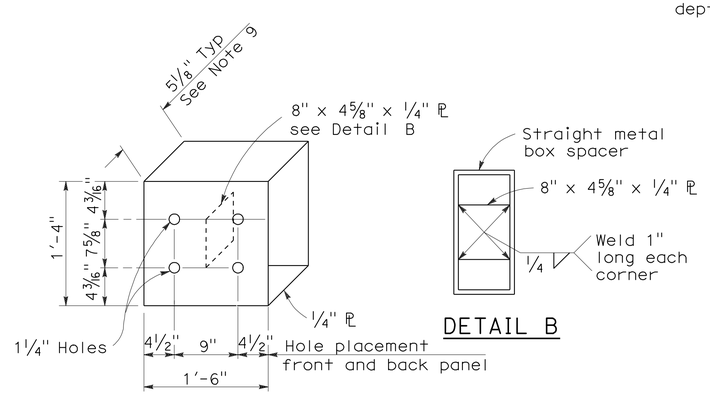

DETAIL A

DETAIL B

STRAIGHT METAL BOX SPACER

STATE OF CALIFORNIA
DEPARTMENT OF TRANSPORTATION

METAL BEAM GUARD RAILING CONNECTIONS TO BRIDGE RAILINGS WITHOUT SIDEWALKS DETAILS No.1

NO SCALE

RSP A77J1 DATED JUNE 6, 2008 SUPERSEDES STANDARD PLAN A77J1
DATED MAY 1, 2006 - PAGE 72 OF THE STANDARD PLANS BOOK DATED MAY 2006.

REVISED STANDARD PLAN RSP A77J1

2006 REVISED STANDARD PLAN RSP A77J1

12-10-07

DIST	COUNTY	ROUTE	POST MILES TOTAL PROJECT	SHEET NO.	TOTAL SHEETS
12	Ora	91	9.1/15.1	800	949

Randell D. Hiatt
REGISTERED CIVIL ENGINEER

June 6, 2008
PLANS APPROVAL DATE

REGISTERED PROFESSIONAL ENGINEER
Randell D. Hiatt
No. C50200
Exp. 6-30-09
CIVIL
STATE OF CALIFORNIA

The State of California or its officers or agents shall not be responsible for the accuracy or completeness of electronic copies of this plan sheet.

To accompany plans dated 10-25-10

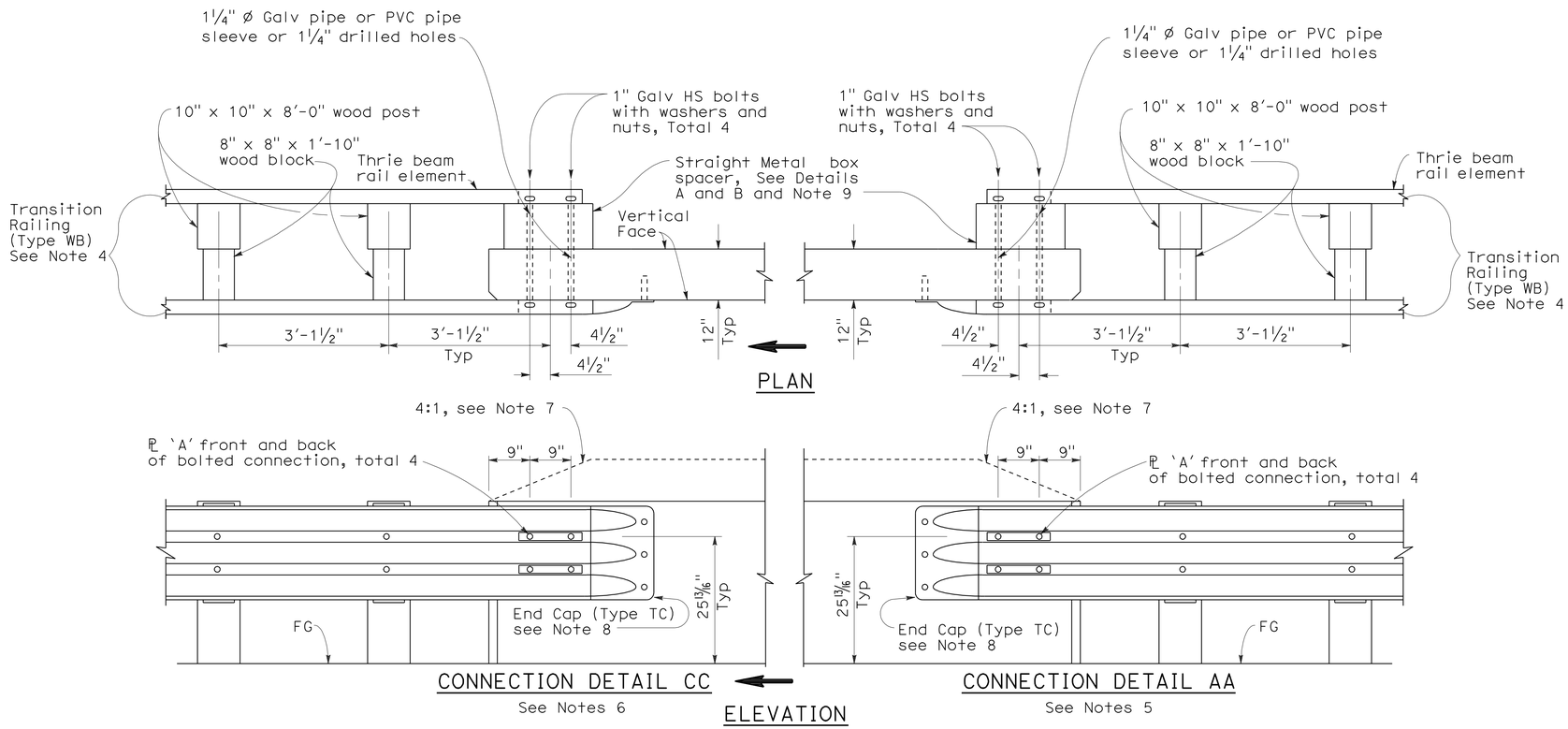

GUARD RAILING CONNECTION TO BRIDGE RAILING WITHOUT SIDEWALK

NOTES:

1. See Revised Standard Plan RSP A77J1 for additional connection details to bridges without sidewalks.
2. Additional details of posts, blocks and hardware are shown on Standard Plan A77B1, A77C1 and A77C2.
3. Direction of adjacent traffic indicated by ⟹.
4. For additional details of Transition Railing (Type WB), see Standard Plan A77J4. Transition Railing (Type WB) transitions the 12 gage w-beam standard railing section of guard railing to a heavier gage nested thrie beam railing section which is connected to the concrete bridge railing.
5. For typical use of Connection Detail AA, see Layout Types 12A and 12B on Revised Standard Plan RSP A77F1, Layout Types 12C and 12D on Standard Plan A77F2, and Layout Type 12E on Revised Standard Plan RSP A77F3.
6. For typical use of Connection Detail CC, see Layout Types 12AA and 12BB on Standard Plan A77F4 and Layout Type 12CC on Standard Plan A77F5.
7. Where the height of the bridge railing exceeds the height of the thrie beam railing by more than 1" at Connection Detail AA and connection Detail CC, taper the top of the end of the bridge railing at 4:1 to match the top elevation of the thrie beam railing.
8. For details of End Cap (Type TC), see Standard Plans A77J4.
9. See Standard Plans A77J4 for additional details regarding depth dimension for straight metal box spacer.

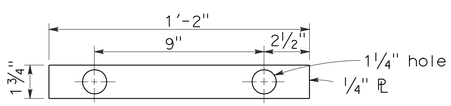

PLATE 'A'

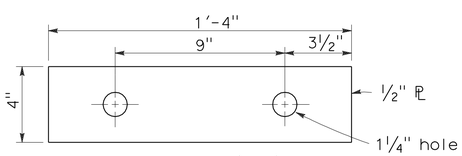

PLATE 'B'
(For backside of connection BB)

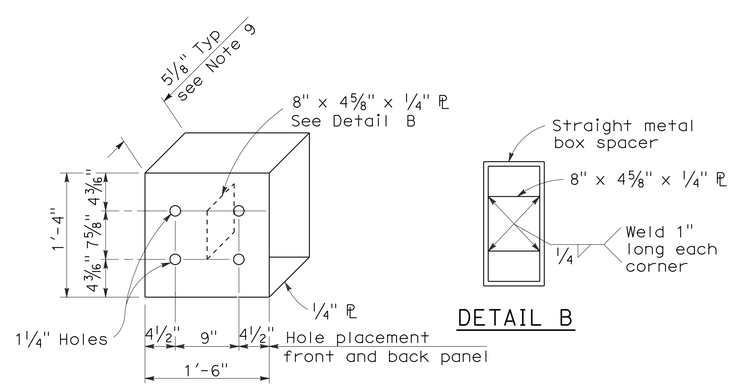

DETAIL A

DETAIL B

STRAIGHT METAL BOX SPACER

STATE OF CALIFORNIA
DEPARTMENT OF TRANSPORTATION

METAL BEAM GUARD RAILING CONNECTIONS TO BRIDGE RAILINGS WITHOUT SIDEWALKS DETAILS No.2

NO SCALE

RSP A77J2 DATED JUNE 6, 2008 SUPERSEDES STANDARD PLAN A77J2 DATED MAY 1, 2006 - PAGE 73 OF THE STANDARD PLANS BOOK DATED MAY 2006.

REVISED STANDARD PLAN RSP A77J2

2006 REVISED STANDARD PLAN RSP A77J2

12-10-07