DESIGN STUDY ONLY

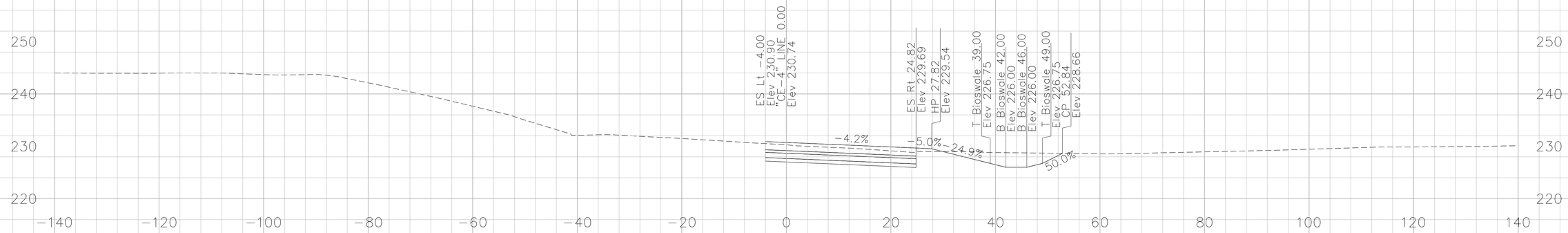

310+00.00

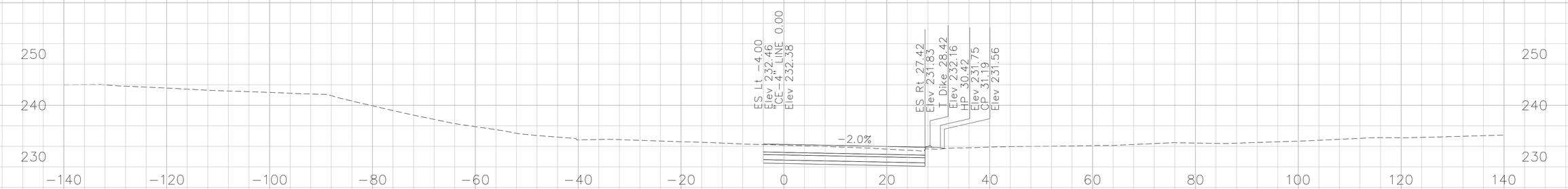

309+55.34

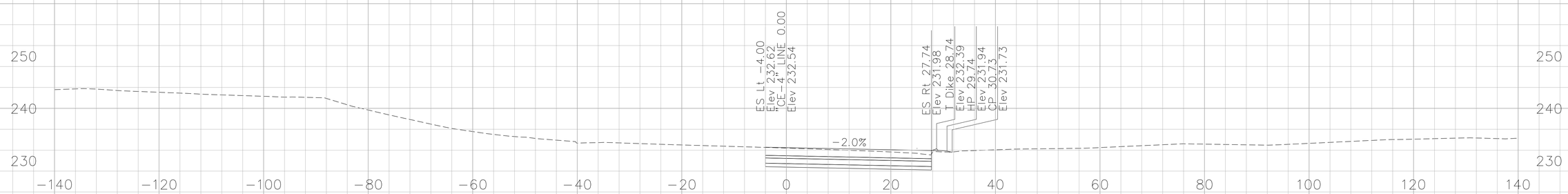

309+50.00

CROSS SECTIONS CREATED BY: DP
DATE: 10/17/2013
File: ...\CE-4 Line.dgn

PROJECT: I-5 SEGMENT 2
CONTRACT No: 12-0F96C4 12-Ora-5
PM: 3.7/6.2

Scale Ratio: 1:10' Horiz.
1:10' Vert.
ALL DIMENSIONS ARE US SURVEY FEET

"CE-4" LINE CROSS SECTIONS

SHEET 01 OF 13

DESIGN STUDY ONLY

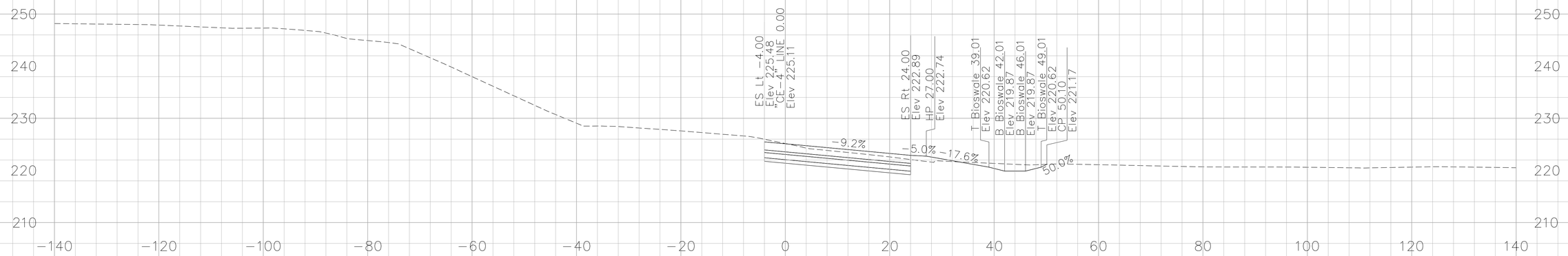

311+00.00

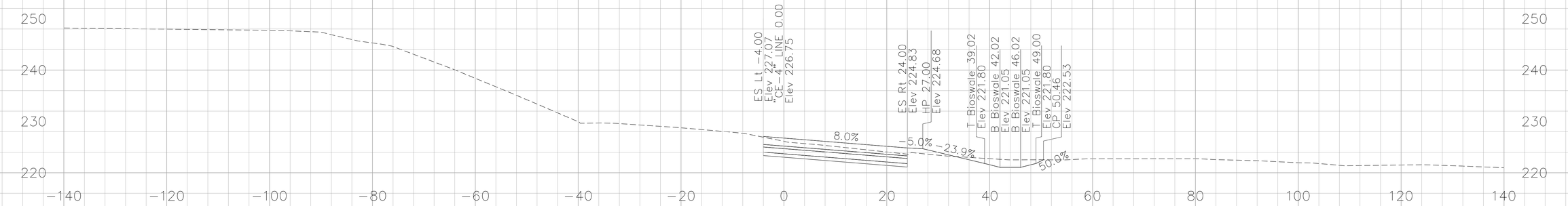

310+75.34

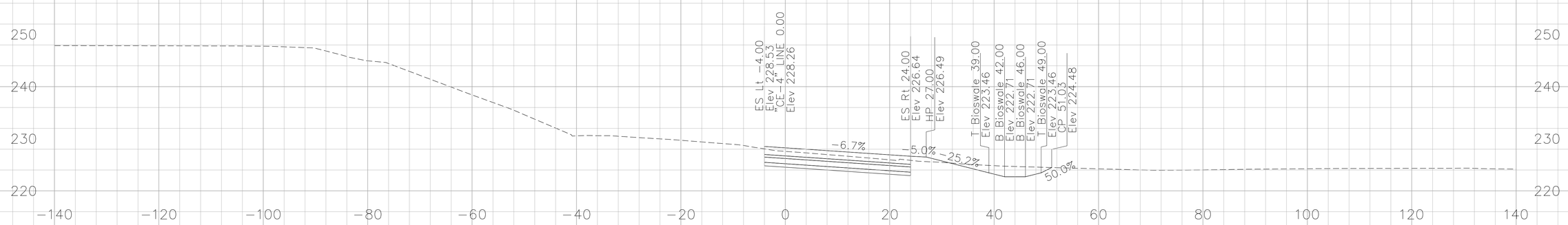

310+50.00

CROSS SECTIONS CREATED BY: DP
DATE: 10/17/2013
File: ...\CE-4 Line.dgn

PROJECT: I-5 SEGMENT 2
CONTRACT No: 12-0F96C4 12-Ora-5
PM: 3.7/6.2

Scale Ratio: 1:10' Horiz.
1:10' Vert.
ALL DIMENSIONS ARE US SURVEY FEET

"CE-4" LINE CROSS SECTIONS

SHEET 02 OF 13

DESIGN STUDY ONLY

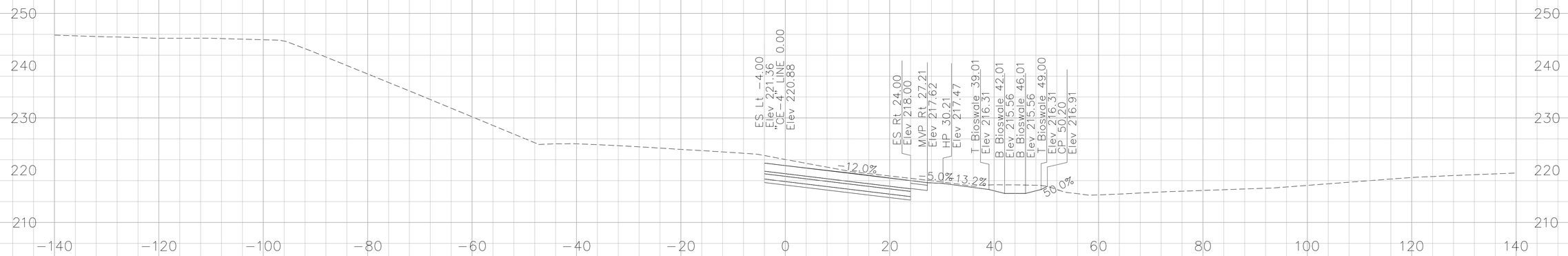

311+55.34

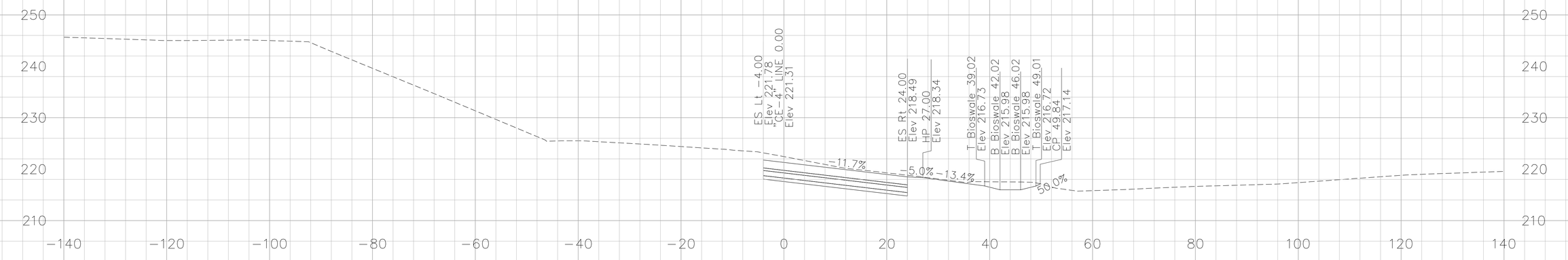

311+50.00

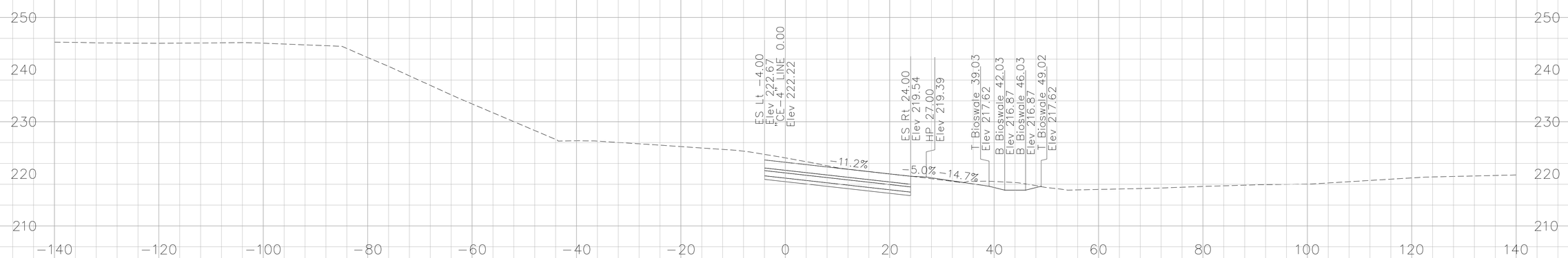

311+38.63

CROSS SECTIONS CREATED BY: DP
DATE: 10/17/2013
File: ...\CE-4 Line.dgn

PROJECT: I-5 SEGMENT 2
CONTRACT No: 12-0F96C4 12-Ora-5
PM: 3.7/6.2

Scale Ratio: 1:10' Horiz.
1:10' Vert.
ALL DIMENSIONS ARE US SURVEY FEET

"CE-4" LINE CROSS SECTIONS

SHEET 03 OF 13

DESIGN STUDY ONLY

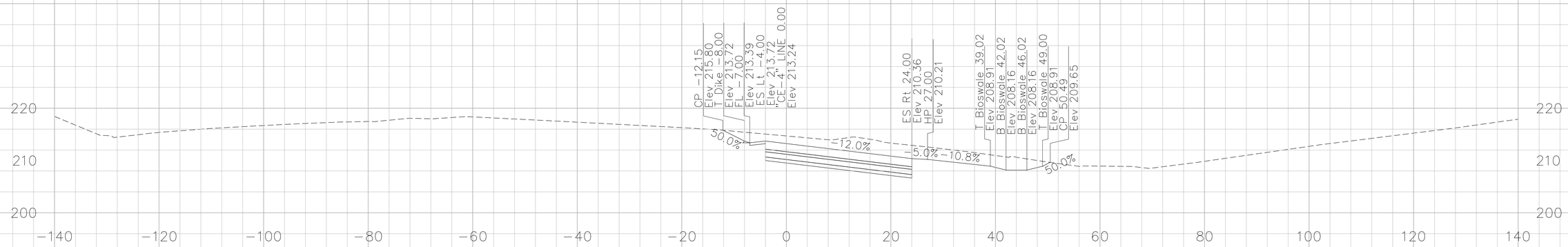

312+50.84

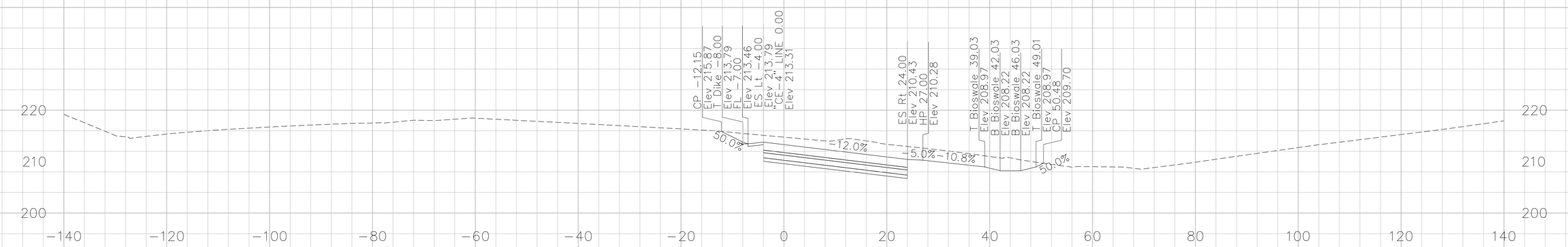

312+50.00

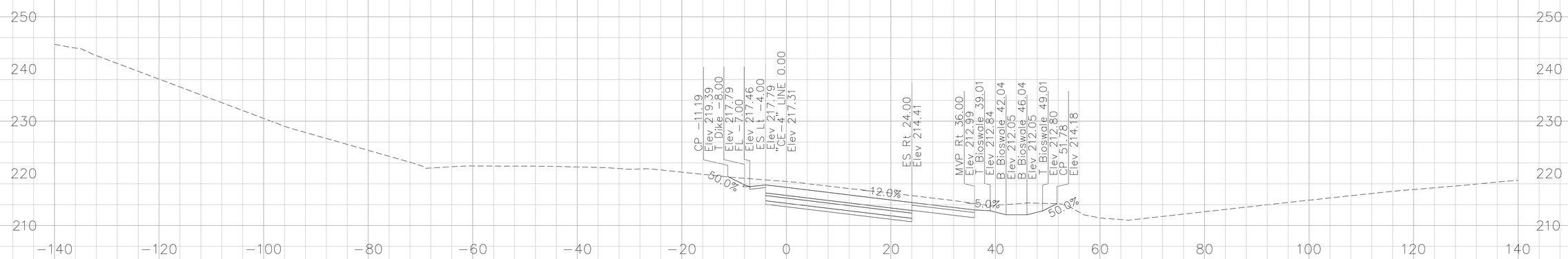

312+00.00

CROSS SECTIONS CREATED BY: DP
DATE: 10/17/2013
File: ...\CE-4 Line.dgn

PROJECT: I-5 SEGMENT 2
CONTRACT No: 12-OF96C4 12-Ora-5
PM: 3.7/6.2

Scale Ratio: 1:10' Horiz.
1:10' Vert.
ALL DIMENSIONS ARE US SURVEY FEET

"CE-4" LINE CROSS SECTIONS

SHEET 04 OF 13

DESIGN STUDY ONLY

313+90.21

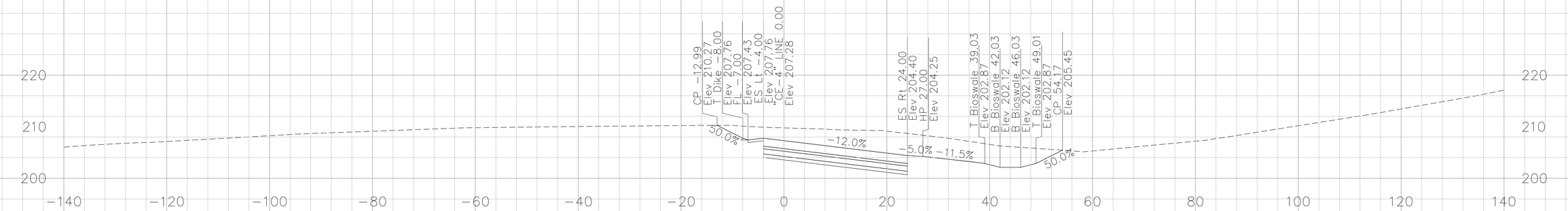

313+50.00

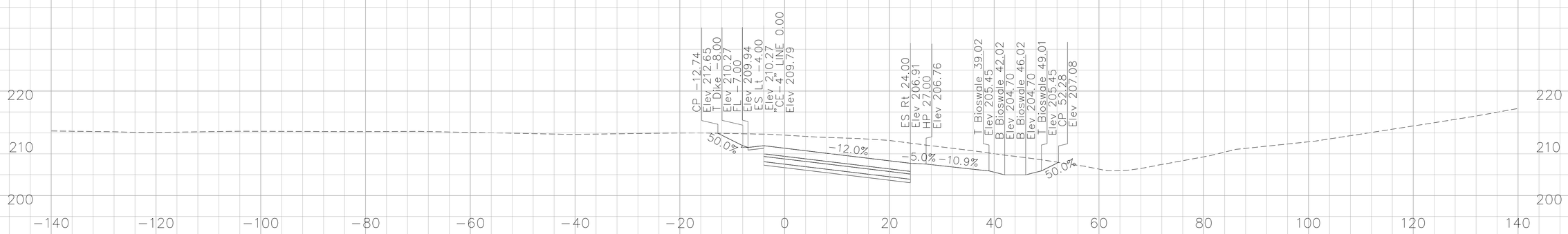

313+00.00

CROSS SECTIONS CREATED BY: DP
DATE: 10/17/2013
File: ...\CE-4 Line.dgn

PROJECT: I-5 SEGMENT 2
CONTRACT No: 12-0F96C4 12-Ora-5
PM: 3.7/6.2

Scale Ratio: 1:10' Horiz.
1:10' Vert.
ALL DIMENSIONS ARE US SURVEY FEET

"CE-4" LINE CROSS SECTIONS

SHEET 05 OF 13

DESIGN STUDY ONLY

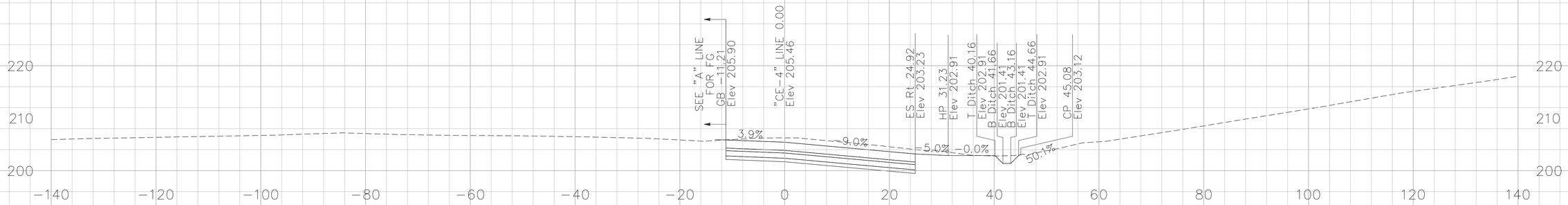

314+80.84

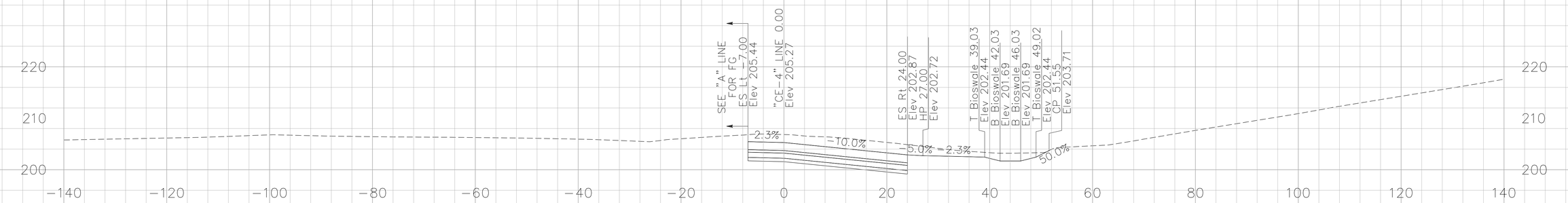

314+50.00

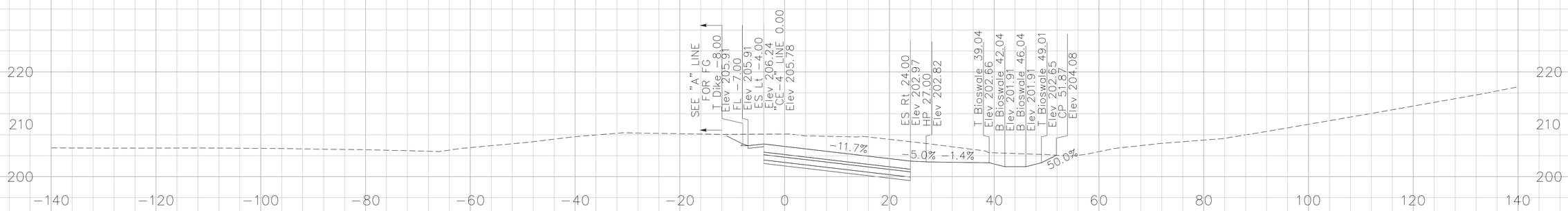

314+00.00

CROSS SECTIONS CREATED BY: DP
DATE: 10/17/2013
File: ...\CE-4 Line.dgn

PROJECT: I-5 SEGMENT 2
CONTRACT No: 12-0F96C4 12-Ora-5
PM: 3.7/6.2

Scale Ratio: 1:10' Horiz.
1:10' Vert.
ALL DIMENSIONS ARE US SURVEY FEET

"CE-4" LINE CROSS SECTIONS

SHEET 06 OF 13

DESIGN STUDY ONLY

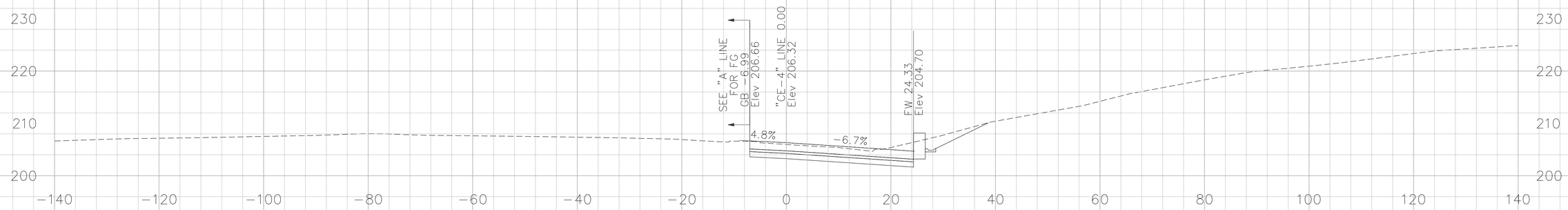

315+50.00

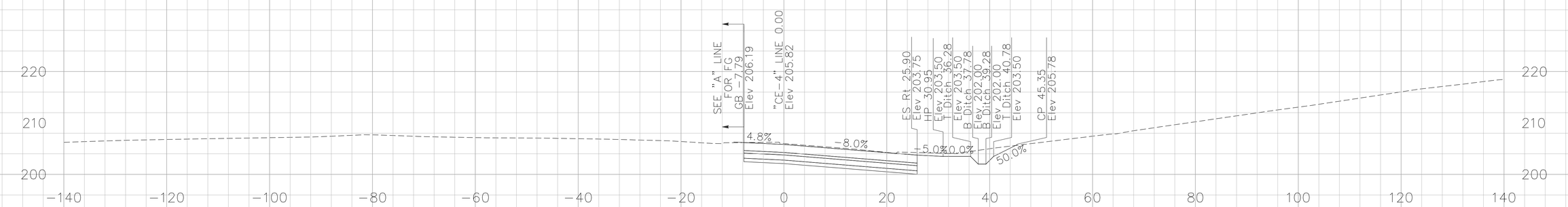

315+09.77

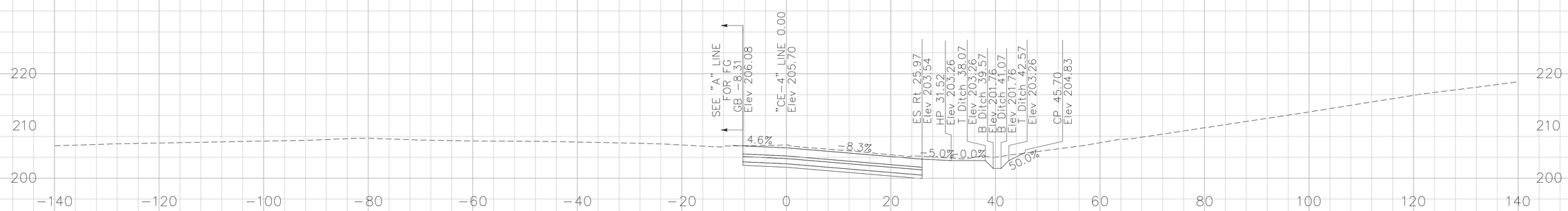

315+00.00

CROSS SECTIONS CREATED BY: DP
DATE: 10/17/2013
File: ...\CE-4 Line.dgn

PROJECT: I-5 SEGMENT 2
CONTRACT No: 12-0F96C4 12-Ora-5
PM: 3.7/6.2

Scale Ratio: 1:10' Horiz.
1:10' Vert.
ALL DIMENSIONS ARE US SURVEY FEET

"CE-4" LINE CROSS SECTIONS

SHEET 07 OF 13

DESIGN STUDY ONLY

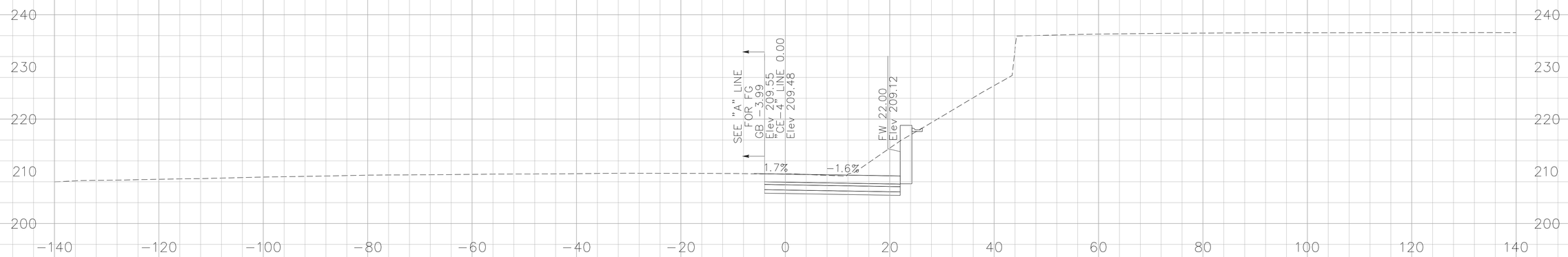

317+00.00

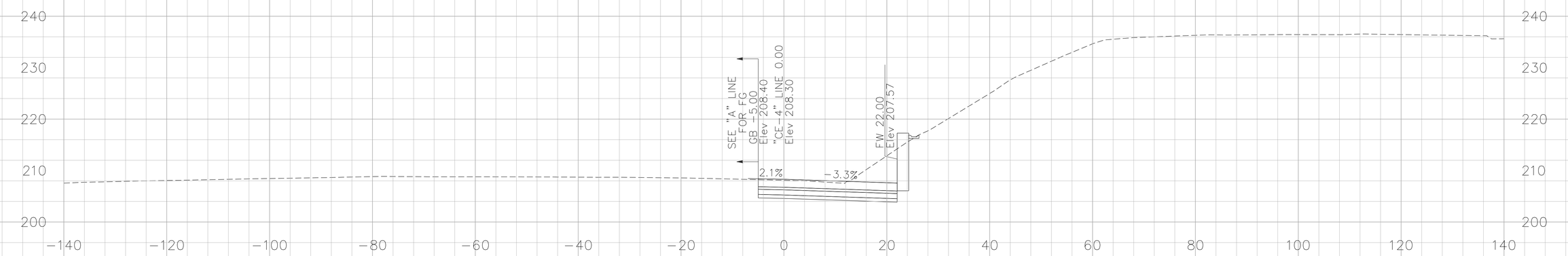

316+50.00

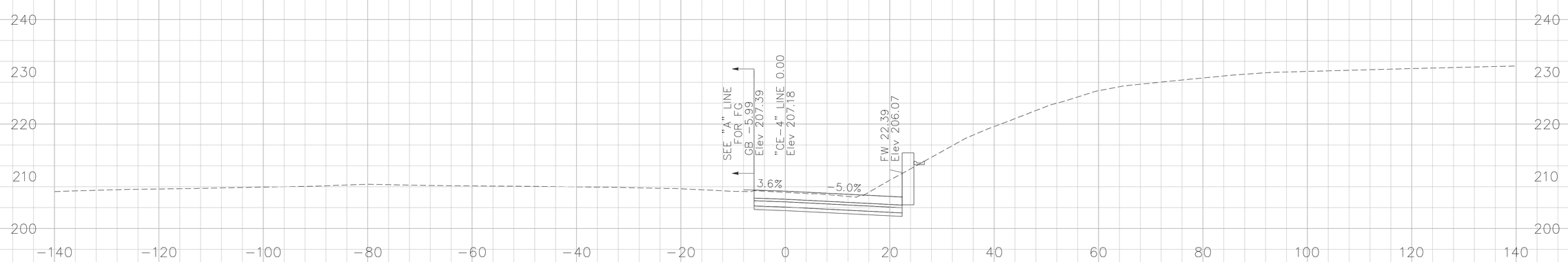

316+00.00

CROSS SECTIONS CREATED BY: DP
DATE: 10/17/2013
File: ...\CE-4 Line.dgn

PROJECT: I-5 SEGMENT 2
CONTRACT No: 12-0F96C4 12-Ora-5
PM: 3.7/6.2

Scale Ratio: 1:10' Horiz.
1:10' Vert.
ALL DIMENSIONS ARE US SURVEY FEET

"CE-4" LINE CROSS SECTIONS

SHEET 08 OF 13

DESIGN STUDY ONLY

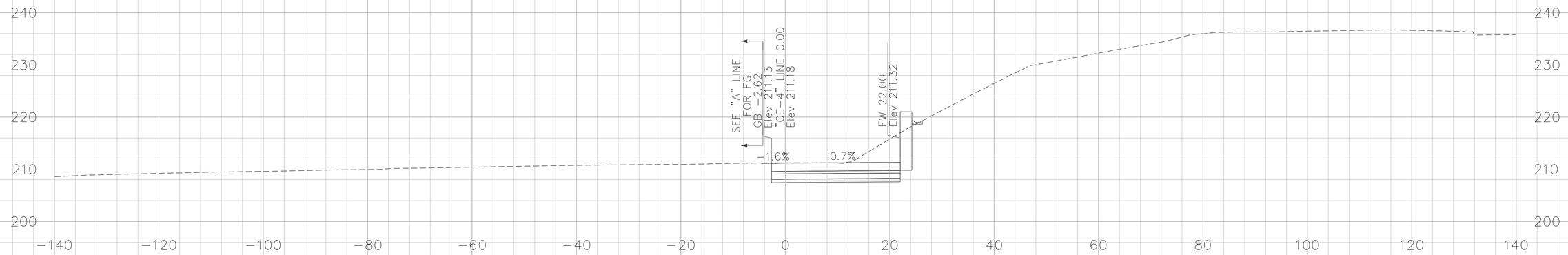

317+68.91

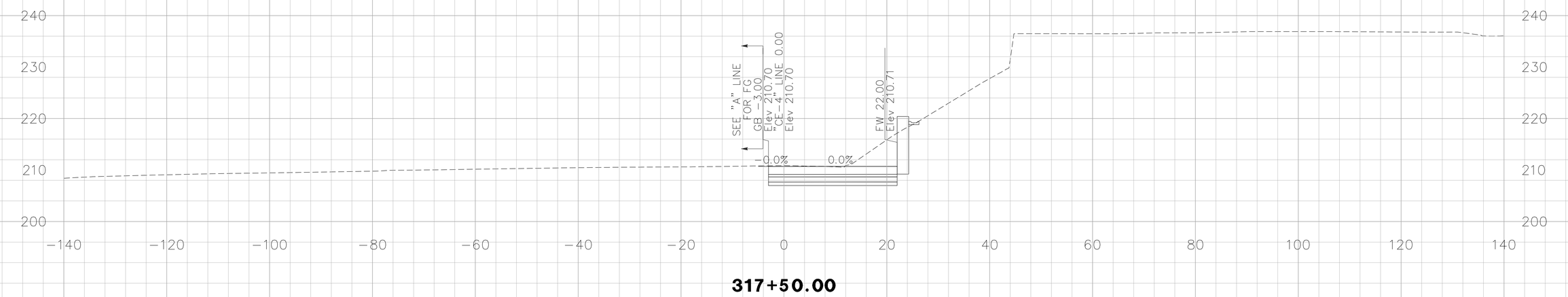

317+50.00

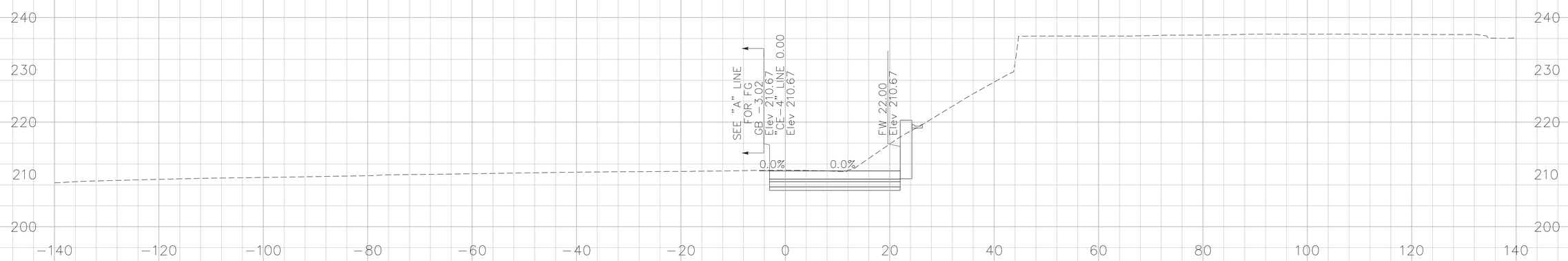

317+48.88

CROSS SECTIONS CREATED BY: DP
DATE: 10/17/2013
File: ...\CE-4 Line.dgn

PROJECT: I-5 SEGMENT 2
CONTRACT No: 12-0F96C4 12-Ora-5
PM: 3.7/6.2

Scale Ratio: 1:10' Horiz.
1:10' Vert.
ALL DIMENSIONS ARE US SURVEY FEET

"CE-4" LINE CROSS SECTIONS

SHEET 09 OF 13

DESIGN STUDY ONLY

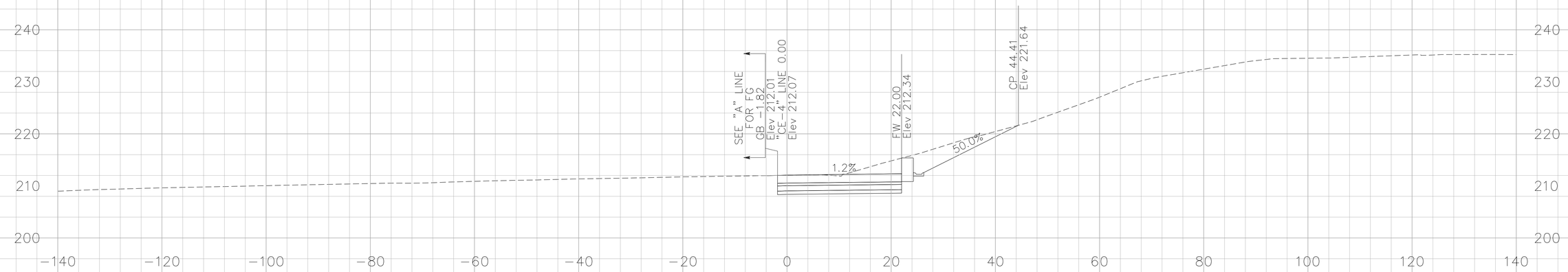

318+08.66

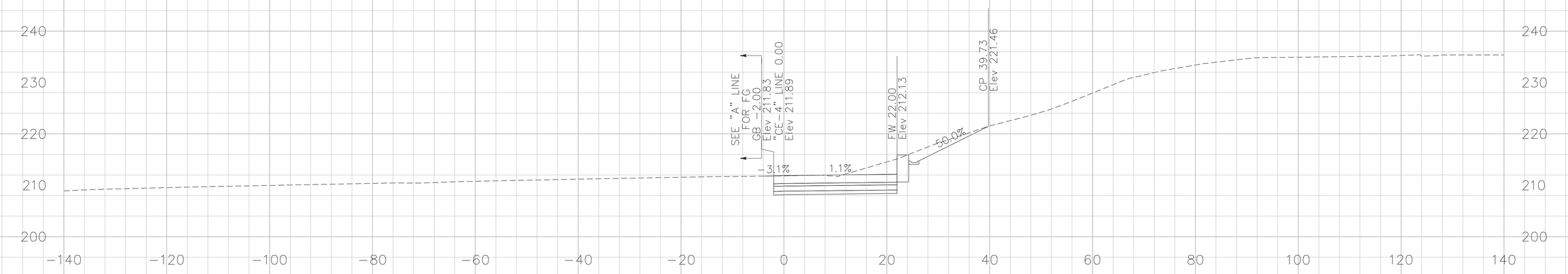

318+00.00

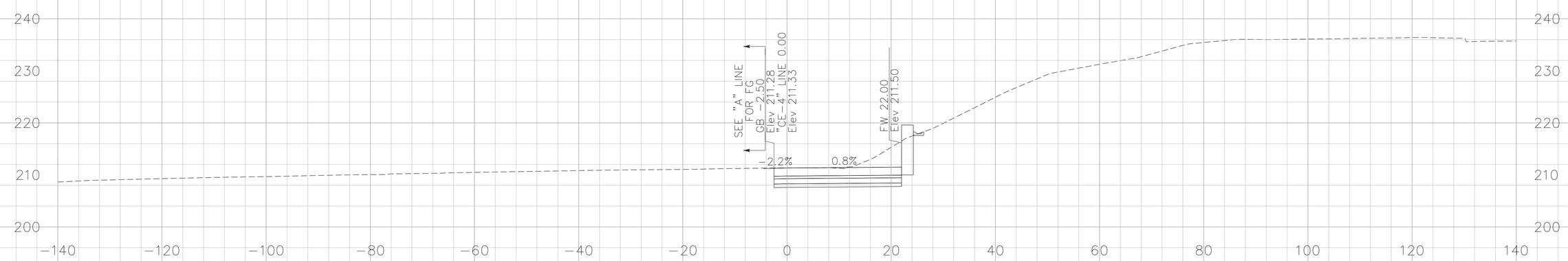

317+75.00

CROSS SECTIONS CREATED BY: DP
DATE: 10/17/2013
File: ...\CE-4 Line.dgn

PROJECT: I-5 SEGMENT 2
CONTRACT No: 12-0F96C4 12-Ora-5
PM: 3.7/6.2

Scale Ratio: 1:10' Horiz.
1:10' Vert.
ALL DIMENSIONS ARE US SURVEY FEET

"CE-4" LINE CROSS SECTIONS

DESIGN STUDY ONLY

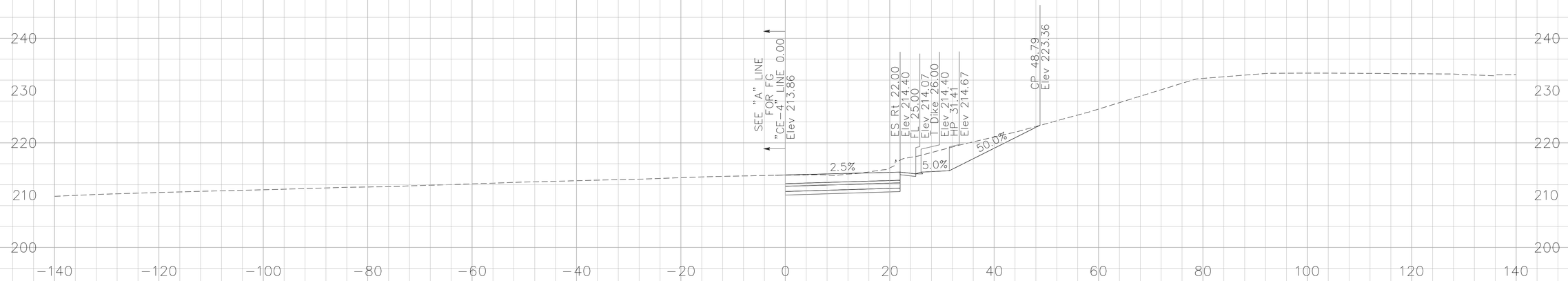

319+00.00

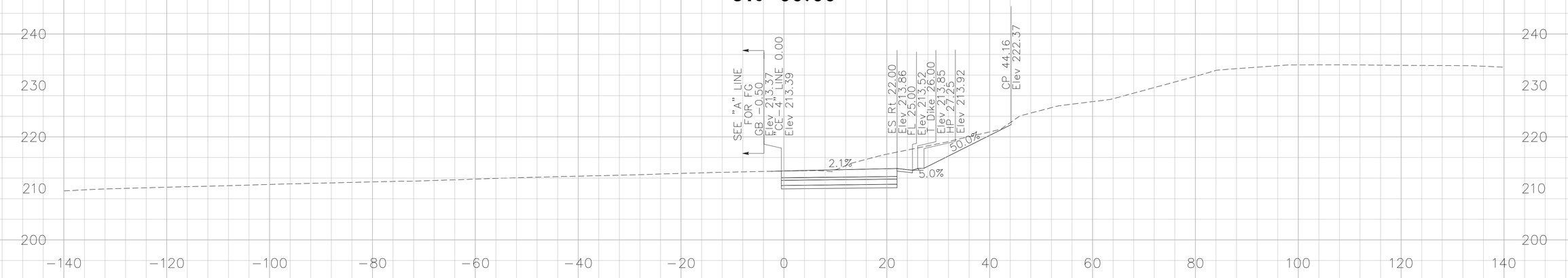

318+75.00

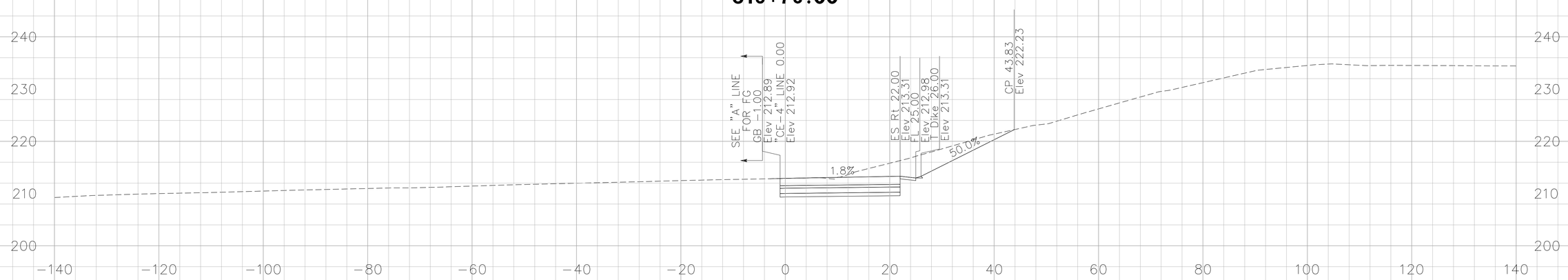

318+50.00

CROSS SECTIONS CREATED BY: DP
DATE: 10/17/2013
File: ...\CE-4 Line.dgn

PROJECT: I-5 SEGMENT 2
CONTRACT No: 12-0F96C4 12-Ora-5
PM: 3.7/6.2

Scale Ratio: 1:10' Horiz.
1:10' Vert.
ALL DIMENSIONS ARE US SURVEY FEET

"CE-4" LINE CROSS SECTIONS

SHEET 11 OF 13

DESIGN STUDY ONLY

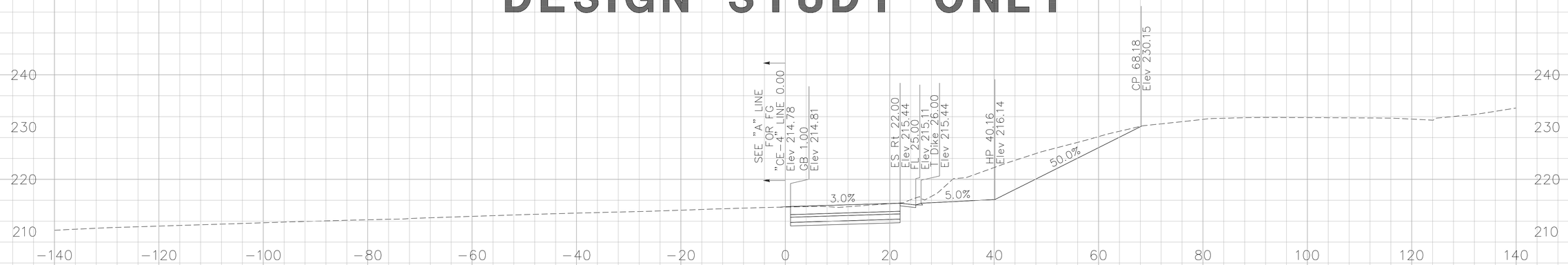

319+50.00

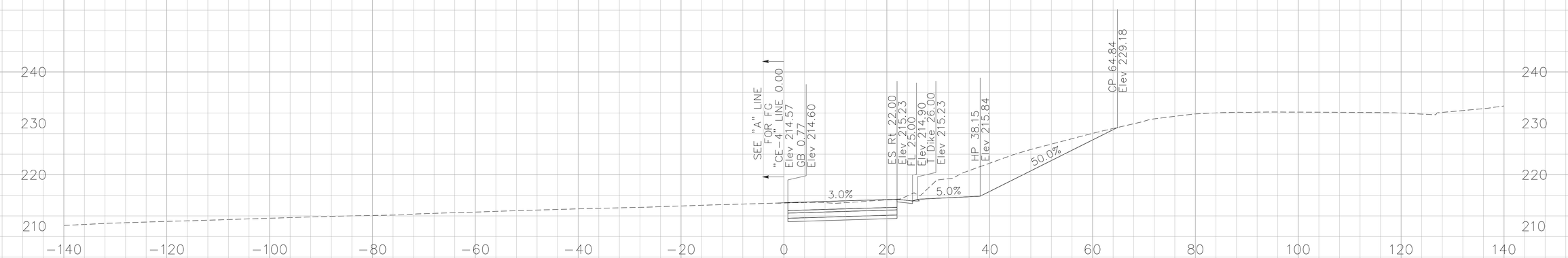

319+38.55

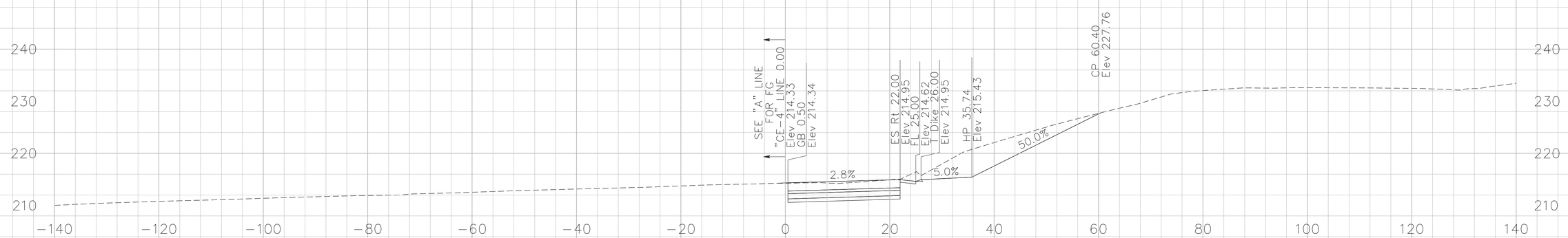

319+25.00

CROSS SECTIONS CREATED BY: DP
DATE: 10/17/2013
File: ...\CE-4 Line.dgn

PROJECT: I-5 SEGMENT 2
CONTRACT No: 12-0F96C4 12-Ora-5
PM: 3.7/6.2

Scale Ratio: 1:10' Horiz.
1:10' Vert.
ALL DIMENSIONS ARE US SURVEY FEET

"CE-4" LINE CROSS SECTIONS

DESIGN STUDY ONLY

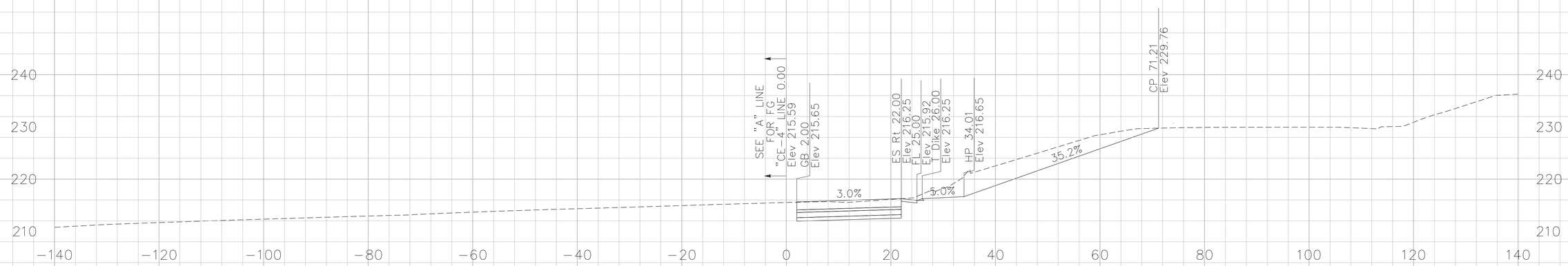

320+00.00

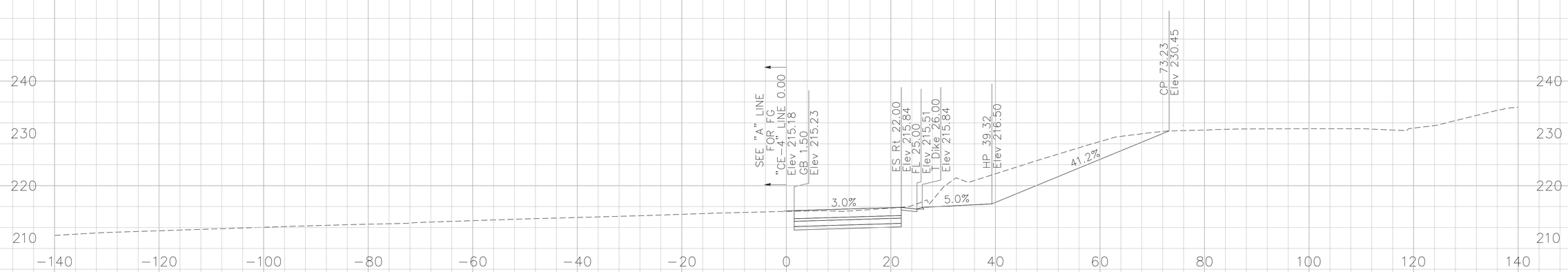

319+75.00

CROSS SECTIONS CREATED BY: DP
DATE: 10/17/2013
File: ...\CE-4 Line.dgn

PROJECT: I-5 SEGMENT 2
CONTRACT No: 12-0F96C4 12-Ora-5
PM: 3.7/6.2

Scale Ratio: 1:10' Horiz.
1:10' Vert.
ALL DIMENSIONS ARE US SURVEY FEET

"CE-4" LINE CROSS SECTIONS

SHEET 13 OF 13