TO ACCOMPANY PLANS DATED 3-10-14

Dist	COUNTY	ROUTE	POST MILES TOTAL PROJECT	SHEET No.	TOTAL SHEETS
12	Ora	5	3.0/3.7	501	635

REGISTERED CIVIL ENGINEER

April 19, 2013
PLANS APPROVAL DATE

REGISTERED PROFESSIONAL ENGINEER Gurinderpal Bhullar No. C48815 Exp. 9-30-14 CIVIL STATE OF CALIFORNIA

THE STATE OF CALIFORNIA OR ITS OFFICERS OR AGENTS SHALL NOT BE RESPONSIBLE FOR THE ACCURACY OR COMPLETENESS OF SCANNED COPIES OF THIS PLAN SHEET.

NOTES:

See Revised Standard Plan RSP T9 for tables.

Use cone spacing X for taper segment, Y for tangent segment or Z for conflict situations, as approriate, per Table 1, unless X, Y, or Z cone spacing is shown on this sheet.

Unless otherwise specified in the special provisions, all temporary warning signs shall have black legend on fluorescent orange background.

California codes are designated by (CA). Otherwise, Federal (MUTCD) codes are shown.

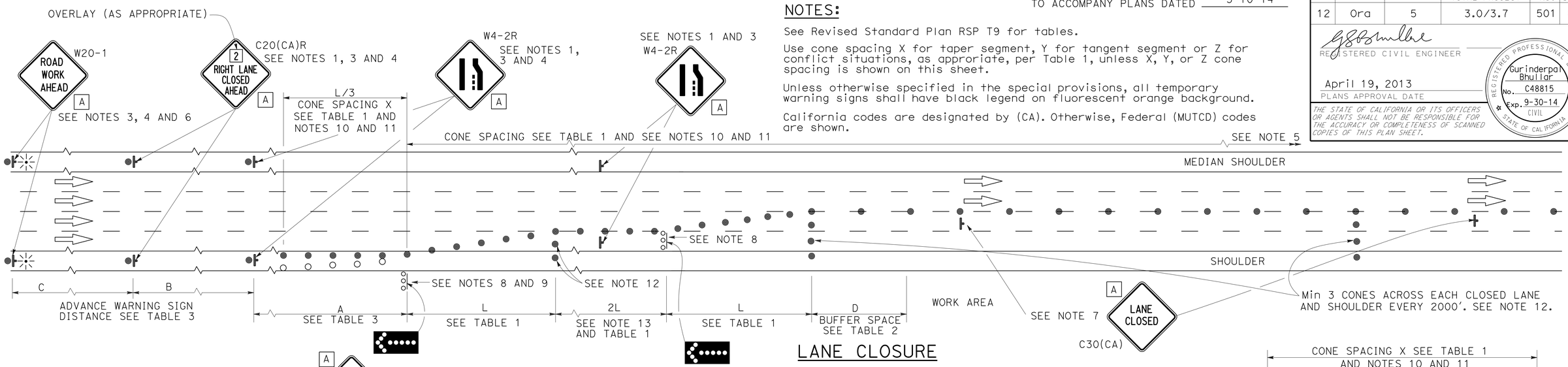

LANE CLOSURE

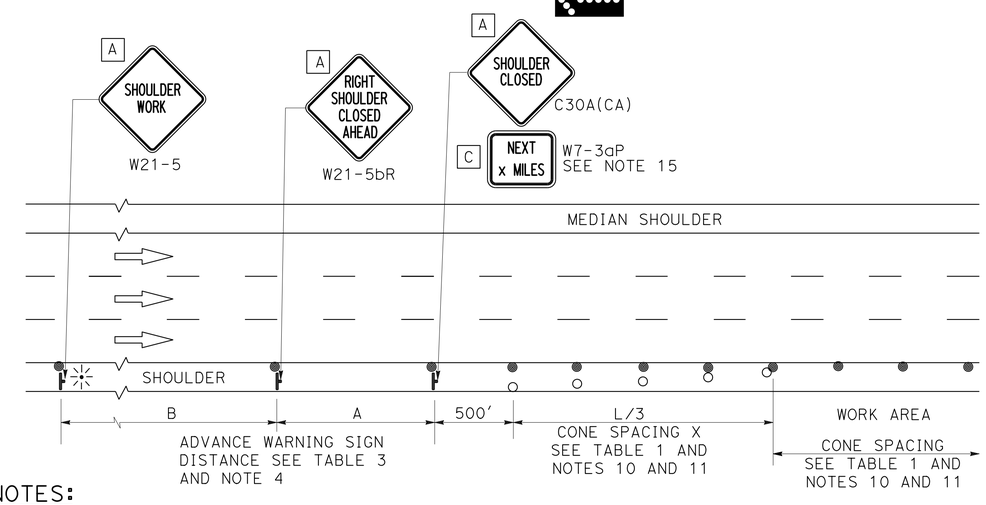

SHOULDER CLOSURE

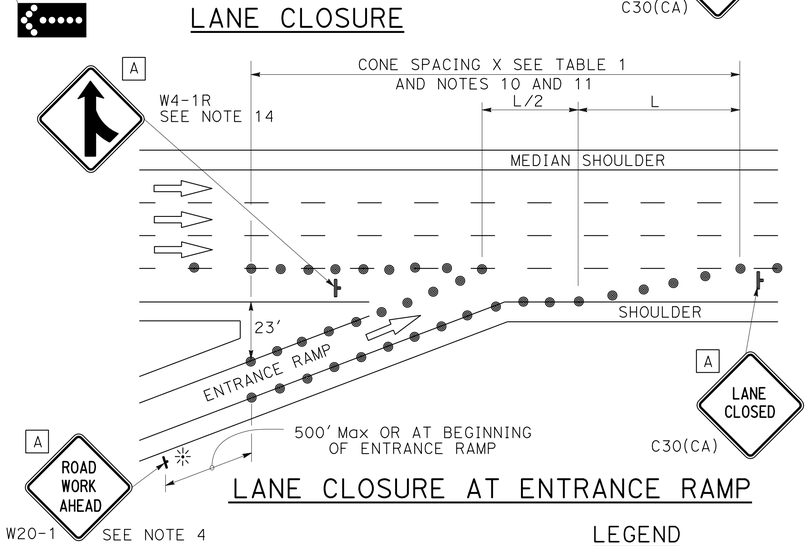

LANE CLOSURE AT ENTRANCE RAMP

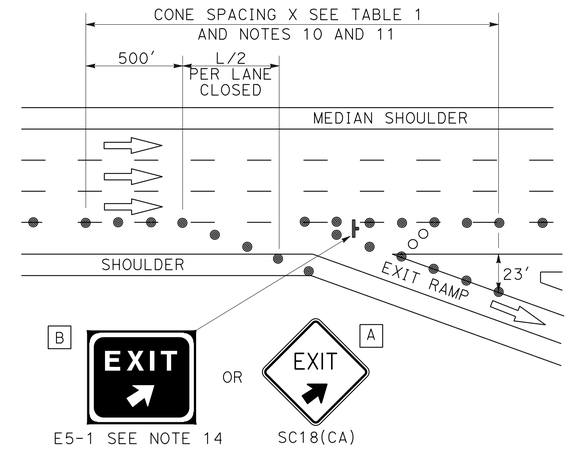

LANE CLOSURE AT EXIT RAMP

NOTES:

1. Median lane closures shall conform to the details as shown except that C20(CA)L and W4-2L signs shall be used.
2. At least one person shall be assigned to provide full time maintenance of traffic control devices for lane closures.
3. Duplicate sign installations are not required:
   a) On opposite shoulder if at least one-half of the available lanes remain open to traffic.
   b) In the median if the width of the median shoulder is less than 8' and the outside lanes are to be closed.
4. Each advance warning sign on each side of the roadway shall be equipped with at least two flags for daytime closure. Each flag shall be at least 16" x 16" in size and shall be orange or fluorescent red-orange in color. Flashing beacons shall be placed at the locations indicated for lane closure during hours of darkness.
5. A G20-2 "END ROAD WORK" sign, with minimum size of 48" x 24" as appropriate, shall be placed at the end of the lane closure unless the end of work area is obvious or ends within a larger project's limits.
6. If the W20-1 sign would follow within 2000' of a stationary W20-1 or G20-1 "ROAD WORK NEXT _____ MILES", use a C20(CA) sign for the first advance warning sign.
7. Place a C30(CA) sign every 2000' throughout length of lane closure.
8. One flashing arrow sign for each lane closed. The flashing arrow signs shall be Type I.
9. A minimum 1500' of sight distance shall be provided where possible for vehicles approaching the first flashing arrow sign. Lane closures shall not begin at top of crest vertical curve or on a horizontal curve.
10. All cones used for lane closures during the hours of darkness shall be fitted with retroreflective bands (or sleeves) as specified in the specifications.
11. Portable delineators, placed at one-half the spacing indicated for traffic cones may be used instead of cones for daytime closures only.
12. Unless otherwise specified in the special provisions, a minimum of 3 cones shall be placed transversely across each closed lane and shoulder at each location where a taper across a traffic lane ends and every 2000' as shown on the "Lane Closure" detail. Two Type II barricades may be used instead of the 3 cones. The transverse alignment of the cones or barricades on the closed shoulder may be shifted from the transverse alignment to provide access to the work.
13. Unless otherwise specified in the special provisions, the 2L tangent shown along lane lines shall be used between the L tapers required for each closed traffic lane.
14. Unless otherwise specified in the special provisions, the E5-1 or SC18(CA) and W4-1 signs shall be used as shown.
15. A W7-3aP "NEXT____ MILES" plaque must be used if theshoulder closure extends beyond the distance that can be perceived by road users.

LEGEND

- TRAFFIC CONE
- TRAFFIC CONE (OPTIONAL TAPER)
- TEMPORARY TRAFFIC CONTROL SIGN
- FLASHING ARROW SIGN (FAS)
- FAS SUPPORT OR TRAILER
- PORTABLE FLASHING BEACON

SIGN PANEL SIZE (Min)

A	48" x 48"
B	72" x 60"
C	36" x 30"

STATE OF CALIFORNIA
DEPARTMENT OF TRANSPORTATION

TRAFFIC CONTROL SYSTEM FOR LANE CLOSURE ON FREEWAYS AND EXPRESSWAYS

NO SCALE

RSP T10 DATED APRIL 19, 2013 SUPERSEDES STANDARD PLAN T10 DATED MAY 20, 2011 - PAGE 237 OF THE STANDARD PLANS BOOK DATED 2010.

REVISED STANDARD PLAN RSP T10

2010 REVISED STANDARD PLAN RSP T10

12-18-12

TO ACCOMPANY PLANS DATED 3-10-14

Dist	COUNTY	ROUTE	POST MILES TOTAL PROJECT	SHEET No.	TOTAL SHEETS
12	Ora	5	3.0/3.7	502	635

REGISTERED CIVIL ENGINEER

April 19, 2013
PLANS APPROVAL DATE

REGISTERED PROFESSIONAL ENGINEER Gurinderpal Bhullar No. C48815 Exp. 9-30-14 CIVIL STATE OF CALIFORNIA

THE STATE OF CALIFORNIA OR ITS OFFICERS OR AGENTS SHALL NOT BE RESPONSIBLE FOR THE ACCURACY OR COMPLETENESS OF SCANNED COPIES OF THIS PLAN SHEET.

NOTES: See Revised Standard Plan RSP T9 for tables.

Use cone spacing X for taper segment, Y for tangent segment or Z for conflict situations, as approriate, per Table 1, unless X, Y, or Z cone spacing is shown on this sheet.

Unless otherwise specified in the special provisions, all temporary warning signs shall have black legend on fluorescent orange background.

California codes are designated by (CA). Otherwise, Federal (MUTCD) codes are shown.

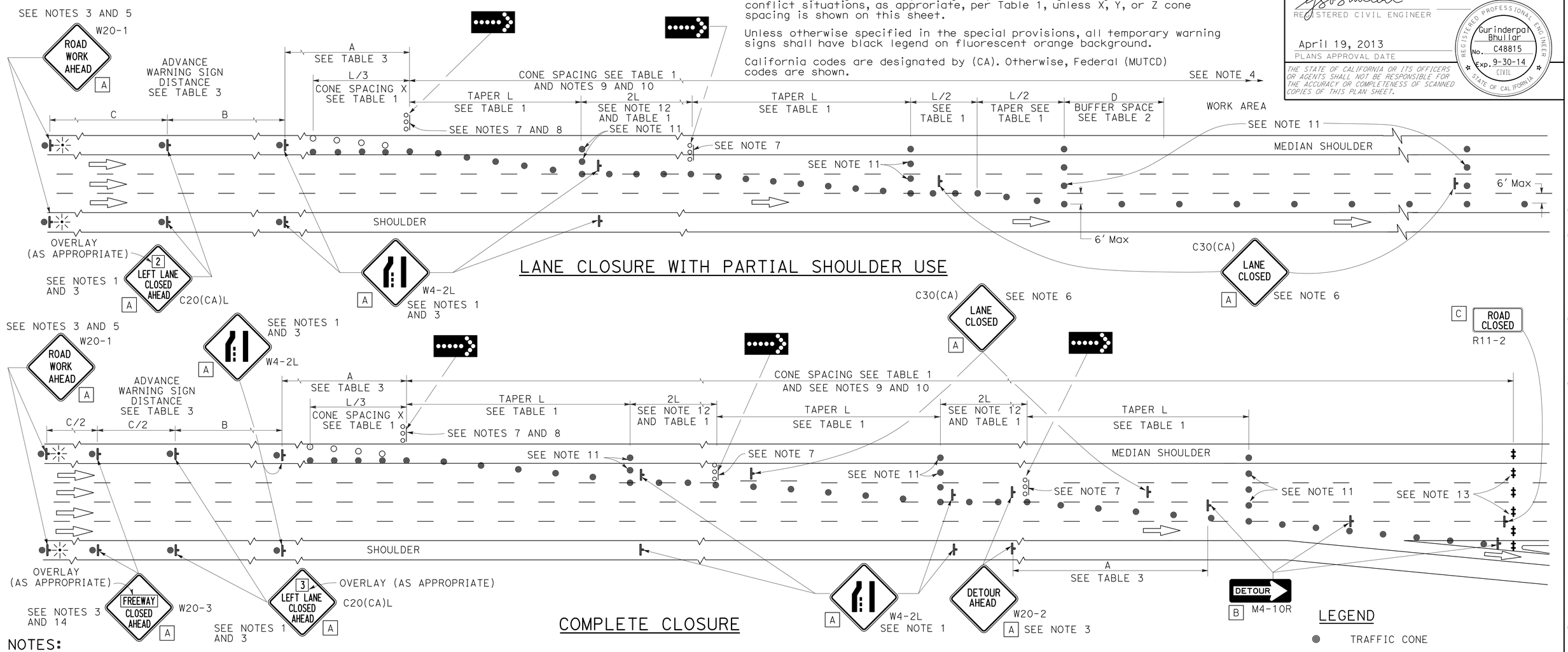

LANE CLOSURE WITH PARTIAL SHOULDER USE

COMPLETE CLOSURE

NOTES:

1. Lane closures on the right side using partial median shoulder as a traffic lane shall conform to the details as shown except that C20(CA)R and W4-2R signs shall be used.
2. At least one person shall be assigned to provide full time maintenance of traffic control devices for lane closures.
3. Each advance warning sign on each side of the roadway shall be equipped with at least two flags for daytime closure. Each flag shall be at least 16" X 16" in size and shall be orange or fluorescent red-orange in color. Flashing beacons shall be placed at the locations indicated for lane closure during hours of darkness.
4. A G20-2 "END ROAD WORK" sign, with minimum size of 48" x 24" as appropriate, shall be placed at the end of the lane closure unless the end of work area is obvious or ends within a larger project's limits.
5. If the W20-1 sign would follow within 2000' of a stationary W20-1 or G20-1 "ROAD WORK NEXT ___ MILES", use a C20(CA) sign for the first advance warning sign.
6. Place a C30(CA) sign every 2000' throughout length of lane closure.
7. One flashing arrow sign for each lane closed. The flashing arrow signs shall be Type I.
8. A minimum 1500' of sight distance shall be provided where possible for vehicles approaching the first flashing arrow sign. Lane closures shall not begin at the top of crest vertical curve or on a horizontal curve.
9. All cones used for lane closures during the hours of darkness shall be fitted with retroreflective bands (or sleeves) as specified in the specifications.
10. Portable delineators, placed at one-half the spacing indicated for traffic cones, may be used instead of cones for daytime closures only.
11. Unless otherwise specified in the special provisions, a minimum of 3 cones shall be placed transversely across each closed lane and shoulder at each location where a taper across a traffic lane ends and every 2000' as shown on the "Lane Closure With Partial Shoulder Use" detail. Two Type II barricades may be used instead of the 3 cones. The transverse alignment of the cones or barricades on the closed shoulder may be shifted from the transverse alignment to provide access to the work.
12. Unless otherwise specified in the special provisions, the 2L tangent shown along lane lines shall be used between the L tapers required for each closed traffic lane.
13. A minimum of Two Type II or III barricades shall be placed across each closed lane and shoulder at the location shown and every 2000' within the complete closure area. Within the complete closure area, the transverse alignment of the barricades on the closed shoulder may be shifted from the transverse alignment to provide access to the work.
14. When specified in the special provisions, a W20-2 "DETOUR AHEAD" sign is to be used in place of the W20-3 "FREEWAY CLOSED AHEAD" sign.

SIGN PANEL SIZE (Min)

A	48" x 48"
B	48" x 18"
C	48" x 30"

LEGEND

- TRAFFIC CONE
- TRAFFIC CONE (OPTIONAL TAPER)
- TEMPORARY TRAFFIC CONTROL SIGN
- FLASHING ARROW SIGN (FAS)
- FAS SUPPORT OR TRAILER
- PORTABLE FLASHING BEACON

STATE OF CALIFORNIA
DEPARTMENT OF TRANSPORTATION

TRAFFIC CONTROL SYSTEM FOR LANE CLOSURES ON FREEWAYS AND EXPRESSWAYS

NO SCALE

RSP T10A DATED APRIL 19, 2013 SUPERSEDES STANDARD PLAN T10A DATED MAY 20, 2011 - PAGE 238 OF THE STANDARD PLANS BOOK DATED 2010.

REVISED STANDARD PLAN RSP T10A

2010 REVISED STANDARD PLAN RSP T10A

12-18-12

Dist	COUNTY	ROUTE	POST MILES TOTAL PROJECT	SHEET No.	TOTAL SHEETS
12	Ora	5	3.0/3.7	503	635

REGISTERED CIVIL ENGINEER

April 19, 2013
PLANS APPROVAL DATE

REGISTERED PROFESSIONAL ENGINEER Gurinderpal Bhullar No. C48815 Exp. 9-30-14 CIVIL STATE OF CALIFORNIA

THE STATE OF CALIFORNIA OR ITS OFFICERS OR AGENTS SHALL NOT BE RESPONSIBLE FOR THE ACCURACY OR COMPLETENESS OF SCANNED COPIES OF THIS PLAN SHEET.

TO ACCOMPANY PLANS DATED 3-10-14

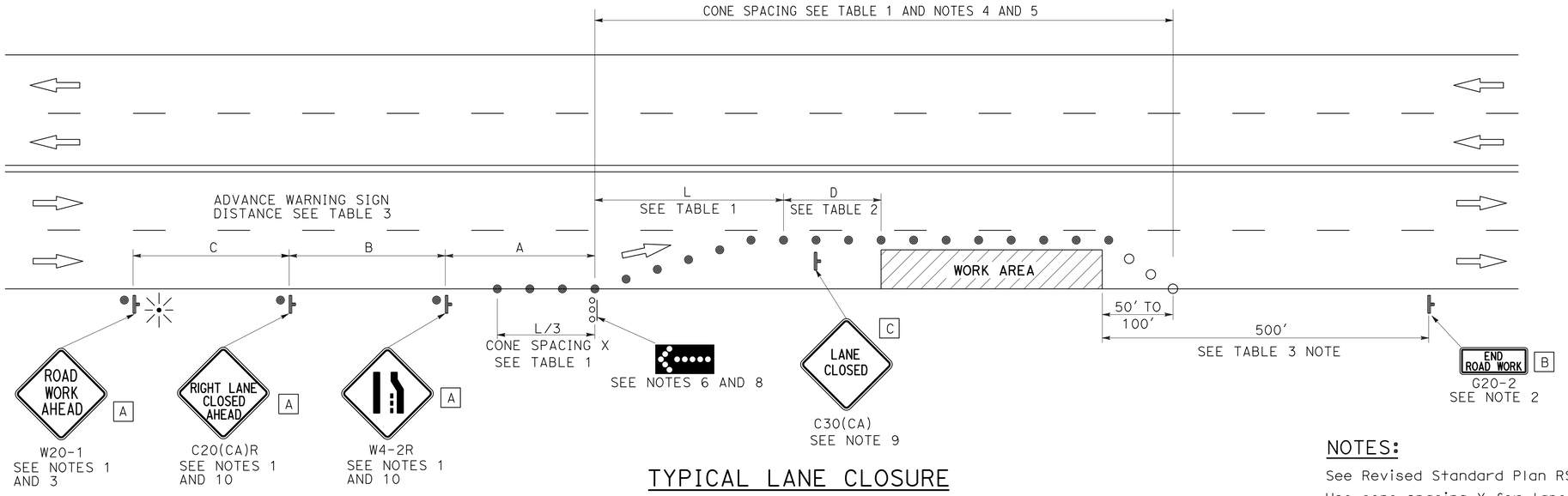

TYPICAL LANE CLOSURE

NOTES:

See Revised Standard Plan RSP T9 for tables.

Use cone spacing X for taper segment, Y for tangent segment or Z for conflict situations, as approriate, per Table 1, unless X, Y, or Z cone spacing is shown on this sheet.

Unless otherwise specified in the special provisions, all temporary warning signs shall have black legend on fluorescent orange background.

California codes are designated by (CA). Otherwise, Federal (MUTCD) codes are shown.

NOTES:

1. Each advance warning sign shall be equipped with at least two flags for daytime closure. Each flag shall be at least 16" x 16" in size and shall be orange or fluorescent red-orange in color. Flashing beacons shall be placed at the locations indicated for lane closure during hours of darkness.
2. A G20-2 "END ROAD WORK" sign, as appropriate, shall be placed at the end of the lane closure unless the end of work area is obvious, or ends within a larger project's limits.
3. If the W20-1 sign would follow within 2000' of a stationary W20-1 or G20-1 "ROAD WORK NEXT _____ MILES", use a C20(CA) sign for the first advance warning sign.
4. All cones used for lane closures during the hours of darkness shall be fitted with retroreflective bands (or sleeves) as specified in the specifications.
5. Portable delineators, placed at one-half the spacing indicated for traffic cones, may be used instead of cones for daytime closures only.
6. Flashing arrow sign shall be either Type I or Type II.
7. For approach speeds over 50 mph, use the "Traffic Control System for Lane Closure On Freeways And Expressways" plan for lane closure details and requirements.
8. A minimum 1500' of sight distance shall be provided where possible for vehicles approaching the first flashing arrow sign. Lane closures shall not begin at the top of crest vertical curve or on a horizontal curve.
9. Place a C30(CA) sign every 2000' throughout length of lane closure.
10. Median lane closures shall conform to the details as shown except that C20(CA)L and W4-2L signs shall be used.
11. At least one person shall be assigned to provide full time maintenance of traffic control devices for lane closure unless, otherwise directed by the Engineer.

LEGEND

- TRAFFIC CONE
- TRAFFIC CONE (OPTIONAL TAPER)
- TEMPORARY TRAFFIC CONTROL SIGN
- FLASHING ARROW SIGN (FAS)
- FAS SUPPORT OR TRAILER
- PORTABLE FLASHING BEACON

SIGN PANEL SIZE (Min)

A	48" x 48"
B	36" x 18"
C	30" x 30"

STATE OF CALIFORNIA
DEPARTMENT OF TRANSPORTATION

TRAFFIC CONTROL SYSTEM FOR LANE CLOSURE ON MULTILANE CONVENTIONAL HIGHWAYS

NO SCALE

RSP T11 DATED APRIL 19, 2013 SUPERSEDES STANDARD PLAN T11 DATED MAY 20, 2011 - PAGE 239 OF THE STANDARD PLANS BOOK DATED 2010.

REVISED STANDARD PLAN RSP T11

2010 REVISED STANDARD PLAN RSP T11

4-2-13

Dist	COUNTY	ROUTE	POST MILES TOTAL PROJECT	SHEET No.	TOTAL SHEETS
12	Ora	5	3.0/3.7	504	635

REGISTERED CIVIL ENGINEER

April 19, 2013
PLANS APPROVAL DATE

REGISTERED PROFESSIONAL ENGINEER Gurinderpal Bhullar No. C48815 Exp. 9-30-14 CIVIL STATE OF CALIFORNIA

THE STATE OF CALIFORNIA OR ITS OFFICERS OR AGENTS SHALL NOT BE RESPONSIBLE FOR THE ACCURACY OR COMPLETENESS OF SCANNED COPIES OF THIS PLAN SHEET.

TO ACCOMPANY PLANS DATED 3-10-14

TYPICAL RAMP CLOSURES

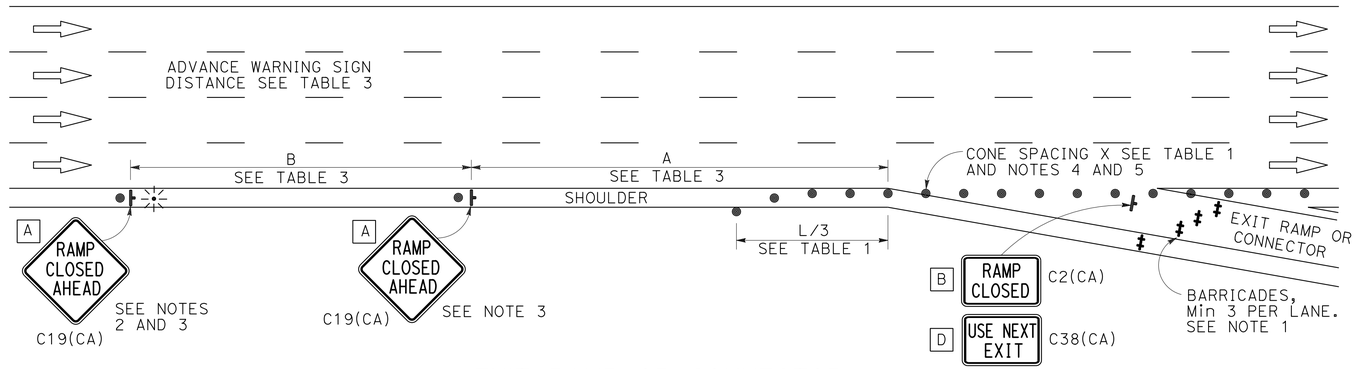

EXIT RAMP OR CONNECTOR

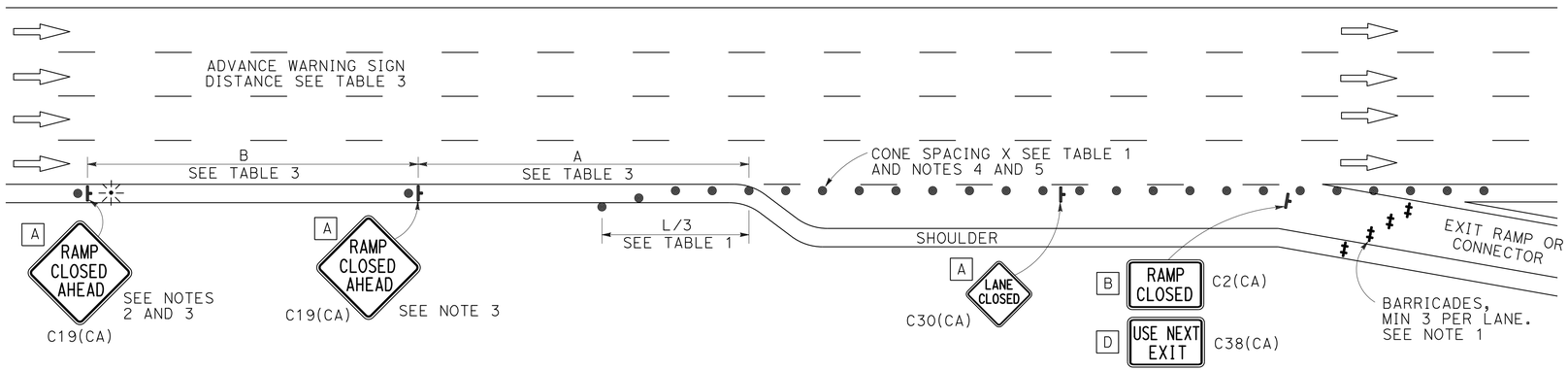

EXIT RAMP OR CONNECTOR WITH ADDITIONAL LANE

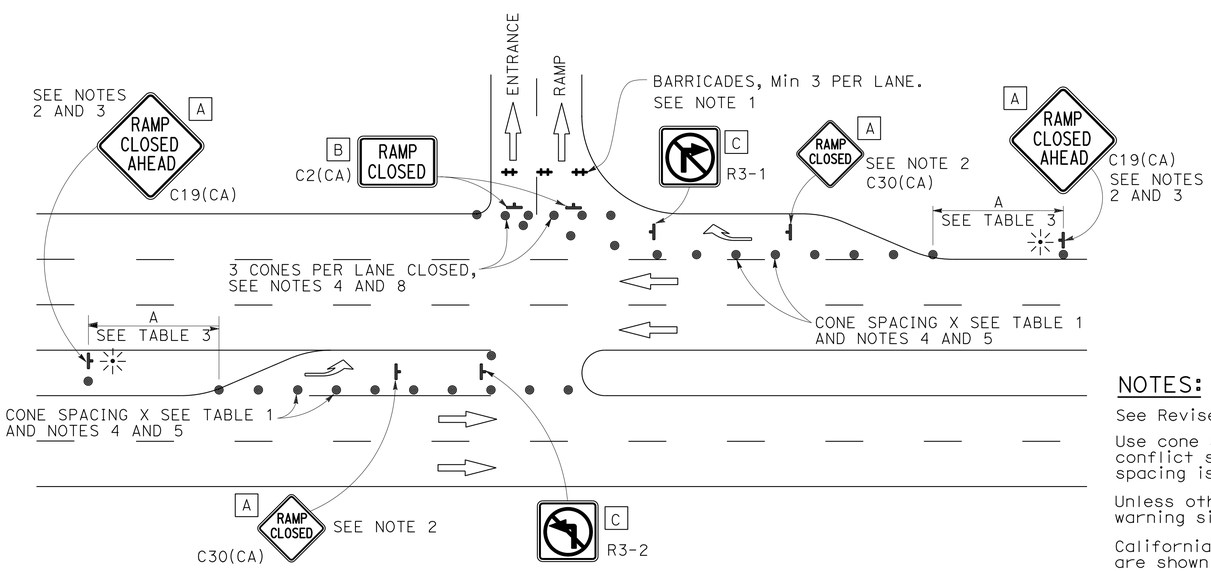

ENTRANCE RAMP WITH TURNING POCKETS

SIGN PANEL SIZE (Min)

- A 48" x 48"
- B 48" x 30"
- C 36" x 36"
- D 48" x 36"

LEGEND

- TRAFFIC CONE
- TEMPORARY TRAFFIC CONTROL SIGN
- BARRICADES
- PORTABLE FLASHING BEACON

NOTES:

1. Barricades shall be Type I, II, or III for closures lasting one week or less and Type III for closures lasting longer than one week.
2. In addition to placing the C19(CA) "RAMP CLOSED AHEAD" and C30(CA) "RAMP CLOSED" signs, black on orange overlay plates with the word "CLOSED" may be mounted, as directed by the Engineer, on all guide signs that refer to the closed ramp. The letter size on the overlay shall be the same as the guide sign.
3. Each advance C19(CA) "RAMP CLOSED AHEAD" sign shall be equipped with at least two flags for daytime closure. Each flag shall be at least 16" x 16" in size and shall be orange or fluorescent red-orange in color. A flashing beacon shall be placed on top of the first C19(CA) sign during hours of darkness.
4. All cones used for ramp closures during the hours of darkness shall be fitted with retroreflective bands (or sleeves) as specified in the specifications.
5. Portable delineators, placed at one-half the spacing indicated for traffic cones, may be used instead of cones for daytime ramp closures only.
6. At least one person shall be assigned to provide full time maintenance of traffic control devices, unless otherwise directed by the Engineer.
7. The existing "EXIT" signs shall be covered during ramp closures.
8. A minimum of 3 cones shall be placed transversely across each closed lane and shoulder.

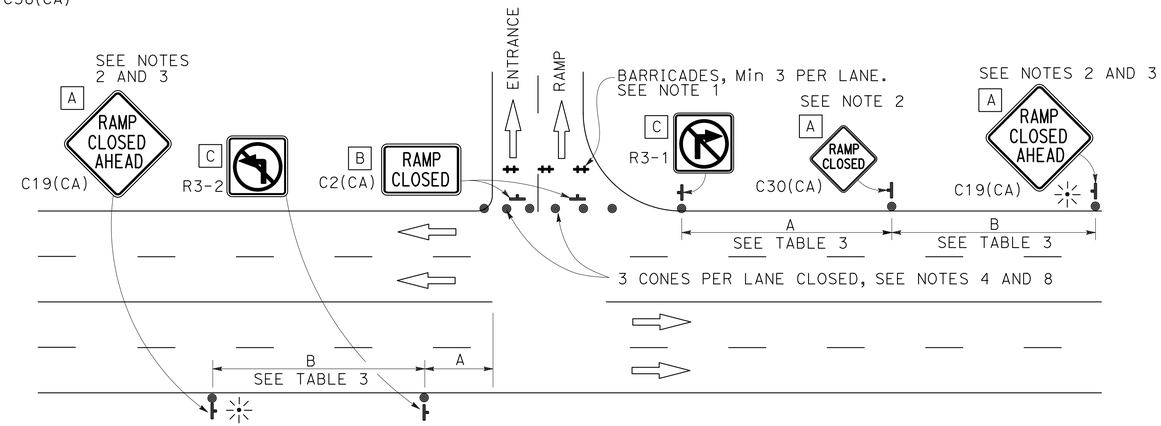

ENTRANCE RAMP WITHOUT TURNING POCKETS

NOTES:

See Revised Standard Plan RSP T9 for tables.

Use cone spacing X for taper segment, Y for tangent segment or Z for conflict situations, as approriate, per Table 1, unless X, Y, or Z cone spacing is shown on this sheet.

Unless otherwise specified in the special provisions, all temporary warning signs shall have black legend on fluorescent orange background.

California codes are designated by (CA). Otherwise, Federal (MUTCD) codes are shown.

STATE OF CALIFORNIA
DEPARTMENT OF TRANSPORTATION

TRAFFIC CONTROL SYSTEM FOR RAMP CLOSURE

NO SCALE

RSP T14 DATED APRIL 19, 2013 SUPERSEDES STANDARD PLAN T14 DATED MAY 20, 2011 - PAGE 242 OF THE STANDARD PLANS BOOK DATED 2010.

REVISED STANDARD PLAN RSP T14

2010 REVISED STANDARD PLAN RSP T14

12-18-12

Dist	COUNTY	ROUTE	POST MILES TOTAL PROJECT	SHEET No.	TOTAL SHEETS
12	Ora	5	3.0/3.7	505	635

REGISTERED CIVIL ENGINEER

April 20, 2012
PLANS APPROVAL DATE

REGISTERED PROFESSIONAL ENGINEER Gary Wang No. C58298 Exp. 6-30-12 CIVIL STATE OF CALIFORNIA

THE STATE OF CALIFORNIA OR ITS OFFICERS OR AGENTS SHALL NOT BE RESPONSIBLE FOR THE ACCURACY OR COMPLETENESS OF SCANNED COPIES OF THIS PLAN SHEET.

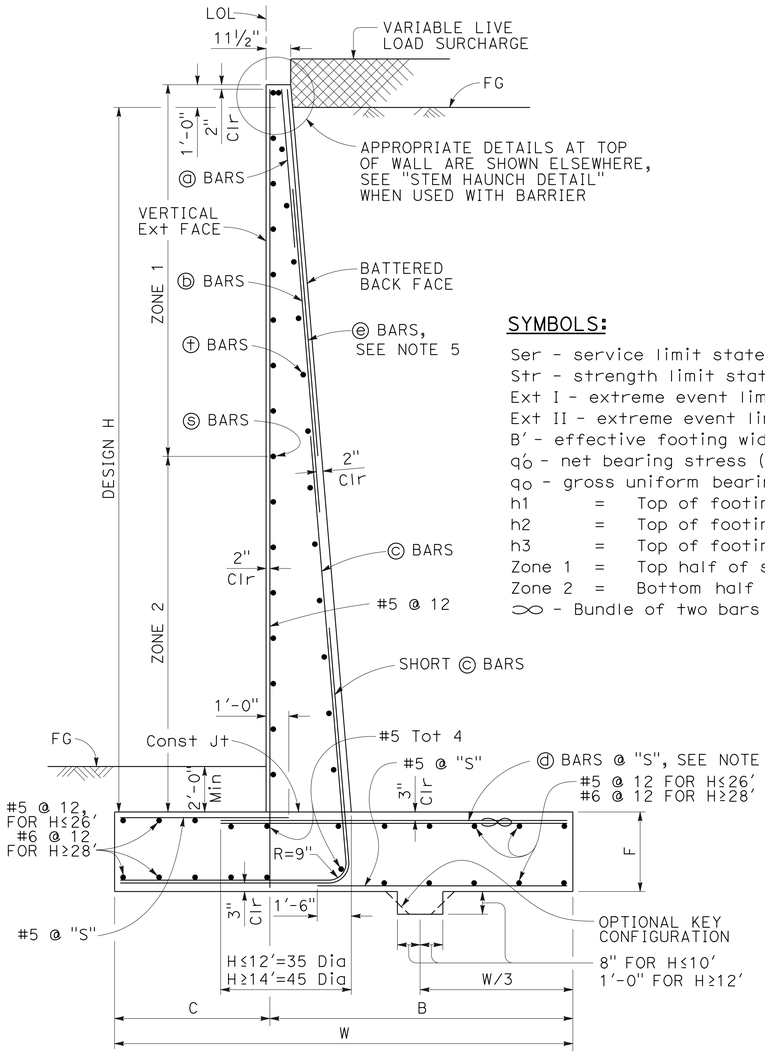

TYPICAL SECTION

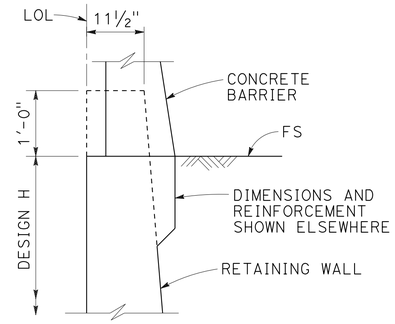

STEM HAUNCH DETAIL

SYMBOLS:

Ser - service limit state I
Str - strength limit state I
Ext I - extreme event limit state I
Ext II - extreme event limit state II
B' - effective footing width (ft)
q_o' - net bearing stress (ksf), OG assumed to be FG at toe
q_o - gross uniform bearing stress (ksf)
h1 = Top of footing to top of short ⓒ bar
h2 = Top of footing to top of ⓒ bar
h3 = Top of footing to top of ⓑ bar
Zone 1 = Top half of stem height
Zone 2 = Bottom half of stem height
∞ - Bundle of two bars

DESIGN CONDITIONS:

Design H may be exceeded by 6" before going to the next size. Special footing design is required where foundation material is incapable of supporting bearing stress listed in the table.

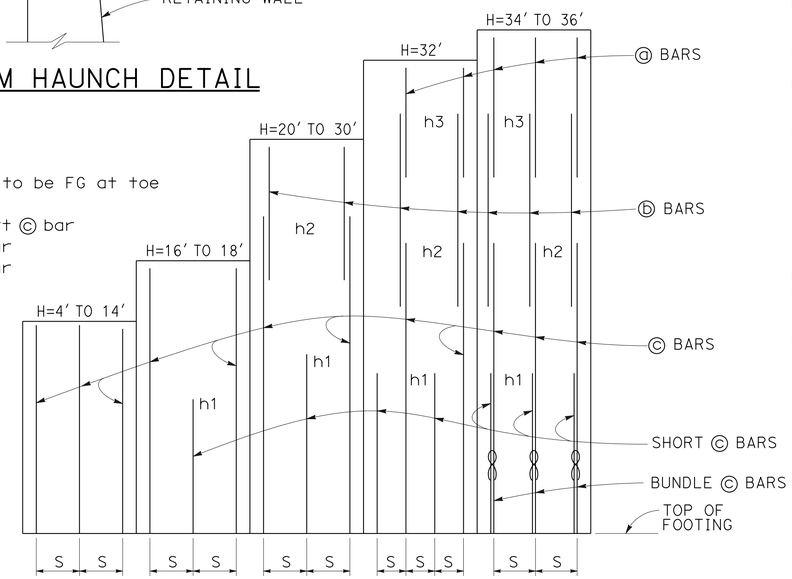

ELEVATION

DESIGN NOTES:

TO ACCOMPANY PLANS DATED 3-10-14

DESIGN: AASHTO LRFD Bridge Design Specifications, 4th Edition with California Amendments

LS: Varied surcharge on level ground surface

DC: Stem Architectural Treatment of thickness up to 6" of concrete (75 psf) considered

CT: 54 kip transverse force applied at He = 32", distributed over 10 feet at the top of wall and 1 : 1 distribution down and outward. Distribution below footing taken no less than 40'.

SEISMIC: $k_h = 0.2$, $k_v = 0.0$

SOIL: $\phi = 34°$, $\gamma = 120$ pcf

REINFORCED CONCRETE: f'c = 3,600 psi
fy = 60,000 psi

LOAD COMBINATIONS AND LIMIT STATES:

Service I	Q = 1.00DC+1.00EV+1.00EH+1.00LS
Strength I	Q = αDC+β̂EV+ηEH+1.75LS
Extreme I	Q = 1.00DC+1.00EV+1.00EH+1.00EQD+1.00EQE
Extreme II	Q = 1.00DC+1.00EV+1.00EH+1.00CT

Where:

Q:	Force Effects
α:	1.25 or 0.90, Whichever Controls Design
β̂:	1.35 or 1.00, Whichever Controls Design
η:	1.50 or 0.90, Whichever Controls Design
DC:	Dead Load of Structure Components
EH:	Horizontal Earth Fill Pressure
EV:	Vertical Earth Pressure from Earth Fill Weight
LS:	Live Load Surcharge
EQE:	Seismic Earth Pressure
EQD:	Soil and Structural and Nonstructural Components Inertia
CT:	Vehicular Collision Force

TABLE OF REINFORCING STEEL, DIMENSIONS AND DATA

DESIGN H	4'	6'	8'	10'	12'	14'	16'	18'	20'	22'	24'	26'	28'	30'	32'	34'	36'
W	6'-10"	7'-0"	7'-3"	7'-7"	8'-4"	9'-7"	10'-9"	12'-0"	13'-3"	14'-6"	15'-9"	17'-1"	18'-5"	19'-10"	21'-2"	22'-7"	24'-0"
C	2'-2"	2'-3"	2'-3"	2'-4"	2'-6"	3'-0"	3'-6"	4'-0"	4'-6"	5'-0"	5'-5"	6'-0"	6'-6"	7'-2"	7'-8"	8'-2"	9'-0"
B	4'-8"	4'-9"	5'-0"	5'-3"	5'-10"	6'-7"	7'-3"	8'-0"	8'-9"	9'-6"	10'-4"	11'-1"	11'-11"	12'-8"	13'-6"	14'-5"	15'-0"
F	1'-4"	1'-4"	1'-4"	1'-4"	1'-6"	1'-8"	1'-8"	1'-9"	1'-9"	1'-11"	2'-2"	2'-5"	2'-10"	3'-3"	3'-6"	4'-0"	4'-3"
BATTER	½: 12	½: 12	½: 12	½: 12	½: 12	½: 12	½: 12	½: 12	½: 12	½: 12	⅝: 12	⅝: 12	¾: 12	⅞: 12	1 : 12	1 : 12	1 : 12
SPACING "S"	9"	9"	9"	9"	9"	7"	6"	5"	6"	6"	6"	6"	6"	6"	6"	10"	8"
ⓐ BARS	-	-	-	-	-	-	-	-	-	-	-	-	-	-	#7	#7	#6
ⓑ BARS	-	-	-	-	-	-	-	-	#7	#7	#7	#7	#7	#7	#9	#9	#8
ⓒ BARS	#6	#6	#6	#6	#6	#6	#7	#7	#8	#9	#9	#10	#10	#10	#11	#11	#11
ⓓ BARS	#5	#5	#6	#6	#6	#6	#9	#8	#8	#9	#9	#10	#10	#10	#11	#11	#11
h1	-	-	-	-	-	-	5'-9"	5'-10"	8'-0"	9'-0"	10'-1"	11'-0"	12'-1"	13'-0"	13'-0"	12'-7"	11'-6"
h2	-	-	-	-	-	-	-	-	10'-5"	13'-0"	14'-7"	17'-6"	19'-0"	20'-5"	19'-0"	18'-0"	20'-2"
h3	-	-	-	-	-	-	-	-	-	-	-	-	-	-	21'-2"	21'-10"	24'-0"
ZONE 1 ⓢ BARS	#5 @ 18	#5 @ 18	#5 @ 18	#5 @ 18	#5 @ 18	#5 @ 18	#5 @ 18	#5 @ 18	#5 @ 18	#5 @ 18	#5 @ 12	#5 @ 12	#5 @ 12	#5 @ 12	#5 @ 12	#5 @ 12	#5 @ 12
ZONE 2 ⓢ BARS	#5 @ 18	#5 @ 18	#5 @ 18	#5 @ 18	#5 @ 18	#5 @ 18	#5 @ 12	#5 @ 12	#5 @ 12	#5 @ 12	#5 @ 12	#5 @ 12	#6 @ 12	#6 @ 12	#6 @ 12	#7 @ 12	#7 @ 12
ZONE 1 ⓣ BARS	#4 @ 18	#4 @ 18	#4 @ 18	#4 @ 18	#4 @ 18	#4 @ 18	#4 @ 18	#4 @ 18	#4 @ 18	#4 @ 18	#4 @ 12	#4 @ 12	#4 @ 18	#4 @ 12	#4 @ 12	#4 @ 12	#4 @ 12
ZONE 2 ⓣ BARS	#4 @ 18	#4 @ 18	#4 @ 18	#4 @ 18	#4 @ 18	#4 @ 18	#4 @ 18	#4 @ 18	#4 @ 18	#4 @ 18	#4 @ 12	#4 @ 12	#4 @ 12	#4 @ 12	#5 @ 12	#5 @ 12	#5 @ 12
Ser: B', q_o'	6.8, 0.7	6.5, 1.0	6.2, 1.3	6.0, 1.6	6.3, 2.0	7.5, 2.1	8.6, 2.2	9.8, 2.3	11.0, 2.4	12.1, 2.5	13.2, 2.8	14.4, 2.9	15.5, 3.1	16.8, 3.3	18.0, 3.5	19.2, 3.7	20.6, 3.7
Str: B', q_o	6.6, 1.6	5.0, 1.8	3.6, 2.3	3.0, 3.3	3.2, 4.0	4.3, 3.8	5.3, 3.7	6.4, 3.7	7.4, 3.8	8.2, 4.1	9.0, 4.4	9.9, 4.6	10.7, 4.9	11.7, 5.2	12.6, 5.4	13.6, 5.8	14.6, 5.9
Ext I: B', q_o	5.2, 1.1	4.7, 1.5	3.9, 2.2	3.1, 3.4	2.8, 4.8	3.2, 5.3	3.6, 5.7	4.1, 6.1	4.6, 6.4	5.0, 6.9	5.3, 7.6	5.8, 8.1	6.1, 8.9	6.7, 9.4	7.1, 10.0	7.5, 10.7	8.2, 10.9
Ext II: B', q_o	2.6, 2.2	2.7, 2.6	2.8, 3.1	2.9, 3.6	3.7, 3.6	5.2, 3.3	6.7, 3.1	8.3, 3.0	9.8, 3.0	11.2, 3.1	12.5, 3.2	13.9, 3.4	15.2, 3.6	16.7, 3.8	18.0, 4.0	19.3, 4.2	20.8, 4.3

NOTES:

1. For details not shown and drainage notes see RSP B3-5
2. For wall stem joint details see B0-3 3-3 and B0-3 3-4
3. At ⓒ bars:
   H ≤ 6', no splices are allowed within 1'-8" above the top of footing.
   H > 6', no splices are allowed within H/4 above the top of footing.
4. Bundle ⓓ bars for H = 34' & 36'.
5. Provide #6 @ 10" x 15'-0" ⓔ bars over a distance of 8'-0" measured from all expansion joints, begin wall and end wall locations. For H ≤ 14', hook ⓔ bar into footing and reduce bar length as needed to maintain Min Clr cover.

STATE OF CALIFORNIA
DEPARTMENT OF TRANSPORTATION

RETAINING WALL TYPE 1 (CASE 1)

NO SCALE

RSP B3-1A DATED APRIL 20, 2012 SUPPLEMENTS THE STANDARD PLANS BOOK DATED 2010.

REVISED STANDARD PLAN RSP B3-1A

2010 REVISED STANDARD PLAN RSP B3-1A

2-22-12

Dist	COUNTY	ROUTE	POST MILES TOTAL PROJECT	SHEET No.	TOTAL SHEETS
12	Ora	5	3.0/3.7	506	635

REGISTERED CIVIL ENGINEER

April 20, 2012
PLANS APPROVAL DATE

REGISTERED PROFESSIONAL ENGINEER Gary Wang No. C58298 Exp. 6-30-12 CIVIL STATE OF CALIFORNIA

THE STATE OF CALIFORNIA OR ITS OFFICERS OR AGENTS SHALL NOT BE RESPONSIBLE FOR THE ACCURACY OR COMPLETENESS OF SCANNED COPIES OF THIS PLAN SHEET.

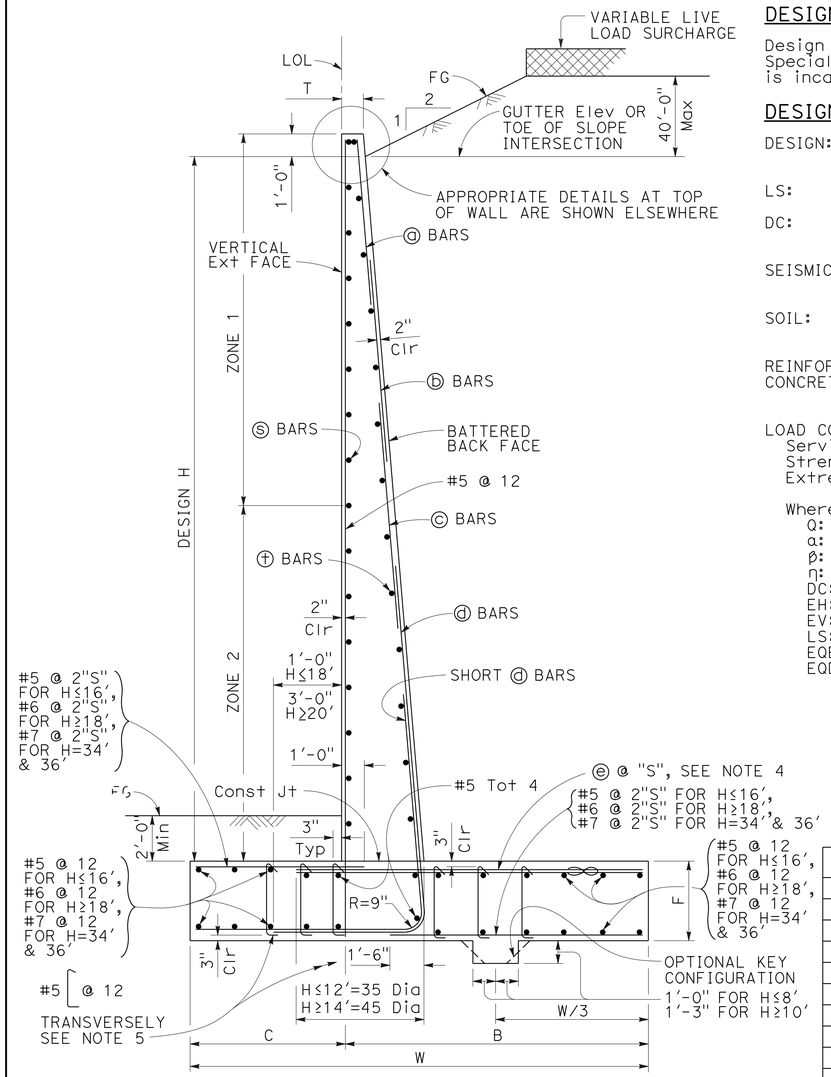

TYPICAL SECTION

DESIGN CONDITIONS:

Design H may be exceeded by 6" before going to the next size. Special footing design is required where foundation material is incapable of supporting bearing stress listed in the table.

DESIGN NOTES:

DESIGN: AASHTO LRFD Bridge Design Specifications, 4th Edition with California Amendments

LS: Varied surcharge on level ground surface

DC: Stem Architectural Treatment of thickness up to 6" of concrete (75 psf) considered

SEISMIC: $k_h = 0.2$
$k_v = 0.0$

SOIL: $\phi = 34°$
$\gamma = 120$ pcf

REINFORCED CONCRETE: $f'c = 3{,}600$ psi
$fy = 60{,}000$ psi

LOAD COMBINATIONS AND LIMIT STATES:

Service I	Q = 1.00DC+1.00EV+1.00EH+1.00LS
Strength I	Q = αDC+βEV+ηEH+1.75LS
Extreme I	Q = 1.00DC+1.00EV+1.00EH+1.00EQD+1.00EQE

Where:

Q:	Force Effects
α:	1.25 or 0.90, Whichever Controls Design
β:	1.35 or 1.00, Whichever Controls Design
η:	1.50 or 0.90, Whichever Controls Design
DC:	Dead Load of Structure Components
EH:	Horizontal Earth Fill Pressure
EV:	Vertical Earth Pressure from Earth Fill Weight
LS:	Live Load Surcharge
EQE:	Seismic Earth Pressure
EQD:	Soil and Structural and Nonstructural Components Inertia

SYMBOLS:

TO ACCOMPANY PLANS DATED 3-10-14

Ser - service limit state I
Str - strength limit state I
Ext - extreme event limit state I
B′ - effective footing width (ft)
q'_o - net bearing stress (ksf), OG assumed to be FG at toe
q_o - gross uniform bearing stress (ksf)
h1 = Top of footing to top of short ⓓ bar
h2 = Top of footing to top of ⓓ bar
h3 = Top of footing to top of ⓒ bar
h4 = Top of footing to top of ⓑ bar
Zone 1 = Top half of stem height
Zone 2 = Bottom half of stem height
∞ - Bundle of two bars

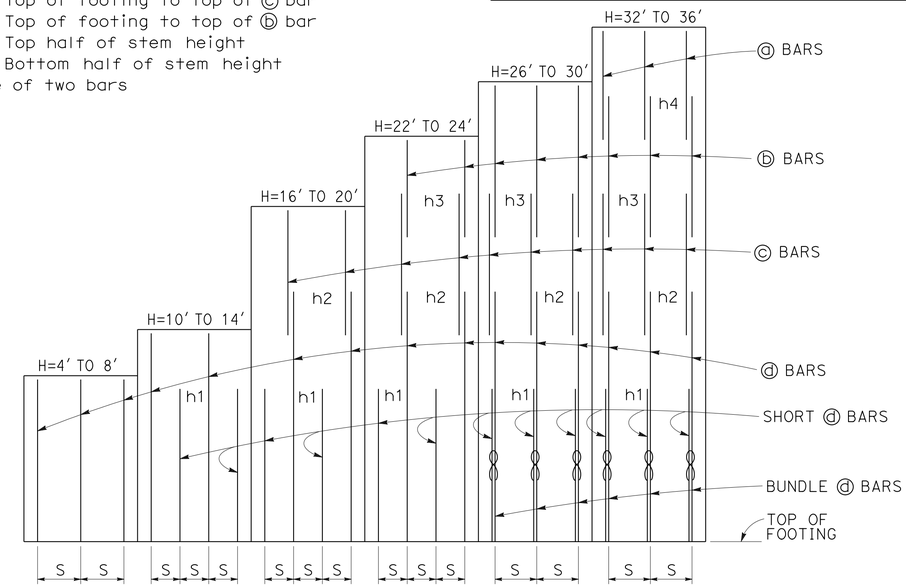

ELEVATION

TABLE OF REINFORCING STEEL, DIMENSIONS AND DATA

DESIGN H	4′	6′	8′	10′	12′	14′	16′	18′	20′	22′	24′	26′	28′	30′	32′	34′	36′
W	6′-0"	7′-6"	9′-6"	11′-0"	12′-6"	15′-6"	17′-3"	19′-6"	21′-9"	23′-6"	26′-0"	28′-1"	30′-3"	31′-6"	33′-0"	34′-8"	35′-11"
C	2′-0"	2′-6"	3′-3"	3′-6"	4′-3"	5′-0"	5′-3"	5′-9"	6′-9"	7′-3"	8′-3"	8′-9"	9′-0"	9′-6"	10′-0"	10′-10"	11′-3"
B	4′-0"	5′-0"	6′-3"	7′-6"	8′-3"	10′-6"	12′-0"	13′-9"	15′-0"	16′-3"	17′-9"	19′-4"	21′-3"	22′-0"	23′-0"	23′-10"	24′-8"
F	1′-6"	1′-6"	2′-0"	2′-3"	2′-6"	2′-8"	2′-10"	3′-0"	3′-4"	3′-6"	3′-6"	3′-7"	3′-7"	3′-9"	3′-9"	4′-0"	4′-4"
T	11½"	11½"	11½"	11½"	11½"	11½"	11½"	11½"	11½"	11½"	11½"	11½"	1′-2"	1′-5"	1′-10"	2′-3"	2′-9"
BATTER	½: 12	½: 12	½: 12	½: 12	½: 12	⅝: 12	⅝: 12	¾: 12	⅞: 12	1 : 12	1⅛: 12	1⅛: 12	1⅛: 12	1⅛: 12	1⅛: 12	1⅛: 12	1⅛: 12
SPACING "S"	16"	12"	10"	7"	7"	7"	7"	7"	7"	6"	6"	10"	8"	7"	7"	7"	7"
ⓐ BARS	-	-	-	-	-	-	-	-	-	-	-	-	-	-	#5	#5	#5
ⓑ BARS	-	-	-	-	-	-	-	-	-	#5	#5	#5	#5	#5	#7	#7	#7
ⓒ BARS	-	-	-	-	-	-	#6	#6	#6	#7	#8	#8	#8	#8	#9	#9	#9
ⓓ BARS	#5	#5	#6	#6	#7	#8	#9	#10	#10	#10	#11	#11	#11	#11	#11	#11	#11
ⓔ BARS	#5	#5	#6	#6	#7	#8	#9	#10	#10	#10	#11	#11	#11	#11	#11	#11	#11
h1	-	-	-	5′-3"	6′-4"	7′-6"	8′-9"	9′-9"	11′-0"	11′-3"	11′-6"	10′-3"	11′-9"	12′-3"	12′-6"	13′-3"	13′-8"
h2	-	-	-	-	-	-	12′-8"	15′-6"	17′-0"	16′-6"	17′-3"	18′-0"	17′-6"	17′-4"	14′-10"	15′-9"	16′-4"
h3	-	-	-	-	-	-	-	-	-	18′-9"	21′-3"	21′-3"	22′-4"	22′-8"	18′-0"	18′-6"	19′-6"
h4	-	-	-	-	-	-	-	-	-	-	-	-	-	-	26′-3"	27′-4"	28′-6"
No. of Toe Stirrups	0	0	0	0	0	0	0	0	0	0	0	5	5	6	7	8	9
No. of Heel Stirrups	0	0	0	0	0	0	0	0	4	6	7	8	10	10	11	11	11
ZONE 1 ⓢ BARS	#5 @ 18	#5 @ 18	#5 @ 18	#5 @ 18	#5 @ 18	#5 @ 18	#5 @ 18	#5 @ 18	#5 @ 12	#5 @ 12	#5 @ 12	#5 @ 12	#5 @ 12	#6 @ 12	#6 @ 12	#6 @ 10	#6 @ 10
ZONE 2 ⓢ BARS	#5 @ 18	#5 @ 18	#5 @ 18	#5 @ 18	#5 @ 18	#5 @ 12	#5 @ 12	#5 @ 12	#5 @ 12	#6 @ 12	#6 @ 12	#7 @ 12	#7 @ 12	#7 @ 12	#7 @ 12	#7 @ 10	#7 @ 10
ZONE 1 ⓣ BARS	#4 @ 18	#4 @ 18	#4 @ 18	#4 @ 18	#4 @ 18	#4 @ 18	#4 @ 18	#4 @ 18	#4 @ 18	#4 @ 18	#4 @ 18	#4 @ 12	#4 @ 12	#4 @ 12	#5 @ 12	#5 @ 12	#5 @ 12
ZONE 2 ⓣ BARS	#4 @ 18	#4 @ 18	#4 @ 18	#4 @ 18	#4 @ 18	#4 @ 12	#4 @ 12	#4 @ 12	#4 @ 12	#4 @ 12	#4 @ 12	#5 @ 12	#5 @ 12	#5 @ 12	#6 @ 12	#6 @ 12	#6 @ 12
Ser: B′, q'_o	4.0, 0.9	5.5, 1.0	9.3, 1.0	10.9, 1.3	12.3, 1.5	14.8, 1.9	16.6, 2.1	18.7, 2.4	20.6, 2.7	22.3, 3.0	24.2, 3.3	26.1, 3.5	28.2, 3.9	29.6, 4.0	31.1, 4.2	32.7, 4.4	34.1, 4.6
Str: B′, q_o	2.2, 2.2	3.5, 2.2	5.1, 2.3	6.3, 2.6	7.6, 2.7	12.9, 3.1	14.3, 3.6	16.5, 3.9	19.4, 4.5	20.7, 4.8	22.5, 5.2	24.3, 5.6	26.2, 6.0	27.5, 6.3	28.8, 6.6	30.3, 6.9	31.8, 7.2
Ext: B′, q_o	2.3, 3.4	2.7, 4.4	3.6, 5.0	3.8, 6.5	4.5, 7.0	7.0, 6.1	7.6, 6.9	9.3, 7.0	11.0, 7.1	11.8, 7.6	14.1, 7.4	15.6, 7.7	17.1, 8.0	17.2, 8.7	18.1, 9.0	19.0, 9.4	19.4, 10.0

NOTES:

1. For details not shown and drainage notes see RSP B3-5
2. For wall stem joint details see B0-3 3-3 and B0-3 3-4
3. At ⓓ and short ⓓ bars:
   H ≤ 6′, no splices are allowed within 1′-8" above the top of footing.
   H > 6′, no splices are allowed within H/4 above the top of footing.
4. Bundle ⓔ bars for H ≥ 26′.
5. Hook stirrups around & space with alternating transverse reinforcement at 2 x "S".

RSP B3-1B DATED APRIL 20, 2012 SUPPLEMENTS THE STANDARD PLANS BOOK DATED 2010.

STATE OF CALIFORNIA
DEPARTMENT OF TRANSPORTATION

RETAINING WALL TYPE 1 (CASE 2)

NO SCALE

REVISED STANDARD PLAN RSP B3-1B

2010 REVISED STANDARD PLAN RSP B3-1B

3-30-12

Dist	COUNTY	ROUTE	POST MILES TOTAL PROJECT	SHEET No.	TOTAL SHEETS
12	Ora	5	3.0/3.7	507	635

REGISTERED CIVIL ENGINEER

April 20, 2012
PLANS APPROVAL DATE

REGISTERED PROFESSIONAL ENGINEER Gary Wang No. C58298 Exp. 6-30-12 CIVIL STATE OF CALIFORNIA

THE STATE OF CALIFORNIA OR ITS OFFICERS OR AGENTS SHALL NOT BE RESPONSIBLE FOR THE ACCURACY OR COMPLETENESS OF SCANNED COPIES OF THIS PLAN SHEET.

TO ACCOMPANY PLANS DATED 3-10-14

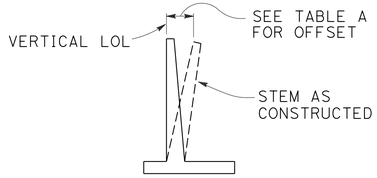

APPROXIMATE WALL OFFSET VALUES

Values for offseting forms to be determined by the Engineer.

TABLE A

H	OFFSET
4'-12'	H/200
14'-16'	H/160
18'-20'	H/140
22'-24'	H/130
26'-36'	2½"

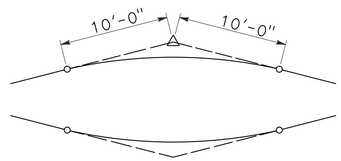

20'-0" VC AT TOP OF WALL SLOPE CHANGE

Where shown on the plans

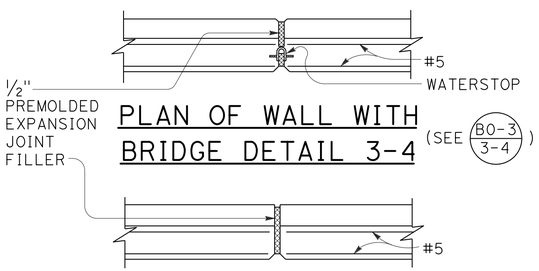

PLAN OF WALL WITH BRIDGE DETAIL 3-4

(SEE B0-3 / 3-4)

PLAN OF WALL WITH EXPANSION JOINT ONLY

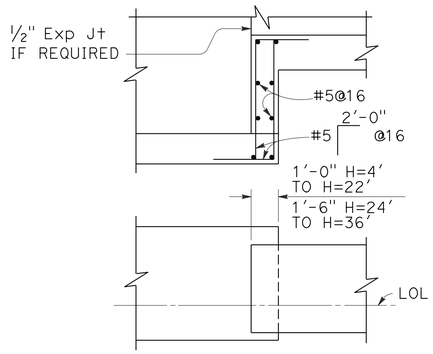

FOOTING STEP

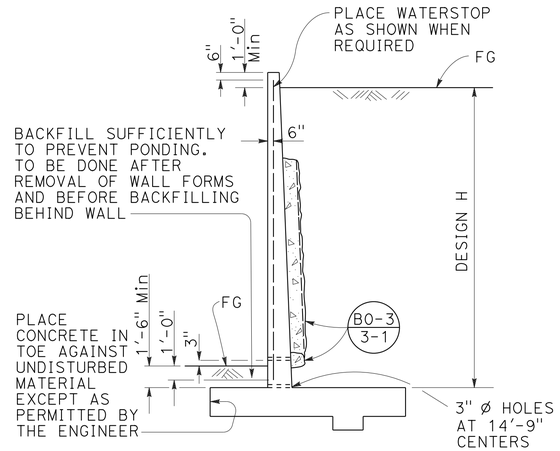

DESIGN AND DRAINAGE

DESIGN CONDITIONS:

Design "H" may be exceeded by 6" before going to the next size. Special footing design is required where foundation material is incapable of supporting bearing stress listed in table

Return wall not required unless shown elsewhere

DESIGN NOTES:

DESIGN: AASHTO LRFD Bridge Design Specifications, 4th edition with California Amendments

LIVE LOAD: Surcharge on level ground surface

SOIL: ϕ = 34°
γ = 120 pcf

REINFORCED CONCRETE: fy = 60,000 psi
fc′ = 3,600 psi

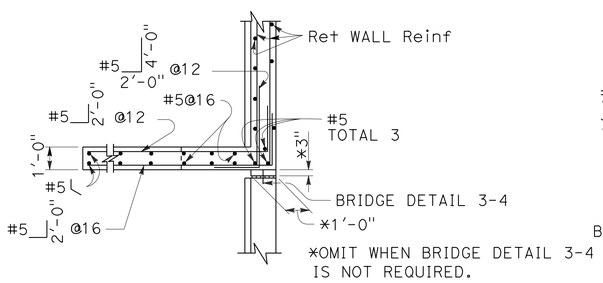

PLAN

(For return wall Type "A")

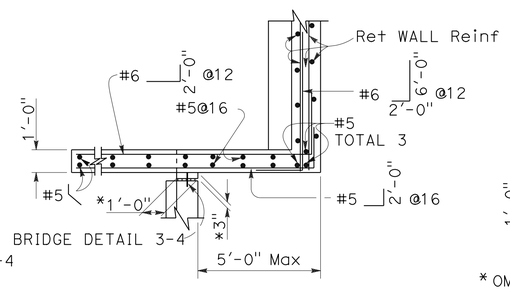

PLAN

(For return wall Type "B")

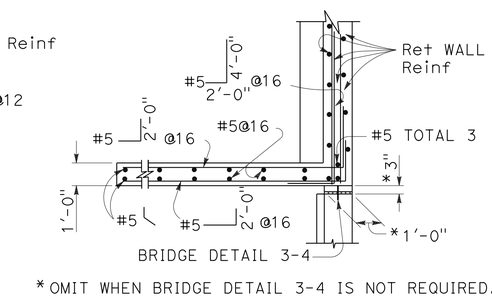

PLAN

(For return wall Type "C")

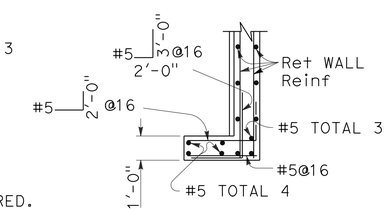

PLAN

(For return wall Type "D")

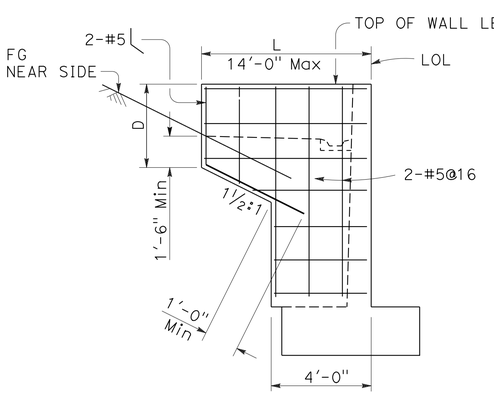

ELEVATION

RETURN WALL TYPE "A"

Use where H=8′ or less

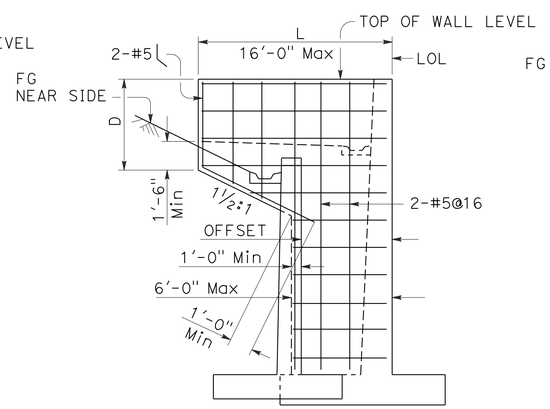

ELEVATION

RETURN WALL TYPE "B"

Use where H=10′ or more on offset walls

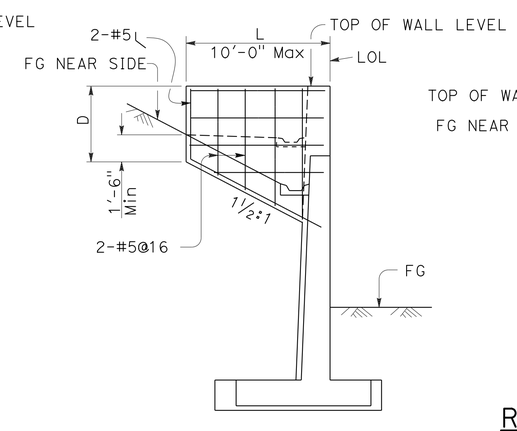

ELEVATION

RETURN WALL TYPE "C"

Use where H=10′ or more on straight walls

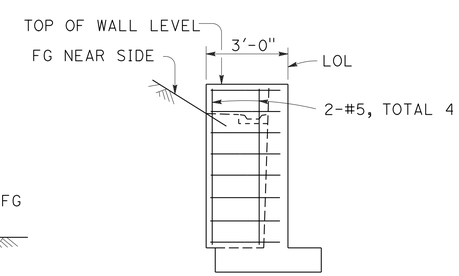

ELEVATION

RETURN WALL TYPE "D"

Use where H=6′ or less

STATE OF CALIFORNIA
DEPARTMENT OF TRANSPORTATION

RETAINING WALL DETAILS No. 1

NO SCALE

RSP B3-5 DATED APRIL 20, 2012 SUPERSEDES STANDARD PLAN B3-5
DATED MAY 20, 2011 - PAGE 277 OF THE STANDARD PLANS BOOK DATED 2010.

REVISED STANDARD PLAN RSP B3-5

2010 REVISED STANDARD PLAN RSP B3-5

2-22-12

Dist	COUNTY	ROUTE	POST MILES TOTAL PROJECT	SHEET No.	TOTAL SHEETS
12	Ora	5	3.0/3.7	508	635

REGISTERED CIVIL ENGINEER

July 19, 2013
PLANS APPROVAL DATE

REGISTERED PROFESSIONAL ENGINEER Marc Friedheim No. C57968 Exp. 6-30-14 CIVIL STATE OF CALIFORNIA

THE STATE OF CALIFORNIA OR ITS OFFICERS OR AGENTS SHALL NOT BE RESPONSIBLE FOR THE ACCURACY OR COMPLETENESS OF SCANNED COPIES OF THIS PLAN SHEET.

TO ACCOMPANY PLANS DATED 3-10-14

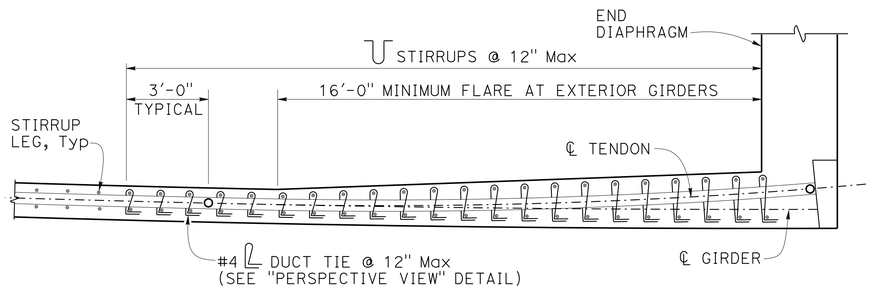

LEGEND:

o - Denotes beginning or end of tendon horizontal angle change (BC, EC or PCC)

PLAN

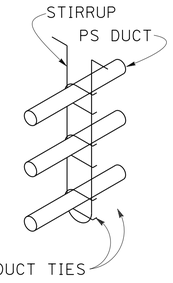

PERSPECTIVE VIEW

DUCT TIES AT TENDON HORIZONTAL ANGLE CHANGES
DETAIL 5-1

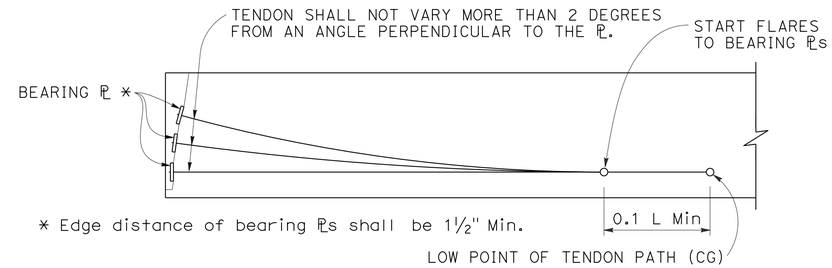

* Edge distance of bearing ℙs shall be 1½" Min.

ELEVATION - BEARING PLATE AND PRESTRESSING PATH
DETAIL 5-2

NOTES FOR DETAIL 5-1

1. Tendon horizontal angle change at end diaphragm shown. Duct tie placement similar for other locations where tendon horizontal angle changes occur. For curved girders place duct ties at tendon angle changes where ℄ tendon radius is smaller than ℄ girder radius.
2. Adjacent duct ties may be staggered to facilitate placement if stirrup spacing is less than 12 inches.
3. Place closed end of duct ties toward inside of tendon curve.
4. Wrap duct ties around both stirrup legs.
5. Individual duct ties may only be used to anchor one duct.

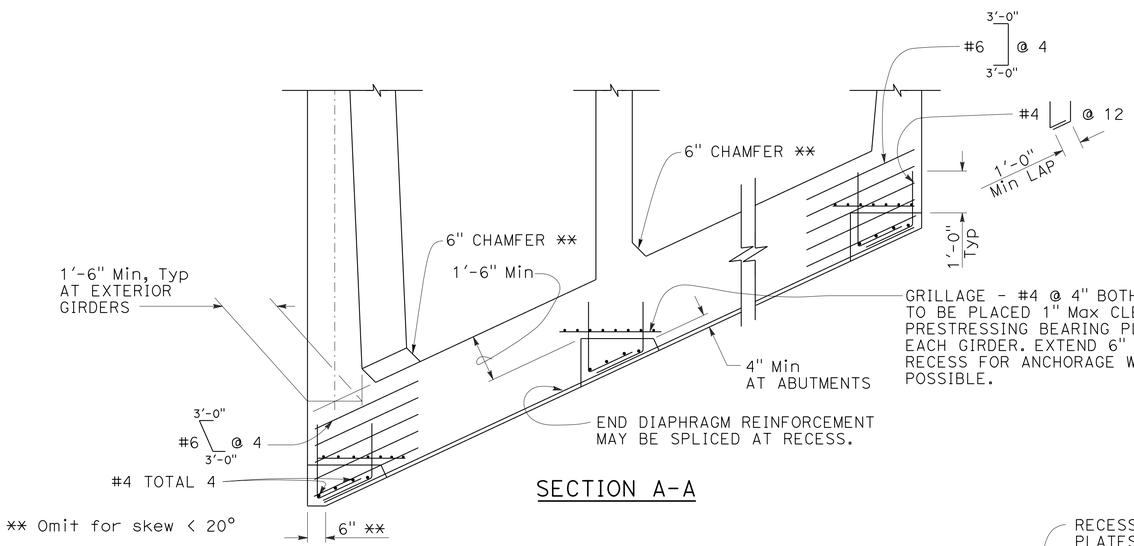

** Omit for skew < 20°

SECTION A-A

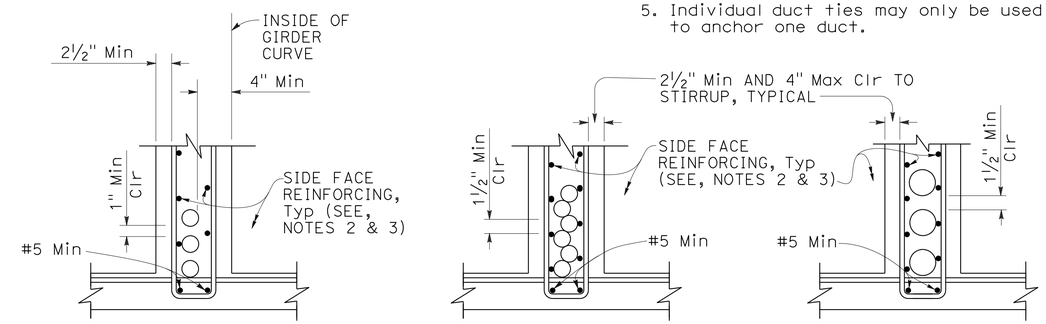

DUCTS 4½" OD AND LESS FOR HORIZONTAL CURVE RADIUS ≤ 2000'

DUCTS 4½" OD AND LESS

DUCTS OVER 4½" OD

CLEARANCE REQUIREMENTS FOR DUCTS
DETAIL 5-4

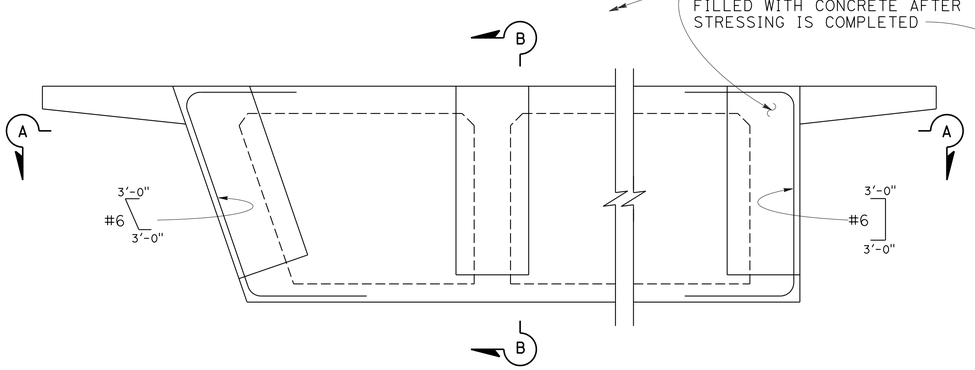

PRESTRESS ANCHORAGE DETAILS AT END DIAPHRAGMS
DETAIL 5-3

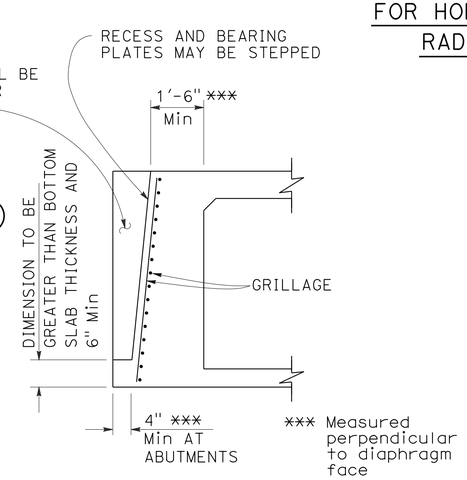

*** Measured perpendicular to diaphragm face

SECTION B-B

NOTES FOR DETAIL 5-4:

1. Stirrups may also be used.
2. For additional details, see Standard Plan B7-1, and Project Plans.
3. Bar reinforcing which interferes with prestressing ducts may be adjusted as approved by the Engineer.

STATE OF CALIFORNIA
DEPARTMENT OF TRANSPORTATION

CAST-IN-PLACE POST-TENSIONED GIRDER DETAILS

NO SCALE

RSP B8-5 DATED JULY 19, 2013 SUPERSEDES STANDARD PLAN B8-5 DATED MAY 20, 2011 - PAGE 291 OF THE STANDARD PLANS BOOK DATED 2010.

REVISED STANDARD PLAN RSP B8-5

2010 REVISED STANDARD PLAN RSP B8-5

4-17-13

Dist	COUNTY	ROUTE	POST MILES TOTAL PROJECT	SHEET No.	TOTAL SHEETS
12	Ora	5	3.0/3.7	509	635

REGISTERED CIVIL ENGINEER

October 21, 2011
PLANS APPROVAL DATE

REGISTERED PROFESSIONAL ENGINEER
Tillat Satter
No. C42892
Exp. 3-31-12
CIVIL
STATE OF CALIFORNIA

THE STATE OF CALIFORNIA OR ITS OFFICERS OR AGENTS SHALL NOT BE RESPONSIBLE FOR THE ACCURACY OR COMPLETENESS OF SCANNED COPIES OF THIS PLAN SHEET.

TO ACCOMPANY PLANS DATED 3-10-14

2010 REVISED STANDARD PLAN RSP B11-47

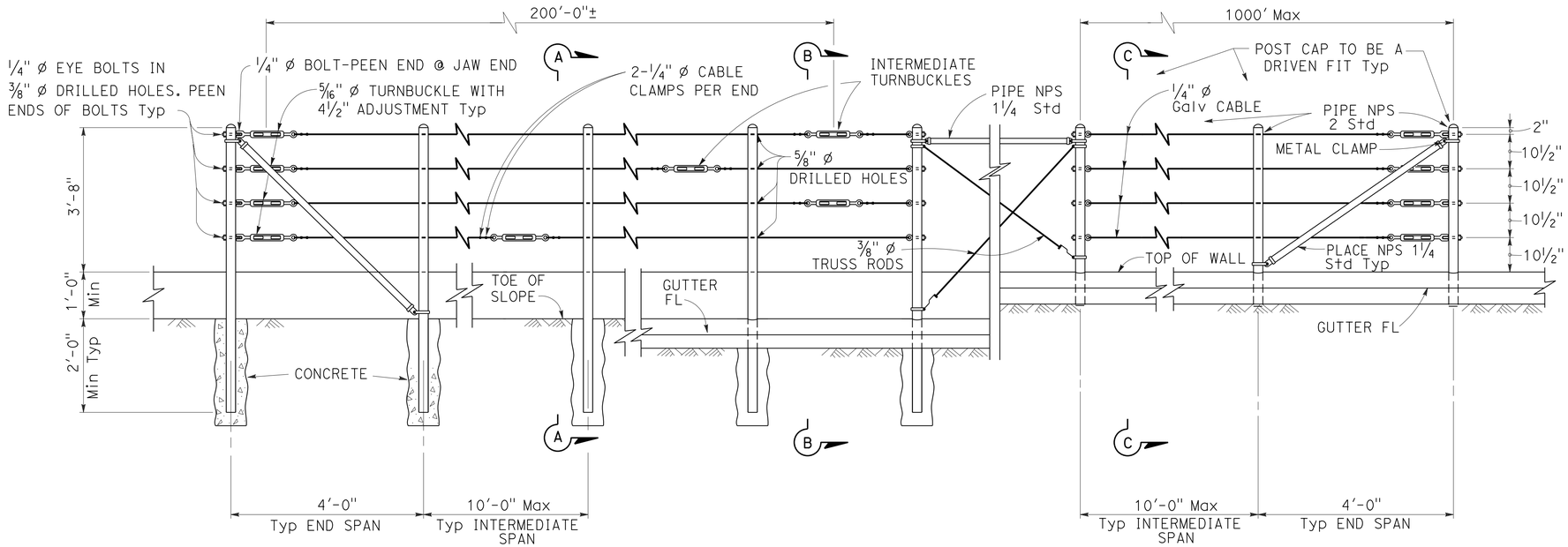

EXISTING WALL (WITHOUT GUTTER)
Existing

RETAINING WALL (WITH GUTTER)
Existing

RETAINING WALL (WITH GUTTER)
New construction

ELEVATION

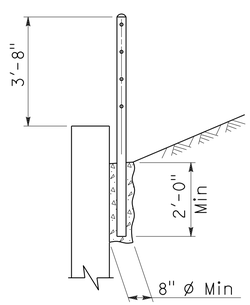

SECTION A-A
Existing

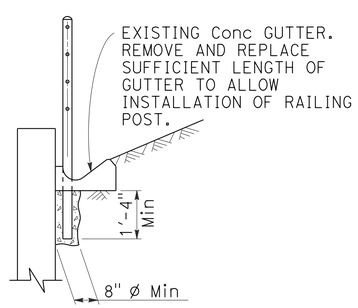

SECTION B-B
Existing

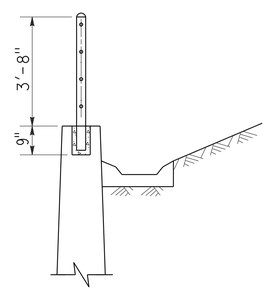

SECTION C-C
New construction

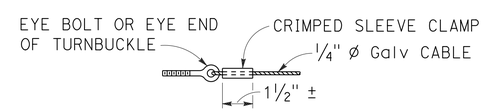

ALTERNATIVE CABLE CONNECTION

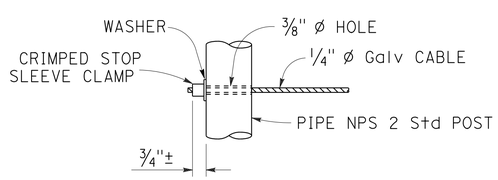

ALTERNATIVE DEAD END ANCHORAGE

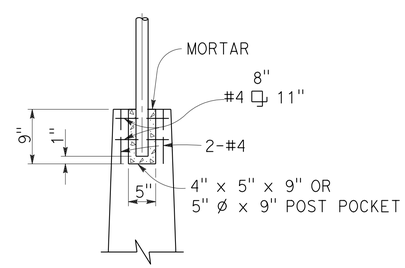

POST POCKET

NOTES:

1. Maximum distance between turnbuckles shall be 200'-0"±.
2. Intermediate turnbuckles to be placed in adjacent spans.
3. Cable shall not be spliced between intermediate turnbuckles and end posts.
4. Posts to be vertical.
5. Alignment of holes in posts may vary to conform to slope of top of retaining wall.
6. The Contractor shall verify all dependent dimensions in the field before ordering or fabricating any material.
7. Line posts shall be braced horizontally and trussed diagonally in both directions at intervals not to exceed 1000'.
8. Post pockets to be centered in top of wall.
9. Typical end spans, braced in both directions, shall be constructed at changes in line where the angle of deflection is 15° or more.
10. Provide thimbles at all cable loops.

STATE OF CALIFORNIA
DEPARTMENT OF TRANSPORTATION

CABLE RAILING

NO SCALE

RSP B11-47 DATED OCTOBER 21, 2011 SUPERSEDES STANDARD PLAN B11-47 DATED MAY 20, 2011 - PAGE 293 OF THE STANDARD PLANS BOOK DATED 2010.

REVISED STANDARD PLAN RSP B11-47

Dist	COUNTY	ROUTE	POST MILES TOTAL PROJECT	SHEET No.	TOTAL SHEETS
12	Ora	5	3.0/3.7	510	635

REGISTERED CIVIL ENGINEER

November 15, 2013
PLANS APPROVAL DATE

REGISTERED PROFESSIONAL ENGINEER — Tillat Satter — No. C42892 — Exp. 3-31-14 — CIVIL — STATE OF CALIFORNIA

THE STATE OF CALIFORNIA OR ITS OFFICERS OR AGENTS SHALL NOT BE RESPONSIBLE FOR THE ACCURACY OR COMPLETENESS OF SCANNED COPIES OF THIS PLAN SHEET.

TO ACCOMPANY PLANS DATED 3-10-14

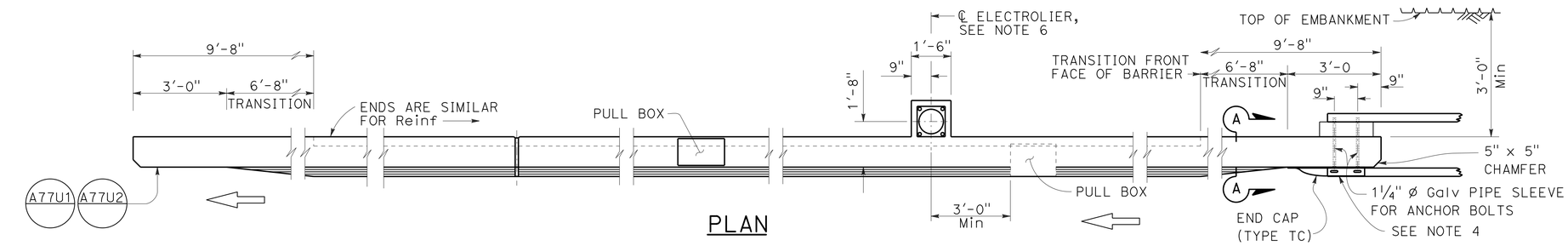

PLAN

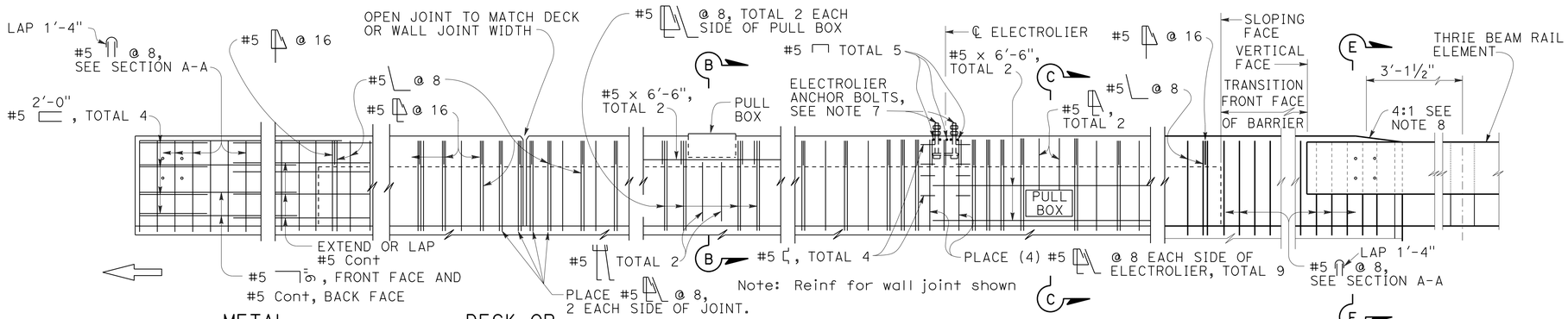

METAL RAILING CONNECTION

DECK OR WALL JOINT

ELECTROLIER
See Note F

TYPE 736A

ELEVATION

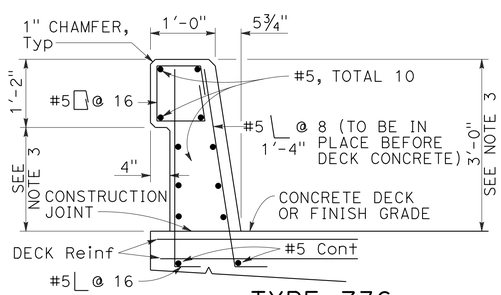

TYPE 736

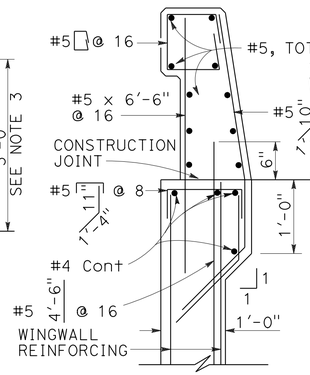

TYPE 736A

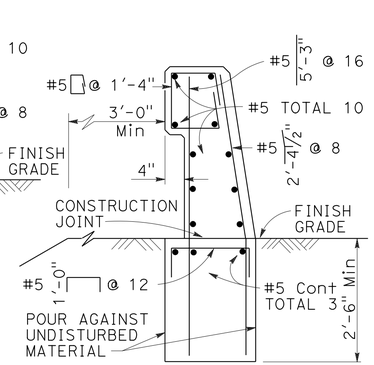

TYPE 736B

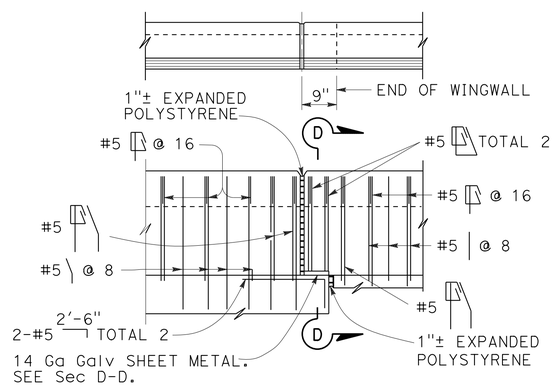

TYPE 736A TYPE 736B

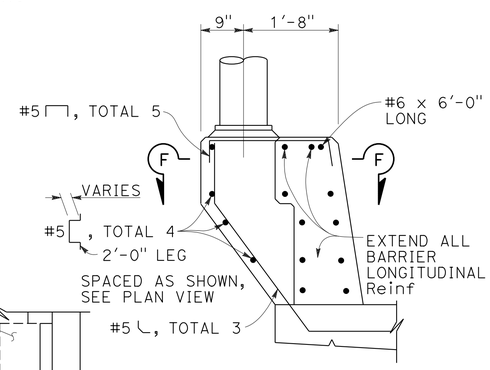

PEDESTAL ELEVATION

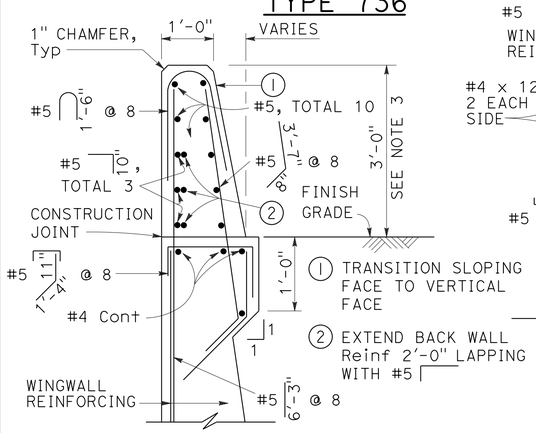

SECTION A-A

Details shown for barrier anchorage to Type 736A. Anchorgae for barrier Types 736 and 736B are similar to their respective details.

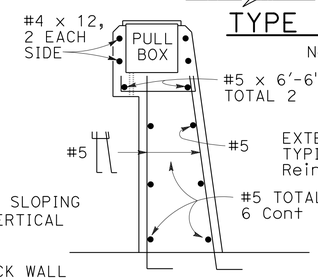

SECTION B-B

Note: Types 736A & 736B are similar to Type 736 except as noted

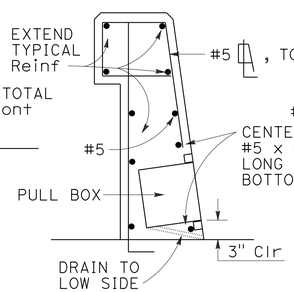

SECTION C-C
See Notes

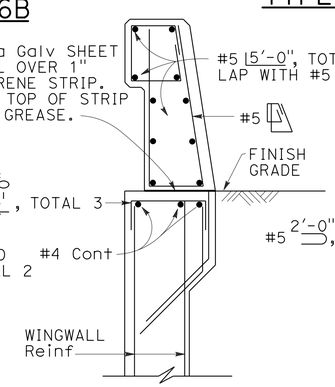

SECTION D-D

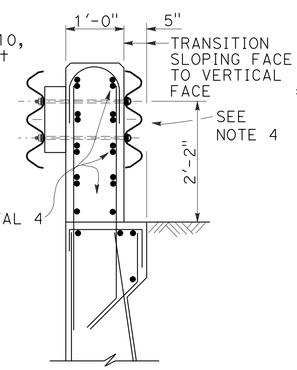

SECTION E-E
See Notes

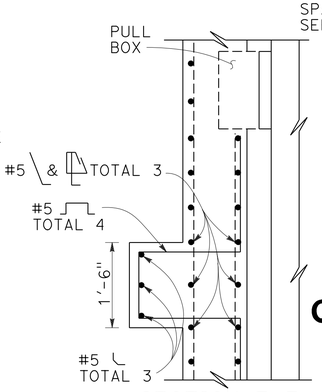

SECTION F-F

NOTES:

1. Walls are to be backfilled before barrier is placed.
2. Clearance to reinforcing steel in barrier to be 1", except as noted. Longitudinal reinforcement to stop at all expansion joints.
3. Dimensions may vary with roadway cross slope and with certain thickness of surfacing. See Project Plans.
4. For typical metal railing connection details not shown, see Revised Standard Plans RSP A77U1 and RSP A77U2.
5. See Standard Plans ES-9A, ES-9B, ES-9C, ES-9D and ES-9E for electrical details. The maximum number of conduits in the barrier is limited to two 2" conduits along with one 3" conduit. When a 3" conduit is used, it is restricted to the base of the barrier.
6. For electrolier mounting details, See Standard Plans ES-6A and ES-6B.
7. Minimum concrete edge distance, to the reinforcing shown, shall be maintained. Edge distance may be adjusted to accommodate increase in concrete cover for architectual treatment.
8. Taper the top of the end of the bridge railing at 4:1 to match the top elevation of the thrie beam rail element.

STATE OF CALIFORNIA
DEPARTMENT OF TRANSPORTATION

CONCRETE BARRIER TYPE 736

NO SCALE

RSP B11-56 DATED NOVEMBER 15, 2013 SUPERSEDES RSP B11-56 DATED JULY 19, 2013 AND STANDARD PLAN B11-56 DATED MAY 20, 2011 - PAGE 298 OF THE STANDARD PLANS BOOK DATED 2010.

REVISED STANDARD PLAN RSP B11-56

2010 REVISED STANDARD PLAN RSP B11-56

10-4-13

Dist	COUNTY	ROUTE	POST MILES TOTAL PROJECT	SHEET No.	TOTAL SHEETS
12	Ora	5	3.0/3.7	511	635

REGISTERED CIVIL ENGINEER

July 19, 2013
PLANS APPROVAL DATE

REGISTERED PROFESSIONAL ENGINEER
Stanley P. Johnson
No. C57793
Exp. 3-31-14
CIVIL
STATE OF CALIFORNIA

THE STATE OF CALIFORNIA OR ITS OFFICERS OR AGENTS SHALL NOT BE RESPONSIBLE FOR THE ACCURACY OR COMPLETENESS OF SCANNED COPIES OF THIS PLAN SHEET.

TO ACCOMPANY PLANS DATED 3-10-14

2010 REVISED STANDARD PLAN RSP S1

INSTRUCTIONS TO FABRICATOR

PROJECT PLANS SHOW:

1. Sign structure location.
2. Length of structure frame.
3. Panel size and locations on structure.
4. Walkway length for two post signs.
5. Post type and height to bottom of frame.
6. Base plate elevation.
7. Footing elevation or location of pile foundation.
8. Photoelectric unit location if required.

REFER TO THE FOLLOWING STANDARD PLANS FOR DETAILS NOT SHOWN ON PROJECT PLANS:

Sheet No.	SHEET NAME
S1	Overhead Signs-Truss, Instructions and Examples
S2	Overhead Signs-Truss, Single Post Type, Post Types II to IX
S3	Overhead Signs-Truss, Single Post Type, Base Plate and Anchorage Details
S4	Overhead Signs-Truss, Single Post Type, Structural Frame Members Details No. 1
S5	Overhead Signs-Truss, Single Post Type, Structural Frame Members Details No. 2
S6	Overhead Signs-Truss, Gusset Plate Details
S8	Overhead Signs-Truss, Single Post Type, Round Pedestal Pile Foundation
S9	Overhead Signs-Truss, Two Post Type, Post Types I-S through VII-S
S10	Overhead Signs-Truss, Two Post Type, Base Plate and Anchorage Details
S11	Overhead Signs-Truss, Two Post Type, Structural Frame Members
S12	Overhead Signs-Truss, Structural Frame Details
S13	Overhead Signs-Truss, Frame Juncture Details
S15	Overhead Signs-Truss, Two Post Type, Round Pedestal Pile Foundation
S16	Overhead Signs, Walkway Details No. 1
S17	Overhead Signs, Walkway Details No. 2
S17A	Overhead Signs, Walkway Details No. 3
S18	Overhead Signs, Walkway Safety Railing Details
S19	Overhead Signs-Truss, Sign Mounting Details, Laminated Panel-Type A
S20	Overhead Signs, Steel Frames, Removable Sign Panel Frames
S21	Overhead Signs, Removable Sign Panel Frames, Mounting Details
S22	Overhead Signs-Truss, Removable Sign Panel Frames, 9'-2" and 10'-0" Sign Panels

WALKWAY BRACKETS:

Space all walkway brackets maintaining uniform spacing where possible. Maximum spacing shall not exceed 5'-6".

LIGHTING FIXTURE SUPPORTS:

Where distance from walkway bracket to end of sign panel exceeds 1'-4", extend lighting fixture supports to next walkway bracket. See Example No. 2.

WALKWAY AND SAFETY RAILING:

Walkway to be continuous for entire length of frame for single post signs. For two post signs, see Project Plans. Safety railing to protect entire walkway, but continuous for no more than 11'-0" in one unit.

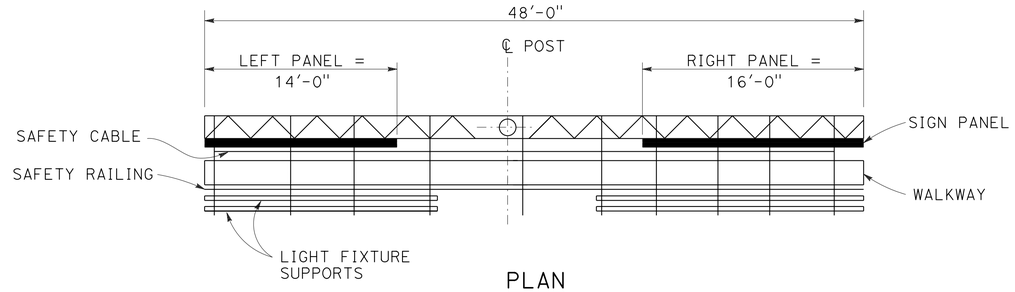

PLAN

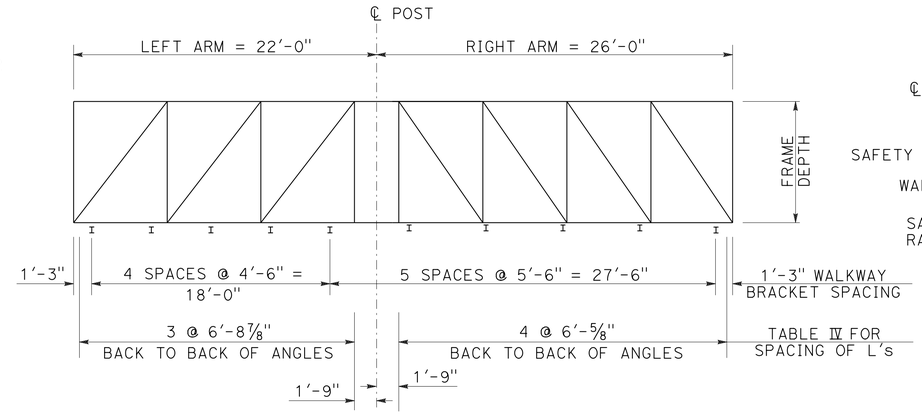

ELEVATION

UNBALANCED SINGLE POST TYPE

Example No. 1

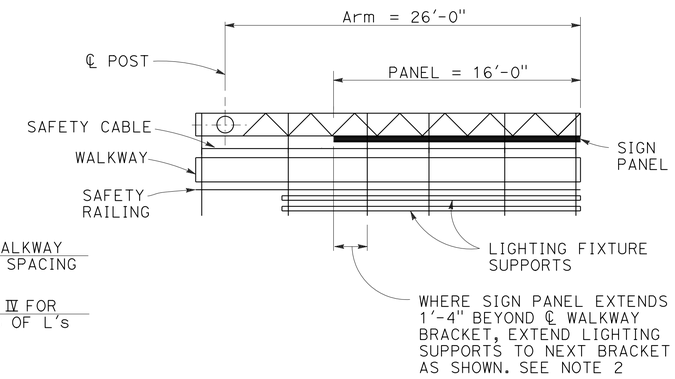

PLAN

CANTILEVER SINGLE POST TYPE

Example No. 2

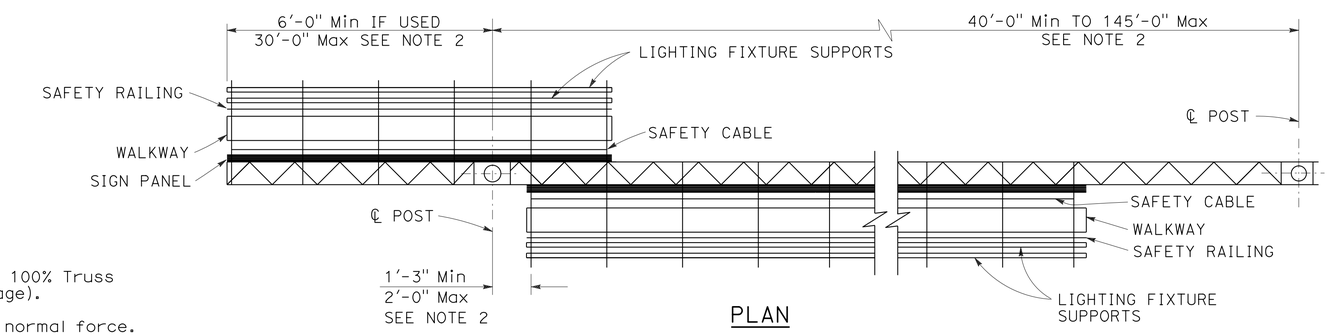

PLAN

TWO POST TYPE WITH CANTILEVER (PART DOUBLE-FACED)

Example No. 3

GENERAL NOTES:

LOADING:

WIND LOADING:

Normal to face of sign: 40.3 psf on 100% Truss surface area (i.e. 100% panel coverage).

Transverse to face of sign: 20% of normal force.

WALKWAY LOADING:

Dead load +500 LB concentrated live load.

UNIT STRESSES:

STRUCTURAL STEEL: fy = 36,000 psi
REINFORCED CONCRETE: fy = 60,000 psi
f'c = 3600 psi
FOOTING SOIL PRESSURE: 2.5 ksf (spread footing)

MINIMUM CLEARANCE

Vertical roadway clearance 18'-0" (bottom of walkway system)

WELDING:

All welding continuous unless otherwise noted on the plans.

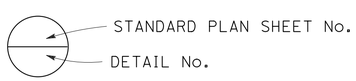

NOTES:

1. Signs are shown and dimensioned looking in the direction of traffic. Double faced signs are shown and dimensioned looking ahead along stationing.
2. Mandatory dimension limit.

STATE OF CALIFORNIA
DEPARTMENT OF TRANSPORTATION

OVERHEAD SIGNS-TRUSS INSTRUCTIONS AND EXAMPLES

NO SCALE

RSP S1 DATED JULY 19, 2013 SUPERSEDES STANDARD PLAN S1 DATED MAY 20, 2011 - PAGE 334 OF THE STANDARD PLANS BOOK DATED 2010.

REVISED STANDARD PLAN RSP S1

7-11-13

Dist	COUNTY	ROUTE	POST MILES TOTAL PROJECT	SHEET No.	TOTAL SHEETS
12	Ora	5	3.0/3.7	512	635

REGISTERED CIVIL ENGINEER

July 19, 2013
PLANS APPROVAL DATE

REGISTERED PROFESSIONAL ENGINEER
Stanley P. Johnson
No. C57793
Exp. 3-31-14
CIVIL
STATE OF CALIFORNIA

THE STATE OF CALIFORNIA OR ITS OFFICERS OR AGENTS SHALL NOT BE RESPONSIBLE FOR THE ACCURACY OR COMPLETENESS OF SCANNED COPIES OF THIS PLAN SHEET.

TO ACCOMPANY PLANS DATED 3-10-14

TABLE XV

POST TYPE	PIPE		CAP PLATE SIZE FOR CHORD L's 5 x 5	CAP PLATE SIZE FOR CHORD L's 6 x 6	ROUND PEDESTAL					SQUARE PEDESTAL						SPREAD FOOTING						
					PEDESTAL SIZE	VERTICAL ⌋-BARS		SPIRAL		PEDESTAL SIZE	VERTICAL ⌋-BARS			HOOP		(SEE NOTE 2)	REINFORCEMENT					
																	WIDTH		LONGITUDINAL		FOOTING STIRRUPS	
	NPS	THICKNESS			Dia	EQUALLY SPACED TOTAL	BAR SIZE	BAR SIZE	PITCH	SQUARE	EQUALLY SPACED TOTAL	BAR SIZE	# OF BARS EA FACE	BAR SIZE	SPACING		TOP	BOTTOM	TOP	BOTTOM		
II	14	1/2"	2'-0" x 2'-0" x 1"	2'-2" x 2'-2" x 1"	5'-3"	16	#10	#5	3 1/2"	5'-3"	16	#10	5	#5	3 1/2"	12'-0" x 14'-0" x 2'-6"	14-#6	14-#7	13-#9	13-#9	#5 @ 12	
III	16		2'-2" x 2'-2" x 1"	2'-4" x 2'-4" x 1"												12'-0" x 14'-0" x 2'-6"	15-#6	15-#7				
IV	18		2'-4" x 2'-4" x 1"	2'-6" x 2'-6" x 1"												12'-0" x 14'-0" x 2'-6"	15-#6	15-#7				
V	20		2'-6" x 2'-6" x 1"	2'-8" x 2'-8" x 1"												13'-0" x 14'-0" x 2'-6"	15-#6	15-#7	14-#9	14-#9		
VI	24		2'-10" x 2'-10" x 1"	3'-0" x 3'-0" x 1"	5'-9"		#11			5'-9"		#11				13'-0" x 16'-0" x 2'-6"	17-#7	17-#7		14-#11		
VII	24	3/4"														13'-0" x 17'-0" x 2'-6"	18-#7	18-#7				
VIII	24	31/32"														13'-0" x 18'-0" x 2'-6"	19-#7	19-#7				
IX	24	31/32"														13'-0" x 18'-0" x 2'-6"	19-#7	19-#7				

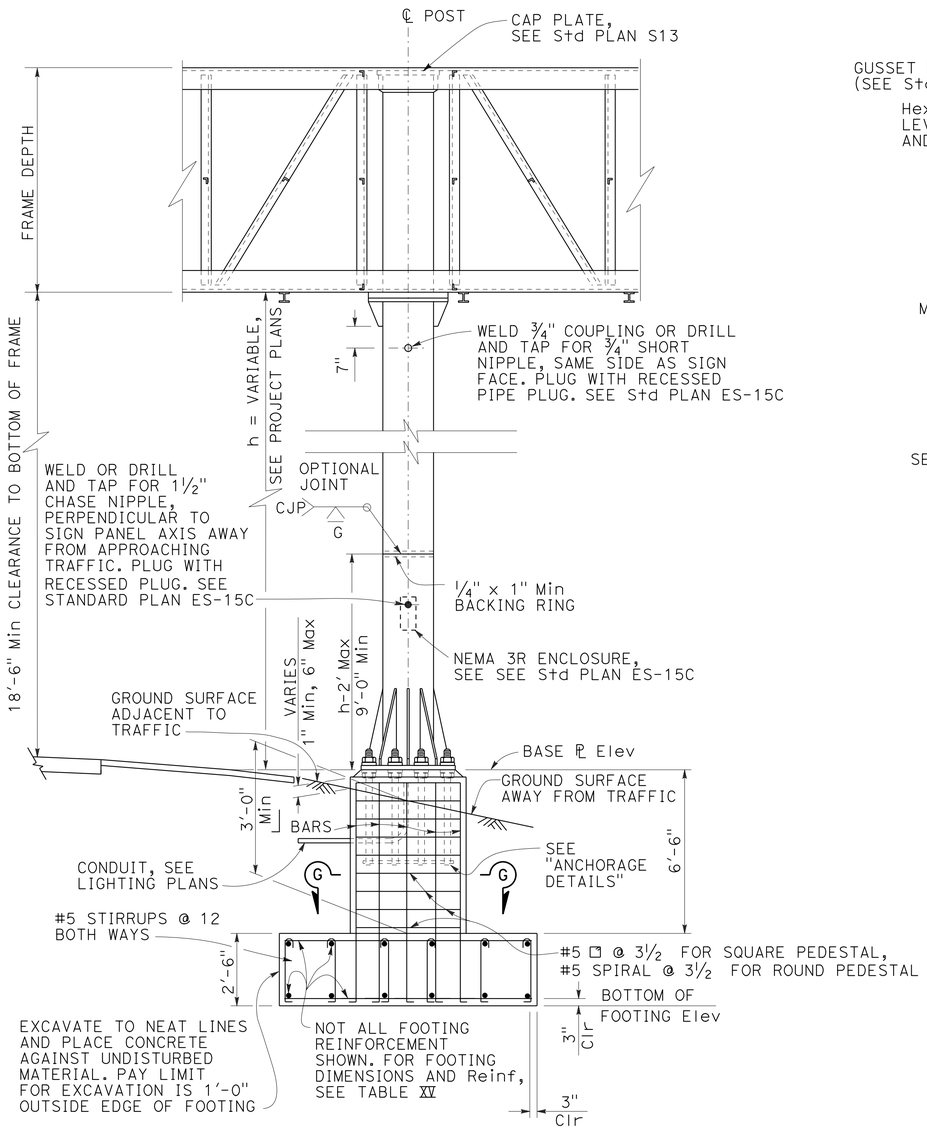

ELEVATION
See Note 5

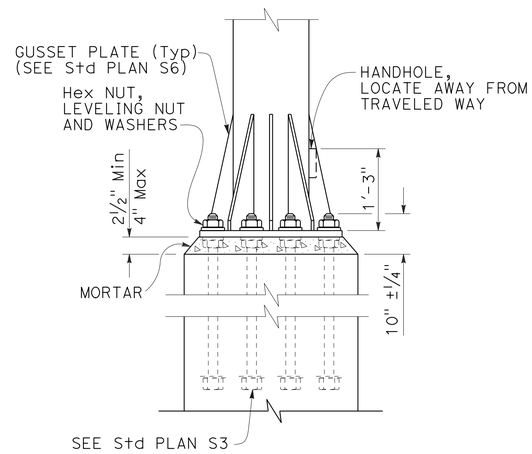

ELEVATION

ANCHORAGE DETAILS

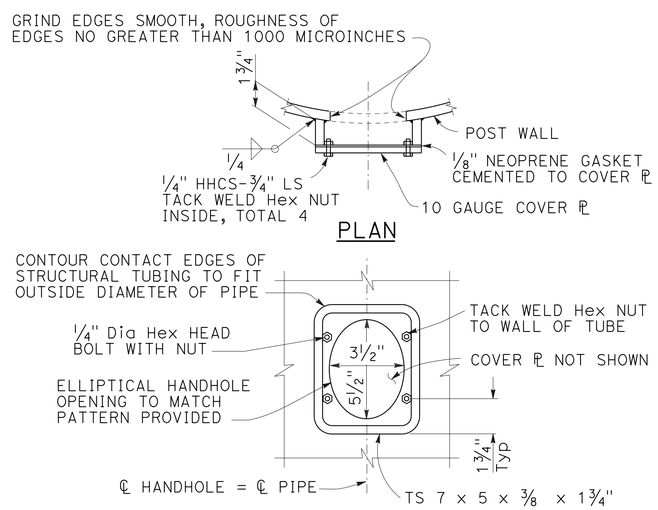

ELEVATION

TYPICAL DETAILS OF HANDHOLE AND COVER

NOTES:

1. For "General Notes", see Revised Standard Plan RSP S1.
2. Longer side of footing (longitudinal) shall be normal to axis of sign.
3. Backfill shall be in place prior to erection of post.
4. Thread upper 10" of anchor bolts and galvanize upper 1'-0".
5. Spread footing with square pedestal foundation shown, use Pile Foundation when shown on the Project Plans. For pile foundation details, see Standard Plan S8.
6. Anchor plates may be retained with hexagon nut or formed head as alternatives to details shown.
7. On single post sign structures, the post shall be raked out of plumb, with the use of the leveling nuts to make the bottom of the sign frame level.
8. At final position of post all top and bottom nuts shall be tightened against base plate.
9. When foundation is located on a steep slope with exposed face of concrete adjacent to traffic, see "Detail C" on Standard Plan S8, as applicable.
10. Slope protection required when indicated on the Project Plans.

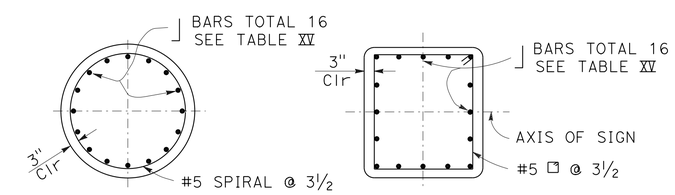

SECTION G-G
ROUND PEDESTAL

SECTION G-G
SQUARE PEDESTAL

STATE OF CALIFORNIA
DEPARTMENT OF TRANSPORTATION

OVERHEAD SIGNS-TRUSS SINGLE POST TYPE POST TYPES II THROUGH IX

NO SCALE

RSP S2 DATED JULY 19, 2013 SUPERSEDES STANDARD PLAN S2
DATED MAY 20, 2011 - PAGE 335 OF THE STANDARD PLANS BOOK DATED 2010.

REVISED STANDARD PLAN RSP S2

2010 REVISED STANDARD PLAN RSP S2

7-11-13

Dist	COUNTY	ROUTE	POST MILES TOTAL PROJECT	SHEET No.	TOTAL SHEETS
12	Ora	5	3.0/3.7	513	635

Theresa Gabriel
REGISTERED ELECTRICAL ENGINEER

July 19, 2013
PLANS APPROVAL DATE

REGISTERED PROFESSIONAL ENGINEER
Theresa Aziz Gabriel
No. E15129
Exp. 6-30-14
ELECTRICAL
STATE OF CALIFORNIA

THE STATE OF CALIFORNIA OR ITS OFFICERS OR AGENTS SHALL NOT BE RESPONSIBLE FOR THE ACCURACY OR COMPLETENESS OF SCANNED COPIES OF THIS PLAN SHEET.

TO ACCOMPANY PLANS DATED 3-10-14

LEGEND:

AB	ABANDON. IF APPLIED TO CONDUIT, REMOVE CONDUCTORS
BC	INSTALL PULL BOX IN EXISTING CONDUIT RUN
BP	PEDESTRIAN BARRICADE, TYPE AS INDICATED ON PLAN
CB	INSTALL CONDUIT INTO EXISTING PULL BOX
CC	CONNECT NEW AND EXISTING CONDUIT. REMOVE EXISTING CONDUCTORS AND INSTALL CONDUCTORS AS INDICATED
CF	CONDUIT TO REMAIN FOR FUTURE USE. REMOVE CONDUCTORS. INSTALL PULL TAPE
DH	DETECTOR HANDHOLE
FA	FOUNDATION TO BE ABANDONED
IS	INSTALL SIGN ON SIGNAL MAST ARM
NS	NO SLIP BASE ON STANDARD
PEC	PHOTOELECTRIC CONTROL
PEU	PHOTOELECTRIC UNIT
RC	EQUIPMENT OR MATERIAL TO BE REMOVED AND BECOME THE PROPERTY OF THE CONTRACTOR
RE	REMOVE ELECTROLIER, FUSES AND BALLAST. TAPE ENDS OF CONDUCTORS
RL	RELOCATE EQUIPMENT
RR	REMOVE AND REUSE EQUIPMENT
RS	REMOVE AND SALVAGE EQUIPMENT
SC	SPLICE NEW TO EXISTING CONDUCTORS
SD	SERVICE DISCONNECT
TSP	TELEPHONE SERVICE POINT

ABBREVIATIONS

APS	ACCESSIBLE PEDESTRIAN SIGNAL
BBS	BATTERY BACKUP SYSTEM
BC	BOLT CIRCLE
BPB	BICYCLE PUSH BUTTON
C	CONDUIT
CB	CIRCUIT BREAKER
CCTV	CLOSED CIRCUIT TELEVISION
Ckt	CIRCUIT
CMS	CHANGEABLE MESSAGE SIGN
Ctid	CALTRANS IDENTIFICATION
Comm	COMMUNICATION
DLC	LOOP DETECTOR LEAD-IN CABLE
EMS	EXTINGUISHABLE MESSAGE SIGN
EVUC	EMERGENCY VEHICLE UNIT CABLE
EVUD	EMERGENCY VEHICLE UNIT DETECTOR
FB	FLASHING BEACON
FBCA	FLASHING BEACON CONTROL ASSEMBLY
FBS	FLASHING BEACON WITH SLIP BASE
FO	FIBER OPTIC
G	EQUIPMENT GROUNDING CONDUCTOR
GB	GROUND BUS
GFCI	GROUND FAULT CIRCUIT INTERRUPTER
HAR	HIGHWAY ADVISORY RADIO
Hex	HEXAGONAL
HPS	HIGH PRESSURE SODIUM
IISNS	INTERNALLY ILLUMINATED STREET NAME SIGN
ISL	INDUCTION SIGN LIGHTING
LED	LIGHT EMITTING DIODE
LMA	LUMINAIRE MAST ARM
LPS	LOW PRESSURE SODIUM
Ltg	LIGHTING
Lum	LUMINAIRE
M	METERED
MAT	MAST ARM MOUNTING TOP ATTACHMENT
MAS	MAST ARM MOUNTING SIDE ATTACHMENT
M/M	MULTIPLE TO MULTIPLE TRANSFORMER
Mtg	MOUNTING
MV	MERCURY VAPOR LIGHTING FIXTURE
MVDS	MICROWAVE VEHICLE DETECTION SYSTEM
N	NEUTRAL (GROUNDED CONDUCTOR)
NB	NEUTRAL BUS
NC	NORMALLY CLOSE
NO	NORMALLY OPEN
P	CIRCUIT BREAKER'S POLE
PB	PULL BOX
PBA	PUSH BUTTON ASSEMBLY
PEC	PHOTOELECTRIC CONTROL
Ped	PEDESTRIAN
PEU	PHOTOELECTRIC UNIT
PT	CONDUIT WITH PULL TAPE
RE	RELOCATED EQUIPMENT
RM	RAMP METERING
RWIS	ROADSIDE WEATHER INFORMATION SYSTEM
SB	SLIP BASE
SIC	SIGNAL INTERCONNECT CABLE
Sig	SIGNAL
SMA	SIGNAL MAST ARM
SNS	STREET NAME SIGN
SP	SERVICE POINT
TDC	TELEPHONE DEMARCATION CABINET
TMS	TRAFFIC MONITORING STATION
TOS	TRAFFIC OPERATIONS SYSTEM
Veh	VEHICLE
VIVDS	VIDEO IMAGE VEHICLE DETECTION SYSTEM
WIM	WEIGH-IN-MOTION
Xfmr	TRANSFORMER

SOFFIT AND WALL MOUNTED LUMINAIRES

PENDANT, 70 W HPS UNLESS OTHERWISE SPECIFIED

FLUSH, 70 W HPS UNLESS OTHERWISE SPECIFIED

WALL SURFACE, 70 W HPS UNLESS OTHERWISE SPECIFIED

EXISTING SOFFIT OR WALL LUMINAIRE TO REMAIN UNMODIFIED

EXISTING SOFFIT OR WALL LUMINAIRE TO BE MODIFIED AS SPECIFIED

NOTE:

Arrow indicates "street side" of luminaire.

COMMONLY USED SYMBOLS FOR UNITED STATES CUSTOMARY UNITS OF MEASUREMENT:

SYMBOL USED	DEFINITIONS
Ω	OHMS
min	MINUTE
s	SECOND
bps	BITS PER SECOND
Bps	BYTES PER SECOND
A	AMPERE
V	VOLT
V(dc)	VOLT (DIRECT CURRENT)
V(ac)	VOLT (ALTERNATING CURRENT)
FC	FOOT - CANDLE
W	WATTS
VA	VOLT-AMPERE
M	MEGA
k	KILO
m	MILLI
μ	MICRO
P	PICO
Hz	HERTZ

MISCELLANEOUS ELECTROLIERS

NEW	EXISTING	
		LUMINAIRE ON WOOD POLE
		NON-STANDARD ELECTROLIER (SEE PROJECT NOTES OR PROJECT PLANS)
		CITY ELECTROLIER
		ELECTROLIER FOUNDATION (FUTURE INSTALLATION)

NOTES:

1. HPS luminaires shall be 310 W HPS when installed on Type 21, 21D, 30, 31 and 32 Standards, unless otherwise specified. HPS luminaires shall be 200 W when installed on other type standards or poles, unless otherwise specified.
2. LED luminaires shall be 235 W when installed on Type 21, 21D, 30, 31 and 32 Standards, unless otherwise specified. LED luminaires shall be 165 W when installed on other type standards or poles, unless otherwise specified.
3. Luminaires shall be the cutoff type, ANSI Type III medium cutoff lighting distribution, unless otherwise specified.

STANDARD ELECTROLIER

NEW	EXISTING	STANDARD TYPE
		15
		15D
		15 STRUCTURE
		15D STRUCTURE
		21
		21D
		21 STRUCTURE
		21D STRUCTURE
		30
		31
		32

STATE OF CALIFORNIA
DEPARTMENT OF TRANSPORTATION

ELECTRICAL SYSTEMS (LEGEND AND ABBREVIATIONS)

NO SCALE

RSP ES-1A DATED JULY 19, 2013 SUPERSEDES STANDARD PLAN ES-1A DATED MAY 20, 2011 - PAGE 425 OF THE STANDARD PLANS BOOK DATED 2010.

REVISED STANDARD PLAN RSP ES-1A

2010 REVISED STANDARD PLAN RSP ES-1A

Dist	COUNTY	ROUTE	POST MILES TOTAL PROJECT	SHEET No.	TOTAL SHEETS
12	Ora	5	3.0/3.7	514	635

Theresa Gabriel
REGISTERED ELECTRICAL ENGINEER

July 19, 2013
PLANS APPROVAL DATE

REGISTERED PROFESSIONAL ENGINEER Theresa Aziz Gabriel No. E15129 Exp. 6-30-14 ELECTRICAL STATE OF CALIFORNIA

THE STATE OF CALIFORNIA OR ITS OFFICERS OR AGENTS SHALL NOT BE RESPONSIBLE FOR THE ACCURACY OR COMPLETENESS OF SCANNED COPIES OF THIS PLAN SHEET.

TO ACCOMPANY PLANS DATED 3-10-14

CONDUIT

NEW	EXISTING	
		LIGHTING CONDUIT, UNLESS OTHERWISE INDICATED OR NOTED
		TRAFFIC SIGNAL CONDUIT
C	c	COMMUNICATION CONDUIT
T	t	TELEPHONE CONDUIT
F	f	FIRE ALARM CONDUIT
FO	fo	FIBER OPTIC CONDUIT
		CONDUIT TERMINATION
R	r	CONDUIT RISER ATTACHED TO THE STRUCTURE OR SERVICE POLE

SERVICE EQUIPMENT

NEW	EXISTING	
OH	oh	OVERHEAD LINES
U	U	WOOD POLE, "U" INDICATES UTILITY OWNED
		POLE GUY WITH ANCHOR
		UTILITY TRANSFORMER - GROUND MOUNTED
III	III	SERVICE EQUIPMENT ENCLOSURE TYPE. DOOR INDICATES FRONT OF ENCLOSURE
T	t	TELEPHONE DEMARCATION CABINET

POLE-MOUNTED SERVICE DESIGNATION

TYPE H SERVICE, 28'-10" — TYPE OF INSTALLATION AND POLE HEIGHT ABOVE GRADE

FLASHING BEACON

NEW	EXISTING	
R	R	FLASHING BEACON (ONE VEHICLE SIGNAL HEAD WITH BACKPLATE AND VISOR) "R" INDICATES RED INDICATION, "Y" INDICATES YELLOW INDICATION
Y Y	Y Y	FLASHING BEACON WITH TYPE 15-FBS STANDARD AND A SIGN.
R R	R R	FLASHING BEACON WITH TYPES 9, 9A OR 9B SIGN UNLESS OTHERWISE SPECIFIED OR INDICATED

SIGNAL EQUIPMENT

NEW	EXISTING	
C	C	PEDESTRIAN SIGNAL HEAD "C" INDICATES COUNTDOWN PEDESTRIAN HEAD
		PUSH BUTTON ASSEMBLY POST
		PEDESTRIAN BARRICADE
		VEHICLE SIGNAL HEAD (WITH BACKPLATE AND 3-SECTIONS: RED, YELLOW AND GREEN)
		VEHICLE SIGNAL HEAD WITH ANGLE VISOR
PV	PV	MODIFICATIONS OF BASIC SYMBOL: "L" INDICATES ALL NON-ARROW SECTIONS LOUVERED "LG" INDICATES LOUVERED GREEN SECTION ONLY "PV" INDICATES ALL 12" SECTIONS PROGRAMMED VISIBILITY "8" INDICATES ALL 8" SECTIONS (ONLY WHEN SPECIFIED)
		VEHICLE SIGNAL HEAD CONSISTING OF RED, YELLOW AND GREEN LEFT ARROW SECTIONS
		VEHICLE SIGNAL HEAD CONSISTING OF RED AND YELLOW SECTIONS WITH AN UP GREEN ARROW SECTION
		VEHICLE SIGNAL HEAD (5 SECTION) CONSISTING OF RED, YELLOW AND GREEN SECTIONS WITH YELLOW AND GREEN RIGHT ARROW SECTIONS
		TYPE 15TS STANDARD WITH VEHICLE SIGNAL HEAD AND LUMINAIRE
		TYPE 21TS STANDARD WITH VEHICLE SIGNAL HEAD AND LUMINAIRE
		STANDARD WITH LUMINAIRE AND SIGNAL MAST ARMS AND ATTACHED VEHICLE SIGNAL HEADS
		TYPE 1 STANDARD WITH ATTACHED VEHICLE SIGNAL HEADS
		STANDARD WITH A SIGNAL MAST ARM, ATTACHED VEHICLE SIGNAL HEADS AND INTERNALLY ILLUMINATED STREET NAME SIGN
		CONTROLLER ASSEMBLY. DOOR INDICATES FRONT OF CABINET

SIGNAL EQUIPMENT Cont

NEW	EXISTING	
		GUARD POST
		TYPE 1 STANDARD WITH RAMP METERING SIGN
		OPTICAL DETECTOR FOR THE EMERGENCY VEHICLE DETECTION SYSTEM

NOTES:

1. All signal sections shall be 12" unless shown otherwise.
2. Signal heads shall be provided with backplates unless shown otherwise.

ILLUMINATED OVERHEAD SIGN

NEW	EXISTING	
		SINGLE POST, SINGLE ILLUMINATED SIGN, BALANCED BUTTERFLY
		SINGLE POST, DOUBLE ILLUMINATED SIGN, BALANCED BUTTERFLY
		SINGLE POST, SINGLE ILLUMINATED SIGN, FULL CANTILEVER
		DOUBLE POST, SINGLE ILLUMINATED SIGN
		SINGLE ILLUMINATED SIGN MOUNTED ON STRUCTURE
		DOUBLE POST, SINGLE ILLUMINATED SIGN WITH ELECTROLIER

STATE OF CALIFORNIA
DEPARTMENT OF TRANSPORTATION

ELECTRICAL SYSTEMS (LEGEND AND ABBREVIATIONS)

NO SCALE

RSP ES-1B DATED JULY 19, 2013 SUPERSEDES STANDARD PLAN ES-1B DATED MAY 20, 2011 - PAGE 426 OF THE STANDARD PLANS BOOK DATED 2010.

REVISED STANDARD PLAN RSP ES-1B

2010 REVISED STANDARD PLAN RSP ES-1B

7-15-13

Dist	COUNTY	ROUTE	POST MILES TOTAL PROJECT	SHEET No.	TOTAL SHEETS
12	Ora	5	3.0/3.7	515	635

Theresa Gabriel
REGISTERED ELECTRICAL ENGINEER

July 19, 2013
PLANS APPROVAL DATE

REGISTERED PROFESSIONAL ENGINEER
Theresa Aziz Gabriel
No. E15129
Exp. 6-30-14
ELECTRICAL
STATE OF CALIFORNIA

THE STATE OF CALIFORNIA OR ITS OFFICERS OR AGENTS SHALL NOT BE RESPONSIBLE FOR THE ACCURACY OR COMPLETENESS OF SCANNED COPIES OF THIS PLAN SHEET.

TO ACCOMPANY PLANS DATED 3-10-14

EQUIPMENT IDENTIFICATION

ILLUMINATED SIGN IDENTIFICATION NUMBER:

SIGN No. 12345

10 ISL SCI 1.0

- SIGN NUMBER - PLACE ON POST OR STRUCTURE
- TRANSFORMER RATING (kVA)
- LIGHTING CONTROL TYPE
- NUMBER AND TYPE OF FIXTURES

} DO NOT PLACE ON STANDARD OR STRUCTURE

ELECTROLIER OR EQUIPMENT IDENTIFICATION NUMBER:

12345 - 15'-0"

- MAST ARM LENGTH, IF SHOWN. DO NOT PLACE ON STANDARD OR STRUCTURE
- EQUIPMENT NUMBER - PLACE ON STANDARD OR STRUCTURE. EXISTING EQUIPMENT NUMBERS ARE SHOWN IN PARENTHESIS

CONDUIT AND CONDUCTOR IDENTIFICATION:

1½"C, 2#10, 15#14, 2 DLC, 12P#18

- PAIR
- NUMBER AND SIZE OF CONDUCTORS AND CABLES
- SIZE OF CONDUIT IN INCHES

Ø1, Ø2, Ø2P, etc.	TRAFFIC PHASE IDENTIFICATION FOR SIGNAL FACES, DETECTORS AND PHASE DIAGRAMS
1 2 3	LEGEND NUMBERS
A B C	EQUIPMENT, SIGNAL POLES, INSTALLATION OR ITEMS
1 2 3	CONDUIT RUN NUMBERS

SIGNAL AND LIGHTING STANDARD (TYPICAL DESIGNATION):

19A - 3 - 100

- WIND VELOCITY = 100 mph
- CASE 3 ARM LOADING
- STANDARD TYPE
- STANDARD PLAN SHEET NUMBER
- DETAIL, NUMBER, SECTION, TYPE OR ELEVATION

MISCELLANEOUS EQUIPMENT

NEW	EXISTING	
CMS	cms	CHANGEABLE MESSAGE SIGN
		CLOSED CIRCUIT TELEVISION CAMERA
		HIGHWAY ADVISORY RADIO POLE AND ANTENNA
EMS	ems	EXTINGUISHABLE MESSAGE SIGN
M V	m v	DETECTION DEVICE M = MICROWAVE SENSOR V = VIDEO IMAGE SENSOR

WIRING DIAGRAM LEGEND

----	EXTERNAL CONDUCTOR
	CONDUCTOR OR BUS
	TIE POINT
	CONTACTOR COIL
	CONTACTOR, NO CONTACT
	TERMINAL BLOCKS
	CONTACTOR, NC CONTACT
	ENCLOSURE BOND
	GROUNDING ELECTRODE
	CIRCUIT BREAKER
	RECEPTACLE

PULL BOXES

NEW	EXISTING	
		PULL BOX, No. 5 UNLESS OTHERWISE INDICATED OR NOTED
3	9A(21)	PULL BOX, ADDITIONAL DESIGNATIONS OR DESCRIPTIONS

3 No. 3½ PULL BOX
5 No. 5 PULL BOX
6 No. 6 PULL BOX
7 No. 7 (CEILING PULL BOX)
8 No. 8 (PENDANT SOFFIT PULL BOX)
9 No. 9 PULL BOX
9A No. 9A PULL BOX

(C) COMMUNICATIONS PULL BOX
(E) PULL BOX WITH EXTENSION
(S) SPRINKLER CONTROL PULL BOX
(21) ANCHOR BOLTS AND CONDUIT FOR FUTURE INSTALLATION OF TYPE 21 STANDARD
(T) TRAFFIC PULL BOX

VEHICLE DETECTORS

5 J 9 U

- VEHICLE DETECTOR DESIGNATION
- U = UPPER
  L = LOWER
- SLOT NUMBER IN INPUT FILE
- INPUT FILE (I OR J)
- PHASE

NEW	EXISTING	
		TYPE A DETECTOR LOOP. OUTLINE OF SAWCUT SHOWN
		TYPE B DETECTOR LOOP. OUTLINE OF SAWCUT SHOWN
		TYPE C DETECTOR LOOP. OUTLINE OF SAWCUT SHOWN
		TYPE D DETECTOR LOOP. OUTLINE OF SAWCUT SHOWN
		TYPE E DETECTOR LOOP. OUTLINE OF SAWCUT SHOWN
		TYPE Q DETECTOR LOOP. OUTLINE OF SAWCUT SHOWN
		MAGNETIC DETECTOR
DH	dh	DETECTOR HANDHOLE
		MICROWAVE OR VIDEO DETECTION ZONE

STATE OF CALIFORNIA
DEPARTMENT OF TRANSPORTATION

ELECTRICAL SYSTEMS (LEGEND AND ABBREVIATIONS)

NO SCALE

RSP ES-1C DATED JULY 19, 2013 SUPERSEDES STANDARD PLAN ES-1C DATED MAY 20, 2011 - PAGE 427 OF THE STANDARD PLANS BOOK DATED 2010.

REVISED STANDARD PLAN RSP ES-1C

2010 REVISED STANDARD PLAN RSP ES-1C

7-11-13

Dist	COUNTY	ROUTE	POST MILES TOTAL PROJECT	SHEET No.	TOTAL SHEETS
12	Ora	5	3.0/3.7	516	635

Theresa Gabriel
REGISTERED ELECTRICAL ENGINEER

July 19, 2013
PLANS APPROVAL DATE

REGISTERED PROFESSIONAL ENGINEER
Theresa Aziz Gabriel
No. E15129
Exp. 6-30-14
ELECTRICAL
STATE OF CALIFORNIA

THE STATE OF CALIFORNIA OR ITS OFFICERS OR AGENTS SHALL NOT BE RESPONSIBLE FOR THE ACCURACY OR COMPLETENESS OF SCANNED COPIES OF THIS PLAN SHEET.

TO ACCOMPANY PLANS DATED 3-10-14

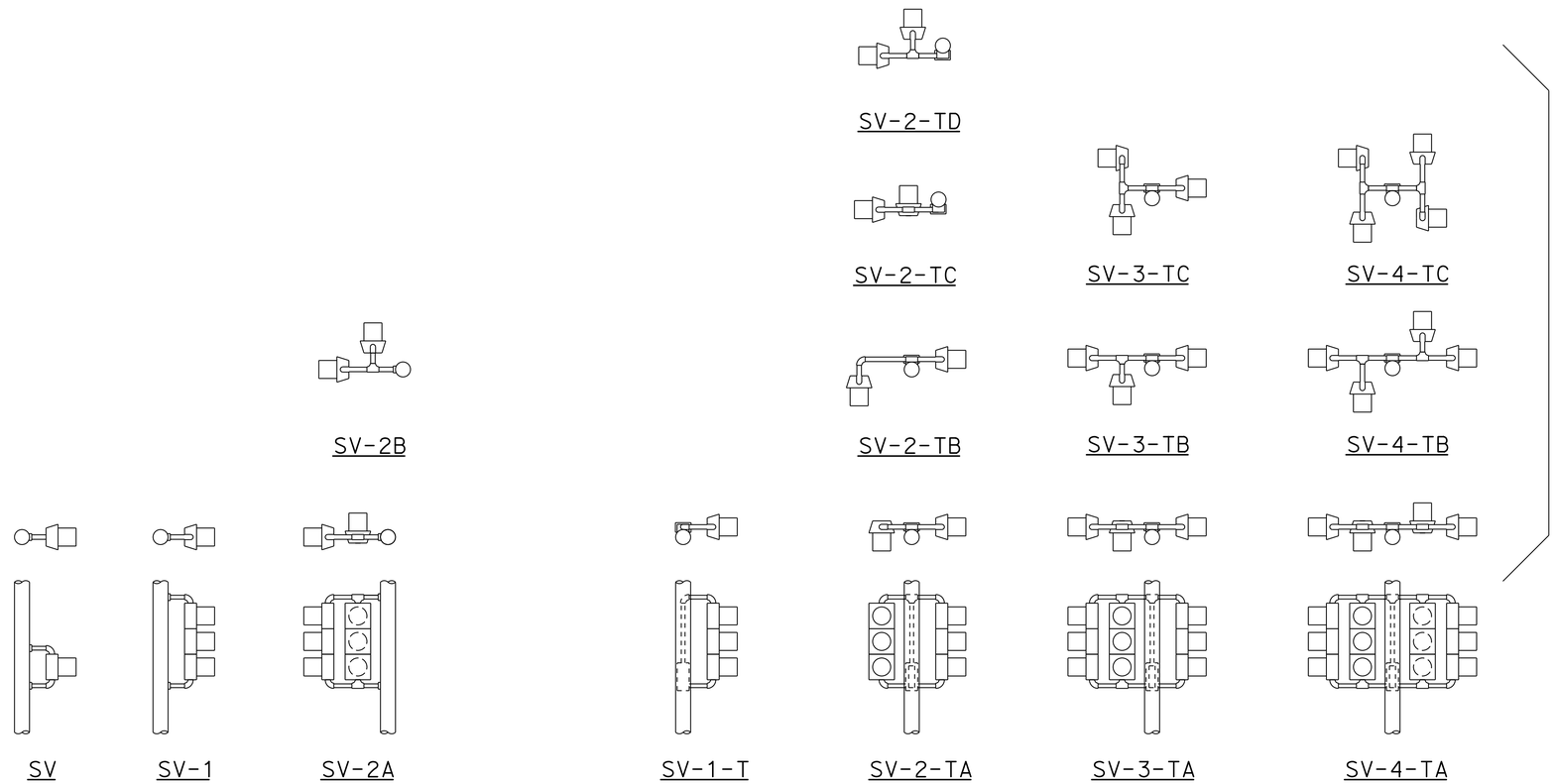

SIDE MOUNTINGS

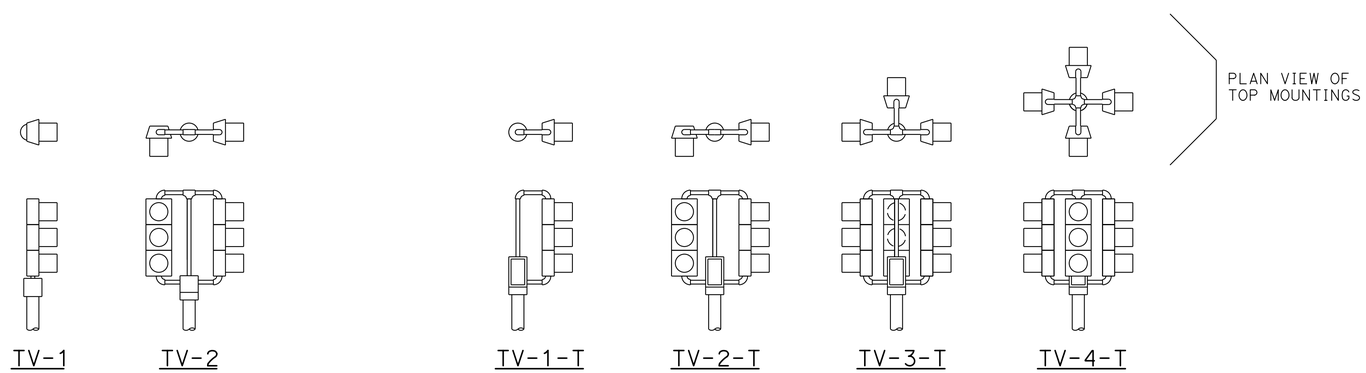

TOP MOUNTINGS

ABBREVIATIONS:

SV	SIDE MOUNTED VEHICLE SIGNALS
T	TERMINAL COMPARTMENT
TV	TOP MOUNTED VEHICLE SIGNALS
1, 2, 3, 4	NUMBER OF SIGNAL FACES (3 - SECTION, UNLESS OTHERWISE INDICATED)
A, B, C, D	CONFIGURATION OF SIGNALS

NOTES:

1. Mountings shall be oriented to provide maximum horizontal clearance to adjacent roadway.
2. Bracket arms shall be long enough to permit proper alignment of signals and backplate installation.
3. See Standard Plans ES-4D and ES-4E for attachment fitting details.

STATE OF CALIFORNIA
DEPARTMENT OF TRANSPORTATION

ELECTRICAL SYSTEMS (VEHICULAR SIGNAL HEADS AND MOUNTINGS)

NO SCALE

RSP ES-4A DATED JULY 19, 2013 SUPERSEDES STANDARD PLAN ES-4A DATED MAY 20, 2011 - PAGE 443 OF THE STANDARD PLANS BOOK DATED 2010.

REVISED STANDARD PLAN RSP ES-4A

2010 REVISED STANDARD PLAN RSP ES-4A

Dist	COUNTY	ROUTE	POST MILES TOTAL PROJECT	SHEET No.	TOTAL SHEETS
12	Ora	5	3.0/3.7	517	635

Theresa Gabriel
REGISTERED ELECTRICAL ENGINEER

July 19, 2013
PLANS APPROVAL DATE

REGISTERED PROFESSIONAL ENGINEER
Theresa Aziz Gabriel
No. E15129
Exp. 6-30-14
ELECTRICAL
STATE OF CALIFORNIA

THE STATE OF CALIFORNIA OR ITS OFFICERS OR AGENTS SHALL NOT BE RESPONSIBLE FOR THE ACCURACY OR COMPLETENESS OF SCANNED COPIES OF THIS PLAN SHEET.

TO ACCOMPANY PLANS DATED 3-10-14

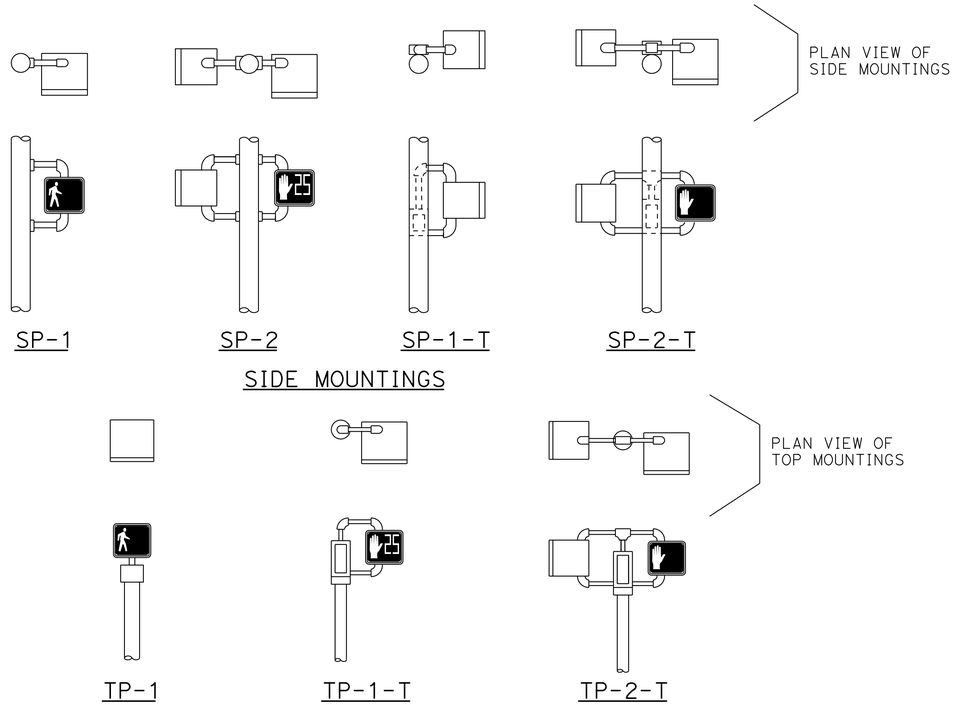

PEDESTRIAN SIGNALS AND MOUNTINGS
DETAIL A

PERSON WALKING INTERVAL FLASHING UPRAISED HAND INTERVAL STEADY UPRAISED HAND INTERVAL

PEDESTRIAN SIGNAL MODULE WITH COUNTDOWN
DETAIL B

PERSON WALKING INTERVAL STEADY UPRAISED HAND INTERVAL

PEDESTRIAN SIGNAL MODULE WITHOUT COUNTDOWN
DETAIL C

NOTES:

1. Mounting shall be oriented to provide maximum horizontal clearance to adjacent roadway.
2. Bracket arms shall be long enough to permit proper alignment of signals.
3. See Standard Plan ES-4D for attachment fittings details.

ABBREVIATIONS:

1, 2	NUMBER OF SIGNAL FACES
SP	SIDE MOUNTED PEDESTRIAN SIGNAL
T	TERMINAL COMPARTMENT
TP	TOP MOUNTED PEDESTRIAN SIGNAL

RAMP METERING SIGN
DETAIL D

STATE OF CALIFORNIA
DEPARTMENT OF TRANSPORTATION

ELECTRICAL SYSTEMS (PEDESTRIAN SIGNAL AND RAMP METERING SIGN)

NO SCALE

RSP ES-4B DATED JULY 19, 2013 SUPERSEDES STANDARD PLAN ES-4B DATED MAY 20, 2011 - PAGE 444 OF THE STANDARD PLANS BOOK DATED 2010.

REVISED STANDARD PLAN RSP ES-4B

2010 REVISED STANDARD PLAN RSP ES-4B

7-9-13

Dist	COUNTY	ROUTE	POST MILES TOTAL PROJECT	SHEET No.	TOTAL SHEETS
12	Ora	5	3.0/3.7	518	635

Theresa Gabriel
REGISTERED ELECTRICAL ENGINEER

July 19, 2013
PLANS APPROVAL DATE

REGISTERED PROFESSIONAL ENGINEER Theresa Aziz Gabriel No. E15129 Exp. 6-30-14 ELECTRICAL STATE OF CALIFORNIA

THE STATE OF CALIFORNIA OR ITS OFFICERS OR AGENTS SHALL NOT BE RESPONSIBLE FOR THE ACCURACY OR COMPLETENESS OF SCANNED COPIES OF THIS PLAN SHEET.

TO ACCOMPANY PLANS DATED 3-10-14

2010 REVISED STANDARD PLAN RSP ES-4C

VISORS

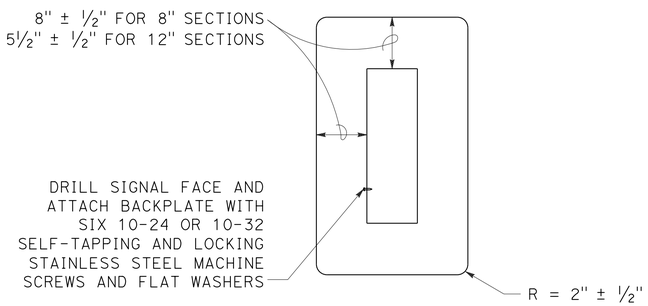

8" AND 12" SECTIONS

BACKPLATE

1/16" minimum thickness
3001-14 aluminum or plastic
when specified

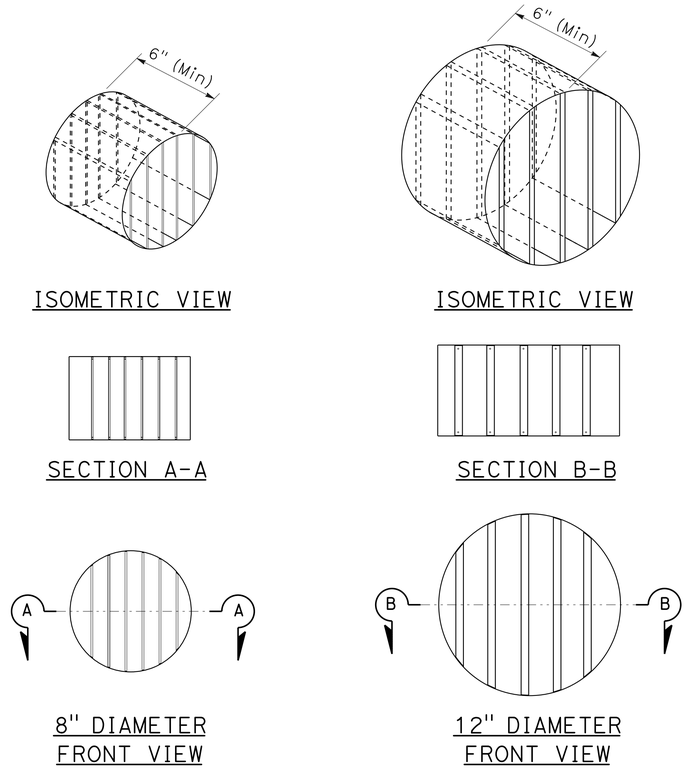

DIRECTIONAL LOUVER

Directional louvers shall be oriented as directed by the Engineer and secured in place with one plated brass machine screw and nut.

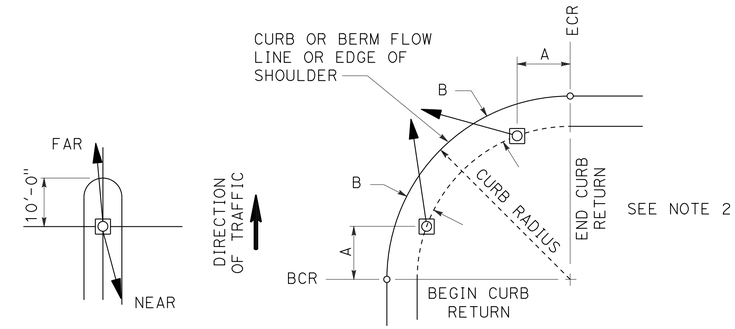

NOTES:

1. Typical signal pole placement unless dimensioned on plans.
2. For A and B dimensions, see Pole Schedule, or as directed by the Engineer.

SIGNAL STANDARD PLACEMENT DIMENSIONS AND EQUIPMENT LOCATIONS

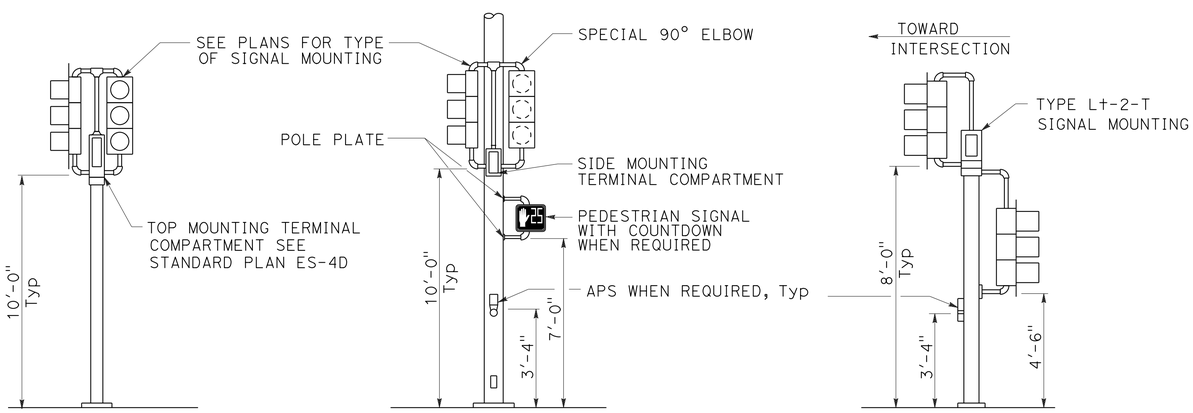

TOP MOUNTED SIGNALS (TV)
Type 1-A, 1-B, 1-C and 1-D standard as indicated on the plans

SIDE MOUNTED SIGNALS (SV AND SP)
Normally used on standards with luminaire or signal mast arm

LEFT TURN LANE SIGNAL
Type 1-A, 1-B, 1-C and 1-D standard as indicated on plans

TYPICAL SIGNAL INSTALLATIONS

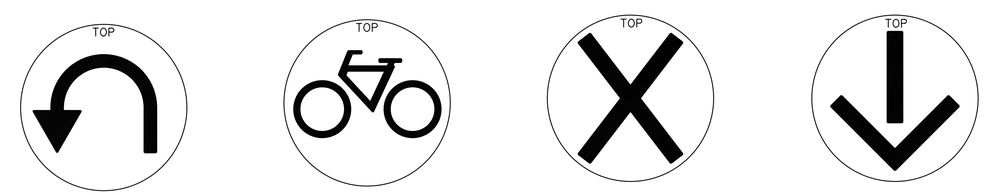

U-TURN | BICYCLE | LANE CONTROL | LANE CONTROL

SIGNAL FACES

STATE OF CALIFORNIA
DEPARTMENT OF TRANSPORTATION

ELECTRICAL SYSTEMS (VEHICULAR SIGNAL HEADS AND MOUNTINGS)

NO SCALE

RSP ES-4C DATED JULY 19, 2013 SUPERSEDES STANDARD PLAN ES-04C DATED MAY 20, 2011 - PAGE 445 OF THE STANDARD PLANS BOOK DATED 2010.

REVISED STANDARD PLAN RSP ES-4C

7-10-13

Dist	COUNTY	ROUTE	POST MILES TOTAL PROJECT	SHEET No.	TOTAL SHEETS
12	Ora	5	3.0/3.7	519	635

Theresa Gabriel
REGISTERED ELECTRICAL ENGINEER

July 19, 2013
PLANS APPROVAL DATE

REGISTERED PROFESSIONAL ENGINEER
Theresa Aziz Gabriel
No. E15129
Exp. 6-30-14
ELECTRICAL
STATE OF CALIFORNIA

THE STATE OF CALIFORNIA OR ITS OFFICERS OR AGENTS SHALL NOT BE RESPONSIBLE FOR THE ACCURACY OR COMPLETENESS OF SCANNED COPIES OF THIS PLAN SHEET.

TO ACCOMPANY PLANS DATED 3-10-14

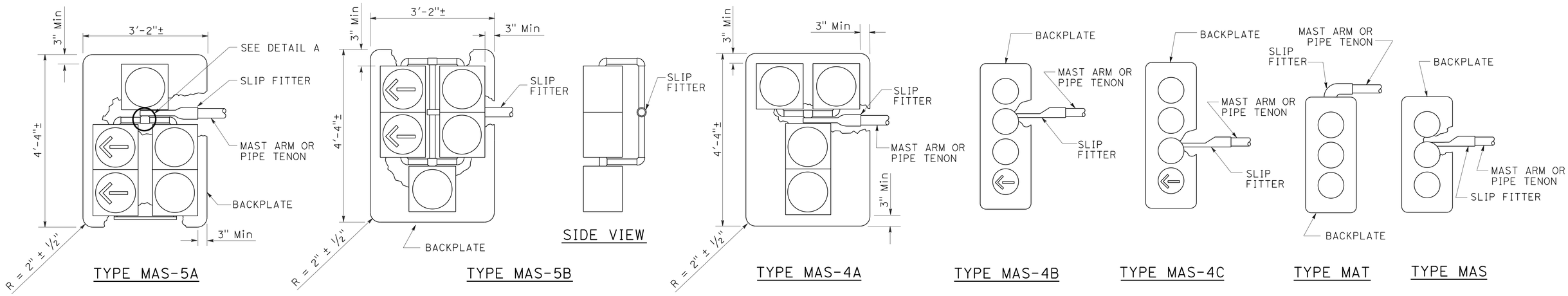

MAST ARM MOUNTINGS

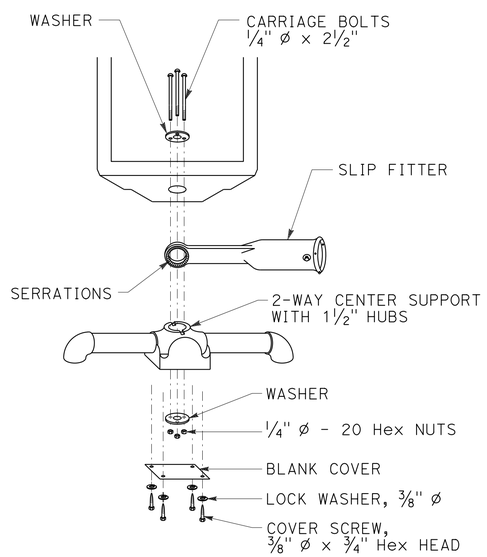

DETAIL A

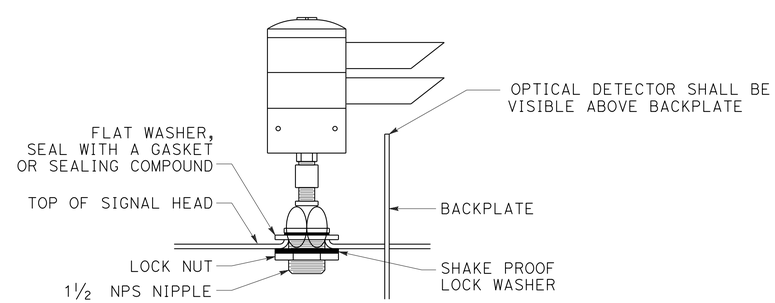

OPTICAL DETECTOR MOUNTING FOR EMERGENCY VEHICLE DETECTION SYSTEM

DETAIL B

STATE OF CALIFORNIA
DEPARTMENT OF TRANSPORTATION

ELECTRICAL SYSTEMS (VEHICULAR SIGNAL HEADS AND OPTICAL DETECTOR MOUNTING)

NO SCALE

RSP ES-4E DATED JULY 19, 2013 SUPERSEDES STANDARD PLAN ES-4E DATED MAY 20, 2011 - 447 OF THE STANDARD PLANS BOOK DATED 2010.

REVISED STANDARD PLAN RSP ES-4E

2010 REVISED STANDARD PLAN RSP ES-4E

7-9-13

Dist	COUNTY	ROUTE	POST MILES TOTAL PROJECT	SHEET No.	TOTAL SHEETS
12	Ora	5	3.0/3.7	520	635

Theresa Gabriel
REGISTERED ELECTRICAL ENGINEER

July 19, 2013
PLANS APPROVAL DATE

REGISTERED PROFESSIONAL ENGINEER Theresa Aziz Gabriel No. E15129 Exp. 6-30-14 ELECTRICAL STATE OF CALIFORNIA

THE STATE OF CALIFORNIA OR ITS OFFICERS OR AGENTS SHALL NOT BE RESPONSIBLE FOR THE ACCURACY OR COMPLETENESS OF SCANNED COPIES OF THIS PLAN SHEET.

TO ACCOMPANY PLANS DATED 3-10-14

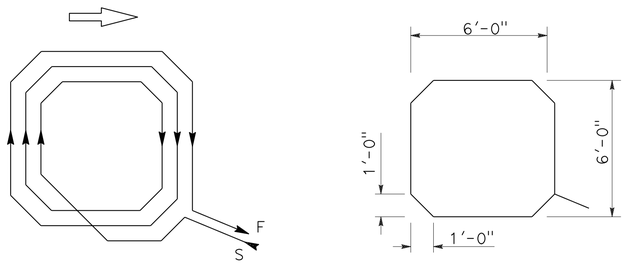

WINDING DETAIL SAWCUT DETAIL

TYPE A LOOP DETECTOR CONFIGURATION

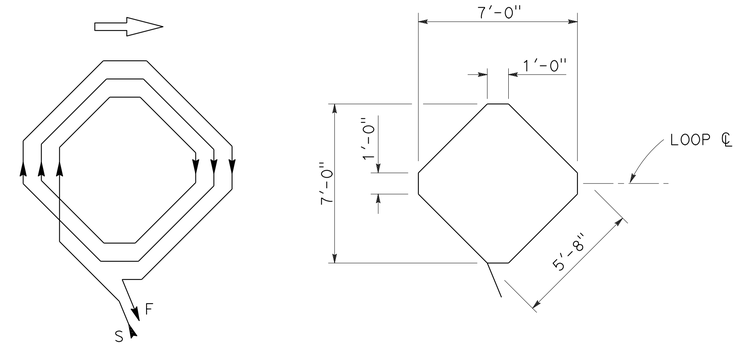

WINDING DETAIL SAWCUT DETAIL

TYPE B LOOP DETECTOR CONFIGURATION

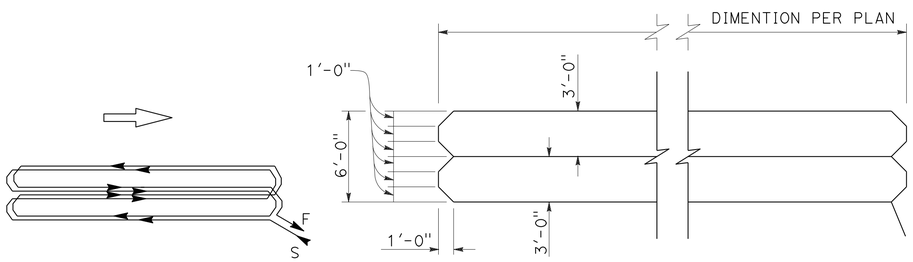

WINDING DETAIL SAWCUT DETAIL

TYPE C LOOP DETECTOR CONFIGURATION

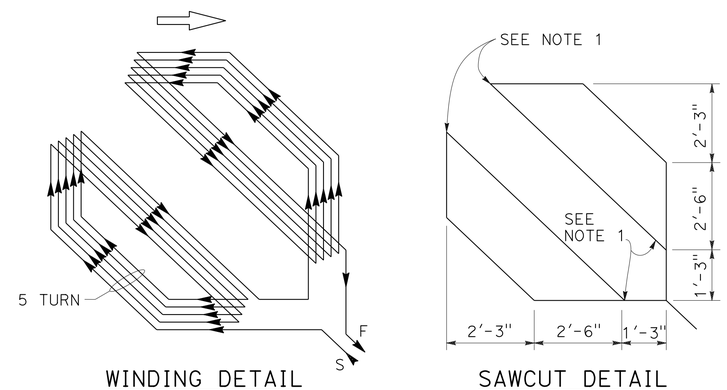

WINDING DETAIL SAWCUT DETAIL

TYPE D LOOP DETECTOR CONFIGURATION

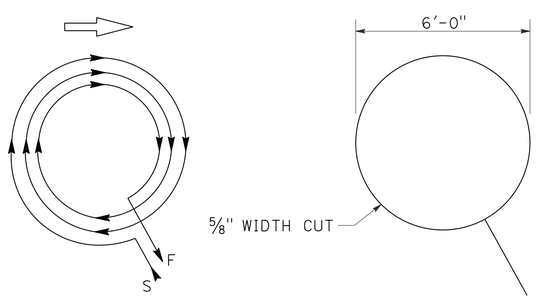

WINDING DETAIL SAWCUT DETAIL

TYPE E LOOP DETECTOR CONFIGURATION

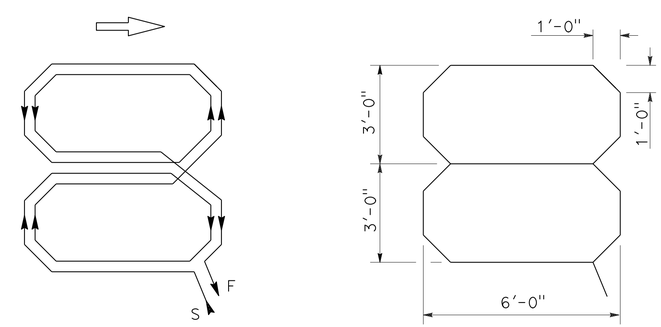

WINDING DETAIL SAWCUT DETAIL

TYPE Q LOOP DETECTOR CONFIGURATION

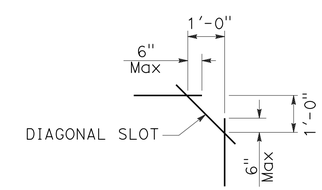

PLAN VIEW OF DIAGONAL SLOT AT CORNERS

NOTES:

1. Round corners of acute angle sawcuts to prevent damage to conductors.
2. Typical distance separating loops from edge to edge is 10' for Type A, B, D and E installation in single lane.

STATE OF CALIFORNIA
DEPARTMENT OF TRANSPORTATION

ELECTRICAL SYSTEMS (DETECTORS)

NO SCALE

RSP ES-5B DATED JULY 19, 2013 SUPERSEDES STANDARD PLAN ES-5B DATED MAY 20, 2011 - PAGE 449 OF THE STANDARD PLANS BOOK DATED 2010.

REVISED STANDARD PLAN RSP ES-5B

2010 REVISED STANDARD PLAN RSP ES-5B

7-9-13

Dist	COUNTY	ROUTE	POST MILES TOTAL PROJECT	SHEET No.	TOTAL SHEETS
12	Ora	5	3.0/3.7	521	635

Theresa Gabriel
REGISTERED ELECTRICAL ENGINEER

July 19, 2013
PLANS APPROVAL DATE

REGISTERED PROFESSIONAL ENGINEER
Theresa Aziz Gabriel
No. E15129
Exp. 6-30-14
ELECTRICAL
STATE OF CALIFORNIA

THE STATE OF CALIFORNIA OR ITS OFFICERS OR AGENTS SHALL NOT BE RESPONSIBLE FOR THE ACCURACY OR COMPLETENESS OF SCANNED COPIES OF THIS PLAN SHEET.

TO ACCOMPANY PLANS DATED 3-10-14

2010 REVISED STANDARD PLAN RSP ES-5C

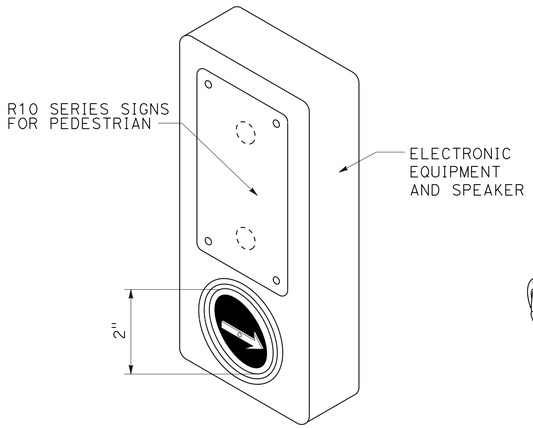

ACCESSIBLE PEDESTRIAN SIGNAL

DETAIL A
(See note 1 to 4)

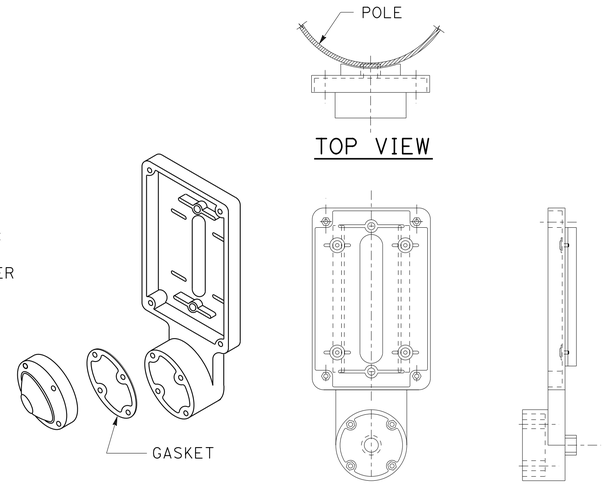

TYPE B PUSH BUTTON ASSEMBLY

DETAIL B
(See note 1 to 4)

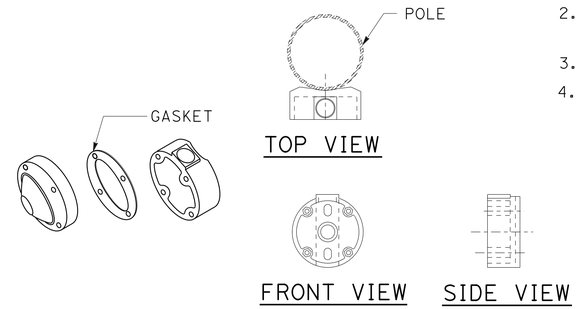

TYPE C PUSH BUTTON ASSEMBLY

DETAIL C
(See note 1 to 4)

NOTES:

1. Back casting shape to fit curvature of pole.
2. Provide cover fitting for top of post, when PBA is mounted on push button assembly post.
3. Install push button on crosswalk side of standard.
4. Use R10 series regulatory signs and plaques for pedestrian and bicycle facilities.

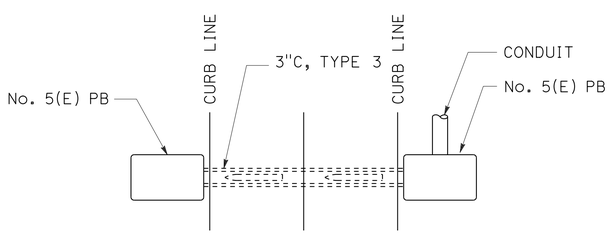

PLAN

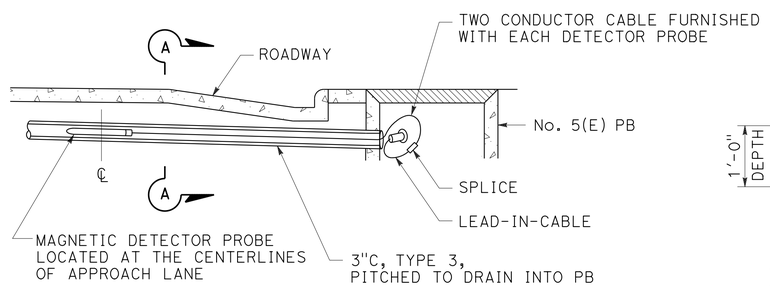

ELEVATION

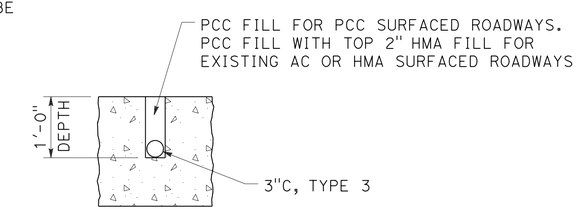

SECTION A-A

MAGNETIC VEHICLE DETECTOR INSTALLATION DETAILS

DETAIL D

STATE OF CALIFORNIA
DEPARTMENT OF TRANSPORTATION

ELECTRICAL SYSTEMS (ACCESSIBLE PEDESTRIAN SIGNAL, PUSH BUTTON ASSEMBLIES AND MAGNETIC VEHICLE DETECTOR)

NO SCALE

RSP ES-5C DATED JULY 19, 2013 SUPERSEDES STANDARD PLAN ES-5C
DATED MAY 20, 2011 - PAGE 450 OF THE STANDARD PLANS BOOK DATED 2010.

REVISED STANDARD PLAN RSP ES-5C

Dist	COUNTY	ROUTE	POST MILES TOTAL PROJECT	SHEET No.	TOTAL SHEETS
12	Ora	5	3.0/3.7	522	635

Theresa Gabriel
REGISTERED ELECTRICAL ENGINEER

July 19, 2013
PLANS APPROVAL DATE

REGISTERED PROFESSIONAL ENGINEER Theresa Aziz Gabriel No. E15129 Exp. 6-30-14 ELECTRICAL STATE OF CALIFORNIA

THE STATE OF CALIFORNIA OR ITS OFFICERS OR AGENTS SHALL NOT BE RESPONSIBLE FOR THE ACCURACY OR COMPLETENESS OF SCANNED COPIES OF THIS PLAN SHEET.

TO ACCOMPANY PLANS DATED 3-10-14

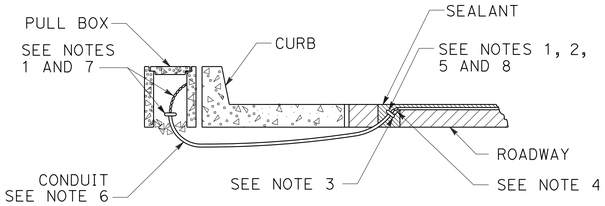

TYPE A
CURB TERMINATION DETAIL

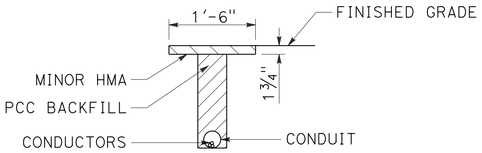

"T" TRENCH
DETAIL T

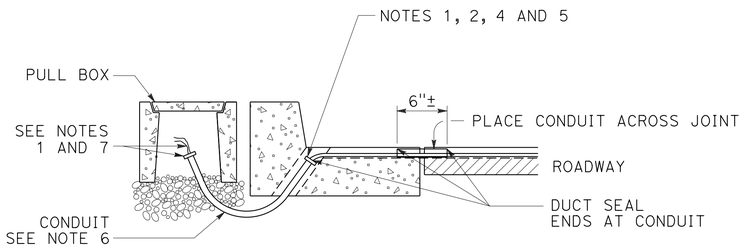

CROSS SECTION

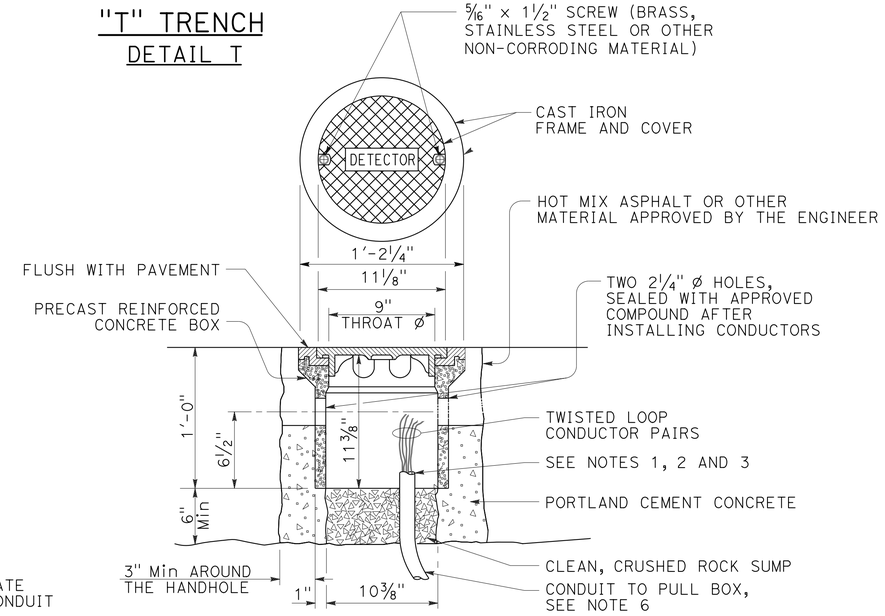

DETECTOR HANDHOLE DETAIL

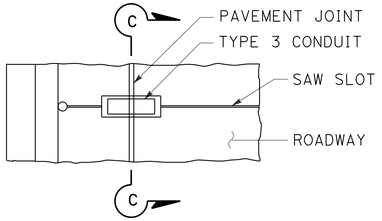

PLAN VIEW

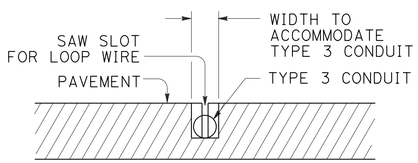

SECTION C-C

TYPE B
CURB TERMINATION DETAIL

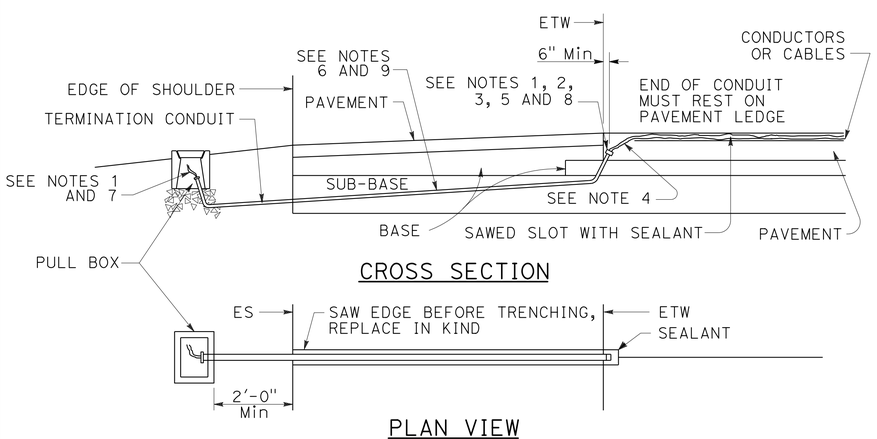

CROSS SECTION

PLAN VIEW

SHOULDER TERMINATION DETAILS

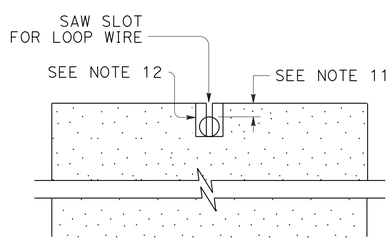

SECTION A-A

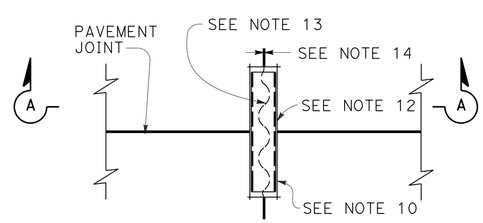

PLAN VIEW

TYPICAL LOOP LEAD-IN DETAIL AT PAVEMENT JOINT

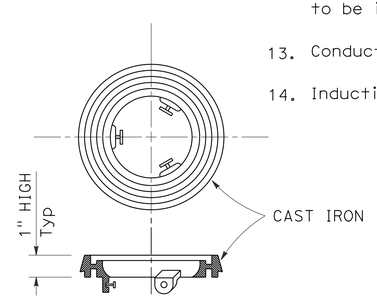

LOCKING GRADE RING

NOTES:

1. Bushing shall be used at end of conduit.
2. Tape detector conductors or cables 3" each side of bushings.
3. Install duct seal compound to each end of termination conduit before installing sealant.
4. Round all sharp edges where detector conductors or cables have to pass.
5. End of conduit shall be 3⅛" below roadway surface.
6.

Conduit size	Loop conductors
1"C minimum	1 to 2 pairs
1½"C minimum	3 to 4 pairs
2"C minimum	5 or more pairs

7. Splice detector conductors or cables to detector lead-in-cable.
8. Location of detector handhole when shown on plans.
9. When the shoulder and traveled way are paved with the same material and there is no joint between them, the conduit shall extend only 2'-0" into the shoulder pavement.
10. ¾"C, Type 3 conduit 6" long minimum, plug both ends with duct compound to keep out sealant.
11. ½" Minimum between top of conduit and pavement surface.
12. Sawcut shall not exceed 1" in width and ⅛" longer than conduit to be installed.
13. Conductors with ½" minimum slack inside conduit.
14. Inductive loop detector saw slot.

STATE OF CALIFORNIA
DEPARTMENT OF TRANSPORTATION

ELECTRICAL SYSTEMS (CURB TERMINATION AND HANDHOLE)

NO SCALE

RSP ES-5D DATED JULY 19, 2013 SUPERSEDES STANDARD PLAN ES-5D DATED MAY 20, 2011 - PAGE 451 OF THE STANDARD PLANS BOOK DATED 2010.

REVISED STANDARD PLAN RSP ES-5D

2010 REVISED STANDARD PLAN RSP ES-5D

7-9-13

Dist	COUNTY	ROUTE	POST MILES TOTAL PROJECT	SHEET No.	TOTAL SHEETS
12	Ora	5	3.0/3.7	523	635

REGISTERED CIVIL ENGINEER

July 19, 2013
PLANS APPROVAL DATE

REGISTERED PROFESSIONAL ENGINEER
Stanley P. Johnson
No. C57793
Exp. 3-31-14
CIVIL
STATE OF CALIFORNIA

THE STATE OF CALIFORNIA OR ITS OFFICERS OR AGENTS SHALL NOT BE RESPONSIBLE FOR THE ACCURACY OR COMPLETENESS OF SCANNED COPIES OF THIS PLAN SHEET.

TO ACCOMPANY PLANS DATED 3-10-14

2010 REVISED STANDARD PLAN RSP ES-7A

NOTES:

1. For additional notes, details and data for Type 15TS and Type 21TS Standards, see Standard Plan ES-6A.
2. Handhole shall be located on the downstream side of traffic.

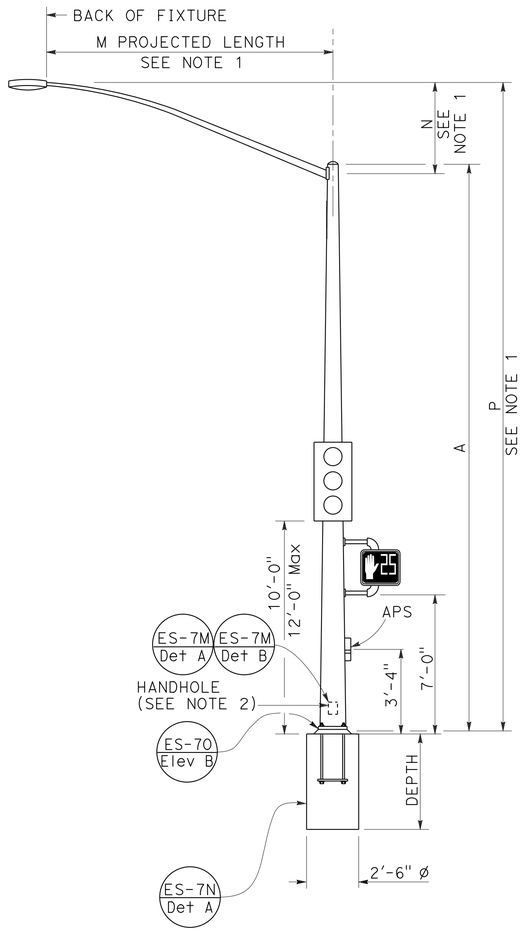

TYPE 15TS AND 21TS STANDARD

ELEVATION A

(See Note 1)

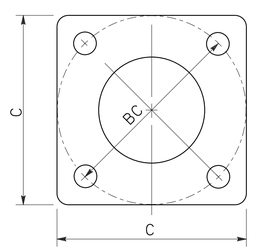

BASE PLATE

TYPE 15TS AND 21TS

DETAIL A

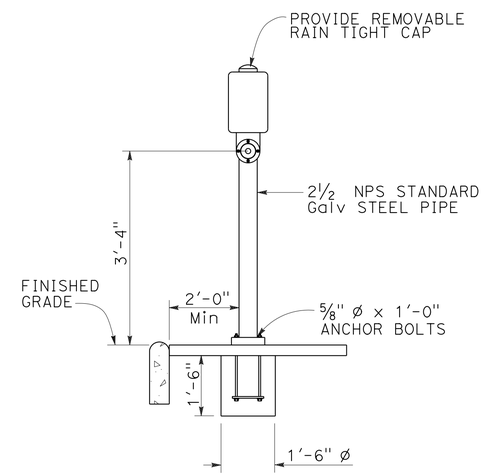

ELEVATION

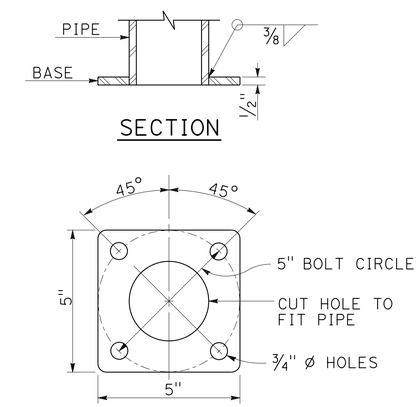

BASE PLATE

PBA POST

PUSH BUTTON ASSEMBLY POST

DETAIL B

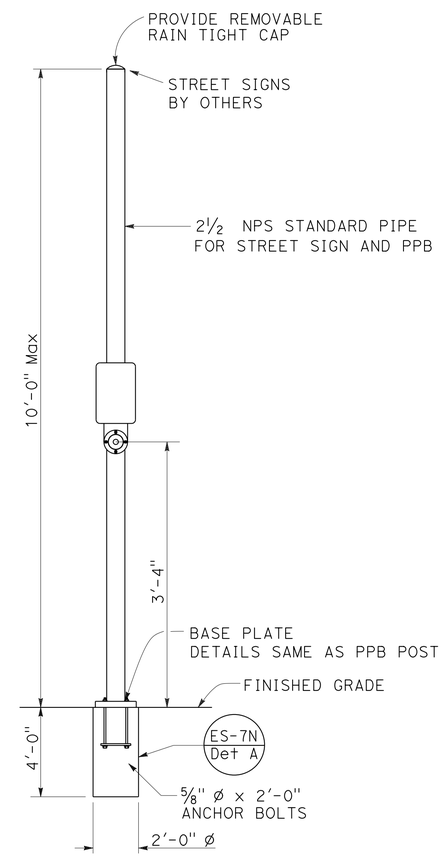

COMBINED STREET SIGN
PUSH BUTTON ASSEMBLY POST

DETAIL C

POLE TYPE	POLE DATA				BASE PLATE DATA				CIDH
	A HEIGHT	Min OD BASE	Min OD TOP	WALL THICKNESS	C	BC = BOLT CIRCLE	THICKNESS	ANCHOR BOLT SIZE	DEPTH
15TS	30'-0"	8"	3 11/16"	0.1793"	1'-1½"	1'-0"	2"	1½" ø x 42"	7'-6"
21TS	35'-0"	9⅜"	3 9/16"		1'-3"	1'-2"			8'-6"

STATE OF CALIFORNIA
DEPARTMENT OF TRANSPORTATION

ELECTRICAL SYSTEMS (SIGNAL AND LIGHTING STANDARD, TYPE TS, AND PUSH BUTTON ASSEMBLY POST)

NO SCALE

RSP ES-7A DATED JULY 19, 2013 SUPERSEDES STANDARD PLAN ES-7A DATED MAY 20, 2011 - PAGE 462 OF THE STANDARD PLANS BOOK DATED 2010.

REVISED STANDARD PLAN RSP ES-7A

6-18-13

Dist	COUNTY	ROUTE	POST MILES TOTAL PROJECT	SHEET No.	TOTAL SHEETS
12	Ora	5	3.0/3.7	524	635

REGISTERED CIVIL ENGINEER

July 19, 2013
PLANS APPROVAL DATE

REGISTERED PROFESSIONAL ENGINEER Stanley P. Johnson No. C57793 Exp. 3-31-14 CIVIL STATE OF CALIFORNIA

THE STATE OF CALIFORNIA OR ITS OFFICERS OR AGENTS SHALL NOT BE RESPONSIBLE FOR THE ACCURACY OR COMPLETENESS OF SCANNED COPIES OF THIS PLAN SHEET.

NOTE: TO ACCOMPANY PLANS DATED 3-10-14

Handhole shall be located on the downstream side of traffic.

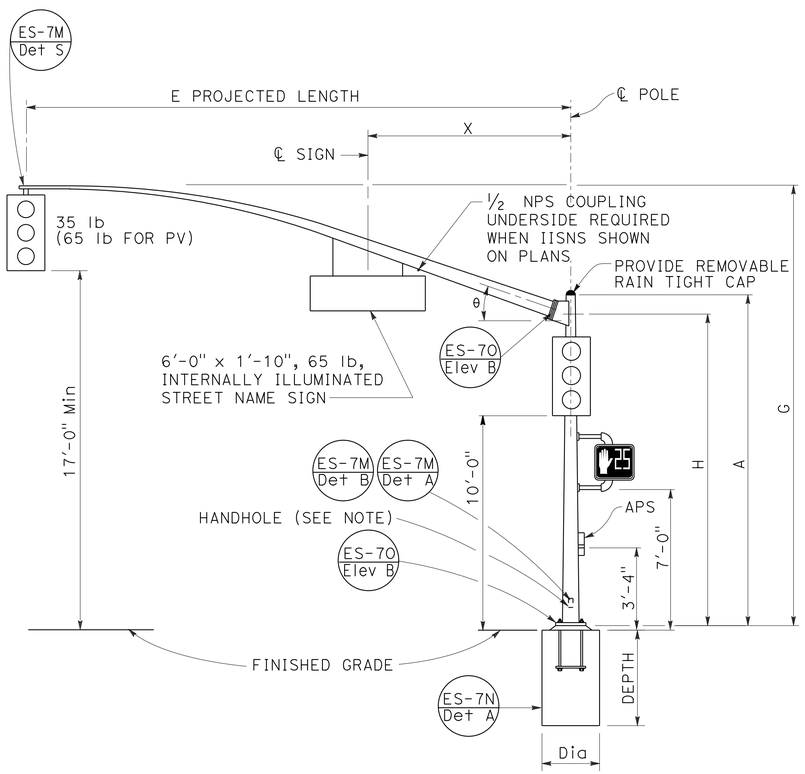

TYPE 16-2-100, 18-2-100

ELEVATION A

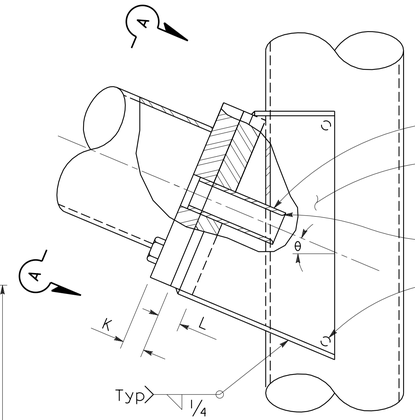

ELEVATION C

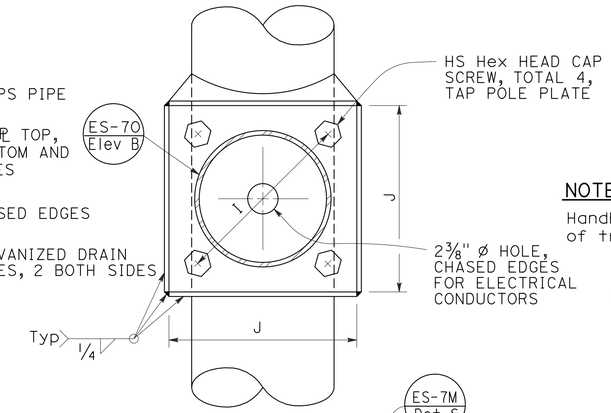

VIEW A-A

SIGNAL MAST ARM CONNECTION

DETAIL A

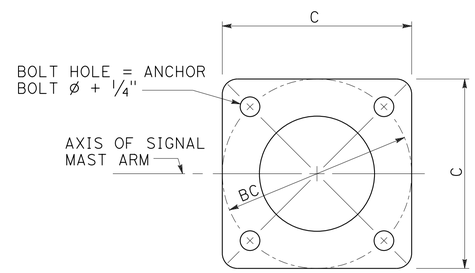

BASE PLATE

DETAIL B

REQUIRED FOR
TYPE 17-2-100
TYPE 17A-2-100

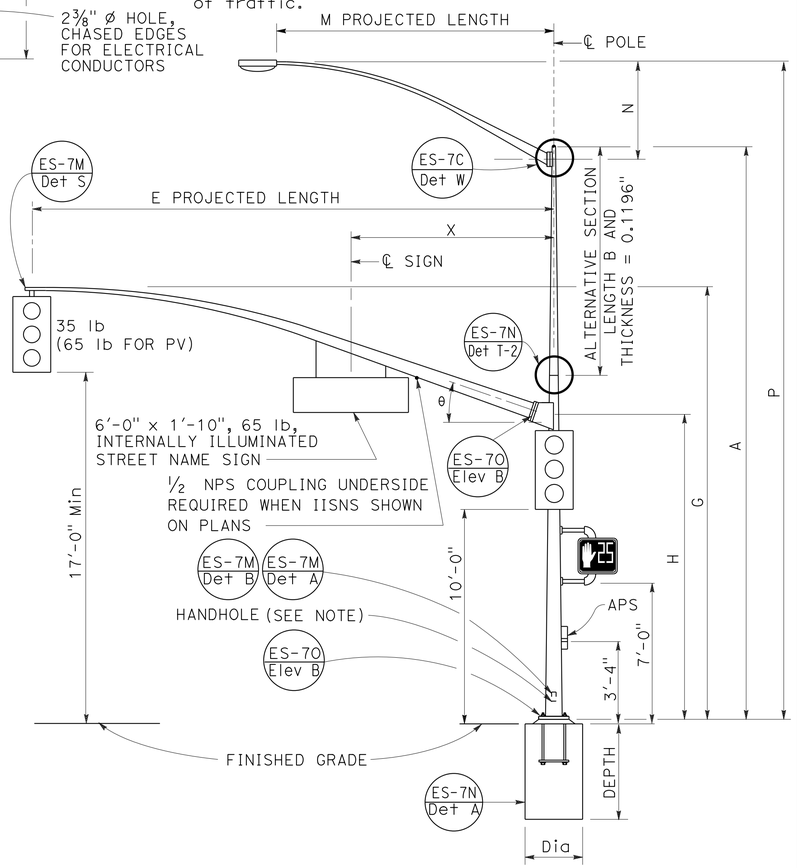

TYPE 17-2-100, 17A-2-100, 19-2-100, 19A-2-100

ELEVATION B

SIGNAL MAST ARM DATA											
E PROJECTED LENGTH	G MOUNTING HEIGHT	H	Min OD AT POLE	THICKNESS	I BOLT CIRCLE	HS CAP SCREWS	J PLATE SIZE	K MAST ARM ℙ THICKNESS	L POLE ℙ THICKNESS	θ	X Max
15'-0"	21'-8"±	17'-6"	7⅜"	0.1793"	12"	1¼"-7NC-3"	1'-0"	1¼"	1½"	23°	10'-6"
20'-0"	21'-8"±		7⅜"								
25'-0"	22'-8"±	16'-0"	7⅜"								
30'-0"	23'-0"±		8"								

LUMINAIRE MAST ARM DATA					
M PROJECTED LENGTH	N RISE	Min OD AT POLE	THICKNESS	P MOUNTING HEIGHT 30'-0" POLE	P MOUNTING HEIGHT 35'-0" POLE
6'-0"	2'-0"±	3¼"	0.1196"	31'-6"±	36'-6"±
8'-0"	2'-6"±	3½"		32'-0"±	37'-0"±
10'-0"	3'-3"±	3⅞"		32'-9"±	37'-9"±
12'-0"	4'-3"±			33'-9"±	38'-9"±
15'-0"	4'-9"±	4¼"		34'-3"±	39'-3"±

POLE TYPE	LOAD CASE	WIND VELOCITY (mph)	POLE DATA A HEIGHT	Min OD BASE	Min OD TOP	THICKNESS	ALTERNATIVE SECTION B LENGTH	BOTTOM	TOP	BASE PLATE DATA C	BC = BOLT CIRCLE	THICKNESS	ANCHOR BOLT SIZE	LUMINAIRE MAST ARM	SIGNAL MAST ARM	CIDH PILE FOUNDATION DIAMETER	DEPTH	REINFORCED
16-2-100	2	100	18'-6"	10¾"	8 1/16"	0.1793"	NONE			1'-5½"	1'-5½"	3"	1½"Ø x 42"	NONE	15'-0", 20'-0"	2'-6"	9'-0"	YES
17-2-100			30'-0"		6 7/16"		10'-0"	7⅞"	6 7/16"					6'-15' 12'-0"				
17A-2-100			35'-0"		5 11/16"		15'-0"		5 11/16"					6'-15' 15'-0"				
18-2-100			17'-0"		8 5/16"		NONE							None	25'-0", 30'-0"			
19-2-100			30'-0"		6 7/16"	0.2391"	10'-0"	7⅞"	6 7/16"	1'-7"			2"Ø x 42"	6'-15' 12'-0"			9'-6"	
19A-2-100			35'-0"		5 11/16"		15'-0"		5 11/16"					6'-15' 15'-0"				

☐ INDICATES MAST ARM LENGTH TO BE USED UNLESS OTHERWISE NOTED ON PLANS.

STATE OF CALIFORNIA
DEPARTMENT OF TRANSPORTATION

ELECTRICAL SYSTEMS (SIGNAL AND LIGHTING STANDARD, CASE 2 SIGNAL MAST ARM LOADING, WIND VELOCITY=100 MPH AND SIGNAL MAST ARM LENGTHS 15' TO 30')

NO SCALE

RSP ES-7D DATED JULY 19, 2013 SUPERSEDES STANDARD PLAN ES-7D
DATED MAY 20, 2011 - PAGE 465 OF THE STANDARD PLANS BOOK DATED 2010.

REVISED STANDARD PLAN RSP ES-7D

2010 REVISED STANDARD PLAN RSP ES-7D

6-18-13

Dist	COUNTY	ROUTE	POST MILES TOTAL PROJECT	SHEET No.	TOTAL SHEETS
12	Ora	5	3.0/3.7	525	635

REGISTERED CIVIL ENGINEER

July 19, 2013
PLANS APPROVAL DATE

REGISTERED PROFESSIONAL ENGINEER
Stanley P. Johnson
No. C57793
Exp. 3-31-14
CIVIL
STATE OF CALIFORNIA

THE STATE OF CALIFORNIA OR ITS OFFICERS OR AGENTS SHALL NOT BE RESPONSIBLE FOR THE ACCURACY OR COMPLETENESS OF SCANNED COPIES OF THIS PLAN SHEET.

TO ACCOMPANY PLANS DATED 3-10-14

NOTE:
Handhole shall be located on the downstream side of traffic.

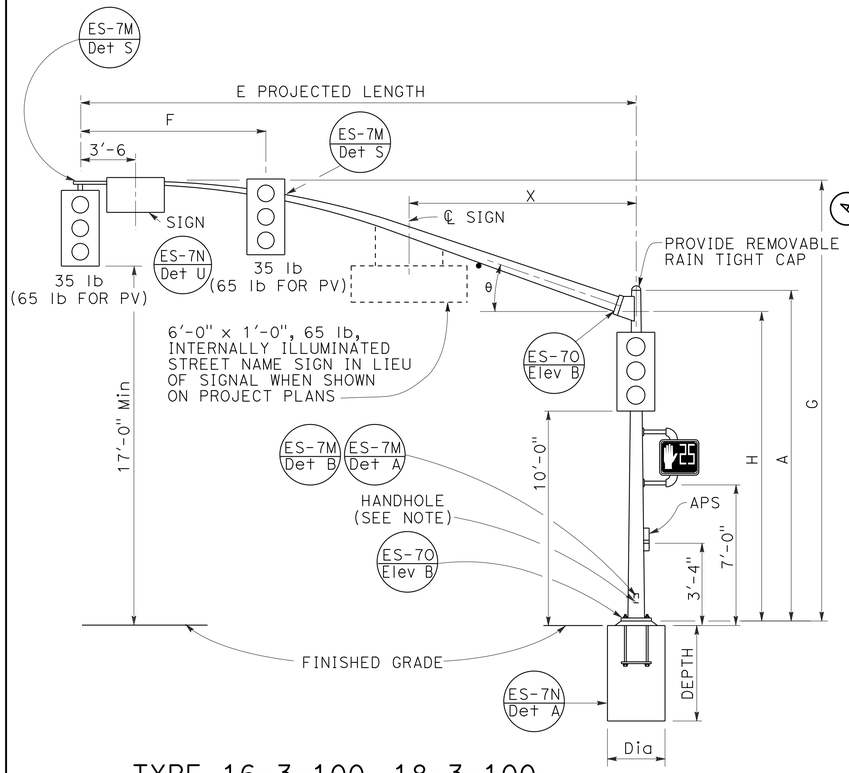

TYPE 16-3-100, 18-3-100, 23-3-100, 27-3-100
ELEVATION A

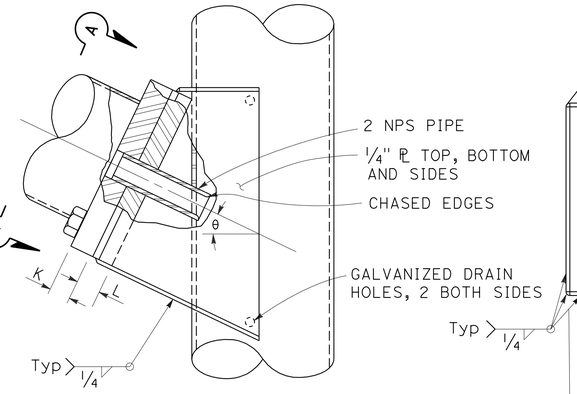

ELEVATION C

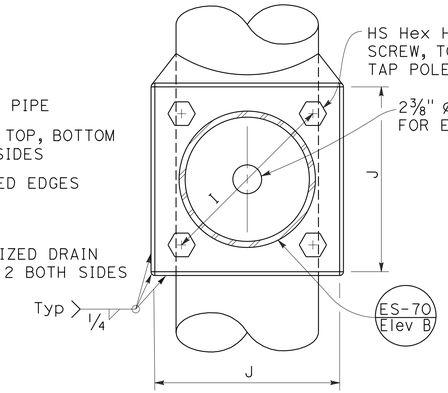

VIEW A-A

SIGNAL MAST ARM CONNECTION
DETAIL A

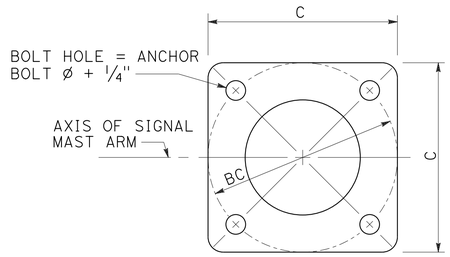

BASE PLATE
DETAIL B

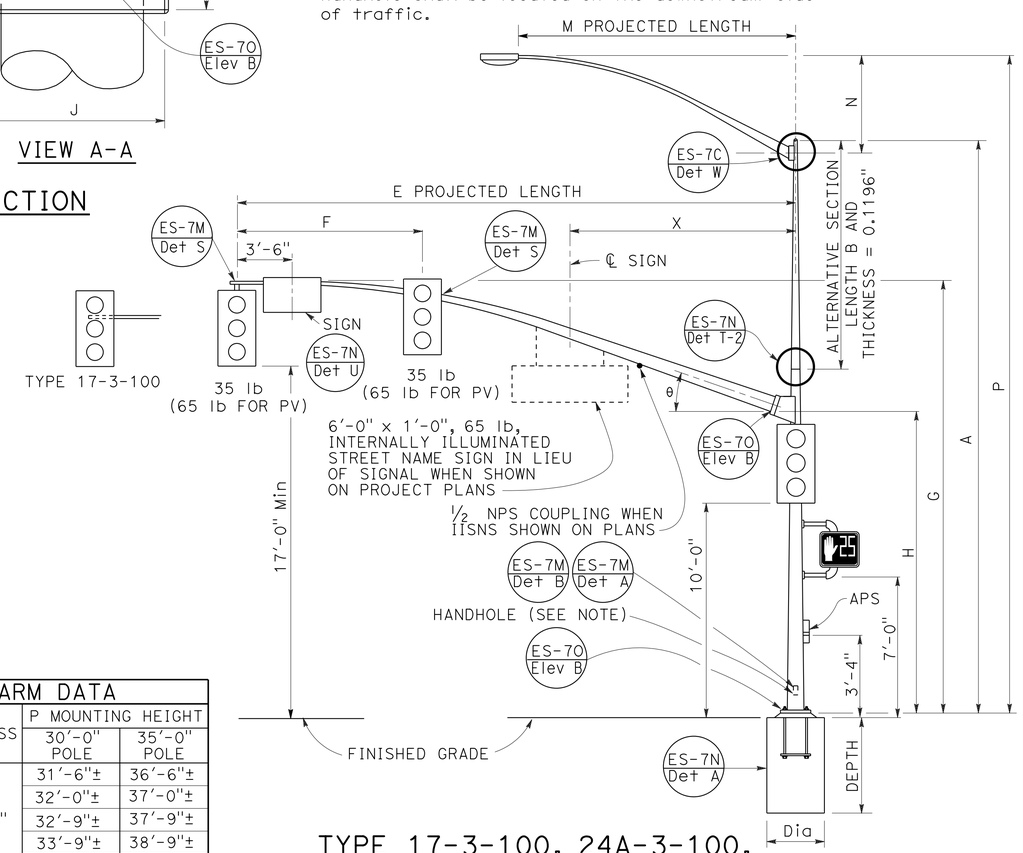

TYPE 17-3-100, 24A-3-100, 19-3-100, 26-3-100, 19A-3-100, 26A-3-100, 24-3-100
ELEVATION B

SIGNAL MAST ARM DATA

E PROJECTED LENGTH	F Min SPACING	G MOUNTING HEIGHT	H	Min OD AT POLE	THICKNESS	I BOLT CIRCLE	HS CAP SCREWS	J PLATE SIZE	K MAST ARM ℙ THICKNESS	L POLE ℙ THICKNESS	θ	X Max
15'-0"	8'-0"	21'-8"±	17'-6"	7 3/8"	0.1793"	12"	1 1/4"-7NC-3"	1'-0"	1 1/4"	1 1/2"	23°	-
20'-0"		21'-8"±		7 3/8"								
25'-0"	12'-0"	22'-8"±	16'-0"	7 3/8"	0.2391"							10'-6"
30'-0"		23'-0"±		8"								
35'-0"	14'-0"			8 3/4"		13"		1'-1"	1 1/2"	1 3/4"	21°	
40'-0"	15'-0"			9 3/8"							15°	13'-0"
45'-0"		23'-8"±		10 1/16"								

LUMINAIRE MAST ARM DATA

M PROJECTED LENGTH	N RISE	Min OD AT POLE	THICKNESS	P MOUNTING HEIGHT 30'-0" POLE	P MOUNTING HEIGHT 35'-0" POLE
6'-0"	2'-0"±	3 1/4"	0.1196"	31'-6"±	36'-6"±
8'-0"	2'-6"±	3 1/2"		32'-0"±	37'-0"±
10'-0"	3'-3"±	3 7/8"		32'-9"±	37'-9"±
12'-0"	4'-3"±			33'-9"±	38'-9"±
15'-0"	4'-9"±	4 1/4"		34'-3"±	39'-3"±

POLE DATA / BASE PLATE DATA / CIDH PILE FOUNDATION

POLE TYPE	LOAD CASE	WIND VELOCITY (mph)	A HEIGHT	Min OD BASE	Min OD TOP	THICKNESS	ALTERNATIVE SECTION B LENGTH	ALTERNATIVE SECTION BOTTOM	ALTERNATIVE SECTION TOP	C	BC = BOLT CIRCLE	THICKNESS	ANCHOR BOLT SIZE	LUMINAIRE MAST ARM	SIGNAL MAST ARM	CIDH PILE FOUNDATION DIAMETER	CIDH PILE FOUNDATION DEPTH	CIDH PILE FOUNDATION REINFORCED
16-3-100	3	100	18'-6"	10 3/4"	8 1/16"	0.1793"	NONE			1'-5 1/2"	1'-5 1/2"	3"	1 1/2" ø x 42"	NONE	15'-0", 20'-0"	3'-0"	8'-6"	YES
17-3-100			30'-0"		6 7/16"		10'-0"	7 7/8"	6 7/16"					6'-15' 12'-0"				
18-3-100			17'-0"	1'-0"	8 5/16"	0.2391"	NONE			1'-7"			2" ø x 42"	NONE	25'-0", 30'-0"		9'-6"	
19-3-100			30'-0"		7 11/16"		10'-0"	9 1/8"	7 11/16"					6'-15' 12'-0"			11'-0"	
19A-3-100			35'-0"		6 15/16"		15'-0"		6 15/16"					6'-15' 15'-0"				
23-3-100			17'-0"		9 9/16"		NONE							NONE	35'-0"			
24-3-100			30'-0"		7 11/16"		10'-0"	9 1/8"	7 11/16"					6'-15' 12'-0"				
24A-3-100			35'-0"		6 15/16"		15'-0"		6 15/16"					6'-15' 15'-0"				
26-3-100			30'-0"	1'-2"	7 13/16"	0.3125"	10'-0"	9 1/4"	7 13/16"	1'-11"	1'-9"		2 1/2" ø x 42"	6'-15' 12'-0"	40'-0", 45'-0"	3'-6"	12'-0"	
26A-3-100			35'-0"		7 1/16"		15'-0"		7 1/16"					6'-15' 15'-0"				
27-3-100			17'-0"		9 11/16"		NONE							NONE				

[ ] INDICATES MAST ARM LENGTH TO BE USED UNLESS OTHERWISE NOTED ON PLANS.

STATE OF CALIFORNIA
DEPARTMENT OF TRANSPORTATION

ELECTRICAL SYSTEMS (SIGNAL AND LIGHTING STANDARD, CASE 3 SIGNAL MAST ARM LOADING, WIND VELOCITY=100 MPH AND SIGNAL MAST ARM LENGTHS 15' TO 45')

NO SCALE

RSP 7E DATED JULY 19, 2013 SUPERSEDES STANDARD PLAN 7E
DATED MAY 20, 2011 - PAGE 466 OF THE STANDARD PLANS BOOK DATED 2010.

REVISED STANDARD PLAN RSP ES-7E

2010 REVISED STANDARD PLAN RSP ES-7E

6-17-13

Dist	COUNTY	ROUTE	POST MILES TOTAL PROJECT	SHEET No.	TOTAL SHEETS
12	Ora	5	3.0/3.7	526	635

REGISTERED CIVIL ENGINEER

July 19, 2013
PLANS APPROVAL DATE

REGISTERED PROFESSIONAL ENGINEER
Stanley P. Johnson
No. C57793
Exp. 3-31-14
CIVIL
STATE OF CALIFORNIA

THE STATE OF CALIFORNIA OR ITS OFFICERS OR AGENTS SHALL NOT BE RESPONSIBLE FOR THE ACCURACY OR COMPLETENESS OF SCANNED COPIES OF THIS PLAN SHEET.

NOTE:

1. Handhole shall be located on the downstream side of traffic.

TO ACCOMPANY PLANS DATED 3-10-14

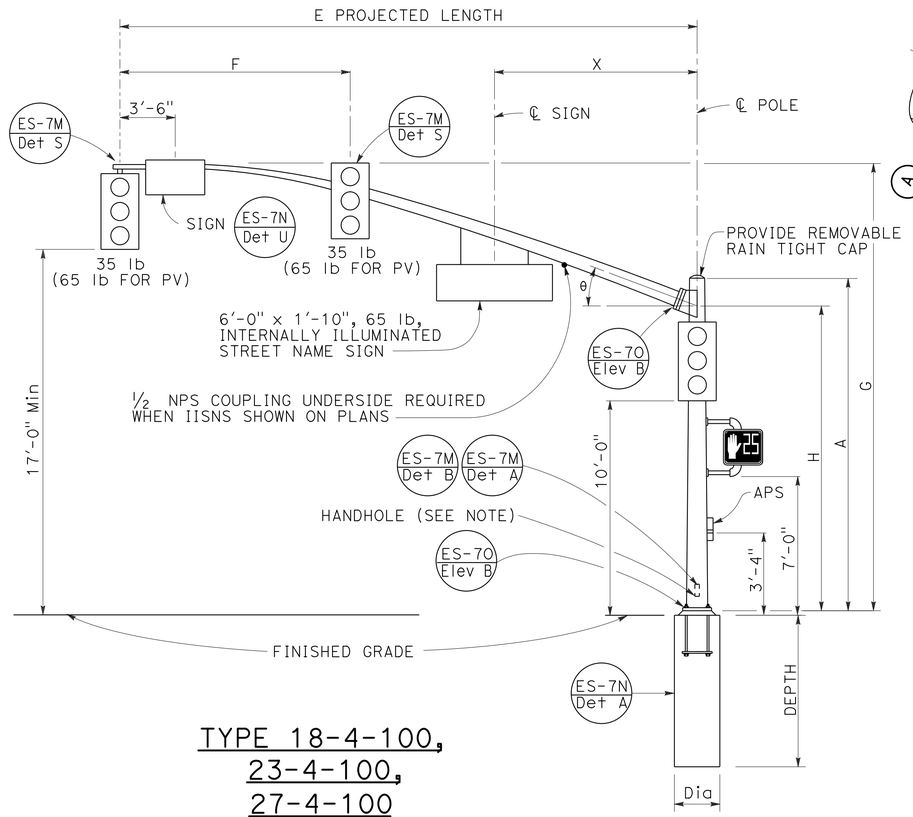

TYPE 18-4-100,
23-4-100,
27-4-100
ELEVATION A

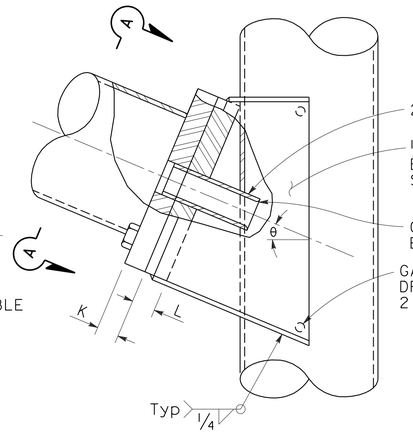

ELEVATION C

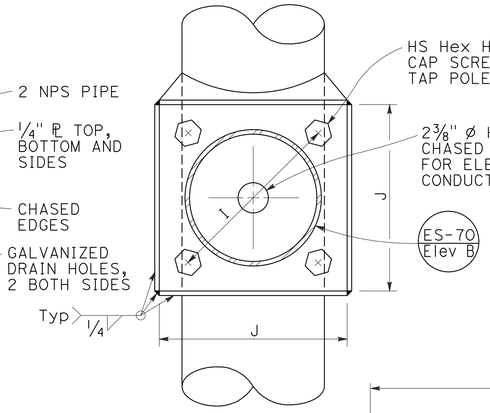

VIEW A-A

SIGNAL MAST ARM CONNECTION
DETAIL A

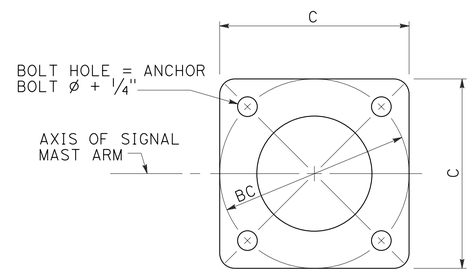

BASE PLATE
DETAIL B

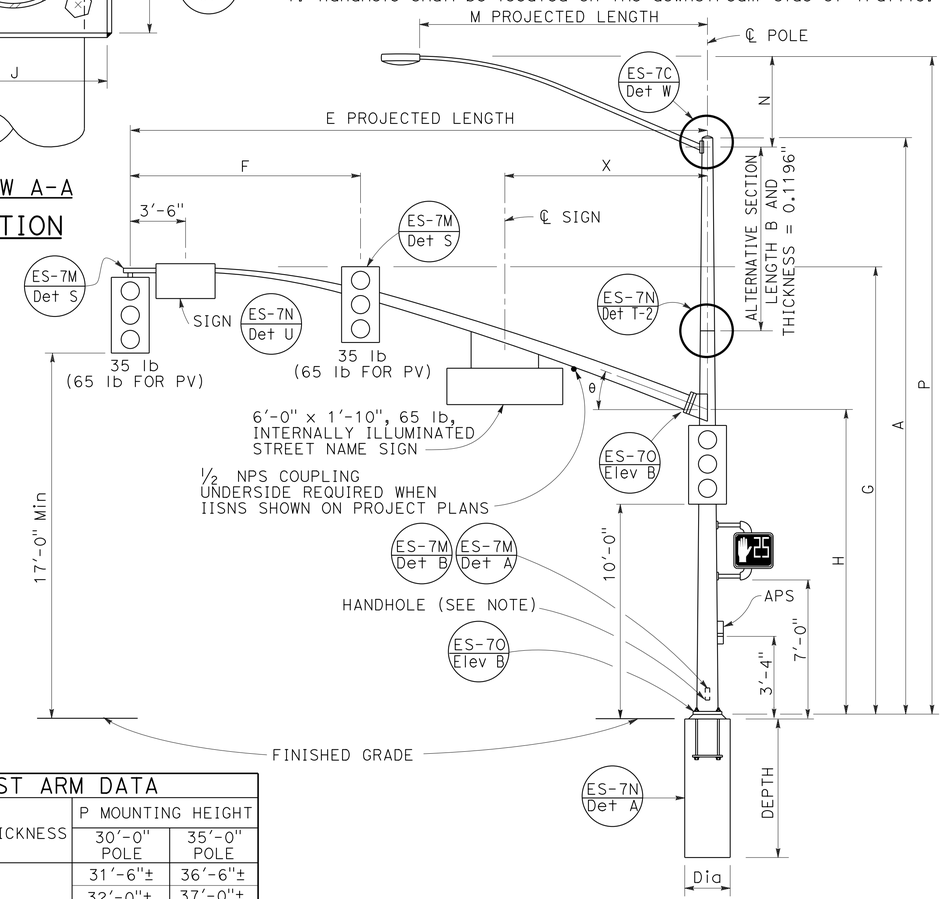

TYPE 19-4-100, 19A-4-100,
24-4-100, 24A-4-100,
26-4-100, 26A-4-100
ELEVATION B

SIGNAL MAST ARM DATA												
E PROJECTED LENGTH	F Min SPACING	G MOUNTING HEIGHT	H	Min OD AT POLE	THICKNESS	I BOLT CIRCLE	HS CAP SCREWS	J PLATE SIZE	K MAST ARM ℄ THICKNESS	L POLE ℄ THICKNESS	θ	X Max
25'-0"	10'-0"	22'-8"±	16'-0"	7⅜"	0.2391"	12"	1¼"-7NC-3"	1'-0"	1¼"	1½"	23°	10'-6"
30'-0"	12'-0"	23'-0"±		8"								
35'-0"	14'-0"			8 11/16"		13½"		1'-1½"	1½"	1¾"	21°	
40'-0"	15'-0"			9⅜"							15°	13'-0"
45'-0"		23'-8"±		10¼"								

LUMINAIRE MAST ARM DATA					
M PROJECTED LENGTH	N RISE	Min OD AT POLE	THICKNESS	P MOUNTING HEIGHT	
				30'-0" POLE	35'-0" POLE
6'-0"	2'-0"±	3¼"	0.1196"	31'-6"±	36'-6"±
8'-0"	2'-6"±	3½"		32'-0"±	37'-0"±
10'-0"	3'-3"±	3⅞"		32'-9"±	37'-9"±
12'-0"	4'-3"±			33'-9"±	38'-9"±
15'-0"	4'-9"±	4¼"		34'-3"±	39'-3"±

POLE TYPE	LOAD CASE	WIND VELOCITY (mph)	POLE DATA							BASE PLATE DATA				LUMINAIRE MAST ARM	SIGNAL MAST ARM	CIDH PILE FOUNDATION		
			A HEIGHT	Min OD BASE	Min OD TOP	THICKNESS	ALTERNATIVE SECTION B LENGTH	ALTERNATIVE SECTION BOTTOM	ALTERNATIVE SECTION TOP	C	BC = BOLT CIRCLE	THICKNESS	ANCHOR BOLT SIZE			Dia	DEPTH	REINFORCED
18-4-100	4	100	17'-0"	12⅛"	9 9/16"	0.3125"	NONE			1'-7"	1'-5½"	3"	2" Ø x 42"	NONE	25'-0", 30'-0"	3'-0"	11'-0"	YES
19-4-100			30'-0"		7 11/16"		10'-0"	9⅛"	7 11/16"					6'-15' 12'-0"				
19A-4-100			35'-0"		6 15/16"		15'-0'		6 15/16"					6'-15' 15'-0"				
23-4-100			17'-0"		9 9/16"		NONE							NONE	35'-0"			
24-4-100			30'-0"		7 11/16"		10'-0"	9⅛"	7 11/16"					6'-15' 12'-0"				
24A-4-100			35'-0"		6 15/16"		15'-0"		6 15/16"					6'-15' 15'-0"				
26-4-100			30'-0"	14"	8 3/16"		10'-0"	9⅝"	8 3/16"		21"		2½" Ø x 42"	6'-15' 12'-0"	40'-0", 45'-0"	3'-6"	12'-0"	
26A-4-100			35'-0"		7 7/16"		15'-0"		7 7/16"	23"				6'-15' 15'-0"				
27-4-100			17'-0"		10 1/16"		NONE							NONE				

INDICATES MAST ARM LENGTH TO BE USED UNLESS OTHERWISE NOTED ON PLANS.

STATE OF CALIFORNIA
DEPARTMENT OF TRANSPORTATION

ELECTRICAL SYSTEMS (SIGNAL AND LIGHTING STANDARD, CASE 4 SIGNAL MAST ARM LOADING, WIND VELOCITY=100 MPH AND SIGNAL MAST ARM LENGTHS 25' TO 45')

NO SCALE

RSP ES-7F DATED JULY 19, 2013 SUPERSEDES STANDARD PLAN ES-7F
DATED MAY 20, 2011 - PAGE 467 OF THE STANDARD PLANS BOOK DATED 2010.

REVISED STANDARD PLAN RSP ES-7F

2010 REVISED STANDARD PLAN RSP ES-7F

6-18-13

Dist	COUNTY	ROUTE	POST MILES TOTAL PROJECT	SHEET No.	TOTAL SHEETS
12	Ora	5	3.0/3.7	527	635

REGISTERED CIVIL ENGINEER

July 19, 2013
PLANS APPROVAL DATE

REGISTERED PROFESSIONAL ENGINEER Stanley P. Johnson No. C57793 Exp. 3-31-14 CIVIL STATE OF CALIFORNIA

THE STATE OF CALIFORNIA OR ITS OFFICERS OR AGENTS SHALL NOT BE RESPONSIBLE FOR THE ACCURACY OR COMPLETENESS OF SCANNED COPIES OF THIS PLAN SHEET.

TO ACCOMPANY PLANS DATED 3-10-14

NOTE:
Handhole shall be located on the downstream side of traffic.

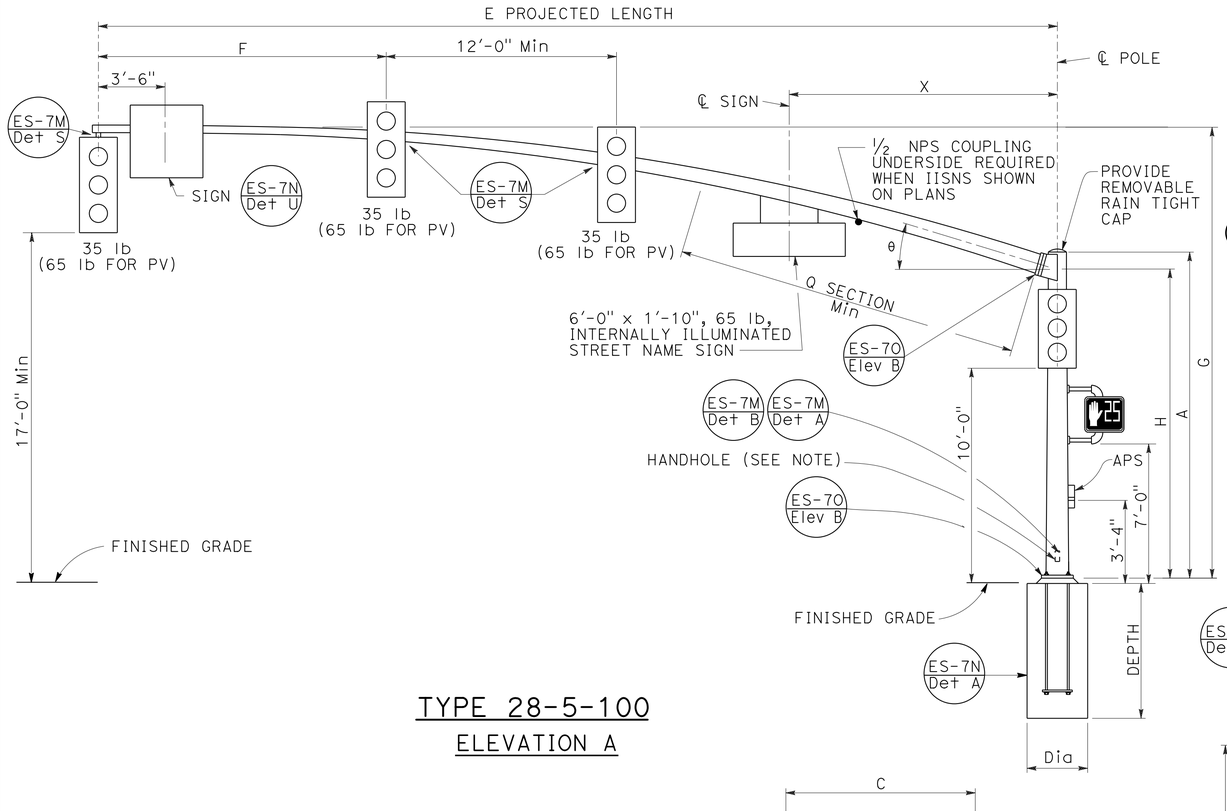

TYPE 28-5-100
ELEVATION A

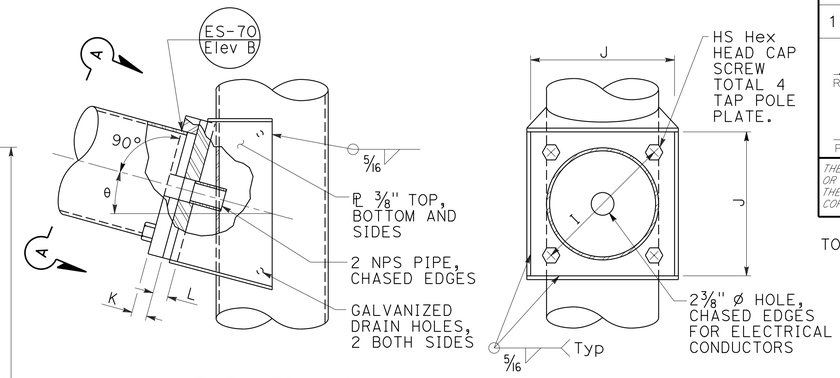

ELEVATION C

VIEW A-A

SIGNAL MAST ARM CONNECTION
DETAIL A

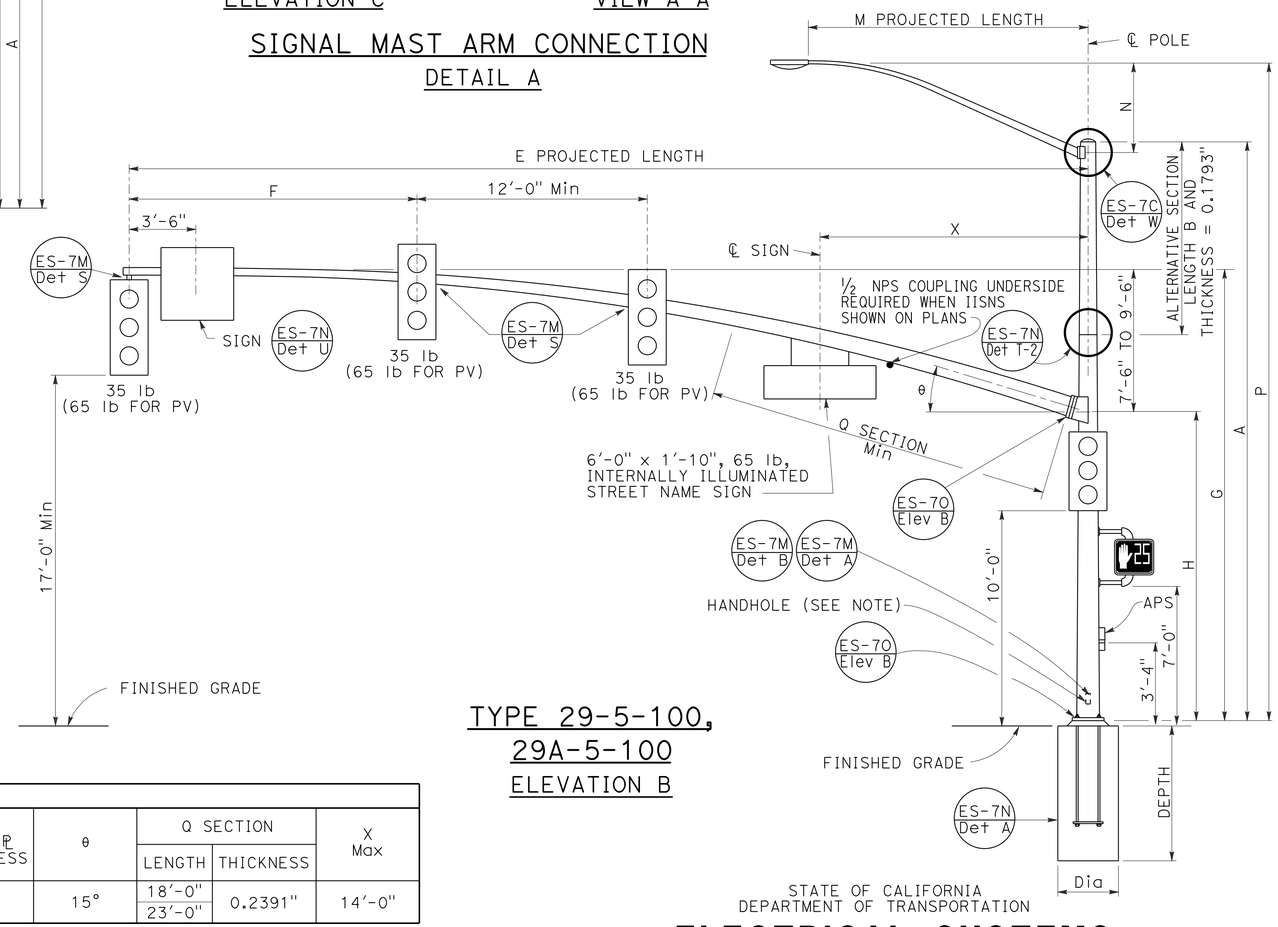

TYPE 29-5-100,
29A-5-100
ELEVATION B

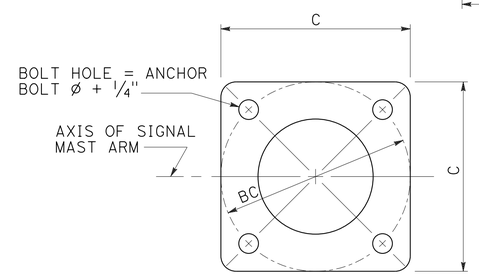

BASE PLATE
DETAIL B

LUMINAIRE MAST ARM DATA					
M PROJECTED LENGTH	N RISE	Min OD AT POLE	THICKNESS	P MOUNTING HEIGHT 30'-0" POLE	P MOUNTING HEIGHT 35'-0" POLE
6'-0"	2'-0"±	3 1/4"	0.1196"	31'-6"±	36'-6"±
8'-0"	2'-6"±	3 1/2"		32'-0"±	37'-0"±
10'-0"	3'-3"±	3 7/8"		32'-9"±	37'-9"±
12'-0"	4'-3"±			33'-9"±	38'-9"±
15'-0"	4'-9"±	4 1/4"		34'-3"±	39'-3"±

SIGNAL MAST ARM DATA														
E PROJECTED LENGTH	F Min SPACING	G MOUNTING HEIGHT	H	Min OD AT POLE	THICKNESS	I BOLT CIRCLE	HS CAP SCREWS	J PLATE SIZE	K MAST ARM ℄ THICKNESS	L POLE ℄ THICKNESS	θ	Q SECTION LENGTH	Q SECTION THICKNESS	X Max
50'-0"	15'-0"	23'-7"± TO 25'-7"±	16'-0"	11 7/16"	0.1793"	16"	1 1/2"-6NC-3 1/4"	1'-4"	1 3/4"	1 3/4"	15°	18'-0"	0.2391"	14'-0"
55'-0"				1'-1/4"								23'-0"		

POLE TYPE	LOAD CASE	WIND VELOCITY (mph)	POLE DATA A HEIGHT	Min OD BASE	Min OD TOP	THICKNESS	ALTERNATIVE SECTION B LENGTH	ALTERNATIVE SECTION BOTTOM	ALTERNATIVE SECTION TOP	BASE PLATE DATA C	BC = BOLT CIRCLE	THICKNESS	ANCHOR BOLT SIZE	LUMINAIRE MAST ARM	SIGNAL MAST ARM	CIDH PILE FOUNDATION Dia	DEPTH	REINFORCED
28-5-100	5	100	17'-0"	14"	11 9/16"	0.3125"	NONE	11 1/8"	9 11/16"	23"	21"	3"	2 1/2" Ø x 42"	NONE	50'-0", 55'-0"	3'-6"	12'-0"	YES
29-5-100			30'-0"		9 11/16"		10'-0"							6'-15' 15'-0"				
29A-5-100			35'-0"		8 15/16"		15'-0"		8 15/16"									

INDICATES MAST ARM LENGTH TO BE USED UNLESS OTHERWISE NOTED ON PLANS.

STATE OF CALIFORNIA
DEPARTMENT OF TRANSPORTATION

ELECTRICAL SYSTEMS (SIGNAL AND LIGHTING STANDARD, CASE 5 SIGNAL MAST ARM LOADING, WIND VELOCITY=100 MPH AND SIGNAL MAST ARM LENGTHS 50' TO 55')

NO SCALE

RSP ES-7G DATED JULY 19, 2013 SUPERSEDES STANDARD PLAN ES-7G
DATED MAY 20, 2011 - PAGE 468 OF THE STANDARD PLANS BOOK DATED 2010.

REVISED STANDARD PLAN RSP ES-7G

2010 REVISED STANDARD PLAN RSP ES-7G

6-18-13

Dist	COUNTY	ROUTE	POST MILES TOTAL PROJECT	SHEET No.	TOTAL SHEETS
12	Ora	5	3.0/3.7	528	635

REGISTERED CIVIL ENGINEER

July 19, 2013
PLANS APPROVAL DATE

REGISTERED PROFESSIONAL ENGINEER Stanley P. Johnson No. C57793 Exp. 3-31-14 CIVIL STATE OF CALIFORNIA

THE STATE OF CALIFORNIA OR ITS OFFICERS OR AGENTS SHALL NOT BE RESPONSIBLE FOR THE ACCURACY OR COMPLETENESS OF SCANNED COPIES OF THIS PLAN SHEET.

TO ACCOMPANY PLANS DATED 3-10-14

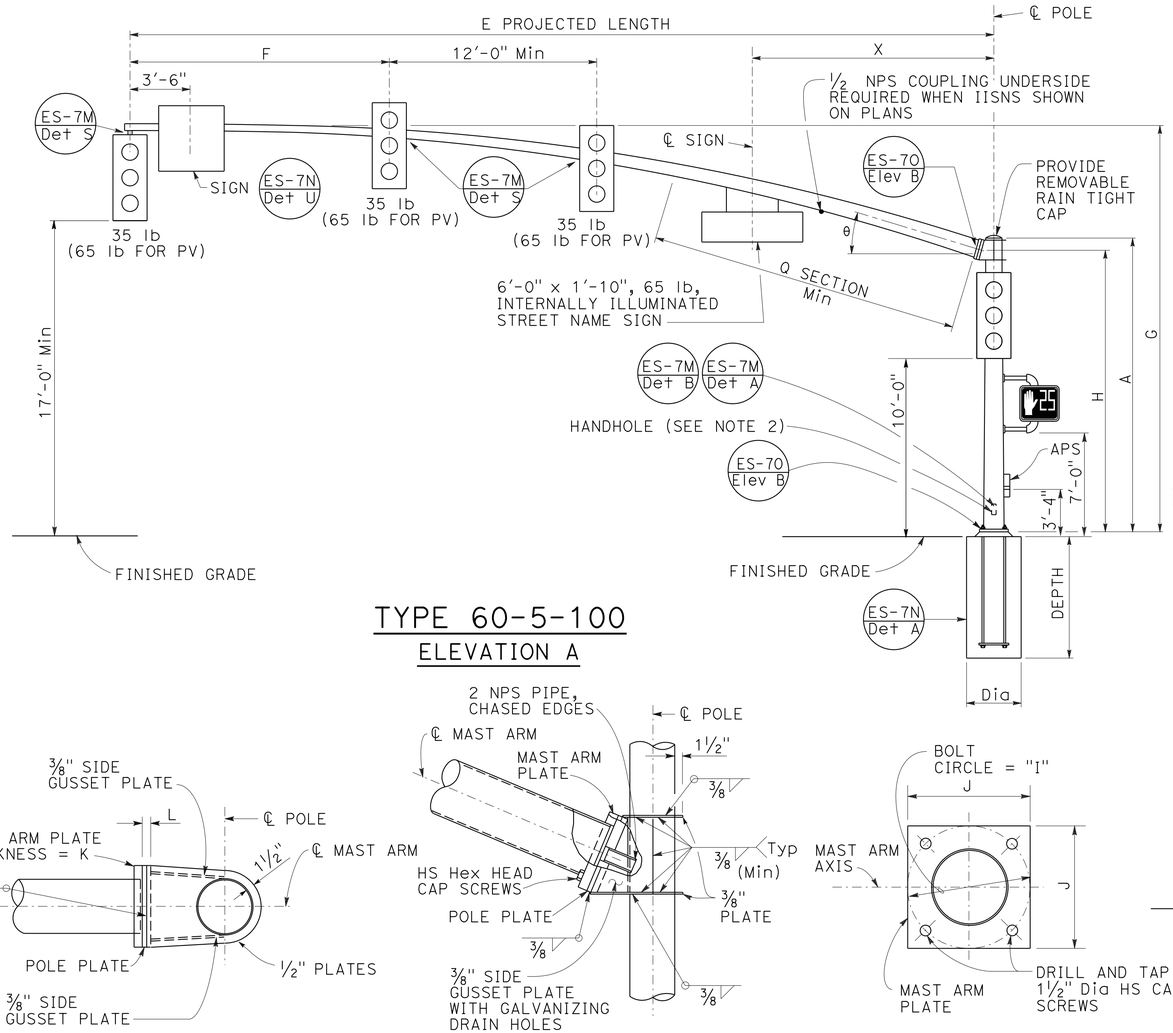

TYPE 60-5-100
ELEVATION A

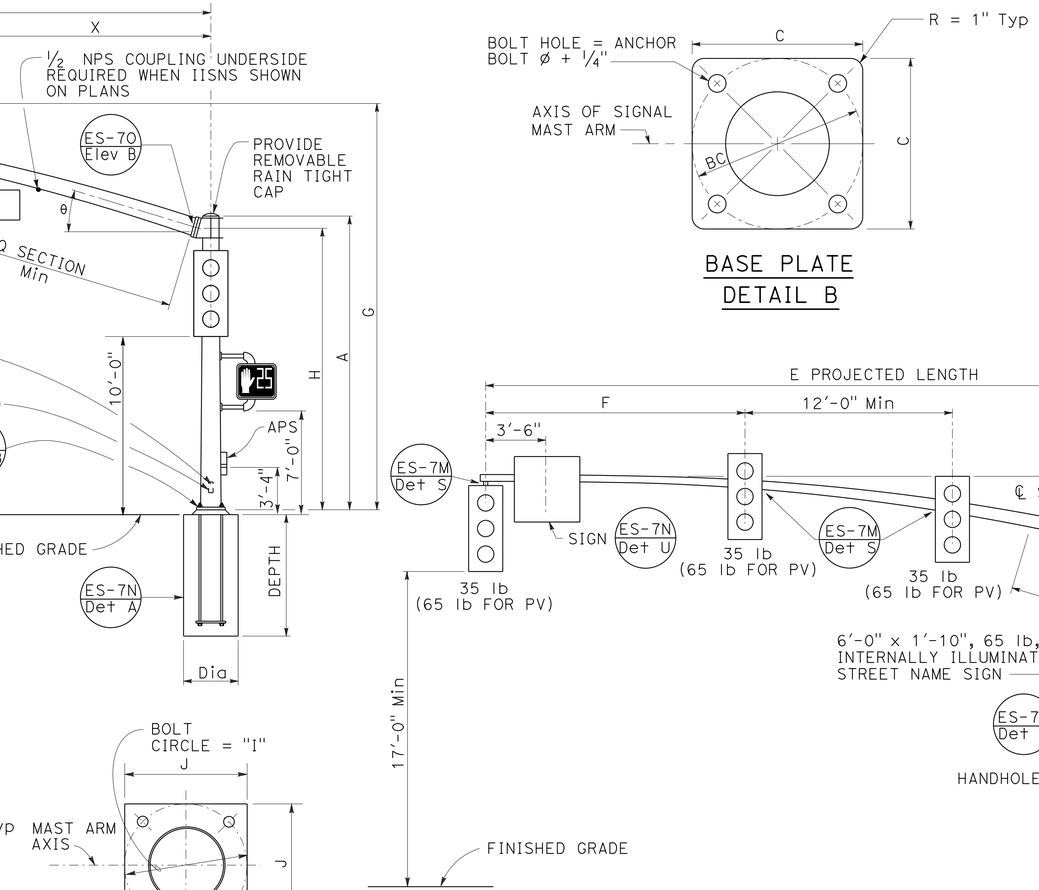

BASE PLATE
DETAIL B

TYPE 61-5-100,
61A-5-100
ELEVATION B

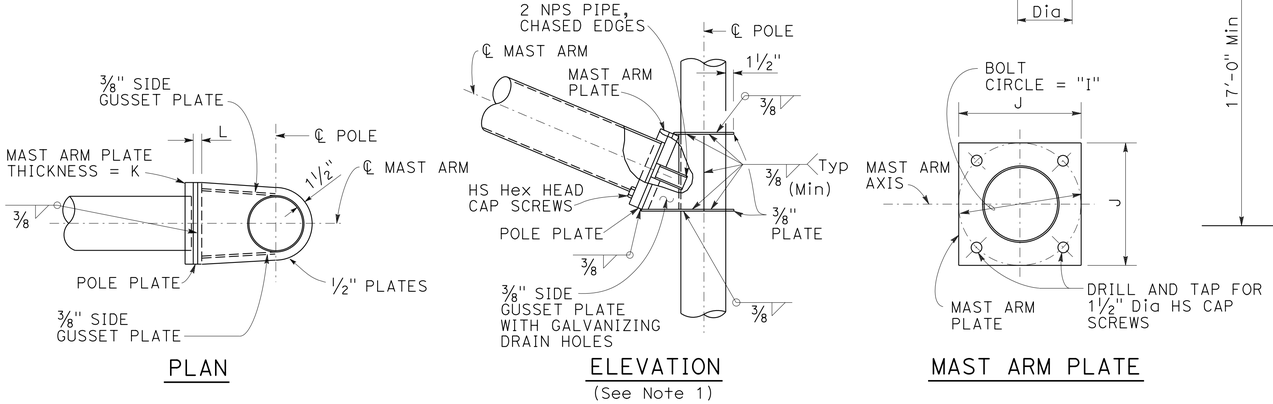

PLAN

ELEVATION
(See Note 1)

MAST ARM PLATE

SIGNAL MAST ARM CONNECTION
DETAIL A

SIGNAL MAST ARM DATA														
E PROJECTED LENGTH	F Min SPACING	G MOUNTING HEIGHT	H	Min OD AT POLE	THICKNESS	I BOLT CIRCLE	HS CAP SCREWS	J PLATE SIZE	K MAST ARM ℄ THICKNESS	L POLE ℄ THICKNESS	θ	Q SECTION LENGTH	Q SECTION THICKNESS	X Max
60'-0"	15'-0"	23'-7" TO 25'-7"	16'-0"	1'-1½"	0.1793"	20"	1½"-6NC-4"	1'-8"	2"	2"	15°	24'-0"	0.2391"	14'-0"
65'-0"					0.2391"							29'-0"	0.3125"	

LUMINAIRE MAST ARM DATA					
M PROJECTED LENGTH	N RISE	Min OD AT POLE	THICKNESS	P MOUNTING HEIGHT 30'-0" POLE	P MOUNTING HEIGHT 35'-0" POLE
6'-0"	2'-0"±	3¼"	0.1196"	31'-6"±	36'-6"±
8'-0"	2'-6"±	3½"		32'-0"±	37'-0"±
10'-0"	3'-3"±	3⅞"		32'-9"±	37'-9"±
12'-0"	4'-3"±			33'-9"±	38'-9"±
15'-0"	4'-9"±	4¼"		34'-3"±	39'-3"±

NOTES:

1. The radial separation between the face of the pole and the adjacent insides of the top and bottom gusset plates shall not exceed 3/16". Fillet weld size to be increased by amount of gap.
2. Handhole shall be located on the downstream side of traffic.

POLE TYPE	LOAD CASE	WIND VELOCITY (mph)	POLE DATA A HEIGHT	POLE DATA Min OD BASE	POLE DATA Min OD TOP	POLE DATA THICKNESS	BASE PLATE DATA C	BASE PLATE DATA BC = BOLT CIRCLE	BASE PLATE DATA THICKNESS	BASE PLATE DATA ANCHOR BOLT SIZE	LUMINAIRE MAST ARM	SIGNAL MAST ARM	CIDH PILE FOUNDATION DIAMETER	CIDH PILE FOUNDATION DEPTH	CIDH PILE FOUNDATION REINFORCED
60-5-100	5	100	17'-0"	16"	1'-1 9/16"	0.3125"	2'-0"	1'-11"	3"	2½" ø x 60"	NONE	60'-0", 65'-0"	3'-6"	13'-0"	YES
61-5-100			30'-0"		11 11/16"						6'-15' 15'-0"				
61A-5-100			35'-0"		10 15/16"										

☐ INDICATES MAST ARM LENGTH TO BE USED UNLESS OTHERWISE NOTED ON PLANS.

STATE OF CALIFORNIA
DEPARTMENT OF TRANSPORTATION

ELECTRICAL SYSTEMS (SIGNAL AND LIGHTING STANDARD, CASE 5 SIGNAL MAST ARM LOADING, WIND VELOCITY=100 MPH AND SIGNAL MAST ARM LENGTHS 60' TO 65')

NO SCALE

RSP ES-7H DATED JULY 19, 2013 SUPERSEDES STANDARD PLAN ES-7H
DATED MAY 20, 2011 - PAGE 469 OF THE STANDARD PLANS BOOK DATED 2010.

REVISED STANDARD PLAN RSP ES-7H

2010 REVISED STANDARD PLAN RSP ES-7H

Dist	COUNTY	ROUTE	POST MILES TOTAL PROJECT	SHEET No.	TOTAL SHEETS
12	Ora	5	3.0/3.7	529	635

REGISTERED CIVIL ENGINEER

July 19, 2013
PLANS APPROVAL DATE

REGISTERED PROFESSIONAL ENGINEER
Stanley P. Johnson
No. C57793
Exp. 3-31-14
CIVIL
STATE OF CALIFORNIA

THE STATE OF CALIFORNIA OR ITS OFFICERS OR AGENTS SHALL NOT BE RESPONSIBLE FOR THE ACCURACY OR COMPLETENESS OF SCANNED COPIES OF THIS PLAN SHEET.

TO ACCOMPANY PLANS DATED 3-10-14

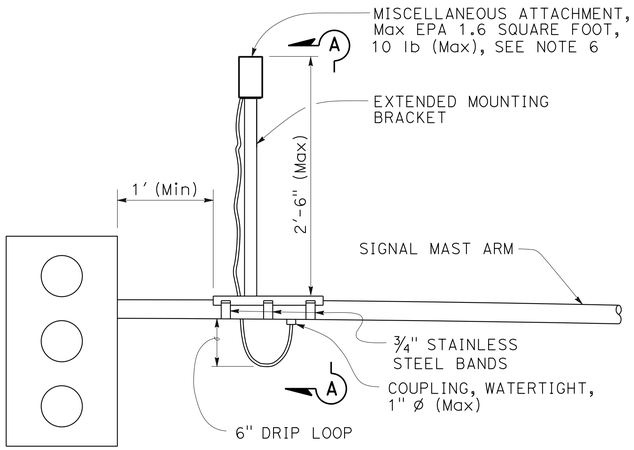

SIGNAL MAST ARM MOUNT

DETAIL A

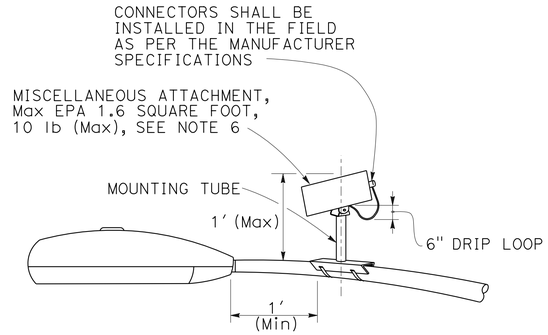

LUMINAIRE MAST ARM MOUNT

DETAIL B

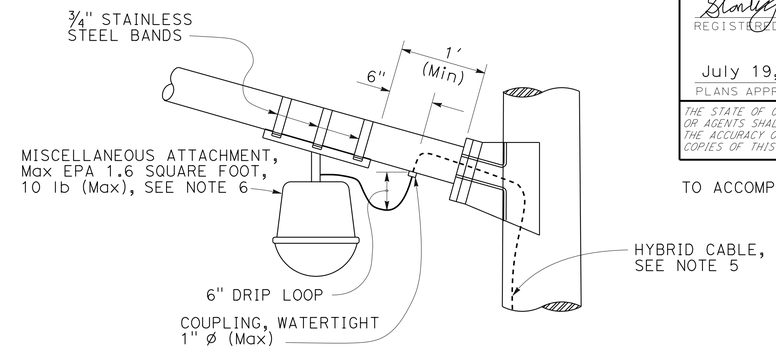

LUMINAIRE MAST ARM MOUNT

DETAIL C

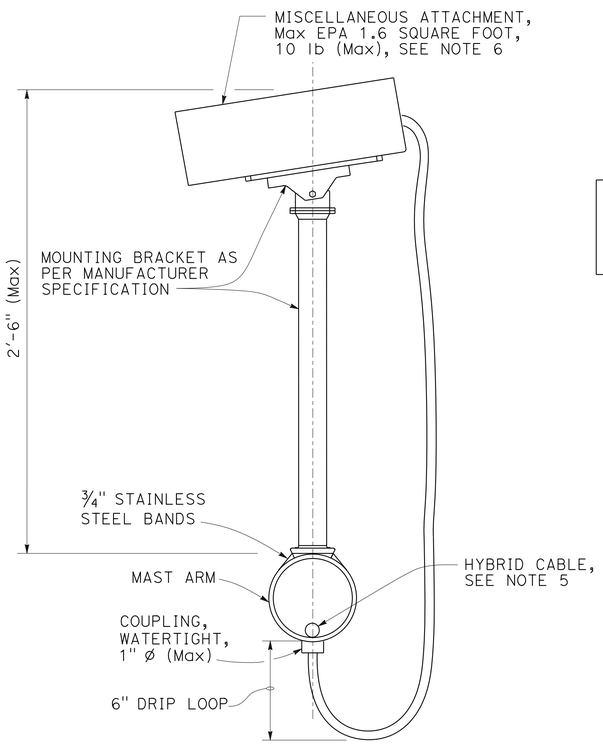

SECTION A-A

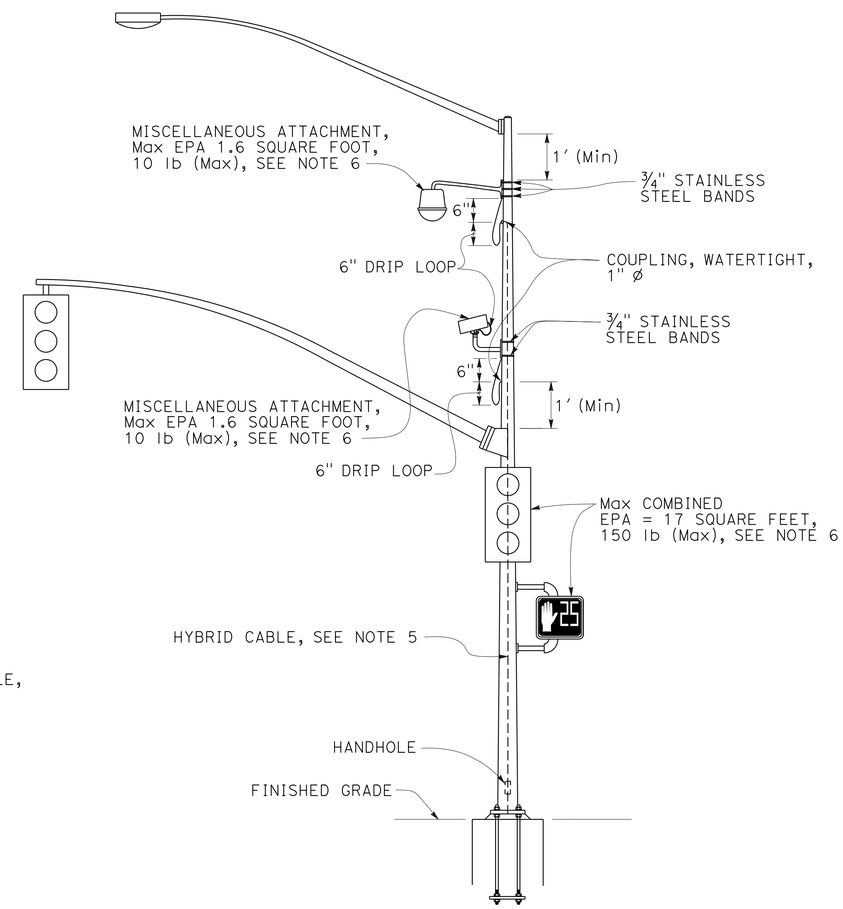

SIGNAL POLE MOUNT

DETAIL D

NOTES:

1. Exact mounting location of miscellaneous attachment and bracket shall be approved by the Engineer per manufacturer's recommendation.
2. Location of cable entrances on signal pole shall be a minimum of 1′ from any flange or base plate.
3. Hybrid cable entrances on signal pole shall be drilled for weathertight coupling as required.
4. Hybrid cable shall have a drip loop at the entrance into signal pole, luminaire mast arm and signal mast arm.
5. A single hybrid cable shall run continuous and shall not be twisted from the miscellaneous attachment to the controller cabinet. No splices shall be allowed.
6. Use the manufacturer's Effective Projected Area (EPA) for miscellaneous attachment. The maximum EPA for each miscellaneous attachment shall be 1.6 square feet.
7. Maximum of two miscellaneous attachments per traffic signal structure.
8. Maximum of one miscellaneous attachment per mast arm.
9. Miscellaneous attachment shall be mounted using clamping devices.

STATE OF CALIFORNIA
DEPARTMENT OF TRANSPORTATION

ELECTRICAL SYSTEMS (SIGNAL AND LIGHTING, MISCELLANEOUS ATTACHMENT)

NO SCALE

RSP ES-7R DATED JULY 19, 2013 SUPERSEDES STANDARD PLAN ES-7R
DATED MAY 20, 2011 - PAGE 479 OF THE STANDARD PLANS BOOK DATED 2010.

REVISED STANDARD PLAN RSP ES-7R

2010 REVISED STANDARD PLAN RSP ES-7R

6-17-13

DIST	COUNTY	ROUTE	POST MILES TOTAL PROJECT	SHEET NO.	TOTAL SHEETS
12	Ora	5	3.0/3.7	530	635

Theresa Gabriel
REGISTERED ELECTRICAL ENGINEER

July 19, 2013
PLANS APPROVAL DATE

REGISTERED PROFESSIONAL ENGINEER
Theresa Aziz Gabriel
No. E15129
Exp. 6-30-14
ELECTRICAL
STATE OF CALIFORNIA

THE STATE OF CALIFORNIA OR ITS OFFICERS OR AGENTS SHALL NOT BE RESPONSIBLE FOR THE ACCURACY OR COMPLETENESS OF SCANNED COPIES OF THIS PLAN SHEET.

TO ACCOMPANY PLANS DATED 3-10-14

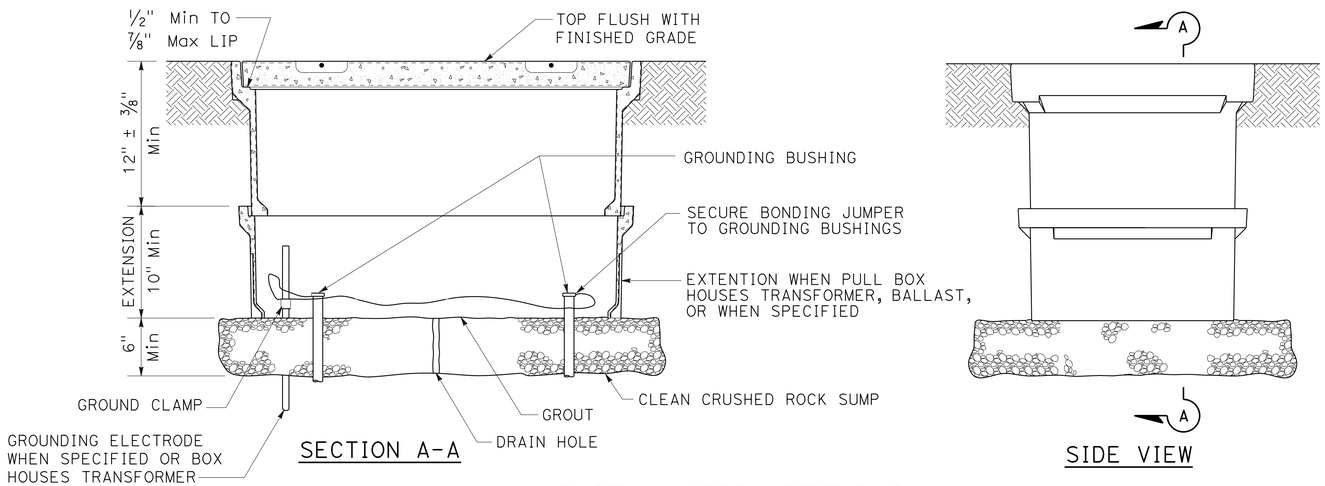

INSTALLATION DETAILS

DETAIL A

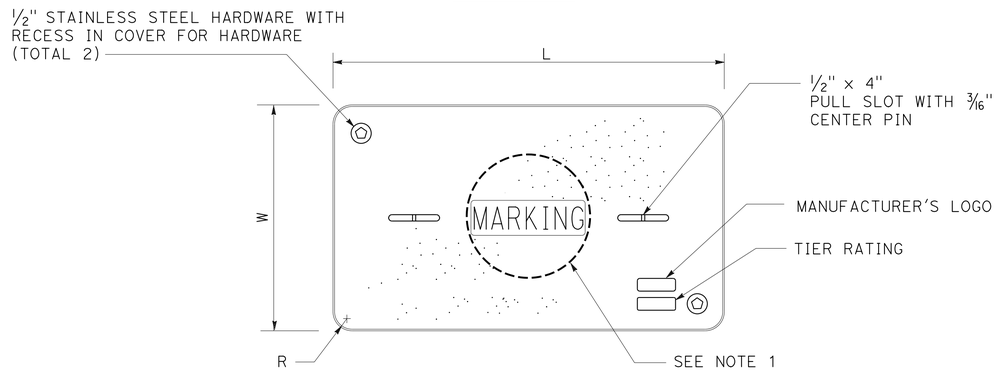

COVER TOP VIEW

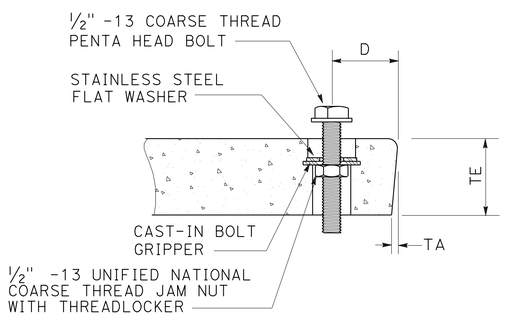

TYPICAL COVER CAPTIVE BOLT

OR SIMILAR

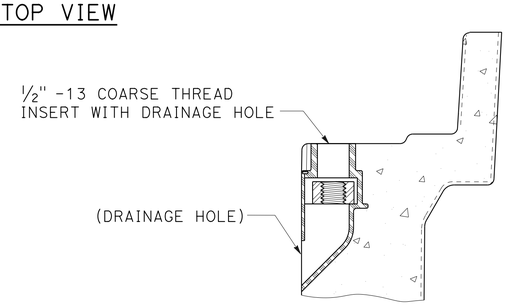

TYPICAL THREADED INSERT

OR SIMILAR

DIMENSION TABLE

PULL BOX	PULL BOX			COVER						
	MINIMUM DEPTH BOX	MINIMUM DEPTH EXTENSION	MAXIMUM WEIGHT	L	W	R	TE	TA	D	MAXIMUM WEIGHT
No. 3½	12"	N/A	40 lb	1′ - 3⅜"	10⅛"	1⅜"	2"	⅛"	1¾"	30 lb
No. 5	12"	10"	55 lb	1′ - 11¼"	1′ - 1¾"	1⅜"	2"	⅛"	1¾"	60 lb
No. 6	12"	10"	70 lb	2′ - 6½"	1′ - 5½"	1⅜"	2"	⅛"	2"	85 lb

NOTES:

1. Pull box covers shall be marked as follows: "SERVICE" Service circuits between service point and service disconnect; "SPRINKLER-CONTROL" sprinkler control circuits, 50 V or less; "CALTRANS" on all pull boxes, except pull boxes marked "SPRINKLER-CONTROL"; and "TELEPHONE" Telephone service;
   - A) No. 3½ pull box.
     - 1) "SIGNAL" - Traffic signal circuits with or without lighting or sign lighting circuits.
     - 2) "LIGHTING" - Lighting or sign lighting circuits where voltage is under 600 V.
   - B) No. 5, 6, 9 or 9A pull box.
     - 1) "TRAFFIC SIGNAL" - Traffic signal circuits with or without lighting or sign lighting circuits.
     - 2) "LIGHTING" - Lighting or sign lighting circuits where voltage is under 600 V.
     - 3) "LIGHTING-HIGH VOLTAGE" - Lighting or sign lighting circuits where voltage is above 600 V.
     - 4) "IRRIGATION" - Circuits to irrigation controller 120 V or more.
     - 5) "RAMP METER" - Ramp meter circuits.
     - 6) "COUNT STATION" - Count or speed monitor circuits.
     - 7) "COMMUNICATIONS" - Communication circuits.
     - 8) "TOS COMMUNICATIONS" - TOS communication line.
     - 9) "TOS POWER" - TOS power.
     - 10) "TDC POWER" - Telephone demarcation cabinet power.
     - 11) "CCTV" - Closed circuit television circuits.
     - 12) "TMS" - Traffic monitoring station circuits.
     - 13) "CMS" - Changeable message sign circuits.
     - 14) "HAR" - Highway advisory radio circuits.
     - 15) "BOOSTER PUMP" - Booster pump circuit.
2. The nominal dimensions of the opening in which the cover sets shall be the same as the cover dimensions except the length and width dimensions shall be ⅛" greater.
3. Covers and boxes shall be interchangeable with California standard male and female gages. When interchanged with a standard male or female gage, the top surfaces shall be flush within ⅛". Top outside radius of covers and pull boxes shall have a ⅛" radius.
4. Pull box extension may be another pull box as long as the bottom edge of the pull box can fit into the cover opening.
5. All dimensions for the cover for non-traffic pull box are nominal values.

STATE OF CALIFORNIA
DEPARTMENT OF TRANSPORTATION

ELECTRICAL SYSTEMS (NON-TRAFFIC PULL BOX)

NO SCALE

RSP ES-8A DATED JULY 19, 2013 SUPERSEDES RSP ES-8A DATED JANUARY 20, 2012 THAT SUPPLEMENTS THE STANDARD PLANS BOOK DATED 2010.

REVISED STANDARD PLAN RSP ES-8A

2010 REVISED STANDARD PLAN RSP ES-8A

7-15-13

DIST	COUNTY	ROUTE	POST MILES TOTAL PROJECT	SHEET NO.	TOTAL SHEETS
12	Ora	5	3.0/3.7	531	635

Theresa Gabriel
REGISTERED ELECTRICAL ENGINEER

July 19, 2013
PLANS APPROVAL DATE

REGISTERED PROFESSIONAL ENGINEER
Theresa Aziz Gabriel
No. E15129
Exp. 6-30-14
ELECTRICAL
STATE OF CALIFORNIA

THE STATE OF CALIFORNIA OR ITS OFFICERS OR AGENTS SHALL NOT BE RESPONSIBLE FOR THE ACCURACY OR COMPLETENESS OF SCANNED COPIES OF THIS PLAN SHEET.

TO ACCOMPANY PLANS DATED 3-10-14

2010 REVISED STANDARD PLAN RSP ES-8B

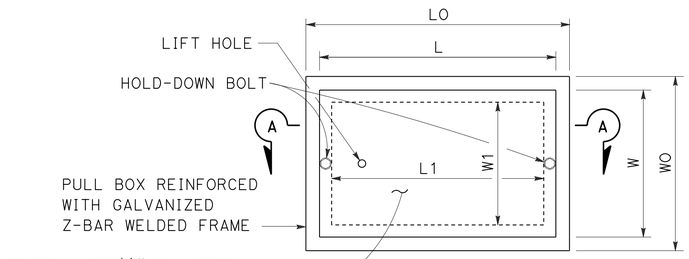

TOP VIEW

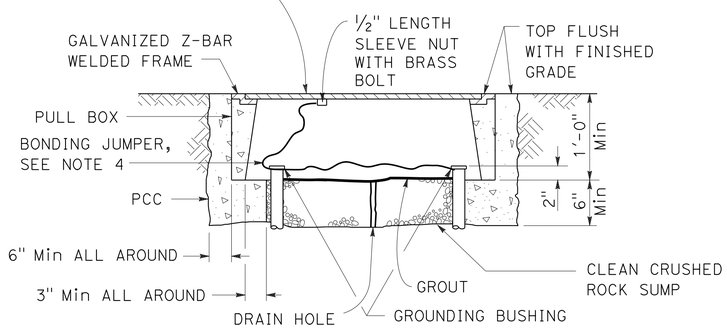

SECTION A-A

No. 3½(T), No. 5(T) AND No. 6(T) TRAFFIC PULL BOX

NOTES:

1. Traffic pull box shall be provided with steel cover and special concrete footing. Steel cover shall have embossed non-skid pattern.
2. Steel reinforcing shall be as regularly used in the standard products of the respective manufacturer.
3. Pull box covers shall be marked as follows: "SERVICE" Service circuits between service point and service disconnect; "SPRINKLER-CONTROL" Sprinkler control circuits, 50 V or less; "CALTRANS" On all pull boxes, except pull boxes marked "SPRINKLER-CONTROL"; and "TELEPHONE" Telephone service.
   - A) No. 3½(T) pull box.
     - 1) "SIGNAL" - Traffic signal circuits with or without lighting or sign lighting circuits.
     - 2) "LIGHTING" - Lighting or sign lighting circuits where voltage is under 600 V.
   - B) No. 5(T) or 6(T) pull box.
     - 1) "TRAFFIC SIGNAL" - Traffic signal circuits with or without lighting or sign lighting circuits.
     - 2) "LIGHTING" - Lighting or sign lighting circuits where voltage is under 600 V.
     - 3) "LIGHTING-HIGH VOLTAGE" - Lighting or sign lighting circuits where voltage is above 600 V.
     - 4) "IRRIGATION" - Circuits to irrigation controller 120 V or more.
     - 5) "RAMP METER" - Ramp meter circuits.
     - 6) "COUNT STATION" - Count or speed monitor circuits.
     - 7) "COMMUNICATION" - Communication circuits.
     - 8) "TOS COMMUNICATIONS" - TOS communications line.
     - 9) "TOS POWER" - TOS power.
     - 10) "TDC POWER" - Telephone demarcation cabinet power.
     - 11) "CCTV" - Closed circuit television circuits.
     - 12) "TMS" - Traffic monitoring station circuits.
     - 13) "CMS" - Changeable message sign circuits.
     - 14) "HAR" - Highway advisory radio circuits.
     - 15) "BOOSTER PUMP" - Booster pump circuit.
4. Bonding jumper for metal covers shall be 3' long, minimum.
5. The nominal dimensions of the opening in which the cover sets shall be the same as the cover dimensions except the length and width dimensions shall be ⅛" greater.
6. Covers and boxes shall be interchangeable with California standard male and female gages. When interchanged with a standard male or female gage, the top surfaces shall be flush within ⅛".

DIMENSION TABLE

PULL BOX	PULL BOX						COVER				
	MINIMUM * THICKNESS	MINIMUM DEPTH BOX AND EXTENSION	WO	LO	L1	W1	L **	W **	R	EDGE THICKNESS	EDGE TAPER
No. 3½(T)	1½"	1'-0"	1'-5"± 1"	1'-8⅞"±	1'-2½"±	10⅝"± 1"	1'-8"±	1'-1¾"±	0"	½"	NONE
No. 5(T)	1¾"	1'-0"	1'-11½"± 1"	2'-5½"±	1'-7"±	1'-1"± 1"	2'-3"±	1'-4"±	0"	½"	NONE
No. 6(T)	2"	1'-0"	2'-6"± 1"	2'-11½"±	1'-11½"±	1'-5"± 1"	2'-9"±	1'-8"±	0"	½"	NONE

* EXCLUDING CONDUIT WEB ** TOP DIMENSION

STATE OF CALIFORNIA
DEPARTMENT OF TRANSPORTATION

ELECTRICAL SYSTEMS (TRAFFIC PULL BOX)

NO SCALE

RSP ES-8B DATED JULY 19, 2013 SUPERSEDES RSP ES-8B DATED JANUARY 20, 2012 THAT SUPPLEMENTS THE STANDARD PLANS BOOK DATED 2010.

REVISED STANDARD PLAN RSP ES-8B

7-15-13

Dist	COUNTY	ROUTE	POST MILES TOTAL PROJECT	SHEET No.	TOTAL SHEETS
12	Ora	5	3.0/3.7	532	635

Theresa Gabriel
REGISTERED ELECTRICAL ENGINEER

July 19, 2013
PLANS APPROVAL DATE

REGISTERED PROFESSIONAL ENGINEER
Theresa Aziz Gabriel
No. E15129
Exp. 6-30-14
ELECTRICAL
STATE OF CALIFORNIA

THE STATE OF CALIFORNIA OR ITS OFFICERS OR AGENTS SHALL NOT BE RESPONSIBLE FOR THE ACCURACY OR COMPLETENESS OF SCANNED COPIES OF THIS PLAN SHEET.

TO ACCOMPANY PLANS DATED 3-10-14

ISOFOOTCANDLE CURVE - MINIMUM

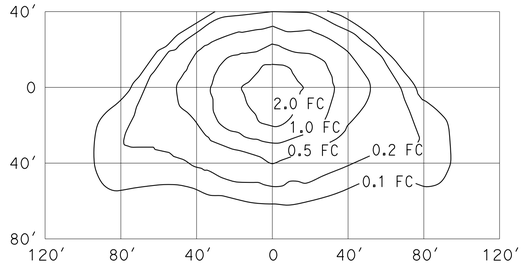

TYPE III MEDIUM CUTOFF

Cutoff Luminaire
34′ Mounting Height
Lamp operated at 22,000 lm
200-W high pressure sodium lamp
ANSI Designation S66

ISOFOOTCANDLE CURVE - MINIMUM

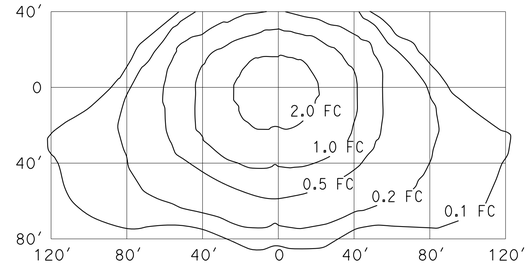

TYPE III MEDIUM CUTOFF

Cutoff Luminaire
40′ Mounting Height
Lamp operated at 37,000 lm
310-W high pressure sodium lamp
ANSI Designation S67

ISOFOOTCANDLE CURVE - MINIMUM

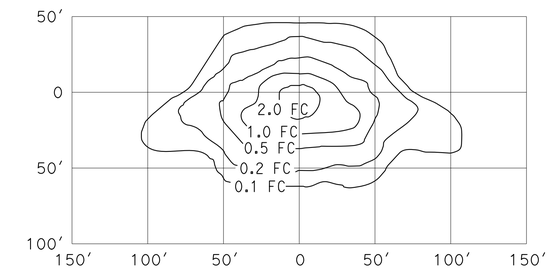

TYPE III MEDIUM CUTOFF

Cutoff Luminaire
30′ Mounting Height
Lamp operated at 16,000 lm
150-W high pressure sodium lamp
ANSI Designation S55

ISOFOOTCANDLE CURVE - MINIMUM

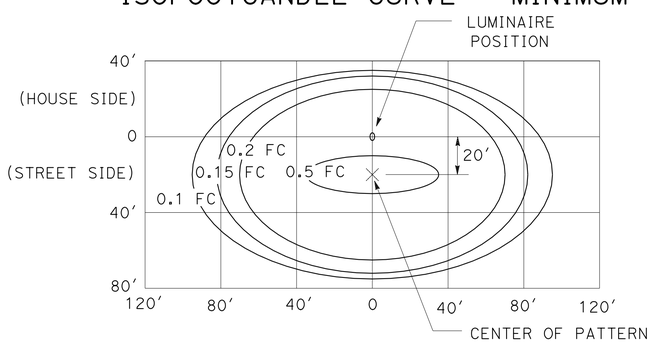

LED LUMINAIRE ROADWAY 1

165-W at 34′ Mounting Height

ISOFOOTCANDLE CURVE - MINIMUM

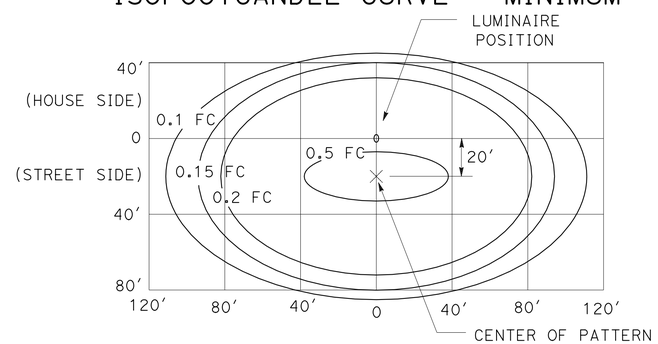

LED LUMINAIRE ROADWAY 2

235-W at 40′ Mounting Height

ISOFOOTCANDLE CURVE - MINIMUM

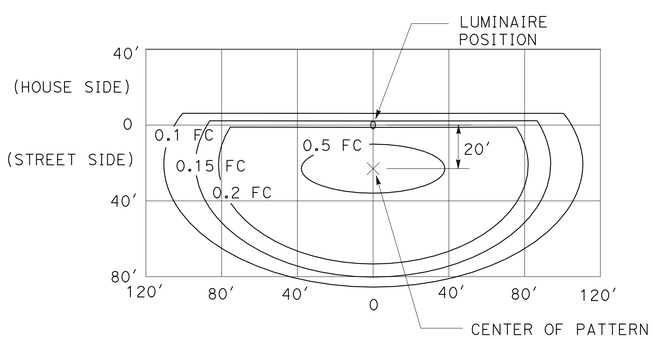

LED LUMINAIRE ROADWAY 3

235-W at 40′ Mounting Height
with back side control

ISOFOOTCANDLE CURVE - MINIMUM

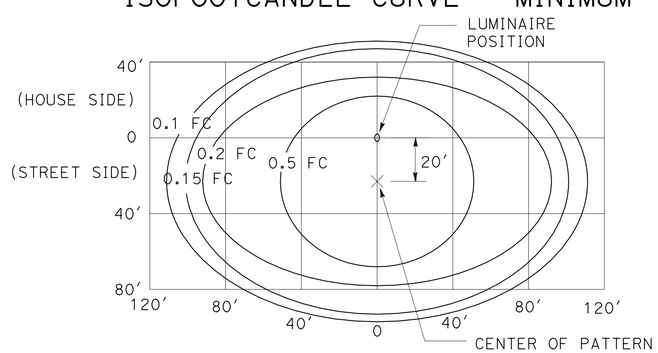

LED LUMINAIRE ROADWAY 4

300-W at 40′ Mounting Height

ISOFOOTCANDLE CURVE - MINIMUM

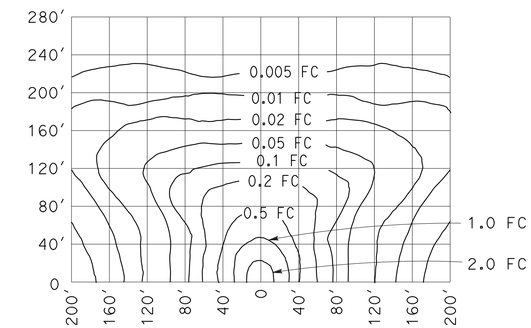

LOW PRESSURE SODIUM LUMINAIRE

40′ Mounting Height
Lamp operated at 33,000 lm
180-W low pressure sodium lamp

STATE OF CALIFORNIA
DEPARTMENT OF TRANSPORTATION

ELECTRICAL SYSTEMS (ISOFOOTCANDLE DIAGRAMS)

NO SCALE

RSP ES-10A DATED JULY 19, 2013 SUPERSEDES RSP ES-10A DATED JULY 20, 2012 THAT SUPPLEMENTS THE STANDARD PLANS BOOK DATED 2010.

REVISED STANDARD PLAN RSP ES-10A

2010 REVISED STANDARD PLAN RSP ES-10A

7-9-13

Dist	COUNTY	ROUTE	POST MILES TOTAL PROJECT	SHEET No.	TOTAL SHEETS
12	Ora	5	3.0/3.7	533	635

REGISTERED ELECTRICAL ENGINEER

July 20, 2012
PLANS APPROVAL DATE

REGISTERED PROFESSIONAL ENGINEER
Jeffery G. McRae
No. E14512
Exp. 6-30-14
ELECTRICAL
STATE OF CALIFORNIA

THE STATE OF CALIFORNIA OR ITS OFFICERS OR AGENTS SHALL NOT BE RESPONSIBLE FOR THE ACCURACY OR COMPLETENESS OF SCANNED COPIES OF THIS PLAN SHEET.

TO ACCOMPANY PLANS DATED 3-10-14

ISOFOOTCANDLE CURVE - MINIMUM

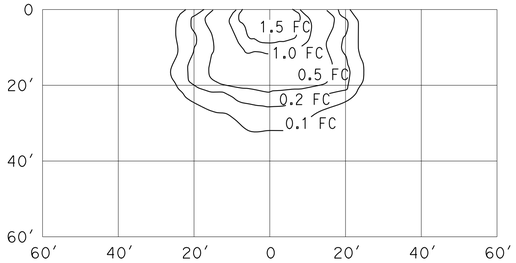

WALL LUMINAIRE
15′ Mounting Height
Lamp operated at 5,800 lm
70-W high pressure sodium lamp
ANSI Designation S62

ISOFOOTCANDLE CURVE - MINIMUM

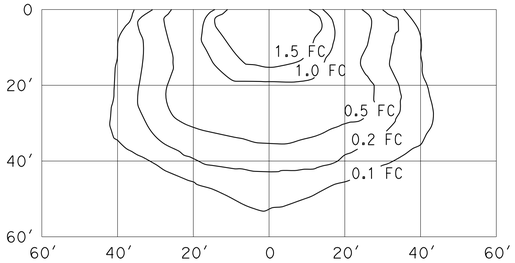

WALL LUMINAIRE
15′ Mounting Height
Lamp operated at 9,500 lm
100-W high pressure sodium lamp
ANSI Designation S54

ISOFOOTCANDLE CURVE - MINIMUM

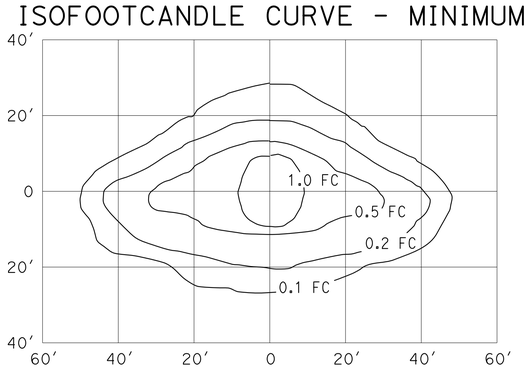

PENDANT SOFFIT LUMINAIRE
TYPE III SHORT
17′ Mounting Height
Lamp operated at 5,800 lm
70-W high pressure sodium lamp
ANSI Designation S62

ISOFOOTCANDLE CURVE - MINIMUM

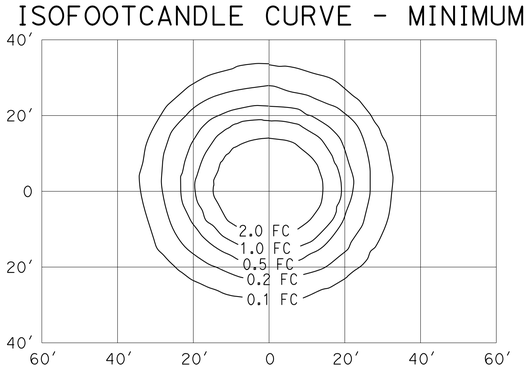

PENDANT SOFFIT LUMINAIRE
17′ Mounting Height
Lamp operated at 5,800 lm
70-W high pressure sodium lamp
ANSI Designation S62

ISOFOOTCANDLE CURVE - MINIMUM

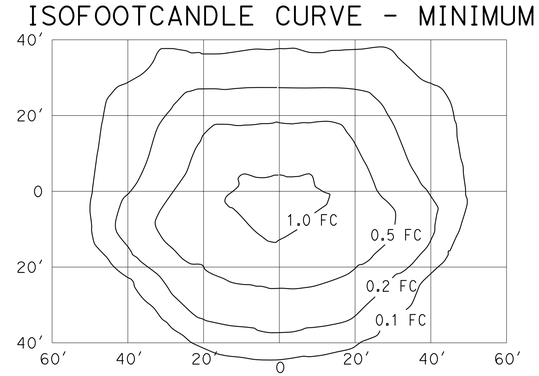

FLUSH SOFFIT LUMINAIRE
17′ Mounting Height
Lamp operated at 5,800 lm
70-W high pressure sodium lamp
ANSI Designation S62

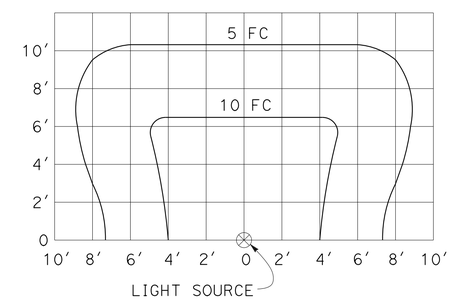

SIGN LIGHTING FIXTURE
ISOFOOTCANDLE DIAGRAM

NOTES:

1. Curves represent the minimum footcandle (FC) of initial illumination on a 10′-0" x 20′-0" panel.
2. The FC shown are with the fixture attached to the light fixture mounting channel which places the center of the source 4′-8" in front of panel and 1′-0" below the bottom edge.
3. Applicable lamp: 85-W fluorescent phosphor coated induction lamp.

STATE OF CALIFORNIA
DEPARTMENT OF TRANSPORTATION

ELECTRICAL SYSTEMS (ISOFOOTCANDLE DIAGRAMS)

NO SCALE

RSP ES-10B DATED JULY 20, 2012 SUPPLEMENTS THE STANDARD PLANS BOOK DATED 2010.

REVISED STANDARD PLAN RSP ES-10B

2010 REVISED STANDARD PLAN RSP ES-10B

Dist	COUNTY	ROUTE	POST MILES TOTAL PROJECT	SHEET No.	TOTAL SHEETS
12	Ora	5	3.0/3.7	534	635

REGISTERED CIVIL ENGINEER

July 19, 2013
PLANS APPROVAL DATE

REGISTERED PROFESSIONAL ENGINEER
Stanley P. Johnson
No. C57793
Exp. 3-31-14
CIVIL
STATE OF CALIFORNIA

THE STATE OF CALIFORNIA OR ITS OFFICERS OR AGENTS SHALL NOT BE RESPONSIBLE FOR THE ACCURACY OR COMPLETENESS OF SCANNED COPIES OF THIS PLAN SHEET.

TO ACCOMPANY PLANS DATED 3-10-14

STANDARD TYPE	SETBACK (DIMENSION A)
32	30'-0" (Min)
31	20'-0" (Min)
15, 15D, 15-SB, 21, 21D, 30	ARM LENGTH (Min)

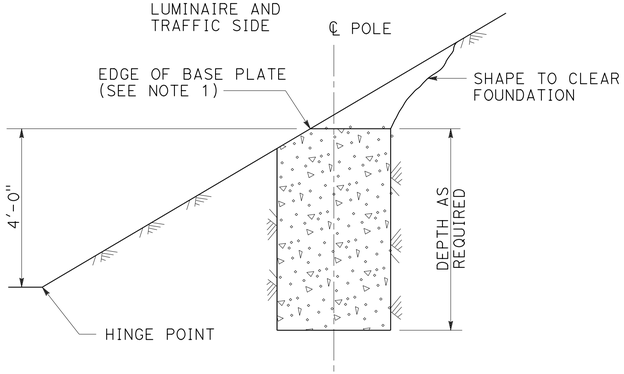

CUT SLOPES
STEEPER THAN 4:1,
LESS THAN 2:1
DETAIL A-1
See Note 2 and 3

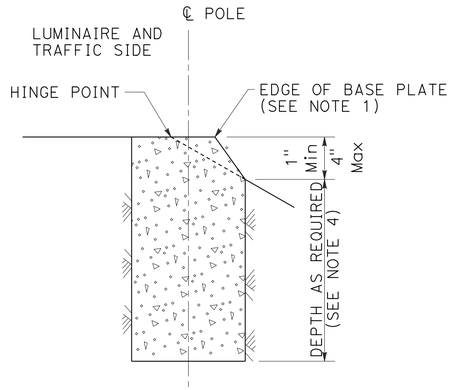

FILL SLOPES
STEEPER THAN 4:1,
LESS THAN 2:1
DETAIL A-2
See Note 2 and 3

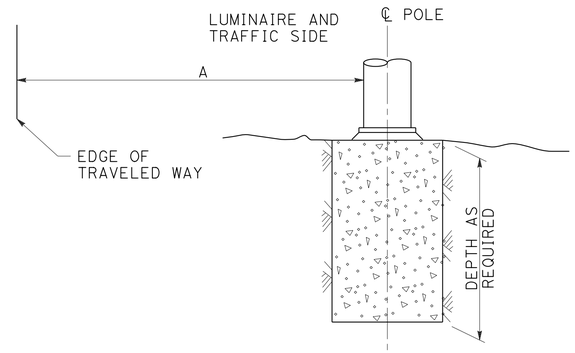

FLAT SECTIONS, CUT OR FILL SLOPES
4:1 OR FLATTER
DETAIL A-3
See Note 2

FOUNDATIONS ADJACENT TO ALL ROADWAYS EXCEPT
IN SIDEWALK, MEDIAN AND ISLAND AREAS
DETAIL A

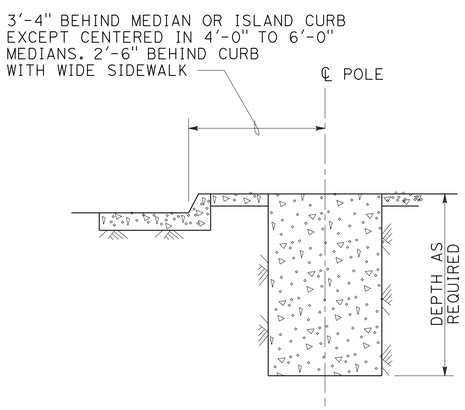

MEDIAN, ISLAND
OR WIDE SIDEWALK
DETAIL B-1
7' Wide and wider

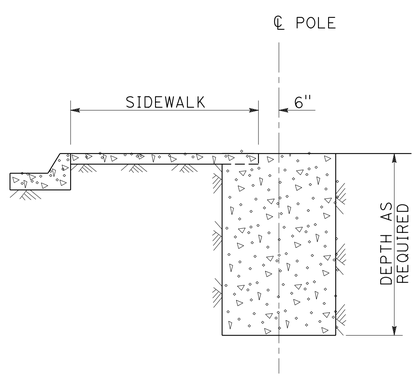

NARROW SIDEWALK
DETAIL B-2
Less than 7' wide

FOUNDATIONS IN SIDEWALK, MEDIAN AND ISLAND AREAS
DETAIL B

NOTES:

1. Where a portion of the foundation is above grade, the top edges shall have a 1" chamfer.
2. Slopes shall be horizontal to vertical ratio (Horizontal : Vertical).
3. Horizontal setbacks on cut and fill slopes steeper than 4:1 shall not exceed the distance shown for flat sections.
4. CIDH embedment depth shall be increased beyond standard depths by the diameter of the CIDH.

STATE OF CALIFORNIA
DEPARTMENT OF TRANSPORTATION

ELECTRICAL SYSTEMS (FOUNDATION INSTALLATIONS)

NO SCALE

RSP ES-11 DATED JULY 19, 2013 SUPERSEDES STANDARD PLAN ES-11
DATED MAY 20, 2011 - PAGE 488 OF THE STANDARD PLANS BOOK DATED 2010.

REVISED STANDARD PLAN RSP ES-11

2010 REVISED STANDARD PLAN RSP ES-11

7-9-13

Dist	COUNTY	ROUTE	POST MILES TOTAL PROJECT	SHEET No.	TOTAL SHEETS
12	Ora	5	3.0/3.7	535	635

REGISTERED CIVIL ENGINEER

November 15, 2013
PLANS APPROVAL DATE

REGISTERED PROFESSIONAL ENGINEER
Stanley P. Johnson
No. C57793
Exp. 3-31-14
CIVIL
STATE OF CALIFORNIA

THE STATE OF CALIFORNIA OR ITS OFFICERS OR AGENTS SHALL NOT BE RESPONSIBLE FOR THE ACCURACY OR COMPLETENESS OF SCANNED COPIES OF THIS PLAN SHEET.

TO ACCOMPANY PLANS DATED 3-10-14

2010 REVISED STANDARD PLAN RSP ES-16B

POLE TYPE	POLE DATA				BASE PLATE DATA				CIDH	
	HEIGHT "h"	Min OD		THICKNESS	"C"	THICKNESS	ANCHOR BOLT SIZE	BC = BOLT CIRCLE	Dia	"d"
		BASE	TOP							
CCTV 25	25′	7⅜"	3¾"	0.1793"	1′-1"	1"	1½" ø x 36"	11½"	2′-6"	7′-0"
CCTV 30	30′	8"			1′-1½"			1′-0"		7′-6"
CCTV 35	35′	8⅝"			1′-2"			1′-1"		8′-0"
CCTV 40	40′	9⅜"			1′-3"			1′-1½"		8′-6"
CCTV 45	45′	10"						1′-2"		

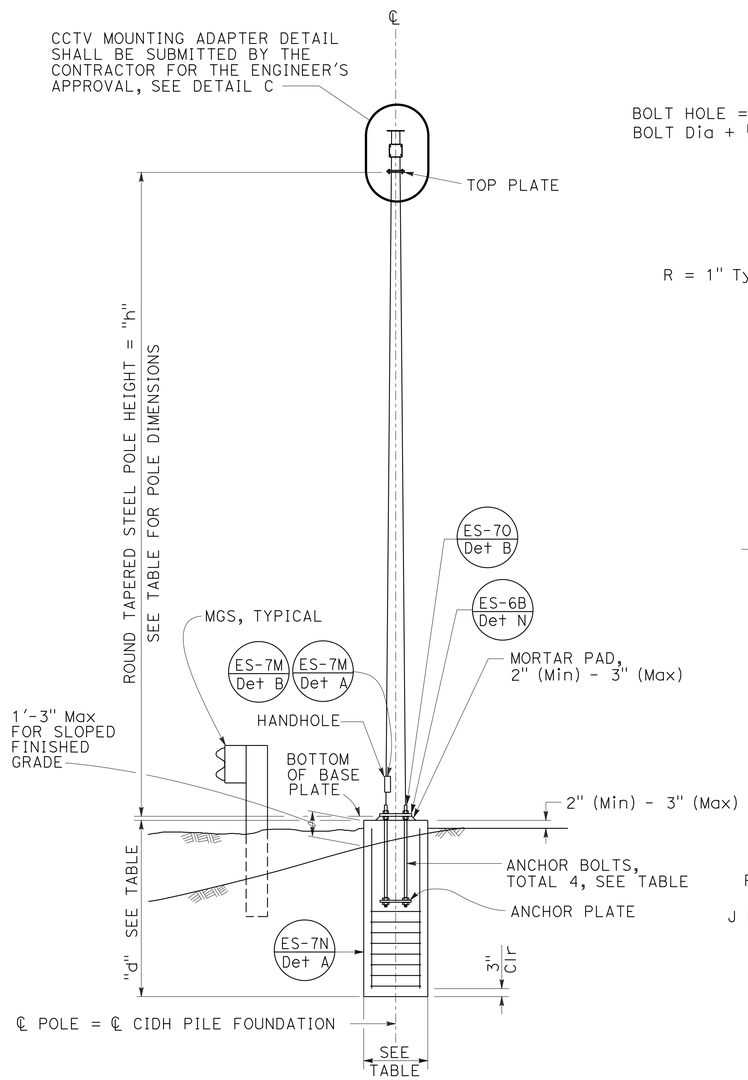

ELEVATION A

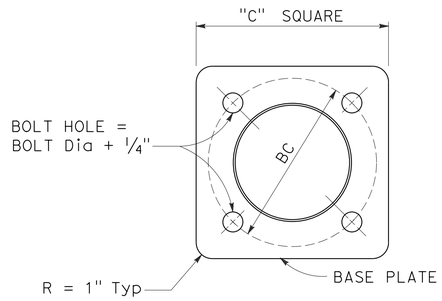

BASE PLATE

DETAIL A

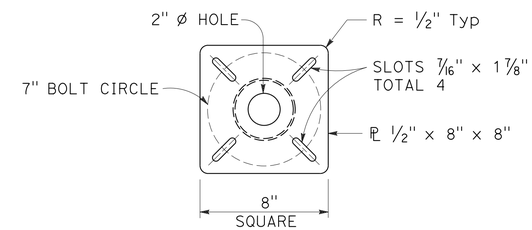

TOP PLATE

DETAIL B

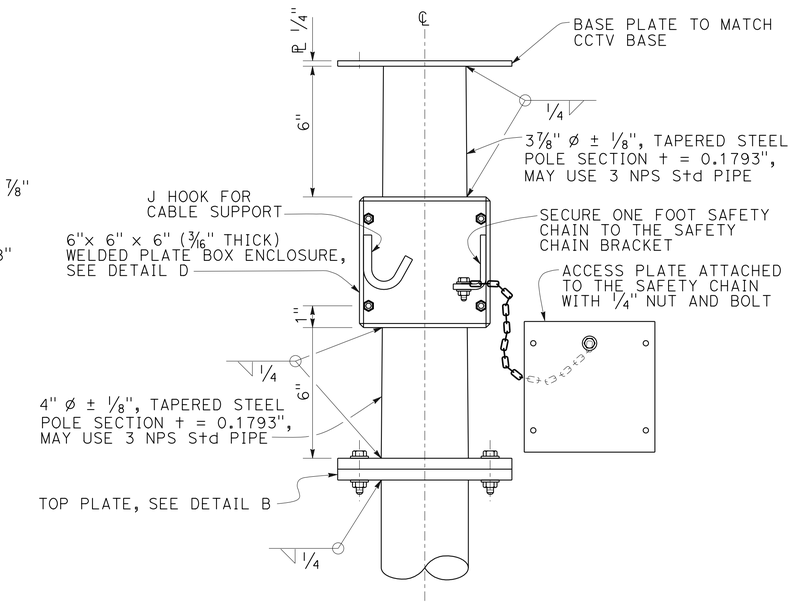

CLOSED CIRCUIT TELEVISION MOUNTING ADAPTER

DETAIL C

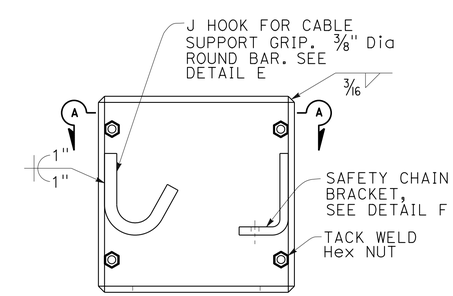

BOX ENCLOSURE

DETAIL D

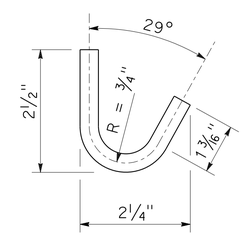

J HOOK

DETAIL E

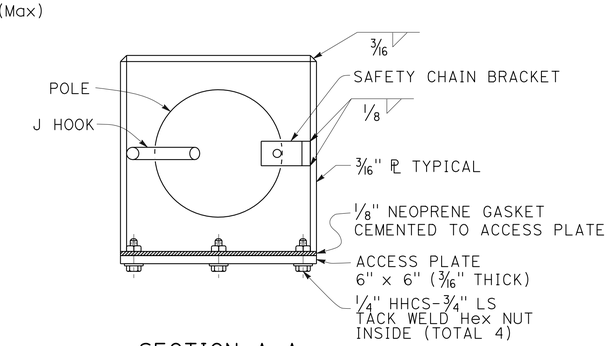

SECTION A-A

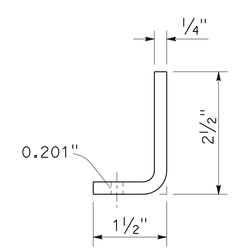

SAFETY CHAIN BRACKET

DETAIL F

NOTES:

1. The Contractor shall verify controlling field dimensions before ordering or fabricating any material.
2. During pole installation, the post shall be raked as necessary with the use of leveling nuts to provide a plumb pole axis.
3. Wind Loadings (3-second gust): 100 mph
4. Unit Stresses (Structural Steel):
   a. fy = 55,000 psi (tapered steel tube and anchor bolts)
   b. fy = 50,000 psi (unless otherwise noted)
5. Unit Stresses (Reinforced Concrete):
   a. f′c = 3,625 psi
   b. fy = 60,000 psi

STATE OF CALIFORNIA
DEPARTMENT OF TRANSPORTATION

ELECTRICAL SYSTEMS (CLOSED CIRCUIT TELEVISION, 25' TO 45' POLE)

NO SCALE

RSP ES-16B DATED NOVEMBER 15, 2013 SUPERSEDES STANDARD PLAN ES-16B DATED MAY 20, 2011 - PAGE 501 OF THE STANDARD PLANS BOOK DATED 2010.

REVISED STANDARD PLAN RSP ES-16B

DIST	COUNTY	ROUTE	POST MILES TOTAL PROJECT	SHEET No	TOTAL SHEETS
12	Ora	5	3.0/3.7	536	635

REGISTERED CIVIL ENGINEER 4/26/13 DATE

3-10-14
PLANS APPROVAL DATE

REGISTERED PROFESSIONAL ENGINEER MARTIN E. RUVALCABA No. C-75838 Exp. 6/20/14 CIVIL STATE OF CALIFORNIA

The State of California or its officers or agents shall not be responsible for the accuracy or completeness of electronic copies of this plan sheet.

OCTA
550 SOUTH MAIN ST
ORANGE, CA 92863

PARSONS
2201 DUPONT DRIVE, SUITE 200
IRVINE, CA 92612

188+00.00 EVC
ELEV 120.59

192+50.00 BVC
ELEV 127.34

195+50.00 EVC
ELEV 133.77

+1.50% +2.79%

300' VC
R/C = 0.43% PER STA

PROFILE GRADE

NO SCALE

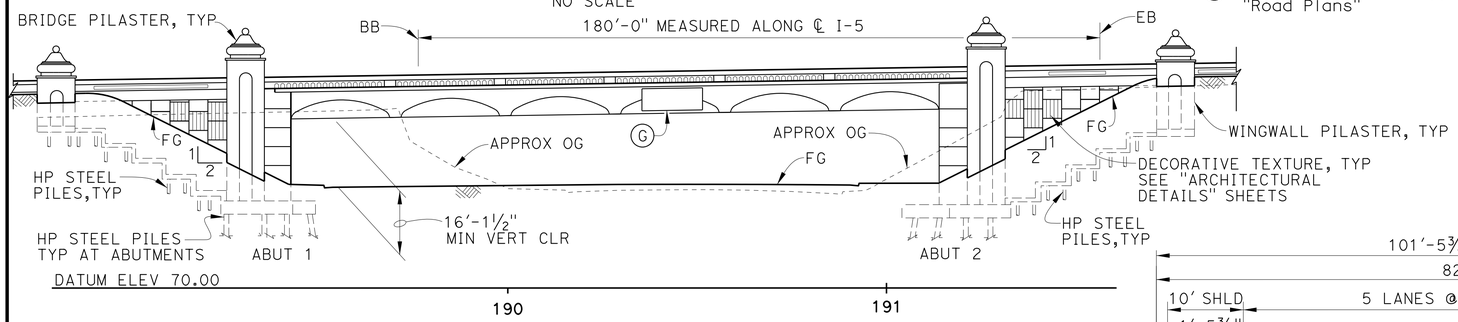

Note: All Piles Are Not Shown.

ELEVATION

1" = 20'

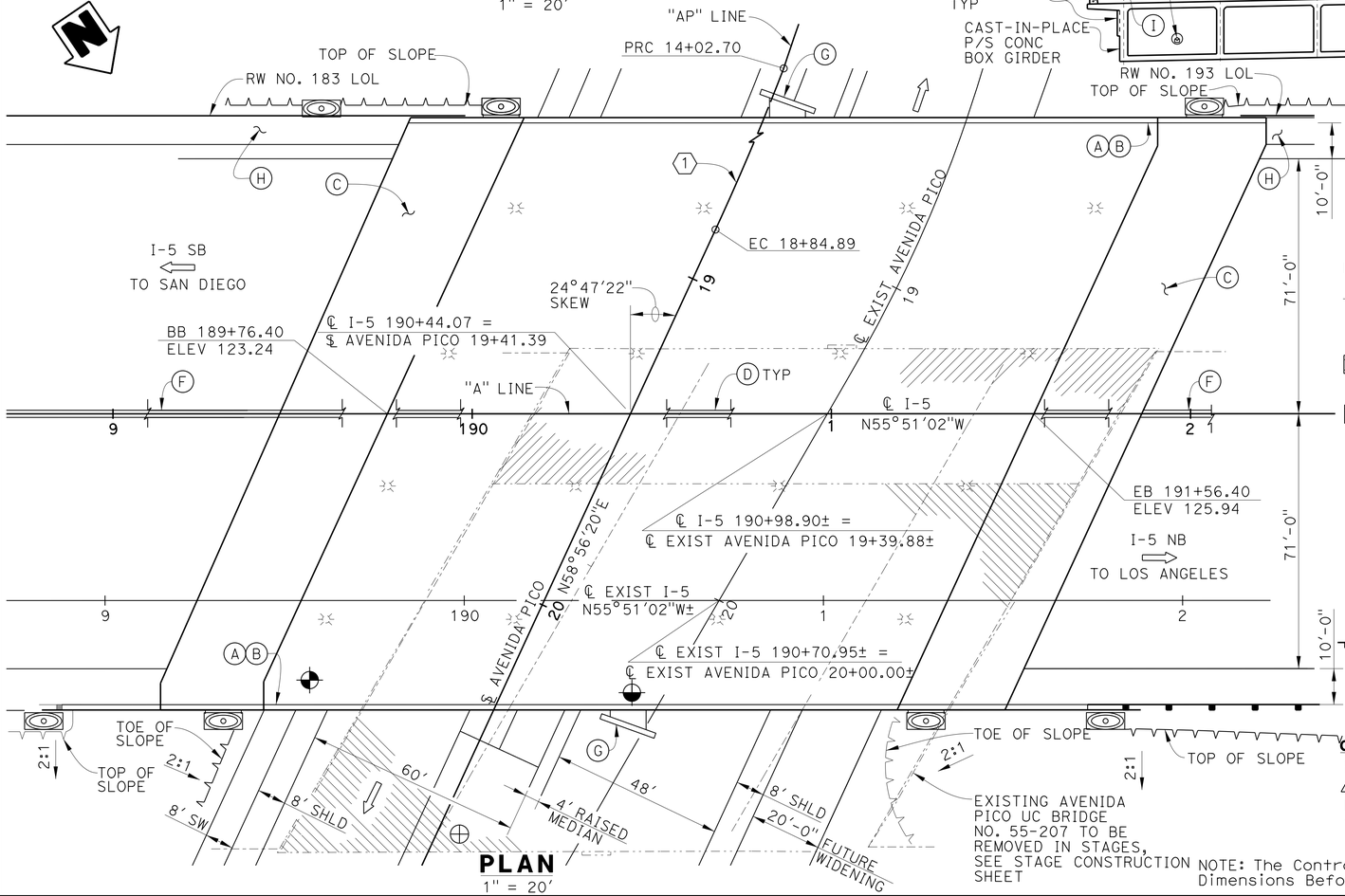

PLAN

1" = 20'

NOTES:

(A) Paint "Avenida Pico UC"

(B) Paint "Bridge No. 55-1107"

(C) Structure Approach Type N(30S)

(D) Concrete Barrier Type 60A, see "Road Plans"

(E) Concrete Barrier Type 736, Mod

(F) Concrete Barrier Type 60, see "Road Plans" Connection Detail On "Additional Girder Reinforcement" Sheet

(G) Bridge Mounted Sign Structure, see "Road Plans". Bridge Anchorage Details on "Additional Girder Reinforcement" Sheet.

(H) Concrete Barrier Slab, see "Retaining Wall No. 183" and "Retaining Wall No. 193" plans.

(I) 2" ø Electrical conduit, see "Road Plans".

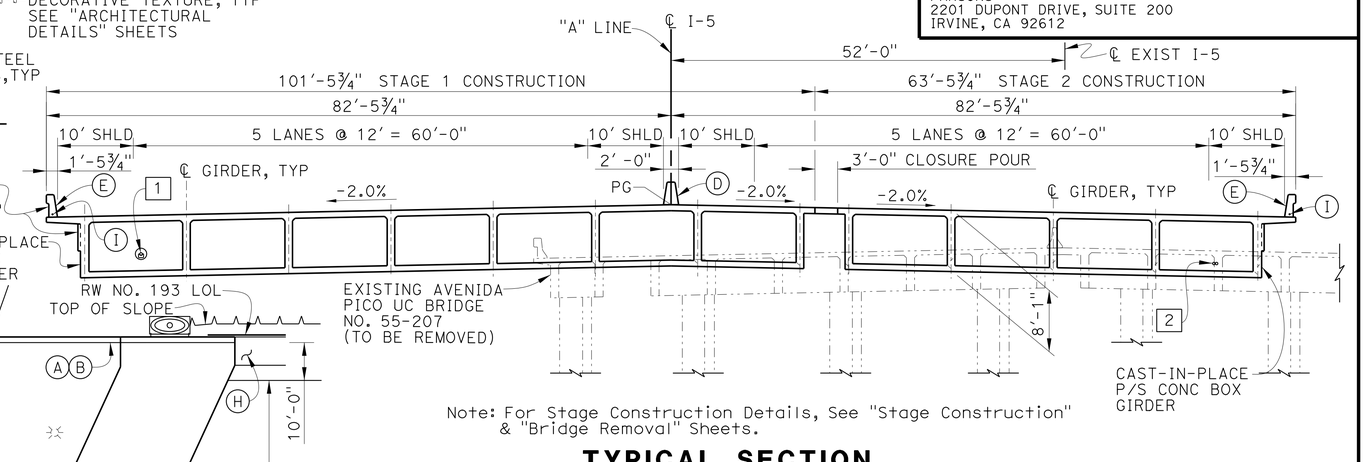

Note: For Stage Construction Details, See "Stage Construction" & "Bridge Removal" Sheets.

TYPICAL SECTION

1" = 10'

LEGEND:

- Existing Bridge
- Indicates Direction of Traffic
- Indicates Stage 1 Construction Bridge Removal
- Indicates Stage 2 Construction Bridge Removal
- Indicates Point of Mininmum Vertical Clearance
- Indicates Point of Minimum Vertical Clearance During Stage 1 Construction (15'-2⅝"±)
- Indicates Point of Minimum Vertical Clearance During Stage 2 Construction (15'-0⅝")
- Soffit Lighting
- MBGR

UTILITIES:

1 — 4" Supply Line (Bridge)

2 — 4" ø Fiberoptic Conduit, see "Road Plans"

CURVE DATA (1)

R = 750.00'
△ = 36°50'11"
L = 482.19'
T = 249.76'

AVENIDA PICO UC (REPLACE) BRIDGE NO 55-1107

QUANTITIES

BRIDGE REMOVAL	LUMP	SUM
STRUCTURE EXCAVATION (BRIDGE)	6,710	CY
STRUCTURE BACKFILL (BRIDGE)	5,450	CY
4" SUPPLY LINE (BRIDGE)	240	LF
TEMPORARY SUPPORT	LUMP	SUM
FURNISH STEEL PILING (HP 10 X 57)	2,229	LF
DRIVE STEEL PILE (HP 10 X 57)	50	EA
FURNISH STEEL PILING (HP 14 X 117)	20,355	LF
DRIVE STEEL PILE (HP 14 X 117)	344	EA
PRESTRESSING CAST-IN-PLACE CONCRETE	LUMP	SUM
STRUCTURAL CONCRETE, BRIDGE FOOTING	1,120	CY
STRUCTURAL CONCRETE, BRIDGE	4,387	CY
STRUCTURAL CONCRETE, APPROACH SLAB (TYPE N)	367	CY
ARCHITECTURAL TREATMENT	13,100	SQFT
JOINT SEAL (MR 2")	360	LF
BAR REINFORCING STEEL (BRIDGE)	1,152,900	LB
CONCRETE BARRIER (TYPE 60A)	240	LF
CONCRETE BARRIER (TYPE 736 MODIFIED)	480	LF

NOTE: The Contractor Shall Verify All Controlling Field Dimensions Before Ordering Or Fabricating Any Material.

Luqi Yang
DESIGN OVERSIGHT Luqi Yang
7-10-13
SIGN OFF DATE

	BY	CHECKED
DESIGN	M. Ruvalcaba	E. Mobo
DETAILS	P. Johnson	E. Mobo
QUANTITIES	J. Fix	E. Mobo

LOAD & RESISTANCE FACTOR DESIGN — LIVE LOADING: HL93 W/"LOW-BOY"; PERMIT DESIGN VEHICLE

LAYOUT — BY D. Lew — CHECKED E. Johnson

SPECIFICATIONS — BY G. Matesic — PLANS AND SPECS COMPARED E. Mobo

PREPARED FOR THE STATE OF CALIFORNIA DEPARTMENT OF TRANSPORTATION

Mohsen Mohseni
PROJECT ENGINEER

BRIDGE NO. 55-1107
POST MILES 3.39

AVENIDA PICO UC (REPLACE)
GENERAL PLAN

DESIGN GENERAL PLAN SHEET (ENGLISH) (REV.7/16/10)

ORIGINAL SCALE IN INCHES FOR REDUCED PLANS 0 1 2 3

UNIT:
PROJECT NUMBER & PHASE: 12000202771 CONTRACT NO.: 12-0F96A4

DISREGARD PRINTS BEARING EARLIER REVISION DATES

REVISION DATES 5/20/12 11/13/12 3/20/13 4/26/13

SHEET 1 OF 39

FILE => 55-1107-a-gp01.dgn

USERNAME => s128843 DATE PLOTTED => 07-AUG-2014 TIME PLOTTED => 13:04

DIST	COUNTY	ROUTE	POST MILES TOTAL PROJECT	SHEET No	TOTAL SHEETS
12	Ora	5	3.0/3.7	537	635

REGISTERED CIVIL ENGINEER 4/26/13 DATE

3-10-14
PLANS APPROVAL DATE

REGISTERED PROFESSIONAL ENGINEER MARTIN E. RUVALCABA No. C-75838 Exp. 6/20/14 CIVIL STATE OF CALIFORNIA

The State of California or its officers or agents shall not be responsible for the accuracy or completeness of electronic copies of this plan sheet.

OCTA
550 SOUTH MAIN ST
ORANGE, CA 92863

PARSONS
2201 DUPONT DRIVE, SUITE 200
IRVINE, CA 92612

GENERAL NOTES:
LOAD AND RESISTANCE FACTOR DESIGN

Design:
AASHTO LRFD Bridge Design Specifications, 4th Edition with California Amendments (Nov. 2011); Except that Earth Retaining Systems, Bridge Barrier and Structure Approach Slabs are Designed Using Bridge Design Specifications ('96 AASHTO w/ Revisions by Caltrans).

Dead Load:
Includes 35 psf for future wearing surface.

Live Loading:
HL-93 and Permit Design Loading

Seismic Design:
Caltrans Seismic Design Criteria (SDC), Version 1.6, dated November 2010

Seismic Loading:
Caltrans MTD 20_1, SDC Appendix B (Nov. 2010)
Soil Profile: Initial Vs30 = 734 ft/sec, Liquefaction: No
Peak Ground Acceleration: PGA = 0.382g, Moment Magnitude; Mmax = 7.50
ARS as shown (ARS curve for safety earthquake events)
(Includes Modifications per near fault effects)

ACCELERATION RESPONSE SPECTRA

REINFORCED CONCRETE: f_y = 60 ksi
f'_c = 3.6 ksi Unless Otherwise Noted
n = 8

PRESTRESSED CONCRETE: See "Prestressing Notes" on "Girder Layout" Sheet.

STRUCTURAL STEEL (PILING): f_y = 50 ksi
ASTM = A572 Grade 50

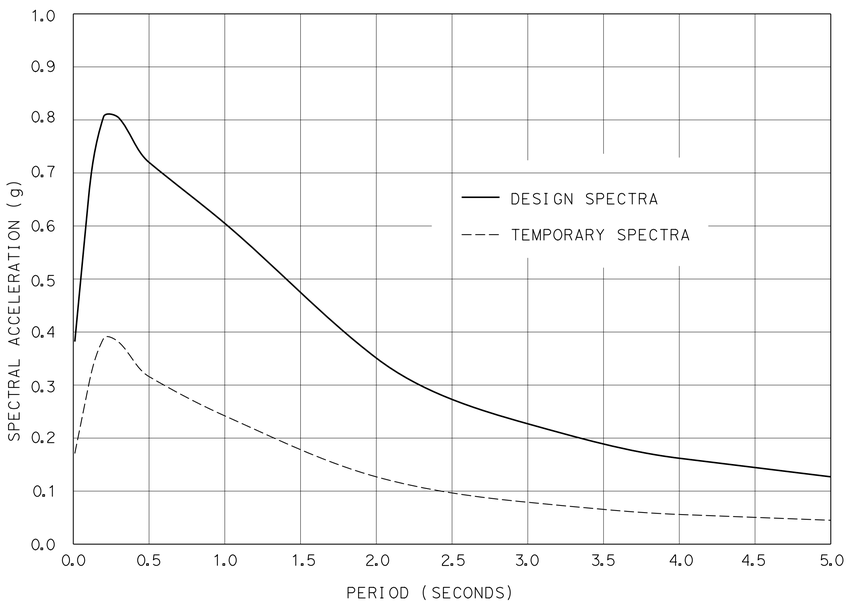

INDEX TO PLANS

SHEET NO.	TITLE
1.	GENERAL PLAN
2.	GENERAL NOTES & INDEX TO PLANS
3.	DECK CONTOURS
4.	FOUNDATION PLAN
5.	FOUNDATION DETAILS
6.	BRIDGE REMOVAL
7.	STAGE CONSTRUCTION
8.	ABUTMENT 1 LAYOUT - STAGE 1 CONSTRUCTION
9.	ABUTMENT 2 LAYOUT - STAGE 1 CONSTRUCTION
10.	ABUTMENT 1 LAYOUT - STAGE 2 CONSTRUCTION
11.	ABUTMENT 2 LAYOUT - STAGE 2 CONSTRUCTION
12.	ABUTMENT 1 PILE LAYOUT
13.	ABUTMENT 2 PILE LAYOUT
14.	ABUTMENT DETAILS No. 1
15.	ABUTMENT DETAILS No. 2
16.	ABUTMENT DETAILS No. 3
17.	ABUTMENT DETAILS No. 4
18	ABUTMENT DETAILS No. 5
19.	ABUTMENT 1 WINGWALL LAYOUT
20.	ABUTMENT 2 WINGWALL LAYOUT
21.	ABUTMENT WINGWALL DETAILS No. 1
22.	ABUTMENT WINGWALL DETAILS No. 2
23.	TYPICAL SECTION STAGE 1 CONSTRUCTION
24.	TYPICAL SECTION STAGE 2 CONSTRUCTION
25.	GIRDER LAYOUT
26.	GIRDER DETAILS
27.	ADDITIONAL GIRDER REINFORCEMENT
28.	STRUCTURE APPROACH DRAINAGE DETAILS
29.	STRUCTURE APPROACH TYPE N(30S)
30.	4"Ø SUPPLY LINE
31.	PRELOAD EMBANKMENT DETAILS
32.	ARCHITECTURAL DETAILS NO. 1
33.	ARCHITECTURAL DETAILS NO. 2
34.	ARCHITECTURAL DETAILS NO. 3
35.	ARCHITECTURAL DETAILS NO. 4
36.	LOG OF TEST BORINGS 1 OF 4
37.	LOG OF TEST BORINGS 2 OF 4
38.	LOG OF TEST BORINGS 3 OF 4
39.	LOG OF TEST BORINGS 4 OF 4

STANDARD PLANS DATED 2010

	A10A	ABBREVIATIONS (SHEET 1 OF 2)
RSP	A10B	ABBREVIATIONS (SHEET 2 OF 2)
	A10C	LINES AND SYMBOLS (SHEET 1 OF 3)
	A10D	LINES AND SYMBOLS (SHEET 2 OF 3)
	A10E	LINES AND SYMBOLS (SHEET 3 OF 3)
	A10F	LEGEND-SOIL (SHEET 1 OF 2)
	A10G	LEGEND-SOIL (SHEET 2 OF 2)
	A10H	ROCK
	A62B	LIMITS OF PAYMENT FOR EXCAVATION AND BACKFILL-BRIDGE SURCHARGE AND WALL
	A62C	LIMITS OF PAYMENT FOR EXCAVATION AND BACKFILL-BRIDGE
	A76A	CONCRETE BARRIER TYPE 60
	B0-1	BRIDGE DETAILS
	B0-3	BRIDGE DETAILS
	B0-5	BRIDGE DETAILS
	B0-13	BRIDGE DETAILS
RSP	B3-1A	RETAINING WALL TYPE 1 (CASE 1)
RSP	B3-1B	RETAINING WALL TYPE 1 (CASE 2)
RSP	B3-5	RETAINING WALL DETAILS No. 1
	B3-6	RETAINING WALL DETAILS No. 2
	B6-21	JOINT SEALS (MAXIMUM MOVEMENT RATING = 2")
	B7-1	BOX GIRDER DETAILS
	B7-10	UTILITY OPENING BOX GIRDER
RSP	B8-5	CAST-IN-PLACE PRESTRESSED GIRDER DETAILS
RSP	B11-56	CONCRETE BARRIER TYPE 736
	B14-5	WATER SUPPLY LINE (DETAILS) (PIPE SIZES LESS THAN 4")
	ES-9E	ELECTRICAL SYSTEMS (ELECTRICAL DETAILS STRUCTURE INSTALLATIONS)

PLAN SYMBOLS

Standard Plan Sheet No.

Detail No.

Section Identification

LEGEND:

Structural Concrete, Bridge (f'_c = 4 ksi @ 28 days)

Structural Concrete, Bridge Footing (f'_c = 4 ksi @ 28 days)

Structural Concrete, Bridge (f'_c Per Prestressing Notes on "Girder Layout" sheet)

Structural Concrete, Approach Slab (f'_c = 3.6 ksi @ 28 days)

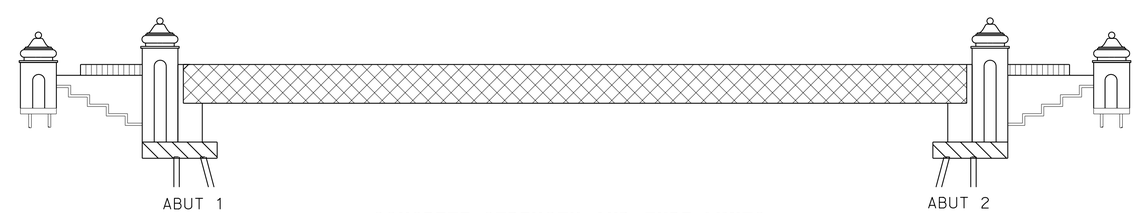

CONCRETE STRENGTH AND TYPE LIMITS
NO SCALE

NOTE: The Contractor Shall Verify All Controlling Field Dimensions Before Ordering Or Fabricating Any Material.

Luqi Yang
DESIGN OVERSIGHT Luqi Yang
1-14-14
SIGN OFF DATE

	BY	CHECKED
DESIGN	M. Ruvalcaba	E. Mobo
DETAILS	P. Johnson	E. Mobo
QUANTITIES	J. Fix	E. Mobo

PREPARED FOR THE STATE OF CALIFORNIA DEPARTMENT OF TRANSPORTATION

Mohsen Mohseni
PROJECT ENGINEER

BRIDGE NO. 55-1107
POST MILES 3.39

AVENIDA PICO UC (REPLACE)
GENERAL NOTES & INDEX TO PLANS

DESIGN DETAIL SHEET (ENGLISH) (REV.7/16/10)

ORIGINAL SCALE IN INCHES FOR REDUCED PLANS 0 1 2 3

UNIT:
PROJECT NUMBER & PHASE: 12000202771 CONTRACT NO.: 12-0F96A4

DISREGARD PRINTS BEARING EARLIER REVISION DATES

REVISION DATES: 5/20/12 11/15/12 3/20/13 4/26/13

SHEET 2 OF 39

FILE => 55-1107-a-itp.dgn

USERNAME => s128843 DATE PLOTTED => 07-AUG-2014 TIME PLOTTED => 13:04

DIST	COUNTY	ROUTE	POST MILES TOTAL PROJECT	SHEET No	TOTAL SHEETS
12	Ora	5	3.0/3.7	538	635

REGISTERED CIVIL ENGINEER — DATE 4/26/13

3-10-14
PLANS APPROVAL DATE

REGISTERED PROFESSIONAL ENGINEER — MARTIN E. RUVALCABA — No. C-75838 — Exp. 6/20/14 — CIVIL — STATE OF CALIFORNIA

The State of California or its officers or agents shall not be responsible for the accuracy or completeness of electronic copies of this plan sheet.

OCTA
550 SOUTH MAIN ST
ORANGE, CA 92863

PARSONS
2201 DUPONT DRIVE, SUITE 200
IRVINE, CA 92612

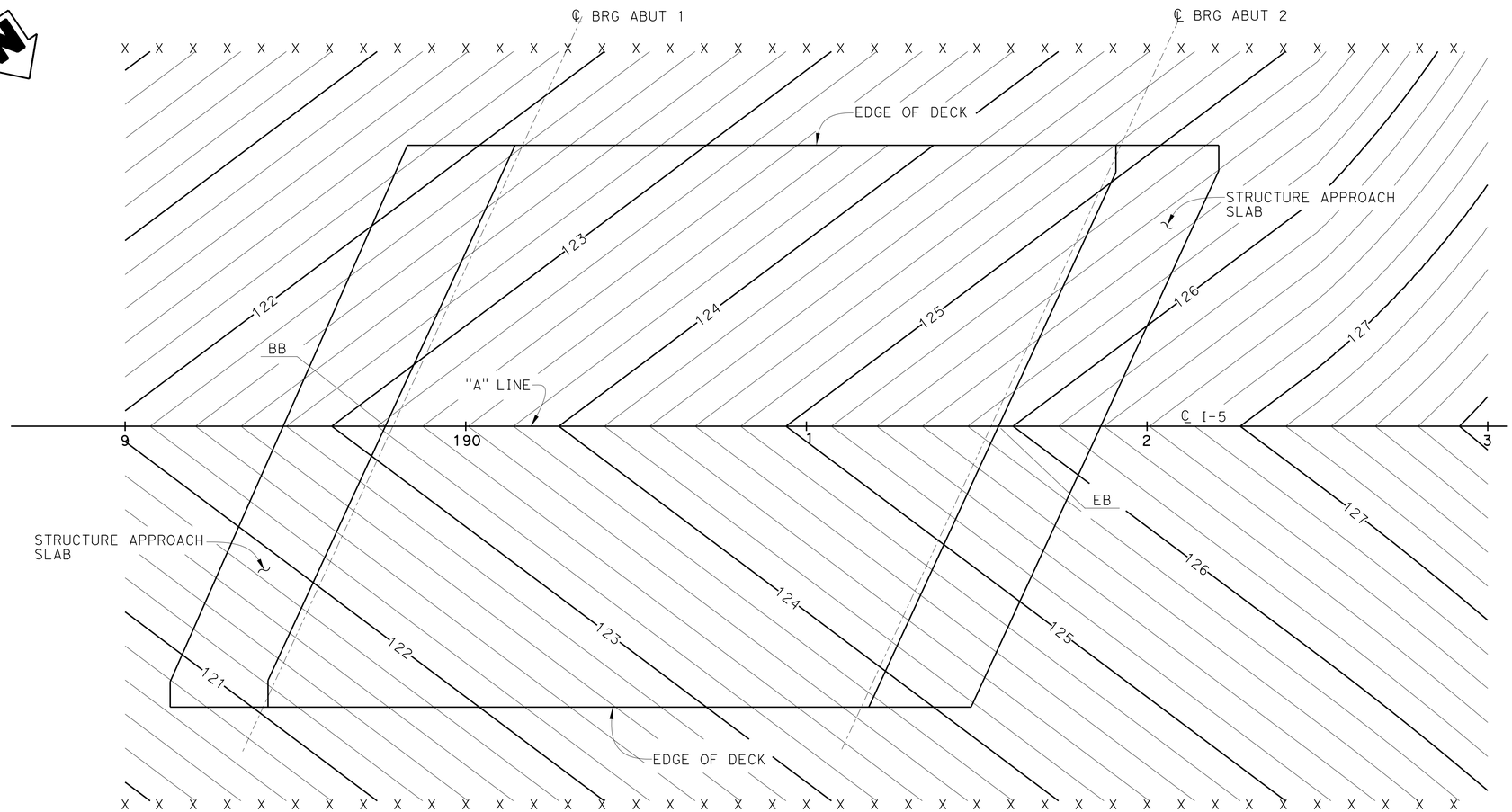

PLAN
1" = 20'

NOTES:

1. Contours Do Not Include Camber Or Falsework Settlement.
2. Contour Interval Is 0.2'.
3. X = 10' Interval Along Station Line.

NOTE: The Contractor Shall Verify All Controlling Field Dimensions Before Ordering Or Fabricating Any Material.

DESIGN OVERSIGHT Luqi Yang
7-10-13
SIGN OFF DATE

	BY	CHECKED
DESIGN	M. Ruvalcaba	E. Mobo
DETAILS	P. Johnson	E. Mobo
QUANTITIES	J. Fix	E. Mobo

PREPARED FOR THE STATE OF CALIFORNIA DEPARTMENT OF TRANSPORTATION

Mohsen Mohseni
PROJECT ENGINEER

BRIDGE NO. 55-1107
POST MILES 3.39

AVENIDA PICO UC (REPLACE)
DECK CONTOURS

DESIGN DETAIL SHEET (ENGLISH) (REV.7/16/10)

ORIGINAL SCALE IN INCHES FOR REDUCED PLANS 0 1 2 3

UNIT:
PROJECT NUMBER & PHASE: 12000202771 CONTRACT NO.: 12-0F96A4

DISREGARD PRINTS BEARING EARLIER REVISION DATES → 5/20/12 11/05/12 3/04/13 4/26/13

SHEET 3 OF 39

FILE => 55-1107-d-dc01.dgn

USERNAME => s128843 DATE PLOTTED => 07-AUG-2014 TIME PLOTTED => 13:04

DIST	COUNTY	ROUTE	POST MILES TOTAL PROJECT	SHEET No	TOTAL SHEETS
12	Ora	5	3.0/3.7	539	635

REGISTERED CIVIL ENGINEER — DATE 4/26/13

3-10-14
PLANS APPROVAL DATE

REGISTERED PROFESSIONAL ENGINEER — MARTIN E. RUVALCABA — No. C-75838 — Exp. 6/20/14 — CIVIL — STATE OF CALIFORNIA

The State of California or its officers or agents shall not be responsible for the accuracy or completeness of electronic copies of this plan sheet.

OCTA
550 SOUTH MAIN ST
ORANGE, CA 92863

PARSONS
2201 DUPONT DRIVE, SUITE 200
IRVINE, CA 92612

DATUM STATEMENT: HORIZONTAL CONTROL DATUM IS BASED ON THE CALIFORNIA STATE PLANE COORDINATE SYSTEM, ZONE VI. 1983 NORTH AMERICAN DATUM, 1991.35 EPOCH, ORANGE COUNTY ADJUSTMENT (FULL DESCRIPTIONS FOR EACH CONTROL STATION CAN BE OBTAINED FROM ORANGE COUNTY GEOMATICS OFFICE).

BENCHMARKS: DESCRIBED BY OCS 2003-FOUND 3¾" OCS ALUMINUM BENCHMARK DISK STAMPED "3Y-38-91", SET IN THE NORTHWESTERLY CORNER OF A 4 FT. BY 17 FT. CORNER CATCH BASIN. MONUMENT IS LOCATED IN THE SOUTHEASTERLY CORNER OF THE INTERSECTION OF AVENIDA PICO AND AVENIDA LA PATA, 50 FT. SOUTHERLY OF THE CENTERLINE OF AVENIDA LA PATA AND 90 FT. EASTERLY OF AVENIDA PICO. MONUMENT IS SET LEVEL WITH THE TOP OF THE CURB.

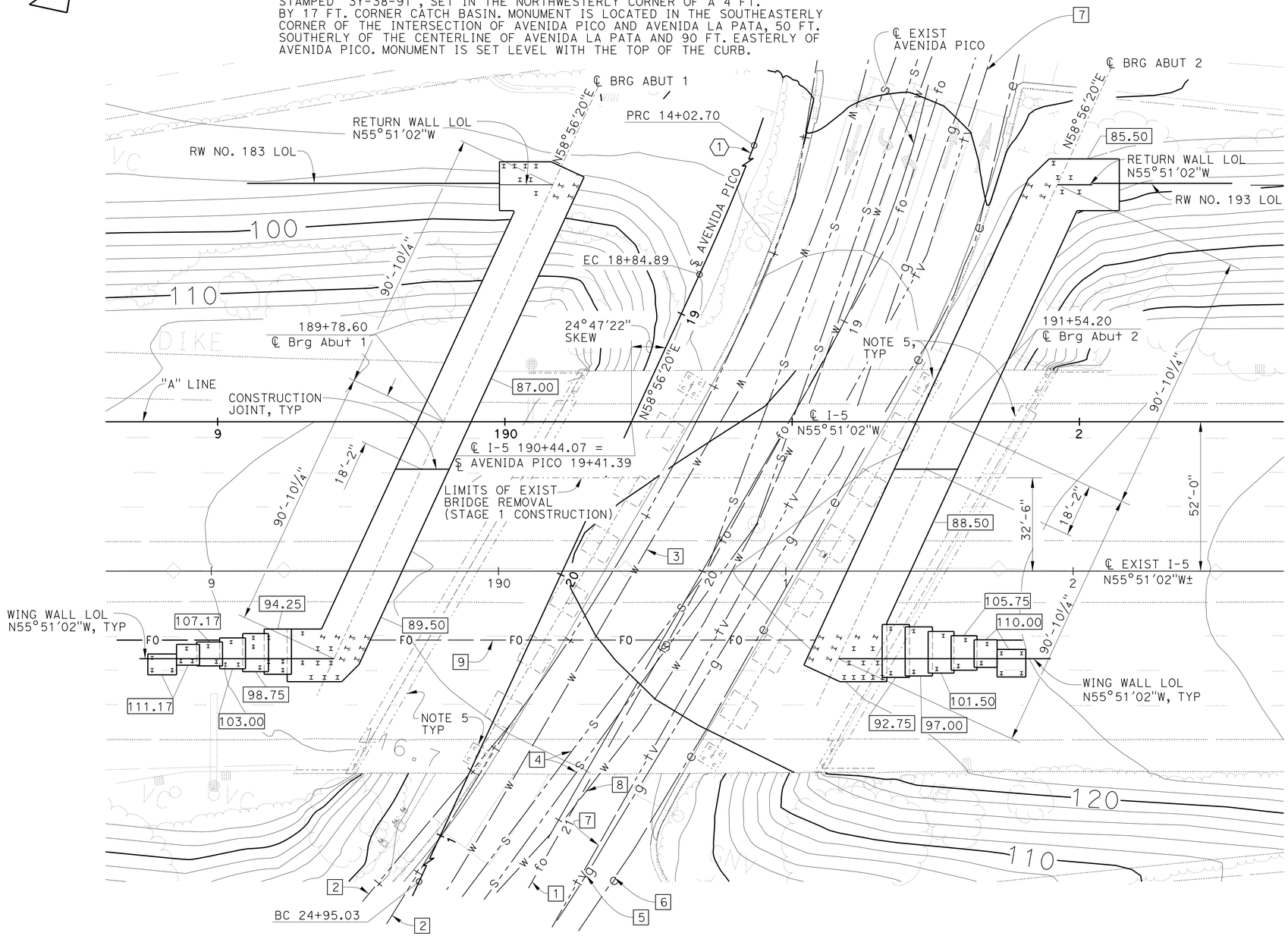

PLAN
1" = 20'

NOTE: The Contractor Shall Verify All Controlling Field Dimensions Before Ordering Or Fabricating Any Material.

LEGEND:

XX.XX	Indicates Bottom of Footing Elevation
H	Indicates Vertical Driven Steel H-pile
⇦H	Indicates 1:3 Battered Driven Steel H-pile (Batter in Direction of Arrow)

CURVE DATA (1)

R = 750.00'
Δ = 36°50'11"
L = 482.19'
T = 249.76'

NOTES:

1. All piles not shown.
2. Contours shown represent existing ground.
3. For "Pile Data Table" see "Foundation Details" sheet.
4. All utilities in conflict with foundations to be relocated.
5. Remove existing bridge foundations, see "Bridge Removal Plan" sheet.
6. The types & locations of all utilities are provided for information only. The Contractor shall verify all existing utilities & notify utility agencies prior to any removal, relocation or new construction. See "Road Plans" for utility details not shown.

EXISTING UTILITIES:

1. UG Fiber Cable (COX)
2. UG Cable (AT&T)
3. 10" Ø ACP Water (SCWD)
4. 8" Ø VCP Sewer
5. 10" Ø Gas (SCG)
6. 12" Kv Electric (SDG&E)
7. COAX Cable (COX)
8. 27" Ø CCP Water (TCMWD)

PROPOSED UTILITIES:

9. 2 - 4" Proposed Fiber Optic Conduits

GEOTECHNICAL PROFESSIONAL — APPROVAL DATE

DESIGN OVERSIGHT Luqi Yang — 7-10-13 — SIGN OFF DATE

SCALE: 1" = 20'	VERT.DATUM OCS 2003	HORZ.DATUM NAD 1983	
PHOTOGRAMMETRY AS OF: 01/12	ALIGNMENT TIES		
SURVEYED	BY Psomas	DRAFTED	BY Psomas
FIELD CHECKED	BY Psomas	CHECKED	BY Psomas

	BY	CHECKED
DESIGN	M. Ruvalcaba	E. Mobo
DETAILS	P. Johnson	E. Mobo
QUANTITIES	J. Fix	E. Mobo

PREPARED FOR THE STATE OF CALIFORNIA DEPARTMENT OF TRANSPORTATION

Mohsen Mohseni
PROJECT ENGINEER

BRIDGE NO. 55-1107
POST MILES 3.39

AVENIDA PICO UC (REPLACE)
FOUNDATION PLAN

FOUNDATION PLAN SHEET (ENGLISH) (REV.7/16/10)

ORIGINAL SCALE IN INCHES FOR REDUCED PLANS 0 1 2 3

UNIT:
PROJECT NUMBER & PHASE: 12000202771 CONTRACT NO.: 12-0F96A4

DISREGARD PRINTS BEARING EARLIER REVISION DATES — REVISION DATES 5/29/12 11/13/12 3/04/13 4/26/13

SHEET 4 OF 39

FILE => 55-1107-e-fdp101.dgn

USERNAME => s128843 DATE PLOTTED => 07-AUG-2014 TIME PLOTTED => 13:04

DIST	COUNTY	ROUTE	POST MILES TOTAL PROJECT	SHEET No	TOTAL SHEETS
12	Ora	5	3.0/3.7	540	635

REGISTERED CIVIL ENGINEER 4/26/13 DATE

3-10-14
PLANS APPROVAL DATE

REGISTERED PROFESSIONAL ENGINEER MARTIN E. RUVALCABA No. C-75838 Exp. 6/20/14 CIVIL STATE OF CALIFORNIA

The State of California or its officers or agents shall not be responsible for the accuracy or completeness of electronic copies of this plan sheet.

OCTA
550 SOUTH MAIN ST
ORANGE, CA 92863

PARSONS
2201 DUPONT DRIVE, SUITE 200
IRVINE, CA 92612

PILE DATA TABLE

Location		Pile Type	Nominal Resistance (kips) Compression	Nominal Resistance (kips) Tension	Design Tip Elevations (ft)	Specified Tip Elevations (ft)	Nominal Driving Resistance (kips)
			STAGE 1 BRIDGE (I-5 SOUTHBOUND)				
ABUTMENT 1		HP14x117	370	0	+20 (a); +50 (c) +41 (d)	+20	370
ABUTMENT 2		HP14x117	400	0	+38 (a); +59 (c) +44 (d)	+38	400
			STAGE 2 BRIDGE (I-5 NORTHBOUND)				
ABUTMENT 1		HP14x117	340	0	+24 (a); +50 (c) +44 (d)	+24	340
ABUTMENT 2		HP14x117	360	0	+42 (a); +59 (c) +47 (d)	+42	360
			WING WALLS (I-5 NORTHBOUND)				
ABUT 1 WING WALL	H=8′	HP10x57	60	0	+82 (a,c); +86 (d)	+82	60
	H=12′	HP10x57	80	10	+78 (a); +95 (b) +82 (c,d)	+78	80
	H=16′	HP10x57	140	10	+49 (a); +84 (b) +82 (c) +78 (d)	+49	140
	H=20′	HP10x57	180	20	+36 (a); +79 (b) +82 (c) +74 (d)	+36	180
	H=24′	HP10x57	150	20	+41 (a); +79 (b) +82 (c) +69 (d)	+41	150
ABUT 2 WING WALL	H=14′	HP10x57	110	10	+69 (a); +93 (b) +80 (c) +85 (d)	+69	110
	H=18′	HP10x57	170	0	+60 (a); +80 (c) +81 (d)	+60	170
	H=22′	HP10x57	180	30	+54 (a); +83 (b) +80 (c) +77 (d)	+54	180
	H=26′	HP10x57	160	20	+56 (a); +83 (b) +80 (c) +72 (d)	+56	160
	H=28′	HP10x57	160	30	+52 (a); +80 (b,c) +68 (d)	+52	160
ABUT 1 PILASTER	H=8′	HP10x57	50	10	+86 (a); +97 (b,c) +82 (d)	+86	50
ABUT 2 PILASTER	H=14′	HP10x57	90	20	+75 (a); +90 (b,c) +85 (d)	+75	90

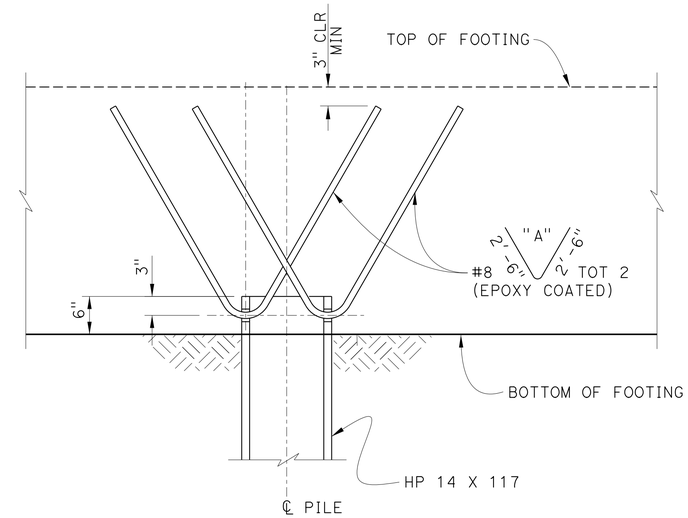

ELEVATION

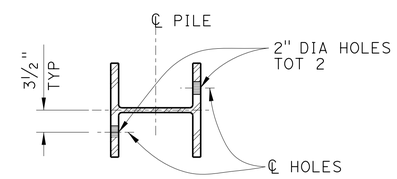

PLAN

STEEL PILE ANCHOR

½" = 1′-0"

LOCATION	"A"
Exterior Piles With ℄ Pile To Edge Of Footing Distance Of 1′-6" Min	30°
Interior Piles	60°

NOTES:

1. Design Tip Elevations For ABUTMENTs Are Controlled By The Following Demands: (a) Compression, (b) Tension, (c) Settlement, (d) Lateral Load.
2. The Specified Tip Elevations Shall Not Be Raised Above The Design Tip Elevations For Tension, Settlement And Lateral Load.

NOTE: The Contractor Shall Verify All Controlling Field Dimensions Before Ordering Or Fabricating Any Material.

DESIGN OVERSIGHT Luqi Yang
7-10-13
SIGN OFF DATE

	BY	CHECKED
DESIGN	M. Ruvalcaba	E. Mobo
DETAILS	P. Johnson	E. Mobo
QUANTITIES	J. Fix	E. Mobo

PREPARED FOR THE STATE OF CALIFORNIA DEPARTMENT OF TRANSPORTATION

Mohsen Mohseni
PROJECT ENGINEER

BRIDGE NO. 55-1107
POST MILES 3.39

AVENIDA PICO UC (REPLACE)
FOUNDATION DETAILS

DESIGN DETAIL SHEET (ENGLISH) (REV.7/16/10)

ORIGINAL SCALE IN INCHES FOR REDUCED PLANS 0 1 2 3

UNIT:
PROJECT NUMBER & PHASE: 12000202771 CONTRACT NO.: 12-0F96A4

DISREGARD PRINTS BEARING EARLIER REVISION DATES

REVISION DATES 5/29/12 11/15/12 3/28/13 4/26/13

SHEET 5 OF 39

FILE => 55-1107-e-fdpldt01.dgn

USERNAME => s128843 DATE PLOTTED => 07-AUG-2014 TIME PLOTTED => 13:04

DIST	COUNTY	ROUTE	POST MILES TOTAL PROJECT	SHEET No	TOTAL SHEETS
12	Ora	5	3.0/3.7	541	635

REGISTERED CIVIL ENGINEER 4/26/13 DATE

3-10-14
PLANS APPROVAL DATE

REGISTERED PROFESSIONAL ENGINEER MARTIN E. RUVALCABA No. C-75838 Exp. 6/20/14 CIVIL STATE OF CALIFORNIA

The State of California or its officers or agents shall not be responsible for the accuracy or completeness of electronic copies of this plan sheet.

OCTA
550 SOUTH MAIN ST
ORANGE, CA 92863

PARSONS
2201 DUPONT DRIVE, SUITE 200
IRVINE, CA 92612

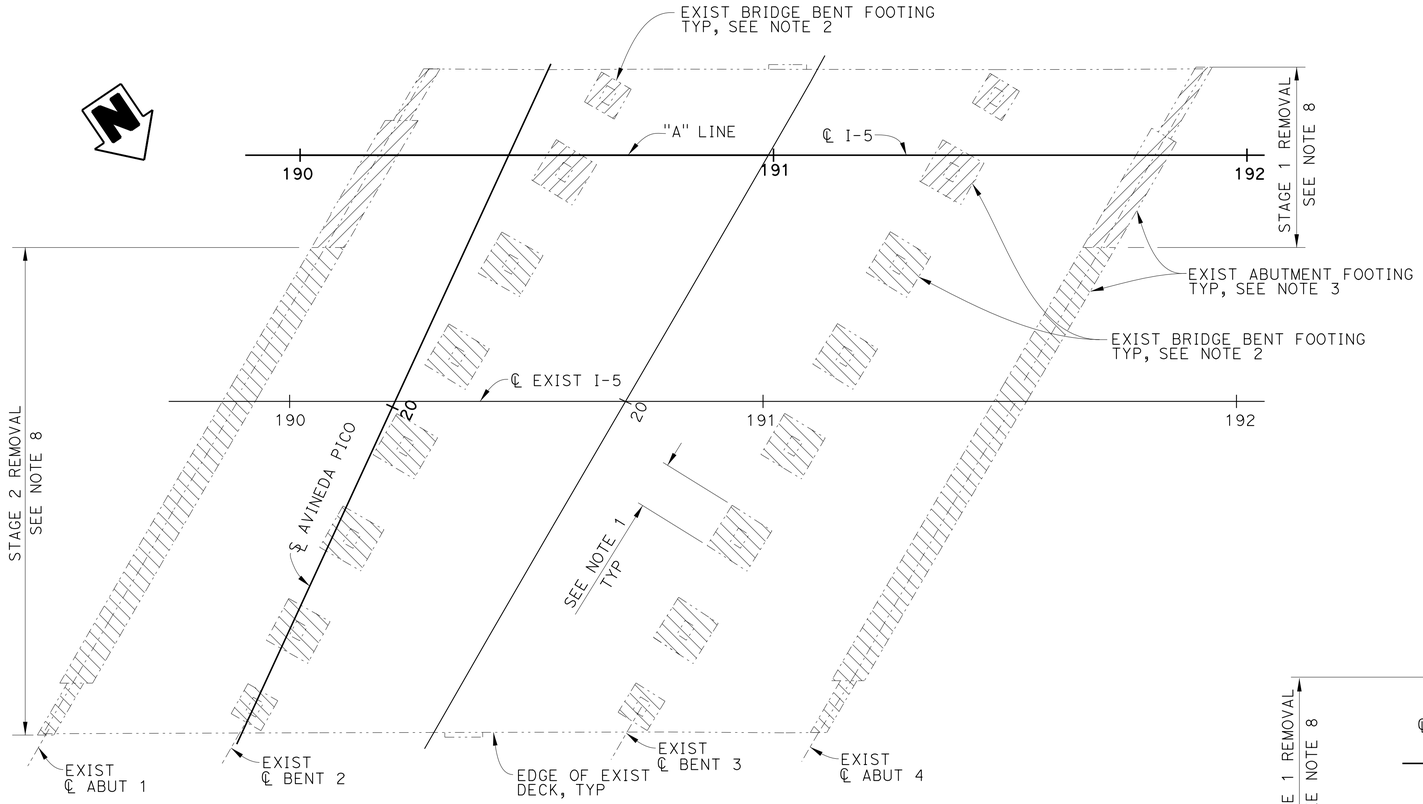

NOTE: All Piles Not Shown.

PLAN - EXISTING BRIDGE SUBSTRUCTURE REMOVAL

1/16" = 1'-0"

TEMPORARY SUPPORT DESIGN LOADING		
VERTICAL LOADS		
LOCATION	DESIGN LOADING (UNFACTORED)	
	DEAD LOAD (KIPS)	LIVE LOAD+ IMPACT (KIPS)
G-7	243	173
G-9	195	137
LATERAL LOADS		
Lateral Load = 0.02 X Dead Loads		
Specified Minimum Stiffness = 0 Kip/Ft		

LEGEND:

Indicates Existing Bridge Removal Stage 1

Indicates Existing Bridge Removal Stage 2

Temporary Support

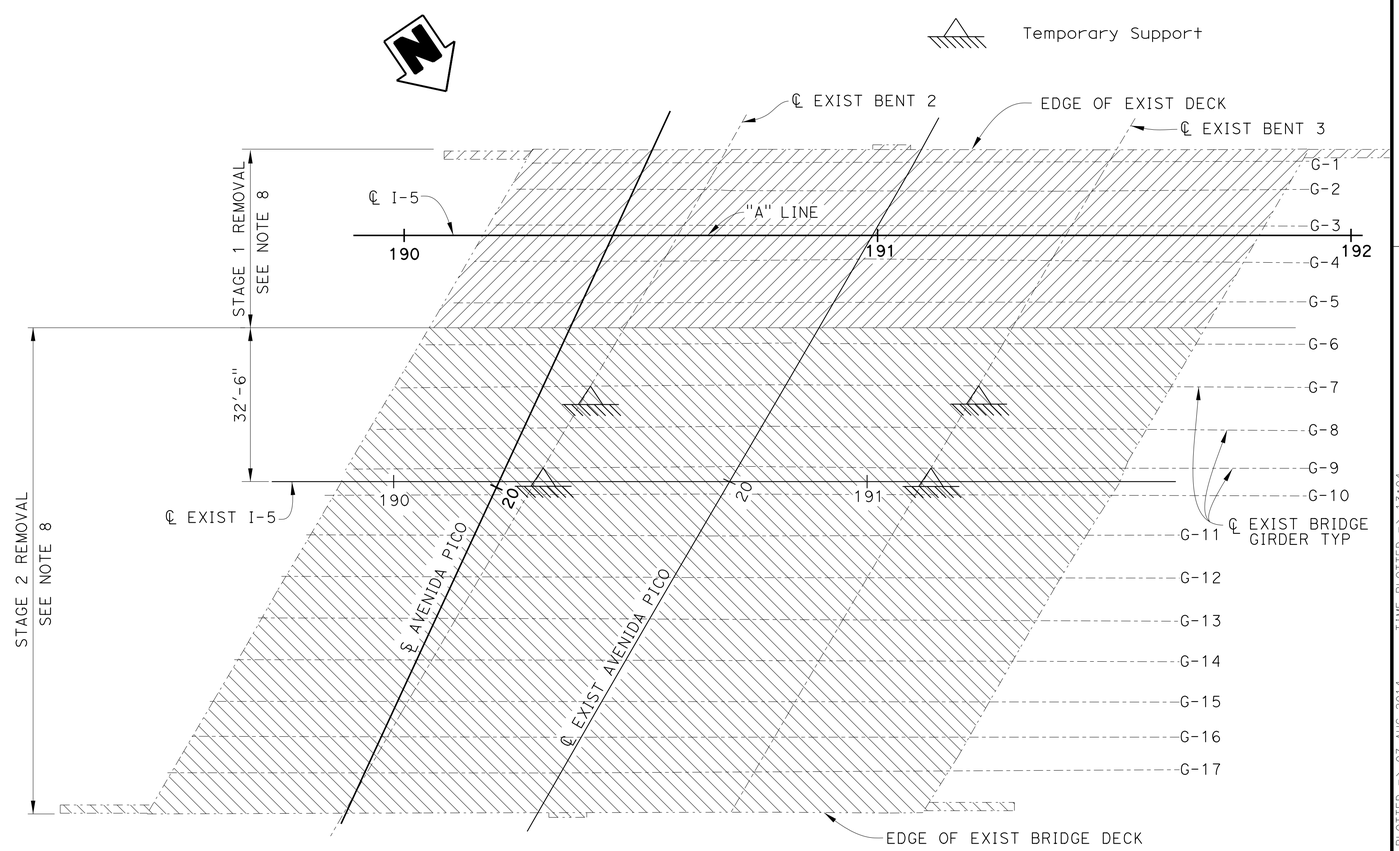

PLAN - EXISTING BRIDGE SUPERSTRUCTURE REMOVAL

1/16" = 1'-0"

NOTES:

1. For Existing Bridge Dimensions, Elevations, Details And Information Not Shown, See "As-Built Plans."
2. Completely Remove Existing Bent Footing and Exist Piles, Where Occurs, Down to 3'-0" Min Below the Bottom Of Footing.
3. Completely Remove Existing Abutment, Wingwall, Abutment Footing and Exist Piles Down To 3'-0" Min Below Bottom of Footing.
4. All Loads Shown Are In Addition To Those Required For Falsework Construction As Specified In Caltrans Standard Specifications Section 48-2.01D(3)(b). All Loads Shown Are Unfactored. Live Load Is HS-20 Loading Only.
5. Temporary Support Shall Be Pre-Loaded To 75% Of The Dead Loads Shown At Each Girder, Prior To Any Bridge Removal.
6. Temporary Supports Shall Be Designed For 100% Of The Dead Load Plus 100% Live Load Plus Impact.
7. Temporary Supports Are Required Directly Underneath Girder G-7 & G-9 At Intersection With Centerline of Bent Cap As Shown.
8. For Limits Of Bridge Removal At Each Construction Stage, See "Stage Construction" Sheet.

NOTE: The Contractor Shall Verify All Controlling Field Dimensions Before Ordering Or Fabricating Any Material.

DESIGN OVERSIGHT Luqi Yang
7-10-13
SIGN OFF DATE

	BY	CHECKED
DESIGN	M. Ruvalcaba	E. Mobo
DETAILS	P. Johnson	E. Mobo
QUANTITIES	J. Fix	E. Mobo

PREPARED FOR THE STATE OF CALIFORNIA DEPARTMENT OF TRANSPORTATION

Mohsen Mohseni
PROJECT ENGINEER

BRIDGE NO. 55-1107
POST MILES 3.39

AVENIDA PICO UC (REPLACE)
BRIDGE REMOVAL

DESIGN DETAIL SHEET (ENGLISH) (REV.7/16/10)

ORIGINAL SCALE IN INCHES FOR REDUCED PLANS 0 1 2 3

UNIT:
PROJECT NUMBER & PHASE: 12000202771 CONTRACT NO.: 12-0F96A4

DISREGARD PRINTS BEARING EARLIER REVISION DATES

REVISION DATES 5/20/12 11/15/12 3/04/13 4/26/13

SHEET 6 OF 39

FILE => 55-1107-e-remov01.dgn

USERNAME => s128843 DATE PLOTTED => 07-AUG-2014 TIME PLOTTED => 13:04

DIST	COUNTY	ROUTE	POST MILES TOTAL PROJECT	SHEET No	TOTAL SHEETS
12	Ora	5	3.0/3.7	542	635

REGISTERED CIVIL ENGINEER — DATE 4/26/13

3-10-14
PLANS APPROVAL DATE

REGISTERED PROFESSIONAL ENGINEER — MARTIN E. RUVALCABA — No. C-75838 — Exp. 6/20/14 — CIVIL — STATE OF CALIFORNIA

The State of California or its officers or agents shall not be responsible for the accuracy or completeness of electronic copies of this plan sheet.

OCTA
550 SOUTH MAIN ST
ORANGE, CA 92863

PARSONS
2201 DUPONT DRIVE, SUITE 200
IRVINE, CA 92612

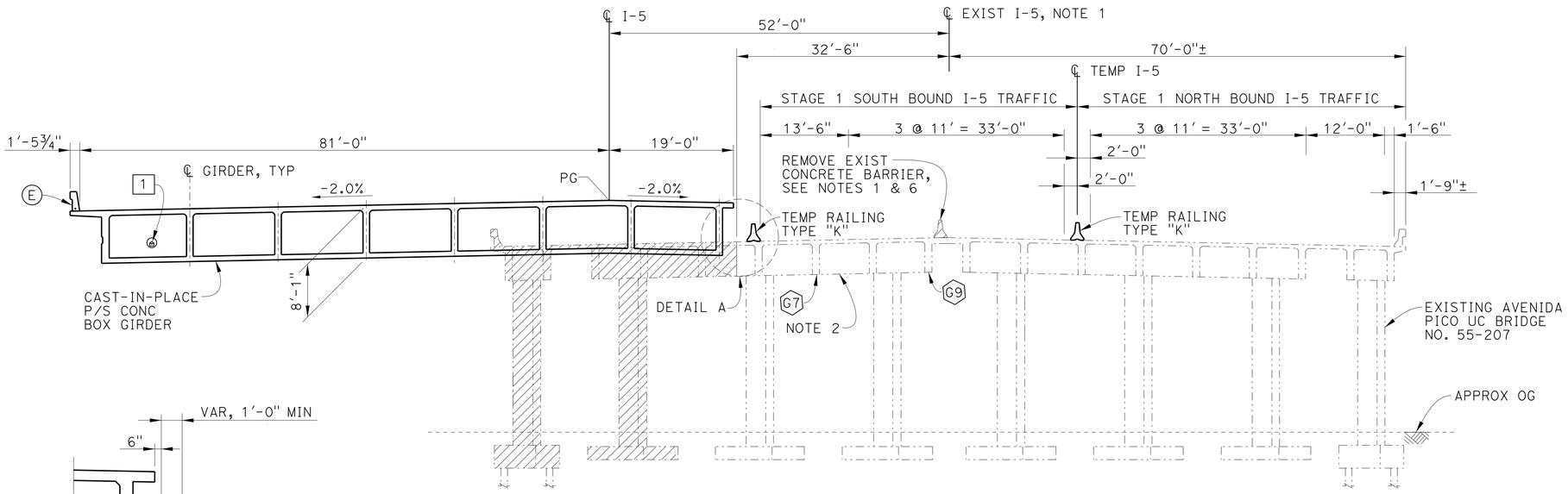

Note: All Piles Not Shown.

TYPICAL SECTION - STAGE 1 CONSTRUCTION

1" = 10'-0"

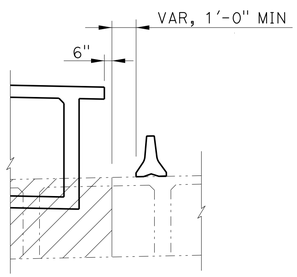

DETAIL A

1" = 5'-0"

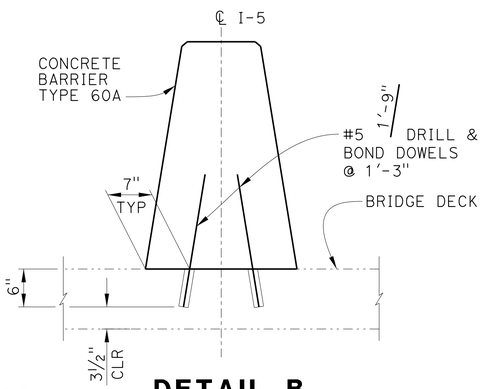

DETAIL B

1" = 1'-0"

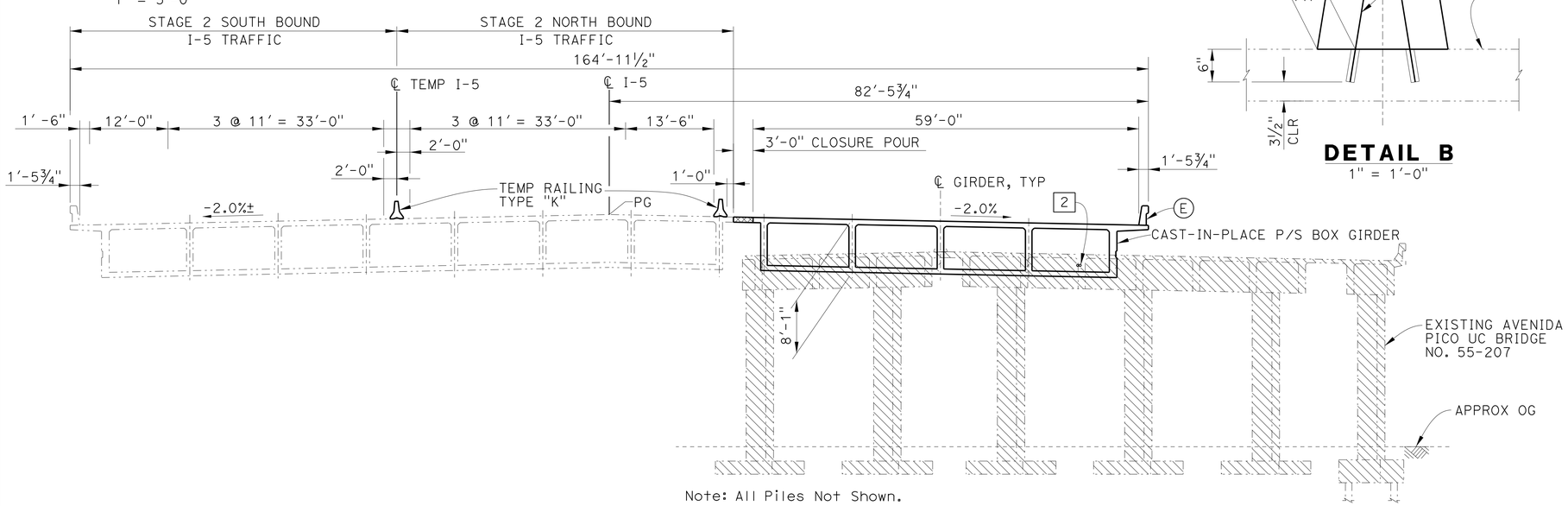

Note: All Piles Not Shown.

TYPICAL SECTION - STAGE 2 CONSTRUCTION

1" = 10'-0"

LEGEND:

- Indicates Exist Bridge Removal Stage 1
- Indicates Exist Bridge Removal Stage 2
- Closure Pour
- G7 G9 Temporary Girder/Bent Support. For Location See "Bridge Removal Plan" Sheet

NOTE:

E Concrete Barrier Type 736, Mod

UTILITIES:

1 4" Supply Line (Bridge)

2 4"ø Fiberoptic Conduit

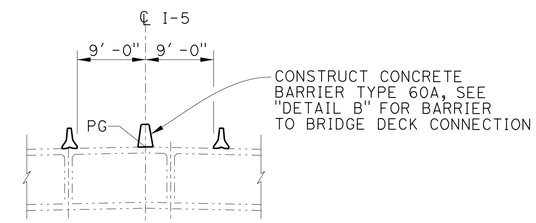

PART TYPICAL SECTION STAGE 3 CONSTRUCTION

1" = 10'-0"

NOTES:

1. Centerline Of Existing I-5 May Not Correspond To The Centerline Of Existing Concrete Barrier.
2. For Stage Construction plans, See "Road Plans".
3. For Dimensions And Details Of Existing Structure, See As Built Plans.
4. For Bridge Removal Details, See "Bridge Removal Plan" Sheet.
5. For Temporary Support Design Loading At Each Bent, See "Bridge Removal Plan" Sheet.
6. Repair Exist Bridge Deck Underneath the Exist Conc Barrier with Polyester Concrete.

NOTE: The Contractor Shall Verify All Controlling Field Dimensions Before Ordering Or Fabricating Any Material.

Luqi Yang
DESIGN OVERSIGHT — Luqi Yang
7-10-13
SIGN OFF DATE

	BY	CHECKED
DESIGN	M. Ruvalcaba	E. Mobo
DETAILS	P. Johnson	E. Mobo
QUANTITIES	J. Fix	E. Mobo

PREPARED FOR THE STATE OF CALIFORNIA DEPARTMENT OF TRANSPORTATION

Mohsen Mohseni
PROJECT ENGINEER

BRIDGE NO. 55-1107
POST MILES 3.39

AVENIDA PICO UC (REPLACE)
STAGE CONSTRUCTION

DESIGN DETAIL SHEET (ENGLISH) (REV.7/16/10)

ORIGINAL SCALE IN INCHES FOR REDUCED PLANS 0 1 2 3

UNIT:
PROJECT NUMBER & PHASE: 12000202771 CONTRACT NO.: 12-0F96A4

DISREGARD PRINTS BEARING EARLIER REVISION DATES

REVISION DATES: 5/29/12 11/15/12 3/04/13 4/26/13

SHEET 7 OF 39

FILE => 55-1107-e-stcnst.dgn

USERNAME => s128843 DATE PLOTTED => 07-AUG-2014 TIME PLOTTED => 13:04

DIST	COUNTY	ROUTE	POST MILES TOTAL PROJECT	SHEET No	TOTAL SHEETS
12	Ora	5	3.0/3.7	543	635

REGISTERED CIVIL ENGINEER 4/26/13 DATE

3-10-14
PLANS APPROVAL DATE

The State of California or its officers or agents shall not be responsible for the accuracy or completeness of electronic copies of this plan sheet.

REGISTERED PROFESSIONAL ENGINEER MARTIN E. RUVALCABA No. C-75838 Exp. 6/20/14 CIVIL STATE OF CALIFORNIA

OCTA
550 SOUTH MAIN ST
ORANGE, CA 92863

PARSONS
2201 DUPONT DRIVE, SUITE 200
IRVINE, CA 92612

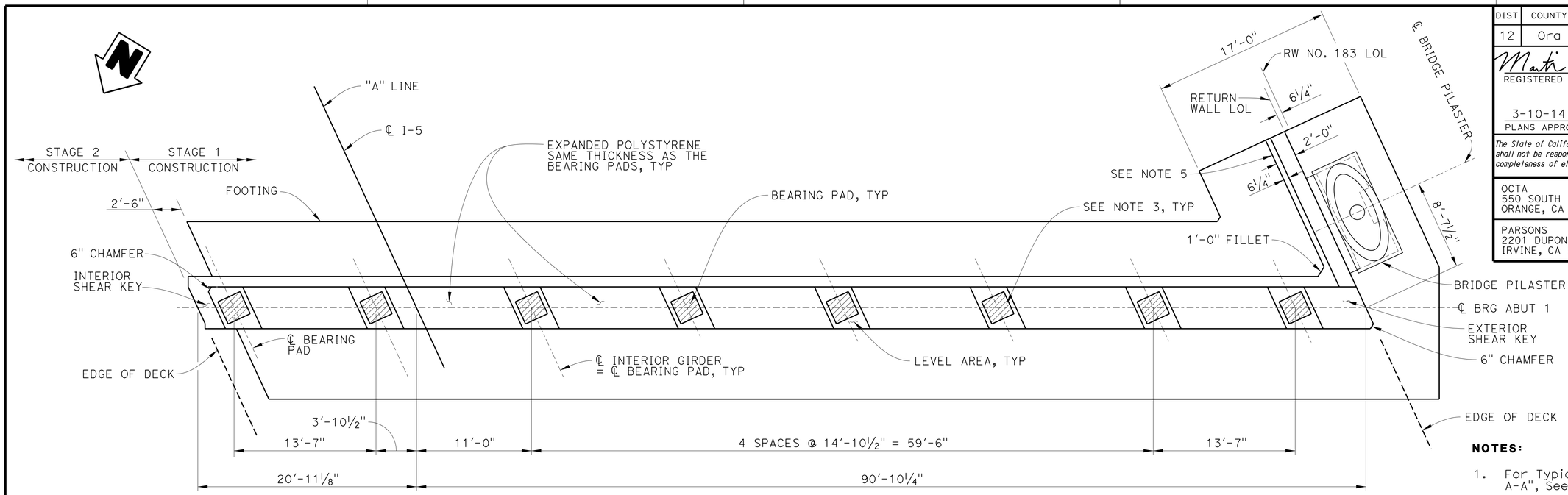

PLAN

3/16" = 1'-0"

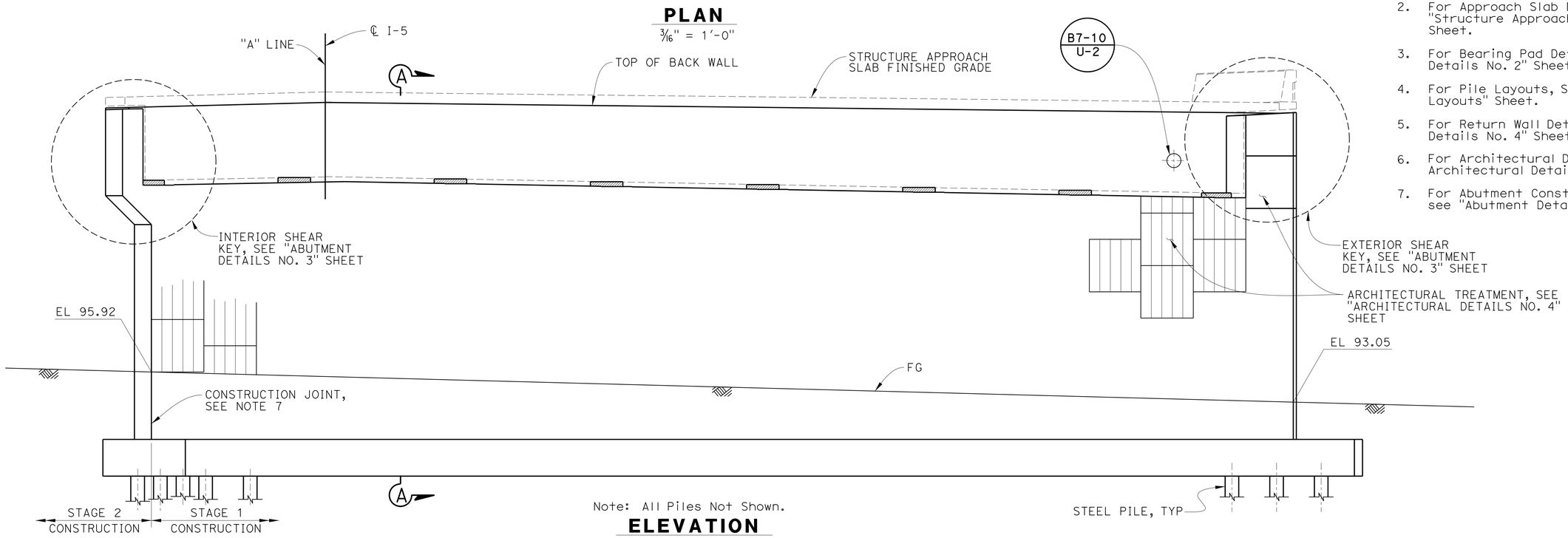

Note: All Piles Not Shown.

ELEVATION

3/16" = 1'-0"

NOTES:

1. For Typical Abutment Section,"Section A-A", See "Abutment Details No. 1" Sheet.
2. For Approach Slab Drainage Details, See "Structure Approach Drainage Details" Sheet.
3. For Bearing Pad Details, See "Abutment Details No. 2" Sheet.
4. For Pile Layouts, See "Abutment Pile Layouts" Sheet.
5. For Return Wall Details, See "Abutment Details No. 4" Sheet.
6. For Architectural Details, See Architectural Details Sheets.
7. For Abutment Construction Joint Detail, see "Abutment Details No. 4" sheet.

NOTE: The Contractor Shall Verify All Controlling Field Dimensions Before Ordering Or Fabricating Any Material.

DESIGN OVERSIGHT Luqi Yang
7-10-13
SIGN OFF DATE

	BY	CHECKED
DESIGN	M. Ruvalcaba	E. Mobo
DETAILS	P. Johnson	E. Mobo
QUANTITIES	J. Fix	E. Mobo

PREPARED FOR THE STATE OF CALIFORNIA DEPARTMENT OF TRANSPORTATION

Mohsen Mohseni
PROJECT ENGINEER

BRIDGE NO. 55-1107
POST MILES 3.39

AVENIDA PICO UC (REPLACE)

ABUTMENT 1 LAYOUT - STAGE 1 CONSTRUCTION

DESIGN DETAIL SHEET (ENGLISH) (REV.7/16/10)

ORIGINAL SCALE IN INCHES FOR REDUCED PLANS 0 1 2 3

UNIT:
PROJECT NUMBER & PHASE: 12000202771 CONTRACT NO.: 12-0F96A4

DISREGARD PRINTS BEARING EARLIER REVISION DATES → 5/20/12 11/05/12 3/04/13 4/26/13

SHEET 8 OF 39

FILE => 55-1107-f-a01_l01.dgn

USERNAME => s128843 DATE PLOTTED => 07-AUG-2014 TIME PLOTTED => 13:04

DIST	COUNTY	ROUTE	POST MILES TOTAL PROJECT	SHEET No	TOTAL SHEETS
12	Ora	5	3.0/3.7	544	635

REGISTERED CIVIL ENGINEER 4/26/13 DATE

3-10-14
PLANS APPROVAL DATE

The State of California or its officers or agents shall not be responsible for the accuracy or completeness of electronic copies of this plan sheet.

REGISTERED PROFESSIONAL ENGINEER MARTIN E. RUVALCABA No. C-75838 Exp. 6/20/14 CIVIL STATE OF CALIFORNIA

OCTA
550 SOUTH MAIN ST
ORANGE, CA 92863

PARSONS
2201 DUPONT DRIVE, SUITE 200
IRVINE, CA 92612

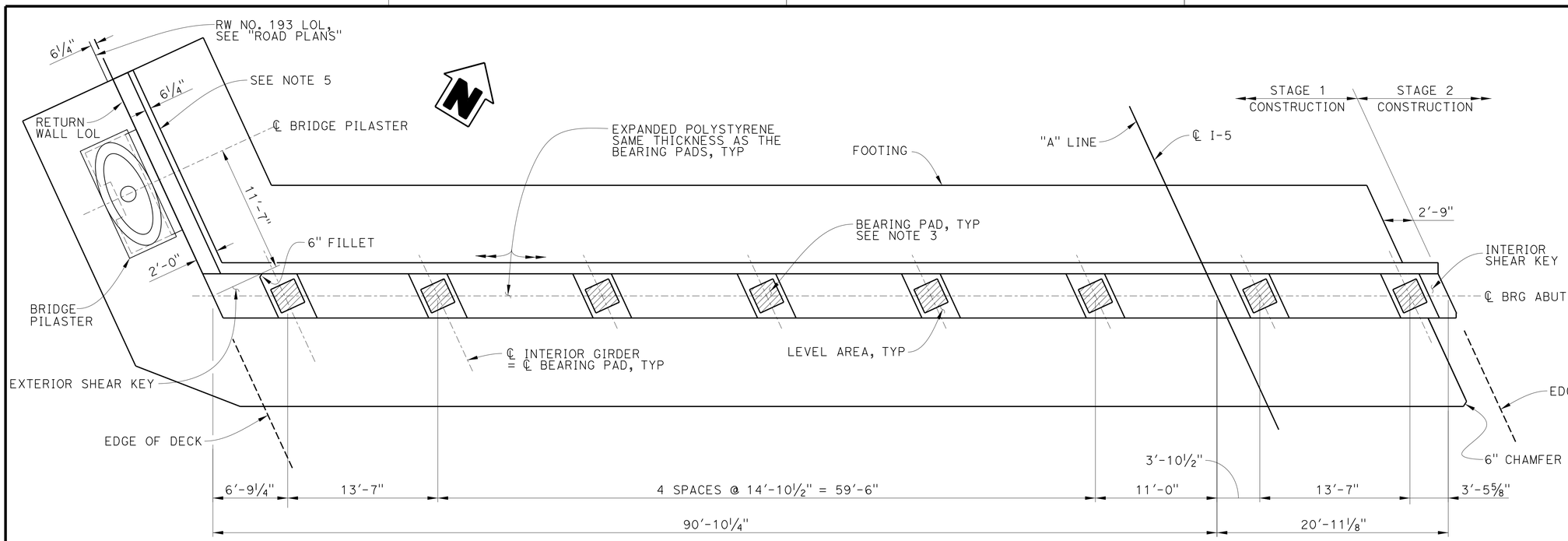

PLAN
3/16" = 1'-0"

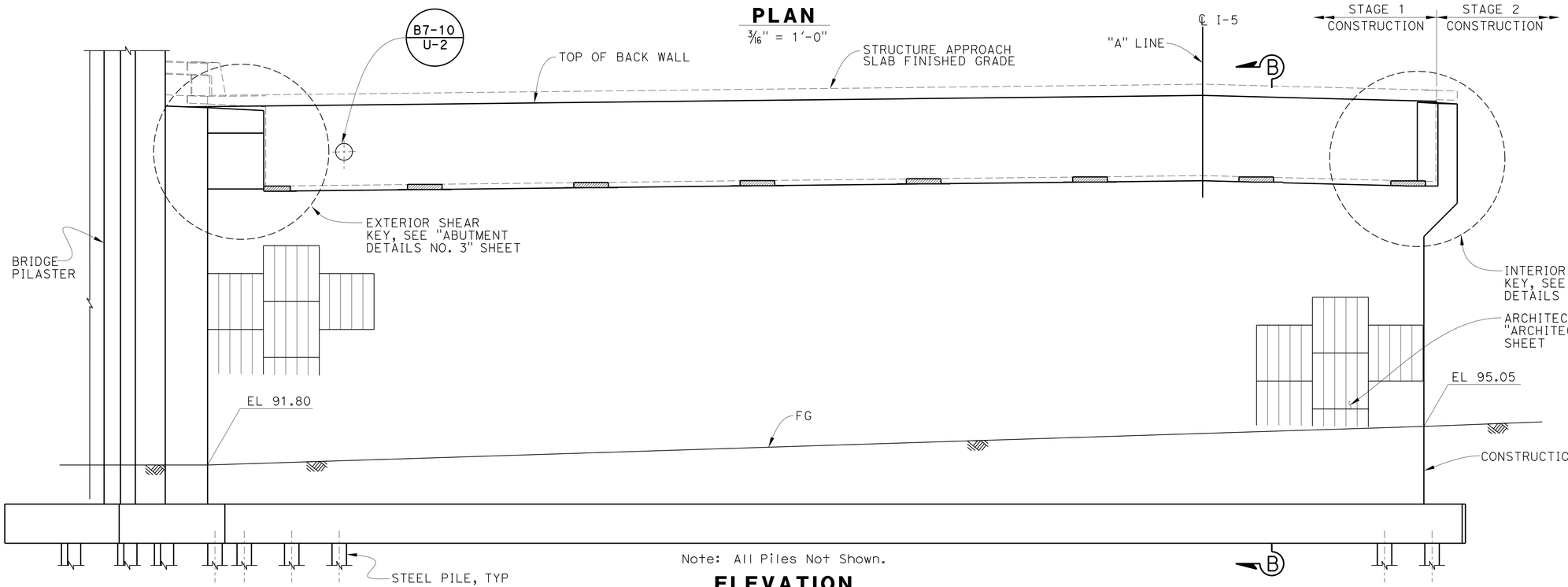

Note: All Piles Not Shown.

ELEVATION
3/16" = 1'-0"

NOTE: The Contractor Shall Verify All Controlling Field Dimensions Before Ordering Or Fabricating Any Material.

NOTES:

1. For Typical Abutment Section,"Section B-B", See "Abutment Details No. 1" Sheet.
2. For Approach Slab Drainage Details, See "Structure Approach Drainage Details" Sheet.
3. For Bearing Pad Details, See "Abutment Details No. 2" Sheet.
4. For Pile Layouts, See "Abutment Pile Layouts" Sheet.
5. For Return Wall Details, See "Abutment Details No. 4" Sheet.
6. For Architectural Details, See Architectural Details Sheet.
7. For Abutment Construction Joint Detail, See "Abutment Details No. 4" sheet.

Luqi Yang
DESIGN OVERSIGHT Luqi Yang
7-10-13
SIGN OFF DATE

	BY	CHECKED
DESIGN	M. Ruvalcaba	E. Mobo
DETAILS	P. Johnson	E. Mobo
QUANTITIES	J. Fix	E. Mobo

PREPARED FOR THE STATE OF CALIFORNIA DEPARTMENT OF TRANSPORTATION

Mohsen Mohseni
PROJECT ENGINEER

BRIDGE NO. 55-1107
POST MILES 3.39

AVENIDA PICO UC (REPLACE)
ABUTMENT 2 LAYOUT - STAGE 1 CONSTRUCTION

DESIGN DETAIL SHEET (ENGLISH) (REV.7/16/10)

ORIGINAL SCALE IN INCHES FOR REDUCED PLANS 0 1 2 3

UNIT:
PROJECT NUMBER & PHASE: 12000202771 CONTRACT NO.: 12-0F96A4

DISREGARD PRINTS BEARING EARLIER REVISION DATES

REVISION DATES 5/29/12 11/15/12 3/04/13 4/26/13 SHEET 9 OF 39

FILE => 55-1107-f-a01_l02.dgn

USERNAME => s128843 DATE PLOTTED => 07-AUG-2014 TIME PLOTTED => 13:04

DIST	COUNTY	ROUTE	POST MILES TOTAL PROJECT	SHEET No	TOTAL SHEETS
12	Ora	5	3.0/3.7	545	635

REGISTERED CIVIL ENGINEER 4/26/13 DATE

3-10-14
PLANS APPROVAL DATE

REGISTERED PROFESSIONAL ENGINEER MARTIN E. RUVALCABA No. C-75838 Exp. 6/20/14 CIVIL STATE OF CALIFORNIA

The State of California or its officers or agents shall not be responsible for the accuracy or completeness of electronic copies of this plan sheet.

OCTA
550 SOUTH MAIN ST
ORANGE, CA 92863

PARSONS
2201 DUPONT DRIVE, SUITE 200
IRVINE, CA 92612

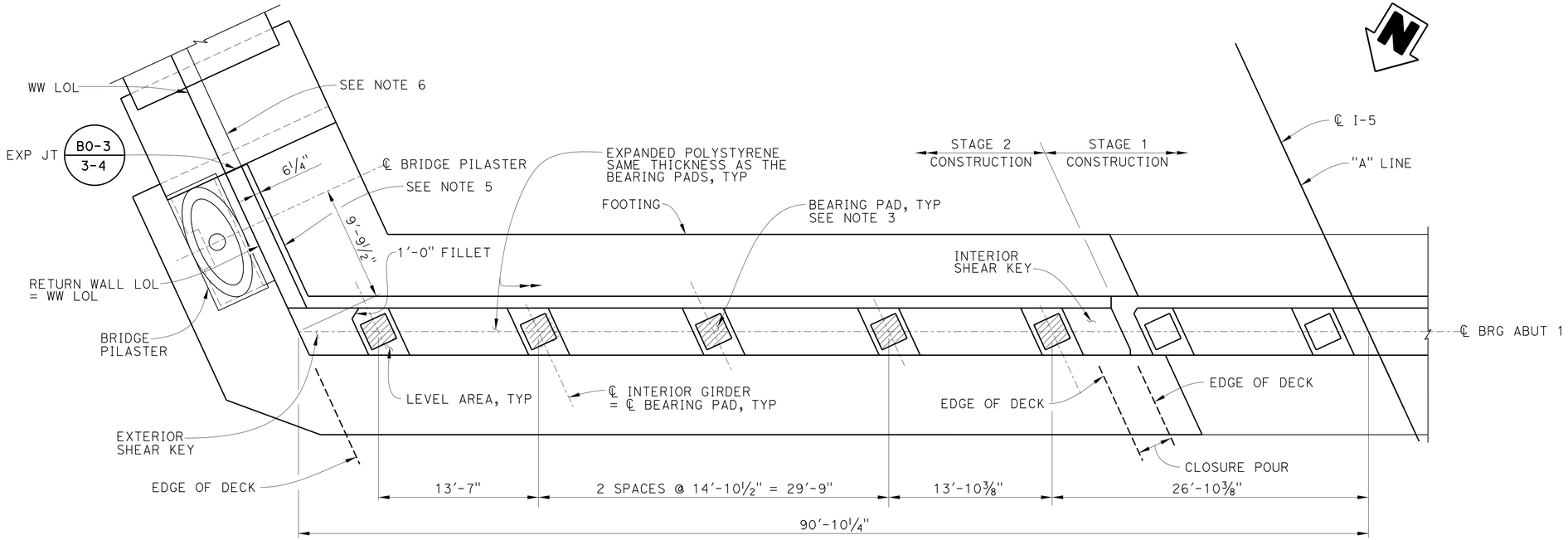

PLAN

3/16" = 1'-0"

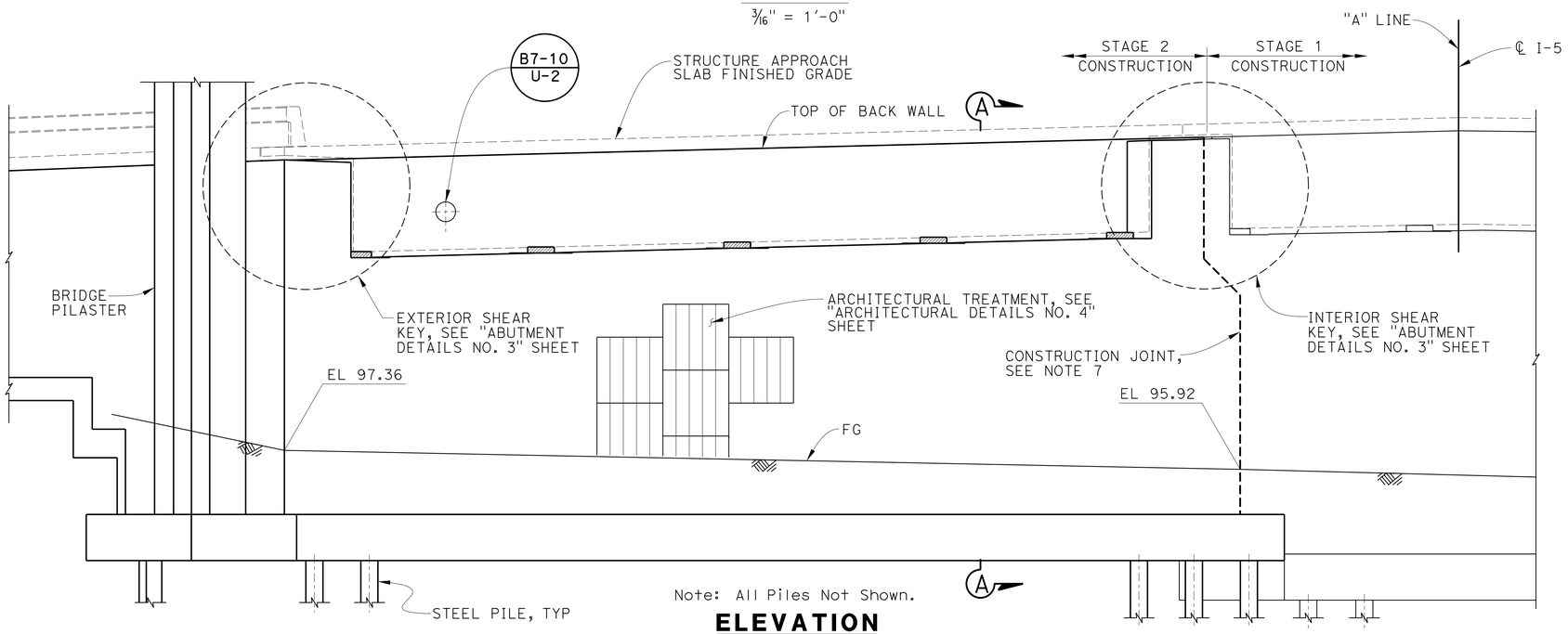

Note: All Piles Not Shown.

ELEVATION

3/16" = 1'-0"

NOTES:

1. For Typical "Section A-A", See "Abutment Details No. 1" Sheet.
2. For Approach Slab Drainage Details, See "Structure Approach Drainage Details" Sheet.
3. For Bearing Pad Details, See "Abutment Details No. 2" Sheet.
4. For Pile Layouts, See "Abutment Pile Layouts" Sheet.
5. For Return Wall Details, See "Abutment Details No. 4" Sheet.
6. For Wing Wall Layout and Details, See "Abutment 1 Wing Wall Layout" Sheet.
7. For Abutment Construction Joint Detail, see "Abutment Details No. 4" sheet.

NOTE: The Contractor Shall Verify All Controlling Field Dimensions Before Ordering Or Fabricating Any Material.

DESIGN OVERSIGHT Luqi Yang
7-10-13
SIGN OFF DATE

	BY	CHECKED
DESIGN	M. Ruvalcaba	E. Mobo
DETAILS	P. Johnson	E. Mobo
QUANTITIES	J. Fix	E. Mobo

PREPARED FOR THE STATE OF CALIFORNIA DEPARTMENT OF TRANSPORTATION

Mohsen Mohseni
PROJECT ENGINEER

BRIDGE NO. 55-1107
POST MILES 3.39

AVENIDA PICO UC (REPLACE)

ABUTMENT 1 LAYOUT - STAGE 2 CONSTRUCTION

DESIGN DETAIL SHEET (ENGLISH) (REV.7/16/10)

ORIGINAL SCALE IN INCHES FOR REDUCED PLANS 0 1 2 3

UNIT:
PROJECT NUMBER & PHASE: 12000202771 CONTRACT NO.: 12-0F96A4

DISREGARD PRINTS BEARING EARLIER REVISION DATES

REVISION DATES: 5/20/12 11/15/12 3/04/13 4/26/13

SHEET 10 OF 39

FILE => 55-1107-f-a02_101.dgn

USERNAME => s128843 DATE PLOTTED => 07-AUG-2014 TIME PLOTTED => 13:04

DIST	COUNTY	ROUTE	POST MILES TOTAL PROJECT	SHEET No	TOTAL SHEETS
12	Ora	5	3.0/3.7	546	635

REGISTERED CIVIL ENGINEER 4/26/13 DATE

3-10-14
PLANS APPROVAL DATE

The State of California or its officers or agents shall not be responsible for the accuracy or completeness of electronic copies of this plan sheet.

REGISTERED PROFESSIONAL ENGINEER MARTIN E. RUVALCABA No. C-75838 Exp. 6/20/14 CIVIL STATE OF CALIFORNIA

OCTA
550 SOUTH MAIN ST
ORANGE, CA 92863

PARSONS
2201 DUPONT DRIVE, SUITE 200
IRVINE, CA 92612

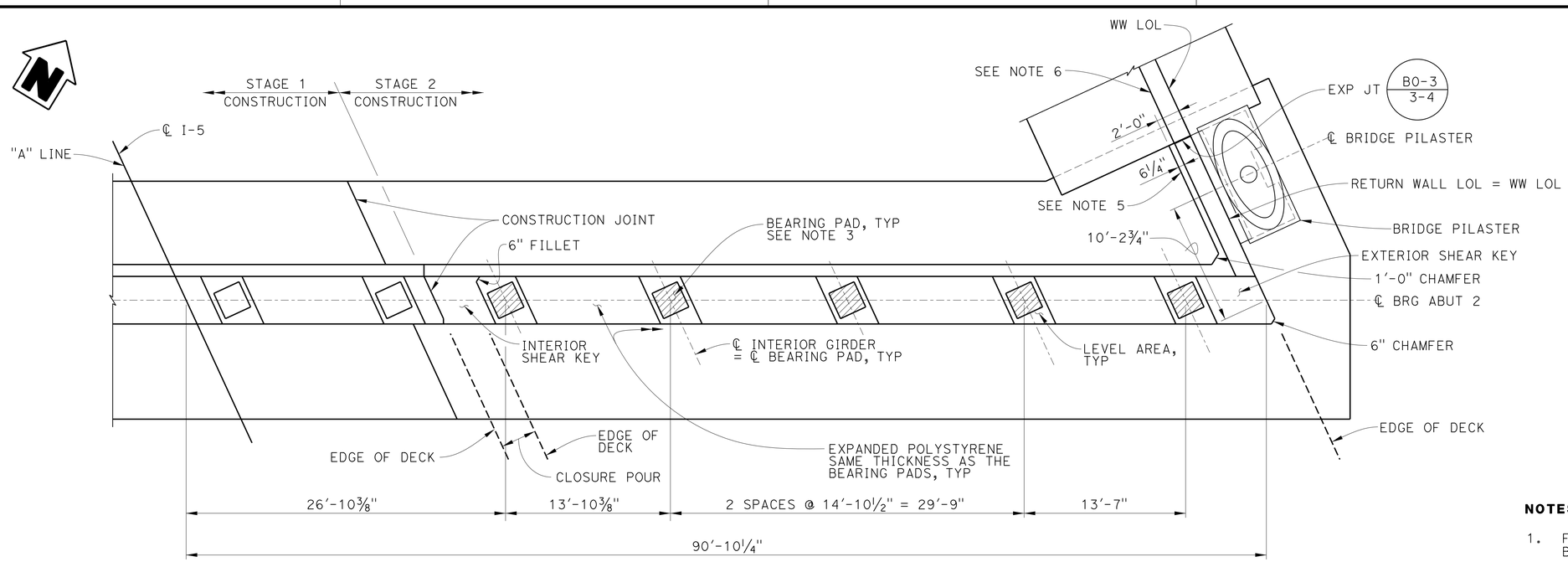

PLAN

3/16" = 1'-0"

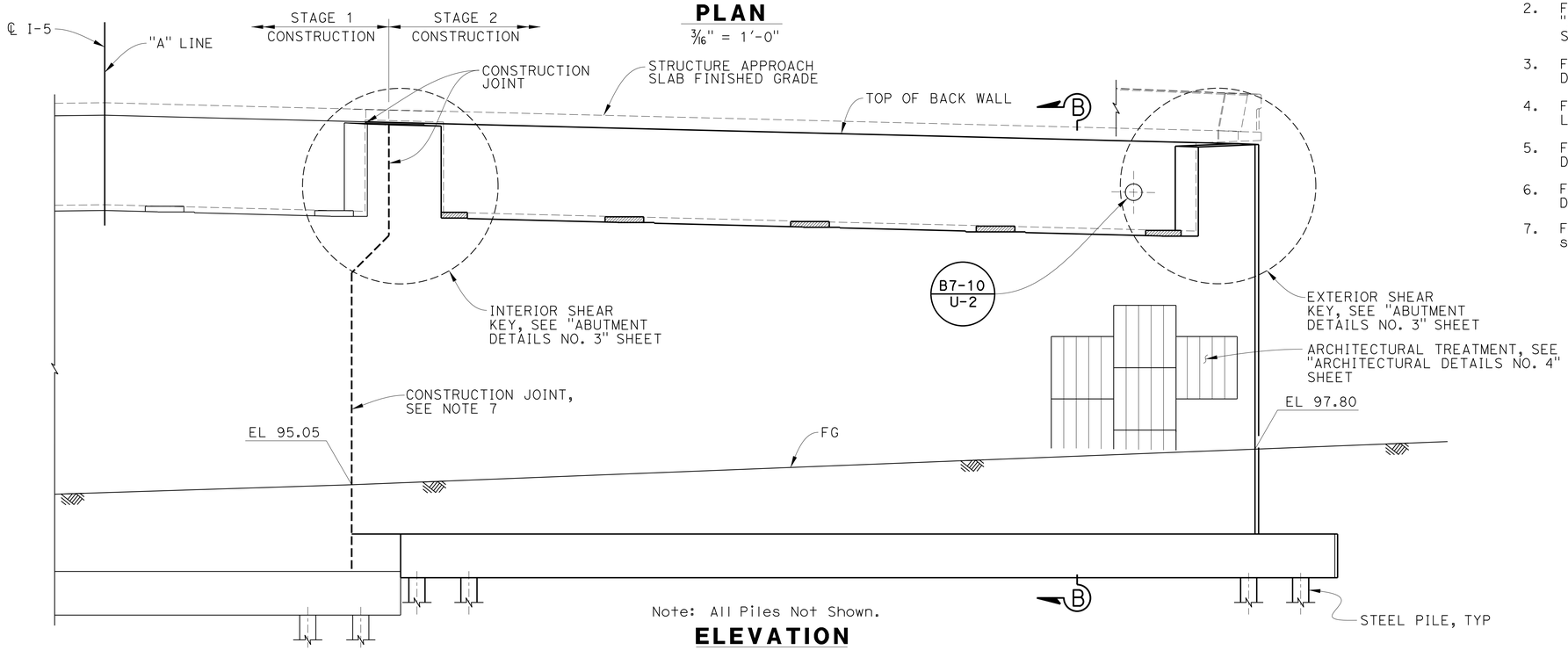

Note: All Piles Not Shown.

ELEVATION

3/16" = 1'-0"

NOTES:

1. For Typical Abutment Section,"Section B-B", See "Abutment Details No. 1" Sheet.
2. For Approach Slab Drainage Details, See "Structure Approach Drainage Details" Sheet.
3. For Bearing Pad Details, See "Abutment Details No. 2" Sheet.
4. For Pile Layouts, See "Abutment Pile Layouts" Sheet.
5. For Return Wall Details, See "Abutment Details No. 5" Sheet.
6. For Wing Wall Details, See "Abutment 1 Details" Sheet.
7. For Autment Construction Joint Detail, see "Abutment Details No. 4" Sheet.

NOTE: The Contractor Shall Verify All Controlling Field Dimensions Before Ordering Or Fabricating Any Material.

Luqi Yang
DESIGN OVERSIGHT Luqi Yang
7-10-13
SIGN OFF DATE

	BY	CHECKED
DESIGN	M. Ruvalcaba	E. Mobo
DETAILS	P. Johnson	E. Mobo
QUANTITIES	J. Fix	E. Mobo

PREPARED FOR THE STATE OF CALIFORNIA DEPARTMENT OF TRANSPORTATION

Mohsen Mohseni
PROJECT ENGINEER

BRIDGE NO. 55-1107
POST MILES 3.39

AVENIDA PICO UC (REPLACE)

ABUTMENT 2 LAYOUT - STAGE 2 CONSTRUCTION

DESIGN DETAIL SHEET (ENGLISH) (REV.7/16/10)

ORIGINAL SCALE IN INCHES FOR REDUCED PLANS 0 1 2 3

UNIT:
PROJECT NUMBER & PHASE: 12000202771 CONTRACT NO.: 12-0F96A4

DISREGARD PRINTS BEARING EARLIER REVISION DATES

REVISION DATES 5/29/12 11/15/12 3/29/13 4/26/13

SHEET 11 OF 39

FILE => 55-1107-f-a02_l02.dgn

USERNAME => s128843 DATE PLOTTED => 07-AUG-2014 TIME PLOTTED => 13:04

DIST	COUNTY	ROUTE	POST MILES TOTAL PROJECT	SHEET No	TOTAL SHEETS
12	Ora	5	3.0/3.7	547	635

REGISTERED CIVIL ENGINEER 4/26/13 DATE

3-10-14
PLANS APPROVAL DATE

REGISTERED PROFESSIONAL ENGINEER MARTIN E. RUVALCABA No. C-75838 Exp. 6/20/14 CIVIL STATE OF CALIFORNIA

The State of California or its officers or agents shall not be responsible for the accuracy or completeness of electronic copies of this plan sheet.

OCTA
550 SOUTH MAIN ST
ORANGE, CA 92863

PARSONS
2201 DUPONT DRIVE, SUITE 200
IRVINE, CA 92612

NOTES:

1. For bottom of footing elevations, see "Foundation Plan" sheet.
2. For pile type and tip elevations, see "Foundation Details" sheet.
3. Existing bridge abutment piles shall be located and exposed prior to installation of Abutment Piles.
4. For existing abutment removal details see "Bridge Removal Plan".

LEGEND:

I Indicates Vertical HP Steel Pile

I Indicates 1:3 Battered HP Steel Pile

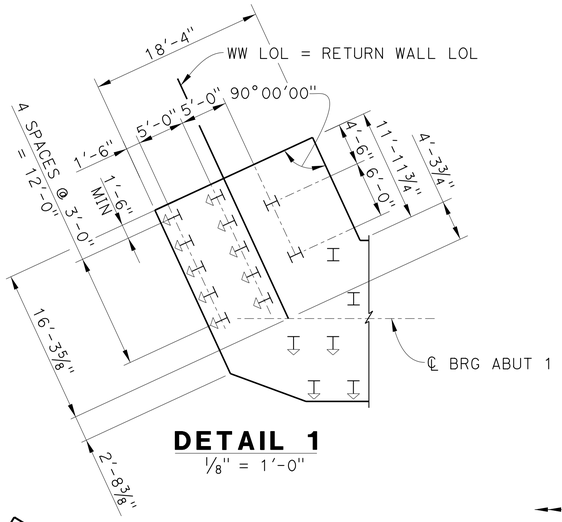

DETAIL 1
⅛" = 1'-0"

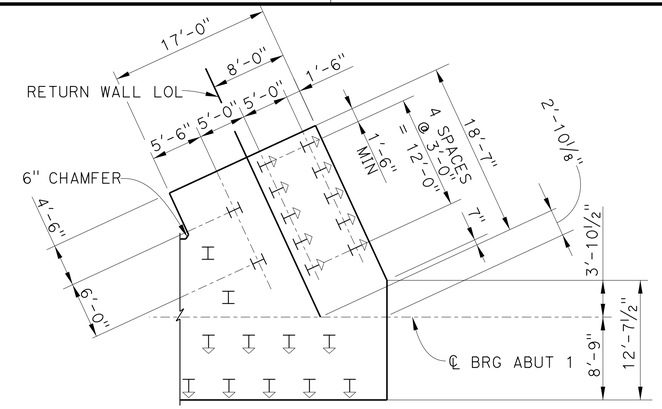

DETAIL 2
⅛" = 1'-0"

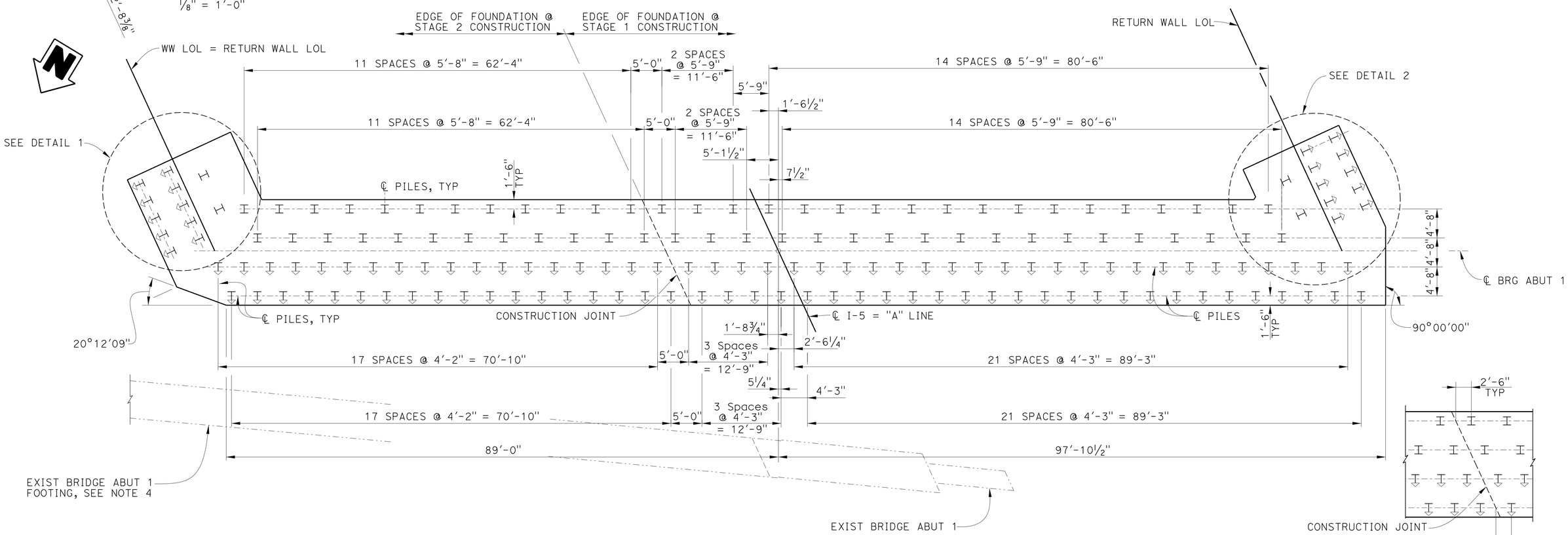

ABUTMENT 1 - PILE LAYOUT
⅛" = 1'-0"

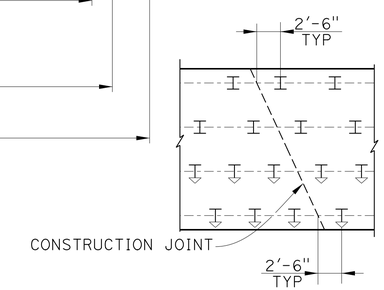

PILE SPACING DETAIL AT CONSTRUCTION JOINT
NO SCALE

NOTE: The Contractor Shall Verify All Controlling Field Dimensions Before Ordering Or Fabricating Any Material.

DESIGN OVERSIGHT Luqi Yang
7-10-13
SIGN OFF DATE

	BY	CHECKED
DESIGN	M. Ruvalcaba	E. Mobo
DETAILS	P. Johnson	E. Mobo
QUANTITIES	J. Fix	E. Mobo

PREPARED FOR THE STATE OF CALIFORNIA DEPARTMENT OF TRANSPORTATION

Mohsen Mohseni
PROJECT ENGINEER

BRIDGE NO. 55-1107
POST MILES 3.39

AVENIDA PICO UC (REPLACE)
ABUTMENT 1 PILE LAYOUT

DESIGN DETAIL SHEET (ENGLISH) (REV.7/16/10)

ORIGINAL SCALE IN INCHES FOR REDUCED PLANS 0 1 2 3

UNIT:
PROJECT NUMBER & PHASE: 12000202771 CONTRACT NO.: 12-0F96A4

DISREGARD PRINTS BEARING EARLIER REVISION DATES

REVISION DATES 5/20/12 11/15/12 3/04/13 4/26/13

SHEET 12 OF 39

FILE => 55-1107-f-a02_pl1.dgn

USERNAME => s128843 DATE PLOTTED => 07-AUG-2014 TIME PLOTTED => 13:04

DIST	COUNTY	ROUTE	POST MILES TOTAL PROJECT	SHEET No	TOTAL SHEETS
12	Ora	5	3.0/3.7	548	635

REGISTERED CIVIL ENGINEER — DATE 4/26/13

3-10-14
PLANS APPROVAL DATE

The State of California or its officers or agents shall not be responsible for the accuracy or completeness of electronic copies of this plan sheet.

REGISTERED PROFESSIONAL ENGINEER — MARTIN E. RUVALCABA — No. C-75838 — Exp. 6/20/14 — CIVIL — STATE OF CALIFORNIA

OCTA
550 SOUTH MAIN ST
ORANGE, CA 92863

PARSONS
2201 DUPONT DRIVE, SUITE 200
IRVINE, CA 92612

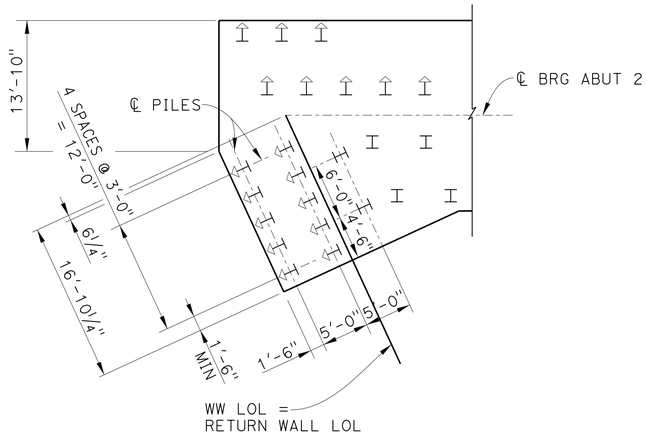

DETAIL 1
⅛" = 1'-0"

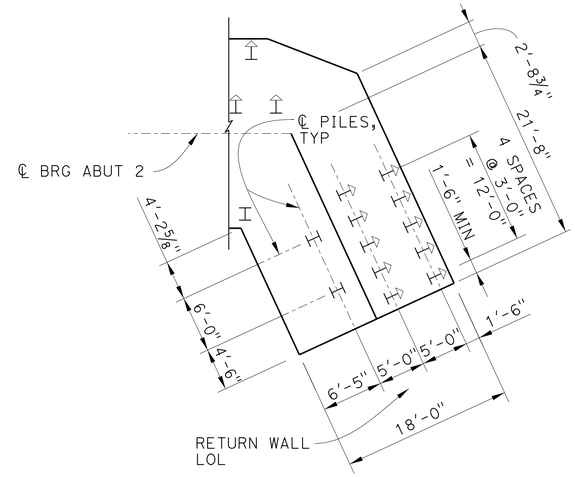

DETAIL 2
⅛" = 1'-0"

NOTES:

1. For bottom of footing elevations, see "Foundation Plan" sheet.
2. For pile type and tip elevations, see "Foundation Details" sheet.
3. Existing bridge abutment/bent piles shall be located and exposed prior to installation of Abutment Piles.
4. For existing abutment and bent removal details see "Bridge Removal Plan".
5. Adjust pile locations where in conflict with existing piles. Pile spacing shall not be less than 3'-6".

LEGEND:

I Indicates Vertical HP Steel Pile

I Indicates 1:3 Battered HP Steel Pile

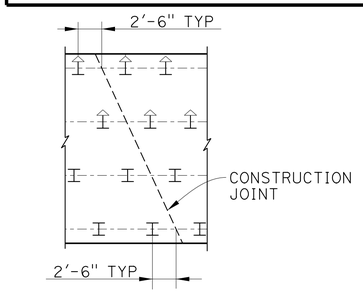

PILE SPACING DETAIL AT CONSTRUCTION JOINT
NO SCALE

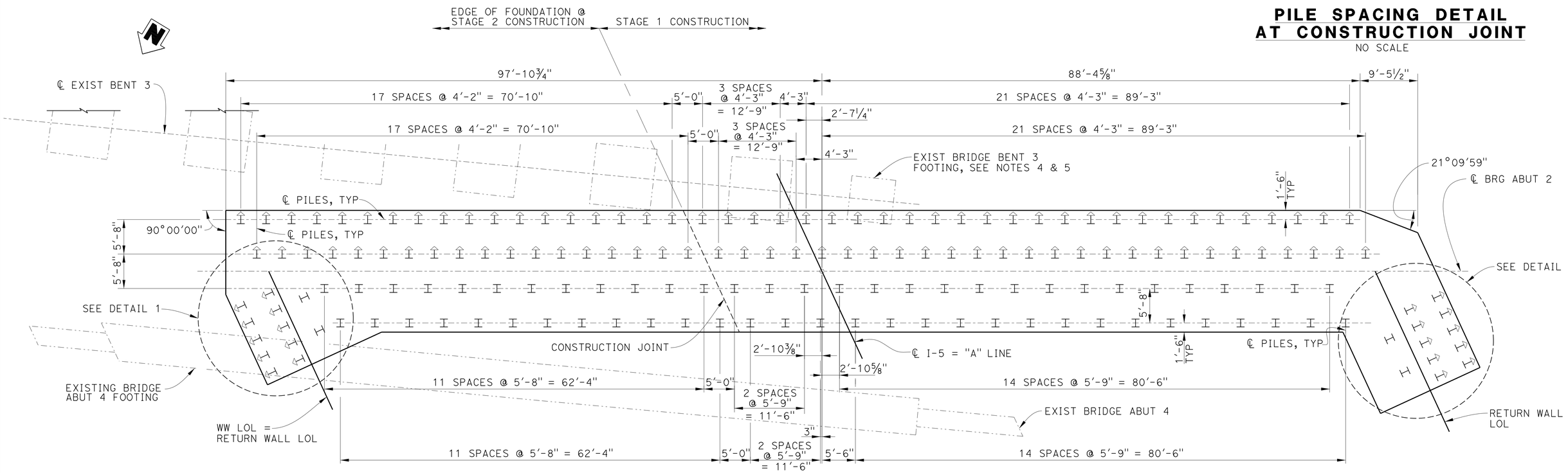

ABUTMENT 2 - PILE LAYOUT
⅛" = 1'-0"

NOTE: The Contractor Shall Verify All Controlling Field Dimensions Before Ordering Or Fabricating Any Material.

Luqi Yang — DESIGN OVERSIGHT — Luqi Yang — 7-10-13 SIGN OFF DATE	DESIGN	BY M. Ruvalcaba	CHECKED E. Mobo	PREPARED FOR THE STATE OF CALIFORNIA DEPARTMENT OF TRANSPORTATION	Mohsen Mohseni — PROJECT ENGINEER
	DETAILS	BY P. Johnson	CHECKED E. Mobo		BRIDGE NO. 55-1107
	QUANTITIES	BY J. Fix	CHECKED E. Mobo		POST MILES 3.39

AVENIDA PICO UC (REPLACE)
ABUTMENT 2 PILE LAYOUT

DESIGN DETAIL SHEET (ENGLISH) (REV.7/16/10)

ORIGINAL SCALE IN INCHES FOR REDUCED PLANS 0 1 2 3

UNIT:
PROJECT NUMBER & PHASE: 12000202771 CONTRACT NO.: 12-0F96A4

DISREGARD PRINTS BEARING EARLIER REVISION DATES

REVISION DATES: 5/29/12 11/15/12 3/04/13 4/26/13

SHEET 13 OF 39

FILE => 55-1107-f-a02_p12.dgn

USERNAME => s128843 DATE PLOTTED => 07-AUG-2014 TIME PLOTTED => 13:05

DIST	COUNTY	ROUTE	POST MILES TOTAL PROJECT	SHEET No	TOTAL SHEETS
12	Ora	5	3.0/3.7	549	635

REGISTERED CIVIL ENGINEER 4/26/13 DATE

3-10-14
PLANS APPROVAL DATE

REGISTERED PROFESSIONAL ENGINEER MARTIN E. RUVALCABA No. C-75838 Exp. 6/20/14 CIVIL STATE OF CALIFORNIA

The State of California or its officers or agents shall not be responsible for the accuracy or completeness of electronic copies of this plan sheet.

OCTA
550 SOUTH MAIN ST
ORANGE, CA 92863

PARSONS
2201 DUPONT DRIVE, SUITE 200
IRVINE, CA 92612

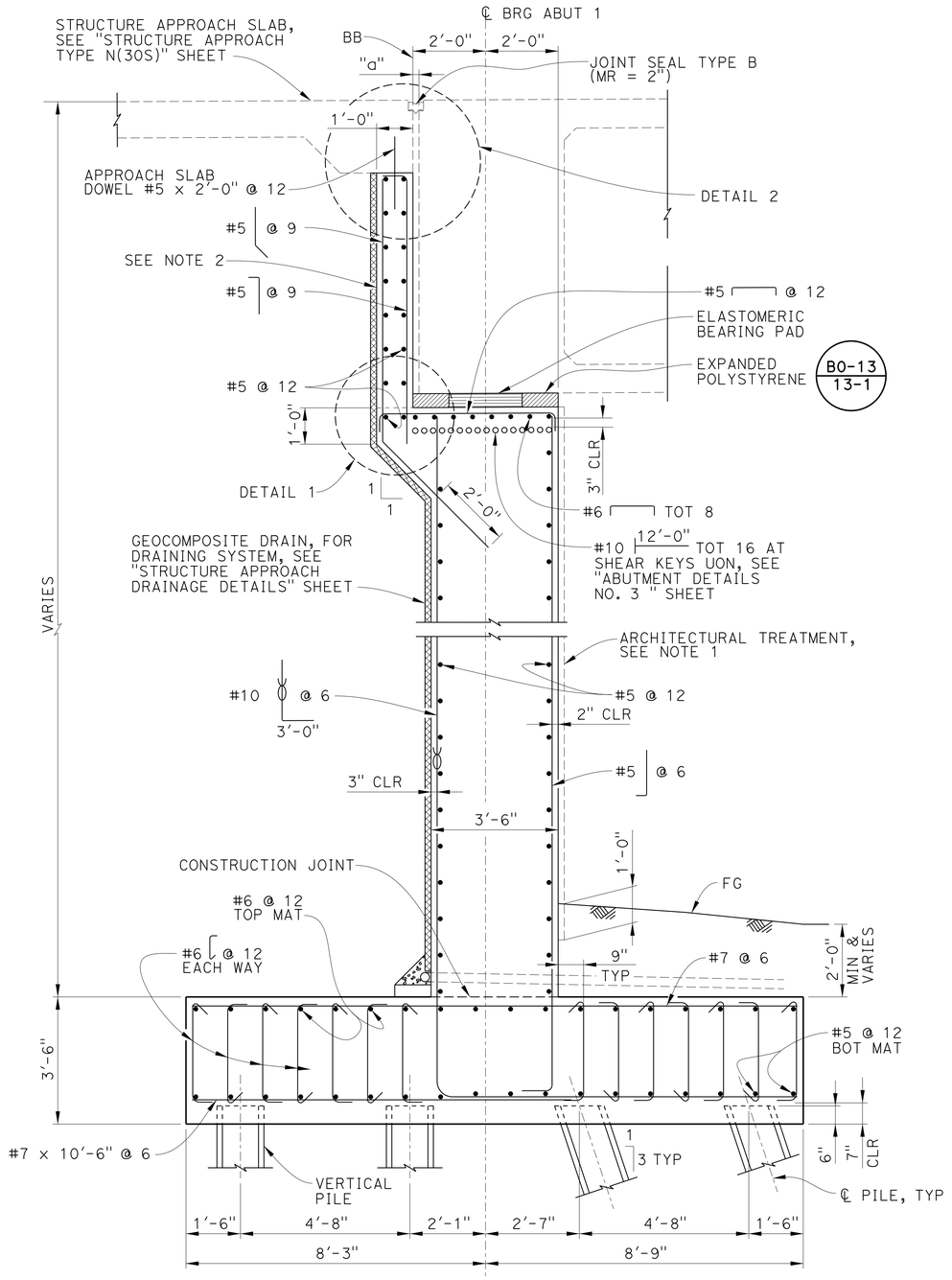

SECTION A-A AT ABUT 1

½" = 1'-0"

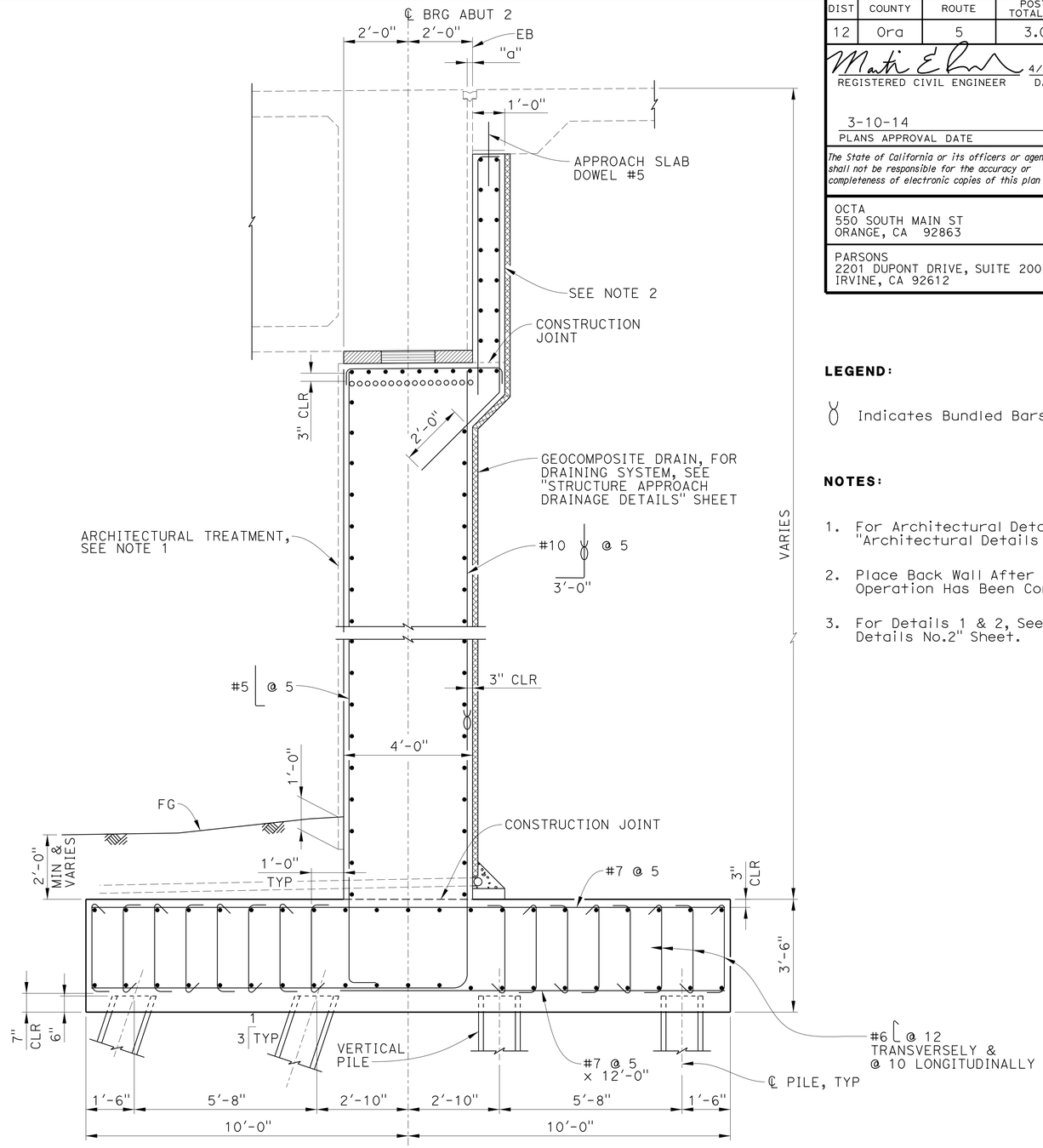

NOTE: For Information Not Shown, See "Section A-A AT ABUT 1".

SECTION B-B AT ABUT 2

½" = 1'-0"

LEGEND:

Indicates Bundled Bars (2 bars)

NOTES:

1. For Architectural Details, See "Architectural Details No.4" Sheet.
2. Place Back Wall After Post Tensioning Operation Has Been Completed.
3. For Details 1 & 2, See "Abutment Details No.2" Sheet.

NOTE: The Contractor Shall Verify All Controlling Field Dimensions Before Ordering Or Fabricating Any Material.

DESIGN OVERSIGHT Luqi Yang
7-10-13
SIGN OFF DATE

	BY	CHECKED
DESIGN	M. Ruvalcaba	E. Mobo
DETAILS	P. Johnson	E. Mobo
QUANTITIES	J. Fix	E. Mobo

PREPARED FOR THE STATE OF CALIFORNIA DEPARTMENT OF TRANSPORTATION

Mohsen Mohseni
PROJECT ENGINEER

BRIDGE NO. 55-1107
POST MILES 3.39

AVENIDA PICO UC (REPLACE)
ABUTMENT DETAILS NO. 1

DESIGN DETAIL SHEET (ENGLISH) (REV.7/16/10)

ORIGINAL SCALE IN INCHES FOR REDUCED PLANS 0 1 2 3

UNIT:
PROJECT NUMBER & PHASE: 12000202771 CONTRACT NO.: 12-0F96A4

DISREGARD PRINTS BEARING EARLIER REVISION DATES

REVISION DATES: 5/20/12 11/05/12 3/04/13 4/26/13

SHEET 14 OF 39

FILE => 55-1107-f-adt01.dgn

USERNAME => s128843 DATE PLOTTED => 07-AUG-2014 TIME PLOTTED => 13:05

DIST	COUNTY	ROUTE	POST MILES TOTAL PROJECT	SHEET No	TOTAL SHEETS
12	Ora	5	3.0/3.7	550	635

REGISTERED CIVIL ENGINEER 4/26/13 DATE

3-10-14
PLANS APPROVAL DATE

REGISTERED PROFESSIONAL ENGINEER MARTIN E. RUVALCABA No. C-75838 Exp. 6/20/14 CIVIL STATE OF CALIFORNIA

The State of California or its officers or agents shall not be responsible for the accuracy or completeness of electronic copies of this plan sheet.

OCTA
550 SOUTH MAIN ST
ORANGE, CA 92863

PARSONS
2201 DUPONT DRIVE, SUITE 200
IRVINE, CA 92612

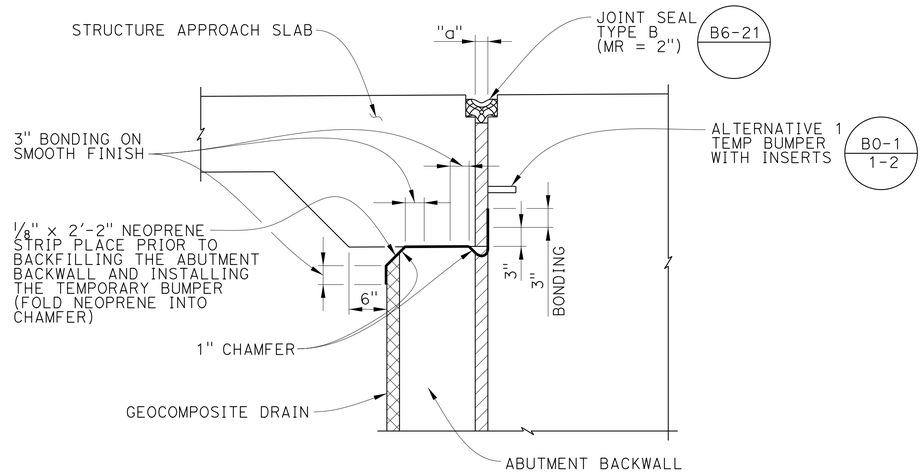

DETAIL 2
1" = 1'-0"

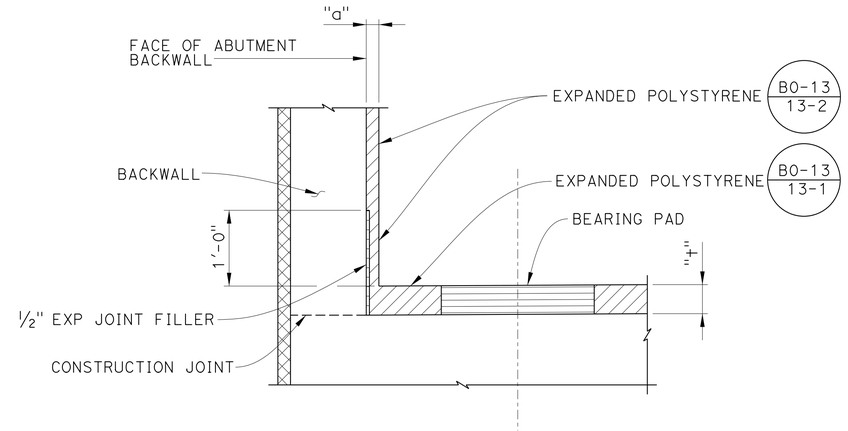

DETAIL 1
1" = 1'-0"

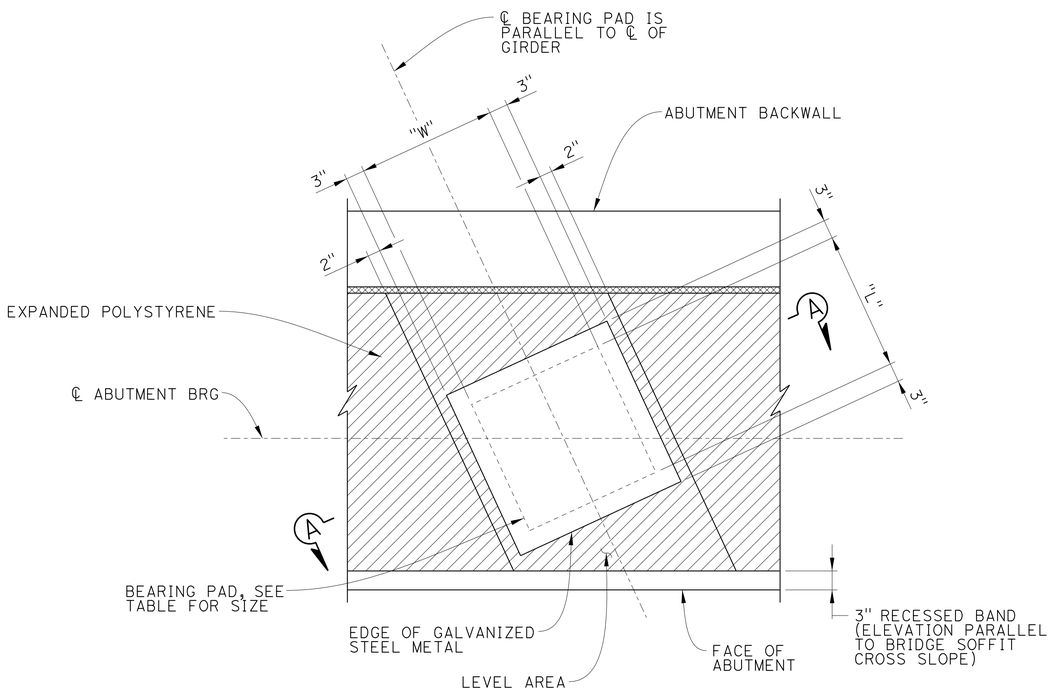

PLAN

BEARING PAD DETAIL
1" = 1'-0"

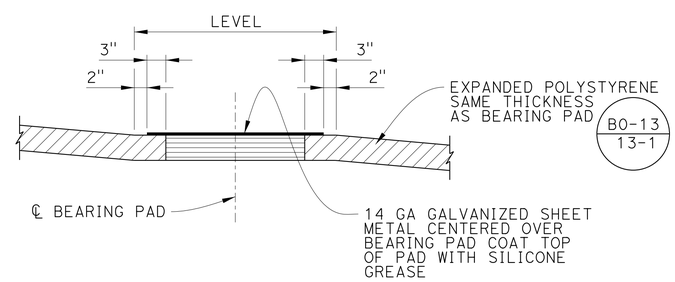

SECTION A-A
NOT TO SCALE

NOTES:

1. Construct Abutment With 1% Slope Away From Backwall In Areas Not Required To Be Level.
2. Abutment 1 Shown, Abutment 2 Similar.

ELASTOMERIC BEARING PAD	
LOCATION	STEEL REINFORCED (WxLxt)
ABUT 1 ABUT 2	28"x28"x4" 28"x28"x4"

NOTE: The Contractor Shall Verify All Controlling Field Dimensions Before Ordering Or Fabricating Any Material.

Luqi Yang
DESIGN OVERSIGHT Luqi Yang
7-10-13
SIGN OFF DATE

	BY	CHECKED
DESIGN	M. Ruvalcaba	E. Mobo
DETAILS	P. Johnson	E. Mobo
QUANTITIES	J. Fix	E. Mobo

PREPARED FOR THE STATE OF CALIFORNIA DEPARTMENT OF TRANSPORTATION

Mohsen Mohseni
PROJECT ENGINEER

BRIDGE NO. 55-1107
POST MILES 3.39

AVENIDA PICO UC (REPLACE)
ABUTMENT DETAILS NO. 2

DESIGN DETAIL SHEET (ENGLISH) (REV.7/16/10)

ORIGINAL SCALE IN INCHES FOR REDUCED PLANS 0 1 2 3

UNIT:
PROJECT NUMBER & PHASE: 12000202771 CONTRACT NO.: 12-0F96A4

DISREGARD PRINTS BEARING EARLIER REVISION DATES

REVISION DATES 5/29/12 11/05/12 3/04/13 4/26/13

SHEET 15 OF 39

FILE => 55-1107-f-adt02.dgn

USERNAME => s128843 DATE PLOTTED => 07-AUG-2014 TIME PLOTTED => 13:05

DIST	COUNTY	ROUTE	POST MILES TOTAL PROJECT	SHEET No	TOTAL SHEETS
12	Ora	5	3.0/3.7	551	635

REGISTERED CIVIL ENGINEER 4/26/13 DATE

3-10-14
PLANS APPROVAL DATE

REGISTERED PROFESSIONAL ENGINEER MARTIN E. RUVALCABA No. C-75838 Exp. 6/20/14 CIVIL STATE OF CALIFORNIA

The State of California or its officers or agents shall not be responsible for the accuracy or completeness of electronic copies of this plan sheet.

OCTA
550 SOUTH MAIN ST
ORANGE, CA 92863

PARSONS
2201 DUPONT DRIVE, SUITE 200
IRVINE, CA 92612

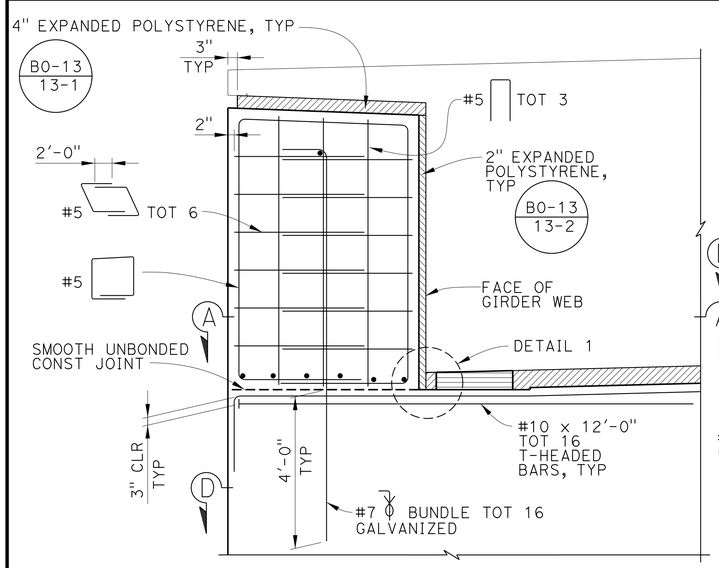

EXTERIOR - RIGHT SIDE

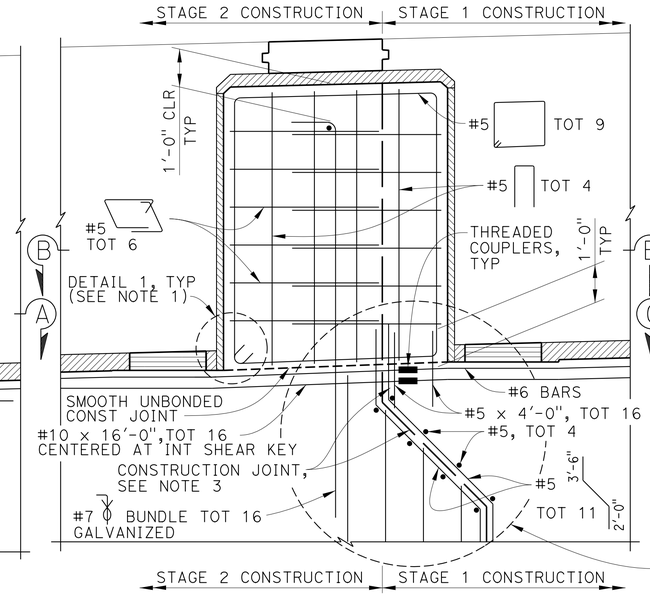

NOTE: Abutment 1 Shown, Abutment 2 Similar.

INTERIOR

ELEVATION - ABUTMENT 1 SHEAR KEYS

½" = 1'-0"

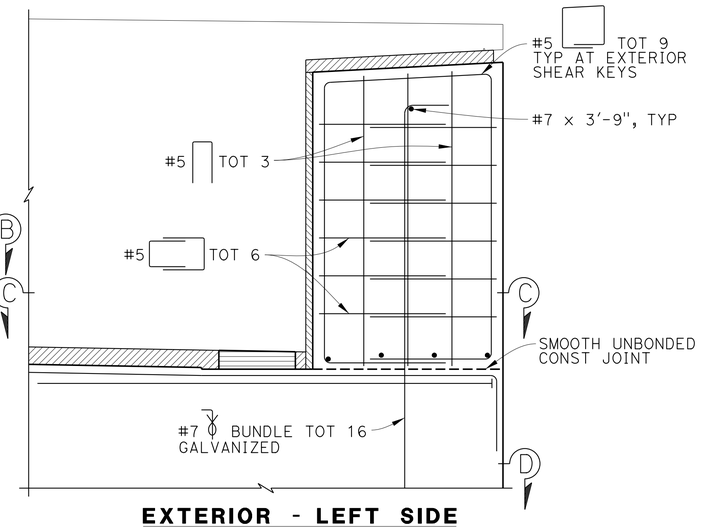

EXTERIOR - LEFT SIDE

NOTES:

1. For Detail 1, See "Abutment Details No. 4" Sheet.
2. For Return Wall Elevation, See "Abutment Details No. 4" Sheet.
3. For Abutment Construction Joint Detail, see "Abutment Details No. 4" sheet.

LEGEND:

Threaded Coupler

Indicates Bundled Bars (2 Bars)

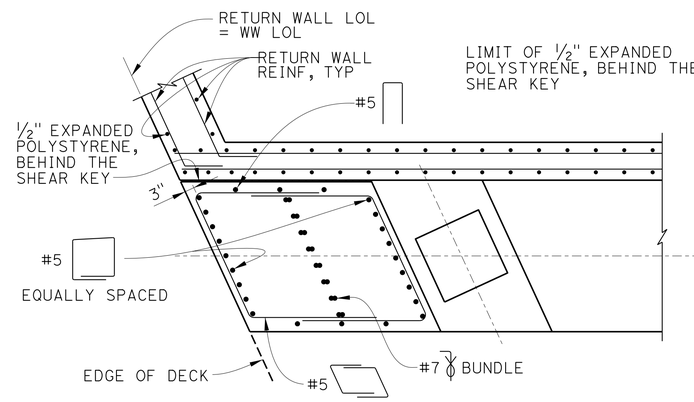

SECTION A-A

½" = 1'-0"

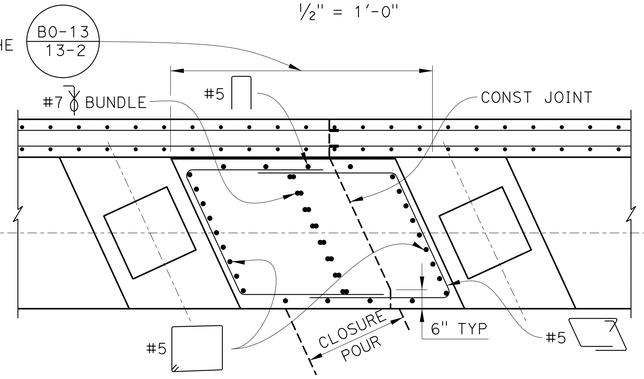

NOTE: Abutment 1 Shown, Abutment 2 Similar.

SECTION B-B

½" = 1'-0"

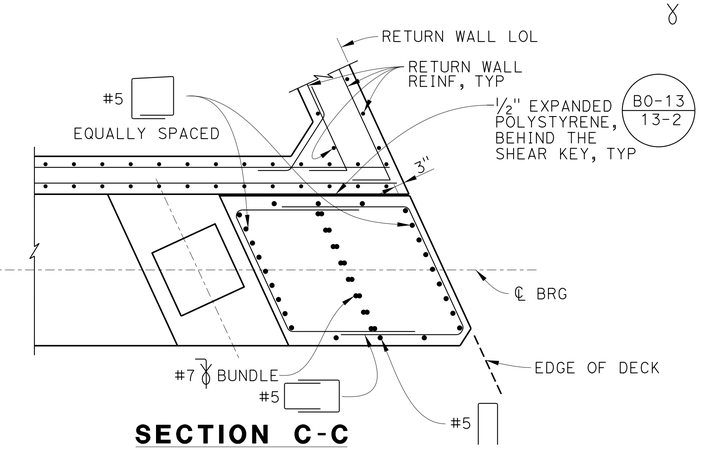

SECTION C-C

½" = 1'-0"

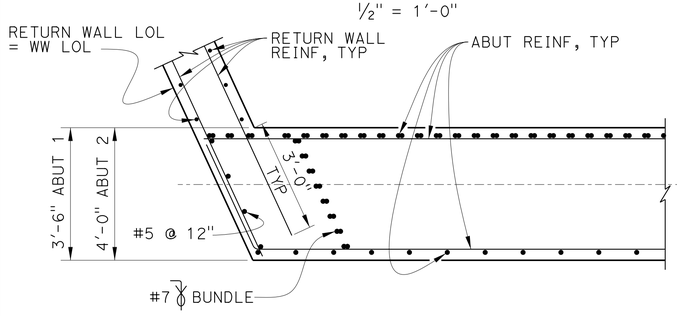

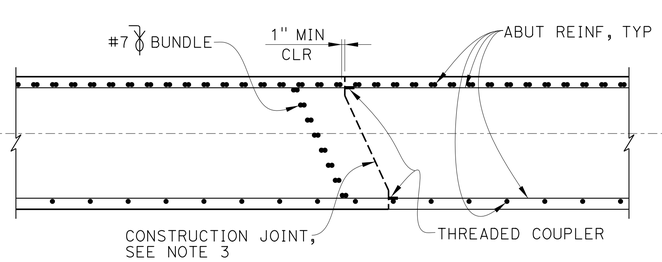

SECTION D-D NOTE: Abutment 1 shown, Abutment 2 similar

½" = 1'-0"

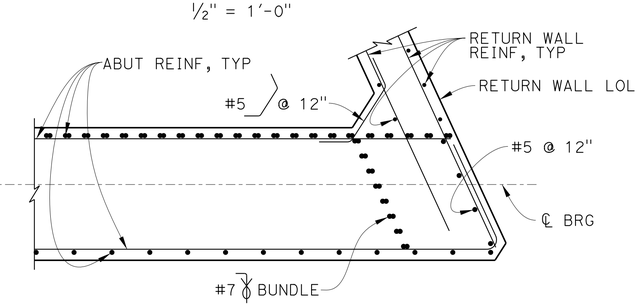

NOTE: The Contractor Shall Verify All Controlling Field Dimensions Before Ordering Or Fabricating Any Material.

Luqi Yang
DESIGN OVERSIGHT Luqi Yang
7-10-13
SIGN OFF DATE

	BY	CHECKED
DESIGN	M. Ruvalcaba	E. Mobo
DETAILS	P. Johnson	E. Mobo
QUANTITIES	J. Fix	E. Mobo

PREPARED FOR THE STATE OF CALIFORNIA DEPARTMENT OF TRANSPORTATION

Mohsen Mohseni
PROJECT ENGINEER

BRIDGE NO. 55-1107
POST MILES 3.39

AVENIDA PICO UC (REPLACE)
ABUTMENT DETAILS NO. 3

DESIGN DETAIL SHEET (ENGLISH) (REV.7/16/10)

ORIGINAL SCALE IN INCHES FOR REDUCED PLANS 0 1 2 3

UNIT:
PROJECT NUMBER & PHASE: 12000202771 CONTRACT NO.: 12-0F96A4

DISREGARD PRINTS BEARING EARLIER REVISION DATES

REVISION DATES 5/20/12 11/15/12 3/04/13 4/26/13

SHEET 16 OF 39

FILE => 55-1107-f-adt03.dgn

USERNAME => s128643 DATE PLOTTED => 07-AUG-2014 TIME PLOTTED => 13:05

DIST	COUNTY	ROUTE	POST MILES TOTAL PROJECT	SHEET No	TOTAL SHEETS
12	Ora	5	3.0/3.7	552	635

REGISTERED CIVIL ENGINEER 4/26/13 DATE

3-10-14
PLANS APPROVAL DATE

REGISTERED PROFESSIONAL ENGINEER MARTIN E. RUVALCABA No. C-75838 Exp. 6/20/14 CIVIL STATE OF CALIFORNIA

The State of California or its officers or agents shall not be responsible for the accuracy or completeness of electronic copies of this plan sheet.

OCTA
550 SOUTH MAIN ST
ORANGE, CA 92863

PARSONS
2201 DUPONT DRIVE, SUITE 200
IRVINE, CA 92612

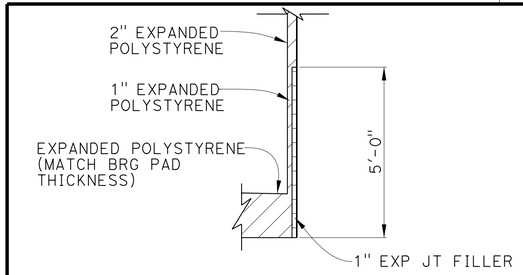

DETAIL 1
NOT TO SCALE

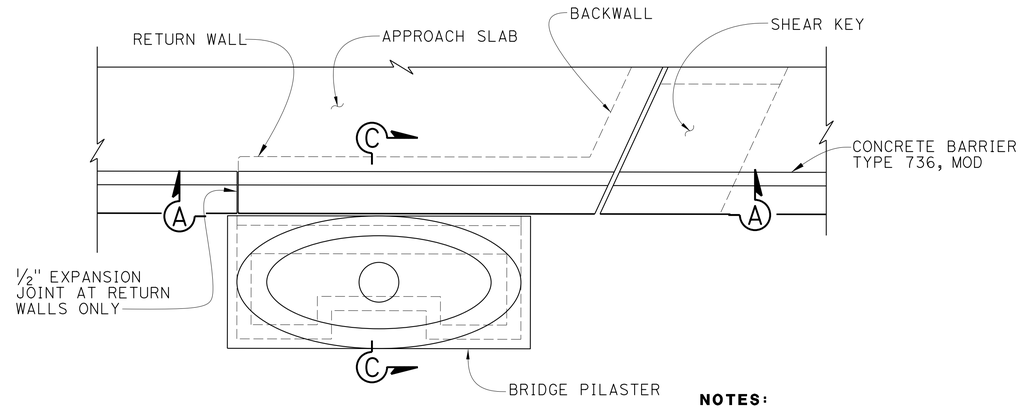

PLAN
⅜" = 1'-0"

NOTES:

1. For Sections A-A, B-B, C-C, D-D and E-E see "Abutment Details No. 5" sheet.
2. For Wingwall Pilaster Details, see "Abutment Wingwall Details No. 2" sheet.
3. For Sections F-F and G-G, see "Abutment Wingwall Details No. 2" sheet.

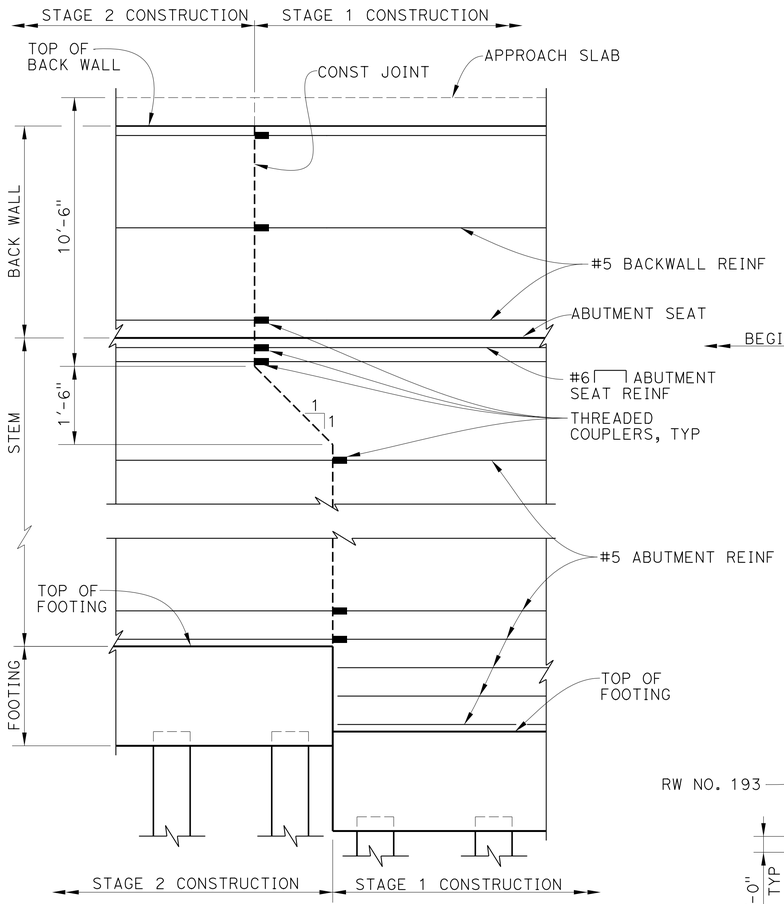

NOTES:
1. Abut 1 shown, Abut 2 similar
2. All reinforcing not shown for clarity.
3. Interior Shear Key not shown for Clarity, see "Abutment Details No. 3" sheet for information not shown.

ABUTMENT CONSTRUCTION JOINT DETAIL
NOT TO SCALE

NOTE: The Contractor Shall Verify All Controlling Field Dimensions Before Ordering Or Fabricating Any Material.

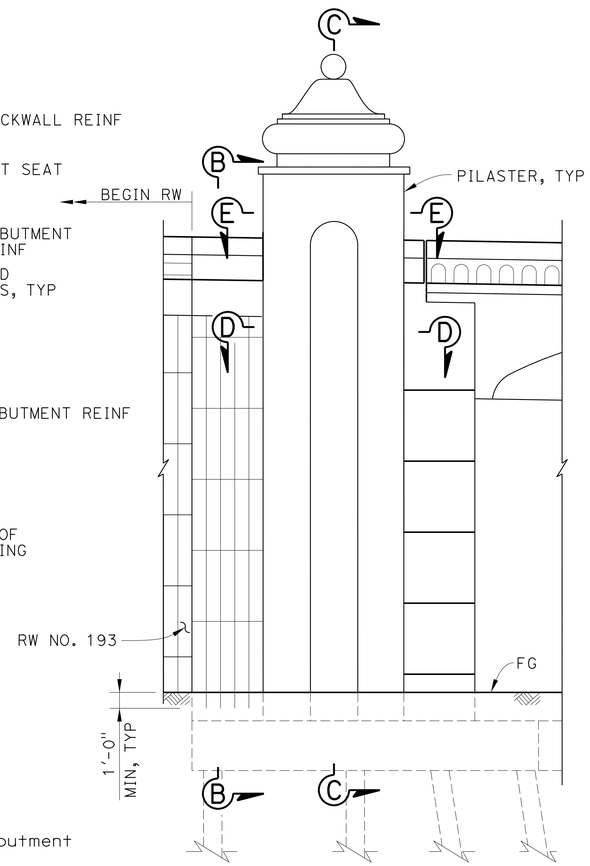

NOTE: Abutment 2 shown, Abutment 1 similar.

SOUTH ELEVATION
3/16" = 1'-0"

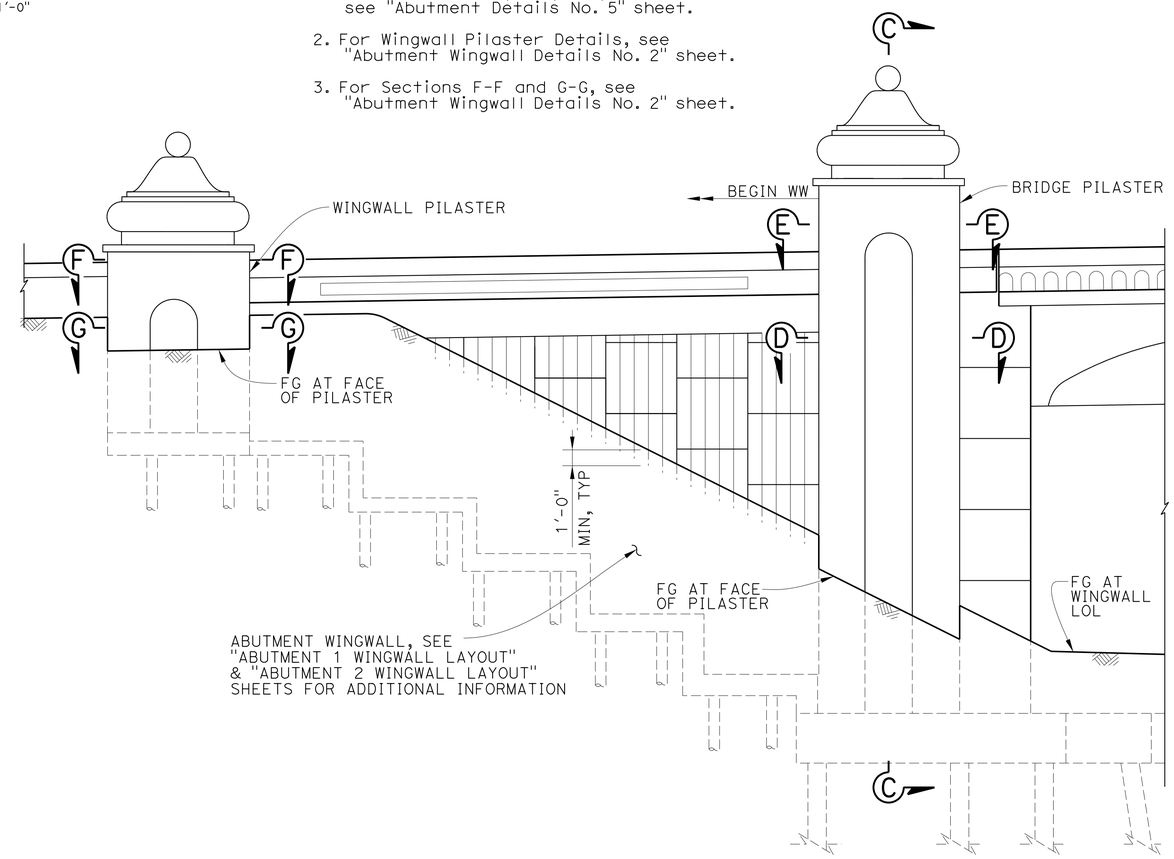

NOTE: Abutment 1 shown, Abutment 2 similar.

NORTH ELEVATION
3/16" = 1'-0"

DESIGN OVERSIGHT Luqi Yang
7-10-13
SIGN OFF DATE

	BY	CHECKED
DESIGN	M. Ruvalcaba/E. Mobo	E. Mobo/M. Ruvalcaba
DETAILS	P. Johnson	E. Mobo
QUANTITIES	J. Fix	E. Mobo

PREPARED FOR THE STATE OF CALIFORNIA DEPARTMENT OF TRANSPORTATION

Mohsen Mohseni
PROJECT ENGINEER

BRIDGE NO. 55-1107
POST MILES 3.39

AVENIDA PICO UC (REPLACE)
ABUTMENT DETAILS NO. 4

DESIGN DETAIL SHEET (ENGLISH) (REV.7/16/10)

ORIGINAL SCALE IN INCHES FOR REDUCED PLANS 0 1 2 3

UNIT:
PROJECT NUMBER & PHASE: 12000202771 CONTRACT NO.: 12-0F96A4

DISREGARD PRINTS BEARING EARLIER REVISION DATES

REVISION DATES 5/29/12 11/15/12 3/04/13 4/26/13

SHEET 17 OF 39

FILE => 55-1107-f-adt04.dgn

USERNAME => s128843 DATE PLOTTED => 07-AUG-2014 TIME PLOTTED => 13:05

DIST	COUNTY	ROUTE	POST MILES TOTAL PROJECT	SHEET No	TOTAL SHEETS
12	Ora	5	3.0/3.7	553	635

REGISTERED CIVIL ENGINEER 4/26/13 DATE

3-10-14
PLANS APPROVAL DATE

REGISTERED PROFESSIONAL ENGINEER MARTIN E. RUVALCABA No. C-75838 Exp. 6/20/14 CIVIL STATE OF CALIFORNIA

The State of California or its officers or agents shall not be responsible for the accuracy or completeness of electronic copies of this plan sheet.

OCTA
550 SOUTH MAIN ST
ORANGE, CA 92863

PARSONS
2201 DUPONT DRIVE, SUITE 200
IRVINE, CA 92612

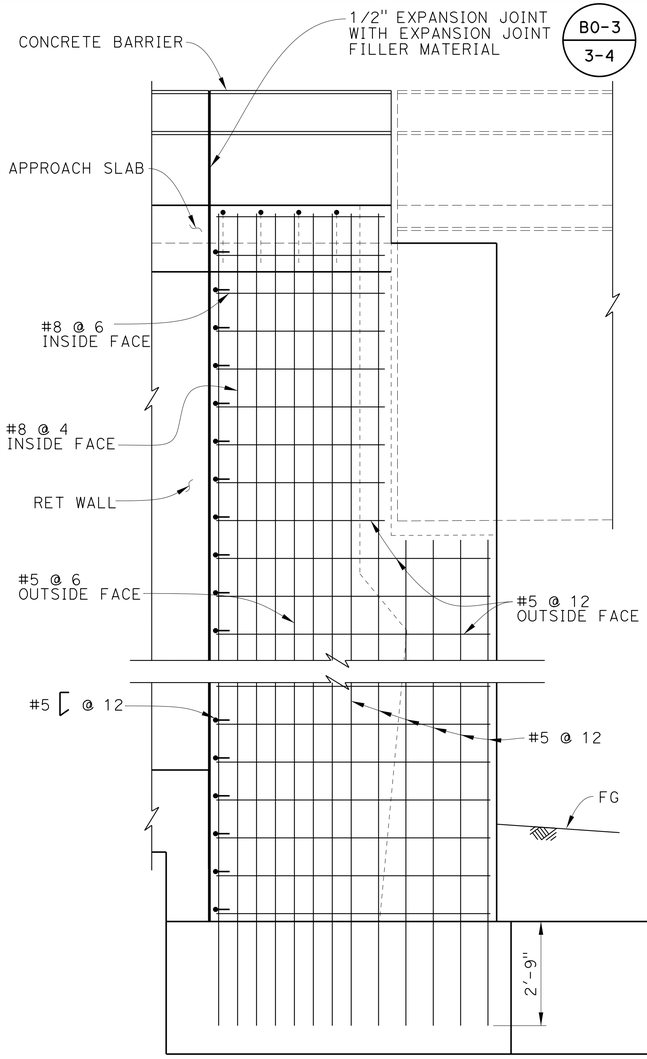

NOTE:
All reinforcement and bridge pilaster not shown for clarity.

SECTION A-A
1/2" = 1'-0"

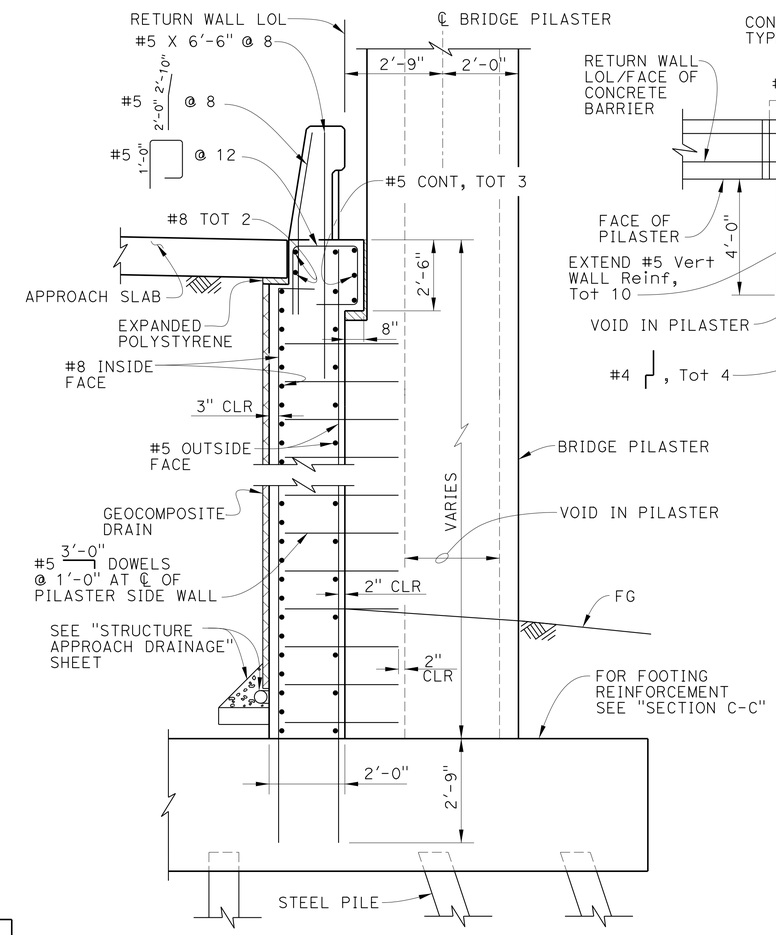

SECTION B-B
NO SCALE

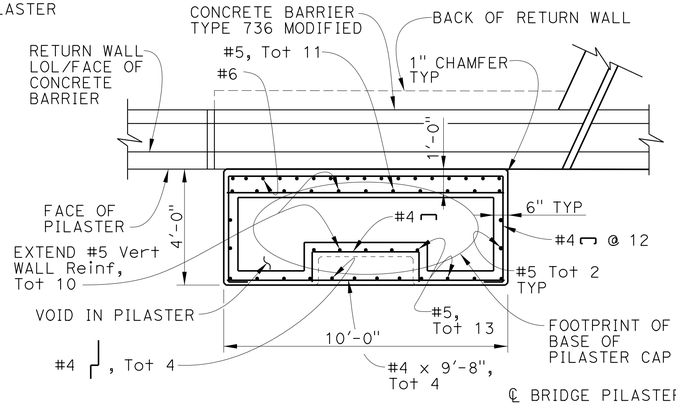

SECTION E-E
1/2" = 1'-0"

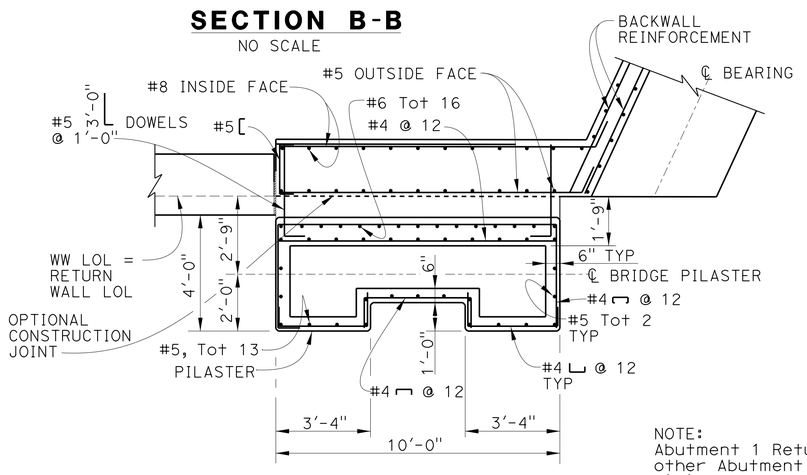

SECTION D-D
3/8" = 1'-0"

NOTE:
Abutment 1 Return Wall shown, other Abutment Return Walls similar.

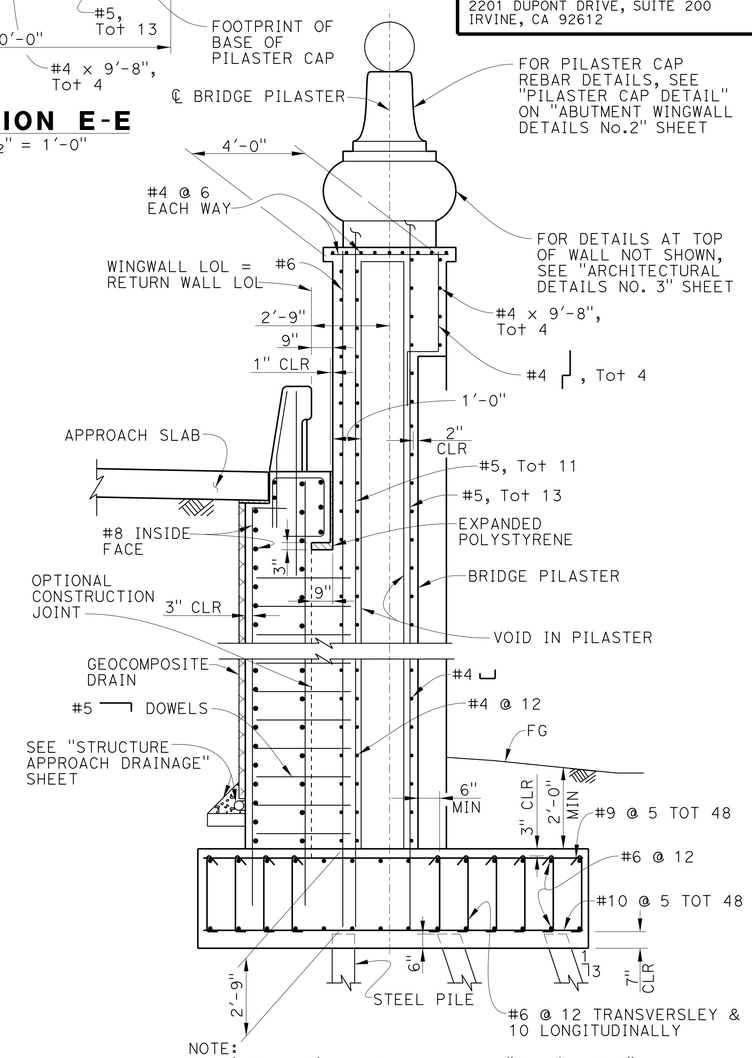

NOTE:
For information not shown, see "Section B-B"

SECTION C-C
3/8" = 1'-0"

NOTE: The Contractor Shall Verify All Controlling Field Dimensions Before Ordering Or Fabricating Any Material.

DESIGN OVERSIGHT Luqi Yang
7-10-13
SIGN OFF DATE

	BY	CHECKED
DESIGN	M. Ruvalcaba/E. Mobo	E. Mobo/M. Ruvalcaba
DETAILS	P. Johnson	E. Mobo
QUANTITIES	J. Fix	E. Mobo

PREPARED FOR THE STATE OF CALIFORNIA DEPARTMENT OF TRANSPORTATION

Mohsen Mohseni
PROJECT ENGINEER

BRIDGE NO. 55-1107
POST MILES 3.39

AVENIDA PICO UC (REPLACE)
ABUTMENT DETAILS NO. 5

DESIGN DETAIL SHEET (ENGLISH) (REV.7/16/10)

ORIGINAL SCALE IN INCHES FOR REDUCED PLANS 0 1 2 3

UNIT:
PROJECT NUMBER & PHASE: 12000202771 CONTRACT NO.: 12-0F96A4

DISREGARD PRINTS BEARING EARLIER REVISION DATES

REVISION DATES: 5/24/12 11/15/12 3/14/13 4/26/13

SHEET 18 OF 39

FILE => 55-1107-f-adt05.dgn

USERNAME => s128843 DATE PLOTTED => 07-AUG-2014 TIME PLOTTED => 13:05

DIST	COUNTY	ROUTE	POST MILES TOTAL PROJECT	SHEET No	TOTAL SHEETS
12	Ora	5	3.0/3.7	554	635

REGISTERED CIVIL ENGINEER — DATE 4/26/13

3-10-14
PLANS APPROVAL DATE

REGISTERED PROFESSIONAL ENGINEER — MARTIN E. RUVALCABA — No. C-75838 — Exp. 6/20/14 — CIVIL — STATE OF CALIFORNIA

The State of California or its officers or agents shall not be responsible for the accuracy or completeness of electronic copies of this plan sheet.

OCTA
550 SOUTH MAIN ST
ORANGE, CA 92863

PARSONS
2201 DUPONT DRIVE, SUITE 200
IRVINE, CA 92612

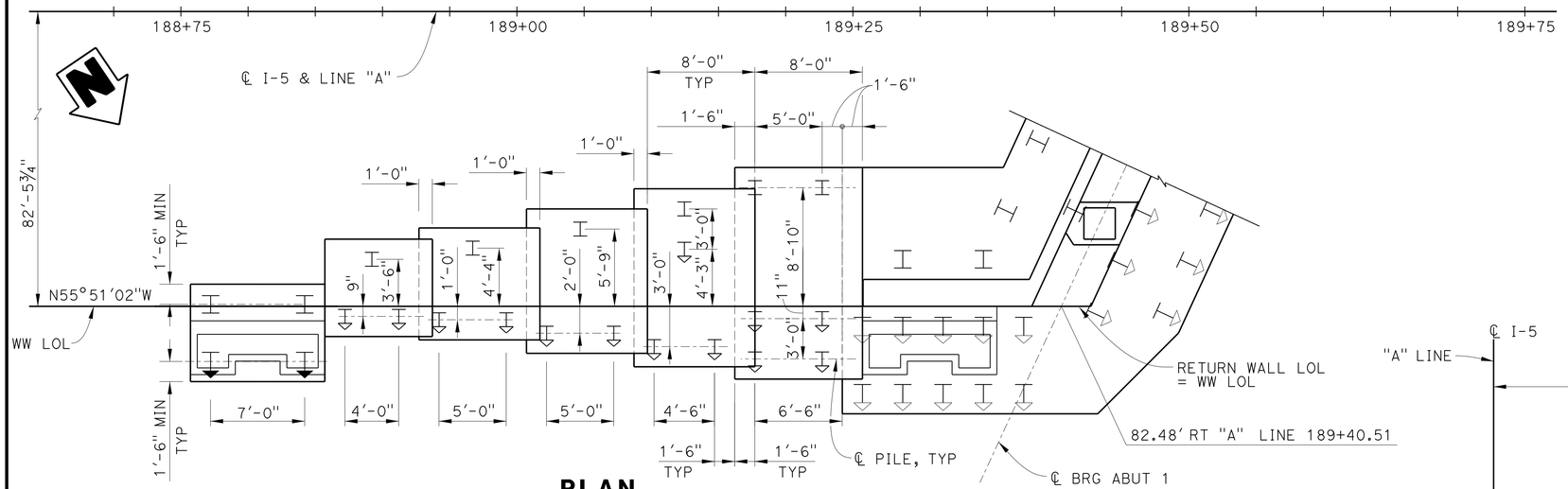

PLAN
3/16" = 1'-0"

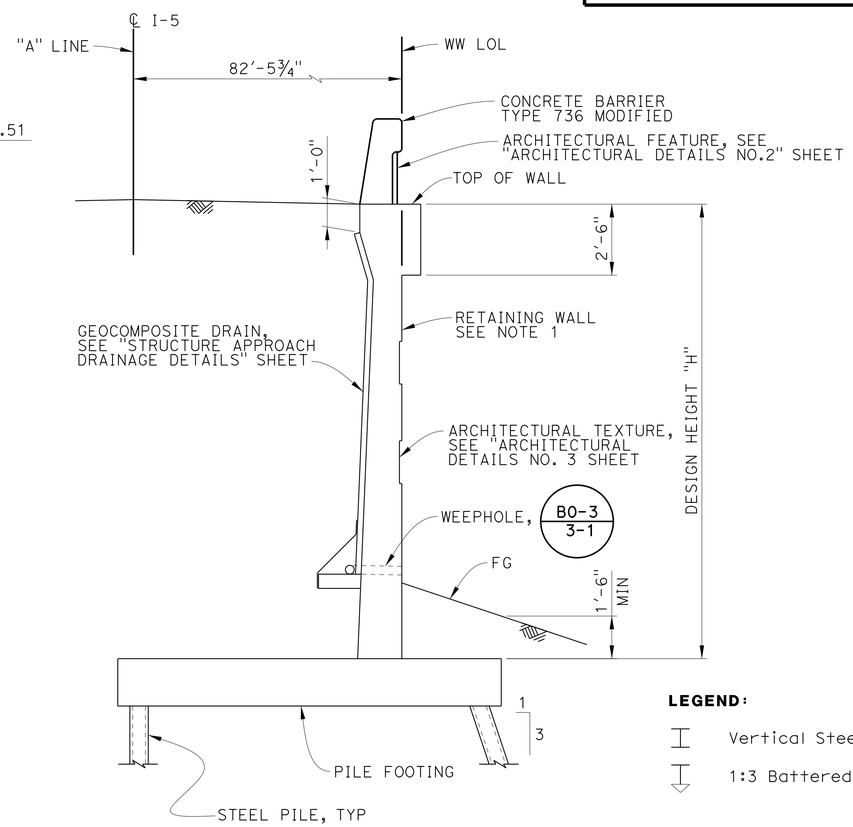

TYPICAL SECTION
3/8" = 1'-0"

LEGEND:

Vertical Steel Pile

1:3 Battered Steel Pile

NOTE:

1. For Pile Type And Pile Tip Elevations, See "Foundation Details" Sheet
2. For Retaining Wall Details, See "Abutment Wingwall Details No. 1" Sheet

DESIGN HEIGHT "H"	8'-0"	12'-0"	16'-0"	20'-0"	24'-0"
WALL LENGTH ALONG WW LOL	8'-0"	8'-0"	8'-0"	8'-0"	8'-0"

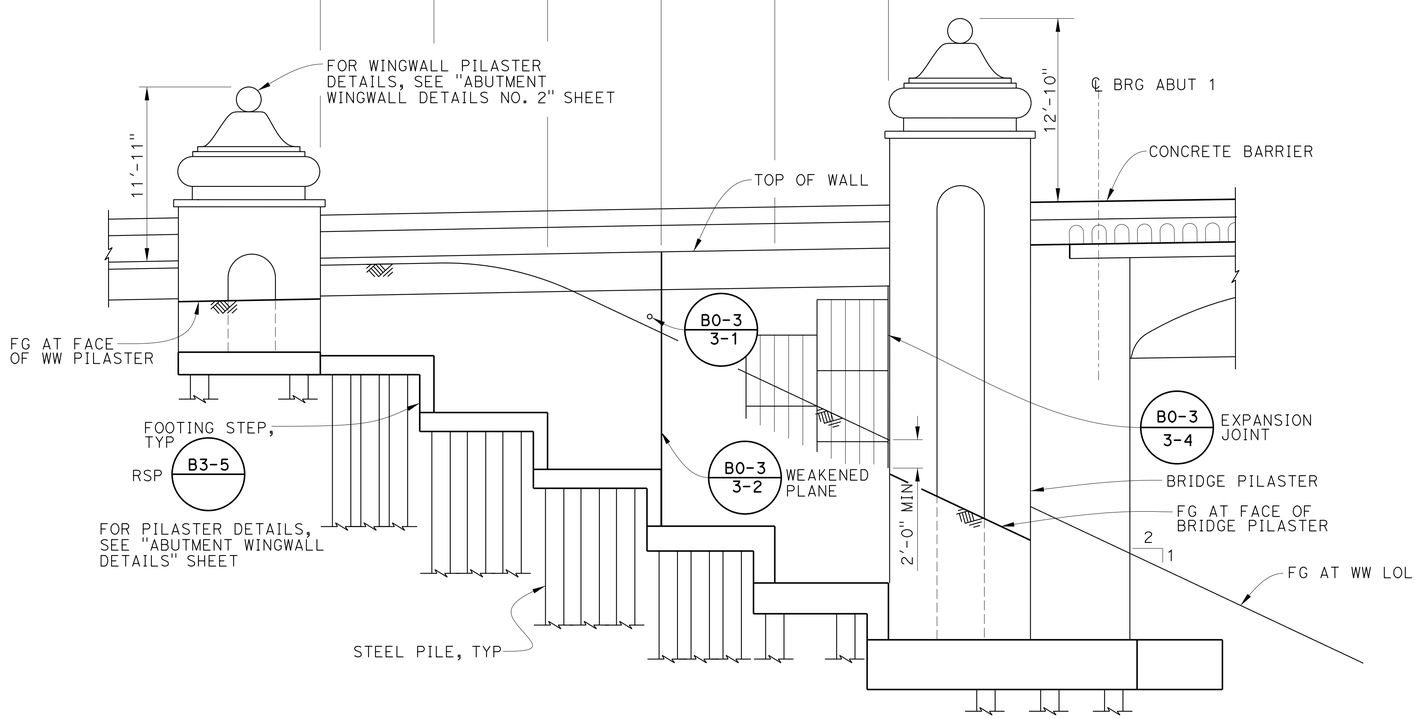

ELEVATION
3/16" = 1'-0"

NOTE: The Contractor Shall Verify All Controlling Field Dimensions Before Ordering Or Fabricating Any Material.

Luqi Yang
DESIGN OVERSIGHT — Luqi Yang
7-10-13
SIGN OFF DATE

	BY	CHECKED
DESIGN	M. Ruvalcaba/E. Mobo	E. Mobo/M. Ruvalcaba
DETAILS	P. Johnson	E. Mobo
QUANTITIES	J. Fix	E. Mobo

PREPARED FOR THE STATE OF CALIFORNIA DEPARTMENT OF TRANSPORTATION

Mohsen Mohseni
PROJECT ENGINEER

BRIDGE NO. 55-1107
POST MILES 3.39

AVENIDA PICO UC (REPLACE)
ABUTMENT 1 WINGWALL LAYOUT

DESIGN DETAIL SHEET (ENGLISH) (REV.7/16/10)

ORIGINAL SCALE IN INCHES FOR REDUCED PLANS 0 1 2 3

UNIT:
PROJECT NUMBER & PHASE: 12000202771 CONTRACT NO.: 12-0F96A4

DISREGARD PRINTS BEARING EARLIER REVISION DATES

REVISION DATES: 5/20/12 11/15/12 3/04/13 4/26/13

SHEET 19 OF 39

FILE => 55-1107-f-aww_l01.dgn

USERNAME => s128843 DATE PLOTTED => 07-AUG-2014 TIME PLOTTED => 13:05

DIST	COUNTY	ROUTE	POST MILES TOTAL PROJECT	SHEET No	TOTAL SHEETS
12	Ora	5	3.0/3.7	555	635

REGISTERED CIVIL ENGINEER — DATE 4/26/13

3-10-14
PLANS APPROVAL DATE

REGISTERED PROFESSIONAL ENGINEER — MARTIN E. RUVALCABA — No. C-75838 — Exp. 6/20/14 — CIVIL — STATE OF CALIFORNIA

The State of California or its officers or agents shall not be responsible for the accuracy or completeness of electronic copies of this plan sheet.

OCTA
550 SOUTH MAIN ST
ORANGE, CA 92863

PARSONS
2201 DUPONT DRIVE, SUITE 200
IRVINE, CA 92612

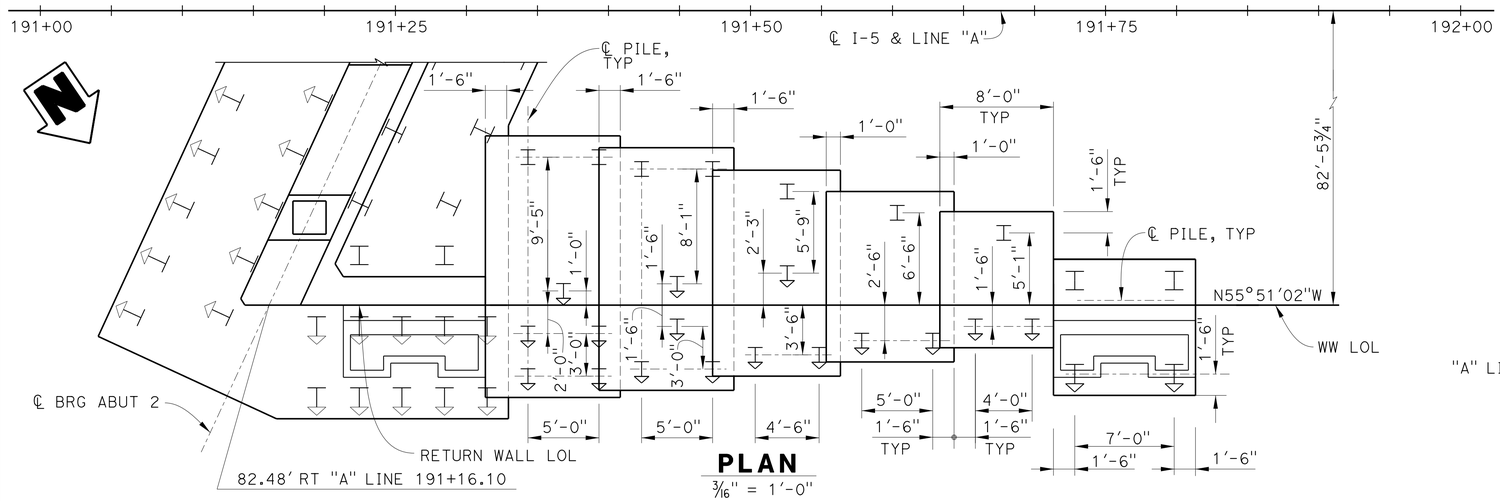

PLAN
3/16" = 1'-0"

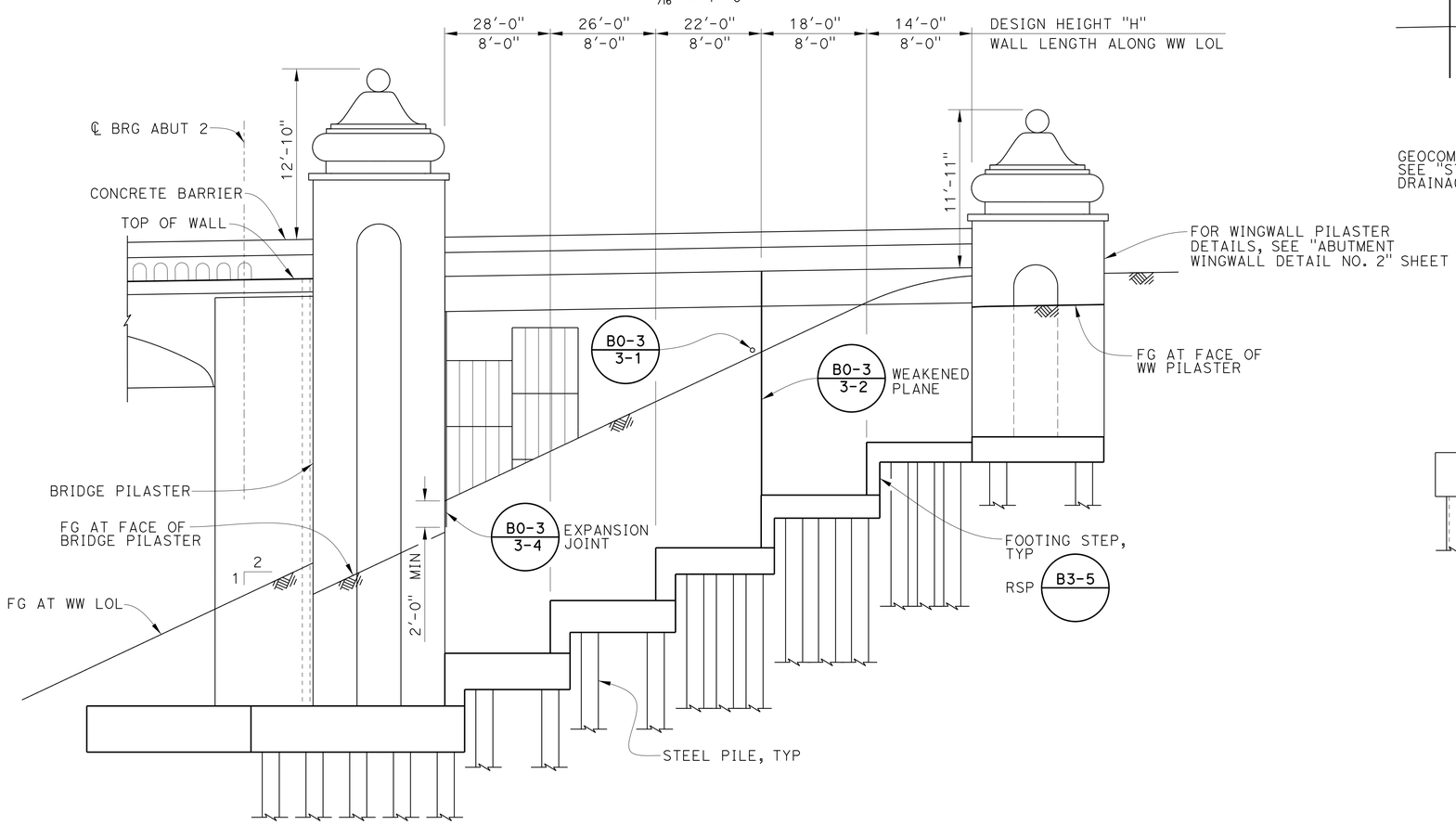

ELEVATION
3/16" = 1'-0"

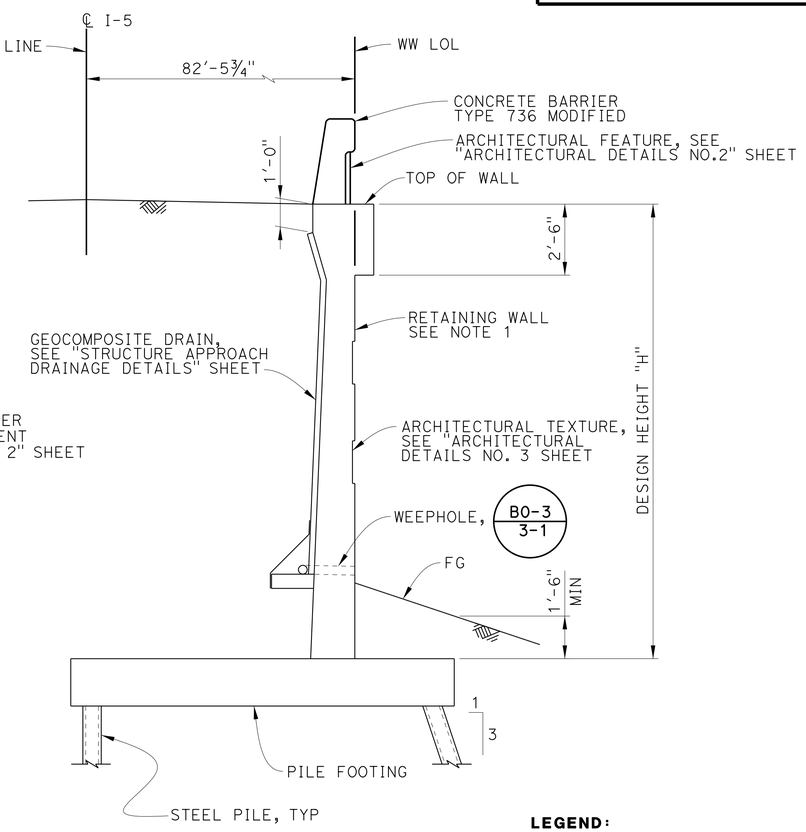

TYPICAL SECTION
3/8" = 1'-0"

LEGEND:

Vertical Steel Pile

1:3 Battered Steel Pile

NOTE:

1. For Retaining Wall Details, See "Abutment Wingwall Details No. 1" Sheet
2. For Pile Type And Pile Tip Elevations, See "Foundation Details" Sheet

NOTE: The Contractor Shall Verify All Controlling Field Dimensions Before Ordering Or Fabricating Any Material.

DESIGN OVERSIGHT Luqi Yang — 7-10-13 — SIGN OFF DATE

	BY	CHECKED
DESIGN	M. Ruvalcaba/E. Mobo	E. Mobo/M. Ruvalcaba
DETAILS	P. Johnson	E. Mobo
QUANTITIES	J. Fix	E. Mobo

PREPARED FOR THE STATE OF CALIFORNIA DEPARTMENT OF TRANSPORTATION

Mohsen Mohseni — PROJECT ENGINEER

BRIDGE NO. 55-1107 — POST MILES 3.39

AVENIDA PICO UC (REPLACE)
ABUTMENT 2 WINGWALL LAYOUT

DESIGN DETAIL SHEET (ENGLISH) (REV.7/16/10)

ORIGINAL SCALE IN INCHES FOR REDUCED PLANS 0 1 2 3

UNIT:
PROJECT NUMBER & PHASE: 12000202771 CONTRACT NO.: 12-0F96A4

DISREGARD PRINTS BEARING EARLIER REVISION DATES → 5/20/12 11/15/12 3/04/13 4/26/13

SHEET 20 OF 39

FILE => 55-1107-f-aww_l02.dgn

USERNAME => s128643 DATE PLOTTED => 07-AUG-2014 TIME PLOTTED => 13:05

DIST	COUNTY	ROUTE	POST MILES TOTAL PROJECT	SHEET No	TOTAL SHEETS
12	Ora	5	3.0/3.7	556	635

REGISTERED CIVIL ENGINEER 4/26/13 DATE

3-10-14
PLANS APPROVAL DATE

REGISTERED PROFESSIONAL ENGINEER MARTIN E. RUVALCABA No. C-75838 Exp. 6/20/14 CIVIL STATE OF CALIFORNIA

The State of California or its officers or agents shall not be responsible for the accuracy or completeness of electronic copies of this plan sheet.

OCTA
550 SOUTH MAIN ST
ORANGE, CA 92863

PARSONS
2201 DUPONT DRIVE, SUITE 200
IRVINE, CA 92612

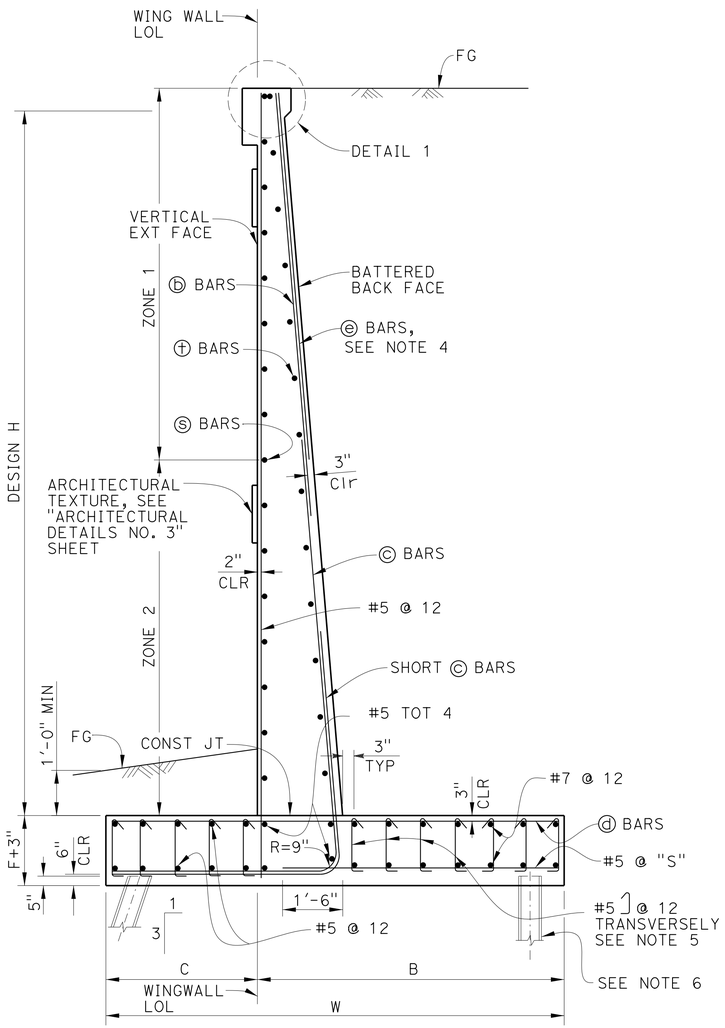

TYPICAL SECTION - WINGWALL

NO SCALE

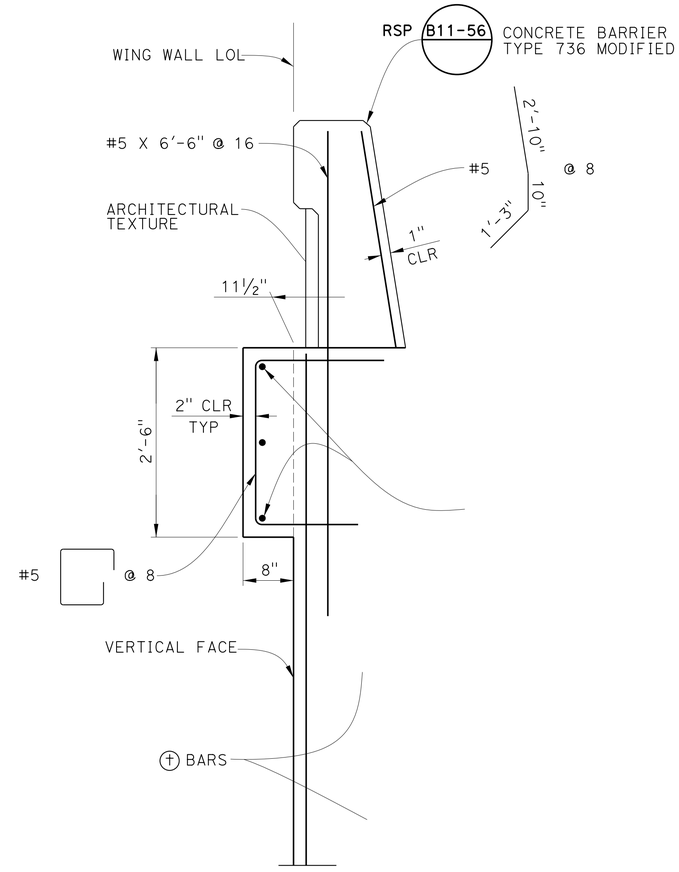

Note: All Concrete Barrier Reinf Not Shown.

DETAIL-1

1" = 1'-0"

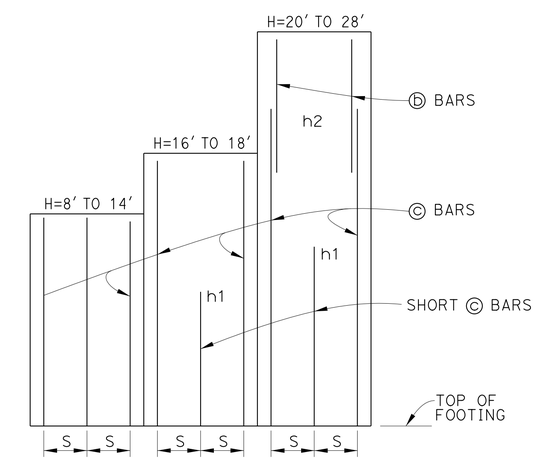

ELEVATION- WINGWALL

NOTES:

1. For Details Not Shown And Drainage Notes See RSP B3-5
2. For Wall Stem Joint Details See B0-3/3-3 And B0-3/3-4
3. At ⓒ Bars:
   No Splices Are Allowed Within H/4 Above The Top Of Footing.
4. Provide #6 @ 10" x 15'-0" ⓔ Bars Over a Distance Of 8'-0" Measured From All Expansion Joints, Begin Wall And End Wall Locations. For H ≤ 14', Hook ⓔ Bar Into Footing And Reduce Bar Length As Needed To Maintain Min Clr Cover.
5. Hook Stirrups Around & Space With Alternating Transverse Reinforcement At 2 x"S"
6. Not All Piles Shown, For Pile Layout And Location See Abutment Detail Sheets.

NOTE: The Contractor Shall Verify All Controlling Field Dimensions Before Ordering Or Fabricating Any Material.

TABLE OF REINFORCING STEEL, DIMENSIONS AND DATA

DESIGN H	8'	12'	14'	16'	18'	20'	22'	24'	26'	28'
W	7'-3"	8'-4"	9'-7"	10'-9"	12'-0"	13'-3"	14'-6"	15'-9"	17'-1"	18'-5"
C	2'-3"	2'-6"	3'-0"	3'-6"	4'-0"	4'-6"	5'-0"	5'-5"	6'-0"	6'-6"
B	5'-0"	5'-10"	6'-7"	7'-3"	8'-0"	8'-9"	9'-6"	10'-4"	11'-1"	11'-11"
F	1'-4"	1'-6"	1'-8"	1'-8"	1'-9"	1'-9"	1'-11"	2'-2"	2'-5"	2'-10"
BATTER	½: 12	½: 12	½: 12	½: 12	½: 12	½: 12	½: 12	⅝: 12	⅝: 12	¾: 12
SPACING "S"	9"	9"	7"	6"	5"	6"	6"	6"	6"	6"
ⓑ BARS	-	-	-	-	-	#7	#7	#7	#7	#7
ⓒ BARS	#6	#6	#6	#7	#7	#8	#9	#9	#10	#10
ⓓ BARS	#6 @ 9	#6 @ 6	#6 @ 6	#8 @ 7.5	#8 @ 6	#9 @ 6	#9 @ 6	#9 @ 6	#10 @ 6	#10 @ 6
h1	-	-	-	5'-9"	5'-10"	8'-0"	9'-0"	10'-1"	11'-0"	12'-1"
h2	-	-	-	-	-	10'-5"	13'-0"	14'-7"	17'-6"	19'-0"
ZONE 1 ⓢ BARS	#5 @ 18	#5 @ 18	#5 @ 18	#5 @ 18	#5 @ 18	#5 @ 18	#5 @ 18	#5 @ 12	#5 @ 12	#5 @ 12
ZONE 2 ⓢ BARS	#5 @ 18	#5 @ 18	#5 @ 18	#5 @ 12	#5 @ 12	#5 @ 12	#5 @ 12	#5 @ 12	#5 @ 12	#6 @ 12
ZONE 1 ⓣ BARS	#4 @ 18	#4 @ 18	#4 @ 18	#4 @ 18	#4 @ 18	#4 @ 18	#4 @ 18	#4 @ 12	#4 @ 12	#4 @ 18
ZONE 2 ⓣ BARS	#4 @ 18	#4 @ 18	#4 @ 18	#4 @ 18	#4 @ 18	#4 @ 18	#4 @ 18	#4 @ 12	#4 @ 12	#4 @ 12

SYMBOLS:

h1 = Top Of Footing To Top Of Short ⓒ Bar
h2 = Top Of Footing To Top Of ⓒ Bar
Zone 1 = Top Half Of Stem Height
Zone 2 = Bottom Half Of Stem Height

Luqi Yang
DESIGN OVERSIGHT Luqi Yang
1-14-14
SIGN OFF DATE

	BY	CHECKED
DESIGN	M. Ruvalcaba/E. Mobo	E. Mobo/M. Ruvalcaba
DETAILS	P. Johnson	E. Mobo
QUANTITIES	J. Fix	E. Mobo

PREPARED FOR THE STATE OF CALIFORNIA DEPARTMENT OF TRANSPORTATION

Mohsen Mohseni
PROJECT ENGINEER

BRIDGE NO. 55-1107
POST MILES 3.39

AVENIDA PICO UC (REPLACE)
ABUTMENT WINGWALL DETAILS No. 1

DESIGN DETAIL SHEET (ENGLISH) (REV.7/16/10)

ORIGINAL SCALE IN INCHES FOR REDUCED PLANS 0 1 2 3

UNIT:
PROJECT NUMBER & PHASE: 12000202771 CONTRACT NO.: 12-0F96A4

DISREGARD PRINTS BEARING EARLIER REVISION DATES

REVISION DATES 5/20/12 11/15/12 3/04/13 4/26/13

SHEET 21 OF 39

FILE => 55-1107-f-awwdt01.dgn

USERNAME => s128843 DATE PLOTTED => 07-AUG-2014 TIME PLOTTED => 13:05

DIST	COUNTY	ROUTE	POST MILES TOTAL PROJECT	SHEET No	TOTAL SHEETS
12	Ora	5	3.0/3.7	557	635

REGISTERED CIVIL ENGINEER — DATE 4/26/13

3-10-14
PLANS APPROVAL DATE

The State of California or its officers or agents shall not be responsible for the accuracy or completeness of electronic copies of this plan sheet.

REGISTERED PROFESSIONAL ENGINEER — MARTIN E. RUVALCABA — No. C-75838 — Exp. 6/20/14 — CIVIL — STATE OF CALIFORNIA

OCTA
550 SOUTH MAIN ST
ORANGE, CA 92863

PARSONS
2201 DUPONT DRIVE, SUITE 200
IRVINE, CA 92612

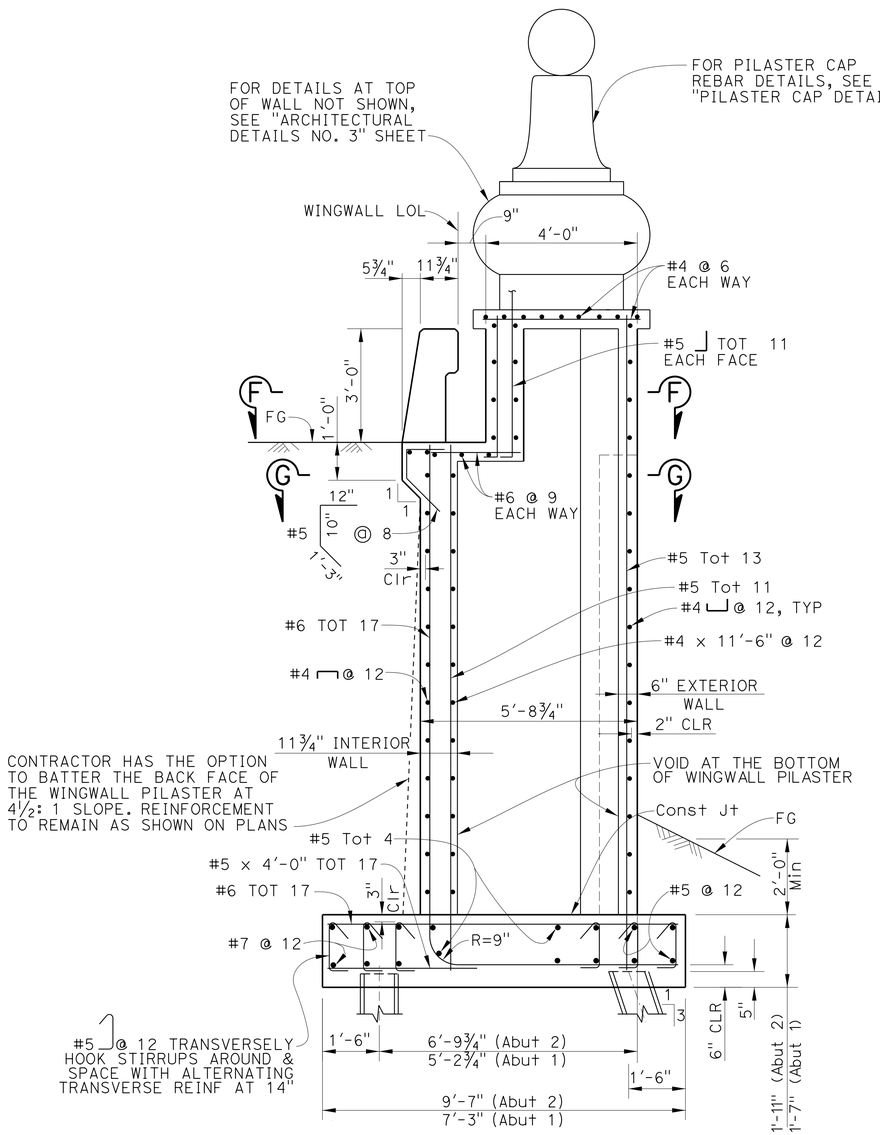

TYPICAL SECTION - WINGWALL PILASTER

NO SCALE

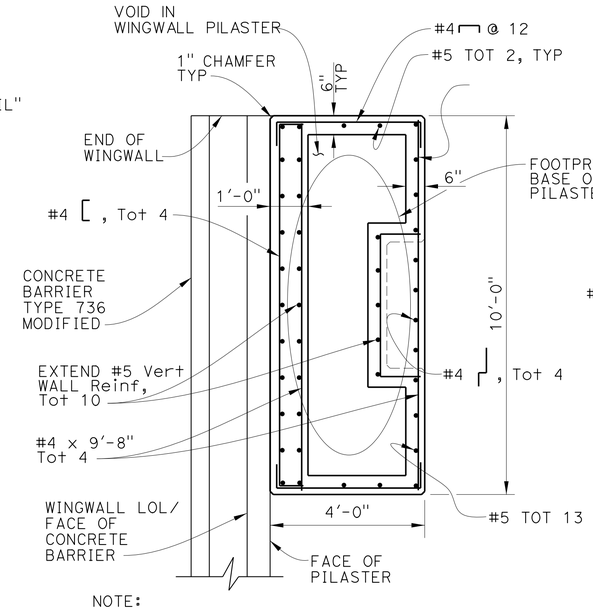

NOTE:

Abutment 2 wingwall shown, Abutment 3 similar.

SECTION F-F

½" = 1'-0"

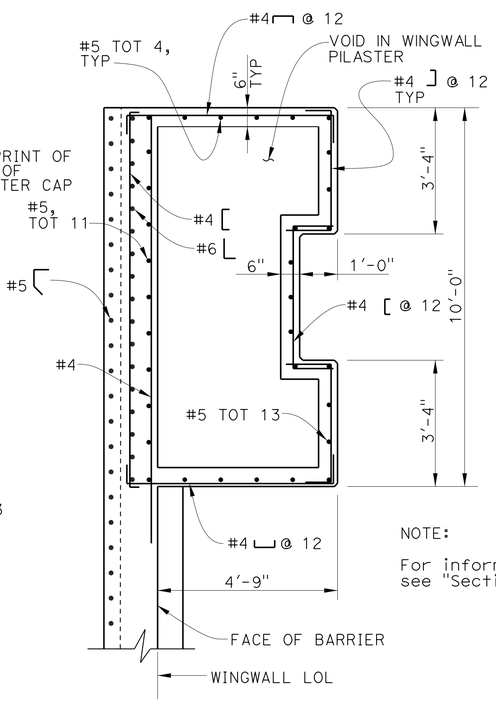

NOTE:

For information not shown, see "Section F-F".

SECTION G-G

½" = 1'-0"

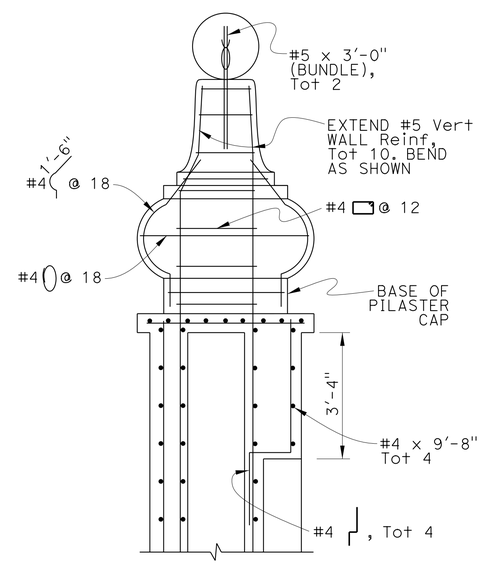

NOTE:

For information on pilaster cap geometry, see "Architectural Details No.3" sheet.

PILASTER CAP DETAIL

NO SCALE

NOTE: The Contractor Shall Verify All Controlling Field Dimensions Before Ordering Or Fabricating Any Material.

DESIGN	BY M. Ruvalcaba/E. Mobo	CHECKED E. Mobo/M. Ruvalcaba	
DETAILS	BY P. Johnson	CHECKED E. Mobo	
QUANTITIES	BY J. Fix	CHECKED E. Mobo	

DESIGN OVERSIGHT Luqi Yang — 7-10-13 — SIGN OFF DATE

PREPARED FOR THE STATE OF CALIFORNIA DEPARTMENT OF TRANSPORTATION

Mohsen Mohseni — PROJECT ENGINEER

BRIDGE NO. 55-1107 — POST MILES 3.39

AVENIDA PICO UC (REPLACE)

ABUTMENT WINGWALL DETAILS No. 2

DESIGN DETAIL SHEET (ENGLISH) (REV.7/16/10)

ORIGINAL SCALE IN INCHES FOR REDUCED PLANS 0 1 2 3

UNIT:
PROJECT NUMBER & PHASE: 12000202771 CONTRACT NO.: 12-0F96A4

DISREGARD PRINTS BEARING EARLIER REVISION DATES

REVISION DATES: 5/20/12 11/15/12 3/04/13 4/26/13

SHEET 22 OF 39

FILE => 55-1107-f-awwdt02.dgn

USERNAME => s128843 DATE PLOTTED => 07-AUG-2014 TIME PLOTTED => 13:05

DIST	COUNTY	ROUTE	POST MILES TOTAL PROJECT	SHEET No	TOTAL SHEETS
12	Ora	5	3.0/3.7	558	635

REGISTERED CIVIL ENGINEER 4/26/13 DATE

3-10-14
PLANS APPROVAL DATE

REGISTERED PROFESSIONAL ENGINEER MARTIN E. RUVALCABA No. C-75838 Exp. 6/20/14 CIVIL STATE OF CALIFORNIA

The State of California or its officers or agents shall not be responsible for the accuracy or completeness of electronic copies of this plan sheet.

OCTA
550 SOUTH MAIN ST
ORANGE, CA 92863

PARSONS
2201 DUPONT DRIVE, SUITE 200
IRVINE, CA 92612

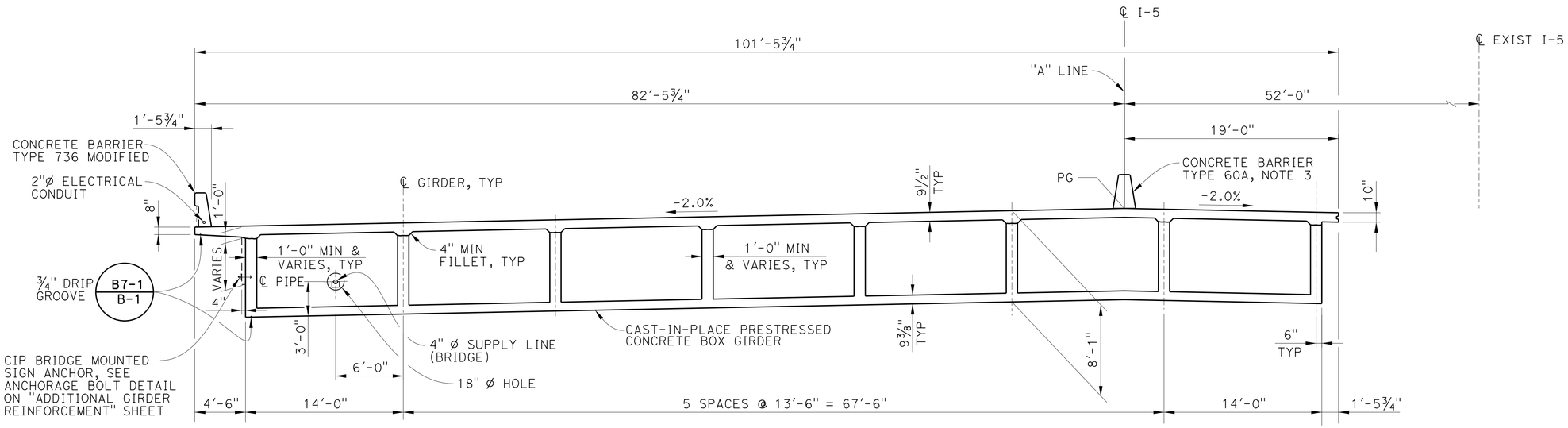

TYPICAL SECTION

3/16" = 1'-0"

NOTES:

1. For Additional Slab Reinforcement See "Additional Girder Reinforcement" Sheet
2. For Soffit Access Opening Location See "Girder Layout" Sheet
3. For Concrete Barrier 60A Stage 3 Construction Connection Details ,See "Detail B" On "Stage Construction" Sheet

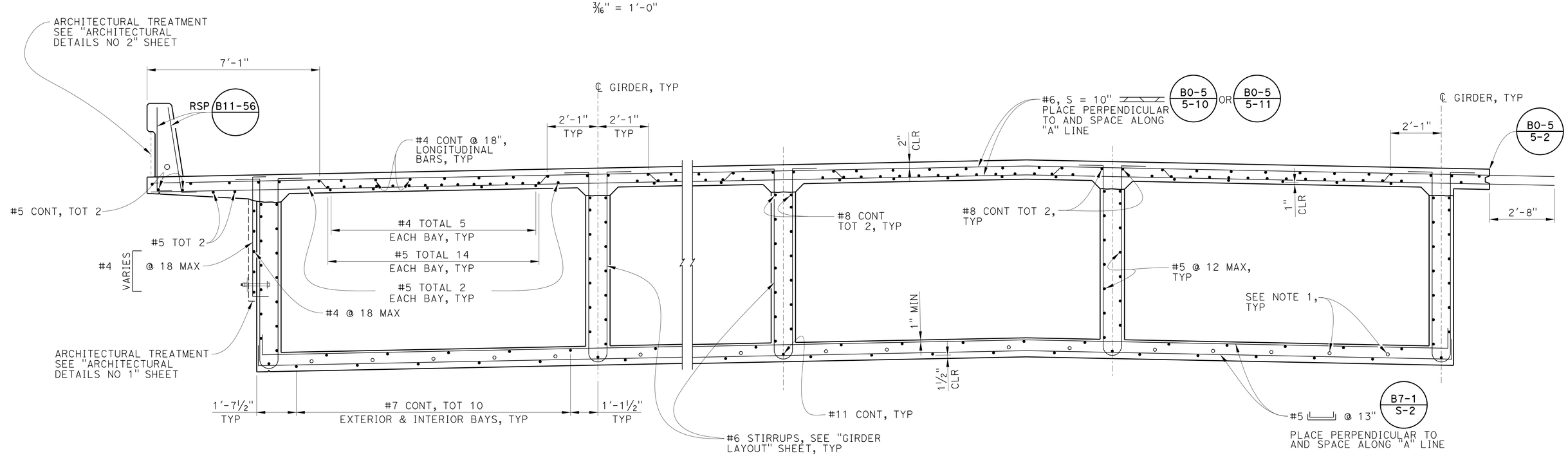

PARTIAL TYPICAL SECTION

B7-1 / B-1 B7-10 B0-5

½" = 1'-0"

NOTE: The Contractor Shall Verify All Controlling Field Dimensions Before Ordering Or Fabricating Any Material.

DESIGN OVERSIGHT Luqi Yang
1-14-14
SIGN OFF DATE

	BY	CHECKED
DESIGN	M. Ruvalcaba	E. Mobo
DETAILS	J. Gilmore	E. Mobo
QUANTITIES	J. Fix	E. Mobo

PREPARED FOR THE STATE OF CALIFORNIA DEPARTMENT OF TRANSPORTATION

Mohsen Mohseni
PROJECT ENGINEER

BRIDGE NO. 55-1107
POST MILES 3.39

AVENIDA PICO UC (REPLACE)

TYPICAL SECTION STAGE 1 CONSTRUCTION

DESIGN DETAIL SHEET (ENGLISH) (REV.7/16/10)

ORIGINAL SCALE IN INCHES FOR REDUCED PLANS 0 1 2 3

UNIT:
PROJECT NUMBER & PHASE: 12000202771 CONTRACT NO.: 12-0F96A4

DISREGARD PRINTS BEARING EARLIER REVISION DATES

REVISION DATES 5/20/12 11/15/12 3/04/13 4/26/13

SHEET 23 OF 39

FILE => 55-1107-k-ts01.dgn

USERNAME => s128843 DATE PLOTTED => 07-AUG-2014 TIME PLOTTED => 13:05

DIST	COUNTY	ROUTE	POST MILES TOTAL PROJECT	SHEET No	TOTAL SHEETS
12	Ora	5	3.0/3.7	559	635

REGISTERED CIVIL ENGINEER — DATE 4/26/13

3-10-14
PLANS APPROVAL DATE

REGISTERED PROFESSIONAL ENGINEER — MARTIN E. RUVALCABA — No. C-75838 — Exp. 6/20/14 — CIVIL — STATE OF CALIFORNIA

The State of California or its officers or agents shall not be responsible for the accuracy or completeness of electronic copies of this plan sheet.

OCTA
550 SOUTH MAIN ST
ORANGE, CA 92863

PARSONS
2201 DUPONT DRIVE, SUITE 200
IRVINE, CA 92612

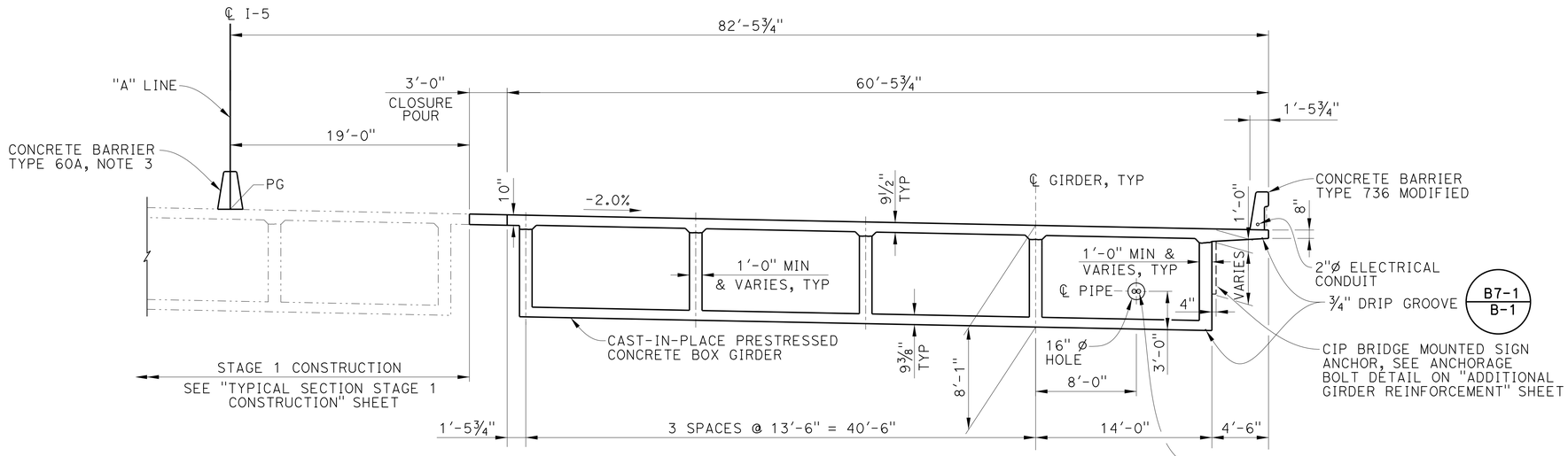

TYPICAL SECTION

3/16" = 1'-0"

NOTES:

1. For Additional Slab Reinforcement See "Additional Girder Reinforcement" Sheet
2. For Soffit Access Opening Location See "Girder Layout" Sheet
3. For Concrete Barrier 60A Stage 3 Construction Connection Details ,See "Detail B" On "Stage Construction" Sheet

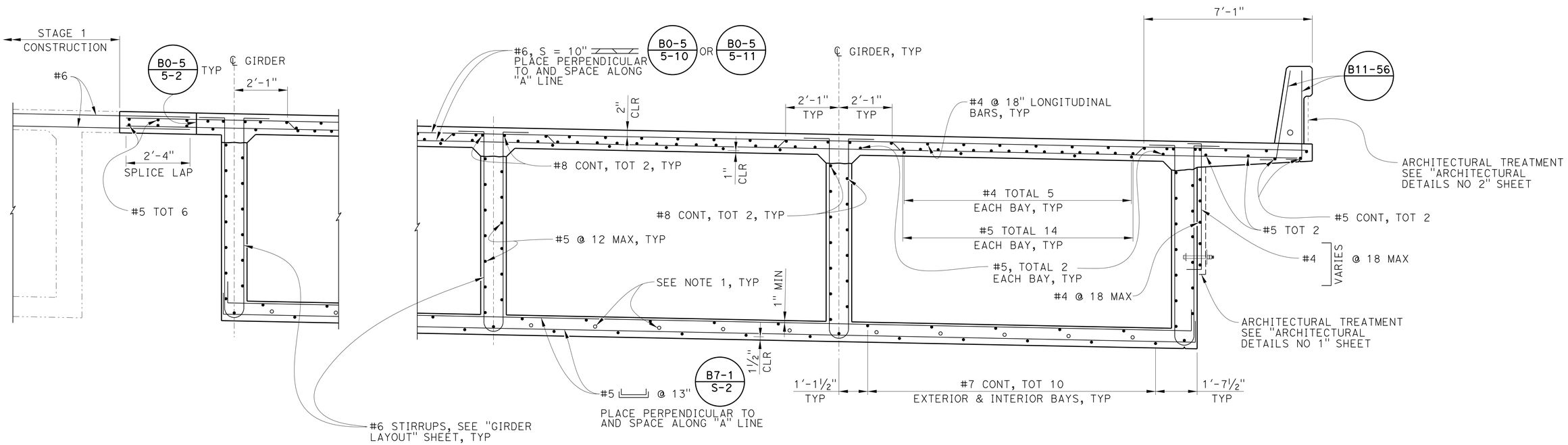

PARTIAL TYPICAL SECTION

½" = 1'-0"

B7-1 / B-1 — B7-10 — B0-5

NOTE: The Contractor Shall Verify All Controlling Field Dimensions Before Ordering Or Fabricating Any Material.

Luqi Yang
DESIGN OVERSIGHT — Luqi Yang
7-10-13
SIGN OFF DATE

	BY	CHECKED
DESIGN	M. Ruvalcaba	E. Mobo
DETAILS	J. Gilmore	E. Mobo
QUANTITIES	J. Fix	E. Mobo

PREPARED FOR THE STATE OF CALIFORNIA DEPARTMENT OF TRANSPORTATION

Mohsen Mohseni
PROJECT ENGINEER

BRIDGE NO. 55-1107
POST MILES 3.39

AVENIDA PICO UC (REPLACE)

TYPICAL SECTION STAGE 2 CONSTRUCTION

DESIGN DETAIL SHEET (ENGLISH) (REV.7/16/10)

ORIGINAL SCALE IN INCHES FOR REDUCED PLANS 0 1 2 3

UNIT:
PROJECT NUMBER & PHASE: 12000202771 CONTRACT NO.: 12-0F96A4

DISREGARD PRINTS BEARING EARLIER REVISION DATES

REVISION DATES: 5/20/12 11/15/12 3/14/13 4/26/13

SHEET 24 OF 39

FILE => 55-1107-k-ts02.dgn

USERNAME => s128643 DATE PLOTTED => 07-AUG-2014 TIME PLOTTED => 13:06

DIST	COUNTY	ROUTE	POST MILES TOTAL PROJECT	SHEET No	TOTAL SHEETS
12	Ora	5	3.0/3.7	560	635

REGISTERED CIVIL ENGINEER 4/26/13 DATE

3-10-14
PLANS APPROVAL DATE

REGISTERED PROFESSIONAL ENGINEER MARTIN E. RUVALCABA No. C-75838 Exp. 6/20/14 CIVIL STATE OF CALIFORNIA

The State of California or its officers or agents shall not be responsible for the accuracy or completeness of electronic copies of this plan sheet.

OCTA
550 SOUTH MAIN ST
ORANGE, CA 92863

PARSONS
2201 DUPONT DRIVE, SUITE 200
IRVINE, CA 92612

FALSEWORK RELEASE NOTES

ALTERNATIVE 1:

Falsework Shall Be Released As Soon As Permitted By The Specifications. Closure Pour Shall Not Be Placed Sooner Than 60 Days After the Falsework has been Released.

ALTERNATIVE 2:

Falsework Shall Not Be Released Less Than 28 Days After The Last Concrete Has Been Placed. Closure Pour Shall Not Be Placed Sooner Than 14 Days After The Falsework Has Been Released.

When Alternative 2 Is Used, Camber Values Are 0.75 Times Those Shown In The Camber Diagram.

LEGEND:

XX Indicates Width Of Girder

12 Indicates Minimum Girder Width in Inches

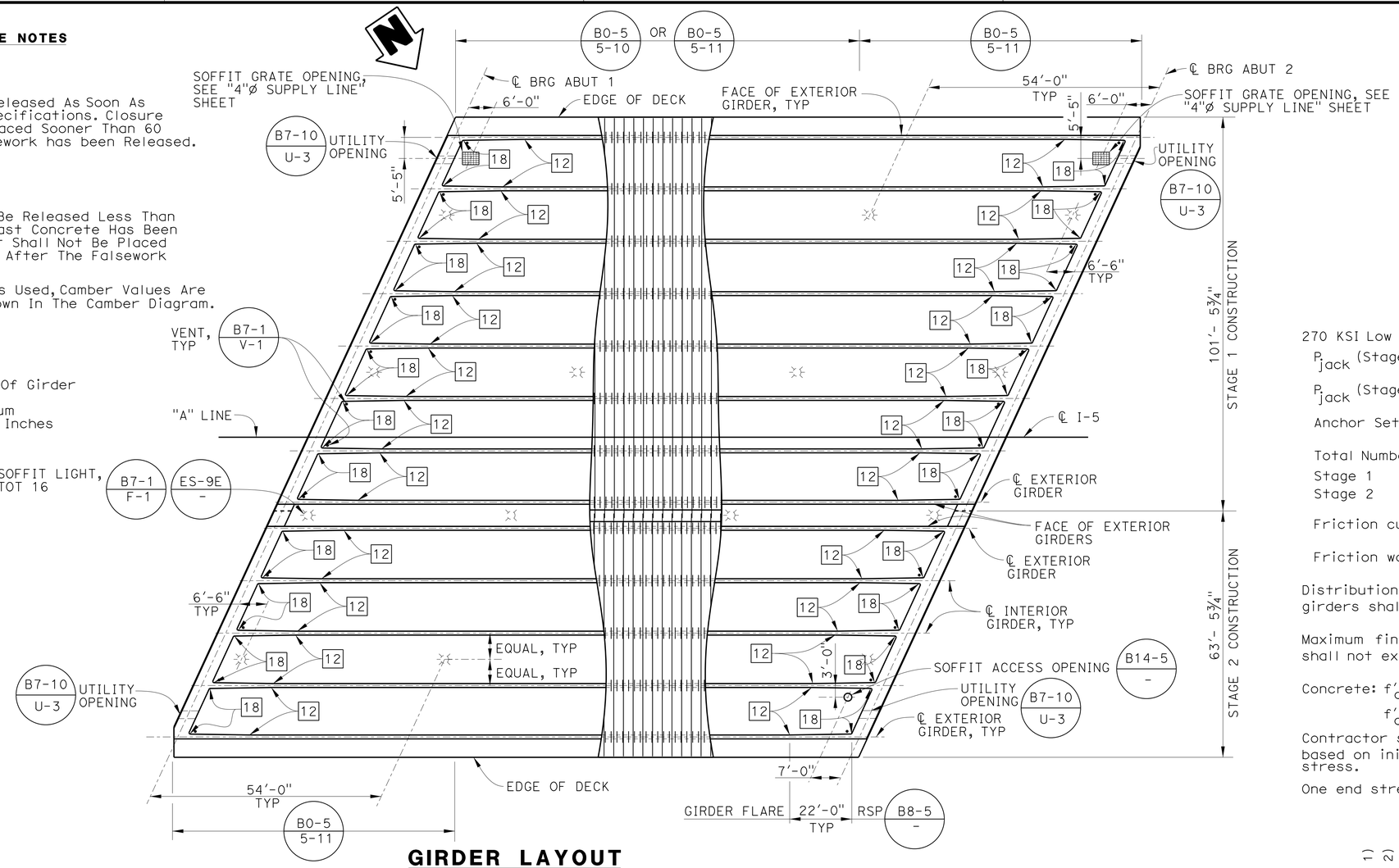

GIRDER LAYOUT

1/16" = 1'-0"

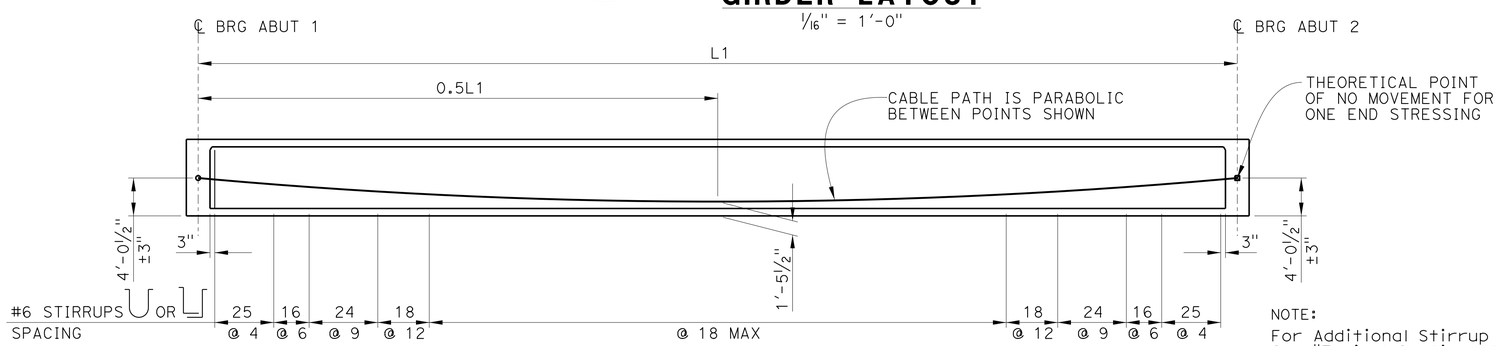

LONGITUDINAL SECTION

NO SCALE

NOTE:
For Additional Stirrup At Anchorage, See "Typical Section At Girder PS Anchorage" On "Girder Details" Sheet.

NOTE: The Contractor Shall Verify All Controlling Field Dimensions Before Ordering Or Fabricating Any Material.

PRESTRESSING NOTES

270 KSI Low Relaxation Strand:

P_{jack} (Stage 1) = 33,800 kips

P_{jack} (Stage 2) = 21,120 kips

Anchor Set = ⅜ inch

Total Number of Girders
Stage 1 = 8
Stage 2 = 5

Friction curvature coefficient μ = 0.15 (1/rad)

Friction wobble coefficient k = 0.0002 (1/ft)

Distribution of prestress force (Pjack) between girders shall not exceed the ratio of 3:2.

Maximum final force variation between girders shall not exceed 725 kips.

Concrete: f'_c = 5.0 ksi @ 28 days

f'_{ci} = 4.0 ksi @ time of stressing

Contractor shall submit elongation calculations based on initial stress at ⊠ = 0.928 times jacking stress.

One end stressing shall be performed from either end.

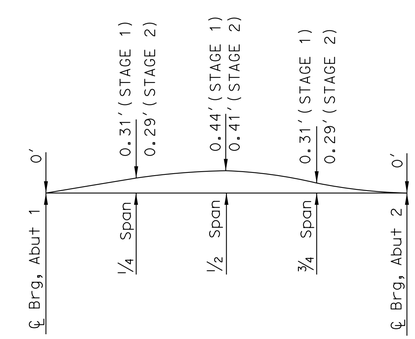

NOTE:
Camber Does Not Include Allowance For Falsework Settlements.

CAMBER DIAGRAM

NO SCALE

DESIGN	BY M. Ruvalcaba	CHECKED E. Mobo	
DETAILS	BY P. Johnson	CHECKED E. Mobo	
QUANTITIES	BY J. Fix	CHECKED E. Mobo	

Luqi Yang
DESIGN OVERSIGHT Luqi Yang
1-14-14
SIGN OFF DATE

DESIGN DETAIL SHEET (ENGLISH) (REV.7/16/10)

ORIGINAL SCALE IN INCHES FOR REDUCED PLANS 0 1 2 3

PREPARED FOR THE STATE OF CALIFORNIA DEPARTMENT OF TRANSPORTATION

Mohsen Mohseni
PROJECT ENGINEER

BRIDGE NO. 55-1107
POST MILES 3.39

AVENIDA PICO UC (REPLACE)
GIRDER LAYOUT

UNIT:
PROJECT NUMBER & PHASE: 12000202771 CONTRACT NO.: 12-0F96A4

DISREGARD PRINTS BEARING EARLIER REVISION DATES

REVISION DATES 5/28/12 11/15/12 3/28/13 4/26/13

SHEET 25 OF 39

FILE => 55-1107-1-g_1o01.dgn

USERNAME => s128843 DATE PLOTTED => 07-AUG-2014 TIME PLOTTED => 13:06

DIST	COUNTY	ROUTE	POST MILES TOTAL PROJECT	SHEET No	TOTAL SHEETS
12	Ora	5	3.0/3.7	561	635

REGISTERED CIVIL ENGINEER 4/26/13 DATE

3-10-14
PLANS APPROVAL DATE

REGISTERED PROFESSIONAL ENGINEER MARTIN E. RUVALCABA No. C-75838 Exp. 6/20/14 CIVIL STATE OF CALIFORNIA

The State of California or its officers or agents shall not be responsible for the accuracy or completeness of electronic copies of this plan sheet.

OCTA
550 SOUTH MAIN ST
ORANGE, CA 92863

PARSONS
2201 DUPONT DRIVE, SUITE 200
IRVINE, CA 92612

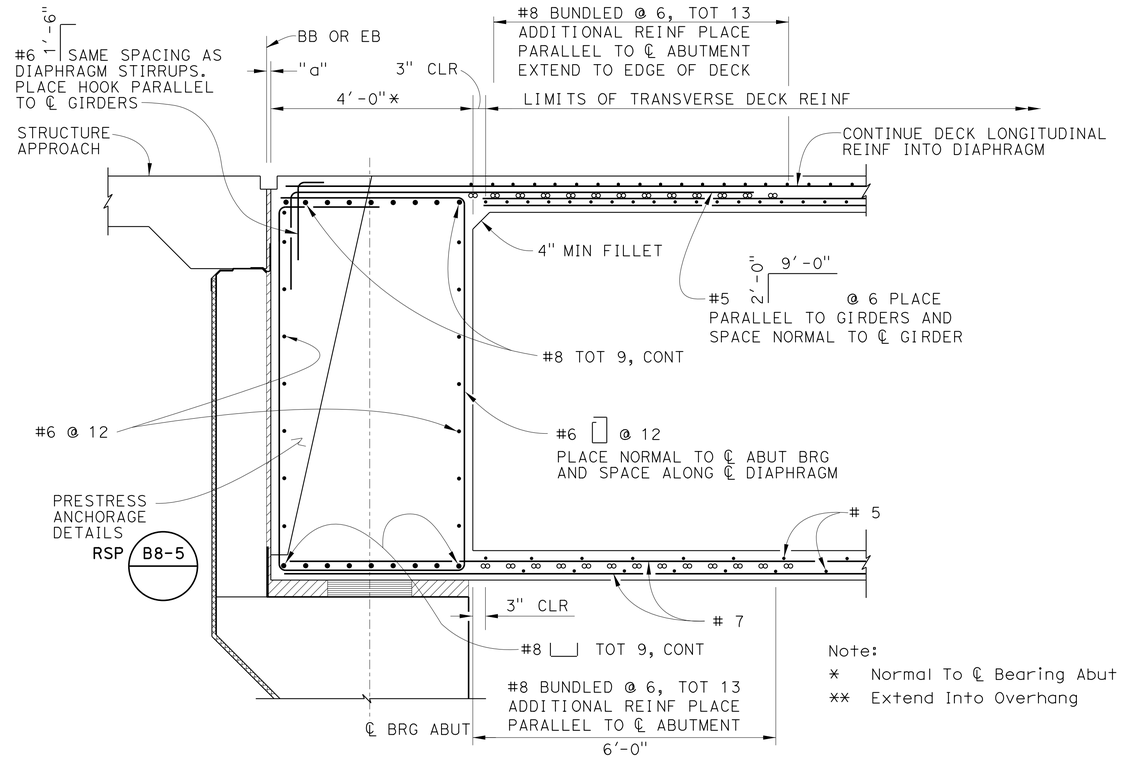

Note:
* Normal To ℄ Bearing Abut
** Extend Into Overhang

TYPICAL ABUTMENT DIAPHRAGM SECTION

1½" = 1'-0"

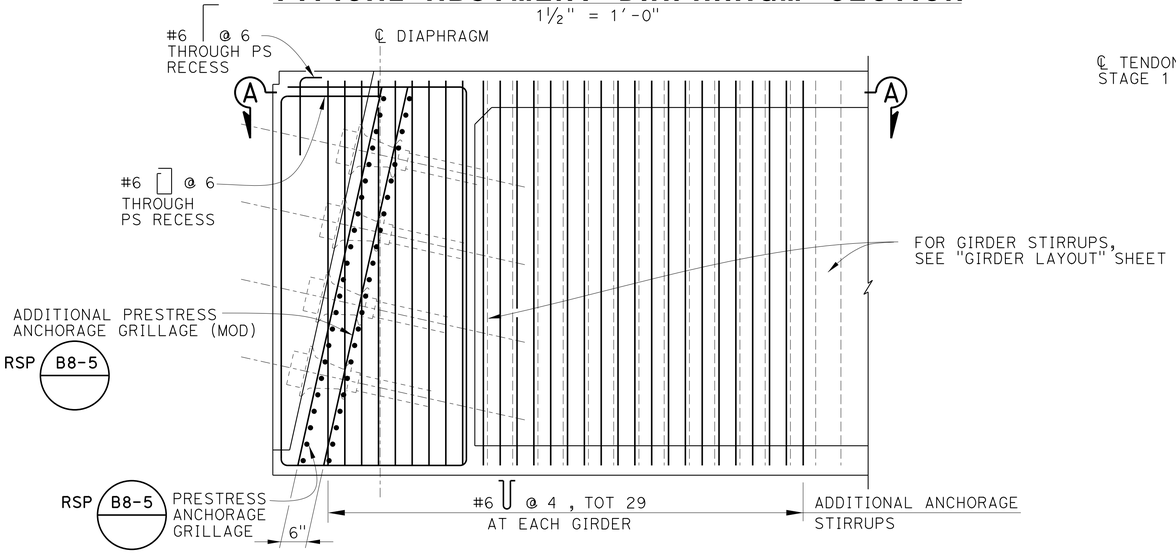

TYPICAL SECTION AT GIRDER PS ANCHORAGE

1½" = 1'-0"

NOTE: The Contractor Shall Verify All Controlling Field Dimensions Before Ordering Or Fabricating Any Material.

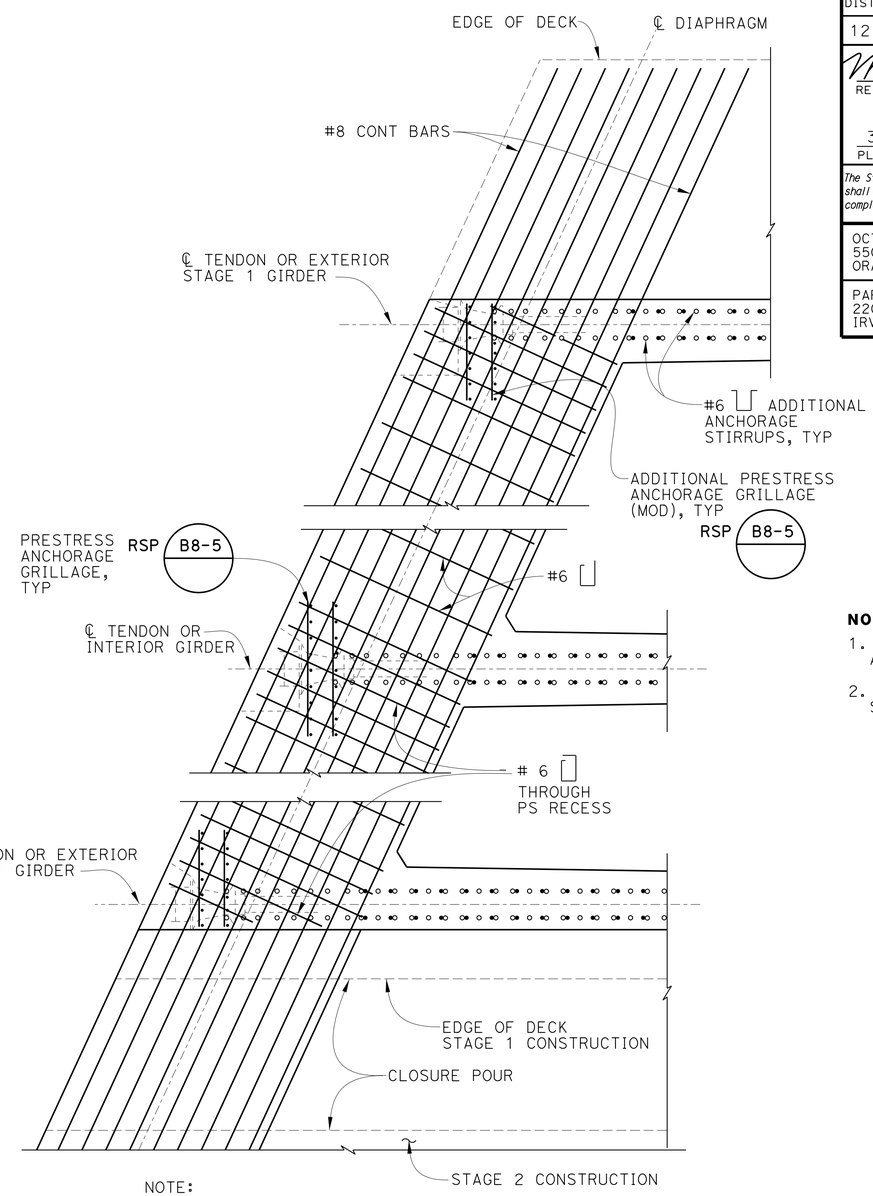

NOTE:
Abut 1 End Diaphragm Shown, Abut 2 Similiar.

SECTION A-A

1½" = 1'-0"
(Left Half Shown, Right Half Similar)

NOTES:

1. For Reinf Not Shown, See "Typical Abutment Diaphragm Section" Sheet
2. Prestress Anchorage & Duct Pattern Shown Is Conceptual Only.

DESIGN OVERSIGHT Luqi Yang
1-14-14
SIGN OFF DATE

	BY	CHECKED
DESIGN	M. Ruvalcaba	E. Mobo
DETAILS	P. Johnson	E. Mobo
QUANTITIES	J. Fix	E. Mobo

PREPARED FOR THE STATE OF CALIFORNIA DEPARTMENT OF TRANSPORTATION

Mohsen Mohseni
PROJECT ENGINEER

BRIDGE NO. 55-1107
POST MILES 3.39

AVENIDA PICO UC (REPLACE)
GIRDER DETAILS

DESIGN DETAIL SHEET (ENGLISH) (REV.7/16/10)

ORIGINAL SCALE IN INCHES FOR REDUCED PLANS 0 1 2 3

UNIT:
PROJECT NUMBER & PHASE: 12000202771 CONTRACT NO.: 12-0F96A4

DISREGARD PRINTS BEARING EARLIER REVISION DATES

REVISION DATES 5/29/12 11/15/12 3/14/13 4/26/13

SHEET 26 OF 39

FILE => 55-1107-1-gdt01.dgn

USERNAME => s128843 DATE PLOTTED => 07-AUG-2014 TIME PLOTTED => 13:06

DIST	COUNTY	ROUTE	POST MILES TOTAL PROJECT	SHEET No	TOTAL SHEETS
12	Ora	5	3.0/3.7	562	635

REGISTERED CIVIL ENGINEER — DATE 4/26/13

3-10-14
PLANS APPROVAL DATE

The State of California or its officers or agents shall not be responsible for the accuracy or completeness of electronic copies of this plan sheet.

REGISTERED PROFESSIONAL ENGINEER — MARTIN E. RUVALCABA — No. C-75838 — Exp. 6/20/14 — CIVIL — STATE OF CALIFORNIA

OCTA
550 SOUTH MAIN ST
ORANGE, CA 92863

PARSONS
2201 DUPONT DRIVE, SUITE 200
IRVINE, CA 92612

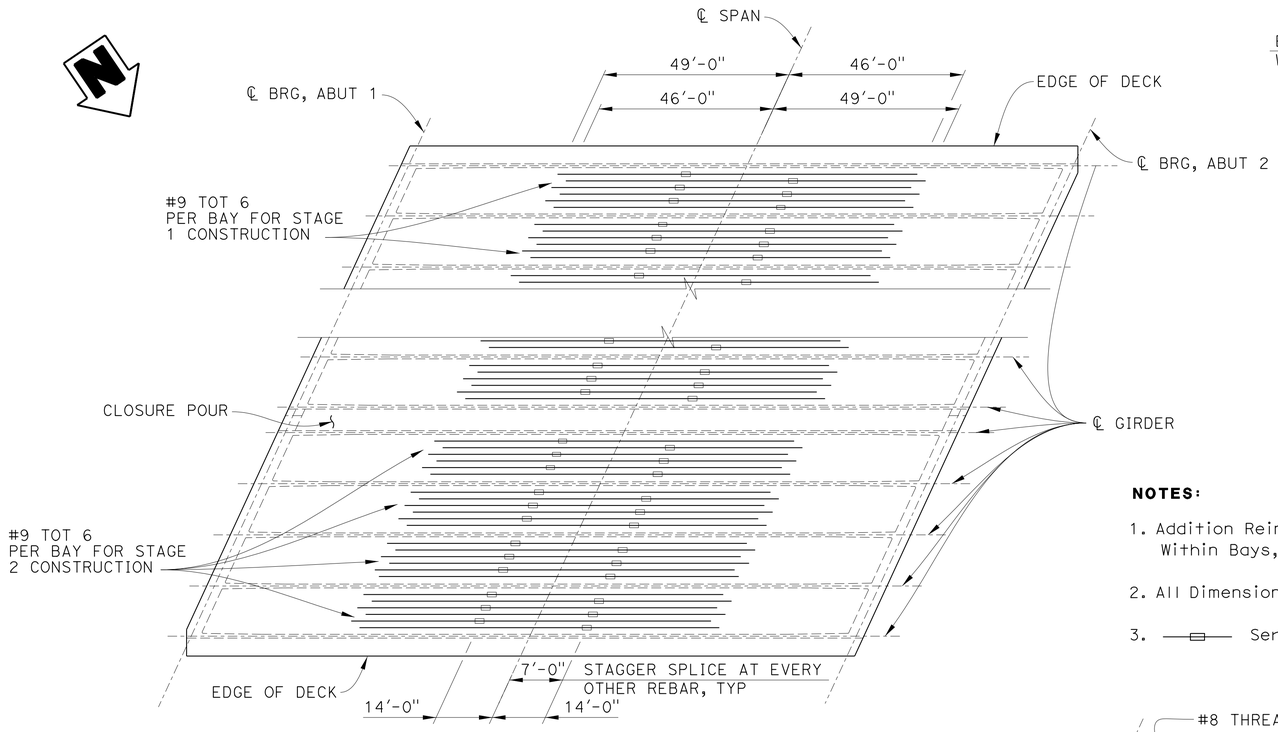

BOTTOM SLAB ADDITIONAL REINFORCEMENT

NO SCALE

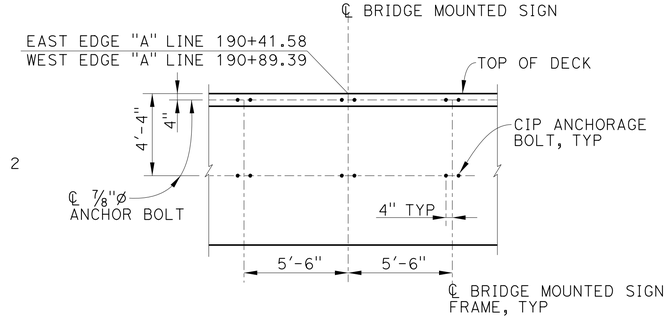

BRIDGE MOUNTED SIGN-
CIP ANCHORAGE BOLT LAYOUT

1/4" = 1'-0"

NOTES:

1. Addition Reinforcement Shall Be Spaced Equally Within Bays, As Shown In "Typical Section" Sheet
2. All Dimensions Are Measured Along ℄ Girders
3. —▭— Service Splice

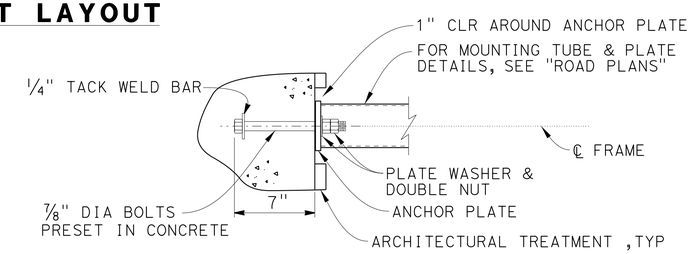

(CIP BOLT ANCHORAGE ON VERTICAL FACE)

ANCHORAGE BOLT DETAIL

NO SCALE

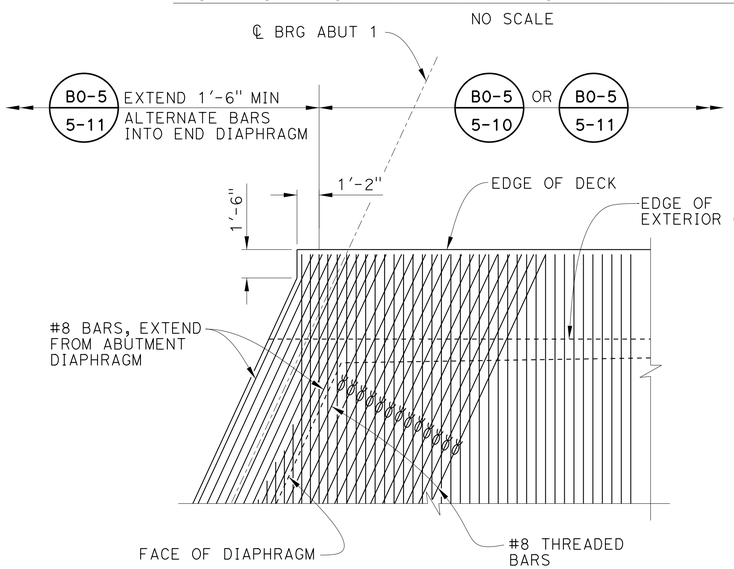

Note: All Bars Not Shown For Clarity

DETAIL-1

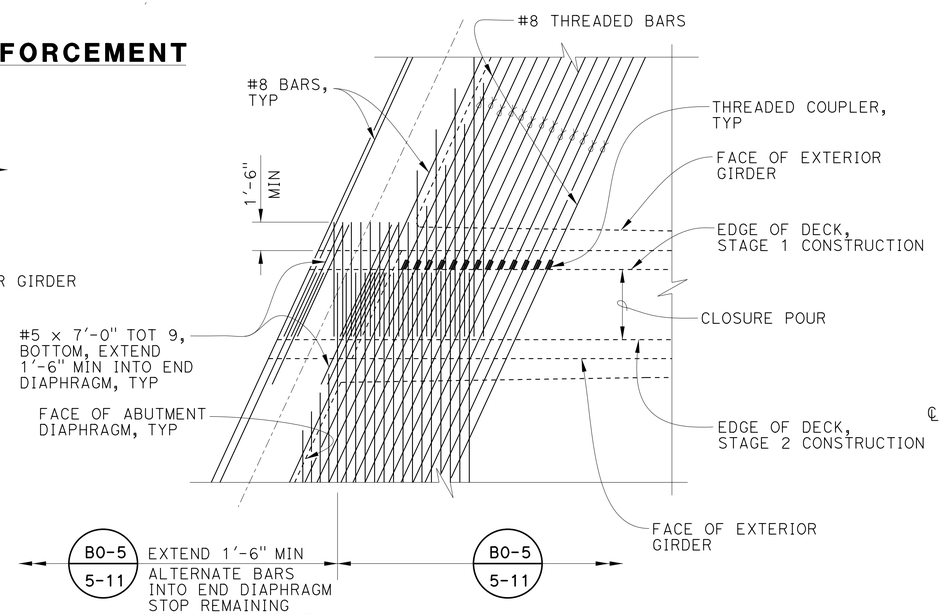

DETAIL-2

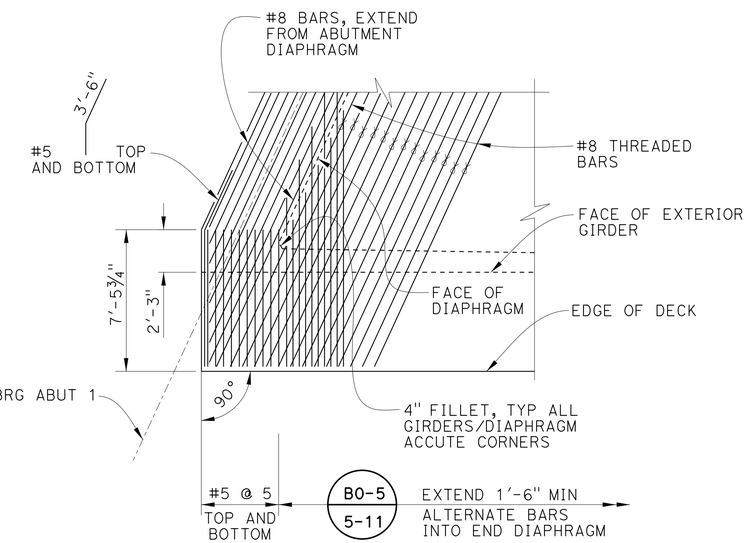

Note: All Bars Not Shown For Clarity

DETAIL-3

TRANSVERSE DECK REINFORCEMENT

1/4" = 1'-0"

NOTE: The Contractor Shall Verify All Controlling Field Dimensions Before Ordering Or Fabricating Any Material.

Luqi Yang
DESIGN OVERSIGHT — Luqi Yang
7-10-13
SIGN OFF DATE

	BY	CHECKED
DESIGN	M. Ruvalcaba	E. Mobo
DETAILS	P. Johnson	E. Mobo
QUANTITIES	J. Fix	E. Mobo

PREPARED FOR THE STATE OF CALIFORNIA DEPARTMENT OF TRANSPORTATION

Mohsen Mohseni
PROJECT ENGINEER

BRIDGE NO. 55-1107
POST MILES 3.39

AVENIDA PICO UC (REPLACE)
ADDITIONAL GIRDER REINFORCEMENT

DESIGN DETAIL SHEET (ENGLISH) (REV.7/16/10)

ORIGINAL SCALE IN INCHES FOR REDUCED PLANS 0 1 2 3

UNIT:
PROJECT NUMBER & PHASE: 12000202771
CONTRACT NO.: 12-0F96A4

DISREGARD PRINTS BEARING EARLIER REVISION DATES

REVISION DATES: 5/20/12 11/15/12 3/04/13 4/26/13

SHEET 27 OF 39

FILE => 55-1107-o-gbot01.dgn

USERNAME => s128843 DATE PLOTTED => 07-AUG-2014 TIME PLOTTED => 13:06

DIST	COUNTY	ROUTE	POST MILES TOTAL PROJECT	SHEET No.	TOTAL SHEETS
12	Ora	5	3.0/3.7	563	635

REGISTERED CIVIL ENGINEER 4/26/13 DATE

3-10-14
PLANS APPROVAL DATE

REGISTERED PROFESSIONAL ENGINEER MARTIN E. RUVALCABA No. C-75838 Exp. 6/20/14 CIVIL STATE OF CALIFORNIA

The State of California or its officers or agents shall not be responsible for the accuracy or completeness of electronic copies of this plan sheet.

OCTA
550 SOUTH MAIN ST
ORANGE, CA 92863

PARSONS
2201 DUPONT DRIVE, SUITE 200
IRVINE, CA 92612

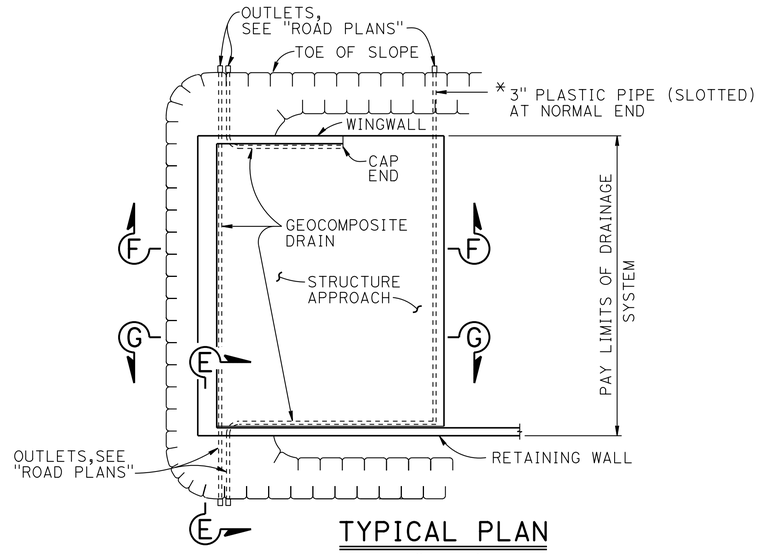

TYPICAL PLAN

1" = 10'

* FOR PIPE LAYOUT AT STAGGERED END, SEE "DETAIL B"

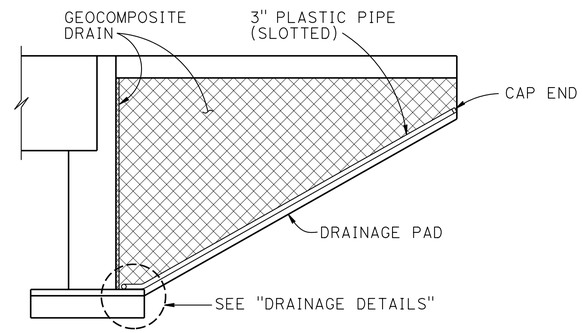

CANTILEVER WINGWALL

SECTION F-F

1/4" = 1'-0"

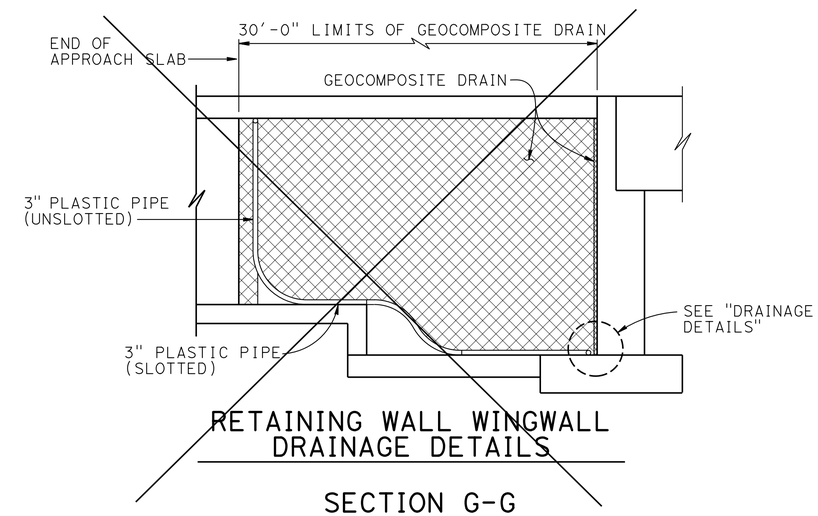

RETAINING WALL WINGWALL DRAINAGE DETAILS

SECTION G-G

1/4" = 1'-0"

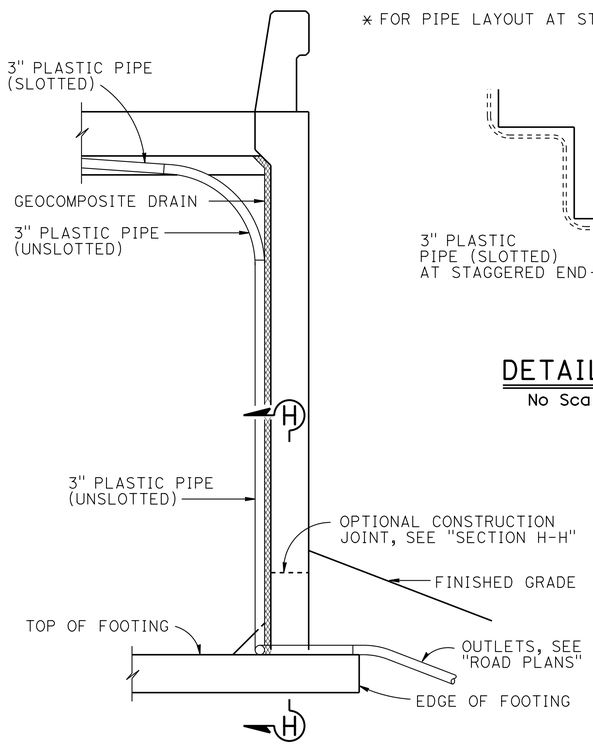

SECTION E-E

1/2" = 1'-0"

NOTE: Bends and junctions in 3" plastic pipe are 30" radius Min

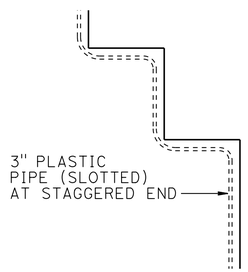

DETAIL B

No Scale

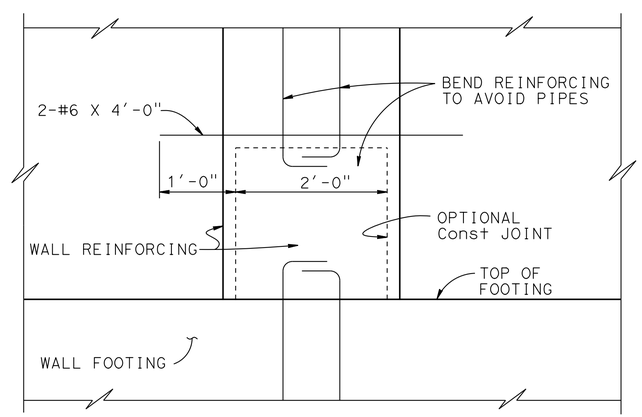

SECTION H-H

1" = 1'-0"

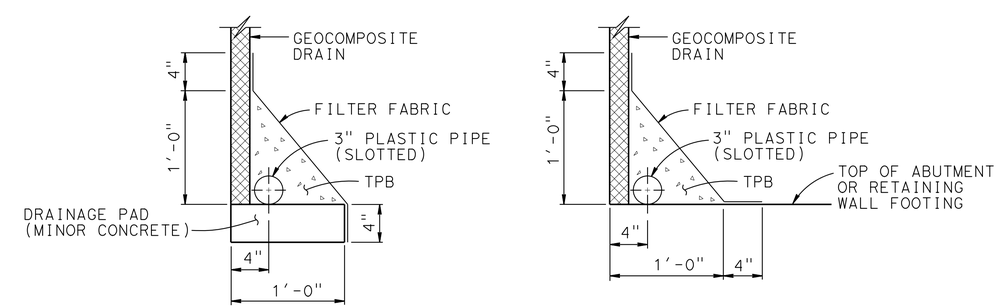

WITHOUT FOOTING

WITH FOOTING

DRAINAGE DETAILS

1 1/2" = 1'-0"

STANDARD DRAWING

FILE NO. xs3-110

APPROVAL DATE July 2011

STATE OF CALIFORNIA
DEPARTMENT OF TRANSPORTATION

DIVISION OF ENGINEERING SERVICES

BRIDGE NO. 55-1107
POST MILE 3.39

AVENIDA PICO REPLACE

STRUCTURE APPROACH DRAINAGE DETAILS

DS OSD 2147A (ENGLISH STANDARD DRAWING "XS" BORDER REV. (02-02-11)

ORIGINAL SCALE IN INCHES FOR REDUCED PLANS 0 1 2 3

UNIT: X
PROJECT NUMBER & PHASE: 12000202771
CONTRACT NO.: 12-0F96A4

DISREGARD PRINTS BEARING EARLIER REVISION DATES

REVISION DATES: 5/20/12 11/20/12 03/20/13 4/26/13

SHEET 28 OF 39

FILE => 55-1107-s-sadd.dgn

USERNAME => s128843 DATE PLOTTED => 07-AUG-2014 TIME PLOTTED => 13:06

DIST	COUNTY	ROUTE	POST MILES TOTAL PROJECT	SHEET No.	TOTAL SHEETS
12	Ora	5	3.0/3.7	564	635

REGISTERED CIVIL ENGINEER 4/26/13 DATE

3-10-14
PLANS APPROVAL DATE

REGISTERED PROFESSIONAL ENGINEER MARTIN E. RUVALCABA No. C-75838 Exp. 6/20/14 CIVIL STATE OF CALIFORNIA

The State of California or its officers or agents shall not be responsible for the accuracy or completeness of electronic copies of this plan sheet.

OCTA
550 SOUTH MAIN ST
ORANGE, CA 92863

PARSONS
2201 DUPONT DRIVE, SUITE 200
IRVINE, CA 92612

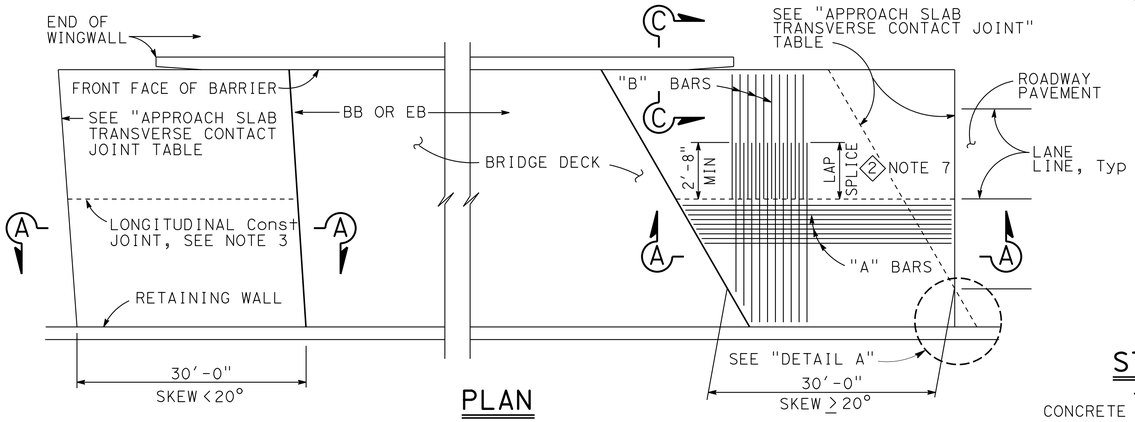

PLAN
1" = 10'

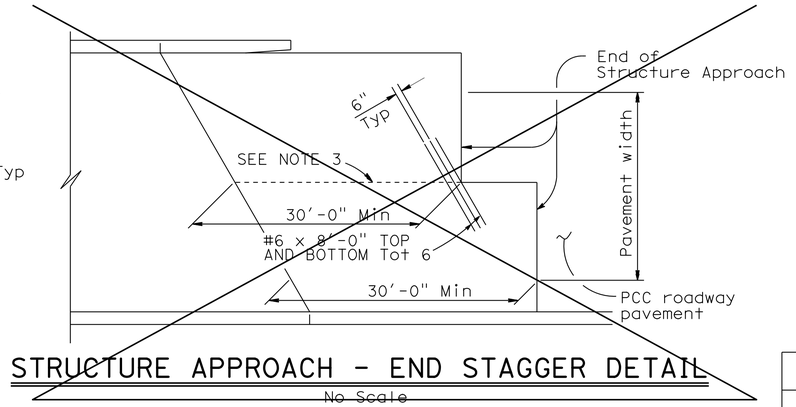

STRUCTURE APPROACH - END STAGGER DETAIL
No Scale

APPROACH SLAB TRANSVERSE CONTACT JOINT		
APPROACH SKEW	WITH AC ROADWAY PAVEMENT	WITH PCC ROADWAY PAVEMENT
< 20°	PARALLEL TO FACE OF PN	PARALLEL TO FACE OF PN
20° - 45°	PARALLEL TO FACE OF PN USE "DETAIL A"	STAGGER LINES 24' TO 36' APART
> 45°	PARALLEL TO FACE OF PN USE "DETAIL A"	STAGGER AT EACH LANE LINE

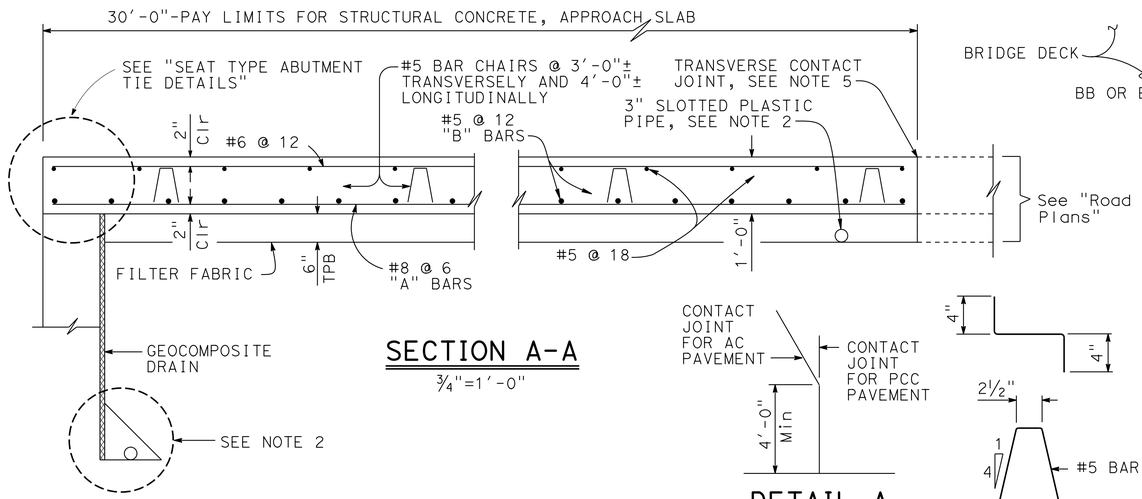

SECTION A-A
¾"=1'-0"

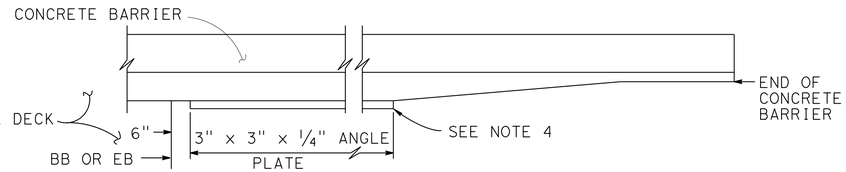

EDGE ANGLE DETAIL
½"=1'-0"

DETAIL A
No Scale

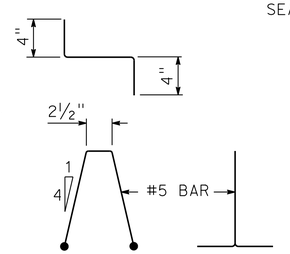

BAR CHAIR DETAIL
1½"=1'-0"

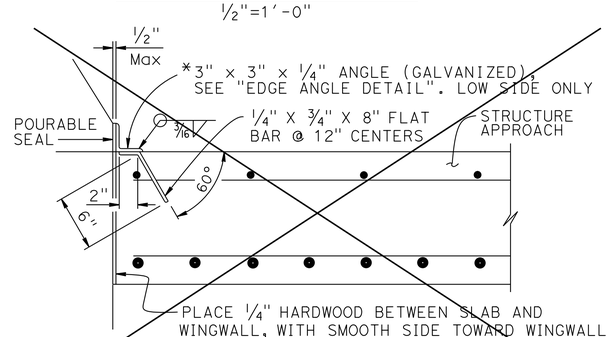

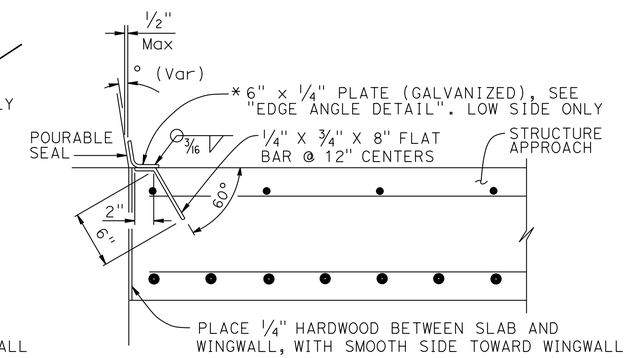

DETAIL B
1½" = 1'-0"

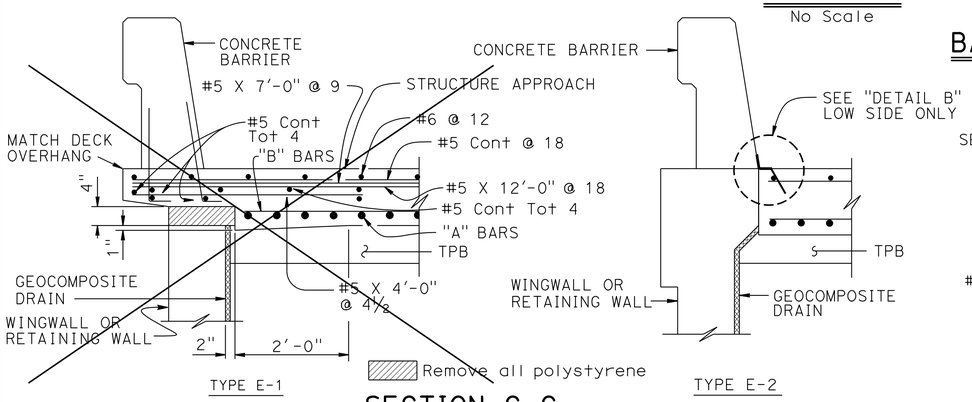

SECTION C-C
¾"=1'-0"

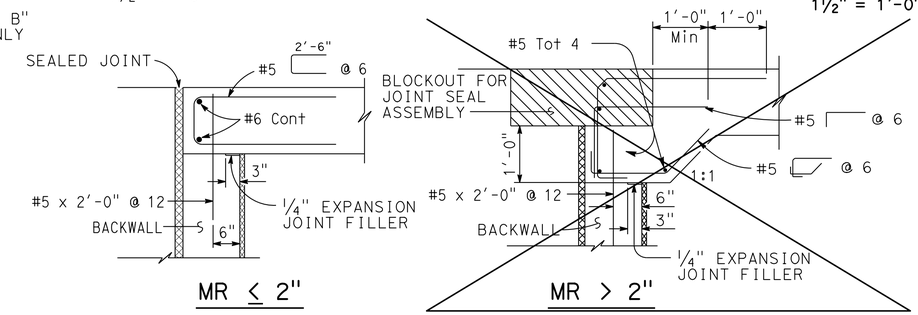

SEAT TYPE ABUTMENT TIE DETAILS (SEE NOTE 1)
¾"=1'-0"

NOTES:

1. For details not shown, see Structure Plans. For MR ≤ 2", adjust bar reinforcement to clear a sawcut for sealed joint, when required
2. For drainage details, see "STRUCTURE APPROACH DRAINAGE DETAILS" sheet
3. Longitudinal construction joints, when permitted by the Engineer, shall be located on lane lines
4. End angle or plate at beginning of barrier transition, end of wingwall or end of structure approach as applicable
5. For transverse contact joint with new PCC paving, refer to Standard Plan P10
6. At the Contractor's option, approach slab transverse reinforcement may be placed parallel to paving notch. Spacing of transverse reinforcement is measured along ℄ roadway
7. For stage construction limits, see "STAGE CONSTRUCTION" sheet 1

REVISED STANDARD DRAWING

FILE NO. xs3-120

APPROVAL DATE July 2011

1 NOTE ADDED
2 LAP SPLICE ADDED

STATE OF CALIFORNIA
DEPARTMENT OF TRANSPORTATION

DIVISION OF ENGINEERING SERVICES

BRIDGE NO. 55-1107
POST MILE 3.39

AVENIDA PICO UC (REPLACE)
STRUCTURE APPROACH TYPE N(30S)

DS OSD 2147A (ENGLISH STANDARD DRAWING "XS" BORDER REV. (02-02-11)

ORIGINAL SCALE IN INCHES FOR REDUCED PLANS 0 1 2 3

UNIT:
PROJECT NUMBER & PHASE: 12000202771
CONTRACT NO.: 12-0F96A4

DISREGARD PRINTS BEARING EARLIER REVISION DATES

REVISION DATES 11/15/12 03/04/13 4/26/13

SHEET 29 OF 39

FILE => 55-1107-s-sae1.dgn

USERNAME => s128843 DATE PLOTTED => 07-AUG-2014 TIME PLOTTED => 13:06

DIST	COUNTY	ROUTE	POST MILES TOTAL PROJECT	SHEET No	TOTAL SHEETS
12	Ora	5	3.0/3.7	565	635

REGISTERED CIVIL ENGINEER 4/26/13 DATE

3-10-14
PLANS APPROVAL DATE

The State of California or its officers or agents shall not be responsible for the accuracy or completeness of electronic copies of this plan sheet.

REGISTERED PROFESSIONAL ENGINEER MARTIN E. RUVALCABA No. C-75838 Exp. 6/20/14 CIVIL STATE OF CALIFORNIA

OCTA
550 SOUTH MAIN ST
ORANGE, CA 92863

PARSONS
2201 DUPONT DRIVE, SUITE 200
IRVINE, CA 92612

NOTES:

1. 4"Ø Supply Line (Bridge) shall be installed parallel to bridge deck.
2. Pipe shall be tightly clamped at the two pipe supports nearest the center of any two expansion assemblies. At all other pipe supports the pipe clamp shall be shimmed with steel washer plates to provide 1/4inch clearance between casing pipe and pipe clamp.
3. For continuation of 4"Ø Supply Line (Bridge), see "Road Plans."

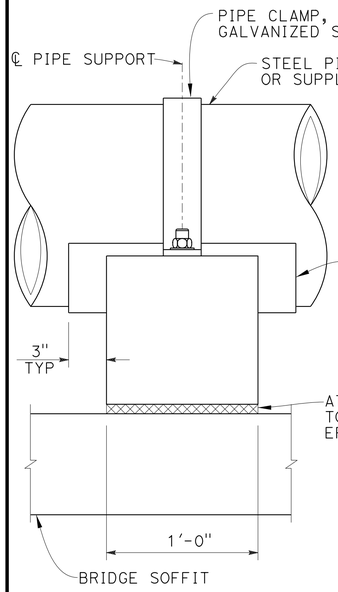

FRONT VIEW

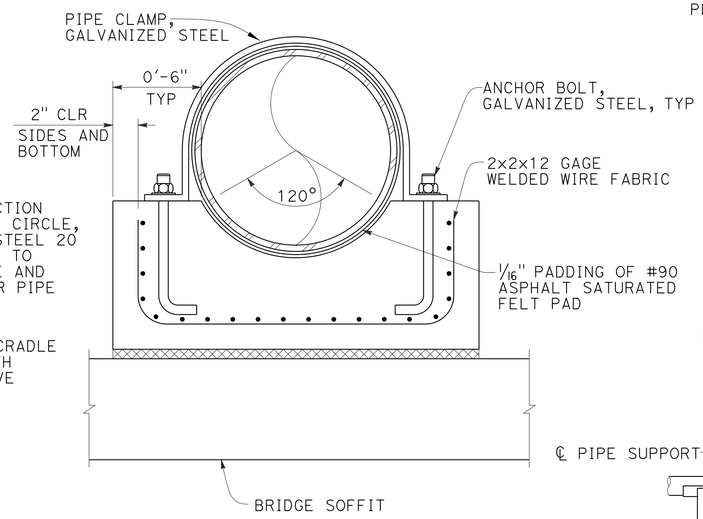

SECTION VIEW, PIPE LINE

CONCRETE PIPE SUPPORT
NO SCALE

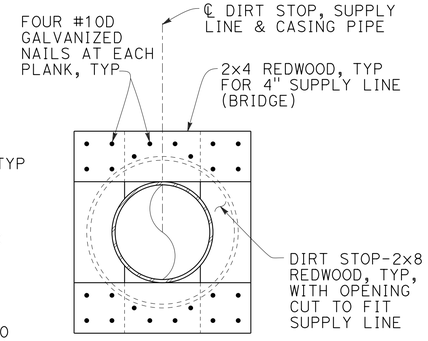

DIRT STOP DETAIL
NO SCALE

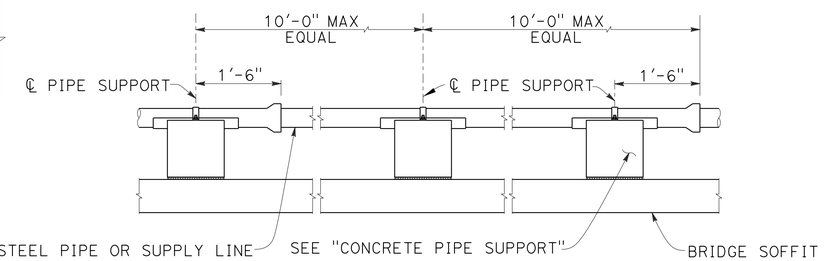

TYPICAL CONCRETE PIPE SUPPORT SPACING DETAIL
NO SCALE

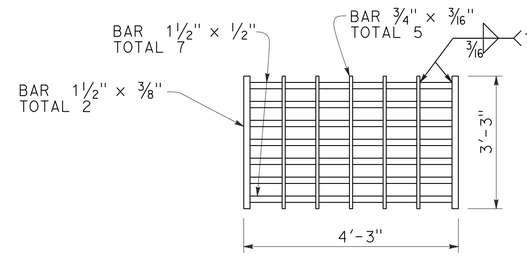

GRATE

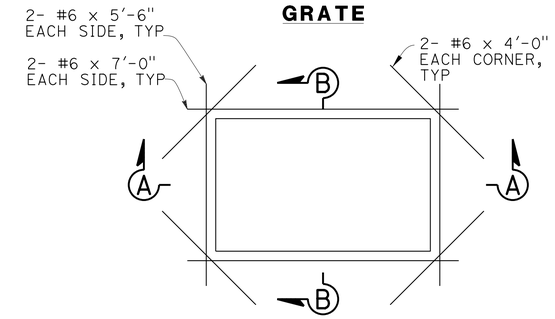

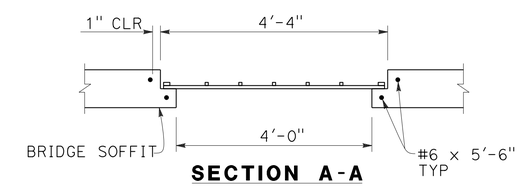

SECTION A-A

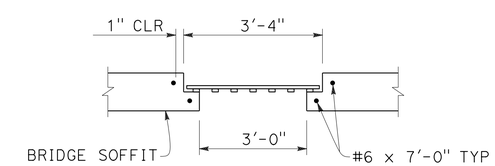

SECTION B-B

SOFFIT GRATE OPENING DETAIL
NO SCALE

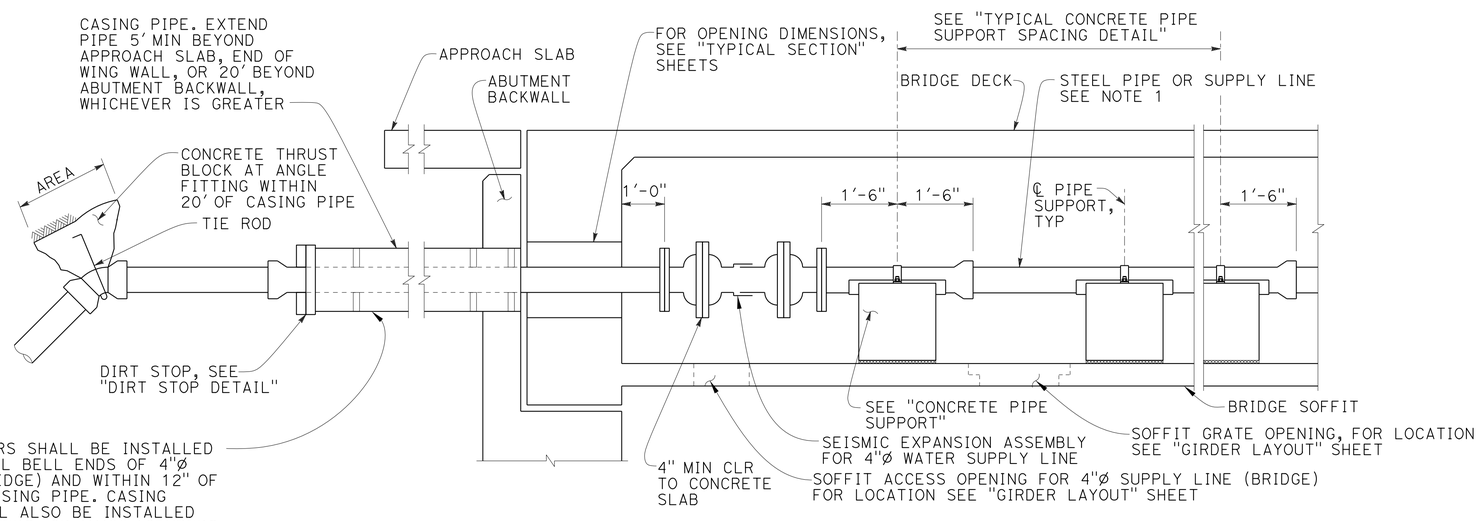

CASING INSULATORS SHALL BE INSTALLED WITHIN 18" OF ALL BELL ENDS OF 4"Ø SUPPLY LINE (BRIDGE) AND WITHIN 12" OF BOTH ENDS OF CASING PIPE. CASING INSULATORS SHALL ALSO BE INSTALLED EVERY 7' ON CENTERS, OR MANUFACTURERS RECOMMENDATION, WHICHEVER IS LESS. FILL VOID BETWEEN DIRT STOP AND FIRST CASING INSULATOR WITH FOAM.

PIPE LINE SIZE	CASING PIPE SIZE	CASING PIPE THICKNESS	THRUST BLOCK AREA 45° ELBOW	THRUST BLOCK AREA 90° ELBOW	THRUST BLOCK TIE ROD	PIPE CLAMP THICKNESS X WIDTH	ANCHOR BOLT SIZE	ANCHOR BOLT EMBEDMENT	SOFFIT ACCESS OPENING
4"Ø	10"Ø	1/4"	1.0 SQ FT	1.5 SQ FT	#4	1/4" x 1 1/4"	5/8"Ø X 8"	6"	2'-6"Ø

NOTE: ABUTMENT 1 SHOWN, ABUTMENT 2 SIMILAR

PIPE LINE INSTALLATION AT SEAT TYPE ABUTMENT AND BENT CAP
NO SCALE

NOTE: The Contractor Shall Verify All Controlling Field Dimensions Before Ordering Or Fabricating Any Material.

DESIGN OVERSIGHT Luqi Yang	DESIGN	BY M. Ruvalcaba	CHECKED E. Mobo
7-10-13 SIGN OFF DATE	DETAILS	BY P. Johnson	CHECKED E. Mobo
	QUANTITIES	BY J. Fix	CHECKED E. Mobo

PREPARED FOR THE STATE OF CALIFORNIA DEPARTMENT OF TRANSPORTATION

Mohsen Mohseni
PROJECT ENGINEER

BRIDGE NO. 55-1107
POST MILES 3.39

AVENIDA PICO UC (REPLACE)
4"Ø SUPPLY LINE

DESIGN DETAIL SHEET (ENGLISH) (REV.7/16/10)

ORIGINAL SCALE IN INCHES FOR REDUCED PLANS 0 1 2 3

UNIT:
PROJECT NUMBER & PHASE: 12000202771 CONTRACT NO.: 12-0F96A4

DISREGARD PRINTS BEARING EARLIER REVISION DATES

REVISION DATES 5/20/12 11/15/12 3/04/13 4/26/13 SHEET 30 OF 39

FILE => 55-1107-u-miscdt00.dgn

USERNAME => s128643 DATE PLOTTED => 07-AUG-2014 TIME PLOTTED => 13:06

DIST	COUNTY	ROUTE	POST MILES TOTAL PROJECT	SHEET No	TOTAL SHEETS
12	Ora	5	3.0/3.7	566	635

REGISTERED CIVIL ENGINEER — DATE 8/30/13

3-10-14
PLANS APPROVAL DATE

REGISTERED PROFESSIONAL ENGINEER — MARTIN E. RUVALCABA — No. C-75838 — Exp. 6/20/14 — CIVIL — STATE OF CALIFORNIA

The State of California or its officers or agents shall not be responsible for the accuracy or completeness of electronic copies of this plan sheet.

OCTA
550 SOUTH MAIN ST
ORANGE, CA 92863

PARSONS
2201 DUPONT DRIVE, SUITE 200
IRVINE, CA 92612

LEGEND:

- Preload Embankment Surcharge
- Limits of Stage 1 Bridge Removal
- Limits of Stage 2 Bridge Removal
- Settlement HUB

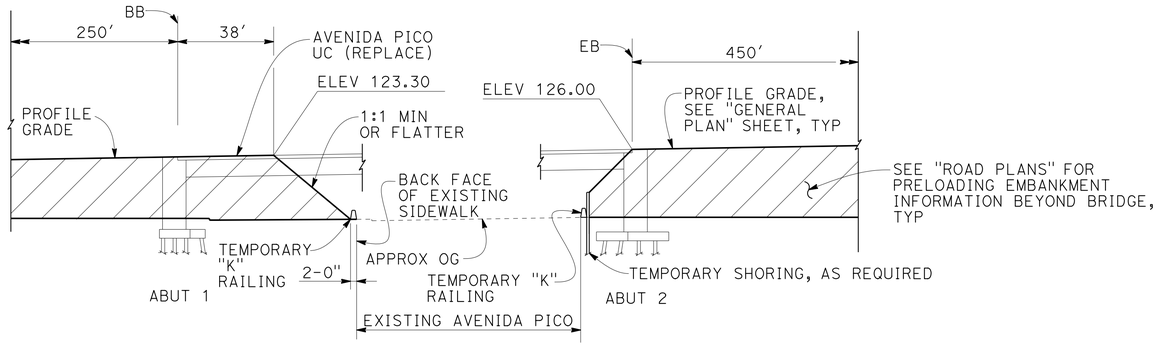

Note: Existing bridge not shown for clarity.

MIRRORED ELEVATION

NO SCALE

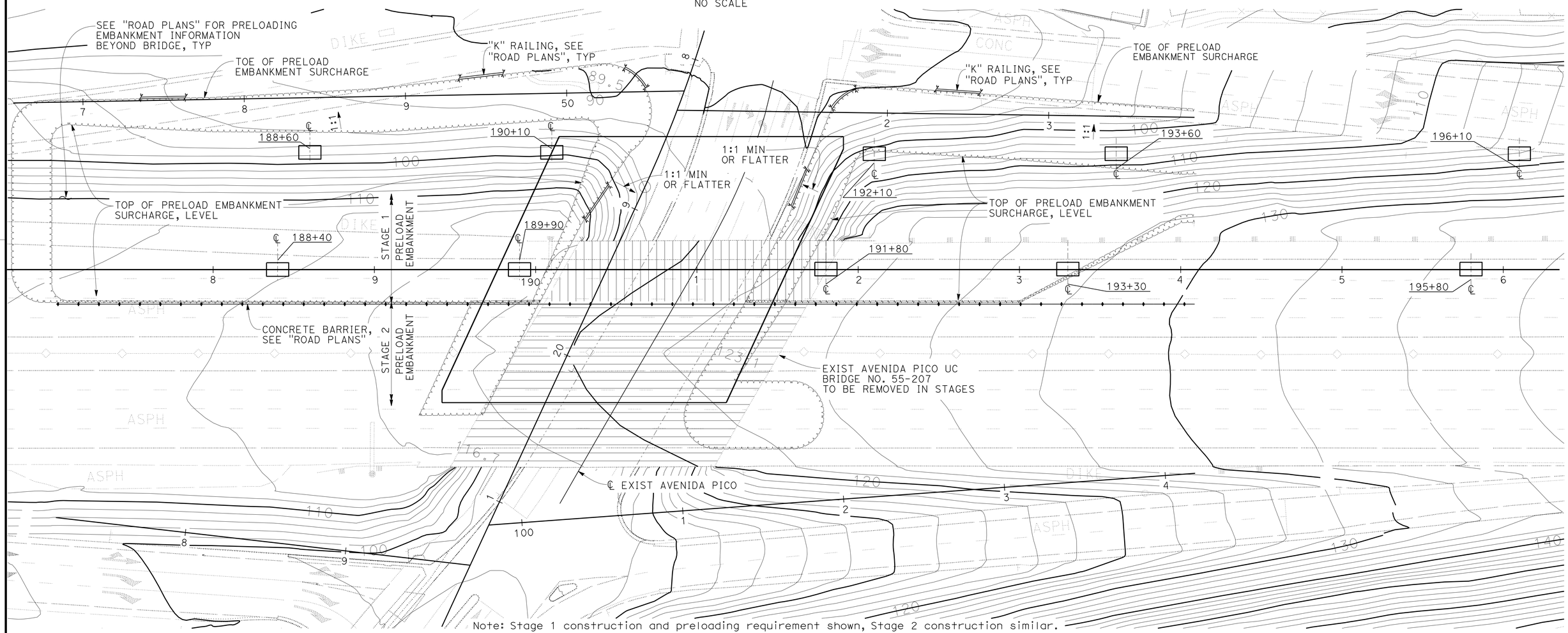

Note: Stage 1 construction and preloading requirement shown, Stage 2 construction similar.

PLAN

1" = 30'

NOTE: The Contractor Shall Verify All Controlling Field Dimensions Before Ordering Or Fabricating Any Material.

DESIGN OVERSIGHT Luqi Yang — 1-14-14 SIGN OFF DATE

	BY	CHECKED
DESIGN	M. Ruvalcaba	E. Mobo
DETAILS	P. Johnson	E. Mobo
QUANTITIES	J. Fix	E. Mobo

PREPARED FOR THE STATE OF CALIFORNIA DEPARTMENT OF TRANSPORTATION

Mohsen Mohseni — PROJECT ENGINEER

BRIDGE NO. 55-1107 — POST MILES 3.39

AVENIDA PICO UC (REPLACE)
PRELOAD EMBANKMENT DETAILS

DESIGN DETAIL SHEET (ENGLISH) (REV.7/16/10)

ORIGINAL SCALE IN INCHES FOR REDUCED PLANS 0 1 2 3

UNIT:
PROJECT NUMBER & PHASE: 12000202771 CONTRACT NO.: 12-0F96A4

DISREGARD PRINTS BEARING EARLIER REVISION DATES

REVISION DATES: 5/29/12 11/15/12 3/29/13 4/26/13

SHEET 31 OF 39

FILE => 55-1107-u-miscdt000.dgn

USERNAME => s128843 DATE PLOTTED => 07-AUG-2014 TIME PLOTTED => 13:06

DIST	COUNTY	ROUTE	POST MILES TOTAL PROJECT	SHEET No	TOTAL SHEETS
12	Ora	5	3.0/3.7	567	635

REGISTERED CIVIL ENGINEER 4/26/13 DATE

3-10-14
PLANS APPROVAL DATE

REGISTERED PROFESSIONAL ENGINEER MARTIN E. RUVALCABA No. C-75838 Exp. 6/20/14 CIVIL STATE OF CALIFORNIA

The State of California or its officers or agents shall not be responsible for the accuracy or completeness of electronic copies of this plan sheet.

OCTA
550 SOUTH MAIN ST
ORANGE, CA 92863

PARSONS
2201 DUPONT DRIVE, SUITE 200
IRVINE, CA 92612

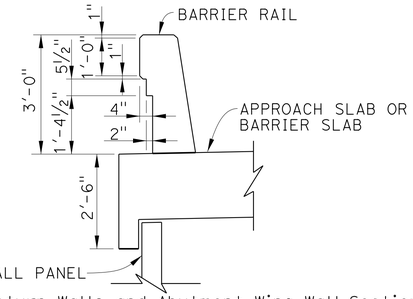

NOTE:
For Abutment Return Walls and Abutment Wing Wall Sections, see "Abutment Details No. 5" and "Abutment Wing Wall Details" sheets.

SECTION A-A

NOTES:

1. For Section "B-B" and "C-C", See "Architectural Details No. 3" Sheet.
2. For Textured Abutment Wall Detail, See "Architectural Details No. 4" Sheet.
3. For Textured Wingwall or Return Wall Detail, See "Architectural Details No.3" Sheet.

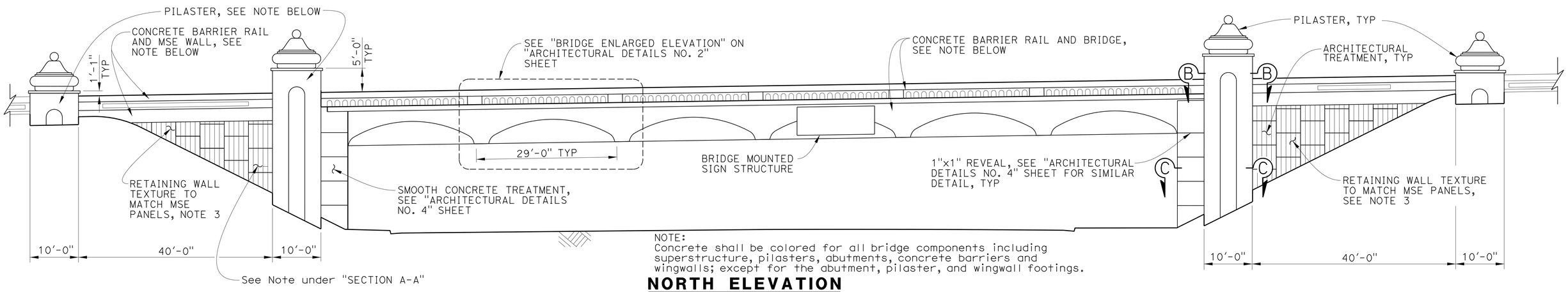

NOTE:
Concrete shall be colored for all bridge components including superstructure, pilasters, abutments, concrete barriers and wingwalls; except for the abutment, pilaster, and wingwall footings.

NORTH ELEVATION

1" = 10'

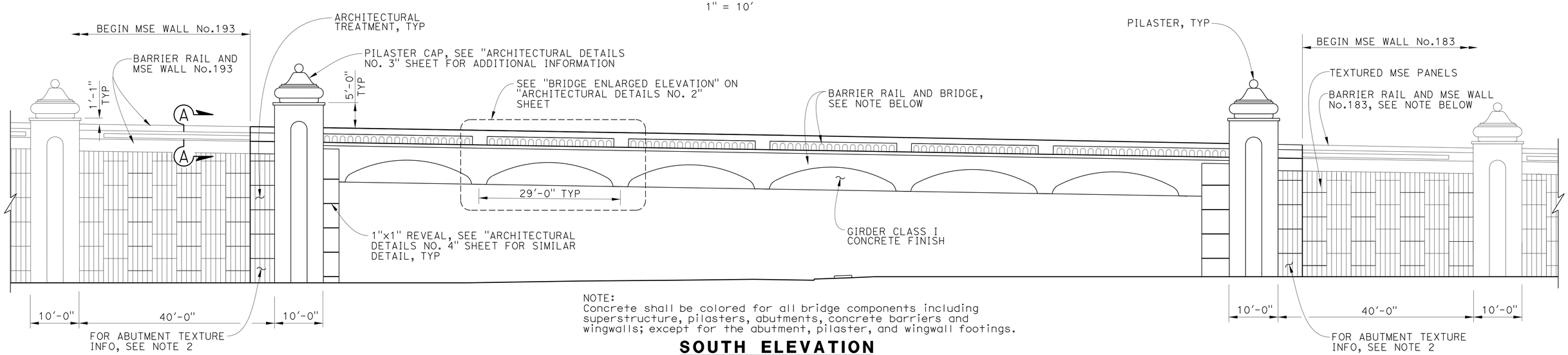

NOTE:
Concrete shall be colored for all bridge components including superstructure, pilasters, abutments, concrete barriers and wingwalls; except for the abutment, pilaster, and wingwall footings.

SOUTH ELEVATION

1" = 10'

NOTE: The Contractor Shall Verify All Controlling Field Dimensions Before Ordering Or Fabricating Any Material.

Luqi Yang
DESIGN OVERSIGHT Luqi Yang
7-10-13
SIGN OFF DATE

DESIGN	R. Genick	CHECKED	D. Jackson
DETAILS	BY P. Johnson	CHECKED	M. Mohseni
QUANTITIES	BY J. Fix	CHECKED	E. Mobo

PREPARED FOR THE STATE OF CALIFORNIA DEPARTMENT OF TRANSPORTATION

Mohsen Mohseni
PROJECT ENGINEER

BRIDGE NO. 55-1107
POST MILES 3.39

AVENIDA PICO UC (REPLACE)
ARCHITECTURAL DETAILS NO. 1

DESIGN DETAIL SHEET (ENGLISH) (REV.7/16/10)

ORIGINAL SCALE IN INCHES FOR REDUCED PLANS 0 1 2 3

UNIT:
PROJECT NUMBER & PHASE: 12000202771 CONTRACT NO.: 12-0F96A4

DISREGARD PRINTS BEARING EARLIER REVISION DATES

REVISION DATES: 5/20/12 11/15/12 3/04/13 4/26/13

SHEET 32 OF 39

FILE => 55-1107-u-miscdt01.dgn

USERNAME => s128843 DATE PLOTTED => 07-AUG-2014 TIME PLOTTED => 13:06

DIST	COUNTY	ROUTE	POST MILES TOTAL PROJECT	SHEET No	TOTAL SHEETS
12	Ora	5	3.0/3.7	568	635

REGISTERED CIVIL ENGINEER 4/26/13 DATE

3-10-14
PLANS APPROVAL DATE

REGISTERED PROFESSIONAL ENGINEER MARTIN E. RUVALCABA No. C-75838 Exp. 6/20/14 CIVIL STATE OF CALIFORNIA

The State of California or its officers or agents shall not be responsible for the accuracy or completeness of electronic copies of this plan sheet.

OCTA
550 SOUTH MAIN ST
ORANGE, CA 92863

PARSONS
2201 DUPONT DRIVE, SUITE 200
IRVINE, CA 92612

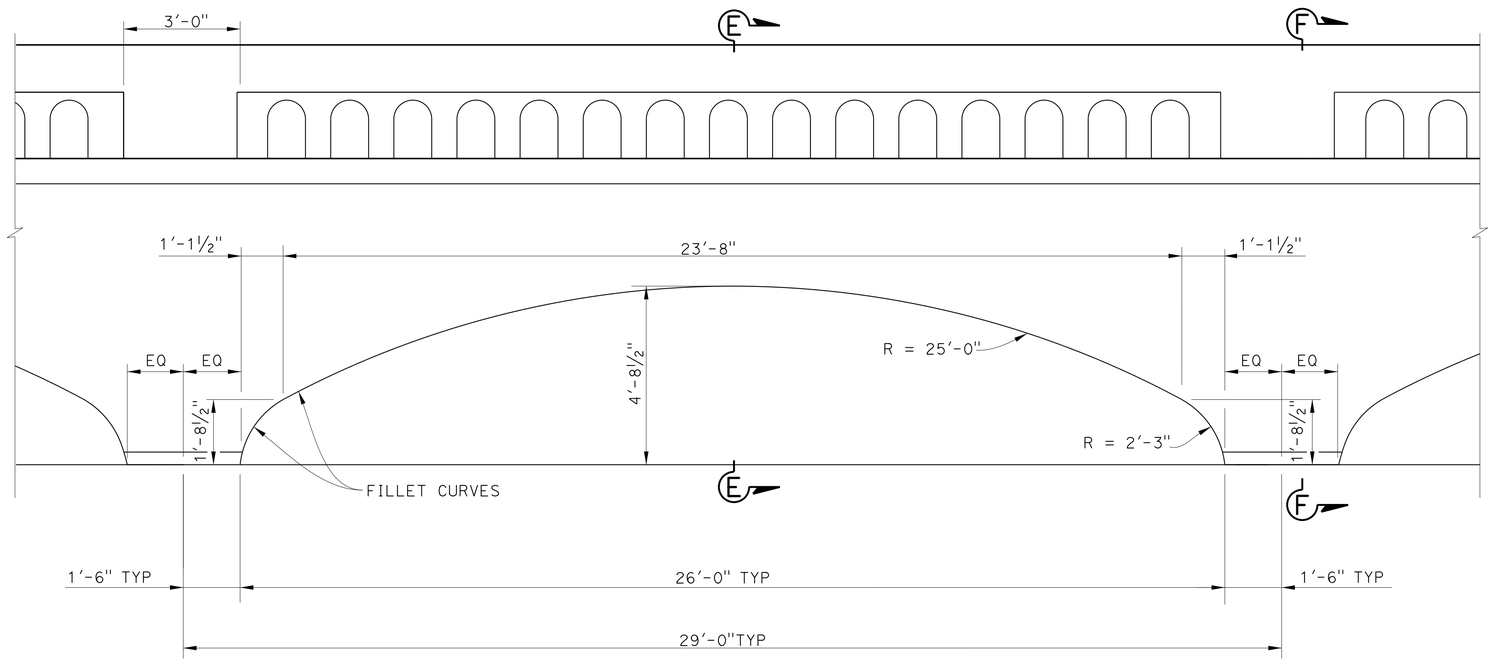

BRIDGE ENLARGED ELEVATION

SCALE: ½" = 1'-0"

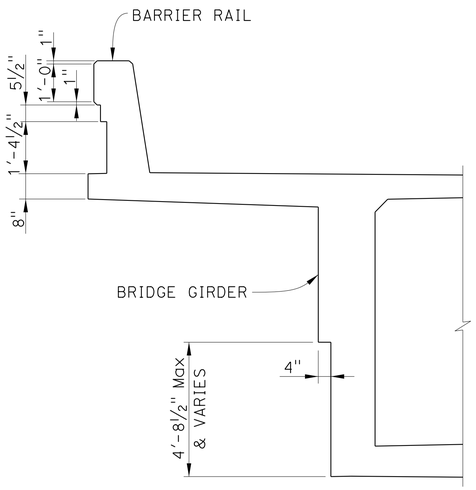

SECTION E-E

SCALE: ½" = 1'-0"

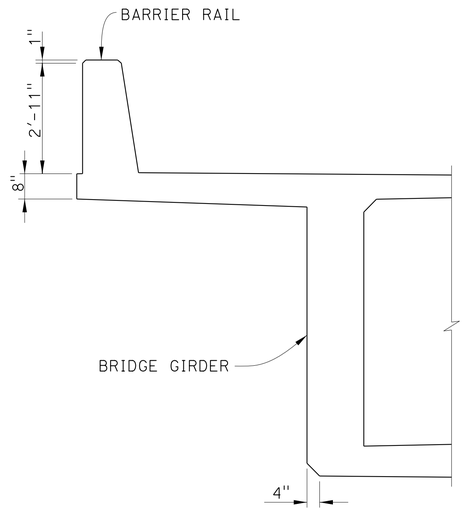

SECTION F-F

SCALE: ½" = 1'-0"

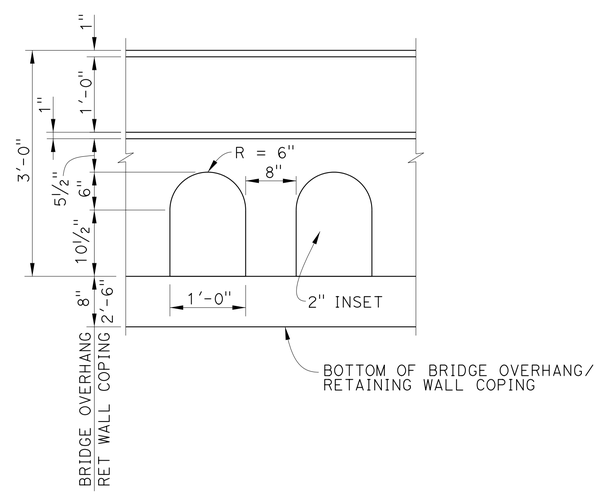

BARRIER ELEVATION

SCALE: 1" = 1'-0"

NOTE: The Contractor Shall Verify All Controlling Field Dimensions Before Ordering Or Fabricating Any Material.

Luqi Yang
DESIGN OVERSIGHT Luqi Yang
7-10-13
SIGN OFF DATE

DESIGN	R. Genick	CHECKED	D. Jackson
DETAILS	BY P. Johnson	CHECKED	M. Mohseni
QUANTITIES	BY J. Fix	CHECKED	E. Mobo

PREPARED FOR THE STATE OF CALIFORNIA DEPARTMENT OF TRANSPORTATION

Mohsen Mohseni
PROJECT ENGINEER

BRIDGE NO. 55-1107
POST MILES 3.39

AVENIDA PICO UC (REPLACE)
ARCHITECTURAL DETAILS NO. 2

DESIGN DETAIL SHEET (ENGLISH) (REV.7/16/10)

ORIGINAL SCALE IN INCHES FOR REDUCED PLANS 0 1 2 3

UNIT:
PROJECT NUMBER & PHASE: 12000202771 CONTRACT NO.: 12-0F96A4

DISREGARD PRINTS BEARING EARLIER REVISION DATES

REVISION DATES 5/29/12 11/15/12 3/28/13 4/26/13

SHEET 33 OF 39

FILE => 55-1107-u-miscdt02.dgn

USERNAME => s128843 DATE PLOTTED => 07-AUG-2014 TIME PLOTTED => 13:06

DIST	COUNTY	ROUTE	POST MILES TOTAL PROJECT	SHEET No	TOTAL SHEETS
12	Ora	5	3.0/3.7	569	635

REGISTERED CIVIL ENGINEER 4/26/13 DATE

3-10-14
PLANS APPROVAL DATE

REGISTERED PROFESSIONAL ENGINEER MARTIN E. RUVALCABA No. C-75838 Exp. 6/20/14 CIVIL STATE OF CALIFORNIA

The State of California or its officers or agents shall not be responsible for the accuracy or completeness of electronic copies of this plan sheet.

OCTA
550 SOUTH MAIN ST
ORANGE, CA 92863

PARSONS
2201 DUPONT DRIVE, SUITE 200
IRVINE, CA 92612

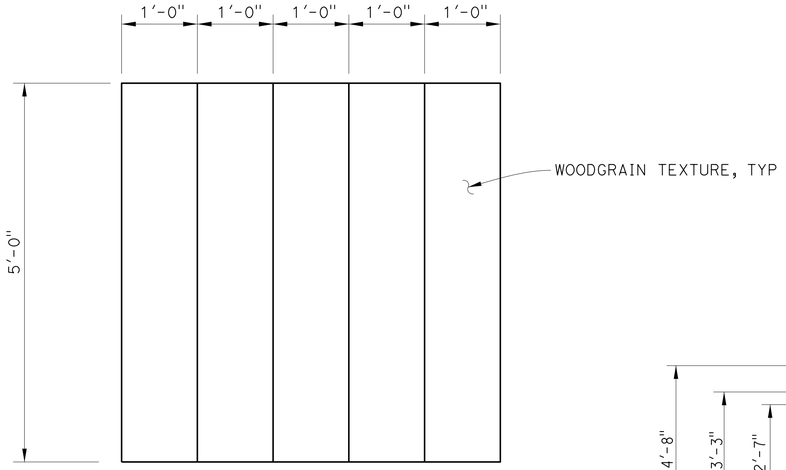

ELEVATION

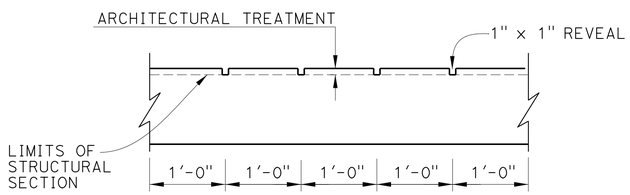

SECTION

TEXTURED WINGWALL OR RETURN WALL DETAIL

1" = 1'-0"

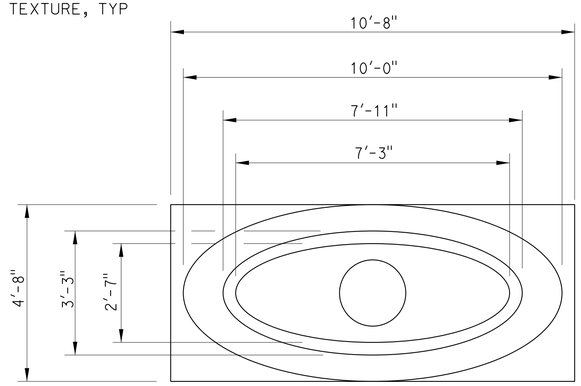

PILASTER CAP PLAN

SCALE: 1/2 " = 1'-0"

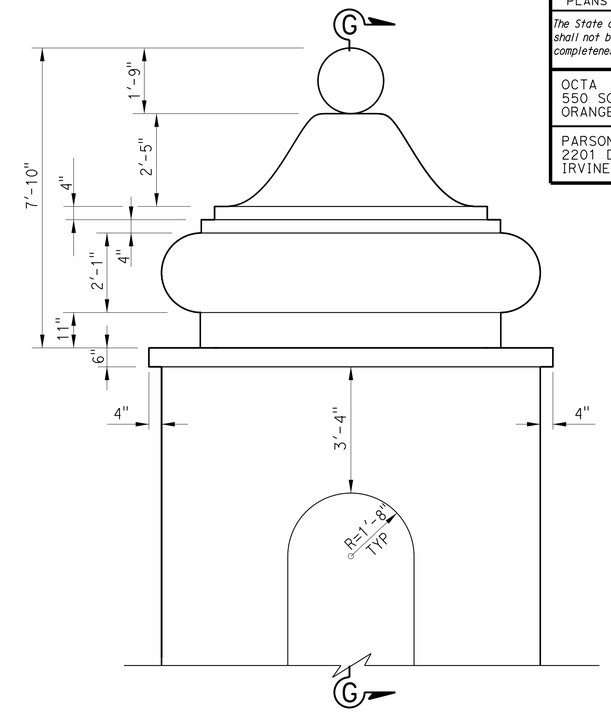

NOTE: For Section G-G, see "Architectural Details No. 4" sheet.

PILASTER CAP ELEVATION

SCALE: 1/2 " = 1'-0"

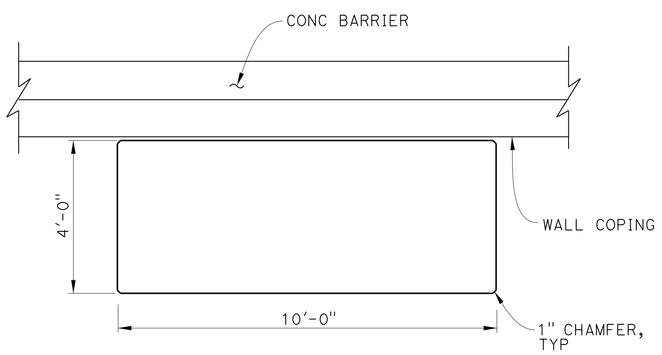

SECTION B-B

1/2 " = 1'-0"

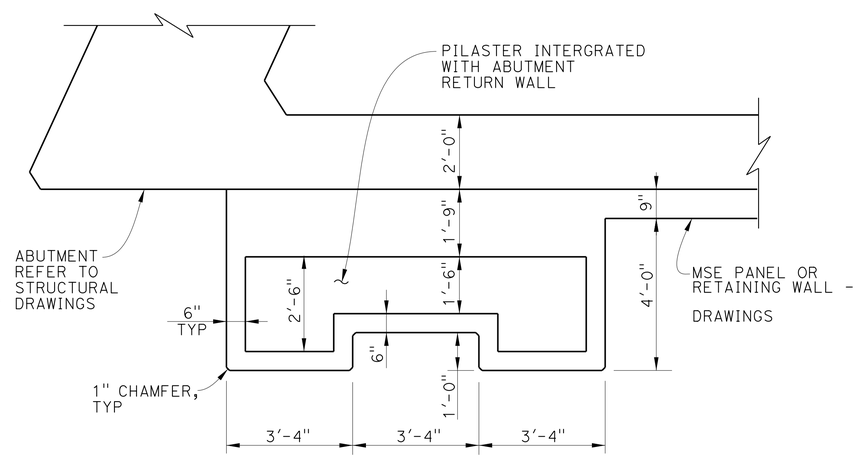

SECTION C-C

1/2" = 1'-0"

NOTE: The Contractor Shall Verify All Controlling Field Dimensions Before Ordering Or Fabricating Any Material.

Luqi Yang DESIGN OVERSIGHT Luqi Yang 7-10-13 SIGN OFF DATE	DESIGN	R. Genick	CHECKED D. Jackson	PREPARED FOR THE STATE OF CALIFORNIA DEPARTMENT OF TRANSPORTATION	Mohsen Mohseni PROJECT ENGINEER
	DETAILS	BY P. Johnson	CHECKED M. Mohseni		
	QUANTITIES	BY J. Fix	CHECKED E. Mobo		

BRIDGE NO. 55-1107
POST MILES 3.39

AVENIDA PICO UC (REPLACE)
ARCHITECTURAL DETAILS NO. 3

DESIGN DETAIL SHEET (ENGLISH) (REV.7/16/10)

ORIGINAL SCALE IN INCHES FOR REDUCED PLANS 0 1 2 3

UNIT:
PROJECT NUMBER & PHASE: 12000202771 CONTRACT NO.: 12-0F96A4

DISREGARD PRINTS BEARING EARLIER REVISION DATES

REVISION DATES 5/20/12 11/15/12 3/04/13 4/26/13 SHEET 34 OF 39

FILE => 55-1107-u-miscdt03.dgn

USERNAME => s128643 DATE PLOTTED => 07-AUG-2014 TIME PLOTTED => 13:06

DIST	COUNTY	ROUTE	POST MILES TOTAL PROJECT	SHEET No	TOTAL SHEETS
12	Ora	5	3.0/3.7	570	635

REGISTERED CIVIL ENGINEER 4/26/13 DATE

3-10-14
PLANS APPROVAL DATE

The State of California or its officers or agents shall not be responsible for the accuracy or completeness of electronic copies of this plan sheet.

REGISTERED PROFESSIONAL ENGINEER MARTIN E. RUVALCABA No. C-75838 Exp. 6/20/14 CIVIL STATE OF CALIFORNIA

OCTA
550 SOUTH MAIN ST
ORANGE, CA 92863

PARSONS
2201 DUPONT DRIVE, SUITE 200
IRVINE, CA 92612

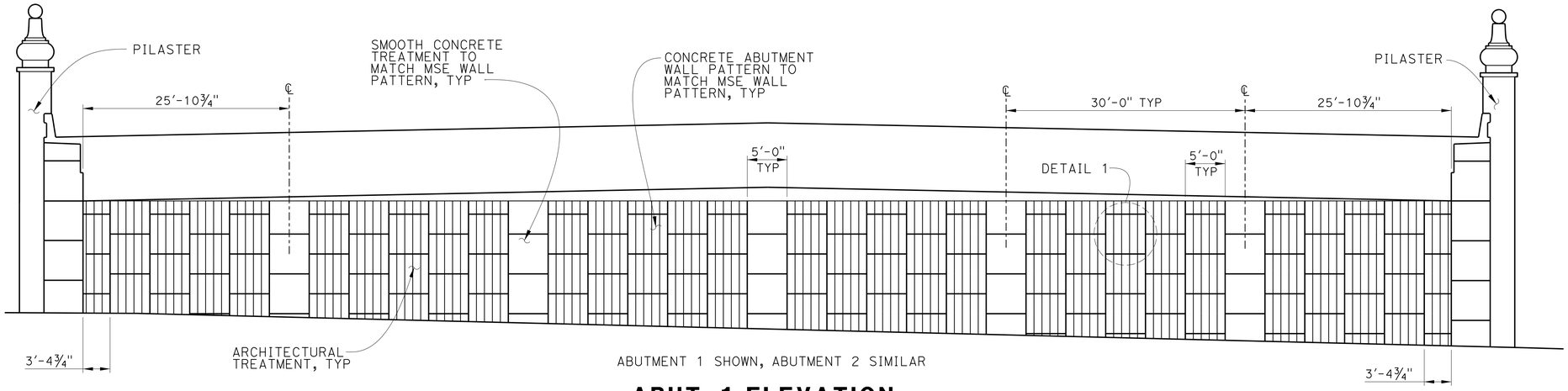

ABUTMENT 1 SHOWN, ABUTMENT 2 SIMILAR

ABUT 1 ELEVATION

⅛" = 1'-0"

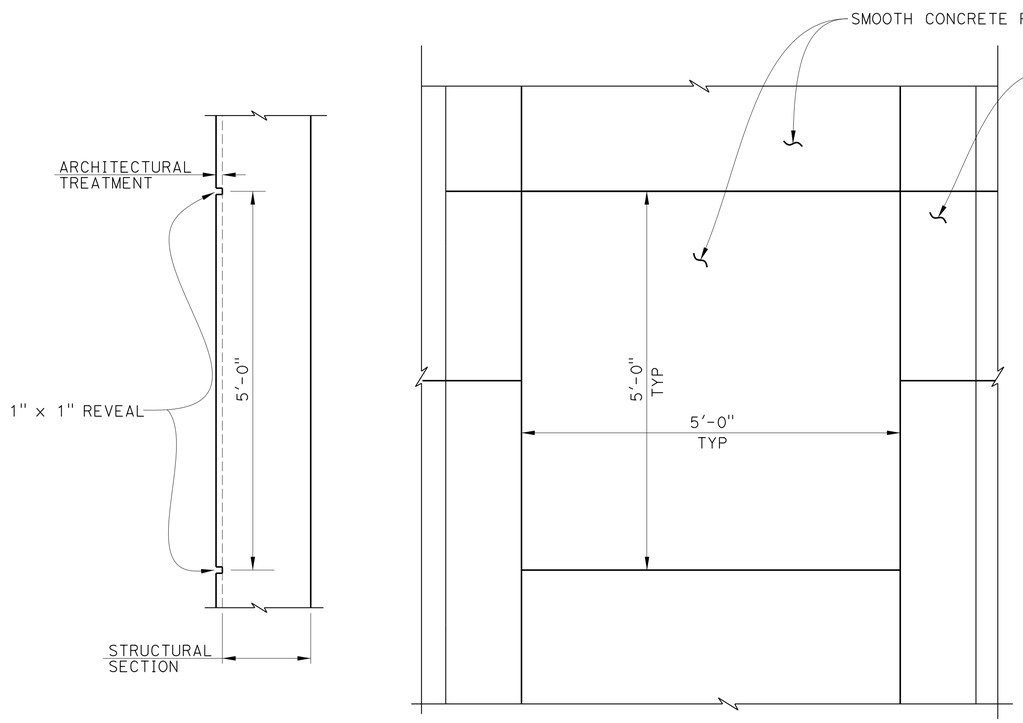

SMOOTH CONCRETE FINISH

1" = 1'-0"

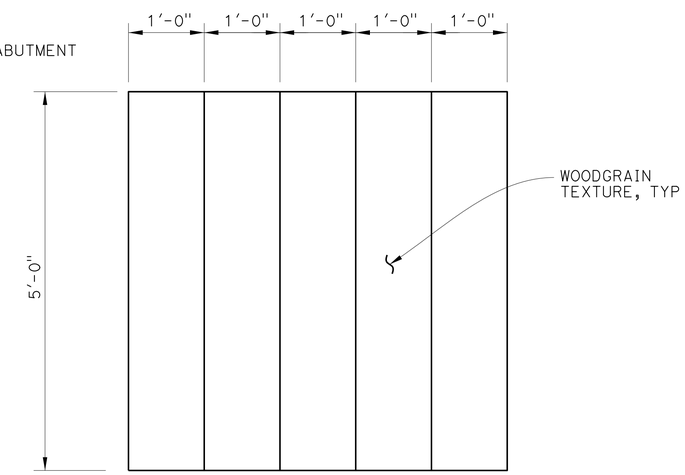

ELEVATION

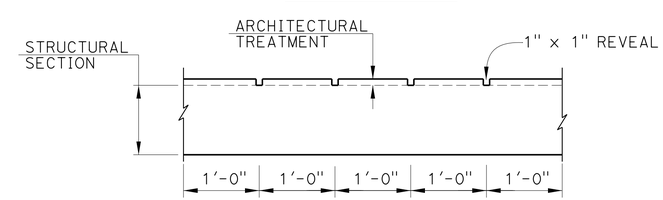

SECTION

TEXTURED ABUTMENT WALL DETAIL

1" = 1'-0"

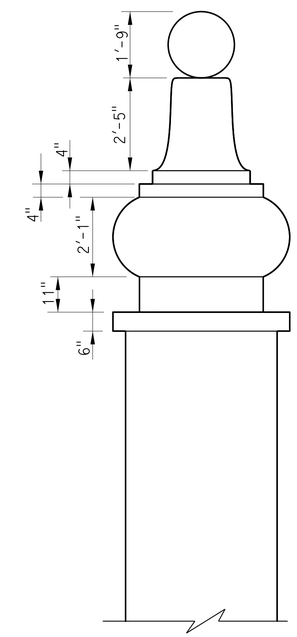

SECTION G-G

1/2" = 1'-0"

NOTE: The Contractor Shall Verify All Controlling Field Dimensions Before Ordering Or Fabricating Any Material.

DESIGN OVERSIGHT Luqi Yang
7-10-13
SIGN OFF DATE

DESIGN	R. Genick	CHECKED	D. Jackson
DETAILS	BY P. Johnson	CHECKED	M. Mohseni
QUANTITIES	BY J. Fix	CHECKED	E. Mobo

PREPARED FOR THE STATE OF CALIFORNIA DEPARTMENT OF TRANSPORTATION

Mohsen Mohseni
PROJECT ENGINEER

BRIDGE NO. 55-1107
POST MILES 3.39

AVENIDA PICO UC (REPLACE)
ARCHITECTURAL DETAILS NO. 4

DESIGN DETAIL SHEET (ENGLISH) (REV.7/16/10)

ORIGINAL SCALE IN INCHES FOR REDUCED PLANS 0 1 2 3

UNIT:
PROJECT NUMBER & PHASE: 12000202771 CONTRACT NO.: 12-0F96A4

DISREGARD PRINTS BEARING EARLIER REVISION DATES

REVISION DATES 5/29/12 11/15/12 3/04/13 4/26/13 SHEET 35 OF 39

FILE => 55-1107-u-miscdt04.dgn

USERNAME => s128843 DATE PLOTTED => 07-AUG-2014 TIME PLOTTED => 13:07

DIST	COUNTY	ROUTE	POST MILES TOTAL PROJECT	SHEET No	TOTAL SHEETS
12	Ora	5	3.0/3.7	571	635

GEOTECHNICAL PROFESSIONAL — DATE 4/26/13

3-10-14
PLANS APPROVAL DATE

REGISTERED PROFESSIONAL ENGINEER — MIKE KAPUSKAR — NO. GE 2564 — EXP. 12-31-14 — GEOTECHNICAL — STATE OF CALIFORNIA

The State of California or its officers or agents shall not be responsible for the accuracy or completeness of electronic copies of this plan sheet.

ORANGE COUNTY TRANSPORTATION AUTHORITY
550 S. MAIN STREET
ORANGE, CA 92863-1584

EARTH MECHANICS, INC.
17800 NEWHOPE STREET, SUITE B
FOUNTAIN VALLEY, CA 92708

BENCH MARK:

DESIGNATION: 3Y-38-91 ELEV 252.197′ NAVD88

DESCRIBED BY OCS 2003 - FOUND 3¾" OCS ALUMINUM BENCH MARK DISK STAMPED "3Y-38-91", SET IN THE NORTHWESTERLY CORNER OF A 4 FT. BY 17 FT. CONCRETE CATCH BASIN. MONUMENT IS LOCATED IN THE SOUTHEASTERLY CORNER OF INTERSECTION OF AVENIDA PICO AND AVENIDA LA PATA, 50 FT. SOUTHERLY OF THE CENTERLINE OF AVENIDA LA PATA AND 90 FT. EASTERLY OF THE AVENIDA PICO. MONUMENT IS SET LEVEL WITH THE TOP OF THE CURB.

NOTES:

(1) This LOTB sheet was prepared in accordance with the Caltrans Soil and Rock Logging, Classification and Presentation Manual (June 2010).

(2) 2.4" samples were taken using a California Modified Sampler.

(3) An automatic trip hammer system consisting of a hammer weight of 140 lbs falling a distance of 30" was used to advance the drive sampler.

(4) Conversion factor from 2.4" Modified California Ring Sampler blowcounts to Standard Penetration Test (SPT) blowcounts is 0.5.

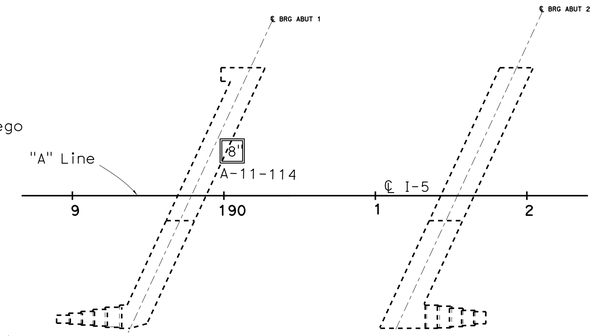

PLAN

1" = 50′

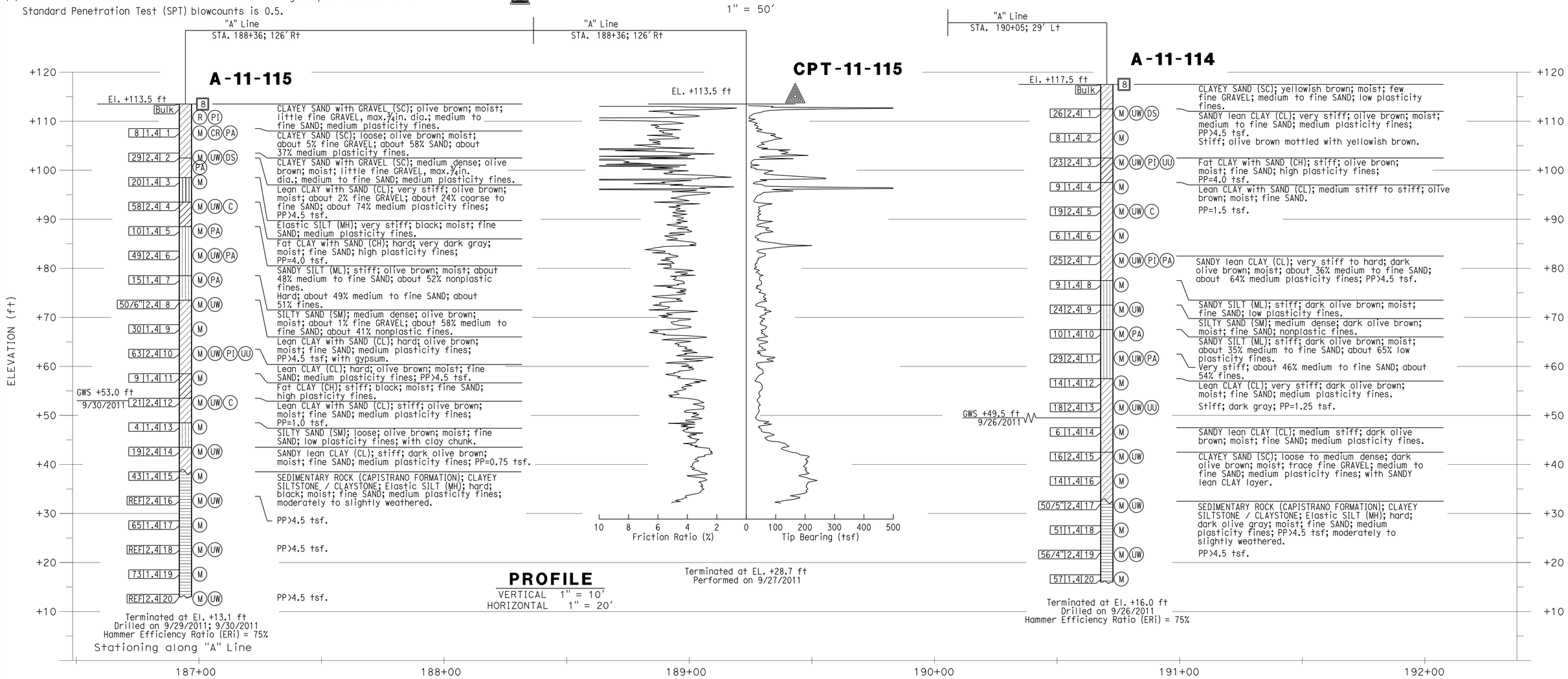

PROFILE

VERTICAL 1" = 10′
HORIZONTAL 1" = 20′

Luqi Yang — DESIGN OVERSIGHT Luqi Yang; 7-10-13 SIGN OFF DATE	DRAWN BY J. FANG	R. JIE; K. KAEKUL; C. PONGSAKORNPATARA — FIELD INVESTIGATION BY:	PREPARED FOR THE STATE OF CALIFORNIA DEPARTMENT OF TRANSPORTATION
	CHECKED BY M. KAPUSKAR	DATE: 9/2011	M. KAPUSKAR — PROJECT ENGINEER

BRIDGE NO. 55-1107
POST MILES 3.39

AVENIDA PICO UC (REPLACE)

LOG OF TEST BORINGS 1 OF 4

GS GEOTECHNICAL LOG OF TEST BORINGS SHEET (ENGLISH) (REV. 7/16/10)

ORIGINAL SCALE IN INCHES FOR REDUCED PLANS 0 1 2 3

UNIT: -
PROJECT NUMBER & PHASE: 12000202771 CONTRACT NO.: 12-0F96B1

DISREGARD PRINTS BEARING EARLIER REVISION DATES → 4/26/13

REVISION DATES | SHEET 36 | OF 39

FILE => 55-1107-z-lotb1.dgn

USERNAME => s128843 DATE PLOTTED => 07-AUG-2014 TIME PLOTTED => 13:07

DIST	COUNTY	ROUTE	POST MILES TOTAL PROJECT	SHEET No	TOTAL SHEETS
12	Ora	5	3.0/3.7	572	635

GEOTECHNICAL PROFESSIONAL — DATE 4/26/13

3-10-14
PLANS APPROVAL DATE

REGISTERED PROFESSIONAL ENGINEER — MIKE KAPUSKAR — NO. GE 2564 — EXP. 12-31-14 — GEOTECHNICAL — STATE OF CALIFORNIA

The State of California or its officers or agents shall not be responsible for the accuracy or completeness of electronic copies of this plan sheet.

ORANGE COUNTY TRANSPORTATION AUTHORITY
550 S. MAIN STREET
ORANGE, CA 92863-1584

EARTH MECHANICS, INC.
17800 NEWHOPE STREET, SUITE B
FOUNTAIN VALLEY, CA 92708

BENCH MARK:

DESIGNATION: 3Y-38-91 ELEV 252.197′ NAVD88

DESCRIBED BY OCS 2003 - FOUND 3¾" OCS ALUMINUM BENCH MARK DISK STAMPED "3Y-38-91", SET IN THE NORTHWESTERLY CORNER OF A 4 FT. BY 17 FT. CONCRETE CATCH BASIN. MONUMENT IS LOCATED IN THE SOUTHEASTERLY CORNER OF INTERSECTION OF AVENIDA PICO AND AVENIDA LA PATA, 50 FT. SOUTHERLY OF THE CENTERLINE OF AVENIDA LA PATA AND 90 FT. EASTERLY OF THE AVENIDA PICO. MONUMENT IS SET LEVEL WITH THE TOP OF THE CURB.

NOTES:

(1) This LOTB sheet was prepared in accordance with the Caltrans Soil and Rock Logging, Classification and Presentation Manual (June 2010).

(2) 2.4" samples were taken using a California Modified Sampler.

(3) An automatic trip hammer system consisting of a hammer weight of 140 lbs falling a distance of 30" was used to advance the drive sampler.

(4) Conversion factor from 2.4" Modified California Ring Sampler blowcounts to Standard Penetration Test (SPT) blowcounts is 0.5.

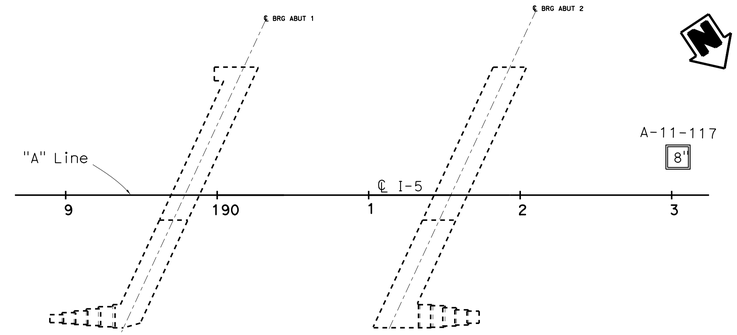

PLAN

1" = 50′

To Los Angeles

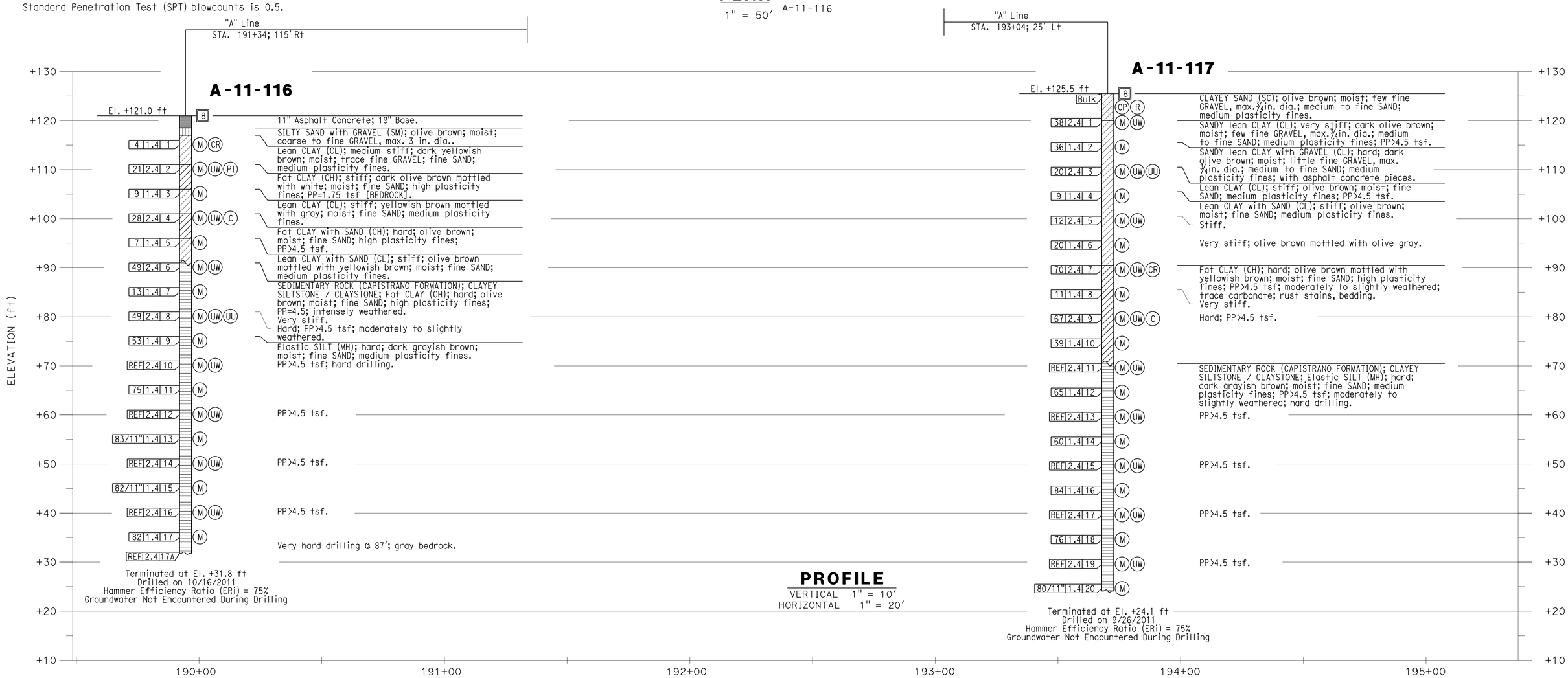

PROFILE

VERTICAL 1" = 10′
HORIZONTAL 1" = 20′

DESIGN OVERSIGHT Luqi Yang	DRAWN BY	J. FANG	R. JIE; K. KAEKUL; C. PONGSAKORNPATARA — FIELD INVESTIGATION BY:
7-10-13 SIGN OFF DATE	CHECKED BY	M. KAPUSKAR	DATE: 9/2011, 10/2011

PREPARED FOR THE STATE OF CALIFORNIA DEPARTMENT OF TRANSPORTATION

M. KAPUSKAR — PROJECT ENGINEER

BRIDGE NO. 55-1107
POST MILES 3.39

AVENIDA PICO UC (REPLACE)

LOG OF TEST BORINGS 2 OF 4

GS GEOTECHNICAL LOG OF TEST BORINGS SHEET (ENGLISH) (REV. 7/16/10)

ORIGINAL SCALE IN INCHES FOR REDUCED PLANS 0 1 2 3

UNIT: -
PROJECT NUMBER & PHASE: 12000202771 CONTRACT NO.: 12-0F96B1

DISREGARD PRINTS BEARING EARLIER REVISION DATES 4/26/13

REVISION DATES | SHEET 37 | OF 39

FILE => 55-1107-z-lotb2.dgn

USERNAME => s128843 DATE PLOTTED => 07-AUG-2014 TIME PLOTTED => 13:07

DIST.	COUNTY	ROUTE	POST MILES	SHEET NO.	TOTAL SHEETS
VII	Ora	5	3.0/3.7	573	635

DIVISION OF ENGINEERING SERVICES - GEOTECHNICAL SERVICES

As-Built Log of Test Borings sheet is considered an informational document only. As such, the State of California registration seal with signature, license number and registration certificate expiration date confirm that this is a true and accurate copy of the original document. This drawing is available and presented only for the convenience of any bidder, contractor or other interested party.

GEOTECHNICAL PROFESSIONAL — DATE 4/26/13

REGISTERED PROFESSIONAL ENGINEER — MIKE KAPUSKAR — NO. GE 2564 — EXP. 12-31-14 — GEOTECHNICAL — STATE OF CALIFORNIA

AVENIDA PICO UC (REPLACE)

LOG OF TEST BORINGS 3 OF 4

NOTE: A COPY OF THIS LOG OF TEST BORINGS IS AVAILABLE AT OFFICE OF STRUCTURE MAINTENANCE AND INVESTIGATIONS, SACRAMENTO, CALIFORNIA

UNIT: PROJECT NUMBER & PHASE: 12000202781

BRIDGE No.	Sheet	of
55-0207	38	39

TO ACCOMPANY PLANS DATED 3-10-14

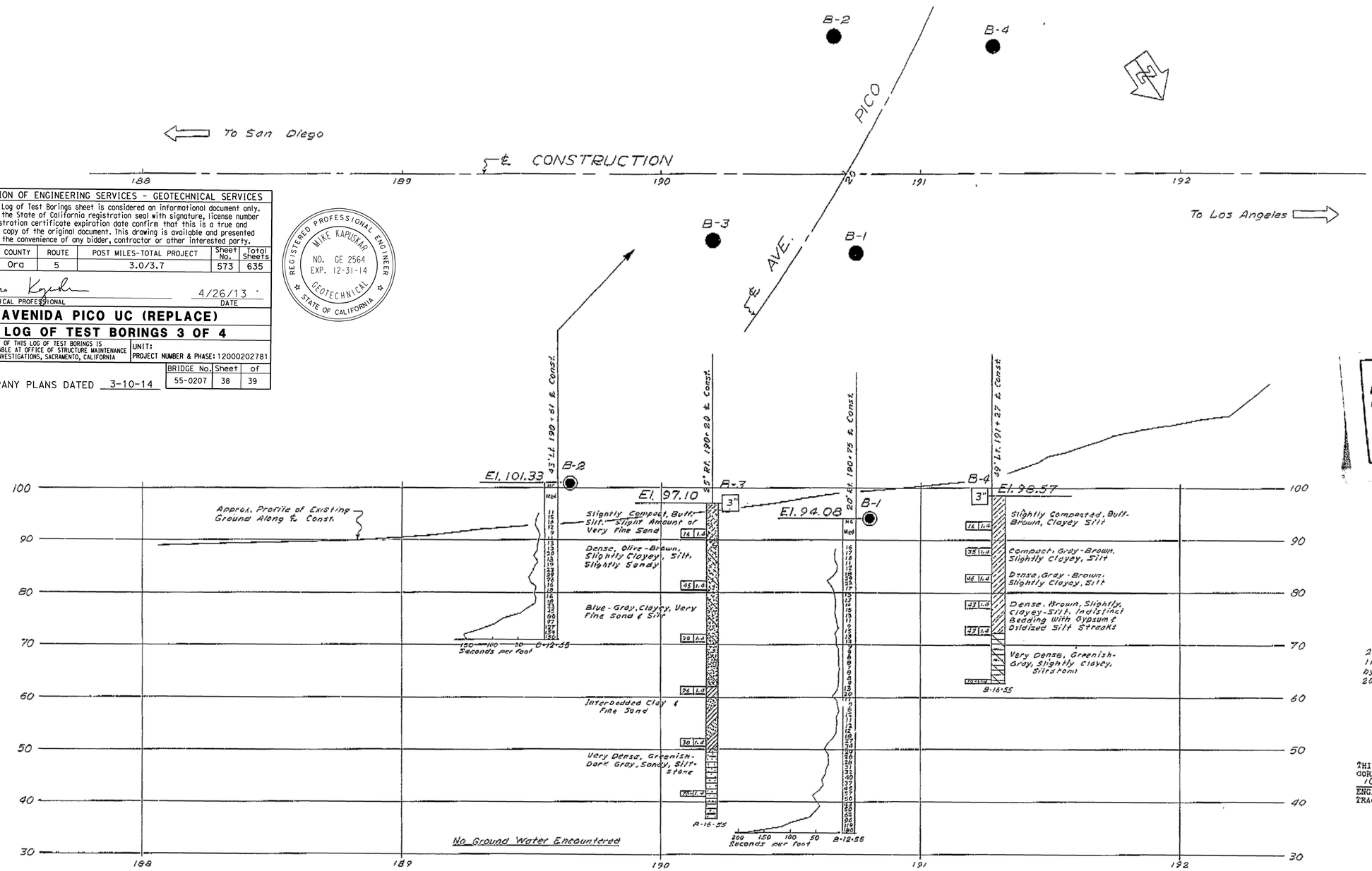

AS BUILT PLANS
Contract No. 060-7VC2
Date Completed
Document No. 70002283

THIS SET OF PLANS HAS BEEN CORRECTED TO CORRESPOND TO THE "AS BUILT" PLANS DATED 10-6-6_ AS SUBMITTED BY RESIDENT ENGINEER
TRACINGS CORRECTED BY: DATE:

CLASSIFICATION OF MATERIAL BASED ON STANDARD GRADE SIZE LIMITS

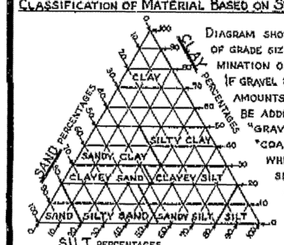

DIAGRAM SHOWING THE BASIS FOR ESTIMATES OF GRADE SIZE DISTRIBUTION USED IN DETERMINATION OF CLASS NAMES. IF GRAVEL IS PRESENT IN APPRECIABLE AMOUNTS THE TERM "GRAVELLY" MAY BE ADDED TO THE CLASS NAME, VIZ. "GRAVELLY SAND". THE TERMS "COARSE", "MEDIUM" AND "FINE" WHEN USED TO DESCRIBE SAND, SILT AND GRAVEL REFER TO STANDARD GRADE SIZE LIMITS.

LEGEND OF EARTH MATERIALS

- GRAVEL
- SAND
- SILT
- CLAY
- SANDY CLAY OR CLAYEY SAND
- SANDY SILT OR SILTY SAND
- SILTY CLAY OR CLAYEY SILT
- PEAT AND/OR ORGANIC MATTER
- FILL MATERIAL
- IGNEOUS ROCK
- SEDIMENTARY ROCK
- METAMORPHIC ROCK

LEGEND OF BORING OPERATIONS

- PLAN OF ANY BORING
- PENETROMETER
- 2¼" CONE PENETROMETER
- SAMPLER BORING (DRY)
- ROTARY BORING (WET)
- AUGER BORING (DRY)
- JET BORING
- CORE BORING
- TEST PIT

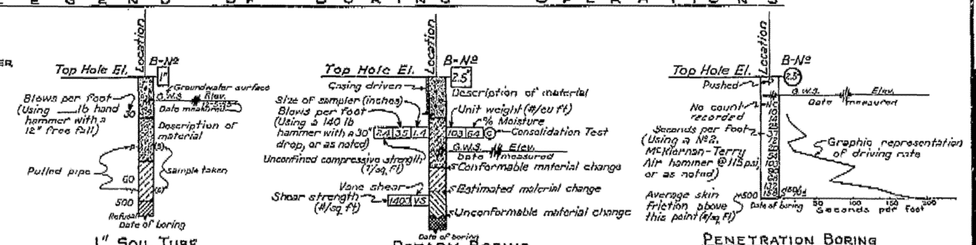

NOTES

The contractor's attention is directed to Section 2, Article (c) of the Standard Specifications and to the Special Provisions accompanying this set of plans.

Classification of earth material as shown on this sheet is based upon field inspection and is not to be construed to imply mechanical analysis.

STATE OF CALIFORNIA
DEPARTMENT OF PUBLIC WORKS
DIVISION OF HIGHWAYS

AVE. PICO UNDERCROSSING

LOG OF TEST BORINGS

SCALE Horiz. 1"=20' Vert. 1"=10' | BRIDGE 55-207 | FILE E-5 | DRAWING C-3723-10

PREL DRAWING NO. 3723 9

692

55-1107-z-lotb3.tif

DIST.	COUNTY	ROUTE	SECTION	SHEET NO.	TOTAL SHEETS
07	ORA	5	0.0/0.1	505	530
	SD	5	Railroad		

Robert L. Reynolds #165
CHIEF (SENIOR) ENGINEERING GEOLOGIST — NUMBER
DATE APPROVED March 12, 1979

BENCH MARK

B.M.# 193-2-S Cle.-60 — Elev. 123.64
Set a std. brass cap monument 4' right of ℄ Frwy. Sta. 193+00.

DIVISION OF ENGINEERING SERVICES - GEOTECHNICAL SERVICES					
As-Built Log of Test Borings sheet is considered an informational document only. As such, the State of California registration seal with signature, license number and registration certificate expiration date confirm that this is a true and accurate copy of the original document. This drawing is available and presented only for the convenience of any bidder, contractor or other interested party.					
DIST.	COUNTY	ROUTE	POST MILES-TOTAL PROJECT	Sheet No.	Total Sheets
12	Ora	5	3.0/3.7	574	635
GEOTECHNICAL PROFESSIONAL				4/26/13 DATE	
AVENIDA PICO UC (REPLACE)					
LOG OF TEST BORINGS 4 OF 4					
NOTE: A COPY OF THIS LOG OF TEST BORINGS IS AVAILABLE AT OFFICE OF STRUCTURE MAINTENANCE AND INVESTIGATIONS, SACRAMENTO, CALIFORNIA			UNIT: PROJECT NUMBER & PHASE: 12000202781		
			BRIDGE No.	Sheet	of
			55-0207	39	39

REGISTERED PROFESSIONAL ENGINEER — MIKE KAPUSKAR — NO. GE 2564 — EXP. 12-31-14 — GEOTECHNICAL — STATE OF CALIFORNIA

TO ACCOMPANY PLANS DATED 3-10-14

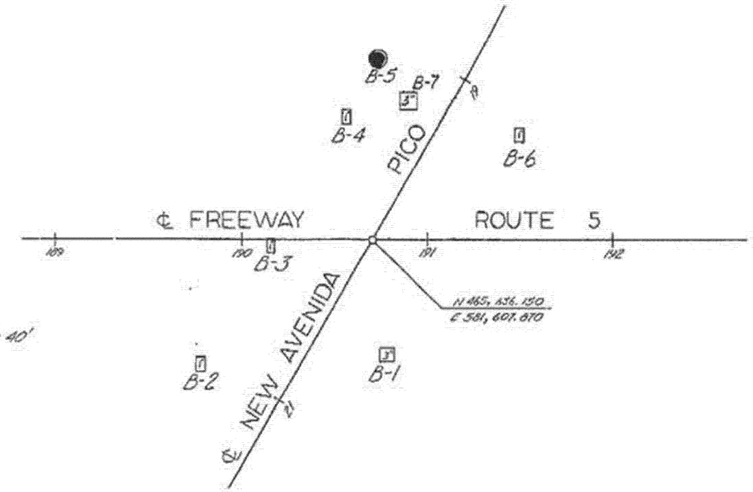

PLAN
Scale: 1" = 40'

NO GROUND WATER ENCOUNTERED DURING THIS INVESTIGATION BY BRIDGE DEPT. GEOLOGY SECTION
DATE Feb.-Mar. 1967 - May 1967

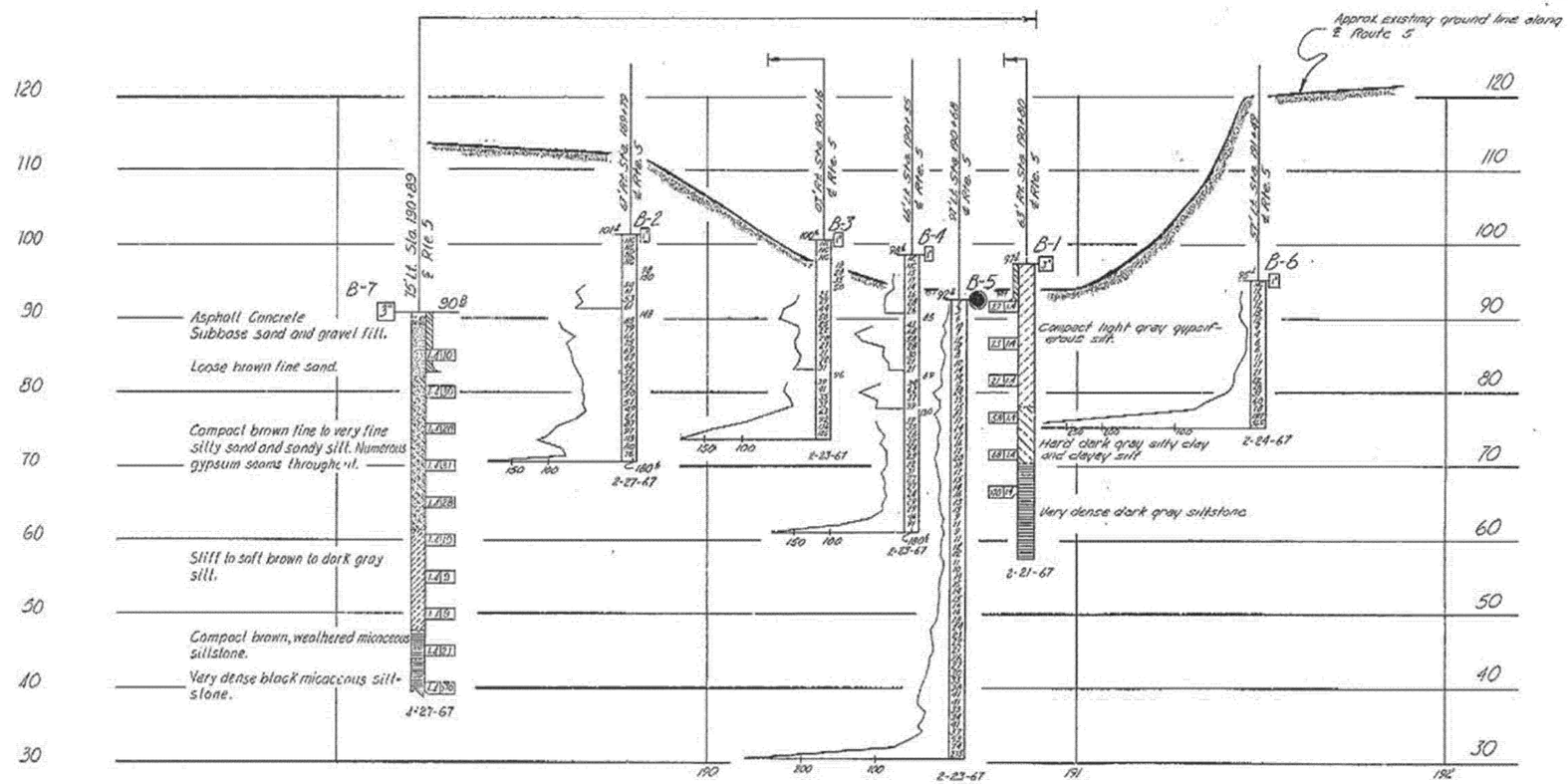

NOTE
All 1" Soil Tube borings (Closed Tip) driven with Cobra.

PROFILE
Scale: Vert. 1"=10'
Horiz. 1"=20'

NO AS BUILT CORRECTION
AS BUILT
CORRECTIONS BY W. Lobse
CONTRACT NO. 07-105274
DATE 4-1-88 and 10-17-88

SHEET	OF
10	10

STATE OF CALIFORNIA
DEPARTMENT OF TRANSPORTATION

AVENIDA PICO UNDERCROSSING (WIDENING)

LOG OF TEST BORINGS

SCALE As Noted | BRIDGE 55-207 | FILE | DRAWING 55207-2

Chg. 07209
W.A. 105271

Disregard prints bearing earlier numbers → PREL. DRAWING No. PR-

LEGEND OF BORING OPERATIONS
- Penetrometer
- 2½" Core Penetrometer
- Sampler Borings (SV)
- Rotary Borings (SRT)
- Auger Borings (BK)
- Jet Borings
- Core Borings
- Test Pit
- Penetration Borings
- Rotary Borings
- 1" Soil Tube

LEGEND OF EARTH MATERIALS
- Gravel
- Sand
- Silt
- Clay
- Sandy Clay or Clayey Sand
- Sandy Silt or Silty Sand
- Silty Clay or Clayey Silt
- Peat & Organic Matter
- Fill Material
- Igneous Rock
- Sedimentary Rock
- Metamorphic Rock

CLASSIFICATION OF MATERIAL BASED ON STANDARD GRADE SIZE LIMITS

NOTE: Classification of earth material as shown on this sheet is based upon field inspection and is not to be construed to imply mechanical analysis.

55-1107-z-lotb4.tif

DIST	COUNTY	ROUTE	POST MILES TOTAL PROJECT	SHEET No	TOTAL SHEETS
12	Ora	5	3.0/3.7	575	635

REGISTERED CIVIL ENGINEER — DATE 4/26/13

3-10-14
PLANS APPROVAL DATE

REGISTERED PROFESSIONAL ENGINEER — MOHSEN MOHSENI — No. C45999 — Exp. 12/31/14 — CIVIL — STATE OF CALIFORNIA

The State of California or its officers or agents shall not be responsible for the accuracy or completeness of electronic copies of this plan sheet.

PARSONS 2201 DUPONT DRIVE, SUITE 200, IRVINE, CA 92612

OCTA 550 SOUTH MAIN STREET, ORANGE, CA 92863

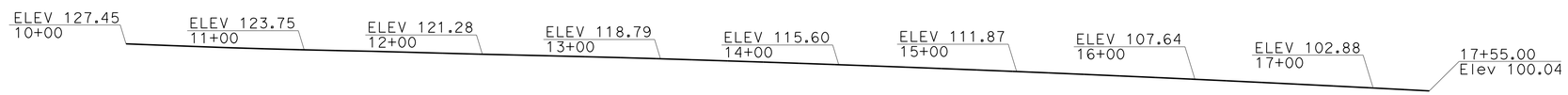

TOP OF WALL ELEVATION
NO SCALE

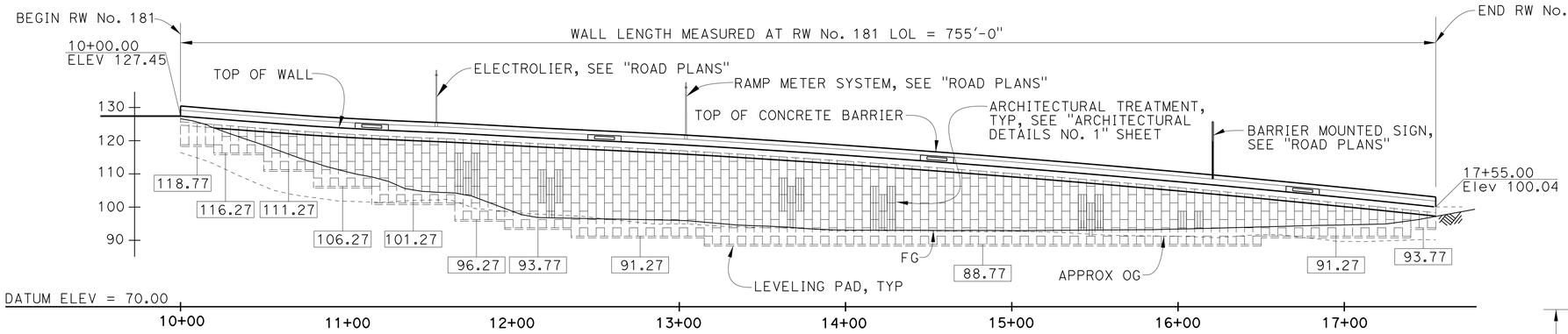

CURVE DATA (1)
R = 1425.00'
Δ = 07°44'44"
T = 96.47'
L = 192.64'

CURVE DATA (2)
R = 2820.00'
Δ = 27°20'47"
T = 686.05'
L = 1345.95'

MIRROR ELEVATION
1" = 20' VERT
1" = 40' HORIZ

RETAINING WALL NO. 181 — BRIDGE NO 55E0139

QUANTITIES

STRUCTURE EXCAVATION (RETAINING WALL)	1,640	CY
STRUCTURE BACKFILL (RETAINING WALL)	1,640	CY
MECHANICALLY STABILIZED EMBANKMENT, LOCATION A	15,575	SQFT
STRUCTURAL CONCRETE, BARRIER SLAB	385	CY
CONCRETE BARRIER (TYPE 736 MODIFIED)	756	LF

LEGEND:
- Indicates Direction of Traffic
- Standard Plan Sheet No. / Detail No.
- XXX.XX Indicates Top of Leveling Pad Elev
- Indicates Concrete Barrier Type 736 Modified
- Structural Excavation, Retaining Wall and Structural Backfill, Retaining Wall

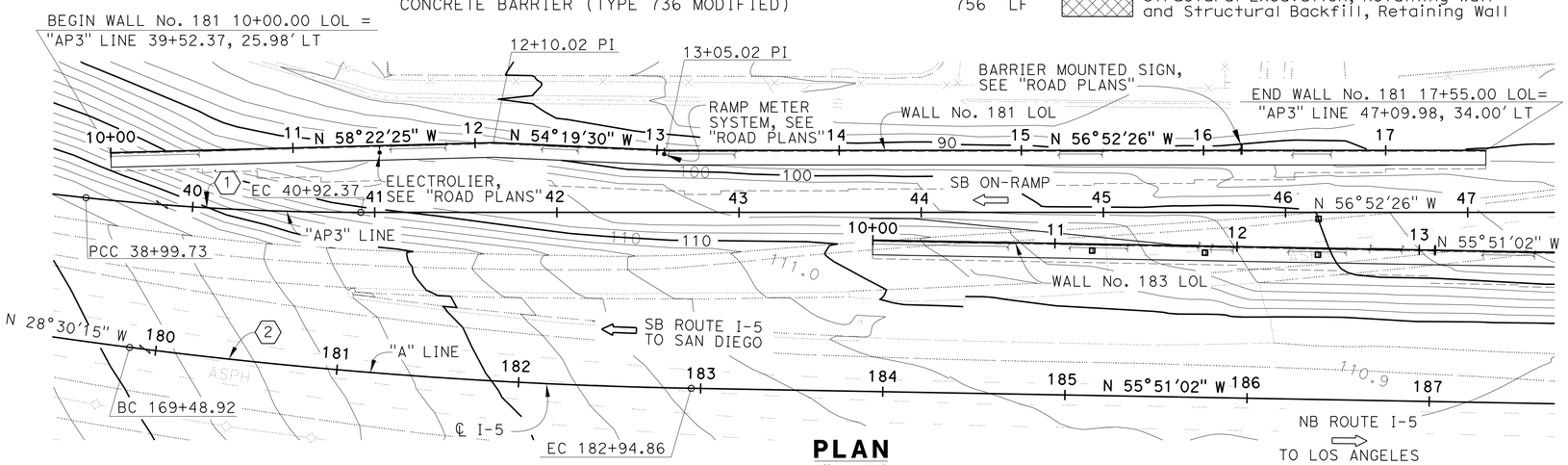

PLAN
1" = 40'

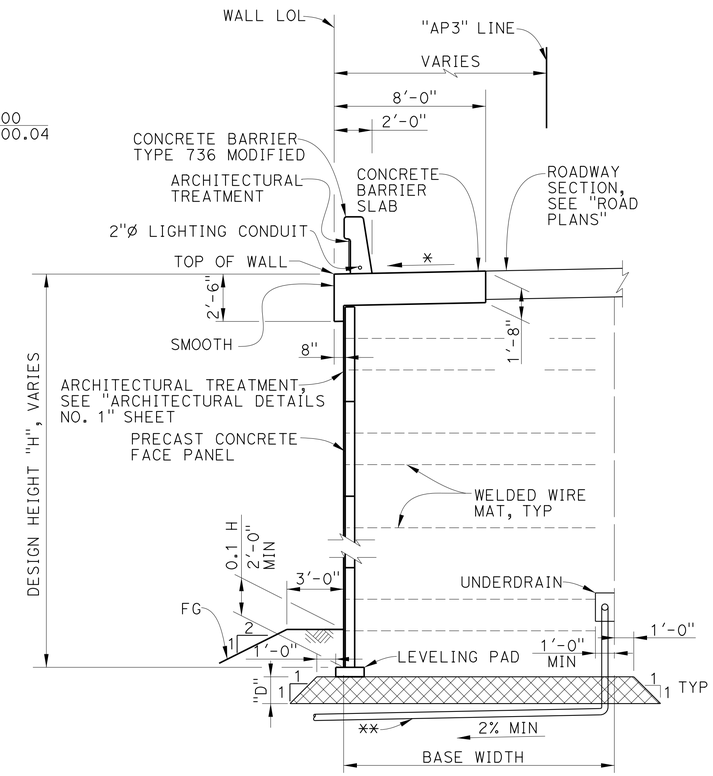

* VARIES, SEE "ROADWAY PLANS"
** SEE STRUCTURE PLAN SHEETS

TYPICAL SECTION
NO SCALE

Design Height "H"	Depth "D"
6'-8" TO 14'-2"	2.0'
16'-8" TO 24'-2"	2.5'
26'-8" TO 31'-8"	3.0'

TABLE 1

Luqi Yang — DESIGN OVERSIGHT Luqi Yang — 1-14-14 SIGN OFF DATE	DESIGN	BY M. Mohseni	CHECKED M. Ruvalcaba	LOAD & RESISTANCE FACTOR DESIGN	LIVE LOADING: HL93 W/"LOW-BOY"; PERMIT DESIGN VEHICLE
	DETAILS	BY P. Johnson	CHECKED M. Mohseni	LAYOUT — BY E. JOHNSON	CHECKED D. Lew
	QUANTITIES	BY J. Fix	CHECKED M. Ruvalcaba	SPECIFICATIONS — BY G. Matesic	CHECKED D. Lew — PLANS AND SPECS COMPARED X

PREPARED FOR THE STATE OF CALIFORNIA DEPARTMENT OF TRANSPORTATION

MOHSEN MOHSENI — PROJECT ENGINEER

BRIDGE NO. 55E0139 — POST MILES 3.2

RETAINING WALL No. 181
GENERAL PLAN

DESIGN GENERAL PLAN SHEET (ENGLISH) (REV.7/16/10)

ORIGINAL SCALE IN INCHES FOR REDUCED PLANS 0 1 2 3

UNIT:
PROJECT NUMBER & PHASE: 12000202771 — CONTRACT NO.: 12-0F96A4

DISREGARD PRINTS BEARING EARLIER REVISION DATES

REVISION DATES: 5/29/12 11/13/12 03/04/13 4/26/13 — SHEET 1 OF 13

FILE => 55e-0139-a-gp01.dgn

USERNAME => s128843 DATE PLOTTED => 07-AUG-2014 TIME PLOTTED => 13:08

DIST	COUNTY	ROUTE	POST MILES TOTAL PROJECT	SHEET No	TOTAL SHEETS
12	Ora	5	3.0/3.7	576	635

REGISTERED CIVIL ENGINEER 4/26/13 DATE

3-10-14
PLANS APPROVAL DATE

The State of California or its officers or agents shall not be responsible for the accuracy or completeness of electronic copies of this plan sheet.

REGISTERED PROFESSIONAL ENGINEER MOHSEN MOHSENI No. C45999 Exp. 12/31/14 CIVIL STATE OF CALIFORNIA

PARSONS 2201 DUPONT DRIVE SUITE 200 IRVINE, CA 92612

OCTA 550 SOUTH MAIN STREET ORANGE, CA 92863

STANDARD PLANS DATED 2010

	A10A	ACRONYMS AND ABBREVIATIONS (SHEET 1 OF 2)
RSP	A10B	ACRONYMS AND ABBREVIATIONS (SHEET 2 OF 2)
	A10F	LEGEND-SOIL (SHEET 1 OF 2)
	A10G	LEGEND-SOIL (SHEET 2 OF 2)
	A62B	LIMITS OF PAYMENT FOR EXCAVATION BACKFILL BRIDGE SURCHARGE AND WALL
	D102	UNDERDRAINS
	B0-13	BRIDGE DETAILS
RSP	B11-56	CONCRETE BARRIER TYPE 736
	ES-6A	ELECTRICAL SYSTEMS (LIGHTING STANDARD, TYPES 15 AND 21)
	ES-6B	ELECTRICAL SYSTEMS (ELECTROLIER ANCHORAGE AND GROUNTING FOR TYPES 15 AND 21, BARRIER RAIL MOUNTED
	ES-7B	ELECTRICAL SYSTEMS (SIGNAL AND LIGHTING STANDARDS, TYPE 1 AND EQUIPMENT NUMBERING)

GENERAL NOTES
LOAD & RESISTANCE FACTOR DESIGN

DESIGN: AASHTO LRFD BRIDGE DESIGN SPECIFICATIONS, 4TH EDITION WITH CALIFORNIA AMENDMENTS

LIVE LOAD: SURCHARGE = 240 lb/ft^2

SOIL PARAMETERS:

INTERNAL DESIGN ϕ = 34°, γ = 120 lb/ft^3

EXTERNAL DESIGN ϕ(RETAINED BACKFILL) = 30°, γ = 120 lb/ft^3

ϕ(FOUNDATION) = 30°

K_h = 0.2

PRECAST CONCRETE PANELS:

f'c = 4,000 psi (CONCRETE COMPRESSIVE STRENGTH AT 28 DAYS)

fy = 60,000 psi (YIELD STRENGTH OF REINFORCEMENT)

SOIL REINFORCEMENT:

WELDED WIRE MATS: fy = 65,000 psi (YIELD STRENGTH)

COUPLER: fy = 36,000 psi (YIELD STRENGTH)

CORROSION RATE = 1.1 mils/year

REINFORCED CONCRETE:

f'c = 3,600 psi, EXCEPT AS NOTED (CONCRETE COMPRESSIVE STRENGTH AT 28 DAYS)

fy = 60,000 psi (YIELD STRENGTH OF REINFORCEMENT)

MSE = MECHANICALLY STABILIZED EMBANKMENT

INDEX TO PLANS

SHEET NO.	TITLE
1	GENERAL PLAN
2	INDEX TO PLANS
3	STRUCTURE PLAN No. 1
4	STRUCTURE PLAN No. 2
5	STRUCTURE PLAN No. 3
6	STRUCTURE PLAN No. 4
7	CONCRETE BARRIER SLAB DETAILS
8	DETAILS No. 1
9	DETAILS No. 2
10	DETAILS No. 3
11	DETAILS No. 4
12	ARCHITECTURAL DETAILS No. 1
13	LOG OF TEST BORINGS No. 1

NOTES:

1. Limits to FG except to GP when in roadway section.
2. Locate underdrain behind bottom level of welded wire mats wherever possible, or at elevation needed to drain, as shown elsewhere on plans.
3. Place perforated pipe underdrain of diameter shown elsewhere on plans or minimum 4"Ø smoothed wall PVC or minimum 8"Ø corrugated HDPE.
4. Maximum spacing of outlet pipe is 200 feet.
5. At sags in profile of underdrain, install outlet pipe for each direction of flow.
6. For Structural Excavation, Retaining Wall and Structural Backfill, Retaining Wall, see "General Plan" sheet.
7. For Limits of Preloading, see "Road Plans".
8. For Pilaster Design Notes, see "Pilaster Details" sheet.

LEGEND:

- Limits of structure excavation
- Limits of structure backfill
- Limits of permeable material
- Structural Excavation, Retaining Wall and Structural Backfill, Retaining Wall

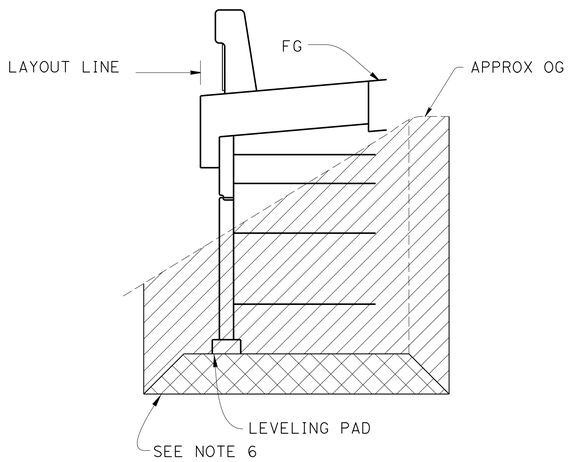

LIMITS OF EXCAVATION
½" = 1'-0"

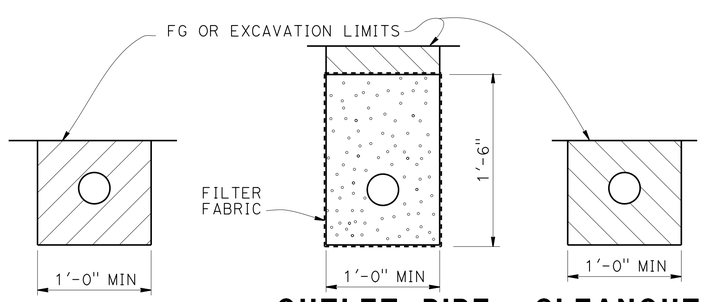

EXCAVATION
OUTLET PIPE BACKFILL
CLEANOUT PIPE
UNPERFORATED OUTLET OR CLEAN OUT PIPE FOR UNDERDRAIN
NO SCALE

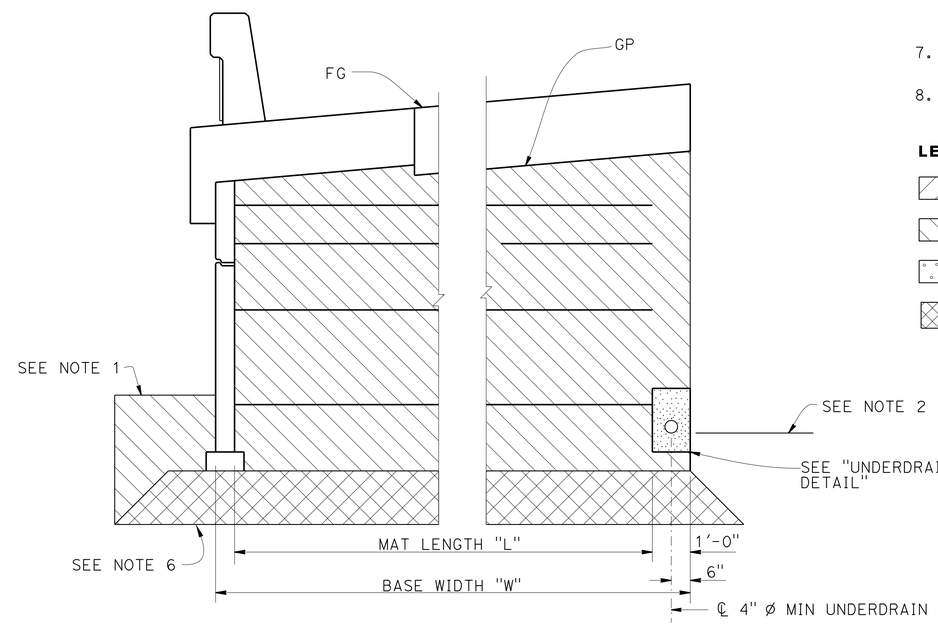

ROADWAY SECTION
½" = 1'-0"

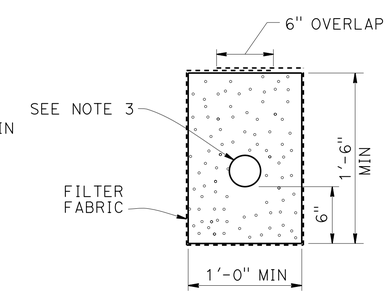

UNDERDRAIN DETAIL

Luqi Yang DESIGN OVERSIGHT Luqi Yang 1-14-14 SIGN OFF DATE	DESIGN	BY M. Mohseni	CHECKED M. Ruvalcaba	PREPARED FOR THE STATE OF CALIFORNIA DEPARTMENT OF TRANSPORTATION	MOHSEN MOHSENI PROJECT ENGINEER
	DETAILS	BY J. Gilmore	CHECKED M. Mohseni		BRIDGE NO. 55E0139
	QUANTITIES	BY J. Fix	CHECKED M. Ruvalcaba		POST MILES 3.2

RETAINING WALL No. 181
INDEX TO PLANS

DESIGN DETAIL SHEET (ENGLISH) (REV.7/16/10)

ORIGINAL SCALE IN INCHES FOR REDUCED PLANS 0 1 2 3

UNIT: X
PROJECT NUMBER & PHASE: 12000202771 CONTRACT NO.: 12-0F96A4

DISREGARD PRINTS BEARING EARLIER REVISION DATES

REVISION DATES 5/20/12 11/13/12 03/04/13 4/26/13

SHEET 2 OF 13

FILE => 55e-0139-a-itp.dgn

USERNAME => s128843 DATE PLOTTED => 07-AUG-2014 TIME PLOTTED => 13:08

DIST	COUNTY	ROUTE	POST MILES TOTAL PROJECT	SHEET No	TOTAL SHEETS
12	Ora	5	3.0/3.7	577	635

REGISTERED CIVIL ENGINEER 4/26/13 DATE

3-10-14
PLANS APPROVAL DATE

REGISTERED PROFESSIONAL ENGINEER MOHSEN MOHSENI No. C45999 Exp. 12/31/14 CIVIL STATE OF CALIFORNIA

The State of California or its officers or agents shall not be responsible for the accuracy or completeness of electronic copies of this plan sheet.

PARSONS 2201 DUPONT DRIVE SUITE 200 IRVINE, CA 92612

OCTA 550 SOUTH MAIN STREET ORANGE, CA 92863

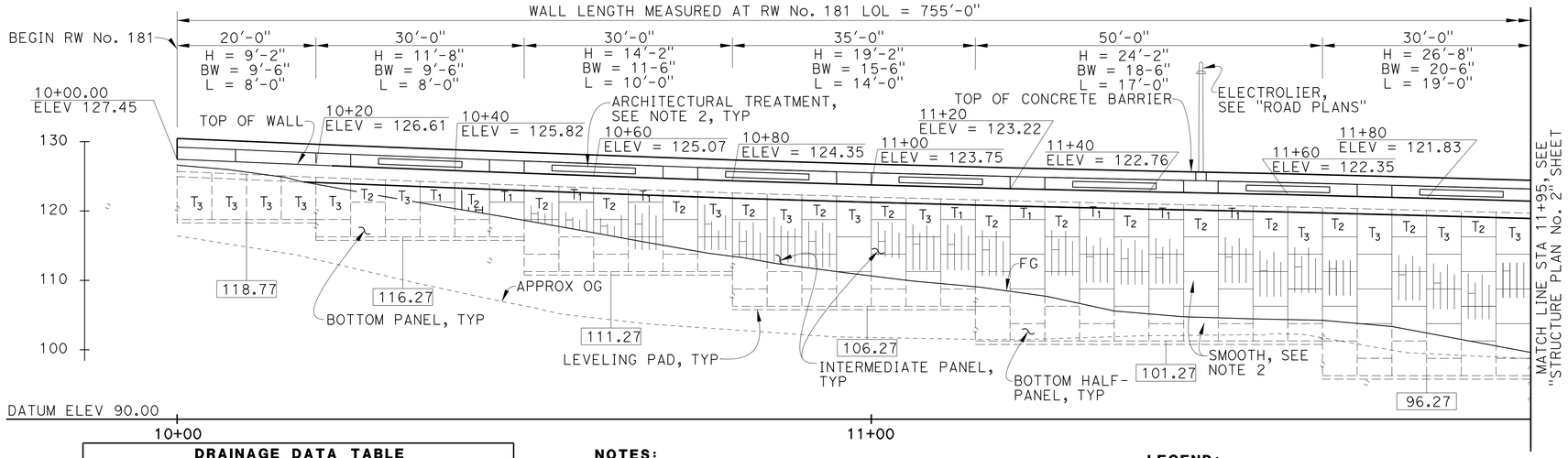

DRAINAGE DATA TABLE			
ELEMENT	STA	DESCRIPTION	ELEV
1	9+90.33	Cleanout/Riser	120.35
2	10+00.00	45° Elbow	120.02
3	10+20.00	90° Elbow	119.62
4	10+20.00	90° Elbow	117.52
5	10+45.00	90° Elbow	117.02
6	10+45.00	90° Elbow	112.52
7	10+80.00	90° Elbow	111.82
8	10+80.00	90° Elbow	107.52
9	11+15.00	90° Elbow	106.82
10	11+15.00	90° Elbow	102.52
11	11+65.00	90° Elbow	101.52
12	11+65.00	90° Elbow	97.52
13	11+95.00	90° Elbow	96.92
14	11+95.00	90° Elbow	92.42
16	11+71.33	Cleanout/Riser	94.90
17	11+95.00	90° Elbow	94.73

NOTES:

1. No expansion joint is allowed the full length of concrete barrier and concrete barrier slab.
2. For Architectural Treatment,see "Architectural Details No. 1" sheet.

MIRROR ELEVATION

1" = 10'

LEGEND:

H Denotes Design Height
BW Denotes Minimum Base Width
L Denotes Minimum Wire Mat Length
XX.XX Top Leveling Pad Elevation
10 Interval in Years
Precast Panel
Inspection Wire
T_X Top Panel
Number of layers of wire mat soil reinforcement

CURVE DATA (1)

R = 1425.00'
Δ = 7°44'44"
T = 96.47'
L = 192.64'

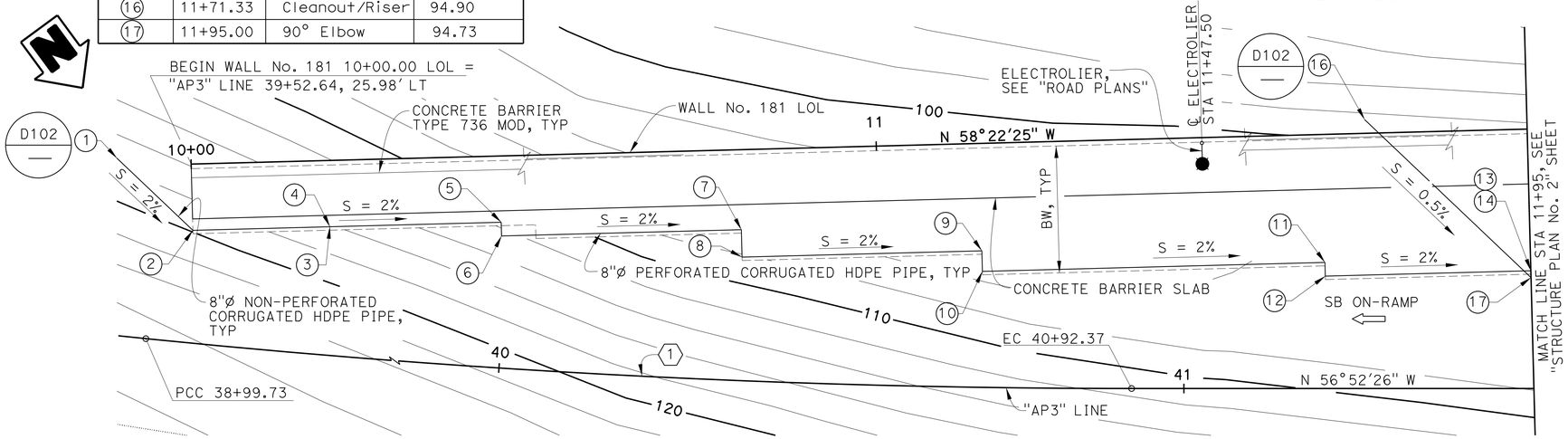

PLAN

1" = 10'

H = 9'-2"	H = 11'-8"
TOP LAYER 4-W15 X W15 @ 6 1 OF 4-W15 X W15 @ 6 1 OF 4-W15 X W15 @ 6	TOP LAYER 4-W15 X W15 @ 6 2 OF 4-W15 X W15 @ 6 1 OF 4-W20 X W15 @ 9
H = 14'-2"	**H = 19'-2"**
TOP LAYER 4-W15 X W15 @ 6 3 OF 4-W15 X W15 @ 6 1 OF 4-W20 X W15 @ 9	TOP LAYER 4-W15 X W15 @ 6 4 OF 4-W15 X W15 @ 6 1 of 4-W20 X W15 @ 9 1 OF 4-W20 X W15 @ 9
H = 24'-2"	**H = 26'-8"**
TOP LAYER 4-W15 X W15 @ 6 4 OF 4-W15 X W15 @ 18 3 OF 4-W20 X W15 @ 24 1 OF 4-W20 X W15 @ 24	TOP LAYER 4-W15 X W15 @ 6 4 OF 4-W15 X W15 @ 18 3 OF 4-W20 X W15 @ 24 1 OF 6-W25 X W15 @ 24 1 OF 6-W25 X W15 @ 24

NOTES:

1. Example Configuration: 3 OF 4-W20 X W15 @ 24
   3 OF = 3 Layers of reinforcement mats with
   4-W20 X = Longitudinal wires W20 sized by
   W15 @ 24 = W15 sized transverse wires at 24-inch spacing
2. Top panels are designated as "T1", "T2" and "T3" depending upon the number of required layers of wire mat soil reinforcement.
3. For wire mat layers with 4 or 6 number of longitudinal wires, see "Details No. 2" sheet.
4. Wire mat layers shown are those required for the maximum specified wall height.

WIRE MAT SOIL REINFORCEMENT TABLE

Luqi Yang
DESIGN OVERSIGHT Luqi Yang
7-10-13
SIGN OFF DATE

DESIGN	BY M. Mohseni	CHECKED M. Ruvalcaba
DETAILS	BY P. Johnson	CHECKED M. Mohseni
QUANTITIES	BY J. Fix	CHECKED M. Ruvalcaba

PREPARED FOR THE STATE OF CALIFORNIA DEPARTMENT OF TRANSPORTATION

MOHSEN MOHSENI
PROJECT ENGINEER

BRIDGE NO. 55E0139
POST MILES 3.2

RETAINING WALL No. 181
STRUCTURE PLAN No. 1

DESIGN DETAIL SHEET (ENGLISH) (REV.7/16/10)

ORIGINAL SCALE IN INCHES FOR REDUCED PLANS 0 1 2 3

UNIT: X
PROJECT NUMBER & PHASE: 12000202771 CONTRACT NO.: 12-0F96A4

DISREGARD PRINTS BEARING EARLIER REVISION DATES

REVISION DATES 5/20/12 11/13/12 03/04/13 4/26/13 SHEET 3 OF 13

FILE => 55e-0139-c-sp01.dgn

USERNAME => s128843 DATE PLOTTED => 07-AUG-2014 TIME PLOTTED => 13:08

DIST	COUNTY	ROUTE	POST MILES TOTAL PROJECT	SHEET No	TOTAL SHEETS
12	Ora	5	3.0/3.7	578	635

REGISTERED CIVIL ENGINEER 4/26/13 DATE

3-10-14
PLANS APPROVAL DATE

The State of California or its officers or agents shall not be responsible for the accuracy or completeness of electronic copies of this plan sheet.

REGISTERED PROFESSIONAL ENGINEER MOHSEN MOHSENI No. C45999 Exp. 12/31/14 CIVIL STATE OF CALIFORNIA

PARSONS 2201 DUPONT DRIVE SUITE 200 IRVINE, CA 92612

OCTA 550 SOUTH MAIN STREET ORANGE, CA 92863

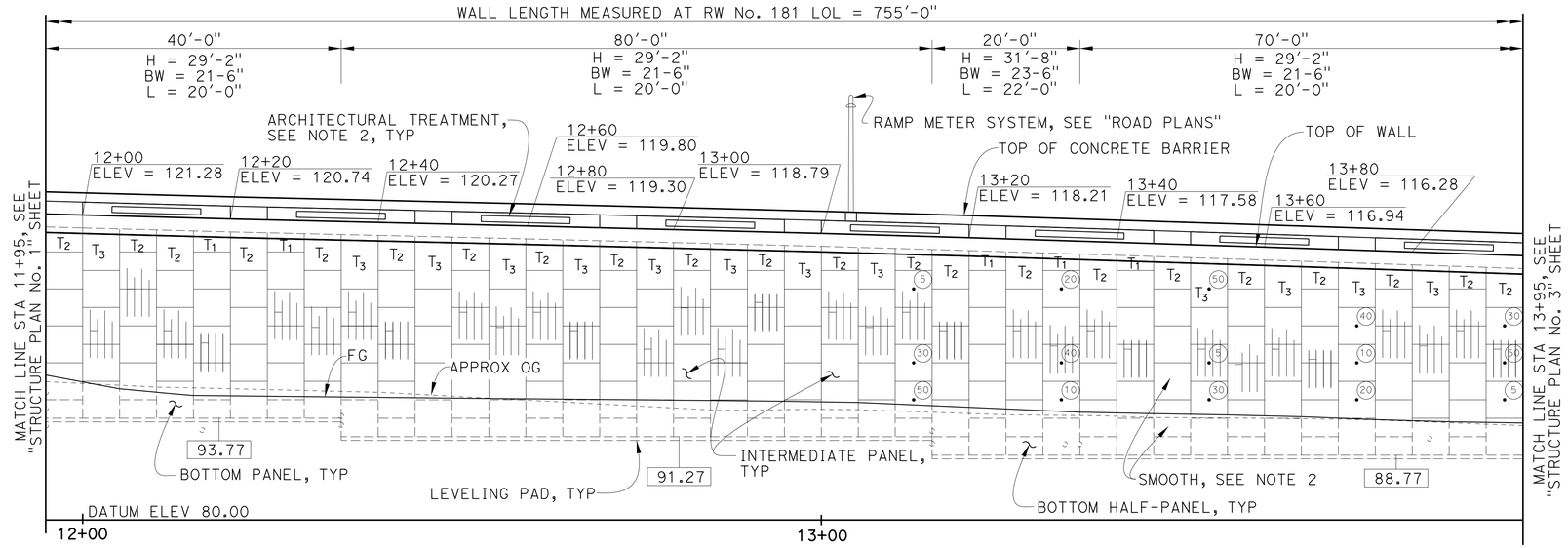

DRAINAGE DATA TABLE			
ELEMENT	STA	DESCRIPTION	ELEV
15	12+16.18	Outlet	91.83
18	12+35.00	90° Elbow	93.73
19	12+35.00	90° Elbow	92.52
20	13+15.00	90° Elbow	91.72
21	13+15.00	90° Elbow	90.02
22	13+33.00	90° Elbow	89.93
23	13+35.00	90° Elbow	89.92
27	13+82.36	Cleanout/Riser	90.66

NOTES:

1. No expansion joint is allowed the full length of concrete barrier and concrete barrier slab.
2. For Architectural Treatment, see "Architectural Details No. 1" sheet.

MIRROR ELEVATION

1" = 10'

LEGEND:

H Denotes Design Height
BW Denotes Minimum Base Width
L Denotes Minimum Wire Mat Length
XX.XX Top Leveling Pad Elevation
10 Interval in Years
Precast Panel
Inspection Wire
T_X Top Panel
Number of layers of wire mat soil reinforcement

H = 29'-2"	H = 31'-8"
TOP LAYER 4-W15 X W15 @ 6	TOP LAYER 4-W15 X W15 @ 6
4 OF 4-W15 X W15 @ 18	4 OF 4-W15 X W15 @ 18
3 OF 4-W20 X W15 @ 24	4 OF 4-W20 X W15 @ 24
2 OF 6-W25 X W15 @ 24	2 OF 6-W25 X W15 @ 30
1 OF 6-W25 X W15 @ 24	1 OF 6-W25 X W15 @ 30

NOTES:

1. Example Configuration: 3 OF 4-W20 X W15 @ 24
   - 3 OF = 3 Layers of reinforcement mats with
   - 4-W20 X = Longitudinal wires W20 sized by
   - W15 @ 24 = W15 sized transverse wires at 24-inch spacing
2. Top panels are designated as "T1", "T2" and "T3" depending upon the number of required layers of wire mat soil reinforcement.
3. For wire mat layers with 4 or 6 number of longitudinal wires, see "Details No. 2" sheet.
4. Wire mat layers shown are those required for the maximum specified wall height.

WIRE MAT SOIL REINFORCEMENT TABLE

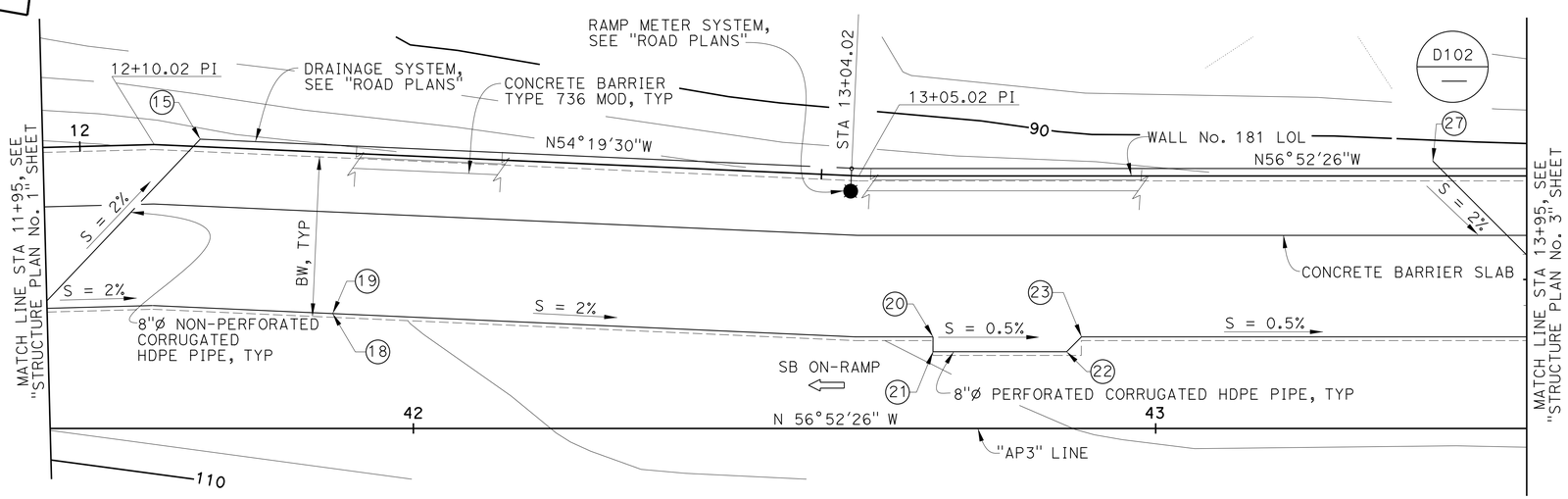

PLAN

1" = 10'

Luqi Yang
DESIGN OVERSIGHT Luqi Yang
7-10-13
SIGN OFF DATE

	BY	CHECKED
DESIGN	M. Mohseni	M. Ruvalcaba
DETAILS	P. Johnson	M. Mohseni
QUANTITIES	J. Fix	M. Ruvalcaba

PREPARED FOR THE STATE OF CALIFORNIA DEPARTMENT OF TRANSPORTATION

MOHSEN MOHSENI
PROJECT ENGINEER

BRIDGE NO. 55E0139
POST MILES 3.2

RETAINING WALL No. 181
STRUCTURE PLAN No. 2

DESIGN DETAIL SHEET (ENGLISH) (REV.7/16/10)

ORIGINAL SCALE IN INCHES FOR REDUCED PLANS 0 1 2 3

UNIT: X
PROJECT NUMBER & PHASE: 12000202771 CONTRACT NO.: 12-0F96A4

DISREGARD PRINTS BEARING EARLIER REVISION DATES

REVISION DATES 5/20/12 11/13/12 03/04/13 4/26/13

SHEET 4 OF 13

FILE => 55e-0139-c-sp02.dgn

USERNAME => s128843 DATE PLOTTED => 07-AUG-2014 TIME PLOTTED => 13:08

DIST	COUNTY	ROUTE	POST MILES TOTAL PROJECT	SHEET No	TOTAL SHEETS
12	Ora	5	3.0/3.7	579	635

REGISTERED CIVIL ENGINEER 4/26/13 DATE

3-10-14
PLANS APPROVAL DATE

The State of California or its officers or agents shall not be responsible for the accuracy or completeness of electronic copies of this plan sheet.

REGISTERED PROFESSIONAL ENGINEER MOHSEN MOHSENI No. C45999 Exp. 12/31/14 CIVIL STATE OF CALIFORNIA

PARSONS 2201 DUPONT DRIVE SUITE 200 IRVINE, CA 92612

OCTA 550 SOUTH MAIN STREET ORANGE, CA 92863

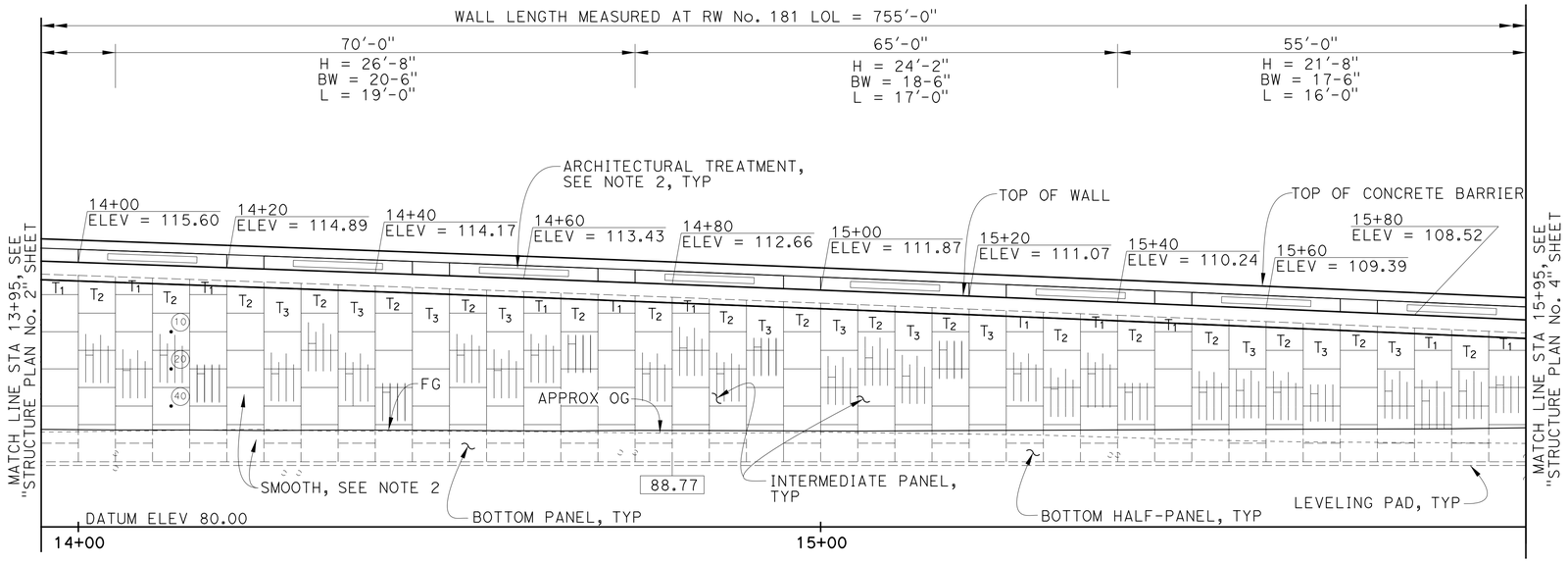

NOTES:

1. No expansion joint is allowed the full length of concrete barrier and concrete barrier slab.
2. For Architectural Treatment, see "Architectural Details No. 1" sheet.

MIRROR ELEVATION

1" = 10'

DRAINAGE DATA TABLE

ELEMENT	STA	DESCRIPTION	ELEV
24	14+05.00	90° Elbow	89.57
25	14+05.00	90° Elbow	87.57
26	14+27.69	Outlet	86.93
28	14+05.00	90° Elbow	90.02
29	14+73.00	90° Elbow	89.68
30	14+75.00	90° Elbow	89.67
31	15+39.00	90° Elbow	89.35
32	15+40.00	90° Elbow	89.35

LEGEND:

- H Denotes Design Height
- BW Denotes Minimum Base Width
- L Denotes Minimum Wire Mat Length
- XX.XX Top Leveling Pad Elevation
- (10) Interval in Years
- Precast Panel
- Inspection Wire
- T_x Top Panel
- Number of layers of wire mat soil reinforcement

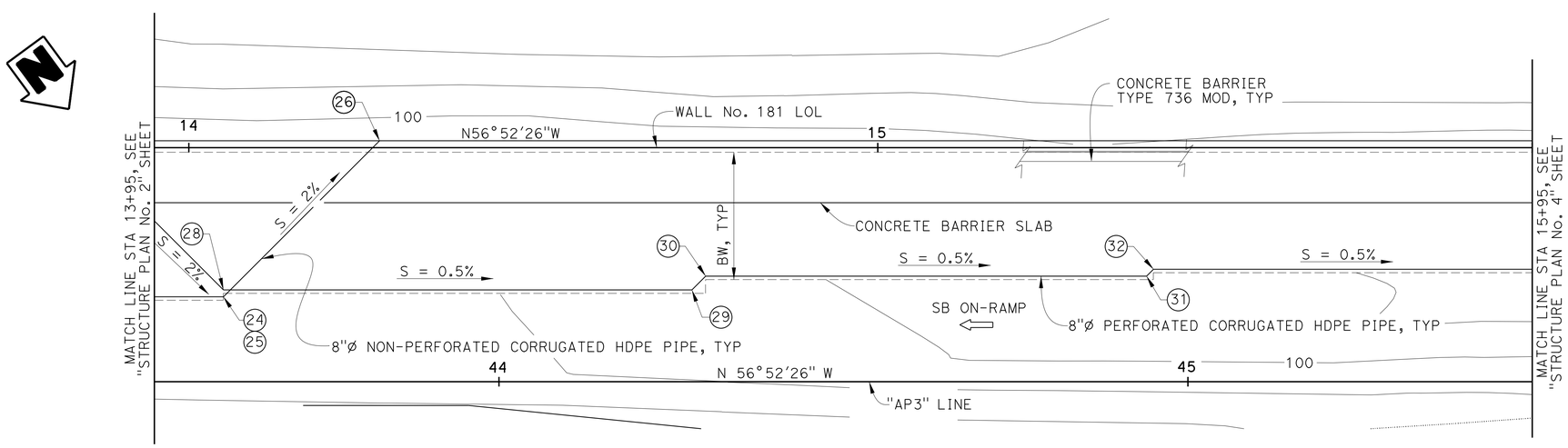

PLAN

1" = 10'

H = 26'-8"	H = 24'-2"
TOP LAYER 4-W15 X W15 @ 6	TOP LAYER 4-W15 X W15 @ 6
4 OF 4-W15 X W15 @ 18	4 OF 4-W15 X W15 @ 18
3 OF 4-W20 X W15 @ 24	3 OF 4-W20 X W15 @ 24
1 OF 6-W25 X W15 @ 24	1 OF 4-W20 X W15 @ 24
1 OF 6-W25 X W15 @ 24	

H = 21'-8"
TOP LAYER 4-W15 X W15 @ 6
4 OF 4-W15 X W15 @ 18
2 OF 4-W20 X W15 @ 24
1 OF 4-W20 X W15 @ 24

NOTES:

1. Example Configuration: 3 OF 4-W20 X W15 @ 24
   - 3 OF = 3 Layers of reinforcement mats with
   - 4-W20 X = Longitudinal wires W20 sized by
   - W15 @ 24 = W15 sized transverse wires at 24-inch spacing
2. Top panels are designated as "T1", "T2" and "T3" depending upon the number of required layers of wire mat soil reinforcement.
3. For wire mat layers with 4 or 6 number of longitudinal wires, see "Details No. 2" sheet.
4. Wire mat layers shown are those required for the maximum specified wall height.

WIRE MAT SOIL REINFORCEMENT TABLE

Luqi Yang
DESIGN OVERSIGHT Luqi Yang
7-10-13
SIGN OFF DATE

	BY	CHECKED
DESIGN	M. Mohseni	M. Ruvalcaba
DETAILS	P. Johnson	M. Mohseni
QUANTITIES	J. Fix	M. Ruvalcaba

PREPARED FOR THE STATE OF CALIFORNIA DEPARTMENT OF TRANSPORTATION

MOHSEN MOHSENI
PROJECT ENGINEER

BRIDGE NO. 55E0139
POST MILES 3.2

RETAINING WALL No. 181
STRUCTURE PLAN No. 3

DESIGN DETAIL SHEET (ENGLISH) (REV.7/16/10)

ORIGINAL SCALE IN INCHES FOR REDUCED PLANS 0 1 2 3

UNIT: X
PROJECT NUMBER & PHASE: 12000202771 CONTRACT NO.: 12-0F96A4

DISREGARD PRINTS BEARING EARLIER REVISION DATES

REVISION DATES 5/29/12 11/13/12 03/04/13 4/26/13

SHEET 5 OF 13

FILE => 55e-0139-c-sp03.dgn

USERNAME => s128843 DATE PLOTTED => 07-AUG-2014 TIME PLOTTED => 13:08

DIST	COUNTY	ROUTE	POST MILES TOTAL PROJECT	SHEET No	TOTAL SHEETS
12	Ora	5	3.0/3.7	580	635

REGISTERED CIVIL ENGINEER 4/26/13 DATE

3-10-14
PLANS APPROVAL DATE

The State of California or its officers or agents shall not be responsible for the accuracy or completeness of electronic copies of this plan sheet.

REGISTERED PROFESSIONAL ENGINEER — MOHSEN MOHSENI — No. C45999 — Exp. 12/31/14 — CIVIL — STATE OF CALIFORNIA

PARSONS 2201 DUPONT DRIVE, SUITE 200, IRVINE, CA 92612

OCTA 550 SOUTH MAIN STREET, ORANGE, CA 92863

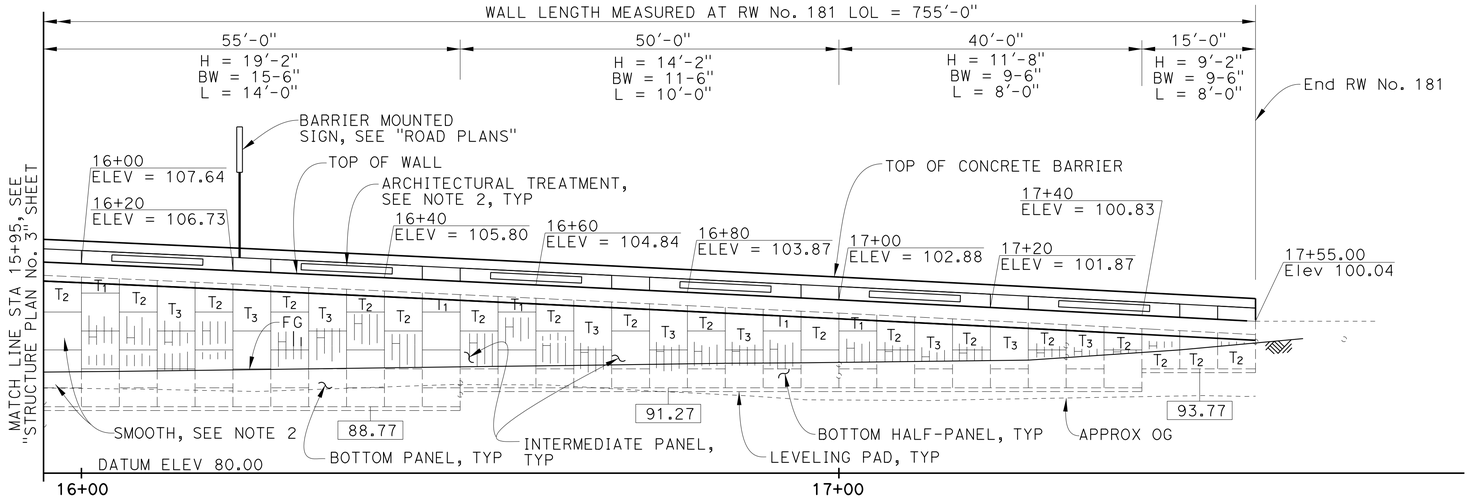

DRAINAGE DATA TABLE			
ELEMENT	STA	DESCRIPTION	ELEV
33	15+95.00	90° Elbow	89.07
34	15+95.00	90° Elbow	86.07
35	15+95.00	Tee	85.70
36	16+32.92	System 10a *	79.15
37	15+95.00	90° Elbow	86.03
38	15+95.00	90° Elbow	89.47
39	16+50.00	90° Elbow	90.02
40	16+50.00	90° Elbow	91.52
41	17+00.00	90° Elbow	92.52
42	17+00.00	90° Elbow	94.04
43	17+30.00	90° Elbow	95.02
44	17+30.00	90° Elbow	96.52
45	17+55.00	90° Elbow	97.02
46	17+66.68	Cleanout/Riser	97.35

* For System 10a, see "Road Plans"

NOTES:

1. No expansion joint is allowed the full length of concrete barrier and concrete barrier slab.
2. For Architectural Treatment, see "Architectural Details No. 1" sheet.

MIRROR ELEVATION
1" = 10'

LEGEND:

H Denotes Design Height
BW Denotes Minimum Base Width
L Denotes Minimum Wire Mat Length
XX.XX Top Leveling Pad Elevation
(10) Interval in Years
Precast Panel
Inspection Wire
T_X Top Panel
Number of layers of wire mat soil reinforcement

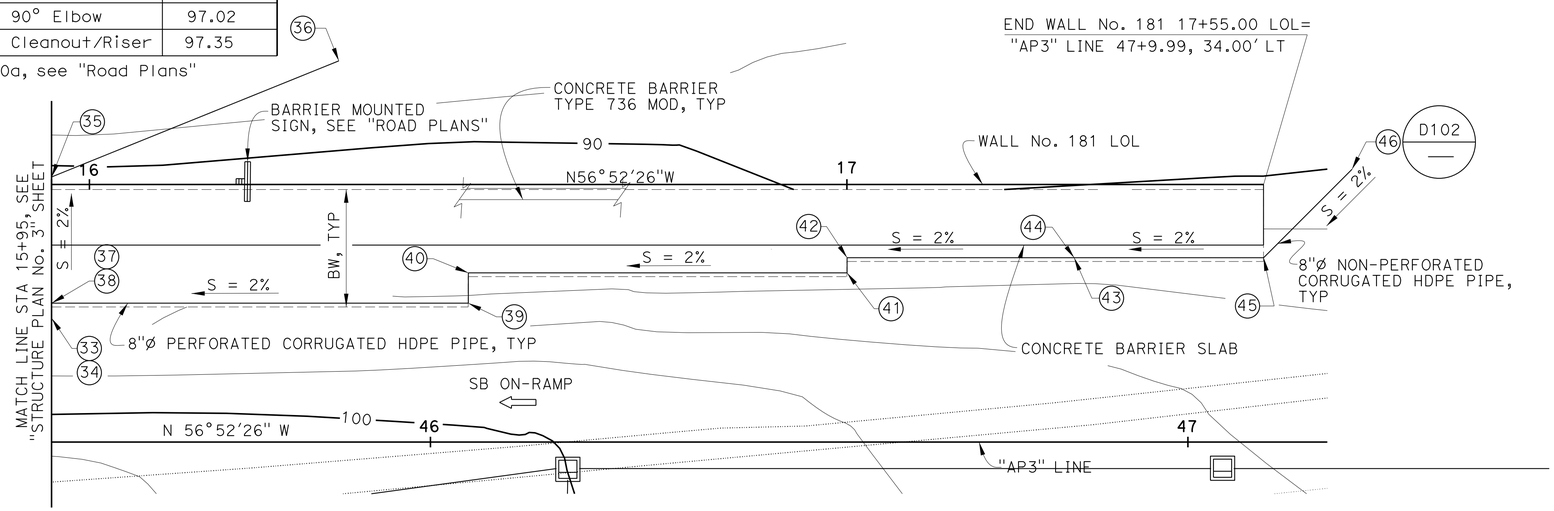

PLAN
1" = 10'

H = 19'-2"	H = 14'-2"
TOP LAYER 4-W15 X W15 @ 6 4 OF 4-W15 X W15 @ 6 1 of 4-W20 X W15 @ 9 1 OF 4-W20 X W15 @ 9	TOP LAYER 4-W15 X W15 @ 6 3 OF 4-W15 X W15 @ 6 1 OF 4-W20 X W15 @ 9

H = 9'-2"	H = 6'-8"
TOP LAYER 4-W15 X W15 @ 6 1 OF 4-W15 X W15 @ 6 1 OF 4-W15 X W15 @ 6	TOP LAYER 4-W15 X W15 @ 6 1 OF 4-W15 X W15 @ 6

NOTES:

1. Example Configuration: 3 OF 4-W20 X W15 @ 24
   - 3 OF = 3 Layers of reinforcement mats with
   - 4-W20 X = Longitudinal wires W20 sized by
   - W15 @ 24 = W15 sized transverse wires at 24-inch spacing
2. Top panels are designated as "T1", "T2" and "T3" depending upon the number of required layers of wire mat soil reinforcement.
3. For wire mat layers with 4 or 6 number of longitudinal wires, see "Details No. 2" sheet.
4. Wire mat layers shown are those required for the maximum specified wall height.

WIRE MAT SOIL REINFORCEMENT TABLE

Luqi Yang
DESIGN OVERSIGHT Luqi Yang
7-10-13
SIGN OFF DATE

	BY	CHECKED
DESIGN	M. Mohseni	M. Ruvalcaba
DETAILS	P. Johnson	M. Mohseni
QUANTITIES	J. Fix	M. Ruvalcaba

PREPARED FOR THE STATE OF CALIFORNIA DEPARTMENT OF TRANSPORTATION

MOHSEN MOHSENI
PROJECT ENGINEER

BRIDGE NO. 55E0139
POST MILES 3.2

RETAINING WALL No. 181
STRUCTURE PLAN No. 4

DESIGN DETAIL SHEET (ENGLISH) (REV.7/16/10)

ORIGINAL SCALE IN INCHES FOR REDUCED PLANS 0 1 2 3

UNIT: X
PROJECT NUMBER & PHASE: 12000202771 CONTRACT NO.: 12-0F96A4

DISREGARD PRINTS BEARING EARLIER REVISION DATES

REVISION DATES: 5/20/12 11/13/12 03/04/13 4/26/13

SHEET 6 OF 13

FILE => 55e-0139-c-sp04.dgn

USERNAME => s128643 DATE PLOTTED => 07-AUG-2014 TIME PLOTTED => 13:08

DIST	COUNTY	ROUTE	POST MILES TOTAL PROJECT	SHEET No	TOTAL SHEETS
12	Ora	5	3.0/3.7	581	635

REGISTERED CIVIL ENGINEER — DATE 4/26/13

3-10-14
PLANS APPROVAL DATE

REGISTERED PROFESSIONAL ENGINEER — MOHSEN MOHSENI — No. C45999 — Exp. 12/31/14 — CIVIL — STATE OF CALIFORNIA

The State of California or its officers or agents shall not be responsible for the accuracy or completeness of electronic copies of this plan sheet.

PARSONS 2201 DUPONT DRIVE, SUITE 200, IRVINE, CA 92612

OCTA 550 SOUTH MAIN STREET, ORANGE, CA 92863

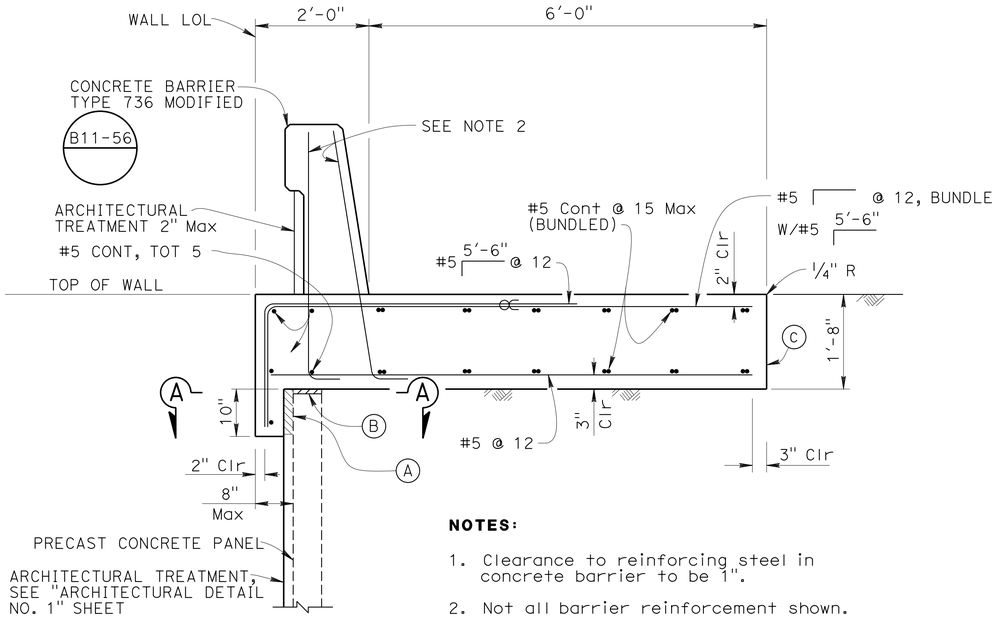

NOTES:

1. Clearance to reinforcing steel in concrete barrier to be 1".
2. Not all barrier reinforcement shown.
3. No expansion joints in concrete barrier or barrier slab within wall limits.
4. ∝ Indicates bundled bars.

CONCRETE BARRIER SLAB

3/4" = 1'-0"

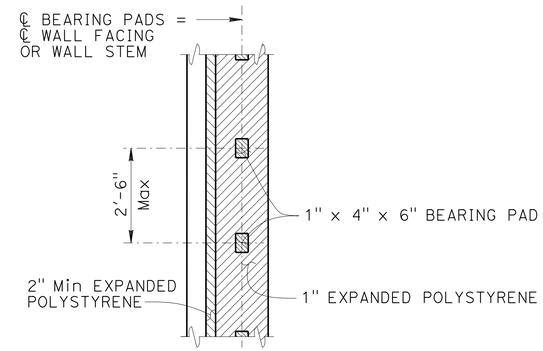

SECTION A-A

1/2" = 1'-0"

NOTES:

(A) 2" Min Expanded polystyrene

(B) 1" Expanded Polystyrene

(C) Contact joint

Luqi Yang
DESIGN OVERSIGHT — Luqi Yang
7-10-13
SIGN OFF DATE

DESIGN DETAIL SHEET (ENGLISH) (REV.7/16/10)

	BY	CHECKED
DESIGN	M. Mohseni	M. Ruvalcaba
DETAILS	P. Johnson	M. Mohseni
QUANTITIES	J. Fix	M. Ruvalcaba

ORIGINAL SCALE IN INCHES FOR REDUCED PLANS 0 1 2 3

PREPARED FOR THE STATE OF CALIFORNIA DEPARTMENT OF TRANSPORTATION

MOHSEN MOHSENI
PROJECT ENGINEER

BRIDGE NO. 55E0139
POST MILES 3.2

RETAINING WALL No. 181
CONCRETE BARRIER SLAB DETAILS

UNIT: X
PROJECT NUMBER & PHASE: 12000202771 CONTRACT NO.: 12-0F96A4

DISREGARD PRINTS BEARING EARLIER REVISION DATES

REVISION DATES: 5/29/12 11/13/12 03/04/13 4/26/13

SHEET 7 OF 13

FILE => 55e-0139-g-rwdt00.dgn

USERNAME => s128843 DATE PLOTTED => 07-AUG-2014 TIME PLOTTED => 13:08

DIST	COUNTY	ROUTE	POST MILES TOTAL PROJECT	SHEET No.	TOTAL SHEETS
12	Ora	5	3.0/3.7	582	635

REGISTERED CIVIL ENGINEER 4/26/13 DATE

3-10-14
PLANS APPROVAL DATE

The State of California or its officers or agents shall not be responsible for the accuracy or completeness of electronic copies of this plan sheet.

REGISTERED PROFESSIONAL ENGINEER MOHSEN MOHSENI No. C45999 Exp. 12/31/14 CIVIL STATE OF CALIFORNIA

PARSONS 2201 DUPONT DRIVE SUITE 200 IRVINE, CA 92612

OCTA 550 SOUTH MAIN STREET ORANGE, CA 92863

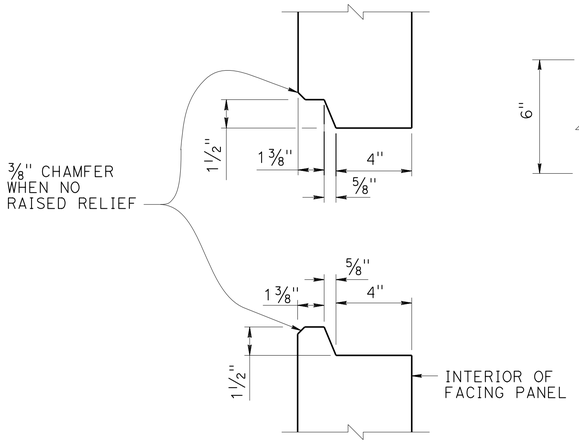

HORIZONTAL JOINT DETAIL
3" = 1'-0"

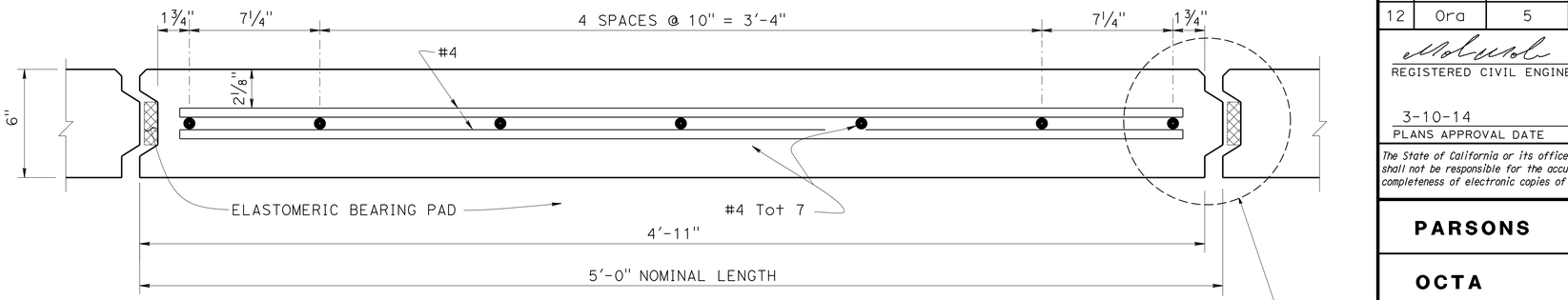

PLAN - FACING PANEL
3" = 1'-0"

NOTES:

1. Architectural treatment not shown
2. Place reinforced elastomeric bearing pads in all of the panel joints between the panels. Place one in each vertical joint where the horizontal joints intersect. Place two per panel in each horizontal joint:
   3/4" x 2 3/8" x 6" for vertical joints
   3/4" x 4" x 6" for horizontal joints
3. Bond a strip of filter fabric, 1'-0" wide, over the full length of all panel joints
4. Top layer of welded wire mats attached parallel to top of panel when top of wall is angled or curved as shown elsewhere in "STRUCTURE PLANS"
5. Eliminate mid level mat when closer than 6" to top mat, continue variable dimension between remaining mats

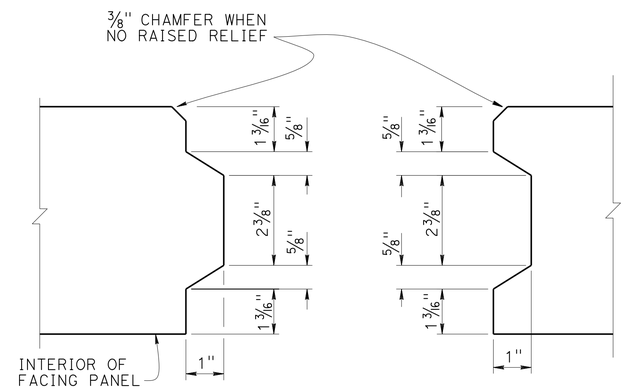

VERTICAL JOINT DETAIL
6" = 1'-0"

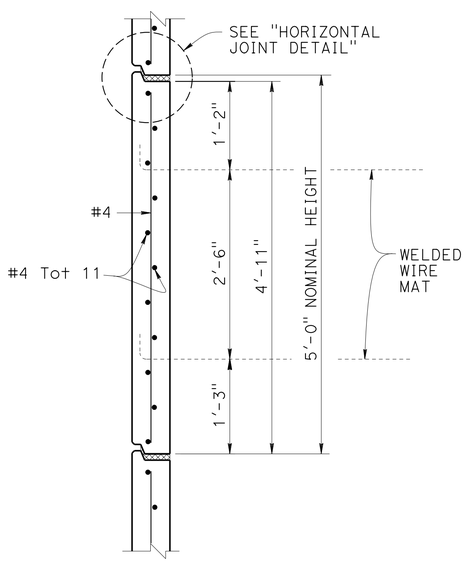

INTERMEDIATE PANEL
1" = 1'-0"

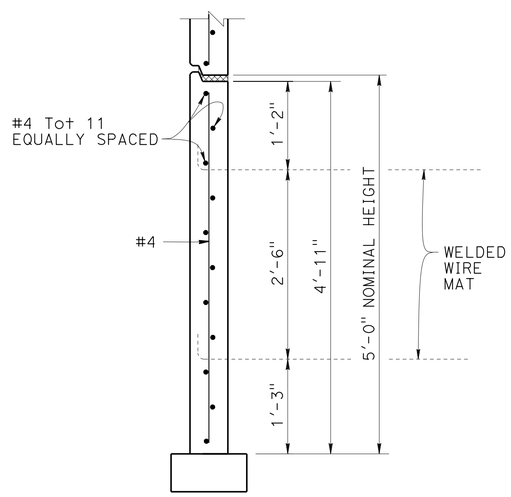

BOTTOM PANEL
1" = 1'-0"

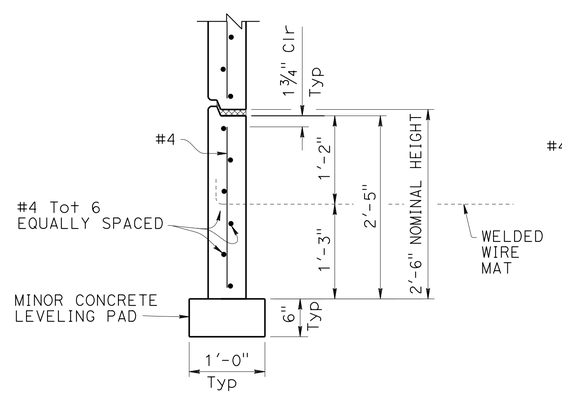

BOTTOM HALF PANEL
1" = 1'-0"

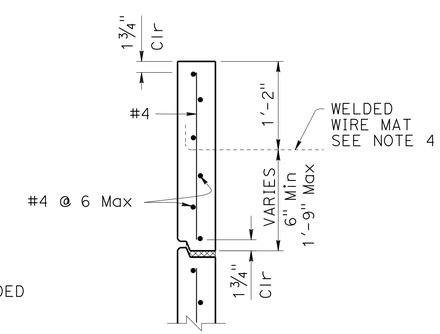

TOP HALF PANEL
1" = 1'-0"

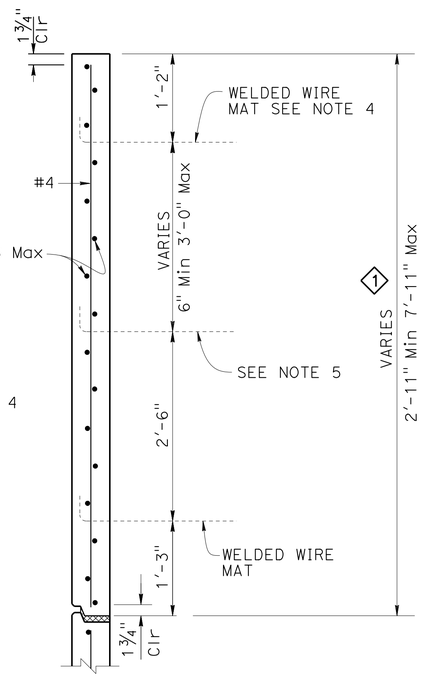

TOP PANEL WITH MULTIPLE MATS
1" = 1'-0"

SPECIAL DETAILS

RETAINING WALL No. 181

MECHANICALLY STABILIZED EMBANKMENT

DETAILS NO. 1

REVISED STANDARD DRAWING

FILE NO. **xs13-020-1**

APPROVAL DATE January 2012

1 Revised Dimension

STATE OF **CALIFORNIA** DEPARTMENT OF TRANSPORTATION

DIVISION OF ENGINEERING SERVICES

BRIDGE NO. 55E0139

POST MILE 3.2

UNIT: X

PROJECT NUMBER & PHASE: 12000202771

CONTRACT NO.: 12-0F96A4

DISREGARD PRINTS BEARING EARLIER REVISION DATES

REVISION DATES 5/29/12 11/13/12 03/04/13 4/26/13

SHEET 8 OF 13

DS OSD 2147A (ENGLISH STANDARD DRAWING "XS" BORDER REV. (02-02-11)

ORIGINAL SCALE IN INCHES FOR REDUCED PLANS 0 1 2 3

FILE => 55e-0139-g-rwdt01.dgn

USERNAME => s128843 DATE PLOTTED => 07-AUG-2014 TIME PLOTTED => 13:08

DIST	COUNTY	ROUTE	POST MILES TOTAL PROJECT	SHEET No	TOTAL SHEETS
12	Ora	5	3.0/3.7	583	635

REGISTERED CIVIL ENGINEER 4/26/13 DATE

3-10-14
PLANS APPROVAL DATE

REGISTERED PROFESSIONAL ENGINEER MOHSEN MOHSENI No. C45999 Exp. 12/31/14 CIVIL STATE OF CALIFORNIA

The State of California or its officers or agents shall not be responsible for the accuracy or completeness of electronic copies of this plan sheet.

PARSONS 2201 DUPONT DRIVE SUITE 200 IRVINE, CA 92612

OCTA 550 SOUTH MAIN STREET ORANGE, CA 92863

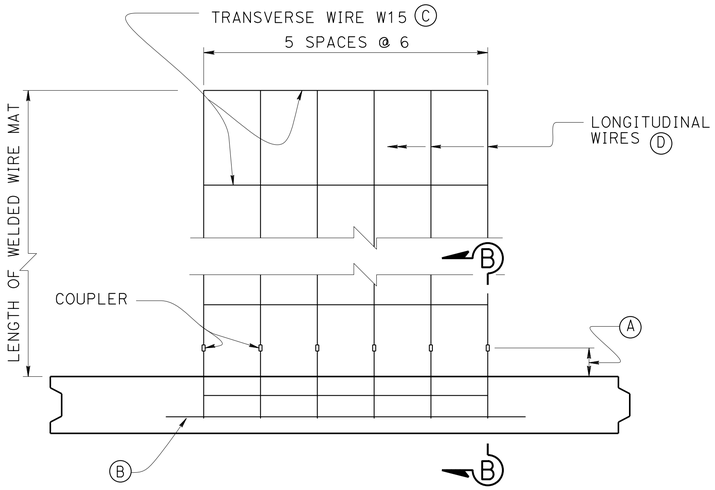

PLAN OF PANEL WITH SIX WIRE MAT

1½" = 1'-0"

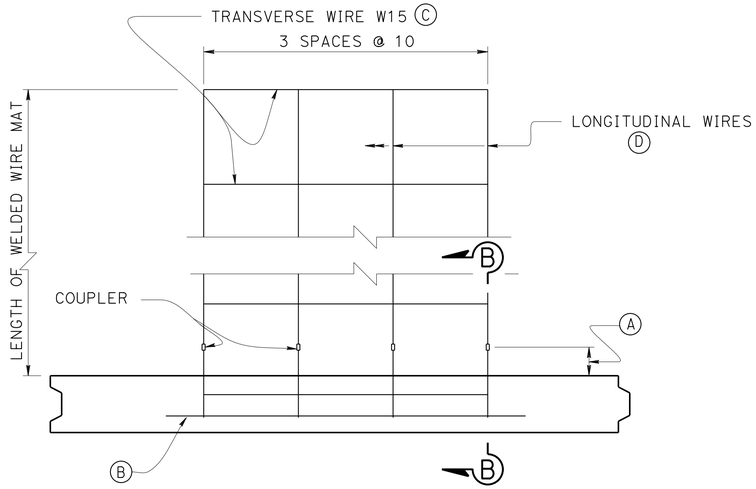

PLAN OF PANEL WITH FOUR WIRE MAT

1½" = 1'-0"

NOTES:

(A) Distance as required to permit coupler to be swaged

(B) Place #4 x 3'-2", centered on connector mat, but not welded to it

(C) All transverse wires size W15 at various spacing as shown elsewhere in plans

(D) Size of longitudinal wires shown elsewhere in plans

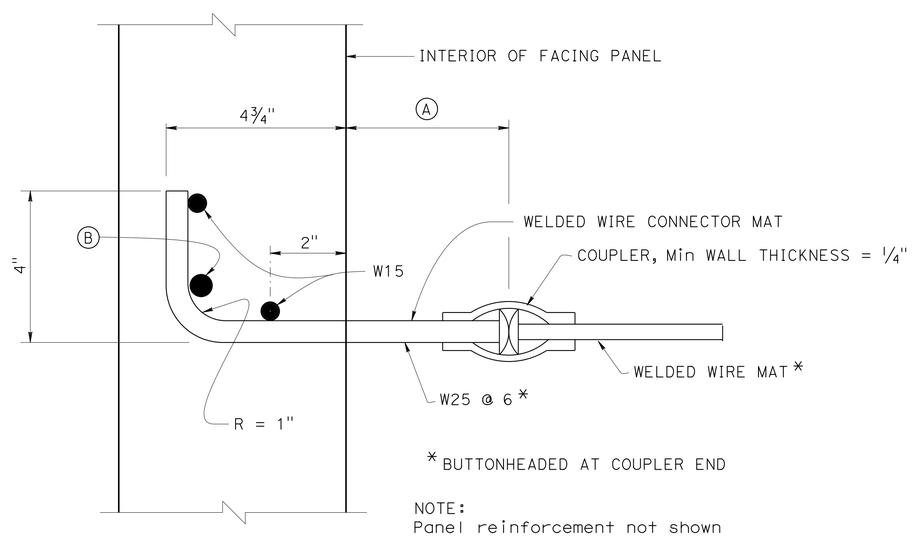

SECTION B-B

6" = 1'-0"

Luqi Yang
DESIGN OVERSIGHT Luqi Yang
7-10-13
SIGN OFF DATE

	BY	CHECKED
DESIGN	M. Mohseni	M. Ruvalcaba
DETAILS	P. Johnson	M. Mohseni
QUANTITIES	J. Fix	M. Ruvalcaba

PREPARED FOR THE STATE OF CALIFORNIA DEPARTMENT OF TRANSPORTATION

MOHSEN MOHSENI
PROJECT ENGINEER

BRIDGE NO. 55E0139
POST MILES 3.2

RETAINING WALL No. 181
DETAILS NO. 2

DESIGN DETAIL SHEET (ENGLISH) (REV.7/16/10)

ORIGINAL SCALE IN INCHES FOR REDUCED PLANS 0 1 2 3

UNIT: X
PROJECT NUMBER & PHASE: 12000202771 CONTRACT NO.: 12-0F96A4

DISREGARD PRINTS BEARING EARLIER REVISION DATES

REVISION DATES 5/20/12 11/13/12 03/04/13 4/26/13

SHEET 9 OF 13

FILE => 55e-0139-g-rwdt02.dgn

USERNAME => s128843 DATE PLOTTED => 07-AUG-2014 TIME PLOTTED => 13:08

DIST	COUNTY	ROUTE	POST MILES TOTAL PROJECT	SHEET No.	TOTAL SHEETS
12	Ora	5	3.0/3.7	584	635

REGISTERED CIVIL ENGINEER 4/26/13 DATE

3-10-14
PLANS APPROVAL DATE

REGISTERED PROFESSIONAL ENGINEER MOHSEN MOHSENI No. C45999 Exp. 12/31/14 CIVIL STATE OF CALIFORNIA

The State of California or its officers or agents shall not be responsible for the accuracy or completeness of electronic copies of this plan sheet.

PARSONS 2201 DUPONT DRIVE SUITE 200 IRVINE, CA 92612

OCTA 550 SOUTH MAIN STREET ORANGE, CA 92863

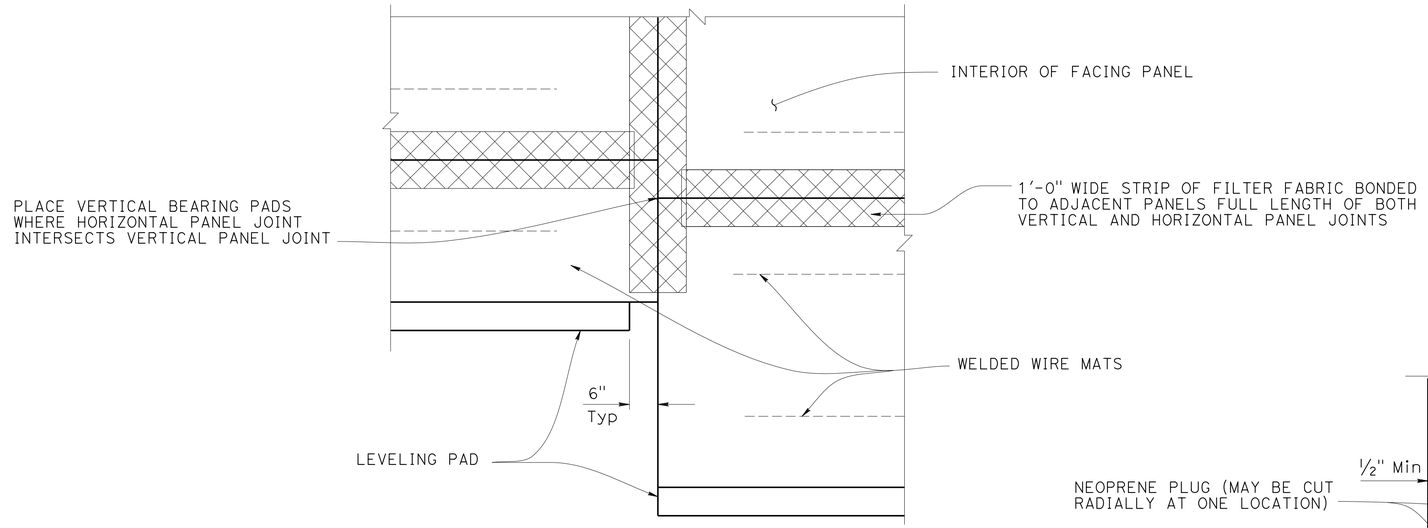

PART ELEVATION

3/4" = 1'-0"

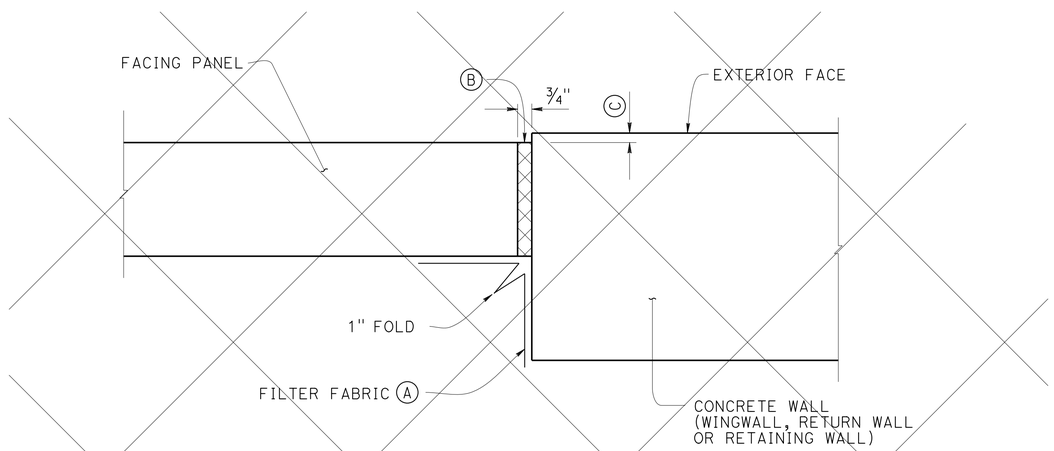

MSE FACING PANEL-TO-CONCRETE WALL JOINT DETAIL 1

3" = 1'-0"

NOTES:

(A) Bond a strip of filter fabric, 1'-6" wide, to back of MSE panels and the adjacent concrete wall for entire length of vertical joint

(B) Bond expansion joint material to the concrete wall

(C) Offset between face of MSE facing panel and face of the concrete wall as dictated by location of layout lines shown elsewhere in "STRUCTURE PLANS"

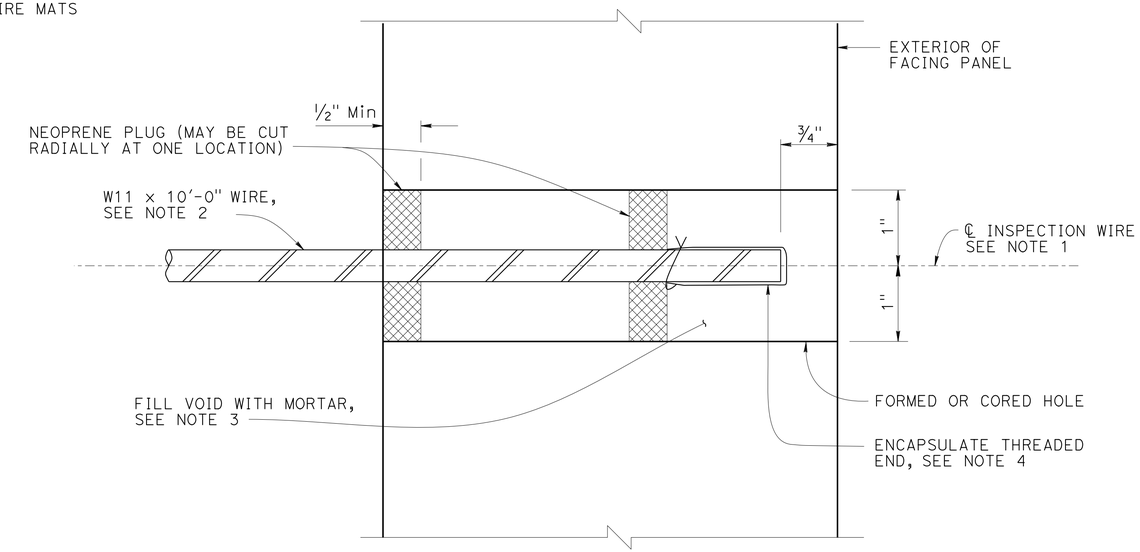

SECTION THRU INSPECTION WIRE

NO SCALE

NOTES:

1. Center inspection wire in facing panel.
2. Fabricated inspection wire from W11 wire representative of the welded wire mats, with 3/8" ø 16 UNC threads for at least 1 1/2" of one end.
3. Place inspection wire horizontal and perpendicular to the wall panel prior to backfilling.
4. Encapsulate threaded end with corrosion inhibiting mastic, vinyl covering, and secure with plastic tie.

UNC = Unified Coarse Threads

1 Does Not Apply

SPECIAL DETAILS

RETAINING WALL No. 181

MECHANICALLY STABILIZED EMBANKMENT

DETAILS NO. 3

REVISED STANDARD DRAWING

FILE NO. xs13-020-3

APPROVAL DATE January 2012

STATE OF CALIFORNIA DEPARTMENT OF TRANSPORTATION

DIVISION OF ENGINEERING SERVICES

BRIDGE NO. 55E0139

POST MILE 3.2

DS OSD 2147A (ENGLISH STANDARD DRAWING "XS" BORDER REV. (02-02-11)

ORIGINAL SCALE IN INCHES FOR REDUCED PLANS 0 1 2 3

UNIT: X
PROJECT NUMBER & PHASE: 12000202771
CONTRACT NO.: 12-0F96A4

DISREGARD PRINTS BEARING EARLIER REVISION DATES

REVISION DATES 5/29/12 11/13/12 03/04/13 4/26/13

SHEET 10 OF 13

FILE => 55e-0139-g-rwdt03.dgn

USERNAME => s128843 DATE PLOTTED => 07-AUG-2014 TIME PLOTTED => 13:08

DIST	COUNTY	ROUTE	POST MILES TOTAL PROJECT	SHEET No	TOTAL SHEETS
12	Ora	5	3.0/3.7	585	635

REGISTERED CIVIL ENGINEER 4/26/13 DATE

3-10-14
PLANS APPROVAL DATE

REGISTERED PROFESSIONAL ENGINEER MOHSEN MOHSENI No. C45999 Exp. 12/31/14 CIVIL STATE OF CALIFORNIA

The State of California or its officers or agents shall not be responsible for the accuracy or completeness of electronic copies of this plan sheet.

PARSONS 2201 DUPONT DRIVE SUITE 200 IRVINE, CA 92612

OCTA 550 SOUTH MAIN STREET ORANGE, CA 92863

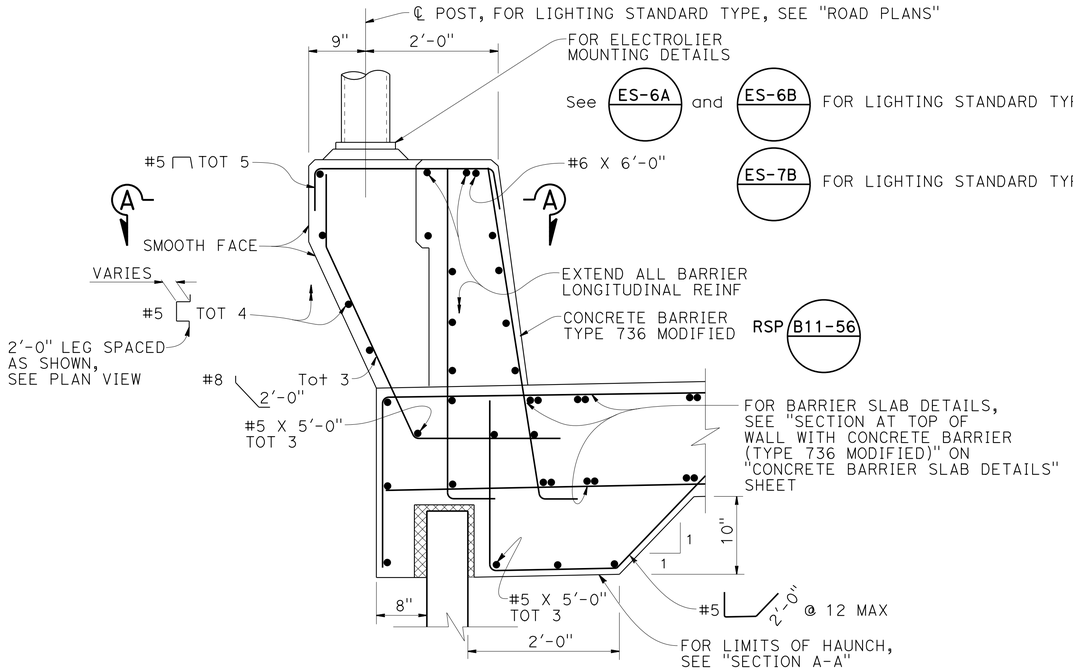

NOTES:

1. For Information not shown, see "CONCRETE BARRIER SLAB" Detail on "CONCRETE BARRIER SLAB DETAILS" Sheet
2. For Anchor System, use similar to ES-6B

ELEVATION - ELECTROLIER PEDESTAL ON WALL

1" = 1'-0"

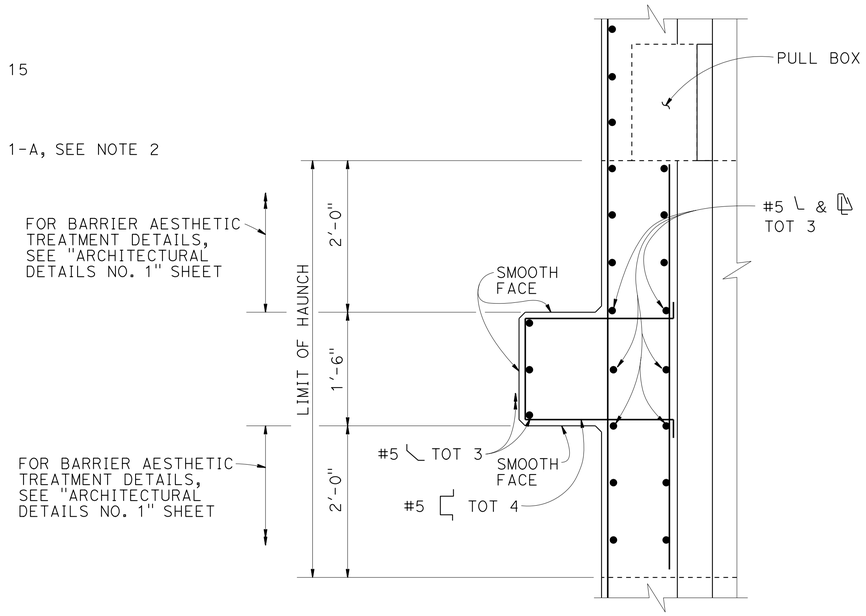

SECTION A-A

1" = 1'-0"

NOTES:

(A) 2" Expanded Polystyrene Recessed 2" into Barrier Slab at Front of MSE Facing Panel.

(B) #5 6¼" 3'-4" @ 12

(C) #5 6'-10⅝" @ 12

(D) #5 4'-7" @ 12 Bundled With (C) Bars

(E) #5 @ 12

(F) #5 6¼" @ 16 (To be in Place prior Approach Slab Concrete)

(G) #5 6¼" @ 8 (To be in Place Prior to Approach Slab Concrete)

(H) Approach Slab Reinforcement

(I) Filter Fabric

(J) 3" Plastic Pipe (Slotted)

(K) 3" Plastic Pipe and Fitting (Unslotted)

(L) 4" Schedule 80 PVC Outlet Pipe and Fittings (Unslotted)

(M) 1'-0" Wide X 2'-0" Filter Fabric Wrapped Around Pipe and Secured With Nylon Ties

(N) 1" Expanded Polystyrene

Luqi Yang
DESIGN OVERSIGHT Luqi Yang
1-14-14
SIGN OFF DATE

	BY	CHECKED
DESIGN	M. Mohseni	M. Ruvalcaba
DETAILS	P. Johnson	M. Mohseni
QUANTITIES	J. Fix	M. Ruvalcaba

PREPARED FOR THE STATE OF CALIFORNIA DEPARTMENT OF TRANSPORTATION

MOHSEN MOHSENI
PROJECT ENGINEER

BRIDGE NO. 55E0139
POST MILES 3.2

RETAINING WALL No. 181
DETAILS NO. 4

DESIGN DETAIL SHEET (ENGLISH) (REV.7/16/10)

ORIGINAL SCALE IN INCHES FOR REDUCED PLANS 0 1 2 3

UNIT: X
PROJECT NUMBER & PHASE: 12000202771 CONTRACT NO.: 12-0F96A4

DISREGARD PRINTS BEARING EARLIER REVISION DATES

REVISION DATES 5/29/12 11/13/12 03/04/13 4/26/13

SHEET 11 OF 13

FILE => 55e-0139-g-rwdt04.dgn

USERNAME => s128843 DATE PLOTTED => 07-AUG-2014 TIME PLOTTED => 13:09

DIST	COUNTY	ROUTE	POST MILES TOTAL PROJECT	SHEET No	TOTAL SHEETS
12	Ora	5	3.0/3.7	586	635

REGISTERED CIVIL ENGINEER 4/26/13 DATE

3-10-14
PLANS APPROVAL DATE

REGISTERED PROFESSIONAL ENGINEER MOHSEN MOHSENI No. C45999 Exp. 12/31/14 CIVIL STATE OF CALIFORNIA

The State of California or its officers or agents shall not be responsible for the accuracy or completeness of electronic copies of this plan sheet.

PARSONS 2201 DUPONT DRIVE SUITE 200 IRVINE, CA 92612

OCTA 550 SOUTH MAIN STREET ORANGE, CA 92863

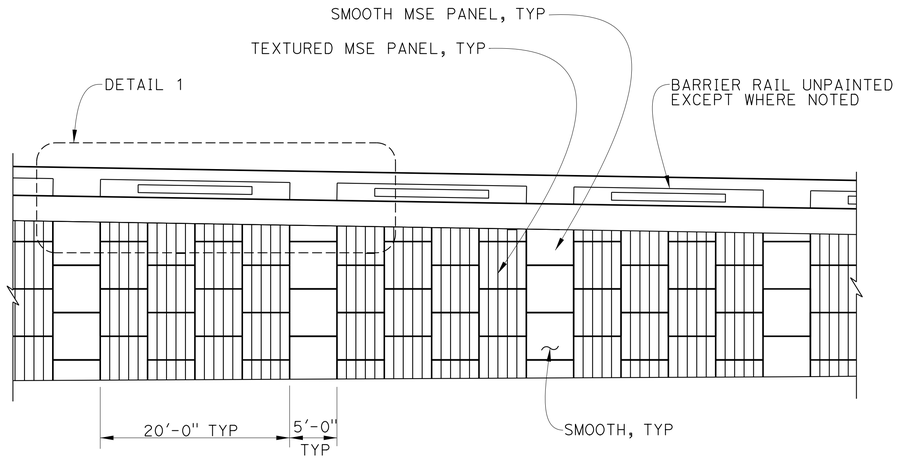

PARTIAL WALL ELEVATION
SCALE: 1/8" = 1'-0"

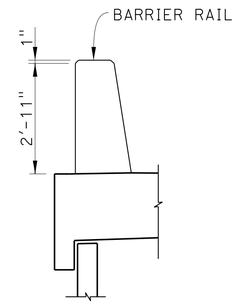

SECTION D-D
SCALE: 1/2" = 1'-0"

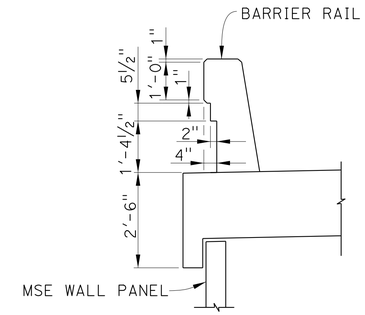

SECTION E-E
SCALE: 1/2" = 1'-0"

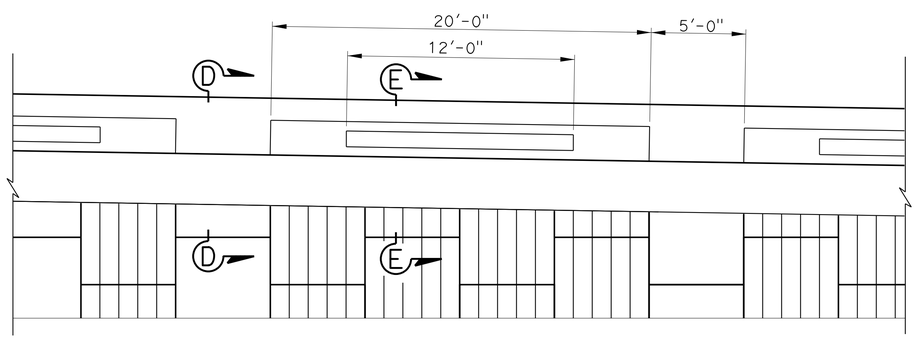

DETAIL 1
SCALE: 1/4" = 1'-0"

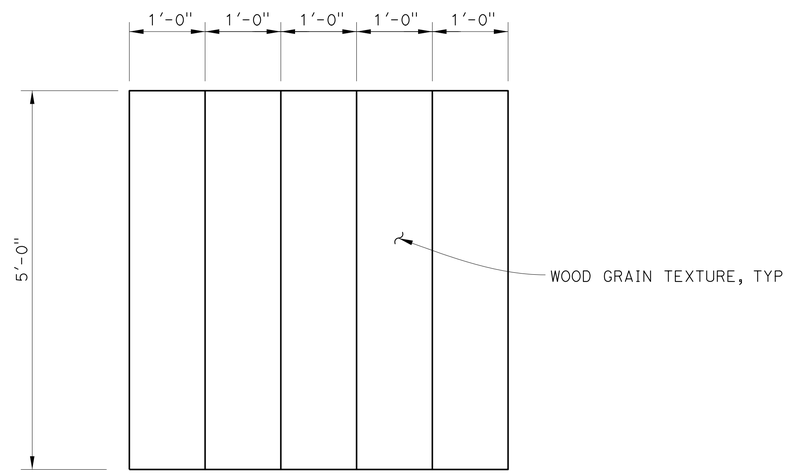

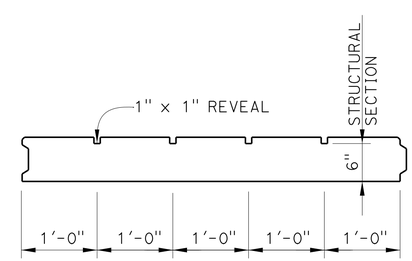

TEXTURED MSE PANEL
1" = 1'-0"

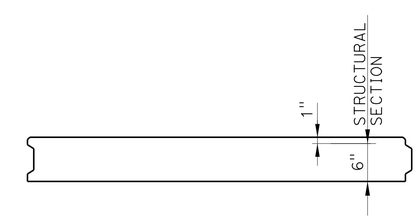

SMOOTH MSE PANEL
1" = 1'-0"

Luqi Yang
DESIGN OVERSIGHT Luqi Yang
7-10-13
SIGN OFF DATE

DESIGN	R. Genick	CHECKED
DETAILS	BY P. Johnson	CHECKED
QUANTITIES	BY J. Fix	CHECKED

PREPARED FOR THE STATE OF CALIFORNIA DEPARTMENT OF TRANSPORTATION

MOHSEN MOHSENI
PROJECT ENGINEER

BRIDGE NO. 55E0139
POST MILES 3.2

RETAINING WALL No. 181
ARCHITECTURAL DETAILS NO. 1

DESIGN DETAIL SHEET (ENGLISH) (REV.7/16/10)

ORIGINAL SCALE IN INCHES FOR REDUCED PLANS 0 1 2 3

UNIT: X
PROJECT NUMBER & PHASE: 12000202771 CONTRACT NO.: 12-0F96A4

DISREGARD PRINTS BEARING EARLIER REVISION DATES

REVISION DATES 5/29/12 11/13/12 03/04/13 4/26/13

SHEET 12 OF 13

FILE => 55e-0139-u-miscdt01.dgn

USERNAME => s128843 DATE PLOTTED => 07-AUG-2014 TIME PLOTTED => 13:09

DIST	COUNTY	ROUTE	POST MILES TOTAL PROJECT	SHEET No	TOTAL SHEETS
12	Ora	5	3.0/3.7	587	635

GEOTECHNICAL PROFESSIONAL — 4/26/13 DATE

3-10-14
PLANS APPROVAL DATE

REGISTERED PROFESSIONAL ENGINEER — MIKE KAPUSKAR — NO. GE 2564 — EXP. 12-31-14 — GEOTECHNICAL — STATE OF CALIFORNIA

The State of California or its officers or agents shall not be responsible for the accuracy or completeness of electronic copies of this plan sheet.

ORANGE COUNTY TRANSPORTATION AUTHORITY
550 S. MAIN STREET
ORANGE, CA 92863-1584

EARTH MECHANICS, INC.
17800 NEWHOPE STREET, SUITE B
FOUNTAIN VALLEY, CA 92708

BENCH MARK:

DESIGNATION: 3Y-38-91 ELEV 252.197′ NAVD88

DESCRIBED BY OCS 2003 - FOUND 3¾" OCS ALUMINUM BENCH MARK DISK STAMPED "3Y-38-91", SET IN THE NORTHWESTERLY CORNER OF A 4 FT. BY 17 FT. CONCRETE CATCH BASIN. MONUMENT IS LOCATED IN THE SOUTHEASTERLY CORNER OF INTERSECTION OF AVENIDA PICO AND AVENIDA LA PATA, 50 FT. SOUTHERLY OF THE CENTERLINE OF AVENIDA LA PATA AND 90 FT. EASTERLY OF THE AVENIDA PICO. MONUMENT IS SET LEVEL WITH THE TOP OF THE CURB.

NOTES:

(1) This LOTB sheet was prepared in accordance with the Caltrans Soil and Rock Logging, Classification and Presentation Manual (June 2010).

(2) 2.4" samples were taken using a California Modified Sampler.

(3) An automatic trip hammer system consisting of a hammer weight of 140 lbs falling a distance of 30" was used to advance the drive sampler.

(4) Conversion factor from 2.4" Modified California Ring Sampler blowcounts to Standard Penetration Test (SPT) blowcounts is 0.5.

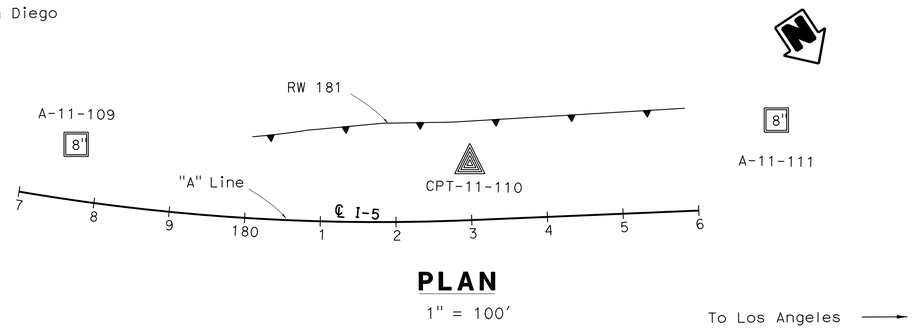

PLAN

1" = 100′

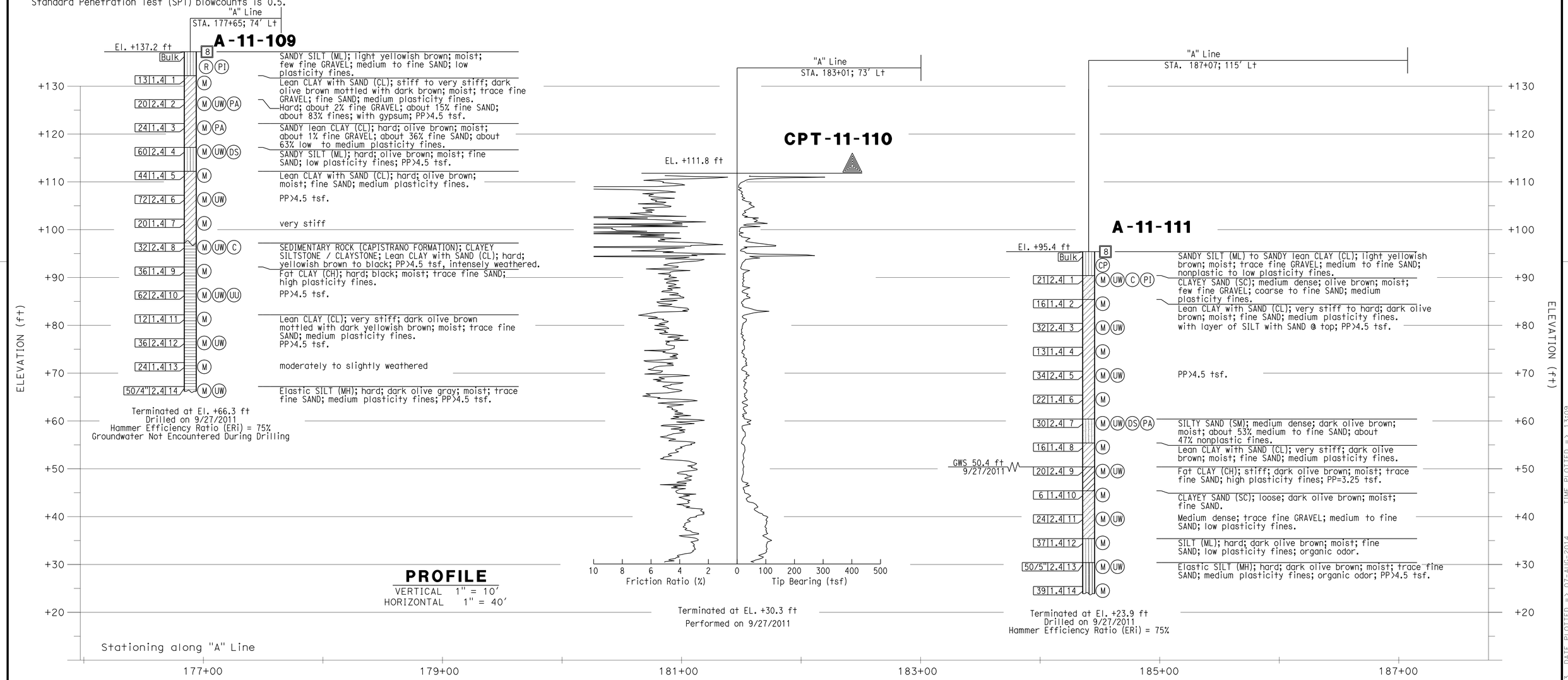

Luqi Yang — DESIGN OVERSIGHT Luqi Yang — 7-10-13 SIGN OFF DATE	DRAWN BY J. FANG	R. JIE; K. KAEKUL; C. PONGSAKORNPATARA — FIELD INVESTIGATION BY:	PREPARED FOR THE STATE OF CALIFORNIA DEPARTMENT OF TRANSPORTATION
	CHECKED BY M. KAPUSKAR	DATE: 9/2011	

M. KAPUSKAR — PROJECT ENGINEER

BRIDGE NO. 55E0139 — POST MILES 3.2

RETAINING WALL 181

LOG OF TEST BORINGS 1 OF 1

GS GEOTECHNICAL LOG OF TEST BORINGS SHEET (ENGLISH) (REV. 7/16/10)

ORIGINAL SCALE IN INCHES FOR REDUCED PLANS 0 1 2 3

UNIT: -
PROJECT NUMBER & PHASE: 12000202771 CONTRACT NO.: 12-0F96B1

DISREGARD PRINTS BEARING EARLIER REVISION DATES → 10/04/12 4/26/13

SHEET 13 OF 13

FILE => 55e-0139-z-lotb1.dgn

USERNAME => s128843 DATE PLOTTED => 07-AUG-2014 TIME PLOTTED => 13:09

DIST	COUNTY	ROUTE	POST MILES TOTAL PROJECT	SHEET No	TOTAL SHEETS
12	Ora	5	3.0/3.7	588	635

REGISTERED CIVIL ENGINEER — DATE 4/26/13

3-10-14
PLANS APPROVAL DATE

REGISTERED PROFESSIONAL ENGINEER — MOHSEN MOHSENI — No. C45999 — Exp. 12/31/14 — CIVIL — STATE OF CALIFORNIA

The State of California or its officers or agents shall not be responsible for the accuracy or completeness of electronic copies of this plan sheet.

PARSONS 2201 DUPONT DRIVE, SUITE 200, IRVINE, CA 92612

OCTA 550 SOUTH MAIN STREET, ORANGE, CA 92863

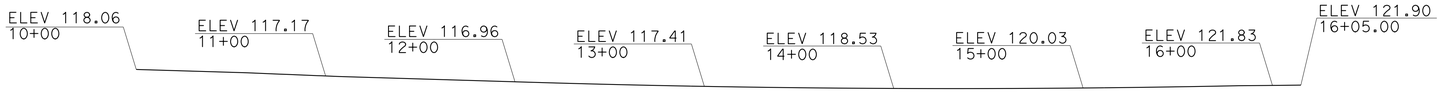

TOP OF WALL ELEVATION

NO SCALE

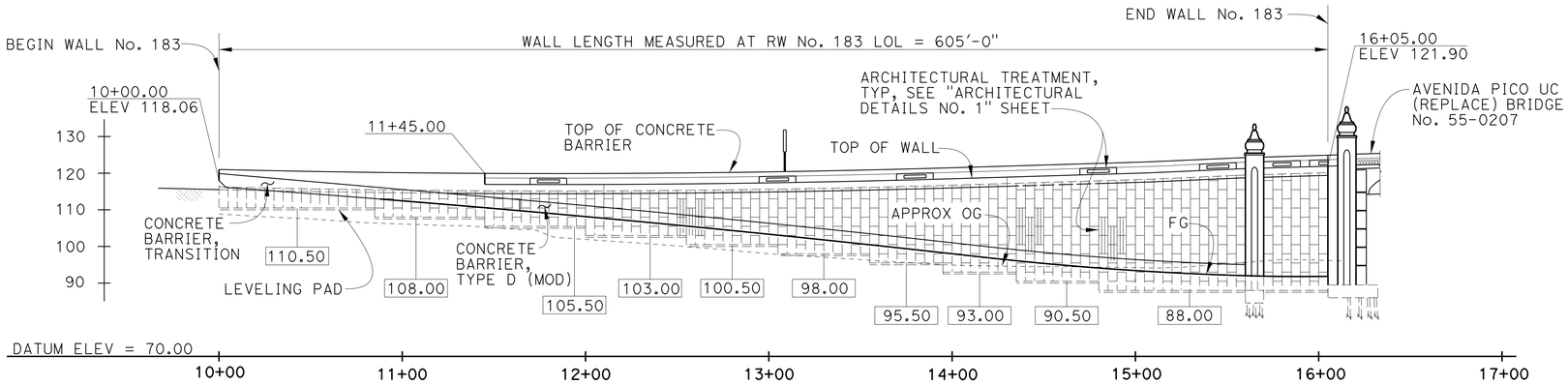

NOTE: All Piles not Shown.

MIRROR ELEVATION

1" = 20' VERT
1" = 40' HORIZ

RETAINING WALL NO. 183 BRIDGE NO 55E0140

QUANTITIES

STRUCTURE EXCAVATION (RETAINING WALL)	1,530	CY
STRUCTURE BACKFILL (RETAINING WALL)	1,580	CY
MECHANICALLY STABILIZED EMBANKMENT, LOCATION B	11,600	SQFT
FURNISH STEEL PILING (HP 10 X 57)	523	LF
DRIVE STEEL PILE (HP 10 X 57)	10	EA
STRUCTURAL CONCRETE, RETAINING WALL	55	CY
STRUCTURAL CONCRETE, BARRIER SLAB	310	CY
BAR REINFORCING STEEL (RETAINING WALL)	13,470	LB
CONCRETE BARRIER (TYPE 60D MODIFIED)	401	LF
CONCRETE BARRIER (TYPE 736 MODIFIED)	605	LF

LEGEND:

- Indicates Direction of Traffic
- Standard Plan Sheet No. / Detail No.
- XXX.XX Indicates Top of Leveling Pad Elev
- Indicates Concrete Barrier Type 736 Modified
- Structural Excavation, Retaining Wall and Structural Backfill, Retaining Wall

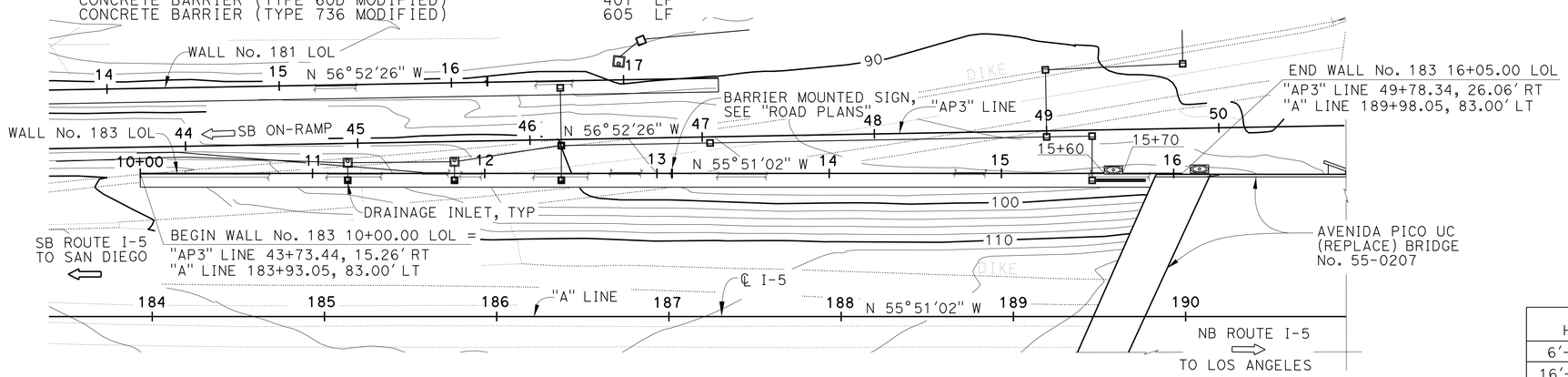

PLAN

1" = 40'

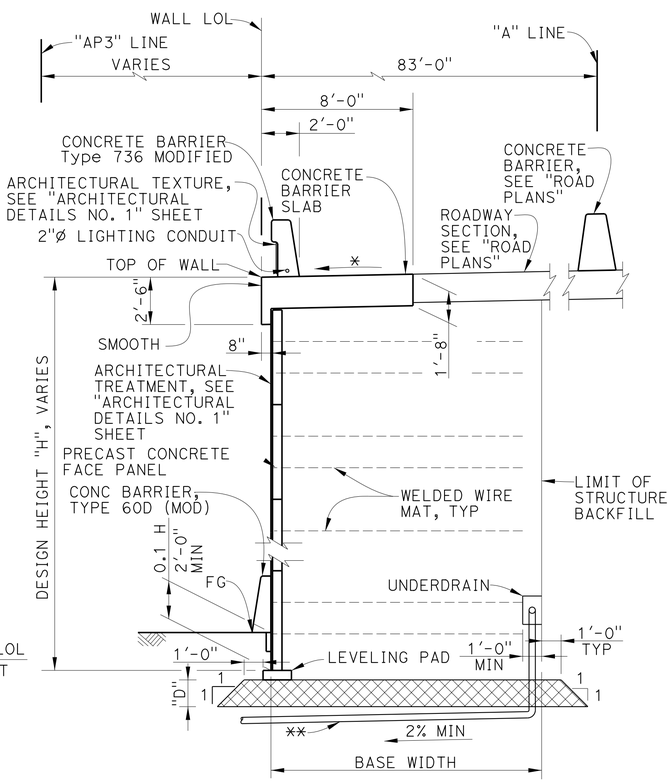

* VARIES, SEE "ROADWAY PLANS"
** SEE STRUCTURE PLAN SHEETS

TYPICAL SECTION

NO SCALE

Design Height "H"	Depth "D"
6'-8" TO 14'-2"	2.0'
16'-8" TO 24'-2"	2.5'
26'-8" TO 34'-2"	4.0'

TABLE 1

Luqi Yang — DESIGN OVERSIGHT — Luqi Yang — 7-10-13 — SIGN OFF DATE	DESIGN	BY M. Mohseni	CHECKED M. Ruvalcaba	LOAD & RESISTANCE FACTOR DESIGN	LIVE LOADING: HL93 W/"LOW-BOY"; PERMIT DESIGN VEHICLE
	DETAILS	BY P. Johnson	CHECKED M. Mohseni	LAYOUT: BY E. Johnson	CHECKED D. Lew
	QUANTITIES	BY J. Fix	CHECKED M. Ruvalcaba	SPECIFICATIONS: BY G. Matesic	PLANS AND SPECS COMPARED X

PREPARED FOR THE STATE OF CALIFORNIA DEPARTMENT OF TRANSPORTATION

M. Mohseni — PROJECT ENGINEER

BRIDGE NO. 55E0140 — POST MILES 3.3

RETAINING WALL No. 183
GENERAL PLAN

DESIGN GENERAL PLAN SHEET (ENGLISH) (REV.7/16/10)

ORIGINAL SCALE IN INCHES FOR REDUCED PLANS 0 1 2 3

UNIT: X
PROJECT NUMBER & PHASE: 12000202771 CONTRACT NO.: 12-0F96A4

DISREGARD PRINTS BEARING EARLIER REVISION DATES — REVISION DATES 5/20/12 11/13/12 03/04/13 4/26/13 — SHEET 1 OF 15

FILE => 55e-0140-a-gp01.dgn

USERNAME => s128843 DATE PLOTTED => 07-AUG-2014 TIME PLOTTED => 13:09

DIST	COUNTY	ROUTE	POST MILES TOTAL PROJECT	SHEET No	TOTAL SHEETS
12	Ora	5	3.0/3.7	589	635

REGISTERED CIVIL ENGINEER 4/26/13 DATE

3-10-14
PLANS APPROVAL DATE

REGISTERED PROFESSIONAL ENGINEER MOHSEN MOHSENI No. C45999 Exp. 12/31/14 CIVIL STATE OF CALIFORNIA

The State of California or its officers or agents shall not be responsible for the accuracy or completeness of electronic copies of this plan sheet.

PARSONS 2201 DUPONT DRIVE SUITE 200 IRVINE, CA 92612

OCTA 550 SOUTH MAIN STREET ORANGE, CA 92863

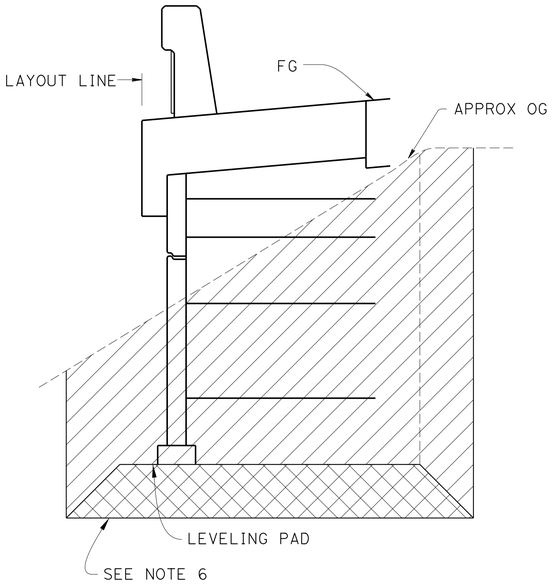

LIMITS OF EXCAVATION

½" = 1'-0"

GENERAL NOTES
LOAD & RESISTANCE FACTOR DESIGN

DESIGN: AASHTO LRFD BRIDGE DESIGN SPECIFICATIONS, 4TH EDITION WITH CALIFORNIA AMENDMENTS

LIVE LOAD: SURCHARGE = 240 lb/ft^2

SOIL PARAMETERS:

INTERNAL DESIGN ϕ = 34°, γ = 120 lb/ft^3

EXTERNAL DESIGN ϕ(RETAINED BACKFILL) = 30°, γ = 120 lb/ft^3

ϕ(FOUNDATION) = 30°

K_h = 0.2

PRECAST CONCRETE PANELS:

f'c = 4,000 psi (CONCRETE COMPRESSIVE STRENGTH AT 28 DAYS)

fy = 60,000 psi (YIELD STRENGTH OF REINFORCEMENT)

SOIL REINFORCEMENT:

WELDED WIRE MATS: fy = 65,000 psi (YIELD STRENGTH)

COUPLER: fy = 36,000 psi (YIELD STRENGTH)

CORROSION RATE = 1.1 mils/year

REINFORCED CONCRETE:

f'c = 3,600 psi, EXCEPT AS NOTED (CONCRETE COMPRESSIVE STRENGTH AT 28 DAYS)

fy = 60,000 psi (YIELD STRENGTH OF REINFORCEMENT)

MSE = MECHANICALLY STABILIZED EMBANKMENT

INDEX TO PLANS

SHEET NO.	TITLE
1	GENERAL PLAN
2	INDEX TO PLANS
3	STRUCTURE PLAN No. 1
4	STRUCTURE PLAN No. 2
5	STRUCTURE PLAN No. 3
6	CONCRETE BARRIER SLAB DETAILS
7	DETAILS No. 1
8	DETAILS No. 2
9	DETAILS No. 3
10	DETAILS No. 4
11	ARCHITECTURAL DETAILS No. 1
12	ARCHITECTURAL DETAILS No. 2
13	PILASTER DETAILS
14	LOG OF TEST BORINGS No. 1
15	LOG OF TEST BORINGS No. 2

STANDARD PLANS DATED 2010

	A10A	ACRONYMS AND ABBREVIATIONS (SHEET 1 OF 2)
RSP	A10B	ACRONYMS AND ABBREVIATIONS (SHEET 2 OF 2)
	A10F	LEGEND-SOIL (SHEET 1 OF 2)
	A10G	LEGEND-SOIL (SHEET 2 OF 2)
	A10H	LEGEND-ROCK
	A62B	LIMITS OF PAYMENT FOR EXCAVATION AND BACKFILL BRIDGE SURCHARGE AND WALL
	A76A	CONCRETE BARRIER TYPE 60
RSP	D73	DRAINAGE INLETS
	D102	UNDERDRAINS
	B0-13	BRIDGE DETAILS
RSP	B11-56	CONCRETE BARRIER TYPE 736
	ES-6A	ELECTRICAL SYSTEMS (LIGHTING STANDARD, TYPES 15 AND 21)
	ES-6B	ELECTRICAL SYSTEMS (ELECTROLIER ANCHORAGE AND GROUNTING FOR TYPES 15 AND 21, BARRIER RAIL MOUNTED

LEGEND:

- Limits of structure excavation
- Limits of structure backfill
- Limits of permeable material
- Structural Excavation, Retaining Wall and Structural Backfill, Retaining Wall
- Limits of structural concrete, Retaining Wall

NOTES:

1. Limits to FG except to GP when in roadway section.
2. Locate underdrain behind bottom level of welded wire mats wherever possible, or at elevation needed to drain, as shown elsewhere on plans.
3. Place perforated pipe underdrain of diameter shown elsewhere on plans or minimum 4"ø smoothed wall PVC or minimum 8"ø corrugated HDPE.
4. Maximum spacing of outlet pipe is 200 feet.
5. At sags in profile of underdrain, install outlet pipe for each direction of flow.
6. For Structural Excavation, Retaining Wall and Structural Backfill, Retaining Wall, see "General Plan" sheet.
7. For limits of preloading, see "Road Plans".
8. For Pilaster Design Notes, see "Pilaster Details" sheet.

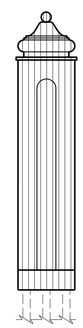

CONCRETE TYPE LIMITS

NO SCALE

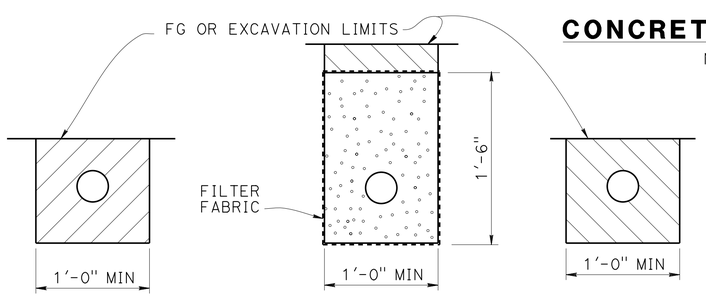

OUTLET PIPE **CLEANOUT PIPE**

EXCAVATION **BACKFILL**

UNPERFORATED OUTLET OR CLEAN OUT PIPE FOR UNDERDRAIN

NO SCALE

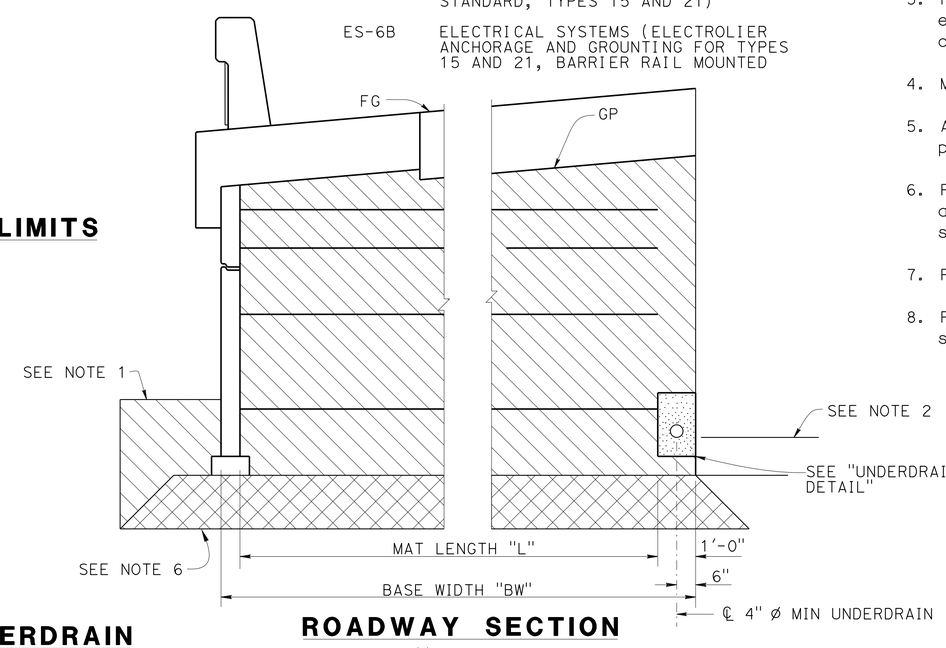

ROADWAY SECTION

½" = 1'-0"

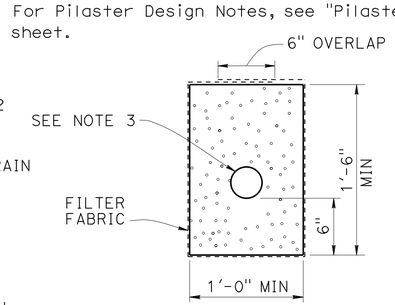

UNDERDRAIN DETAIL

DESIGN OVERSIGHT Luqi Yang 1-14-14 SIGN OFF DATE	DESIGN	BY M. Mohseni	CHECKED M. Ruvalcaba
	DETAILS	BY J. Gilmore	CHECKED M. Mohseni
	QUANTITIES	BY J. Fix	CHECKED M. Ruvalcaba

PREPARED FOR THE STATE OF CALIFORNIA DEPARTMENT OF TRANSPORTATION

M. Mohseni PROJECT ENGINEER

BRIDGE NO. 55E0140 POST MILES 3.3

RETAINING WALL No. 183
INDEX TO PLANS

DESIGN DETAIL SHEET (ENGLISH) (REV.7/16/10)

ORIGINAL SCALE IN INCHES FOR REDUCED PLANS 0 1 2 3

UNIT:
PROJECT NUMBER & PHASE: 12000202771 CONTRACT NO.: 12-0F96A4

DISREGARD PRINTS BEARING EARLIER REVISION DATES

REVISION DATES 5/20/12 11/13/12 03/04/13 4/26/13 SHEET 2 OF 15

FILE => 55e-0140-a-itp.dgn

USERNAME => s128843 DATE PLOTTED => 07-AUG-2014 TIME PLOTTED => 13:09

DIST	COUNTY	ROUTE	POST MILES TOTAL PROJECT	SHEET No	TOTAL SHEETS
12	Ora	5	3.0/3.7	590	635

REGISTERED CIVIL ENGINEER 4/26/13 DATE

3-10-14
PLANS APPROVAL DATE

The State of California or its officers or agents shall not be responsible for the accuracy or completeness of electronic copies of this plan sheet.

REGISTERED PROFESSIONAL ENGINEER MOHSEN MOHSENI No. C45999 Exp. 12/31/14 CIVIL STATE OF CALIFORNIA

PARSONS 2201 DUPONT DRIVE SUITE 200 IRVINE, CA 92612

OCTA 550 SOUTH MAIN STREET ORANGE, CA 92863

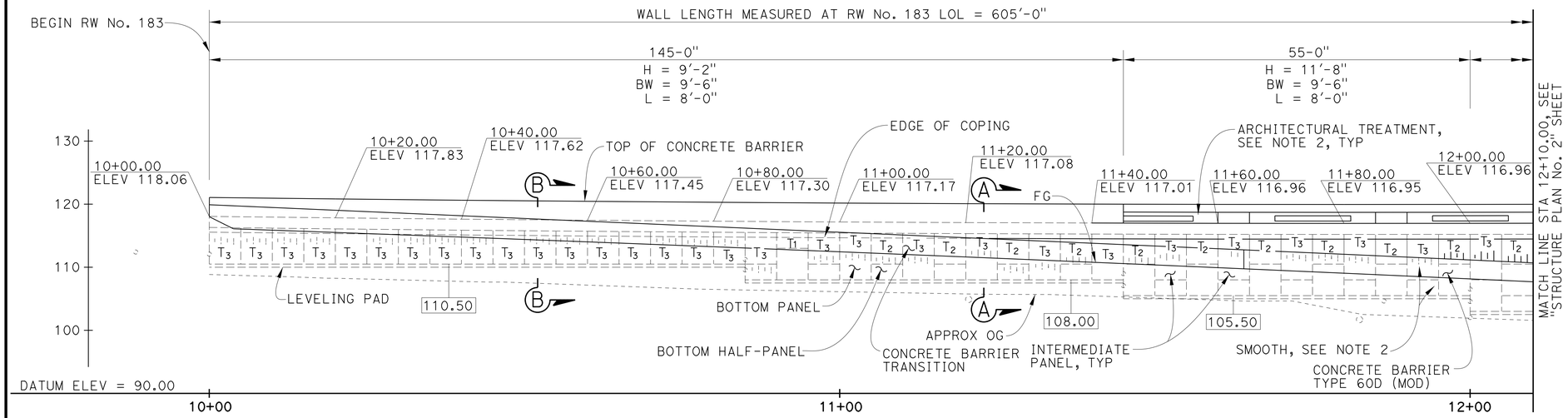

DRAINAGE DATA TABLE			
ELEMENT	STA	DESCRIPTION	ELEV
1	9+88.33	Cleanout/Riser	112.08
2	10+00.00	45° Elbow	111.75
3	10+85.00	90° Elbow	110.90
4	10+85.00	90° Elbow	109.25
5	11+45.00	90° Elbow	108.65
6	11+45.00	90° Elbow	106.75
7	12+00.00	90° Elbow	106.20
8	12+00.00	90° Elbow	101.70
10	11+86.33	Cleanout/Riser	104.31
11	12+00.00	90° Elbow	104.25

NOTE: All Piles not Shown.

MIRROR ELEVATION
1" = 10'

LEGEND:

- H Denotes Design Height
- BW Denotes Minimum Base Width
- L Denotes Minimum Wire Mat Length
- XX.XX Top Leveling Pad Elevation
- 10 — Interval in Years
- Precast Panel
- Inspection Wire
- T_X — Top Panel; Number of layers of wire mat soil reinforcement

H = 9'-2"	H = 11'-8"
TOP LAYER 4-W15 X W15 @ 6	TOP LAYER 4-W15 X W15 @ 6
1 OF 4-W15 X W15 @ 6	2 OF 4-W15 X W15 @ 6
1 OF 4-W15 X W15 @ 6	1 OF 4-W20 X W15 @ 9

NOTES:

1. Example Configuration: 3 OF 4-W20 X W15 @ 24
   - 3 OF = 3 Layers of reinforcement mats with
   - 4-W20 X = Longitudinal wires W20 sized by
   - W15 @ 24 = W15 sized transverse wires at 24-inch spacing
2. Top panels are designated as "T1", "T2", and "T3" depending upon the number of required layers of wire mat soil reinforcement.
3. For wire mat layers with 4 or 6 number of longitudinal wires, see "Details No. 2" sheet.
4. Wire mat layers shown are those required for the maximum specified wall height.

WIRE MAT SOIL REINFORCEMENT TABLE

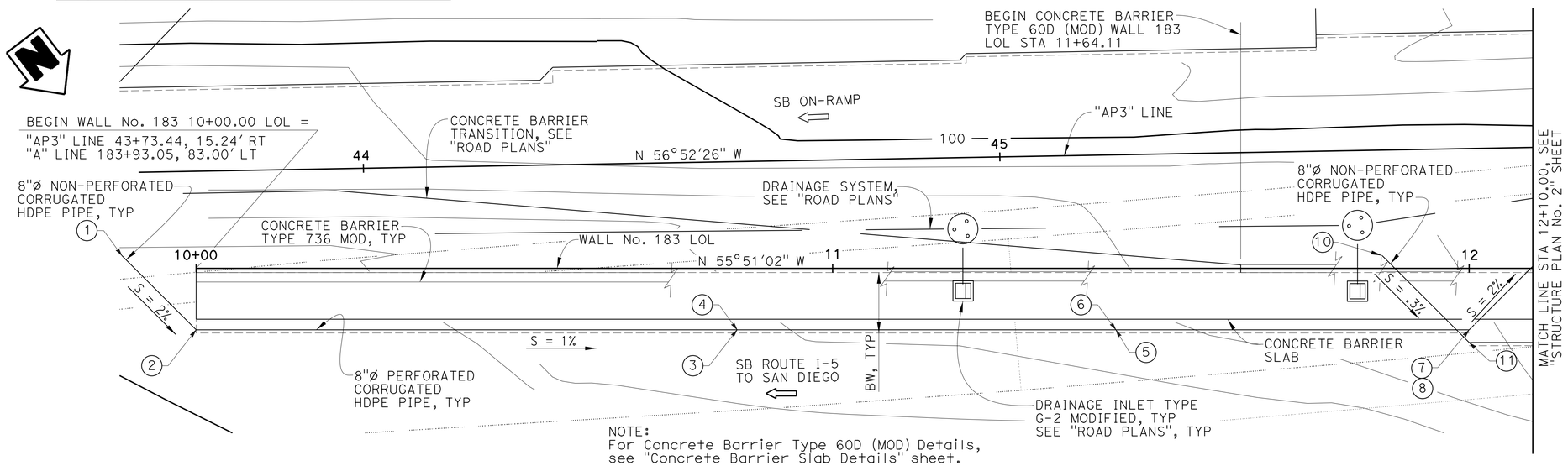

NOTE:
For Concrete Barrier Type 60D (MOD) Details, see "Concrete Barrier Slab Details" sheet.

PLAN
1" = 10'

NOTES:

1. No expansion joint is allowed the full length of concrete barrier and concrete barrier slab.
2. For Architectural Treatment, see "Architectural Details No. 1" Sheet.
3. For Sections "A-A" and "B-B", see "Concrete Barrier Slab Details" sheet.

Luqi Yang
DESIGN OVERSIGHT Luqi Yang
7-10-13
SIGN OFF DATE

	BY	CHECKED
DESIGN	M. Mohseni	M. Ruvalcaba
DETAILS	P. Johnson	M. Mohseni
QUANTITIES	J. Fix	M. Ruvalcaba

PREPARED FOR THE STATE OF CALIFORNIA DEPARTMENT OF TRANSPORTATION

M. Mohseni
PROJECT ENGINEER

BRIDGE NO. 55E0140
POST MILES 3.3

RETAINING WALL No. 183
STRUCTURE PLAN No. 1

DESIGN DETAIL SHEET (ENGLISH) (REV.7/16/10)

ORIGINAL SCALE IN INCHES FOR REDUCED PLANS 0 1 2 3

UNIT:
PROJECT NUMBER & PHASE: 12000202771 CONTRACT NO.: 12-0F96A4

DISREGARD PRINTS BEARING EARLIER REVISION DATES

REVISION DATES 5/28/12 11/13/12 03/04/13 4/26/13

SHEET 3 OF 15

FILE => 55e-0140-c-sp01.dgn

USERNAME => s128843 DATE PLOTTED => 07-AUG-2014 TIME PLOTTED => 13:09

DIST	COUNTY	ROUTE	POST MILES TOTAL PROJECT	SHEET No	TOTAL SHEETS
12	Ora	5	3.0/3.7	591	635

REGISTERED CIVIL ENGINEER — DATE 4/26/13

3-10-14
PLANS APPROVAL DATE

The State of California or its officers or agents shall not be responsible for the accuracy or completeness of electronic copies of this plan sheet.

REGISTERED PROFESSIONAL ENGINEER — MOHSEN MOHSENI — No. C45999 — Exp. 12/31/14 — CIVIL — STATE OF CALIFORNIA

PARSONS 2201 DUPONT DRIVE, SUITE 200, IRVINE, CA 92612

OCTA 550 SOUTH MAIN STREET, ORANGE, CA 92863

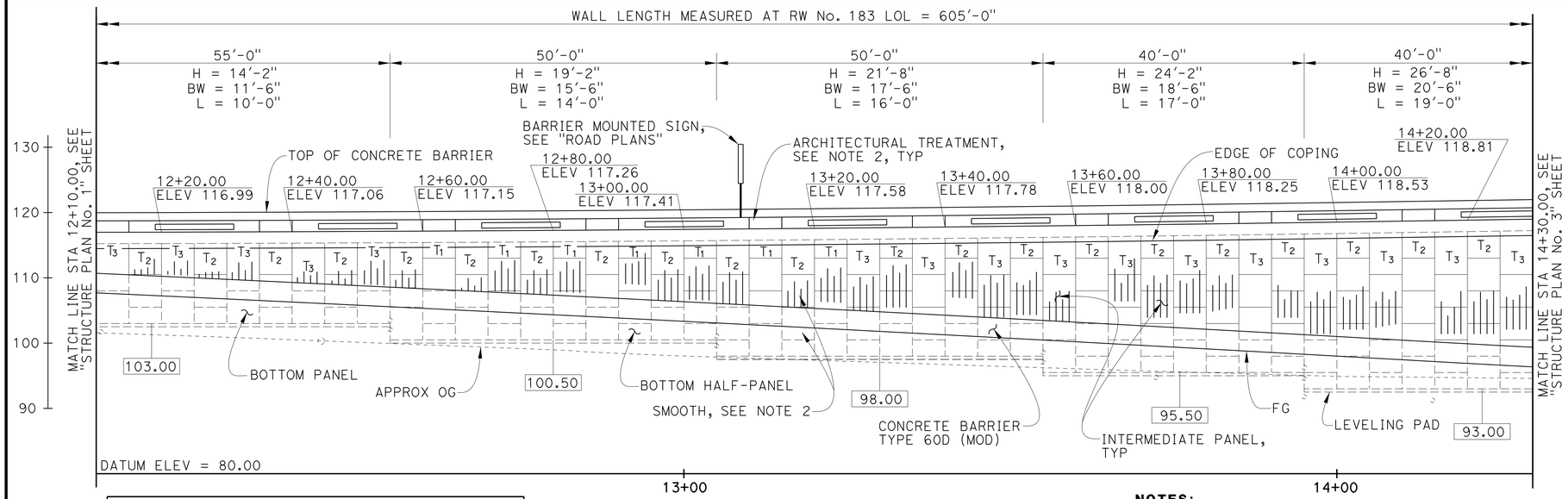

DRAINAGE DATA TABLE			
ELEMENT	STA	DESCRIPTION	ELEV
9	12+10.67	45° Elbow	101.40
12	12+55.00	90° Elbow	103.15
13	12+55.00	90° Elbow	101.75
14	13+05.00	90° Elbow	100.75
15	13+05.00	90° Elbow	99.25
16	13+55.00	90° Elbow	98.25
17	13+55.00	90° Elbow	96.75
18	13+95.00	90° Elbow	95.95
19	13+95.00	90° Elbow	91.45
20	14+14.67	Lateral Connection	90.89
21	13+72.33	Cleanout/Riser	94.41
22	13+95.00	90° Elbow	94.25

MIRROR ELEVATION
1" = 10'

NOTES:

1. No expansion joint is allowed the full length of concrete barrier and concrete barrier slab.
2. For Architectural Treatment Details, see "Architectural Details No. 1" sheet.

LEGEND:

- H — Denotes Design Height
- BW — Denotes Minimum Base Width
- L — Denotes Minimum Wire Mat Length
- XX.XX — Top Leveling Pad Elevation
- 10 — Interval in Years
- Precast Panel
- Inspection Wire
- T_X — Top Panel; Number of layers of wire mat soil reinforcement

H = 14'-2"	H = 16'-8"
TOP LAYER 4-W15 X W15 @ 6	TOP LAYER 4-W15 X W15 @ 6
3 OF 4-W15 X W15 @ 6	3 OF 4-W15 X W15 @ 6
1 OF 4-W20 X W15 @ 9	1 of 4-W20 X W15 @ 9
	1 OF 4-W20 X W15 @ 9

H = 21'-8"	H = 24'-2"
TOP LAYER 4-W15 X W15 @ 6	TOP LAYER 4-W15 X W15 @ 6
4 OF 4-W15 X W15 @ 18	4 OF 4-W15 X W15 @ 18
2 OF 4-W20 X W15 @ 24	3 OF 4-W20 X W15 @ 24
1 OF 4-W20 X W15 @ 24	1 OF 4-W20 X W15 @ 24

H = 26'-8"
TOP LAYER 4-W15 X W15 @ 6
4 OF 4-W15 X W15 @ 18
3 OF 4-W20 X W15 @ 24
1 OF 6-W25 X W15 @ 24
1 OF 6-W25 X W15 @ 24

NOTES:

1. Example Configuration: 3 OF 4-W20 X W15 @ 24
   - 3 OF = 3 Layers of reinforcement mats with
   - 4-W20 X = Longitudinal wires W20 sized by
   - W15 @ 24 = W15 sized transverse wires at 24-inch spacing
2. Top panels are designated as "T1", "T2" and "T3" depending upon the number of required layers of wire mat soil reinforcement.
3. For wire mat layers with 4 or 6 number of longitudinal wires, see "Details No. 2" sheet.
4. Wire mat layers shown are those required for the maximum specified wall height.

WIRE MAT SOIL REINFORCEMENT TABLE

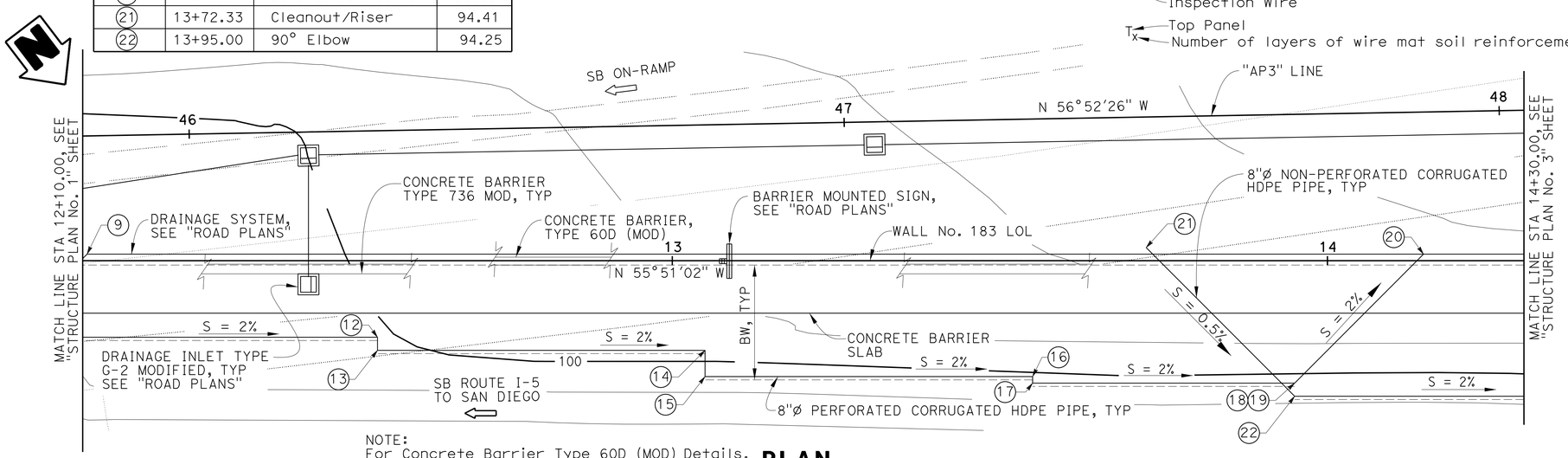

NOTE:
For Concrete Barrier Type 60D (MOD) Details, see "Concrete Barrier Slab Details" sheet.

PLAN
1" = 10'

DESIGN OVERSIGHT Luqi Yang	DESIGN	BY M. Mohseni	CHECKED M. Ruvalcaba
7-10-13 SIGN OFF DATE	DETAILS	BY P. Johnson	CHECKED M. Mohseni
	QUANTITIES	BY J. Fix	CHECKED M. Ruvalcaba

PREPARED FOR THE STATE OF CALIFORNIA DEPARTMENT OF TRANSPORTATION

M. Mohseni — PROJECT ENGINEER

BRIDGE NO. 55E0140 — POST MILES 3.3

RETAINING WALL No. 183
STRUCTURE PLAN No. 2

DESIGN DETAIL SHEET (ENGLISH) (REV.7/16/10)

ORIGINAL SCALE IN INCHES FOR REDUCED PLANS 0 1 2 3

UNIT:
PROJECT NUMBER & PHASE: 12000202771 CONTRACT NO.: 12-0F96A4

DISREGARD PRINTS BEARING EARLIER REVISION DATES

REVISION DATES: 5/28/12 11/13/12 03/04/13 4/26/13 — SHEET 4 OF 15

FILE => 55e-0140-c-sp02.dgn

USERNAME => s128643 DATE PLOTTED => 07-AUG-2014 TIME PLOTTED => 13:09

DIST	COUNTY	ROUTE	POST MILES TOTAL PROJECT	SHEET No	TOTAL SHEETS
12	Ora	5	3.0/3.7	592	635

REGISTERED CIVIL ENGINEER 4/26/13 DATE

3-10-14
PLANS APPROVAL DATE

REGISTERED PROFESSIONAL ENGINEER MOHSEN MOHSENI No. C45999 Exp. 12/31/14 CIVIL STATE OF CALIFORNIA

The State of California or its officers or agents shall not be responsible for the accuracy or completeness of electronic copies of this plan sheet.

PARSONS 2201 DUPONT DRIVE SUITE 200 IRVINE, CA 92612

OCTA 550 SOUTH MAIN STREET ORANGE, CA 92863

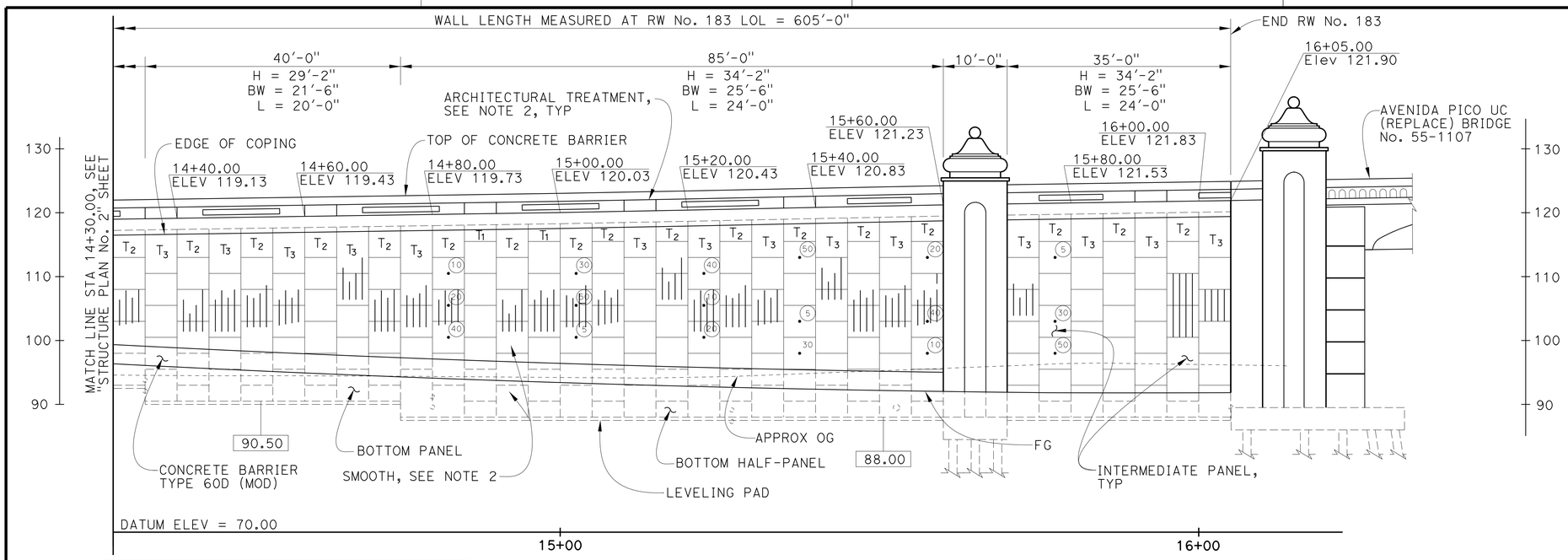

DRAINAGE DATA TABLE			
ELEMENT	STA	DESCRIPTION	ELEV
23	14+35.00	90° Elbow	93.45
24	14+35.00	90° Elbow	91.75
25	14+80.00	90° Elbow	90.85
26	14+80.00	90° Elbow	89.25
27	15+26.88	Tee	88.79
28	15+26.88	Tee	88.50
29	15+26.88	System 43b	87.00
30	16+05.00	90° Elbow	89.25
31	16+05.00	Cleanout/Riser	89.80

NOTE: For System 43b Details, see "Road Plans"

NOTE: All Piles not Shown.

MIRROR ELEVATION

1" = 10'

LEGEND:

- H Denotes Design Height
- BW Denotes Minimum Base Width
- L Denotes Minimum Wire Mat Length
- XX.XX Top Leveling Pad Elevation
- (10) Interval in Years
- Precast Panel
- Inspection Wire
- T_x Top Panel
- Number of layers of wire mat soil reinforcement

H = 29'-2"	H = 34'-2"
TOP LAYER 4-W15 X W15 @ 6	TOP LAYER 4-W15 X W15 @ 18
4 OF 4-W15 X W15 @ 18	4 OF 4-W15 X W15 @ 18
3 OF 4-W20 X W15 @ 24	4 OF 4-W20 X W15 @ 24
2 OF 6-W25 X W15 @ 24	3 OF 6-W25 X W15 @ 30
1 OF 6-W25 X W15 @ 24	1 OF 6-W25 X W15 @ 30

NOTES:

1. Example Configuration: 3 OF 4-W20 X W15 @ 24
   - 3 OF = 3 Layers of reinforcement mats with
   - 4-W20 X = Longitudinal wires W20 sized by
   - W15 @ 24 = W15 sized transverse wires at 24-inch spacing
2. Top panels are designated as "T1", "T2" and "T3" depending upon the number of required layers of wire mat soil reinforcement.
3. For wire mat layers with 4 or 6 number of longitudinal wires, see "Details No. 2" sheet.
4. Wire mat layers shown are those required for the maximum specified wall height.

WIRE MAT SOIL REINFORCEMENT TABLE

NOTES:

1. No expansion joint is allowed the full length of concrete barrier and concrete barrier slab.
2. For Architectural Treatment, see "Architectural Details No. 1" sheet.

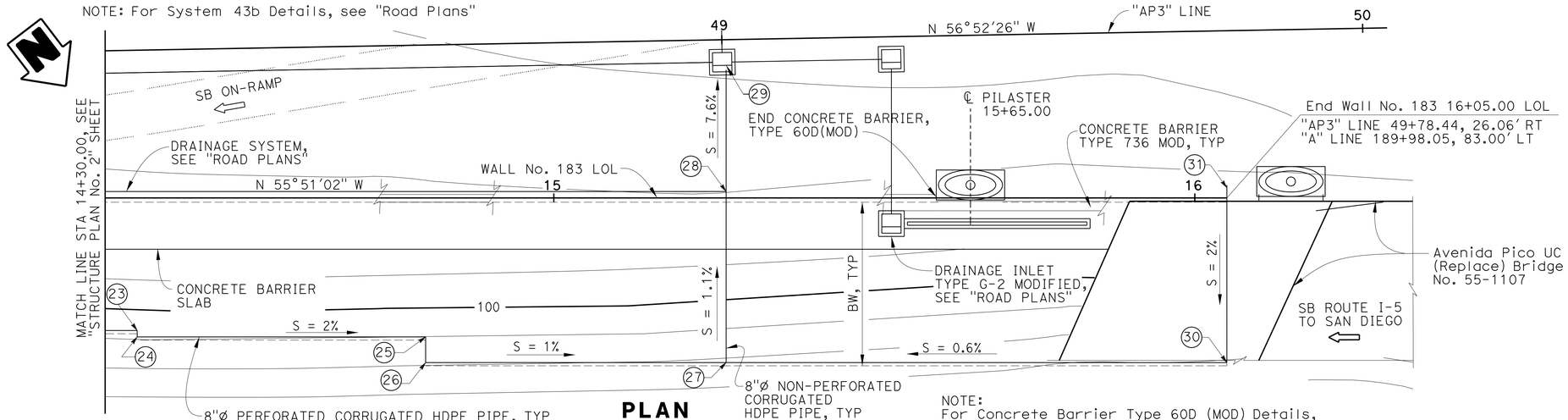

PLAN

1" = 10'

NOTE:
For Concrete Barrier Type 60D (MOD) Details, see "Concrete Barrier Slab Details" sheet.

DESIGN OVERSIGHT Luqi Yang	DESIGN	BY M. Mohseni	CHECKED M. Ruvalcaba
7-10-13 SIGN OFF DATE	DETAILS	BY P. Johnson	CHECKED M. Mohseni
	QUANTITIES	BY J. Fix	CHECKED M. Ruvalcaba

PREPARED FOR THE STATE OF CALIFORNIA DEPARTMENT OF TRANSPORTATION

M. Mohseni PROJECT ENGINEER

BRIDGE NO. 55E0140 POST MILES 3.3

RETAINING WALL No. 183
STRUCTURE PLAN No. 3

DESIGN DETAIL SHEET (ENGLISH) (REV.7/16/10)

ORIGINAL SCALE IN INCHES FOR REDUCED PLANS 0 1 2 3

UNIT:
PROJECT NUMBER & PHASE: 12000202771 CONTRACT NO.: 12-0F96A4

DISREGARD PRINTS BEARING EARLIER REVISION DATES

REVISION DATES 5/20/12 11/13/12 03/04/13 4/26/13 SHEET 5 OF 15

FILE => 55e-0140-c-sp03.dgn

USERNAME => s128843 DATE PLOTTED => 07-AUG-2014 TIME PLOTTED => 13:09

DIST	COUNTY	ROUTE	POST MILES TOTAL PROJECT	SHEET No	TOTAL SHEETS
12	Ora	5	3.0/3.7	593	635

REGISTERED CIVIL ENGINEER — DATE 4/26/13

3-10-14
PLANS APPROVAL DATE

REGISTERED PROFESSIONAL ENGINEER — MOHSEN MOHSENI — No. C45999 — Exp. 12/31/14 — CIVIL — STATE OF CALIFORNIA

The State of California or its officers or agents shall not be responsible for the accuracy or completeness of electronic copies of this plan sheet.

PARSONS 2201 DUPONT DRIVE, SUITE 200, IRVINE, CA 92612

OCTA 550 SOUTH MAIN STREET, ORANGE, CA 92863

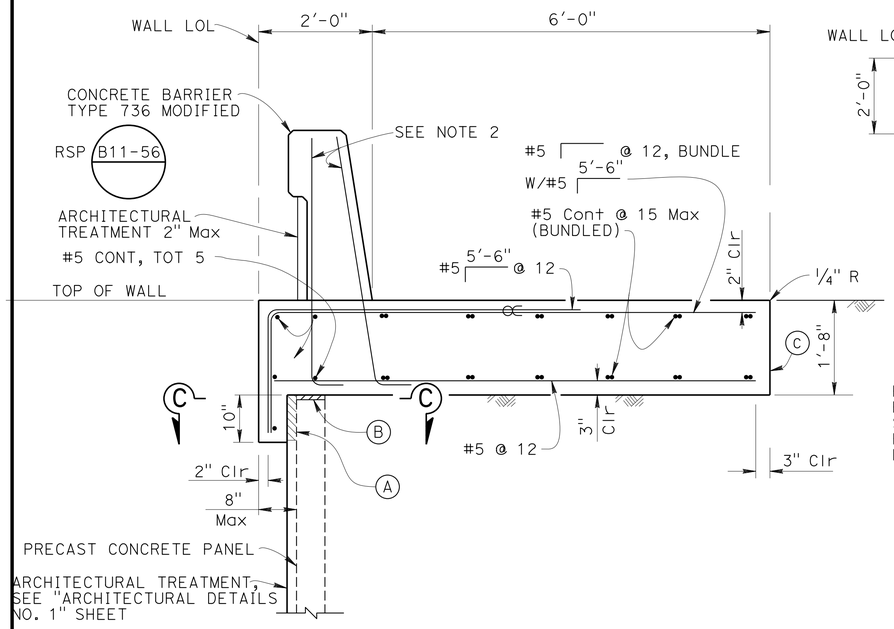

CONCRETE BARRIER SLAB

3/4" = 1'-0"

NOTES:

(A) 2" Min Expanded polystyrene

(B) 1" Expanded Polystyrene

(C) Contact joint

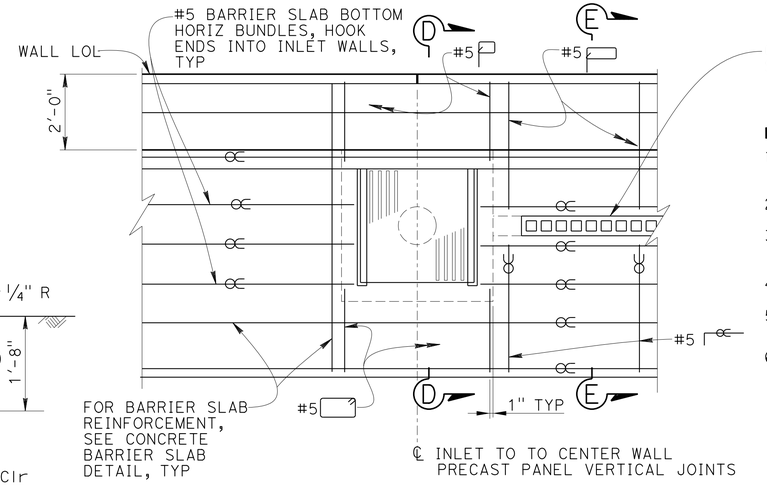

PLAN - G2 INLET MODIFIED

1/2" = 1'-0"

GRATED LINE DRAIN SEE "ROAD PLANS" — D102 / - — WHERE OCCURS

NOTES:

1. Clearance to reinforcing steel in concrete barrier to be 1".
2. Not all barrier reinforcement shown.
3. No expansion joints in concrete barrier or barrier slab within wall limits.
4. ∝ Indicates bundled bars.
5. For Drainage Details not shown, including pipe size and type, see "Road Plans"
6. For Section "E-E", see "Details No. 4" sheet.

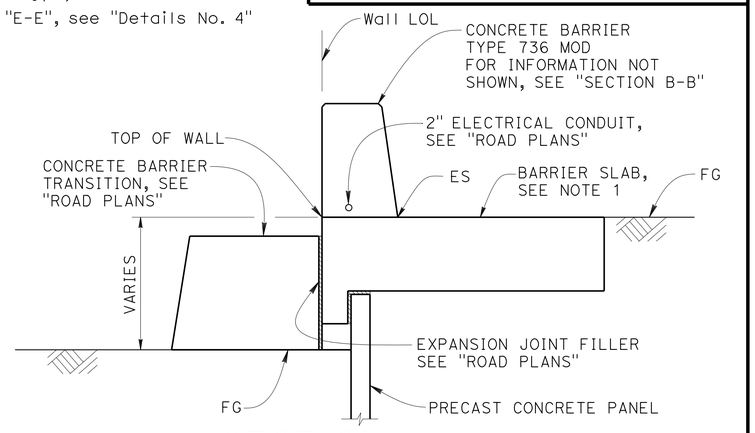

SECTION A-A

1/2" = 1'-0"

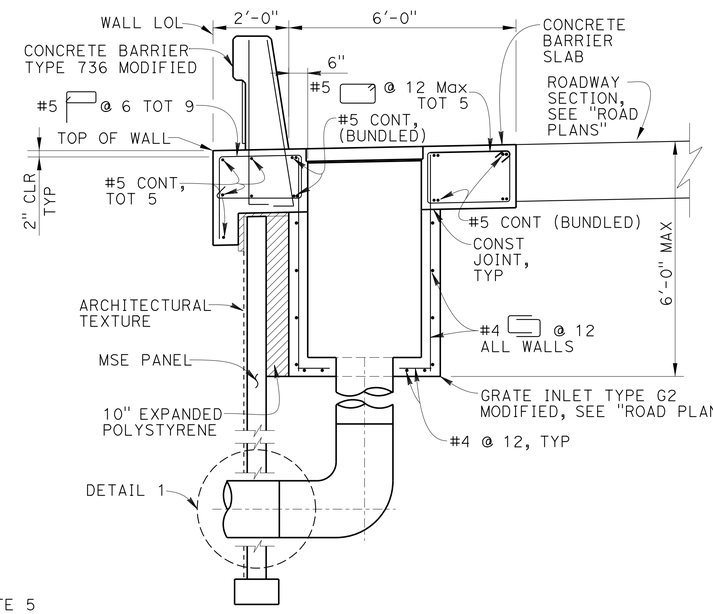

NOTES:

1. For additional inlet details see RSP D73
2. For information not shown see "Concrete Barrier Slab" Detail on this sheet.
3. For MSE Panels and wire mats adjacent to the drainage inlet, see "Details No. 2" sheet.

SECTION D-D

1/2" = 1'-0"

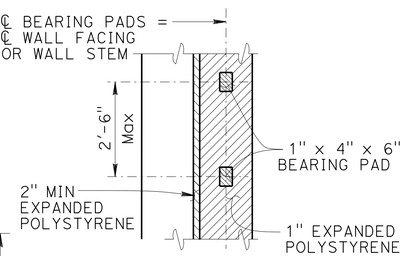

SECTION C-C

NO SCALE

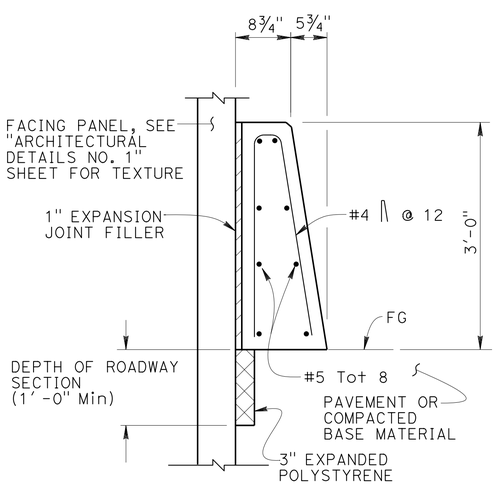

CONCRETE BARRIER TYPE 60D (MOD) AT FACE OF MSE

1" = 1'-0"

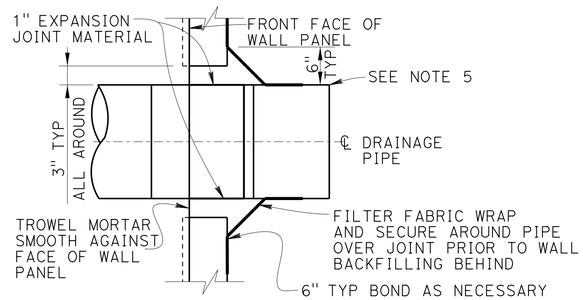

DETAIL 1

1" = 1'-0"

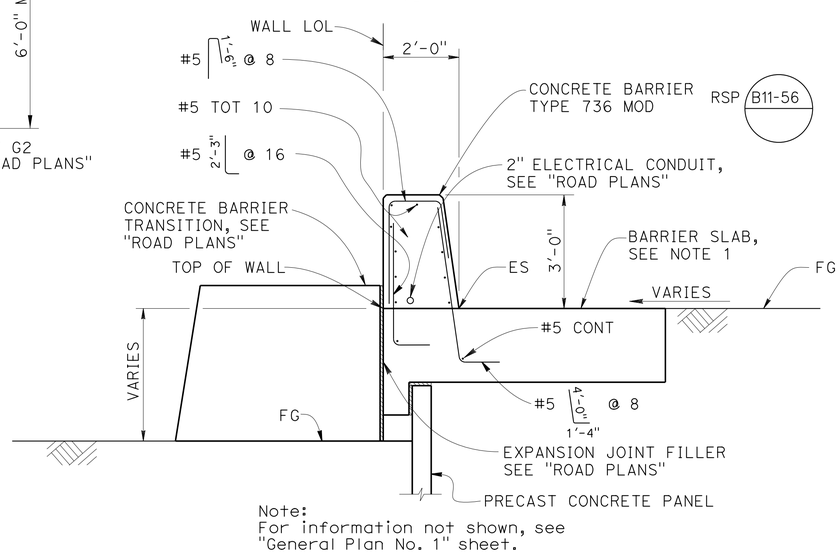

Note:
For information not shown, see "General Plan No. 1" sheet.

SECTION B-B

1/2" = 1'-0"

DESIGN OVERSIGHT Luqi Yang — 1-14-14 SIGN OFF DATE	DESIGN	BY M. Mohseni	CHECKED M. Ruvalcaba
	DETAILS	BY P. Johnson	CHECKED M. Mohseni
	QUANTITIES	BY J. Fix	CHECKED M. Ruvalcaba

PREPARED FOR THE STATE OF CALIFORNIA DEPARTMENT OF TRANSPORTATION

M. Mohseni — PROJECT ENGINEER

BRIDGE NO. 55E0140 — POST MILES 3.3

RETAINING WALL No. 183
CONCRETE BARRIER SLAB DETAILS

DESIGN DETAIL SHEET (ENGLISH) (REV.7/16/10)

ORIGINAL SCALE IN INCHES FOR REDUCED PLANS 0 1 2 3

UNIT:
PROJECT NUMBER & PHASE: 12000202771 CONTRACT NO.: 12-0F96A4

DISREGARD PRINTS BEARING EARLIER REVISION DATES — REVISION DATES 5/20/12 11/13/12 03/04/13 4/26/13 — SHEET 6 OF 15

FILE => 55e-0140-g-rwdt00.dgn

USERNAME => s128843 DATE PLOTTED => 07-AUG-2014 TIME PLOTTED => 13:09

DIST	COUNTY	ROUTE	POST MILES TOTAL PROJECT	SHEET No.	TOTAL SHEETS
12	Ora	5	3.0/3.7	594	635

REGISTERED CIVIL ENGINEER 4/26/13 DATE

3-10-14
PLANS APPROVAL DATE

The State of California or its officers or agents shall not be responsible for the accuracy or completeness of electronic copies of this plan sheet.

REGISTERED PROFESSIONAL ENGINEER MOHSEN MOHSENI No. C45999 Exp. 12/31/14 CIVIL STATE OF CALIFORNIA

PARSONS 2201 DUPONT DRIVE SUITE 200 IRVINE, CA 92612

OCTA 550 SOUTH MAIN STREET ORANGE, CA 92863

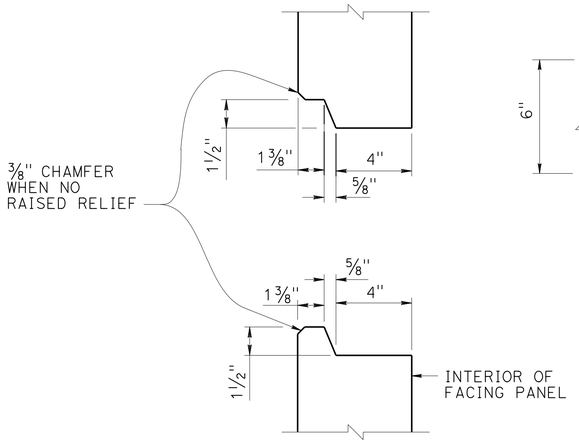

HORIZONTAL JOINT DETAIL
3" = 1'-0"

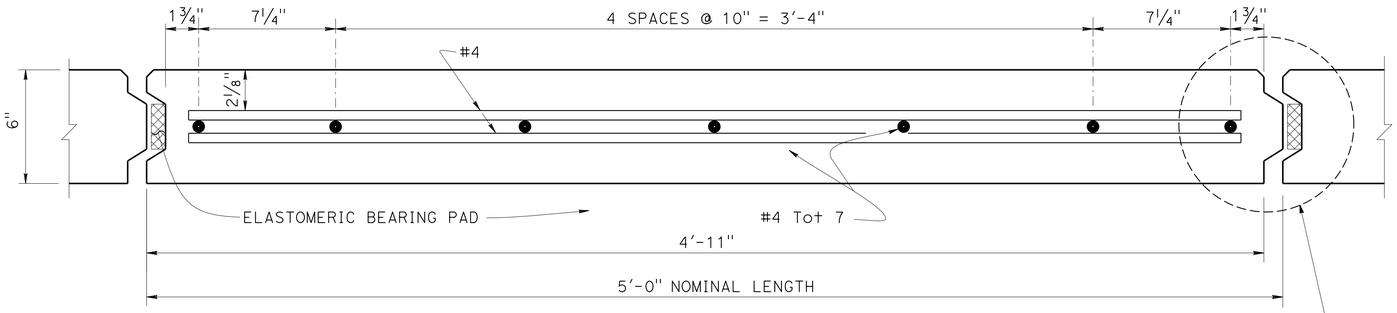

PLAN - FACING PANEL
3" = 1'-0"

NOTES:

1. Architectural treatment not shown
2. Place reinforced elastomeric bearing pads in all of the panel joints between the panels. Place one in each vertical joint where the horizontal joints intersect. Place two per panel in each horizontal joint:
   3/4" x 2 3/8" x 6" for vertical joints
   3/4" x 4" x 6" for horizontal joints
3. Bond a strip of filter fabric, 1'-0" wide, over the full length of all panel joints
4. Top layer of welded wire mats attached parallel to top of panel when top of wall is angled or curved as shown elsewhere in "STRUCTURE PLANS"
5. Eliminate mid level mat when closer than 6" to top mat, continue variable dimension between remaining mats

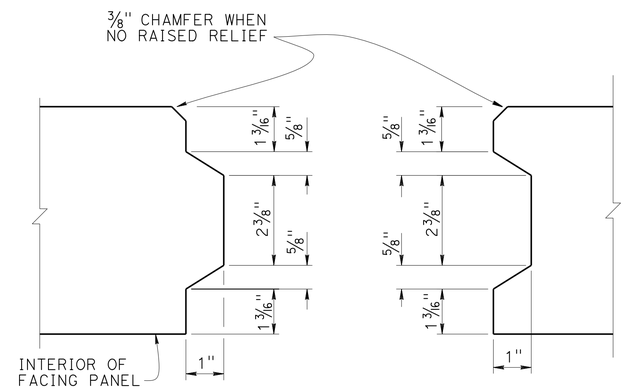

VERTICAL JOINT DETAIL
6" = 1'-0"

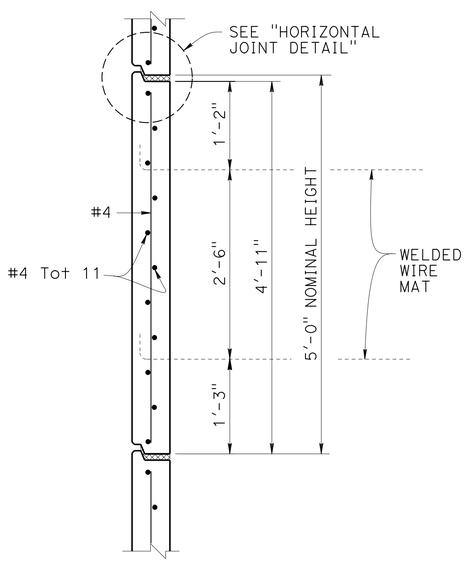

INTERMEDIATE PANEL
1" = 1'-0"

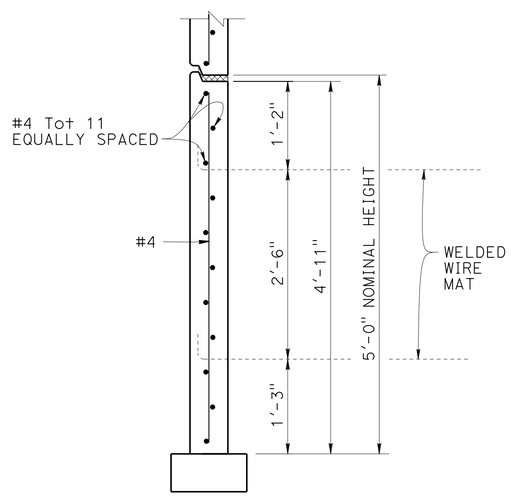

BOTTOM PANEL
1" = 1'-0"

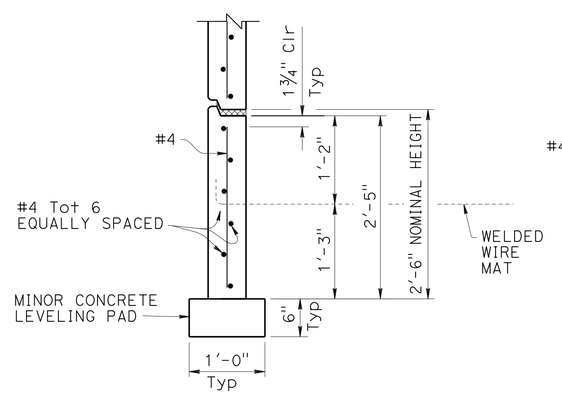

BOTTOM HALF PANEL
1" = 1'-0"

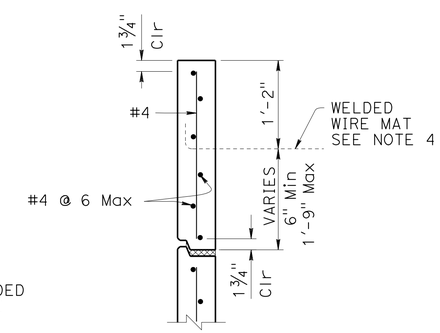

TOP HALF PANEL
1" = 1'-0"

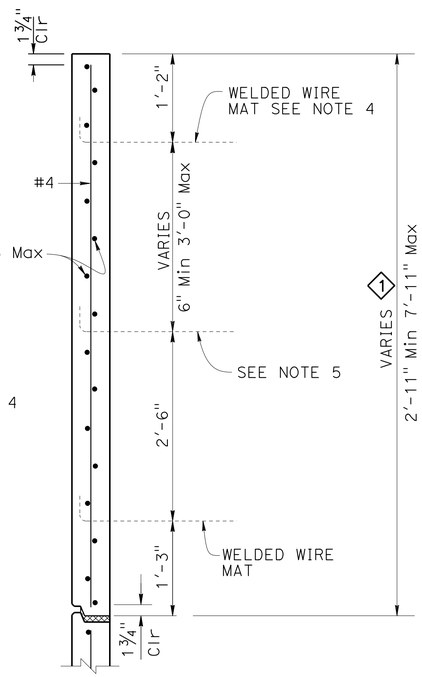

TOP PANEL WITH MULTIPLE MATS
1" = 1'-0"

SPECIAL DETAILS

RETAINING WALL No. 183

MECHANICALLY STABILIZED EMBANKMENT

DETAILS NO. 1

REVISED STANDARD DRAWING

FILE NO. **xs13-020-1**

APPROVAL DATE January 2012

1 Revised Dimension

STATE OF **CALIFORNIA** DEPARTMENT OF TRANSPORTATION

DIVISION OF ENGINEERING SERVICES

BRIDGE NO. 55E0140

POST MILE 3.3

DS OSD 2147A (ENGLISH STANDARD DRAWING "XS" BORDER REV. (02-02-11)

ORIGINAL SCALE IN INCHES FOR REDUCED PLANS 0 1 2 3

UNIT: X
PROJECT NUMBER & PHASE: 12000202771
CONTRACT NO.: 12-0F96A4

DISREGARD PRINTS BEARING EARLIER REVISION DATES

REVISION DATES 5/29/12 11/13/12 03/04/13 4/26/13

SHEET 7 OF 15

FILE => 55e-0140-g-rwdt01.dgn

USERNAME => s128843 DATE PLOTTED => 07-AUG-2014 TIME PLOTTED => 13:09

DIST	COUNTY	ROUTE	POST MILES TOTAL PROJECT	SHEET No	TOTAL SHEETS
12	Ora	5	3.0/3.7	595	635

REGISTERED CIVIL ENGINEER — DATE 4/26/13

3-10-14
PLANS APPROVAL DATE

REGISTERED PROFESSIONAL ENGINEER — MOHSEN MOHSENI — No. C45999 — Exp. 12/31/14 — CIVIL — STATE OF CALIFORNIA

The State of California or its officers or agents shall not be responsible for the accuracy or completeness of electronic copies of this plan sheet.

PARSONS 2201 DUPONT DRIVE, SUITE 200, IRVINE, CA 92612

OCTA 550 SOUTH MAIN STREET, ORANGE, CA 92863

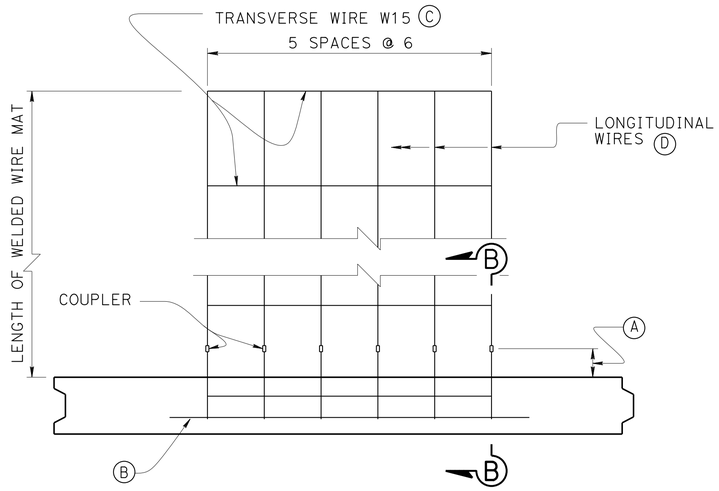

PLAN OF PANEL WITH SIX WIRE MAT

1½" = 1'-0"

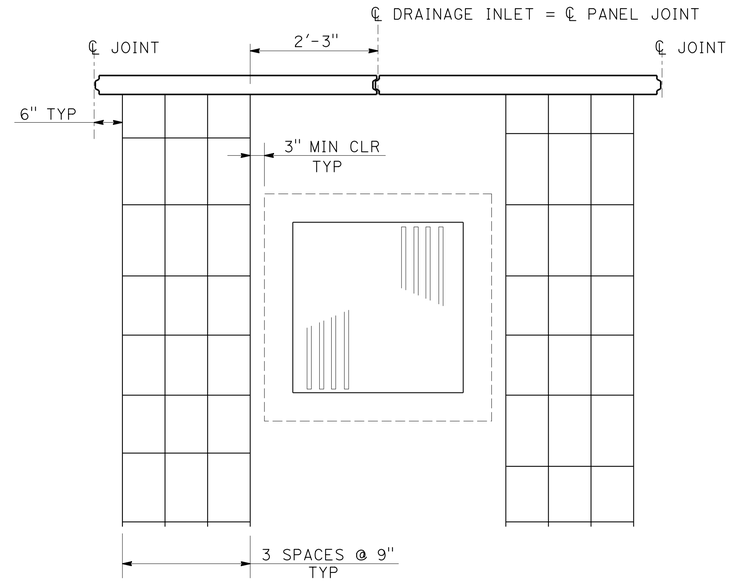

NOTE:
Wall Manufacturer to provide details where soil reinforcement is interrupted by drainage inlet.

PLAN OF PANEL ADJACENT TO DRAINAGE INLET

NO SCALE

NOTES:

(A) Distance as required to permit coupler to be swaged

(B) Place #4 x 3'-2", centered on connector mat, but not welded to it

(C) All transverse wires size W15 at various spacing as shown elsewhere in plans

(D) Size of longitudinal wires shown elsewhere in plans

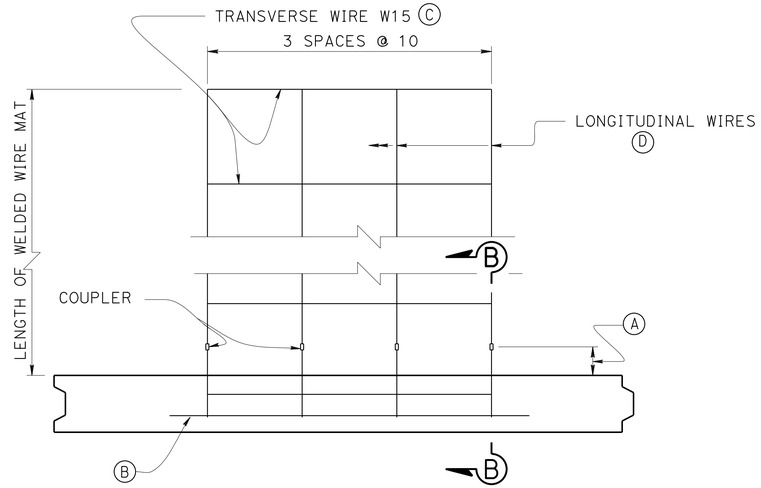

PLAN OF PANEL WITH FOUR WIRE MAT

1½" = 1'-0"

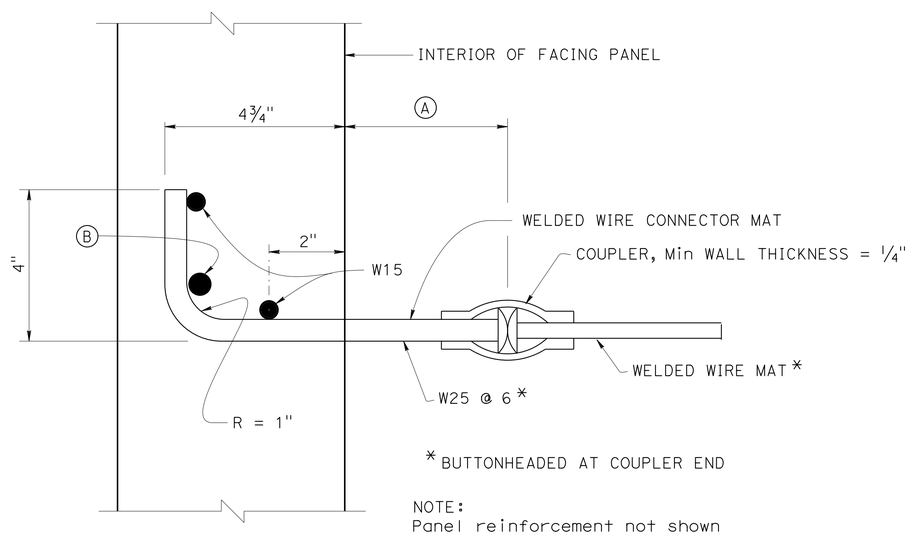

* BUTTONHEADED AT COUPLER END

NOTE:
Panel reinforcement not shown

SECTION B-B

6" = 1'-0"

Luqi Yang
DESIGN OVERSIGHT Luqi Yang
7-10-13
SIGN OFF DATE

	BY	CHECKED
DESIGN	M. Mohseni	M. Ruvalcaba
DETAILS	P. Johnson	M. Mohseni
QUANTITIES	J. Fix	M. Ruvalcaba

PREPARED FOR THE STATE OF CALIFORNIA DEPARTMENT OF TRANSPORTATION

M. Mohseni
PROJECT ENGINEER

BRIDGE NO. 55E0140
POST MILES 3.3

RETAINING WALL No. 183
DETAILS NO. 2

DESIGN DETAIL SHEET (ENGLISH) (REV.7/16/10)

ORIGINAL SCALE IN INCHES FOR REDUCED PLANS 0 1 2 3

UNIT:
PROJECT NUMBER & PHASE: 12000202771 CONTRACT NO.: 12-0F96A4

DISREGARD PRINTS BEARING EARLIER REVISION DATES → 5/20/12 11/13/12 03/04/13 4/26/13

SHEET 8 OF 15

FILE => 55e-0140-g-rwdt02.dgn

USERNAME => s128843 DATE PLOTTED => 07-AUG-2014 TIME PLOTTED => 13:09

DIST	COUNTY	ROUTE	POST MILES TOTAL PROJECT	SHEET No.	TOTAL SHEETS
12	Ora	5	3.0/3.7	596	635

REGISTERED CIVIL ENGINEER 4/26/13 DATE

3-10-14
PLANS APPROVAL DATE

REGISTERED PROFESSIONAL ENGINEER MOHSEN MOHSENI No. C45999 Exp. 12/31/14 CIVIL STATE OF CALIFORNIA

The State of California or its officers or agents shall not be responsible for the accuracy or completeness of electronic copies of this plan sheet.

PARSONS 2201 DUPONT DRIVE SUITE 200 IRVINE, CA 92612

OCTA 550 SOUTH MAIN STREET ORANGE, CA 92863

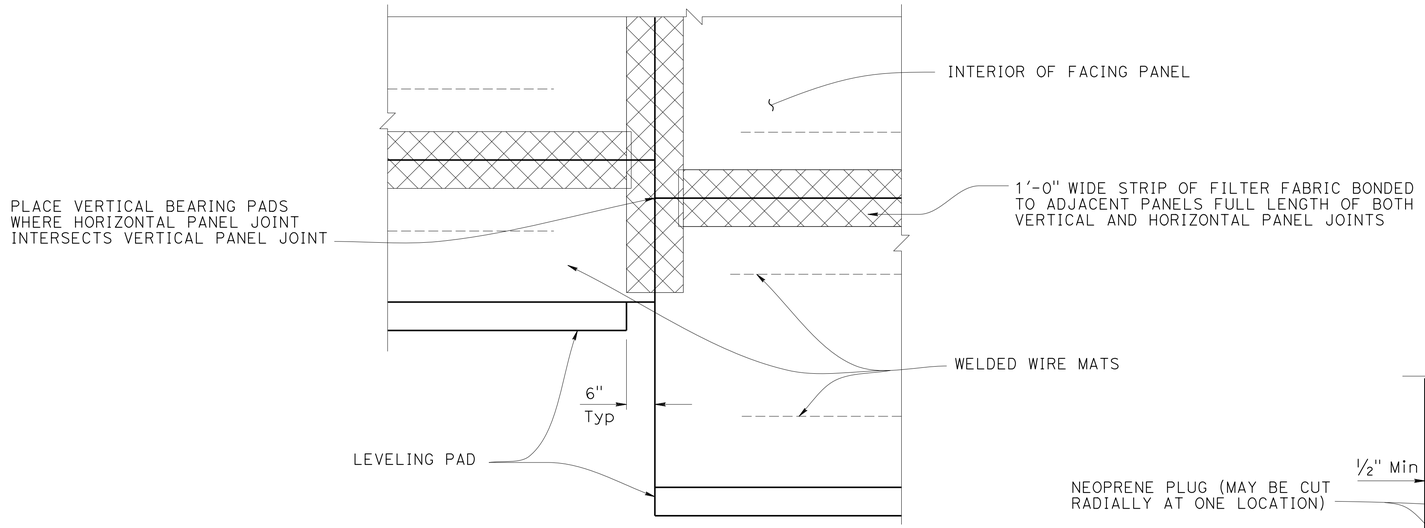

PART ELEVATION

3/4" = 1'-0"

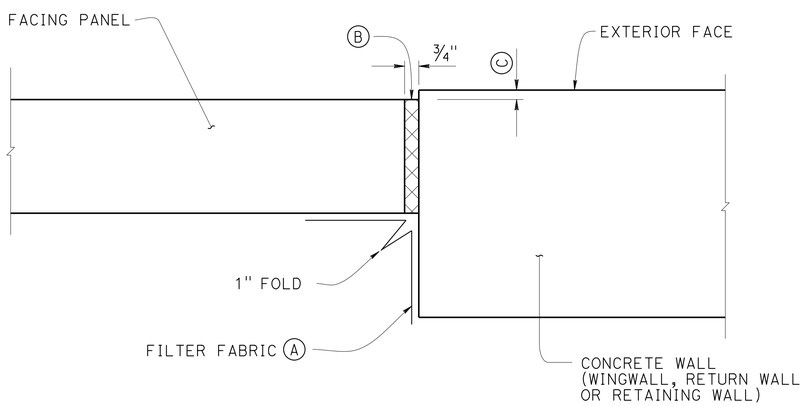

MSE FACING PANEL-TO-CONCRETE WALL JOINT DETAIL

3" = 1'-0"

NOTES:

(A) Bond a strip of filter fabric, 1'-6" wide, to back of MSE panels and the adjacent concrete wall for entire length of vertical joint

(B) Bond expansion joint material to the concrete wall

(C) Offset between face of MSE facing panel and face of the concrete wall as dictated by location of layout lines shown elsewhere in "STRUCTURE PLANS"

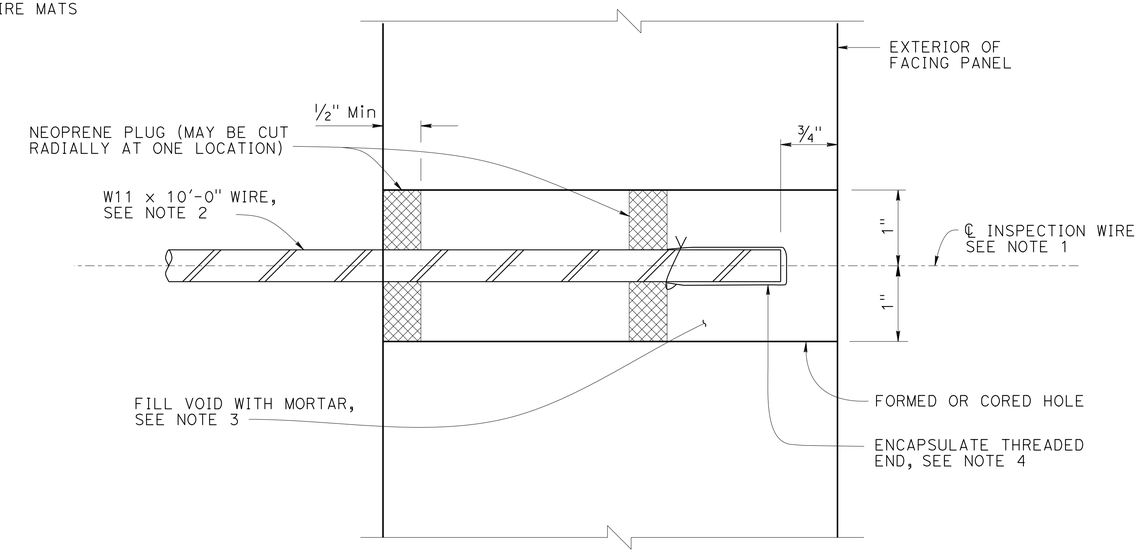

SECTION THRU INSPECTION WIRE

NO SCALE

NOTES:

1. Center inspection wire in facing panel.
2. Fabricated inspection wire from W11 wire representative of the welded wire mats, with 3/8" ø 16 UNC threads for at least 1 1/2" of one end.
3. Place inspection wire horizontal and perpendicular to the wall panel prior to backfilling.
4. Encapsulate threaded end with corrosion inhibiting mastic, vinyl covering, and secure with plastic tie.

UNC = Unified Coarse Threads

RETAINING WALL No. 183

MECHANICALLY STABILIZED EMBANKMENT

DETAILS NO. 3

STANDARD DRAWING

FILE NO. xs13-020-3

APPROVAL DATE January 2012

STATE OF CALIFORNIA DEPARTMENT OF TRANSPORTATION

DIVISION OF ENGINEERING SERVICES

BRIDGE NO. 55E0140

POST MILE 3.3

DS OSD 2147A (ENGLISH STANDARD DRAWING "XS" BORDER REV. (02-02-11)

ORIGINAL SCALE IN INCHES FOR REDUCED PLANS 0 1 2 3

UNIT: X
PROJECT NUMBER & PHASE: 12000202771
CONTRACT NO.: 12-0F96A4

DISREGARD PRINTS BEARING EARLIER REVISION DATES

REVISION DATES 5/29/12 11/13/12 03/04/13 4/26/13

SHEET 9 OF 15

FILE => 55e-0140-g-rwdt03.dgn

USERNAME => s128843 DATE PLOTTED => 07-AUG-2014 TIME PLOTTED => 13:09

DIST	COUNTY	ROUTE	POST MILES TOTAL PROJECT	SHEET No	TOTAL SHEETS
12	Ora	5	3.0/3.7	597	635

REGISTERED CIVIL ENGINEER 4/26/13 DATE

3-10-14
PLANS APPROVAL DATE

REGISTERED PROFESSIONAL ENGINEER MOHSEN MOHSENI No. C45999 Exp. 12/31/14 CIVIL STATE OF CALIFORNIA

The State of California or its officers or agents shall not be responsible for the accuracy or completeness of electronic copies of this plan sheet.

PARSONS 2201 DUPONT DRIVE SUITE 200 IRVINE, CA 92612

OCTA 550 SOUTH MAIN STREET ORANGE, CA 92863

NOTES:

1. Low end of subgrade drain shown, at high end install cap at end of 3" slotted pipe.. Subgrade drain located at end of structure approach slab, see "Structure Plans".
2. Not all barrier reinforcement shown.
3. For Outlet Details, see "Road Plans".
4. At acute corners of approach slab, bend reinforcement as required to clear expansion joint.

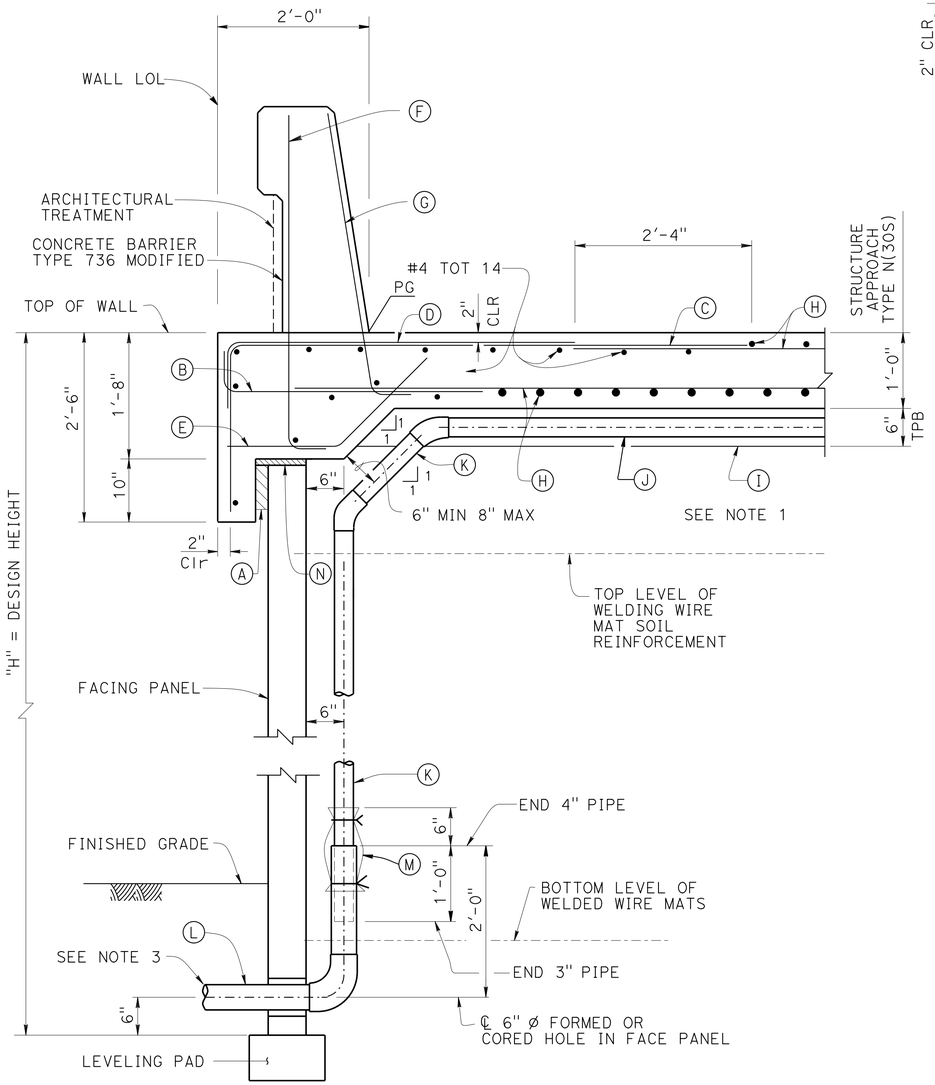

SECTION AT TOP OF MSE WITH STRUCTURE APPROACH SLAB AND CONCRETE BARRIER

1" = 1'-0"

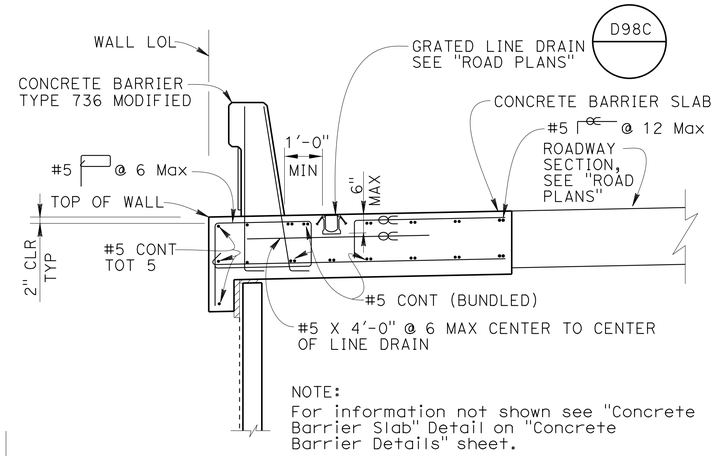

NOTE:
For information not shown see "Concrete Barrier Slab" Detail on "Concrete Barrier Details" sheet.

SECTION E-E

½" = 1'-0"

LEGEND:

Indicates bundled bars

NOTES:

(A) 2" expanded polystyrene recessed 2" into barrier slab at front of MSE facing panel.

(B) #5 6¼" 3'-4" @ 12

(C) #5 6'-10⅝" @ 12

(D) #5 4'-7" @ 12 Bundled with (C) bars

(E) #5 @ 12

(F) #5 6¼" @ 16 (To be in place prior approach slab concrete)

(G) #5 6¼" @ 8 (To be in place prior to approach slab concrete)

(H) Approach slab reinforcement

(I) Filter fabric

(J) 3" Plastic pipe (slotted)

(K) 3" Plastic pipe and fitting (unslotted)

(L) 4" Schedule 80 PVC outlet pipe and fittings (unslotted)

(M) 1'-0" wide X 2'-0" filter fabric wrapped around pipe and secured with nylon ties

(N) 1" Expanded polystyrene

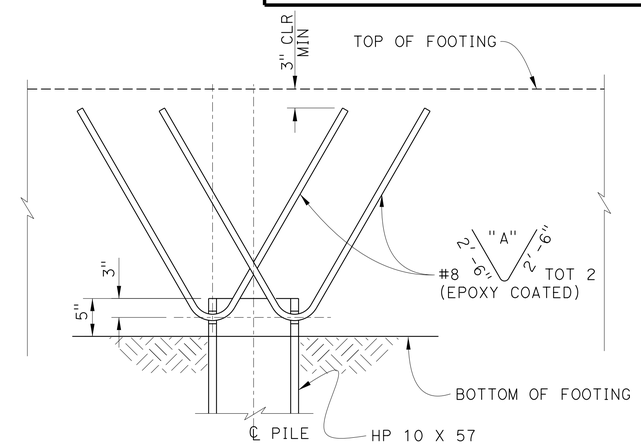

ELEVATION

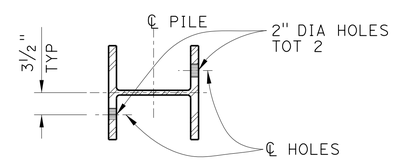

PLAN

STEEL PILE ANCHOR

½" = 1'-0"

STRUCTURAL STEEL (PILING)
F = 50 ksi
ASTM = A572
GRADE 50

LOCATION	"A"
Exterior Piles With ℄ Pile To Edge Of Footing Distance Of 1'-6" Min	30°
Interior Piles	60°

Luqi Yang
DESIGN OVERSIGHT Luqi Yang
7-10-13
SIGN OFF DATE

	BY	CHECKED
DESIGN	M. Mohseni	M. Ruvalcaba
DETAILS	P. Johnson	M. Mohseni
QUANTITIES	J. Fix	M. Ruvalcaba

PREPARED FOR THE STATE OF CALIFORNIA DEPARTMENT OF TRANSPORTATION

M. Mohseni
PROJECT ENGINEER

BRIDGE NO. 55E0140
POST MILES 3.3

RETAINING WALL No. 183
DETAILS NO. 4

DESIGN DETAIL SHEET (ENGLISH) (REV.7/16/10)

ORIGINAL SCALE IN INCHES FOR REDUCED PLANS 0 1 2 3

UNIT:
PROJECT NUMBER & PHASE: 12000202771 CONTRACT NO.: 12-0F96A4

DISREGARD PRINTS BEARING EARLIER REVISION DATES

REVISION DATES 5/29/12 11/13/12 03/04/13 4/26/13 SHEET 10 OF 15

FILE => 55e-0140-g-rwdt04.dgn

USERNAME => s128843 DATE PLOTTED => 07-AUG-2014 TIME PLOTTED => 13:10

DIST	COUNTY	ROUTE	POST MILES TOTAL PROJECT	SHEET No	TOTAL SHEETS
12	Ora	5	3.0/3.7	598	635

REGISTERED CIVIL ENGINEER 4/26/13 DATE

3-10-14
PLANS APPROVAL DATE

REGISTERED PROFESSIONAL ENGINEER MOHSEN MOHSENI No. C45999 Exp. 12/31/14 CIVIL STATE OF CALIFORNIA

The State of California or its officers or agents shall not be responsible for the accuracy or completeness of electronic copies of this plan sheet.

PARSONS 2201 DUPONT DRIVE SUITE 200 IRVINE, CA 92612

OCTA 550 SOUTH MAIN STREET ORANGE, CA 92863

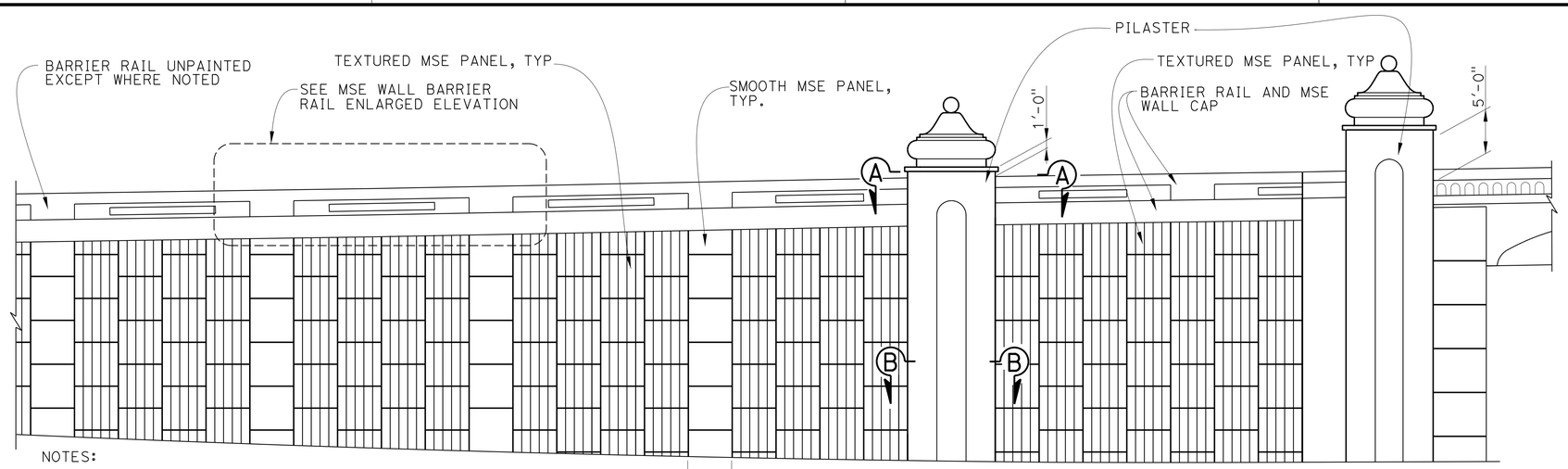

NOTES:

1. For Section "A-A" and Section "B-B", see "ARCHITECTURAL DETAILS No. 2" sheet.
2. Concrete shall be colored for all the wall precast panels, pilasters and all concrete barriers within the limits of the retaining wall.

PARTIAL WALL ELEVATION

SCALE: 1/8" = 1'-0"

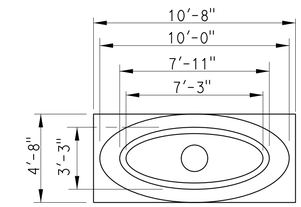

PLAN

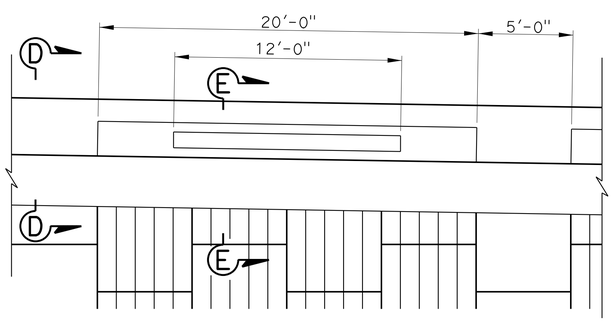

Note: For PLAN VIEW "D-D" and SECTION "E-E", see "ARCHITECTURAL DETAILS NO. 2" Sheet

MSE WALL BARRIER RAIL ENLARGED ELEVATION

SCALE: 1/4" = 1'-0"

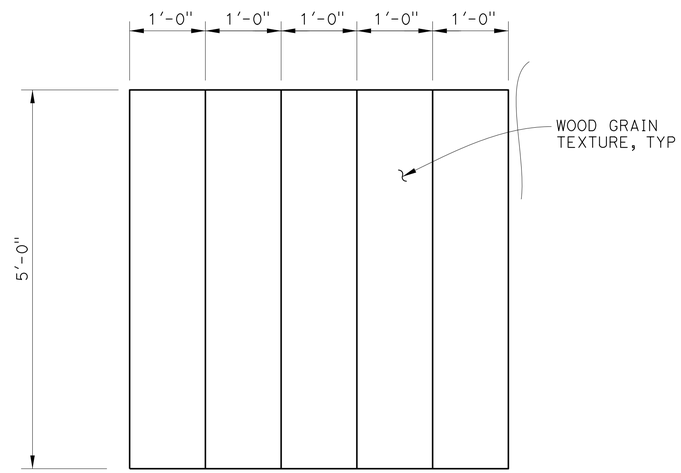

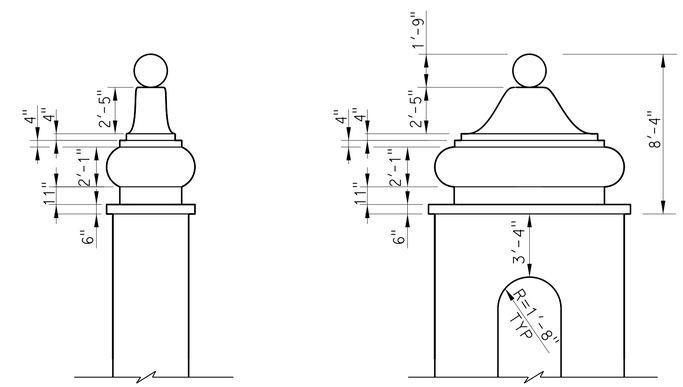

SIDE VIEW **FRONT VIEW**

PILASTER DETAIL

SCALE: 1/4 " = 1'-0"

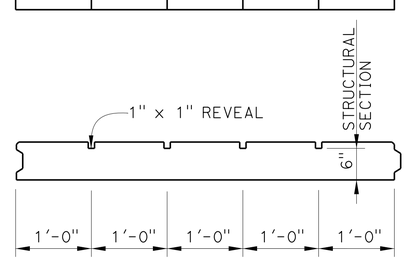

TEXTURED MSE PANEL

1" = 1'-0"

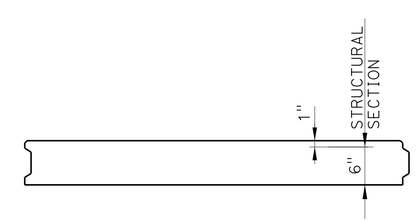

SMOOTH MSE PANEL

1" = 1'-0"

Luqi Yang
DESIGN OVERSIGHT Luqi Yang
7-10-13
SIGN OFF DATE

DESIGN	R. Genick	CHECKED	D. Jackson
DETAILS	BY P. Johnson	CHECKED	M. Mohseni
QUANTITIES	BY J. Fix	CHECKED	M. Ruvalcaba

PREPARED FOR THE STATE OF CALIFORNIA DEPARTMENT OF TRANSPORTATION

M. Mohseni
PROJECT ENGINEER

BRIDGE NO. 55E0140
POST MILES 3.3

RETAINING WALL No. 183
ARCHITECTURAL DETAILS NO. 1

DESIGN DETAIL SHEET (ENGLISH) (REV.7/16/10)

ORIGINAL SCALE IN INCHES FOR REDUCED PLANS 0 1 2 3

UNIT:
PROJECT NUMBER & PHASE: 12000202771 CONTRACT NO.: 12-0F96A4

DISREGARD PRINTS BEARING EARLIER REVISION DATES

REVISION DATES 5/29/12 11/13/12 03/04/13 4/26/13

SHEET 11 OF 15

FILE => 55e-0140-u-miscdt01.dgn

USERNAME => s128843 DATE PLOTTED => 07-AUG-2014 TIME PLOTTED => 13:10

DIST	COUNTY	ROUTE	POST MILES TOTAL PROJECT	SHEET No	TOTAL SHEETS
12	Ora	5	3.0/3.7	599	635

REGISTERED CIVIL ENGINEER 4/26/13 DATE

3-10-14
PLANS APPROVAL DATE

REGISTERED PROFESSIONAL ENGINEER MOHSEN MOHSENI No. C45999 Exp. 12/31/14 CIVIL STATE OF CALIFORNIA

The State of California or its officers or agents shall not be responsible for the accuracy or completeness of electronic copies of this plan sheet.

PARSONS 2201 DUPONT DRIVE SUITE 200 IRVINE, CA 92612

OCTA 550 SOUTH MAIN STREET ORANGE, CA 92863

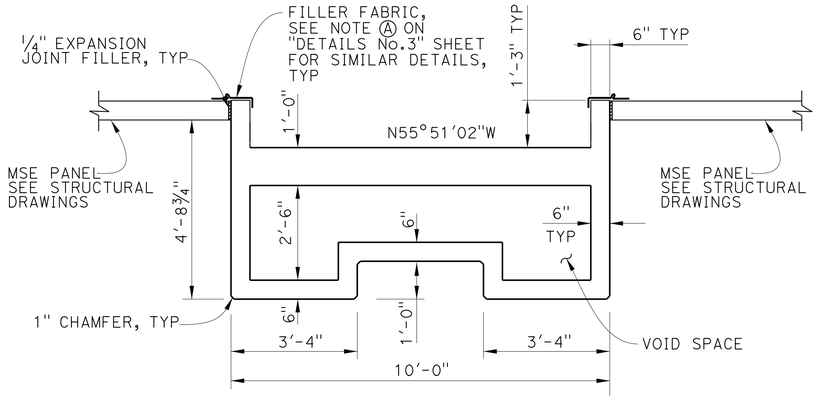

SECTION B-B

1/2 " = 1'-0"

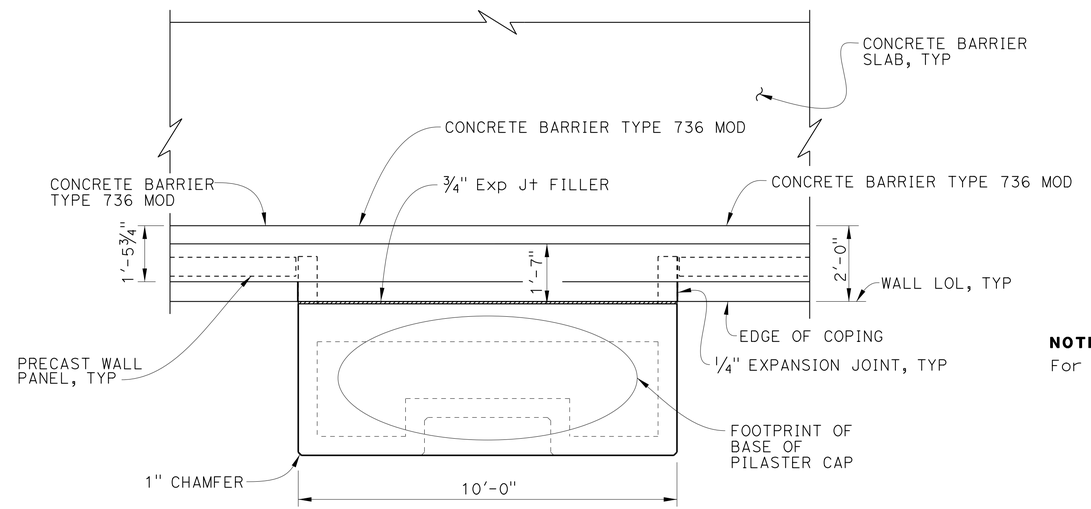

NOTE:

FOR INFORMATION NOT SHOWN, SEE SECTION "B-B".

SECTION A-A

1/2 " = 1'-0"

NOTE:

For Pilaster Details, see "Pilaster Details" sheet.

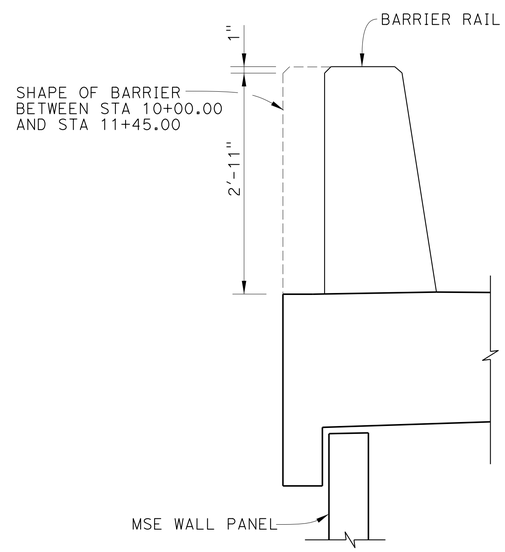

SECTION D-D

SCALE: 1" = 1'-0"

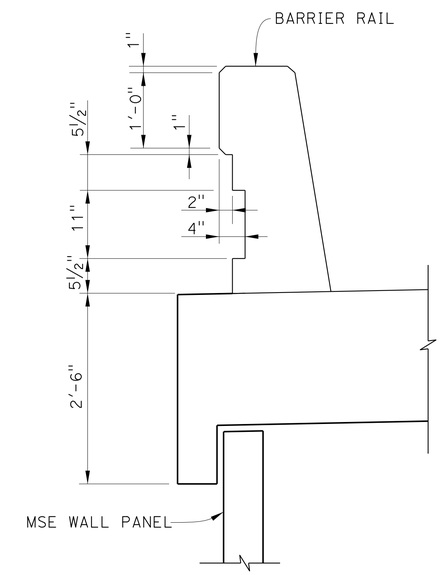

SECTION E-E

SCALE: 1" = 1'-0"

Luqi Yang
DESIGN OVERSIGHT Luqi Yang
7-10-13
SIGN OFF DATE

	BY	CHECKED
DESIGN	R. Genick	D. Jackson
DETAILS	P. Johnson	M. Mohseni
QUANTITIES	J. Fix	M. Ruvalcaba

PREPARED FOR THE STATE OF CALIFORNIA DEPARTMENT OF TRANSPORTATION

M. Mohseni
PROJECT ENGINEER

BRIDGE NO. 55E0140
POST MILES 3.3

RETAINING WALL No. 183
ARCHITECTURAL DETAILS NO. 2

DESIGN DETAIL SHEET (ENGLISH) (REV.7/16/10)

ORIGINAL SCALE IN INCHES FOR REDUCED PLANS 0 1 2 3

UNIT:
PROJECT NUMBER & PHASE: 12000202771 CONTRACT NO.: 12-0F96A4

DISREGARD PRINTS BEARING EARLIER REVISION DATES

REVISION DATES 5/28/12 11/13/12 03/04/13 4/26/13

SHEET 12 OF 15

FILE => 55e-0140-u-miscdt02.dgn

USERNAME => s128843 DATE PLOTTED => 07-AUG-2014 TIME PLOTTED => 13:10

DIST	COUNTY	ROUTE	POST MILES TOTAL PROJECT	SHEET No	TOTAL SHEETS
12	Ora	5	3.0/3.7	600	635

REGISTERED CIVIL ENGINEER 4/26/13 DATE

3-10-14
PLANS APPROVAL DATE

REGISTERED PROFESSIONAL ENGINEER EFREN T MOBO No. C49439 Exp. 09/30/14 CIVIL STATE OF CALIFORNIA

The State of California or its officers or agents shall not be responsible for the accuracy or completeness of electronic copies of this plan sheet.

PARSONS 2201 DUPONT DRIVE SUITE 200 IRVINE, CA 92612

OCTA 550 SOUTH MAIN STREET ORANGE, CA 92863

SECTION A-A
1/2 " = 1'-0"

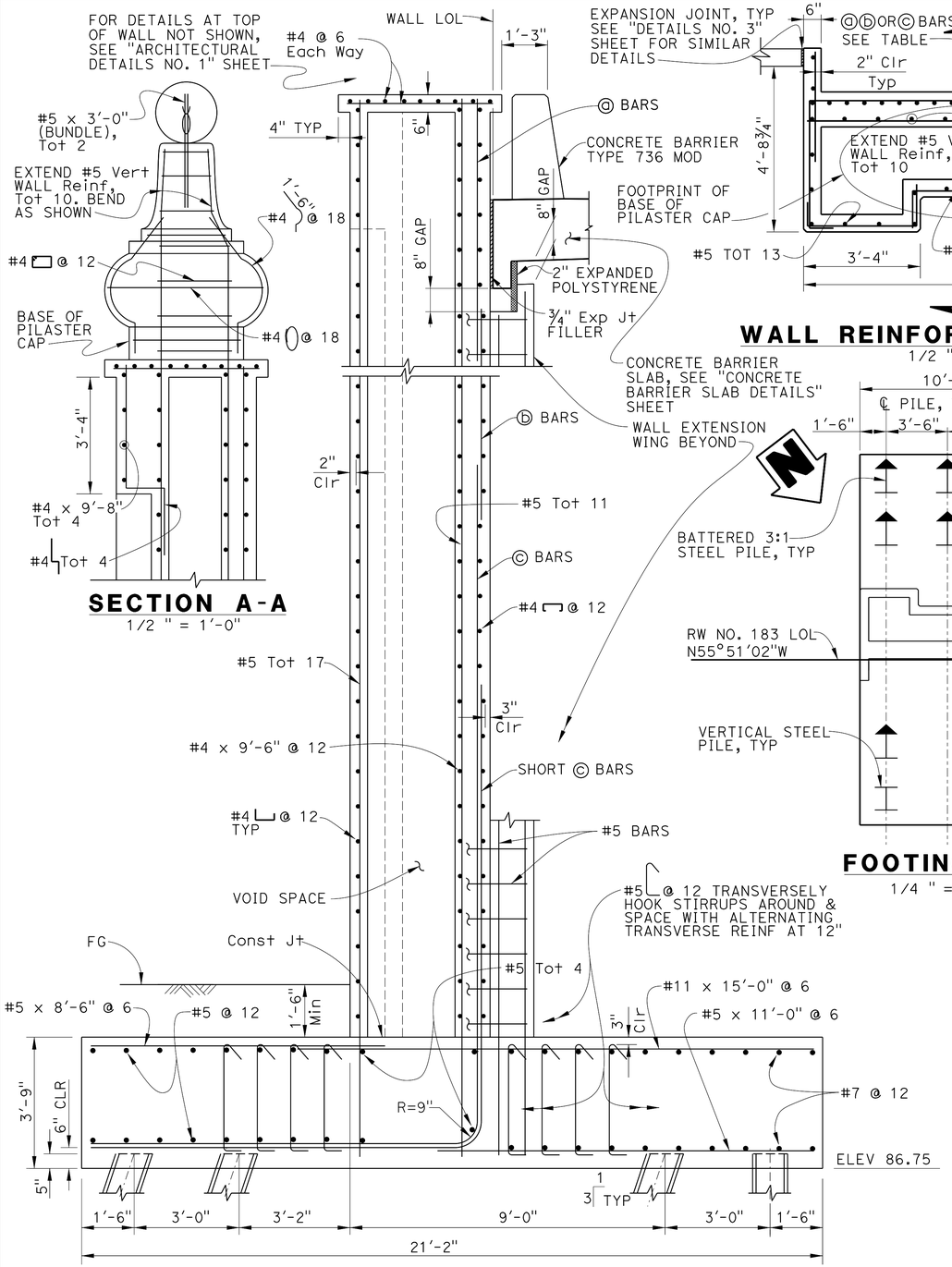

TYPICAL SECTION
1/2 " = 1'-0"

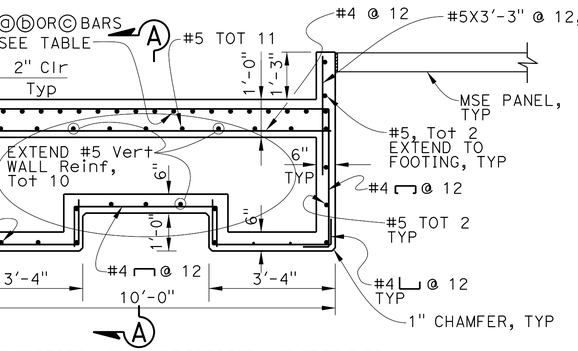

WALL REINFORCEMENT DETAIL
1/2 " = 1'-0"

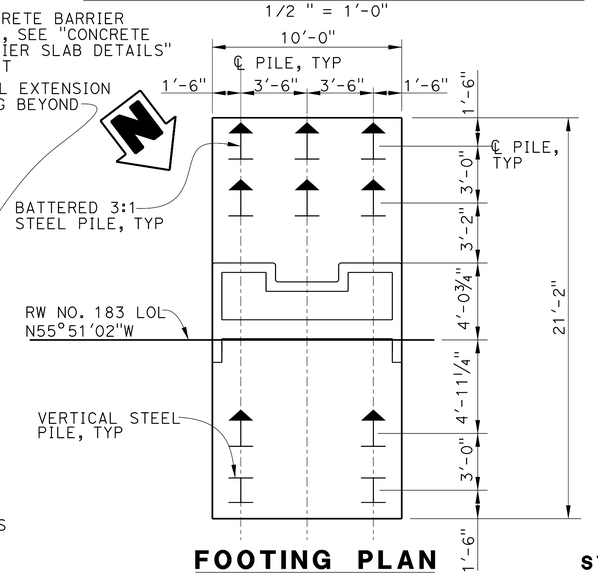

FOOTING PLAN
1/4 " = 1'-0"

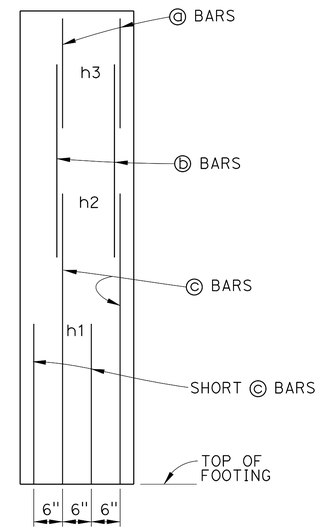

ELEVATION
1/2 " = 1'-0"

TABLE OF REINF STEEL DIMENSIONS AND DATA	
ⓐ BARS	#7
ⓑ BARS	#9
ⓒ BARS	#11
h1	13'-0"
h2	19'-0"
h3	21'-2"

SYMBOLS:

h1 = Top of footing to top of short ⓒ bar
h2 = Top of footing to top of ⓒ bar
h3 = Top of footing to top of ⓑ bar

DESIGN NOTES:

DESIGN: AASHTO LRFD Bridge Design Specifications, 4rth Edition with Caltrans Amendments

LS: Vehicle surcharge 72 psf uniform lateral

DC: Stem Architectural Treatment of thickness up to 6" of concrete (75 psf) considered

CT: 54 kip transverse force applied at He = 32", distributed over 10 feet at the top of wall and 1 : 1 distribution down and outward. Distribution below footing taken no less than 40'.

SEISMIC: $k_h = 0.19g$, $k_v = 0.0$

SOIL: $\phi = 34°$, $\gamma = 120$ PCF

REINFORCED CONCRETE: f'c = 3,600 psi
fy = 60,000 psi

LOAD COMBINATIONS AND LIMIT STATES:

Service I Q = 1.00DC+1.00EV+1.00EH+1.00LS
Strength I Q = aDC+BEV+nEH+1.75LS
Extreme I Q = 1.00DC+1.00EV+1.00EH+1.00EQD+1.00EQE
Extreme II Q = 1.00DC+1.00EV+1.00EH+1.00CT

Where:
Q: Force Effects
a: 1.25 or 0.90, Whichever Controls Design
B: 1.35 or 1.00, Whichever Controls Design
n: 1.50 or 0.90, Whichever Controls Design
DC: Dead Load of Structure Cpomponents
EH: Horizontal Earth Fill Pressure
EV: Vertical Earth Pressure from Earth Fill Weight
LS: Live Load Surcharge
EQE: Seismic Earth Pressure
EQD: Soil and Structural and Nonstructural Components Inertia
CT: Vehicular Collision Force

PILASTER PILE DATA TABLE

Location	Pile Type	Nominal Resistance (kips)		Design Tip Elevations (ft)	Specified Tip Elevations (ft)	Nominal Driving Resistance (kips)
		Compression	Tension			
15+65.00	HP10x57	140	20	+37 (a); +73 (b) +68(c); +82 (d)	+37	140

1. Design Tip Elevations For Pilaster is Controlled By The Following Demands: (a) Compression, (b) Tension, (c) Settlement, (d) Lateral Load.
2. The Specified Tip Elevations Shall Not Be Raised Above The Design Tip Elevations For Tension, Settlement And Lateral Load.

NOTE:
For Steel Piles Anchor Details, see "Details No. 4" sheet.

DESIGN OVERSIGHT Luqi Yang
X7-10-13
SIGN OFF DATE

DESIGN	E. MOBO	CHECKED	M. Ruvalcaba
DETAILS	BY P. Johnson	CHECKED	M. Mohseni
QUANTITIES	BY J. Fix	CHECKED	M. Ruvalcaba

PREPARED FOR THE STATE OF CALIFORNIA DEPARTMENT OF TRANSPORTATION

M. Mohseni
PROJECT ENGINEER

BRIDGE NO. 55E0140
POST MILES 3.3

RETAINING WALL No. 183
PILASTER DETAILS

DESIGN DETAIL SHEET (ENGLISH) (REV.7/16/10)

ORIGINAL SCALE IN INCHES FOR REDUCED PLANS 0 1 2 3

UNIT:
PROJECT NUMBER & PHASE: 12000202771 CONTRACT NO.: 12-0F96A4

DISREGARD PRINTS BEARING EARLIER REVISION DATES

REVISION DATES 5/28/12 11/13/12 03/04/13 4/26/13 SHEET 13 OF 15

FILE => 55e-0140-u-miscdt03.dgn

USERNAME => s128843 DATE PLOTTED => 07-AUG-2014 TIME PLOTTED => 13:10