DIST	COUNTY	ROUTE	POST MILES TOTAL PROJECT	SHEET No	TOTAL SHEETS
12	Ora	57	18.4/20.9	801	856

REGISTERED CIVIL ENGINEER 06/08/09 DATE

1-25-10
PLANS APPROVAL DATE

REGISTERED PROFESSIONAL ENGINEER C. DANIEL SUN No. 40064 Exp. 12/31/09 CIVIL STATE OF CALIFORNIA

The State of California or its officers or agents shall not be responsible for the accuracy or completeness of electronic copies of this plan sheet.

OCTA
550 S. MAIN STREET
ORANGE, CA 92863

CH2M HILL
6 HUTTON CENTRE DRIVE, SUITE 700
SANTA ANA, CA 92707

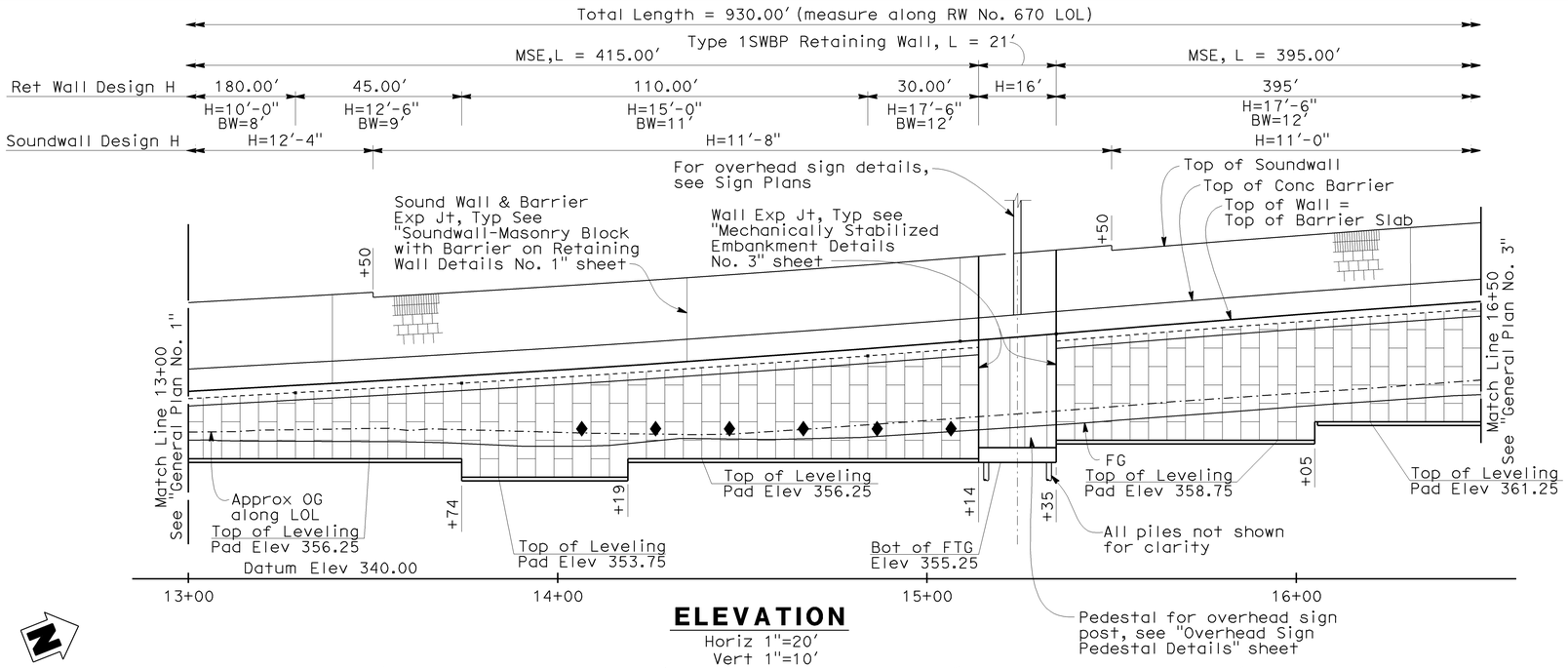

ELEVATION

Horiz 1"=20'
Vert 1"=10'

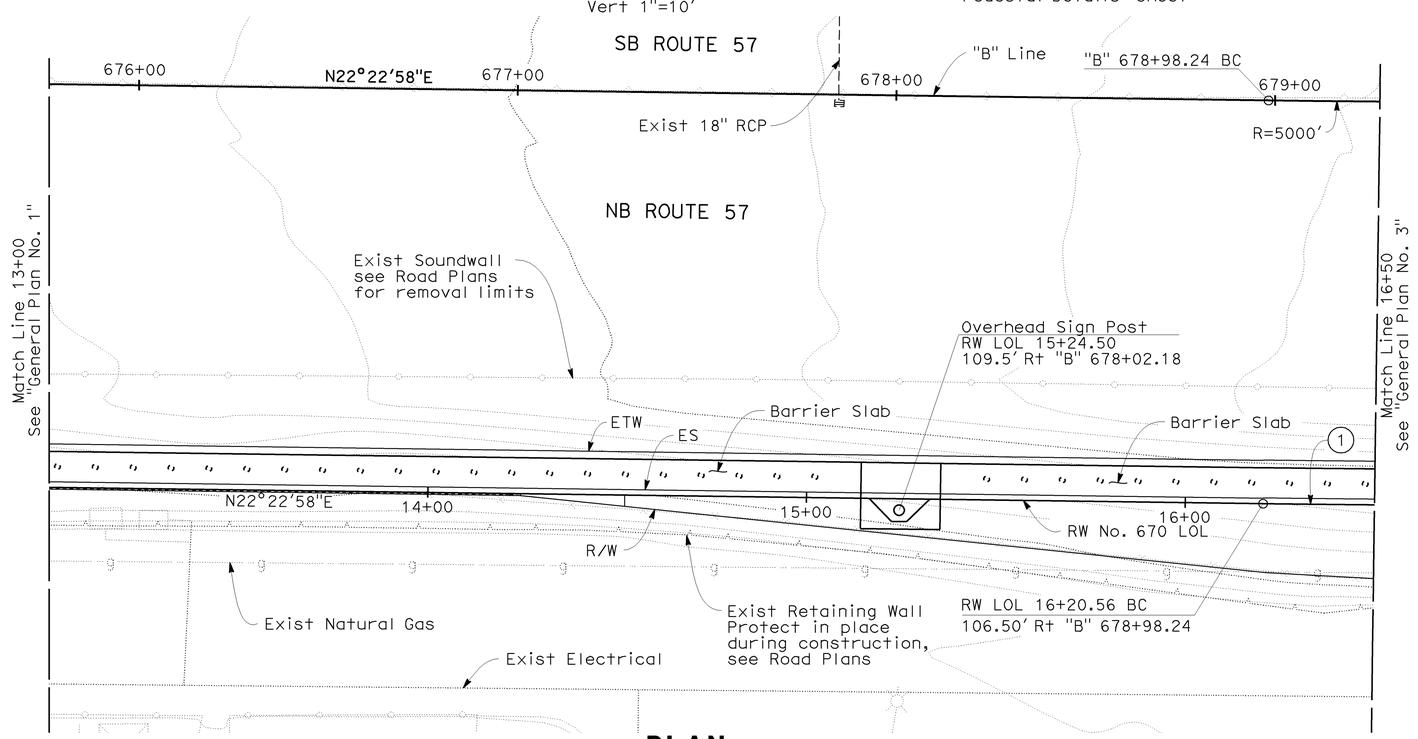

PLAN

1"=20'

LEGEND:

◆ Indicates Inspection Wire, for details see "Mechanically Stabilized Embankment Details No. 3" sheet.

NOTE:

1. For General Notes, see "General Plan No. 1" sheet.

CURVE DATA

NO	R	Δ	T	L
1	5106.50'	3°28'19"	154.77'	309.44'

DESIGN OVERSIGHT Jon Hamaguchi
11-24-09
SIGN OFF DATE

	BY	CHECKED				
DESIGN	D. Sun	J. Powell	LRFD	LIVE LOADING: HL-93 AND PERMIT (P-15) DESIGN LOAD		
DETAILS	D. Sun	J. Powell	LAYOUT	E. Maechler	M. Atiqullah	
QUANTITIES	Y. Chiu	L. Ros	SPECIFICATIONS	M. Remolador	PLANS AND SPECS COMPARED M. Atiqullah	

PREPARED FOR THE STATE OF CALIFORNIA DEPARTMENT OF TRANSPORTATION

Ayman Salama
PROJECT ENGINEER

CU 12220
EA 0F0321

BRIDGE NO. 55E0095
POST MILES 20.21

RETAINING WALL NO. 670
GENERAL PLAN NO. 2

DESIGN GENERAL PLAN SHEET (ENGLISH) (REV. 2/25/05)

ORIGINAL SCALE IN INCHES FOR REDUCED PLANS 0 1 2 3

DISREGARD PRINTS BEARING EARLIER REVISION DATES

REVISION DATES (PRELIMINARY STAGE ONLY) 02/18/09 04/07/09 04/17/09 06/08/09

SHEET 2 OF 21

FILE => 55e0095-a-gp02.dgn

USERNAME => trmnguye DATE PLOTTED => 25-JAN-2010 TIME PLOTTED => 14:34

DIST	COUNTY	ROUTE	POST MILES TOTAL PROJECT	SHEET No	TOTAL SHEETS
12	Ora	57	18.4/20.9	802	856

REGISTERED CIVIL ENGINEER 06/08/09 DATE

1-25-10
PLANS APPROVAL DATE

REGISTERED PROFESSIONAL ENGINEER C. DANIEL SUN No. 40064 Exp. 12/31/09 CIVIL STATE OF CALIFORNIA

The State of California or its officers or agents shall not be responsible for the accuracy or completeness of electronic copies of this plan sheet.

OCTA
550 S. MAIN STREET
ORANGE, CA 92863

CH2M HILL
6 HUTTON CENTRE DRIVE, SUITE 700
SANTA ANA, CA 92707

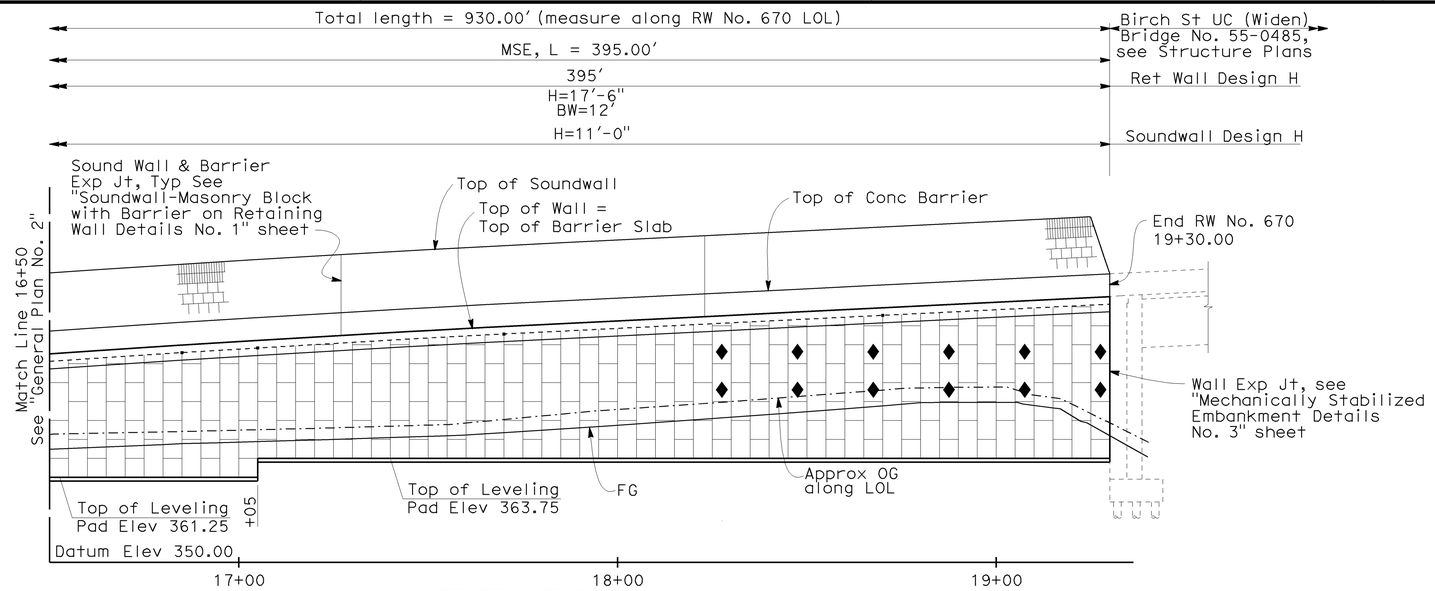

ELEVATION

Horiz 1"=20'
Vert 1"=10'

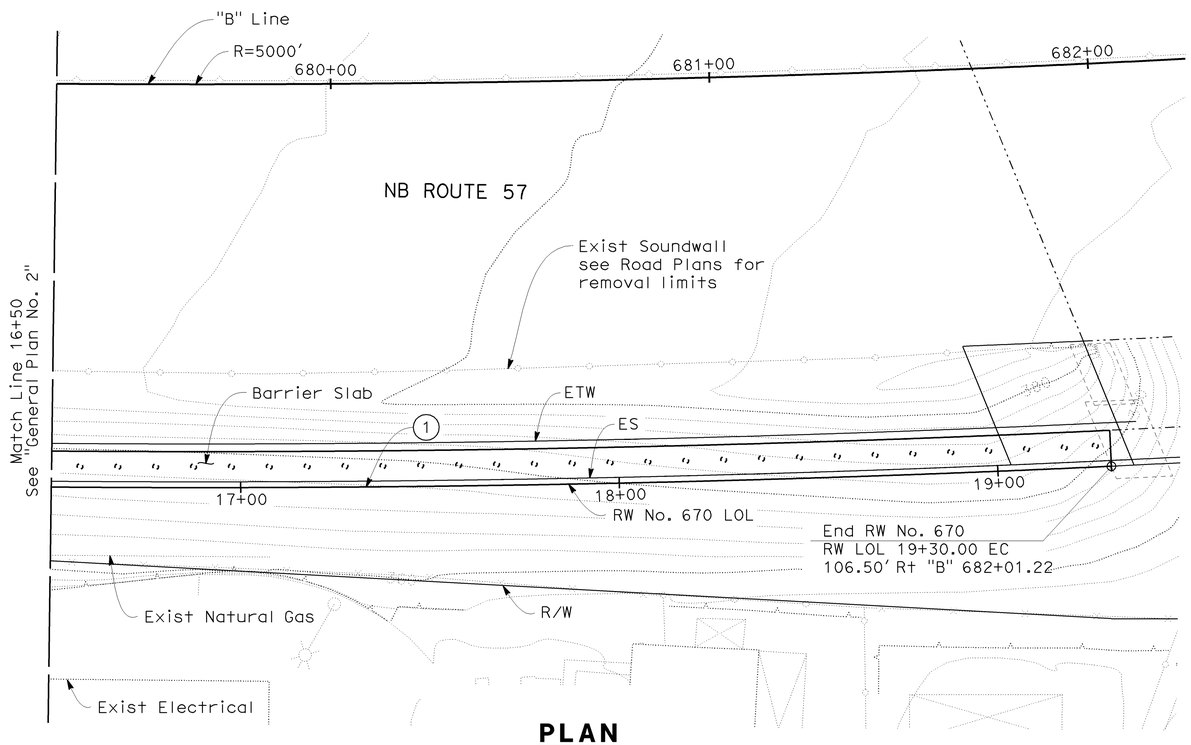

PLAN

1"=20'

LEGEND:

◆ Indicates Inspection Wire, for details see "Mechanically Stabilized Embankment Details No. 3" sheet.

NOTE:

1. For General Notes, see "General Plan No. 1" sheet.

CURVE DATA

NO	R	Δ	T	L
1	5106.50'	3°28'19"	154.77'	309.44'

DESIGN OVERSIGHT Jon Hamaguchi 11-24-09 SIGN OFF DATE	DESIGN	BY D. Sun	CHECKED J. Powell	LRFD	LIVE LOADING: HL-93 AND PERMIT (P-15) DESIGN LOAD		
	DETAILS	BY D. Sun	CHECKED J. Powell	LAYOUT	BY E. Maechler	CHECKED M. Atiqullah	
	QUANTITIES	BY Y. Chiu	CHECKED L. Ros	SPECIFICATIONS	BY M. Remolador	PLANS AND SPECS COMPARED M. Atiqullah	

PREPARED FOR THE STATE OF CALIFORNIA DEPARTMENT OF TRANSPORTATION

Ayman Salama
PROJECT ENGINEER

BRIDGE NO. 55E0095
POST MILES 20.21

RETAINING WALL NO. 670
GENERAL PLAN NO. 3

DESIGN GENERAL PLAN SHEET (ENGLISH) (REV. 2/25/05)

ORIGINAL SCALE IN INCHES FOR REDUCED PLANS 0 1 2 3

CU 12220
EA 0F0321

DISREGARD PRINTS BEARING EARLIER REVISION DATES

REVISION DATES (PRELIMINARY STAGE ONLY) 02/18/09 04/07/09 04/17/09 06/08/09

SHEET 3 OF 21

FILE => 55e0095-a-gp03.dgn

USERNAME => trmnguye DATE PLOTTED => 25-JAN-2010 TIME PLOTTED => 14:35

DIST	COUNTY	ROUTE	POST MILES TOTAL PROJECT	SHEET No	TOTAL SHEETS
12	Ora	57	18.4/20.9	803	856

REGISTERED CIVIL ENGINEER 06/08/09 DATE

1-25-10
PLANS APPROVAL DATE

REGISTERED PROFESSIONAL ENGINEER C. DANIEL SUN No. 40064 Exp. 12/31/09 CIVIL STATE OF CALIFORNIA

The State of California or its officers or agents shall not be responsible for the accuracy or completeness of electronic copies of this plan sheet.

OCTA
550 S. MAIN STREET
ORANGE, CA 92863

CH2M HILL
6 HUTTON CENTRE DRIVE, SUITE 700
SANTA ANA, CA 92707

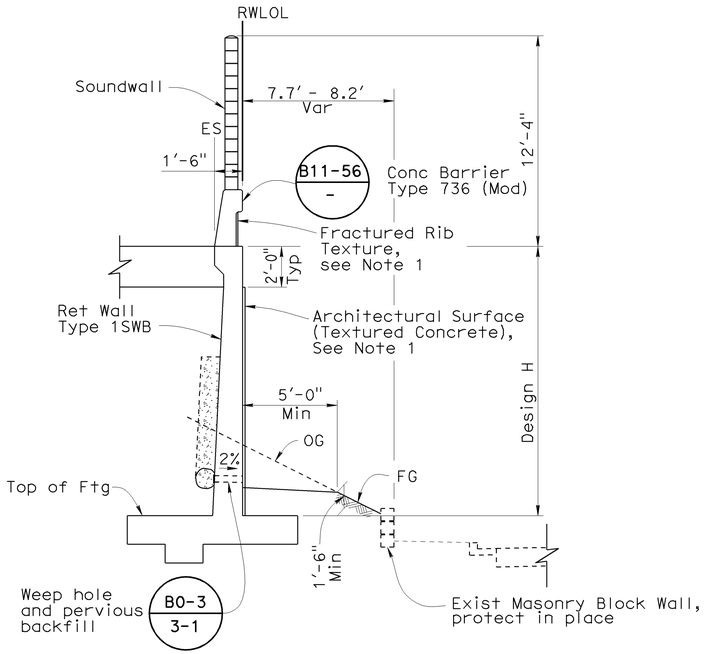

TYPICAL SECTION

1/4"=1'-0"

Sta 10+00.00 to 10+99.00

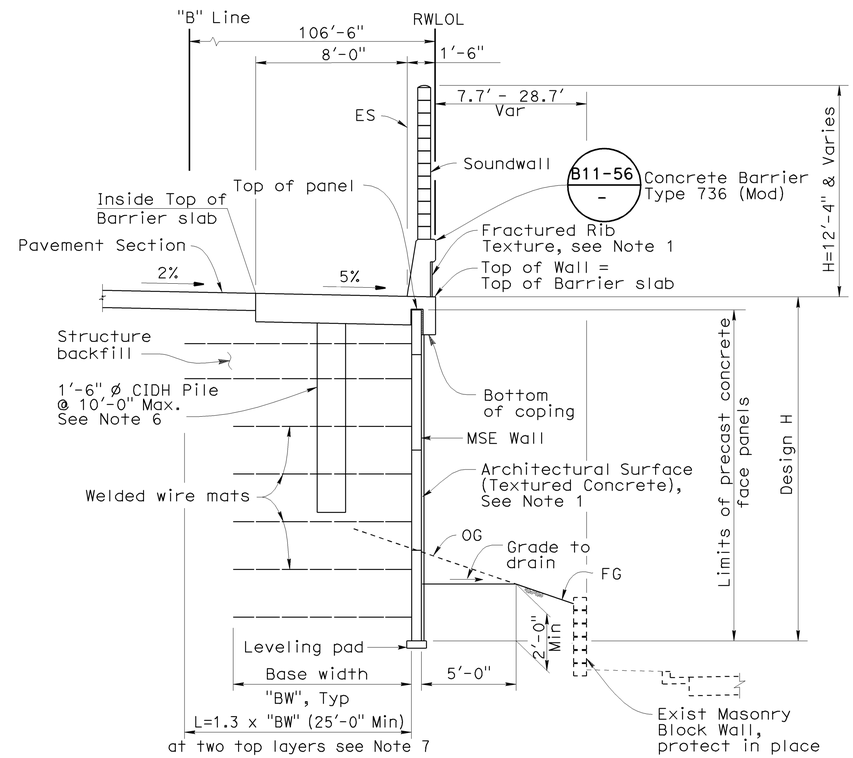

MSE WALL TYPICAL SECTION

1/4"=1'-0"

Sta 10+99.00 to 15+14.32
and
15+35.32 to 19+30.00

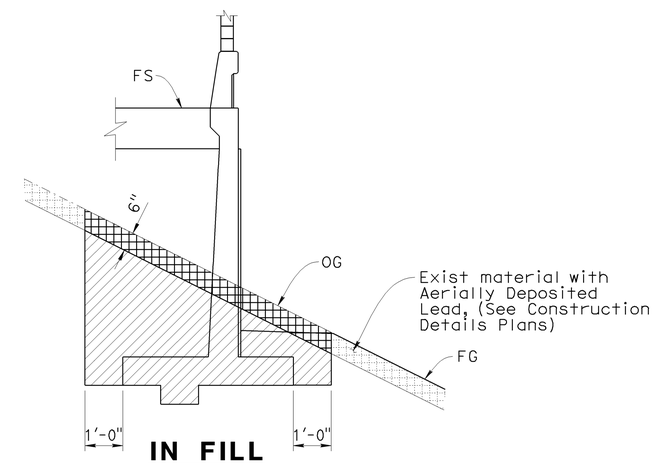

IN FILL

LIMITS OF PAYMENT OF EXCAVATION FOR RETAINING WALL

No Scale

Note:
For Backfill see Caltrans Standard Plans

LEGEND

Indicates Structure Excavation (Type Y-1) (Aerially Deposited Lead)

Structure Excavation (Retaining Wall)

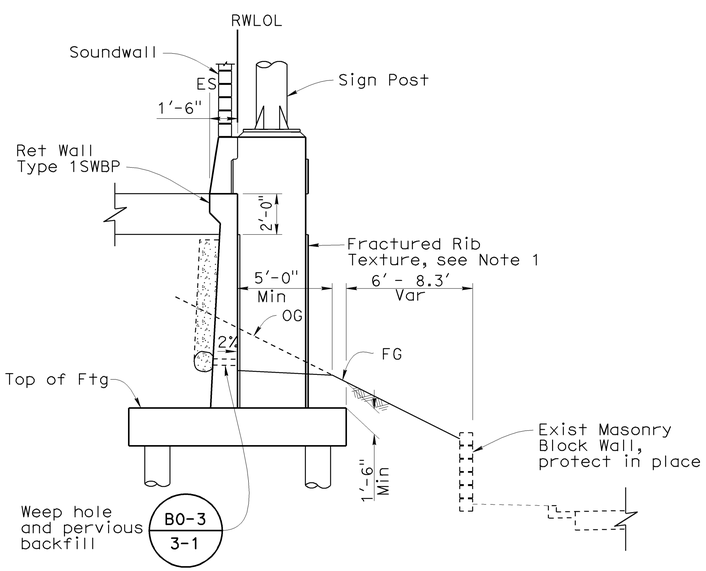

TYPICAL SECTION

No Scale

Sta 15+14.00 to 15+35.00

MSE NOTES:

1. For design height "H", base width "BW", see "General Plan No.1, No.2, & No.3 Section" sheets. For limits of excavation & backfill, see "Mechanically Stabilized Embankment Details No. 6" sheet.
2. For welded wire mats, see Welded Wire Mat Schedule on "Retaining Wall Details" sheet.
3. For Barrier slab details, see "Mechanically Stabilized Embankment Details No. 5" sheet.
4. For panel details, see "Mechanically Stabilized Embankment Details No. 1" sheet.
5. For General Notes and wire mat details, see "Mechanically Stabilized Embankment Details No. 2" sheet.
6. Spacing between CIDH Piles is at 10'-0" maximum. Contractor must revise the spacing of CIDH piles before drilling so the pile remains minimum 4'-0" clear from the existing utilities.
7. The MSE Wall Designer/Manufacturer should verify the (BW) value based on additional surcharge applied from the sound wall.

NOTE:

1. For Fractured Rib Texture and Architectural Surface (Textured Concrete) details, See "Architectural Treatment Details" sheet.

DESIGN OVERSIGHT Jon Hamaguchi
11-24-09
SIGN OFF DATE

	BY	CHECKED
DESIGN	D. Sun	J. Powell
DETAILS	E. Maechler	J. Powell
QUANTITIES	Y. Chiu	L. Ros

PREPARED FOR THE STATE OF CALIFORNIA DEPARTMENT OF TRANSPORTATION

Ayman Salama
PROJECT ENGINEER

BRIDGE NO. 55E0095
POST MILE 20.21

RETAINING WALL NO. 670

TYPICAL SECTIONS

DESIGN DETAIL SHEET (ENGLISH) (REV. 2/25/05)

ORIGINAL SCALE IN INCHES FOR REDUCED PLANS 0 1 2 3

CU 12220
EA 0F0321

DISREGARD PRINTS BEARING EARLIER REVISION DATES

REVISION DATES (PRELIMINARY STAGE ONLY) 02/18/09 04/07/09 04/27/09 06/08/09

SHEET 4 OF 21

FILE => 55e0095-a-ts01.dgn

USERNAME => trmnguye DATE PLOTTED => 25-JAN-2010 TIME PLOTTED => 14:35

DIST.	COUNTY	ROUTE	POST MILES TOTAL PROJECT	SHEET NO.	TOTAL SHEETS
12	Ora	57	18.4/20.9	804	856

REGISTERED ENGINEER - CIVIL DATE 06/08/09

1-25-10
PLANS APPROVAL DATE

REGISTERED PROFESSIONAL ENGINEER C. DANIEL SUN No. 40064 Exp. 12/31/11 CIVIL STATE OF CALIFORNIA

The State of California or its officers or agents shall not be responsible for the accuracy or completeness of electronic copies of this plan sheet.

GENERAL NOTES

1. For soundwall and retaining wall architectural finish or texture, see details elsewhere in project plans.
2. For details not shown and drainage notes, see B3-8
3. Footing cover, 1'-6" minimum.
4. Limit of no splicing rebars = 3 times the bottom thickness of the stem.
5. Placement of reinforcements :
   - ⓑ & ⓒ bars are spliced together.
   - ✳ ⓐ & ⓑ bars are bundled together.
   - ✳✳ Alternate ⓐ & ⓑ bars are shown in "Detail B".
   - Cont = Continuous.
6. For Soundwall & Barrier reinforcement, see "Soundwall Masonry Block on Barriers" sheets in Standard Plans.

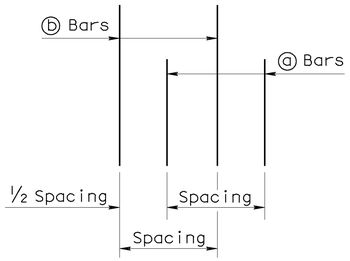

DETAIL B

No Scale

TABLE 1: TABLE OF REINFORCING STEEL DIMENSIONS AND DATA

	Stem With Haunch										
Design H	6'	8'	10'	12'	14'	16'	18'	20'	22'	24'	26'
W	7'-9"	8'-0"	8'-9"	9'-9"	10'-9"	12'-0"	13'-0"	14'-3"	15'-3"	16'-6"	18'-6"
C	2'-9"	2'-9"	3'-0"	3'-3"	3'-6"	4'-0"	4'-3"	4'-9"	5'-0"	5'-6"	6'-3"
B	5'-0"	5'-3"	5'-9"	6'-6"	7'-3"	8'-0"	8'-9"	9'-6"	10'-3"	11'-0"	12'-3"
F Spread footing	1'-3"	1'-3"	1'-3"	1'-3"	1'-3"	1'-6"	1'-6"	1'-9"	2'-0"	2'-3"	2'-9"
Batter	0	½:12	½:12	½:12	½:12	½:12	½:12	½:12	½:12	⅝:12	¾:12
Stem thickn. @ Haunch	1'-0"	1'-0"	1'-0"	1'-0"	1'-0"	1'-0"	1'-0"	1'-0"	1'-0"	1'-0"	1'-0"
ⓐ Bars				#6 @18✳✳	#7 @18✳✳	#8 @18✳✳	#9 @18✳✳	#10 @18✳✳	#8 @ 9✳	#8 @ 9✳	#7 @ 6✳
X				Cont	Cont	Cont	Cont	Cont	Cont	Cont	Cont
Y				8'-0"	6'-6"	7'-6"	8'-6"	9'-6"	9'-6"	11'-0"	11'-6"
ⓑ Bars	#5 @12	#5 @12	#5 @ 9	#6 @18✳✳	#7 @18✳✳	#8 @18✳✳	#9 @18✳✳	#10 @18✳✳	#8 @ 9✳	#8 @ 9✳	#7 @ 6✳
X	Cont	Cont	Cont	Cont	Cont	Cont	Cont	Cont	Cont	5'-6"	6'-6"
Y	Cont	Cont	Cont	Cont	10'-6"	13'-0"	15'-0"	17'-6"	19'-6"	21'-0"	18'-6"
ⓒ Bars					#6 @18	#6 @18	#6 @18	#6 @18	#6 @18	#6 @18	#6 @12
ⓓ Bars	#5 @12	#5 @12	#5 @12	#5 @ 9	#6 @ 9	#6 @ 9	#6 @ 6	#8 @ 9	#8 @ 9	#8 @ 9	#7 @ 6
Ultimate Bearing Capacity Req'd k/sf	4.6	5.5	6.1	6.6	7.3	8.1	9.0	9.9	11.3	12.2	12.5

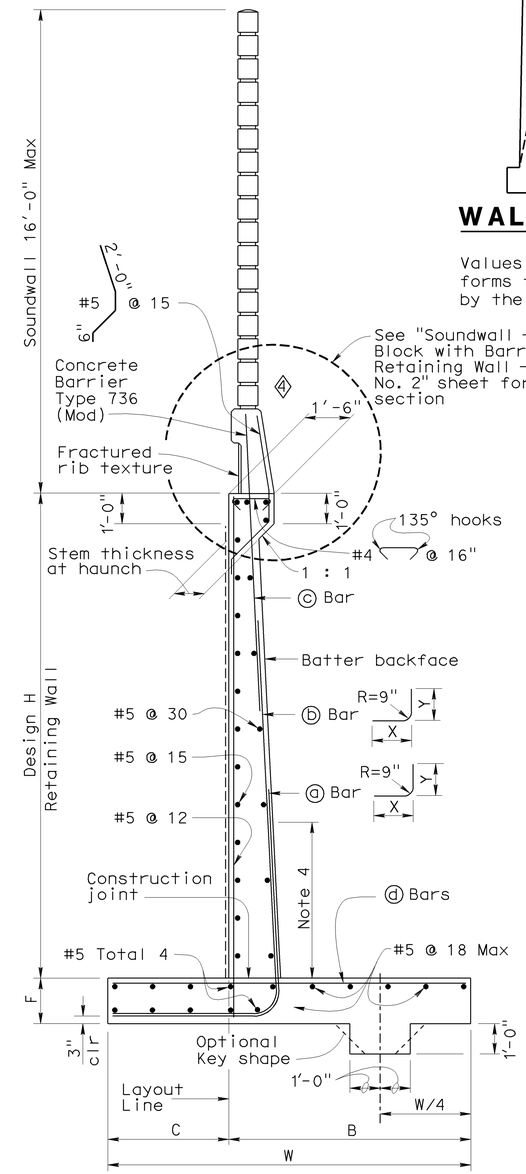

SPREAD FOOTING SECTION

No Scale

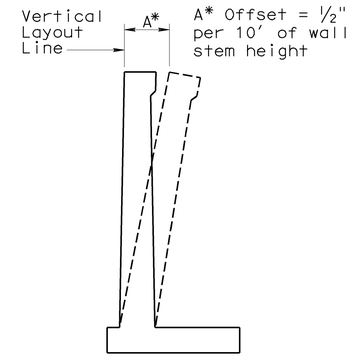

WALL OFFSET

No Scale

Values for offsetting forms to be determined by the Engineer.

DESIGN DATA

DESIGN: Load Factor Design (LFD)

CONCRETE: Reinforced Concrete, f'c = 3600 psi
fy = 60,000 psi

LOADING CASE:
Level ground with 240 psf surcharge and 16' Soundwall ◇1

Seismic Load	= 0.57 Dead Load
Wind Load	= 33 psf
Dead Load of Soundwall	= 1414 lb/ft
Dead Load of Barrier	= 372 lb/ft

SEISMIC LOAD: SOIL
Kh = 0.3g
Kv = 0.0
Kae : Mononobe-Okabe Method

SOIL: Ø = 34° γ = 120 pcf
Equivalent fluid pressure:
= 36 pcf for determination of toe pressure
= 27 pcf for determination of heel pressure

EXTERNAL STABILITY:
Group 1 : D + E + SC
Group 2 : D + E + SC + W
Group 3 : D + PYM

INTERNAL STABILITY (LFD):
Group A : βD + 1.7E + 1.7SC
Group B : βD + 1.7E + 1.3W
Group C (stem) : 1.0D + 1.0E + 1.0EQD + 1.0EQE
Group C (footing) : D + PYM

Where : β = 1.0 or 1.3 whichever controls design
D = Dead Load
E = Lateral Earth Pressure
SC = Surcharge
W = Wind load
EQD = Seismic Dead Load
EQE = Seismic Lateral Earth Pressure
PYM = Probable Yield Moment (1.3 x Nominal Yield Moment of Stem)

SPECIAL DETAILS

STANDARD DRAWING

FILE NO. xs14-220e

APPROVED BY G. WANG — RESPONSIBLE TECHNICAL SPECIALIST
APPROVAL DATE 5-19-08

RELEASED BY ROBERTO LACALLE — RESPONSIBLE OFFICE CHIEF
RELEASE DATE REVISED

◇1 Revised Seismic and Wind Loads
◇2 Removed without haunch detail

STATE OF CALIFORNIA DEPARTMENT OF TRANSPORTATION

DIVISION OF ENGINEERING SERVICES

BRIDGE NO. 55E0095
POST MILE 20.21

RETAINING WALL NO. 670
RETAINING WALL TYPE 1SWB

DS OSD 2147A (ENGLISH STANDARD DRAWING "XS" BORDER REV. 01/11/08)

ORIGINAL SCALE IN INCHES FOR REDUCED PLANS 0 1 2 3

CU 12220
EA 0F0321

DISREGARD PRINTS BEARING EARLIER REVISION DATES 02/18/09 04/07/09 04/17/09 06/08/09

REVISION DATES (PRELIMINARY STAGE ONLY)

SHEET 5 OF 21

USERNAME => trmnguye

55e0095-g-1SWB.dgn

DATE PLOTTED => 25-JAN-2010 TIME PLOTTED => 14:35

DIST	COUNTY	ROUTE	POST MILES TOTAL PROJECT	SHEET No	TOTAL SHEETS
12	Ora	57	18.4/20.9	805	856

REGISTERED CIVIL ENGINEER 06/08/09 DATE

1-25-10
PLANS APPROVAL DATE

REGISTERED PROFESSIONAL ENGINEER C. DANIEL SUN No. 40064 Exp. 12/31/09 CIVIL STATE OF CALIFORNIA

The State of California or its officers or agents shall not be responsible for the accuracy or completeness of electronic copies of this plan sheet.

OCTA
550 S. MAIN STREET
ORANGE, CA 92863

CH2M HILL
6 HUTTON CENTRE DRIVE, SUITE 700
SANTA ANA, CA 92707

WELDED WIRE MAT SCHEDULE (LOADING CASE 1)

MAXIMUM HEIGHT	10	12.5	15	17.5	20	22.5	25
MINIMUM BASE WIDTH	8	9	11	12	14	16	18
TOP LEVELS OF MESH OVER	2 @ W11 x W11 + 6" x 9" 2 @ W11 x W11 + 6" x 12"	2 @ W11 x W11 + 6" x 9" 2 @ W11 x W11 + 6" x 12" 1 @ W11 x W11 + 6" x 18"	2 @ W11 x W11 + 6" x 9" 2 @ W11 x W11 + 6" x 12" 1 @ W11 x W11 + 6" x 18" 1 @ W11 x W11 + 6" x 24"	2 @ W11 x W11 + 6" x 9" 2 @ W11 x W11 + 6" x 12" 1 @ W11 x W11 + 6" x 18" 2 @ W11 x W11 + 6" x 24"	2 @ W11 x W11 + 6" x 9" 3 @ W11 x W11 + 6" x 18" 3 @ W11 x W11 + 6" x 24"	5 @ W11 x W11 + 6" x 18" 4 @ W11 x W11 + 6" x 24"	5 @ W11 x W11 + 6" x 18" 5 @ W11 x W11 + 6" x 24"

LEGEND:

2 @ W11 x W11 + 6" x 9"

- 6" x 9" — Longitudinal wire spacing X Transverse wire spacing
- W11 x W11 — Longitudinal wire size X Transverse wire size
- 2 — Number of welded wire mats per level for a full length panel with 5' nominal height.

RETAINING WALL ELEVATIONS

RW NO. 670 LOL STA	TOP OF WALL ELEV	FG ELEV	TOP OF SW ELEV
10+00	356.99	355.52	369.32
10+10	357.24	355.56	369.57
10+20	357.50	355.61	369.83
10+30	357.77	355.66	370.10
10+40	358.03	355.71	370.36
10+50	358.30	355.75	370.63
10+60	358.57	355.86	370.90
10+70	358.83	355.95	371.16
10+80	359.10	355.95	371.43
10+90	359.38	355.94	371.71
11+00	359.64	355.94	371.97
11+10	359.92	355.93	372.25
11+20	360.19	355.93	372.52
11+30	360.47	356.09	372.80
11+40	360.75	356.36	373.08
11+50	361.03	356.63	373.36
11+60	361.31	356.90	373.64
11+70	361.59	357.18	373.92
11+80	361.87	357.38	374.20
11+90	362.16	357.58	374.49
12+00	362.44	357.78	374.77
12+10	362.73	357.92	375.06
12+20	363.02	357.95	375.35
12+30	363.30	358.07	375.63
12+40	363.59	358.22	375.92
12+50	363.87	358.38	376.20
12+60	364.15	358.54	376.48
12+70	364.44	358.68	376.77
12+80	364.72	358.66	377.05
12+90	365.01	358.77	377.34

RW NO. 670 LOL STA	TOP OF WALL ELEV	FG ELEV	TOP OF SW ELEV
13+00	365.29	358.87	377.62
13+10	365.57	358.81	377.90
13+20	365.86	358.76	378.19
13+30	366.14	358.74	378.47
13+40	366.42	358.72	378.75
13+50	366.71	358.69	379.04
13+60	367.01	358.65	378.68
13+70	367.30	358.53	378.97
13+80	367.61	358.31	379.28
13+90	367.92	358.08	379.59
14+00	368.24	358.07	379.91
14+10	368.57	358.13	380.24
14+20	368.90	358.48	380.57
14+30	369.24	358.98	380.91
14+40	369.58	359.10	381.25
14+50	369.93	359.03	381.60
14+60	370.29	359.00	381.96
14+70	370.65	359.12	382.32
14+80	371.03	359.23	382.70
14+90	371.41	359.51	383.08
15+00	371.79	359.84	383.46
15+10	372.18	360.14	383.85
15+20	372.58	360.46	384.25
15+30	372.98	360.79	384.65
15+40	373.39	361.13	385.06
15+50	373.80	361.52	385.47
15+60	374.20	361.90	385.20
15+70	374.61	362.27	385.61
15+80	375.00	362.64	386.00
15+90	375.39	363.02	386.39

RW NO. 670 LOL STA	TOP OF WALL ELEV	FG ELEV	TOP OF SW ELEV
16+00	375.77	363.41	386.77
16+10	376.14	363.78	387.14
16+20	376.52	364.12	387.52
16+30	376.87	364.46	387.87
16+40	377.21	364.82	388.21
16+50	377.56	365.05	388.56
16+60	377.89	365.26	388.89
16+70	378.22	365.47	389.22
16+80	378.54	365.69	389.54
16+90	378.86	365.86	389.86
17+00	379.17	366.00	390.17
17+10	379.47	366.14	390.47
17+20	379.77	366.29	390.77
17+30	380.06	366.44	391.06
17+40	380.35	366.60	391.35
17+50	380.63	366.77	391.63
17+60	380.89	366.94	391.89
17+70	381.15	367.26	392.15
17+80	381.41	367.58	392.41
17+90	381.66	367.90	392.66
18+00	381.90	368.24	392.90
18+10	382.15	368.58	393.15
18+20	382.40	368.93	393.40
18+30	382.64	369.29	393.64
18+40	382.89	369.66	393.89
18+50	383.13	370.03	394.13
18+60	383.38	370.42	394.38
18+70	383.63	370.81	394.63
18+80	383.87	371.20	394.87
18+90	384.12	371.25	395.12

RW NO. 670 LOL STA	TOP OF WALL ELEV	FG ELEV	TOP OF SW ELEV
19+00	384.36	371.26	395.36
19+10	384.61	370.83	395.61
19+20	384.86	369.39	395.86
19+30	385.10	366.78	396.10

DESIGN OVERSIGHT Jon Hamaguchi
11-24-09
SIGN OFF DATE

	BY	CHECKED
DESIGN	D. Sun	J. Powell
DETAILS	E. Maechler	J. Powell
QUANTITIES	Y. Chiu	L. Ros

PREPARED FOR THE STATE OF CALIFORNIA DEPARTMENT OF TRANSPORTATION

Ayman Salama
PROJECT ENGINEER

BRIDGE NO. 55E0095
POST MILE 20.21

RETAINING WALL NO. 670
RETAINING WALL DETAILS No. 1

DESIGN DETAIL SHEET (ENGLISH) (REV. 2/25/05)

ORIGINAL SCALE IN INCHES FOR REDUCED PLANS 0 1 2 3

CU 12220
EA 0F0321

DISREGARD PRINTS BEARING EARLIER REVISION DATES

REVISION DATES (PRELIMINARY STAGE ONLY) 02/18/09 04/07/09 04/17/09 06/08/09

SHEET 6 OF 21

FILE => 55e0095-g-det01.dgn

USERNAME => trmnguye DATE PLOTTED => 25-JAN-2010 TIME PLOTTED => 14:35

DIST	COUNTY	ROUTE	POST MILES TOTAL PROJECT	SHEET No	TOTAL SHEETS
12	Ora	57	18.4/20.9	806	856

REGISTERED CIVIL ENGINEER — DATE 06/08/09

1-25-10
PLANS APPROVAL DATE

REGISTERED PROFESSIONAL ENGINEER — MOHAMMED ATIQULLAH — No. C47027 — Exp. 12/31/09 — CIVIL — STATE OF CALIFORNIA

The State of California or its officers or agents shall not be responsible for the accuracy or completeness of electronic copies of this plan sheet.

OCTA
550 S. MAIN STREET
ORANGE, CA 92863

CH2M HILL
6 HUTTON CENTRE DRIVE, SUITE 700
SANTA ANA, CA 92707

TABLE OF PILE SPACING: 16" CIDH - CONCRETE PILES	
Design H	16′
W	14′-0"
C	8′-0"
B	6′-0"
F	3′-0"
M	6′-0"
N	4′-0"
Configuration	I

TABLE 1: TABLE OF REINFORCING STEEL DIMENSIONS AND DATA	STEM WITH HAUNCH
Design H	16′
Stem Batter	½:12
Stem Thickness @ Top	1′-6"
Stem Thickness @ Haunch	1′-0"
ⓐ Bars	#8 @ 18**
X	Cont
Y	7′-6"
ⓑ Bars	#8 @ 18**
X	Cont
Y	13′-0"
ⓒ Bars	#6 @ 18
ⓓ Bars	#5 @ 12
Total ⓔ Bars	8 #5
Total ⓕ Bars	8 #5

Cont = Continuous

* = Ⓐ and Ⓑ Bars are bundled together.

** = Alternate Ⓐ and Ⓑ Bars as shown in Detail A.

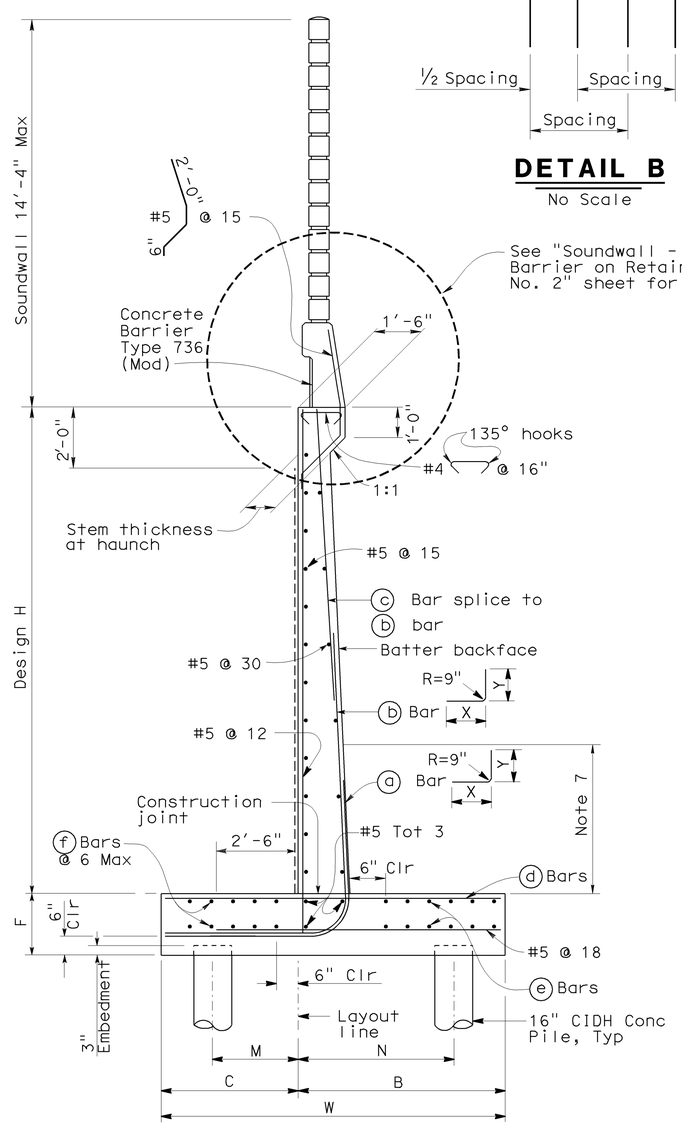

16" CIDH CONCRETE PILE FOOTING SECTION

No Scale

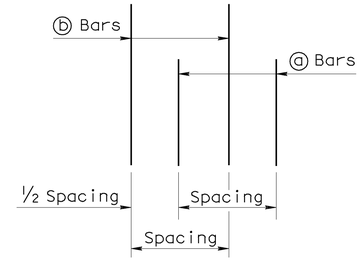

DETAIL B

No Scale

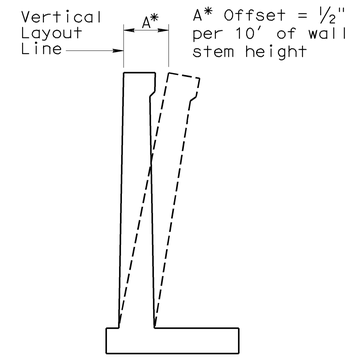

WALL OFFSET

No Scale

Values for offsetting forms to be determined by the Engineer.

GENERAL NOTES

1. 16" CIDH-CONCRETE PILES WERE USED FOR THE DESIGN.
2. MINIMUM DISTANCE BETWEEN CENTER PILE AND EDGE OF FOOTING IS 1′-6".
3. REDUCTION FACTORS:
   GROUPS A & B : Ø = 0.75
   GROUP C & X1: Ø = 1.0
4. LATERAL RESISTANCE OF EACH PILE:
   GROUPS A & B : = 30 kip
   GROUP C & X1: = 40 kip
5. MAXIMUM SPACING BETWEEN PILES IS SHOWN IN THE TABLE. REDUCE TO SUIT THE LENGTH OF FOOTING.
6. MINIMUM DISTANCE BETWEEN ANY TWO PILES IS 4′-0".
7. LIMIT OF NO SPLICING FOR REBARS = 3 TIMES THE BOTTOM THICKNESS OF STEM.
8. FOR SOUNDWALL AND RETAINING WALL ARCHITECTURAL FINISH OR TEXTURE, SEE DETAILS ELSEWHERE IN PROJECT PLANS.
9. FOR DETAILS NOT SHOWN AND DRAINAGE NOTES, SEE (B3-8).
10. FOOTING COVER, 1′-6" MINIMUM.
11. PLACEMENT OF REINFORCEMENTS :
    Ⓑ & Ⓒ BARS ARE SPLICED TOGETHER.
    * Ⓐ & Ⓑ BARS ARE BUNDLED TOGETHER.
    ** ALTERNATE Ⓐ & Ⓑ BARS ARE SHOWN IN "DETAIL B".
    Cont = CONTINUOUS.
12. FOR SOUNDWALL & BARRIER REINFORCEMENT, SEE "SOUNDWALL MASONRY BLOCK ON BARRIERS" SHEETS IN STANDARD PLANS.

DESIGN DATA

DESIGN: LOAD FACTOR DESIGN (LFD)

CONCRETE: REINFORCED CONCRETE, f′c = 3600 psi
fy = 60000 psi

LOADING CASE:

LEVEL GROUND WITH 240 psf LIVE LOAD SURCHARGE AND 14′-4" SOUNDWALL.
SEISMIC LOAD = 0.57 DEAD LOAD
WIND LOAD = 33 psf
DEAD LOAD OF SOUNDWALL = 997 lb/lf
DEAD LOAD OF BARRIER = 470 lb/lf

SEISMIC LOAD: SOIL

Kh = 0.3g
Kv = 0.0
Kae : MONONOBE-OKABE METHOD

SOIL: 0 = 34° γ = 120 pcf

EQUIVALENT FLUID PRESSURE:
= 36 pcf FOR DETERMINATION OF TOE PRESSURE
= 27 pcf FOR DETERMINATION OF HEEL PRESSURE

LOAD COMBINATIONS:

GROUP A : βD+1.7E+1.7SC
GROUP B : βD+1.7E+1.7SC+W
GROUP C :
STEM : 1.0D+1.0E+1.0EQD+1.0EQE
FOOTING : D+PYM
GROUP X1: 1.3E+1.3SC+1.0CT
WHERE : β = 1.0 OR 1.3 WHICHEVER CONTROLS DESIGN
D = DEAD LOAD
E = LATERAL EARTH PRESSURE
SC = SURCHARGE
W = WIND LOAD
EQD = SEISMIC DEAD LOAD
EQE = SEISMIC LATERAL EARTH PRESSURE
PYM = PROBABLE YIELD MOMENT (1.3* NOMINAL YIELD MOMENT OF STEM)
CT = TRUCK COLLISION

DESIGN OVERSIGHT — Jon Hamaguchi
11-24-09
SIGN OFF DATE

	BY	CHECKED
DESIGN	M. Atiqullah / E. Cutler	J. Powell
DETAILS	M. Atiqullah / E. Cutler	J. Powell
QUANTITIES	Y. Chiu	L. Ros

PREPARED FOR THE STATE OF CALIFORNIA DEPARTMENT OF TRANSPORTATION

Ayman Salama
PROJECT ENGINEER

BRIDGE NO. 55E0095
POST MILE 20.21

RETAINING WALL NO. 670
RETAINING WALL DETAILS No 2

DESIGN DETAIL SHEET (ENGLISH) (REV. 2/25/05)

ORIGINAL SCALE IN INCHES FOR REDUCED PLANS 0 1 2 3

CU 12220
EA 0F0321

DISREGARD PRINTS BEARING EARLIER REVISION DATES

REVISION DATES (PRELIMINARY STAGE ONLY) 02/18/09 04/07/09 04/17/09 06/08/09

SHEET 7 OF 21

FILE => 55e0095-g-det02.dgn

USERNAME => trmnguye DATE PLOTTED => 25-JAN-2010 TIME PLOTTED => 14:35

DIST.	COUNTY	ROUTE	POST MILES TOTAL PROJECT	SHEET NO.	TOTAL SHEETS
12	Ora	57	18.4/20.9	807	856

REGISTERED ENGINEER - CIVIL DATE 06/08/09

1-25-10
PLANS APPROVAL DATE

REGISTERED PROFESSIONAL ENGINEER C. DANIEL SUN No. 40064 Exp. 12/31/11 CIVIL STATE OF CALIFORNIA

The State of California or its officers or agents shall not be responsible for the accuracy or completeness of electronic copies of this plan sheet.

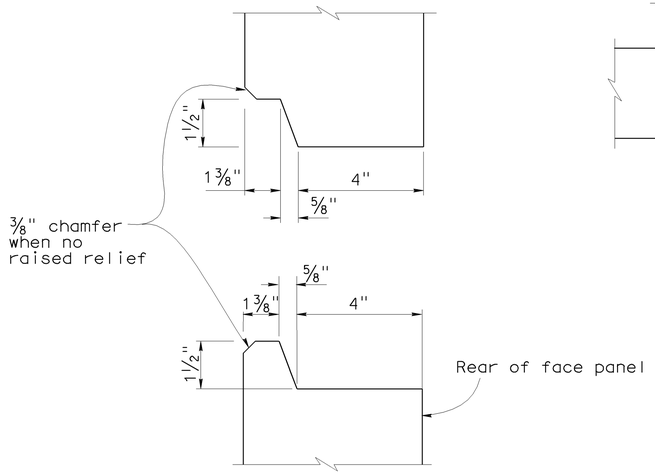

HORIZONTAL JOINT DETAIL
No Scale

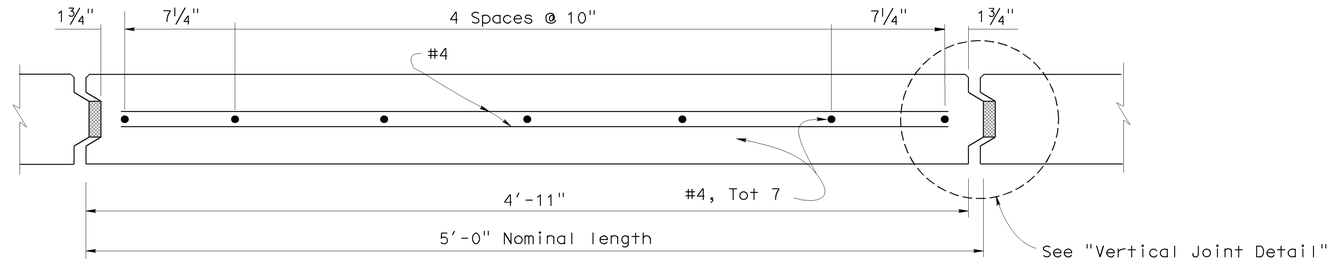

PLAN - FACE PANEL
No Scale

NOTES:

1. Architectural treatment not shown. Architectural Surface (Textured Concrete) extends beyond face of panel. See Architectural Treatment Details" sheet.
2. Place reinforced elastomeric bearing pads in all of the panel joints between the panels. Place one in each vertical joint where the horizontal joint intersects it. Place two per panel in each horizontal joint.
   3/4" x 2 3/8" x 6" for vertical joints
   3/4" x 4" x 6" for horizontal joints.
3. Bond a strip of filter fabric, 1' - 0" wide, over the full length of all panel joints.

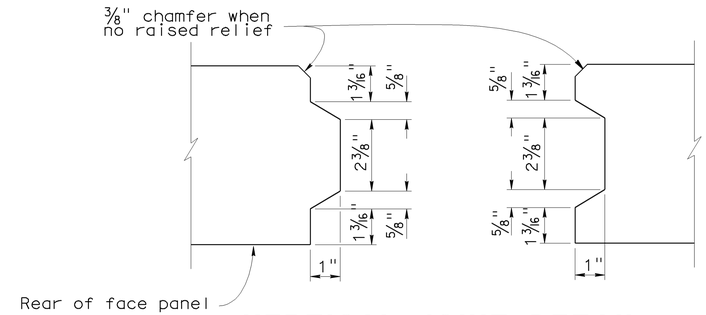

VERTICAL JOINT DETAIL
No Scale

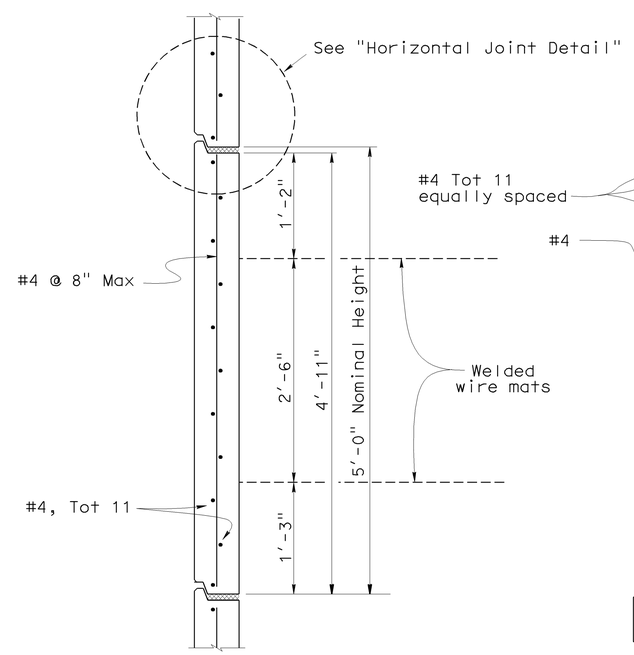

INTERMEDIATE PANEL
No Scale

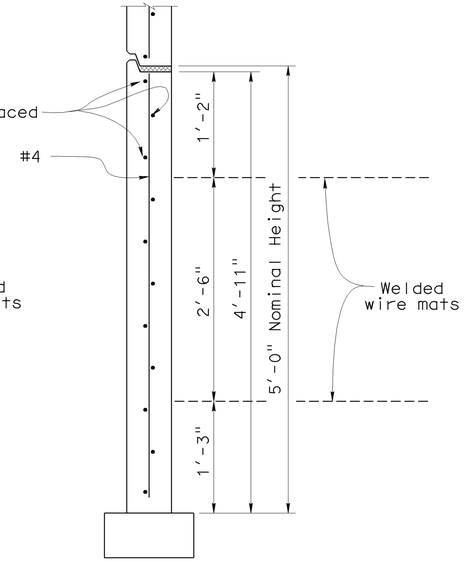

BOTTOM PANEL
No Scale

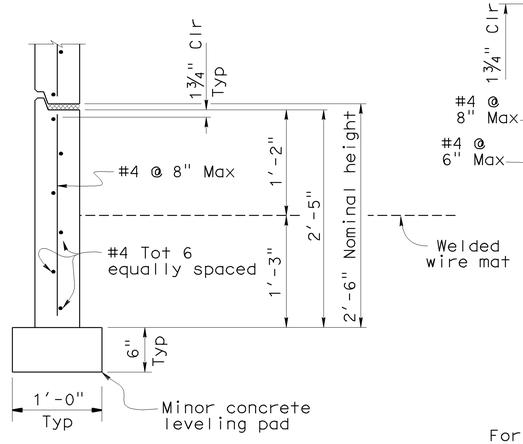

BOTTOM HALF PANEL
No Scale

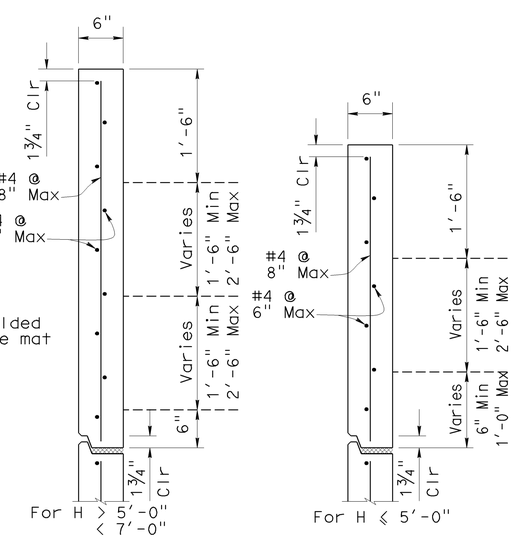

TOP PANEL
No Scale

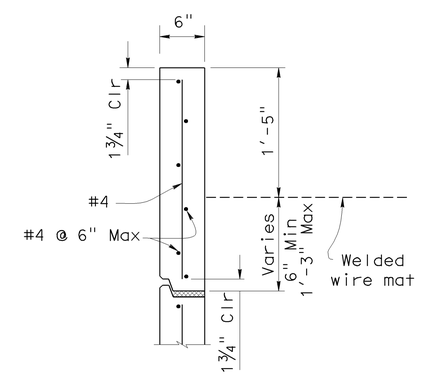

TOP HALF PANEL
No Scale

SPECIAL DETAILS

STANDARD DRAWING

FILE NO. xs13-020-1e

APPROVED BY K. GRISWELL — RESPONSIBLE TECHNICAL SPECIALIST
APPROVAL DATE 5-6-08

RELEASED BY ROBERTO LACALLE — RESPONSIBLE OFFICE CHIEF
RELEASE DATE REVISED

1 Added Top Panel Details
2 Revised Note

STATE OF CALIFORNIA DEPARTMENT OF TRANSPORTATION

DIVISION OF ENGINEERING SERVICES

BRIDGE NO. 55E0095
POST MILE 20.21

RETAINING WALL NO. 670
MECHANICALLY STABILIZED EMBANKMENT
DETAIL NO. 1

DS OSD 2147A (ENGLISH STANDARD DRAWING "XS" BORDER REV. 01/11/08)

ORIGINAL SCALE IN INCHES FOR REDUCED PLANS 0 1 2 3

CU 12220
EA 0F0321

DISREGARD PRINTS BEARING EARLIER REVISION DATES

REVISION DATES (PRELIMINARY STAGE ONLY) 02/18/09 04/07/09 04/17/09 06/08/09

SHEET 8 OF 21

USERNAME => trmnguye

55e0095-g-msedt01.dgn

DATE PLOTTED => 25-JAN-2010 TIME PLOTTED => 14:35

DIST.	COUNTY	ROUTE	POST MILES TOTAL PROJECT	SHEET NO.	TOTAL SHEETS
12	Ora	57	18.4/20.9	808	856

C. Daniel Sun 06/08/09
REGISTERED ENGINEER - CIVIL DATE

1-25-10
PLANS APPROVAL DATE

REGISTERED PROFESSIONAL ENGINEER
C. DANIEL SUN
No. 40064
Exp. 12/31/11
CIVIL
STATE OF CALIFORNIA

The State of California or its officers or agents shall not be responsible for the accuracy or completeness of electronic copies of this plan sheet.

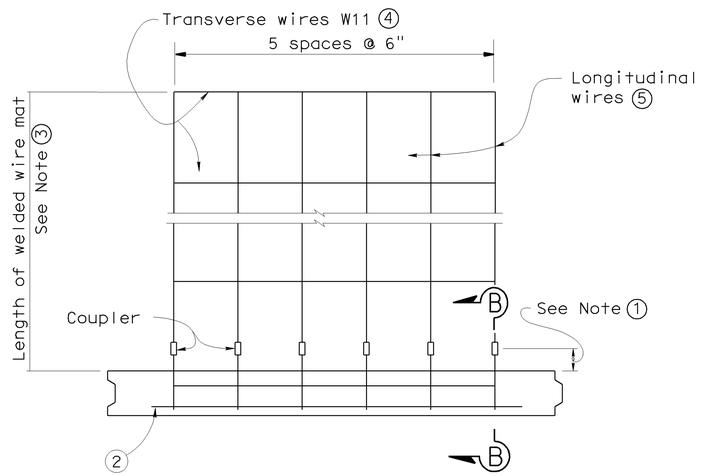

PLAN OF PANEL WITH WELDED WIRE MAT

No scale

GENERAL NOTES (MSE WALLS)

Live loading: Surcharge = 240 lb/ft^2

Soil parameters:

Internal design ϕ = 34°, γ = 120 lb/ft^3
External design ϕ(Backfill) = 34°, γ = 120 lb/ft^3
ϕ(Foundation) = 30°

Precast concrete panels:

f′c = 4,000 psi (Concrete compressive strength at 28 days)
fy = 60,000 psi (Yield strength of reinforcement)

Soil reinforcement:

Welded wire mats: fy = 65,000 psi (Yield strength)
Coupler: fy = 36,000 psi (Yield strength)
Corrosion rate = 1.1 mils/year

Reinforced concrete:

f′c = 3,600 psi, except as noted
(Concrete compressive strength at 28 days)

fy = 60,000 psi (Yield strength of reinforcement)

MSE = Mechanically stabilized embankment

NOTES:

① Distance as required to permit coupler to be swaged.

② Place #4 bar, 3′ - 2" long, centered on connector mat, but not welded to it.

③ Length equals "Base width" of wall, except it shall not be less than 16′ for the top 2 levels of mats at the top of the wall.

④ All Transverse Wires size W11 at various spacings as shown elsewhere in plans.

⑤ All Longitudinal Wires at 6" spacing, of various sizes, as shown elsewhere in plans.

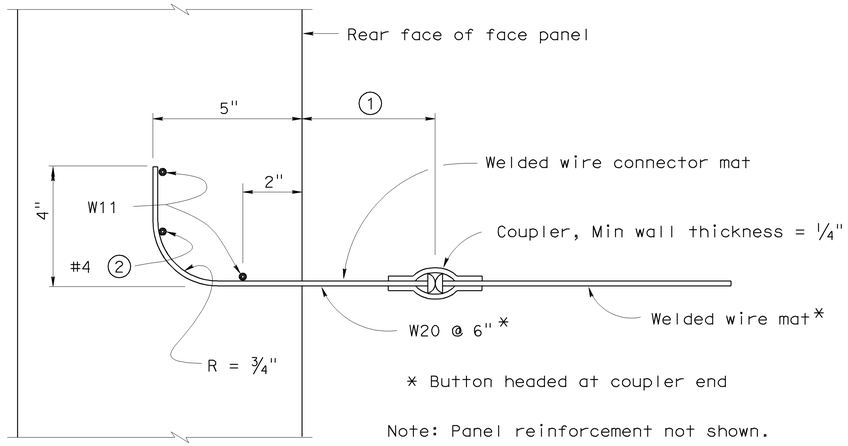

SECTION B-B

No scale

STANDARD DRAWING

FILE NO. xs13-020-2e

APPROVED BY K. GRISWELL
RESPONSIBLE TECHNICAL SPECIALIST
APPROVAL DATE 5-6-08

RELEASED BY ROBERTO LACALLE
RESPONSIBLE OFFICE CHIEF
RELEASE DATE 5-6-08

STATE OF CALIFORNIA
DEPARTMENT OF TRANSPORTATION

DIVISION OF ENGINEERING SERVICES

BRIDGE NO. 55E0095
POST MILE 20.21

RETAINING WALL NO. 670
MECHANICALLY STABILIZED EMBANKMENT
DETAIL NO. 2

DS OSD 2147A (ENGLISH STANDARD DRAWING "XS" BORDER REV. 01/11/08)

ORIGINAL SCALE IN INCHES FOR REDUCED PLANS 0 1 2 3

CU 12220
EA 0F0321

DISREGARD PRINTS BEARING EARLIER REVISION DATES

REVISION DATES (PRELIMINARY STAGE ONLY) 02/18/09 04/07/09 04/17/09 06/08/09

SHEET 9 OF 21

USERNAME => trmnguye

55e0095-g-msedt02.dgn

DATE PLOTTED => 25-JAN-2010 TIME PLOTTED => 14:35

DIST.	COUNTY	ROUTE	POST MILES TOTAL PROJECT	SHEET NO.	TOTAL SHEETS
12	Ora	57	18.4/20.9	809	856

REGISTERED ENGINEER - CIVIL DATE 06/08/09

1-25-10
PLANS APPROVAL DATE

REGISTERED PROFESSIONAL ENGINEER C. DANIEL SUN No. 40064 Exp. 12/31/11 CIVIL STATE OF CALIFORNIA

The State of California or its officers or agents shall not be responsible for the accuracy or completeness of electronic copies of this plan sheet.

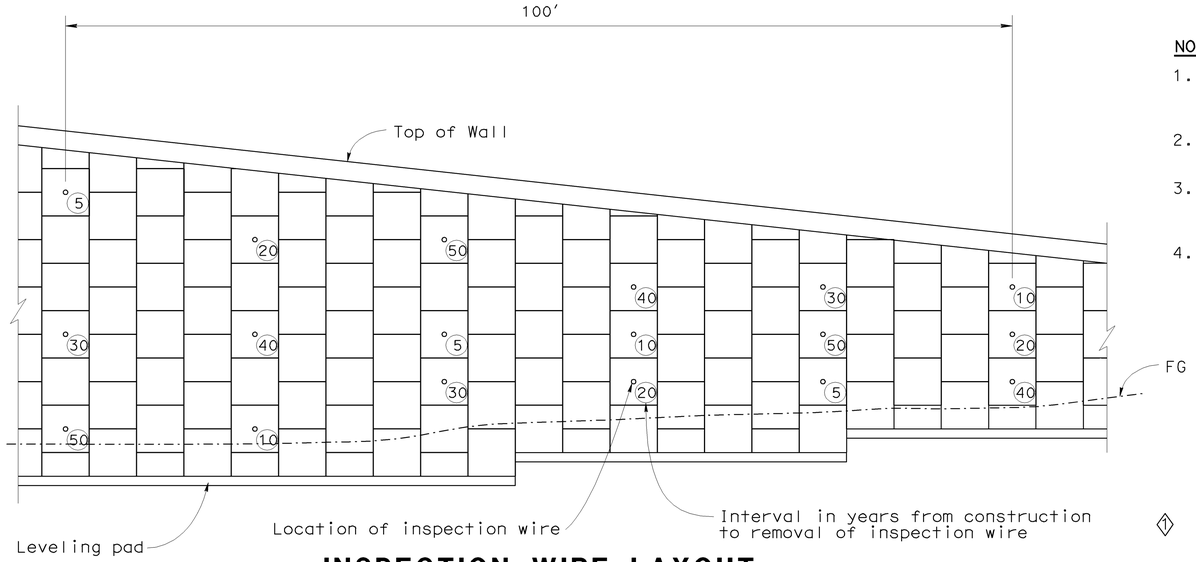

INSPECTION WIRE LAYOUT

No Scale

NOTES:

1. A set of 18 inspection wires is required for every MSE section of at least 100 feet long and a height equal to or greater than 17 feet.
2. Sets should be located approximately 500 feet apart, along the LOL.
3. Place wires in every fourth panel column along the LOL (20 feet apart) and number them according to the typical layout shown.
4. Walls which do not require a set of inspection wires based on the criteria in Note 1 shall have single level of inspection wires installed at a uniform spacing of 20 feet along this level. The location of this level shall be at the first panels above the base of the wall which will be fully exposed after completion of the wall. A minimum of 6 inspection wires shall be installed.

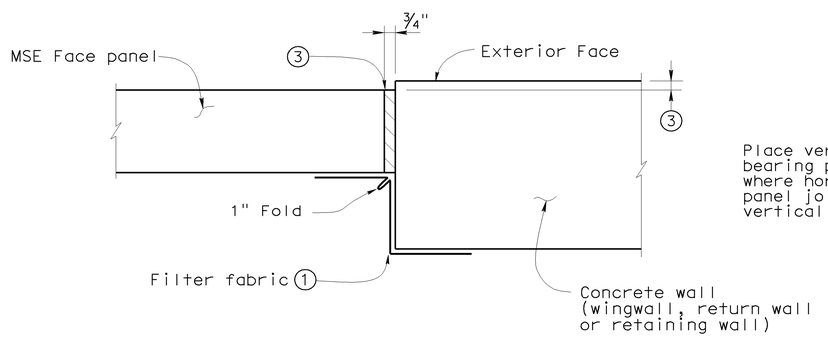

MSE FACE PANEL-TO-CONCRETE WALL JOINT DETAIL

No Scale

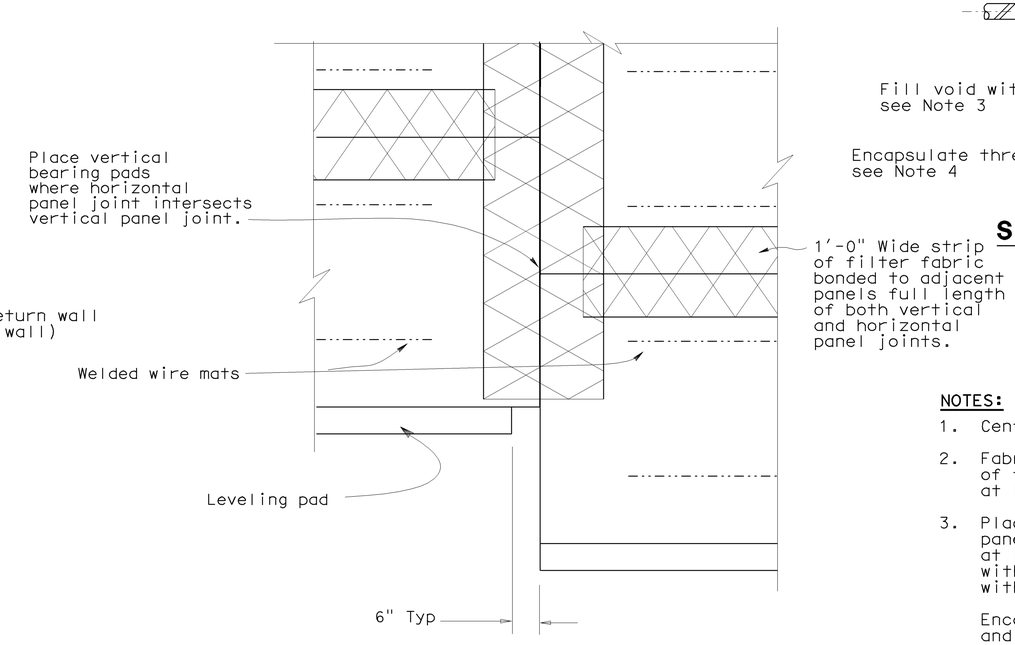

REAR ELEVATION

No Scale

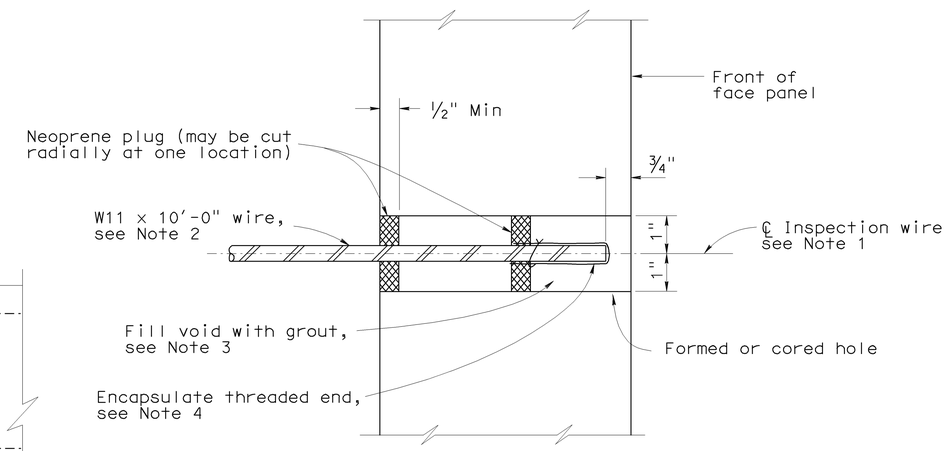

SECTION THRU INSPECTION WIRE

No Scale

LEGEND

1. Bond a strip of filter fabric, 1'-6" wide, to back of MSE panels and the adjacent concrete wall for entire length of vertical joint.
2. Bond expansion joint material to the concrete wall.
3. Offset between face of MSE face panel and face of the concrete wall as dictated by location of layout lines shown elsewhere in Project Plans.

NOTES:

1. Center inspection wire in face panel.
2. Fabricate inspection wires from W11 wire representative of the welded wire mats, with 3/8" dia - 16 UNC threads for at least 1 1/2" of one end.
3. Place inspection wire horizontal and perpendicular to the wall panel prior to backfilling. After backfill placement to a level at least 2'-0" above the inspection wire, dry pack opening with 1000 to 1500 psi mortar. Trowel mortar smooth and flush with face of panel.

   Encapsulate threaded end with corrosion inhibiting mastic, and secure round vinyl cover with nylon tie.
4. UNC = Unified coarse threads

SPECIAL DETAILS

RETAINING WALL NO. 670

MECHANICALLY STABILIZED EMBANKMENT

DETAIL NO. 3

STANDARD DRAWING

FILE NO. xs13-020-3e

APPROVED BY K. GRISWELL, RESPONSIBLE TECHNICAL SPECIALIST
APPROVAL DATE 5-6-08

RELEASED BY ROBERTO LACALLE, RESPONSIBLE OFFICE CHIEF
RELEASE DATE REVISED

1 Added Inspection Wire Layout & Notes from Bridge Design Aids 3-8

STATE OF CALIFORNIA DEPARTMENT OF TRANSPORTATION

DIVISION OF ENGINEERING SERVICES

BRIDGE NO. 55E0095
POST MILE 20.21

CU 12220
EA 0F0321

DS OSD 2147A (ENGLISH STANDARD DRAWING "XS" BORDER REV. 01/11/08)

ORIGINAL SCALE IN INCHES FOR REDUCED PLANS 0 1 2 3

DISREGARD PRINTS BEARING EARLIER REVISION DATES

REVISION DATES (PRELIMINARY STAGE ONLY) 02/18/09 04/07/09 04/17/09 06/08/09

SHEET 10 OF 21

USERNAME => trmnguye

55e0095-g-msedt03.dgn

DATE PLOTTED => 25-JAN-2010 TIME PLOTTED => 14:35

DIST.	COUNTY	ROUTE	POST MILES TOTAL PROJECT	SHEET NO.	TOTAL SHEETS
12	Ora	57	18.4/20.9	810	856

REGISTERED ENGINEER - CIVIL DATE 06/08/09

1-25-10
PLANS APPROVAL DATE

REGISTERED PROFESSIONAL ENGINEER C. DANIEL SUN No. 40064 Exp. 12/31/11 CIVIL STATE OF CALIFORNIA

The State of California or its officers or agents shall not be responsible for the accuracy or completeness of electronic copies of this plan sheet.

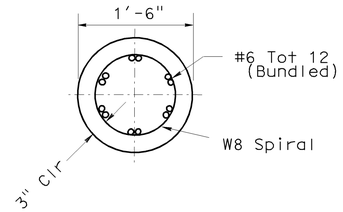

SECTION A-A
No Scale

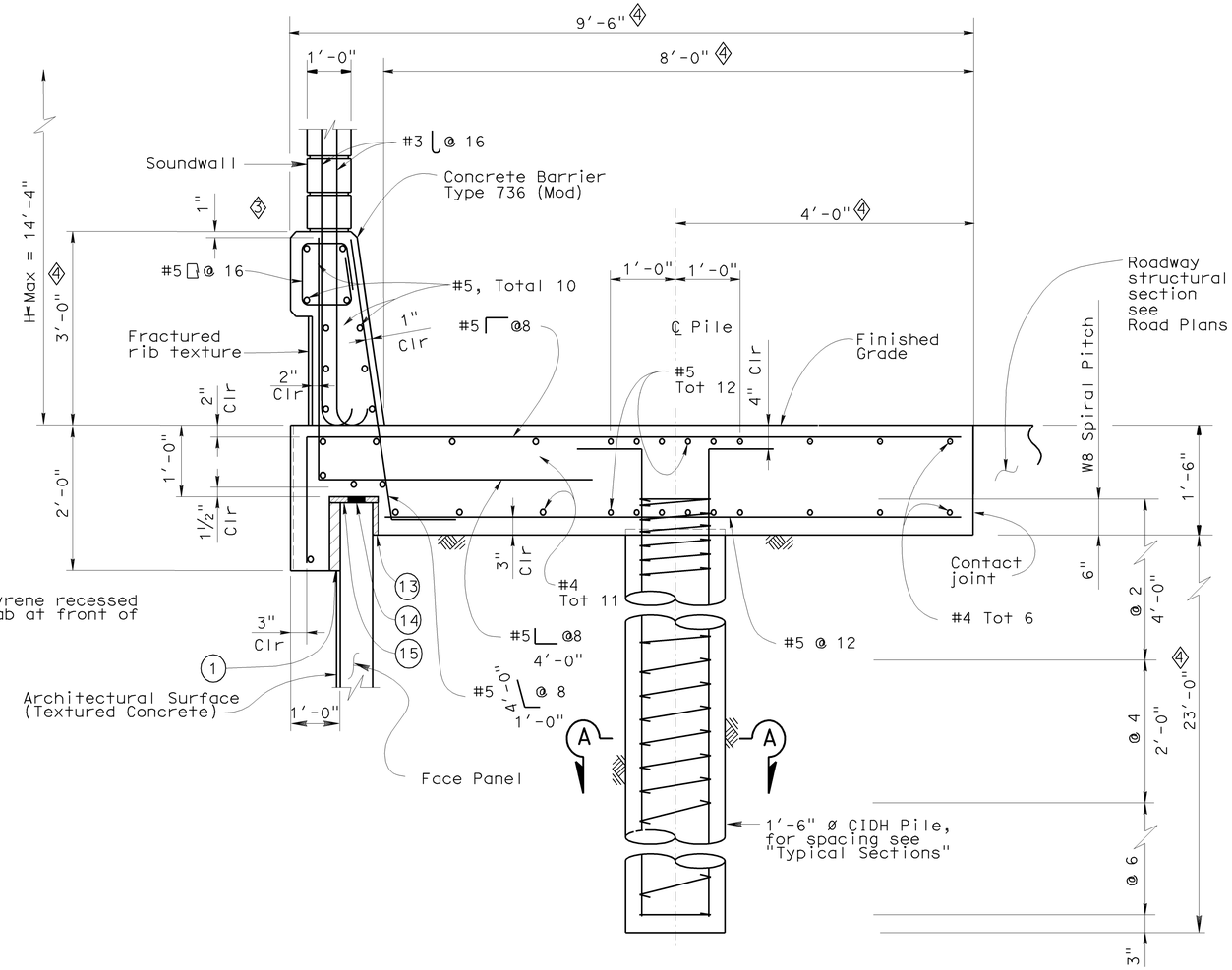

SECTION AT TOP OF WALL WITH SOUNDWALL AND CONCRETE BARRIER
No Scale

LEGEND

(1) 2" Expanded polystyrene recessed 2" into barrier slab at front of MSE face panel.

(13) 1" Expanded polystyrene.

(14) Five elastomeric bearing pads ¾" × 4" × 6" bonded to top of MSE face panel.

(15) 0.5" Expanded polystyrene.

SPECIAL DETAILS

RETAINING WALL NO. 670

MECHANICALLY STABILIZED EMBANKMENT

DETAIL NO. 5

STANDARD DRAWING

FILE NO. xs13-020-5e

APPROVED BY K. GRISWELL — RESPONSIBLE TECHNICAL SPECIALIST
APPROVAL DATE 5-6-08

RELEASED BY ROBERTO LACALLE — RESPONSIBLE OFFICE CHIEF
RELEASE DATE REVISED

1 Deleted Section
2 Deleted Notes
3 Revised Barrier
4 Revised dimension & detail

STATE OF CALIFORNIA DEPARTMENT OF TRANSPORTATION

DIVISION OF ENGINEERING SERVICES

BRIDGE NO. 55E0095
POST MILE 20.21

CU 12220
EA 0F0321

DISREGARD PRINTS BEARING EARLIER REVISION DATES 02/14/09 04/07/08 04/17/05 06/08/09

REVISION DATES (PRELIMINARY STAGE ONLY)

SHEET 11 OF 21

DS OSD 2147A (ENGLISH STANDARD DRAWING "XS" BORDER REV. 01/11/08)

ORIGINAL SCALE IN INCHES FOR REDUCED PLANS 0 1 2 3

USERNAME => trmnguye

55e0095-g-msedt05.dgn

DATE PLOTTED => 25-JAN-2010 TIME PLOTTED => 14:35

DIST.	COUNTY	ROUTE	POST MILES TOTAL PROJECT	SHEET NO.	TOTAL SHEETS
12	Ora	57	18.4/20.9	811	856

C. Daniel Sun 06/08/09
REGISTERED ENGINEER - CIVIL DATE

1-25-10
PLANS APPROVAL DATE

REGISTERED PROFESSIONAL ENGINEER C. DANIEL SUN No. 40064 Exp. 12/31/11 CIVIL STATE OF CALIFORNIA

The State of California or its officers or agents shall not be responsible for the accuracy or completeness of electronic copies of this plan sheet.

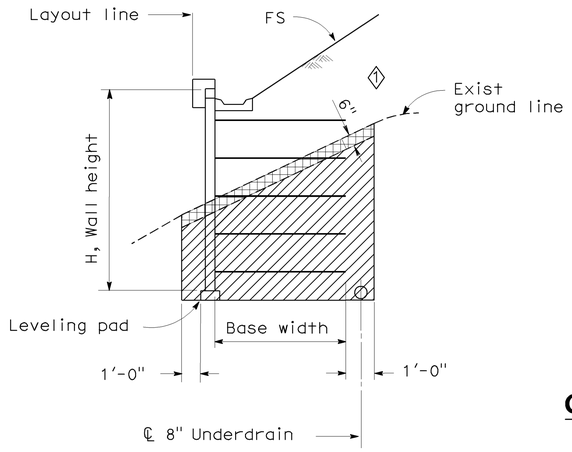

LIMITS OF EXCAVATION

No Scale

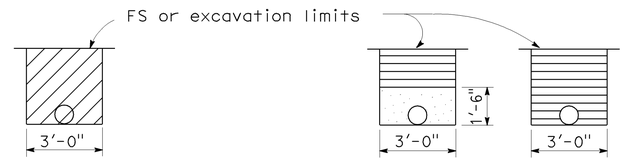

OUTLET PIPE **CLEANOUT PIPE**

EXCAVATION **BACKFILL**

OUTLET OR CLEANOUT PIPE FOR UNDERDRAIN

No Scale

ABBREVIATIONS

OG	Original ground
FS	Planned finished surface
GP	Planned grading plane

LEGEND

- Limits of structure excavation
- Limits of structure backfill
- Limits of permeable material
- 2 Indicates Structure Excavation (Type Y-1) (Aerially Deposited Lead)

NOTES:

1. Limits to FS except to GP when in roadway section.
2. Locate 8" perforated underdrain below bottom level of welded wire mats.
3. Maximum spacing of outlet pipes is 200 ft.
4. At sags in profile of underdrain, install outlet pipe for each direction of flow.

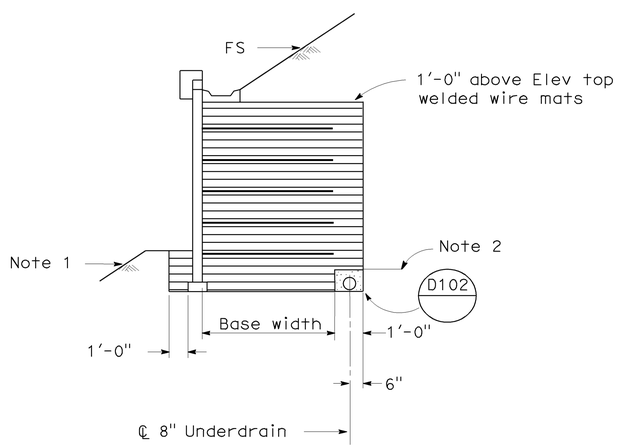

SLOPING FINISHED SURFACE

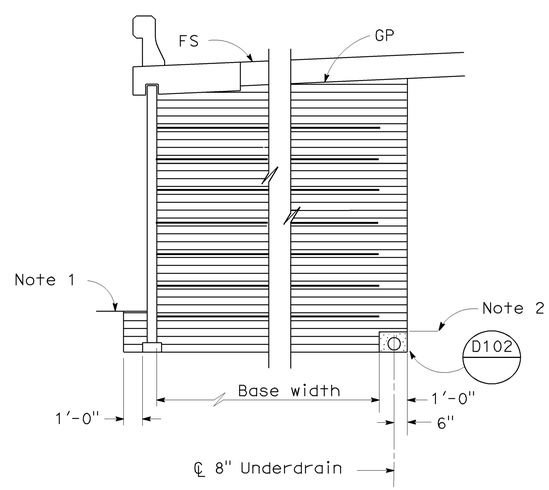

ROADWAY SECTION WITH BASE WIDTH 16' OR GREATER

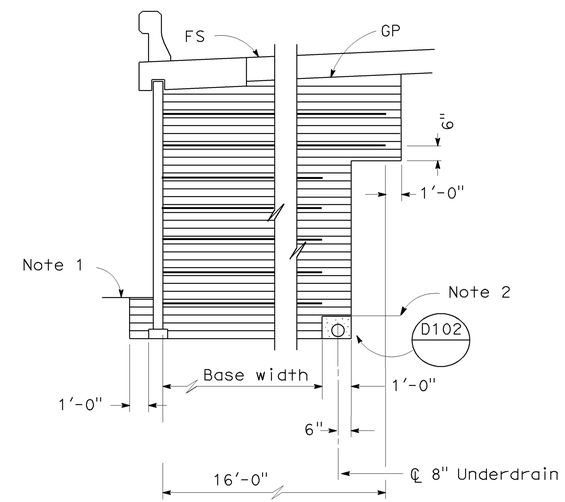

ROADWAY SECTION WITH BASE WIDTH LESS THAN 16'

LIMITS OF BACKFILL

No Scale

SPECIAL DETAILS

RETAINING WALL NO. 670

MECHANICALLY STABILIZED EMBANKMENT

DETAIL NO. 6

STANDARD DRAWING

FILE NO. xs13-020-6e

APPROVED BY K. GRISWELL RESPONSIBLE TECHNICAL SPECIALIST
APPROVAL DATE 5-6-08

RELEASED BY ROBERTO LACALLE RESPONSIBLE OFFICE CHIEF
RELEASE DATE REVISED

1 Added Limits of ADL Excavation
2 Added ADL Excavation Legend

STATE OF CALIFORNIA DEPARTMENT OF TRANSPORTATION

DIVISION OF ENGINEERING SERVICES

BRIDGE NO. 55E0095
POST MILE 20.21

DS OSD 2147A (ENGLISH STANDARD DRAWING "XS" BORDER REV. 01/11/08)

ORIGINAL SCALE IN INCHES FOR REDUCED PLANS 0 1 2 3

CU 12220
EA 0F0321

DISREGARD PRINTS BEARING EARLIER REVISION DATES

REVISION DATES (PRELIMINARY STAGE ONLY) 02/18/09 04/07/09 04/17/09 06/08/09

SHEET 12 OF 21

USERNAME => trcarol

55e0095-g-msedt06.dgn

DATE PLOTTED => 25-JAN-2010 TIME PLOTTED => 14:39

DIST	COUNTY	ROUTE	POST MILES TOTAL PROJECT	SHEET No	TOTAL SHEETS
12	Ora	57	18.4/20.9	812	856

REGISTERED CIVIL ENGINEER — DATE 06/08/09

1-25-10
PLANS APPROVAL DATE

REGISTERED PROFESSIONAL ENGINEER — MOHAMMED ATIQULLAH — No. C47027 — Exp. 12/31/09 — CIVIL — STATE OF CALIFORNIA

The State of California or its officers or agents shall not be responsible for the accuracy or completeness of electronic copies of this plan sheet.

OCTA
550 S. MAIN STREET
ORANGE, CA 92863

CH2M HILL
6 HUTTON CENTRE DRIVE, SUITE 700
SANTA ANA, CA 92707

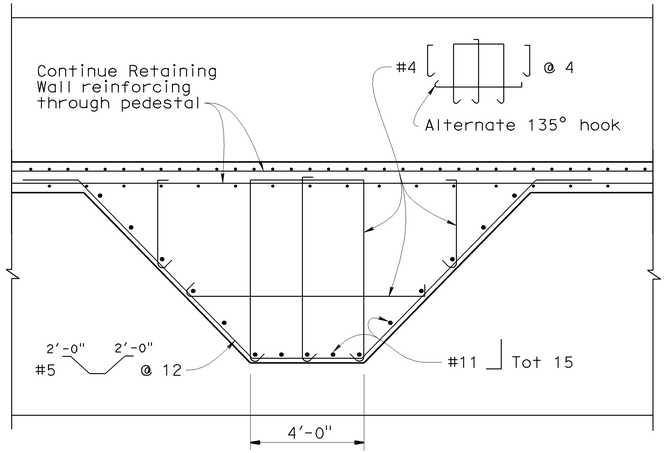

SECTION B-B
3/8"=1'-0"

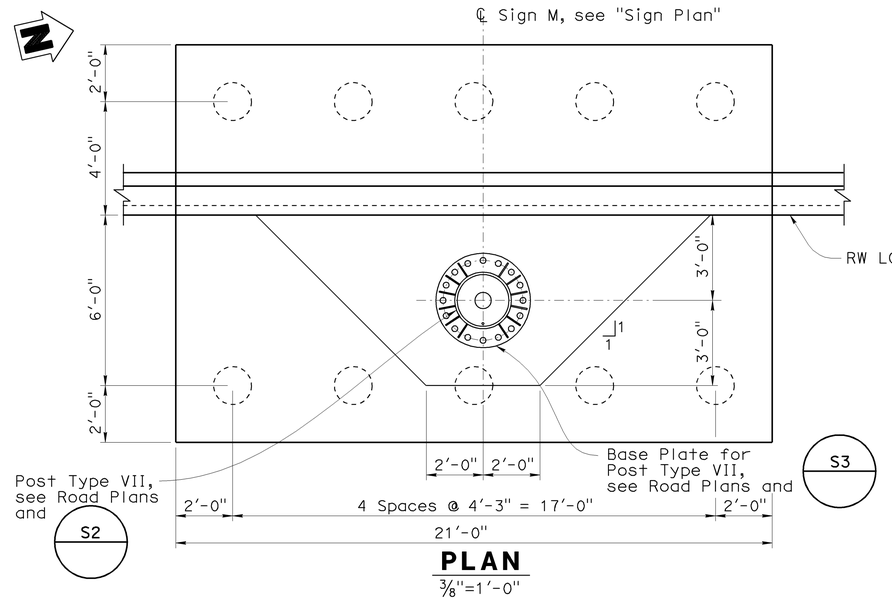

PLAN
3/8"=1'-0"

PILE DATA TABLE

Location	Pile Type	Nominal Resistance (kips)		Design Tip Elevation (ft)	Specified Tip Elevation (ft)
		Compression	Tension		
Sta 15+14.00 to 15+35.00	16" CIDH Conc Pile	180	0	325.00 (a) 335.50 (c) 335.50 (d)	325.00

Design Tip Elevation is controlled by following demand:
(a) Compression; (c) Settlement; (d) Lateral Capacity.

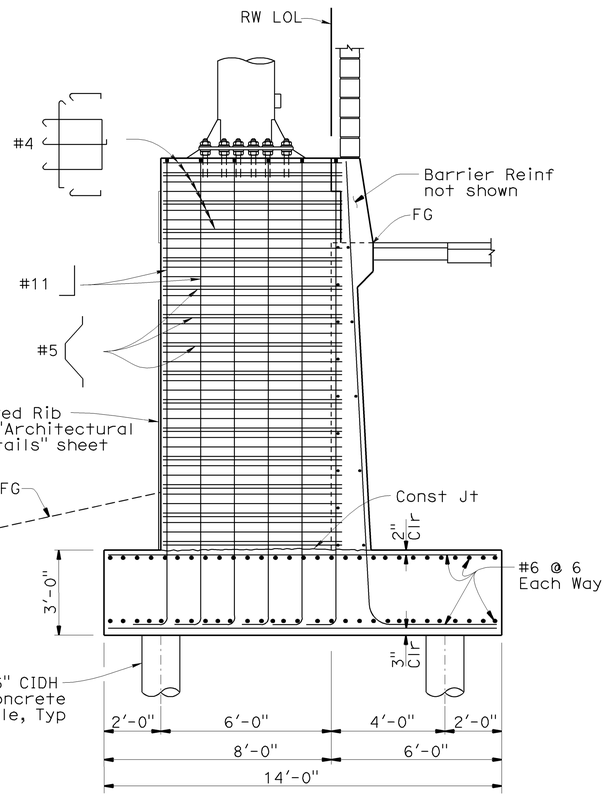

SECTION A-A
3/8"=1'-0"

Note:
Soundwall vertical reinforcement not shown.

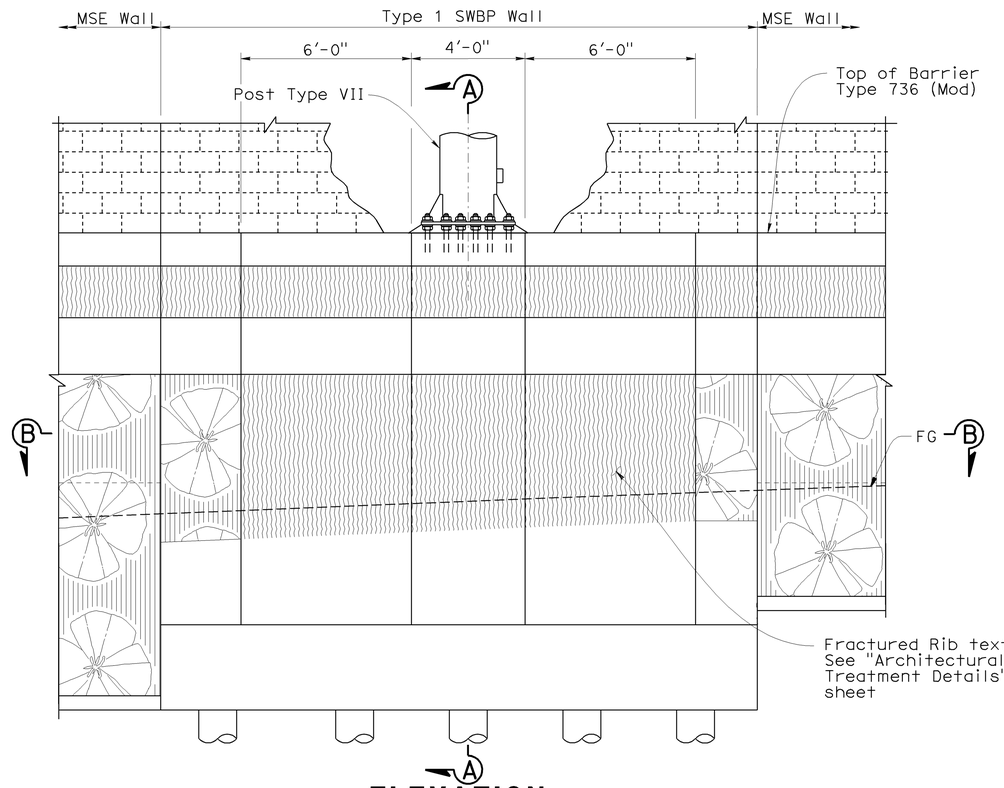

ELEVATION
3/8"=1'-0"

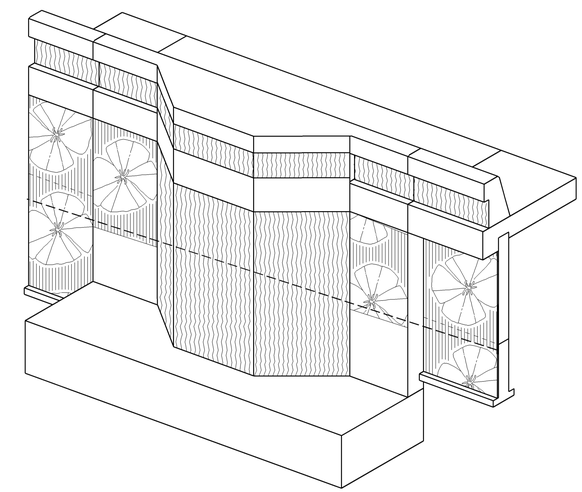

ISOMETRIC VIEW
No Scale

NOTES:

1. For information not shown, see "Typical Sections" and "Retaining Wall Detail No. 2" sheets.
2. Reinforcement shown on Sections A-A and B-B shall only apply at overhead sign foundation. All other reinforcement, see "Retaining Wall Detail No. 2" sheets.

DESIGN OVERSIGHT — Jon Hanaguchi
11-24-09
SIGN OFF DATE

	BY	CHECKED
DESIGN	M. Atiqullah / E. Cutler	J. Powell
DETAILS	M. Atiqullah / E. Cutler	J. Powell
QUANTITIES	Y. Chiu	L. Ros

PREPARED FOR THE STATE OF CALIFORNIA DEPARTMENT OF TRANSPORTATION

Ayman Salama
PROJECT ENGINEER

BRIDGE NO. 55E0095
POST MILE 20.21

RETAINING WALL NO. 670
OVERHEAD SIGN PEDESTAL DETAILS

DESIGN DETAIL SHEET (ENGLISH) (REV. 2/25/05)

ORIGINAL SCALE IN INCHES FOR REDUCED PLANS 0 1 2 3

CU 12220
EA 0F0321

DISREGARD PRINTS BEARING EARLIER REVISION DATES
REVISION DATES (PRELIMINARY STAGE ONLY) 02/18/09 04/07/09 04/17/09 06/08/09

SHEET 13 OF 21

FILE => 55e0095-g-ssdt01.dgn

USERNAME => trcarol DATE PLOTTED => 25-JAN-2010 TIME PLOTTED => 14:39

DIST.	COUNTY	ROUTE	POST MILES TOTAL PROJECT	SHEET NO.	TOTAL SHEETS
12	Ora	57	18.4/20.9	813	856

REGISTERED ENGINEER - CIVIL DATE 06/08/09

1-25-10
PLANS APPROVAL DATE

REGISTERED PROFESSIONAL ENGINEER C. DANIEL SUN No. 40064 Exp. 12/31/11 CIVIL STATE OF CALIFORNIA

The State of California or its officers or agents shall not be responsible for the accuracy or completeness of electronic copies of this plan sheet.

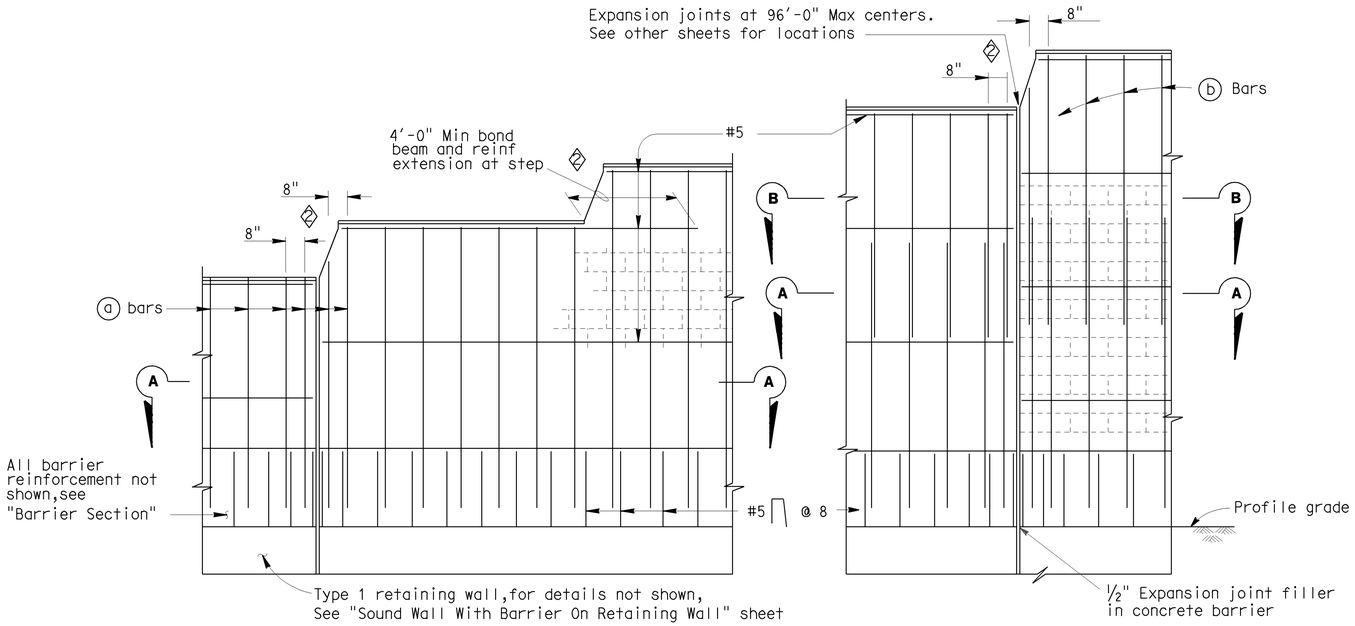

PART ELEVATIONS

No Scale

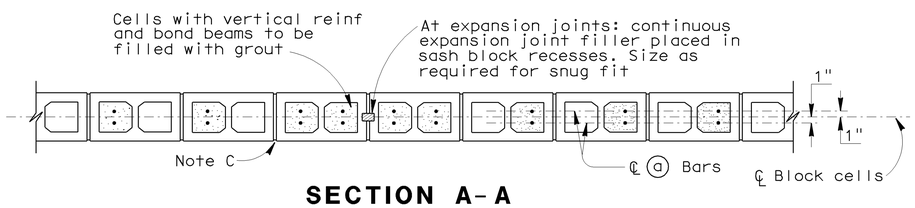

SECTION A-A

For details not shown, see other details

H=6'-4" THRU H=10'-4"

No Scale

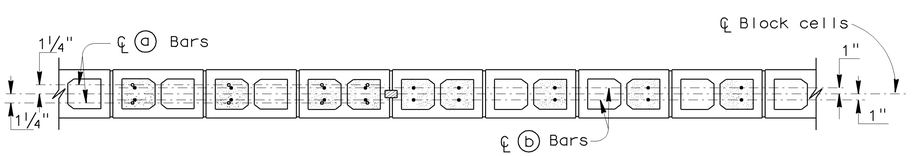

SECTION A-A SECTION B-B

For details not shown, see other details

H=12'-4" THRU H=16'-4"

No Scale

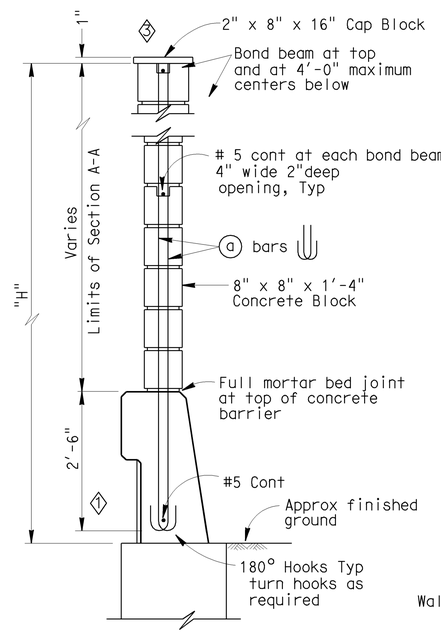

H=6'-4" THRU H=10'-4"

For details not shown, see H=12'-4" thru H=16'-4"

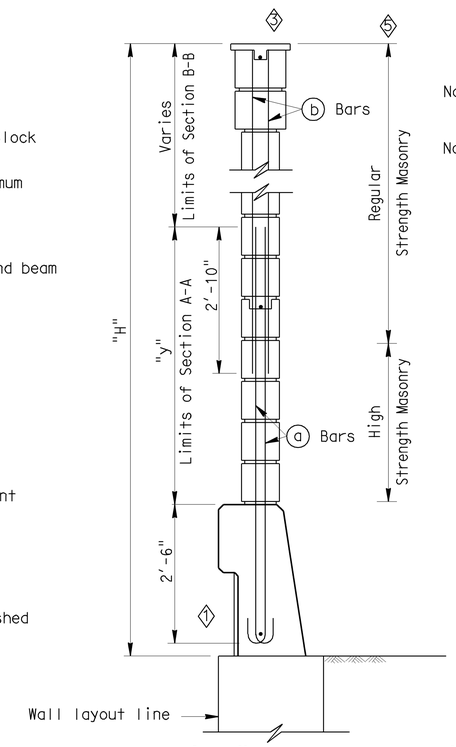

H=12'-4" THRU H=16'-4"

For details not shown, see H=6'-4" thru H=10'-4"

TYPICAL SECTIONS

No Scale

SOUNDWALL REINFORCEMENT TABLE

Maximum H	a Bars @ 1'-4" Max	B bars @ 1'-4" Max	"y"	f'm (KSI)	Compressive Strength of CMU (KSI)	Maximum H
6'-4"	# 4	———	———	1.5	1.9	6'-4"
8'-4"	# 4	———	———	1.5	1.9	8'-4"
10'-4"	# 4	———	———	1.5	1.9	10'-4"
12'-4"	# 5	# 4	5'-0"	1.5	1.9	12'-4"
14'-4"	# 6	# 4	7'-0"	1.5	1.9	14'-4"
16'-4"	# 6	# 4	9'-0"	2.5	3.7	16'-4"

Note I : For details not shown, see "Sound Wall With Barrier On Retaining Wall - Masonry Block - Details No.2" sheet.

Note II : Slope ground at traffic side of barrier to drain. Maximum slope ±10%.

GENERAL NOTES

Note A: For type of block and joint finish, see other sheets.

Note B: When blocks are laid in stacked bond, ladder type, galvanized joint reinforcement shall be provided. A minimum of 2-9 gauge wire continuous at 4'-0" maximum to be used. Locate reinforcement in joints that are at the approximate midpoint between bond beams.

Note C: Horizontal joints shall be tooled concave or may be weathered.
Vertical joints shall be tooled concave or may be raked.

Note D: For intermediate wall heights that are between the "H's" given. Use the tabular information for the next higher "H".

Note E: Masonry strengths are listed in "SOUNDWALL REINFORCEMENT TABLE".

Note F: Class 2 concrete to be used for the barrier.

SPECIAL DETAILS

RETAINING WALL NO. 670

SOUNDWALL - MASONRY BLOCK WITH BARRIER ON RETAINING WALL

DETAILS NO. 1

STANDARD DRAWING

FILE NO. xs15-130-1e

APPROVED BY T SATTER — RESPONSIBLE TECHNICAL SPECIALIST
APPROVAL DATE 9-2-08

RELEASED BY ROBERTO LACALLE — RESPONSIBLE OFFICE CHIEF
RELEASE DATE REVISED

1. Revised Barrier
2. Revised Step
3. Revised Cap Blocks
4. Removed Note
5. Added Limits of Masonry Strength

STATE OF CALIFORNIA
DEPARTMENT OF TRANSPORTATION

DIVISION OF ENGINEERING SERVICES

BRIDGE NO. 55E0095
POST MILE 20.21

DS OSD 2147A (ENGLISH STANDARD DRAWING "XS" BORDER REV. 01/11/08)

ORIGINAL SCALE IN INCHES FOR REDUCED PLANS 0 1 2 3

CU 12220
EA 0F0321

DISREGARD PRINTS BEARING EARLIER REVISION DATES

REVISION DATES (PRELIMINARY STAGE ONLY) 02/18/09 04/07/09 04/17/09 06/08/09

SHEET 14 OF 21

USERNAME => trcarol

55e0095-g-SWdet01.dgn

DATE PLOTTED => 25-JAN-2010 TIME PLOTTED => 14:39

DIST.	COUNTY	ROUTE	POST MILES TOTAL PROJECT	SHEET NO.	TOTAL SHEETS
12	Ora	57	18.4/20.9	814	856

C. Daniel Sun 06/08/09
REGISTERED ENGINEER - CIVIL DATE

1-25-10
PLANS APPROVAL DATE

REGISTERED PROFESSIONAL ENGINEER C. DANIEL SUN No. 40064 Exp. 12/31/11 CIVIL STATE OF CALIFORNIA

The State of California or its officers or agents shall not be responsible for the accuracy or completeness of electronic copies of this plan sheet.

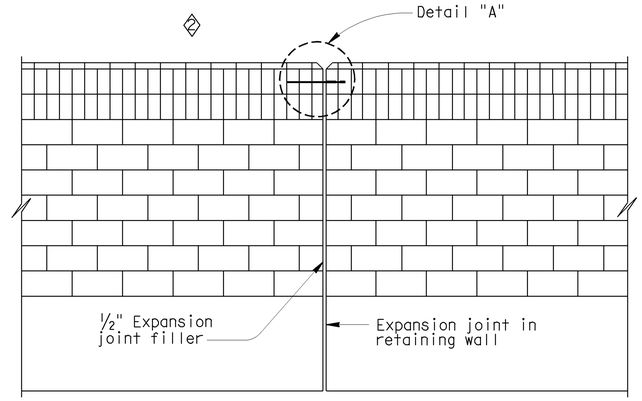

ALIGNMENT KEY DETAIL
No Scale

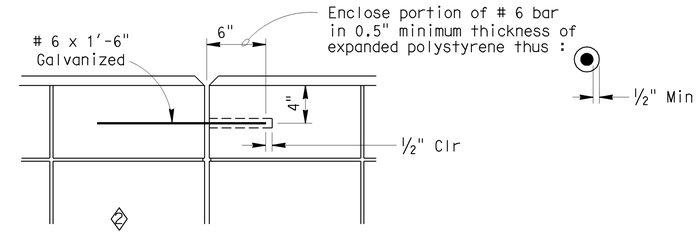

DETAIL A
No Scale

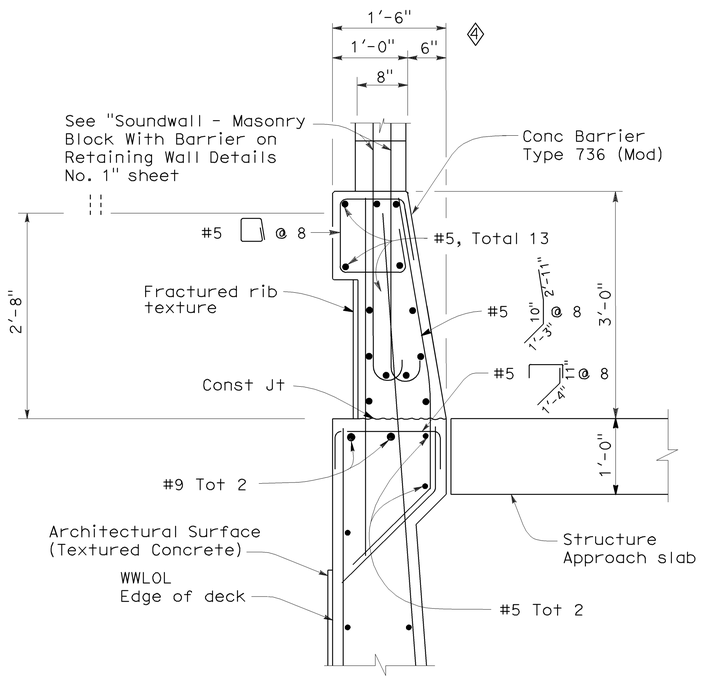

BARRIER SECTION
No Scale

NOTES:

I : For details not shown, see "Retaining Wall Type 1SWB" sheets.

II : Slope ground at traffic side of barrier to drain. Maximum slope ±10%. See Standard Plan B11-56, Note D.

DESIGN NOTES

DESIGN

Uniform Building Code, 1997 Edition and the Bridge Design Specifications.

DESIGN WIND LOAD

33 PSF

DESIGN SEISMIC LOAD

0.57 Dead load

REINFORCED CONCRETE

f'c = 3250 PSI
fy = 60 KSI

CONCRETE MASONRY

REGULAR STRENGTH	HIGH STRENGTH	
f'm = 1500 PSI	f'm = 2000 PSI	f'm = 2500 PSI
fb = 1500 PSI	fb = 660 PSI	fb = 830 PSI
fs = 24.0 KSI	fs = 24.0 KSI	fs = 24000 PSI
n = 25.8	n = 19.3	n = 15.5

LOAD FACTORS AND LOAD COMBINATIONS

Working Stress Design (WSD) Percentage of unit stress

Group 1: D + E + SC 100%
Group 2: D + W + SC + E 100%
Group 3: D + 0.71 EQD + E 100%

Where:

D = Dead load
E = Lateral earth pressure
SC = Live load surcharge
W = Wind load
EQD = Seismic dead load

Load Factor Design (LFD)

Group A: βD + 1.7 E + 1.7 SC
Group B: βD + 1.7 E + 1.3 W
Group C: βD + 1.3 E + 1.0 EQE
Group D: βD + 1.3 E + 1.0 EQD
Group E: βD + 1.1 E + 0.85 (EQE + EQD)

Where : β = 0.9 or 1.2, whichever controls in design
D = Dead load
E = Lateral earth pressure
SC = Live load surcharge
W = Wind load
EQD = Seismic dead load
EQE = Seismic earth load

STRENGTH REDUCTION FACTORS, Ø

Reinforced concrete:
For flexure ---------- Ø=0.90
For shear ---------- Ø=0.85

Concrete masonry:
For flexure ---------- Ø=0.80
For shear ---------- Ø=0.60

Foundations :

See "RETAINING WALL WITH SOUNDWALL" sheets.

SPECIAL DETAILS

RETAINING WALL NO. 670

STANDARD DRAWING

FILE NO. xs15-130-2e
APPROVED BY T SATTER — RESPONSIBLE TECHNICAL SPECIALIST
APPROVAL DATE 4-15-08
RELEASED BY ROBERTO LACALLE — RESPONSIBLE OFFICE CHIEF
RELEASE DATE REVISED

1 Revised Barrier
2 Revised Cap Blocks
3 Removed Detail
4 Revised Dimension & Detail

STATE OF CALIFORNIA
DEPARTMENT OF TRANSPORTATION

DIVISION OF ENGINEERING SERVICES

BRIDGE NO. 55E0095
POST MILE 20.21

SOUNDWALL - MASONRY BLOCK WITH BARRIER ON RETAINING WALL

DETAILS NO. 2

DS OSD 2147A (ENGLISH STANDARD DRAWING "XS" BORDER REV. 01/11/08)

ORIGINAL SCALE IN INCHES FOR REDUCED PLANS 0 1 2 3

CU 12220
EA 0F0321

DISREGARD PRINTS BEARING EARLIER REVISION DATES

REVISION DATES (PRELIMINARY STAGE ONLY) 02/18/09 04/07/09 04/17/09 06/08/09

SHEET 15 OF 21

USERNAME => trcarol

DATE PLOTTED => 25-JAN-2010 TIME PLOTTED => 14:14

55e0095-g-SWdet02.dgn

DIST	COUNTY	ROUTE	POST MILES TOTAL PROJECT	SHEET No	TOTAL SHEETS
12	Ora	57	18.4/20.9	815	856

REGISTERED CIVIL ENGINEER — DATE 06/08/09

1-25-10
PLANS APPROVAL DATE

The State of California or its officers or agents shall not be responsible for the accuracy or completeness of electronic copies of this plan sheet.

REGISTERED PROFESSIONAL ENGINEER — MOHAMMED ATIQULLAH — No. C47027 — Exp. 12/31/09 — CIVIL — STATE OF CALIFORNIA

OCTA
550 S. MAIN STREET
ORANGE, CA 92863

CH2M HILL
6 HUTTON CENTRE DRIVE, SUITE 700
SANTA ANA, CA 92707

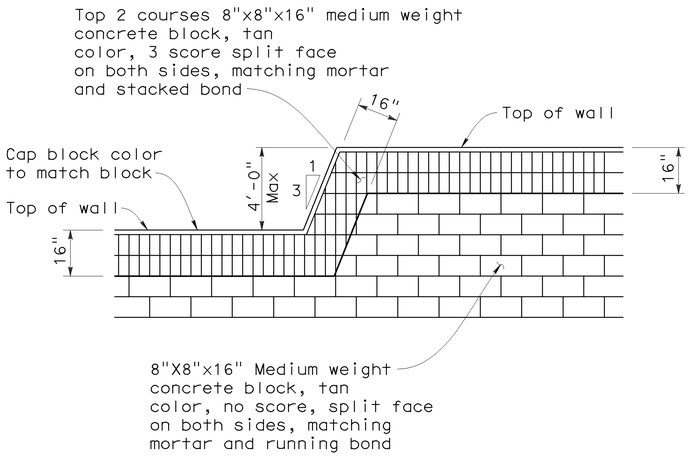

TRANSITION ELEVATION

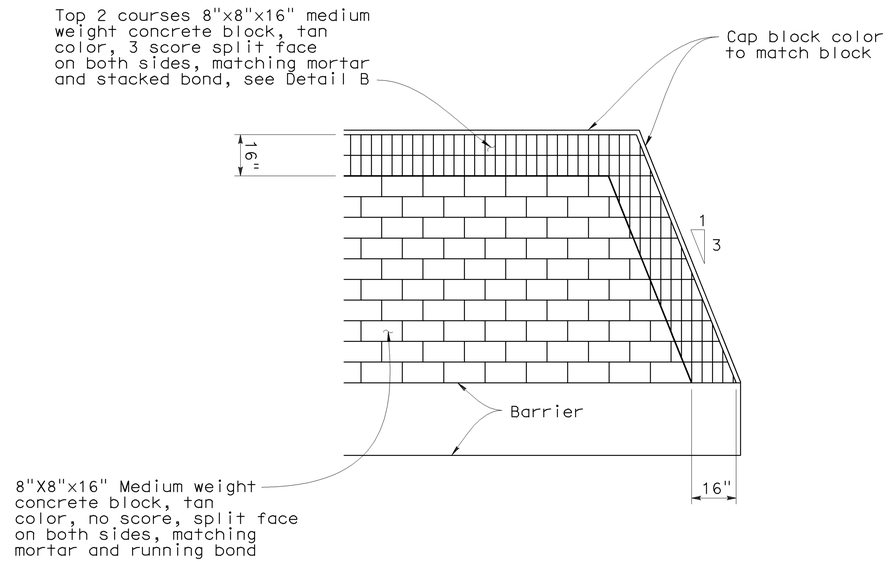

END WALL ELEVATION

CONCRETE BLOCK TYPE, COLOR AND PLACEMENT

No Scale

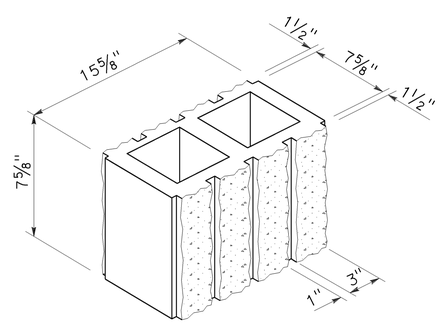

DETAIL B

No Scale

8" Wide 3-Score split face both sides

DESIGN OVERSIGHT — Jon Hamaguchi	DESIGN	BY M. Atiqullah	CHECKED E. Cutler
11-24-09 SIGN OFF DATE	DETAILS	BY M. Atiqullah	CHECKED E. Cutler
	QUANTITIES	BY Y. Chiu	CHECKED L. Ros

PREPARED FOR THE STATE OF CALIFORNIA DEPARTMENT OF TRANSPORTATION

Ayman Salama
PROJECT ENGINEER

BRIDGE NO. 55E0095
POST MILE 20.21

RETAINING WALL NO. 670

SOUNDWALL MASONRY BLOCK MISCELLANEOUS DETAILS

DESIGN DETAIL SHEET (ENGLISH) (REV. 2/25/05)

ORIGINAL SCALE IN INCHES FOR REDUCED PLANS 0 1 2 3

CU 12220
EA 0F0321

DISREGARD PRINTS BEARING EARLIER REVISION DATES → 06/08/09

REVISION DATES (PRELIMINARY STAGE ONLY)

SHEET 16 OF 21

FILE => 55e0095-u-miscdt01.dgn

USERNAME => ttstrk DATE PLOTTED => 26-JAN-2010 TIME PLOTTED => 06:02

DIST	COUNTY	ROUTE	POST MILES TOTAL PROJECT	SHEET No	TOTAL SHEETS
12	Ora	57	18.4/20.9	816	856

REGISTERED CIVIL ENGINEER — DATE 06/08/09

1-25-10
PLANS APPROVAL DATE

REGISTERED PROFESSIONAL ENGINEER — MOHAMMED ATIQULLAH — No. C47027 — Exp. 12/31/09 — CIVIL — STATE OF CALIFORNIA

The State of California or its officers or agents shall not be responsible for the accuracy or completeness of electronic copies of this plan sheet.

OCTA
550 S. MAIN STREET
ORANGE, CA 92863

CH2M HILL
6 HUTTON CENTRE DRIVE, SUITE 700
SANTA ANA, CA 92707

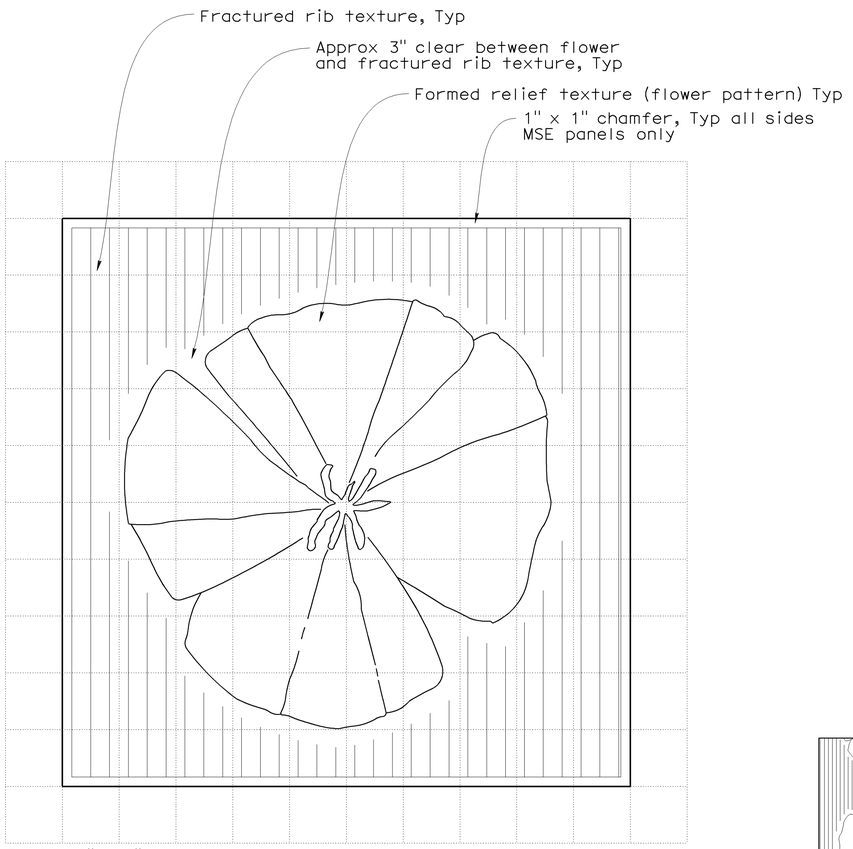

ARCHITECTURAL SURFACE (TEXTURED CONCRETE) FOR MSE PANEL

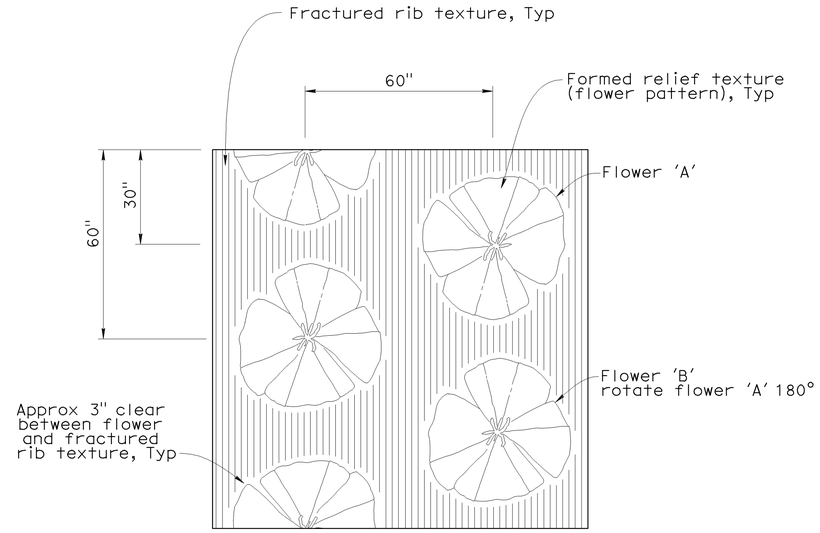

ARCHITECTURAL SURFACE (TEXTURED CONCRETE) PATTERN

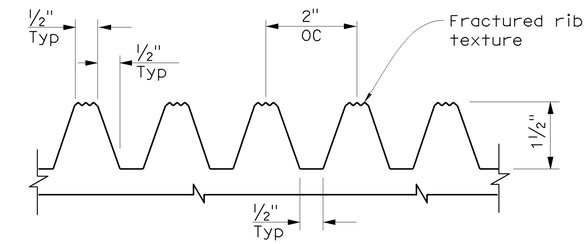

FRACTURED RIB TEXTURE DETAIL

(Elastomer Formliner)

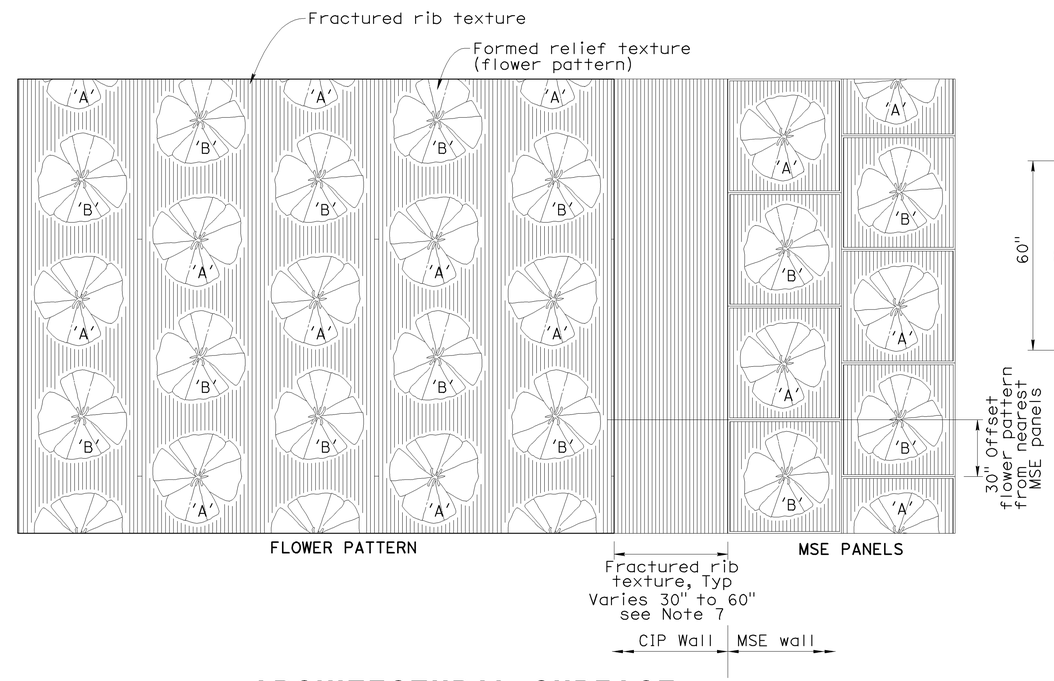

ARCHITECTURAL SURFACE (TEXTURED CONCRETE) ELEVATION

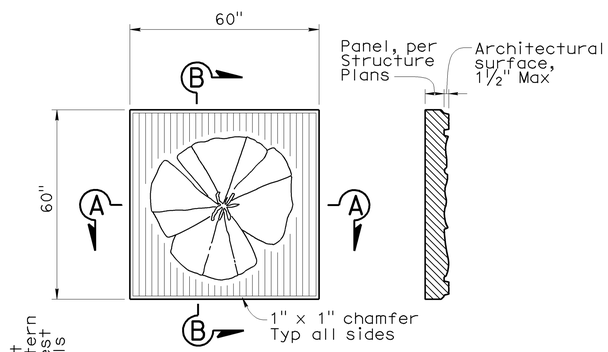

VIEW

SECTION B-B

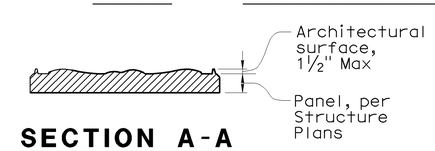

SECTION A-A

MSE PANEL

No scale

NOTES:

1. Identical flower images, scale and spacing shall be used for flower pattern and MSE wall panels.
2. Within a vertical column, flower images shall alternate between flowers 'A' and 'B'. Vertical columns shall be offset 30" from adjacent columns.
3. Where placed on walls bounded by concrete barriers, finished grade or top of wall, flower pattern shall be continued without concern for partial flower images, except as noted.
4. Refer to structural details for width of smooth band to be applied at edges of structures.
5. Where the flower pattern will be used adjacent to a horizontal limit such as a bridge abutment, adjoining MSE wall or overhead sign structure support, flower pattern shall be discontinued from a section not less than 30" and not greater than 60" wide from the horizontal limit to avoid truncation of flower images. Fractured rib texture shall be inserted in the resulting gap to create a continuous buffer between pattern areas.
6. The nearest column of flower images (flower pattern) shall be offset vertically 30" from the panels.
7. Vary fractured rib texture width (30" to 60") to provide complete flower pattern on cip wall side.

DESIGN OVERSIGHT — Jon Hamaguchi
11-24-09
SIGN OFF DATE

	BY	CHECKED
DESIGN	M. Atiqullah	E. Cutler
DETAILS	M. Atiqullah	E. Cutler
QUANTITIES	Y. Chiu	L. Ros

PREPARED FOR THE STATE OF CALIFORNIA DEPARTMENT OF TRANSPORTATION

Ayman Salama
PROJECT ENGINEER

BRIDGE NO. 55E0095
POST MILE 20.21

RETAINING WALL NO. 670
ARCHITECTURAL TREATMENT DETAILS

DESIGN DETAIL SHEET (ENGLISH) (REV. 2/25/05)

ORIGINAL SCALE IN INCHES FOR REDUCED PLANS 0 1 2 3

CU 12220
EA 0F0321

DISREGARD PRINTS BEARING EARLIER REVISION DATES

REVISION DATES (PRELIMINARY STAGE ONLY) 06/08/09

SHEET 17 OF 21

FILE => 55e0095-u-tarcdt01.dgn

USERNAME => trstrk DATE PLOTTED => 26-JAN-2010 TIME PLOTTED => 06:02

DIST	COUNTY	ROUTE	POST MILES TOTAL PROJECT	SHEET No	TOTAL SHEETS
12	Ora	57	18.4/20.9	817	856

GEOTECHNICAL PROFESSIONAL — DATE 06/08/09

1-25-10
PLANS APPROVAL DATE

REGISTERED PROFESSIONAL ENGINEER — HISHAM M. NOFAL No. 2765 Exp. 09/30/09 GEOTECHNICAL — STATE OF CALIFORNIA

The State of California or its officers or agents shall not be responsible for the accuracy or completeness of electronic copies of this plan sheet.

OCTA
550 S. MAIN STREET
ORANGE, CA 92863

CH2M HILL
6 HUTTON CENTRE DRIVE, SUITE 700
SANTA ANA, CA 92707

BENCHMARK:
Horizontal coordinates are cCCS NAD-83, Zone 6.
vertical control based on North American Vertical Datum 1988.
Pt 1050: N2279503.786, E6066168.912, Elev 326.908
Pt 1160: N2281521.621, E6067030.125, Elev 356.584

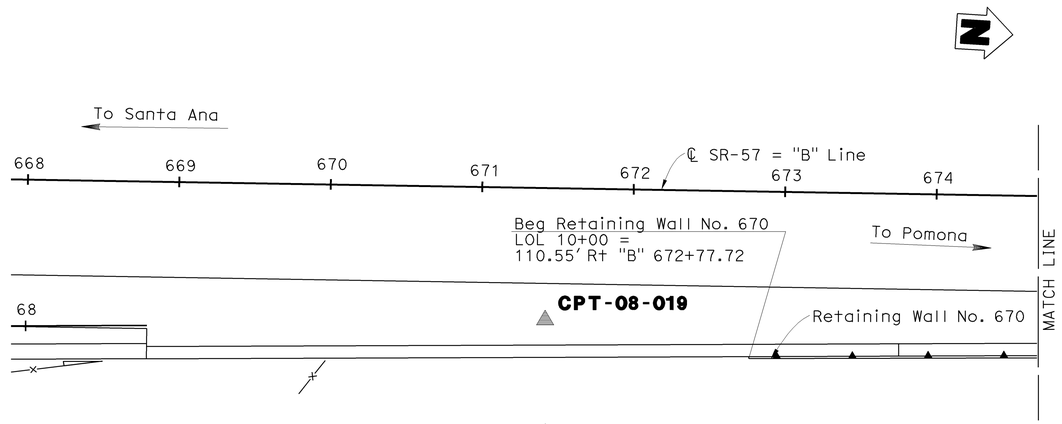

PLAN
1"=50'

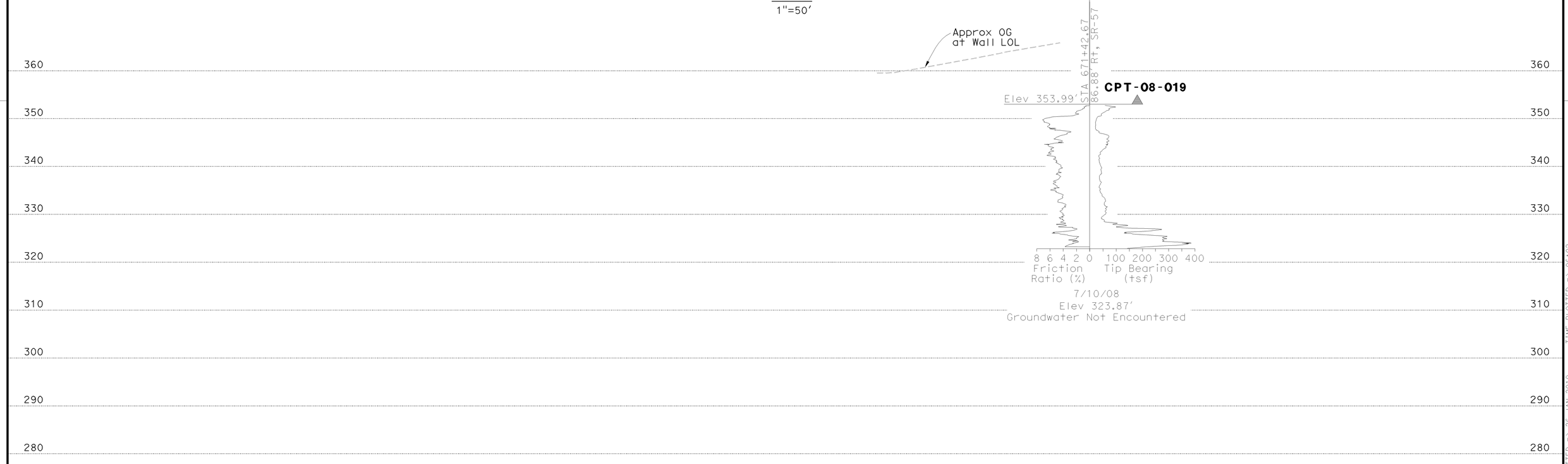

PROFILE
Horz:1"=50'
Vert: 1"=10'

STATIONING "SR-57" = "B" Line

DESIGN OVERSIGHT Jon Hanaguchi 11-24-09 SIGN OFF DATE	DRAWN BY K. Reyes CHECKED BY H. Nofal	R. Bethapudi FIELD INVESTIGATION BY: DATE	PREPARED FOR THE STATE OF CALIFORNIA DEPARTMENT OF TRANSPORTATION	Ayman Salama PROJECT ENGINEER	BRIDGE NO. 55E0095 POST MILES 20.21	RETAINING WALL NO. 670 LOG OF TEST BORINGS SHEET 1 OF 4	
ORIGINAL SCALE IN INCHES FOR REDUCED PLANS 0 1 2 3				CU 12220 EA 0F0321	DISREGARD PRINTS BEARING EARLIER REVISION DATES	REVISION DATES (PRELIMINARY STAGE ONLY) 02/18/09 04/07/09 04/17/09 06/08/09	SHEET 18 OF 21

FILE => 55e0095-z-1tb01.dgn

USERNAME => trsthk DATE PLOTTED => 26-JAN-2010 TIME PLOTTED => 06:02

DIST	COUNTY	ROUTE	POST MILES TOTAL PROJECT	SHEET No	TOTAL SHEETS
12	Ora	57	18.4/20.9	818	856

GEOTECHNICAL PROFESSIONAL — DATE 06/08/09

1-25-10
PLANS APPROVAL DATE

REGISTERED PROFESSIONAL ENGINEER — HISHAM M. NOFAL No. 2765 Exp. 09/30/09 GEOTECHNICAL — STATE OF CALIFORNIA

The State of California or its officers or agents shall not be responsible for the accuracy or completeness of electronic copies of this plan sheet.

OCTA
550 S. MAIN STREET
ORANGE, CA 92863

CH2M HILL
6 HUTTON CENTRE DRIVE, SUITE 700
SANTA ANA, CA 92707

BENCHMARK:

Horizontal coordinates are CCS Nad-83, Zone 6.
Vertical control based on North American Vertical Datum 1988.
Pt 1050: N2279503.786, E6066168.912, Elev 326.908

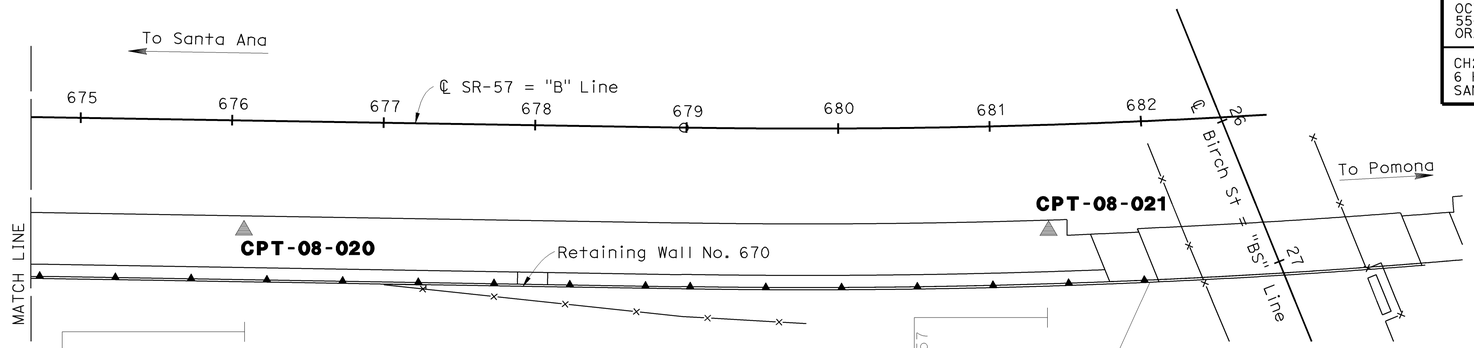

PLAN
1"=50'

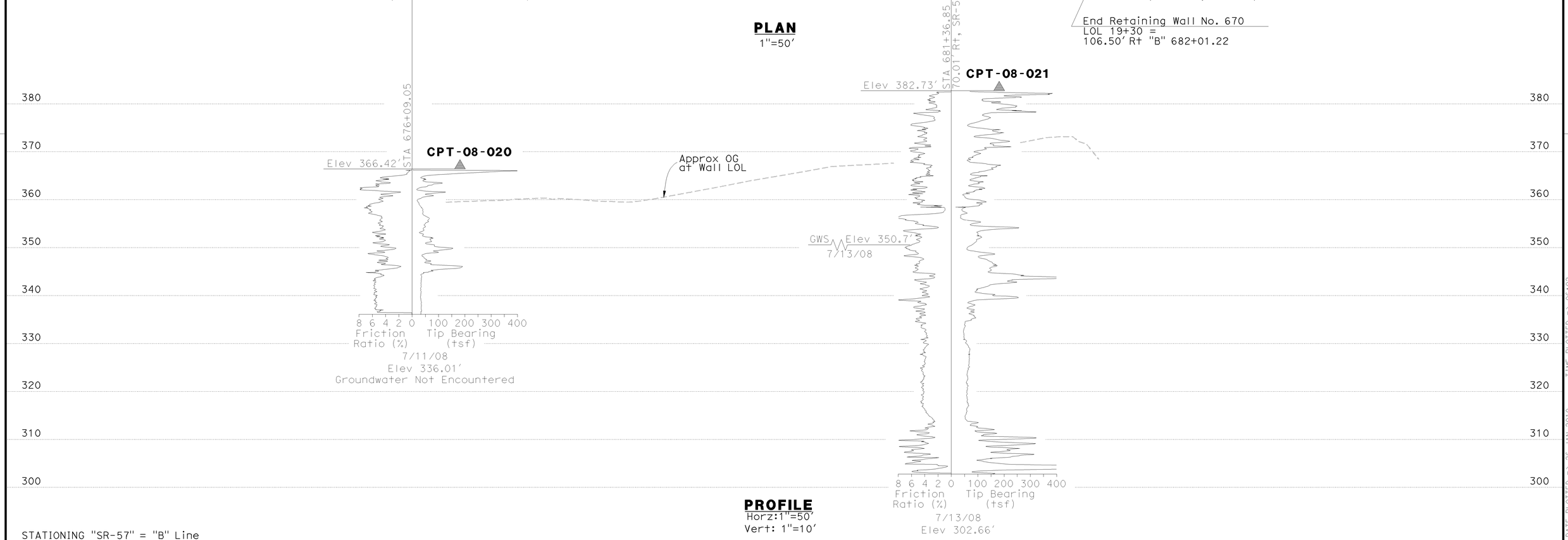

PROFILE
Horz:1"=50'
Vert: 1"=10'

STATIONING "SR-57" = "B" Line

672 673 674 675 676 677 678 679 680 681 682 683 684 685 686

DESIGN OVERSIGHT Jon Hamaguchi	DRAWN BY	K. Reyes	R. Bethapudi — FIELD INVESTIGATION BY:
11-24-09 SIGN OFF DATE	CHECKED BY	H. Nofal	DATE

PREPARED FOR THE STATE OF CALIFORNIA DEPARTMENT OF TRANSPORTATION

Ayman Salama
PROJECT ENGINEER

BRIDGE NO. 55E0095
POST MILES 20.21

RETAINING WALL NO. 670
LOG OF TEST BORINGS SHEET 2 OF 4

ORIGINAL SCALE IN INCHES FOR REDUCED PLANS 0 1 2 3

CU 12220
EA 0F0321

DISREGARD PRINTS BEARING EARLIER REVISION DATES

REVISION DATES (PRELIMINARY STAGE ONLY) 02/18/09 04/07/09 04/17/09 06/08/09

SHEET 19 OF 21

FILE => 55e0095-z-1tb02.dgn

USERNAME => ttstpk DATE PLOTTED => 26-JAN-2010 TIME PLOTTED => 06:02

DIST	COUNTY	ROUTE	POST MILES TOTAL PROJECT	SHEET No	TOTAL SHEETS
12	Ora	57	18.4/20.9	819	856

Hisham Nofal 06/08/09
GEOTECHNICAL PROFESSIONAL DATE

1-25-10
PLANS APPROVAL DATE

REGISTERED PROFESSIONAL ENGINEER HISHAM M. NOFAL No. 2765 Exp. 09/30/09 GEOTECHNICAL STATE OF CALIFORNIA

The State of California or its officers or agents shall not be responsible for the accuracy or completeness of electronic copies of this plan sheet.

OCTA
550 S. MAIN STREET
ORANGE, CA 92863

CH2M HILL
6 HUTTON CENTRE DRIVE, SUITE 700
SANTA ANA, CA 92707

REFERENCE: CALTRANS SOIL & ROCK LOGGING, CLASSIFICATION, AND PRESENTATION MANUAL (JUNE 2007)

GROUP SYMBOLS AND NAMES

Graphic/Symbol	Group Names
GW	Well-graded GRAVEL Well-graded GRAVEL with SAND
GP	Poorly graded GRAVEL Poorly graded GRAVEL with SAND
GW-GM	Well-graded GRAVEL with SILT Well-graded GRAVEL with SILT and SAND
GW-GC	Well-graded GRAVEL with CLAY (or SILTY CLAY) Well-graded GRAVEL with CLAY and SAND (or SILTY CLAY and SAND)
GP-GM	Poorly graded GRAVEL with SILT Poorly graded GRAVEL with SILT and SAND
GP-GC	Poorly graded GRAVEL with CLAY (or SILTY CLAY) Poorly graded GRAVEL with CLAY and SAND (or SILTY CLAY and SAND)
GM	SILTY GRAVEL SILTY GRAVEL with SAND
GC	CLAYEY GRAVEL CLAYEY GRAVEL with SAND
GC-GM	SILTY, CLAYEY GRAVEL SILTY, CLAYEY GRAVEL with SAND
SW	Well-graded SAND Well-graded SAND with GRAVEL
SP	Poorly graded SAND Poorly graded SAND with GRAVEL
SW-SM	Well-graded SAND with SILT Well-graded SAND with SILT and GRAVEL
SW-SC	Well-graded SAND with CLAY (or SILTY CLAY) Well-graded SAND with CLAY and GRAVEL (or SILTY CLAY and GRAVEL)
SP-SM	Poorly graded SAND with SILT Poorly graded SAND with SILT and GRAVEL
SP-SC	Poorly graded SAND with CLAY (or SILTY CLAY) Poorly graded SAND with CLAY and GRAVEL (or SILTY CLAY and GRAVEL)
SM	SILTY SAND SILTY SAND with GRAVEL
SC	CLAYEY SAND CLAYEY SAND with GRAVEL
SC-SM	SILTY, CLAYEY SAND SILTY, CLAYEY SAND with GRAVEL
PT	PEAT
	COBBLES COBBLES and BOULDERS BOULDERS

Graphic/Symbol	Group Names
CL	Lean CLAY Lean CLAY with SAND Lean CLAY with GRAVEL SANDY lean CLAY SANDY lean CLAY with GRAVEL GRAVELLY lean CLAY GRAVELLY lean CLAY with SAND
CL-ML	SILTY CLAY SILTY CLAY with SAND SILTY CLAY with GRAVEL SANDY SILTY CLAY SANDY SILTY CLAY with GRAVEL GRAVELLY SILTY CLAY GRAVELLY SILTY CLAY with SAND
ML	SILT SILT with SAND SILT with GRAVEL SANDY SILT SANDY SILT with GRAVEL GRAVELLY SILT GRAVELLY SILT with SAND
OL	ORGANIC lean CLAY ORGANIC lean CLAY with SAND ORGANIC lean CLAY with GRAVEL SANDY ORGANIC lean CLAY SANDY ORGANIC lean CLAY with GRAVEL GRAVELLY ORGANIC lean CLAY GRAVELLY ORGANIC lean CLAY with SAND
OL	ORGANIC SILT ORGANIC SILT with SAND ORGANIC SILT with GRAVEL SANDY ORGANIC SILT SANDY ORGANIC SILT with GRAVEL GRAVELLY ORGANIC SILT GRAVELLY ORGANIC SILT with SAND
CH	Fat CLAY Fat CLAY with SAND Fat CLAY with GRAVEL SANDY fat CLAY SANDY fat CLAY with GRAVEL GRAVELLY fat CLAY GRAVELLY fat CLAY with SAND
MH	Elastic SILT Elastic SILT with SAND Elastic SILT with GRAVEL SANDY elastic SILT SANDY elastic SILT with GRAVEL GRAVELLY elastic SILT GRAVELLY elastic SILT with SAND
OH	ORGANIC fat CLAY ORGANIC fat CLAY with SAND ORGANIC fat CLAY with GRAVEL SANDY ORGANIC fat CLAY SANDY ORGANIC fat CLAY with GRAVEL GRAVELLY ORGANIC fat CLAY GRAVELLY ORGANIC fat CLAY with SAND
OH	ORGANIC elastic SILT ORGANIC elastic SILT with SAND ORGANIC elastic SILT with GRAVEL SANDY ORGANIC elastic SILT SANDY ORGANIC elastic SILT with GRAVEL GRAVELLY ORGANIC elastic SILT GRAVELLY ORGANIC elastic SILT with SAND
OL/OH	ORGANIC SOIL ORGANIC SOIL with SAND ORGANIC SOIL with GRAVEL SANDY ORGANIC SOIL SANDY ORGANIC SOIL with GRAVEL GRAVELLY ORGANIC SOIL GRAVELLY ORGANIC SOIL with SAND

FIELD AND LABORATORY TESTING

- (C) Consolidation (ASTM D 2435)
- (CL) Collapse Potential (ASTM D 5333)
- (CP) Compaction Curve (CTM 216)
- (CR) Corrosivity Testing (CTM 643, CTM 422, CTM 417)
- (CU) Consolidated Undrained Triaxial (ASTM D 4767)
- (DS) Direct Shear (ASTM D 3080)
- (EI) Expansion Index (ASTM D 4829)
- (M) Moisture Content (ASTM D 2216)
- (OC) Organic Content-% (ASTM D 2974)
- (P) Permeability (CTM 220)
- (PA) Particle Size Analysis (ASTM D 422)
- (PI) Plasticity Index (AASHTO T 90) Liquid Limit (AASHTO T 89)
- (PL) Point Load Index (ASTM D 5731)
- (PM) Pressure Meter
- (PP) Pocket Penetrometer
- (R) R-Value (CTM 301)
- (SE) Sand Equivalent (CTM 217)
- (SG) Specific Gravity (AASHTO T 100)
- (SL) Shrinkage Limit (ASTM D 427)
- (SW) Swell Potential (ASTM D 4546)
- (TV) Pocket Torvane
- (UC) Unconfined Compression-Soil (ASTM D 2166) Unconfined Compression-Rock (ASTM D 2938)
- (UU) Unconsolidated Undrained Triaxial (ASTM D 2850)
- (UW) Unit Weight (ASTM D 4767)
- (VS) Vane Shear (AASHTO T 223)

APPARENT DENSITY OF COHESIONLESS SOILS

Description	SPT N_{60} (Blows / 12 inches)
Very loose	0 - 4
Loose	5 - 10
Medium Dense	11 - 30
Dense	31 - 50
Very Dense	> 50

MOISTURE

Description	Criteria
Dry	Absence of moisture, dusty, dry to the touch
Moist	Damp but no visible water
Wet	Visible free water, usually soil is below water table

PERCENT OR PROPORTION OF SOILS

Description	Criteria
Trace	Particles are present but estimated to be less than 5%
Few	5 to 10%
Little	15 to 25%
Some	30 to 45%
Mostly	50 to 100%

PARTICLE SIZE

Description		Size
Boulder		> 12"
Cobble		3" to 12"
Gravel	Coarse	3/4" to 3"
	Fine	No. 4 to 3/4"
Sand	Coarse	No. 10 to No. 4
	Medium	No. 40 to No. 10
	Fine	No. 200 to No. 40

CEMENTATION

Description	Criteria
Weak	Crumbles or breaks with handling or little finger pressure.
Moderate	Crumbles or breaks with considerable finger pressure.
Strong	Will not crumble or break with finger pressure.

CONSISTENCY OF COHESIVE SOILS

Description	Unconfined Compressive Strength (tsf)	Pocket Penetrometer Measurement (tsf)	Torvane Measurement (tsf)	Field Approximation
Very Soft	< 0.25	< 0.25	< 0.12	Easily penetrated several inches by fist
Soft	0.25 to 0.50	0.25 to 0.50	0.12 to 0.25	Easily penetrated several inches by thumb
Medium Stiff	0.50 to 1.0	0.50 to 1.0	0.25 to 0.50	Penetrated several inches by thumb with moderate effort
Stiff	1 to 2	1 to 2	0.50 to 1.0	Readily indented by thumb but penetrated only with great effort
Very Stiff	2 to 4	2 to 4	1.0 to 2.0	Readily indented by thumbnail
Hard	> 4.0	> 4.0	> 2.0	Indented by thumbnail with difficulty

PLASTICITY OF FINE-GRAINED SOILS

Description	Criteria
Nonplastic	A 1/8-inch thread cannot be rolled at any water content.
Low	The thread can barely be rolled and the lump cannot be formed when drier than the plastic limit.
Medium	The thread is easy to roll and not much time is required to reach the plastic limit. The thread cannot be rerolled after reaching the plastic limit. The lump crumbles when drier than the plastic limit.
High	It takes considerable time rolling and kneading to reach the plastic limit. The thread can be rerolled several times after reaching the plastic limit. The lump can be formed without crumbling when drier than the plastic limit.

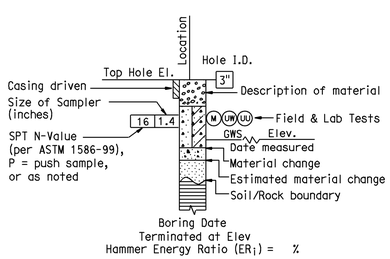

ROTARY BORING

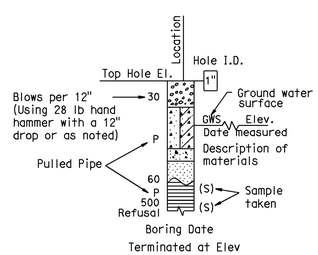

HAND BORING

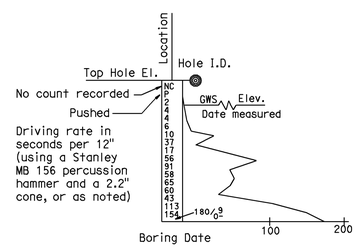

DYNAMIC CONE PENETRATION BORING

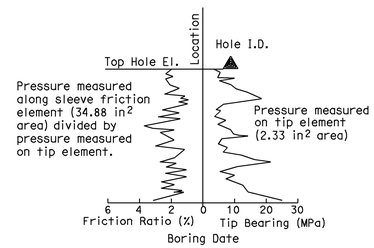

CONE PENETRATION TEST (CPT) SOUNDING

BOREHOLE IDENTIFICATION

Symbol	Hole Type	Description
Size	A	Auger Boring
Size	R P	Rotary drilled boring Rotary percussion boring (air)
Size HQ	R	Rotary drilled diamond core
Size	HD HA	Hand driven (1-inch soil tube) Hand Auger
●	D	Dynamic Cone Penetration Boring
◕	B	Hollow Stem Auger Boring (HSA)
▲	CPT	Cone Penetration Test (ASTM D 5778-95)
□	O	Other

Note: Size in inches.

RETAINING WALL NO. 670

SOIL LEGEND

LOG OF TEST BORINGS SHEET 3 OF 4

Jon Hamaguchi
DESIGN OVERSIGHT Jon Hamaguchi
11-24-09
SIGN OFF DATE

DRAWN BY K. Reyes
CHECKED BY H. Nofal

R. Bethapudi
FIELD INVESTIGATION BY:
DATE

PREPARED FOR THE STATE OF CALIFORNIA DEPARTMENT OF TRANSPORTATION

Ayman Salama
PROJECT ENGINEER

BRIDGE NO. 55E0095
POST MILES 20.21

ORIGINAL SCALE IN INCHES FOR REDUCED PLANS 0 1 2 3

CU 12220
EA 0F0321

DISREGARD PRINTS BEARING EARLIER REVISION DATES
REVISION DATES (PRELIMINARY STAGE ONLY) 02/27/09 04/07/09 04/27/09 06/08/09

SHEET 20 OF 21

FILE => 55e0095-z-1tb03.dgn

USERNAME => trsrtk DATE PLOTTED => 26-JAN-2010 TIME PLOTTED => 06:02

FED. ROAD DIV. NO.	STATE	F. A. PROJECT NO.	SHEET NO.	TOTAL SHEETS
7	CALIF.			

DIST.	COUNTY	ROUTE	SECTION	SHEET NO.	TOTAL SHEETS
07	Ora.	57	18.4/20.9	149	177

REGISTERED CIVIL ENGINEER

DATE APPROVED March 24, 1969

LEGEND OF BORING OPERATIONS

- PIEZOMETER
- 2½" CONE PENETROMETER
- SAMPLER BORING (DCX)
- ROTARY BORING (DRV)
- AUGER BORING (DRV)
- JET BORING
- CORE BORING
- TEST PIT

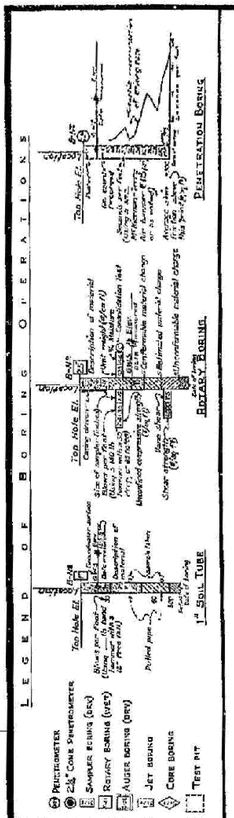

LEGEND OF EARTH MATERIALS

- GRAVEL
- SAND
- SILT
- CLAY
- SANDY CLAY OR CLAYEY SAND
- SANDY SILT OR SILTY SAND
- SILTY CLAY OR CLAYEY SILT
- ORGANIC MATTER
- FILL MATERIAL
- IGNEOUS ROCK
- SEDIMENTARY ROCK
- METAMORPHIC ROCK

CLASSIFICATION OF MATERIAL BASED ON STANDARD UNIFIED SOIL SYSTEM

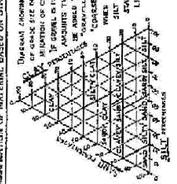

NOTE: Classification of earth material as shown on this sheet is based upon field inspection and is not to be construed to imply mechanical analysis.

FIELD STUDY	H. A. Nofal	11-3-67
DRAWN	H. A. Nofal	3-1-68
CHECKED		

BRIDGE DEPARTMENT
ENGINEERING GEOLOGY SECTION

14

BENCH MARK

B.M. # 684-E-66 Elev. 357.46
Pt. Union Oil Co. Mon. stamped G and L No. 16, 1.5 1966, 0.5' deep 592' west of Stat. 633+39 "P" Line.

NO GROUND WATER ENCOUNTERED DURING THIS INVESTIGATION BY BRIDGE DEPT. GEOLOGY SECTION
DATE Nov., 1967

PLAN

Scale: 1" = 20'

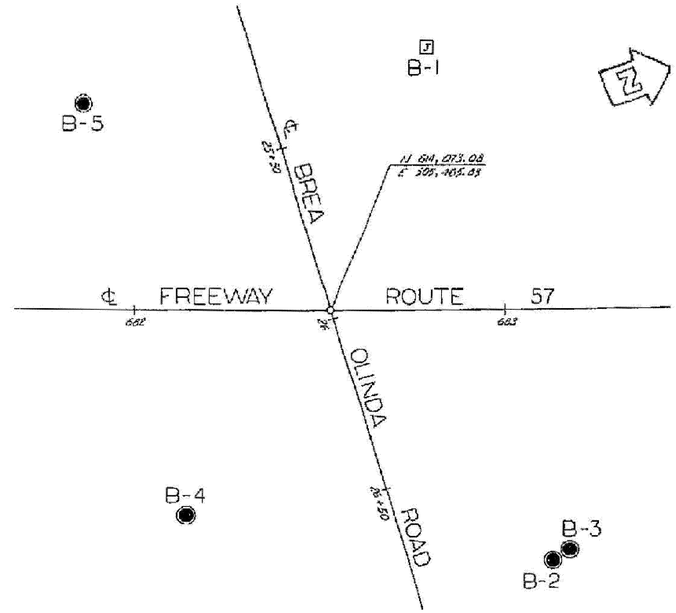

DIVISION OF ENGINEERING SERVICES - GEOTECHNICAL SERVICES					
As-Built Log of Test Borings sheet is considered an informational document only. As such, the State of California registration seal with signature, license number and registration certificate expiration date confirm that this is a true and accurate copy of the original document. This drawing is available and presented only for the convenience of any bidder, contractor or other interested party.					
DIST.	COUNTY	ROUTE	POST MILE-TOTAL PROJECT	Sheet No.	Total sheets
12	Ora	57	18.4/20.9	820	856
Hisham Nofal REGISTERED CIVIL ENGINEER			06/08/09 DATE		
RETAINING WALL NO. 670					
LOG OF TEST BORINGS SHEET 4 of 4					
NOTE: A COPY OF THIS LOG OF TEST BORINGS IS AVAILABLE AT OFFICE OF STRUCTURE MAINTENANCE AND INVESTIGATIONS, SACRAMENTO, CALIFORNIA		CU:12220 EA:0F0321		BRIDGE No. 55E0095	
To accompany plans dated 1-25-10				Sheet 21	of 21

REGISTERED PROFESSIONAL ENGINEER
HISHAM M. NOFAL
No. 2765
Exp. 09/30/09
GEOTECHNICAL
STATE OF CALIFORNIA

PROFILE

Scale: Vert. 1" = 10'
Horiz. 1" = 20'

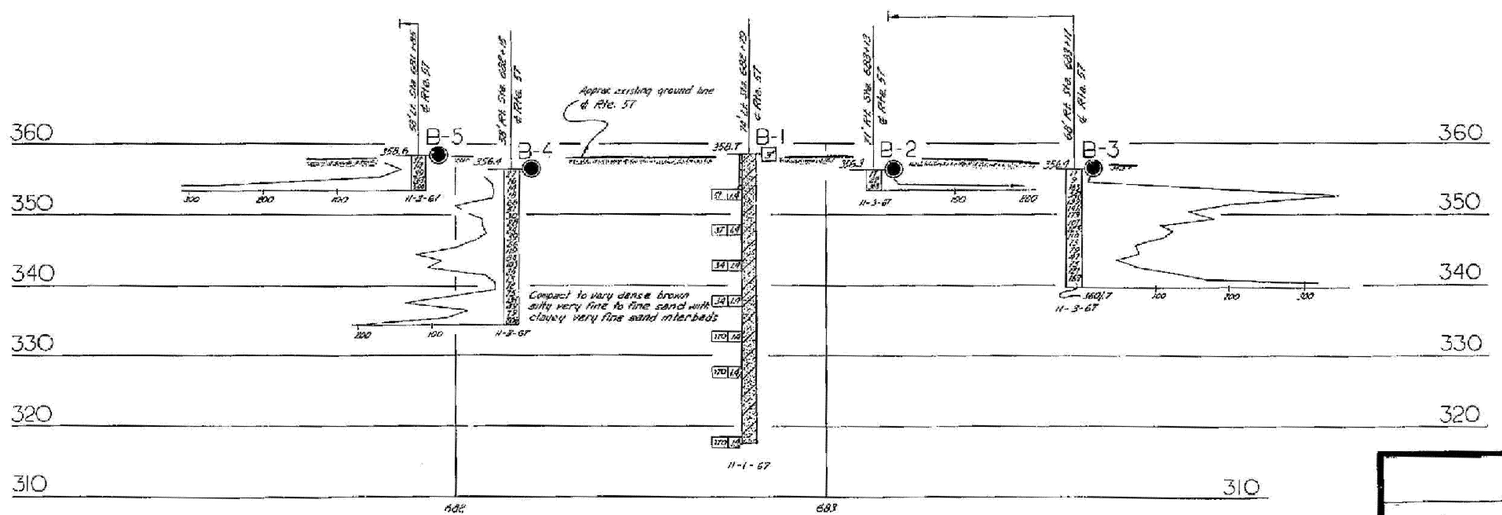

AS BUILT
CORR. W. Hansen
CONTRACT No. 07-032204
DATE 8-31-71
WP 11-3-71

SHEET 13 OF 13

STATE OF CALIFORNIA
DEPARTMENT OF PUBLIC WORKS
DIVISION OF HIGHWAYS

BIRCH STREET UNDERCROSSING

LOG OF TEST BORINGS

SCALE As Noted	BRIDGE 55-485	FILE	DRAWING 55 485-7

Changes 01808
W.A. 032201

Disregard prints bearing earlier numbers

PREL. DRAWING No. PR-

AS BUILT PLANS
Contract No. 07-032204
Date Completed
Document No. 2000 5907

I HEREBY CERTIFY THAT THIS IS A TRUE AND ACCURATE COPY OF THE ABOVE DOCUMENT TAKEN UNDER MY DIRECTION AND CONTROL ON THIS DATE IN SACRAMENTO, CALIFORNIA PURSUANT TO AUTHORIZATION BY THE DIRECTOR OF PUBLIC WORKS.

DATE 15 Feb 73 SIGNATURE James E. Court TITLE Sr. Bmo

FILENAME => 55e0095-z-ltb04.tif

DIST	COUNTY	ROUTE	POST MILES TOTAL PROJECT	SHEET No	TOTAL SHEETS
12	Ora	57	18.4/20.9	821	856

REGISTERED CIVIL ENGINEER — DATE 06/08/09

1-25-10
PLANS APPROVAL DATE

REGISTERED PROFESSIONAL ENGINEER — C. DANIEL SUN — No. 40064 — Exp. 12/31/09 — CIVIL — STATE OF CALIFORNIA

The State of California or its officers or agents shall not be responsible for the accuracy or completeness of electronic copies of this plan sheet.

OCTA
550 S. MAIN STREET
ORANGE, CA 92863

CH2M HILL
6 HUTTON CENTRE DRIVE, SUITE 700
SANTA ANA, CA 92707

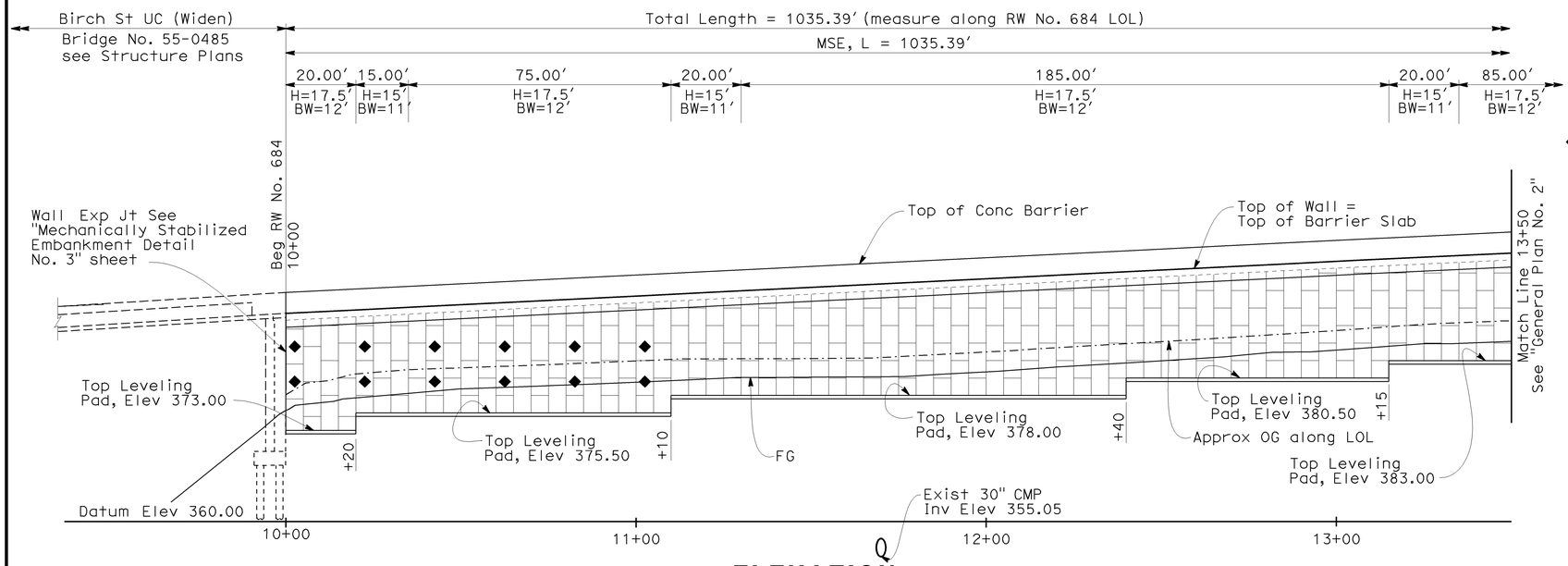

ELEVATION

Horiz 1"=20′
Vert 1"=10′

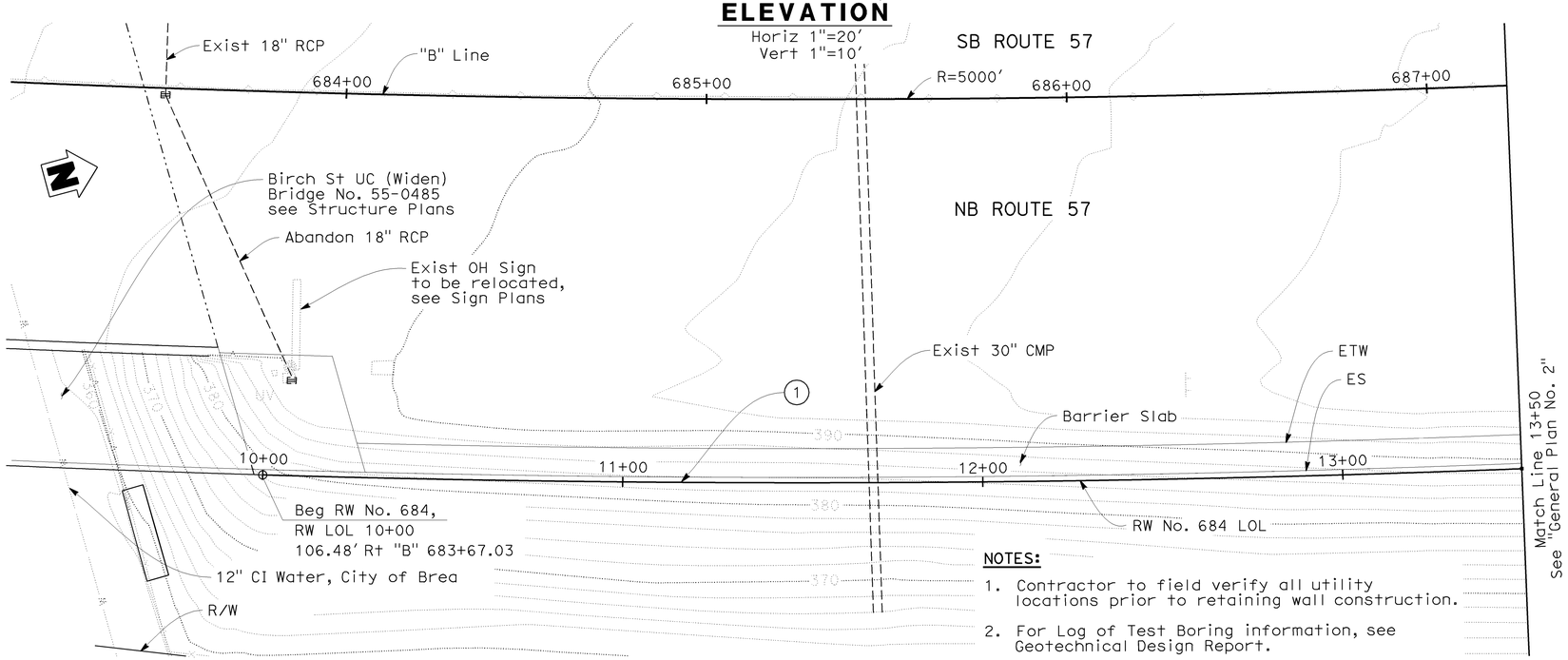

PLAN

1"=20′

CURVE DATA

NO	R	Δ	T	L
1	5106.48′	11°37′02"	519.48′	1035.39′

NOTES:

1. Contractor to field verify all utility locations prior to retaining wall construction.
2. For Log of Test Boring information, see Geotechnical Design Report.
3. For Retaining Wall Elevation Table, see "Typical Section" sheet.
4. For Drainage System & Details, see Drainage Plans.

LEGEND:

◆ Indicates Inspection Wire, for details see "Mechanically Stabilized Embankment Details No. 3" sheet.

INDEX TO PLANS

SHEET NO.	TITLE
1.	GENERAL PLAN NO. 1
2.	GENERAL PLAN NO. 2
3.	GENERAL PLAN NO. 3
4.	TYPICAL SECTION
5.	MECHANICALLY STABILIZED EMBANKMENT DETAIL NO. 1
6.	MECHANICALLY STABILIZED EMBANKMENT DETAIL NO. 2
7.	MECHANICALLY STABILIZED EMBANKMENT DETAIL NO. 3
8.	MECHANICALLY STABILIZED EMBANKMENT DETAIL NO. 4
9.	MECHANICALLY STABILIZED EMBANKMENT DETAIL NO. 5
10.	MECHANICALLY STABILIZED EMBANKMENT DETAIL NO. 6
11.	ARCHITECTURAL TREATMENT DETAILS
12.	LOG OF TEST BORINGS SHEET 1 OF 5
13.	LOG OF TEST BORINGS SHEET 2 OF 5
14.	LOG OF TEST BORINGS SHEET 3 OF 5
15.	LOG OF TEST BORINGS SHEET 4 OF 5
16.	LOG OF TEST BORINGS SHEET 5 OF 5

STANDARD PLANS DATED MAY 2006

A10A	ACRONYMS AND ABBREVIATIONS (SHEET 1 OF 2)
A10B	ACRONYMS AND ABBREVIATIONS (SHEET 2 OF 2)
A10C	SYMBOLS (SHEET 1 OF 2)
A10D	SYMBOLS (SHEET 2 OF 2)
B0-3	BRIDGE DETAILS
B11-56	CONCRETE BARRIER TYPE 736
D102	UNDERDRAINS

Standard Plan Sheet No.

Detail No.

RETAINING WALL NO 684
QUANTITIES

EARTH RETAINING STRUCTURE (MECHANICALLY STABILIZED EARTH WALL)	15,550	SQFT
STRUCTURAL CONCRETE, BARRIER SLAB	532	CY
FRACTURED RIB TEXTURE	1,900	SQFT
CONCRETE BARRIER (TYPE 736 MODIFIED)	1,036	LF

DESIGN OVERSIGHT — Jon Hamaguchi
11-24-09
SIGN OFF DATE

	BY	CHECKED			
DESIGN	D. Sun	J. Powell	LRFD	LIVE LOADING: HL-93 AND PERMIT (P-15) DESIGN LOAD	
DETAILS	E. Maechler	J. Powell	LAYOUT	P. Walker	M. Atiqullah
QUANTITIES	Y. Chiu	L. Ros	SPECIFICATIONS	M. Remolador	M. Atiqullah

PREPARED FOR THE STATE OF CALIFORNIA DEPARTMENT OF TRANSPORTATION

Ayman Salama
PROJECT ENGINEER

BRIDGE NO. 55E0096
POST MILES 20.42

RETAINING WALL NO. 684
GENERAL PLAN NO.1

DESIGN GENERAL PLAN SHEET (ENGLISH) (REV. 2/25/05)

ORIGINAL SCALE IN INCHES FOR REDUCED PLANS 0 1 2 3

CU 12220
EA 0F0321

DISREGARD PRINTS BEARING EARLIER REVISION DATES — REVISION DATES (PRELIMINARY STAGE ONLY) 02/18/09 04/07/09 04/17/09 06/08/09

SHEET 1 OF 16

FILE => 55e0096-a-gp01.dgn

USERNAME => ttistrk DATE PLOTTED => 26-JAN-2010 TIME PLOTTED => 06:02

DIST	COUNTY	ROUTE	POST MILES TOTAL PROJECT	SHEET No	TOTAL SHEETS
12	Ora	57	18.4/20.9	822	856

REGISTERED CIVIL ENGINEER — DATE 06/08/09

1-25-10
PLANS APPROVAL DATE

REGISTERED PROFESSIONAL ENGINEER — C. DANIEL SUN — No. 40064 — Exp. 12/31/09 — CIVIL — STATE OF CALIFORNIA

The State of California or its officers or agents shall not be responsible for the accuracy or completeness of electronic copies of this plan sheet.

OCTA
550 S. MAIN STREET
ORANGE, CA 92863

CH2M HILL
6 HUTTON CENTRE DRIVE, SUITE 700
SANTA ANA, CA 92707

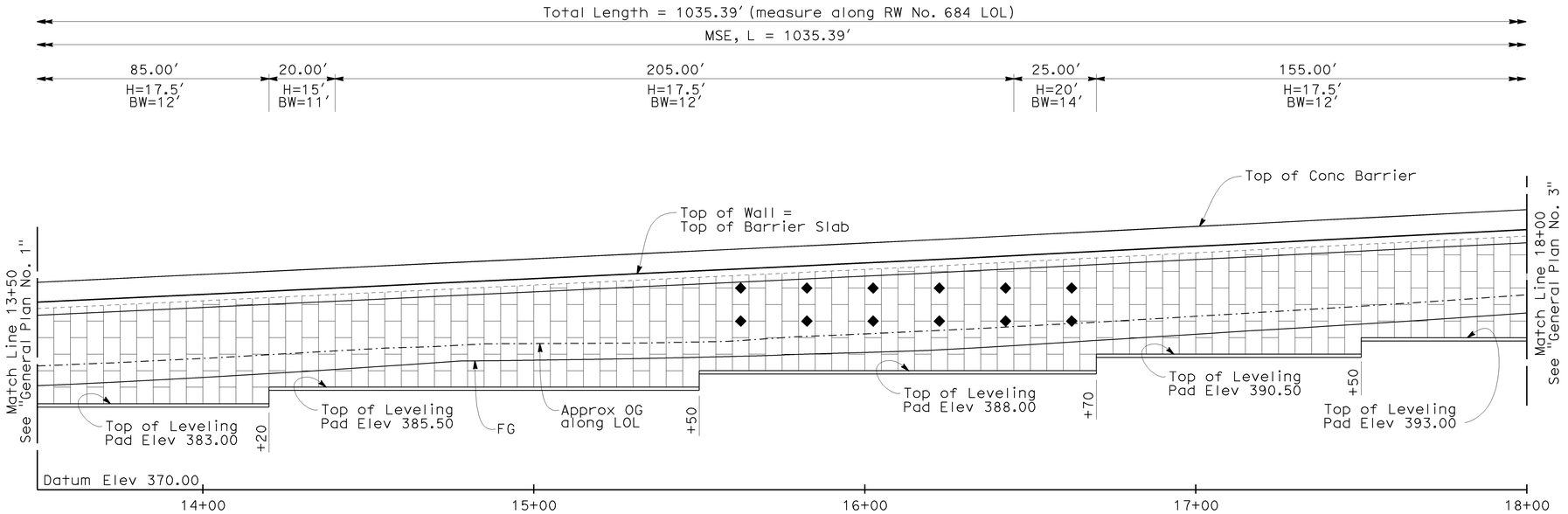

ELEVATION

Horiz 1"=20′
Vert 1"=10′

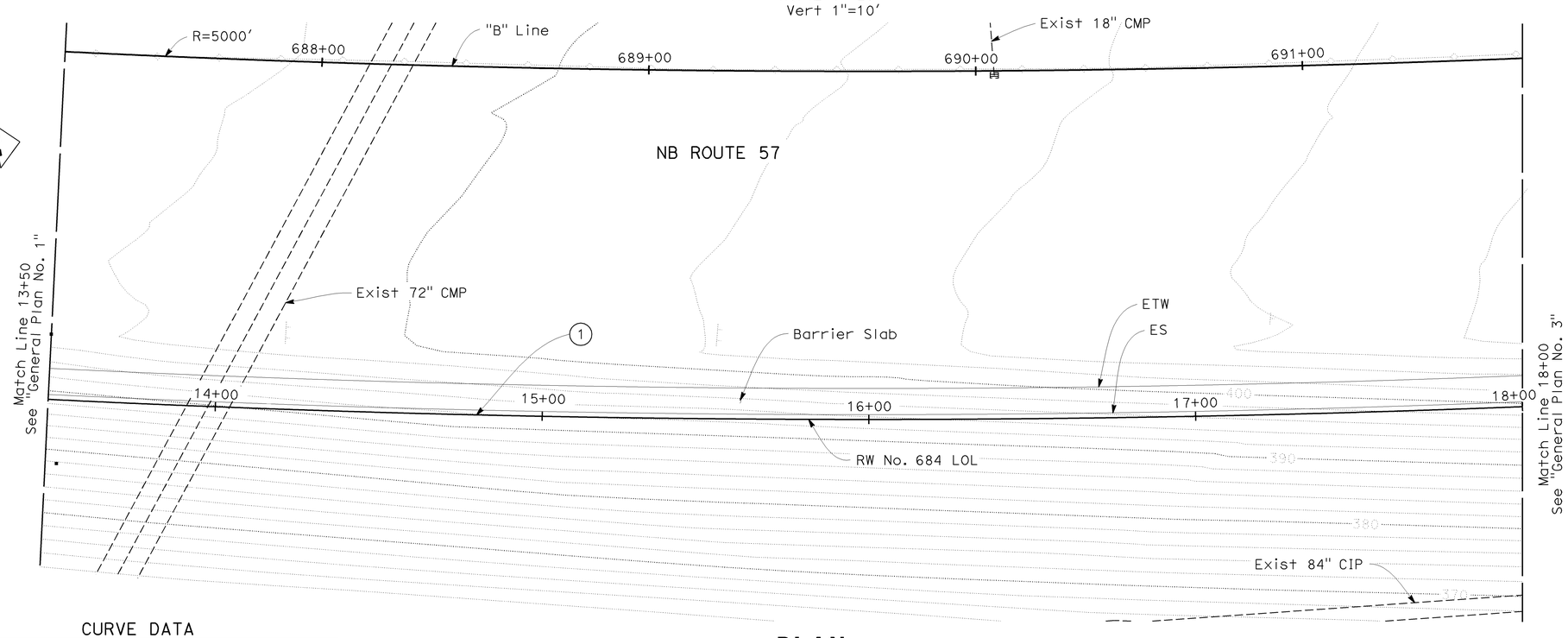

PLAN

1"=20′

LEGEND:

◆ Indicates Inspection Wire, for details see "Mechanically Stabilized Embankment Details No. 3" sheet.

NOTES:

1. Contractor to field verify all utility locations prior to retaining wall construction.
2. For Log of Test Boring information, see Geotechnical Design Report.
3. For Retaining Wall Elevation Table, see "Typical Section" sheet.
4. For Drainage System & Details, see Drainage Plans.

CURVE DATA

NO	R	Δ	T	L
1	5106.48′	11°37′02"	519.48′	1035.39′

DESIGN OVERSIGHT — Jon Hamaguchi
11-24-09
SIGN OFF DATE

	BY	CHECKED		
DESIGN	D. Sun	J. Powell	LRFD	LIVE LOADING: HL-93 AND PERMIT (P-15) DESIGN LOAD
DETAILS	E. Maechler	J. Powell	LAYOUT	P. Walker — M. Atiqullah
QUANTITIES	Y. Chiu	L. Ros	SPECIFICATIONS	M. Remolador — PLANS AND SPECS COMPARED M. Atiqullah

PREPARED FOR THE STATE OF CALIFORNIA DEPARTMENT OF TRANSPORTATION

Ayman Salama
PROJECT ENGINEER

BRIDGE NO. 55E0096
POST MILES 20.42

RETAINING WALL NO. 684
GENERAL PLAN NO.2

DESIGN GENERAL PLAN SHEET (ENGLISH) (REV. 2/25/05)

ORIGINAL SCALE IN INCHES FOR REDUCED PLANS 0 1 2 3

CU 12220
EA 0F0321

DISREGARD PRINTS BEARING EARLIER REVISION DATES

REVISION DATES (PRELIMINARY STAGE ONLY) 02/18/09 04/07/09 04/17/09 06/08/09

SHEET 2 OF 16

FILE => 55e0096-a-gp02.dgn

USERNAME => rtistrk DATE PLOTTED => 26-JAN-2010 TIME PLOTTED => 06:02

DIST	COUNTY	ROUTE	POST MILES TOTAL PROJECT	SHEET No	TOTAL SHEETS
12	Ora	57	18.4/20.9	823	856

REGISTERED CIVIL ENGINEER — DATE 06/08/09

1-25-10
PLANS APPROVAL DATE

REGISTERED PROFESSIONAL ENGINEER — C. DANIEL SUN — No. 40064 — Exp. 12/31/09 — CIVIL — STATE OF CALIFORNIA

The State of California or its officers or agents shall not be responsible for the accuracy or completeness of electronic copies of this plan sheet.

OCTA
550 S. MAIN STREET
ORANGE, CA 92863

CH2M HILL
6 HUTTON CENTRE DRIVE, SUITE 700
SANTA ANA, CA 92707

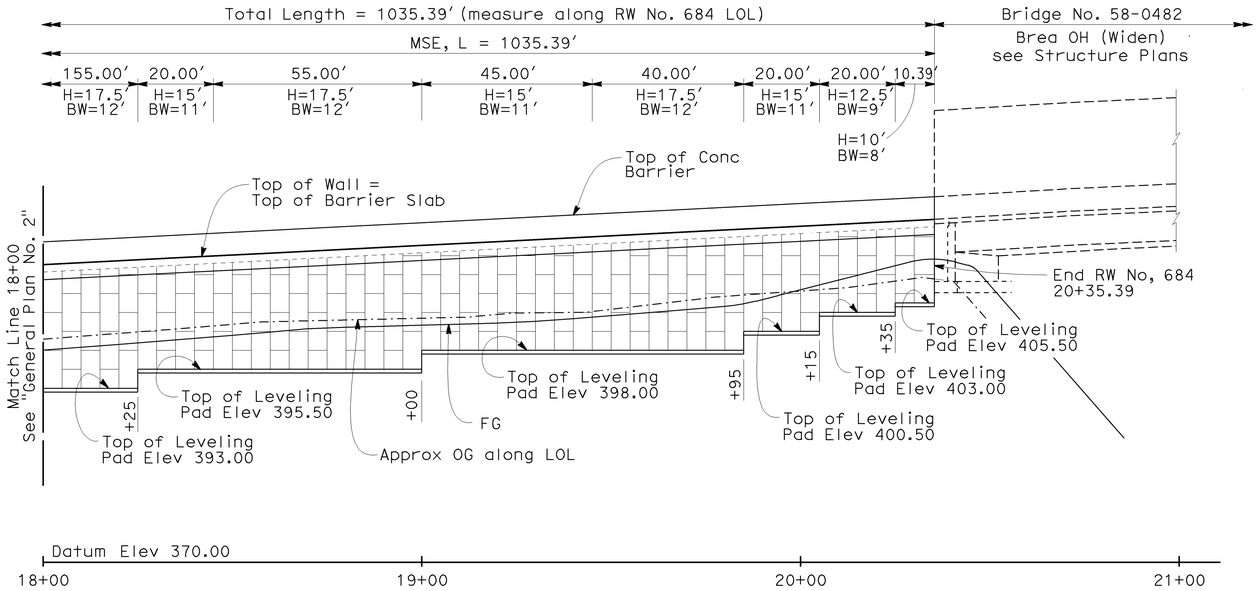

ELEVATION

Horiz 1"=20′
Vert 1"=10′

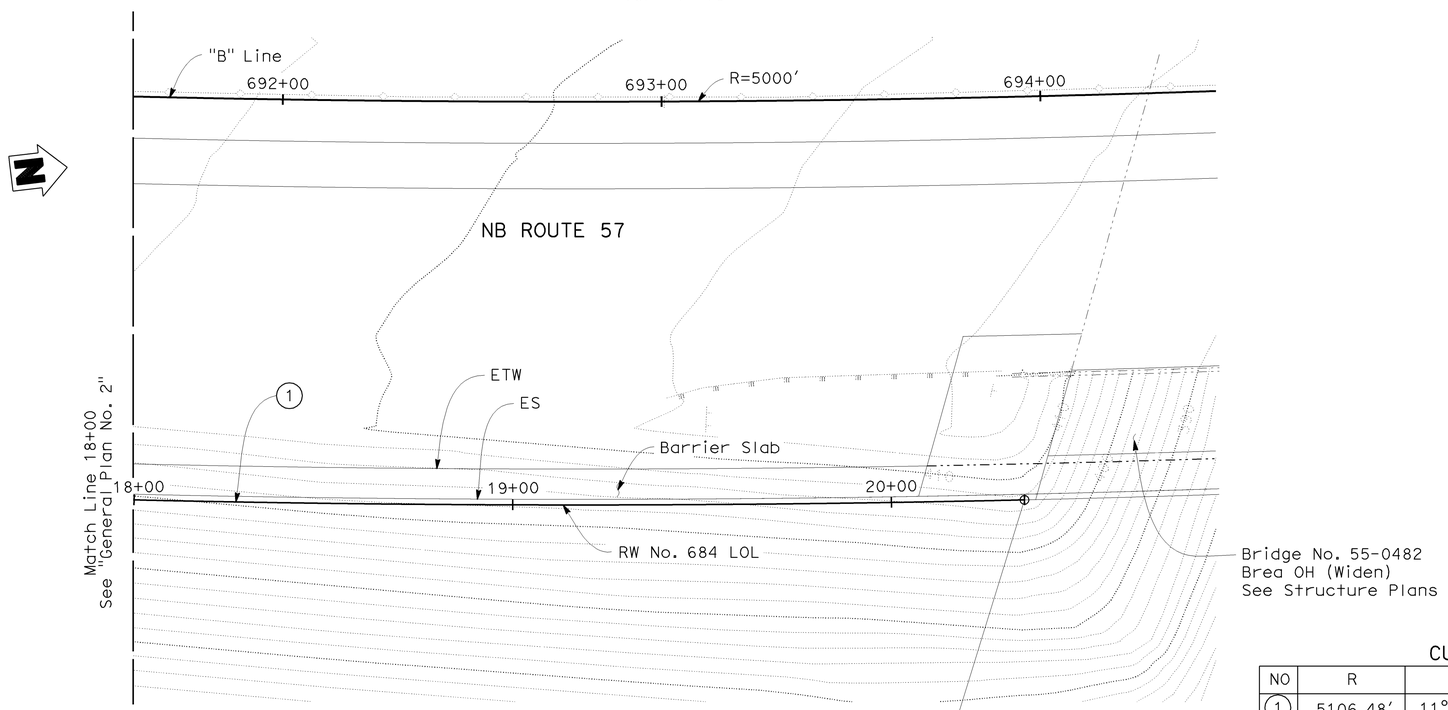

PLAN

1"=20′

CURVE DATA

NO	R	Δ	T	L
1	5106.48′	11°37′02"	519.48′	1035.39′

NOTES:

1. Contractor to field verify all utility locations prior to retaining wall construction.
2. For Log of Test Boring information, see Geotechnical Design Report.
3. For Retaining Wall Elevation Table, see "Typical Section" sheet.
4. For Drainage System & Details, see Drainage Plans.

DESIGN OVERSIGHT — Jon Hamaguchi — 11-24-09 SIGN OFF DATE	DESIGN	BY D. Sun	CHECKED J. Powell	LRFD	LIVE LOADING: HL-93 AND PERMIT (P-15) DESIGN LOAD
	DETAILS	BY E. Maechler	CHECKED J. Powell	LAYOUT	BY P. Walker — CHECKED M. Atiqullah
	QUANTITIES	BY Y. Chiu	CHECKED L. Ros	SPECIFICATIONS	BY M. Remolador — PLANS AND SPECS COMPARED M. Atiqullah

PREPARED FOR THE STATE OF CALIFORNIA DEPARTMENT OF TRANSPORTATION

Ayman Salama
PROJECT ENGINEER

CU 12220
EA 0F0321

BRIDGE NO. 55E0096
POST MILES 20.42

RETAINING WALL NO. 684
GENERAL PLAN NO.3

DESIGN GENERAL PLAN SHEET (ENGLISH) (REV. 2/25/05)

ORIGINAL SCALE IN INCHES FOR REDUCED PLANS 0 1 2 3

DISREGARD PRINTS BEARING EARLIER REVISION DATES — REVISION DATES (PRELIMINARY STAGE ONLY) 02/18/09 04/07/09 04/17/09 06/08/09

SHEET 3 OF 16

FILE => 55e0096-a-gp03.dgn

USERNAME => frostrk DATE PLOTTED => 26-JAN-2010 TIME PLOTTED => 06:03

DIST	COUNTY	ROUTE	POST MILES TOTAL PROJECT	SHEET No	TOTAL SHEETS
12	Ora	57	18.4/20.9	824	856

REGISTERED CIVIL ENGINEER 06/08/09 DATE

1-25-10
PLANS APPROVAL DATE

REGISTERED PROFESSIONAL ENGINEER C. DANIEL SUN No. 40064 Exp. 12/31/09 CIVIL STATE OF CALIFORNIA

The State of California or its officers or agents shall not be responsible for the accuracy or completeness of electronic copies of this plan sheet.

OCTA
550 S. MAIN STREET
ORANGE, CA 92863

CH2M HILL
6 HUTTON CENTRE DRIVE, SUITE 700
SANTA ANA, CA 92707

WELDED WIRE MAT SCHEDULE (LOADING CASE 1)

MAXIMUM HEIGHT	10	12.5	15	17.5	20	22.5
MINIMUM BASE WIDTH	8	9	11	12	14	16
TOP LEVELS OF MESH OVER	2 @ W11 x W11 + 6" x 9" 2 @ W11 x W11 + 6" x 12"	2 @ W11 x W11 + 6" x 9" 2 @ W11 x W11 + 6" x 12" 1 @ W11 x W11 + 6" x 18"	2 @ W11 x W11 + 6" x 9" 2 @ W11 x W11 + 6" x 12" 1 @ W11 x W11 + 6" x 18" 1 @ W11 x W11 + 6" x 24"	2 @ W11 x W11 + 6" x 9" 2 @ W11 x W11 + 6" x 12" 1 @ W11 x W11 + 6" x 18" 2 @ W11 x W11 + 6" x 24"	2 @ W11 x W11 + 6" x 9" 3 @ W11 x W11 + 6" x 18" 3 @ W11 x W11 + 6" x 24"	5 @ W11 x W11 + 6" x 18" 4 @ W11 x W11 + 6" x 24"

LEGEND:

2 @ W11 x W11 + 6" x 9"

- Longitudinal wire spacing X Transverse wire spacing
- Longitudinal wire size X Transverse wire size
- Number of welded wire mats.

RETAINING WALL ELEVATIONS

RW NO. 684 LOL STA	TOP OF WALL ELEV	FG ELEV
10+00	389.74	375.99
10+10	389.99	377.10
10+20	390.24	377.79
10+30	390.49	378.21
10+40	390.73	378.64
10+50	390.98	379.07
10+60	391.23	379.24
10+70	391.48	379.43
10+80	391.72	379.62
10+90	391.97	379.82
11+00	392.22	380.03
11+10	392.47	380.25
11+20	392.71	380.48
11+30	392.96	380.68
11+40	393.21	380.70
11+50	393.46	380.73
11+60	393.70	380.76
11+70	393.95	380.81
11+80	394.20	380.94
11+90	394.45	381.24
12+00	394.69	381.51
12+10	394.94	381.84
12+20	395.19	382.20
12+30	395.44	382.48
12+40	395.68	382.77
12+50	395.93	383.07
12+60	396.18	383.39
12+70	396.43	383.74
12+80	396.68	384.23
12+90	396.92	384.34

RW NO. 684 LOL STA	TOP OF WALL ELEV	FG ELEV
13+00	397.17	384.61
13+10	397.41	384.97
13+20	397.65	385.34
13+30	397.89	385.51
13+40	398.13	385.65
13+50	398.36	385.85
13+60	398.60	386.07
13+70	398.84	386.31
13+80	399.07	386.56
13+90	399.31	386.83
14+00	399.55	387.10
14+10	399.79	387.39
14+20	400.02	387.69
14+30	400.26	388.00
14+40	400.50	388.32
14+50	400.73	388.65
14+60	400.97	388.98
14+70	401.21	389.33
14+80	401.44	389.60
14+90	401.68	389.65
15+00	401.92	389.71
15+10	402.16	389.78
15+20	402.39	389.86
15+30	402.63	389.95
15+40	402.87	390.04
15+50	403.10	390.15
15+60	403.34	390.27
15+70	403.58	390.41
15+80	403.82	390.58
15+90	404.05	390.73

RW NO. 684 LOL STA	TOP OF WALL ELEV	FG ELEV
16+00	404.29	390.88
16+10	404.53	391.04
16+20	404.77	391.22
16+30	405.03	391.49
16+40	405.28	391.78
16+50	405.54	392.07
16+60	405.80	392.38
16+70	406.06	392.70
16+80	406.32	393.00
16+90	406.58	393.31
17+00	406.83	393.64
17+10	407.09	393.96
17+20	407.35	394.27
17+30	407.61	394.57
17+40	407.87	394.87
17+50	408.13	395.18
17+60	408.38	395.50
17+70	408.64	395.82
17+80	408.90	396.16
17+90	409.16	396.51
18+00	409.42	396.87
18+10	409.68	397.24
18+20	409.93	397.62
18+30	410.19	398.02
18+40	410.45	398.42
18+50	410.71	398.83
18+60	410.97	399.26
18+70	411.23	399.69
18+80	411.48	399.92
18+90	411.74	400.04

RW NO. 684 LOL STA	TOP OF WALL ELEV	FG ELEV
19+00	412.00	400.18
19+10	412.26	400.32
19+20	412.52	400.46
19+30	412.78	400.69
19+40	413.04	401.03
19+50	413.29	401.23
19+60	413.55	401.44
19+70	413.81	401.86
19+80	414.07	402.47
19+90	414.33	403.08
20+00	414.59	403.44
20+10	414.84	403.81
20+20	415.10	404.41
20+30	415.38	404.98
20+35.39	415.53	

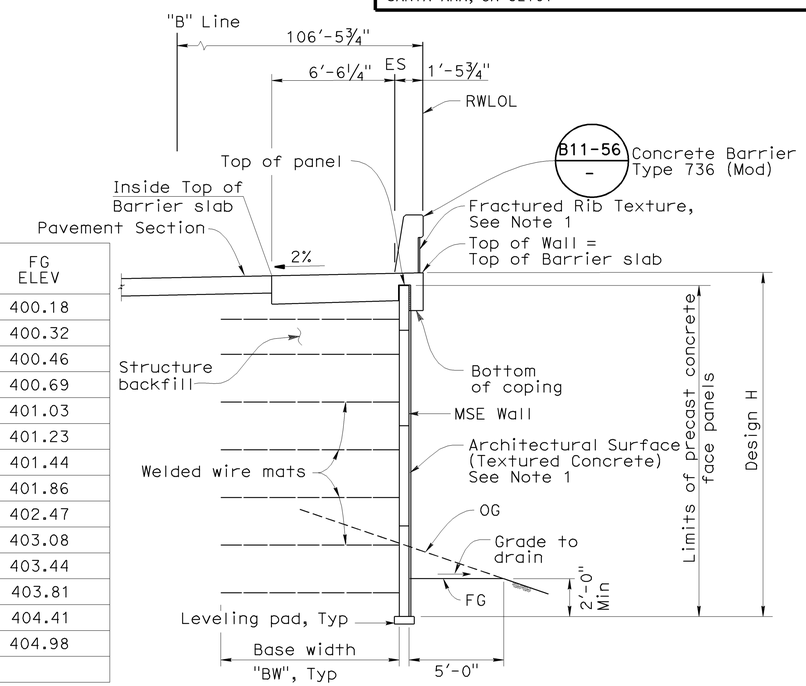

MSE WALL TYPICAL SECTION

¼"=1'-0"

MSE NOTES:

1. For design height "H", base width "BW", see "General Plan No.1, No.2, & No.3" sheets. For limits of excavation & backfill, see "Mechanically Stabilized Embankment Details No. 6" sheet.
2. For Barrier slab details, see "Mechanically Stabilized Embankment Details No. 4" sheet.
3. For panel details, see "Mechanically Stabilized Embankment Details No. 1" sheet.
4. For General Notes and wire mat details, see "Mechanically Stabilized Embankment Details No. 2" sheet.

NOTE:

1. For Fractured Rib Texture and Architectural Surface (Textured Concrete) details, See "Architectural Treatment Details" sheet.

DESIGN OVERSIGHT Jon Hamaguchi
11-24-09
SIGN OFF DATE

	BY	CHECKED
DESIGN	D. Sun	J. Powell
DETAILS	E. Maechler	J. Powell
QUANTITIES	Y. Chiu	L. Ros

PREPARED FOR THE STATE OF CALIFORNIA DEPARTMENT OF TRANSPORTATION

Ayman Salama
PROJECT ENGINEER

BRIDGE NO. 55E0096
POST MILE 20.42

RETAINING WALL NO. 684
TYPICAL SECTION

DESIGN DETAIL SHEET (ENGLISH) (REV. 2/25/05)

ORIGINAL SCALE IN INCHES FOR REDUCED PLANS 0 1 2 3

CU 12220
EA 0F0321

DISREGARD PRINTS BEARING EARLIER REVISION DATES

REVISION DATES (PRELIMINARY STAGE ONLY) 02/18/09 04/07/09 04/17/09 06/08/09

SHEET 4 OF 16

FILE => 55e0096-a-ts01.dgn

USERNAME => trstrk DATE PLOTTED => 26-JAN-2010 TIME PLOTTED => 06:03

DIST.	COUNTY	ROUTE	POST MILES TOTAL PROJECT	SHEET NO.	TOTAL SHEETS
12	Ora	57	18.4/20.9	825	856

REGISTERED ENGINEER - CIVIL 06/08/09 DATE

1-25-10
PLANS APPROVAL DATE

REGISTERED PROFESSIONAL ENGINEER C. DANIEL SUN No. 40064 Exp. 12/31/11 CIVIL STATE OF CALIFORNIA

The State of California or its officers or agents shall not be responsible for the accuracy or completeness of electronic copies of this plan sheet.

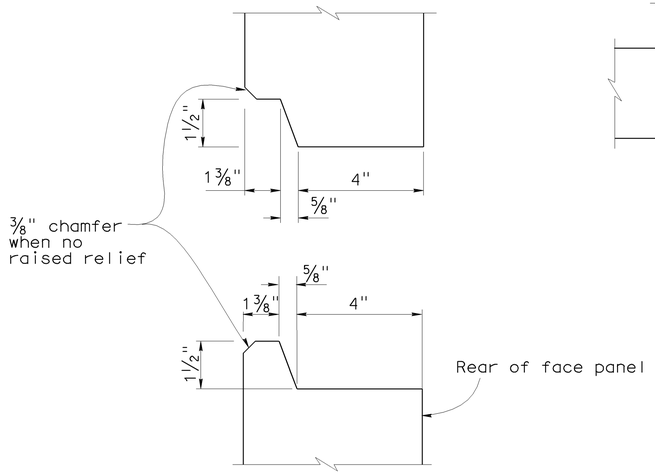

HORIZONTAL JOINT DETAIL
No Scale

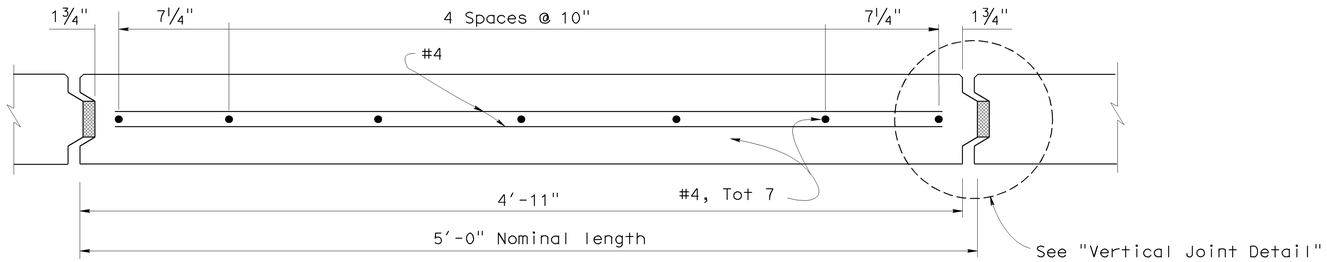

PLAN - FACE PANEL
No Scale

NOTES:

1. Architectural treatment not shown. Architectural Surface (Textured Concrete) extends beyond face of panel. See "Architectural Treatment Details" sheet.
2. Place reinforced elastomeric bearing pads in all of the panel joints between the panels. Place one in each vertical joint where the horizontal joint intersects it. Place two per panel in each horizontal joint.
   3/4" x 2 3/8" x 6" for vertical joints
   3/4" x 4" x 6" for horizontal joints.
3. Bond a strip of filter fabric, 1' - 0" wide, over the full length of all panel joints.

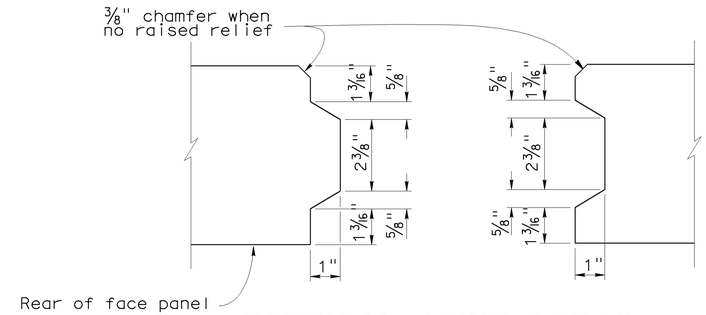

VERTICAL JOINT DETAIL
No Scale

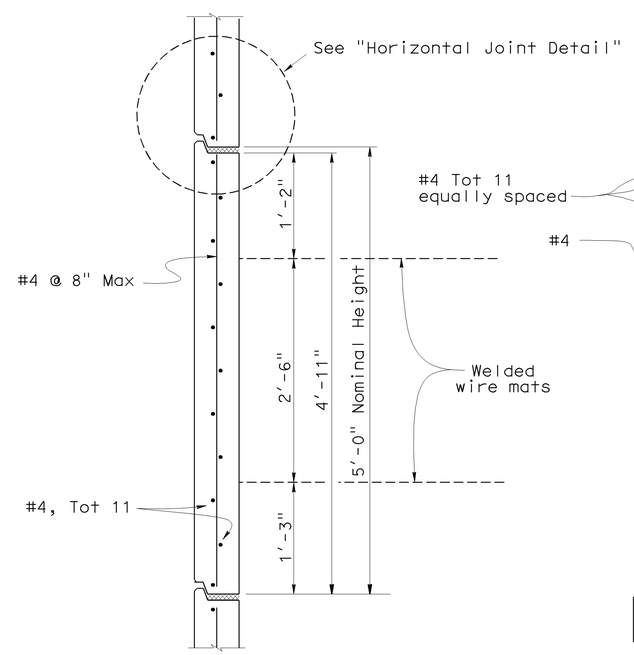

INTERMEDIATE PANEL
No Scale

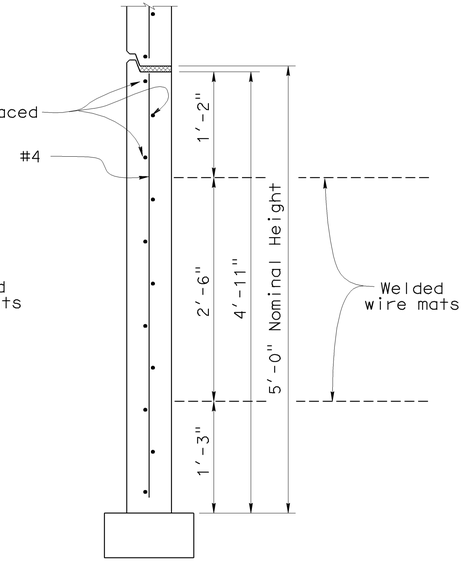

BOTTOM PANEL
No Scale

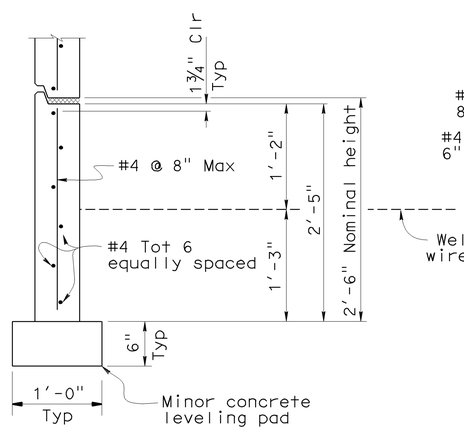

BOTTOM HALF PANEL
No Scale

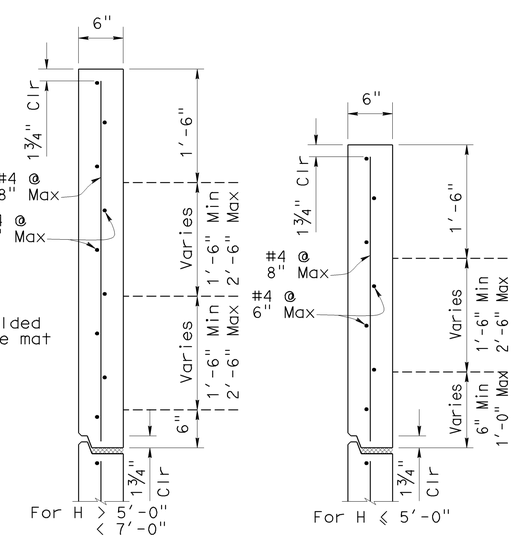

TOP PANEL
No Scale

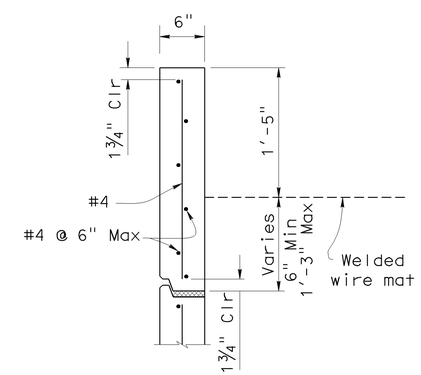

TOP HALF PANEL
No Scale

SPECIAL DETAILS

STANDARD DRAWING			
FILE NO. xs13-020-1e	APPROVED BY K. GRISWELL (RESPONSIBLE TECHNICAL SPECIALIST)	RELEASED BY ROBERTO LACALLE (RESPONSIBLE OFFICE CHIEF)	
	APPROVAL DATE 5-6-08	RELEASE DATE REVISED	

1 Added Top Panel Details
2 Revised Note

STATE OF CALIFORNIA DEPARTMENT OF TRANSPORTATION

DIVISION OF ENGINEERING SERVICES

BRIDGE NO. 55E0096
POST MILE 20.42

RETAINING WALL NO. 684
MECHANICALLY STABILIZED EMBANKMENT
DETAIL NO. 1

DS OSD 2147A (ENGLISH STANDARD DRAWING "XS" BORDER REV. 01/11/08)

ORIGINAL SCALE IN INCHES FOR REDUCED PLANS 0 1 2 3

CU 12220
EA 0F0321

DISREGARD PRINTS BEARING EARLIER REVISION DATES 02/18/09 04/07/09 04/17/09 06/08/09

REVISION DATES (PRELIMINARY STAGE ONLY)

SHEET 5 OF 16

USERNAME => trstrk

55e0096-g-msedt01.dgn

DATE PLOTTED => 26-JAN-2010 TIME PLOTTED => 06:03

DIST.	COUNTY	ROUTE	POST MILES TOTAL PROJECT	SHEET NO.	TOTAL SHEETS
12	Ora	57	18.4/20.9	826	856

REGISTERED ENGINEER - CIVIL DATE 06/08/09

1-25-10
PLANS APPROVAL DATE

REGISTERED PROFESSIONAL ENGINEER C. DANIEL SUN No. 40064 Exp. 12/31/11 CIVIL STATE OF CALIFORNIA

The State of California or its officers or agents shall not be responsible for the accuracy or completeness of electronic copies of this plan sheet.

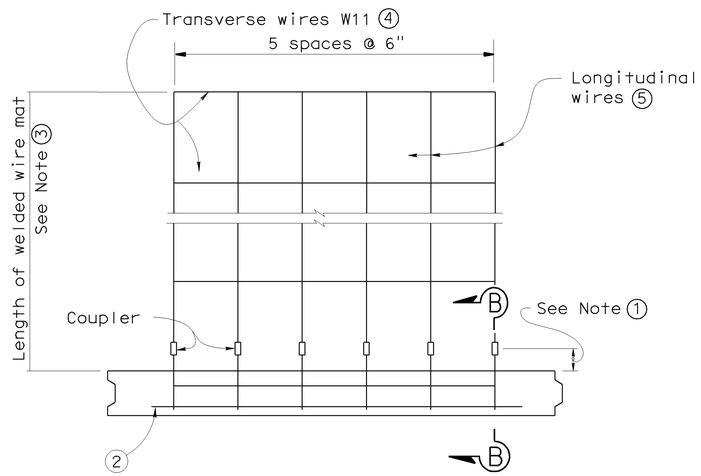

PLAN OF PANEL WITH WELDED WIRE MAT

No scale

GENERAL NOTES (MSE WALLS)

Live loading: Surcharge = 240 lb/ft^2

Soil parameters:

Internal design ϕ = 34°, γ = 120 lb/ft^3
External design ϕ(Backfill) = 34°, γ = 120 lb/ft^3
ϕ(Foundation) = 30°

Precast concrete panels:

f′c = 4,000 psi (Concrete compressive strength at 28 days)
fy = 60,000 psi (Yield strength of reinforcement)

Soil reinforcement:

Welded wire mats: fy = 65,000 psi (Yield strength)
Coupler: fy = 36,000 psi (Yield strength)
Corrosion rate = 1.1 mils/year

Reinforced concrete:

f′c = 3,600 psi, except as noted
(Concrete compressive strength at 28 days)

fy = 60,000 psi (Yield strength of reinforcement)

MSE = Mechanically stabilized embankment

NOTES:

① Distance as required to permit coupler to be swaged.

② Place #4 bar, 3′ - 2" long, centered on connector mat, but not welded to it.

③ Length equals "Base width" of wall, except it shall not be less than 16′ for the top 2 levels of mats at the top of the wall.

④ All Transverse Wires size W11 at various spacings as shown elsewhere in plans.

⑤ All Longitudinal Wires at 6" spacing, of various sizes, as shown elsewhere in plans.

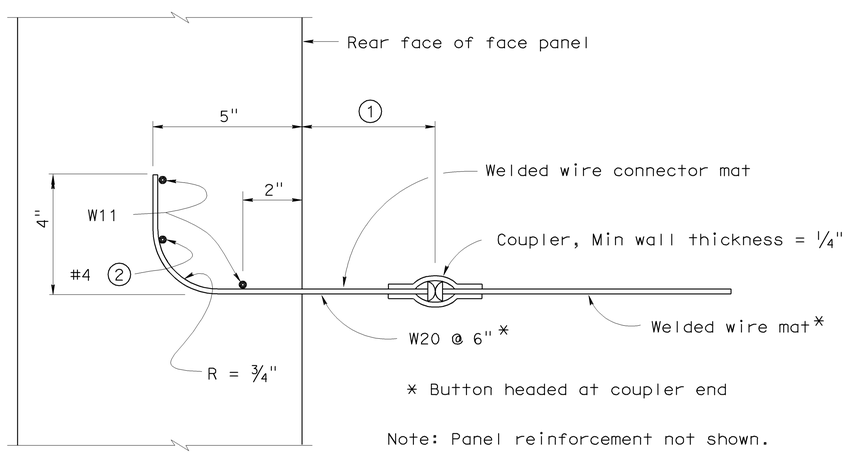

SECTION B-B

No scale

STANDARD DRAWING

FILE NO. xs13-020-2e

APPROVED BY K. GRISWELL
RESPONSIBLE TECHNICAL SPECIALIST
APPROVAL DATE 5-6-08

RELEASED BY ROBERTO LACALLE
RESPONSIBLE OFFICE CHIEF
RELEASE DATE 5-6-08

STATE OF CALIFORNIA
DEPARTMENT OF TRANSPORTATION

DIVISION OF ENGINEERING SERVICES

BRIDGE NO. 55E0096
POST MILE 20.42

RETAINING WALL NO. 684
MECHANICALLY STABILIZED EMBANKMENT
DETAIL NO. 2

DS OSD 2147A (ENGLISH STANDARD DRAWING "XS" BORDER REV. 01/11/08)

ORIGINAL SCALE IN INCHES FOR REDUCED PLANS 0 1 2 3

CU 12220
EA 0F0321

DISREGARD PRINTS BEARING EARLIER REVISION DATES

REVISION DATES (PRELIMINARY STAGE ONLY) 02/18/09 04/07/09 04/17/09 06/08/09

SHEET 6 OF 16

USERNAME => s135318

55e0096-g-msedt02.dgn

DATE PLOTTED => 25-JAN-2010 TIME PLOTTED => 15:44

DIST.	COUNTY	ROUTE	POST MILES TOTAL PROJECT	SHEET NO.	TOTAL SHEETS
12	Ora	57	18.4/20.9	827	856

C. Daniel Sun 06/08/09
REGISTERED ENGINEER - CIVIL DATE

1-25-10
PLANS APPROVAL DATE

REGISTERED PROFESSIONAL ENGINEER C. DANIEL SUN No. 40064 Exp. 12/31/11 CIVIL STATE OF CALIFORNIA

The State of California or its officers or agents shall not be responsible for the accuracy or completeness of electronic copies of this plan sheet.

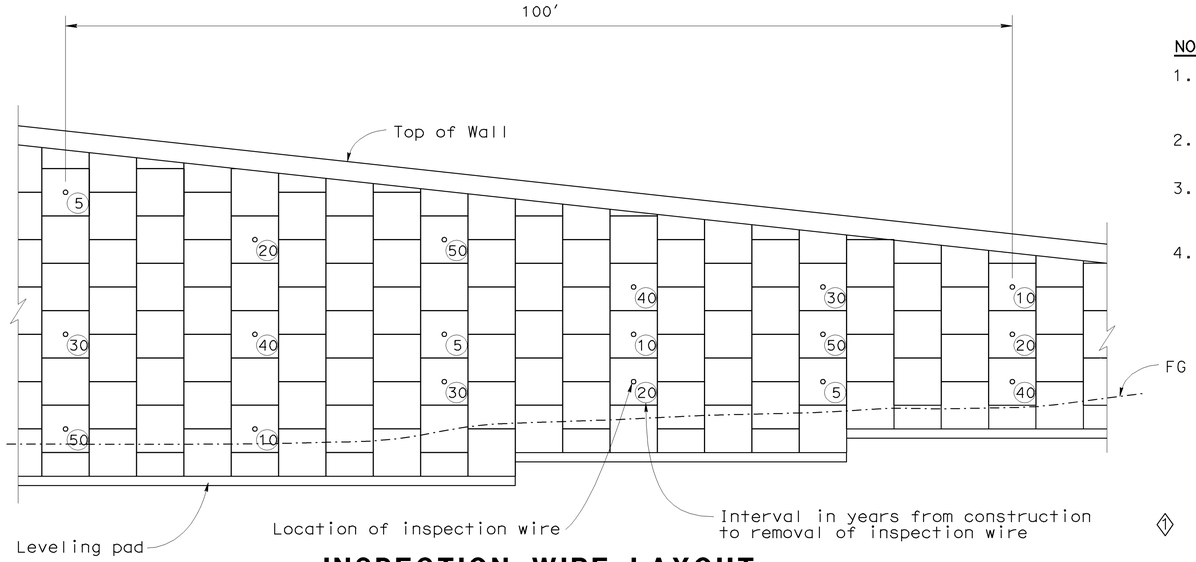

INSPECTION WIRE LAYOUT

No Scale

NOTES:

1. A set of 18 inspection wires is required for every MSE section of at least 100 feet long and a height equal to or greater than 17 feet.
2. Sets should be located approximately 500 feet apart, along the LOL.
3. Place wires in every fourth panel column along the LOL (20 feet apart) and number them according to the typical layout shown.
4. Walls which do not require a set of inspection wires based on the criteria in Note 1 shall have single level of inspection wires installed at a uniform spacing of 20 feet along this level. The location of this level shall be at the first panels above the base of the wall which will be fully exposed after completion of the wall. A minimum of 6 inspection wires shall be installed.

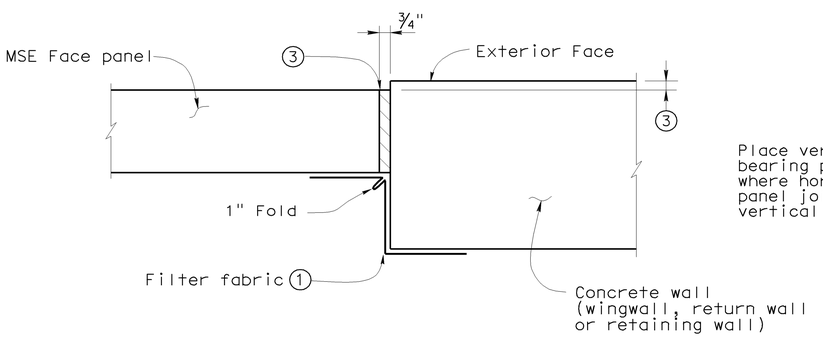

MSE FACE PANEL-TO-CONCRETE WALL JOINT DETAIL

No Scale

LEGEND

1. Bond a strip of filter fabric, 1'-6" wide, to back of MSE panels and the adjacent concrete wall for entire length of vertical joint.
2. Bond expansion joint material to the concrete wall.
3. Offset between face of MSE face panel and face of the concrete wall as dictated by location of layout lines shown elsewhere in Project Plans.

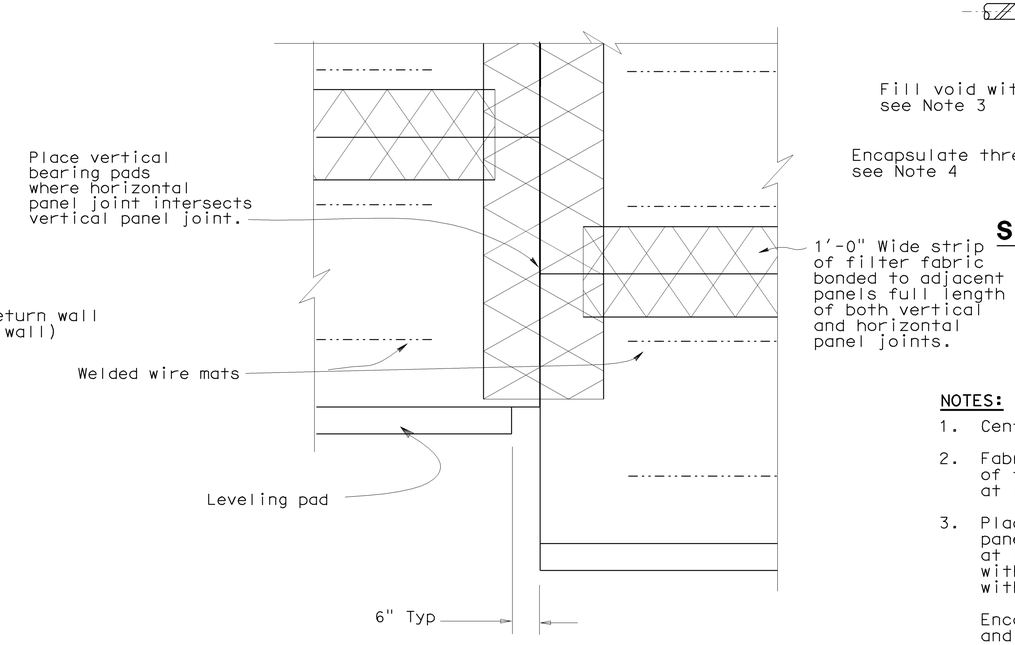

REAR ELEVATION

No Scale

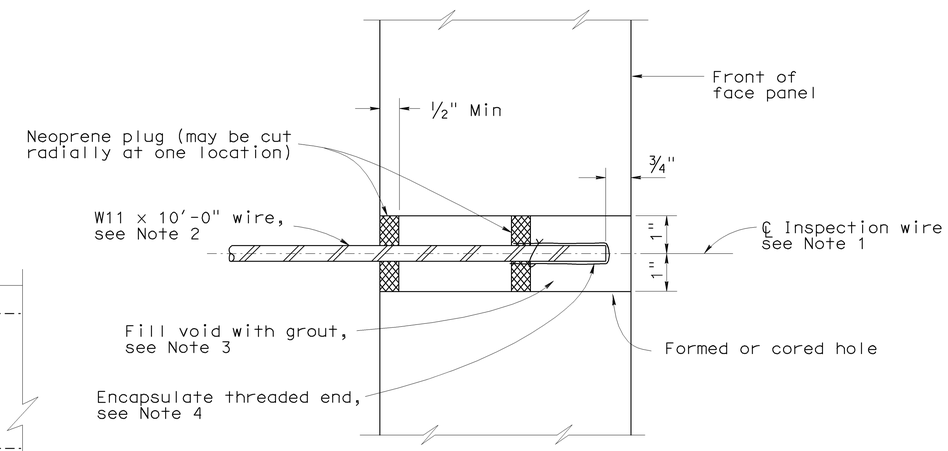

SECTION THRU INSPECTION WIRE

No Scale

NOTES:

1. Center inspection wire in face panel.
2. Fabricate inspection wires from W11 wire representative of the welded wire mats, with 3/8" dia - 16 UNC threads for at least 1 1/2" of one end.
3. Place inspection wire horizontal and perpendicular to the wall panel prior to backfilling. After backfill placement to a level at least 2'-0" above the inspection wire, dry pack opening with 1000 to 1500 psi mortar. Trowel mortar smooth and flush with face of panel.

   Encapsulate threaded end with corrosion inhibiting mastic, and secure round vinyl cover with nylon tie.
4. UNC = Unified coarse threads

SPECIAL DETAILS

RETAINING WALL NO. 684

MECHANICALLY STABILIZED EMBANKMENT

DETAIL NO. 3

STANDARD DRAWING

FILE NO. xs13-020-3e

APPROVED BY K. GRISWELL, RESPONSIBLE TECHNICAL SPECIALIST
APPROVAL DATE 5-6-08

RELEASED BY ROBERTO LACALLE, RESPONSIBLE OFFICE CHIEF
RELEASE DATE REVISED

1 Added Inspection Wire Layout & Notes

STATE OF CALIFORNIA DEPARTMENT OF TRANSPORTATION

DIVISION OF ENGINEERING SERVICES

BRIDGE NO. 55E0096
POST MILE 20.42

CU 12220
EA 0F0321

DS OSD 2147A (ENGLISH STANDARD DRAWING "XS" BORDER REV. 01/11/08)

ORIGINAL SCALE IN INCHES FOR REDUCED PLANS 0 1 2 3

DISREGARD PRINTS BEARING EARLIER REVISION DATES

REVISION DATES (PRELIMINARY STAGE ONLY) 02/18/09 04/07/09 04/17/09 06/08/09

SHEET 7 OF 16

USERNAME => s135318

55e0096-g-msedt03.dgn

DATE PLOTTED => 25-JAN-2010 TIME PLOTTED => 15:44

DIST.	COUNTY	ROUTE	POST MILES TOTAL PROJECT	SHEET NO.	TOTAL SHEETS
12	Ora	57	18.4/20.9	828	856

REGISTERED ENGINEER - CIVIL DATE 06/08/09

1-25-10
PLANS APPROVAL DATE

REGISTERED PROFESSIONAL ENGINEER C. DANIEL SUN No. 40064 Exp. 12/31/11 CIVIL STATE OF CALIFORNIA

The State of California or its officers or agents shall not be responsible for the accuracy or completeness of electronic copies of this plan sheet.

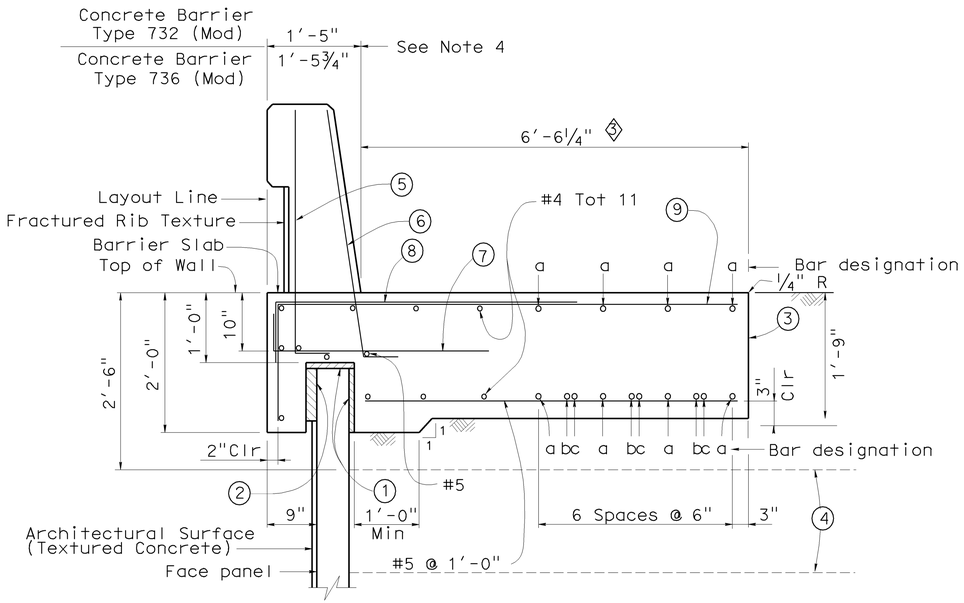

SECTION AT TOP OF WALL WITH BARRIER SLAB AND CONCRETE BARRIER

No Scale

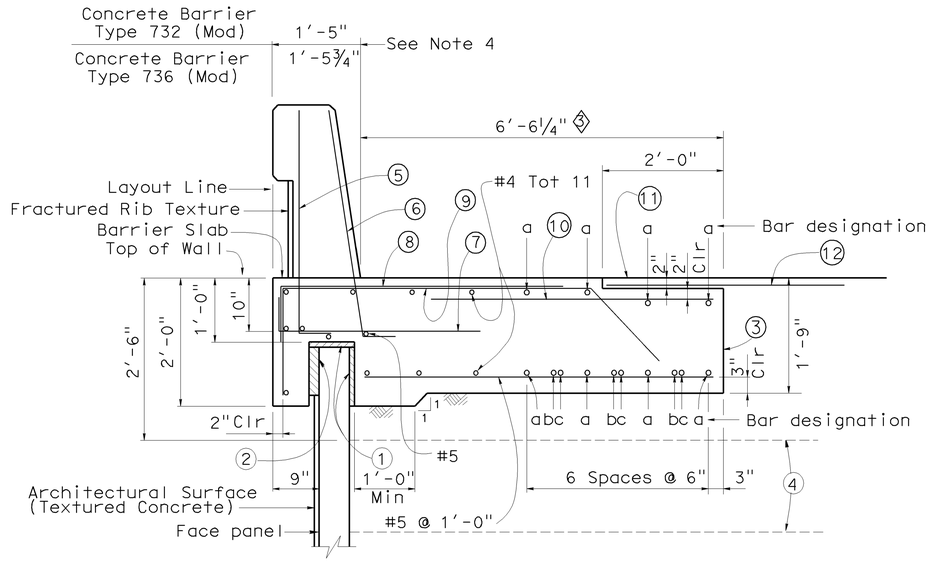

SECTION AT TOP OF WALL WITH BARRIER SLAB WITH PAVING NOTCH AND CONCRETE BARRIER

No Scale

NOTES:

1. Clearance to reinforcing steel in concrete barrier to be 1".
2. Not all barrier reinforcement shown.
3. No expansion joints in concrete barrier or barrier slab within MSE wall limits.
4. Specific concrete barrier to be utilized as shown on typical section elsewhere in Project Plans.
5. Install cable railing or chain link fence when indicated in Project Plans.

LEGEND

(1) 1" Expanded polystyrene.

(2) 2" Expanded polystyrene. Recess expanded polystyrene 2" into barrier slab.

(3) Contact joint.

(4) Welded Wire Mat Soil reinforcement.

(5) #5 6¼" @ 1'-4" (To be in place prior to barrier slab concrete).

(6) #5 6¼" @ 8" (To be in place prior to barrier slab concrete).

(7) #5 6¼" 3'-4" @ 1'-0"

(8) #5 4'-7" @ 1'-0" bundled with (9) bars.

(9) #5 5'-0" 1 1 7-3¾" @ 1'-0"

(10) #5 X 1400 @ 1'-0"

"a" bar = #6 continuous.
"b" bar = #6 X 59'-0"
"c" bar = #6 X 49'-2"
Place "b" and "c" bars at beginning and ending ends of barrier slab.

(11) AC Overlay on barrier slab.

(12) 4'-0" wide pavement reinforcing fabric.

◇1 ◇1 ◇2

SPECIAL DETAILS

RETAINING WALL NO. 684

MECHANICALLY STABILIZED EMBANKMENT

DETAIL NO. 4

STANDARD DRAWING

FILE NO. xs13-020-4e

APPROVED BY K. GRISWELL, RESPONSIBLE TECHNICAL SPECIALIST
APPROVAL DATE 5-6-08

RELEASED BY ROBERTO LACALLE, RESPONSIBLE OFFICE CHIEF
RELEASE DATE REVISED

◇1 Deleted Sections
◇2 Removed Notes (13) thru (15)
◇3 Revised dimensions & Detail

STATE OF CALIFORNIA
DEPARTMENT OF TRANSPORTATION

DIVISION OF ENGINEERING SERVICES

BRIDGE NO. 55E0096
POST MILE 20.42

CU 12220
EA 0F0321

DS OSD 2147A (ENGLISH STANDARD DRAWING "XS" BORDER REV. 01/11/08)

ORIGINAL SCALE IN INCHES FOR REDUCED PLANS 0 1 2 3

DISREGARD PRINTS BEARING EARLIER REVISION DATES

REVISION DATES (PRELIMINARY STAGE ONLY) 02/18/09 04/07/09 04/17/09 06/08/09

SHEET 8 OF 16

USERNAME => s135318

DATE PLOTTED => 25-JAN-2010 TIME PLOTTED => 15:44

55e0096-g-msedt04.dgn

DIST.	COUNTY	ROUTE	POST MILES TOTAL PROJECT	SHEET NO.	TOTAL SHEETS
12	Ora	57	18.4/20.9	829	856

REGISTERED ENGINEER - CIVIL DATE 06/08/09

1-25-10
PLANS APPROVAL DATE

REGISTERED PROFESSIONAL ENGINEER C. DANIEL SUN No. 40064 Exp. 12/31/09 CIVIL STATE OF CALIFORNIA

The State of California or its officers or agents shall not be responsible for the accuracy or completeness of electronic copies of this plan sheet.

NOTES:

1. Low end of subgrade drain shown, at high end install cap at end of ¾" slotted pipe. Subgrade drain located at end of structure approach slab, see "Subgrade Drain Detail".
2. Not all barrier reinforcement shown.
3. Outlet details shown elsewhere in Project Plans.
4. At acute corners of approach slab, bend reinforcement as required to clear expansion joint.
5. Specific concrete barrier to be utilized as shown on typical section elsewhere in Project Plans.

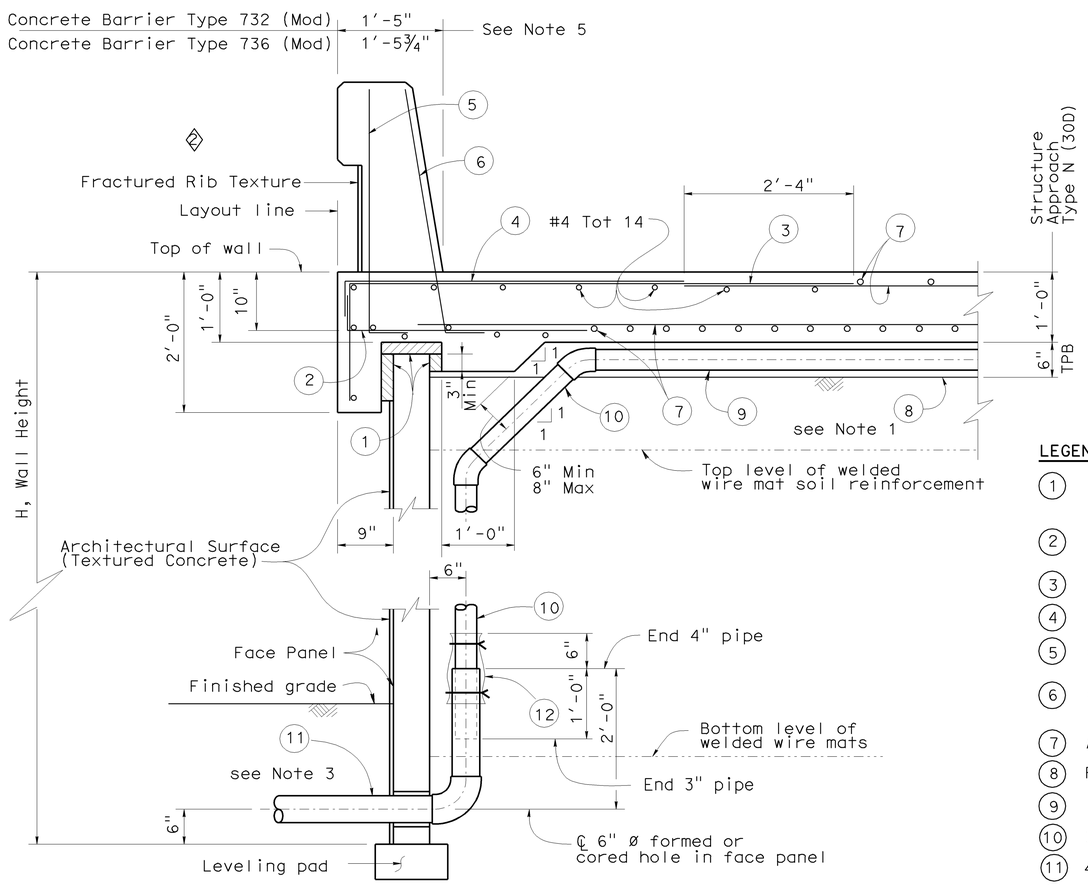

SECTION AT TOP OF WALL WITH STRUCTURE APPROACH SLAB AND CONCRETE BARRIER

No Scale

LEGEND

1. 2" Expanded polystyrene recessed 2" into barrier slab at front of MSE face panel.
2. #5 6¼" / 3'-4" @ 1'-0"
3. #5 6'-10⅝" @ 1'-0"
4. #5 4'-7" @ 1'-0" bundle with (3) bars.
5. #5 L @ 1'-4" (To be in place prior to 6¼" approach slab concrete).
6. #5 L @ 8" (To be in place prior to 6¼" approach slab concrete).
7. Approach slab reinforcement.
8. Filter fabric.
9. 3" Plastic pipe (slotted).
10. 3" Plastic pipe and fittings (unslotted).
11. 4" Sch 80 PVC outlet pipe and fittings (unslotted).
12. 1'-0" wide x 2'-0" filter fabric wrapped around pipe and secured with nylon ties.

SPECIAL DETAILS

RETAINING WALL NO. 684

MECHANICALLY STABILIZED EMBANKMENT

DETAIL NO. 5

STANDARD DRAWING

FILE NO. xs13-020-5e

APPROVED BY K. GRISWELL — RESPONSIBLE TECHNICAL SPECIALIST
APPROVAL DATE 5-6-08

RELEASED BY ROBERTO LACALLE — RESPONSIBLE OFFICE CHIEF
RELEASE DATE REVISED

1 Deleted Section
2 Revised Detail

STATE OF CALIFORNIA DEPARTMENT OF TRANSPORTATION

DIVISION OF ENGINEERING SERVICES

BRIDGE NO. 55E0096
POST MILE 20.42

CU 12220
EA 0F0321

DISREGARD PRINTS BEARING EARLIER REVISION DATES 02/14/09 03/06/09 04/17/09 06/08/09

SHEET 9 OF 16

DS OSD 2147A (ENGLISH STANDARD DRAWING "XS" BORDER REV. 01/11/08)

ORIGINAL SCALE IN INCHES FOR REDUCED PLANS 0 1 2 3

USERNAME => s135318

55e0096-g-msedt05.dgn

DATE PLOTTED => 25-JAN-2010 TIME PLOTTED => 15:44

DIST.	COUNTY	ROUTE	POST MILES TOTAL PROJECT	SHEET NO.	TOTAL SHEETS
12	Ora	57	18.4/20.9	830	856

C. Daniel Sun 06/08/09
REGISTERED ENGINEER - CIVIL DATE

1-25-10
PLANS APPROVAL DATE

REGISTERED PROFESSIONAL ENGINEER C. DANIEL SUN No. 40064 Exp. 12/31/11 CIVIL STATE OF CALIFORNIA

The State of California or its officers or agents shall not be responsible for the accuracy or completeness of electronic copies of this plan sheet.

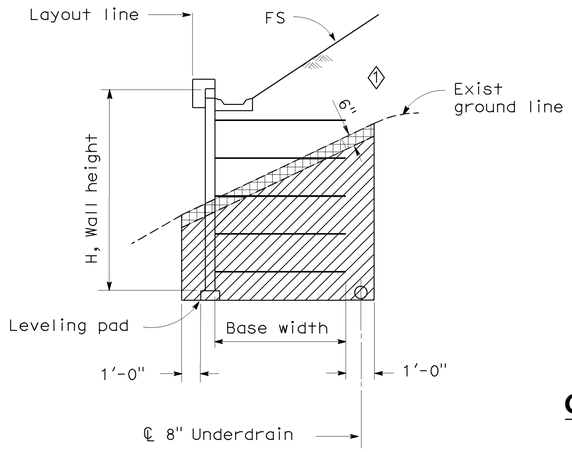

LIMITS OF EXCAVATION

No Scale

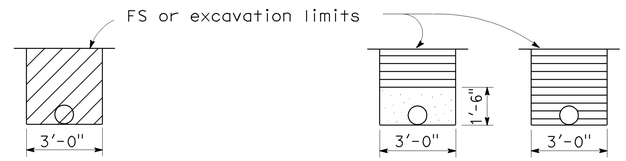

OUTLET PIPE **CLEANOUT PIPE**

EXCAVATION **BACKFILL**

OUTLET OR CLEANOUT PIPE FOR UNDERDRAIN

No Scale

ABBREVIATIONS

OG	Original ground
FS	Planned finished surface
GP	Planned grading plane

LEGEND

- Limits of structure excavation
- Limits of structure backfill
- Limits of permeable material
- 2 Indicates Structure Excavation (Type Y-1) (Aerially Deposited Lead)

NOTES:

1. Limits to FS except to GP when in roadway section.
2. Locate 8" perforated underdrain below bottom level of welded wire mats.
3. Maximum spacing of outlet pipes is 200 ft.
4. At sags in profile of underdrain, install outlet pipe for each direction of flow.

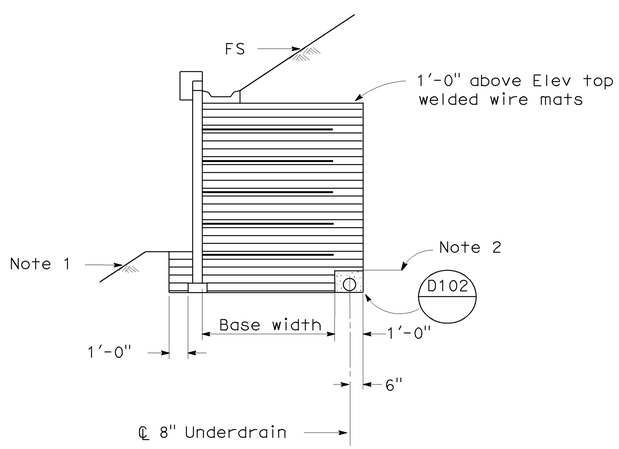

SLOPING FINISHED SURFACE

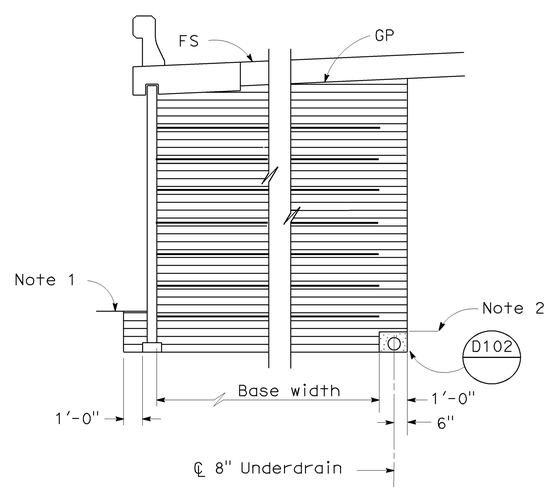

ROADWAY SECTION WITH BASE WIDTH 16' OR GREATER

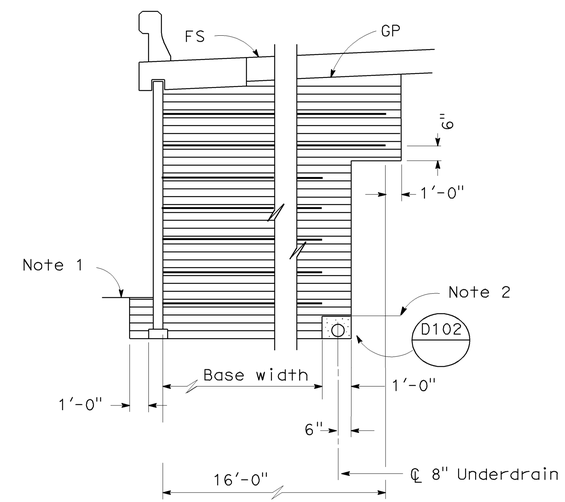

ROADWAY SECTION WITH BASE WIDTH LESS THAN 16'

LIMITS OF BACKFILL

No Scale

SPECIAL DETAILS

RETAINING WALL NO. 684

MECHANICALLY STABILIZED EMBANKMENT

DETAIL NO. 6

STANDARD DRAWING

FILE NO. xs13-020-6e

APPROVED BY K. GRISWELL RESPONSIBLE TECHNICAL SPECIALIST
APPROVAL DATE 5-6-08

RELEASED BY ROBERTO LACALLE RESPONSIBLE OFFICE CHIEF
RELEASE DATE REVISED

1 Added Limits of ADL Excavation
2 Added ADL Excavation Legend

STATE OF CALIFORNIA DEPARTMENT OF TRANSPORTATION

DIVISION OF ENGINEERING SERVICES

BRIDGE NO. 55E0096
POST MILE 20.42

DS OSD 2147A (ENGLISH STANDARD DRAWING "XS" BORDER REV. 01/11/08)

ORIGINAL SCALE IN INCHES FOR REDUCED PLANS 0 1 2 3

CU 12220
EA 0F0321

DISREGARD PRINTS BEARING EARLIER REVISION DATES

REVISION DATES (PRELIMINARY STAGE ONLY) 02/18/09 04/07/09 04/17/09 06/08/09

SHEET 10 OF 16

USERNAME => s135318

55e0096-g-msedt06.dgn

DATE PLOTTED => 25-JAN-2010 TIME PLOTTED => 15:44

DIST	COUNTY	ROUTE	POST MILES TOTAL PROJECT	SHEET No	TOTAL SHEETS
12	Ora	57	18.4/20.9	831	856

REGISTERED CIVIL ENGINEER 06/08/09 DATE

1-25-10
PLANS APPROVAL DATE

REGISTERED PROFESSIONAL ENGINEER MOHAMMED ATIQULLAH No. C47027 Exp. 12/31/09 CIVIL STATE OF CALIFORNIA

The State of California or its officers or agents shall not be responsible for the accuracy or completeness of electronic copies of this plan sheet.

OCTA
550 S. MAIN STREET
ORANGE, CA 92863

CH2M HILL
6 HUTTON CENTRE DRIVE, SUITE 700
SANTA ANA, CA 92707

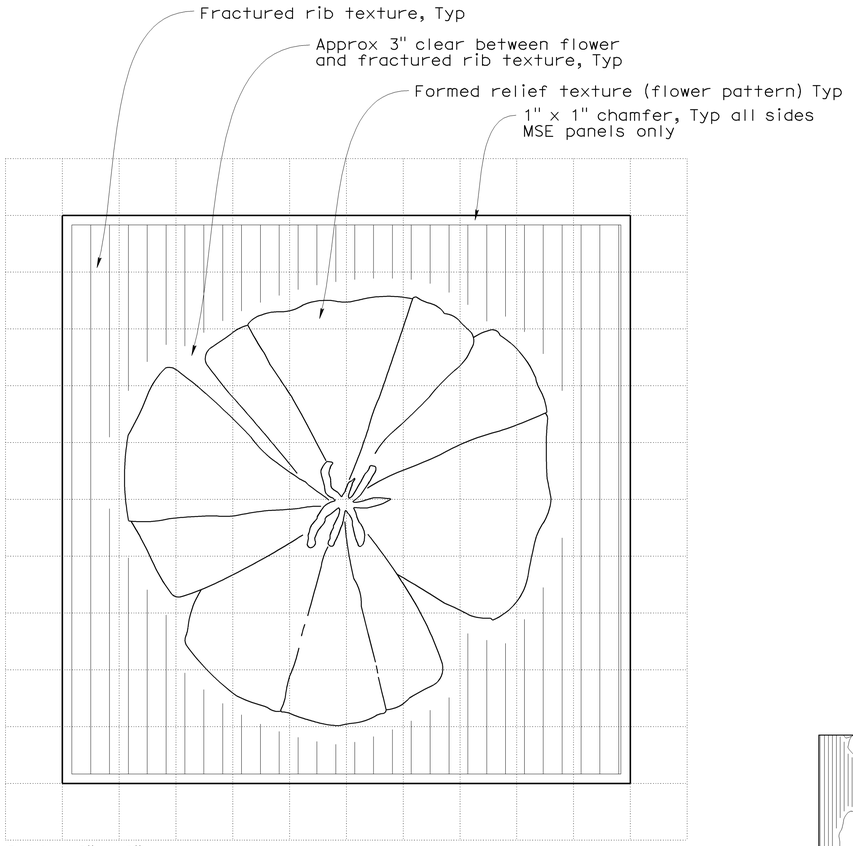

ARCHITECTURAL SURFACE (TEXTURED CONCRETE) FOR MSE PANEL

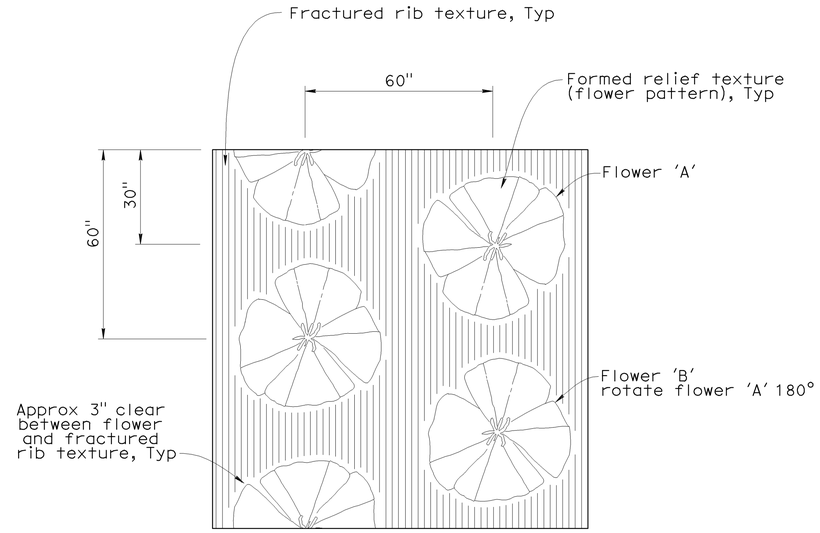

ARCHITECTURAL SURFACE (TEXTURED CONCRETE) PATTERN

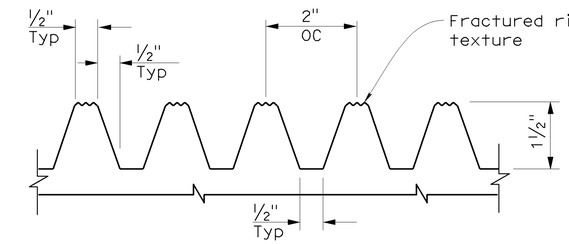

FRACTURED RIB TEXTURE DETAIL

(Elastomer Formliner)

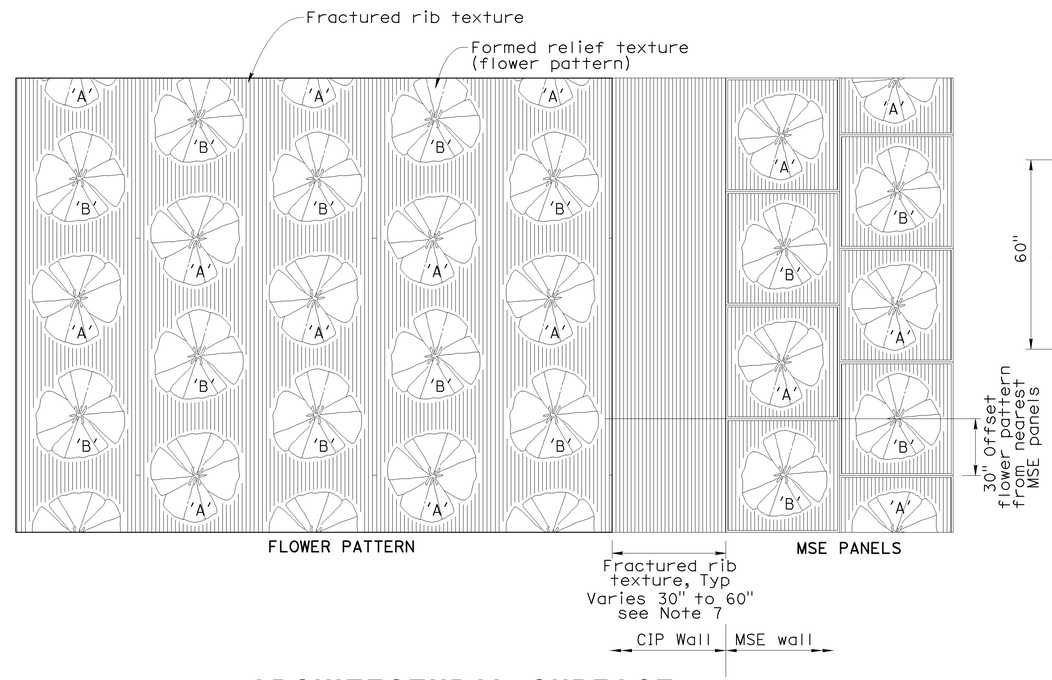

ARCHITECTURAL SURFACE (TEXTURED CONCRETE) ELEVATION

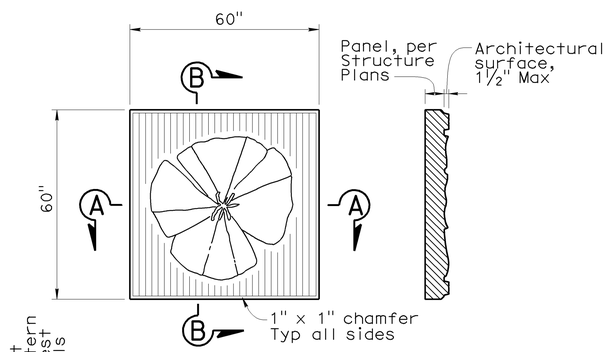

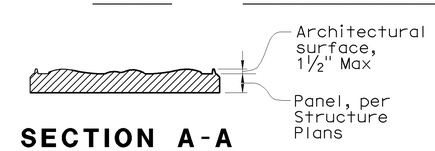

SECTION A-A

MSE PANEL

NOTES:

1. Identical flower images, scale and spacing shall be used for flower pattern and MSE wall panels.
2. Within a vertical column, flower images shall alternate between flowers 'A' and 'B'. Vertical columns shall be offset 30" from adjacent columns.
3. Where placed on walls bounded by concrete barriers, finished grade or top of wall, flower pattern shall be continued without concern for partial flower images, except as noted.
4. Refer to structural details for width of smooth band to be applied at edges of structures.
5. Where the flower pattern will be used adjacent to a horizontal limit such as a bridge abutment, adjoining MSE wall or overhead sign structure support, flower pattern shall be discontinued from a section not less than 30" and not greater than 60" wide from the horizontal limit to avoid truncation of flower images. Fractured rib texture shall be inserted in the resulting gap to create a continuous buffer between pattern areas.
6. The nearest column of flower images (flower pattern) shall be offset vertically 30" from the panels.
7. Vary fractured rib texture width (30" to 60") to provide complete flower pattern on cip wall side.

No scale

DESIGN OVERSIGHT Jon Hamaguchi
11-24-09
SIGN OFF DATE

	BY	CHECKED
DESIGN	M. Atiqullah	E. Cutler
DETAILS	M. Atiqullah	E. Cutler
QUANTITIES	Y. Chiu	L. Ros

PREPARED FOR THE STATE OF CALIFORNIA DEPARTMENT OF TRANSPORTATION

Ayman Salama
PROJECT ENGINEER

BRIDGE NO. 55E0096
POST MILE 20.42

RETAINING WALL NO. 684
ARCHITECTURAL TREATMENT DETAILS

DESIGN DETAIL SHEET (ENGLISH) (REV. 2/25/05)

ORIGINAL SCALE IN INCHES FOR REDUCED PLANS 0 1 2 3

CU 12220
EA 0F0321

DISREGARD PRINTS BEARING EARLIER REVISION DATES 06/08/09

REVISION DATES (PRELIMINARY STAGE ONLY)

SHEET 11 OF 16

FILE => 55e0096-u-tarcdt01.dgn

USERNAME => trstrk DATE PLOTTED => 26-JAN-2010 TIME PLOTTED => 06:18

DIST	COUNTY	ROUTE	POST MILES TOTAL PROJECT	SHEET No	TOTAL SHEETS
12	Ora	57	18.4/20.9	832	856

GEOTECHNICAL PROFESSIONAL — DATE 06/08/09

1-25-10
PLANS APPROVAL DATE

REGISTERED PROFESSIONAL ENGINEER — HISHAM M. NOFAL No. 2765 Exp. 09/30/09 GEOTECHNICAL — STATE OF CALIFORNIA

The State of California or its officers or agents shall not be responsible for the accuracy or completeness of electronic copies of this plan sheet.

OCTA
550 S. MAIN STREET
ORANGE, CA 92863

CH2M HILL
6 HUTTON CENTRE DRIVE, SUITE 700
SANTA ANA, CA 92707

BENCHMARK:

Horizontal coordinates are CCS Nad-83, Zone 6.
vertical control based on North American Vertical Datum 1988.
Pt 1079: N2282339.808, E6067144.835, Elev 407.210
Pt 1160: N2281521.621, E6067030.125, Elev 356.584

SAMPLER TYPES:

California modified ring sampler
standard penetration test sampler

HAMMER TYPE:

Automatic hammer

CORRECTION FACTOR:

To convert from California modified ring sampler blow count to equivalent standard penetration test sampler blow count, for granular and cohesive soil, multiply by 0.67.

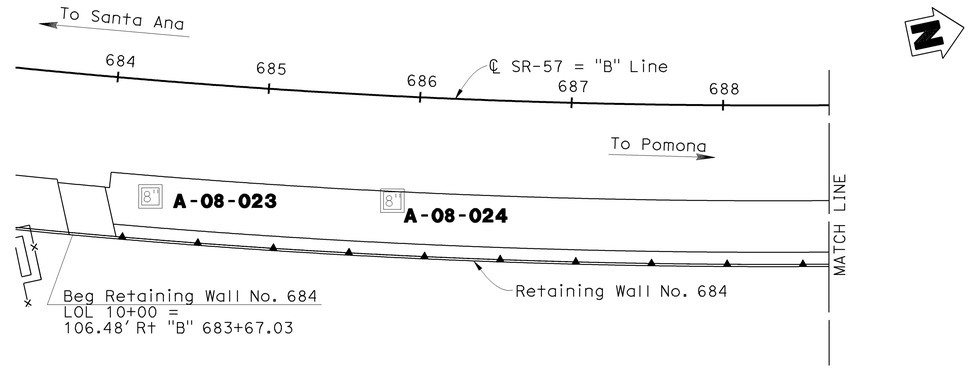

PLAN
1"=50'

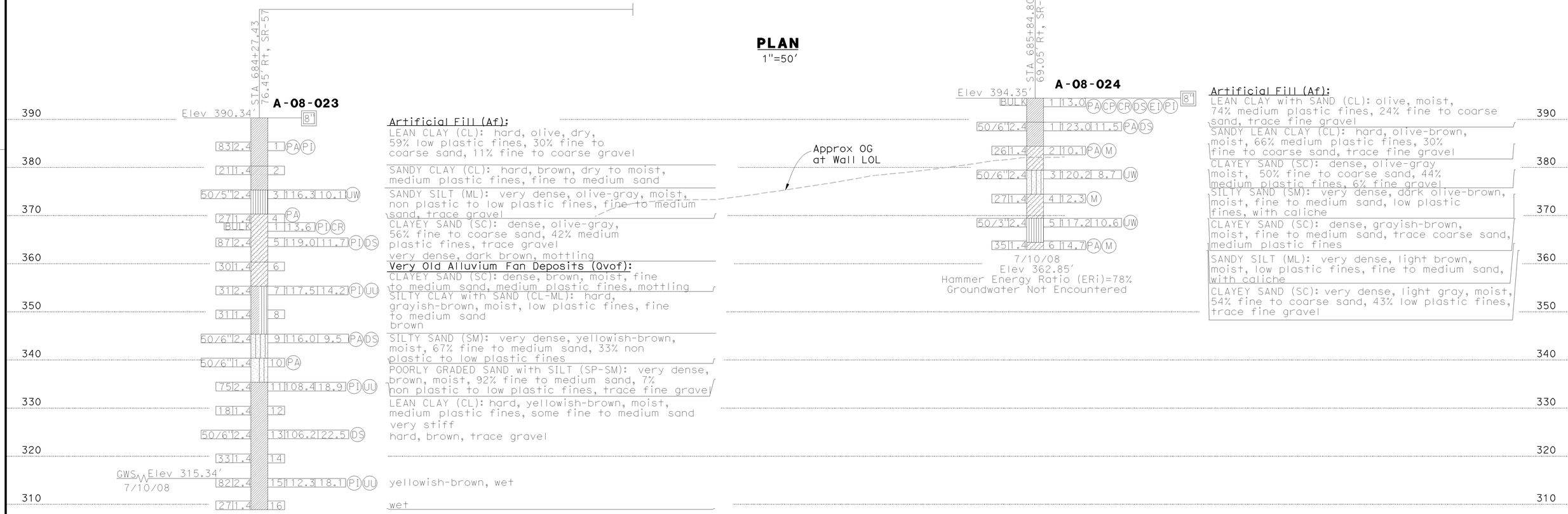

STATIONING "SR-57" = "B" Line

PROFILE
Horz:1"=50'
Vert: 1"=10'

DESIGN OVERSIGHT Jon Hamaguchi — 11-24-09 SIGN OFF DATE

DRAWN BY K. Reyes
CHECKED BY H. Nofal

R. Bethapudi — FIELD INVESTIGATION BY:
DATE

PREPARED FOR THE STATE OF CALIFORNIA DEPARTMENT OF TRANSPORTATION

Ayman Salama — PROJECT ENGINEER

BRIDGE NO. 55E0096
POST MILES 20.42

RETAINING WALL No. 684
LOG OF TEST BORINGS SHEET 1 OF 5

ORIGINAL SCALE IN INCHES FOR REDUCED PLANS 0 1 2 3

CU 12220
EA 0F0321

DISREGARD PRINTS BEARING EARLIER REVISION DATES — REVISION DATES (PRELIMINARY STAGE ONLY) 02/18/09 04/07/09 04/27/09 06/08/09

SHEET 12 OF 16

FILE => 55e0096-z-1tb01.dgn

USERNAME => trstrk DATE PLOTTED => 26-JAN-2010 TIME PLOTTED => 06:19

DIST	COUNTY	ROUTE	POST MILES TOTAL PROJECT	SHEET No	TOTAL SHEETS
12	Ora	57	18.4/20.9	833	856

GEOTECHNICAL PROFESSIONAL — DATE 06/08/09

1-25-10
PLANS APPROVAL DATE

The State of California or its officers or agents shall not be responsible for the accuracy or completeness of electronic copies of this plan sheet.

REGISTERED PROFESSIONAL ENGINEER — HISHAM M. NOFAL No. 2765 Exp. 09/30/09 GEOTECHNICAL — STATE OF CALIFORNIA

OCTA
550 S. MAIN STREET
ORANGE, CA 92863

CH2M HILL
6 HUTTON CENTRE DRIVE, SUITE 700
SANTA ANA, CA 92707

BENCHMARK:

Horizontal coordinates are CCS NAD-83, Zone 6.
vertical control based on North American Vertical Datum 1988.
Pt 1079: N2282339.808, E6067144.835, Elev 407.210
Pt 1160: N2281521.621, E6067030.125, Elev 356.584

SAMPLER TYPES:

California modified ring sampler
standard penetration test sampler

HAMMER TYPE:

Automatic hammer

CORRECTION FACTOR:

To convert from California modified ring sampler blow count to equivalent standard penetration test sampler blow count, for granular and cohesive soil, multiply by 0.67.

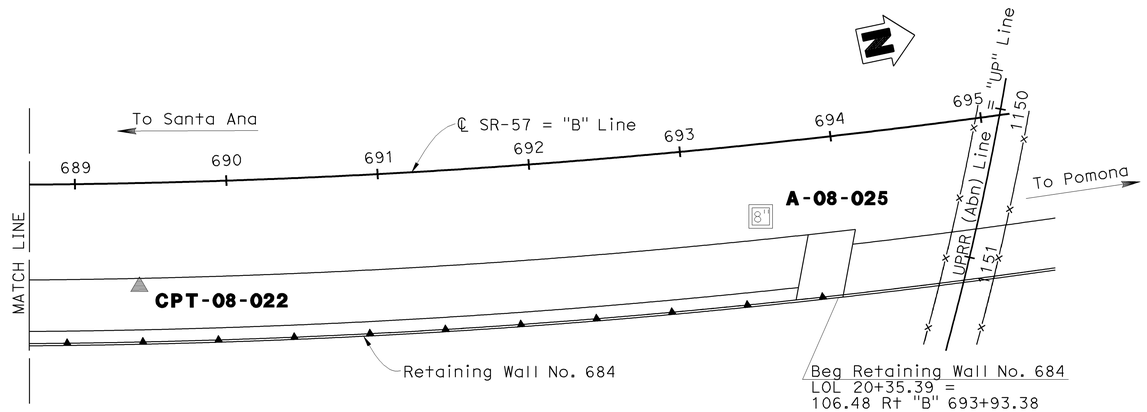

PLAN
1"=50'

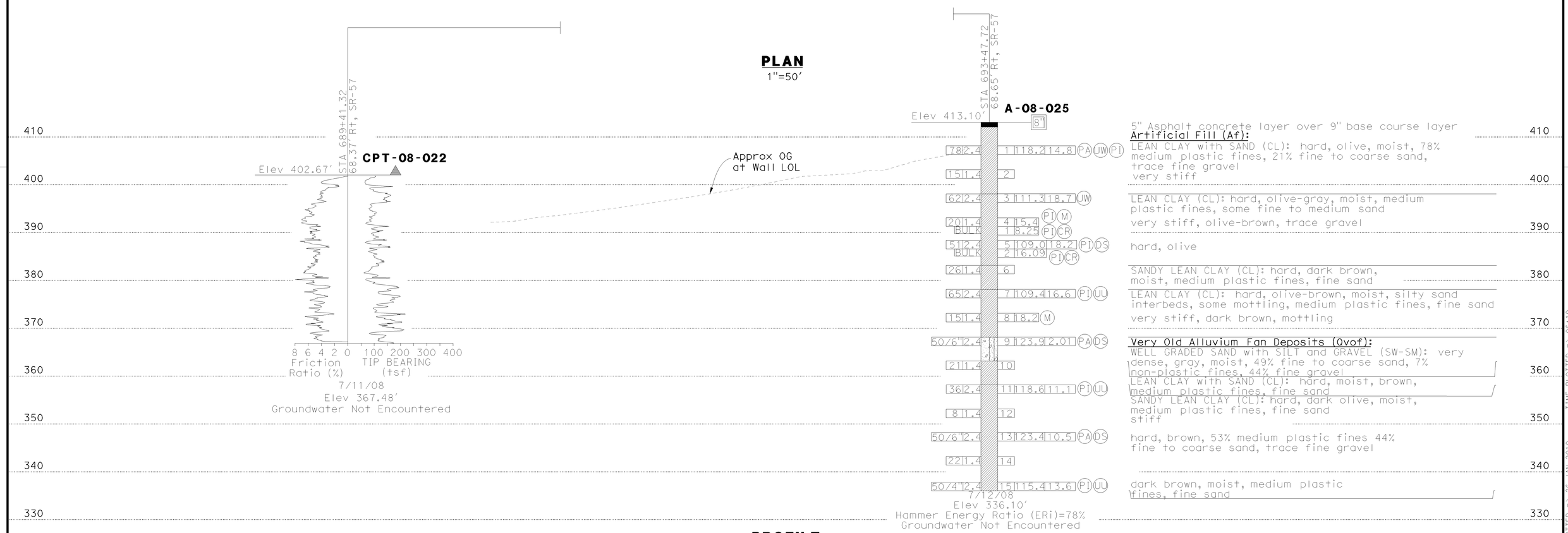

PROFILE
Horz:1"=50'
Vert: 1"=10'

STATIONING "SR-57" = "B" Line

685 686 687 688 689 690 691 692 693 694 695 696 697 698 699

Jon Hamaguchi — DESIGN OVERSIGHT — 11-24-09 SIGN OFF DATE	DRAWN BY K. Reyes	R. Bethapudi FIELD INVESTIGATION BY:	PREPARED FOR THE STATE OF CALIFORNIA DEPARTMENT OF TRANSPORTATION	Ayman Salama PROJECT ENGINEER	BRIDGE NO. 55E0096	RETAINING WALL No. 684	
	CHECKED BY H. Nofal	DATE			POST MILES 20.42	LOG OF TEST BORINGS SHEET 2 OF 5	

ORIGINAL SCALE IN INCHES FOR REDUCED PLANS 0 1 2 3

CU 12220
EA 0F0321

DISREGARD PRINTS BEARING EARLIER REVISION DATES

REVISION DATES (PRELIMINARY STAGE ONLY): 02/18/09 04/07/09 04/17/09 06/08/09

SHEET 13 OF 16

FILE => 55e0096-z-1tb02.dgn

USERNAME => trsrtk DATE PLOTTED => 26-JAN-2010 TIME PLOTTED => 06:19

REFERENCE: CALTRANS SOIL & ROCK LOGGING, CLASSIFICATION, AND PRESENTATION MANUAL (JUNE 2007)

DIST	COUNTY	ROUTE	POST MILES TOTAL PROJECT	SHEET No	TOTAL SHEETS
12	Ora	57	18.4/20.9	834	856

Hisham Nofal 06/08/09
GEOTECHNICAL PROFESSIONAL DATE

1-25-10
PLANS APPROVAL DATE

REGISTERED PROFESSIONAL ENGINEER HISHAM M. NOFAL No. 2765 Exp. 09/30/09 GEOTECHNICAL STATE OF CALIFORNIA

The State of California or its officers or agents shall not be responsible for the accuracy or completeness of electronic copies of this plan sheet.

OCTA
550 S. MAIN STREET
ORANGE, CA 92863

CH2M HILL
6 HUTTON CENTRE DRIVE, SUITE 700
SANTA ANA, CA 92707

GROUP SYMBOLS AND NAMES

Graphic/Symbol	Group Names
GW	Well-graded GRAVEL Well-graded GRAVEL with SAND
GP	Poorly graded GRAVEL Poorly graded GRAVEL with SAND
GW-GM	Well-graded GRAVEL with SILT Well-graded GRAVEL with SILT and SAND
GW-GC	Well-graded GRAVEL with CLAY (or SILTY CLAY) Well-graded GRAVEL with CLAY and SAND (or SILTY CLAY and SAND)
GP-GM	Poorly graded GRAVEL with SILT Poorly graded GRAVEL with SILT and SAND
GP-GC	Poorly graded GRAVEL with CLAY (or SILTY CLAY) Poorly graded GRAVEL with CLAY and SAND (or SILTY CLAY and SAND)
GM	SILTY GRAVEL SILTY GRAVEL with SAND
GC	CLAYEY GRAVEL CLAYEY GRAVEL with SAND
GC-GM	SILTY, CLAYEY GRAVEL SILTY, CLAYEY GRAVEL with SAND
SW	Well-graded SAND Well-graded SAND with GRAVEL
SP	Poorly graded SAND Poorly graded SAND with GRAVEL
SW-SM	Well-graded SAND with SILT Well-graded SAND with SILT and GRAVEL
SW-SC	Well-graded SAND with CLAY (or SILTY CLAY) Well-graded SAND with CLAY and GRAVEL (or SILTY CLAY and GRAVEL)
SP-SM	Poorly graded SAND with SILT Poorly graded SAND with SILT and GRAVEL
SP-SC	Poorly graded SAND with CLAY (or SILTY CLAY) Poorly graded SAND with CLAY and GRAVEL (or SILTY CLAY and GRAVEL)
SM	SILTY SAND SILTY SAND with GRAVEL
SC	CLAYEY SAND CLAYEY SAND with GRAVEL
SC-SM	SILTY, CLAYEY SAND SILTY, CLAYEY SAND with GRAVEL
PT	PEAT
	COBBLES COBBLES and BOULDERS BOULDERS

Graphic/Symbol	Group Names
CL	Lean CLAY Lean CLAY with SAND Lean CLAY with GRAVEL SANDY lean CLAY SANDY lean CLAY with GRAVEL GRAVELLY lean CLAY GRAVELLY lean CLAY with SAND
CL-ML	SILTY CLAY SILTY CLAY with SAND SILTY CLAY with GRAVEL SANDY SILTY CLAY SANDY SILTY CLAY with GRAVEL GRAVELLY SILTY CLAY GRAVELLY SILTY CLAY with SAND
ML	SILT SILT with SAND SILT with GRAVEL SANDY SILT SANDY SILT with GRAVEL GRAVELLY SILT GRAVELLY SILT with SAND
OL	ORGANIC lean CLAY ORGANIC lean CLAY with SAND ORGANIC lean CLAY with GRAVEL SANDY ORGANIC lean CLAY SANDY ORGANIC lean CLAY with GRAVEL GRAVELLY ORGANIC lean CLAY GRAVELLY ORGANIC lean CLAY with SAND
OL	ORGANIC SILT ORGANIC SILT with SAND ORGANIC SILT with GRAVEL SANDY ORGANIC SILT SANDY ORGANIC SILT with GRAVEL GRAVELLY ORGANIC SILT GRAVELLY ORGANIC SILT with SAND
CH	Fat CLAY Fat CLAY with SAND Fat CLAY with GRAVEL SANDY fat CLAY SANDY fat CLAY with GRAVEL GRAVELLY fat CLAY GRAVELLY fat CLAY with SAND
MH	Elastic SILT Elastic SILT with SAND Elastic SILT with GRAVEL SANDY elastic SILT SANDY elastic SILT with GRAVEL GRAVELLY elastic SILT GRAVELLY elastic SILT with SAND
OH	ORGANIC fat CLAY ORGANIC fat CLAY with SAND ORGANIC fat CLAY with GRAVEL SANDY ORGANIC fat CLAY SANDY ORGANIC fat CLAY with GRAVEL GRAVELLY ORGANIC fat CLAY GRAVELLY ORGANIC fat CLAY with SAND
OH	ORGANIC elastic SILT ORGANIC elastic SILT with SAND ORGANIC elastic SILT with GRAVEL SANDY ORGANIC elastic SILT SANDY ORGANIC elastic SILT with GRAVEL GRAVELLY ORGANIC elastic SILT GRAVELLY ORGANIC elastic SILT with SAND
OL/OH	ORGANIC SOIL ORGANIC SOIL with SAND ORGANIC SOIL with GRAVEL SANDY ORGANIC SOIL SANDY ORGANIC SOIL with GRAVEL GRAVELLY ORGANIC SOIL GRAVELLY ORGANIC SOIL with SAND

FIELD AND LABORATORY TESTING

- (C) Consolidation (ASTM D 2435)
- (CL) Collapse Potential (ASTM D 5333)
- (CP) Compaction Curve (CTM 216)
- (CR) Corrosivity Testing (CTM 643, CTM 422, CTM 417)
- (CU) Consolidated Undrained Triaxial (ASTM D 4767)
- (DS) Direct Shear (ASTM D 3080)
- (EI) Expansion Index (ASTM D 4829)
- (M) Moisture Content (ASTM D 2216)
- (OC) Organic Content-% (ASTM D 2974)
- (P) Permeability (CTM 220)
- (PA) Particle Size Analysis (ASTM D 422)
- (PI) Plasticity Index (AASHTO T 90) Liquid Limit (AASHTO T 89)
- (PL) Point Load Index (ASTM D 5731)
- (PM) Pressure Meter
- (PP) Pocket Penetrometer
- (R) R-Value (CTM 301)
- (SE) Sand Equivalent (CTM 217)
- (SG) Specific Gravity (AASHTO T 100)
- (SL) Shrinkage Limit (ASTM D 427)
- (SW) Swell Potential (ASTM D 4546)
- (TV) Pocket Torvane
- (UC) Unconfined Compression-Soil (ASTM D 2166) Unconfined Compression-Rock (ASTM D 2938)
- (UU) Unconsolidated Undrained Triaxial (ASTM D 2850)
- (UW) Unit Weight (ASTM D 4767)
- (VS) Vane Shear (AASHTO T 223)

APPARENT DENSITY OF COHESIONLESS SOILS

Description	SPT N_{60} (Blows / 12 inches)
Very loose	0 - 4
Loose	5 - 10
Medium Dense	11 - 30
Dense	31 - 50
Very Dense	> 50

MOISTURE

Description	Criteria
Dry	Absence of moisture, dusty, dry to the touch
Moist	Damp but no visible water
Wet	Visible free water, usually soil is below water table

PERCENT OR PROPORTION OF SOILS

Description	Criteria
Trace	Particles are present but estimated to be less than 5%
Few	5 to 10%
Little	15 to 25%
Some	30 to 45%
Mostly	50 to 100%

PARTICLE SIZE

Description		Size
Boulder		> 12"
Cobble		3" to 12"
Gravel	Coarse	3/4" to 3"
	Fine	No. 4 to 3/4"
Sand	Coarse	No. 10 to No. 4
	Medium	No. 40 to No. 10
	Fine	No. 200 to No. 40

CEMENTATION

Description	Criteria
Weak	Crumbles or breaks with handling or little finger pressure.
Moderate	Crumbles or breaks with considerable finger pressure.
Strong	Will not crumble or break with finger pressure.

CONSISTENCY OF COHESIVE SOILS

Description	Unconfined Compressive Strength (tsf)	Pocket Penetrometer Measurement (tsf)	Torvane Measurement (tsf)	Field Approximation
Very Soft	< 0.25	< 0.25	< 0.12	Easily penetrated several inches by fist
Soft	0.25 to 0.50	0.25 to 0.50	0.12 to 0.25	Easily penetrated several inches by thumb
Medium Stiff	0.50 to 1.0	0.50 to 1.0	0.25 to 0.50	Penetrated several inches by thumb with moderate effort
Stiff	1 to 2	1 to 2	0.50 to 1.0	Readily indented by thumb but penetrated only with great effort
Very Stiff	2 to 4	2 to 4	1.0 to 2.0	Readily indented by thumbnail
Hard	> 4.0	> 4.0	> 2.0	Indented by thumbnail with difficulty

PLASTICITY OF FINE-GRAINED SOILS

Description	Criteria
Nonplastic	A 1/8-inch thread cannot be rolled at any water content.
Low	The thread can barely be rolled and the lump cannot be formed when drier than the plastic limit.
Medium	The thread is easy to roll and not much time is required to reach the plastic limit. The thread cannot be rerolled after reaching the plastic limit. The lump crumbles when drier than the plastic limit.
High	It takes considerable time rolling and kneading to reach the plastic limit. The thread can be rerolled several times after reaching the plastic limit. The lump can be formed without crumbling when drier than the plastic limit.

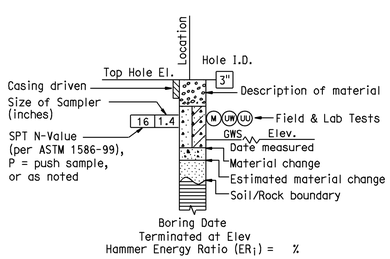

ROTARY BORING

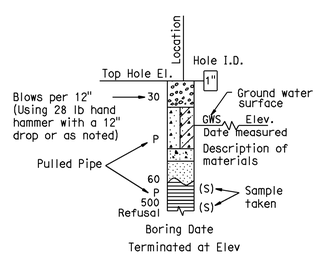

HAND BORING

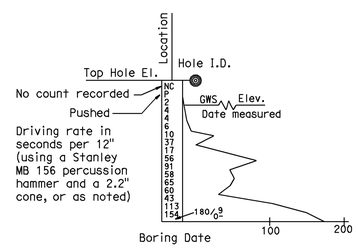

DYNAMIC CONE PENETRATION BORING

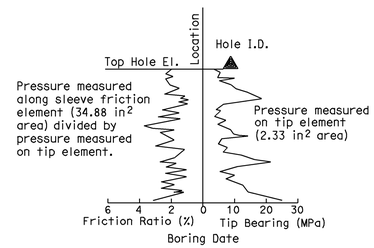

CONE PENETRATION TEST (CPT) SOUNDING

BOREHOLE IDENTIFICATION

Symbol	Hole Type	Description
Size	A	Auger Boring
Size	R P	Rotary drilled boring Rotary percussion boring (air)
Size HQ	R	Rotary drilled diamond core
Size	HD HA	Hand driven (1-inch soil tube) Hand Auger
●	D	Dynamic Cone Penetration Boring
◕	B	Hollow Stem Auger Boring (HSA)
▲	CPT	Cone Penetration Test (ASTM D 5778-95)
□	O	Other

Note: Size in inches.

RETAINING WALL NO. 684

SOIL LEGEND

LOG OF TEST BORINGS SHEET 3 OF 5

Jon Hamaguchi
DESIGN OVERSIGHT Jon Hamaguchi
11-24-09
SIGN OFF DATE

DRAWN BY K. Reyes
CHECKED BY H. Nofal

R. Bethapudi
FIELD INVESTIGATION BY:
DATE

PREPARED FOR THE STATE OF CALIFORNIA DEPARTMENT OF TRANSPORTATION

Ayman Salama
PROJECT ENGINEER

BRIDGE NO. 55E0096
POST MILES 20.42

ORIGINAL SCALE IN INCHES FOR REDUCED PLANS 0 1 2 3

CU 12220
EA 0F0321

DISREGARD PRINTS BEARING EARLIER REVISION DATES
REVISION DATES (PRELIMINARY STAGE ONLY) 02/27/09 04/27/09 04/27/09 06/08/09

SHEET 14 OF 16

FILE => 55e0096-z-1tb03.dgn

USERNAME => trsrtrk DATE PLOTTED => 26-JAN-2010 TIME PLOTTED => 06:19

FED. ROAD DIV. NO.	STATE	F. A. PROJECT NO.	SHEET NO.	TOTAL SHEETS
7	CALIF.			

DIST.	COUNTY	ROUTE	SECTION	SHEET NO.	TOTAL SHEETS
07	Ora.	57	18.4/20.9	149	177

REGISTERED CIVIL ENGINEER

DATE APPROVED March 24, 1969

LEGEND OF BORING OPERATIONS

- PIEZOMETER
- 2½" CONE PENETROMETER
- SAMPLER BORING (DCS)
- ROTARY BORING (DRY)
- AUGER BORING (DRY)
- JET BORING
- CORE BORING
- TEST PIT

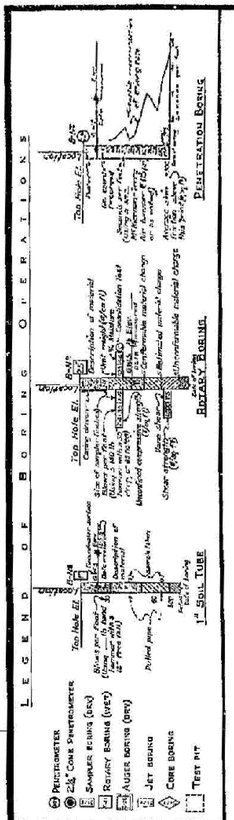

LEGEND OF EARTH MATERIALS

- GRAVEL
- SAND
- SILT
- CLAY
- SILTY CLAY OR CLAYEY SILT
- ORGANIC MATTER
- FILL MATERIAL
- IGNEOUS ROCK
- SEDIMENTARY ROCK
- METAMORPHIC ROCK
- SANDY CLAY OR CLAYEY SAND
- SANDY SILT OR SILTY SAND

CLASSIFICATION OF MATERIAL BASED ON STANDARD GRAIN SIZE LIMITS

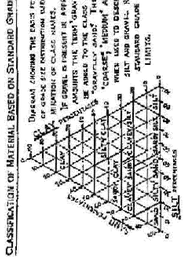

NOTE: Classification of earth material as shown on this sheet is based upon field inspection and is not to be construed to imply mechanical analysis.

FIELD STUDY by D. Miller 11-3-67
DRAWN by A. Hinger 11-20-67
CHECKED by J. Lobo 11-13-67
Approved Recommended: Geotechnical Engineer

BRIDGE DEPARTMENT
ENGINEERING GEOLOGY SECTION

14

BENCH MARK

B.M. # 684-E-66 Elev. 357.46
Pt. Union Oil Co. Mon. stamped G and L No. 16, 2.5 1966, 0.5' deep 592' west of Stat. 633+39 "P" Line.

NO GROUND WATER ENCOUNTERED DURING THIS INVESTIGATION BY BRIDGE DEPT. GEOLOGY SECTION
DATE Nov. 1967

PLAN

Scale: 1" = 20'

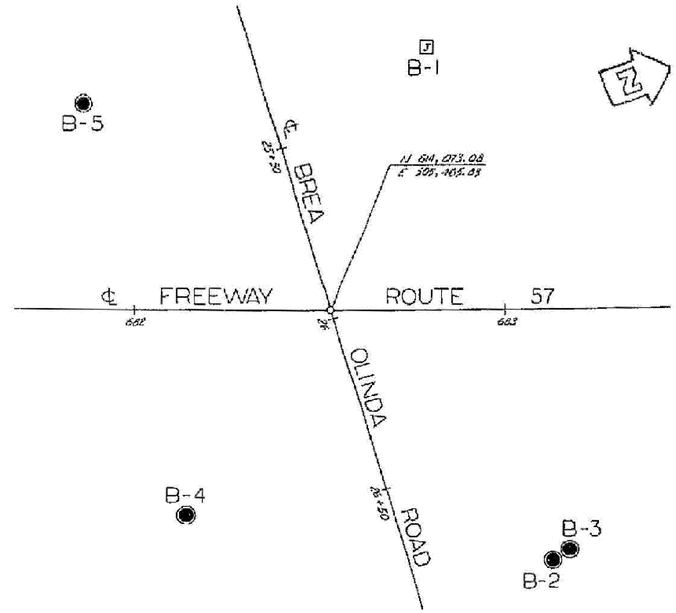

DIVISION OF ENGINEERING SERVICES - GEOTECHNICAL SERVICES					
As-Built Log of Test Borings sheet is considered an informational document only. As such, the State of California registration seal with signature, license number and registration certificate expiration date confirm that this is a true and accurate copy of the original document. This drawing is available and presented only for the convenience of any bidder, contractor or other interested party.					
DIST.	COUNTY	ROUTE	POST MILE-TOTAL PROJECT	Sheet No.	Total Sheets
12	Ora	57	18.4/20.9	835	856
Hisham M. Nofal — REGISTERED CIVIL ENGINEER			06/08/09 — DATE		
RETAINING WALL NO. 684					
LOG OF TEST BORINGS SHEET 4 of 5					
NOTE: A COPY OF THIS LOG OF TEST BORINGS IS AVAILABLE AT OFFICE OF STRUCTURE MAINTENANCE AND INVESTIGATIONS, SACRAMENTO, CALIFORNIA			CU:12220 EA:0F0321	BRIDGE No. 55E0096	
				Sheet 15	of 16

To accompany plans dated 1-25-10

REGISTERED PROFESSIONAL ENGINEER
HISHAM M. NOFAL
No. 2765
Exp. 09/30/09
GEOTECHNICAL
STATE OF CALIFORNIA

PROFILE

Scale: Vert. 1" = 10'
Horiz. 1" = 20'

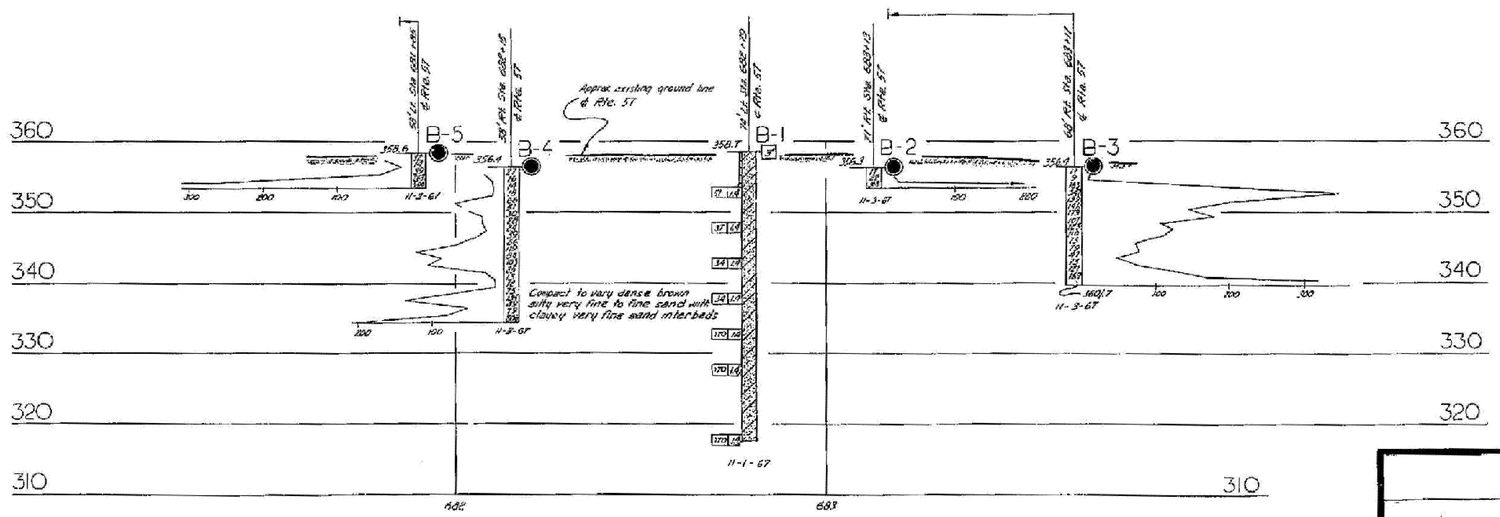

AS BUILT
CONTRACTOR J. W. Hansen
CONTRACT No. 07-032204
DATE 8-31-71
WP 11-3-71

SHEET 13 OF 13

STATE OF CALIFORNIA
DEPARTMENT OF PUBLIC WORKS
DIVISION OF HIGHWAYS

BIRCH STREET UNDERCROSSING

LOG OF TEST BORINGS

SCALE As Noted	BRIDGE 55-485	FILE	DRAWING 55 485-7

Charge 01208
W.A. 032F01

Disregard prints bearing earlier numbers → PREL. DRAWING No. PR-

FILENAME => 55e0096-z-1tb04.tif

AS BUILT PLANS
Contract No. 07-032204
Date Completed
Document No. 2000 5907

I HEREBY CERTIFY THAT THIS IS A TRUE AND ACCURATE COPY OF THE ABOVE DOCUMENT TAKEN UNDER MY DIRECTION AND CONTROL ON THIS DATE IN SACRAMENTO, CALIFORNIA PURSUANT TO AUTHORIZATION BY THE DIRECTOR OF PUBLIC WORKS.

DATE 15 Feb 73 SIGNATURE James E. Court TITLE Sr. Bmo

DIST.	COUNTY	ROUTE	POST MILES
7	ORA	57	18.4/20.9

DIST.	COUNTY	ROUTE	POST MILES-TOTAL PROJECT	Sheet No.	Total Sheets
12	Ora	57	18.4/20.9	836	856

DIVISION OF ENGINEERING SERVICES - GEOTECHNICAL SERVICES

As-Built Log of Test Borings sheet is considered an informational document only. As such, the State of California registration seal with signature, license number and registration certificate expiration date confirm that this is a true and accurate copy of the original document. This drawing is available and presented only for the convenience of any bidder, contractor or other interested party.

Hisham Nofal — REGISTERED CIVIL ENGINEER — DATE 06/08/09

REGISTERED PROFESSIONAL ENGINEER — HISHAM M. NOFAL — No. 2765 — Exp. 09/30/09 — GEOTECHNICAL — STATE OF CALIFORNIA

RETAINING WALL NO. 684

LOG OF TEST BORINGS SHEET 5 OF 5

NOTE: A COPY OF THIS LOG OF TEST BORINGS IS AVAILABLE AT OFFICE OF STRUCTURE MAINTENANCE AND INVESTIGATIONS, SACRAMENTO, CALIFORNIA

CU: 12220
EA: OF0321

BRIDGE No. 55E0096

Sheet 16 of 16

To accompany plans dated 1-25-10

Date Received March 29, 1962

BENCH MARK

BM 964-E-66 Elev 368.47
Pd Tack in conc. Filled 2" I.P. stamped Sta. 643+42.75 "PA P.O.T." in CTR. of tracks, 79' west of rels of S.P.R.Y. spur line and steardense Union Oil Co. pvt. road.

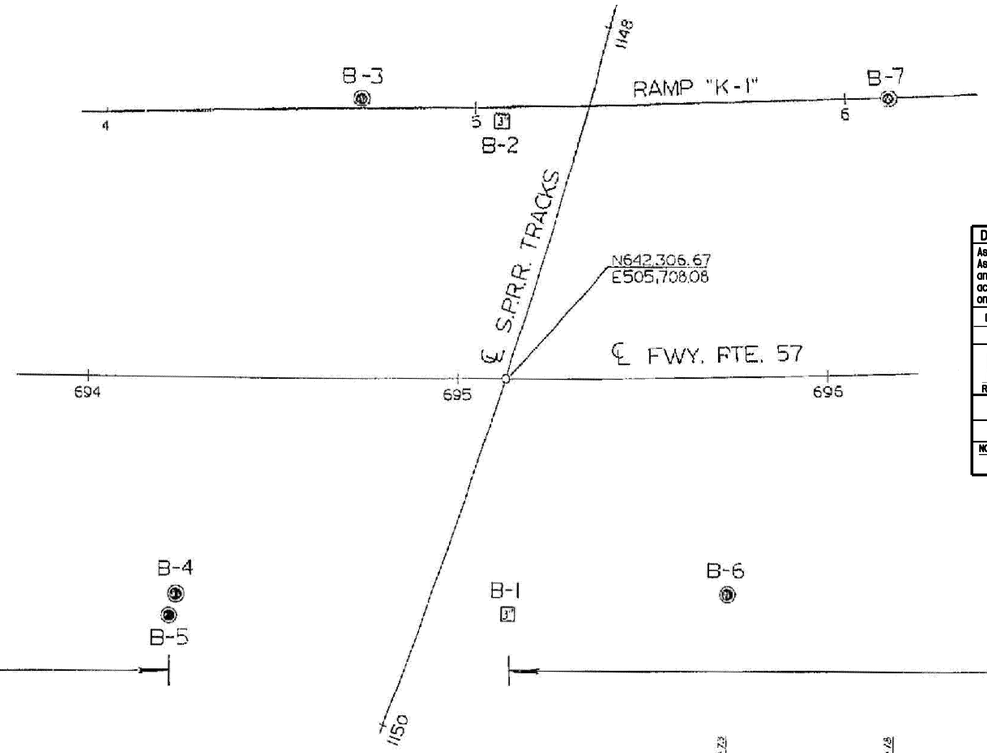

PLAN

Scale: 1" = 20'

PROFILE

Scale: Vert. 1" = 10'
Horiz. 1" = 20'

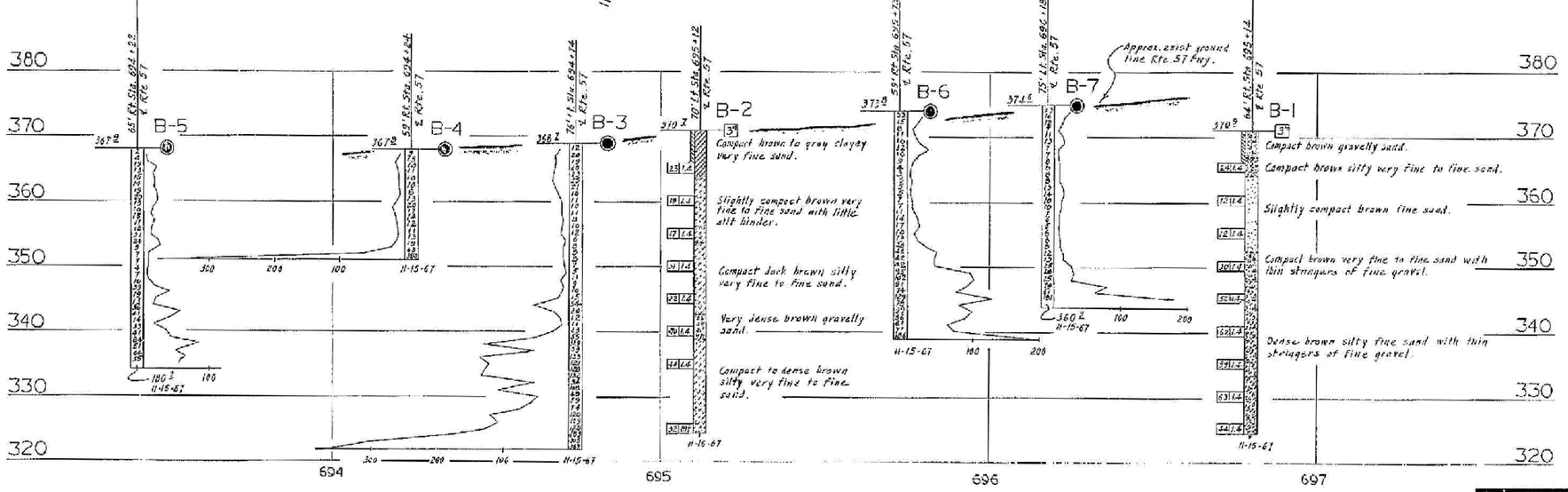

BRIDGE DEPT. GEOLOGY SECTION
DATE November 1967

AS BUILT
CORRECTED W. Hansen
CONTRACT NO. 07-032204
DATE 8-31-71
WF 11-3-71

LEGEND OF BORING OPERATIONS

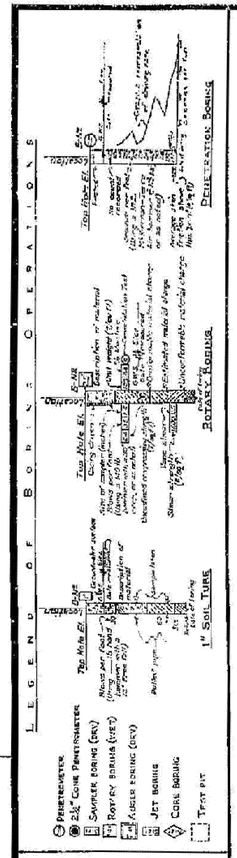

LEGEND OF EARTH MATERIALS

CLASSIFICATION OF MATERIAL BASED ON STANDARD GRADE SIZE LIMITS

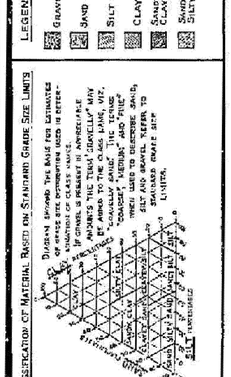

NOTE: Classification of earth material as shown on this sheet is based upon field inspection and is not to be construed to imply mechanical analysis.

FIELD STUDY	R. A. Nikles	11-16-67
DRAWN	R. L. Lewis	11-29-67
CHECKED	R. A. Nikles	12-2-67

Approval Recommended by: Engineering Geologist

BRIDGE DEPARTMENT
ENGINEERING GEOLOGY SECTION

164

AS BUILT PLANS
Contract No. 07-032204
Date Completed
Document No. 2060 5907

I HEREBY CERTIFY THAT THIS IS A TRUE AND ACCURATE COPY OF THE ABOVE DOCUMENT TAKEN UNDER MY DIRECTION AND CONTROL ON THIS DATE IN SACRAMENTO, CALIFORNIA PURSUANT TO AUTHORIZATION BY THE DIRECTOR OF PUBLIC WORKS.

DATE 15 Feb. 73 SIGNATURE James E. Court TITLE Sr. Rmo.

Chg 07206
WA 032201

Direct prints bearing earlier revs.

FILENAME => 55e0096-z-1tb05.tif

STATE OF CALIFORNIA
DEPARTMENT OF PUBLIC WORKS
DIVISION OF HIGHWAYS

BREA OVERHEAD

LOG OF TEST BORINGS

SCALE As Noted | BRIDGE 55-482 | FILE | DRAWING S-452-9

PREL. DRAWING No. PR-

DIST	COUNTY	ROUTE	POST MILES TOTAL PROJECT	SHEET No	TOTAL SHEETS
12	Ora	57	18.4/20.9	837	856

REGISTERED CIVIL ENGINEER 06/08/09 DATE

1-25-10
PLANS APPROVAL DATE

The State of California or its officers or agents shall not be responsible for the accuracy or completeness of electronic copies of this plan sheet.

REGISTERED PROFESSIONAL ENGINEER C. DANIEL SUN No. 40064 Exp. 12/31/09 CIVIL STATE OF CALIFORNIA

OCTA
550 S. MAIN STREET
ORANGE, CA 92863

CH2M HILL
6 HUTTON CENTRE DRIVE, SUITE 700
SANTA ANA, CA 92707

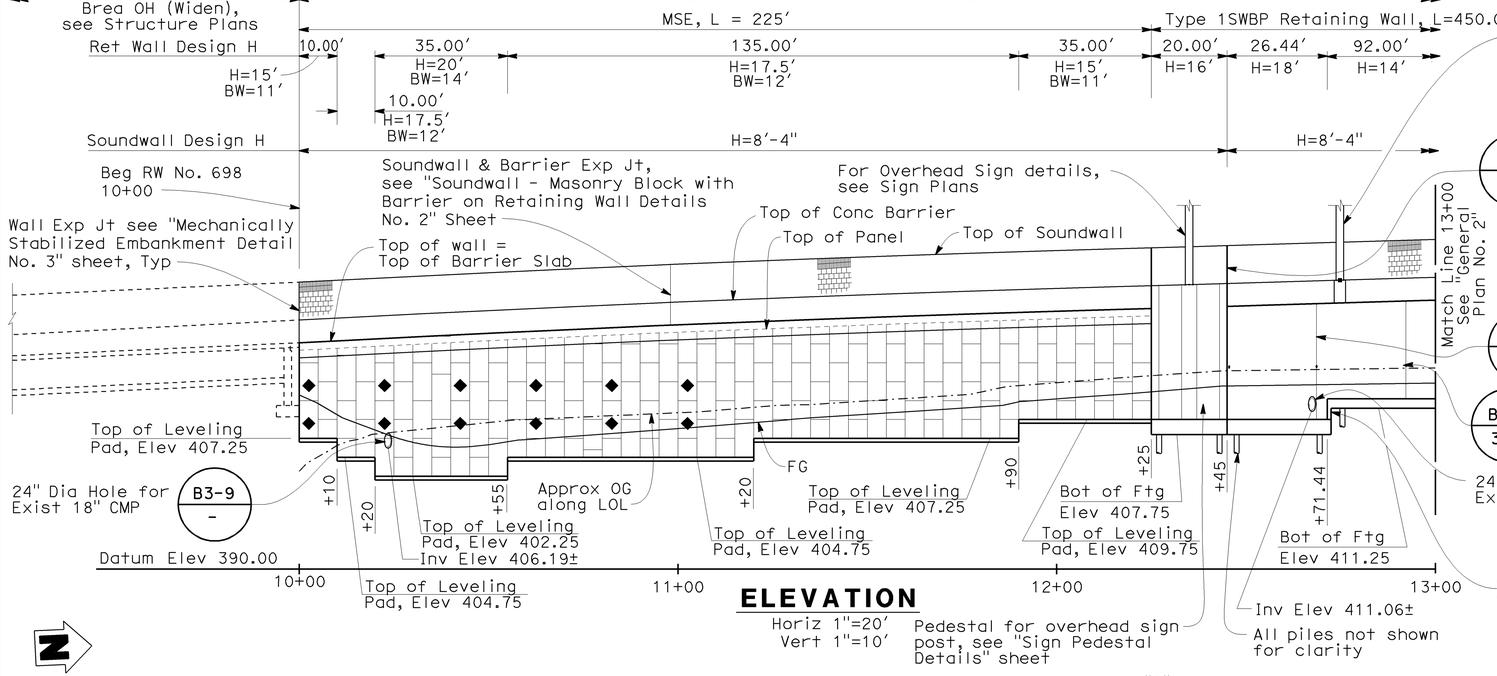

ELEVATION

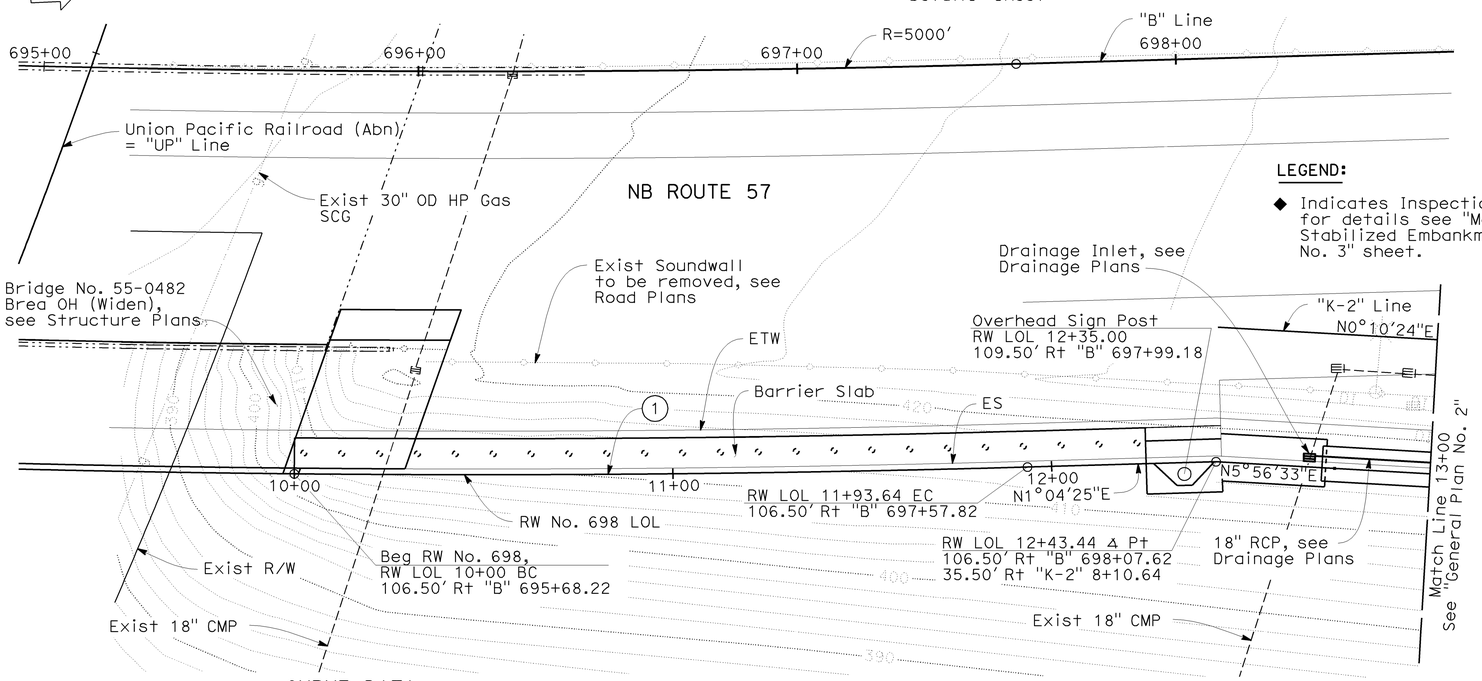

LEGEND:

◆ Indicates Inspection Wire, for details see "Mechanically Stabilized Embankment Details No. 3" sheet.

PLAN

1"=20′

CURVE DATA

NO	R	Δ	T	L
1	5106.50′	2°10′21″	96.83′	193.64′

INDEX TO PLANS

SHEET NO.	TITLE
1.	GENERAL PLAN NO. 1
2.	GENERAL PLAN NO. 2
3.	GENERAL PLAN NO. 3
4.	TYPICAL SECTIONS
5.	PILE LAYOUT
6.	RETAINING WALL DETAILS
7.	RETAINING WALL TYPE 1SWBP - DETAILS NO. 1
8.	RETAINING WALL TYPE 1SWBP - DETAILS NO. 2
9.	MECHANICALLY STABILIZED EMBANKMENT DETAIL NO. 1
10.	MECHANICALLY STABILIZED EMBANKMENT DETAIL NO. 2
11.	MECHANICALLY STABILIZED EMBANKMENT DETAIL NO. 3
12.	MECHANICALLY STABILIZED EMBANKMENT DETAIL NO. 5
13.	MECHANICALLY STABILIZED EMBANKMENT DETAIL NO. 6
14.	SOUNDWALL - MASONRY BLOCK WITH BARRIER ON RETAINING WALL DETAILS NO. 1
15.	SOUNDWALL - MASONRY BLOCK WITH BARRIER ON RETAINING WALL DETAILS NO. 2
16.	SIGN PEDESTAL DETAILS
17.	ARCHITECTURAL TREATMENT DETAILS
18.	LOG OF TEST BORINGS SHEET 1 OF 3
19.	LOG OF TEST BORINGS SHEET 2 OF 3
20.	LOG OF TEST BORINGS SHEET 3 OF 3

STANDARD PLANS DATED MAY 2006

A10A	ACRONYMS AND ABBREVIATIONS (SHEET 1 OF 2)
A10B	ACRONYMS AND ABBREVIATIONS (SHEET 2 OF 2)
A10C	SYMBOLS (SHEET 1 OF 2)
A10D	SYMBOLS (SHEET 2 OF 2)
B0-3	BRIDGE DETAILS
B2-3	16" AND 24" CAST-IN-DRILLED-HOLE CONCRETE PILE
B3-1	RETAINING WALL TYPE 1 - H=4′ THROUGH 30′
B3-8	RETAINING WALL DETAILS NO. 1
B3-9	RETAINING WALL DETAILS NO. 2
B11-56	CONCRETE BARRIER TYPE 736
D102	UNDERDRAINS
S2	OVERHEAD SIGNS - TRUSS, SINGLE POST TYPE - POST TYPES II THRU IX
S3	OVERHEAD SIGNS - TRUSS, SINGLE POST TYPE - BASE PLATE AND ANCHORAGE DETAILS

Standard Plan Sheet No.
Detail No.

RETAINING WALL NO 698
QUANTITIES

STRUCTURE EXCAVATION (RETAINING WALL)	1,950	CY
STRUCTURE EXCAVATION (TYPE Y-1) (AERIALLY DEPOSITED LEAD)	135	CY
STRUCTURE BACKFILL (RETAINING WALL)	1,550	CY
EARTH RETAINING STRUCTURE (MECHANICALLY STABILIZED EARTH WALL)	3,605	SQFT
16" CAST-IN-DRILLED-HOLE CONCRETE PILING	6,201	LF
18" CAST-IN-DRILLED-HOLE CONCRETE PILING	558	LF
STRUCTURAL CONCRETE, RETAINING WALL	746	CY
STRUCTURAL CONCRETE, BARRIER SLAB	120	CY
FORMED RELIEF TEXTURE (FLOWERED PATTERN)	2,600	SQFT
FRACTURED RIB TEXTURE	4,555	SQFT
SOUND WALL BARRIER (MASONRY BLOCK)	3,598	SQFT
BAR REINFORCING STEEL (RETAINING WALL)	95,000	LB
CONCRETE BARRIER (TYPE 736)	251	LF
CONCRETE BARRIER (TYPE 736 MODIFIED)	675	LF

NOTES:

1. Contractor to field verify all utility locations prior to retaining wall construction.
2. For Log of Test Boring information, see Geotechnical Design Report.
3. For Retaining Wall Elevation Table, see "Retaining Wall Details" sheet.
4. For Pile Layout & Pile Data Table, see "Pile Layout" and "General Plan No. 2" sheets respectively.
5. For Drainage System & Details, see Drainage Plans.

DESIGN OVERSIGHT Jon Hamaguchi
11-24-09
SIGN OFF DATE

	BY	CHECKED
DESIGN	D. Sun	J. Powell
DETAILS	D. Sun	J. Powell
QUANTITIES	B. Ho	L. Ros

LRFD	LIVE LOADING: HL-93 AND PERMIT (P-15) DESIGN LOAD		
LAYOUT	BY E. Maechler	CHECKED M. Atiqullah	
SPECIFICATIONS	BY M. Remolador	PLANS AND SPECS COMPARED M. Atiqullah	

PREPARED FOR THE STATE OF CALIFORNIA DEPARTMENT OF TRANSPORTATION

Ayman Salama
PROJECT ENGINEER

BRIDGE NO. 55E0097
POST MILES 20.64

RETAINING WALL NO. 698
GENERAL PLAN NO.1

DESIGN GENERAL PLAN SHEET (ENGLISH) (REV. 2/25/05)

ORIGINAL SCALE IN INCHES FOR REDUCED PLANS 0 1 2 3

CU 12220
EA 0F0321

DISREGARD PRINTS BEARING EARLIER REVISION DATES

REVISION DATES (PRELIMINARY STAGE ONLY) 02/18/09 04/07/09 04/17/09 06/08/09

SHEET 1 OF 20

FILE => 55e0097-a-gp01.dgn

USERNAME => rrsstrk DATE PLOTTED => 26-JAN-2010 TIME PLOTTED => 06:19

DIST	COUNTY	ROUTE	POST MILES TOTAL PROJECT	SHEET No	TOTAL SHEETS
12	Ora	57	18.4/20.9	838	856

REGISTERED CIVIL ENGINEER 06/08/09 DATE

1-25-10
PLANS APPROVAL DATE

REGISTERED PROFESSIONAL ENGINEER C. DANIEL SUN No. 40064 Exp. 12/31/09 CIVIL STATE OF CALIFORNIA

The State of California or its officers or agents shall not be responsible for the accuracy or completeness of electronic copies of this plan sheet.

OCTA
550 S. MAIN STREET
ORANGE, CA 92863

CH2M HILL
6 HUTTON CENTRE DRIVE, SUITE 700
SANTA ANA, CA 92707

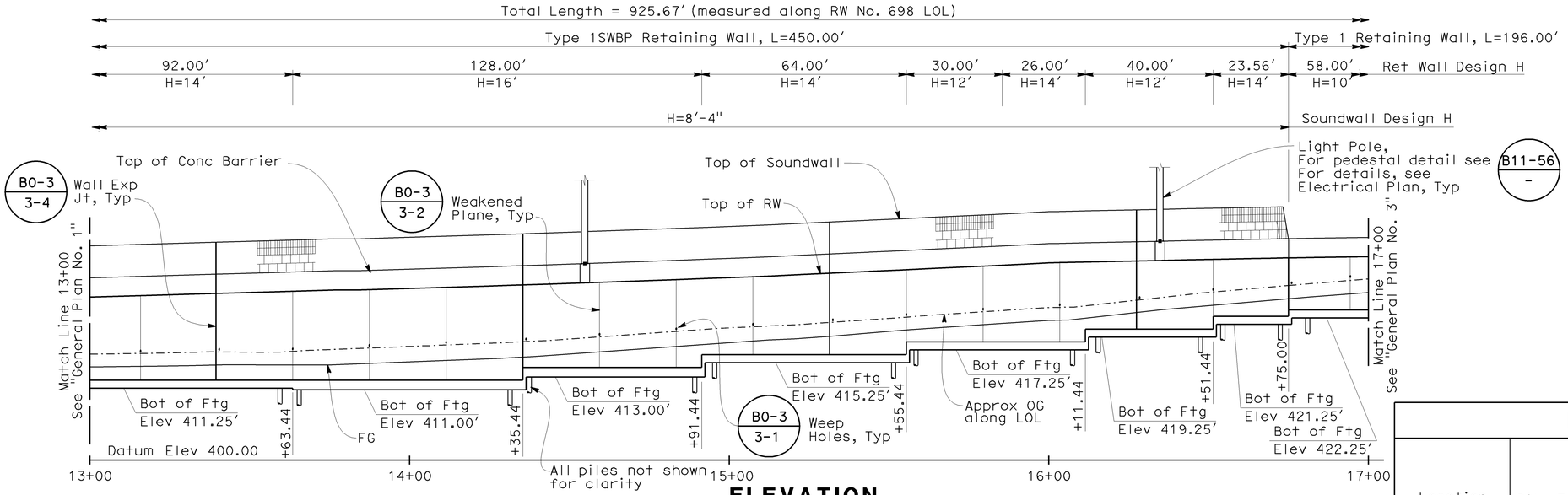

ELEVATION

Horiz 1"=20'
Vert 1"=10'

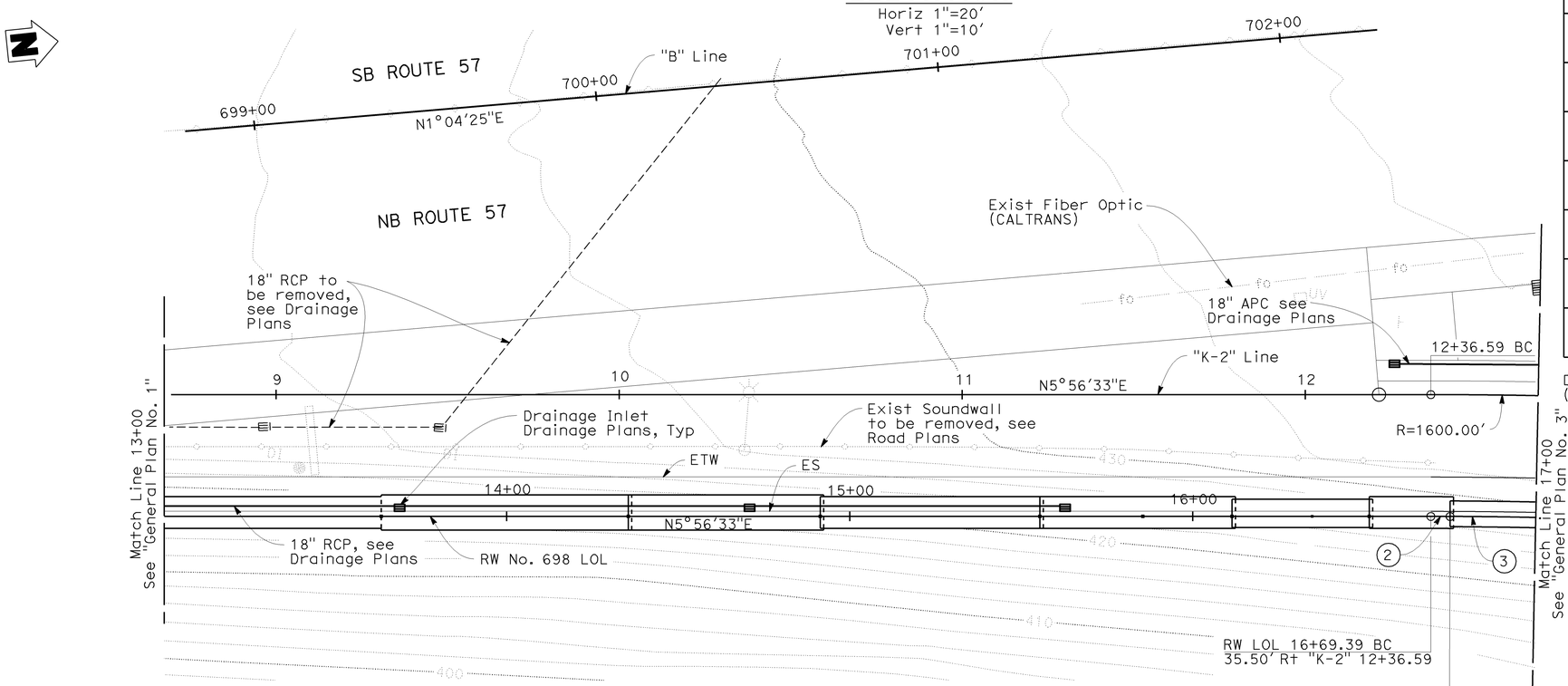

PLAN

1"=20'

PILE DATA TABLE

Location	Pile Type	Nominal Resistance (kips) Compression	Nominal Resistance (kips) Tension	Design Tip Elevation (ft)	Specified Tip Elevation (ft)
Sta 12+25.00 to 12+45.00	16" CIDH Conc Pile	180	0	375.00 (a) 386.00 (c) 388.00 (d)	375.00
Sta 12+45.00 to 12+71.00	16" CIDH Conc Pile	180	0	369.00 (a) 385.75 (c) 387.75 (d)	369.00
Sta 12+71.00 to 14+91.00	16" CIDH Conc Pile	180	0	373.00 (a) 389.25 (c) 391.25 (d)	373.00
Sta 14+91.00 to 16+11.00	16" CIDH Conc Pile	180	0	377.00 (a) 393.25 (c) 395.25 (d)	377.00
Sta 16+11.00 to 16+75.00	16" CIDH Conc Pile	180	0	381.00 (a) 397.25 (c) 399.25 (d)	381.00
Sta 16+75.00 to 17+71.00	16" CIDH Conc Pile	180	0	384.00 (a) 400.25 (c) 402.25 (d)	384.00
Sta 17+71.00 to 18+71.00	16" CIDH Conc Pile	180	0	388.00 (a) 404.25 (c) 406.25 (d)	388.00

Design Tip Elevation is controlled by following demand:
(a) Compression; (c) Settlement; (d) Lateral Capacity.

CURVE DATA

NO	R	Δ	T	L
2	1564.50'	0°12'20"	2.80'	5.61'
3	1564.52'	6°22'53"	87.21'	174.25'

NOTE:

1. For General Notes, see "General Plan No. 1" sheet.

DESIGN OVERSIGHT Jon Hamaguchi	DESIGN	BY D. Sun	CHECKED J. Powell	LRFD	LIVE LOADING: HL-93 AND PERMIT (P-15) DESIGN LOAD	
11-24-09 SIGN OFF DATE	DETAILS	BY D. Sun	CHECKED J. Powell	LAYOUT	BY E. Maechler	CHECKED M. Atiqullah
	QUANTITIES	BY B. Ho	CHECKED L. Ros	SPECIFICATIONS	BY M. Remolador	PLANS AND SPECS COMPARED M. Atiqullah

PREPARED FOR THE STATE OF CALIFORNIA DEPARTMENT OF TRANSPORTATION

Ayman Salama
PROJECT ENGINEER

CU 12220
EA 0F0321

BRIDGE NO. 55E0097
POST MILES 20.64

RETAINING WALL NO. 698
GENERAL PLAN NO.2

DESIGN GENERAL PLAN SHEET (ENGLISH) (REV. 2/25/05)

ORIGINAL SCALE IN INCHES FOR REDUCED PLANS 0 1 2 3

DISREGARD PRINTS BEARING EARLIER REVISION DATES

REVISION DATES (PRELIMINARY STAGE ONLY) 02/18/09 04/07/09 04/17/09 06/08/09

SHEET 2 OF 20

FILE => 55e0097-a-gp02.dgn

USERNAME => frestrk DATE PLOTTED => 26-JAN-2010 TIME PLOTTED => 06:13

DIST	COUNTY	ROUTE	POST MILES TOTAL PROJECT	SHEET No	TOTAL SHEETS
12	Ora	57	18.4/20.9	839	856

REGISTERED CIVIL ENGINEER 06/08/09 DATE

1-25-10
PLANS APPROVAL DATE

REGISTERED PROFESSIONAL ENGINEER C. DANIEL SUN No. 40064 Exp. 12/31/09 CIVIL STATE OF CALIFORNIA

The State of California or its officers or agents shall not be responsible for the accuracy or completeness of electronic copies of this plan sheet.

OCTA
550 S. MAIN STREET
ORANGE, CA 92863

CH2M HILL
6 HUTTON CENTRE DRIVE, SUITE 700
SANTA ANA, CA 92707

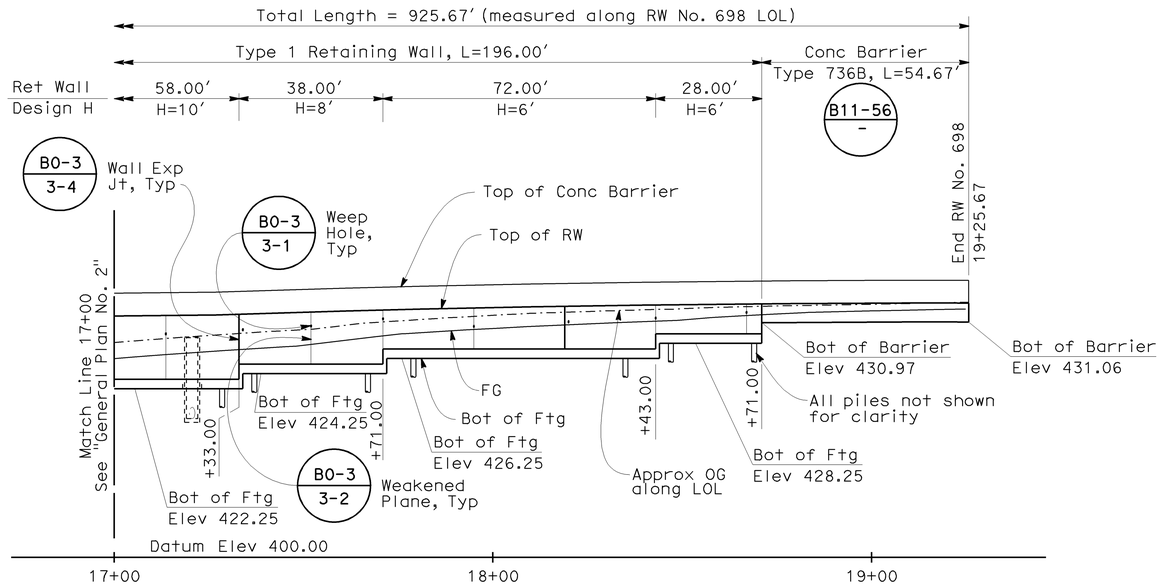

ELEVATION

Horiz 1"=20′
Vert 1"=10′

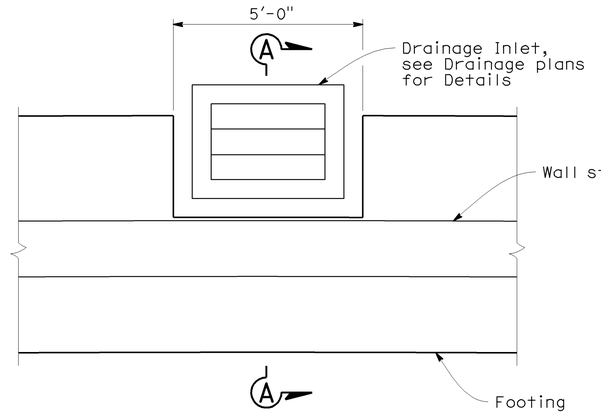

DETAIL A

½" = 1′-0"

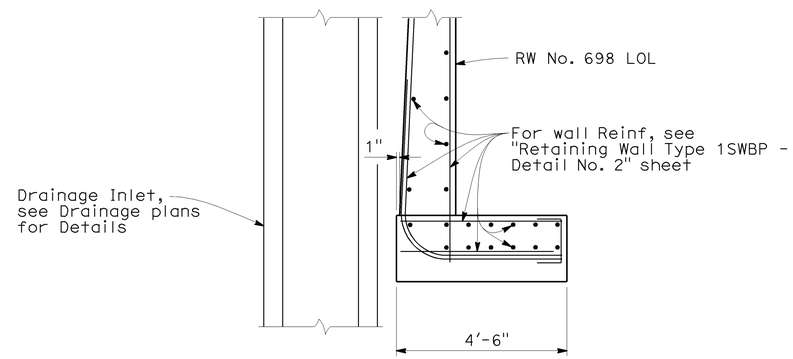

SECTION A-A

½" = 1′-0"

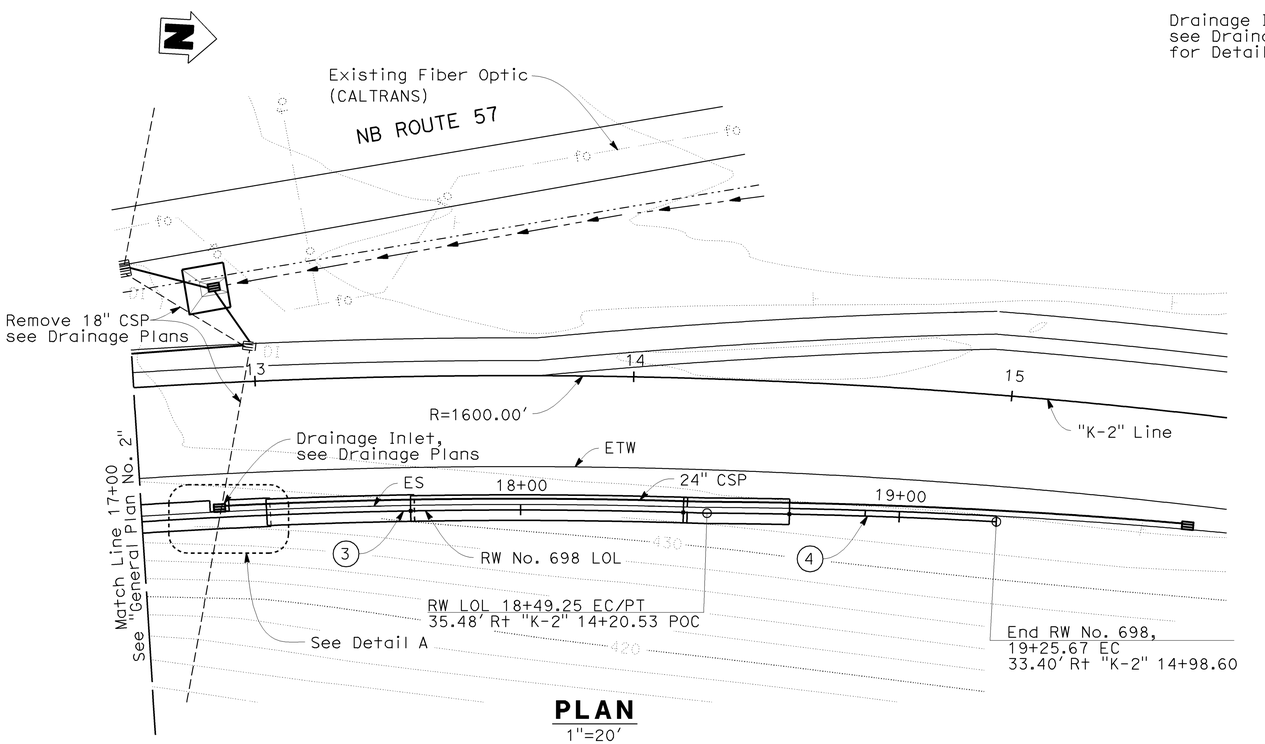

PLAN

1"=20′

CURVE DATA

NO	R	Δ	T	L
3	1564.52′	6°22′53"	87.21′	174.25′
4	1566.30′	2°47′44"	38.22′	76.43′

NOTE:

1. For General Notes, see "General Plan No. 1" sheet.

DESIGN OVERSIGHT Jon Hamaguchi 11-24-09 SIGN OFF DATE	DESIGN	BY D. Sun	CHECKED J. Powell	LRFD	LIVE LOADING: HL-93 AND PERMIT (P-15) DESIGN LOAD		
	DETAILS	BY D. Sun	CHECKED J. Powell	LAYOUT	BY E. Maechler	CHECKED M. Atiqullah	
	QUANTITIES	BY B. Ho	CHECKED L. Ros	SPECIFICATIONS	BY M. Remolador	PLANS AND SPECS COMPARED M. Atiqullah	

DESIGN GENERAL PLAN SHEET (ENGLISH) (REV. 2/25/05)

ORIGINAL SCALE IN INCHES FOR REDUCED PLANS 0 1 2 3

PREPARED FOR THE STATE OF CALIFORNIA DEPARTMENT OF TRANSPORTATION

Ayman Salama
PROJECT ENGINEER

CU 12220
EA 0F0321

BRIDGE NO. 55E0097
POST MILES 20.64

RETAINING WALL NO. 698
GENERAL PLAN NO.3

DISREGARD PRINTS BEARING EARLIER REVISION DATES

REVISION DATES (PRELIMINARY STAGE ONLY) 02/18/09 04/07/09 04/17/09 06/08/09

SHEET 3 OF 20

FILE => 55e0097-a-gp03.dgn

USERNAME => rtrstrk DATE PLOTTED => 26-JAN-2010 TIME PLOTTED => 06:19

DIST	COUNTY	ROUTE	POST MILES TOTAL PROJECT	SHEET No	TOTAL SHEETS
12	Ora	57	18.4/20.9	840	856

REGISTERED CIVIL ENGINEER 06/08/09 DATE

1-25-10
PLANS APPROVAL DATE

REGISTERED PROFESSIONAL ENGINEER C. DANIEL SUN No. 40064 Exp. 12/31/09 CIVIL STATE OF CALIFORNIA

The State of California or its officers or agents shall not be responsible for the accuracy or completeness of electronic copies of this plan sheet.

OCTA
550 S. MAIN STREET
ORANGE, CA 92863

CH2M HILL
6 HUTTON CENTRE DRIVE, SUITE 700
SANTA ANA, CA 92707

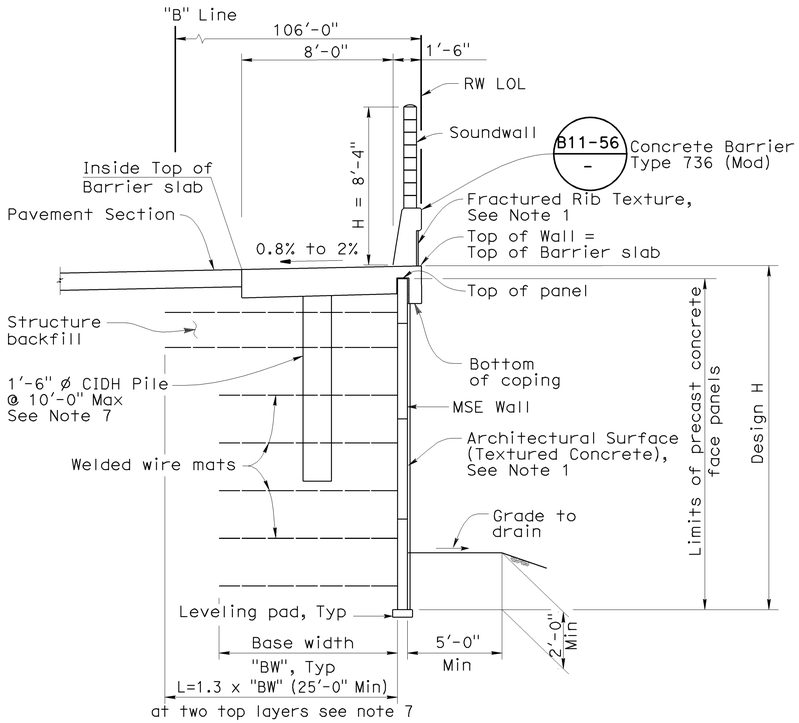

MSE WALL TYPICAL SECTION

1/4"=1'-0"

MSE NOTES:

1. For design height "H", base width "BW", see "General Plan No.1, No.2, & No.3. Section" sheets. For limits of excavation & backfill, see "Mechanically Stabilized Embankment Details No. 6" sheet.
2. For welded wire mats, see Welded Wire Mat Schedule on "Retaining Wall Details" sheet.
3. For Barrier slab details, see "Mechanically Stabilized Embankment Detail No. 5" sheet.
4. For panel details, see "Mechanically Stabilized Embankment Details No. 1" sheet.
5. For General Notes and wire mat details, see "Mechanically Stabilized Embankment Details No. 2" sheet.
6. Spacing between CIDH Piles is at 10'-0" maximum. Contractor must revise the spacing of CIDH piles before drilling so the pile remains minimum 4'-0" clear from the existing utilities.
7. The MSE Wall Designer/Manufacturer should verify the (BW) value based on additional surcharge applied from the sound wall.

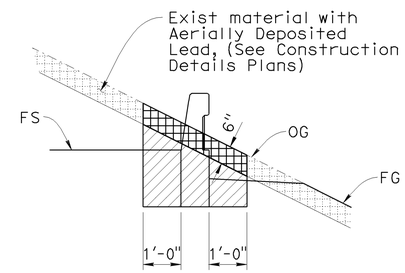

IN CUT

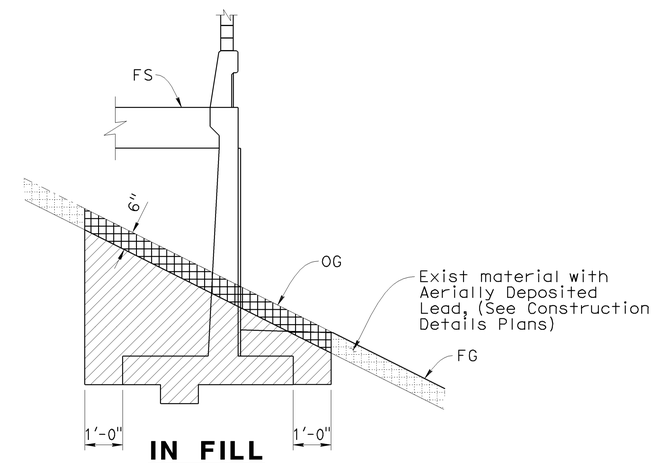

IN FILL

LIMITS OF PAYMENT OF EXCAVATION FOR RETAINING WALL

No Scale

Note:
For Backfill see Caltrans Standard Plans

LEGEND

Indicates Structure Excavation (Type Y-1) (Aerially Deposited Lead)

Structure Excavation (Retaining Wall)

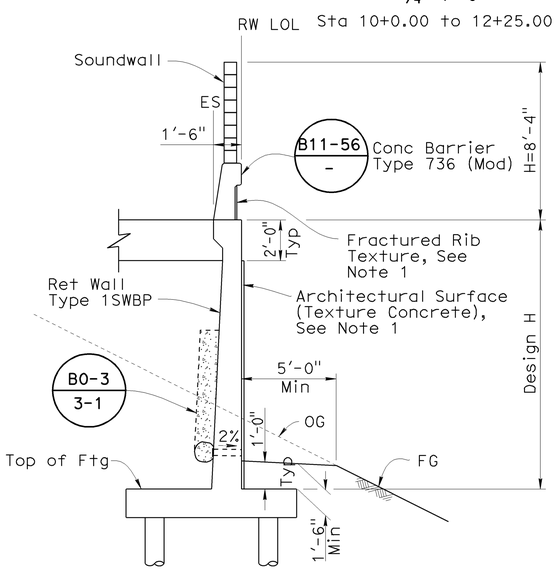

TYPICAL SECTION

1/4"=1'-0"

Sta 12+25.00 to 16+75.00

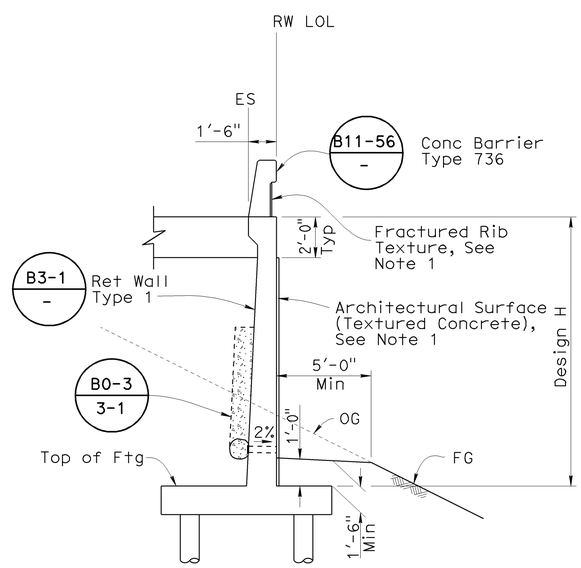

TYPICAL SECTION

1/4"=1'-0"

Sta 16+75.00 to 18+71.00

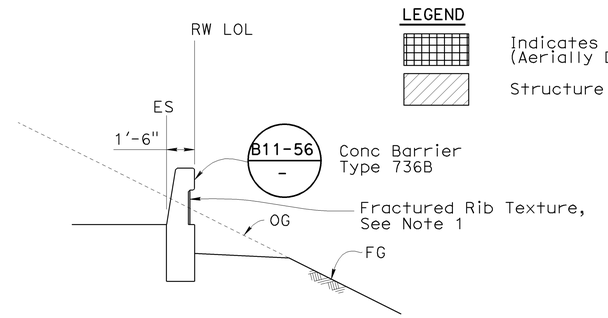

TYPICAL SECTION

1/4"=1'-0"

Sta 18+71.00 to 19+25.67

NOTE:

1. For Fractured Rib Texture and Architectural Surface (Textured Concrete) details, see "Architectural Treatment Details" sheet.

DESIGN OVERSIGHT Jon Hamaguchi
11-24-09
SIGN OFF DATE

DESIGN DETAIL SHEET (ENGLISH) (REV. 2/25/05)

	BY	CHECKED
DESIGN	D. Sun	J. Powell
DETAILS	E. Maechler	J. Powell
QUANTITIES	B. Ho	L. Ros

ORIGINAL SCALE IN INCHES FOR REDUCED PLANS 0 1 2 3

PREPARED FOR THE STATE OF CALIFORNIA DEPARTMENT OF TRANSPORTATION

Ayman Salama
PROJECT ENGINEER

CU 12220
EA 0F0321

BRIDGE NO. 55E0097
POST MILE 20.64

RETAINING WALL NO. 698
TYPICAL SECTIONS

DISREGARD PRINTS BEARING EARLIER REVISION DATES

REVISION DATES (PRELIMINARY STAGE ONLY) 02/18/09 04/07/09 04/17/09 06/08/09

SHEET 4 OF 20

FILE => 55e0097-a-ts01.dgn

USERNAME => ttistrk DATE PLOTTED => 26-JAN-2010 TIME PLOTTED => 06:19

DIST	COUNTY	ROUTE	POST MILES TOTAL PROJECT	SHEET No	TOTAL SHEETS
12	Ora	57	18.4/20.9	841	856

REGISTERED CIVIL ENGINEER — DATE 06/08/09

1-25-10
PLANS APPROVAL DATE

REGISTERED PROFESSIONAL ENGINEER — C. DANIEL SUN — No. 40064 — Exp. 12/31/09 — CIVIL — STATE OF CALIFORNIA

The State of California or its officers or agents shall not be responsible for the accuracy or completeness of electronic copies of this plan sheet.

OCTA
550 S. MAIN STREET
ORANGE, CA 92863

CH2M HILL
6 HUTTON CENTRE DRIVE, SUITE 700
SANTA ANA, CA 92707

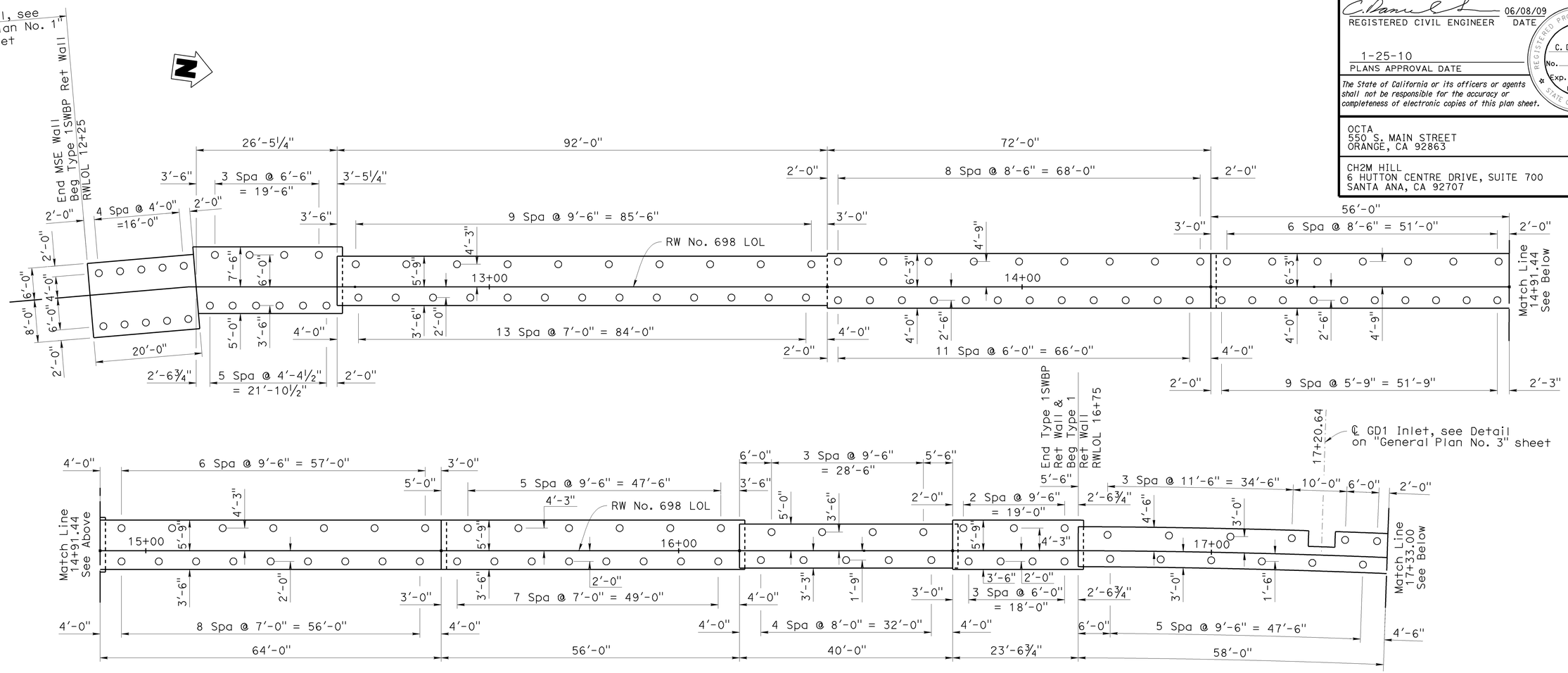

PLAN
1"=10'

NOTE:

1. All dimensions are measured along RWLOL.

DESIGN OVERSIGHT — Jon Hamaguchi
11-24-09
SIGN OFF DATE

	BY	CHECKED
DESIGN	D. Sun	J. Powell
DETAILS	E. Maechler	J. Powell
QUANTITIES	B. Ho	L. Ros

PREPARED FOR THE STATE OF CALIFORNIA DEPARTMENT OF TRANSPORTATION

Ayman Salama
PROJECT ENGINEER

BRIDGE NO. 55E0097
POST MILE 20.64

RETAINING WALL NO. 698
PILE LAYOUT

DESIGN DETAIL SHEET (ENGLISH) (REV. 2/25/05)

ORIGINAL SCALE IN INCHES FOR REDUCED PLANS 0 1 2 3

CU 12220
EA 0F0321

DISREGARD PRINTS BEARING EARLIER REVISION DATES

REVISION DATES (PRELIMINARY STAGE ONLY) 04/07/09 04/17/09 06/08/09

SHEET 5 OF 20

FILE => 55e0097-e-pl01.dgn

USERNAME => trsttk DATE PLOTTED => 26-JAN-2010 TIME PLOTTED => 08:19

DIST	COUNTY	ROUTE	POST MILES TOTAL PROJECT	SHEET No	TOTAL SHEETS
12	Ora	57	18.4/20.9	842	856

REGISTERED CIVIL ENGINEER 06/08/09 DATE

1-25-10
PLANS APPROVAL DATE

REGISTERED PROFESSIONAL ENGINEER C. DANIEL SUN No. 40064 Exp. 12/31/09 CIVIL STATE OF CALIFORNIA

The State of California or its officers or agents shall not be responsible for the accuracy or completeness of electronic copies of this plan sheet.

OCTA
550 S. MAIN STREET
ORANGE, CA 92863

CH2M HILL
6 HUTTON CENTRE DRIVE, SUITE 700
SANTA ANA, CA 92707

WELDED WIRE MAT SCHEDULE (LOADING CASE 1)

MAXIMUM HEIGHT	10	12.5	15	17.5	20	22.5	25
MINIMUM BASE WIDTH	8	9	11	12	14	16	18
TOP LEVELS OF MESH OVER	2 @ W11 x W11 + 6" x 9" 2 @ W11 x W11 + 6" x 12"	2 @ W11 x W11 + 6" x 9" 2 @ W11 x W11 + 6" x 12" 1 @ W11 x W11 + 6" x 18"	2 @ W11 x W11 + 6" x 9" 2 @ W11 x W11 + 6" x 12" 1 @ W11 x W11 + 6" x 18" 1 @ W11 x W11 + 6" x 24"	2 @ W11 x W11 + 6" x 9" 2 @ W11 x W11 + 6" x 12" 1 @ W11 x W11 + 6" x 18" 2 @ W11 x W11 + 6" x 24"	2 @ W11 x W11 + 6" x 9" 3 @ W11 x W11 + 6" x 18" 3 @ W11 x W11 + 6" x 24"	5 @ W11 x W11 + 6" x 18" 4 @ W11 x W11 + 6" x 24"	5 @ W11 x W11 + 6" x 18" 5 @ W11 x W11 + 6" x 24"

LEGEND:

2 @ W11 x W11 + 6" x 9"

- 6" x 9": Longitudinal wire spacing X Transverse wire spacing
- W11 x W11: Longitudinal wire size X Transverse wire size
- 2: Number of welded wire mats per level for a full length panel with 5' nominal height.

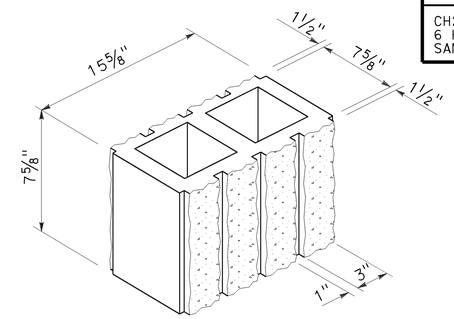

DETAIL B

No Scale

8" WIDE 3-SCORE SPLIT FACE BOTH SIDES

RETAINING WALL ELEVATIONS

RW NO. 698 LOL STA	TOP OF WALL ELEV	FG ELEV
10+00	420.14	400.41
10+10	420.32	403.20
10+20	420.52	404.96
10+30	420.73	405.54
10+40	420.93	406.04
10+50	421.14	406.55
10+60	421.35	407.22
10+70	421.55	407.57
10+80	421.76	407.93
10+90	421.96	408.30
11+00	422.17	408.68
11+10	422.37	409.06
11+20	422.56	409.46
11+30	422.76	409.90
11+40	422.96	410.25
11+50	423.15	410.57
11+60	423.33	410.89
11+70	423.52	411.21
11+80	423.70	411.55
11+90	423.87	412.22
12+00	424.04	412.61
12+10	424.19	412.97
12+20	424.33	413.33
12+30	424.48	413.74
12+40	424.63	414.15
12+50	424.79	414.33
12+60	424.93	414.40
12+70	425.08	414.47
12+80	425.22	414.54
12+90	425.37	414.61
13+00	425.51	414.68

RW NO. 698 LOL STA	TOP OF WALL ELEV	FG ELEV
13+10	425.65	414.75
13+20	425.79	414.81
13+30	425.92	414.89
13+40	426.06	415.00
13+50	426.20	415.02
13+60	426.33	414.98
13+70	426.48	414.99
13+80	426.62	415.09
13+90	426.77	415.29
14+00	426.93	415.48
14+10	427.12	415.67
14+20	427.28	415.87
14+30	427.44	416.08
14+40	427.61	416.34
14+50	427.79	416.69
14+60	427.96	417.05
14+70	428.15	417.40
14+80	428.34	417.75
14+90	428.54	418.11
15+00	428.73	418.46
15+10	428.93	418.82
15+20	429.14	419.09
15+30	429.34	419.42
15+40	429.55	419.83
15+50	429.75	420.25
15+60	429.96	420.63
15+70	430.17	420.98
15+80	430.38	421.33
15+90	430.62	421.65
16+00	430.84	421.97
16+10	430.93	422.23

RW NO. 698 LOL STA	TOP OF WALL ELEV	FG ELEV
16+20	431.02	422.79
16+30	431.09	423.34
16+40	431.16	423.85
16+50	431.23	424.28
16+60	431.28	424.71
16+70	431.33	425.15
16+80	431.37	425.55
16+90	431.41	425.94
17+00	431.43	426.33
17+10	431.45	426.72
17+20	431.47	427.08
17+30	431.52	427.42
17+40	431.65	427.73
17+50	431.78	428.07
17+60	431.89	428.67
17+70	432.00	429.25
17+80	432.10	429.71
17+90	432.20	430.02
18+00	432.29	430.30
18+10	432.37	430.56
18+20	432.44	430.80
18+30	432.50	431.01
18+40	432.56	431.20
18+50	432.61	431.42
18+60	432.67	431.81
18+70	432.73	432.08
18+80	432.77	432.33
18+90	432.81	432.50
19+00	432.84	432.62
19+10	432.86	432.72
19+20	432.88	432.82

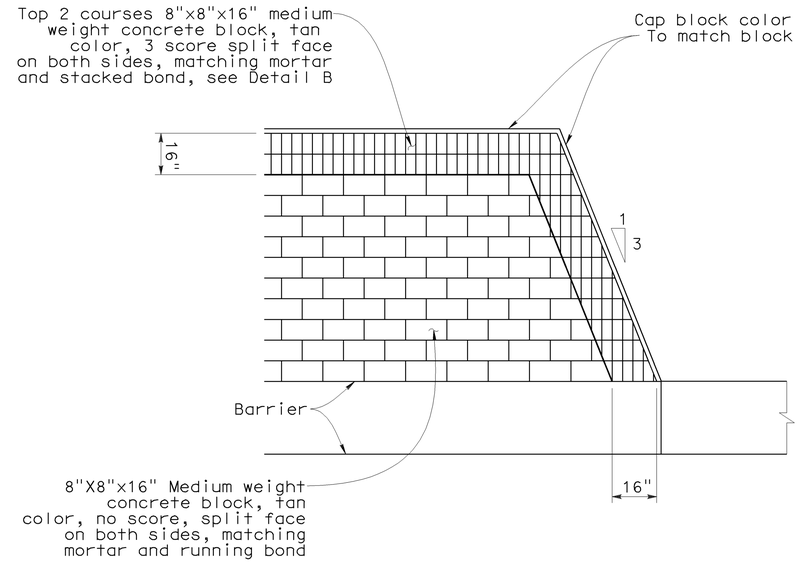

END WALL ELEVATION

CONCRETE BLOCK TYPE, COLOR AND PLACEMENT

No Scale

DESIGN OVERSIGHT Jon Hamaguchi
11-24-09
SIGN OFF DATE

DESIGN DETAIL SHEET (ENGLISH) (REV. 2/25/05)

	BY	CHECKED
DESIGN	D. Sun	J. Powell
DETAILS	E. Maechler	J. Powell
QUANTITIES	B. Ho	L. Ros

ORIGINAL SCALE IN INCHES FOR REDUCED PLANS 0 1 2 3

PREPARED FOR THE STATE OF CALIFORNIA DEPARTMENT OF TRANSPORTATION

Ayman Salama
PROJECT ENGINEER

CU 12220
EA 0F0321

BRIDGE NO. 55E0097
POST MILE 20.64

RETAINING WALL NO. 698

RETAINING WALL DETAILS

DISREGARD PRINTS BEARING EARLIER REVISION DATES

REVISION DATES (PRELIMINARY STAGE ONLY) 02/18/09 04/07/09 04/17/09 06/08/09

SHEET 6 OF 20

FILE => 55e0097-g-det.dgn

USERNAME => trstrk DATE PLOTTED => 26-JAN-2010 TIME PLOTTED => 06:13

DIST.	COUNTY	ROUTE	POST MILES TOTAL PROJECT	SHEET NO.	TOTAL SHEETS
12	Ora	57	18.4/20.9	843	856

REGISTERED ENGINEER - CIVIL DATE 06/08/09

1-25-10
PLANS APPROVAL DATE

REGISTERED PROFESSIONAL ENGINEER C. DANIEL SUN No. 40064 Exp. 12/31/11 CIVIL STATE OF CALIFORNIA

The State of California or its officers or agents shall not be responsible for the accuracy or completeness of electronic copies of this plan sheet.

2

TABLE OF PILE SPACING: 16" CIDH - CONCRETE PILES				
DESIGN H	12′	14′	16′	18′
W	8′-3"	9′-3"	10′-3"	12′-6"
C	3′-3"	3′-6"	4′-0"	5′-0"
B	5′-0"	5′-9"	6′-3"	7′-6"
F	1′-9"	1′-9"	2′-0"	2′-6"
M	1′-9"	2′-0"	2′-6"	3′-6"
N	3′-6"	4′-3"	4′-9"	6′-0"
ROW 1	8′-0"	7′-0"	6′-0"	4′-9"
ROW 2	9′-6"	9′-6"	8′-6"	7′-0"
ROW 3				
ROW 4				
CONFIGURATION	I	I	I	I

2

TABLE 1: TABLE OF REINFORCING STEEL DIMENSIONS AND DATA	STEM WITH HAUNCH			
DESIGN H	12′	14′	16′	18′
STEM BATTER	½:12	½:12	½:12	½:12
STEM THICKNESS @ TOP	1′-6"	1′-6"	1′-6"	1′-6"
STEM THICKNESS @ HAUNCH	1′-0"	1′-0"	1′-0"	1′-0"
ⓐ BARS	#7@18**	#8@18**	#9@18**	#9@12**
X	CONT	CONT	CONT	CONT
Y	8′-0"	6′-6"	7′-6"	8′-6"
ⓑ BARS	#7@18**	#8@18**	#9@18**	#9@12**
X	CONT	CONT	CONT	CONT
Y	CONT	10′-6"	13′-0"	15′-0"
ⓒ BARS		#6 @ 18	#6 @ 18	#6 @ 12
ⓓ BARS	#6 @ 12	#6 @ 12	#6 @ 9	#6 @ 9
TOTAL ⓔ BARS	10 #7	10 #6	10 #6	12 #6
TOTAL ⓕ BARS	10 #7	10 #6	10 #6	12 #6
TOTAL ⓖ BARS	#5@6	#5@6	#5@6	#5@6

CONT = CONTINUOUS

* = ⓐ AND ⓑ BARS ARE BUNDLED TOGETHER.

** = ALTERNATE ⓐ AND ⓑ BARS AS SHOWN IN DETAIL A.

2

1

DESIGN DATA

DESIGN: LOAD FACTOR DESIGN (LFD)

CONCRETE: REINFORCED CONCRETE, f′c = 3600 psi
fy = 60000 psi

LOADING CASE:

LEVEL GROUND WITH 240 psf LIVE LOAD SURCHARGE AND 8′-4" SOUNDWALL.
SEISMIC LOAD = 0.57 DEAD LOAD
WIND LOAD = 33 psf
DEAD LOAD OF SOUNDWALL = 462 lb/lf
DEAD LOAD OF BARRIER = 470 lb/lf

SEISMIC LOAD: SOIL

Kh = 0.3g
Kv = 0.0
Kae : MONONOBE-OKABE METHOD

SOIL: Ø = 34° γ = 120 pcf

EQUIVALENT FLUID PRESSURE:
= 36 pcf FOR DETERMINATION OF TOE PRESSURE
= 27 pcf FOR DETERMINATION OF HEEL PRESSURE

LOAD COMBINATIONS:

GROUP A : βD+1.7E+1.7SC
GROUP B : βD+1.7E+1.7SC+W
GROUP C :
STEM : 1.0D+1.0E+1.0EQD+1.0EQE
FOOTING : D+PYM
GROUP X1: 1.3E+1.3SC+1.0CT
WHERE : β = 1.0 OR 1.3 WHICHEVER CONTROLS DESIGN
D = DEAD LOAD
E = LATERAL EARTH PRESSURE
SC = SURCHARGE
W = WIND LOAD
EQD = SEISMIC DEAD LOAD
EQE = SEISMIC LATERAL EARTH PRESSURE
PYM = PROBABLE YIELD MOMENT (1.3* NOMINAL YIELD MOMENT OF STEM)
CT = TRUCK COLLISION

3

GENERAL NOTES

1. 16" CIDH-CONCRETE PILES WERE USED FOR THE DESIGN.
2. MINIMUM DISTANCE BETWEEN CENTER PILE AND EDGE OF FOOTING IS 1′-6".
3. REDUCTION FACTORS:
   GROUPS A & B : Ø = 0.75
   GROUP C & X1: Ø = 1.0
4. LATERAL RESISTANCE OF EACH PILE:
   GROUPS A & B : = 30 kip
   GROUP C & X1: = 40 kip
5. MAXIMUM SPACING BETWEEN PILES IS SHOWN IN THE TABLE. REDUCE TO SUIT THE LENGHTH OF FOOTING.
6. MINIMUM DISTANCE BETWEEN ANY TWO PILES IS 4′-0".
7. LIMIT OF NO SPLICING FOR REBARS = 3 TIMES THE BOTTOM THICKNESS OF STEM.

SPECIAL DETAILS

STANDARD DRAWING

FILE NO. xs14-320-1e

APPROVED BY G. WANG
RESPONSIBLE TECHNICAL SPECIALIST
APPROVAL DATE 5-13-08

RELEASED BY ROBERTO LACALLE
RESPONSIBLE OFFICE CHIEF
RELEASE DATE REVISED

1 Revised design data
2 Revised Tables and removed Table 2
3 Revised General Notes

STATE OF CALIFORNIA
DEPARTMENT OF TRANSPORTATION

DIVISION OF ENGINEERING SERVICES

BRIDGE NO. 55E0097
POST MILE 20.64

RETAINING WALL NO. 698
RETAINING WALL TYPE 1SWBP - DETAIL NO. 1

DIST.	COUNTY	ROUTE	POST MILES TOTAL PROJECT	SHEET NO.	TOTAL SHEETS
12	Ora	57	18.4/20.9	844	856

C. Daniel Sun 06/08/09
REGISTERED ENGINEER - CIVIL DATE

1-25-10
PLANS APPROVAL DATE

REGISTERED PROFESSIONAL ENGINEER C. DANIEL SUN No. 40064 Exp. 12/31/11 CIVIL STATE OF CALIFORNIA

The State of California or its officers or agents shall not be responsible for the accuracy or completeness of electronic copies of this plan sheet.

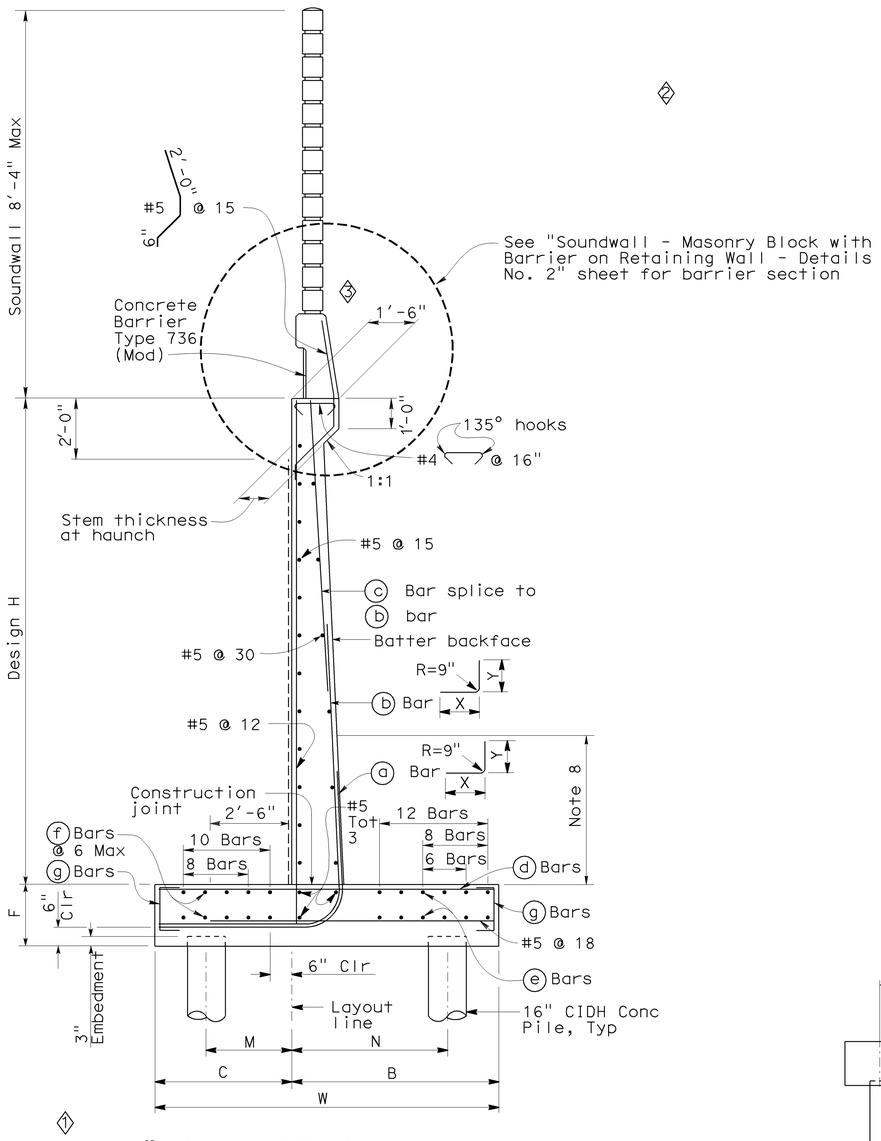

16" CIDH CONCRETE PILE FOOTING SECTION

NO SCALE

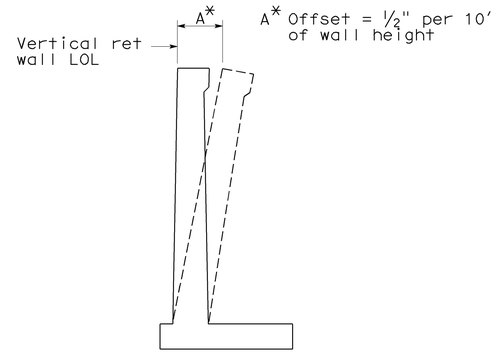

WALL OFFSET

NO SCALE

Values for offsetting forms to be determined by the engineer

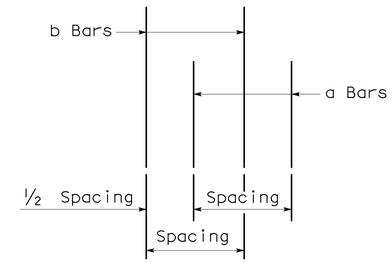

DETAIL A

NO SCALE

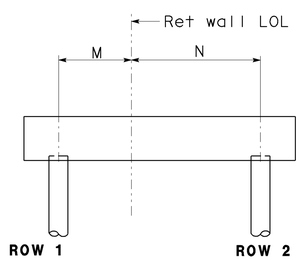

CONFIGURATION I

NO SCALE

NOTES

1. For soundwall and retaining wall architectural finish or texture, see details elsewhere in project plans.
2. For details not shown and drainage notes, see B3-8
3. Footing cover, 1'-6" minimum.
4. For soundwall and barrier reinforcrments, see "Soundwall Masonry Block on Barriers" Sheets in Standard Plans.

SPECIAL DETAILS

STANDARD DRAWING

FILE NO. xs14-320-2e

APPROVED BY G. WANG — RESPONSIBLE TECHNICAL SPECIALIST
APPROVAL DATE 5-13-08

RELEASED BY ROBERTO LACALLE — RESPONSIBLE OFFICE CHIEF
RELEASE DATE REVISED

1 Revised 45T Pile Ftg Section and Configuration I
2 Removed Configuration II & III and Spread Ftg Sect Without Haunch
3 Revised Barrier

STATE OF CALIFORNIA DEPARTMENT OF TRANSPORTATION

DIVISION OF ENGINEERING SERVICES

BRIDGE NO. 55E0097
POST MILE 20.64

RETAINING WALL NO. 698
RETAINING WALL TYPE 1SWBP - DETAIL NO. 2

DS OSD 2147A (ENGLISH STANDARD DRAWING "XS" BORDER REV. 01/11/08)

ORIGINAL SCALE IN INCHES FOR REDUCED PLANS 0 1 2 3

CU 12220
EA 0F0321

DISREGARD PRINTS BEARING EARLIER REVISION DATES

REVISION DATES (PRELIMINARY STAGE ONLY) 02/18/09 04/07/09 04/17/09 06/08/09

SHEET 8 OF 20

USERNAME => trstrk

55e0097-g-det02.dgn

DATE PLOTTED => 26-JAN-2010 TIME PLOTTED => 06:20

DIST.	COUNTY	ROUTE	POST MILES TOTAL PROJECT	SHEET NO.	TOTAL SHEETS
12	Ora	57	18.4/20.9	845	856

REGISTERED ENGINEER - CIVIL DATE 06/08/09

1-25-10
PLANS APPROVAL DATE

REGISTERED PROFESSIONAL ENGINEER C. DANIEL SUN No. 40064 Exp. 12/31/11 CIVIL STATE OF CALIFORNIA

The State of California or its officers or agents shall not be responsible for the accuracy or completeness of electronic copies of this plan sheet.

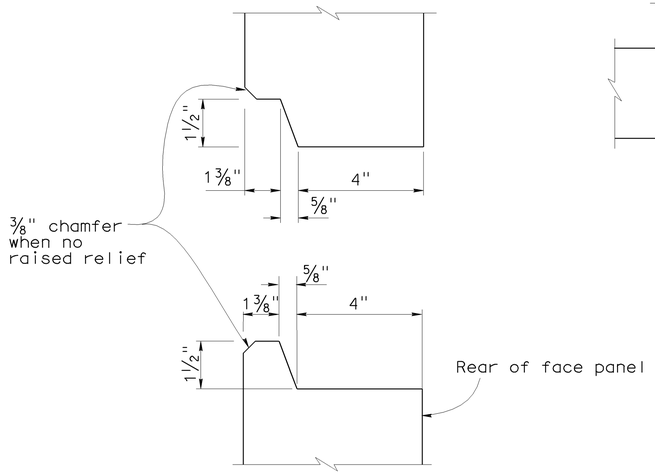

HORIZONTAL JOINT DETAIL
No Scale

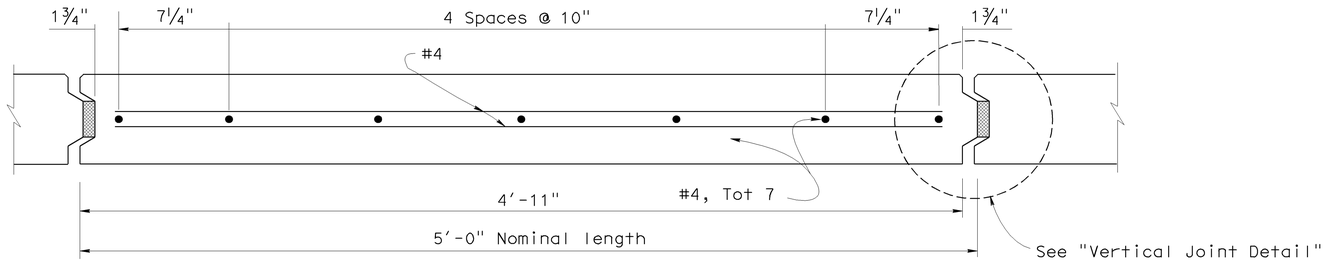

PLAN - FACE PANEL
No Scale

NOTES:

1. Architectural treatment not shown. Architectural Surface (Textured Concrete) extends beyond face of panel. See "Architectural Treatment Details" sheet.
2. Place reinforced elastomeric bearing pads in all of the panel joints between the panels. Place one in each vertical joint where the horizontal joint intersects it. Place two per panel in each horizontal joint.
   3/4" x 2 3/8" x 6" for vertical joints
   3/4" x 4" x 6" for horizontal joints.
3. Bond a strip of filter fabric, 1' - 0" wide, over the full length of all panel joints.

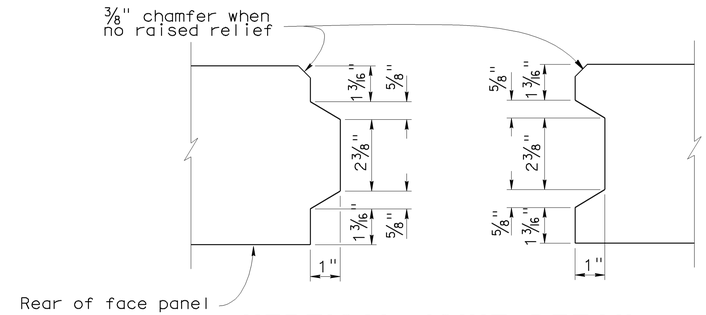

VERTICAL JOINT DETAIL
No Scale

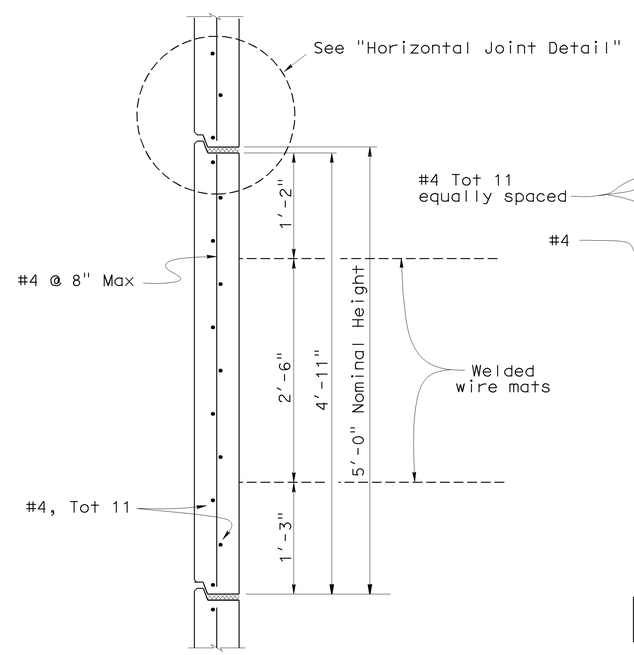

INTERMEDIATE PANEL
No Scale

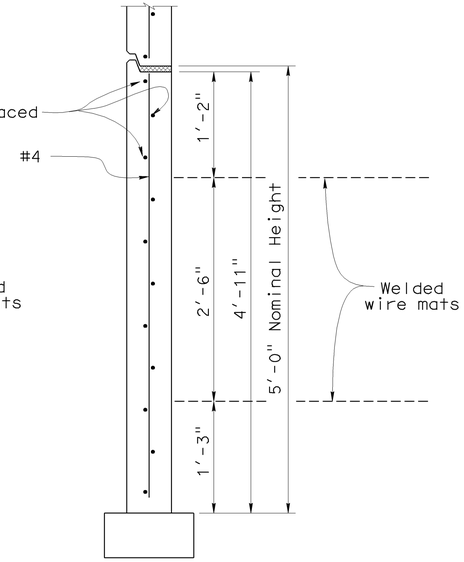

BOTTOM PANEL
No Scale

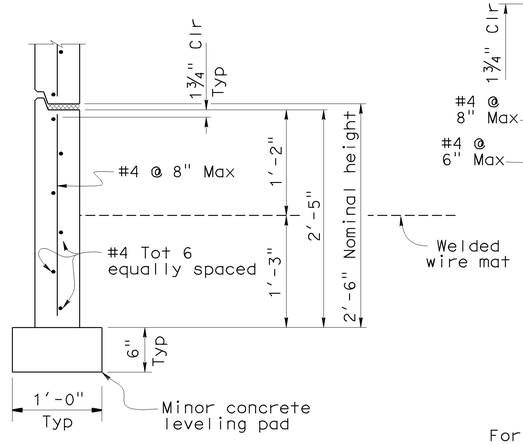

BOTTOM HALF PANEL
No Scale

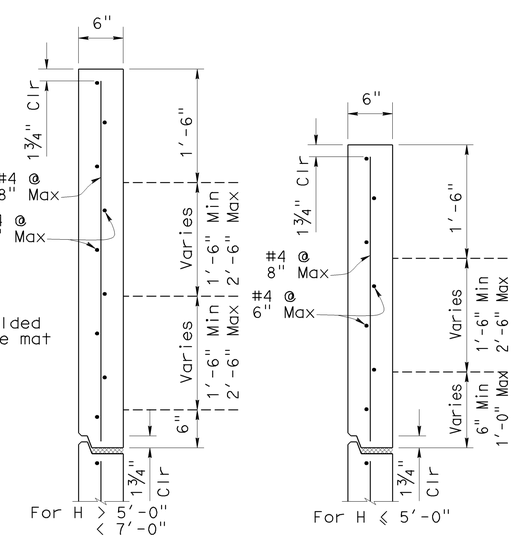

TOP PANEL
No Scale

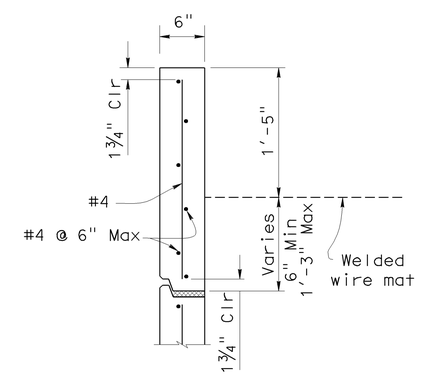

TOP HALF PANEL
No Scale

SPECIAL DETAILS

STANDARD DRAWING			
FILE NO. xs13-020-1e	APPROVED BY K. GRISWELL (RESPONSIBLE TECHNICAL SPECIALIST)	RELEASED BY ROBERTO LACALLE (RESPONSIBLE OFFICE CHIEF)	
	APPROVAL DATE REVISED	RELEASE DATE REVISED	

1 Added Top Panel Details
2 Revised Note

STATE OF CALIFORNIA DEPARTMENT OF TRANSPORTATION

DIVISION OF ENGINEERING SERVICES

BRIDGE NO. 55E0097
POST MILE 20.64

RETAINING WALL NO. 698
MECHANICALLY STABILIZED EMBANKMENT
DETAIL NO. 1

DS OSD 2147A (ENGLISH STANDARD DRAWING "XS" BORDER REV. 01/11/08)

ORIGINAL SCALE IN INCHES FOR REDUCED PLANS 0 1 2 3

CU 12220
EA 0F0321

DISREGARD PRINTS BEARING EARLIER REVISION DATES 02/18/09 04/07/09 04/17/09 06/08/09

REVISION DATES (PRELIMINARY STAGE ONLY)

SHEET 9 OF 20

USERNAME => trstrk

55e0097-g-msedt01.dgn

DATE PLOTTED => 26-JAN-2010 TIME PLOTTED => 06:20

DIST	COUNTY	ROUTE	POST MILES TOTAL PROJECT	SHEET No	TOTAL SHEETS
12	Ora	57	18.4/20.9	846	856

C. Daniel Sun 06/08/09
REGISTERED ENGINEER - CIVIL DATE

1-25-10
PLANS APPROVAL DATE

REGISTERED PROFESSIONAL ENGINEER C. DANIEL SUN No. 40064 Exp. 12/31/11 CIVIL STATE OF CALIFORNIA

The State of California or its officers or agents shall not be responsible for the accuracy or completeness of electronic copies of this plan sheet.

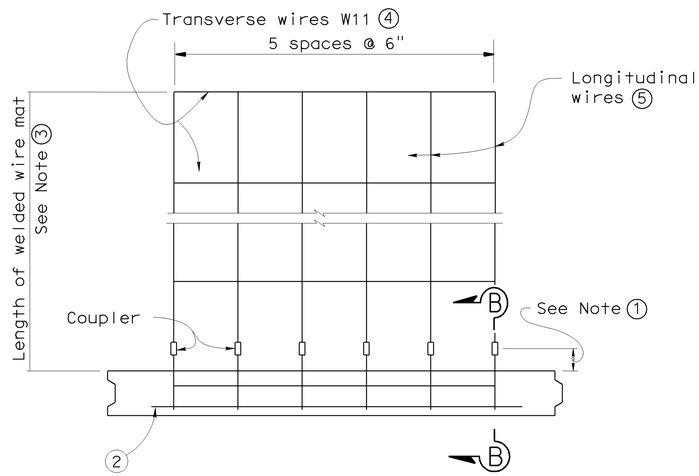

PLAN OF PANEL WITH WELDED WIRE MAT

No scale

GENERAL NOTES (MSE WALLS)

Live loading: Surcharge = 240 lb/ft^2

Soil parameters:

Internal design ϕ = 34°, γ = 120 lb/ft^3
External design ϕ(Backfill) = 34°, γ = 120 lb/ft^3
ϕ(Foundation) = 30°

Precast concrete panels:

f′c = 4,000 psi (Concrete compressive strength at 28 days)
fy = 60,000 psi (Yield strength of reinforcement)

Soil reinforcement:

Welded wire mats: fy = 65,000 psi (Yield strength)
Coupler: fy = 36,000 psi (Yield strength)
Corrosion rate = 1.1 mils/year

Reinforced concrete:

f′c = 3,600 psi, except as noted
(Concrete compressive strength at 28 days)

fy = 60,000 psi (Yield strength of reinforcement)

MSE = Mechanically stabilized embankment

NOTES:

① Distance as required to permit coupler to be swaged.

② Place #4 bar, 3′ - 2" long, centered on connector mat, but not welded to it.

③ Length equals "Base width" of wall, except it shall not be less than 16′ for the top 2 levels of mats at the top of the wall.

④ All Transverse Wires size W11 at various spacings as shown elsewhere in plans.

⑤ All Longitudinal Wires at 6" spacing, of various sizes, as shown elsewhere in plans.

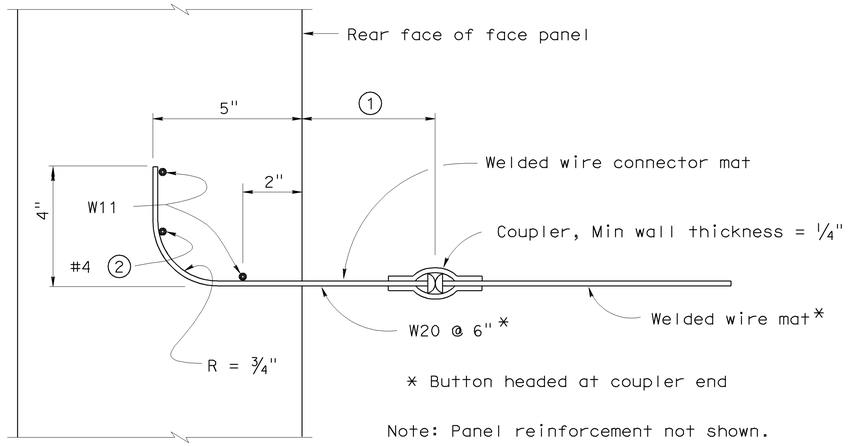

SECTION B-B

No scale

STANDARD DRAWING			
FILE NO. xs13-020-2e	APPROVED BY K. GRISWELL (RESPONSIBLE TECHNICAL SPECIALIST)	RELEASED BY ROBERTO LACALLE (RESPONSIBLE OFFICE CHIEF)	
	APPROVAL DATE 5-6-08	RELEASE DATE 5-6-08	

STATE OF CALIFORNIA DEPARTMENT OF TRANSPORTATION

DIVISION OF ENGINEERING SERVICES

BRIDGE NO. 55E0097
POST MILE 20.64

RETAINING WALL NO. 698
MECHANICALLY STABILIZED EMBANKMENT
DETAIL NO. 2

DS OSD 2147A (ENGLISH STANDARD DRAWING "XS" BORDER REV. 01/11/08)

ORIGINAL SCALE IN INCHES FOR REDUCED PLANS 0 1 2 3

CU 12220
EA 0F0321

DISREGARD PRINTS BEARING EARLIER REVISION DATES

REVISION DATES (PRELIMINARY STAGE ONLY) 02/18/09 04/07/09 04/17/09 06/08/09

SHEET 10 OF 20

USERNAME => trlenard

55e0097-g-msedt02.dgn

DATE PLOTTED => 26-JAN-2010 TIME PLOTTED => 05:41

DIST	COUNTY	ROUTE	POST MILES TOTAL PROJECT	SHEET No	TOTAL SHEETS
12	Ora	57	18.4/20.9	847	856

C. Daniel Sun 06/08/09
REGISTERED ENGINEER - CIVIL DATE

1-25-10
PLANS APPROVAL DATE

REGISTERED PROFESSIONAL ENGINEER C. DANIEL SUN No. 40064 Exp. 12/31/11 CIVIL STATE OF CALIFORNIA

The State of California or its officers or agents shall not be responsible for the accuracy or completeness of electronic copies of this plan sheet.

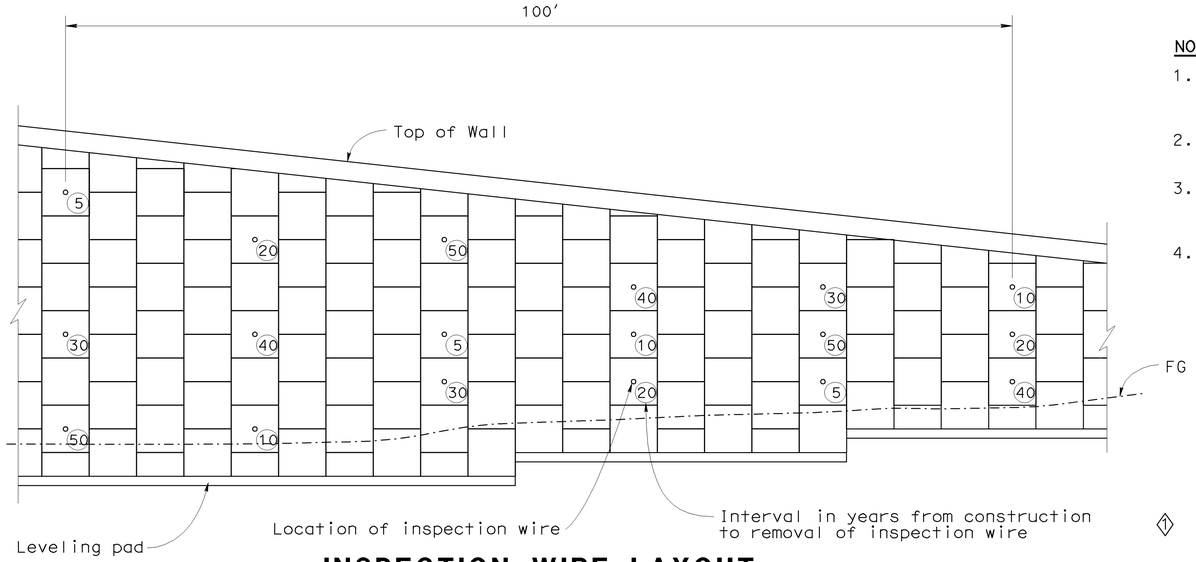

INSPECTION WIRE LAYOUT

No Scale

NOTES:

1. A set of 18 inspection wires is required for every MSE section of at least 100 feet long and a height equal to or greater than 17 feet.
2. Sets should be located approximately 500 feet apart, along the LOL.
3. Place wires in every fourth panel column along the LOL (20 feet apart) and number them according to the typical layout shown.
4. Walls which do not require a set of inspection wires based on the criteria in Note 1 shall have single level of inspection wires installed at a uniform spacing of 20 feet along this level. The location of this level shall be at the first panels above the base of the wall which will be fully exposed after completion of the wall. A minimum of 6 inspection wires shall be installed.

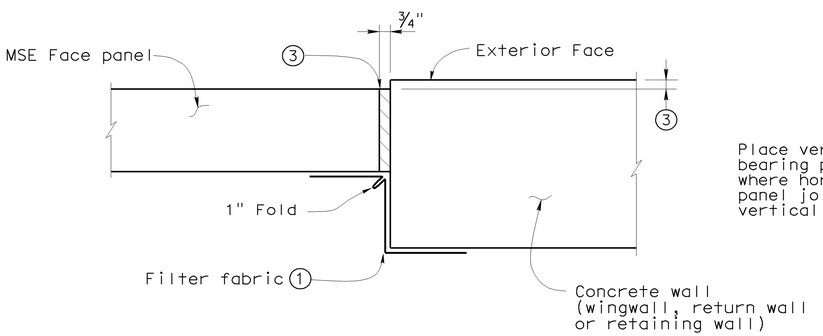

MSE FACE PANEL-TO-CONCRETE WALL JOINT DETAIL

No Scale

LEGEND

1. Bond a strip of filter fabric, 1'-6" wide, to back of MSE panels and the adjacent concrete wall for entire length of vertical joint.
2. Bond expansion joint material to the concrete wall.
3. Offset between face of MSE face panel and face of the concrete wall as dictated by location of layout lines shown elsewhere in Project Plans.

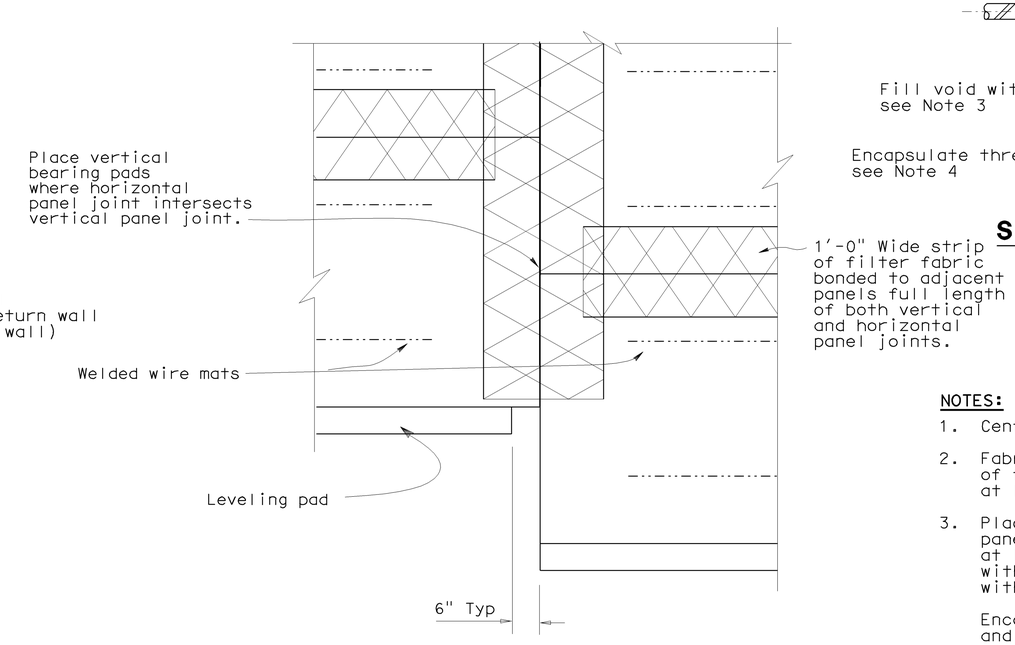

REAR ELEVATION

No Scale

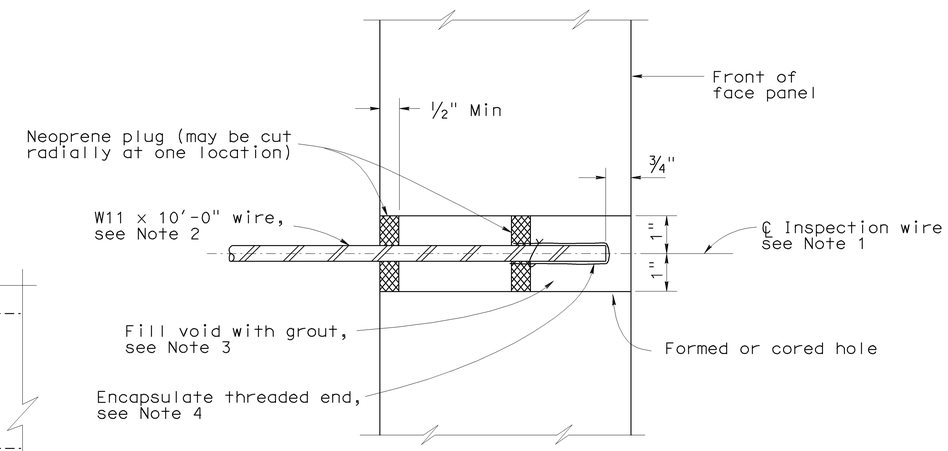

SECTION THRU INSPECTION WIRE

No Scale

NOTES:

1. Center inspection wire in face panel.
2. Fabricate inspection wires from W11 wire representative of the welded wire mats, with 3/8" dia - 16 UNC threads for at least 1 1/2" of one end.
3. Place inspection wire horizontal and perpendicular to the wall panel prior to backfilling. After backfill placement to a level at least 2'-0" above the inspection wire, dry pack opening with 1000 to 1500 psi mortar. Trowel mortar smooth and flush with face of panel.

   Encapsulate threaded end with corrosion inhibiting mastic, and secure round vinyl cover with nylon tie.
4. UNC = Unified coarse threads

SPECIAL DETAILS

RETAINING WALL NO. 698

MECHANICALLY STABILIZED EMBANKMENT

DETAIL NO. 3

STANDARD DRAWING

FILE NO. xs13-020-3e

APPROVED BY K. GRISWELL, RESPONSIBLE TECHNICAL SPECIALIST
APPROVAL DATE 5-6-08

RELEASED BY ROBERTO LACALLE, RESPONSIBLE OFFICE CHIEF
RELEASE DATE REVISED

1 Added Inspection Wire Layout & Notes from Bridge Design Aids 3-8

STATE OF CALIFORNIA DEPARTMENT OF TRANSPORTATION

DIVISION OF ENGINEERING SERVICES

BRIDGE NO. 55E0097
POST MILE 20.64

CU 12220
EA 0F0321

DS OSD 2147A (ENGLISH STANDARD DRAWING "XS" BORDER REV. 01/11/08)

ORIGINAL SCALE IN INCHES FOR REDUCED PLANS 0 1 2 3

DISREGARD PRINTS BEARING EARLIER REVISION DATES 12/18/09 04/07/09 04/17/08 06/08/09

REVISION DATES (PRELIMINARY STAGE ONLY)

SHEET 11 OF 20

USERNAME => trlenard

55e0097-g-msedt03.dgn

DATE PLOTTED => 26-JAN-2010 TIME PLOTTED => 05:42

DIST	COUNTY	ROUTE	POST MILES TOTAL PROJECT	SHEET No	TOTAL SHEETS
12	Ora	57	18.4/20.9	848	856

C. Daniel Sun 06/08/09
REGISTERED ENGINEER - CIVIL DATE

1-25-10
PLANS APPROVAL DATE

REGISTERED PROFESSIONAL ENGINEER C. DANIEL SUN No. 40064 Exp. 12/31/11 CIVIL STATE OF CALIFORNIA

The State of California or its officers or agents shall not be responsible for the accuracy or completeness of electronic copies of this plan sheet.

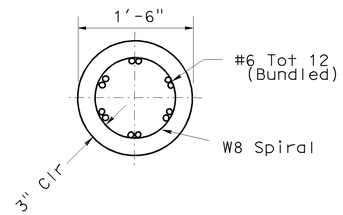

SECTION A-A
No Scale

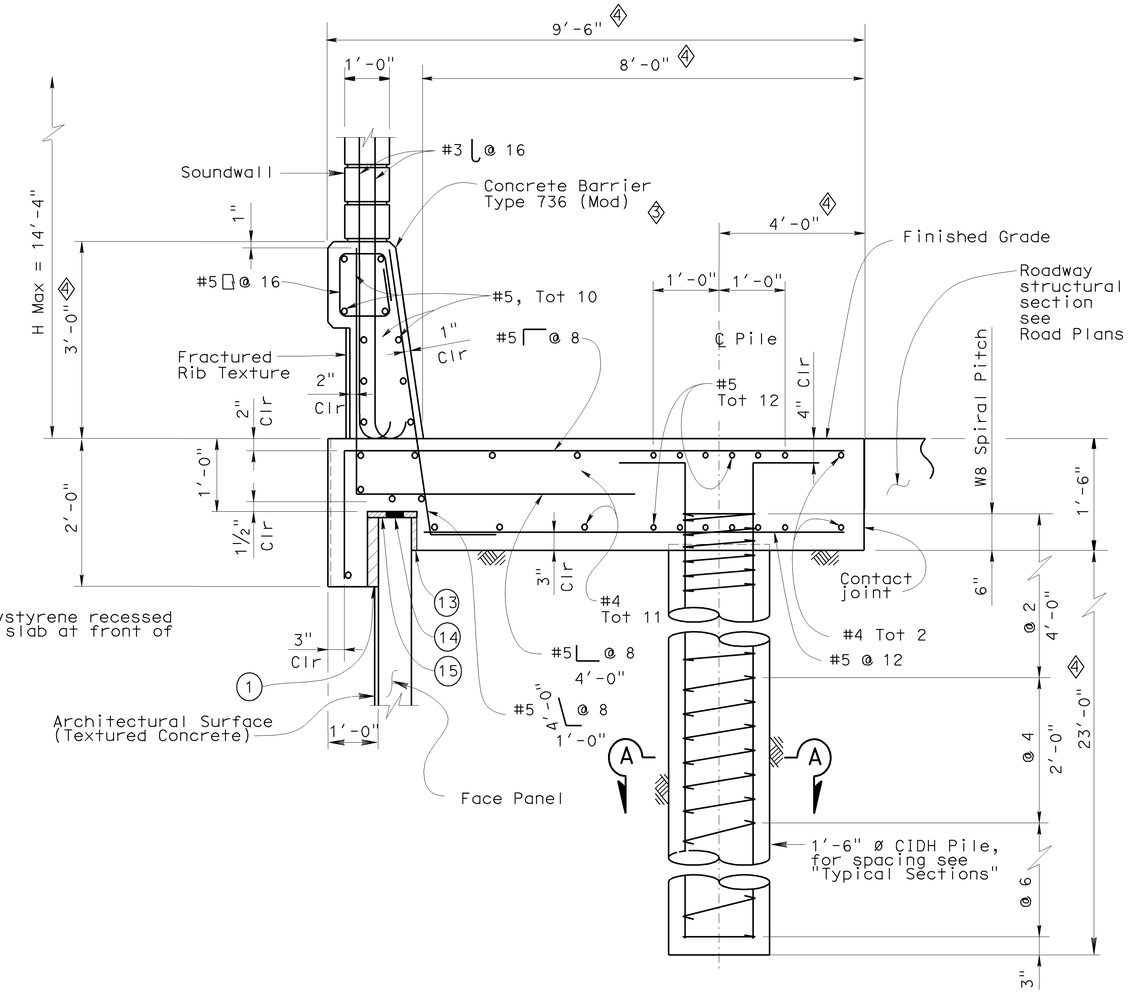

SECTION AT TOP OF WALL WITH SOUNDWALL AND CONCRETE BARRIER
No Scale

LEGEND

(1) 2" Expanded polystyrene recessed 2" into barrier slab at front of MSE face panel.

(13) 1" Expanded polystyrene.

(14) Five elastomeric bearing pads ¾" × 4" × 6" bonded to top of MSE face panel.

(15) 0.5" Expanded polystyrene.

SPECIAL DETAILS

RETAINING WALL NO. 698

MECHANICALLY STABILIZED EMBANKMENT

DETAIL NO. 5

STANDARD DRAWING

FILE NO. xs13-020-5e

APPROVED BY K. GRISWELL — RESPONSIBLE TECHNICAL SPECIALIST
APPROVAL DATE 5-6-08

RELEASED BY ROBERTO LACALLE — RESPONSIBLE OFFICE CHIEF
RELEASE DATE REVISED

1 Deleted Section
2 Deleted Notes
3 Revised Barrier
4 Revised dimensions & detail

STATE OF CALIFORNIA DEPARTMENT OF TRANSPORTATION

DIVISION OF ENGINEERING SERVICES

BRIDGE NO. 55E0097
POST MILE 20.64

CU 12220
EA 0F0321

DISREGARD PRINTS BEARING EARLIER REVISION DATES 02/14/09 04/07/09 04/17/09 06/08/09

REVISION DATES (PRELIMINARY STAGE ONLY)

SHEET 12 OF 20

DS OSD 2147A (ENGLISH STANDARD DRAWING "XS" BORDER REV. 01/11/08)

ORIGINAL SCALE IN INCHES FOR REDUCED PLANS 0 1 2 3

DATE PLOTTED => 26-JAN-2010 TIME PLOTTED => 05:42

USERNAME => trienard

55e0097-g-msedt05.dgn

DIST	COUNTY	ROUTE	POST MILES TOTAL PROJECT	SHEET No	TOTAL SHEETS
12	Ora	57	18.4/20.9	849	856

REGISTERED ENGINEER - CIVIL DATE 06/08/09

1-25-10
PLANS APPROVAL DATE

REGISTERED PROFESSIONAL ENGINEER C. DANIEL SUN No. 40064 Exp. 12/31/11 CIVIL STATE OF CALIFORNIA

The State of California or its officers or agents shall not be responsible for the accuracy or completeness of electronic copies of this plan sheet.

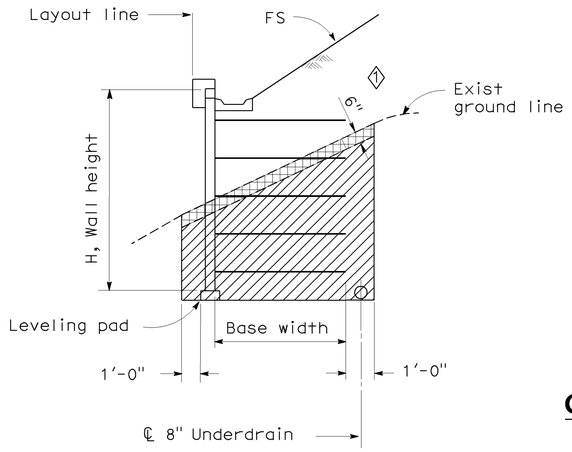

LIMITS OF EXCAVATION

No Scale

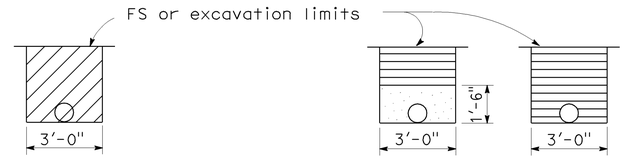

OUTLET PIPE **CLEANOUT PIPE**

EXCAVATION **BACKFILL**

OUTLET OR CLEANOUT PIPE FOR UNDERDRAIN

No Scale

ABBREVIATIONS

OG	Original ground
FS	Planned finished surface
GP	Planned grading plane

LEGEND

- Limits of structure excavation
- Limits of structure backfill
- Limits of permeable material
- 2 Indicates Structure Excavation (Type Y-1) (Aerially Deposited Lead)

NOTES:

1. Limits to FS except to GP when in roadway section.
2. Locate 8" perforated underdrain below bottom level of welded wire mats.
3. Maximum spacing of outlet pipes is 200 ft.
4. At sags in profile of underdrain, install outlet pipe for each direction of flow.

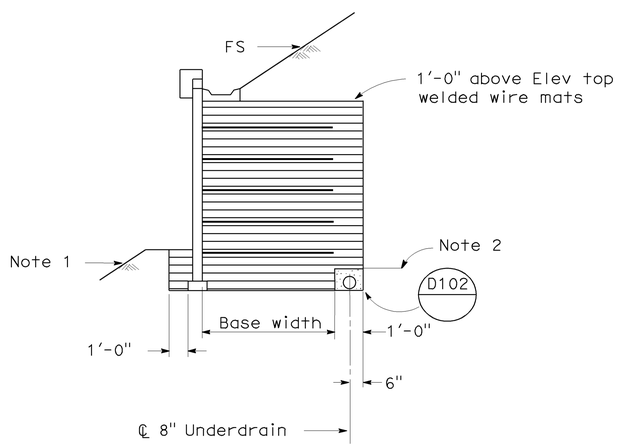

SLOPING FINISHED SURFACE

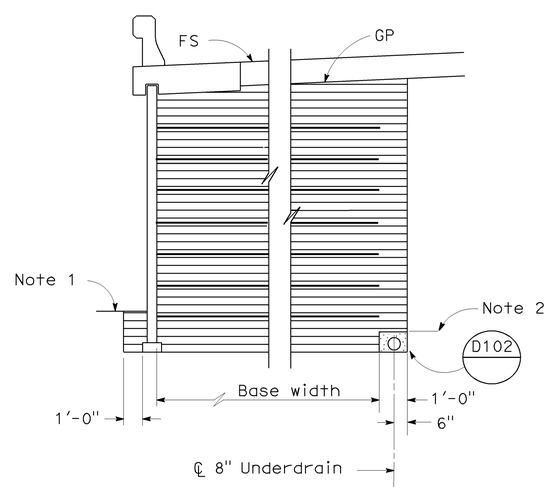

ROADWAY SECTION WITH BASE WIDTH 16' OR GREATER

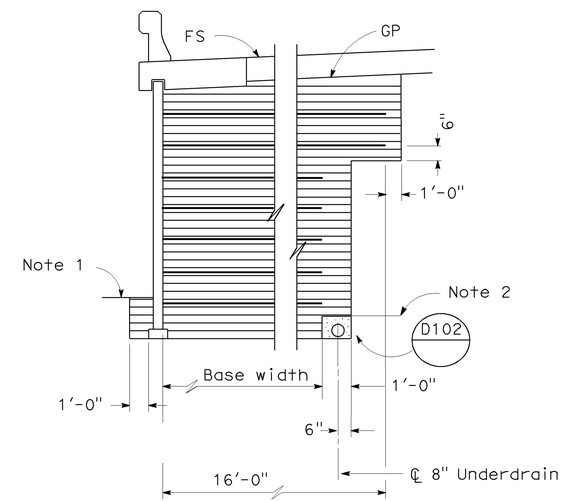

ROADWAY SECTION WITH BASE WIDTH LESS THAN 16'

LIMITS OF BACKFILL

No Scale

SPECIAL DETAILS

RETAINING WALL NO. 698

MECHANICALLY STABILIZED EMBANKMENT

DETAIL NO. 6

STANDARD DRAWING

FILE NO. xs13-020-6e

APPROVED BY K. GRISWELL — RESPONSIBLE TECHNICAL SPECIALIST
APPROVAL DATE 5-6-08

RELEASED BY ROBERTO LACALLE — RESPONSIBLE OFFICE CHIEF
RELEASE DATE REVISED

1 Added Limits of ADL Excavation
2 Added ADL Excavation Legend

STATE OF CALIFORNIA DEPARTMENT OF TRANSPORTATION

DIVISION OF ENGINEERING SERVICES

BRIDGE NO. 55E0097
POST MILE 20.64

CU 12220
EA 0F0321

DISREGARD PRINTS BEARING EARLIER REVISION DATES 02/18/09 04/07/09 04/17/09 06/08/09

SHEET 13 OF 20

DS OSD 2147A (ENGLISH STANDARD DRAWING "XS" BORDER REV. 01/11/08)

ORIGINAL SCALE IN INCHES FOR REDUCED PLANS 0 1 2 3

USERNAME => trlenard

55e0097-g-msedt06.dgn

DATE PLOTTED => 26-JAN-2010 TIME PLOTTED => 05:42

DIST	COUNTY	ROUTE	POST MILES TOTAL PROJECT	SHEET No	TOTAL SHEETS
12	Ora	57	18.4/20.9	850	856

REGISTERED ENGINEER - CIVIL DATE 06/08/09

1-25-10
PLANS APPROVAL DATE

REGISTERED PROFESSIONAL ENGINEER C. DANIEL SUN No. 40064 Exp. 12/31/11 CIVIL STATE OF CALIFORNIA

The State of California or its officers or agents shall not be responsible for the accuracy or completeness of electronic copies of this plan sheet.

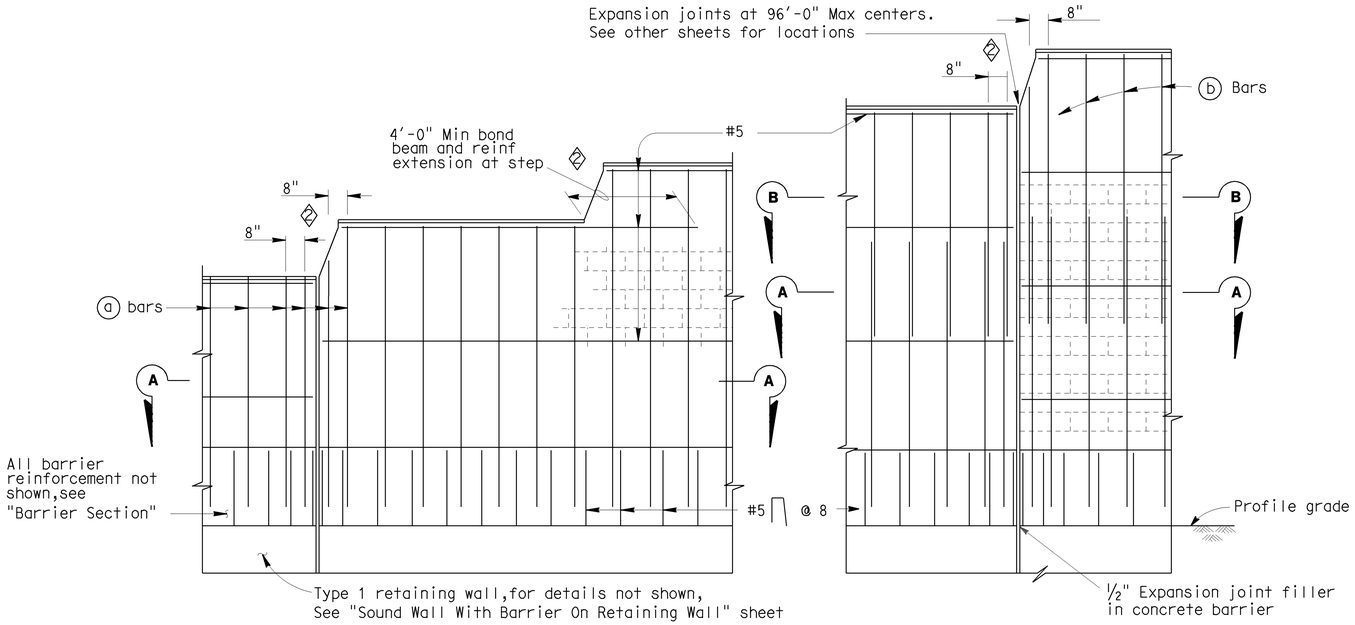

PART ELEVATIONS

No Scale

SOUNDWALL REINFORCEMENT TABLE

Maximum H	a Bars @ 1'-4" Max	B bars @ 1'-4" Max	"y"	f'm (KSI)	Compressive Strength of CMU (KSI)	Maximum H
6'-4"	# 4	———	———	1.5	1.9	6'-4"
8'-4"	# 4	———	———	1.5	1.9	8'-4"
10'-4"	# 4	———	———	1.5	1.9	10'-4"
12'-4"	# 5	# 4	5'-0"	1.5	1.9	12'-4"
14'-4"	# 6	# 4	7'-0"	1.5	1.9	14'-4"
16'-4"	# 6	# 4	9'-0"	2.5	3.7 ⟨7⟩	16'-4"

Note I : For details not shown, see "Sound Wall With Barrier On Retaining Wall - Masonry Block - Details No.2" sheet.

Note II : Slope ground at traffic side of barrier to drain. Maximum slope ±10%.

⟨4⟩

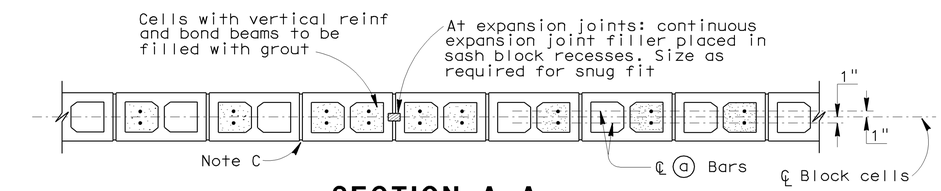

SECTION A-A

For details not shown, see other details

H=6'-4" THRU H=10'-4"

No Scale

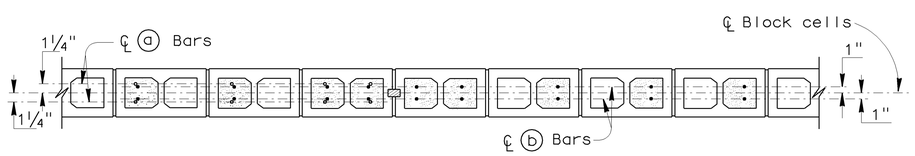

SECTION A-A

SECTION B-B

For details not shown, see other details

H=12'-4" THRU H=16'-4"

No Scale

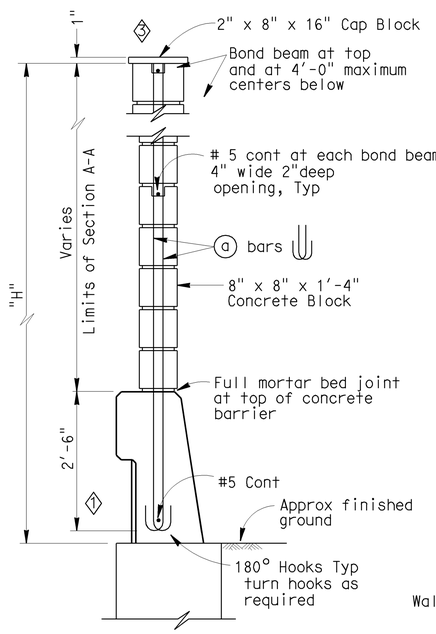

H=6'-4" THRU H=10'-4"

For details not shown, see H=12'-4" thru H=16'-4"

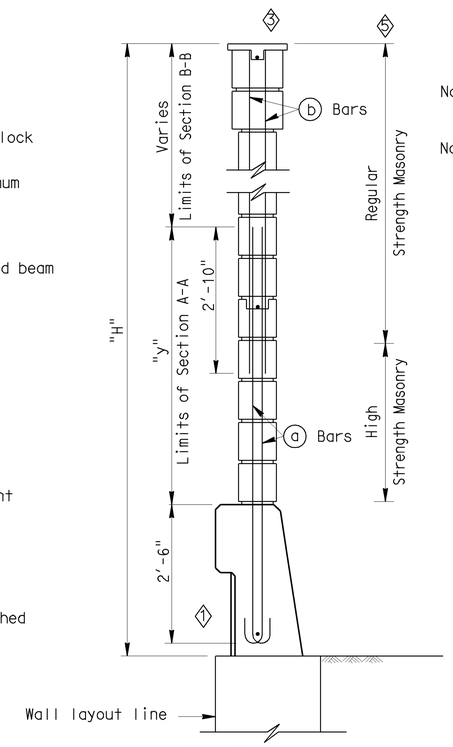

H=12'-4" THRU H=16'-4"

For details not shown, see H=6'-4" thru H=10'-4"

TYPICAL SECTIONS

No Scale

GENERAL NOTES

Note A: For type of block and joint finish, see other sheets.

Note B: When blocks are laid in stacked bond, ladder type, galvanized joint reinforcement shall be provided. A minimum of 2-9 gauge wire continuous at 4'-0" maximum to be used. Locate reinforcement in joints that are at the approximate midpoint between bond beams.

Note C: Horizontal joints shall be tooled concave or may be weathered.
Vertical joints shall be tooled concave or may be raked.

Note D: For intermediate wall heights that are between the "H's" given. Use the tabular information for the next higher "H".

Note E: Masonry strengths are listed in "SOUNDWALL REINFORCEMENT TABLE".

Note F: Class 2 concrete to be used for the barrier.

SPECIAL DETAILS

RETAINING WALL NO. 698

STANDARD DRAWING

FILE NO. xs15-130-1e

APPROVED BY T SATTER — RESPONSIBLE TECHNICAL SPECIALIST
APPROVAL DATE 9-2-08

RELEASED BY ROBERTO LACALLE — RESPONSIBLE OFFICE CHIEF
RELEASE DATE REVISED

⟨1⟩ Revised Barrier
⟨2⟩ Revised Step
⟨3⟩ Revised Cap Blocks
⟨4⟩ Removed Note
⟨5⟩ Added Limits of Masonry Strength
⟨7⟩ Deleted H=16'-4"

STATE OF CALIFORNIA
DEPARTMENT OF TRANSPORTATION

DIVISION OF ENGINEERING SERVICES

BRIDGE NO. 55E0097
POST MILE 20.64

SOUNDWALL - MASONRY BLOCK WITH BARRIER ON RETAINING WALL

DETAILS NO. 1

DS OSD 2147A (ENGLISH STANDARD DRAWING "XS" BORDER REV. 01/11/08)

ORIGINAL SCALE IN INCHES FOR REDUCED PLANS 0 1 2 3

CU 12220
EA 0F0321

DISREGARD PRINTS BEARING EARLIER REVISION DATES

REVISION DATES (PRELIMINARY STAGE ONLY) 02/18/09 04/07/09 04/17/09 06/08/09

SHEET 14 OF 20

USERNAME => trlenard

55e0097-g-SWdet01.dgn

DATE PLOTTED => 26-JAN-2010 TIME PLOTTED => 05:42

DIST	COUNTY	ROUTE	POST MILES TOTAL PROJECT	SHEET No	TOTAL SHEETS
12	Ora	57	18.4/20.9	851	856

C. Daniel Sun 06/08/09
REGISTERED ENGINEER - CIVIL DATE

1-25-10
PLANS APPROVAL DATE

REGISTERED PROFESSIONAL ENGINEER C. DANIEL SUN No. 40064 Exp. 12/31/11 CIVIL STATE OF CALIFORNIA

The State of California or its officers or agents shall not be responsible for the accuracy or completeness of electronic copies of this plan sheet.

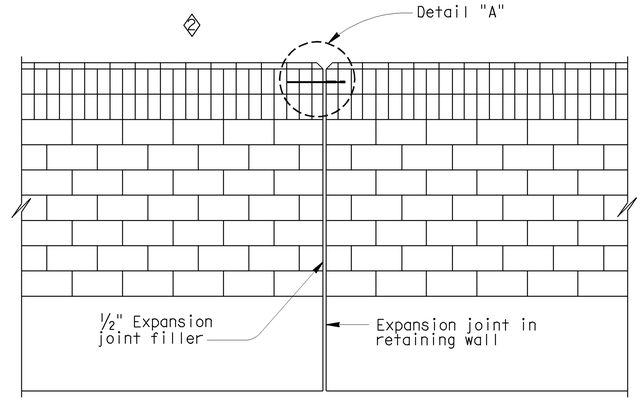

ALIGNMENT KEY DETAIL
No Scale

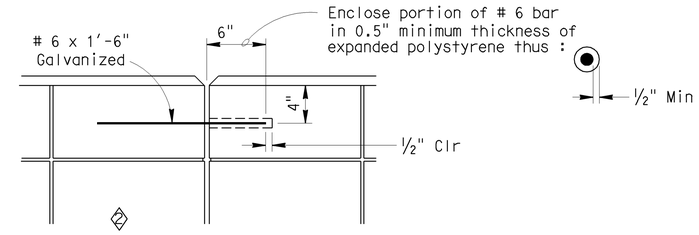

DETAIL A
No Scale

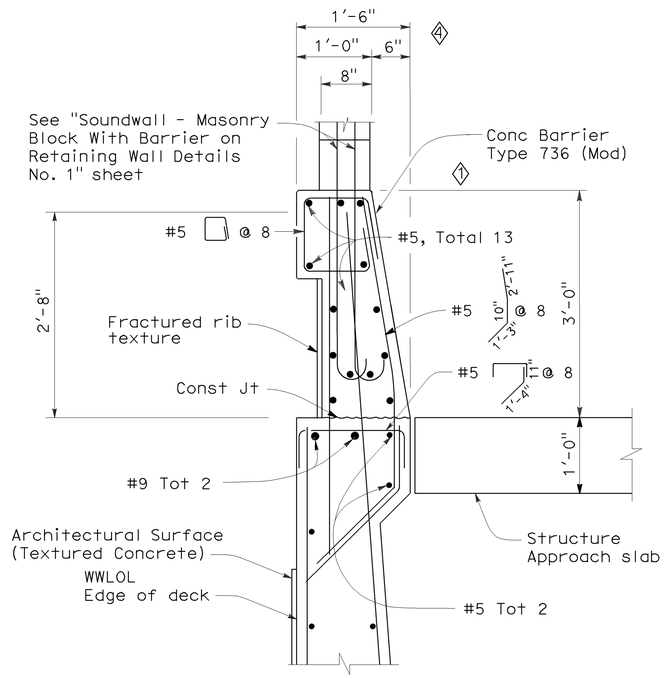

BARRIER SECTION
No Scale

NOTES:

I : For details not shown, see "Retaining Wall Type 1SWB" sheets.

II : Slope ground at traffic side of barrier to drain. Maximum slope ±10%. See Standard Plan B11-56, Note D.

DESIGN NOTES

DESIGN

Uniform Building Code, 1997 Edition and the Bridge Design Specifications.

DESIGN WIND LOAD

33 PSF

DESIGN SEISMIC LOAD

0.57 Dead load

REINFORCED CONCRETE

f'c = 3250 PSI
fy = 60 KSI

CONCRETE MASONRY

REGULAR STRENGTH	HIGH STRENGTH	
f'm = 1500 PSI	f'm = 2000 PSI	f'm = 2500 PSI
fb = 1500 PSI	fb = 660 PSI	fb = 830 PSI
fs = 24.0 KSI	fs = 24.0 KSI	fs = 24000 PSI
n = 25.8	n = 19.3	n = 15.5

LOAD FACTORS AND LOAD COMBINATIONS

Working Stress Design (WSD) Percentage of unit stress

Group 1: D + E + SC 100%
Group 2: D + W + SC + E 100%
Group 3: D + 0.71 EQD + E 100%

Where:

D = Dead load
E = Lateral earth pressure
SC = Live load surcharge
W = Wind load
EQD = Seismic dead load

Load Factor Design (LFD)

Group A: βD + 1.7 E + 1.7 SC
Group B: βD + 1.7 E + 1.3 W
Group C: βD + 1.3 E + 1.0 EQE
Group D: βD + 1.3 E + 1.0 EQD
Group E: βD + 1.1 E + 0.85 (EQE + EQD)

Where : β = 0.9 or 1.2, whichever controls in design
D = Dead load
E = Lateral earth pressure
SC = Live load surcharge
W = Wind load
EQD = Seismic dead load
EQE = Seismic earth load

STRENGTH REDUCTION FACTORS, Ø

Reinforced concrete:
For flexure ---------- Ø=0.90
For shear ---------- Ø=0.85

Concrete masonry:
For flexure ---------- Ø=0.80
For shear ---------- Ø=0.60

Foundations :

See "RETAINING WALL WITH SOUNDWALL" sheets.

SPECIAL DETAILS

RETAINING WALL NO. 698

STANDARD DRAWING

FILE NO. xs15-130-2e
APPROVED BY T SATTER — RESPONSIBLE TECHNICAL SPECIALIST
APPROVAL DATE 4-15-08
RELEASED BY ROBERTO LACALLE — RESPONSIBLE OFFICE CHIEF
RELEASE DATE REVISED

1 Revised Barrier
2 Revised Cap Blocks
3 Removed Detail
4 Revised Dimension and Detail

STATE OF CALIFORNIA
DEPARTMENT OF TRANSPORTATION

DIVISION OF ENGINEERING SERVICES

BRIDGE NO. 55E0097
POST MILE 20.64

SOUNDWALL - MASONRY BLOCK WITH BARRIER ON RETAINING WALL

DETAILS NO. 2

DS OSD 2147A (ENGLISH STANDARD DRAWING "XS" BORDER REV. 01/11/08)

ORIGINAL SCALE IN INCHES FOR REDUCED PLANS 0 1 2 3

CU 12220
EA 0F0321

DISREGARD PRINTS BEARING EARLIER REVISION DATES

REVISION DATES (PRELIMINARY STAGE ONLY) 02/18/09 04/07/09 04/17/09 06/08/09

SHEET 15 OF 20

USERNAME => trlenard

55e0097-g-SWdet02.dgn

DATE PLOTTED => 26-JAN-2010 TIME PLOTTED => 08:54:42

DIST	COUNTY	ROUTE	POST MILES TOTAL PROJECT	SHEET No	TOTAL SHEETS
12	Ora	57	18.4/20.9	852	856

REGISTERED CIVIL ENGINEER — DATE 06/08/09

1-25-10
PLANS APPROVAL DATE

REGISTERED PROFESSIONAL ENGINEER — MOHAMMED ATIQULLAH — No. C47027 — Exp. 12/31/09 — CIVIL — STATE OF CALIFORNIA

The State of California or its officers or agents shall not be responsible for the accuracy or completeness of electronic copies of this plan sheet.

OCTA
550 S. MAIN STREET
ORANGE, CA 92863

CH2M HILL
6 HUTTON CENTRE DRIVE, SUITE 700
SANTA ANA, CA 92707

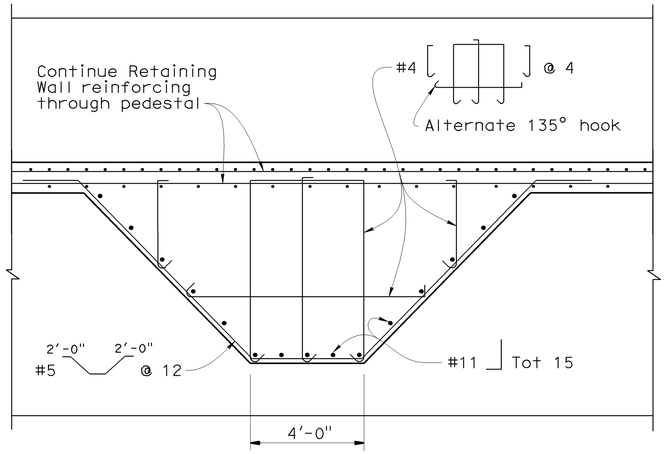

SECTION B-B
3/8"=1'-0"

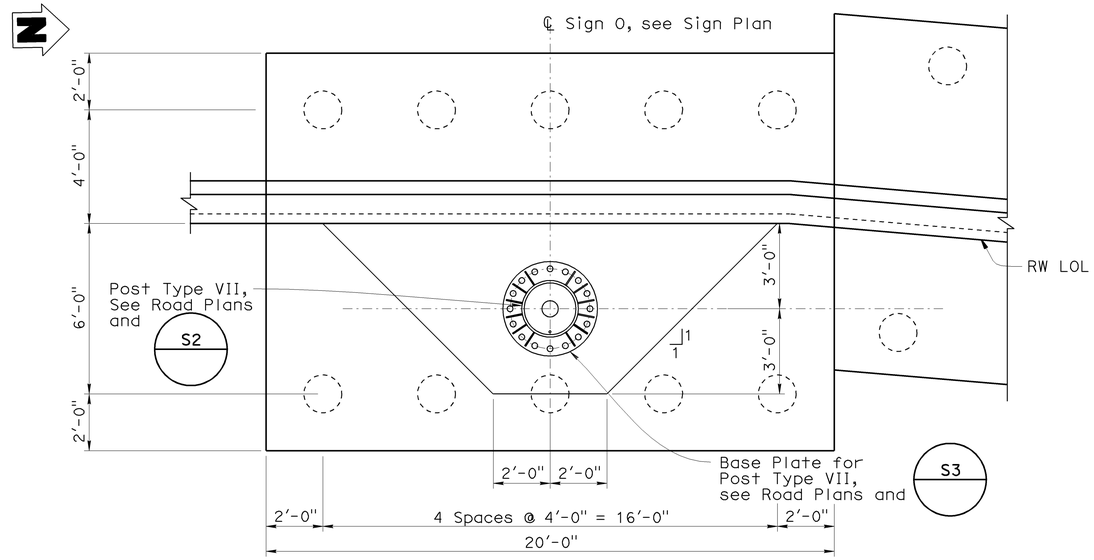

PLAN
3/8"=1'-0"

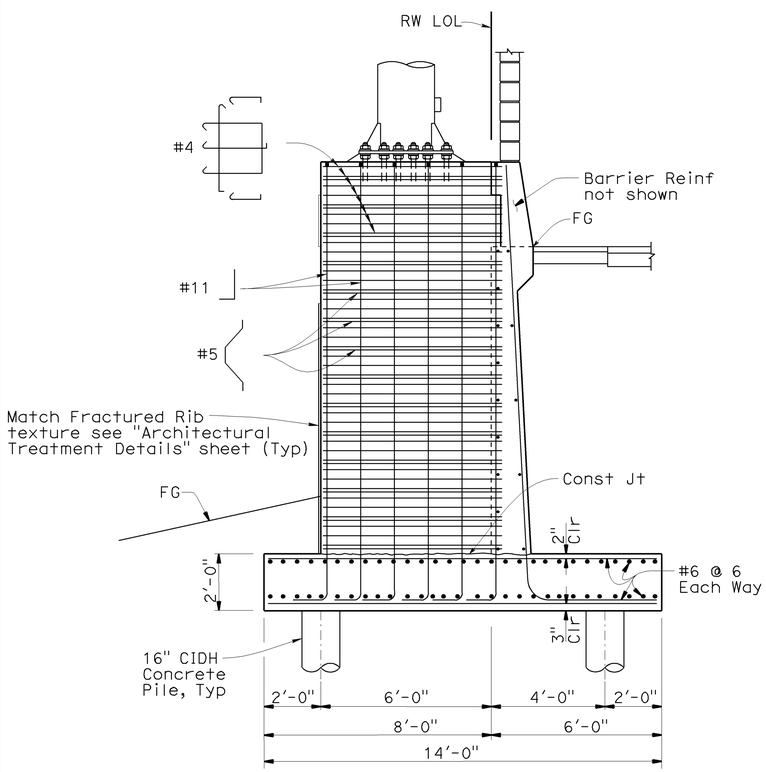

SECTION A-A
3/8"=1'-0"

Note:
Soundwall vertical reinforcement not shown.

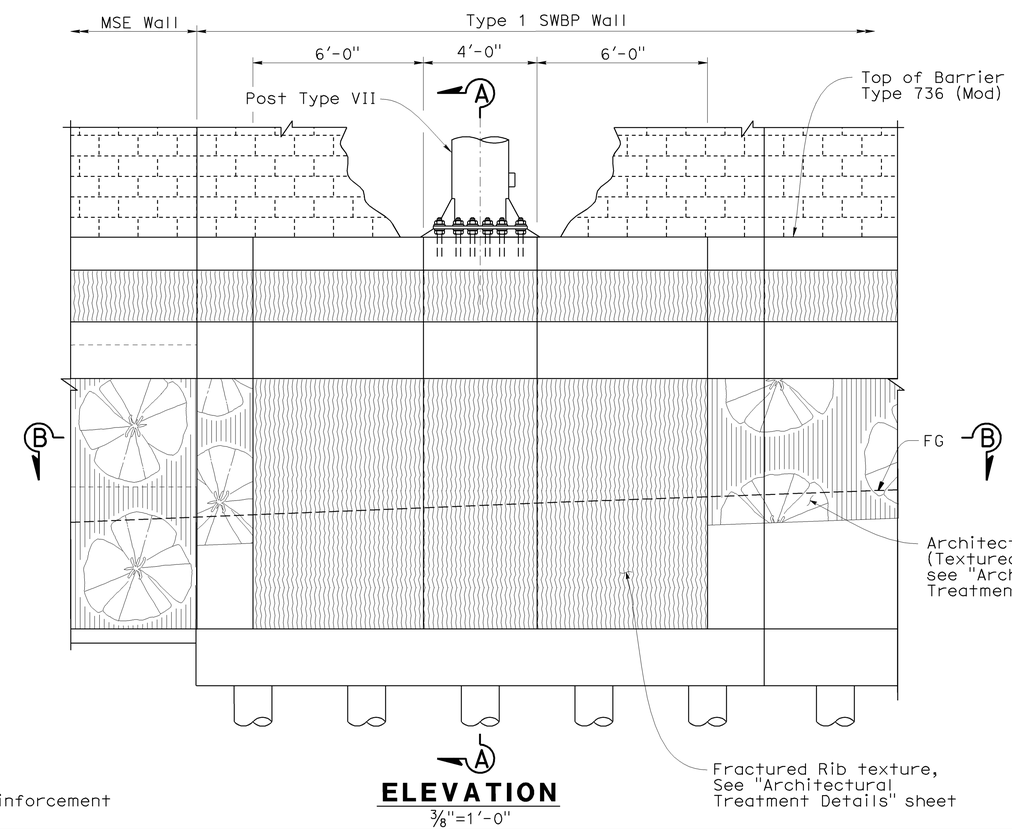

ELEVATION
3/8"=1'-0"

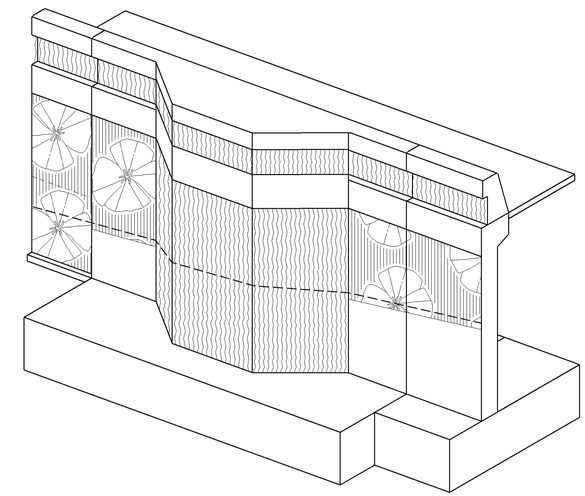

ISOMETRIC VIEW
No Scale

NOTES:

1. For information not shown, see "Typical Sections" and "Retaining Wall Type 1SWBP - Details No. 1 & 2" sheets.
2. Reinforcement shown on Section A-A and Section B-B shall only apply at overhead sign foundation. All other reinforcement, see "Retaining Wall Type 1SWBP - Details No. 1 & 2" sheets.

DESIGN OVERSIGHT — Jon Hamaguchi
12-17-09
SIGN OFF DATE

	BY	CHECKED
DESIGN	M. Atiqullah / E. Cutler	J. Powell
DETAILS	M. Atiqullah / E. Cutler	J. Powell
QUANTITIES	B. Ho	L. Ros

PREPARED FOR THE STATE OF CALIFORNIA DEPARTMENT OF TRANSPORTATION

Ayman Salama
PROJECT ENGINEER

BRIDGE NO. 55E0097
POST MILE 20.64

RETAINING WALL NO. 698
SIGN PEDESTAL DETAILS

DESIGN DETAIL SHEET (ENGLISH) (REV. 2/25/05)

ORIGINAL SCALE IN INCHES FOR REDUCED PLANS 0 1 2 3

CU 12220
EA 0F0321

DISREGARD PRINTS BEARING EARLIER REVISION DATES

REVISION DATES (PRELIMINARY STAGE ONLY): 02/18/09 04/07/09 04/17/09 06/08/09

SHEET 16 OF 20

FILE => 55e0097-u-dt01.dgn

USERNAME => trlenard DATE PLOTTED => 26-JAN-2010 TIME PLOTTED => 05:42

DIST	COUNTY	ROUTE	POST MILES TOTAL PROJECT	SHEET No	TOTAL SHEETS
12	Ora	57	18.4/20.9	853	856

REGISTERED CIVIL ENGINEER — DATE 06/08/09

1-25-10
PLANS APPROVAL DATE

REGISTERED PROFESSIONAL ENGINEER — MOHAMMED ATIQULLAH — No. C47027 — Exp. 12/31/09 — CIVIL — STATE OF CALIFORNIA

The State of California or its officers or agents shall not be responsible for the accuracy or completeness of electronic copies of this plan sheet.

OCTA
550 S. MAIN STREET
ORANGE, CA 92863

CH2M HILL
6 HUTTON CENTRE DRIVE, SUITE 700
SANTA ANA, CA 92707

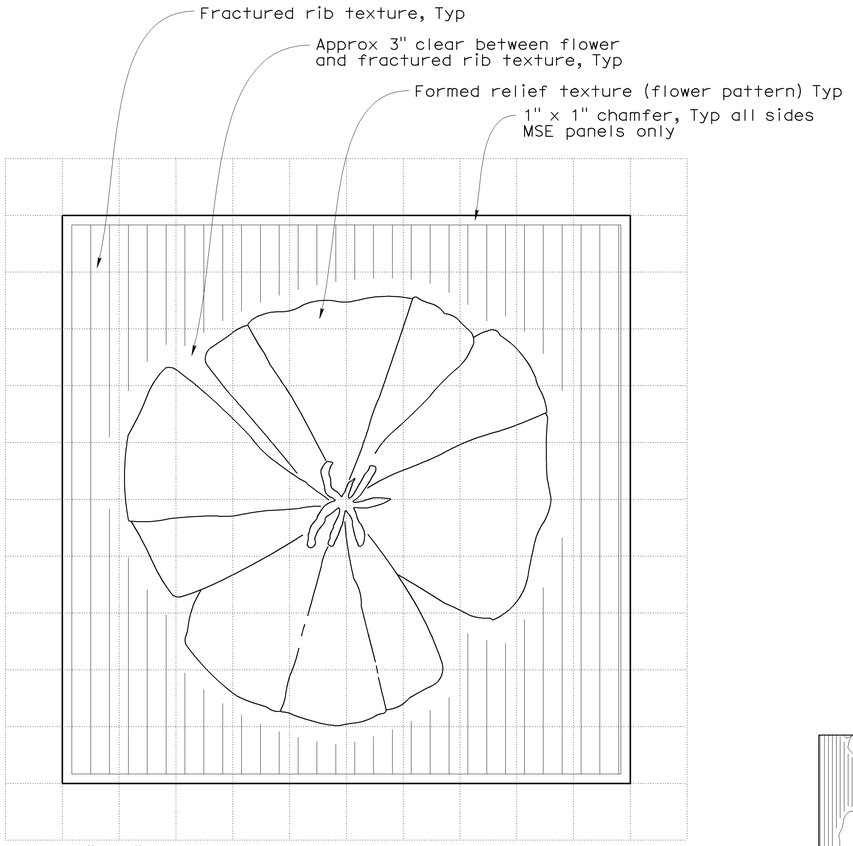

ARCHITECTURAL SURFACE (TEXTURED CONCRETE) FOR MSE PANEL

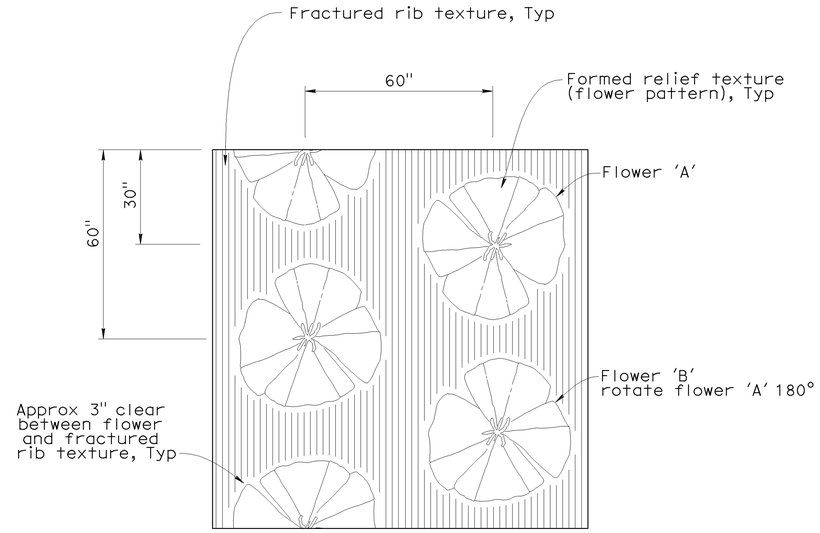

ARCHITECTURAL SURFACE (TEXTURED CONCRETE) PATTERN

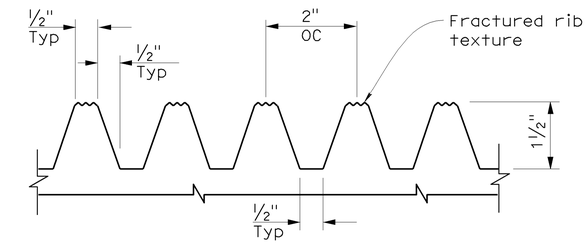

FRACTURED RIB TEXTURE DETAIL

(Elastomer Formliner)

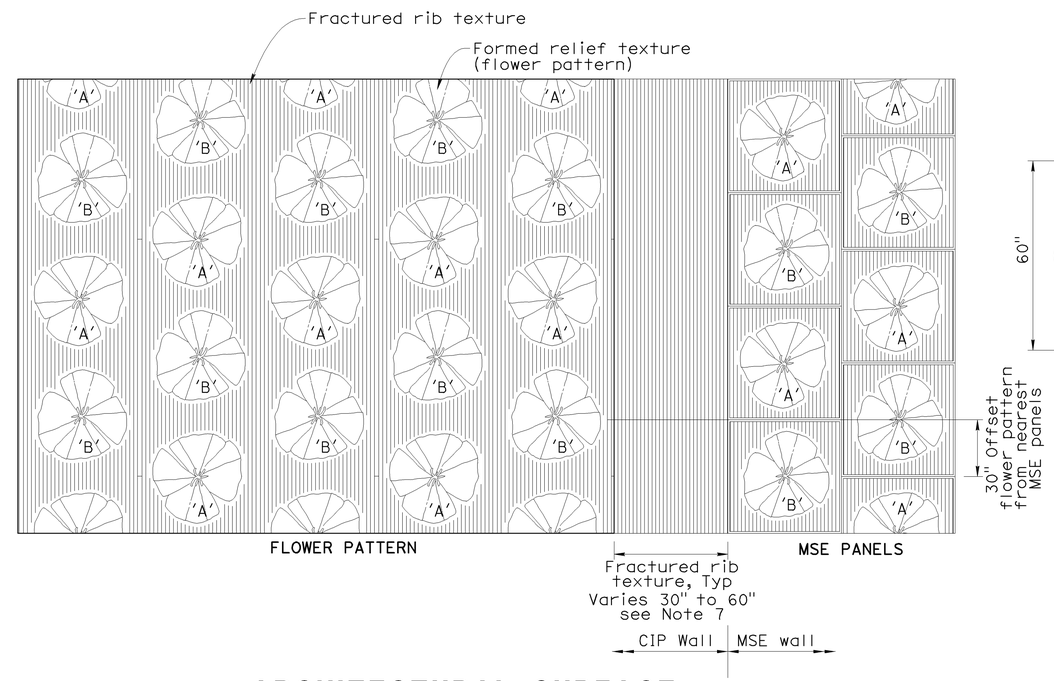

ARCHITECTURAL SURFACE (TEXTURED CONCRETE) ELEVATION

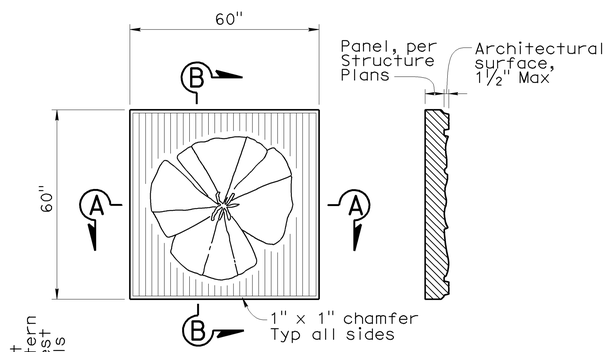

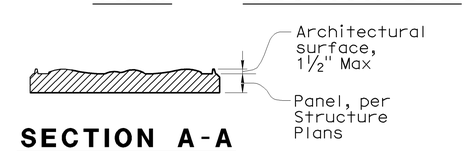

SECTION A-A

MSE PANEL

NOTES:

1. Identical flower images, scale and spacing shall be used for flower pattern and MSE wall panels.
2. Within a vertical column, flower images shall alternate between flowers 'A' and 'B'. Vertical columns shall be offset 30" from adjacent columns.
3. Where placed on walls bounded by concrete barriers, finished grade or top of wall, flower pattern shall be continued without concern for partial flower images, except as noted.
4. Refer to structural details for width of smooth band to be applied at edges of structures.
5. Where the flower pattern will be used adjacent to a horizontal limit such as a bridge abutment, adjoining MSE wall or overhead sign structure support, flower pattern shall be discontinued from a section not less than 30" and not greater than 60" wide from the horizontal limit to avoid truncation of flower images. Fractured rib texture shall be inserted in the resulting gap to create a continuous buffer between pattern areas.
6. The nearest column of flower images (flower pattern) shall be offset vertically 30" from the panels.
7. Vary fractured rib texture width (30" to 60") to provide complete flower pattern on cip wall side.

No scale

DESIGN OVERSIGHT — Jon Hamaguchi
11-24-09
SIGN OFF DATE

	BY	CHECKED
DESIGN	M. Atiqullah	E. Cutler
DETAILS	M. Atiqullah	E. Cutler
QUANTITIES	B. Ho	L. Ros

PREPARED FOR THE STATE OF CALIFORNIA DEPARTMENT OF TRANSPORTATION

Ayman Salama
PROJECT ENGINEER

BRIDGE NO. 55E0097
POST MILE 20.64

RETAINING WALL NO. 698
ARCHITECTURAL TREATMENT DETAILS

DESIGN DETAIL SHEET (ENGLISH) (REV. 2/25/05)

ORIGINAL SCALE IN INCHES FOR REDUCED PLANS 0 1 2 3

CU 12220
EA 0F0321

DISREGARD PRINTS BEARING EARLIER REVISION DATES — REVISION DATES (PRELIMINARY STAGE ONLY) 06/08/09

SHEET 17 OF 20

FILE => 55e0097-u-tarcdt01.dgn

USERNAME => trhenard DATE PLOTTED => 26-JAN-2010 TIME PLOTTED => 05:42

DIST	COUNTY	ROUTE	POST MILES TOTAL PROJECT	SHEET No	TOTAL SHEETS
12	Ora	57	18.4/20.9	854	856

Hisham Nofal
GEOTECHNICAL PROFESSIONAL — 06/08/09 DATE

1-25-10
PLANS APPROVAL DATE

REGISTERED PROFESSIONAL ENGINEER — HISHAM M. NOFAL No. 2765 Exp. 09/30/09 GEOTECHNICAL — STATE OF CALIFORNIA

The State of California or its officers or agents shall not be responsible for the accuracy or completeness of electronic copies of this plan sheet.

OCTA
550 S. MAIN STREET
ORANGE, CA 92863

CH2M HILL
6 HUTTON CENTRE DRIVE, SUITE 700
SANTA ANA, CA 92707

BENCHMARK:

Horizontal coordinates are CCS NAD-83, Zone 6.
vertical control based on North American Vertical Datum 1988.
Pt 1079: N2282339.808, E6067144.835, Elev 407.210
Pt 1081: N2282931.290, E6067198.604, Elev 422.355
Pt 1152: N2283540.401, E6067209.856, Elev 435.405

SAMPLER TYPES:

California modified ring sampler
standard penetration test sampler

HAMMER TYPE:

Automatic hammer

CORRECTION FACTOR:

To convert from California modified ring sampler blow count to equivalent standard penetration test sampler blow count, for granular and cohesive soil, multiply by 0.67.

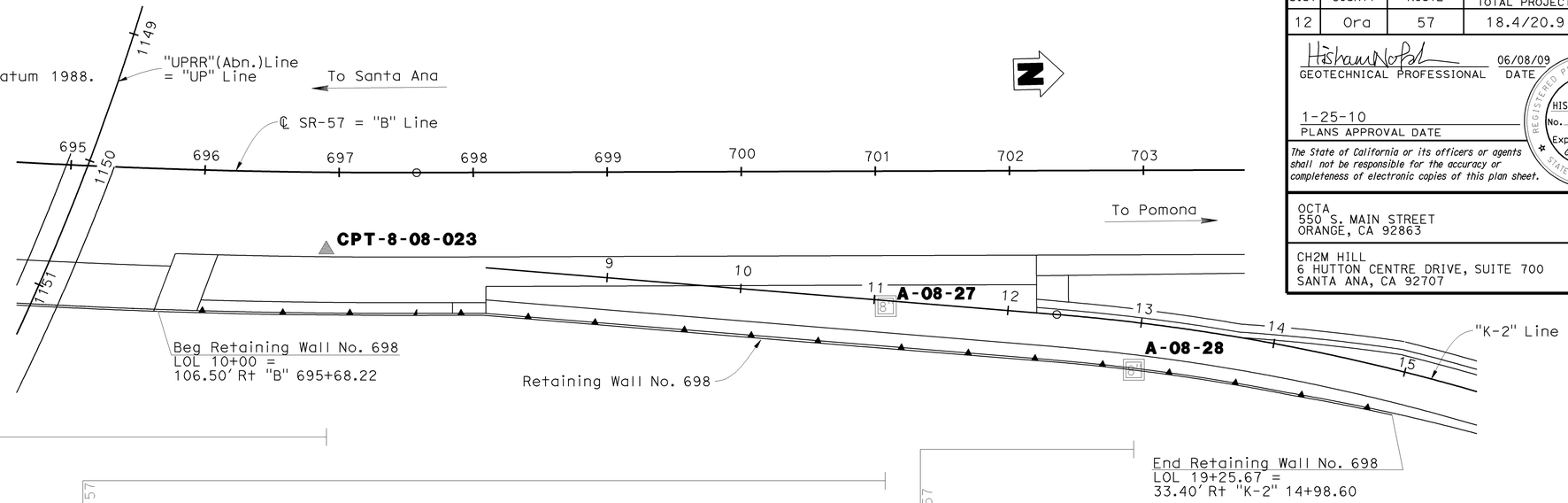

PLAN

1"=50'

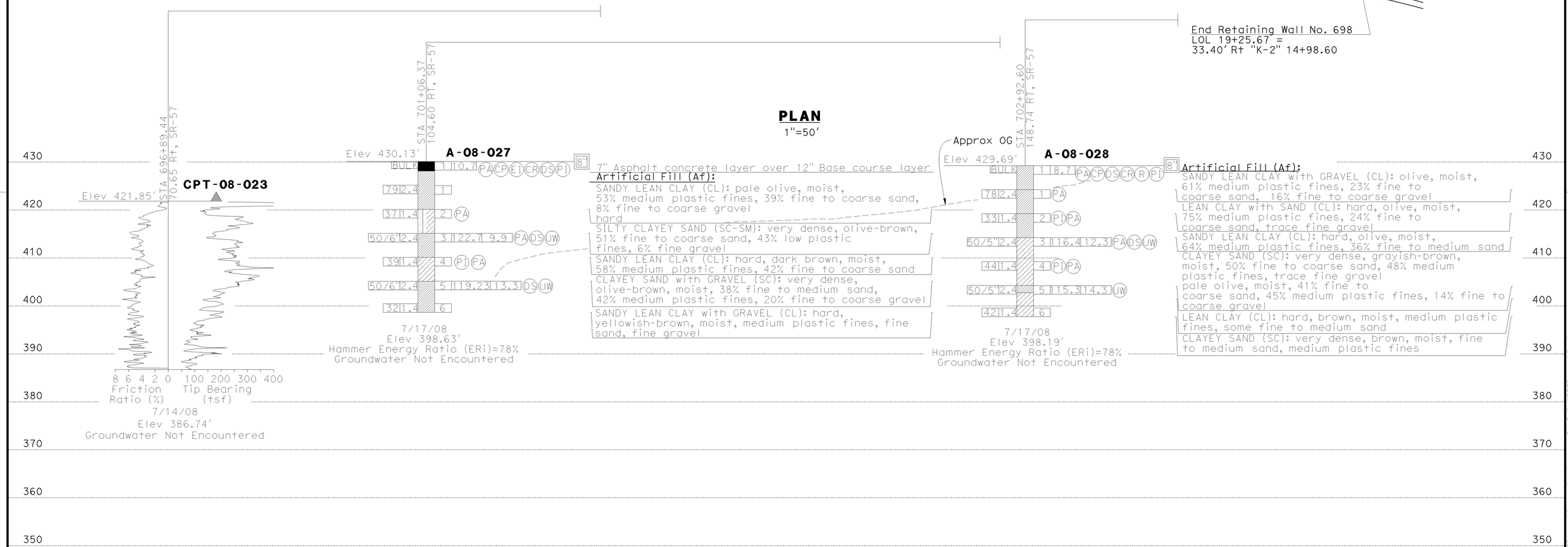

PROFILE

Horz:1"=50'
Vert: 1"=10'

STATIONING "SR-57" = "B" Line

691 692 693 694 695 696 697 698 699 700 701 702 703 704 705 706

DESIGN OVERSIGHT Jon Hamaguchi	DRAWN BY	K. Reyes	R. Bethapudi FIELD INVESTIGATION BY:
11-24-09 SIGN OFF DATE	CHECKED BY	H. Nofal	DATE

PREPARED FOR THE STATE OF CALIFORNIA DEPARTMENT OF TRANSPORTATION

Ayman Salama
PROJECT ENGINEER

BRIDGE NO. 55E0097
POST MILES 20.64

RETAINING WALL NO. 698

LOG OF TEST BORINGS SHEET 1 OF 3

ORIGINAL SCALE IN INCHES FOR REDUCED PLANS 0 1 2 3

CU 12220
EA 0F0321

DISREGARD PRINTS BEARING EARLIER REVISION DATES

REVISION DATES (PRELIMINARY STAGE ONLY) 02/18/09 04/07/09 04/17/09 06/08/09

SHEET 18 OF 20

FILE => 55e0097-z-1tb01.dgn

USERNAME => frlenard DATE PLOTTED => 26-JAN-2010 TIME PLOTTED => 06:42

REFERENCE: CALTRANS SOIL & ROCK LOGGING, CLASSIFICATION, AND PRESENTATION MANUAL (JUNE 2007)

DIST	COUNTY	ROUTE	POST MILES TOTAL PROJECT	SHEET No	TOTAL SHEETS
12	Ora	57	18.4/20.9	855	856

Hisham Nofal 06/08/09
GEOTECHNICAL PROFESSIONAL DATE

REGISTERED PROFESSIONAL ENGINEER HISHAM M. NOFAL No. 2765 Exp. 09/30/09 GEOTECHNICAL STATE OF CALIFORNIA

1-25-10
PLANS APPROVAL DATE

The State of California or its officers or agents shall not be responsible for the accuracy or completeness of electronic copies of this plan sheet.

OCTA
550 S. MAIN STREET
ORANGE, CA 92863

CH2M HILL
6 HUTTON CENTRE DRIVE, SUITE 700
SANTA ANA, CA 92707

GROUP SYMBOLS AND NAMES

Graphic/Symbol	Group Names	Graphic/Symbol	Group Names
GW	Well-graded GRAVEL Well-graded GRAVEL with SAND	CL	Lean CLAY Lean CLAY with SAND Lean CLAY with GRAVEL SANDY lean CLAY SANDY lean CLAY with GRAVEL GRAVELLY lean CLAY GRAVELLY lean CLAY with SAND
GP	Poorly graded GRAVEL Poorly graded GRAVEL with SAND		
GW-GM	Well-graded GRAVEL with SILT Well-graded GRAVEL with SILT and SAND	CL-ML	SILTY CLAY SILTY CLAY with SAND SILTY CLAY with GRAVEL SANDY SILTY CLAY SANDY SILTY CLAY with GRAVEL GRAVELLY SILTY CLAY GRAVELLY SILTY CLAY with SAND
GW-GC	Well-graded GRAVEL with CLAY (or SILTY CLAY) Well-graded GRAVEL with CLAY and SAND (or SILTY CLAY and SAND)		
GP-GM	Poorly graded GRAVEL with SILT Poorly graded GRAVEL with SILT and SAND	ML	SILT SILT with SAND SILT with GRAVEL SANDY SILT SANDY SILT with GRAVEL GRAVELLY SILT GRAVELLY SILT with SAND
GP-GC	Poorly graded GRAVEL with CLAY (or SILTY CLAY) Poorly graded GRAVEL with CLAY and SAND (or SILTY CLAY and SAND)		
GM	SILTY GRAVEL SILTY GRAVEL with SAND	OL	ORGANIC lean CLAY ORGANIC lean CLAY with SAND ORGANIC lean CLAY with GRAVEL SANDY ORGANIC lean CLAY SANDY ORGANIC lean CLAY with GRAVEL GRAVELLY ORGANIC lean CLAY GRAVELLY ORGANIC lean CLAY with SAND
GC	CLAYEY GRAVEL CLAYEY GRAVEL with SAND		
GC-GM	SILTY, CLAYEY GRAVEL SILTY, CLAYEY GRAVEL with SAND	OL	ORGANIC SILT ORGANIC SILT with SAND ORGANIC SILT with GRAVEL SANDY ORGANIC SILT SANDY ORGANIC SILT with GRAVEL GRAVELLY ORGANIC SILT GRAVELLY ORGANIC SILT with SAND
SW	Well-graded SAND Well-graded SAND with GRAVEL		
SP	Poorly graded SAND Poorly graded SAND with GRAVEL	CH	Fat CLAY Fat CLAY with SAND Fat CLAY with GRAVEL SANDY fat CLAY SANDY fat CLAY with GRAVEL GRAVELLY fat CLAY GRAVELLY fat CLAY with SAND
SW-SM	Well-graded SAND with SILT Well-graded SAND with SILT and GRAVEL		
SW-SC	Well-graded SAND with CLAY (or SILTY CLAY) Well-graded SAND with CLAY and GRAVEL (or SILTY CLAY and GRAVEL)	MH	Elastic SILT Elastic SILT with SAND Elastic SILT with GRAVEL SANDY elastic SILT SANDY elastic SILT with GRAVEL GRAVELLY elastic SILT GRAVELLY elastic SILT with SAND
SP-SM	Poorly graded SAND with SILT Poorly graded SAND with SILT and GRAVEL		
SP-SC	Poorly graded SAND with CLAY (or SILTY CLAY) Poorly graded SAND with CLAY and GRAVEL (or SILTY CLAY and GRAVEL)	OH	ORGANIC fat CLAY ORGANIC fat CLAY with SAND ORGANIC fat CLAY with GRAVEL SANDY ORGANIC fat CLAY SANDY ORGANIC fat CLAY with GRAVEL GRAVELLY ORGANIC fat CLAY GRAVELLY ORGANIC fat CLAY with SAND
SM	SILTY SAND SILTY SAND with GRAVEL		
SC	CLAYEY SAND CLAYEY SAND with GRAVEL	OH	ORGANIC elastic SILT ORGANIC elastic SILT with SAND ORGANIC elastic SILT with GRAVEL SANDY ORGANIC elastic SILT SANDY ORGANIC elastic SILT with GRAVEL GRAVELLY ORGANIC elastic SILT GRAVELLY ORGANIC elastic SILT with SAND
SC-SM	SILTY, CLAYEY SAND SILTY, CLAYEY SAND with GRAVEL		
PT	PEAT	OL/OH	ORGANIC SOIL ORGANIC SOIL with SAND ORGANIC SOIL with GRAVEL SANDY ORGANIC SOIL SANDY ORGANIC SOIL with GRAVEL GRAVELLY ORGANIC SOIL GRAVELLY ORGANIC SOIL with SAND
	COBBLES COBBLES and BOULDERS BOULDERS		

FIELD AND LABORATORY TESTING

- (C) Consolidation (ASTM D 2435)
- (CL) Collapse Potential (ASTM D 5333)
- (CP) Compaction Curve (CTM 216)
- (CR) Corrosivity Testing (CTM 643, CTM 422, CTM 417)
- (CU) Consolidated Undrained Triaxial (ASTM D 4767)
- (DS) Direct Shear (ASTM D 3080)
- (EI) Expansion Index (ASTM D 4829)
- (M) Moisture Content (ASTM D 2216)
- (OC) Organic Content-% (ASTM D 2974)
- (P) Permeability (CTM 220)
- (PA) Particle Size Analysis (ASTM D 422)
- (PI) Plasticity Index (AASHTO T 90) Liquid Limit (AASHTO T 89)
- (PL) Point Load Index (ASTM D 5731)
- (PM) Pressure Meter
- (PP) Pocket Penetrometer
- (R) R-Value (CTM 301)
- (SE) Sand Equivalent (CTM 217)
- (SG) Specific Gravity (AASHTO T 100)
- (SL) Shrinkage Limit (ASTM D 427)
- (SW) Swell Potential (ASTM D 4546)
- (TV) Pocket Torvane
- (UC) Unconfined Compression-Soil (ASTM D 2166) Unconfined Compression-Rock (ASTM D 2938)
- (UU) Unconsolidated Undrained Triaxial (ASTM D 2850)
- (UW) Unit Weight (ASTM D 4767)
- (VS) Vane Shear (AASHTO T 223)

APPARENT DENSITY OF COHESIONLESS SOILS

Description	SPT N_{60} (Blows / 12 inches)
Very loose	0 - 4
Loose	5 - 10
Medium Dense	11 - 30
Dense	31 - 50
Very Dense	> 50

MOISTURE

Description	Criteria
Dry	Absence of moisture, dusty, dry to the touch
Moist	Damp but no visible water
Wet	Visible free water, usually soil is below water table

PERCENT OR PROPORTION OF SOILS

Description	Criteria
Trace	Particles are present but estimated to be less than 5%
Few	5 to 10%
Little	15 to 25%
Some	30 to 45%
Mostly	50 to 100%

PARTICLE SIZE

Description		Size
Boulder		> 12"
Cobble		3" to 12"
Gravel	Coarse	3/4" to 3"
	Fine	No. 4 to 3/4"
Sand	Coarse	No. 10 to No. 4
	Medium	No. 40 to No. 10
	Fine	No. 200 to No. 40

CEMENTATION

Description	Criteria
Weak	Crumbles or breaks with handling or little finger pressure.
Moderate	Crumbles or breaks with considerable finger pressure.
Strong	Will not crumble or break with finger pressure.

CONSISTENCY OF COHESIVE SOILS

Description	Unconfined Compressive Strength (tsf)	Pocket Penetrometer Measurement (tsf)	Torvane Measurement (tsf)	Field Approximation
Very Soft	< 0.25	< 0.25	< 0.12	Easily penetrated several inches by fist
Soft	0.25 to 0.50	0.25 to 0.50	0.12 to 0.25	Easily penetrated several inches by thumb
Medium Stiff	0.50 to 1.0	0.50 to 1.0	0.25 to 0.50	Penetrated several inches by thumb with moderate effort
Stiff	1 to 2	1 to 2	0.50 to 1.0	Readily indented by thumb but penetrated only with great effort
Very Stiff	2 to 4	2 to 4	1.0 to 2.0	Readily indented by thumbnail
Hard	> 4.0	> 4.0	> 2.0	Indented by thumbnail with difficulty

PLASTICITY OF FINE-GRAINED SOILS

Description	Criteria
Nonplastic	A 1/8-inch thread cannot be rolled at any water content.
Low	The thread can barely be rolled and the lump cannot be formed when drier than the plastic limit.
Medium	The thread is easy to roll and not much time is required to reach the plastic limit. The thread cannot be rerolled after reaching the plastic limit. The lump crumbles when drier than the plastic limit.
High	It takes considerable time rolling and kneading to reach the plastic limit. The thread can be rerolled several times after reaching the plastic limit. The lump can be formed without crumbling when drier than the plastic limit.

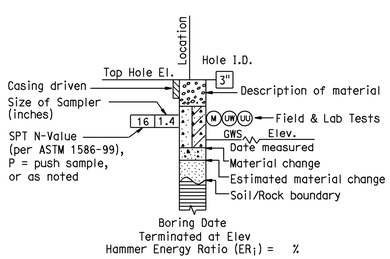

ROTARY BORING

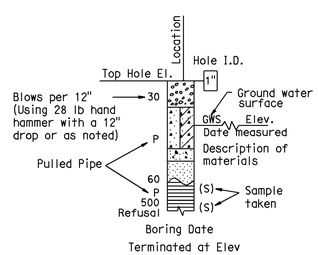

HAND BORING

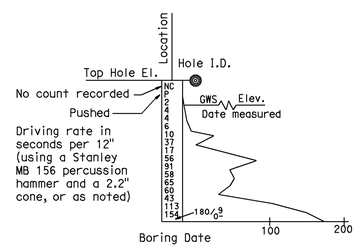

DYNAMIC CONE PENETRATION BORING

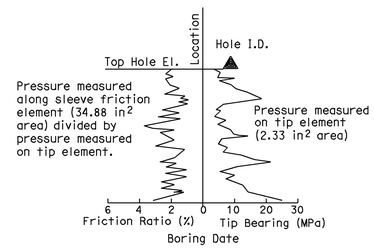

CONE PENETRATION TEST (CPT) SOUNDING

BOREHOLE IDENTIFICATION

Symbol	Hole Type	Description
Size	A	Auger Boring
Size	R P	Rotary drilled boring Rotary percussion boring (air)
Size HQ	R	Rotary drilled diamond core
Size	HD HA	Hand driven (1-inch soil tube) Hand Auger
●	D	Dynamic Cone Penetration Boring
◕	B	Hollow Stem Auger Boring (HSA)
▲	CPT	Cone Penetration Test (ASTM D 5778-95)
□	O	Other

Note: Size in inches.

RETAINING WALL NO. 698

SOIL LEGEND

LOG OF TEST BORINGS SHEET 2 OF 3

Jon Hamaguchi
DESIGN OVERSIGHT Jon Hamaguchi
11-24-09
SIGN OFF DATE

DRAWN BY K. Reyes
CHECKED BY H. Nofal

R. Bethapudi
FIELD INVESTIGATION BY:
DATE

PREPARED FOR THE STATE OF CALIFORNIA DEPARTMENT OF TRANSPORTATION

Ayman Salama
PROJECT ENGINEER

BRIDGE NO. 55E0097
POST MILES 20.64

ORIGINAL SCALE IN INCHES FOR REDUCED PLANS 0 1 2 3

CU 12220
EA 0F0321

DISREGARD PRINTS BEARING EARLIER REVISION DATES
REVISION DATES (PRELIMINARY STAGE ONLY) 02/18/09 04/07/09 04/17/09 06/08/09

SHEET 19 OF 20

FILE => 55e0097-z-1tb02.dgn

USERNAME => trlenard DATE PLOTTED => 26-JAN-2010 TIME PLOTTED => 05:42

DIST. NO.	STATE	F.A. PROJECTS		
7	CALIF.			

Insp.	Quantity	Angle	Station	Sheet No.	Total Sheets
37	0.0A	57	18.5 to 19.6	166	147

March 29, 1962

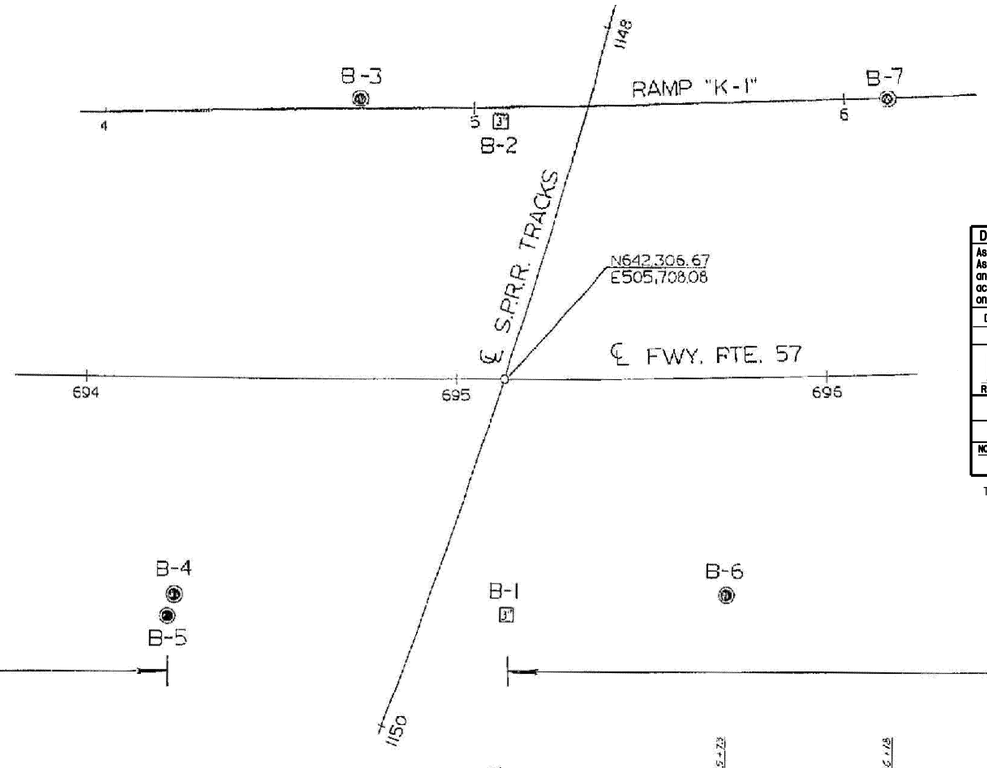

BENCH MARK

BM 964-E-66 Elev 368.47
Pd Tack in conc. filled 2" I.P. stamped Sta. 235+42.75 "PM P.O.T., in CTR. of tracks, 19' west of rails of S.P.R.Y. spur line and steardlense Union Oil Co. pvt. road.

DIVISION OF ENGINEERING SERVICES - GEOTECHNICAL SERVICES					
As-Built Log of Test Borings sheet is considered an informational document only. As such, the State of California registration seal with signature, license number and registration certificate expiration date confirm that this is a true and accurate copy of the original document. This drawing is available and presented only for the convenience of any bidder, contractor or other interested party.					
DIST.	COUNTY	ROUTE	POST MILES-TOTAL PROJECT	Sheet No.	Total Sheets
12	Ora	57	18.4/20.9	856	856
Hisham Nofal REGISTERED CIVIL ENGINEER				06/08/09 DATE	
RETAINING WALL NO. 698					
LOG OF TEST BORINGS SHEET 3 OF 3					
NOTE: A COPY OF THIS LOG OF TEST BORINGS IS AVAILABLE AT OFFICE OF STRUCTURE MAINTENANCE AND INVESTIGATIONS, SACRAMENTO, CALIFORNIA			CU: 12220 EA: OF0321	BRIDGE No. 55E0097	
To accompany plans dated 1-25-10				Sheet 20	of 20

REGISTERED PROFESSIONAL ENGINEER
HISHAM M. NOFAL
No. 2765
Exp. 09/30/09
GEOTECHNICAL
STATE OF CALIFORNIA

PLAN
Scale: 1" = 20'

PROFILE
Scale: Vert. 1" = 10'
Horiz. 1" = 20'

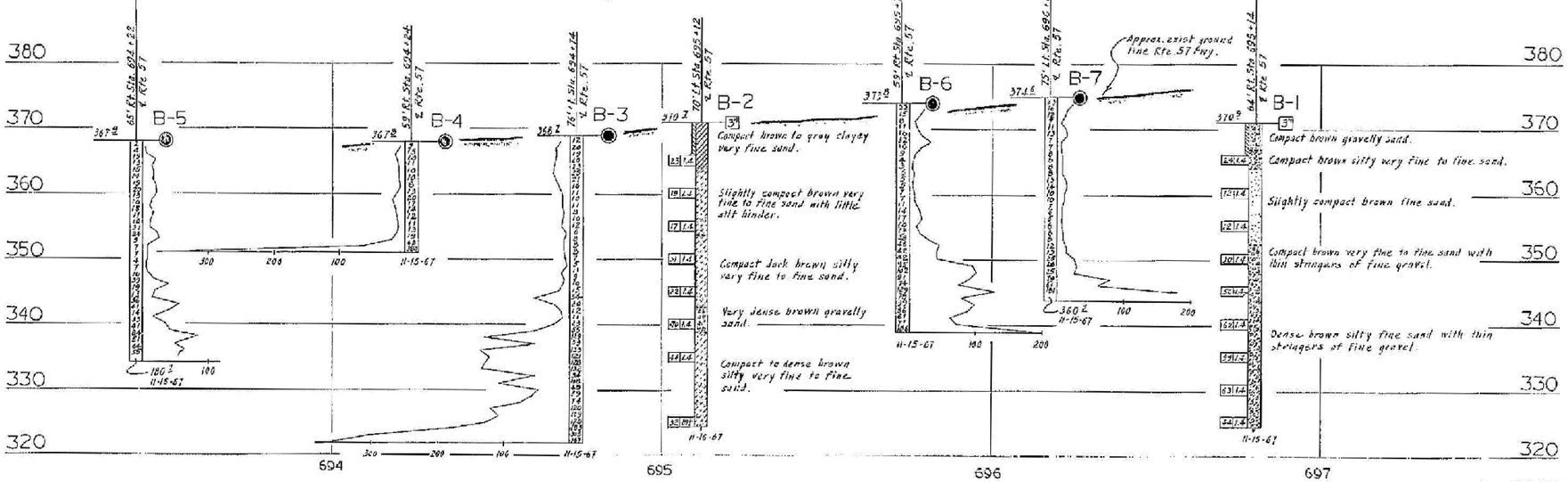

DIVISION OF HIGHWAYS
BRIDGE DEPT. GEOLOGY SECTION
DATE November 1967

AS BUILT
CONTRACTOR J. W. Hansen
CONTRACT NO. 07-032204
DATE 8-31-71
WF 11-3-71

SHEET 15 OF 15

LEGEND OF BORING OPERATIONS

PENETROMETER; 2½" CONE PENETROMETER; SAMPLER BORING (DEV); ROTARY BORING (DEV); AUGER BORING (DEV); JET BORING; CORE BORING; TEST PIT; PENETRATION BORING; ROTARY BORING; 1" SOIL TUBE

LEGEND OF EARTH MATERIALS

GRAVEL; SAND; SILT; CLAY; SILTY CLAY OR CLAYEY SILT; PEAT "MUCK" ORGANIC MATTER; FILL MATERIAL; IGNEOUS ROCK; SEDIMENTARY ROCK; METAMORPHIC ROCK; SANDY CLAY OR CLAYEY SAND; SANDY SILT OR SILTY SAND

CLASSIFICATION OF MATERIAL BASED ON STANDARD GRADE SIZE LIMITS

NOTE: Classification of earth material as shown on this sheet is based upon field inspection and is not to be construed to imply mechanical analysis.

FIELD UTILITY	R. A. Hilkes	11-16-67
DRAWN		11-29-67
CHECKED		1-2-68

Approval Recommended by: Engineering Geology

BRIDGE DEPARTMENT
ENGINEERING GEOLOGY SECTION

164

AS BUILT PLANS
Contract No. 07-032204
Date Completed
Document No. 2000 5907

I HEREBY CERTIFY THAT THIS IS A TRUE AND ACCURATE COPY OF THE ABOVE DOCUMENT TAKEN UNDER MY DIRECTION AND CONTROL ON THIS DATE IN SACRAMENTO, CALIFORNIA PURSUANT TO AUTHORIZATION BY THE DIRECTOR OF PUBLIC WORKS.

DATE 15 Feb. 73 SIGNATURE James E. Court TITLE Sr. Rma

STATE OF CALIFORNIA
DEPARTMENT OF PUBLIC WORKS
DIVISION OF HIGHWAYS

BREA OVERHEAD

LOG OF TEST BORINGS

SCALE As Noted	BRIDGE 55-1A2	FILE	DRAWING S-452-9

Chg 07206
WA 032201

Disregard prints bearing earlier revs.

PREL. DRAWING No. PR-

FILENAME => 55e0097-z-1tb03.tif