| DIST | COUNTY | ROUTE | POST MILES TOTAL PROJECT | SHEET No | TOTAL SHEETS |
|---|---|---|---|---|---|
| 12 | Ora | 57 | 18.4/20.9 | 601 | 856 |

REGISTERED CIVIL ENGINEER — DATE 06/08/09

1-25-10
PLANS APPROVAL DATE

REGISTERED PROFESSIONAL ENGINEER — MOHAMMED ATIQULLAH — No. C47027 — Exp. 12/31/09 — CIVIL — STATE OF CALIFORNIA

*The State of California or its officers or agents shall not be responsible for the accuracy or completeness of electronic copies of this plan sheet.*

OCTA
550 S. MAIN STREET
ORANGE, CA 92863

CH2M HILL
6 HUTTON CENTRE DRIVE, SUITE 700
SANTA ANA, CA 92707

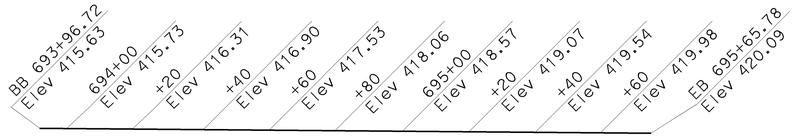


106'-6" RIGHT ℄ SR-57 = "B" LINE

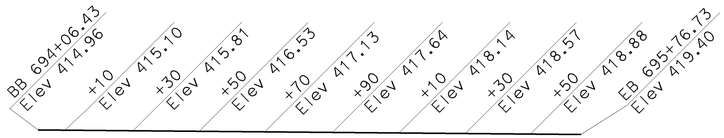


72'-3½" RIGHT ℄ SR-57 = "B" LINE

## PROFILE GRADE

No Scale

LEGEND

+XX.XX / XXX.XX — Denotes station & elevation at top of exist deck.

## PILE DATA TABLE

| Location | Pile Type | Nominal Resistance (kips) Compression | Nominal Resistance (kips) Tension | Design Tip Elevation (ft) | Specified Tip Elevation (ft) |
|---|---|---|---|---|---|
| Bent 2 | 24" CIDH Conc Pile | 280 | 0 | 330.00(a)<br>348.85(c)<br>354.60(d) | 330 |
| Bent 3 | 24" CIDH Conc Pile | 280 | 0 | 330.00(a)<br>351.85(c)<br>355.60(d) | 330 |

Design Tip Elevation controlled by following demand:
(a) Compression; (c) Settlement; (d) Lateral Capacity.

## SPREAD FOOTING DATA TABLE

| Support Location | Working Stress Design (WSD) Permissible Gross Contact Stress (Settlement) (ksf) | Working Stress Design (WSD) Allowable Gross Bearing Capacity (ksf) |
|---|---|---|
| Abut 1 | 3.2 | 3.0 |
| Abut 4 | 3.2 | 3.0 |

## GENERAL NOTES
## LOAD AND RESISTANCE FACTOR DESIGN (LRFD)

Design: AASHTO LRFD Bridge Design specifications, 3rd edition with interims through 2006 and the Caltrans Amendments 3.06.01; except that abutments, earth retaining system, Bridge details taken from Standard Plans March 2006 and earlier versions, and Standard Bridge Details XS sheets, are designed using Bridge Design specifications (1996 AASHTO w/Revisions by Caltrans)

Seismic Design: Caltrans Seismic Design Criteria (SDC) Version 1.4 June 2006

Dead Load: Includes 35 psf for future wearing surface.

The Soundwall dead load is distributed on the right side of the bridge with 75% of the moment and 75% of the shear forces to the exterior girder, and 25% of the moment and 25% of the shear to the first interior girder.

Live Loading: HL-93 and permit (P-15) Design Load

Seismic Loading: Caltrans SDC - ARS Curve Fig B-8 for Soil Profile D (Modified) (Magnitude = 7.25± 0.25). (Peak bed rock acceleration = 0.7 g) (Increased by 20% for periods greater than 1.0 second, no increase for periods less than 0.5 second, and linear interpolation between 0.5 and 1.0 second).

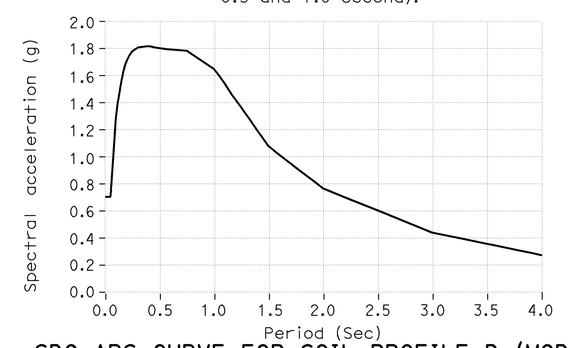


SDC ARS CURVE FOR SOIL PROFILE D (MODIFIED)

Reinforced Concrete:
New Concrete (Bridge)
fy = 60,000 psi
f'c = 3,600 psi, Unless otherwise noted
n = 8

**NOTE:**
The Contractor shall verify all controlling field dimensions before ordering or fabricating any materials.

DESIGN OVERSIGHT — Jon Hamaguchi
6-9-09
SIGN OFF DATE

| | BY | CHECKED |
|---|---|---|
| DESIGN | M. Atiqullah / A. Issa | M. Desai / E. Cutler |
| DETAILS | M. Atiqullah / A. Issa | M. Desai / E. Cutler |
| QUANTITIES | A. Issa | E. Cutler |

PREPARED FOR THE STATE OF CALIFORNIA DEPARTMENT OF TRANSPORTATION

Ayman Salama
PROJECT ENGINEER

BRIDGE NO. 55-0482
POST MILE 20.61

# BREA OVERHEAD (WIDEN)
## GENERAL NOTES

DESIGN DETAIL SHEET (ENGLISH) (REV. 2/25/05)

ORIGINAL SCALE IN INCHES FOR REDUCED PLANS 0 1 2 3

CU 12220
EA 0F0321

DISREGARD PRINTS BEARING EARLIER REVISION DATES — REVISION DATES (PRELIMINARY STAGE ONLY) 01/16/09 04/07/09 04/17/09 04/28/09 06/08/09

SHEET 3 OF 25

FILE => 55-0482-b-gnotes.dgn

USERNAME => friehard DATE PLOTTED => 25-JAN-2010 TIME PLOTTED => 08:13

| DIST | COUNTY | ROUTE | POST MILES TOTAL PROJECT | SHEET No | TOTAL SHEETS |
|---|---|---|---|---|---|
| 12 | Ora | 57 | 18.4/20.9 | 602 | 856 |

REGISTERED CIVIL ENGINEER 06/08/09 DATE

1-25-10
PLANS APPROVAL DATE

REGISTERED PROFESSIONAL ENGINEER MOHAMMED ATIQULLAH No. C47027 Exp. 12/31/09 CIVIL STATE OF CALIFORNIA

*The State of California or its officers or agents shall not be responsible for the accuracy or completeness of electronic copies of this plan sheet.*

OCTA
550 S. MAIN STREET
ORANGE, CA 92863

CH2M HILL
6 HUTTON CENTRE DRIVE, SUITE 700
SANTA ANA, CA 92707

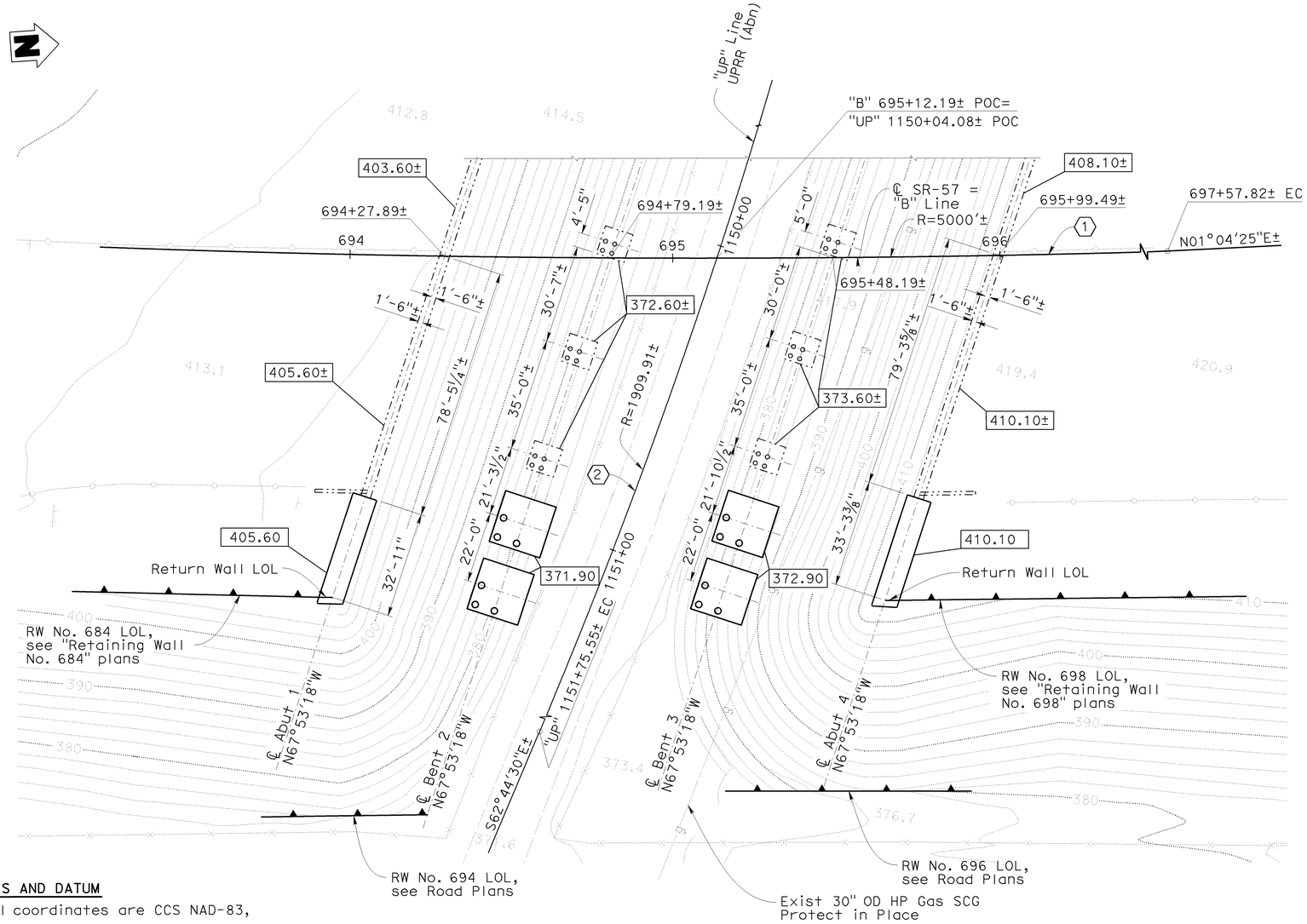


**PLAN**
1"=20'

## LEGEND

| | |
|---|---|
| —·—·— | Indicates Existing Structure |
| ——— | Indicates New Construction |
| o | Indicates New CIDH Conc Piles |
| ∘ | Indicates Exist CIDH Conc Piles |
| or | Denotes existing sign |
| | Indicates median barrier |
| | Indicates existing soundwall |
| | Indicates existing chain link fence |
| XXX.XX | Indicates bottom of footing elevation |

## BENCHMARKS AND DATUM

Horizontal coordinates are CCS NAD-83, Zone 6

Vertical control based on North American Vertical Datum 1988 (1995 ADJ).

Pt 1079 Elevation = 407.210
Set Mag Nail & Flash in shoulder
Northing 2282339.808 Easting 6067144.835

Pt 1081 Elevation = 422.355
Set Mag Nail & Flash in shoulder
Northing 2282931.290 Easting 6067198.604

## NOTES:

1. The Contractor shall verify all controlling field dimensions before ordering or fabricating any materials.
2. For curve data, see "General Plan" sheet

GEOTECHNICAL PROFESSIONAL 06/08/09 APPROVAL DATE

DESIGN OVERSIGHT Jon Hamaguchi
6-9-09
SIGN OFF DATE

| | | | |
|---|---|---|---|
| SCALE: 1"-20' | VERT.DATUM NAVD-88 (1995 ADJ) | HORZ.DATUM NAD83 | |
| PHOTOGRAMMETRY AS OF: X | | ALIGNMENT TIES X | |
| SURVEYED | BY R. Williams | DRAFTED | BY X |
| FIELD CHECKED | BY M. Wilson | CHECKED | BY X |

| | BY | CHECKED |
|---|---|---|
| DESIGN | M. Atiqullah / A. Issa | M. Desai / E. Cutler |
| DETAILS | M. Atiqullah / A. Issa | M. Desai / E. Cutler |
| QUANTITIES | A. Issa | E. Cutler |

PREPARED FOR THE STATE OF CALIFORNIA DEPARTMENT OF TRANSPORTATION

Ayman Salama
PROJECT ENGINEER

BRIDGE NO. 55-0482
POST MILE 20.61

# BREA OVERHEAD (WIDEN)
# FOUNDATION PLAN

FOUNDATION PLAN SHEET (ENGLISH) (REV. 2-25-05)

ORIGINAL SCALE IN INCHES FOR REDUCED PLANS 0 1 2 3

CU 12220
EA 0F0321

DISREGARD PRINTS BEARING EARLIER REVISION DATES

REVISION DATES (PRELIMINARY STAGE ONLY) 01/08/09 04/07/09 04/17/09 04/29/09 06/08/09

SHEET 4 OF 25

FILE => 55-0482-e-fdp101.dgn

USERNAME => trmikesi DATE PLOTTED => 26-JAN-2010 TIME PLOTTED => 06:22

| DIST | COUNTY | ROUTE | POST MILES TOTAL PROJECT | SHEET No | TOTAL SHEETS |
|---|---|---|---|---|---|
| 12 | Ora | 57 | 18.4/20.9 | 603 | 856 |

REGISTERED CIVIL ENGINEER — DATE 06/08/09

1-25-10
PLANS APPROVAL DATE

REGISTERED PROFESSIONAL ENGINEER — MOHAMMED ATIQULLAH — No. C47027 — Exp. 12/31/09 — CIVIL — STATE OF CALIFORNIA

*The State of California or its officers or agents shall not be responsible for the accuracy or completeness of electronic copies of this plan sheet.*

OCTA
550 S. MAIN STREET
ORANGE, CA 92863

CH2M HILL
6 HUTTON CENTRE DRIVE, SUITE 700
SANTA ANA, CA 92707

**LEGEND**

- Bridge removal (Portion)
- Abutment Closure Pour
- * Match Exist Grade & Cross Slope

**NOTE:**

1. For Section C-C, see "Abutment Details No. 1" sheet.

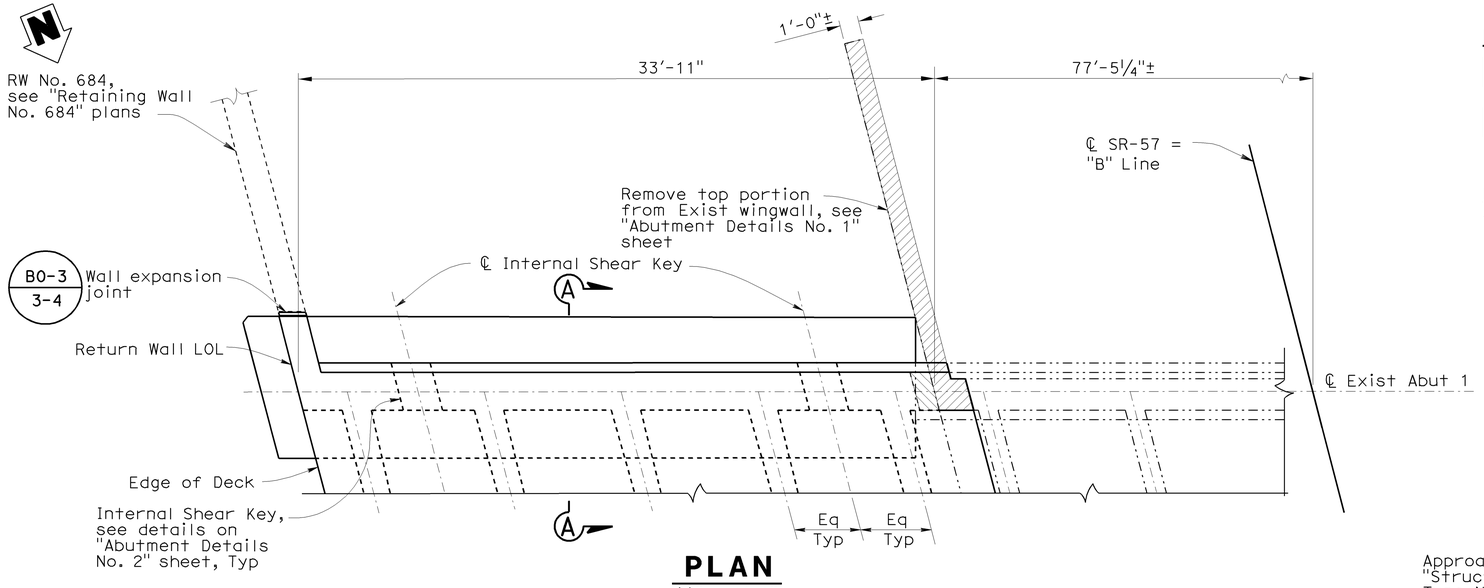


## PLAN
¼" = 1'-0"

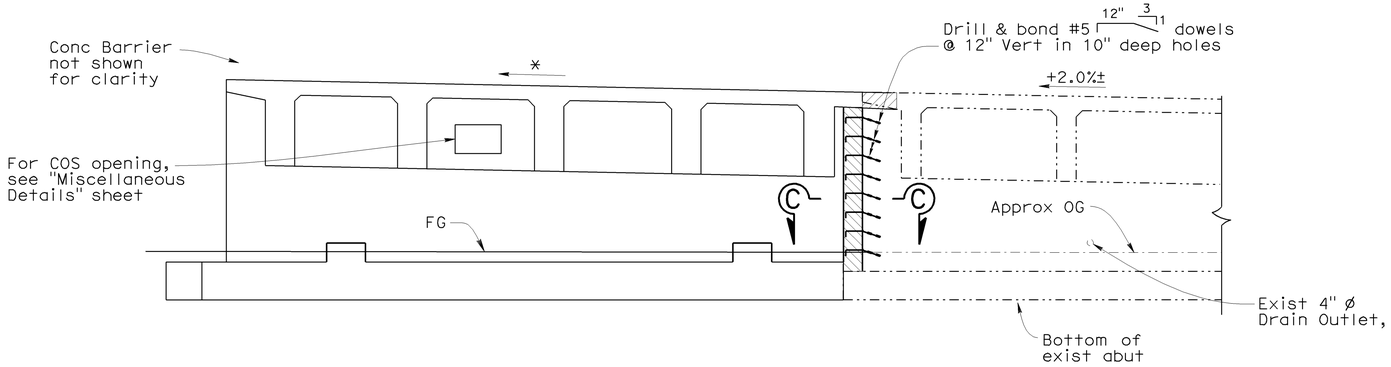


## ELEVATION
¼" = 1'-0"

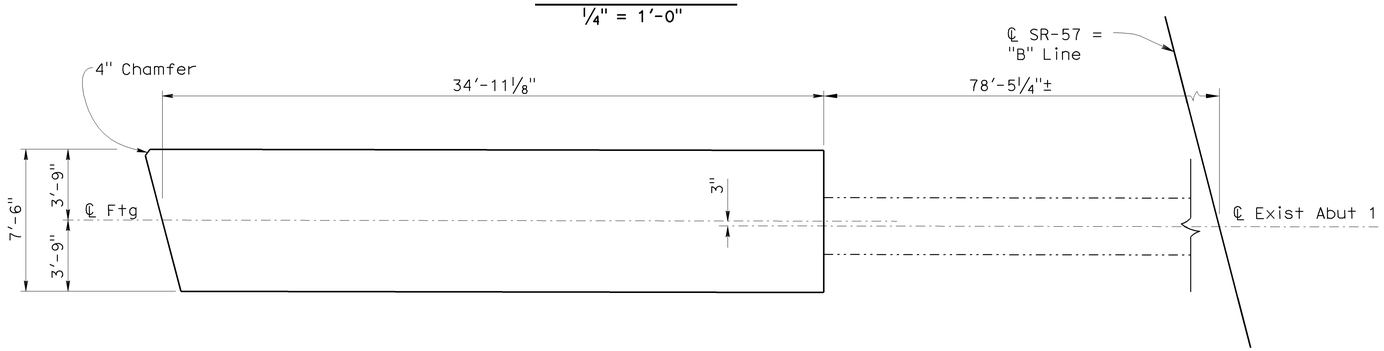


## FOUNDATION LAYOUT PLAN
¼" = 1'-0"

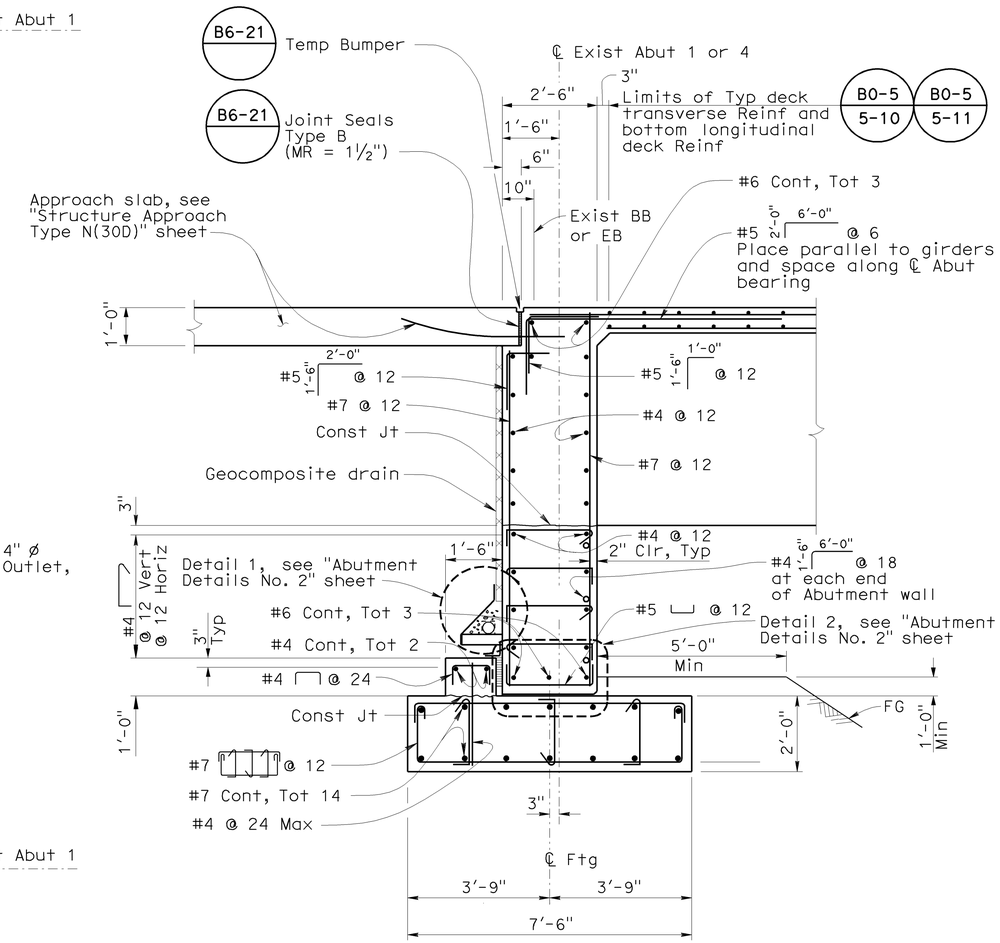


## SECTION A-A
½" = 1'-0"

**NOTE:**

The Contractor shall verify all controlling field dimensions before ordering or fabricating any materials.

| | | | |
|---|---|---|---|
| DESIGN OVERSIGHT — Jon Hamaguchi | DESIGN | BY M. Atiqullah / A. Issa | CHECKED M. Desai / E. Cutler |
| 6-9-09 SIGN OFF DATE | DETAILS | BY M. Atiqullah / A. Issa | CHECKED M. Desai / E. Cutler |
| | QUANTITIES | BY A. Issa | CHECKED E. Cutler |

PREPARED FOR THE STATE OF CALIFORNIA DEPARTMENT OF TRANSPORTATION

Ayman Salama
PROJECT ENGINEER

BRIDGE NO. 55-0482
POST MILE 20.61

# BREA OVERHEAD (WIDEN)
# ABUTMENT 1 LAYOUT

DESIGN DETAIL SHEET (ENGLISH) (REV. 2/25/05)

ORIGINAL SCALE IN INCHES FOR REDUCED PLANS 0 1 2 3

CU 12220
EA 0F0321

DISREGARD PRINTS BEARING EARLIER REVISION DATES

REVISION DATES (PRELIMINARY STAGE ONLY) 01/16/09 04/07/09 04/17/09 04/29/09 06/08/09

SHEET 5 OF 25

FILE => 55-0482-f-a01_lo1.dgn

USERNAME => friehard DATE PLOTTED => 25-JAN-2010 TIME PLOTTED => 08:14

| DIST | COUNTY | ROUTE | POST MILES TOTAL PROJECT | SHEET No | TOTAL SHEETS |
|---|---|---|---|---|---|
| 12 | Ora | 57 | 18.4/20.9 | 604 | 856 |

REGISTERED CIVIL ENGINEER 06/08/09 DATE

1-25-10
PLANS APPROVAL DATE

REGISTERED PROFESSIONAL ENGINEER MOHAMMED ATIQULLAH No. C47027 Exp. 12/31/09 CIVIL STATE OF CALIFORNIA

*The State of California or its officers or agents shall not be responsible for the accuracy or completeness of electronic copies of this plan sheet.*

OCTA
550 S. MAIN STREET
ORANGE, CA 92863

CH2M HILL
6 HUTTON CENTRE DRIVE, SUITE 700
SANTA ANA, CA 92707

**LEGEND**

- Bridge removal (Portion)
- Abutment Closure Pour
- * Match Exist Grade & Cross Slope

**NOTE:**

1. For Section A-A, see "Abutment 1 Layout" sheet.
2. For Section C-C, see "Abutment Details No. 1" sheet.

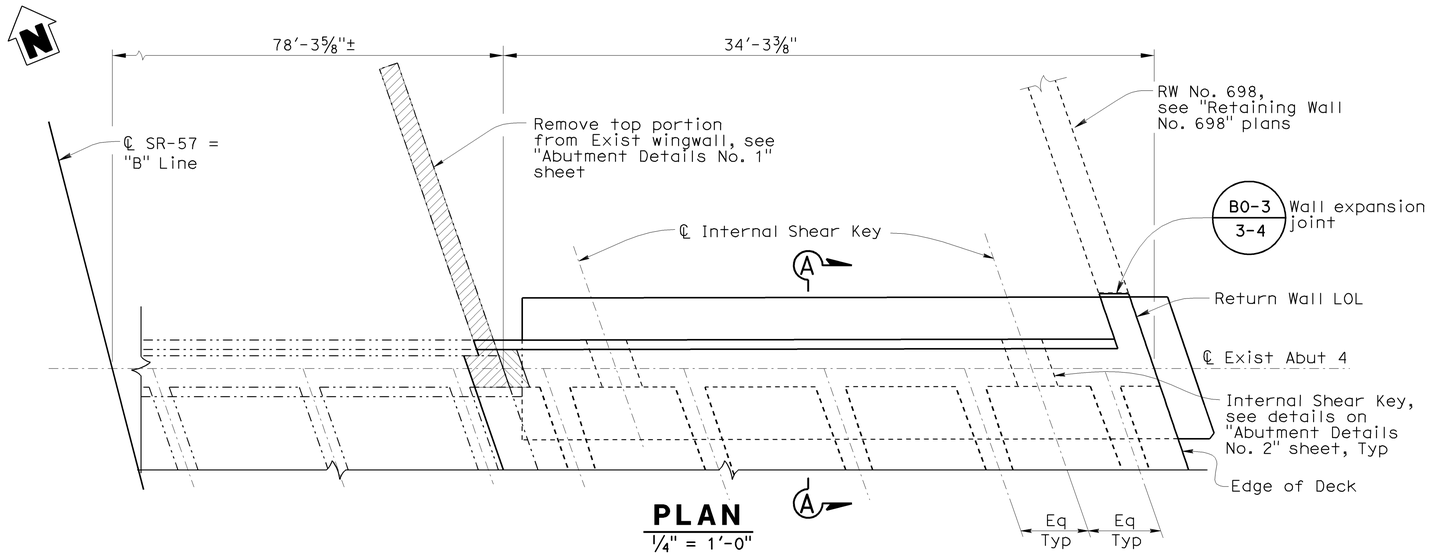


**PLAN**
1/4" = 1'-0"

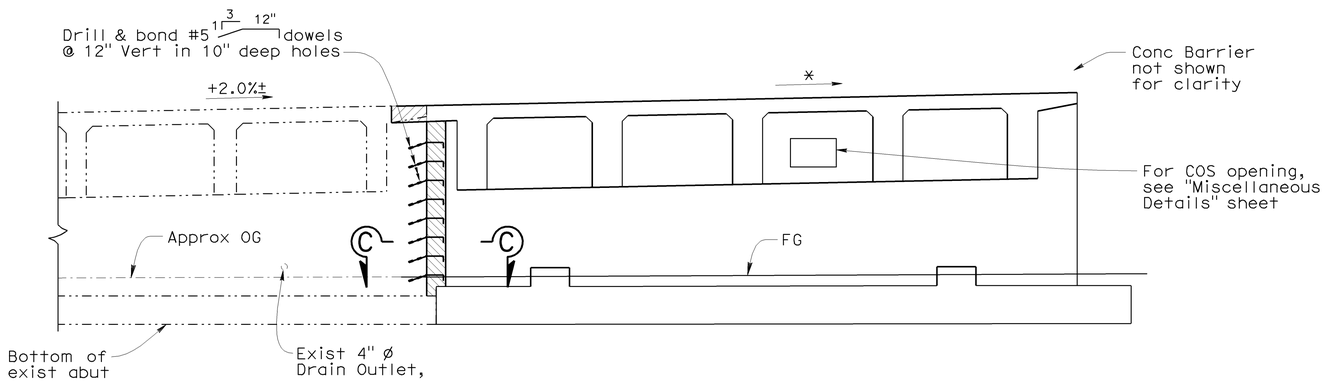


**ELEVATION**
1/4" = 1'-0"

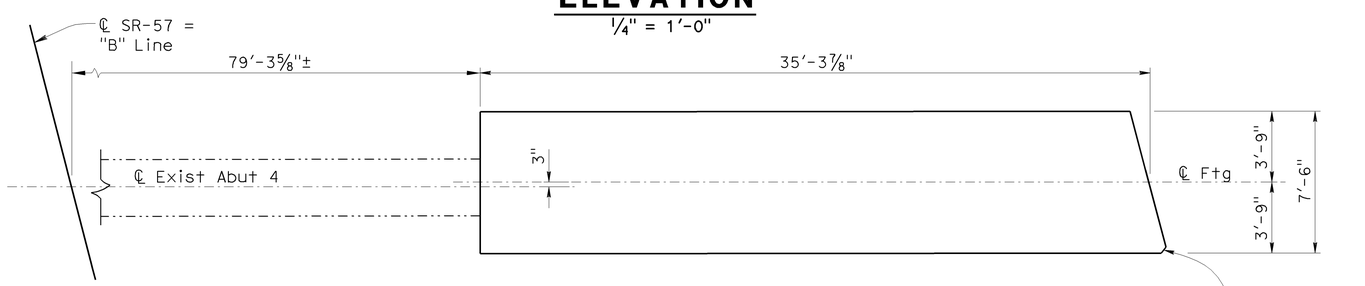


**FOUNDATION LAYOUT PLAN**
1/4" = 1'-0"

**NOTE:**
The Contractor shall verify all controlling field dimensions before ordering or fabricating any materials.

DESIGN OVERSIGHT Jon Hamaguchi
6-9-09
SIGN OFF DATE

DESIGN DETAIL SHEET (ENGLISH) (REV. 2/25/05)

| | BY | CHECKED |
|---|---|---|
| DESIGN | M. Atiqullah / A. Issa | M. Desai / E. Cutler |
| DETAILS | M. Atiqullah / A. Issa | M. Desai / E. Cutler |
| QUANTITIES | A. Issa | E. Cutler |

ORIGINAL SCALE IN INCHES FOR REDUCED PLANS 0 1 2 3

PREPARED FOR THE STATE OF CALIFORNIA DEPARTMENT OF TRANSPORTATION

Ayman Salama
PROJECT ENGINEER

CU 12220
EA 0F0321

BRIDGE NO. 55-0482
POST MILE 20.61

# BREA OVERHEAD (WIDEN)
# ABUTMENT 4 LAYOUT

DISREGARD PRINTS BEARING EARLIER REVISION DATES

REVISION DATES (PRELIMINARY STAGE ONLY) 01/16/09 04/07/09 04/17/09 04/28/09 06/08/09

SHEET 6 OF 25

FILE => 55-0482-f-a01_1o2.dgn

USERNAME => trienard DATE PLOTTED => 25-JAN-2010 TIME PLOTTED => 08:14

| DIST | COUNTY | ROUTE | POST MILES TOTAL PROJECT | SHEET No | TOTAL SHEETS |
|---|---|---|---|---|---|
| 12 | Ora | 57 | 18.4/20.9 | 605 | 856 |

REGISTERED CIVIL ENGINEER — 06/08/09 DATE

1-25-10
PLANS APPROVAL DATE

REGISTERED PROFESSIONAL ENGINEER — MOHAMMED ATIQULLAH — No. C47027 — Exp. 12/31/09 — CIVIL — STATE OF CALIFORNIA

*The State of California or its officers or agents shall not be responsible for the accuracy or completeness of electronic copies of this plan sheet.*

OCTA
550 S. MAIN STREET
ORANGE, CA 92863

CH2M HILL
6 HUTTON CENTRE DRIVE, SUITE 700
SANTA ANA, CA 92707

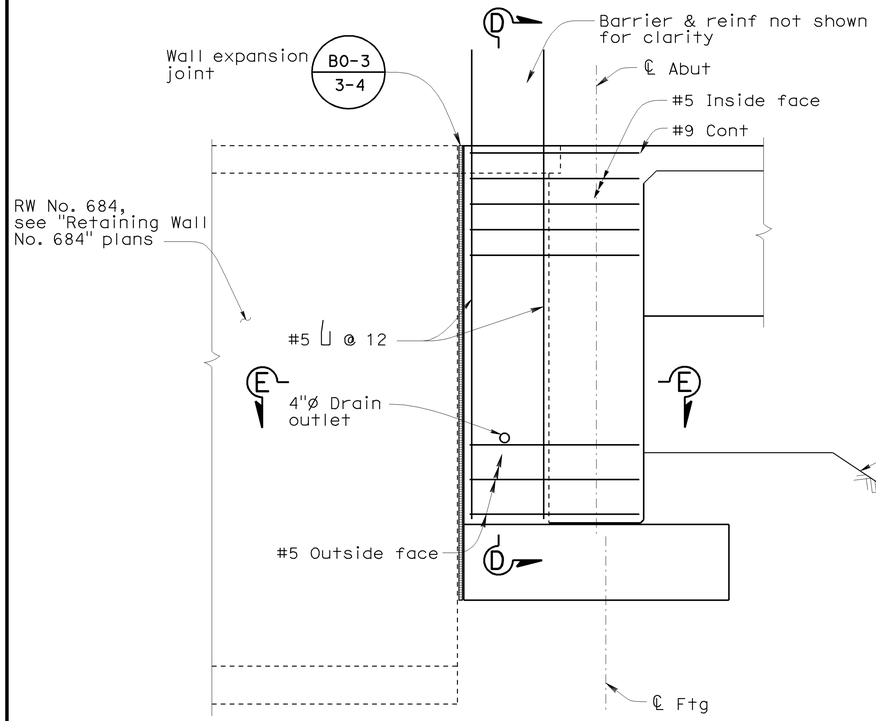


## RETURN WALL (RIGHT WIDEN) ELEVATION

½"=1'-0"
(Abutment 1 shown, Abutment 4 similar)

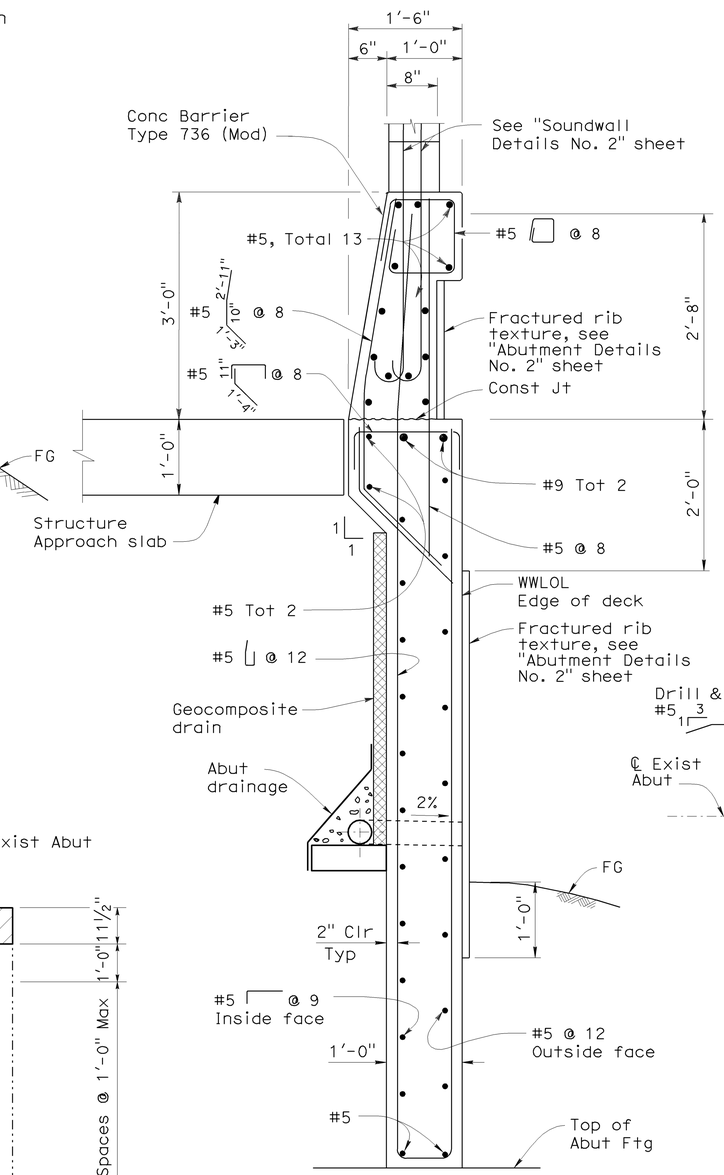


## SECTION D-D

1"=1'-0"

**LEGEND**

Bridge removal (Portion)

**NOTES:**

1. Locations of cored and drilled holes shown in the plans are approximate. Prior to placing holes in concrete, the Contractor shall locate all reinforcing steel and adjust the locations of the holes to clear all reinforcing bars (except as Noted). Final hole locations are subject to the approval of the Engineer.
2. Space new reinforcement to avoid existing reinforcement.

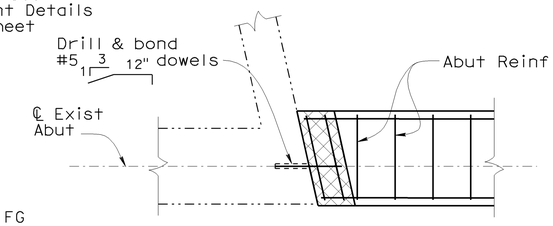


## SECTION C-C

½"=1'-0"
(Abutment 4 shown, Abutment 1 similar)

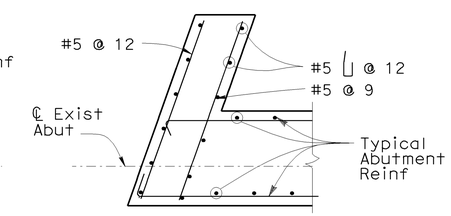


## SECTION E-E

½"=1'-0"

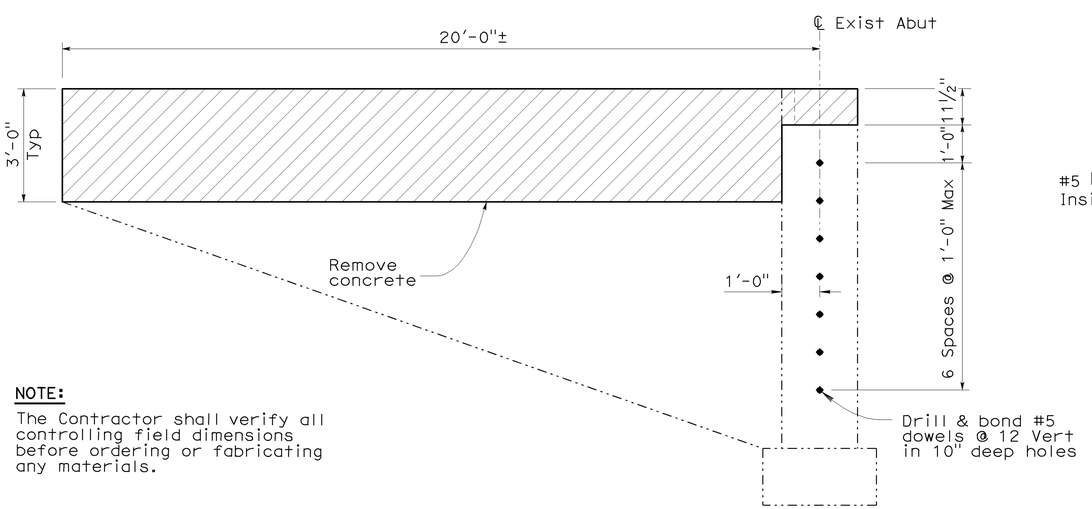


**NOTE:**

The Contractor shall verify all controlling field dimensions before ordering or fabricating any materials.

## LIMITS OF CONCRETE REMOVAL EXISTING ABUTMENT

½"=1'-0"

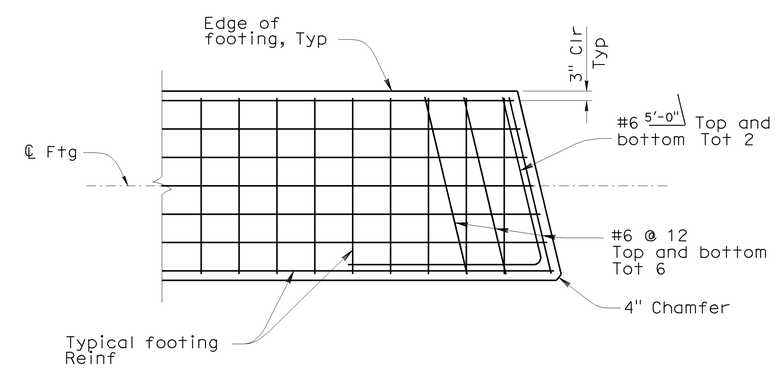


## ABUTMENT FOOTING CORNER DETAIL

½"=1'-0"

DESIGN OVERSIGHT — Jon Hamaguchi
6-9-09
SIGN OFF DATE

| | BY | CHECKED |
|---|---|---|
| DESIGN | M. Atiqullah / A. Issa | M. Desai / E. Cutler |
| DETAILS | M. Atiqullah / A. Issa | M. Desai / E. Cutler |
| QUANTITIES | A. Issa | E. Cutler |

PREPARED FOR THE STATE OF CALIFORNIA DEPARTMENT OF TRANSPORTATION

Ayman Salama
PROJECT ENGINEER

BRIDGE NO. 55-0482
POST MILE 20.61

# BREA OVERHEAD (WIDEN)
# ABUTMENT DETAILS NO. 1

DESIGN DETAIL SHEET (ENGLISH) (REV. 2/25/05)

ORIGINAL SCALE IN INCHES FOR REDUCED PLANS 0 1 2 3

CU 12220
EA 0F0321

DISREGARD PRINTS BEARING EARLIER REVISION DATES

REVISION DATES (PRELIMINARY STAGE ONLY): 01/16/09 04/07/09 04/17/09 04/29/09 06/08/09

SHEET 7 OF 25

FILE => 55-0482-f-a01dt01.dgn

USERNAME => rfrehond DATE PLOTTED => 25-JAN-2010 TIME PLOTTED => 08:14

| DIST | COUNTY | ROUTE | POST MILES TOTAL PROJECT | SHEET No | TOTAL SHEETS |
|---|---|---|---|---|---|
| 12 | Ora | 57 | 18.4/20.9 | 606 | 856 |

REGISTERED CIVIL ENGINEER 06/08/09 DATE

1-25-10
PLANS APPROVAL DATE

REGISTERED PROFESSIONAL ENGINEER MOHAMMED ATIQULLAH No. C47027 Exp. 12/31/09 CIVIL STATE OF CALIFORNIA

*The State of California or its officers or agents shall not be responsible for the accuracy or completeness of electronic copies of this plan sheet.*

OCTA
550 S. MAIN STREET
ORANGE, CA 92863

CH2M HILL
6 HUTTON CENTRE DRIVE, SUITE 700
SANTA ANA, CA 92707

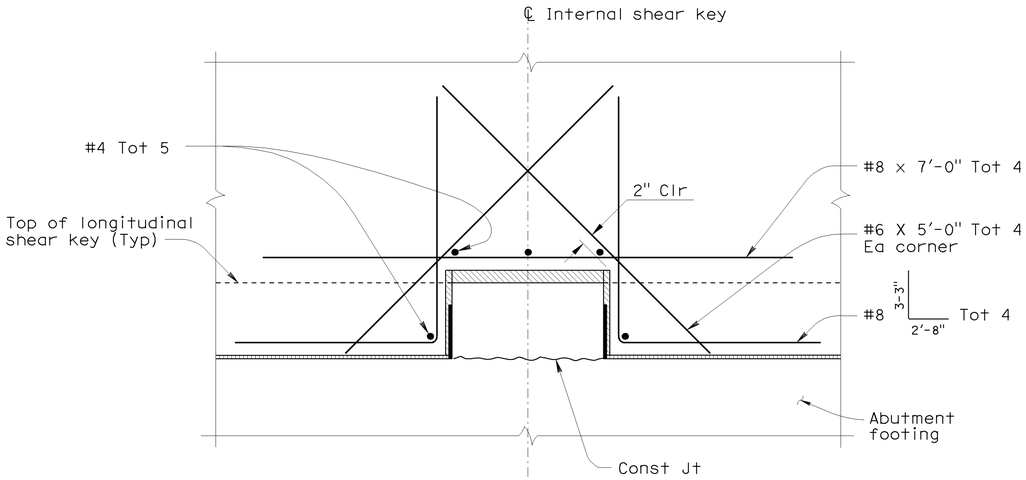


## DIAPHRAGM DETAIL AT SHEAR KEY

1"=1'-0"

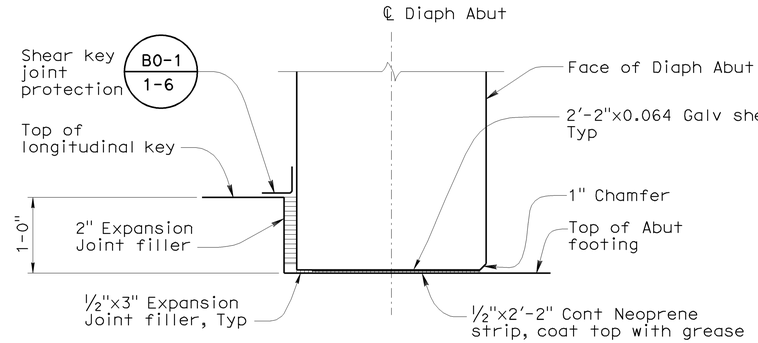


## DETAIL 2

No Scale

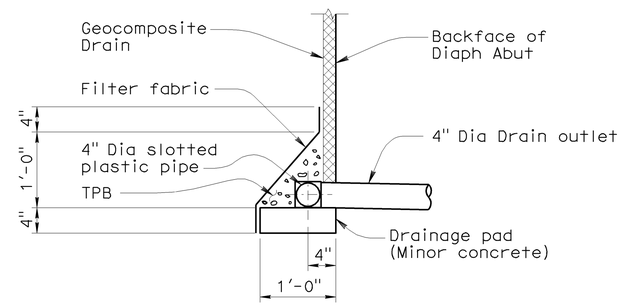


## DETAIL 1

No Scale

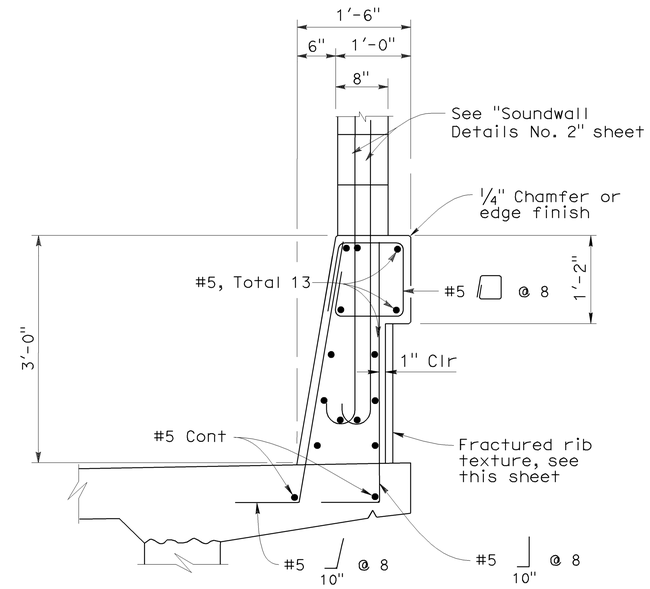


## CONCRETE BARRIER TYPE 736 MODIFIED

1"=1'-0"

Note: For Details not shown, see B11-56 -

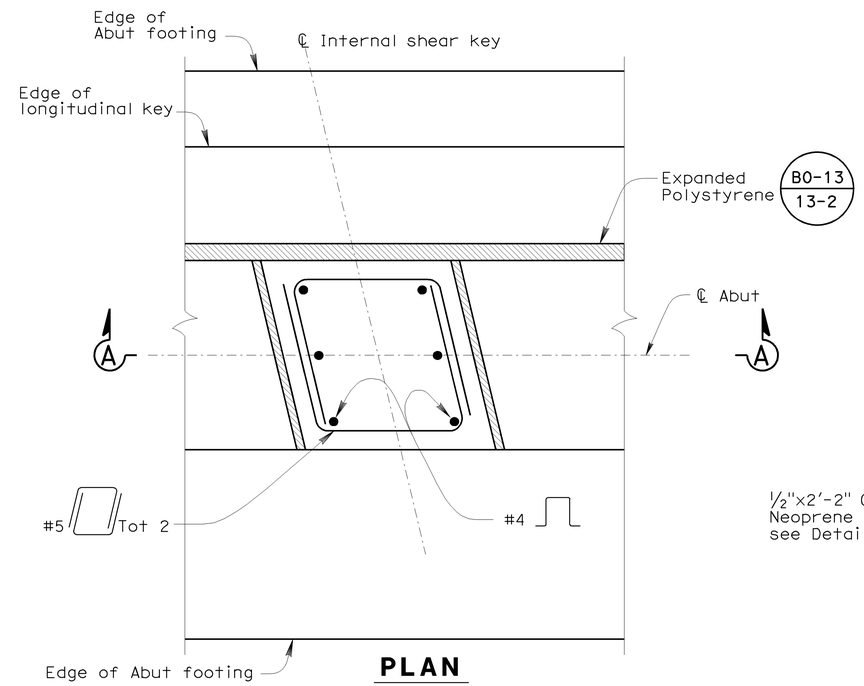


## PLAN

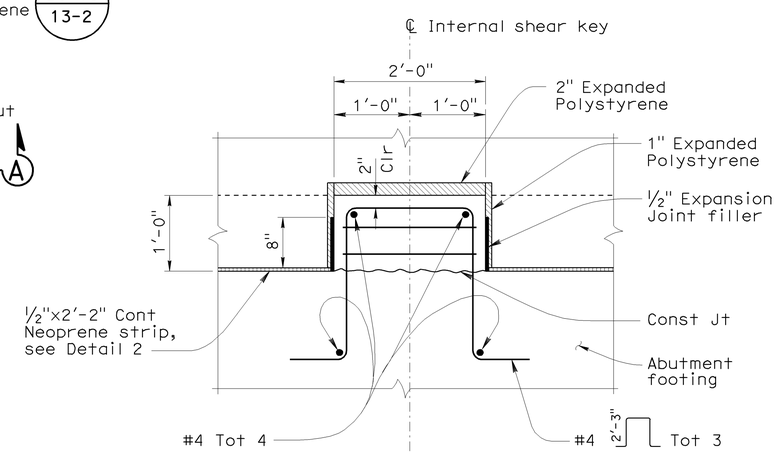


## SECTION A-A

NOTE:

The Contractor shall verify all controlling field dimensions before ordering or fabricating any materials.

## INTERNAL SHEAR KEY DETAILS

1"=1'-0"

Abutment 1 shown, Abutment 4 similar

NOTE:

1. For location of Detail 1 & 2, see "Abutment 1 Layout" sheet.

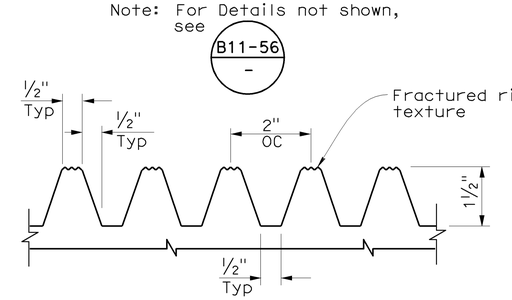


## FRACTURED RIB TEXTURE DETAIL

No scale

(Elastomer Formliner)

| | | | |
|---|---|---|---|
| DESIGN OVERSIGHT Jon Hamaguchi | DESIGN | BY M. Atiqullah / A. Issa | CHECKED M. Desai / E. Cutler |
| 6-9-09 SIGN OFF DATE | DETAILS | BY M. Atiqullah / A. Issa | CHECKED M. Desai / E. Cutler |
| | QUANTITIES | BY A. Issa | CHECKED E. Cutler |

PREPARED FOR THE STATE OF CALIFORNIA DEPARTMENT OF TRANSPORTATION

Ayman Salama
PROJECT ENGINEER

BRIDGE NO. 55-0482
POST MILE 20.61

# BREA OVERHEAD (WIDEN)
# ABUTMENT DETAILS NO. 2

DESIGN DETAIL SHEET (ENGLISH) (REV. 2/25/05)

ORIGINAL SCALE IN INCHES FOR REDUCED PLANS 0 1 2 3

CU 12220
EA 0F0321

DISREGARD PRINTS BEARING EARLIER REVISION DATES

REVISION DATES (PRELIMINARY STAGE ONLY) 01/26/09 03/27/09 04/27/09 06/08/09

SHEET 8 OF 25

FILE => 55-0482-f-a01dt02.dgn

USERNAME => trlenard DATE PLOTTED => 25-JAN-2010 TIME PLOTTED => 08:14

| DIST | COUNTY | ROUTE | POST MILES TOTAL PROJECT | SHEET No | TOTAL SHEETS |
|---|---|---|---|---|---|
| 12 | Ora | 57 | 18.4/20.9 | 607 | 856 |

REGISTERED CIVIL ENGINEER 06/08/09 DATE

1-25-10
PLANS APPROVAL DATE

REGISTERED PROFESSIONAL ENGINEER MOHAMMED ATIQULLAH No. C47027 Exp. 12/31/09 CIVIL STATE OF CALIFORNIA

*The State of California or its officers or agents shall not be responsible for the accuracy or completeness of electronic copies of this plan sheet.*

OCTA
550 S. MAIN STREET
ORANGE, CA 92863

CH2M HILL
6 HUTTON CENTRE DRIVE, SUITE 700
SANTA ANA, CA 92707

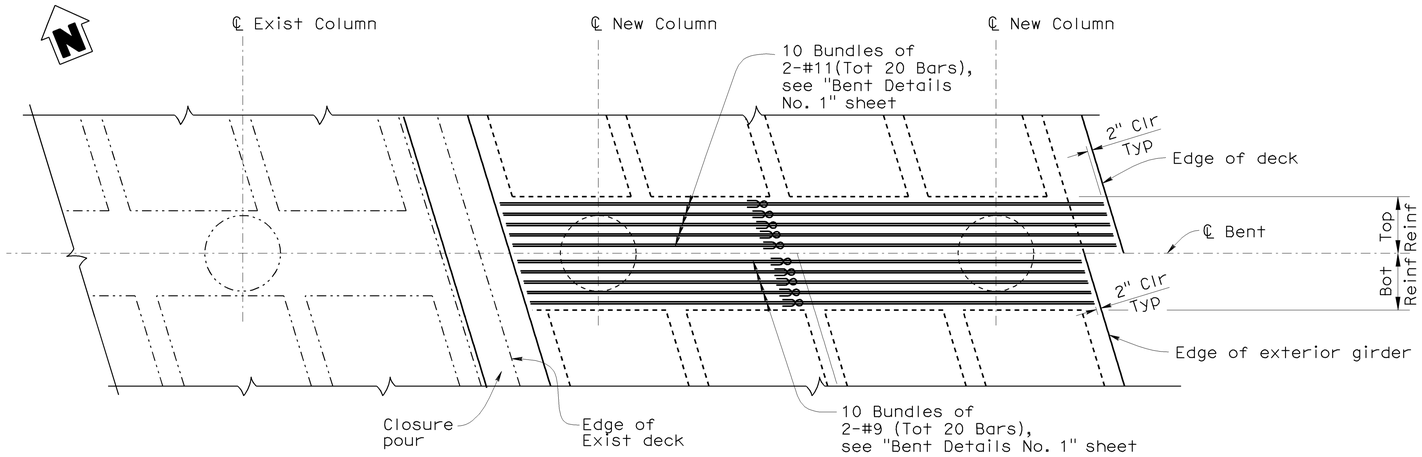


## PLAN
1/4" = 1'-0"

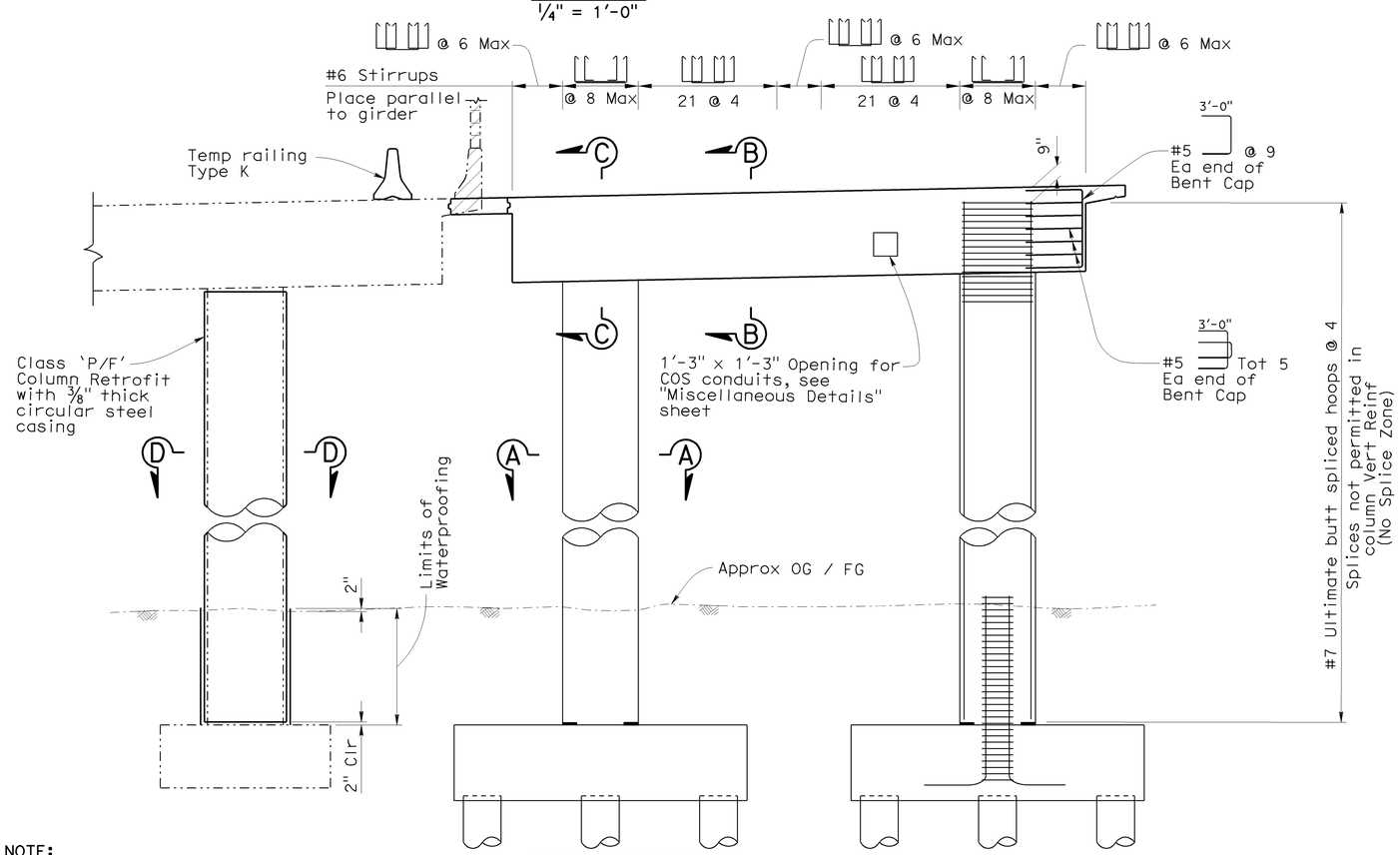


## ELEVATION
1/4" = 1'-0"

Note
Bent 2 shown, Bent 3 similar

**NOTE:**

The Contractor shall verify all controlling field dimensions before ordering or fabricating any materials.

**LEGEND**

- Indicates Existing Structure
- Indicates New Structure
- Indicates Bundled Bars
- Bridge removal (Portion)

**NOTES:**

1. For Section A-A, see "Bent Details No. 2" sheet.
2. For Section B-B and C-C, see "Bent Details No. 1" sheet.
3. Splice not permitted in Bent cap main top and bottom reinforcement.

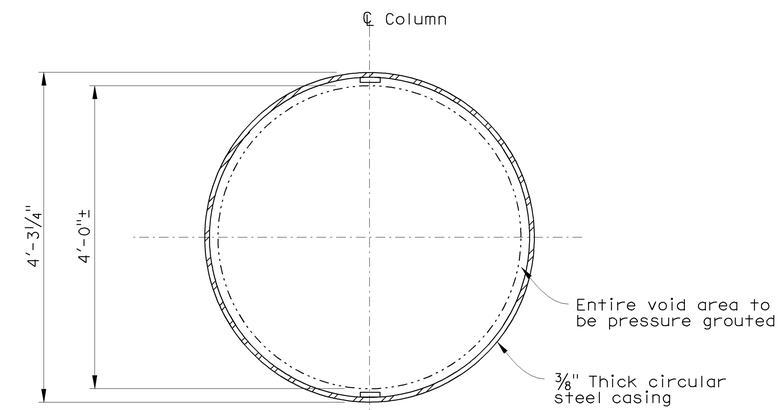


## SECTION D-D
1" = 1'-0"

Note: For additional details, see "Steel Column Casing" sheet.

DESIGN OVERSIGHT Jon Hamaguchi
6-9-09
SIGN OFF DATE

DESIGN DETAIL SHEET (ENGLISH) (REV. 2/25/05)

| | BY | CHECKED |
|---|---|---|
| DESIGN | M. Atiqullah / A. Issa | M. Desai / E. Cutler |
| DETAILS | M. Atiqullah / A. Issa | M. Desai / E. Cutler |
| QUANTITIES | A. Issa | E. Cutler |

ORIGINAL SCALE IN INCHES FOR REDUCED PLANS 0 1 2 3

PREPARED FOR THE STATE OF CALIFORNIA DEPARTMENT OF TRANSPORTATION

Ayman Salama
PROJECT ENGINEER

CU 12220
EA 0F0321

BRIDGE NO. 55-0482
POST MILE 20.61

# BREA OVERHEAD (WIDEN)
# BENT LAYOUT

DISREGARD PRINTS BEARING EARLIER REVISION DATES

REVISION DATES (PRELIMINARY STAGE ONLY) 01/14/09 04/07/09 04/17/09 06/08/09

SHEET 9 OF 25

FILE => 55-0482-h-b01_lo01.dgn

USERNAME => trhenord DATE PLOTTED => 25-JAN-2010 TIME PLOTTED => 08:14

| DIST | COUNTY | ROUTE | POST MILES TOTAL PROJECT | SHEET No | TOTAL SHEETS |
|---|---|---|---|---|---|
| 12 | Ora | 57 | 18.4/20.9 | 608 | 856 |

REGISTERED CIVIL ENGINEER 06/08/09 DATE

1-25-10
PLANS APPROVAL DATE

REGISTERED PROFESSIONAL ENGINEER MOHAMMED ATIQULLAH No. C47027 Exp. 12/31/09 CIVIL STATE OF CALIFORNIA

*The State of California or its officers or agents shall not be responsible for the accuracy or completeness of electronic copies of this plan sheet.*

OCTA
550 S. MAIN STREET
ORANGE, CA 92863

CH2M HILL
6 HUTTON CENTRE DRIVE, SUITE 700
SANTA ANA, CA 92707

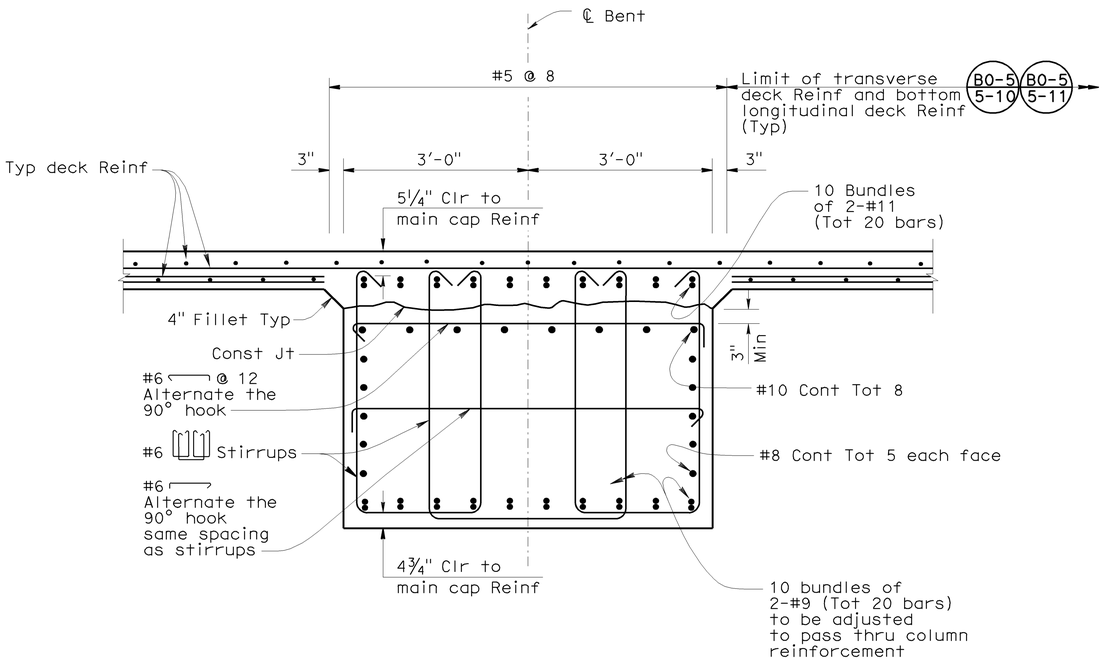


## SECTION B-B

¾" = 1'-0"

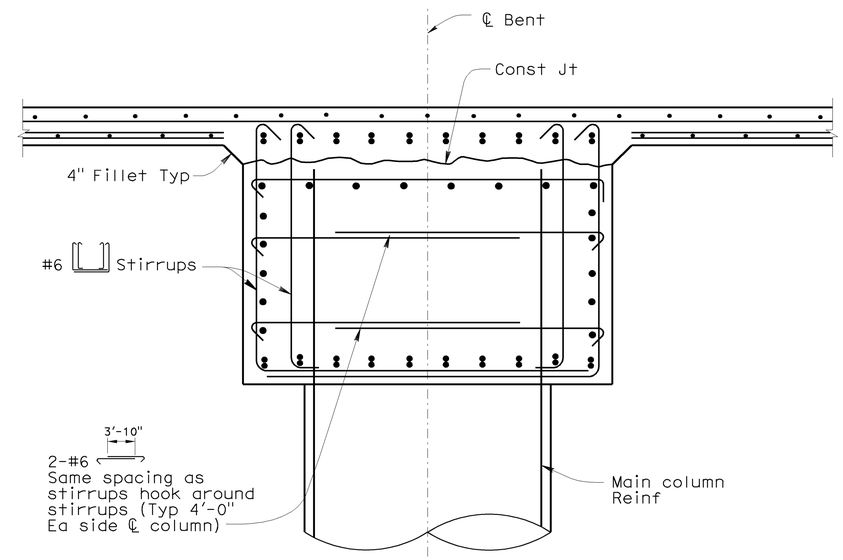


## SECTION C-C

¾" = 1'-0"

For details not shown, see Section B-B on this sheet.

**NOTES:**

1. For details not shown, see "Bent Details No. 2" sheet.
2. For location of Section B-B and C-C, see "Bent Layout" sheet.

**NOTE:**

The Contractor shall verify all controlling field dimensions before ordering or fabricating any materials.

DESIGN OVERSIGHT Jon Hamaguchi
6-9-09
SIGN OFF DATE

| | BY | CHECKED |
|---|---|---|
| DESIGN | M. Atiqullah / A. Issa | M. Desai / E. Cutler |
| DETAILS | M. Atiqullah / A. Issa | M. Desai / E. Cutler |
| QUANTITIES | A. Issa | E. Cutler |

PREPARED FOR THE STATE OF CALIFORNIA DEPARTMENT OF TRANSPORTATION

Ayman Salama
PROJECT ENGINEER

BRIDGE NO. 55-0482
POST MILE 20.61

# BREA OVERHEAD (WIDEN)
# BENT DETAILS NO. 1

DESIGN DETAIL SHEET (ENGLISH) (REV. 2/25/05)

ORIGINAL SCALE IN INCHES FOR REDUCED PLANS 0 1 2 3

CU 12220
EA 0F0321

DISREGARD PRINTS BEARING EARLIER REVISION DATES

REVISION DATES (PRELIMINARY STAGE ONLY) 01/26/09 04/07/09 04/27/09 06/08/09

SHEET 10 OF 25

FILE => 55-0482-h-b01dt01.dgn

USERNAME => triemard DATE PLOTTED => 25-JAN-2010 TIME PLOTTED => 08:14

| DIST | COUNTY | ROUTE | POST MILES TOTAL PROJECT | SHEET No | TOTAL SHEETS |
|---|---|---|---|---|---|
| 12 | Ora | 57 | 18.4/20.9 | 609 | 856 |

REGISTERED CIVIL ENGINEER — DATE 06/08/09

1-25-10
PLANS APPROVAL DATE

REGISTERED PROFESSIONAL ENGINEER — MOHAMMED ATIQULLAH — No. C47027 — Exp. 12/31/09 — CIVIL — STATE OF CALIFORNIA

*The State of California or its officers or agents shall not be responsible for the accuracy or completeness of electronic copies of this plan sheet.*

OCTA
550 S. MAIN STREET
ORANGE, CA 92863

CH2M HILL
6 HUTTON CENTRE DRIVE, SUITE 700
SANTA ANA, CA 92707

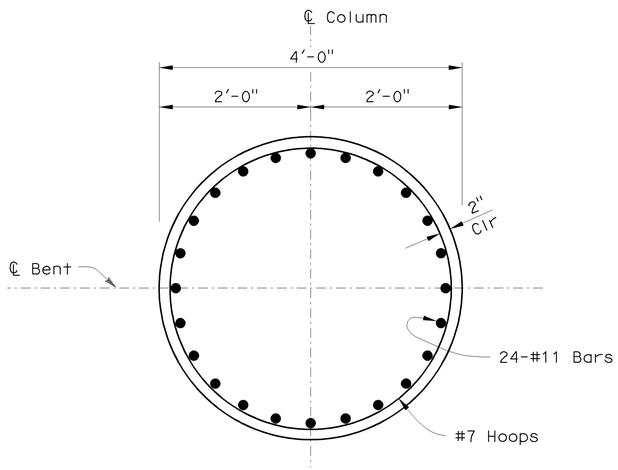


## SECTION A-A
1" = 1'-0"

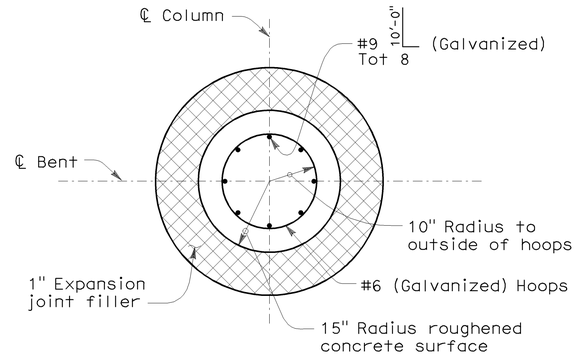


## PLAN

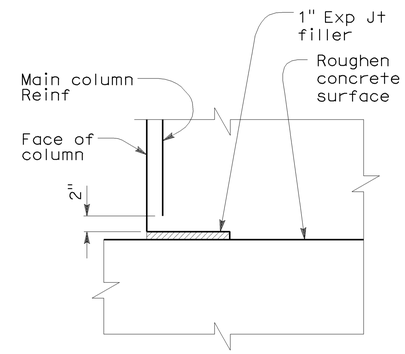


## PARTIAL ELEVATION

## COLUMN BOTTOM KEY DETAIL
No Scale

**NOTE:**

1. For location of Section A-A, see "Bent Layout" sheet.

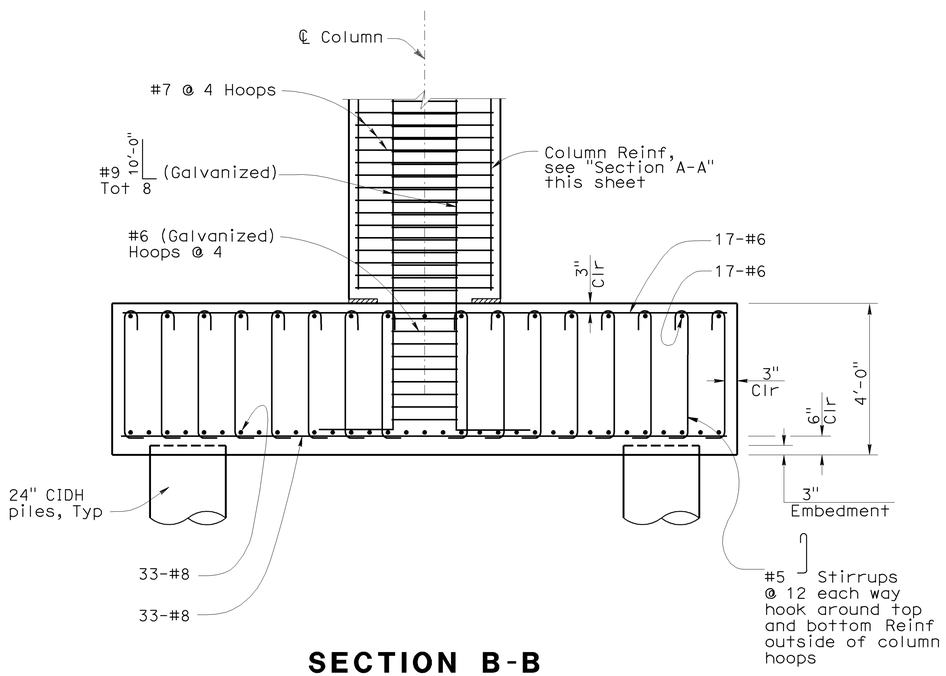


## SECTION B-B
½" = 1'-0"

Note: Bent 2 shown, Bent 3 similar.

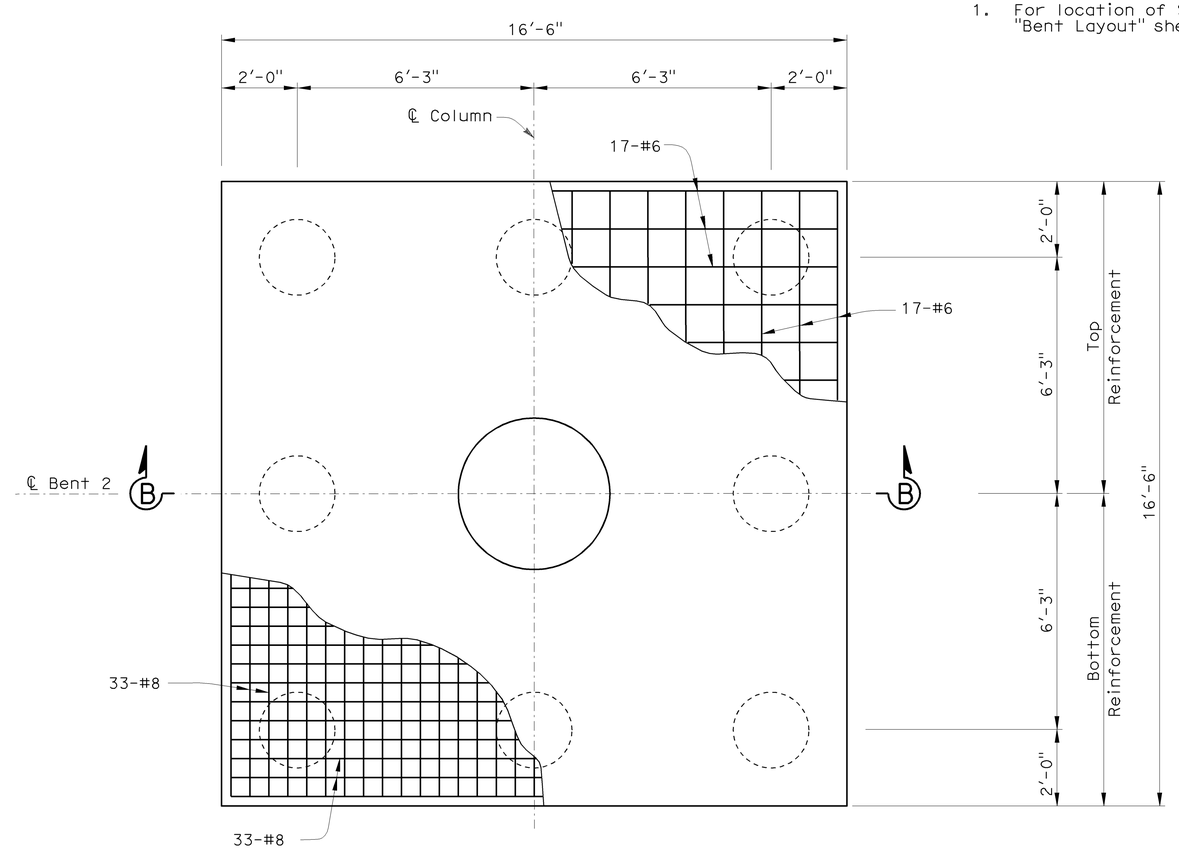


## PILE LAYOUT
½" = 1'-0"

**NOTE:**

The Contractor shall verify all controlling field dimensions before ordering or fabricating any materials.

DESIGN OVERSIGHT — Jon Hamaguchi
6-9-09
SIGN OFF DATE

| | BY | CHECKED |
|---|---|---|
| DESIGN | M. Atiqullah / A. Issa | M. Desai / E. Cutler |
| DETAILS | M. Atiqullah / A. Issa | M. Desai / E. Cutler |
| QUANTITIES | A. Issa | E. Cutler |

PREPARED FOR THE STATE OF CALIFORNIA DEPARTMENT OF TRANSPORTATION

Ayman Salama
PROJECT ENGINEER

BRIDGE NO. 55-0482
POST MILE 20.61

# BREA OVERHEAD (WIDEN)
# BENT DETAILS NO. 2

DESIGN DETAIL SHEET (ENGLISH) (REV. 2/25/05)

ORIGINAL SCALE IN INCHES FOR REDUCED PLANS 0 1 2 3

CU 12220
EA 0F0321

DISREGARD PRINTS BEARING EARLIER REVISION DATES

REVISION DATES (PRELIMINARY STAGE ONLY) 01/16/09 04/07/09 04/17/09 06/08/09

SHEET 11 OF 25

FILE => 55-0482-h-b01dt02.dgn

USERNAME => trlenard DATE PLOTTED => 25-JAN-2010 TIME PLOTTED => 08:14

| DIST. | COUNTY | ROUTE | POST MILES TOTAL PROJECT | SHEET NO. | TOTAL SHEETS |
|---|---|---|---|---|---|
| 12 | Ora | 57 | 18.4/20.9 | 610 | 856 |

REGISTERED ENGINEER - CIVIL DATE 06/08/09

1-25-10
PLANS APPROVAL DATE

REGISTERED PROFESSIONAL ENGINEER MOHAMMED ATIQULLAH No. C47027 Exp. 12/31/07 CIVIL STATE OF CALIFORNIA

The State of California or its officers or agents shall not be responsible for the accuracy or completeness of electronic copies of this plan sheet.

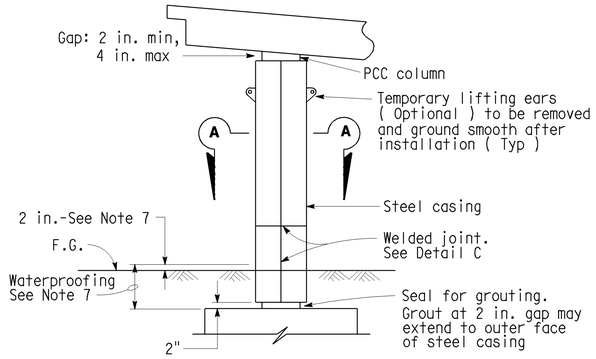


## CLASS F COLUMN

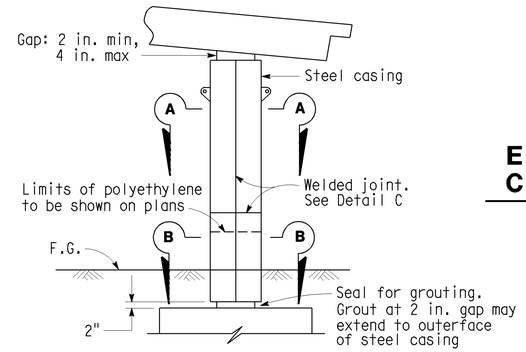


## CLASS P/F COLUMN

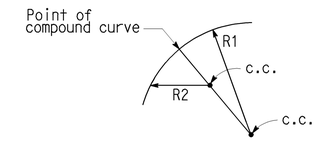


## ELLIPTICAL CASING DETAIL CLASS F AND P/F COLUMN

Radii R1 and R2 to be determined by the Contractor subject to the approval of the Engineer

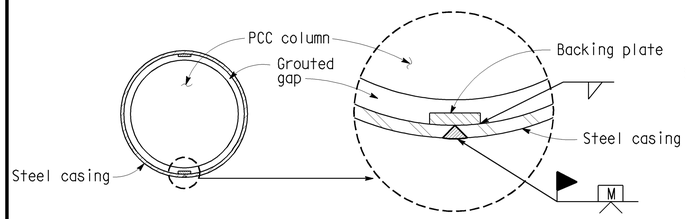


## SECTION A-A ROUND COLUMN

Minimum inside diameter of steel casing = 1½" greater than nominal column diameter for Class F and 2½" for Class P/F

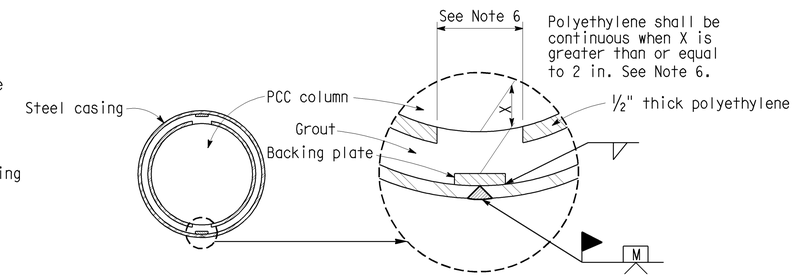


## SECTION B-B ROUND COLUMN

Minimum inside diameter of steel casing = 2½" greater than nominal column diameter for Class P/F.

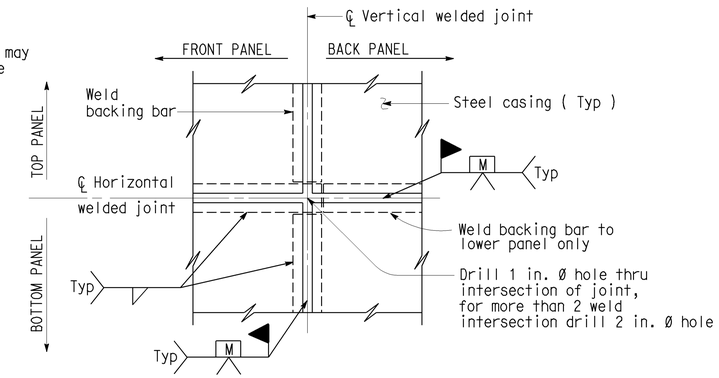


( TWO WELDED INTERSECTION JOINT )

## DETAIL C

NOTES:

1) For varying thickness steel casing inside surface to remain flush. Minimum clearance from PCC column to casing shall be maintained.
2) Appropriate injection nozzles to be provided on casing, but removed and ground flush following completion of grouting operation.
3) All voids between steel casing and polyethylene ( Class P/F ), and steel casing and PCC column ( Class F ) to be filled with grout.
4) Location and number of vertical and horizontal welds to be determined by the Contractor, and subject to the approval of the Engineer. The location of casing welds are for illustration. No skip welds allowed.
5) Circular steel casing to be ¼" thick minimum for casings with a 4'-4" diameter or less; all other steel casings to be ⅜" thick unless noted differently on contract plans. Backing plates to be the same thickness as casing up to maximum ½" thick.
6) Contractor shall remove 12 in. polyethylene strip behind backing plate if backing plate is closer than 2" from face of column.
7) Waterproof limits for steel casings. Typical for Classe "F" and "P/F".
8) For pipe extensions, opening shall be no more than ¼" greater than the pipe extension diameter. For other openings, the opening diameter to be determined by the Engineer.

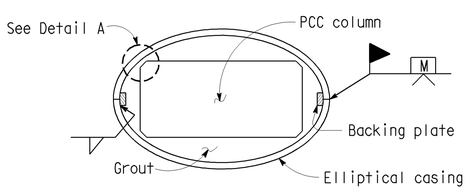


## SECTION A-A RECTANGULAR COLUMN

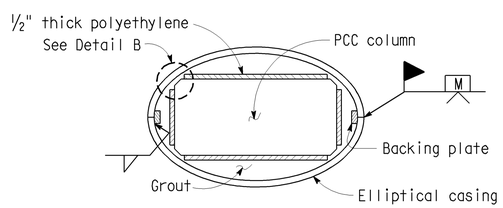


## SECTION B-B RECTANGULAR COLUMN

## DETAIL A

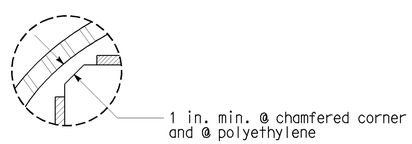


## DETAIL B

NOTE:

The Contractor shall verify all controlling field dimensions before ordering or fabricating any materials.

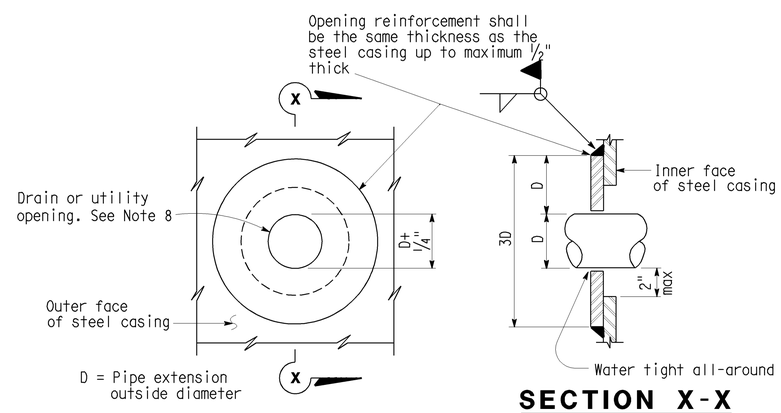


## SECTION X-X

## CASING OPENING

Note: Opening reinforcement required for drain or utility openings larger than 4 in.

NO SCALE

| STANDARD DRAWING | | | | | |
|---|---|---|---|---|---|
| RELEASE DATE 11-16-06 | DESIGN | BY BRIAN MARONEY | CHECKED R.J. ZELINSKI | RELEASED BY Michael D. Keever OFFICE CHIEF | |
| FILE NO. xs7-010e | DETAILS | BY R. YEE | CHECKED PAT HIPLEY | | |
| | SUBMITTED | BY R.J. ZELINSKI | DRAWING DATE 8/93 | | |

STRUCTURES DESIGN DETAIL SHEET (ENGLISH) (REV. 10/25/05)

ORIGINAL SCALE IN INCHES FOR REDUCED PLANS 0 1 2 3

STATE OF CALIFORNIA DEPARTMENT OF TRANSPORTATION

DIVISION OF ENGINEERING SERVICES

CU 12220
EA 0F0321

BRIDGE NO. 55-0482
POST MILES 20.61

DISREGARD PRINTS BEARING EARLIER REVISION DATES

REVISION DATES (PRELIMINARY STAGE ONLY) 01/16/09 04/07/09 04/17/09 06/08/09

SHEET 12 OF 25

# BREA OVERHEAD (WIDEN)

# STEEL COLUMN CASINGS

# SEISMIC RETROFIT

USERNAME => trlenard

55-0482-j-scc01.dg

DATE PLOTTED => 25-JAN-2010 TIME PLOTTED => 08:14

| DIST | COUNTY | ROUTE | POST MILES TOTAL PROJECT | SHEET No | TOTAL SHEETS |
|---|---|---|---|---|---|
| 12 | Ora | 57 | 18.4/20.9 | 611 | 856 |

REGISTERED CIVIL ENGINEER 06/08/09 DATE

1-25-10
PLANS APPROVAL DATE

REGISTERED PROFESSIONAL ENGINEER MOHAMMED ATIQULLAH No. C47027 Exp. 12/31/09 CIVIL STATE OF CALIFORNIA

*The State of California or its officers or agents shall not be responsible for the accuracy or completeness of electronic copies of this plan sheet.*

OCTA
550 S. MAIN STREET
ORANGE, CA 92863

CH2M HILL
6 HUTTON CENTRE DRIVE, SUITE 700
SANTA ANA, CA 92707

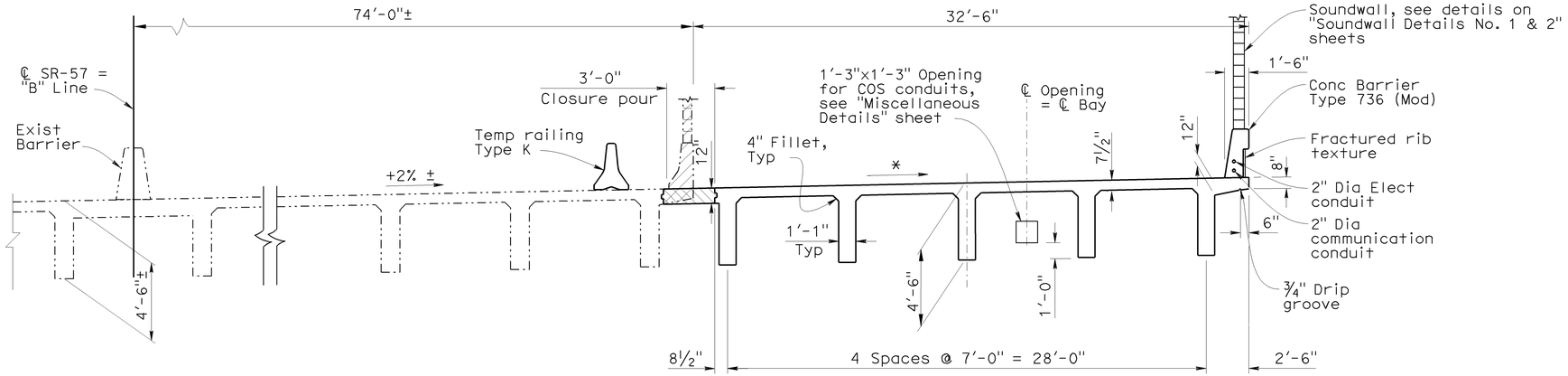


## TYPICAL SECTION

¼" = 1'-0"

**LEGEND**

- Indicates Existing Structure
- Indicates New Structure
- Bridge removal (Portion)
- Closure pour
- * Match Exist Grade & Cross Slope

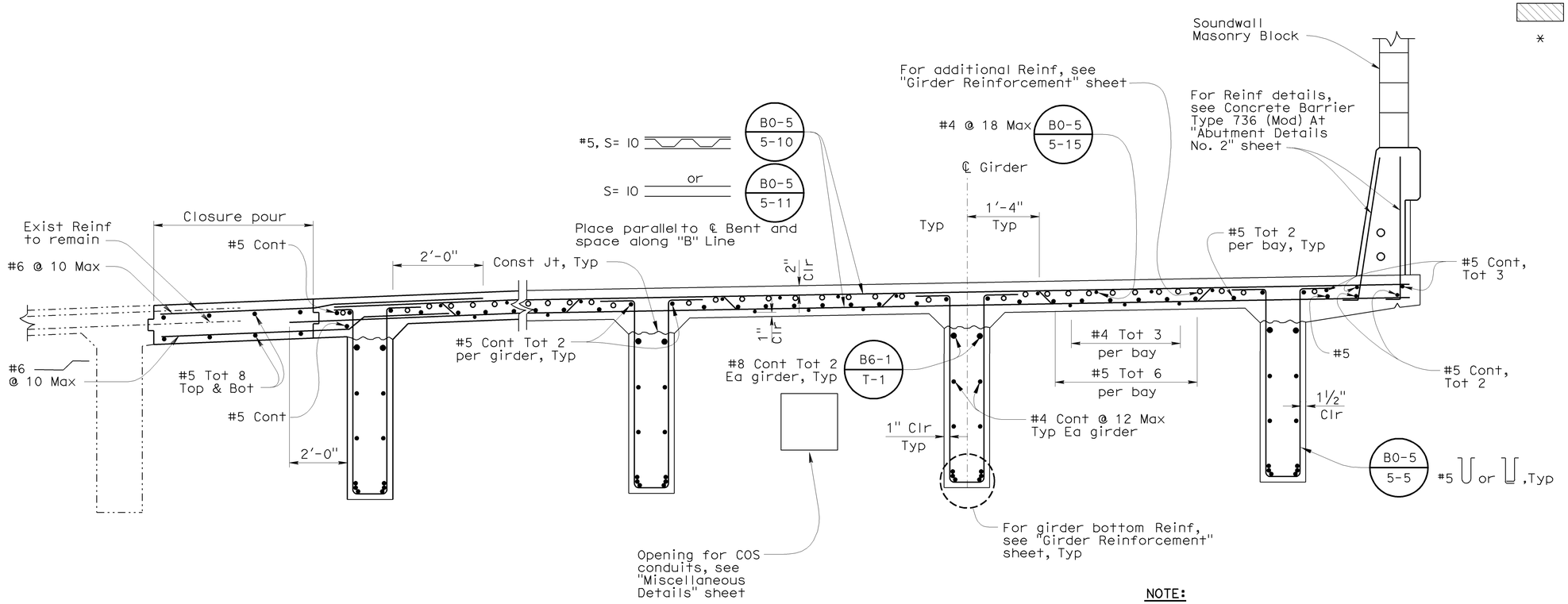


## PARTIAL TYPICAL SECTION

B0-5 / B6-1

¾" = 1'-0"

**NOTE:**

The Contractor shall verify all controlling field dimensions before ordering or fabricating any materials.

**NOTE:**

1. Falsework Release:
   Aternative 1
   Falsework shall be released as soon as permitted by specifications. Closure pour shall not be placed sooner than 60 days after the falsework has been released.

   Alternative 2
   Falsework shall not be released less 14 days after the last concrete has been placed. Closure pour shall not be placed sooner than 14 days after the falsework has been released.

DESIGN OVERSIGHT Jon Hamaguchi
6-9-09
SIGN OFF DATE

| | BY | CHECKED |
|---|---|---|
| DESIGN | M. Atiqullah / A. Issa | M. Desai / E. Cutler |
| DETAILS | M. Atiqullah / A. Issa | M. Desai / E. Cutler |
| QUANTITIES | A. Issa | E. Cutler |

PREPARED FOR THE STATE OF CALIFORNIA DEPARTMENT OF TRANSPORTATION

Ayman Salama
PROJECT ENGINEER

BRIDGE NO. 55-0482
POST MILE 20.61

# BREA OVERHEAD (WIDEN)

# TYPICAL SECTION

DESIGN DETAIL SHEET (ENGLISH) (REV. 2/25/05)

ORIGINAL SCALE IN INCHES FOR REDUCED PLANS 0 1 2 3

CU 12220
EA 0F0321

DISREGARD PRINTS BEARING EARLIER REVISION DATES

REVISION DATES (PRELIMINARY STAGE ONLY) 01/16/09 04/07/09 04/27/09 06/08/09

SHEET 13 OF 25

FILE => 55-0482-k-ts01.dgn

USERNAME => triemard DATE PLOTTED => 25-JAN-2010 TIME PLOTTED => 08:14

| DIST | COUNTY | ROUTE | POST MILES TOTAL PROJECT | SHEET No | TOTAL SHEETS |
|---|---|---|---|---|---|
| 12 | Ora | 57 | 18.4/20.9 | 612 | 856 |

REGISTERED CIVIL ENGINEER 06/08/09 DATE

1-25-10
PLANS APPROVAL DATE

REGISTERED PROFESSIONAL ENGINEER MOHAMMED ATIQULLAH No. C47027 Exp. 12/31/09 CIVIL STATE OF CALIFORNIA

*The State of California or its officers or agents shall not be responsible for the accuracy or completeness of electronic copies of this plan sheet.*

OCTA
550 S. MAIN STREET
ORANGE, CA 92863

CH2M HILL
6 HUTTON CENTRE DRIVE, SUITE 700
SANTA ANA, CA 92707

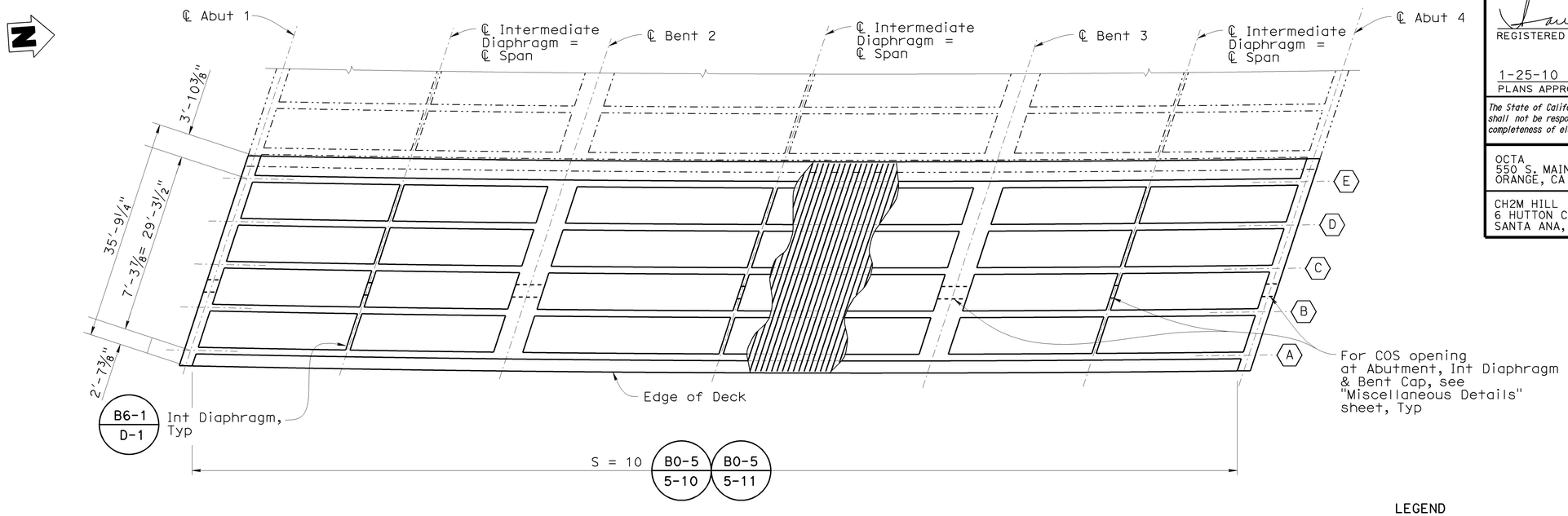


## GIRDER LAYOUT

1"=10'

**LEGEND**

⟨X⟩ Indicates Centerline Girder

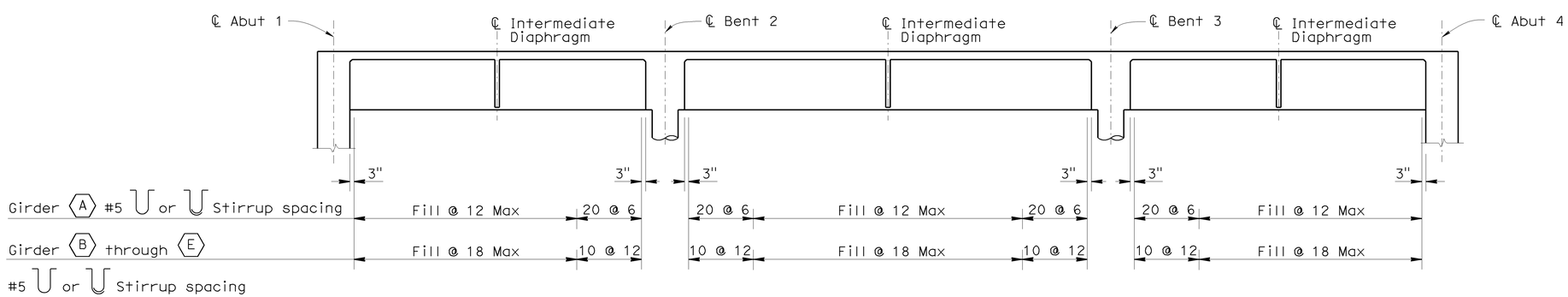


## TYPICAL GIRDER

No Scale

**NOTE:**

The Contractor shall verify all controlling field dimensions before ordering or fabricating any materials.

DESIGN OVERSIGHT Jon Hamaguchi
6-9-09
SIGN OFF DATE

DESIGN DETAIL SHEET (ENGLISH) (REV. 2/25/05)

| | BY | CHECKED |
|---|---|---|
| DESIGN | M. Atiqullah / A. Issa | M. Desai / E. Cutler |
| DETAILS | M. Atiqullah / A. Issa | M. Desai / E. Cutler |
| QUANTITIES | A. Issa | E. Cutler |

ORIGINAL SCALE IN INCHES FOR REDUCED PLANS 0 1 2 3

PREPARED FOR THE STATE OF CALIFORNIA DEPARTMENT OF TRANSPORTATION

Ayman Salama
PROJECT ENGINEER

CU 12220
EA 0F0321

BRIDGE NO. 55-0482
POST MILE 20.61

# BREA OVERHEAD (WIDEN)
# GIRDER LAYOUT

DISREGARD PRINTS BEARING EARLIER REVISION DATES

REVISION DATES (PRELIMINARY STAGE ONLY) 01/16/09 04/07/09 04/17/09 06/08/09

SHEET 14 OF 25

FILE => 55-0482-1-g_lo01.dgn

USERNAME => friehard DATE PLOTTED => 25-JAN-2010 TIME PLOTTED => 08:14

| DIST | COUNTY | ROUTE | POST MILES TOTAL PROJECT | SHEET No | TOTAL SHEETS |
|---|---|---|---|---|---|
| 12 | Ora | 57 | 18.4/20.9 | 613 | 856 |

REGISTERED CIVIL ENGINEER 06/08/09 DATE

1-25-10
PLANS APPROVAL DATE

REGISTERED PROFESSIONAL ENGINEER MOHAMMED ATIQULLAH No. C47027 Exp. 12/31/09 CIVIL STATE OF CALIFORNIA

*The State of California or its officers or agents shall not be responsible for the accuracy or completeness of electronic copies of this plan sheet.*

OCTA
550 S. MAIN STREET
ORANGE, CA 92863

CH2M HILL
6 HUTTON CENTRE DRIVE, SUITE 700
SANTA ANA, CA 92707

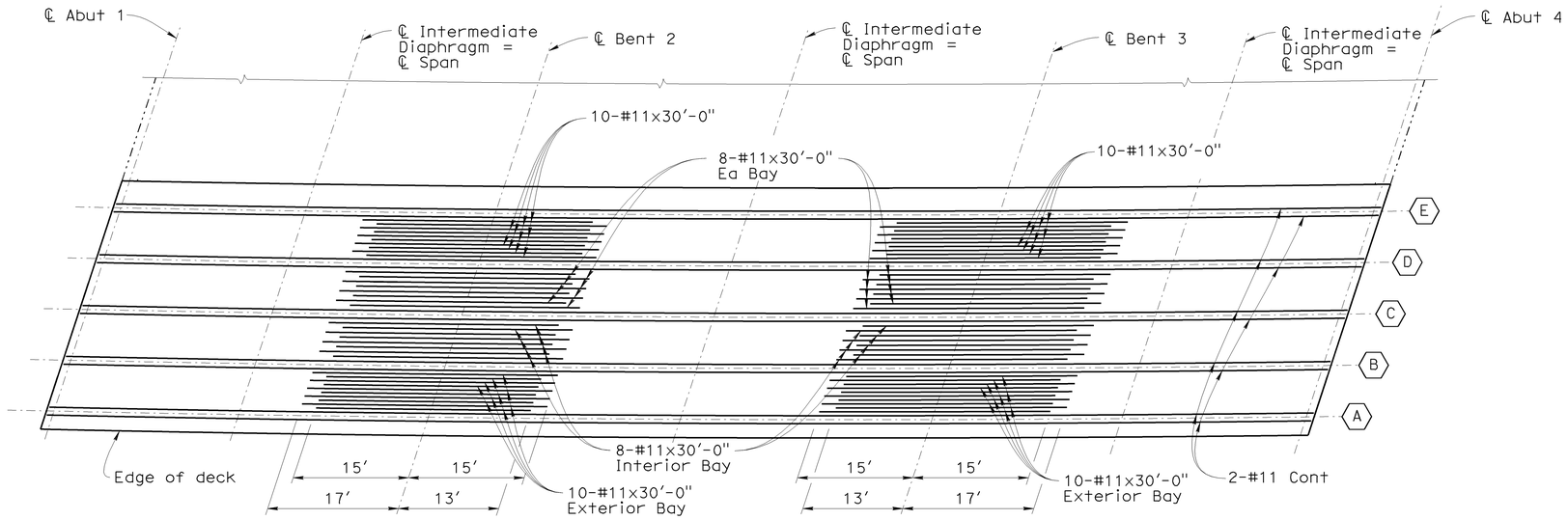


## TOP REINFORCEMENT

1"=10'

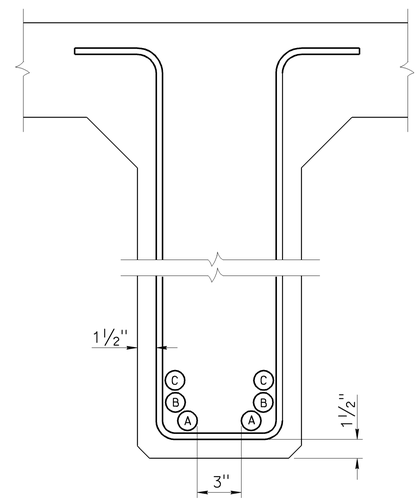


## SECTION A-A

2"=1'-0"

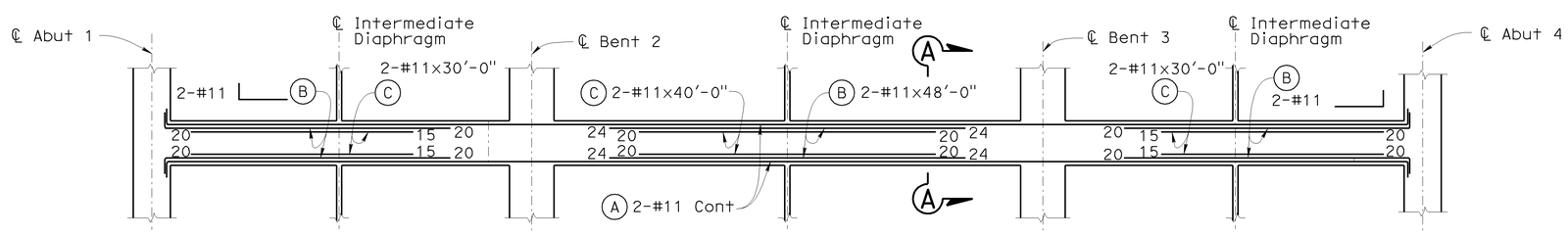


## BOTTOM REINFORCEMENT

No Scale

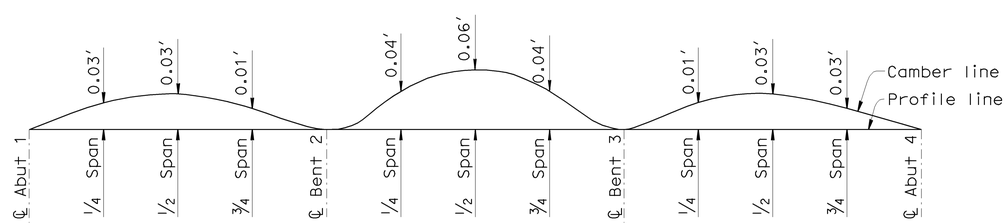


## CAMBER DIAGRAM

No Scale

**NOTE:**

Camber diagram does not include allowance for falsework settlement.

**LEGEND**

(X) Indicates Reinf Bars

⟨X⟩ Indicates Centerline Girder

**NOTE:**

1. The numbers at ends of bars indicates distance in feet from ℄ span.
2. No Splice is allowed in bars identified as (B) & (C), Bars identified as (A) shall have "Service" butt splices.
3. No Splice is allowed in 30'-0" long bars shown as top reinforcement Continuous bars as top reincforcement shall have "Service" butt splices.

**NOTE:**

The Contractor shall verify all controlling field dimensions before ordering or fabricating any materials.

DESIGN OVERSIGHT Jon Hamaguchi
6-9-09
SIGN OFF DATE

| | BY | CHECKED |
|---|---|---|
| DESIGN | M. Atiqullah / A. Issa | M. Desai / E. Cutler |
| DETAILS | M. Atiqullah / A. Issa | M. Desai / E. Cutler |
| QUANTITIES | A. Issa | E. Cutler |

PREPARED FOR THE STATE OF CALIFORNIA DEPARTMENT OF TRANSPORTATION

Ayman Salama
PROJECT ENGINEER

BRIDGE NO. 55-0482
POST MILE 20.61

# BREA OVERHEAD (WIDEN)
# GIRDER REINFORCEMENT

DESIGN DETAIL SHEET (ENGLISH) (REV. 2/25/05)

ORIGINAL SCALE IN INCHES FOR REDUCED PLANS 0 1 2 3

CU 12220
EA 0F0321

DISREGARD PRINTS BEARING EARLIER REVISION DATES

REVISION DATES (PRELIMINARY STAGE ONLY) 01/06/09 04/07/09 04/17/09 06/08/09

SHEET 15 OF 25

FILE => 55-0482-o-gir_rf01.dgn

USERNAME => friehard DATE PLOTTED => 25-JAN-2010 TIME PLOTTED => 08:14

| DIST. | COUNTY | ROUTE | POST MILES TOTAL PROJECT | SHEET NO. | TOTAL SHEETS |
|---|---|---|---|---|---|
| 12 | Ora | 57 | 18.4/20.9 | 614 | 856 |

REGISTERED ENGINEER - CIVIL DATE 06/08/09

1-25-10
PLANS APPROVAL DATE

REGISTERED PROFESSIONAL ENGINEER MOHAMMED ATIQULLAH No. C47027 Exp. 12/31/09 CIVIL STATE OF CALIFORNIA

The State of California or its officers or agents shall not be responsible for the accuracy or completeness of electronic copies of this plan sheet.

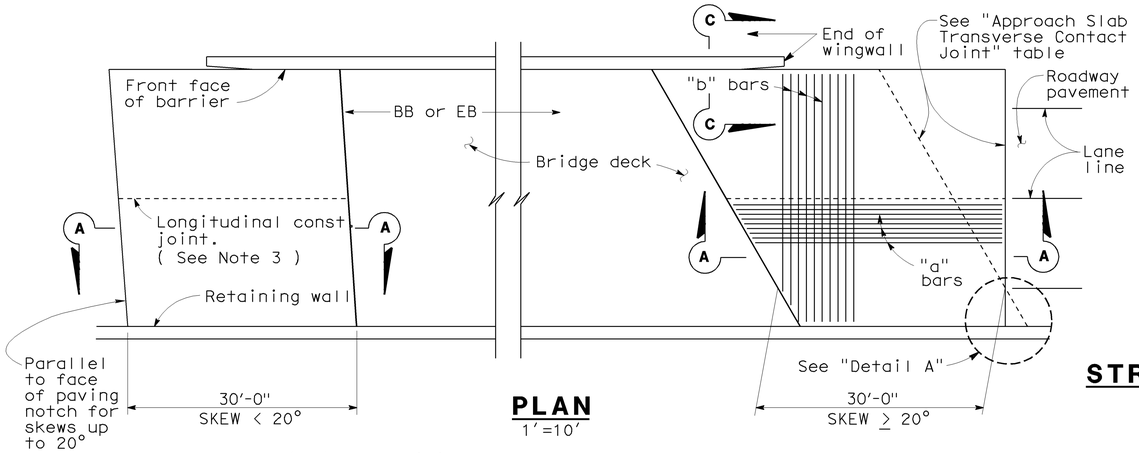


## PLAN
1"=10'

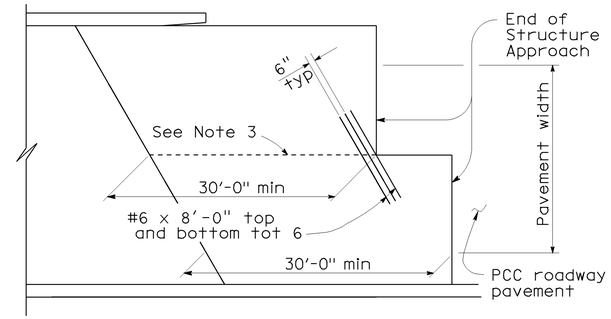


## STRUCTURE APPROACH - END STAGGER DETAIL
No Scale

| APPROACH SLAB TRANSVERSE CONTACT JOINT | | |
|---|---|---|
| APPROACH SKEW | WITH AC ROADWAY PAVEMENT | WITH PCC ROADWAY PAVEMENT |
| < 20° | Parallel to face of paving notch | Parallel to face of paving notch |
| 20°- 45° | Parallel to face of P N use (Detail A) | Stagger lines 24' to 36' apart |
| > 45° | Parallel to face of P N use (Detail A) | Stagger at each lane line |

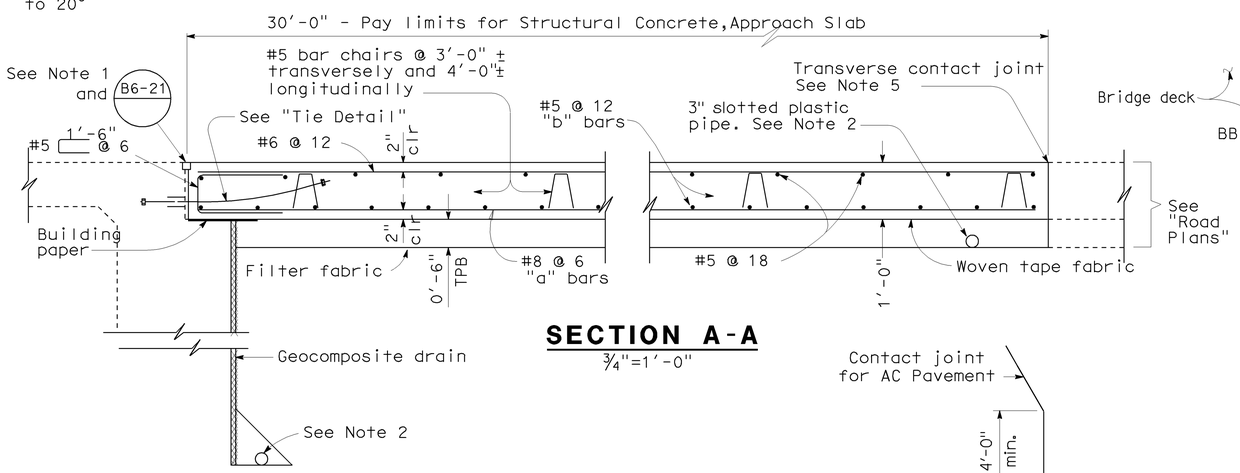


## SECTION A-A
¾"=1'-0"

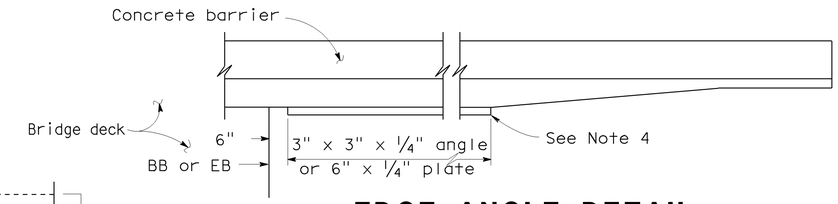


## EDGE ANGLE DETAIL
½"=1'-0"

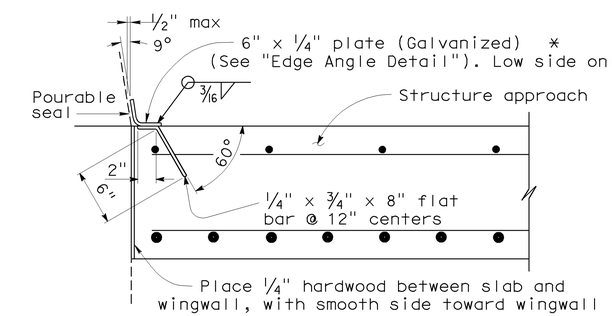


*** (TO BE USED WITH TYPE 732 OR TYPE 736 CONCRETE BARRIER)**

## DETAIL B
1½"=1'-0"

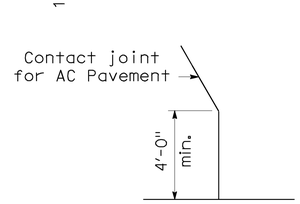


## DETAIL A
No Scale

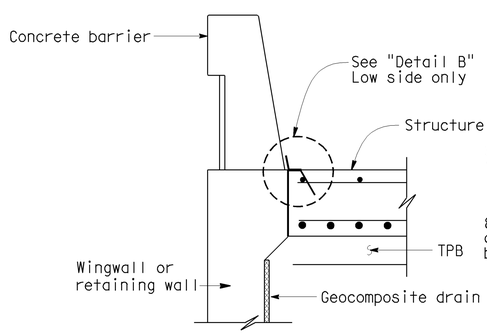


**TYPE E-2**

## SECTION C-C
¾"=1'-0"
( Type E-1 to be used, unless otherwise shown on plans )

**NOTE:**
The Contractor shall verify all controlling field dimensions before ordering or fabricating any materials.

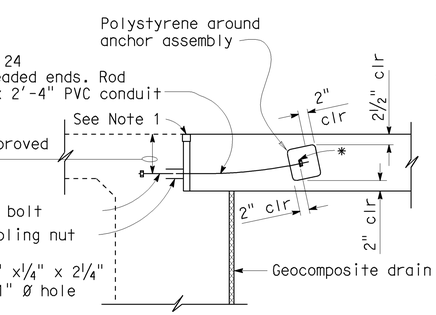


## TIE DETAIL
¾"=1'-0"

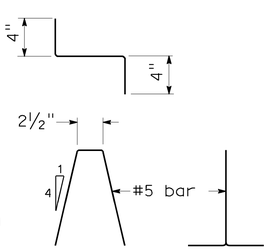


## BAR CHAIR DETAIL
1½"=1'-0"

**NOTES:**

1. For details not noted or shown, see Structure Plans.
2. For drainage details, see "Structure Approach Drainage Details" sheet.
3. Longitudinal construction joints, when permitted by the Engineer, shall be located on lane lines.
4. End angle or plate at beginning of barrier transition, end of wingwall or end of structure approach, as applicable.
5. For transverse contact joint with new PCC paving, refer to Standard Plan P10.
6. At the contractor's option, approach slab transverse reinforcement may be placed parallel to paving notch. Spacing of transverse reinforcement is measured along ℄ roadway.

Polystyrene to be removed.

## SPECIAL DETAILS

STANDARD DRAWING

FILE NO. xs3-180e

APPROVED BY M. Ha — RESPONSIBLE TECHNICAL SPECIALIST
APPROVAL DATE 8-12-08

RELEASED BY O. Alcantara — RESPONSIBLE OFFICE CHIEF
RELEASE DATE REVISED

1 Section C-C Type E-1 removed
2 Type 25 or Type 27 Conc Barrier on Det B removed

STATE OF CALIFORNIA
DEPARTMENT OF TRANSPORTATION

DIVISION OF ENGINEERING SERVICES

CU 12220
EA 0F0321

BRIDGE NO. 55-0482
POST MILE 20.61

BREA OVERHEAD (WIDEN)
STRUCTURE APPROACH TYPE N(30D)

DS OSD 2147A (ENGLISH STANDARD DRAWING "XS" BORDER REV. 01/11/08)

ORIGINAL SCALE IN INCHES FOR REDUCED PLANS 0 1 2 3

DISREGARD PRINTS BEARING EARLIER REVISION DATES

REVISION DATES (PRELIMINARY STAGE ONLY) 1/16/08 04/07/09 04/17/09 06/08/09

SHEET 16 OF 25

USERNAME => trlenard

55-0482-r-sap01.dgn

DATE PLOTTED => 25-JAN-2010 TIME PLOTTED => 08:15

| DIST. | COUNTY | ROUTE | POST MILES TOTAL PROJECT | SHEET NO. | TOTAL SHEETS |
|---|---|---|---|---|---|
| 12 | Ora | 57 | 18.4/20.9 | 615 | 856 |

REGISTERED ENGINEER - CIVIL DATE 06/08/09

1-25-10
PLANS APPROVAL DATE

The State of California or its officers or agents shall not be responsible for the accuracy or completeness of electronic copies of this plan sheet.

REGISTERED PROFESSIONAL ENGINEER MOHAMMED ATIQULLAH No. C47027 Exp. 12/31/09 CIVIL STATE OF CALIFORNIA

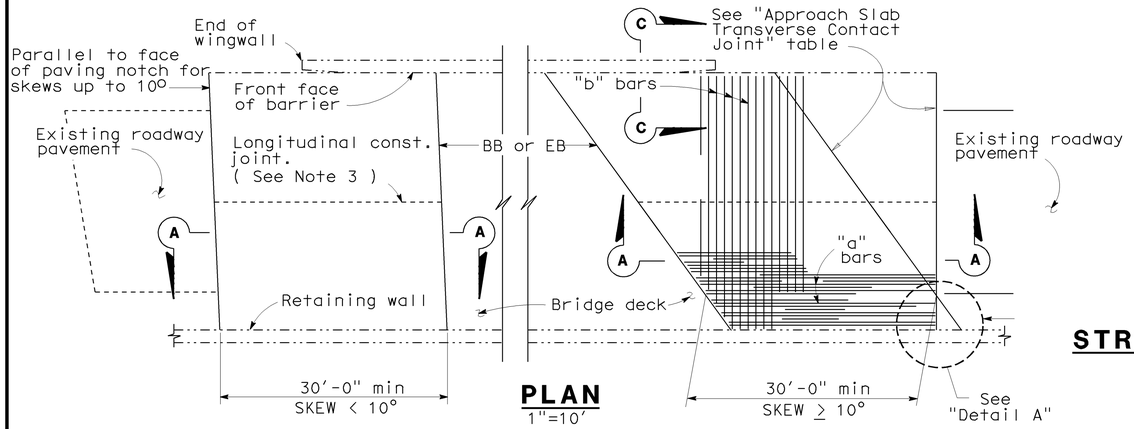


## PLAN
1"=10'

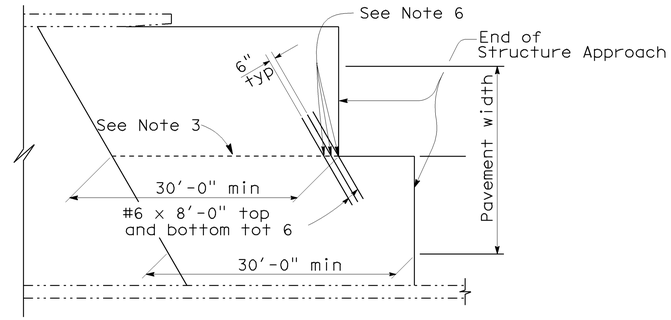


## STRUCTURE APPROACH - END STAGGER DETAIL
No Scale

| APPROACH SLAB TRANSVERSE CONTACT JOINT | | |
|---|---|---|
| APPROACH SKEW | WITH AC ROADWAY PAVEMENT | WITH PCC ROADWAY PAVEMENT |
| < 10° | Parallel to face of paving notch | Parallel to face of paving notch |
| 10° - 45° | Parallel to face of P N use (Detail A) | Stagger lines 24' to 36' apart |
| > 45° | Parallel to face of P N use (Detail A) | Stagger at each lane line |

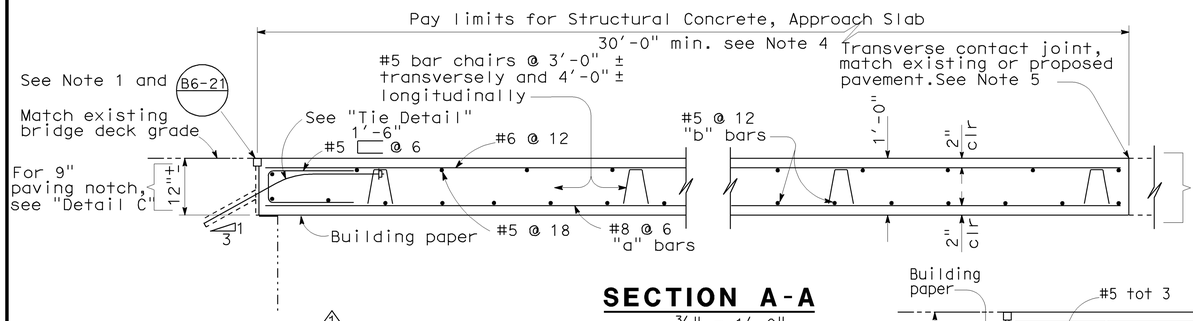


## SECTION A-A
¾" = 1'-0"

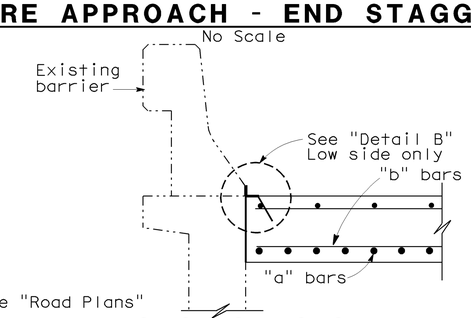


## SECTION C-C
¾" = 1'-0"

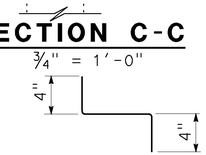


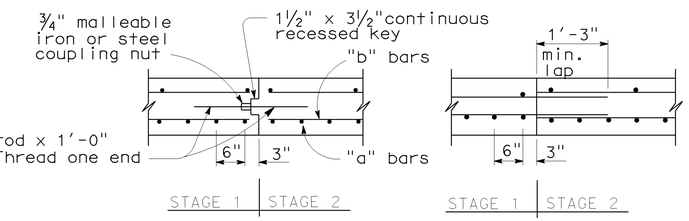


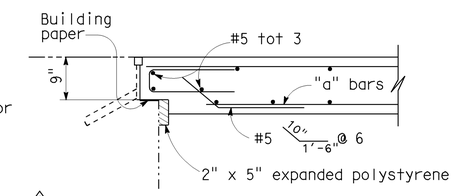


## DETAIL C
¾" = 1'-0"

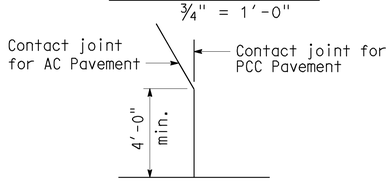


## DETAIL A
No Scale

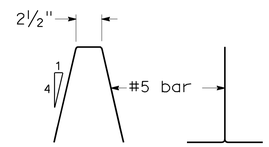


## BAR CHAIR DETAIL
1½" = 1'-0"

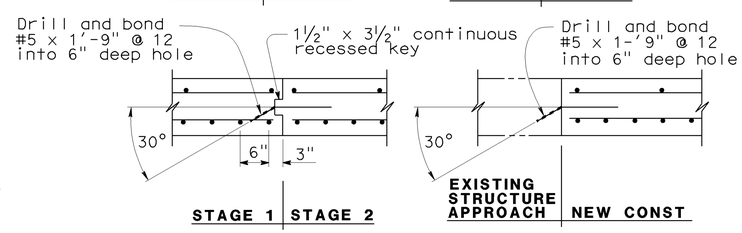


## LONGITUDINAL CONSTRUCTION JOINT ALTERNATIVES
¾" = 1'-0"

NOTES:

1. For details not shown or noted, see Structure Plans. Adjust bar reinforcement to clear a sawcut for sealed joint, when required.
2. Space to avoid existing prestress anchorages and main reinforcement.
3. Longitudinal construction joints, when permitted by the Engineer, shall be located on lane lines.
4. Transverse contact joint shall be a minimum of 5'-0" from an existing or constructed weakened plane joint.
5. For transverse contact joint with new PCC paving. refer to Standard Plan P10.
6. Couplers are required for stage construction.
7. End angle or plate at beginning of barrier transition, end of wingwall or end of structure approach as applicable.

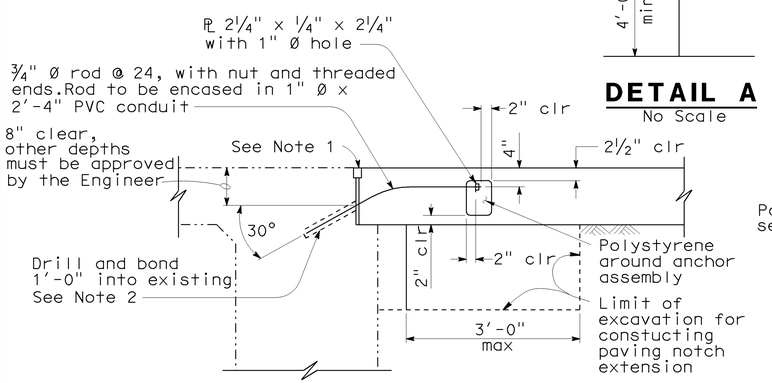


## TIE DETAIL
¾" = 1'-0"

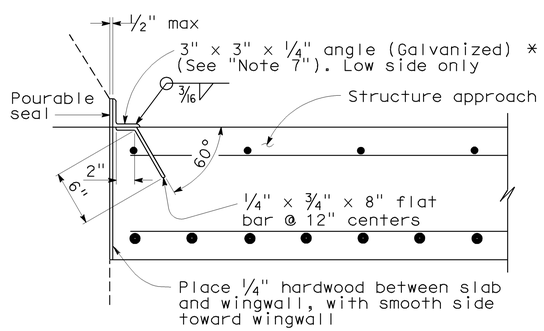


*(TO BE USED WITH TYPE 25 OR TYPE 27 CONCRETE BARRIER)

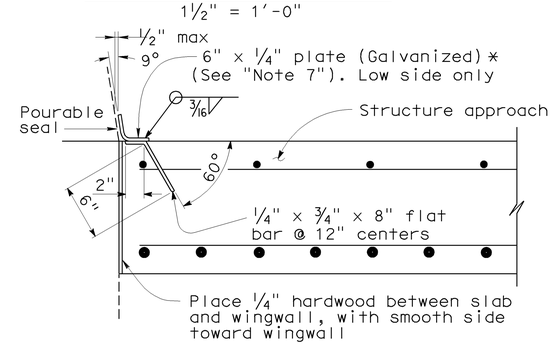


*(TO BE USED WITH TYPE 732 OR TYPE 736 CONCRETE BARRIER)

## DETAIL B
1½" = 1'-0"

NOTE: For details not shown, see "Section A-A".

NOTE:
The Contractor shall verify all controlling field dimensions before ordering or fabricating any material.

## SPECIAL DETAILS

STANDARD DRAWING

| RELEASE DATE REVISED | DESIGN | BY M.TRAFFALIS | CHECKED E.THORKILDSEN | RELEASED BY |
|---|---|---|---|---|
| | DETAILS | BY R.YEE | CHECKED E.THORKILDSEN | |
| FILE NO. xs3-140e | SUBMITTED | BY M.HA | DRAWING DATE 8/92 | OFFICE CHIEF |

1 Revised Details

STATE OF CALIFORNIA DEPARTMENT OF TRANSPORTATION

DIVISION OF ENGINEERING SERVICES

BRIDGE NO. 55-0482
POST MILES 20.61

BREA OVERHEAD (WIDEN)

STRUCTURE APPROACH TYPE R(30D)

DS OSD 2147A (ENGLISH) (REV. X/XX/XX)

ORIGINAL SCALE IN INCHES FOR REDUCED PLANS 0 1 2 3

CU 12220
EA 0F0321

DISREGARD PRINTS BEARING EARLIER REVISION DATES

REVISION DATES (PRELIMINARY STAGE ONLY) 01/15/09 04/07/09 04/27/09 06/08/09

SHEET 17 OF 25

USERNAME => trlenard

DATE PLOTTED => 25-JAN-2010 TIME PLOTTED => 08:15

55-0482-r-sap02.dgn

| DIST. | COUNTY | ROUTE | POST MILES TOTAL PROJECT | SHEET NO. | TOTAL SHEETS |
|---|---|---|---|---|---|
| 12 | Ora | 57 | 18.4/20.9 | 616 | 856 |

REGISTERED ENGINEER - CIVIL DATE 06/08/09

1-25-10
PLANS APPROVAL DATE

REGISTERED PROFESSIONAL ENGINEER MOHAMMED ATIQULLAH No. C47027 Exp. 12/31/09 CIVIL STATE OF CALIFORNIA

The State of California or its officers or agents shall not be responsible for the accuracy or completeness of electronic copies of this plan sheet.

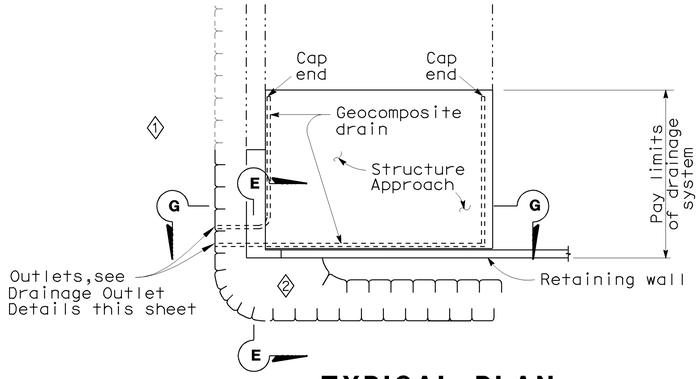


## TYPICAL PLAN

No Scale

*For pipe layout at staggered end, see "Detail B".

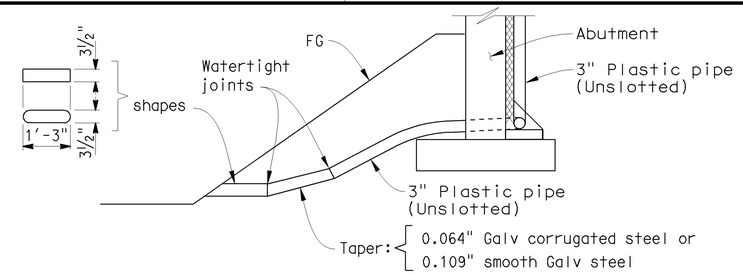


## DRAINAGE OUTLET DETAILS

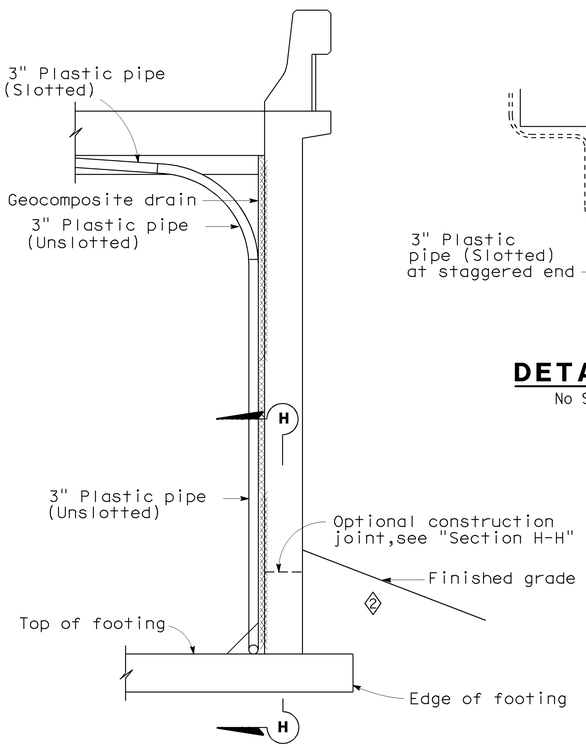


## SECTION E-E

1/2"=1'-0"

NOTE: Bends and junctions in 3" plastic pipe are 30" radius Min

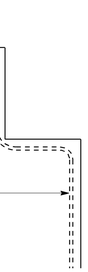


## DETAIL B

No Scale

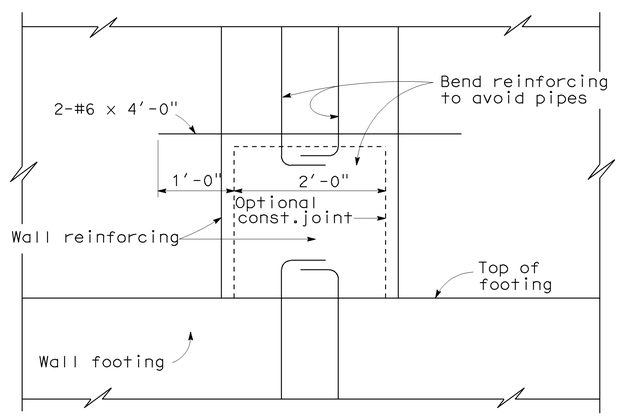


## SECTION H-H

1"=1'-0"

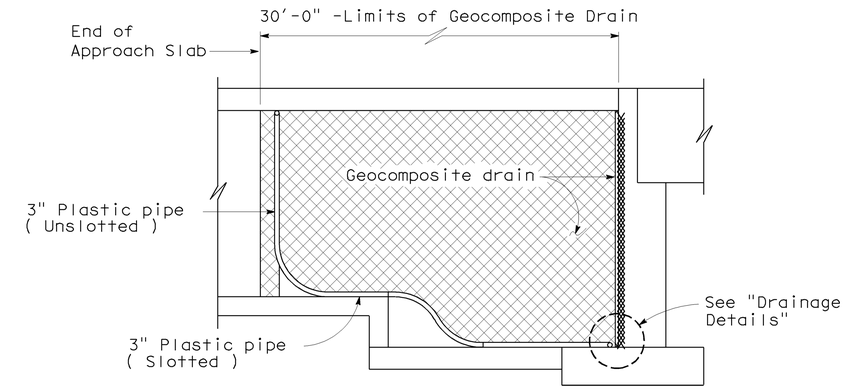


## RETAINING WALL WINGWALL

## SECTION G-G

1/4"=1'-0"

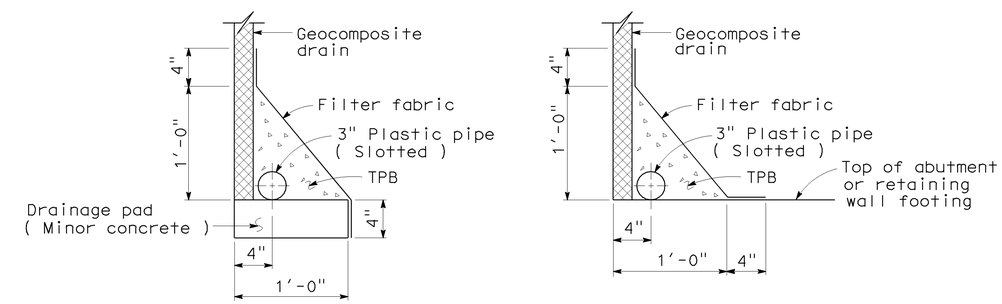


WITHOUT FOOTING

WITH FOOTING

## DRAINAGE DETAILS

1 1/2"=1'-0"

NOTE:
The Contractor shall verify all controlling field dimensions before ordering or fabricating any materials.

## SPECIAL DETAILS

| STANDARD DRAWING | | | | |
|---|---|---|---|---|
| RELEASE DATE REVISED | DESIGN | BY M.TRAFFALIS | CHECKED E.THORKILDSEN | RELEASED BY |
| FILE NO. xs3-110e | DETAILS | BY R.YEE | CHECKED E.THORKILDSEN | OFFICE CHIEF |
| | SUBMITTED | BY M.HA | DRAWING DATE 4/98 | |

DS OSD 2147A (ENGLISH) (REV. X/XX/XX)

1. Removed Section F-F
2. Revised outlet direction
3. Added Drainage Detail at Sidewalk

STATE OF CALIFORNIA
DEPARTMENT OF TRANSPORTATION

DIVISION OF ENGINEERING SERVICES

ORIGINAL SCALE IN INCHES FOR REDUCED PLANS 0 1 2 3

CU 12220
EA 0F0321

BRIDGE NO. 55-0482
POST MILES 20.61

BREA OVERHEAD (WIDEN)

STRUCTURE APPROACH DRAINAGE DETAILS

DISREGARD PRINTS BEARING EARLIER REVISION DATES

REVISION DATES (PRELIMINARY STAGE ONLY) 01/16/08 04/07/09 04/17/09 06/08/09

SHEET 18 OF 25

USERNAME => trlenard

55-0482-s-sadd.dgn

DATE PLOTTED => 25-JAN-2010 TIME PLOTTED => 08:15

| DIST | COUNTY | ROUTE | POST MILES TOTAL PROJECT | SHEET No | TOTAL SHEETS |
|---|---|---|---|---|---|
| 12 | Ora | 57 | 18.4/20.9 | 617 | 856 |

REGISTERED CIVIL ENGINEER 06/08/09 DATE

1-25-10
PLANS APPROVAL DATE

REGISTERED PROFESSIONAL ENGINEER MOHAMMED ATIQULLAH No. C47027 Exp. 12/31/09 CIVIL STATE OF CALIFORNIA

*The State of California or its officers or agents shall not be responsible for the accuracy or completeness of electronic copies of this plan sheet.*

OCTA
550 S. MAIN STREET
ORANGE, CA 92863

CH2M HILL
6 HUTTON CENTRE DRIVE, SUITE 700
SANTA ANA, CA 92707

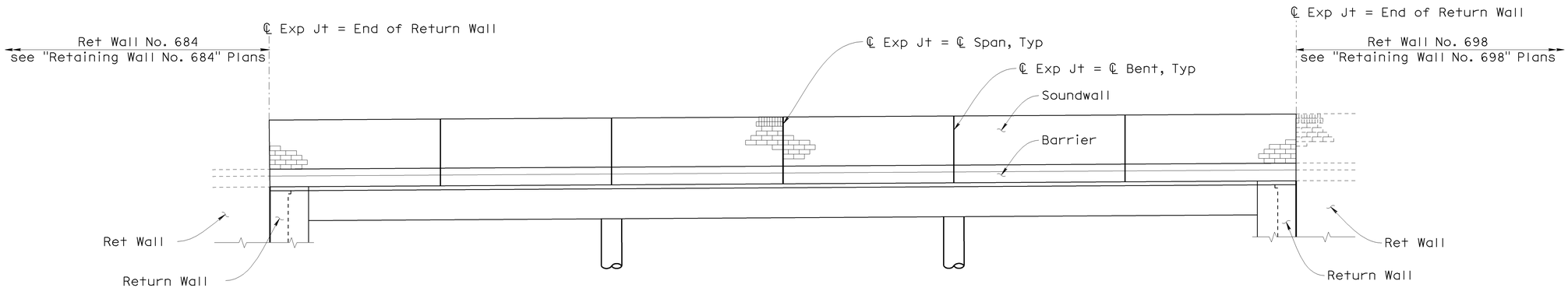


## ELEVATION - (WIDEN)

1"=10'

## DESIGN NOTES

**DESIGN**

Uniform Building Code,1997 Edition and the Bridge Design Specifications.

**DESIGN WIND LOAD**

37 psf

**DESIGN SEISMIC LOAD**

2.0 Dead load

**REINFORCED CONCRETE**

f'c = 3,600 psi
fy = 60,000 psi

**CONCRETE MASONRY**

**HIGH STRENGTH**

f'm = 2500 psi
fy = 60,000 psi

**LOAD FACTORS AND LOAD COMBINATIONS**

Load Factor Design ( LFD )

Group A: βD +1.7 E + 1.7 SC
Group B: βD +1.7 E + 1.3 W
Group C: βD +1.3 E + 1.0 EQE
Group D: βD +1.3 E + 1.0 EQD
Group E: βD +1.1 E + 0.85 ( EQE + EQD )

Where : β = 0.9 or 1.2, whichever controls in design
D = Dead load
E = Lateral earth pressure
SC = Live load surcharge
W = Wind load
EQD = Seismic dead load
EQE = Seismic earth load

**STRENGTH REDUCTION FACTORS, Ø**

Reinforced concrete:
For flexure _____ Ø=0.90
For shear _____ Ø=0.85

Concrete masonry:
For flexure _____ Ø=0.80
For shear _____ Ø=0.60

## GENERAL NOTES

Note A: For type of block, see Masonry Block Type Table on "Soundwall Details No. 2" sheet

Note B: When blocks are laid in stacked bond, ladder type, galvanized joint reinforcement shall be provided. A minimum of 2 - 0.148" wires continuous at 4'-0" maximum to be used. Locate reinforcement in joints that are at the approximate midpoint between bond beams.

Note C: Horizontal joints shall be tooled concave or may be weathered.
Vertical joints shall be tooled concave or may be raked.

Note D: All masonry to be high strength unless otherwise noted.

Note E: For location of expansion joint, see Elevation.

**NOTE:**

The Contractor shall verify all controlling field dimensions before ordering or fabricating any materials.

**NOTE:**

1. Barrier, Deck and Concrete Masonry are designed by the Strength Design Method.

DESIGN OVERSIGHT Jon Hamaguchi
6-9-09
SIGN OFF DATE

| | BY | CHECKED |
|---|---|---|
| DESIGN | M. Atiqullah / A. Issa | M. Desai / E. Cutler |
| DETAILS | M. Atiqullah / A. Issa | M. Desai / E. Cutler |
| QUANTITIES | A. Issa | E. Cutler |

PREPARED FOR THE STATE OF CALIFORNIA DEPARTMENT OF TRANSPORTATION

Ayman Salama
PROJECT ENGINEER

BRIDGE NO. 55-0482
POST MILE 20.61

# BREA OVERHEAD (WIDEN)
# SOUNDWALL DETAILS NO. 1

DESIGN DETAIL SHEET (ENGLISH) (REV. 2/25/05)

ORIGINAL SCALE IN INCHES FOR REDUCED PLANS 0 1 2 3

CU 12220
EA 0F0321

DISREGARD PRINTS BEARING EARLIER REVISION DATES

REVISION DATES (PRELIMINARY STAGE ONLY) 01/16/09 04/07/09 04/17/09 06/08/09

SHEET 19 OF 25

FILE => 55-0482-t-swdt01.dgn

USERNAME => trienard DATE PLOTTED => 25-JAN-2010 TIME PLOTTED => 08:15

| DIST | COUNTY | ROUTE | POST MILES TOTAL PROJECT | SHEET No | TOTAL SHEETS |
|---|---|---|---|---|---|
| 12 | Ora | 57 | 18.4/20.9 | 618 | 856 |

REGISTERED CIVIL ENGINEER — DATE 06/08/09

1-25-10
PLANS APPROVAL DATE

REGISTERED PROFESSIONAL ENGINEER — MOHAMMED ATIQULLAH — No. C47027 — Exp. 12/31/09 — CIVIL — STATE OF CALIFORNIA

*The State of California or its officers or agents shall not be responsible for the accuracy or completeness of electronic copies of this plan sheet.*

OCTA
550 S. MAIN STREET
ORANGE, CA 92863

CH2M HILL
6 HUTTON CENTRE DRIVE, SUITE 700
SANTA ANA, CA 92707

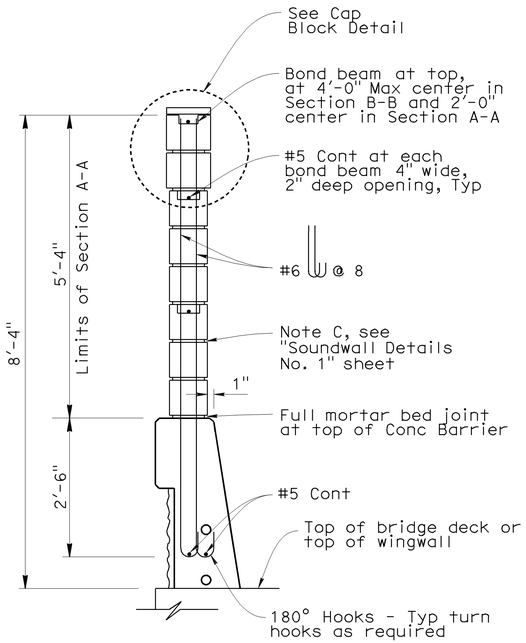


## SOUNDWALL SECTION

3/4" = 1'-0"

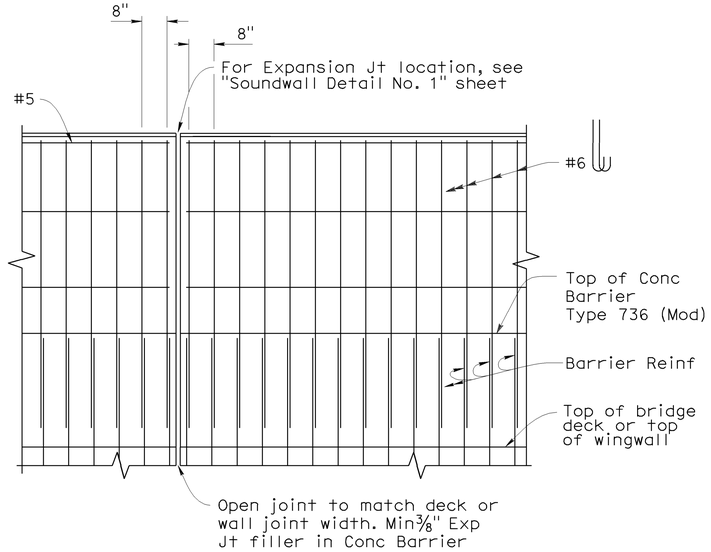


## WALL JOINT DETAIL

No Scale

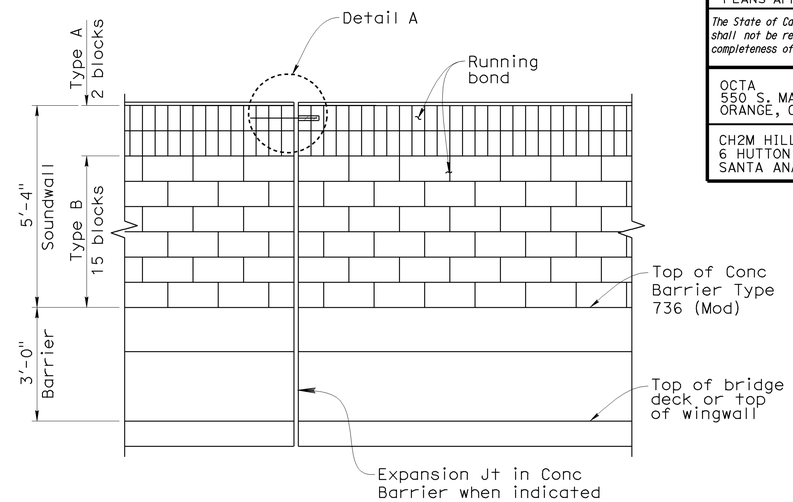


## SOUNDWALL - ARCHITECTURAL TREATMENT DETAIL

1/2"=1'-0"

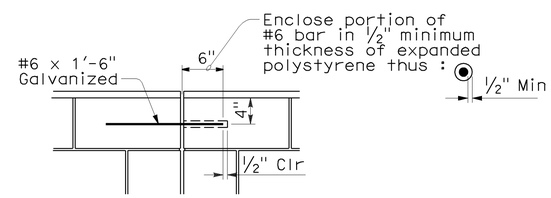


## DETAIL A

No Scale

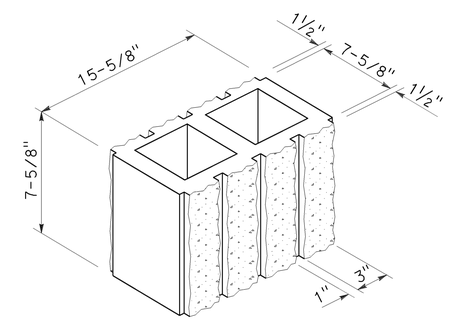


## DETAIL B

No Scale

8" WIDE 3-SCORE SPLIT FACE BOTH SIDES

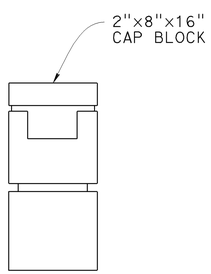


## CAP BLOCK DETAIL

No Scale

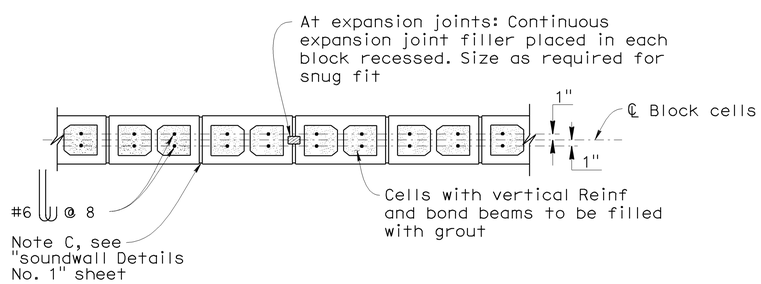


## SECTION A-A

No Scale

**NOTE:**

The Contractor shall verify all controlling field dimensions before ordering or fabricating any materials.

| MASONRY BLOCK TYPE TABLE | |
|---|---|
| Block Type | Block Description |
| A | Wall cap rows (Tan scored split face concrete) 3 scored, see Detail B |
| B | Main wall surface (Tan split face concrete) |

DESIGN OVERSIGHT — Jon Hamaguchi
6-9-09
SIGN OFF DATE

| | BY | CHECKED |
|---|---|---|
| DESIGN | M. Atiqullah / A. Issa | M. Desai / E. Cutler |
| DETAILS | M. Atiqullah / A. Issa | M. Desai / E. Cutler |
| QUANTITIES | A. Issa | E. Cutler |

PREPARED FOR THE STATE OF CALIFORNIA DEPARTMENT OF TRANSPORTATION

Ayman Salama
PROJECT ENGINEER

BRIDGE NO. 55-0482
POST MILE 20.61

# BREA OVERHEAD (WIDEN)
## SOUNDWALL DETAILS NO. 2

DESIGN DETAIL SHEET (ENGLISH) (REV. 2/25/05)

ORIGINAL SCALE IN INCHES FOR REDUCED PLANS 0 1 2 3

CU 12220
EA 0F0321

DISREGARD PRINTS BEARING EARLIER REVISION DATES — REVISION DATES (PRELIMINARY STAGE ONLY) 01/14/09 04/07/09 04/17/09 06/08/09

SHEET 20 OF 25

FILE => 55-0482-t-swdt02.dgn

USERNAME => ttrenord DATE PLOTTED => 25-JAN-2010 TIME PLOTTED => 08:15

| DIST | COUNTY | ROUTE | POST MILES TOTAL PROJECT | SHEET No | TOTAL SHEETS |
|---|---|---|---|---|---|
| 12 | Ora | 57 | 18.4/20.9 | 619 | 856 |

REGISTERED CIVIL ENGINEER — DATE 06/08/09

1-25-10
PLANS APPROVAL DATE

REGISTERED PROFESSIONAL ENGINEER — MOHAMMED ATIQULLAH — No. C47027 — Exp. 12/31/09 — CIVIL — STATE OF CALIFORNIA

*The State of California or its officers or agents shall not be responsible for the accuracy or completeness of electronic copies of this plan sheet.*

OCTA
550 S. MAIN STREET
ORANGE, CA 92863

CH2M HILL
6 HUTTON CENTRE DRIVE, SUITE 700
SANTA ANA, CA 92707

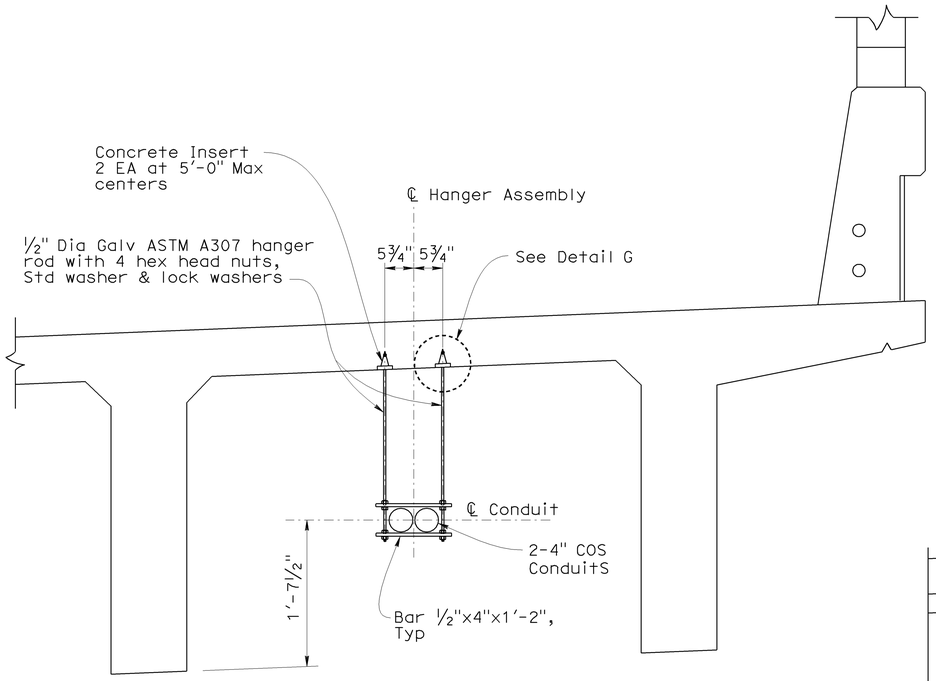


## COS CONDUIT HANGER SUPPORT DETAIL

1" = 1'-0"

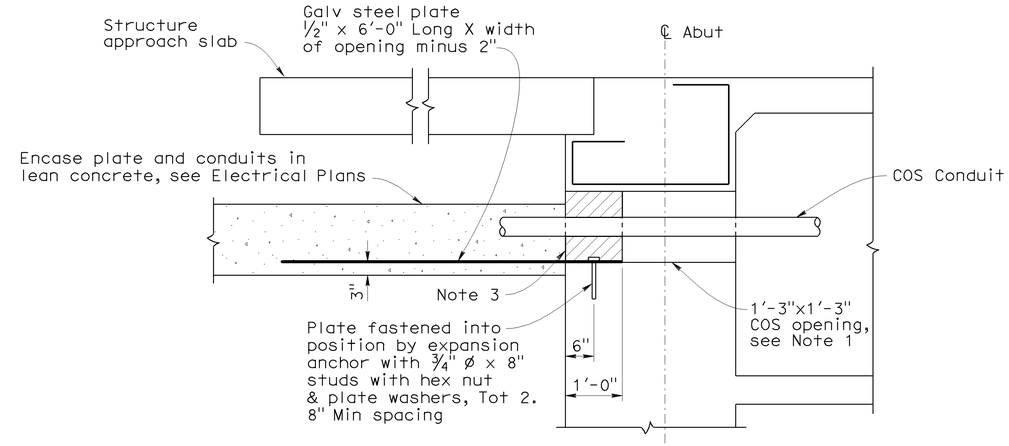


## DETAIL AT ABUTMENT OPENING FOR COS CONDUITS

¾"=1'-0"

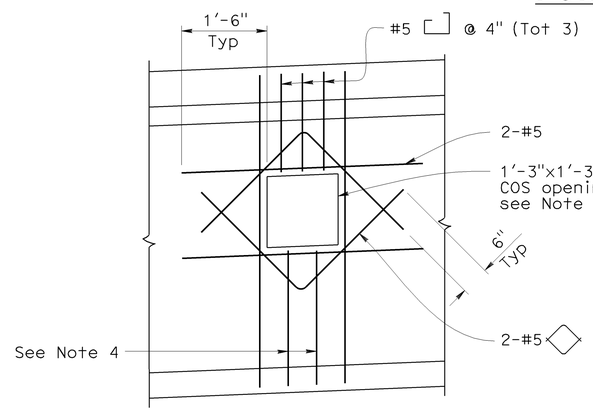


## ABUTMENT DIAPHRAGM

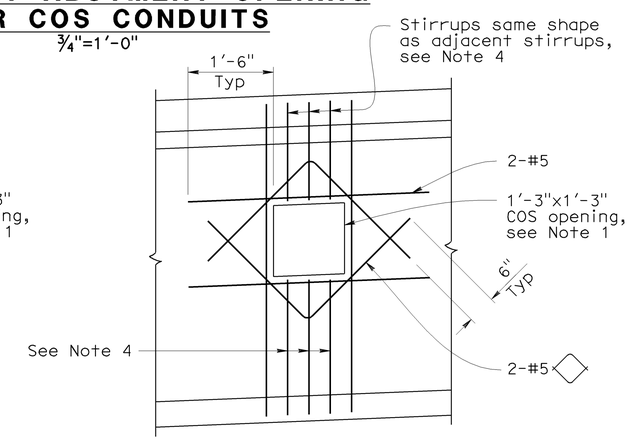


## INTERMEDIATE DIAPHRAGM

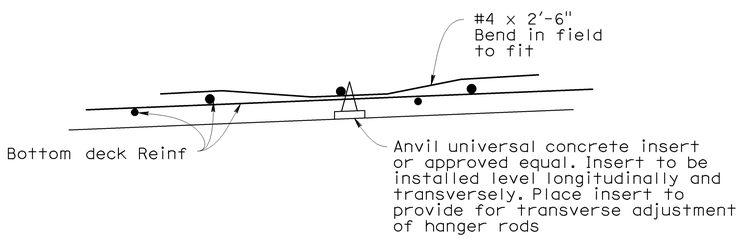


## DETAIL G

No Scale

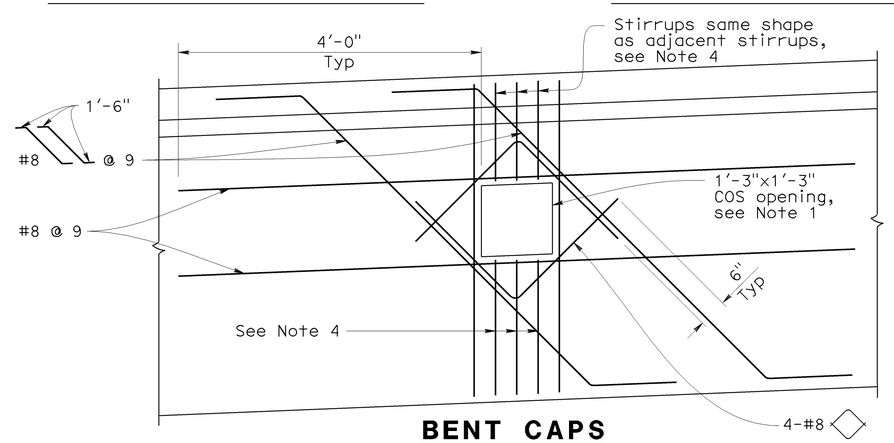


## BENT CAPS
## COS CONDUIT OPENING DETAIL

¾"=1'-0"

**NOTES:**

1. The exact location, elevation, size and direction of COS openings, see "Abutment 1 Layout", "Abutment 2 Layout" and "Typical Section" sheets.
2. All reinforcement detailed to be placed in addition to reinforcement shown on Project Plans.
3. Seal conduits at abutments with concrete or mortar, after tightly wrapping utility with 2 layers of 15 LBS building paper.
4. Reinforcement to be same bar size, and ⅔ the spacing of adjacent reinforcement shown on Project Plans.
5. Reinforcement to be same bar size and shape as adjacent reinforcement shown on Project Plans.
6. When there is insufficient space to place reinforcement as shown, hook reinforcement into exterior girder.

**NOTE:**

The Contractor shall verify all controlling field dimensions before ordering or fabricating any materials.

DESIGN OVERSIGHT — Jon Hamaguchi
6-9-09
SIGN OFF DATE

| | BY | CHECKED |
|---|---|---|
| DESIGN | M. Atiqullah / A. Issa | M. Desai / E. Cutler |
| DETAILS | M. Atiqullah / A. Issa | M. Desai / E. Cutler |
| QUANTITIES | A. Issa | E. Cutler |

PREPARED FOR THE STATE OF CALIFORNIA DEPARTMENT OF TRANSPORTATION

Ayman Salama
PROJECT ENGINEER

BRIDGE NO. 55-0482
POST MILE 20.61

# BREA OVERHEAD (WIDEN)
# MISCELLANEOUS DETAILS

DESIGN DETAIL SHEET (ENGLISH) (REV. 2/25/05)

ORIGINAL SCALE IN INCHES FOR REDUCED PLANS 0 1 2 3

CU 12220
EA 0F0321

DISREGARD PRINTS BEARING EARLIER REVISION DATES

REVISION DATES (PRELIMINARY STAGE ONLY) 01/26/09 04/07/09 04/17/09 06/08/09

SHEET 21 OF 25

FILE => 55-0482-u-miscdt01.dgn

USERNAME => trlenard DATE PLOTTED => 25-JAN-2010 TIME PLOTTED => 08:15

| DIST | COUNTY | ROUTE | POST MILES TOTAL PROJECT | SHEET No | TOTAL SHEETS |
|---|---|---|---|---|---|
| 12 | Ora | 57 | 18.4/20.9 | 620 | 856 |

GEOTECHNICAL PROFESSIONAL — DATE 06/08/09

1-25-10
PLANS APPROVAL DATE

REGISTERED PROFESSIONAL ENGINEER — HISHAM M. NOFAL No. 2765 Exp. 09/30/09 GEOTECHNICAL — STATE OF CALIFORNIA

*The State of California or its officers or agents shall not be responsible for the accuracy or completeness of electronic copies of this plan sheet.*

OCTA
550 S. MAIN STREET
ORANGE, CA 92863

CH2M HILL
6 HUTTON CENTRE DRIVE, SUITE 700
SANTA ANA, CA 92707

**BENCHMARK:**

Horizontal coordinates are CCS NAD-83, Zone 6.
Vertical control based on North American Vertical Datum 1988.
Pt 1079: N2282339.808, E6067144.835, Elev 407.210
Pt 1081: N2282931.290, E6067198.604, Elev 422.355

SAMPLER TYPES:

California modified ring sampler
standard penetration test sampler

HAMMER TYPE:

Automatic hammer

CORRECTION FACTOR:

To convert from California modified ring sampler blow count to equivalent standard penetration test sampler blow count, for granular and cohesive soil, multiply by 0.67.

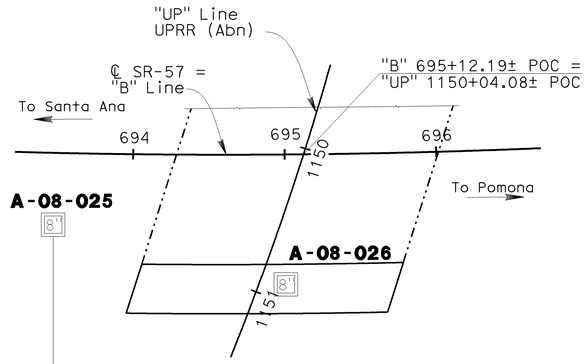


**PLAN**
1"=50'




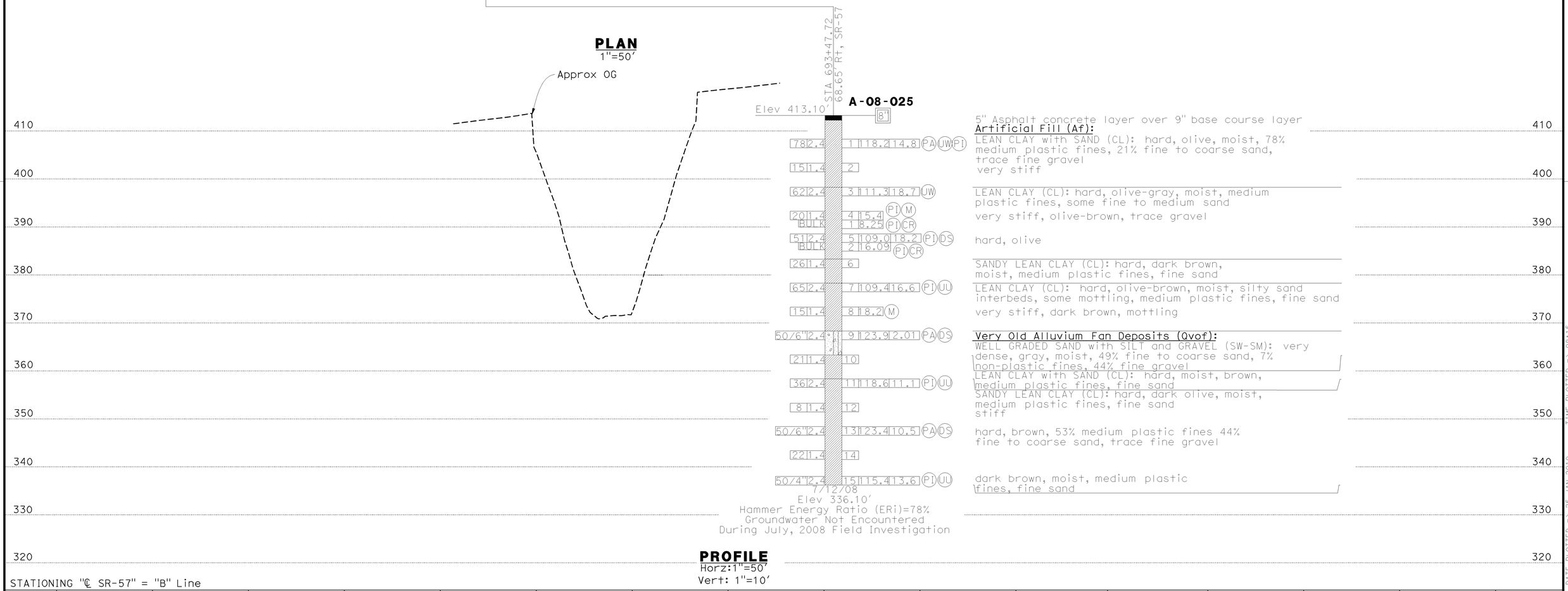


**PROFILE**
Horz:1"=50'
Vert: 1"=10'

STATIONING "℄ SR-57" = "B" Line

689 690 691 692 693 964 695 696 697 698 699 700 701 702 703 704

| | | | |
|---|---|---|---|
| DESIGN OVERSIGHT Jon Hamaguchi | DRAWN BY | R. Reyes | R. Bethapudi FIELD INVESTIGATION BY: |
| 6-9-09 SIGN OFF DATE | CHECKED BY | H. Nofal | DATE |

PREPARED FOR THE STATE OF CALIFORNIA DEPARTMENT OF TRANSPORTATION

Ayman Salama
PROJECT ENGINEER

BRIDGE NO. 55-0482
POST MILES 20.61

# BREA OVERHEAD (WIDEN)
# LOG OF TEST BORINGS SHEET 1 OF 4

ORIGINAL SCALE IN INCHES FOR REDUCED PLANS 0 1 2 3

CU 12220
EA 0F0321

DISREGARD PRINTS BEARING EARLIER REVISION DATES → 01/18/09 04/07/09 04/17/09 06/08/09

SHEET 22 OF 25

FILE => 55-0482-z-1tb01.dgn

USERNAME => rtrienard DATE PLOTTED => 25-JAN-2010 TIME PLOTTED => 08:15

| DIST | COUNTY | ROUTE | POST MILES TOTAL PROJECT | SHEET No | TOTAL SHEETS |
|---|---|---|---|---|---|
| 12 | Ora | 57 | 18.4/20.9 | 621 | 856 |

GEOTECHNICAL PROFESSIONAL — DATE 06/08/09

1-25-10
PLANS APPROVAL DATE

REGISTERED PROFESSIONAL ENGINEER — HISHAM M. NOFAL No. 2765 Exp. 09/30/09 GEOTECHNICAL — STATE OF CALIFORNIA

*The State of California or its officers or agents shall not be responsible for the accuracy or completeness of electronic copies of this plan sheet.*

OCTA
550 S. MAIN STREET
ORANGE, CA 92863

CH2M HILL
6 HUTTON CENTRE DRIVE, SUITE 700
SANTA ANA, CA 92707

**BENCHMARK:**

Horizontal coordinates are CCS NAD-83, Zone 6.
Vertical control based on North American Vertical Datum 1988.
Pt 1079: N2282339.808, E6067144.835, Elev 407.210
Pt 1081: N2282931.290, E6067198.604, Elev 422.355

SAMPLER TYPES:

California modified ring sampler
standard penetration test sampler

HAMMER TYPE:

Automatic hammer

CORRECTION FACTOR:

To convert from California modified ring sampler blow count to equivalent standard penetration test sampler blow count, for granular and cohesive soil, multiply by 0.67.

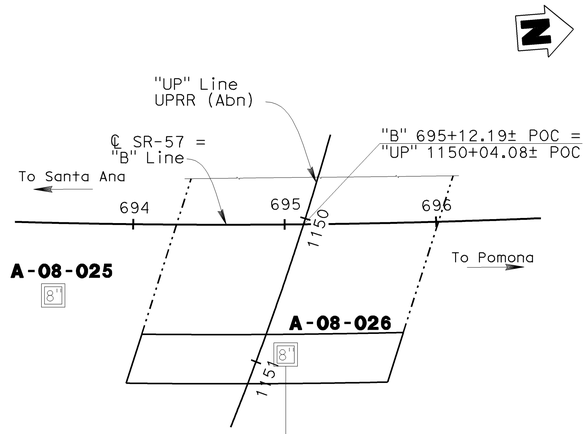


**PLAN**
1"=50'

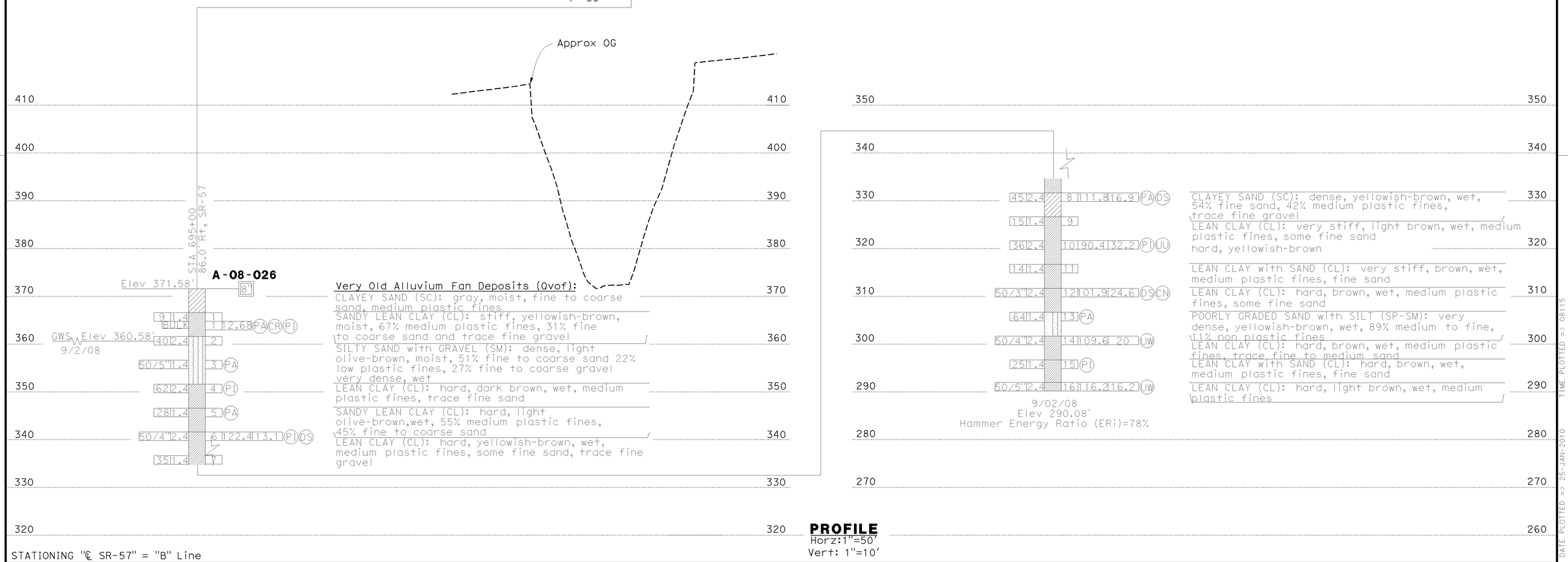


**PROFILE**
Horz:1"=50'
Vert: 1"=10'

| | | | |
|---|---|---|---|
| Jon Hamaguchi — DESIGN OVERSIGHT | DRAWN BY | R. Reyes | R. Bethapudi — FIELD INVESTIGATION BY: |
| 6-9-09 — SIGN OFF DATE | CHECKED BY | H. Nofal | DATE |

PREPARED FOR THE STATE OF CALIFORNIA DEPARTMENT OF TRANSPORTATION

Ayman Salama — PROJECT ENGINEER

BRIDGE NO. 55-0482
POST MILES 20.61

# BREA OVERHEAD (WIDEN)

## LOG OF TEST BORINGS SHEET 2 OF 4

ORIGINAL SCALE IN INCHES FOR REDUCED PLANS 0 1 2 3

CU 12220
EA 0F0321

DISREGARD PRINTS BEARING EARLIER REVISION DATES

REVISION DATES (PRELIMINARY STAGE ONLY): 01/16/09 04/07/09 04/17/09 06/08/09

SHEET 23 OF 25

FILE => 55-0482-z-1tb02.dgn

USERNAME => friehard DATE PLOTTED => 25-JAN-2010 TIME PLOTTED => 08:15

| DIST | COUNTY | ROUTE | POST MILES TOTAL PROJECT | SHEET No | TOTAL SHEETS |
|---|---|---|---|---|---|
| 12 | Ora | 57 | 18.4/20.9 | 622 | 856 |

Hisham Nofal 06/08/09
GEOTECHNICAL PROFESSIONAL DATE

1-25-10
PLANS APPROVAL DATE

REGISTERED PROFESSIONAL ENGINEER HISHAM M. NOFAL No. 2765 Exp. 09/30/09 GEOTECHNICAL STATE OF CALIFORNIA

*The State of California or its officers or agents shall not be responsible for the accuracy or completeness of electronic copies of this plan sheet.*

OCTA
550 S. MAIN STREET
ORANGE, CA 92863

CH2M HILL
6 HUTTON CENTRE DRIVE, SUITE 700
SANTA ANA, CA 92707

REFERENCE: CALTRANS SOIL & ROCK LOGGING, CLASSIFICATION, AND PRESENTATION MANUAL (JUNE 2007)

## GROUP SYMBOLS AND NAMES

| Graphic/Symbol | Group Names |
|---|---|
| GW | Well-graded GRAVEL<br>Well-graded GRAVEL with SAND |
| GP | Poorly graded GRAVEL<br>Poorly graded GRAVEL with SAND |
| GW-GM | Well-graded GRAVEL with SILT<br>Well-graded GRAVEL with SILT and SAND |
| GW-GC | Well-graded GRAVEL with CLAY (or SILTY CLAY)<br>Well-graded GRAVEL with CLAY and SAND (or SILTY CLAY and SAND) |
| GP-GM | Poorly graded GRAVEL with SILT<br>Poorly graded GRAVEL with SILT and SAND |
| GP-GC | Poorly graded GRAVEL with CLAY (or SILTY CLAY)<br>Poorly graded GRAVEL with CLAY and SAND (or SILTY CLAY and SAND) |
| GM | SILTY GRAVEL<br>SILTY GRAVEL with SAND |
| GC | CLAYEY GRAVEL<br>CLAYEY GRAVEL with SAND |
| GC-GM | SILTY, CLAYEY GRAVEL<br>SILTY, CLAYEY GRAVEL with SAND |
| SW | Well-graded SAND<br>Well-graded SAND with GRAVEL |
| SP | Poorly graded SAND<br>Poorly graded SAND with GRAVEL |
| SW-SM | Well-graded SAND with SILT<br>Well-graded SAND with SILT and GRAVEL |
| SW-SC | Well-graded SAND with CLAY (or SILTY CLAY)<br>Well-graded SAND with CLAY and GRAVEL (or SILTY CLAY and GRAVEL) |
| SP-SM | Poorly graded SAND with SILT<br>Poorly graded SAND with SILT and GRAVEL |
| SP-SC | Poorly graded SAND with CLAY (or SILTY CLAY)<br>Poorly graded SAND with CLAY and GRAVEL (or SILTY CLAY and GRAVEL) |
| SM | SILTY SAND<br>SILTY SAND with GRAVEL |
| SC | CLAYEY SAND<br>CLAYEY SAND with GRAVEL |
| SC-SM | SILTY, CLAYEY SAND<br>SILTY, CLAYEY SAND with GRAVEL |
| PT | PEAT |
| | COBBLES<br>COBBLES and BOULDERS<br>BOULDERS |

| Graphic/Symbol | Group Names |
|---|---|
| CL | Lean CLAY<br>Lean CLAY with SAND<br>Lean CLAY with GRAVEL<br>SANDY lean CLAY<br>SANDY lean CLAY with GRAVEL<br>GRAVELLY lean CLAY<br>GRAVELLY lean CLAY with SAND |
| CL-ML | SILTY CLAY<br>SILTY CLAY with SAND<br>SILTY CLAY with GRAVEL<br>SANDY SILTY CLAY<br>SANDY SILTY CLAY with GRAVEL<br>GRAVELLY SILTY CLAY<br>GRAVELLY SILTY CLAY with SAND |
| ML | SILT<br>SILT with SAND<br>SILT with GRAVEL<br>SANDY SILT<br>SANDY SILT with GRAVEL<br>GRAVELLY SILT<br>GRAVELLY SILT with SAND |
| OL | ORGANIC lean CLAY<br>ORGANIC lean CLAY with SAND<br>ORGANIC lean CLAY with GRAVEL<br>SANDY ORGANIC lean CLAY<br>SANDY ORGANIC lean CLAY with GRAVEL<br>GRAVELLY ORGANIC lean CLAY<br>GRAVELLY ORGANIC lean CLAY with SAND |
| OL | ORGANIC SILT<br>ORGANIC SILT with SAND<br>ORGANIC SILT with GRAVEL<br>SANDY ORGANIC SILT<br>SANDY ORGANIC SILT with GRAVEL<br>GRAVELLY ORGANIC SILT<br>GRAVELLY ORGANIC SILT with SAND |
| CH | Fat CLAY<br>Fat CLAY with SAND<br>Fat CLAY with GRAVEL<br>SANDY fat CLAY<br>SANDY fat CLAY with GRAVEL<br>GRAVELLY fat CLAY<br>GRAVELLY fat CLAY with SAND |
| MH | Elastic SILT<br>Elastic SILT with SAND<br>Elastic SILT with GRAVEL<br>SANDY elastic SILT<br>SANDY elastic SILT with GRAVEL<br>GRAVELLY elastic SILT<br>GRAVELLY elastic SILT with SAND |
| OH | ORGANIC fat CLAY<br>ORGANIC fat CLAY with SAND<br>ORGANIC fat CLAY with GRAVEL<br>SANDY ORGANIC fat CLAY<br>SANDY ORGANIC fat CLAY with GRAVEL<br>GRAVELLY ORGANIC fat CLAY<br>GRAVELLY ORGANIC fat CLAY with SAND |
| OH | ORGANIC elastic SILT<br>ORGANIC elastic SILT with SAND<br>ORGANIC elastic SILT with GRAVEL<br>SANDY ORGANIC elastic SILT<br>SANDY ORGANIC elastic SILT with GRAVEL<br>GRAVELLY ORGANIC elastic SILT<br>GRAVELLY ORGANIC elastic SILT with SAND |
| OL/OH | ORGANIC SOIL<br>ORGANIC SOIL with SAND<br>ORGANIC SOIL with GRAVEL<br>SANDY ORGANIC SOIL<br>SANDY ORGANIC SOIL with GRAVEL<br>GRAVELLY ORGANIC SOIL<br>GRAVELLY ORGANIC SOIL with SAND |

## FIELD AND LABORATORY TESTING

- (C) Consolidation (ASTM D 2435)
- (CL) Collapse Potential (ASTM D 5333)
- (CP) Compaction Curve (CTM 216)
- (CR) Corrosivity Testing (CTM 643, CTM 422, CTM 417)
- (CU) Consolidated Undrained Triaxial (ASTM D 4767)
- (DS) Direct Shear (ASTM D 3080)
- (EI) Expansion Index (ASTM D 4829)
- (M) Moisture Content (ASTM D 2216)
- (OC) Organic Content-% (ASTM D 2974)
- (P) Permeability (CTM 220)
- (PA) Particle Size Analysis (ASTM D 422)
- (PI) Plasticity Index (AASHTO T 90) Liquid Limit (AASHTO T 89)
- (PL) Point Load Index (ASTM D 5731)
- (PM) Pressure Meter
- (PP) Pocket Penetrometer
- (R) R-Value (CTM 301)
- (SE) Sand Equivalent (CTM 217)
- (SG) Specific Gravity (AASHTO T 100)
- (SL) Shrinkage Limit (ASTM D 427)
- (SW) Swell Potential (ASTM D 4546)
- (TV) Pocket Torvane
- (UC) Unconfined Compression-Soil (ASTM D 2166) Unconfined Compression-Rock (ASTM D 2938)
- (UU) Unconsolidated Undrained Triaxial (ASTM D 2850)
- (UW) Unit Weight (ASTM D 4767)
- (VS) Vane Shear (AASHTO T 223)

## APPARENT DENSITY OF COHESIONLESS SOILS

| Description | SPT $N_{60}$ (Blows / 12 inches) |
|---|---|
| Very loose | 0 - 4 |
| Loose | 5 - 10 |
| Medium Dense | 11 - 30 |
| Dense | 31 - 50 |
| Very Dense | > 50 |

## MOISTURE

| Description | Criteria |
|---|---|
| Dry | Absence of moisture, dusty, dry to the touch |
| Moist | Damp but no visible water |
| Wet | Visible free water, usually soil is below water table |

## PERCENT OR PROPORTION OF SOILS

| Description | Criteria |
|---|---|
| Trace | Particles are present but estimated to be less than 5% |
| Few | 5 to 10% |
| Little | 15 to 25% |
| Some | 30 to 45% |
| Mostly | 50 to 100% |

## PARTICLE SIZE

| Description | | Size |
|---|---|---|
| Boulder | | > 12" |
| Cobble | | 3" to 12" |
| Gravel | Coarse | 3/4" to 3" |
| | Fine | No. 4 to 3/4" |
| Sand | Coarse | No. 10 to No. 4 |
| | Medium | No. 40 to No. 10 |
| | Fine | No. 200 to No. 40 |

## CEMENTATION

| Description | Criteria |
|---|---|
| Weak | Crumbles or breaks with handling or little finger pressure. |
| Moderate | Crumbles or breaks with considerable finger pressure. |
| Strong | Will not crumble or break with finger pressure. |

## CONSISTENCY OF COHESIVE SOILS

| Description | Unconfined Compressive Strength (tsf) | Pocket Penetrometer Measurement (tsf) | Torvane Measurement (tsf) | Field Approximation |
|---|---|---|---|---|
| Very Soft | < 0.25 | < 0.25 | < 0.12 | Easily penetrated several inches by fist |
| Soft | 0.25 to 0.50 | 0.25 to 0.50 | 0.12 to 0.25 | Easily penetrated several inches by thumb |
| Medium Stiff | 0.50 to 1.0 | 0.50 to 1.0 | 0.25 to 0.50 | Penetrated several inches by thumb with moderate effort |
| Stiff | 1 to 2 | 1 to 2 | 0.50 to 1.0 | Readily indented by thumb but penetrated only with great effort |
| Very Stiff | 2 to 4 | 2 to 4 | 1.0 to 2.0 | Readily indented by thumbnail |
| Hard | > 4.0 | > 4.0 | > 2.0 | Indented by thumbnail with difficulty |

## PLASTICITY OF FINE-GRAINED SOILS

| Description | Criteria |
|---|---|
| Nonplastic | A 1/8-inch thread cannot be rolled at any water content. |
| Low | The thread can barely be rolled and the lump cannot be formed when drier than the plastic limit. |
| Medium | The thread is easy to roll and not much time is required to reach the plastic limit. The thread cannot be rerolled after reaching the plastic limit. The lump crumbles when drier than the plastic limit. |
| High | It takes considerable time rolling and kneading to reach the plastic limit. The thread can be rerolled several times after reaching the plastic limit. The lump can be formed without crumbling when drier than the plastic limit. |

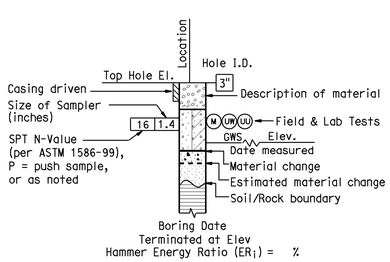


ROTARY BORING

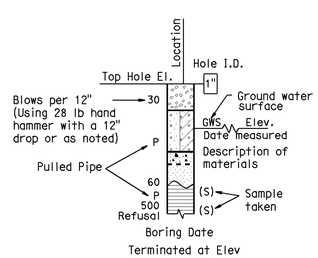


HAND BORING

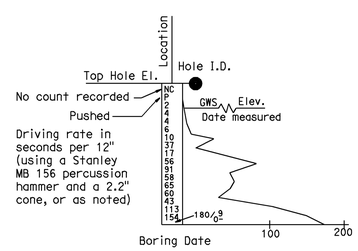


DYNAMIC CONE PENETRATION BORING

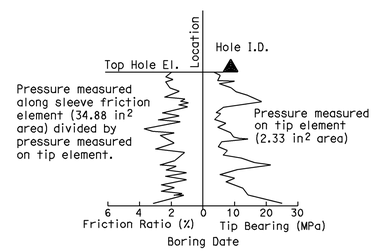


CONE PENETRATION TEST (CPT) SOUNDING

## BOREHOLE IDENTIFICATION

| Symbol | Hole Type | Description |
|---|---|---|
| Size | A | Auger Boring |
| Size | R<br>P | Rotary drilled boring<br>Rotary percussion boring (air) |
| Size | R | Rotary drilled diamond core |
| Size | HD<br>HA | Hand driven (1-inch soil tube)<br>Hand Auger |
| ● | D | Dynamic Cone Penetration Boring |
| ◕ | B | Hollow Stem Auger Boring (HSA) |
| ▲ | CPT | Cone Penetration Test (ASTM D 5778-95) |
| ⬚ | O | Other |

**Note: Size in inches.**

Jon Hamaguchi
DESIGN OVERSIGHT Jon Hamaguchi
6-9-09
SIGN OFF DATE

DRAWN BY K. Reyes
CHECKED BY H. Nofal

R. Bethapudi
FIELD INVESTIGATION BY:
DATE

PREPARED FOR THE STATE OF CALIFORNIA DEPARTMENT OF TRANSPORTATION

Ayman Salama
PROJECT ENGINEER

BRIDGE NO. 55-0482
POST MILES 20.61

# BREA OVERHEAD (WIDEN)
# SOIL LEGEND
# LOG OF TEST BORINGS SHEET 3 OF 4

ORIGINAL SCALE IN INCHES FOR REDUCED PLANS 0 1 2 3

CU 12220
EA 0F0321

DISREGARD PRINTS BEARING EARLIER REVISION DATES
REVISION DATES (PRELIMINARY STAGE ONLY) 01/16/09 04/07/09 04/27/09 06/08/09

SHEET 24 OF 25

FILE => 55-0482-z-1tb03.dgn

USERNAME => trlenard DATE PLOTTED => 25-JAN-2010 TIME PLOTTED => 08:15

| DIST. | COUNTY | ROUTE | POST MILES |
|---|---|---|---|
| 12 | Ora | 57 | 18.4/20.9 |

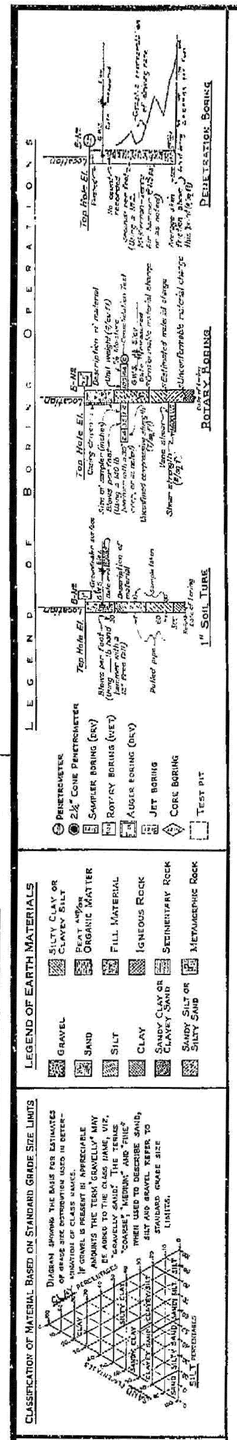


| | | |
|---|---|---|
| FIELD STUDY | by G. Wilkes | 11-16-67 |
| DRAWN | By J. Lear | 11-29-67 |
| CHECKED | By J. Memphis | 1-5-68 |

Approval Recommended by: Engineering Geologist

BRIDGE DEPARTMENT
ENGINEERING GEOLOGY SECTION

164

## BENCH MARK

BM 964-E-66 Elev 368.47
Fd Tack in conc. filled 8" I.P. marked Sta. 643+42.76 "P" P.O.T., in CTR. of tracks, 79' west of ints of S.P.R.Y. spur line and steardlease Union Oil Co. pvt. road.

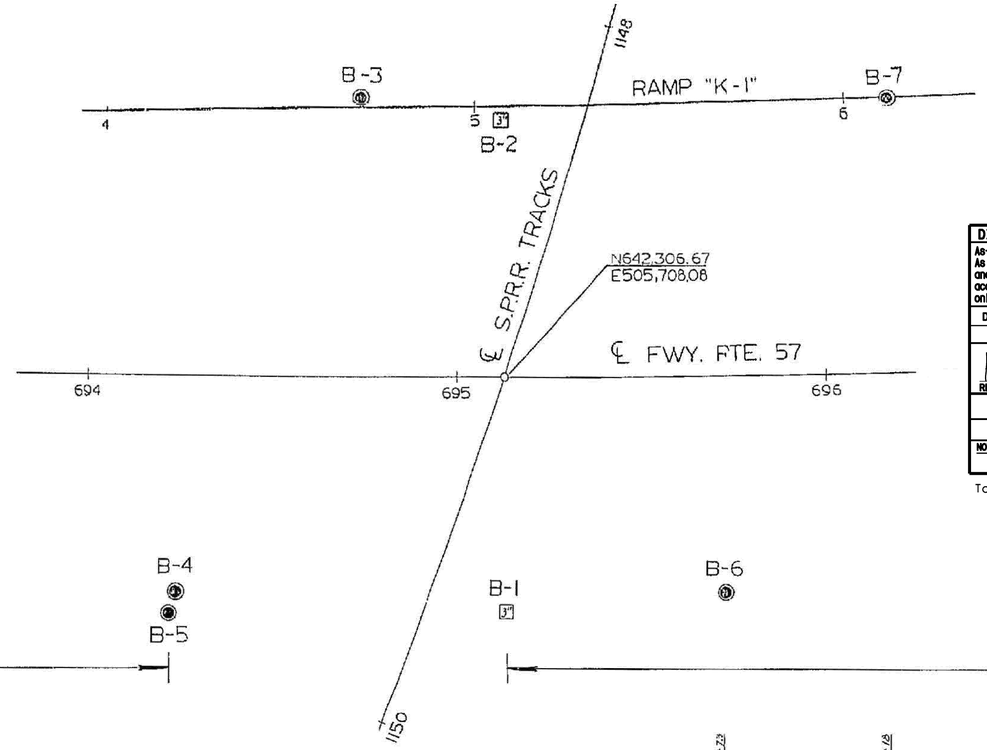


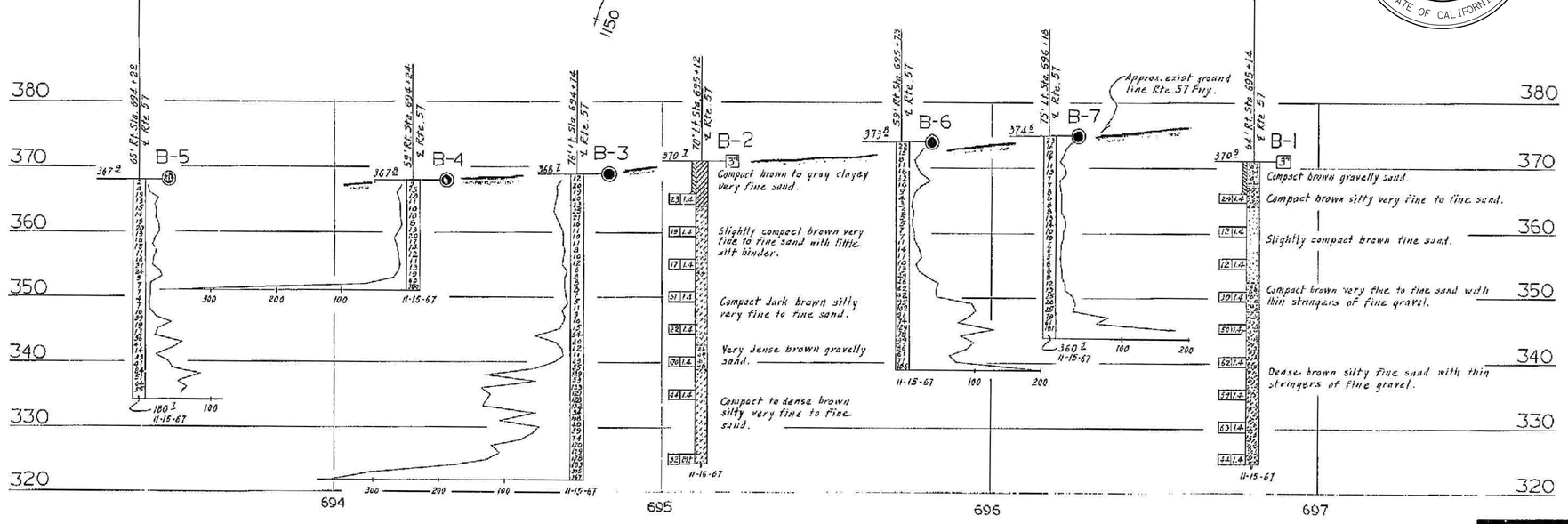


| DIVISION OF ENGINEERING SERVICES - GEOTECHNICAL SERVICES | | | | | |
|---|---|---|---|---|---|
| As-Built Log of Test Borings sheet is considered an informational document only. As such, the State of California registration seal with signature, license number and registration certificate expiration date confirm that this is a true and accurate copy of the original document. This drawing is available and presented only for the convenience of any bidder, contractor or other interested party. | | | | | |
| DIST. | COUNTY | ROUTE | POST MILES-TOTAL PROJECT | Sheet No. | Total Sheets |
| 12 | Ora | 57 | 18.4/20.9 | 623 | 856 |
| Hisham Nofal 06/08/09 REGISTERED CIVIL ENGINEER DATE | | | | | |
| BREA OVERHEAD (WIDEN) | | | | | |
| LOG OF TEST BORINGS SHEET 4 OF 4 | | | | | |
| NOTE: A COPY OF THIS LOG OF TEST BORINGS IS AVAILABLE AT OFFICE OF STRUCTURE MAINTENANCE AND INVESTIGATIONS, SACRAMENTO, CALIFORNIA | CU: 12220 EA: OF0321 | | | BRIDGE No. 55-0482 | |
| To accompany plans dated 1-25-10 | | | | Sheet 25 | of 25 |

REGISTERED PROFESSIONAL ENGINEER
HISHAM M. NOFAL
No. 2765
Exp. 09/30/09
GEOTECHNICAL
STATE OF CALIFORNIA

| DIST. | COUNTY | ROUTE | SECTION | SHEET No. | TOTAL SHEETS |
|---|---|---|---|---|---|
| 7 | ORA | 57 | 18.4/20.6 | 164 | 167 |

REGISTERED PROFESSIONAL ENGINEER
DATE APPROVED March 29, 1969

PLAN
Scale: 1" = 20'

PROFILE
Scale: Vert. 1" = 10'
Horiz. 1" = 20'

BRIDGE DEPT. GEOLOGY SECTION
DATE November 1967

AS BUILT
CONTRACTOR J. W. Hansen
CONTRACT NO. 07-032204
DATE 8-31-71
WP 11-3-71

15 OF 15

AS BUILT PLANS
Contract No. 07-032204
Date Completed
Document No. 7000 5907

STATE OF CALIFORNIA
DEPARTMENT OF PUBLIC WORKS
DIVISION OF HIGHWAYS

BREA OVERHEAD

LOG OF TEST BORINGS

| SCALE: As Noted | BRIDGE # 55-482 | FILE | DRAWING S-F 952-9 |
|---|---|---|---|

I HEREBY CERTIFY THAT THIS IS A TRUE AND ACCURATE COPY OF THE ABOVE DOCUMENT TAKEN UNDER MY DIRECTION AND CONTROL ON THIS DATE IN SACRAMENTO, CALIFORNIA PURSUANT TO AUTHORIZATION BY THE DIRECTOR OF PUBLIC WORKS.

DATE 15 Feb. 79 SIGNATURE James E. Court TITLE SR. RMO

Chg 07206
WA 032201

Disregard prints bearing earlier revisions.

PREL. DRAWING NO. PR-

FILENAME => 55-0482-z-ltb04.tif

| DIST | COUNTY | ROUTE | POST MILES TOTAL PROJECT | SHEET No | TOTAL SHEETS |
|---|---|---|---|---|---|
| 12 | Ora | 57 | 18.4/20.9 | 624 | 856 |

Milind Desai 06/08/09
REGISTERED CIVIL ENGINEER DATE

1-25-10
PLANS APPROVAL DATE

REGISTERED PROFESSIONAL ENGINEER MILLIND R. DESAI No. C51437 Exp. 6/30/10 CIVIL STATE OF CALIFORNIA

*The State of California or its officers or agents shall not be responsible for the accuracy or completeness of electronic copies of this plan sheet.*

OCTA
550 S. MAIN STREET
ORANGE, CA 92863

CH2M HILL
6 HUTTON CENTRE DRIVE, SUITE 700
SANTA ANA, CA 92707

**LEGEND:**

- Indicates Existing Structure
- Indicates New Construction
- (1) Paint "Rolling Hills Drive Undercrossing"
- (2) Paint "Bridge No. 55-0483" & Year Constructed
- (3) Structure Approach Type N(30D)
- (4) Structure Approach Type R(30D)
- (5) Construct joint seal Type B (MR=1½")
- (6) Remove Existing Type 9 Barrier, Metal Railing & Overhang
- (7) 3" Water Supply Line (Bridge) for Irrigation
- Denotes Point of Minimum Vertical Clearance
- Bridge Removal (Portion)
- * Match Existing Grade & Cross Slope

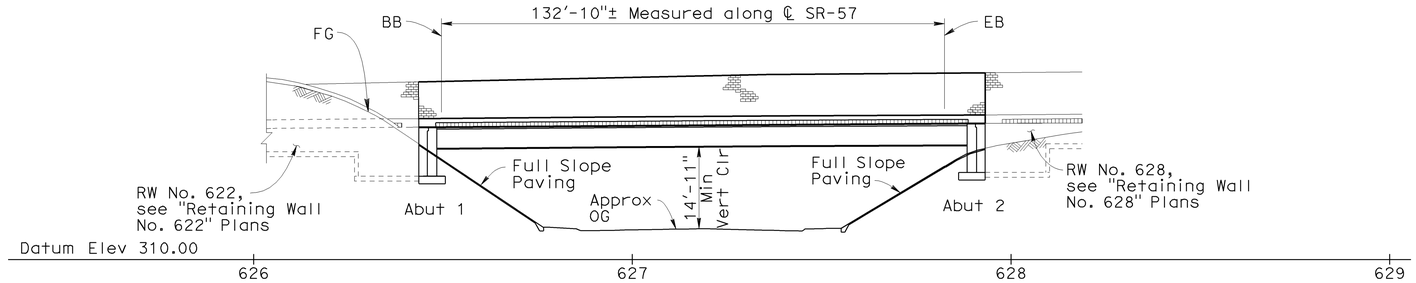


## ELEVATION
1"=20'

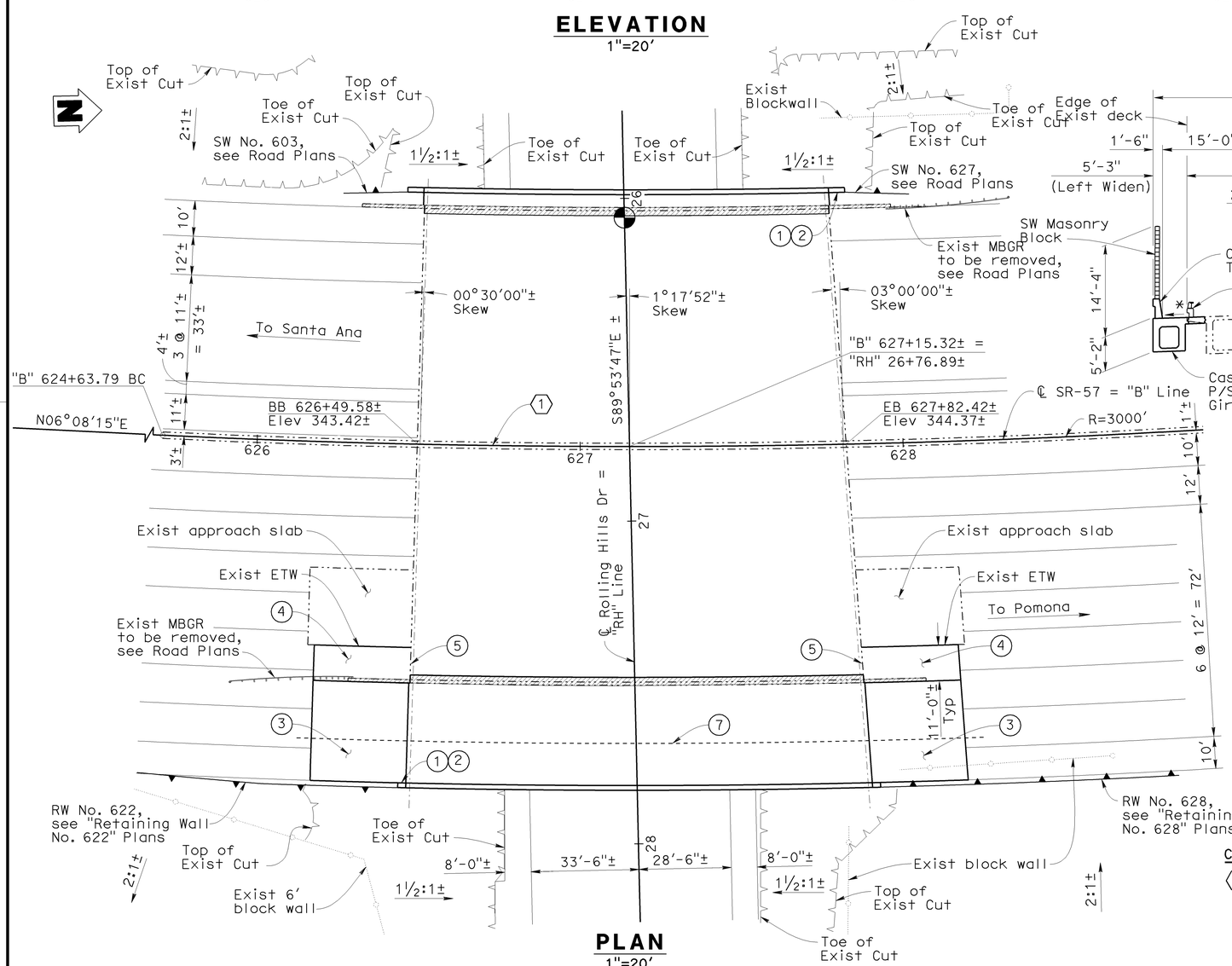


## PLAN
1"=20'

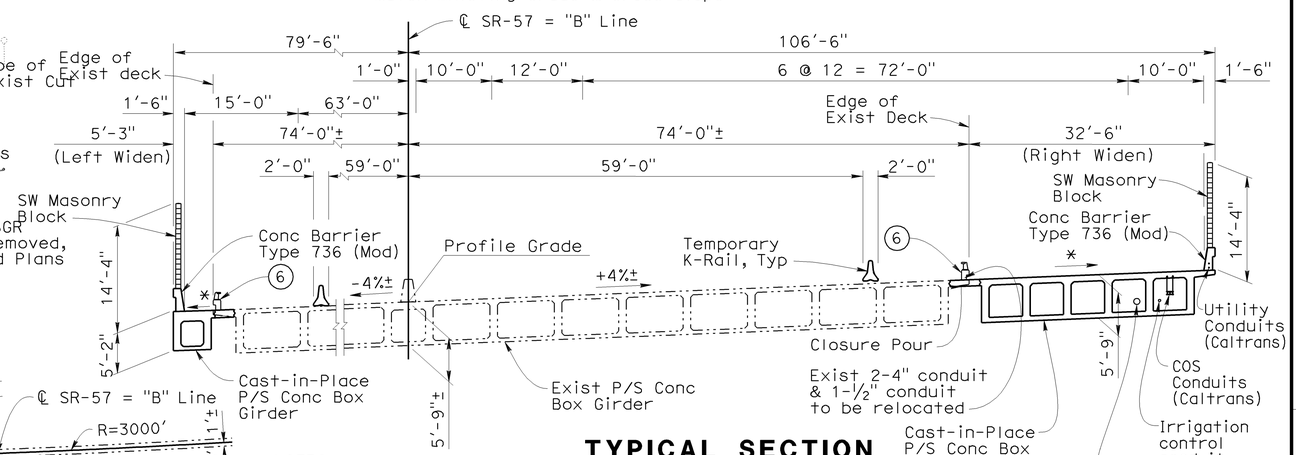


## TYPICAL SECTION
1"=10'

**NOTES:**

1. The Contractor shall verify all controlling field dimensions before ordering or fabricating any materials.
2. For General Notes, see "General Notes" sheet.

ROLLING HILLS UC (WIDEN) BR NO 55-0483
QUANTITIES

| | | |
|---|---|---|
| BRIDGE REMOVAL (PORTION), LOCATION C | LUMP | SUM |
| STRUCTURE EXCAVATION (BRIDGE) | 1,060 | CY |
| STRUCTURE EXCAVATION (TYPE Y-1) (AERIALLY DEPOSITED LEAD) | 110 | CY |
| STRUCTURE BACKFILL (BRIDGE) | 1,100 | CY |
| 3" SUPPLY LINE (BRIDGE) | 212 | LF |
| AGGREGATE BASE (APPROACH SLAB) | 11 | CY |
| PRESTRESSING CAST-IN-PLACE CONCRETE | LUMP | SUM |
| STRUCTURAL CONCRETE, BRIDGE FOOTING | 50 | CY |
| STRUCTURAL CONCRETE, BRIDGE | 551 | CY |
| STRUCTURAL CONCRETE, APPROACH SLAB (TYPE N) | 73 | CY |
| STRUCTURAL CONCRETE, APPROACH SLAB (TYPE R) | 23 | CY |
| FRACTURED RIB TEXTURE | 525 | SQFT |
| DRILL AND BOND DOWEL | 30 | LF |
| SOUND WALL (BARRIER)(MASONRY BLOCK) | 3,260 | SQFT |
| JOINT SEAL (MR 1½") | 97 | LF |
| BAR REINFORCING STEEL (BRIDGE) | 119,600 | LB |
| 3" PLASTIC PIPE DOWNDRAIN | 260 | LF |
| 6" WELDED STEEL PIPE CASING (BRIDGE) | 60 | LF |
| SLOPE PAVING (CONCRETE) | 32 | CY |
| MISCELLANEOUS METAL (BRIDGE) | 550 | LB |
| CONCRETE BARRIER (TYPE 736 MODIFIED) | 285 | LF |

**CURVE DATA**

(1) ℄ SR-57
R = 3000'±
Δ = 33°15'19"±
T = 895.92'±
L = 1741.25±

| | | | | | |
|---|---|---|---|---|---|
| DESIGN OVERSIGHT Jon Hamaguchi | DESIGN | BY M. Desai / J. Powell | CHECKED M. Atiqullah / A. Issa | LOAD FACTOR DESIGN | LIVE LOADING: HL-93 AND PERMIT (P-15) DESIGN LOAD |
| 6-9-09 SIGN OFF DATE | DETAILS | BY M. Desai / J. Powell | CHECKED M. Atiqullah / A. Issa | LAYOUT | BY N. Morales / CHECKED M. Desai |
| | QUANTITIES | BY J. Powell | CHECKED E. Cutler | SPECIFICATIONS | BY M. Remolador / PLANS AND SPECS COMPARED M. Atiqullah |

PREPARED FOR THE STATE OF CALIFORNIA DEPARTMENT OF TRANSPORTATION

Ayman Salama
PROJECT ENGINEER

BRIDGE NO. 55-0483
POST MILES 19.33

# ROLLING HILLS DRIVE UC (WIDEN)
# GENERAL PLAN

DESIGN GENERAL PLAN SHEET (ENGLISH) (REV. 2/25/05)

ORIGINAL SCALE IN INCHES FOR REDUCED PLANS 0 1 2 3

CU 12220
EA 0F0321

DISREGARD PRINTS BEARING EARLIER REVISION DATES

REVISION DATES (PRELIMINARY STAGE ONLY) 12/12/08 04/07/09 06/08/09

SHEET 1 OF 24

FILE => 55-0483-a-gp01.dgn

USERNAME => trienord DATE PLOTTED => 25-JAN-2010 TIME PLOTTED => 08:15

| DIST | COUNTY | ROUTE | POST MILES TOTAL PROJECT | SHEET No | TOTAL SHEETS |
|---|---|---|---|---|---|
| 12 | Ora | 57 | 18.4/20.9 | 625 | 856 |

REGISTERED CIVIL ENGINEER 06/08/09 DATE

1-25-10
PLANS APPROVAL DATE

REGISTERED PROFESSIONAL ENGINEER JOHN W. POWELL No. C71463 Exp. 12/31/09 CIVIL STATE OF CALIFORNIA

*The State of California or its officers or agents shall not be responsible for the accuracy or completeness of electronic copies of this plan sheet.*

OCTA
550 S. MAIN STREET
ORANGE, CA 92863

CH2M HILL
6 HUTTON CENTRE DRIVE, SUITE 700
SANTA ANA, CA 92707

## INDEX TO PLANS


| SHEET NO. | TITLE |
|---|---|
| 1. | GENERAL PLAN |
| 2. | INDEX TO PLANS |
| 3. | GENERAL NOTES |
| 4. | FOUNDATION PLAN |
| 5. | ABUTMENT 1 LAYOUT |
| 6. | ABUTMENT 2 LAYOUT |
| 7. | ABUTMENT DETAILS NO. 1 |
| 8. | ABUTMENT DETAILS NO. 2 |
| 9. | ABUTMENT DETAILS NO. 3 |
| 10. | TYPICAL SECTION |
| 11. | GIRDER LAYOUT (RIGHT WIDEN) |
| 12. | GIRDER LAYOUT (LEFT WIDEN) |
| 13. | GIRDER REINFORCEMENT |
| 14. | STRUCTURE APPROACH TYPE N(30D) |
| 15. | STRUCTURE APPROACH TYPE R(30D) |
| 16. | STRUCTURE APPROACH DRAINAGE DETAILS |
| 17. | SOUNDWALL DETAILS NO. 1 |
| 18. | SOUNDWALL DETAILS NO. 2 |
| 19. | MISCELLANEOUS DETAILS |
| 20. | SLOPE PAVING - FULL SLOPE |
| 21. | LOG OF TEST BORINGS SHEET 1 OF 4 |
| 22. | LOG OF TEST BORINGS SHEET 2 OF 4 |
| 23. | LOG OF TEST BORINGS SHEET 3 OF 4 |
| 24. | LOG OF TEST BORINGS SHEET 4 OF 4 |


## STANDARD PLANS DATED MAY 2006

| | |
|---|---|
| A10A | ACRONYMS AND ABBREVIATIONS (SHEET 1 OF 2) |
| A10B | ACRONYMS AND ABBREVIATIONS (SHEET 2 OF 2) |
| A10C | SYMBOLS (SHEET 1 OF 2) |
| A10D | SYMBOLS (SHEET 2 OF 2) |
| A62C | LIMITS OF PAYMENT FOR EXCAVATION AND BACKFILL - BRIDGE |
| B0-1 | BRIDGE DETAILS |
| B0-3 | BRIDGE DETAILS |
| B0-5 | BRIDGE DETAILS |
| B0-13 | BRIDGE DETAILS |
| B6-21 | JOINT SEALS (MAXIMUM MOVEMENT RATING = 2") |
| B7-1 | BOX GIRDER DETAILS |
| B7-10 | UTILITY OPENING BOX GIRDER |
| B8-5 | CAST-IN-PLACE PRESTRESSED GIRDER DETAILS |
| B11-56 | CONCRETE BARRIER TYPE 736 |
| B14-5 | WATER SUPPLY LINE (DETAILS) (PIPE SIZE LESS THAN 4") |

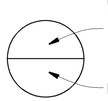


**ABBREVIATION**

COS Corridor Operating System

**NOTE:**

The Contractor shall verify all controlling field dimensions before ordering or fabricating any materials.

| SPREAD FOOTING DATA TABLE | | |
|---|---|---|
| | Work Stress Design (WSD) | |
| Support Location | Permissible Gross Contact Stress (Settlement) (ksf) | Allowable Gross Bearing Capacity (ksf) |
| Abut 1 | 8.00 | 16.00 |
| Abut 2 | 8.00 | 16.00 |

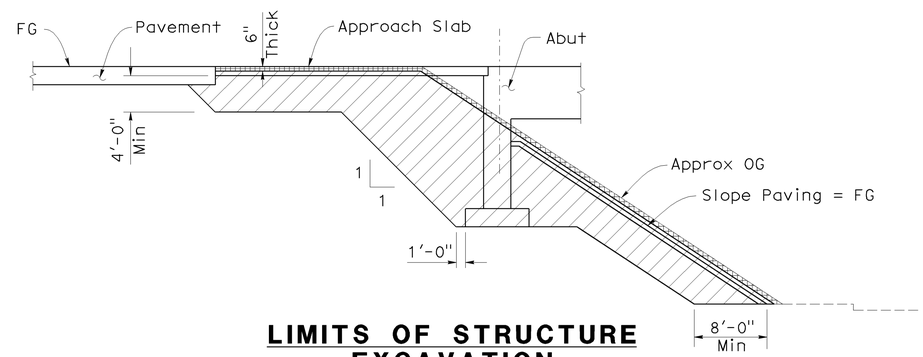


## LIMITS OF STRUCTURE EXCAVATION

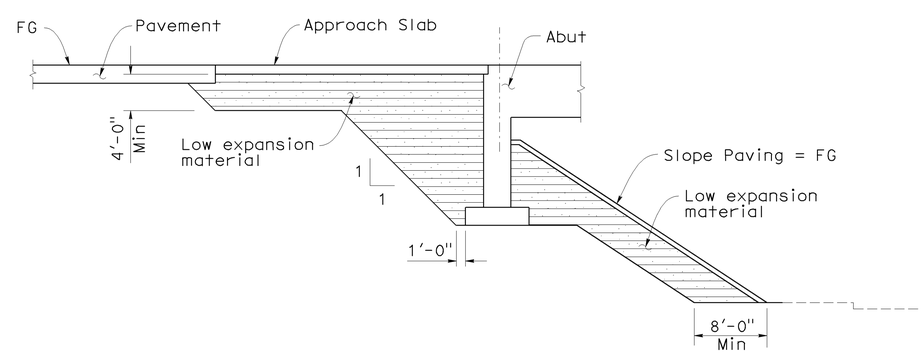


## LOW EXPANSION MATERIAL BACKFILL LIMITS

No scale

**NOTES:**

1. Expansion Index to be determined by ASTM D4829
2. Low Expansion material shall be EI<50 or SE>20 at New Construction only.
3. Backfill shall be placed simultaneously at both abutments after the deck is completed.

**LEGEND**

= Structure Excavation (Bridge)

= Structure Backfill (Bridge) (Low Expansion)

= Structure Excavation (Type Y-1) (Aerially Deposited Lead)

DESIGN OVERSIGHT Jon Hamaguchi
6-9-09
SIGN OFF DATE

| | BY | CHECKED |
|---|---|---|
| DESIGN | M. Desai / J. Powell | M. Atiqullah / A. Issa |
| DETAILS | M. Desai / J. Powell | M. Atiqullah / A. Issa |
| QUANTITIES | J. Powell | E. Cutler |

PREPARED FOR THE STATE OF CALIFORNIA DEPARTMENT OF TRANSPORTATION

Ayman Salama
PROJECT ENGINEER

BRIDGE NO. 55-0483
POST MILE 19.33

# ROLLING HILLS DRIVE UC (WIDEN)
# INDEX TO PLANS

DESIGN DETAIL SHEET (ENGLISH) (REV. 2/25/05)

ORIGINAL SCALE IN INCHES FOR REDUCED PLANS 0 1 2 3

CU 12220
EA 0F0321

DISREGARD PRINTS BEARING EARLIER REVISION DATES

REVISION DATES (PRELIMINARY STAGE ONLY) 12/18/08 04/07/09 06/08/09

SHEET 2 OF 24

FILE => 55-0483-a-itp.dgn

USERNAME => friemard DATE PLOTTED => 25-JAN-2010 TIME PLOTTED => 08:16

| DIST | COUNTY | ROUTE | POST MILES TOTAL PROJECT | SHEET No | TOTAL SHEETS |
|---|---|---|---|---|---|
| 12 | Ora | 57 | 18.4/20.9 | 626 | 856 |

REGISTERED CIVIL ENGINEER 06/08/09 DATE

1-25-10
PLANS APPROVAL DATE

REGISTERED PROFESSIONAL ENGINEER JOHN W. POWELL No. C71463 Exp. 12/31/09 CIVIL STATE OF CALIFORNIA

*The State of California or its officers or agents shall not be responsible for the accuracy or completeness of electronic copies of this plan sheet.*

OCTA
550 S. MAIN STREET
ORANGE, CA 92863

CH2M HILL
6 HUTTON CENTRE DRIVE, SUITE 700
SANTA ANA, CA 92707

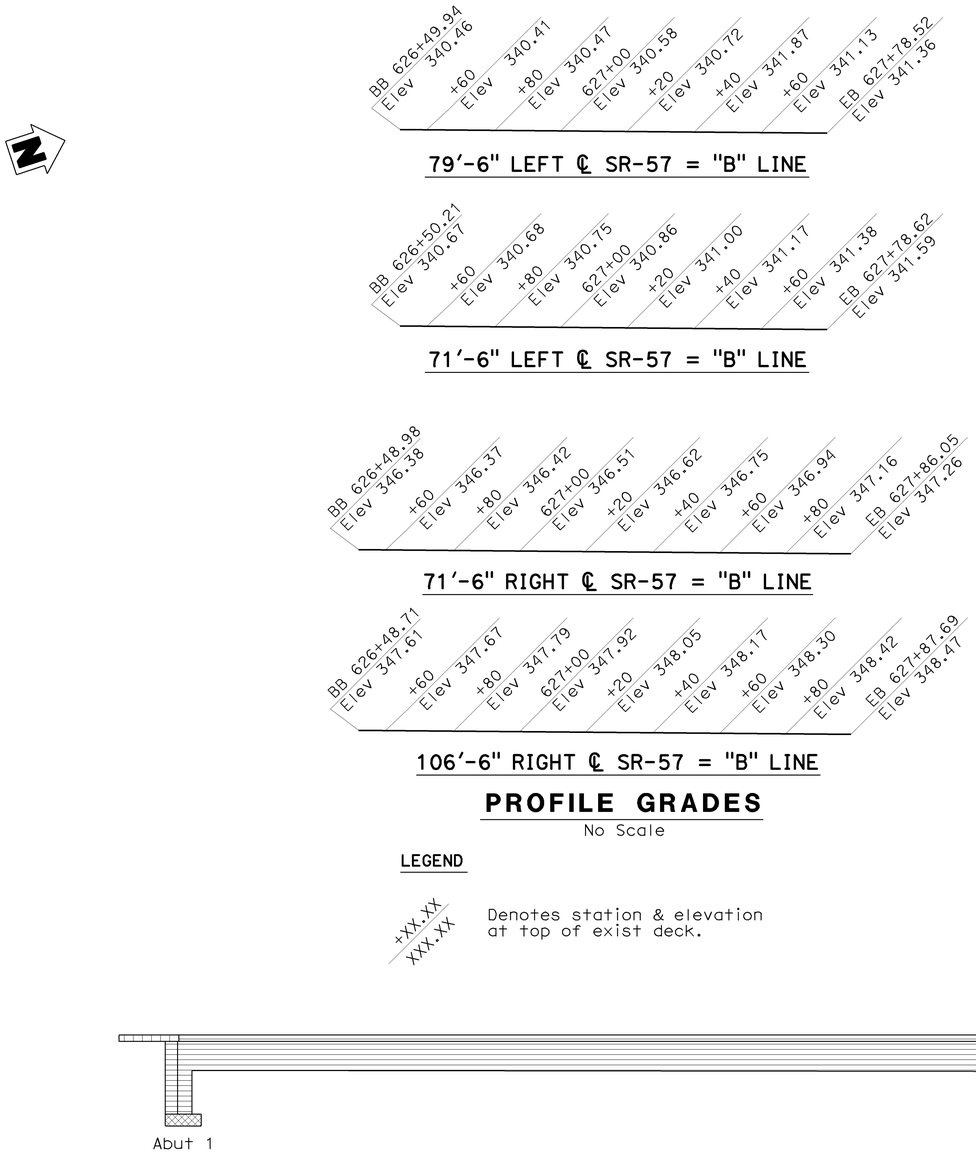


## PROFILE GRADES

No Scale

**LEGEND**

+XX.XX / XXX.XX — Denotes station & elevation at top of exist deck.

## CONCRETE STRENGTH AND TYPE LIMITS

No Scale

**LEGEND**

= Structural Concrete, Bridge, See Prestressing Notes on "Girder Layout" Sheets.

= Structural Concrete, Bridge Footing

= Structural Concrete, Approach Slab

**NOTE:**

The Contractor shall verify all controlling field dimensions before ordering or fabricating any materials.

# GENERAL NOTES

## LOAD AND RESISTANCE FACTOR DESIGN (LRFD)

Design: AASHTO LRFD Bridge Design specifications, 3rd edition with interims through 2006 and the Caltrans Amendments 3.06.01; except that abutments, earth retaining system, Bridge details taken from Standard Plans March 2006 and earlier versions, and Standard Bridge Details XS sheets, are designed using Bridge Design specifications (1996 AASHTO w/Revisions by Caltrans)

Seismic Design: Caltrans Seismic Design Criteria (SDC) Version 1.4 June 2006

Dead Load: Includes 35 psf for future wearing surface.

The sound wall dead load is distributed on the right widen of the bridge with 60% of the moment and 100% of the shear forces to the exterior girder, and 17% of the moment and 17% of the shear to the first interior girder

The sound wall dead load is distributed on the left widen of the bridge with 50% of the moment and 50% of the shear forces to the exterior girder, and 50% of the moment and 50% of the shear to the first interior girder

Live Loading: LRFD: HL-93 and permit (P-15) Design Load

Seismic Loading: Caltrans SDC - ARS Curve Fig B-5 for Soil Profile C (Modified) (Magnitude = 7.25± 0.25). (Peak bed rock acceleration = 0.6 g) (Increased by 20% for periods greater than 1.0 second, no increase for periods less than 0.5 second, and linear interpolation between 0.5 and 1.0 second).

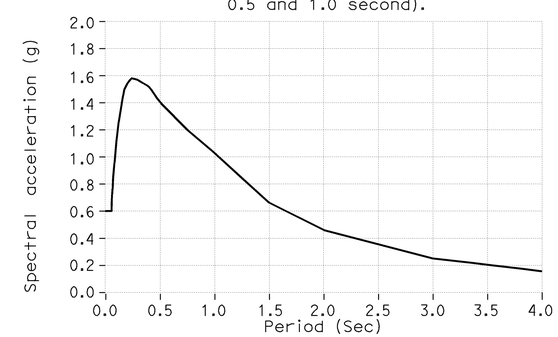


## SDC ARS CURVE FOR SOIL PROFILE C (MODIFIED)

Reinforced Concrete:
New Concrete (Bridge)
fy = 60,000 psi
f'c = 3,600 psi, Unless otherwise noted
n = 8

Prestressed Concrete:
See prestressing notes, on "Girder Layout" sheets.

Jon Hamaguchi
DESIGN OVERSIGHT Jon Hamaguchi
6-9-09
SIGN OFF DATE

DESIGN DETAIL SHEET (ENGLISH) (REV. 2/25/05)

| | BY | CHECKED |
|---|---|---|
| DESIGN | M. Desai / J. Powell | M. Atiqullah / A. Issa |
| DETAILS | M. Desai / J. Powell | M. Atiqullah / A. Issa |
| QUANTITIES | J. Powell | E. Cutler |

ORIGINAL SCALE IN INCHES FOR REDUCED PLANS 0 1 2 3

PREPARED FOR THE STATE OF CALIFORNIA DEPARTMENT OF TRANSPORTATION

Ayman Salama
PROJECT ENGINEER

CU 12220
EA 0F0321

BRIDGE NO. 55-0483
POST MILE 19.33

# ROLLING HILLS DRIVE UC (WIDEN)

## GENERAL NOTES

DISREGARD PRINTS BEARING EARLIER REVISION DATES

REVISION DATES (PRELIMINARY STAGE ONLY) 12/07/08 04/07/09 06/08/09

SHEET 3 OF 24

FILE => 55-0483-b-gnotes.dgn

USERNAME => trlenard DATE PLOTTED => 25-JAN-2010 TIME PLOTTED => 08:16

| DIST | COUNTY | ROUTE | POST MILES TOTAL PROJECT | SHEET No | TOTAL SHEETS |
|---|---|---|---|---|---|
| 12 | Ora | 57 | 18.4/20.9 | 627 | 856 |

Milind Desai
REGISTERED CIVIL ENGINEER 06/08/09 DATE

1-25-10
PLANS APPROVAL DATE

REGISTERED PROFESSIONAL ENGINEER MILLIND R. DESAI No. C51437 Exp. 6/30/10 CIVIL STATE OF CALIFORNIA

*The State of California or its officers or agents shall not be responsible for the accuracy or completeness of electronic copies of this plan sheet.*

OCTA
550 S. MAIN STREET
ORANGE, CA 92863

CH2M HILL
6 HUTTON CENTRE DRIVE, SUITE 700
SANTA ANA, CA 92707

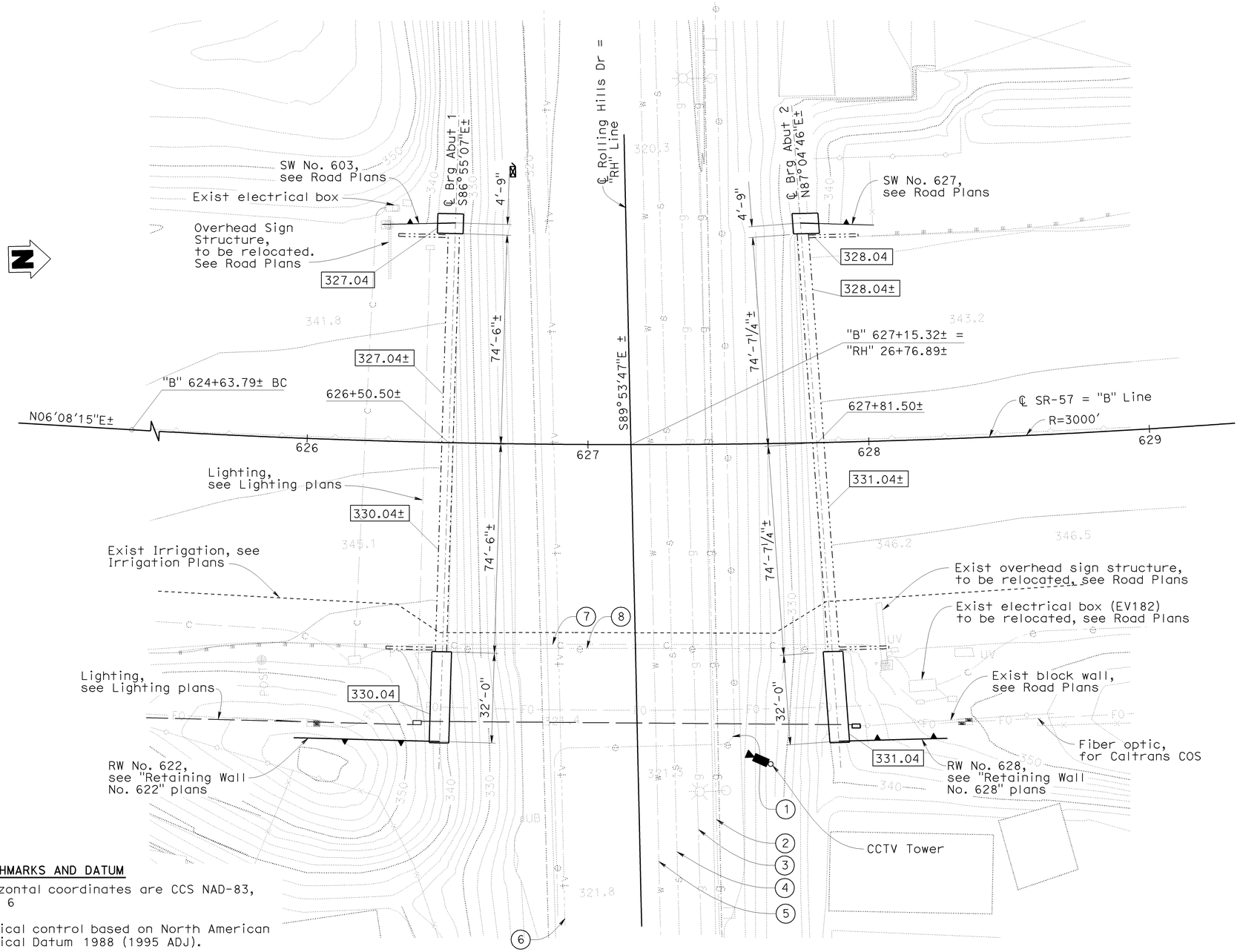


## PLAN
1"=20'

## EXISTING UTILITY LINES TABLE
(BASED ON AS-BUILT DATA)

| NO. | UTILITY | ACTION |
|---|---|---|
| 1 | 12 KV UG Elec 2-5" Cond SCE | Protect in place |
| 2 | 8" Stl Gas Line Energy | Protect in place |
| 3 | 4" PE Gas SCG | Protect in place |
| 4 | 8" Sewer UNOCAL | Protect in place |
| 5 | 12" CI Water (City of Fullerton) | Protect in place |
| 6 | Cond Fiber Time Warner | Protect in place |
| 7 | 2-4" COS Conduits | To Be Relocated |
| 8 | 1-2" Elec Conduit | To Be Relocated |

### LEGEND

- Indicates Existing Structure
- Indicates New Construction
- Denotes Existing Electrolier
- Denotes Existing Sign
- Denotes Existing Overhead Sign
- Denotes Existing Power Pole
- UV Denotes Existing Utility Vault
- UB Denotes Existing Utility Cabinet
- Denotes Existing Post
- XXX.XX Indicates Bottom of Footing Elevation

### BENCHMARKS AND DATUM

Horizontal coordinates are CCS NAD-83, Zone 6

Vertical control based on North American Vertical Datum 1988 (1995 ADJ).

**Pt 1049** Elevation = 348.344
Set Mag Nail & Flash in shoulder
Northing 2276409.426 Easting 6066857.705

**Pt 1065** Elevation = 345.199
Set Mag Nail & Flash in shoulder
Northing 2276096.906 Easting 6066849.261

### NOTES:

1. The Contractor shall verify all controlling field dimensions before ordering or fabricating any materials.
2. Utility location shown are approximate for utility relocations and information see Road Plans.

GEOTECHNICAL PROFESSIONAL 06/08/09 APPROVAL DATE

DESIGN OVERSIGHT Jon Hanaguchi
6-9-09
SIGN OFF DATE

| | | | | | |
|---|---|---|---|---|---|
| SCALE: 1"-20' | VERT.DATUM NAVD-88 (1995 ADJ) | HORZ.DATUM NAD83 | | | |
| PHOTOGRAMMETRY AS OF: X | | ALIGNMENT TIES X | | | |
| SURVEYED | BY P. Lattuca | DRAFTED | BY X | | |
| FIELD CHECKED | BY M. Wilson | CHECKED | BY X | | |

| | BY | CHECKED |
|---|---|---|
| DESIGN | M. Desai / J. Powell | M. Atiqullah / A. Issa |
| DETAILS | N. Morales | M. Atiqullah / A. Issa |
| QUANTITIES | J. Powell | E. Cutler |

PREPARED FOR THE STATE OF CALIFORNIA DEPARTMENT OF TRANSPORTATION

Ayman Salama
PROJECT ENGINEER

BRIDGE NO. 55-0483
POST MILE 19.33

# ROLLING HILLS DRIVE UC (WIDEN)
# FOUNDATION PLAN

FOUNDATION PLAN SHEET (ENGLISH) (REV. 2-25-05)

ORIGINAL SCALE IN INCHES FOR REDUCED PLANS 0 1 2 3

CU 12220
EA 0F0321

DISREGARD PRINTS BEARING EARLIER REVISION DATES 12/18/08 04/07/09 06/08/09

SHEET 4 OF 24

FILE => 55-0483-e-fdp101.dgn

USERNAME => trlenard DATE PLOTTED => 25-JAN-2010 TIME PLOTTED => 08:16

| DIST | COUNTY | ROUTE | POST MILES TOTAL PROJECT | SHEET No | TOTAL SHEETS |
|---|---|---|---|---|---|
| 12 | Ora | 57 | 18.4/20.9 | 628 | 856 |

REGISTERED CIVIL ENGINEER 06/08/09 DATE

1-25-10
PLANS APPROVAL DATE

REGISTERED PROFESSIONAL ENGINEER JOHN W. POWELL No. C71463 Exp. 12/31/09 CIVIL STATE OF CALIFORNIA

*The State of California or its officers or agents shall not be responsible for the accuracy or completeness of electronic copies of this plan sheet.*

OCTA
550 S. MAIN STREET
ORANGE, CA 92863

CH2M HILL
6 HUTTON CENTRE DRIVE, SUITE 700
SANTA ANA, CA 92707

**LEGEND**

- Bridge removal (Portion)
- Abutment Closure Pour
- * Match Existing Grade

**NOTES:**

1. For Section B-B, see "Abutment 2 Layout" sheet.
2. For Section C-C, see "Abutment Details No. 2" sheet.

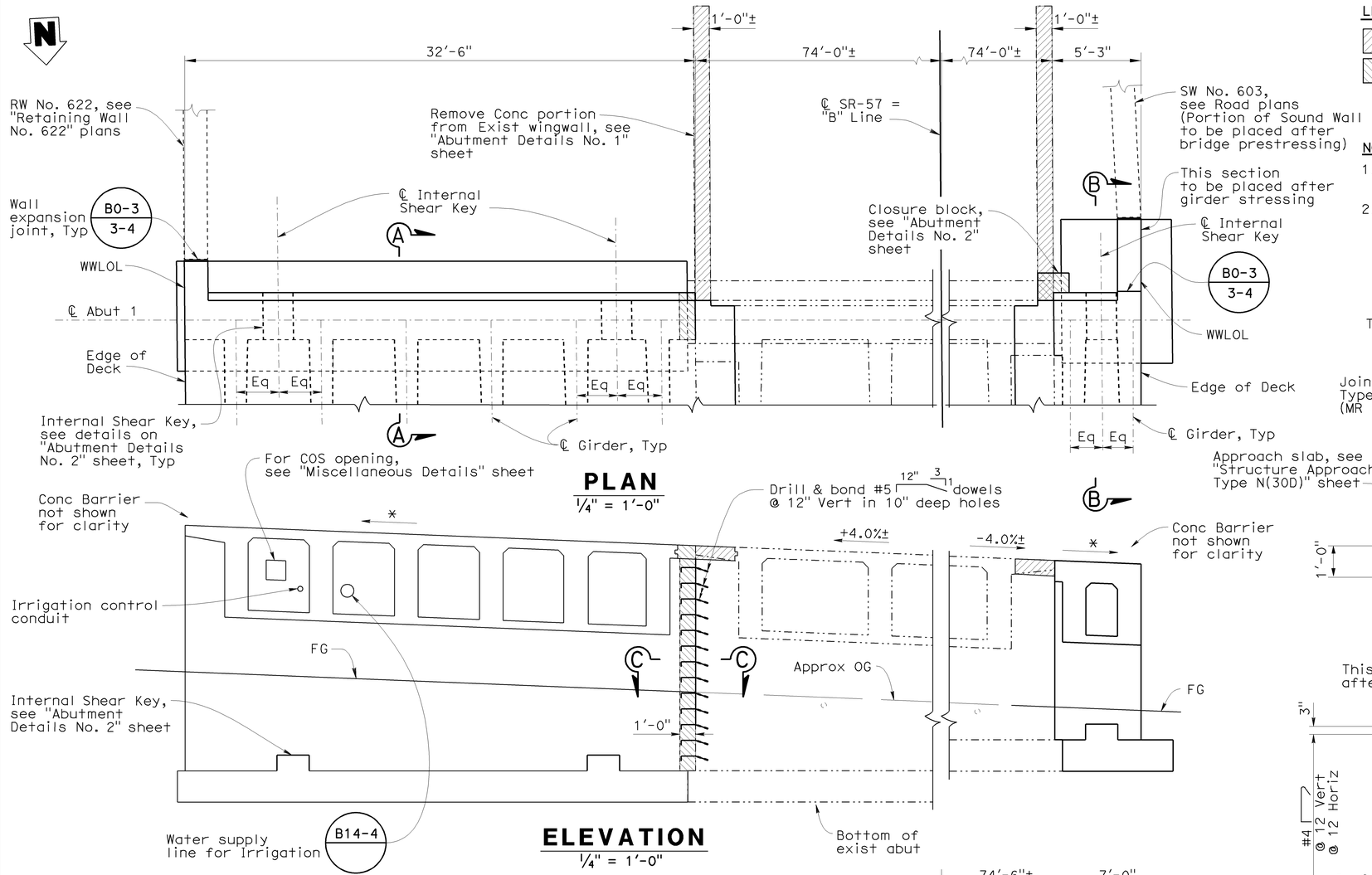


**PLAN**
1/4" = 1'-0"

**ELEVATION**
1/4" = 1'-0"

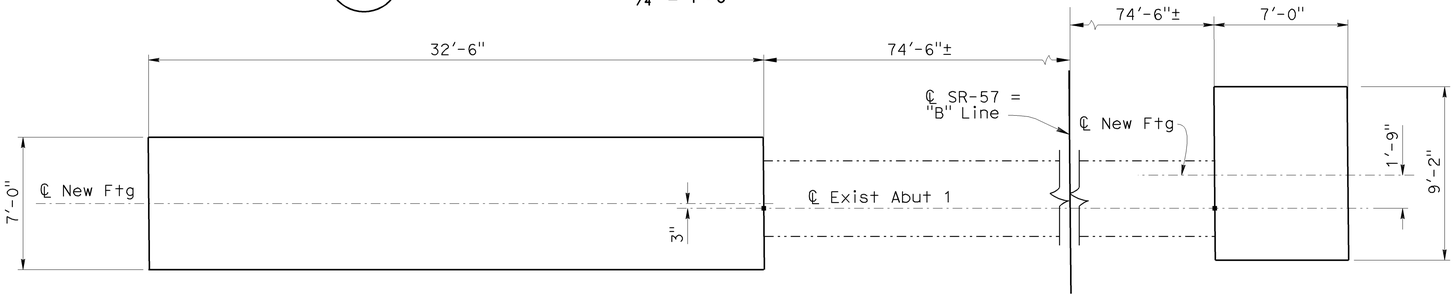


**FOOTING LAYOUT PLAN**
1/4" = 1'-0"

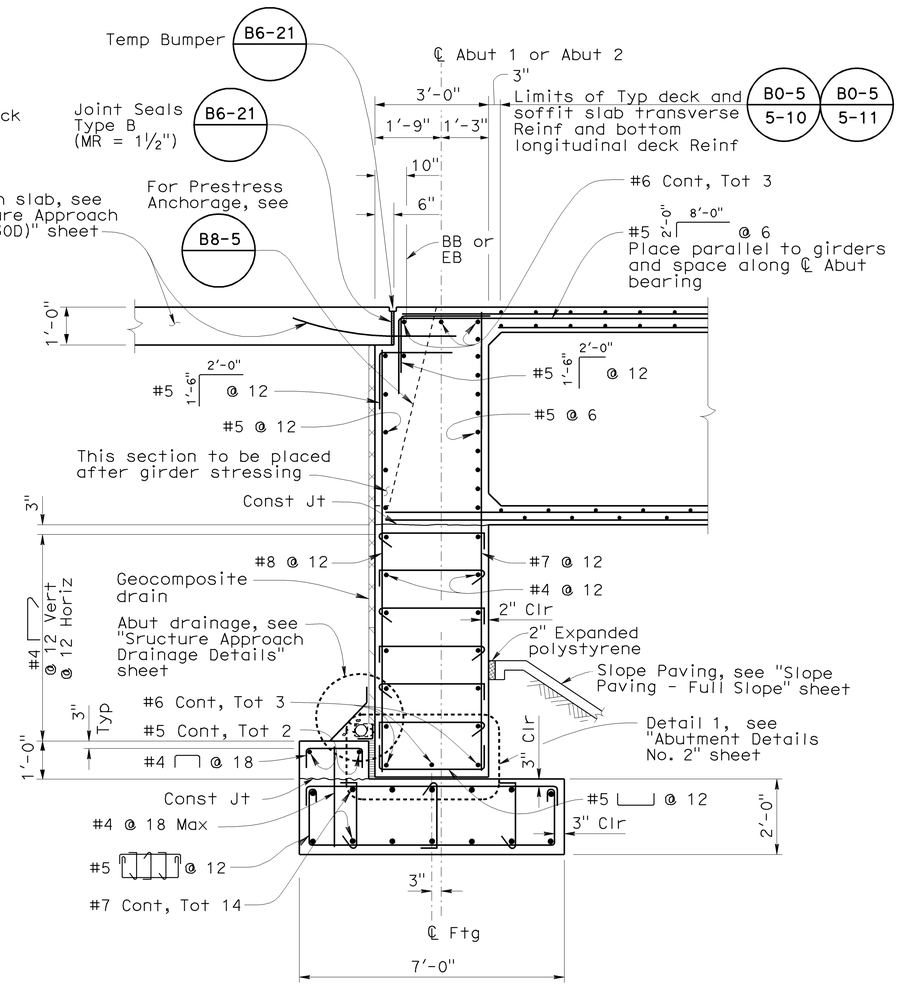


**SECTION A-A**
1/2" = 1'-0"

**NOTE:**

The Contractor shall verify all controlling field dimensions before ordering or fabricating any materials.

| | | | |
|---|---|---|---|
| DESIGN OVERSIGHT Jon Hamaguchi | DESIGN | BY M. Desai / J. Powell | CHECKED M. Atiqullah / A. Issa |
| 6-9-09 SIGN OFF DATE | DETAILS | BY M. Desai / J. Powell | CHECKED M. Atiqullah / A. Issa |
| | QUANTITIES | BY J. Powell | CHECKED E. Cutler |

PREPARED FOR THE STATE OF CALIFORNIA DEPARTMENT OF TRANSPORTATION

Ayman Salama
PROJECT ENGINEER

BRIDGE NO. 55-0483
POST MILE 19.33

# ROLLING HILLS DRIVE UC (WIDEN)
## ABUTMENT 1 LAYOUT

DESIGN DETAIL SHEET (ENGLISH) (REV. 2/25/05)

ORIGINAL SCALE IN INCHES FOR REDUCED PLANS 0 1 2 3

CU 12220
EA 0F0321

DISREGARD PRINTS BEARING EARLIER REVISION DATES

REVISION DATES (PRELIMINARY STAGE ONLY) 12/18/08 04/07/09 06/08/09

SHEET 5 OF 24

FILE => 55-0483-f-a01_lo1.dgn

USERNAME => friehard DATE PLOTTED => 25-JAN-2010 TIME PLOTTED => 08:16

| DIST | COUNTY | ROUTE | POST MILES TOTAL PROJECT | SHEET No | TOTAL SHEETS |
|---|---|---|---|---|---|
| 12 | Ora | 57 | 18.4/20.9 | 629 | 856 |

REGISTERED CIVIL ENGINEER 06/08/09 DATE

1-25-10
PLANS APPROVAL DATE

REGISTERED PROFESSIONAL ENGINEER JOHN W. POWELL No. C71463 Exp. 12/31/09 CIVIL STATE OF CALIFORNIA

*The State of California or its officers or agents shall not be responsible for the accuracy or completeness of electronic copies of this plan sheet.*

OCTA
550 S. MAIN STREET
ORANGE, CA 92863

CH2M HILL
6 HUTTON CENTRE DRIVE, SUITE 700
SANTA ANA, CA 92707

**LEGEND**

- Bridge removal (Portion)
- Abutment Closure Pour
- * Match Existing Grade

**NOTES:**

1. For Section A-A, see "Abutment 1 Layout" sheet
2. For Section C-C, see "Abutment Details No. 2" sheet.

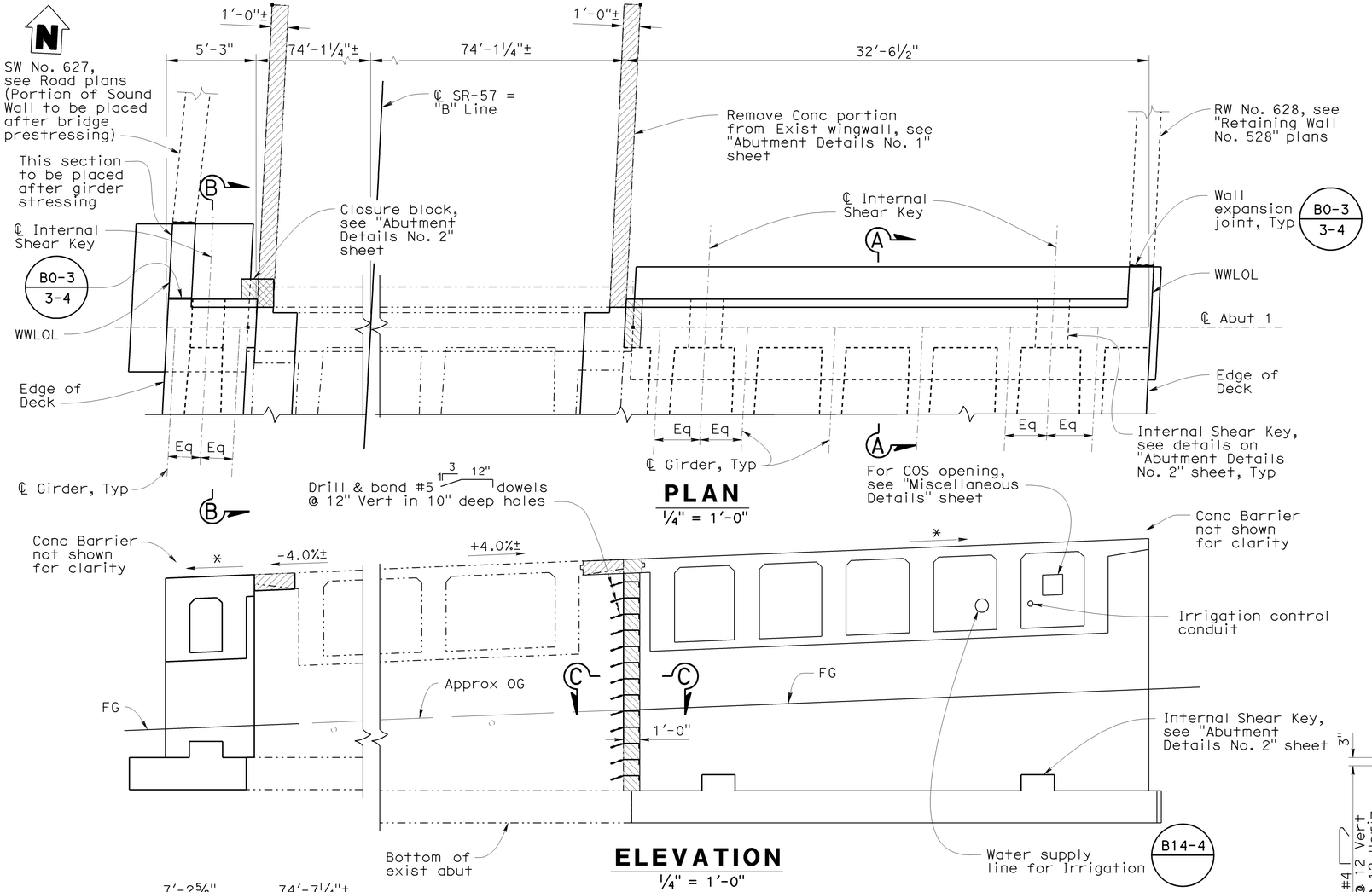


**PLAN**
¼" = 1'-0"




**ELEVATION**
¼" = 1'-0"

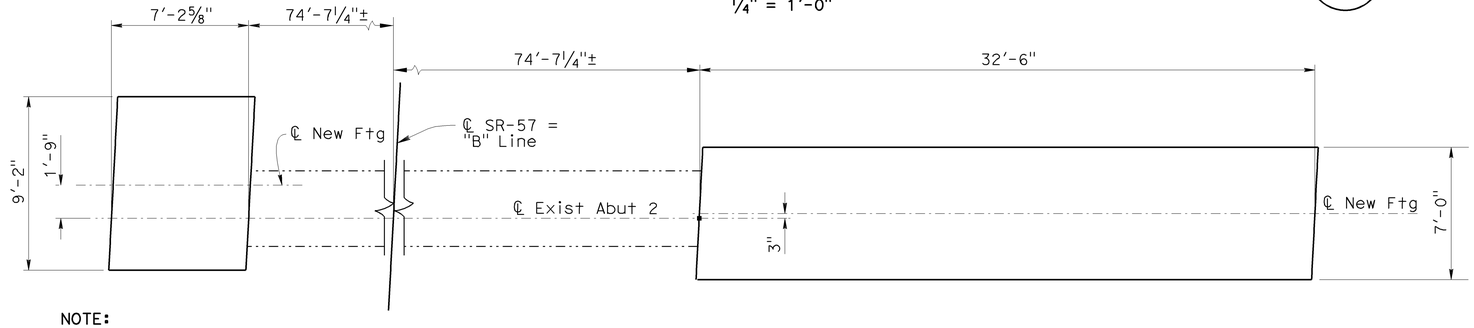


**NOTE:**

The Contractor shall verify all controlling field dimensions before ordering or fabricating any materials.

**FOOTING LAYOUT PLAN**
¼" = 1'-0"

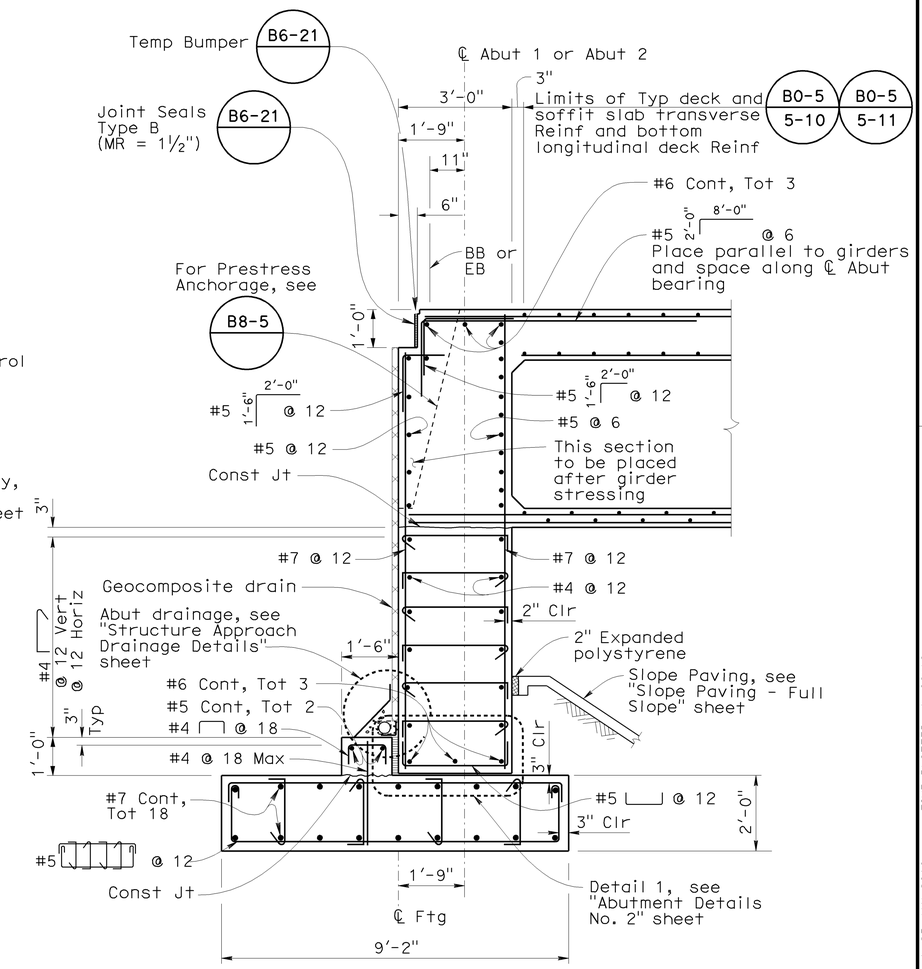


**SECTION B-B**
½" = 1'-0"

| | | | | | |
|---|---|---|---|---|---|
| DESIGN OVERSIGHT Jon Hamaguchi | DESIGN | BY M. Desai / J. Powell | CHECKED M. Atiqullah / A. Issa | PREPARED FOR THE STATE OF CALIFORNIA DEPARTMENT OF TRANSPORTATION | Ayman Salama PROJECT ENGINEER |
| 6-9-09 SIGN OFF DATE | DETAILS | BY M. Desai / J. Powell | CHECKED M. Atiqullah / A. Issa | | |
| | QUANTITIES | BY J. Powell | CHECKED E. Cutler | | |

BRIDGE NO. 55-0483
POST MILE 19.33

# ROLLING HILLS DRIVE UC (WIDEN)
## ABUTMENT 2 LAYOUT

DESIGN DETAIL SHEET (ENGLISH) (REV. 2/25/05)

ORIGINAL SCALE IN INCHES FOR REDUCED PLANS 0 1 2 3

CU 12220
EA 0F0321

DISREGARD PRINTS BEARING EARLIER REVISION DATES

REVISION DATES (PRELIMINARY STAGE ONLY) 12/17/08 04/07/09 06/08/09

SHEET 6 OF 24

FILE => 55-0483-f-a01_lo2.dgn

USERNAME => friemard DATE PLOTTED => 25-JAN-2010 TIME PLOTTED => 08:16

| DIST | COUNTY | ROUTE | POST MILES TOTAL PROJECT | SHEET No | TOTAL SHEETS |
|---|---|---|---|---|---|
| 12 | Ora | 57 | 18.4/20.9 | 630 | 856 |

REGISTERED CIVIL ENGINEER 06/08/09 DATE

1-25-10
PLANS APPROVAL DATE

REGISTERED PROFESSIONAL ENGINEER JOHN W. POWELL No. C71463 Exp. 12/31/09 CIVIL STATE OF CALIFORNIA

*The State of California or its officers or agents shall not be responsible for the accuracy or completeness of electronic copies of this plan sheet.*

OCTA
550 S. MAIN STREET
ORANGE, CA 92863

CH2M HILL
6 HUTTON CENTRE DRIVE, SUITE 700
SANTA ANA, CA 92707

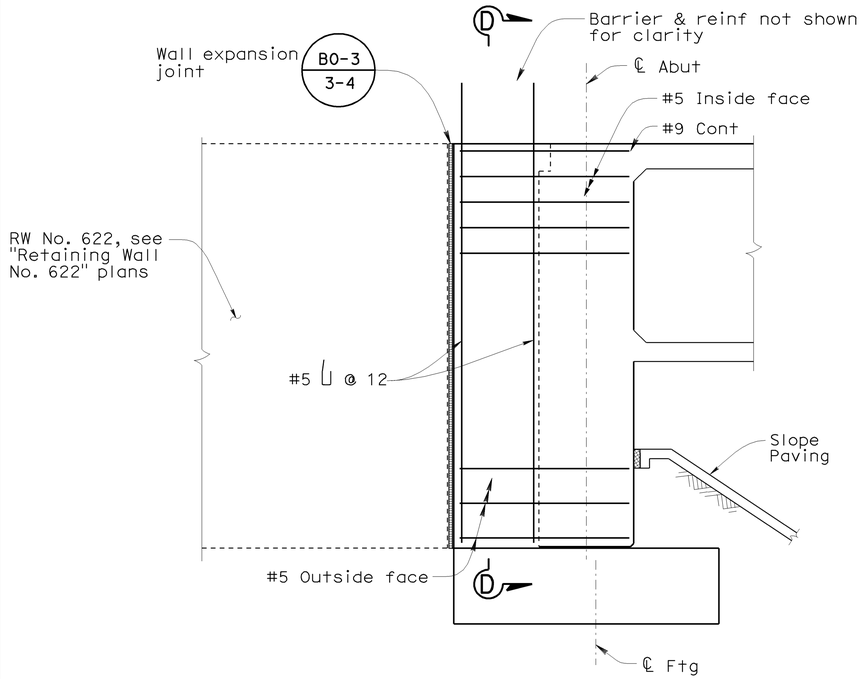


## WINGWALL (RIGHT WIDEN) ELEVATION

½"=1'-0"
(Abutment 1 shown, Abutment 2 similar)

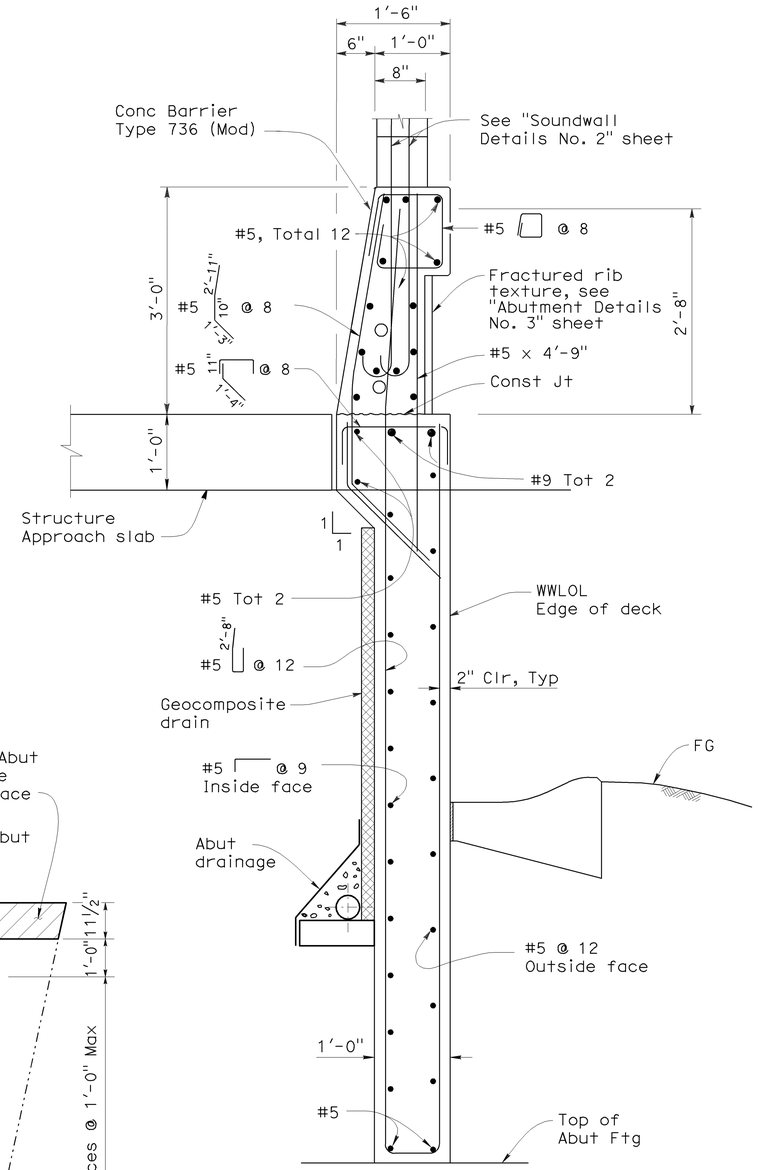


## SECTION D-D

1"=1'-0"

**LEGEND**

Bridge removal (Portion)

**NOTES:**

1. Locations of cored and drilled holes shown in the plans are approximate. Prior to placing holes in concrete, the Contractor shall locate all reinforcing steel and adjust the locations of the holes to clear all reinforcing bars (except as Noted). Final hole locations are subject to the approval of the Engineer.
2. Space new reinforcement to avoid existing reinforcement.

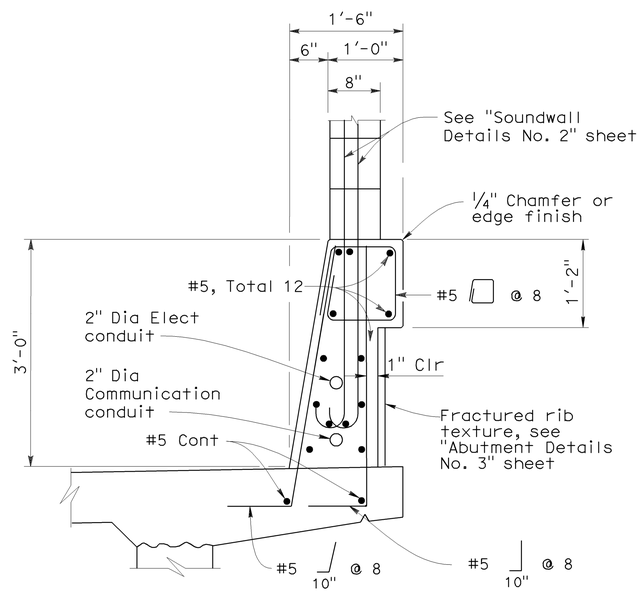


## CONCRETE BARRIER TYPE 736 MODIFIED AT RIGHT WIDEN

1"=1'-0"

Note: For Details not shown, see B11-56 -

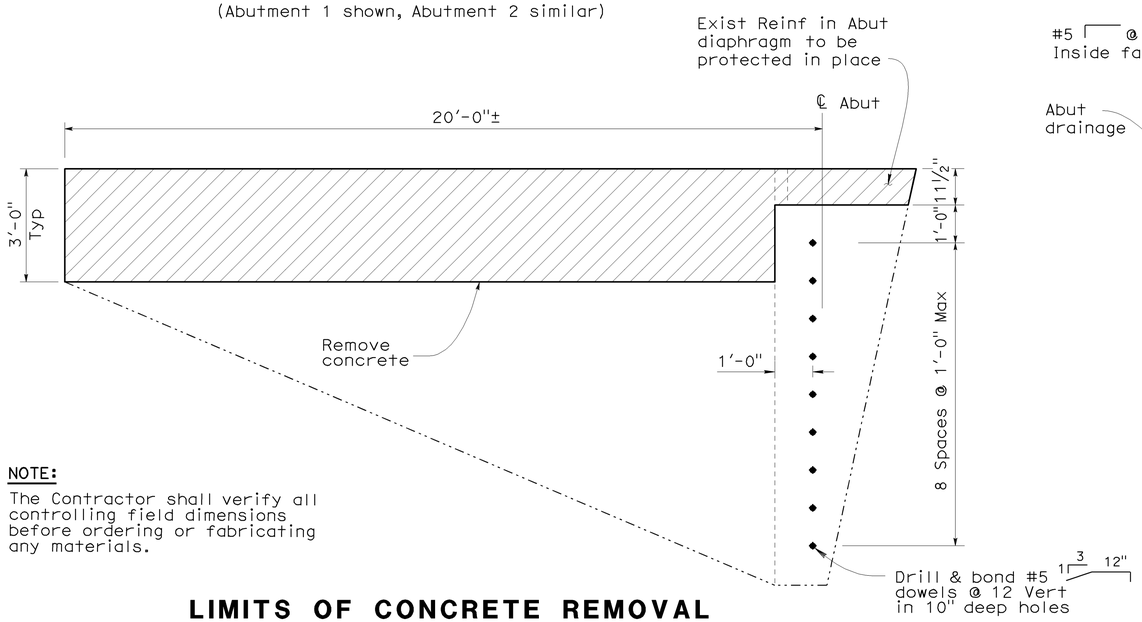


**NOTE:**

The Contractor shall verify all controlling field dimensions before ordering or fabricating any materials.

## LIMITS OF CONCRETE REMOVAL EXISTING ABUTMENT

½"=1'-0"

DESIGN OVERSIGHT Jon Hamaguchi
6-9-09
SIGN OFF DATE

| | BY | CHECKED |
|---|---|---|
| DESIGN | M. Desai / J. Powell | M. Atiqullah / A. Issa |
| DETAILS | M. Desai / J. Powell | M. Atiqullah / A. Issa |
| QUANTITIES | J. Powell | E. Cutler |

PREPARED FOR THE STATE OF CALIFORNIA DEPARTMENT OF TRANSPORTATION

Ayman Salama
PROJECT ENGINEER

BRIDGE NO. 55-0483
POST MILE 19.33

# ROLLING HILLS DRIVE UC (WIDEN)
# ABUTMENT DETAILS NO. 1

DESIGN DETAIL SHEET (ENGLISH) (REV. 2/25/05)

ORIGINAL SCALE IN INCHES FOR REDUCED PLANS 0 1 2 3

CU 12220
EA 0F0321

DISREGARD PRINTS BEARING EARLIER REVISION DATES

REVISION DATES (PRELIMINARY STAGE ONLY) 12/12/08 04/07/09 06/08/09

SHEET 7 OF 24

FILE => 55-0483-f-a01dt01.dgn

USERNAME => friehard DATE PLOTTED => 25-JAN-2010 TIME PLOTTED => 08:16

| DIST | COUNTY | ROUTE | POST MILES TOTAL PROJECT | SHEET No | TOTAL SHEETS |
|---|---|---|---|---|---|
| 12 | Ora | 57 | 18.4/20.9 | 631 | 856 |

REGISTERED CIVIL ENGINEER 06/08/09 DATE

1-25-10
PLANS APPROVAL DATE

REGISTERED PROFESSIONAL ENGINEER JOHN W. POWELL No. C71463 Exp. 12/31/09 CIVIL STATE OF CALIFORNIA

*The State of California or its officers or agents shall not be responsible for the accuracy or completeness of electronic copies of this plan sheet.*

OCTA
550 S. MAIN STREET
ORANGE, CA 92863

CH2M HILL
6 HUTTON CENTRE DRIVE, SUITE 700
SANTA ANA, CA 92707

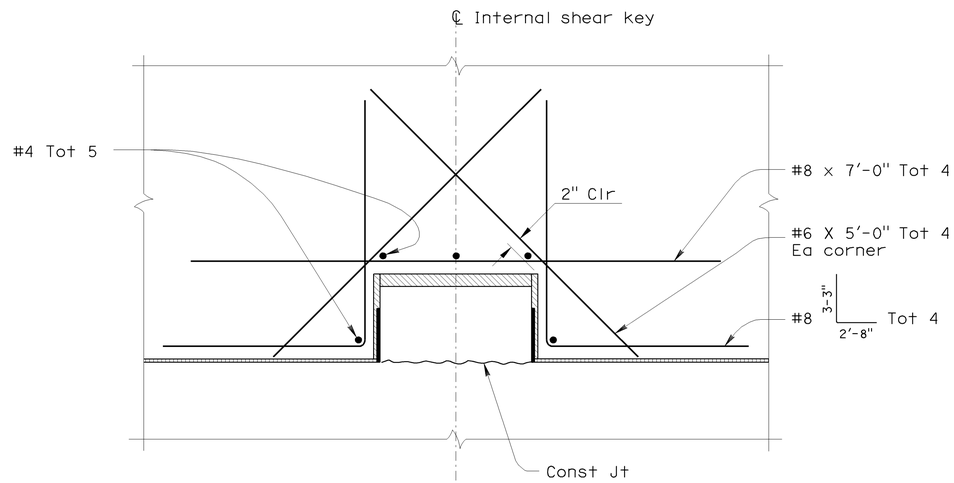


## DIAPHRAGM DETAIL AT SHEAR KEY

1"=1'-0"

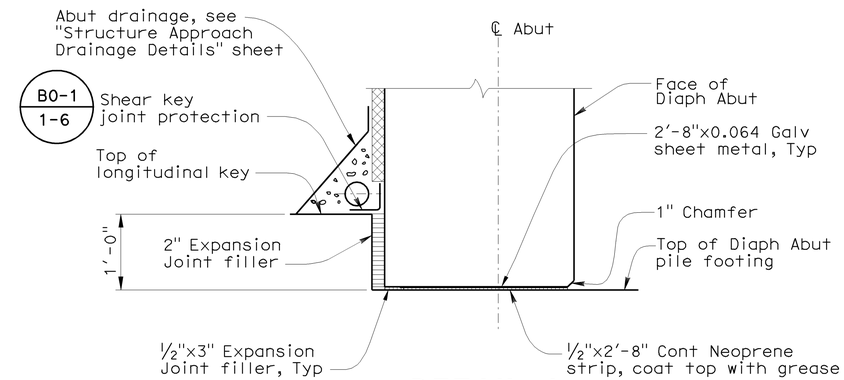


## DETAIL 1

No Scale

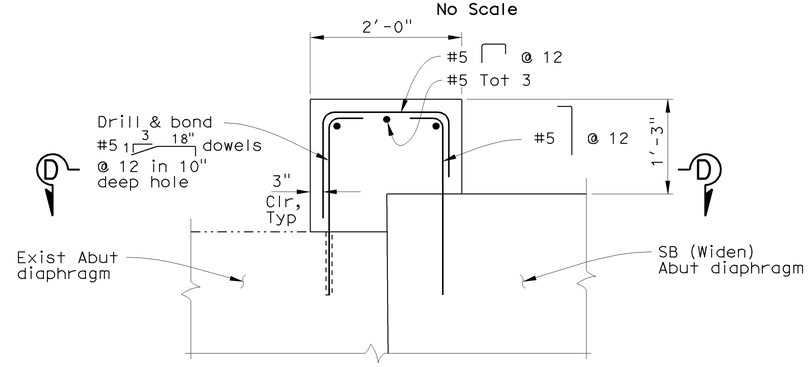


## CLOSURE BLOCK DETAIL

1"=1'-0"

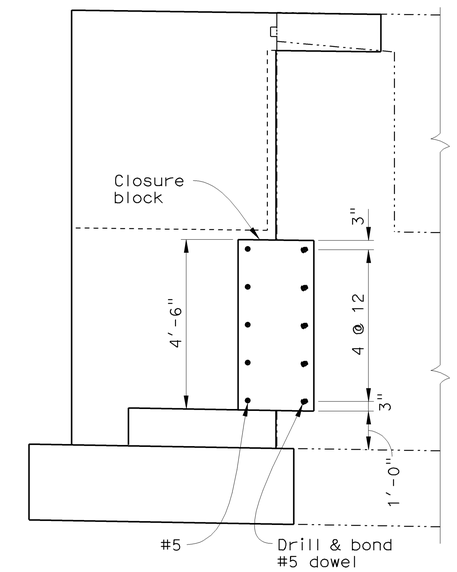


## SECTION D-D

½"=1'-0"

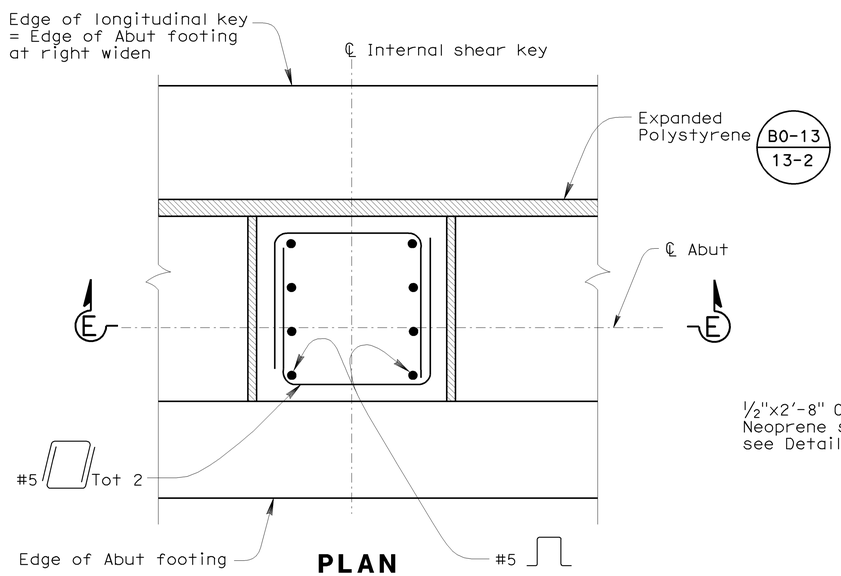


## PLAN

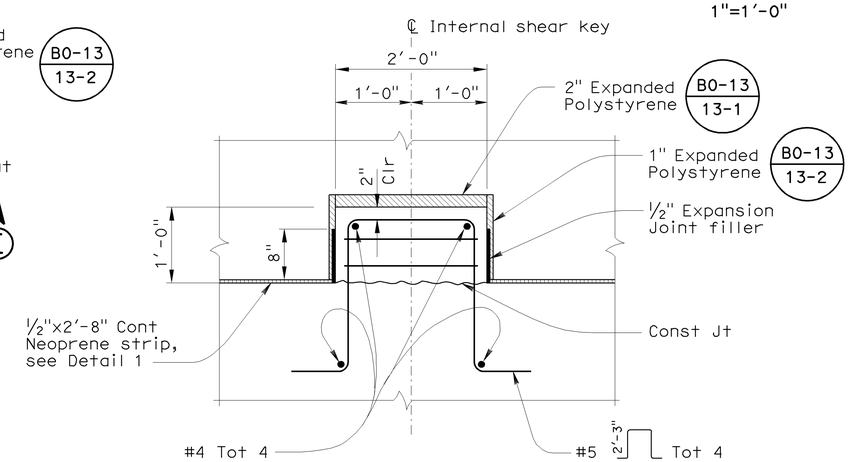


## SECTION E-E

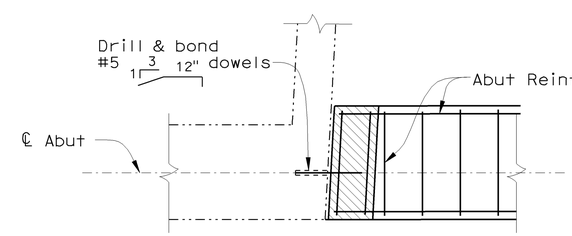


## SECTION C-C

½"=1'-0"

(Abutment 2 shown, Abutment 1 similar)

## INTERNAL SHEAR KEY DETAILS

1"=1'-0"

Abutment 1 shown, Abutment 2 similar

**NOTE:**

The Contractor shall verify all controlling field dimensions before ordering or fabricating any materials.

**NOTE:**

1. For location of Detail 1 & Section C-C, see "Abutment 1 Layout" and "Abutment 2 Layout" sheets.

**LEGEND**

Abutment Closure Pour

DESIGN OVERSIGHT Jon Hamaguchi
6-9-09
SIGN OFF DATE

DESIGN DETAIL SHEET (ENGLISH) (REV. 2/25/05)

| | BY | CHECKED |
|---|---|---|
| DESIGN | M. Desai / J. Powell | M. Atiqullah / A. Issa |
| DETAILS | M. Desai / J. Powell | M. Atiqullah / A. Issa |
| QUANTITIES | J. Powell | E. Cutler |

ORIGINAL SCALE IN INCHES FOR REDUCED PLANS 0 1 2 3

PREPARED FOR THE STATE OF CALIFORNIA DEPARTMENT OF TRANSPORTATION

Ayman Salama
PROJECT ENGINEER

CU 12220
EA 0F0321

BRIDGE NO. 55-0483
POST MILE 19.33

# ROLLING HILLS DRIVE UC (WIDEN)
# ABUTMENT DETAILS NO. 2

DISREGARD PRINTS BEARING EARLIER REVISION DATES

REVISION DATES (PRELIMINARY STAGE ONLY) 12/12/08 04/07/09 06/08/09

SHEET 8 OF 24

FILE => 55-0483-f-a01dt02.dgn

USERNAME => friehard DATE PLOTTED => 25-JAN-2010 TIME PLOTTED => 08:16

| DIST | COUNTY | ROUTE | POST MILES TOTAL PROJECT | SHEET No | TOTAL SHEETS |
|---|---|---|---|---|---|
| 12 | Ora | 57 | 18.4/20.9 | 632 | 856 |

REGISTERED CIVIL ENGINEER 06/08/09 DATE

1-25-10
PLANS APPROVAL DATE

REGISTERED PROFESSIONAL ENGINEER JOHN W. POWELL No. C71463 Exp. 12/31/09 CIVIL STATE OF CALIFORNIA

*The State of California or its officers or agents shall not be responsible for the accuracy or completeness of electronic copies of this plan sheet.*

OCTA
550 S. MAIN STREET
ORANGE, CA 92863

CH2M HILL
6 HUTTON CENTRE DRIVE, SUITE 700
SANTA ANA, CA 92707

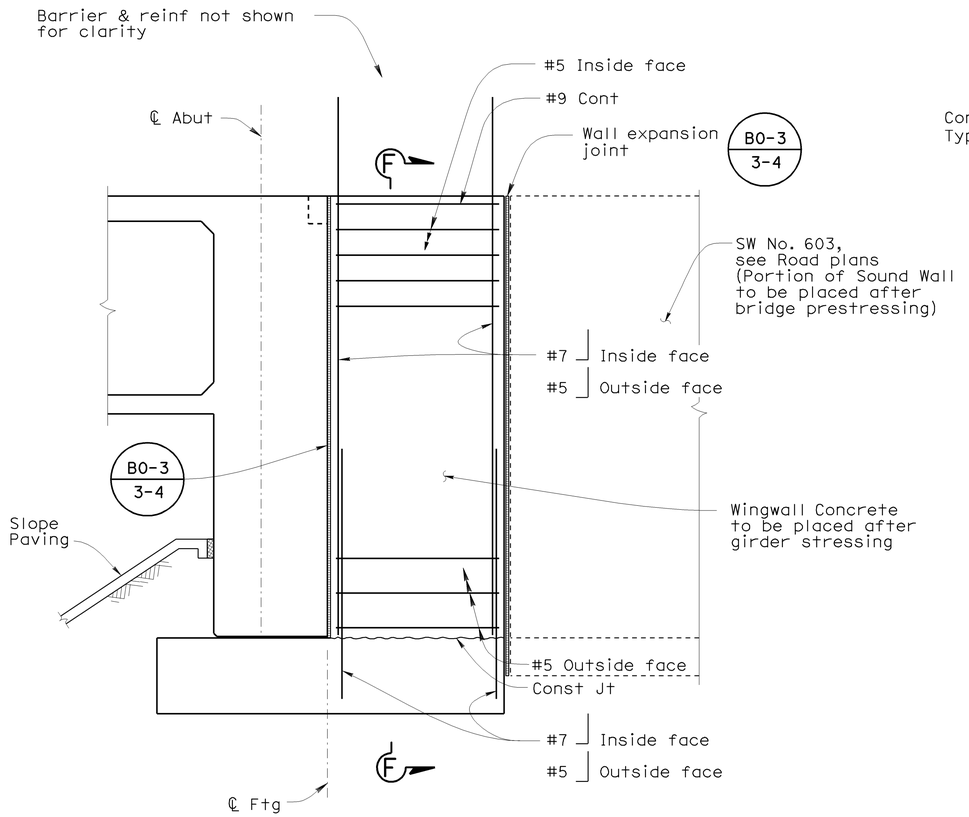


## WINGWALL (LEFT WIDEN) ELEVATION

½"=1'-0"
(Abutment 1 shown, Abutment 2 similar)

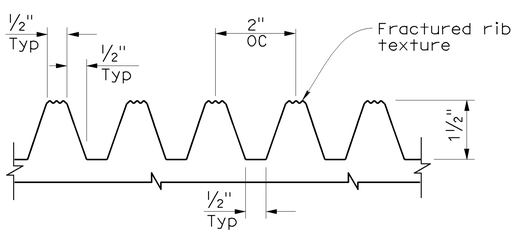


## FRACTURED RIB TEXTURE DETAIL

No scale
(Elastomer Formliner)

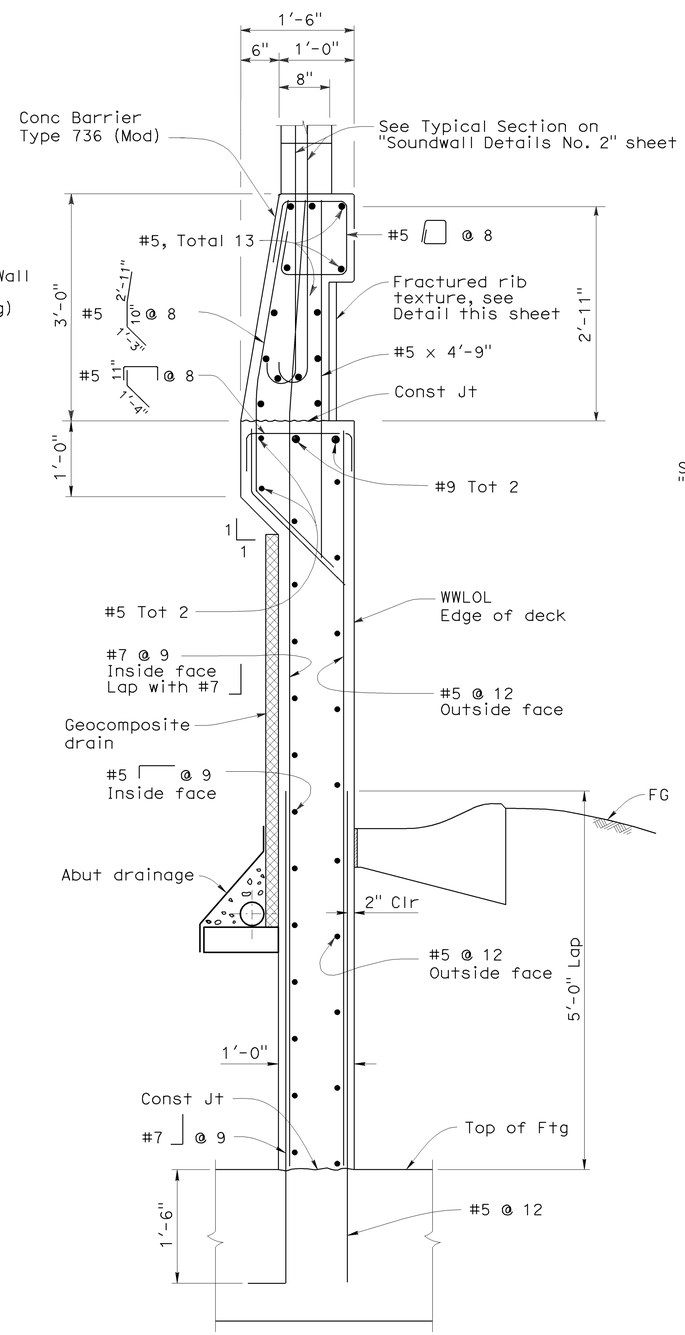


## SECTION F-F

1"=1'-0"

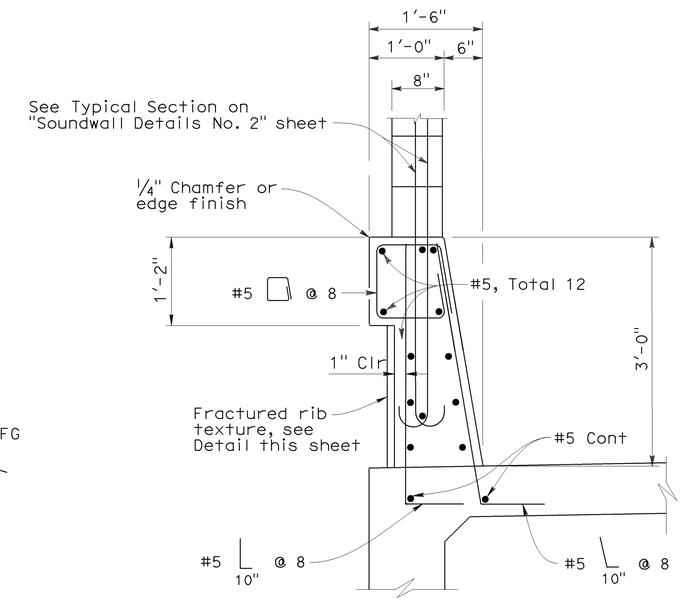


## CONCRETE BARRIER TYPE 736 MODIFIED AT LEFT WIDEN

1"=1'-0"

Note: For Details not shown, see B11-56 / -

**NOTE:**
The Contractor shall verify all controlling field dimensions before ordering or fabricating any materials.

DESIGN OVERSIGHT Jon Hamaguchi
6-9-09
SIGN OFF DATE

| | BY | CHECKED |
|---|---|---|
| DESIGN | M. Desai / J. Powell | M. Atiqullah / A. Issa |
| DETAILS | M. Desai / J. Powell | M. Atiqullah / A. Issa |
| QUANTITIES | A. Issa | E. Cutler |

PREPARED FOR THE STATE OF CALIFORNIA DEPARTMENT OF TRANSPORTATION

Ayman Salama
PROJECT ENGINEER

BRIDGE NO. 55-0483
POST MILE 19.33

# ROLLING HILLS DRIVE UC (WIDEN)
# ABUTMENT DETAILS NO. 3

DESIGN DETAIL SHEET (ENGLISH) (REV. 2/25/05)

ORIGINAL SCALE IN INCHES FOR REDUCED PLANS 0 1 2 3

CU 12220
EA 0F0321

DISREGARD PRINTS BEARING EARLIER REVISION DATES 12/18/08 04/07/09 06/08/09

REVISION DATES (PRELIMINARY STAGE ONLY)

SHEET 9 OF 24

FILE => 55-0483-f-a01dt03.dgn

USERNAME => friehard DATE PLOTTED => 25-JAN-2010 TIME PLOTTED => 08:16

| DIST | COUNTY | ROUTE | POST MILES TOTAL PROJECT | SHEET No | TOTAL SHEETS |
|---|---|---|---|---|---|
| 12 | Ora | 57 | 18.4/20.9 | 633 | 856 |

REGISTERED CIVIL ENGINEER 06/08/09 DATE

1-25-10
PLANS APPROVAL DATE

REGISTERED PROFESSIONAL ENGINEER JOHN W. POWELL No. C71463 Exp. 12/31/09 CIVIL STATE OF CALIFORNIA

*The State of California or its officers or agents shall not be responsible for the accuracy or completeness of electronic copies of this plan sheet.*

OCTA
550 S. MAIN STREET
ORANGE, CA 92863

CH2M HILL
6 HUTTON CENTRE DRIVE, SUITE 700
SANTA ANA, CA 92707

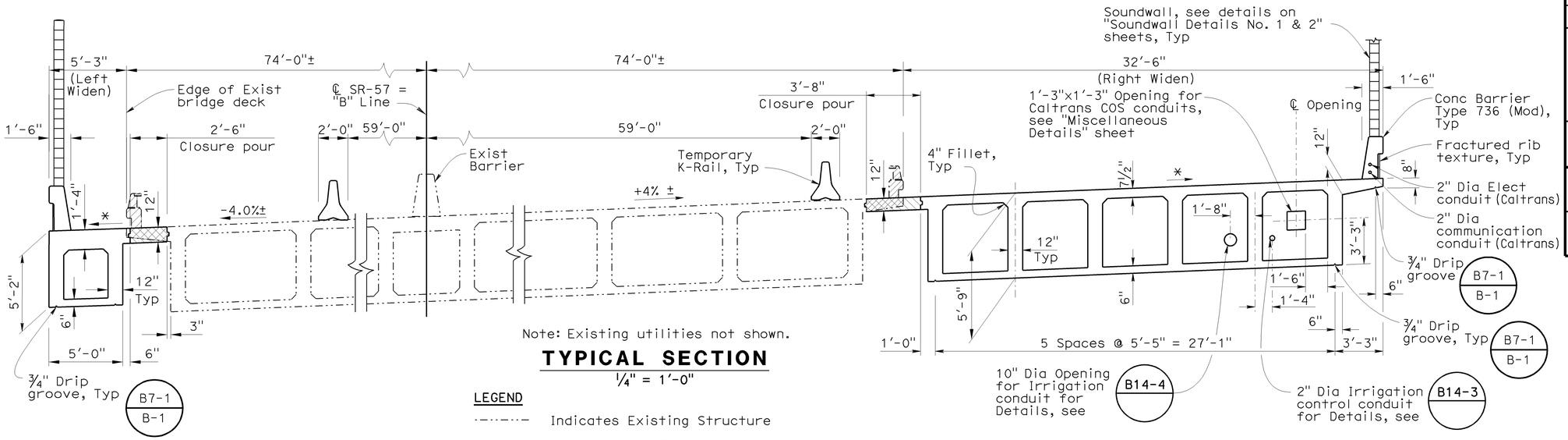


Note: Existing utilities not shown.

## TYPICAL SECTION

¼" = 1'-0"

**LEGEND**

- Indicates Existing Structure
- Indicates New Structure
- Bridge removal (Portion)
- Closure pour
- * Match Existing Grade & Cross Slope

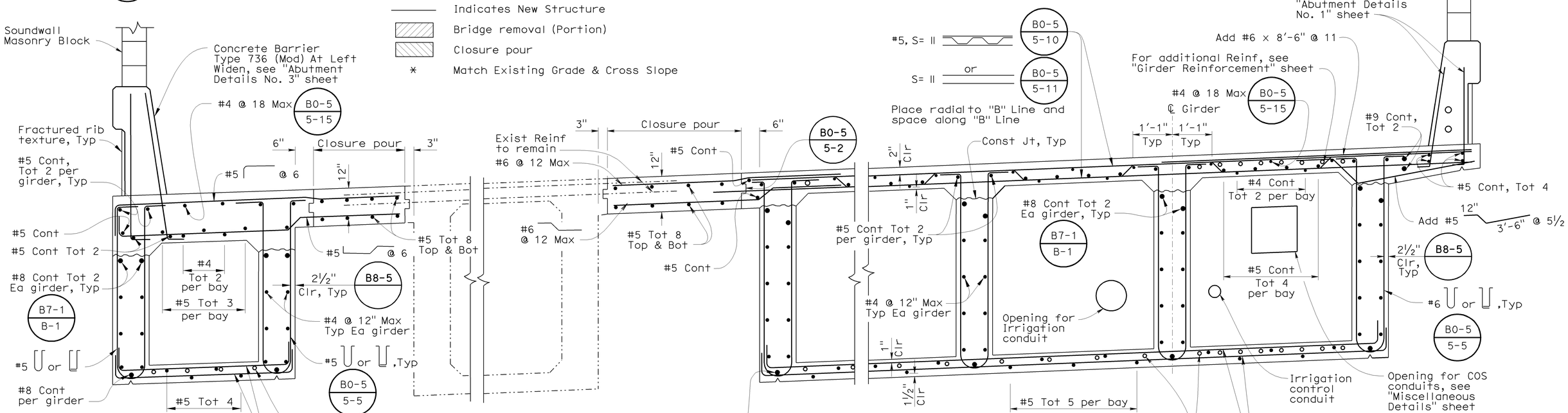


**NOTES:**

1. The Contractor shall verify all controlling field dimensions before ordering or fabricating any materials.
2. Falsework Release:
   Aternative 1
   Falsework shall be released as soon as permitted by specifications. Closure pour shall not be placed sooner than 60 days after the falsework has been released.

## PARTIAL TYPICAL SECTION

¾" = 1'-0"

B0-5 B7-1 B8-5

| | | | |
|---|---|---|---|
| DESIGN OVERSIGHT Jon Hamaguchi | DESIGN | BY M. Desai / J. Powell | CHECKED M. Atiqullah / A. Issa |
| 6-9-09 SIGN OFF DATE | DETAILS | BY M. Desai / J. Powell | CHECKED M. Atiqullah / A. Issa |
| | QUANTITIES | BY J. Powell | CHECKED E. Cutler |

PREPARED FOR THE STATE OF CALIFORNIA DEPARTMENT OF TRANSPORTATION

Ayman Salama
PROJECT ENGINEER

BRIDGE NO. 55-0483
POST MILE 19.33

# ROLLING HILLS DRIVE UC (WIDEN)

## TYPICAL SECTION

DESIGN DETAIL SHEET (ENGLISH) (REV. 2/25/05)

ORIGINAL SCALE IN INCHES FOR REDUCED PLANS 0 1 2 3

CU 12220
EA 0F0321

DISREGARD PRINTS BEARING EARLIER REVISION DATES

REVISION DATES (PRELIMINARY STAGE ONLY) 12/17/08 04/07/09 06/08/09

SHEET 10 OF 24

FILE => 55-0483-k-ts01.dgn

USERNAME => trienard DATE PLOTTED => 25-JAN-2010 TIME PLOTTED => 08:16

| DIST | COUNTY | ROUTE | POST MILES TOTAL PROJECT | SHEET No | TOTAL SHEETS |
|---|---|---|---|---|---|
| 12 | Ora | 57 | 18.4/20.9 | 634 | 856 |

REGISTERED CIVIL ENGINEER 06/08/09 DATE

1-25-10
PLANS APPROVAL DATE

REGISTERED PROFESSIONAL ENGINEER JOHN W. POWELL No. C71463 Exp. 12/31/09 CIVIL STATE OF CALIFORNIA

*The State of California or its officers or agents shall not be responsible for the accuracy or completeness of electronic copies of this plan sheet.*

OCTA
550 S. MAIN STREET
ORANGE, CA 92863

CH2M HILL
6 HUTTON CENTRE DRIVE, SUITE 700
SANTA ANA, CA 92707

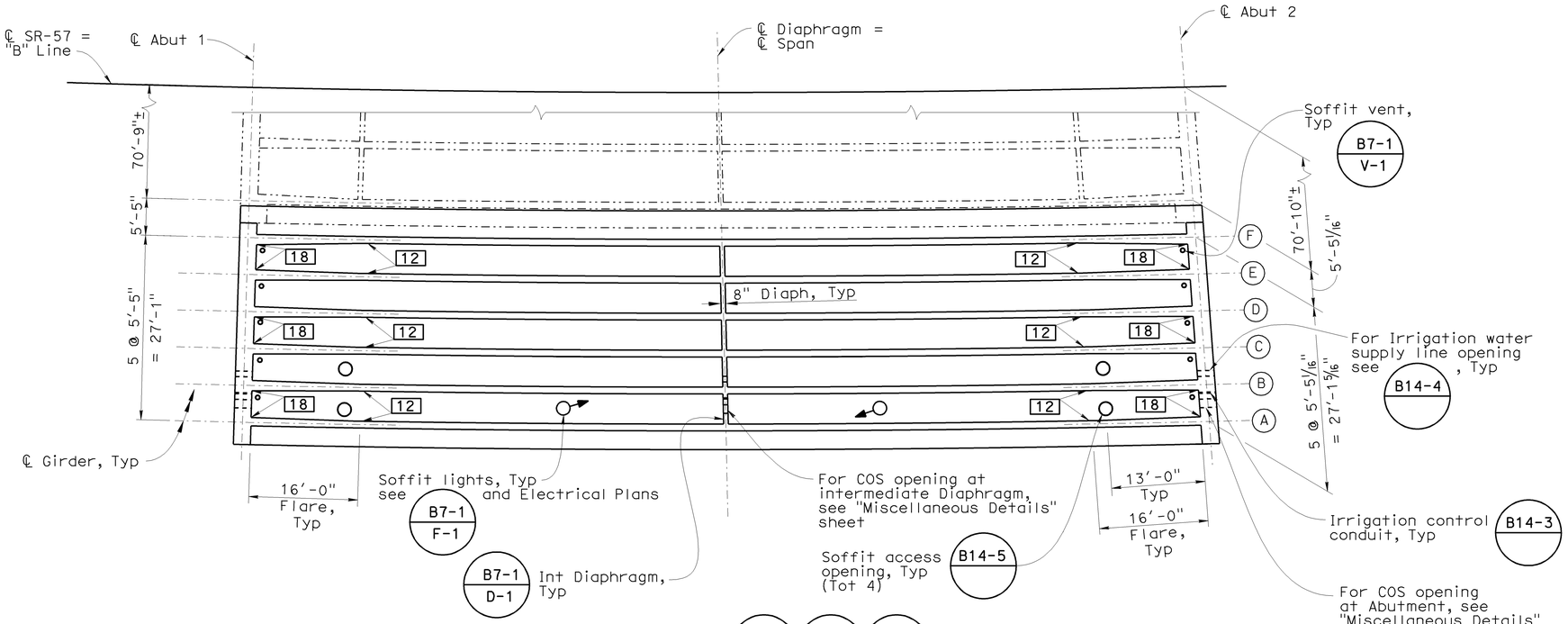


## GIRDER LAYOUT

1"=10'

B7-1 B0-5 B14-5

**NOTE:**
COS Conduit not shown.

**LEGEND**

XX Indicates girder stem width

## PRESTRESSING NOTES:

270 ksi low relaxation strand:

Pjack = see Prestressing Table
Anchor set = 3/8"
K=0.0002 K/ft $\mu$ = 0.15

Distribution of prestress force (Pjack) between girders shall not exceed the ratio of 3:2. Maximum final force variation between girders shall not exceed 725 kip.

Concrete:
f'c = 6,000 psi @ 28 days
f'ci = 4,000 psi @ time of stressing

Contractor shall submit elongation calculations based on initial stress at ⊠ = 0.9565 times the jacking stress. One-end stressing shall be performed from Abut 2 only.

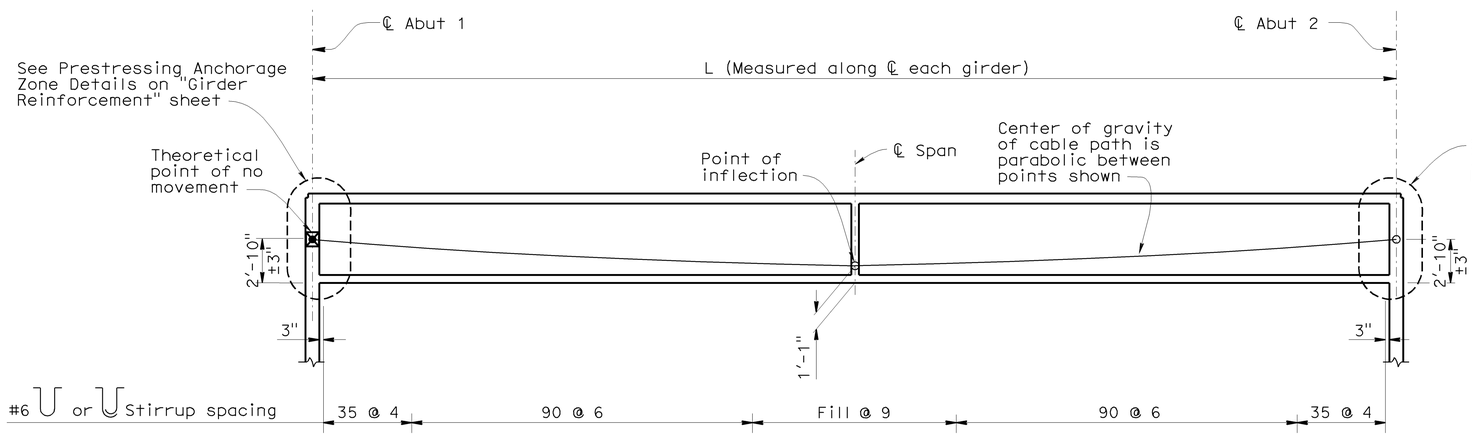


## LONGITUDINAL SECTION

No Scale

| PRESTRESSING TABLE | |
|---|---|
| GIRDER | P-JACK |
| A | 2770k |
| B | 2570k |
| C | 2370k |
| D | 2370k |
| E | 2370k |
| F | 2370k |

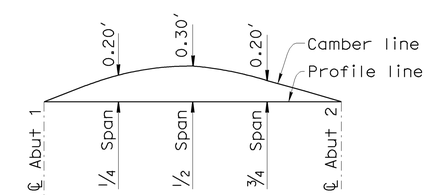


## CAMBER DIAGRAM

No Scale

**NOTE:**
Camber diagram does not include allowance for falsework settlement.

**NOTE:**
The Contractor shall verify all controlling field dimensions before ordering or fabricating any materials.

DESIGN OVERSIGHT Jon Hamaguchi
6-9-09
SIGN OFF DATE

| | BY | CHECKED |
|---|---|---|
| DESIGN | M. Desai / J. Powell | M. Atiqullah / A. Issa |
| DETAILS | M. Desai / J. Powell | M. Atiqullah / A. Issa |
| QUANTITIES | J. Powell | E. Cutler |

PREPARED FOR THE STATE OF CALIFORNIA DEPARTMENT OF TRANSPORTATION

Ayman Salama
PROJECT ENGINEER

BRIDGE NO. 55-0483
POST MILE 19.33

# ROLLING HILLS DRIVE UC (WIDEN)
# GIRDER LAYOUT (RIGHT WIDEN)

DESIGN DETAIL SHEET (ENGLISH) (REV. 2/25/05)

ORIGINAL SCALE IN INCHES FOR REDUCED PLANS 0 1 2 3

CU 12220
EA 0F0321

DISREGARD PRINTS BEARING EARLIER REVISION DATES
REVISION DATES (PRELIMINARY STAGE ONLY) 12/07/08 04/07/09 06/08/09

SHEET 11 OF 24

FILE => 55-0483-1-g_l001.dgn

USERNAME => trlenard DATE PLOTTED => 25-JAN-2010 TIME PLOTTED => 08:16

| DIST | COUNTY | ROUTE | POST MILES TOTAL PROJECT | SHEET No | TOTAL SHEETS |
|---|---|---|---|---|---|
| 12 | Ora | 57 | 18.4/20.9 | 635 | 856 |

REGISTERED CIVIL ENGINEER 06/08/09 DATE

1-25-10
PLANS APPROVAL DATE

REGISTERED PROFESSIONAL ENGINEER
JOHN W. POWELL
No. C71463
Exp. 12/31/09
CIVIL
STATE OF CALIFORNIA

*The State of California or its officers or agents shall not be responsible for the accuracy or completeness of electronic copies of this plan sheet.*

OCTA
550 S. MAIN STREET
ORANGE, CA 92863

CH2M HILL
6 HUTTON CENTRE DRIVE, SUITE 700
SANTA ANA, CA 92707

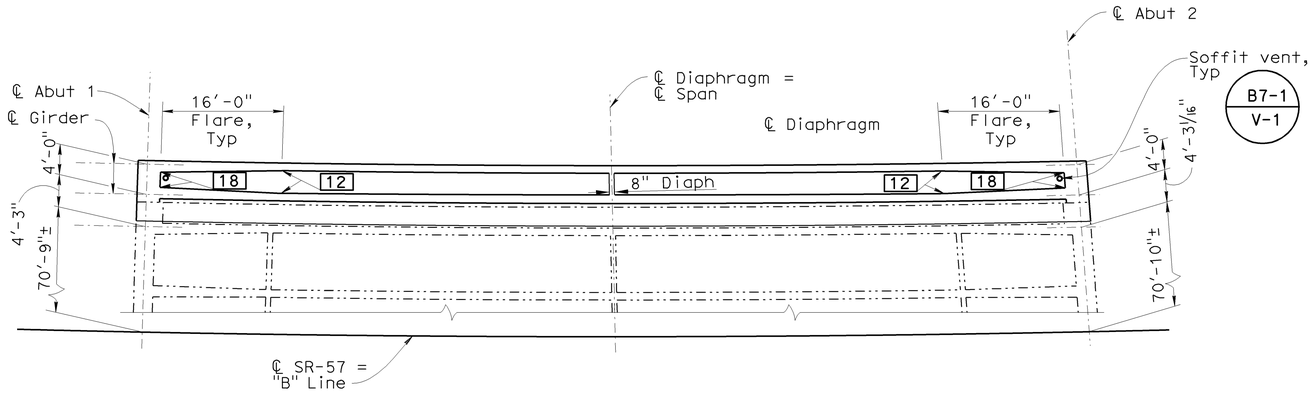


## GIRDER LAYOUT (B7-1 / B0-5)

1"=10'

LEGEND

XX Indicates girder stem width

## PRESTRESSING NOTES:

270 ksi low relaxation strand:

Pjack = 3,660 kips
Anchor set = 3/8"
K=0.0002 K/ft $\mu$ = 0.15
Total number of girders = 2

Distribution of prestress force (Pjack) between girders shall not exceed the ratio of 3:2. Maximum final force variation between girders shall not exceed 725 kip.

Concrete:
f'c = 6,000 psi @ 28 days
f'ci = 4,000 psi @ time of stressing

Contractor shall submit elongation calculations based on initial stress at ⊠ = 0.9589 times jacking stress. One-end stressing shall be performed from Abut 2 only.

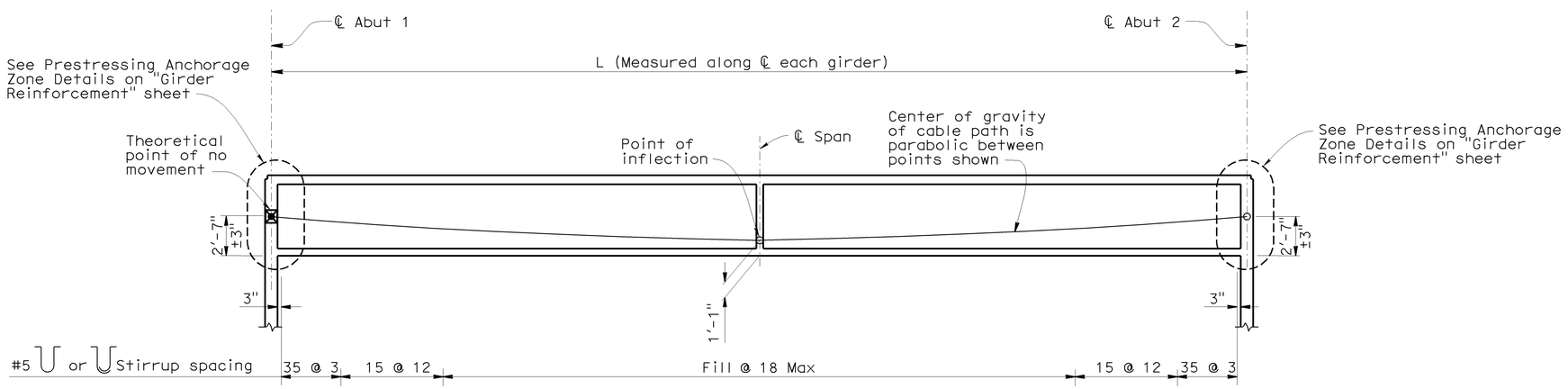


## LONGITUDINAL SECTION

No Scale

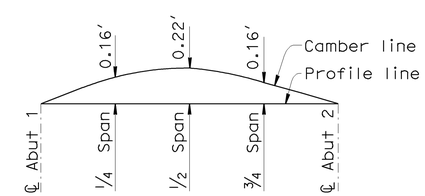


## CAMBER DIAGRAM

No Scale

NOTE:
Camber diagram does not include allowance for falsework settlement.

NOTE:
The Contractor shall verify all controlling field dimensions before ordering or fabricating any materials.

DESIGN OVERSIGHT Jon Hamaguchi
6-9-09
SIGN OFF DATE

| | BY | CHECKED |
|---|---|---|
| DESIGN | M. Desai / J. Powell | M. Atiqullah / A. Issa |
| DETAILS | M. Desai / J. Powell | M. Atiqullah / A. Issa |
| QUANTITIES | J. Powell | E. Cutler |

PREPARED FOR THE STATE OF CALIFORNIA DEPARTMENT OF TRANSPORTATION

Ayman Salama
PROJECT ENGINEER

BRIDGE NO. 55-0483
POST MILE 19.33

# ROLLING HILLS DRIVE UC (WIDEN)
# GIRDER LAYOUT (LEFT WIDEN)

DESIGN DETAIL SHEET (ENGLISH) (REV. 2/25/05)

ORIGINAL SCALE IN INCHES FOR REDUCED PLANS 0 1 2 3

CU 12220
EA 0F0321

DISREGARD PRINTS BEARING EARLIER REVISION DATES

REVISION DATES (PRELIMINARY STAGE ONLY) 12/12/08 04/07/09 06/08/09

SHEET 12 OF 24

FILE => 55-0483-1-g_1002.dgn

USERNAME => friehard DATE PLOTTED => 25-JAN-2010 TIME PLOTTED => 08:17

| DIST | COUNTY | ROUTE | POST MILES TOTAL PROJECT | SHEET No | TOTAL SHEETS |
|---|---|---|---|---|---|
| 12 | Ora | 57 | 18.4/20.9 | 636 | 856 |

REGISTERED CIVIL ENGINEER 06/08/09 DATE

1-25-10
PLANS APPROVAL DATE

REGISTERED PROFESSIONAL ENGINEER JOHN W. POWELL No. C71463 Exp. 12/31/09 CIVIL STATE OF CALIFORNIA

*The State of California or its officers or agents shall not be responsible for the accuracy or completeness of electronic copies of this plan sheet.*

OCTA
550 S. MAIN STREET
ORANGE, CA 92863

CH2M HILL
6 HUTTON CENTRE DRIVE, SUITE 700
SANTA ANA, CA 92707

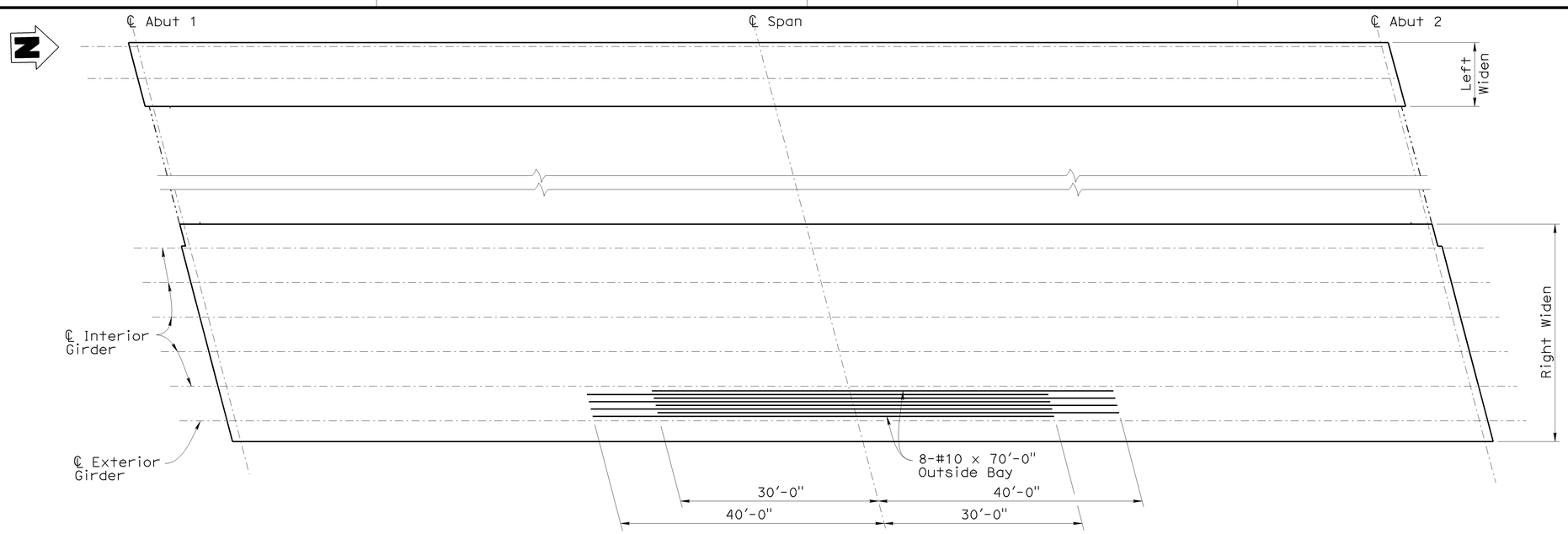


## ADDITIONAL GIRDER TOP REINFORCEMENT

No Scale

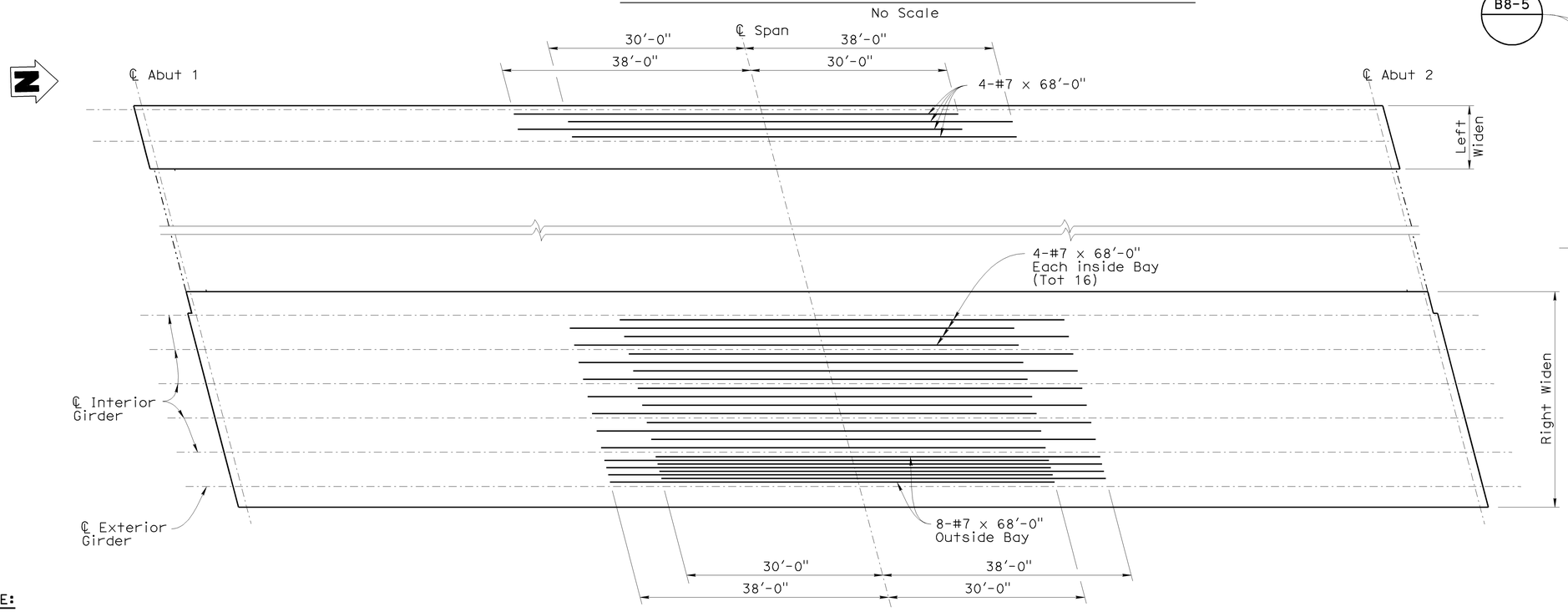


## ADDITIONAL GIRDER BOTTOM REINFORCEMENT

No Scale

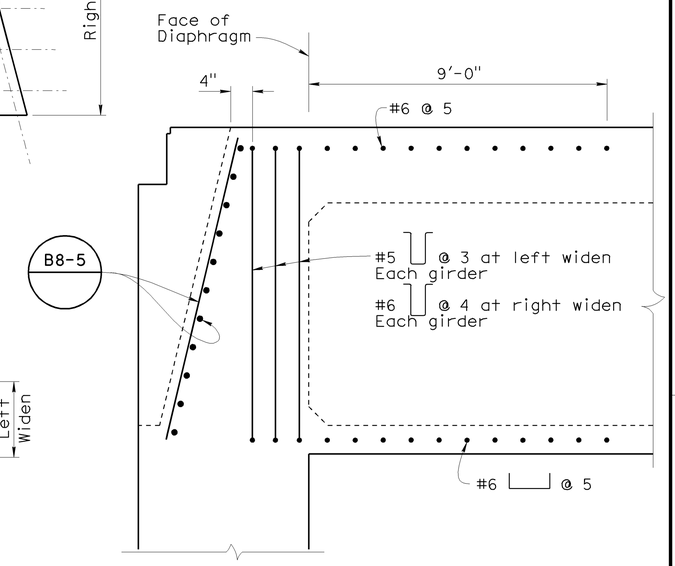


## PRESTRESS ANCHORAGE ZONE DETAILS

No Scale

**NOTE:**

The Contractor shall verify all controlling field dimensions before ordering or fabricating any materials.

**NOTE:**

Added girder reinforcement shall have "Service" butt splice.

DESIGN OVERSIGHT Jon Hamaguchi
6-9-09
SIGN OFF DATE

| | BY | CHECKED |
|---|---|---|
| DESIGN | M. Desai / J. Powell | M. Atiqullah / A. Issa |
| DETAILS | M. Desai / J. Powell | M. Atiqullah / A. Issa |
| QUANTITIES | J. Powell | E. Cutler |

PREPARED FOR THE STATE OF CALIFORNIA DEPARTMENT OF TRANSPORTATION

Ayman Salama
PROJECT ENGINEER

BRIDGE NO. 55-0483
POST MILE 19.33

# ROLLING HILLS DRIVE UC (WIDEN)
# GIRDER REINFORCEMENT

DESIGN DETAIL SHEET (ENGLISH) (REV. 2/25/05)

ORIGINAL SCALE IN INCHES FOR REDUCED PLANS 0 1 2 3

CU 12220
EA 0F0321

DISREGARD PRINTS BEARING EARLIER REVISION DATES

REVISION DATES (PRELIMINARY STAGE ONLY) 12/18/08 04/07/09 06/08/09

SHEET 13 OF 24

FILE => 55-0483-o-gir_rf01.dgn

USERNAME => trlenard DATE PLOTTED => 25-JAN-2010 TIME PLOTTED => 08:17

| DIST. | COUNTY | ROUTE | POST MILES TOTAL PROJECT | SHEET NO. | TOTAL SHEETS |
|---|---|---|---|---|---|
| 12 | Ora | 57 | 18.4/20.9 | 637 | 856 |

REGISTERED ENGINEER - CIVIL DATE 06/08/09

1-25-10
PLANS APPROVAL DATE

REGISTERED PROFESSIONAL ENGINEER JOHN W. POWELL No. C71463 Exp. 12/31/09 CIVIL STATE OF CALIFORNIA

The State of California or its officers or agents shall not be responsible for the accuracy or completeness of electronic copies of this plan sheet.

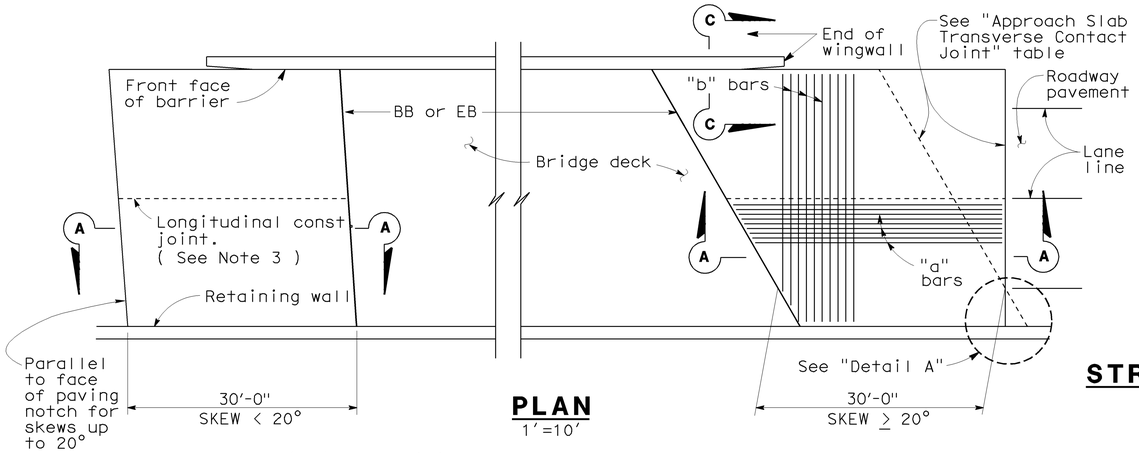


## PLAN
1"=10'

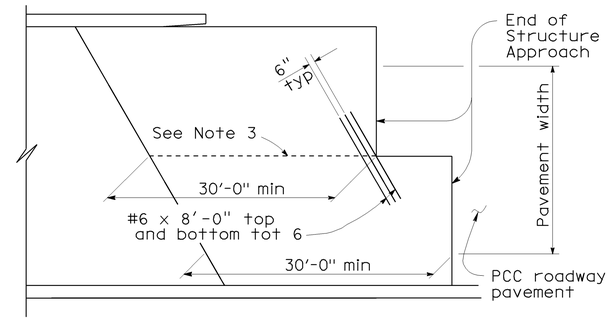


## STRUCTURE APPROACH - END STAGGER DETAIL
No Scale

| APPROACH SLAB TRANSVERSE CONTACT JOINT | | |
|---|---|---|
| APPROACH SKEW | WITH AC ROADWAY PAVEMENT | WITH PCC ROADWAY PAVEMENT |
| < 20° | Parallel to face of paving notch | Parallel to face of paving notch |
| 20°- 45° | Parallel to face of P N use (Detail A) | Stagger lines 24' to 36' apart |
| > 45° | Parallel to face of P N use (Detail A) | Stagger at each lane line |

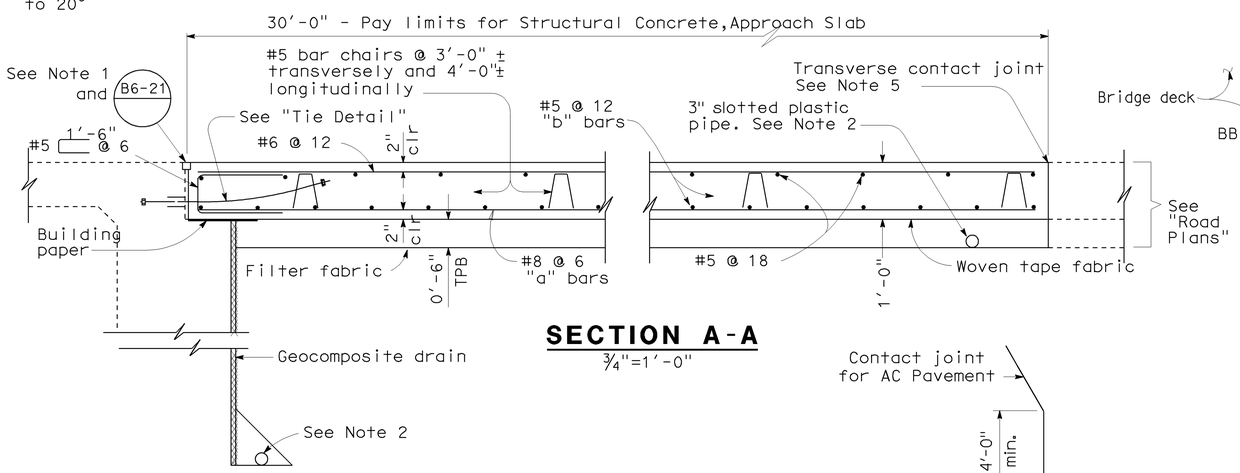


## SECTION A-A
¾"=1'-0"

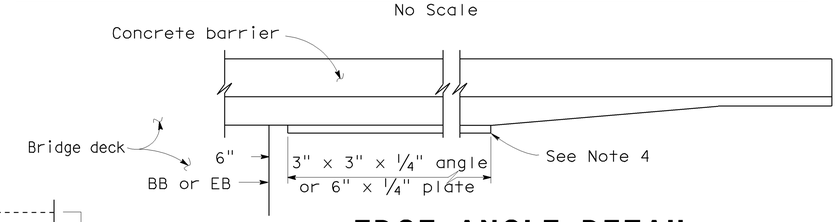


## EDGE ANGLE DETAIL
½"=1'-0"

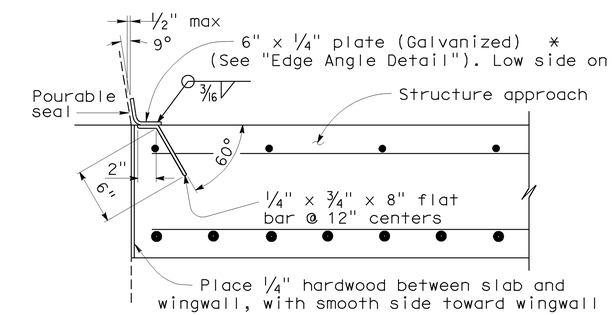


*** (TO BE USED WITH TYPE 732 OR TYPE 736 CONCRETE BARRIER)**

## DETAIL B
1½"=1'-0"

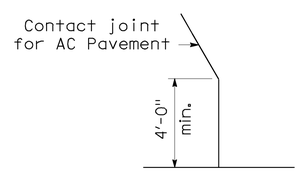


## DETAIL A
No Scale

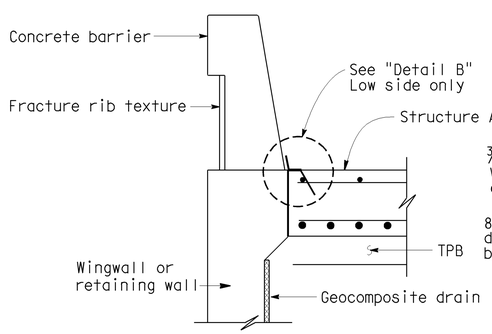


**NOTE:**
The Contractor shall verify all controlling field dimensions before ordering or fabricating any materials.

2

1 **TYPE E-2**

## SECTION C-C
¾"=1'-0"
( Type E-1 to be used, unless otherwise shown on plans )

3

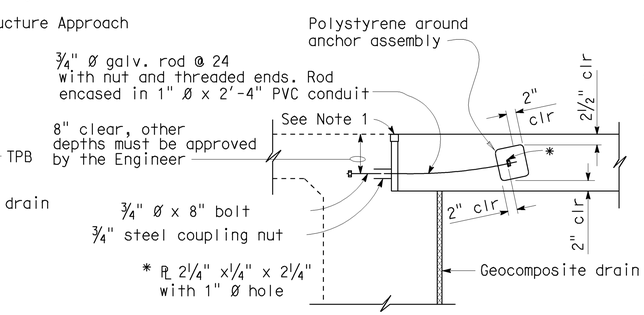


## TIE DETAIL
¾"=1'-0"

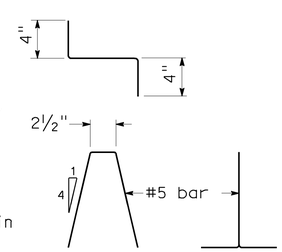


## BAR CHAIR DETAIL
1½"=1'-0"

**NOTES:**

1. For details not noted or shown, see Structure Plans.
2. For drainage details, see "Structure Approach Drainage Details" sheet.
3. Longitudinal construction joints, when permitted by the Engineer, shall be located on lane lines.
4. End angle or plate at beginning of barrier transition, end of wingwall or end of structure approach, as applicable.
5. For transverse contact joint with new PCC paving, refer to Standard Plan P10.
6. At the contractor's option, approach slab transverse reinforcement may be placed parallel to paving notch. Spacing of transverse reinforcement is measured along ℄ roadway.

Polystyrene to be removed.

| STANDARD DRAWING | | | |
|---|---|---|---|
| FILE NO. xs3-180e | APPROVED BY M. Ha (RESPONSIBLE TECHNICAL SPECIALIST) | RELEASED BY O. Alcantara (RESPONSIBLE OFFICE CHIEF) | |
| | APPROVAL DATE 8-12-08 | RELEASE DATE REVISED | |

1 Revised detail
2 Type E-1 removed
3 Type 25 or Type 27 Conc Barrier on Det B removed

STATE OF CALIFORNIA DEPARTMENT OF TRANSPORTATION

DIVISION OF ENGINEERING SERVICES

BRIDGE NO. 55-0483
POST MILE 19.33

# ROLLING HILLS DRIVE UC (WIDEN)
# STRUCTURE APPROACH TYPE N(30D)

DS OSD 2147A (ENGLISH STANDARD DRAWING "XS" BORDER REV. 01/11/08)

ORIGINAL SCALE IN INCHES FOR REDUCED PLANS 0 1 2 3

CU 12220
EA 0F0321

DISREGARD PRINTS BEARING EARLIER REVISION DATES

REVISION DATES (PRELIMINARY STAGE ONLY) 2/12/08 04/07/08 06/08/09

SHEET 14 OF 24

USERNAME => trlenard

55-0483-r-sap01.dgn

DATE PLOTTED => 25-JAN-2010 TIME PLOTTED => 08:17

| DIST. | COUNTY | ROUTE | POST MILES TOTAL PROJECT | SHEET NO. | TOTAL SHEETS |
|---|---|---|---|---|---|
| 12 | Ora | 57 | 18.4/20.9 | 638 | 856 |

REGISTERED ENGINEER - CIVIL DATE 06/08/09

1-25-10
PLANS APPROVAL DATE

REGISTERED PROFESSIONAL ENGINEER JOHN W. POWELL No. C71463 Exp. 12/31/09 CIVIL STATE OF CALIFORNIA

The State of California or its officers or agents shall not be responsible for the accuracy or completeness of electronic copies of this plan sheet.

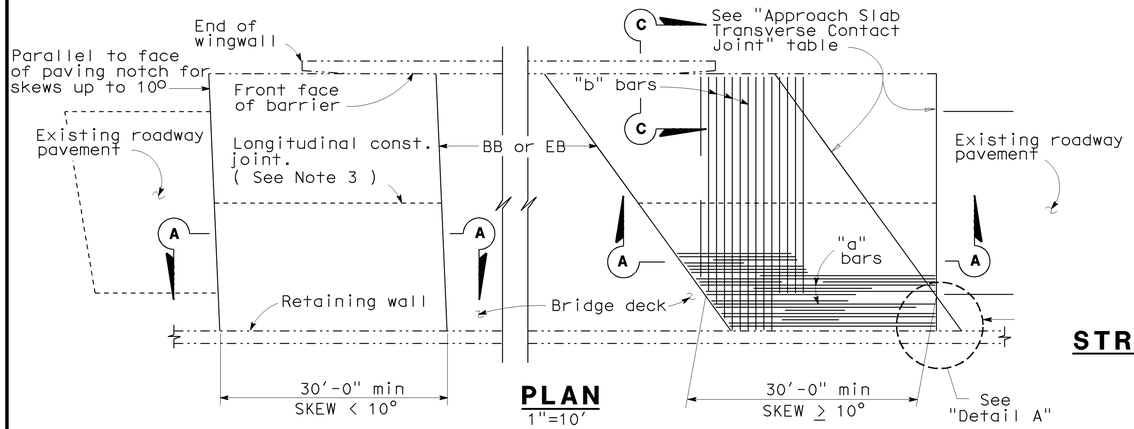


## PLAN
1"=10'

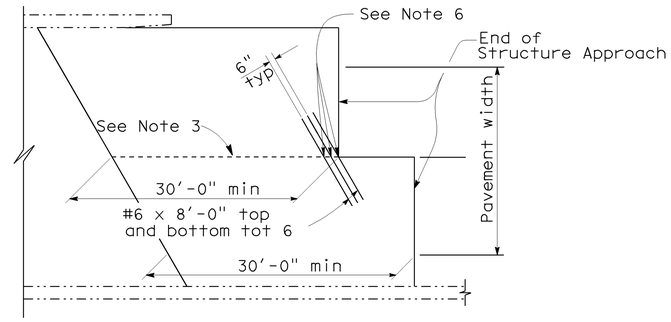


## STRUCTURE APPROACH - END STAGGER DETAIL
No Scale

| APPROACH SLAB TRANSVERSE CONTACT JOINT | | |
|---|---|---|
| APPROACH SKEW | WITH AC ROADWAY PAVEMENT | WITH PCC ROADWAY PAVEMENT |
| < 10° | Parallel to face of paving notch | Parallel to face of paving notch |
| 10° - 45° | Parallel to face of P N use (Detail A) | Stagger lines 24' to 36' apart |
| > 45° | Parallel to face of P N use (Detail A) | Stagger at each lane line |

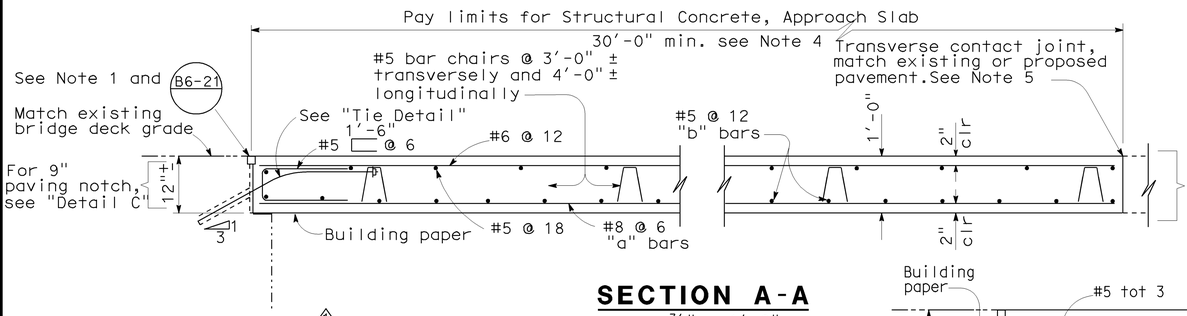


## SECTION A-A
¾" = 1'-0"

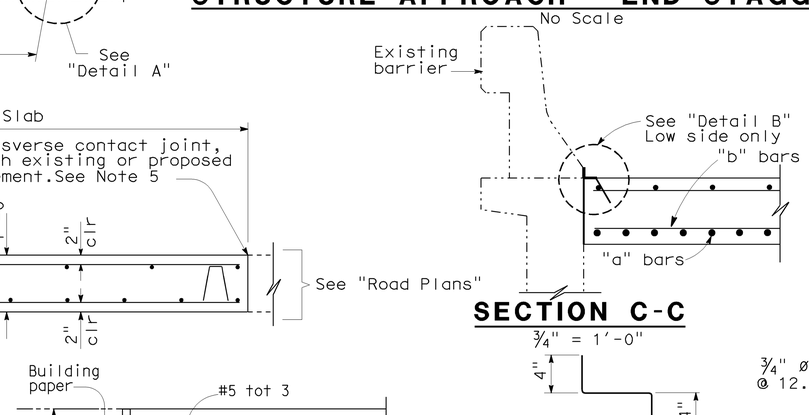


## SECTION C-C
¾" = 1'-0"




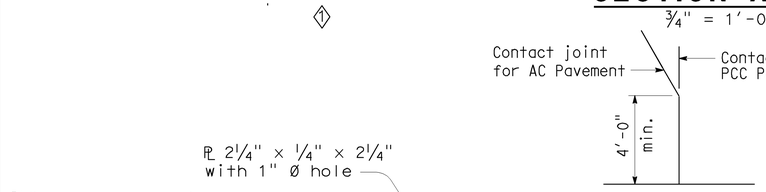


## DETAIL A
No Scale

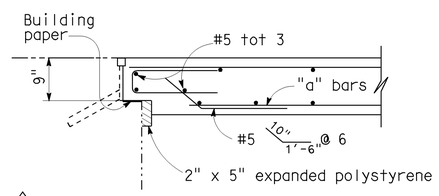


## DETAIL C
¾" = 1'-0"

NOTE: For details not shown, see "Section A-A".

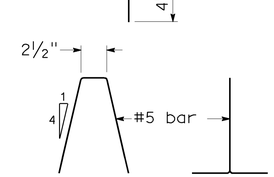


## BAR CHAIR DETAIL
1½" = 1'-0"

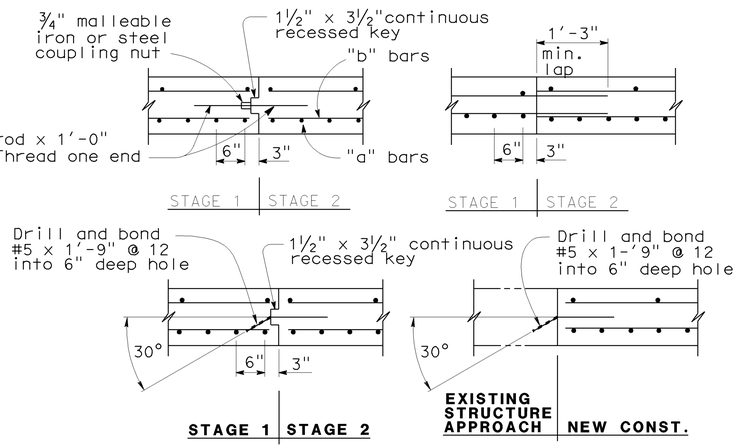


## LONGITUDINAL CONSTRUCTION JOINT ALTERNATIVES
¾" = 1'-0"

NOTES:

1. For details not shown or noted, see Structure Plans. Adjust bar reinforcement to clear a sawcut for sealed joint, when required.
2. Space to avoid existing prestress anchorages and main reinforcement.
3. Longitudinal construction joints, when permitted by the Engineer, shall be located on lane lines.
4. Transverse contact joint shall be a minimum of 5'-0" from an existing or constructed weakened plane joint.
5. For transverse contact joint with new PCC paving, refer to Standard Plan P10.
6. Couplers are required for stage construction.
7. End angle or plate at beginning of barrier transition, end of wingwall or end of structure approach as applicable.

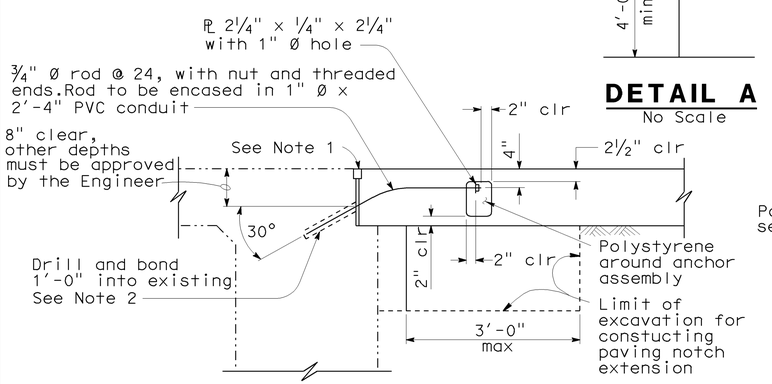


## TIE DETAIL
¾" = 1'-0"

NOTE:
The Contractor shall verify all controlling field dimensions before ordering or fabricating any material.

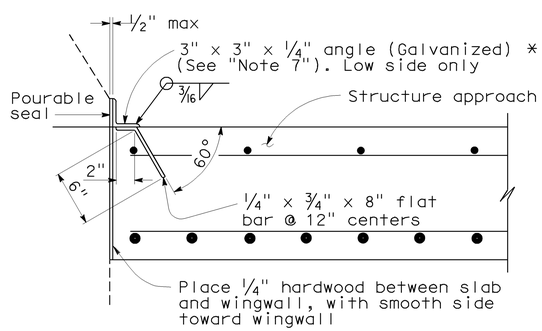


*(TO BE USED WITH TYPE 25 OR TYPE 27 CONCRETE BARRIER)

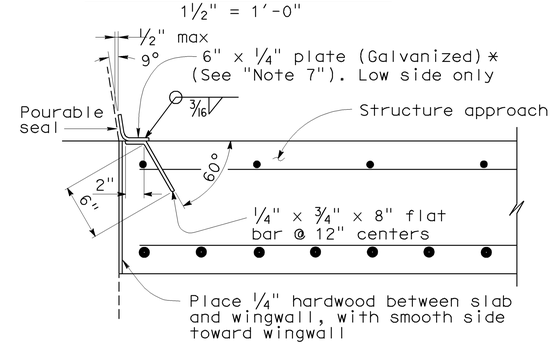


*(TO BE USED WITH TYPE 732 OR TYPE 736 CONCRETE BARRIER)

## DETAIL B
1½" = 1'-0"

| STANDARD DRAWING | | | | |
|---|---|---|---|---|
| RELEASE DATE Revised | DESIGN | BY M.TRAFFALIS | CHECKED E.THORKILDSEN | RELEASED BY |
| FILE NO. xs3-140e | DETAILS | BY R.YEE | CHECKED E.THORKILDSEN | |
| | SUBMITTED | BY M.HA | DRAWING DATE 8/92 | OFFICE CHIEF |

1 Revised Details

STATE OF CALIFORNIA DEPARTMENT OF TRANSPORTATION

DIVISION OF ENGINEERING SERVICES

BRIDGE NO. 55-0483
POST MILES 19.33

# ROLLING HILLS DRIVE UC (WIDEN)
# STRUCTURE APPROACH TYPE R(30D)

DS OSD 2147A (ENGLISH) (REV. X/XX/XX)

ORIGINAL SCALE IN INCHES FOR REDUCED PLANS 0 1 2 3

CU 12220
EA 0F0321

DISREGARD PRINTS BEARING EARLIER REVISION DATES

REVISION DATES (PRELIMINARY STAGE ONLY) 2/12/08 04/07/09 06/08/09

SHEET 15 OF 24

USERNAME => trlenard

55-0483-r-sap02.dgn

DATE PLOTTED => 25-JAN-2010 TIME PLOTTED => 08:17

| DIST. | COUNTY | ROUTE | POST MILES TOTAL PROJECT | SHEET NO. | TOTAL SHEETS |
|---|---|---|---|---|---|
| 12 | Ora | 57 | 18.4/20.9 | 639 | 856 |

REGISTERED ENGINEER - CIVIL DATE 06/08/09

1-25-10
PLANS APPROVAL DATE

REGISTERED PROFESSIONAL ENGINEER JOHN W. POWELL No. C71463 Exp. 12/31/09 CIVIL STATE OF CALIFORNIA

The State of California or its officers or agents shall not be responsible for the accuracy or completeness of electronic copies of this plan sheet.

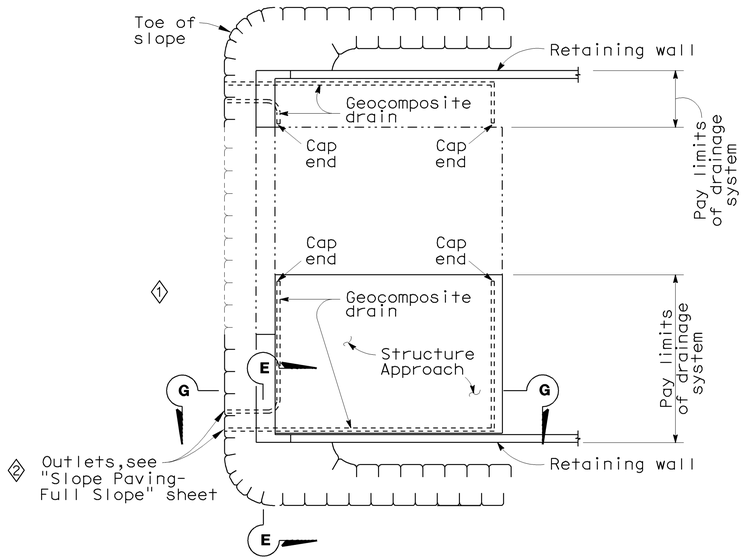


## TYPICAL PLAN

No Scale

*For pipe layout at staggered end, see "Detail B".

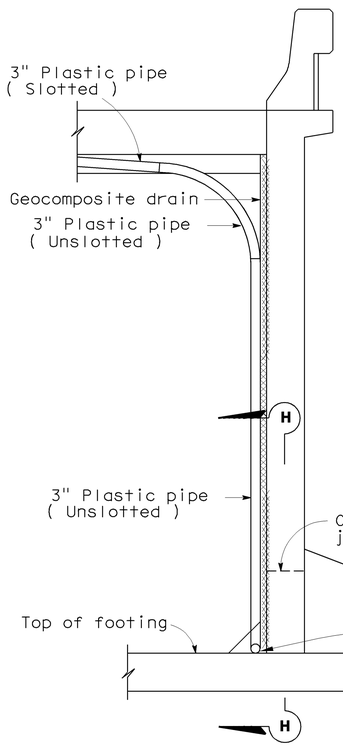


## SECTION E-E

½"=1'-0"

NOTE: Bends and junctions in 3" plastic pipe are 30" radius Min

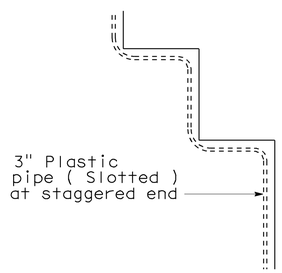


## DETAIL B

No Scale

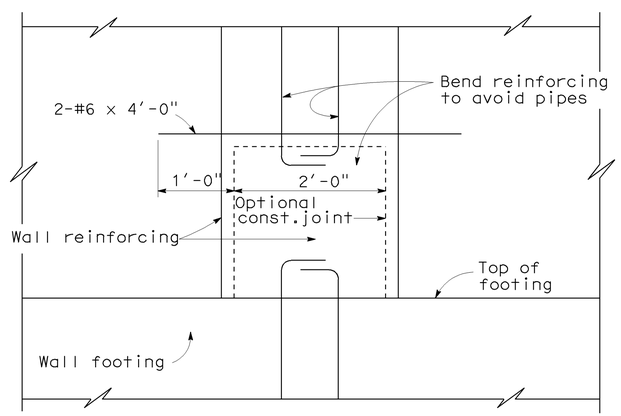


## SECTION H-H

1"=1'-0"

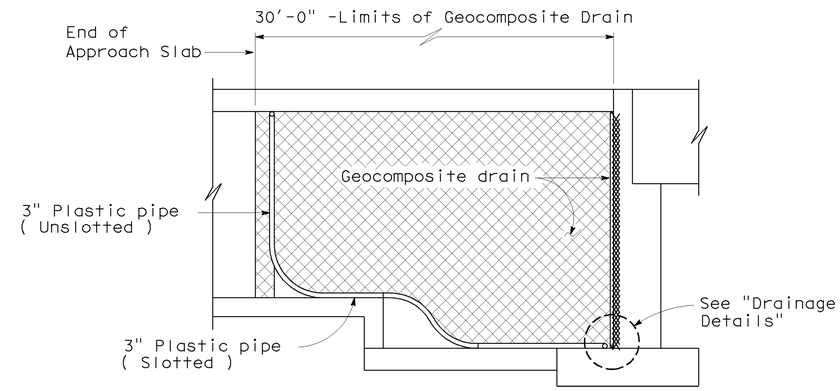


## RETAINING WALL WINGWALL

## SECTION G-G

¼"=1'-0"

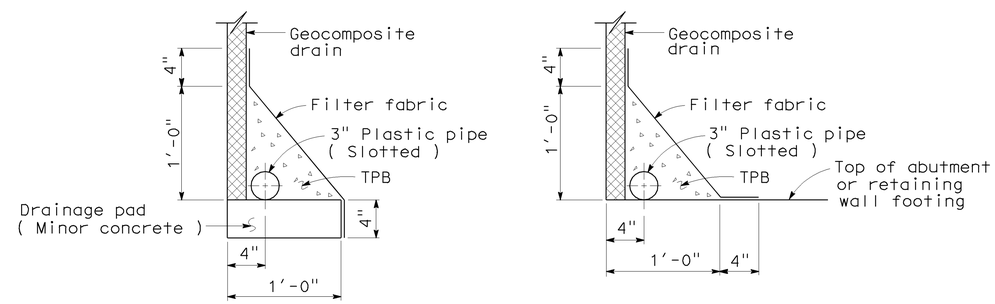


**WITHOUT FOOTING** **WITH FOOTING**

## DRAINAGE DETAILS

1½"=1'-0"

NOTE:
The Contractor shall verify all controlling field dimensions before ordering or fabricating any materials.

STANDARD DRAWING

| RELEASE DATE 4/23/98 | DESIGN | BY M.TRAFFALIS | CHECKED E.THORKILDSEN | RELEASED BY |
|---|---|---|---|---|
| FILE NO. xs3-110e | DETAILS | BY R.YEE | CHECKED E.THORKILDSEN | OFFICE CHIEF |
| | SUBMITTED | BY M.HA | DRAWING DATE 4/98 | |

1 Removed Section F-F
2 Revised outlet direction

STATE OF CALIFORNIA DEPARTMENT OF TRANSPORTATION

DIVISION OF ENGINEERING SERVICES

BRIDGE NO. 55-0483
POST MILES 19.33

# ROLLING HILLS DRIVE UC (WIDEN)
# STRUCTURE APPROACH DRAINAGE DETAILS

DS OSD 2147A (ENGLISH) (REV. X/XX/XX)

ORIGINAL SCALE IN INCHES FOR REDUCED PLANS 0 1 2 3

CU 12220
EA 0F0321

DISREGARD PRINTS BEARING EARLIER REVISION DATES

REVISION DATES (PRELIMINARY STAGE ONLY) 12/12/08 04/07/09 06/08/09

SHEET 16 OF 24

USERNAME => trlenard

55-0483-s-sadd.dgn

DATE PLOTTED => 25-JAN-2010 TIME PLOTTED => 08:17

| DIST | COUNTY | ROUTE | POST MILES TOTAL PROJECT | SHEET No | TOTAL SHEETS |
|---|---|---|---|---|---|
| 12 | Ora | 57 | 18.4/20.9 | 640 | 856 |

REGISTERED CIVIL ENGINEER 06/08/09 DATE

1-25-10
PLANS APPROVAL DATE

REGISTERED PROFESSIONAL ENGINEER JOHN W. POWELL No. C71463 Exp. 12/31/09 CIVIL STATE OF CALIFORNIA

*The State of California or its officers or agents shall not be responsible for the accuracy or completeness of electronic copies of this plan sheet.*

OCTA
550 S. MAIN STREET
ORANGE, CA 92863

CH2M HILL
6 HUTTON CENTRE DRIVE, SUITE 700
SANTA ANA, CA 92707

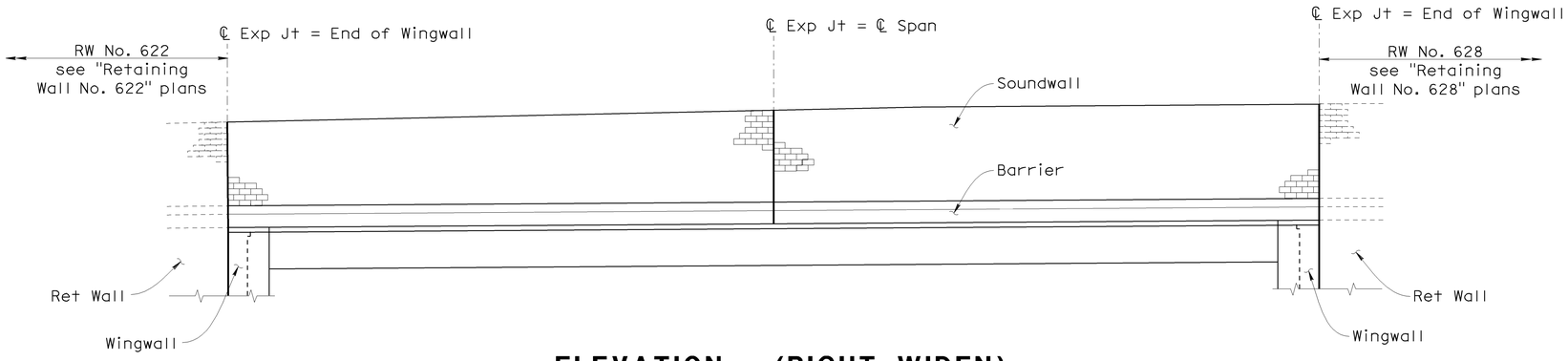


## ELEVATION - (RIGHT WIDEN)

1"=10'

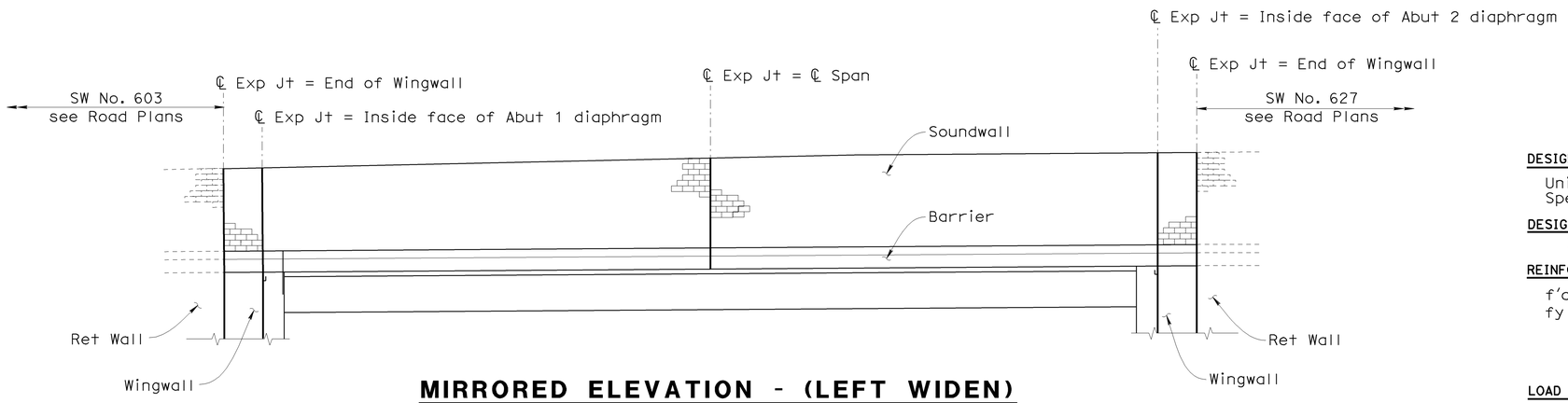


## MIRRORED ELEVATION - (LEFT WIDEN)

1"=10'

## DESIGN NOTES

**DESIGN**

Uniform Building Code,1997 Edition and the Bridge Design Specifications.

**DESIGN WIND LOAD**

37 psf

**DESIGN SEISMIC LOAD**

2.0 Dead load

**REINFORCED CONCRETE**

f'c = 3,600 psi
fy = 60,000 psi

**CONCRETE MASONRY**

**HIGH STRENGTH**

f'm = 2500 psi
fy = 60,000 psi

**LOAD FACTORS AND LOAD COMBINATIONS**

Load Factor Design ( LFD )

Group A: βD +1.7 E + 1.7 SC
Group B: βD +1.7 E + 1.3 W
Group C: βD +1.3 E + 1.0 EQE
Group D: βD +1.3 E + 1.0 EQD
Group E: βD +1.1 E + 0.85 ( EQE + EQD )

Where : β = 0.9 or 1.2, whichever controls in design
D = Dead load
E = Lateral earth pressure
SC = Live load surcharge
W = Wind load
EQD = Seismic dead load
EQE = Seismic earth load

**STRENGTH REDUCTION FACTORS, Ø**

Reinforced concrete:
For flexure _____ Ø=0.90
For shear _____ Ø=0.85

Concrete masonry:
For flexure _____ Ø=0.80
For shear _____ Ø=0.60

## GENERAL NOTES

Note A: For type of block, see Masonry Block Type Table on "Soundwall Details No. 2" sheet

Note B: When blocks are laid in stacked bond, ladder type, galvanized joint reinforcement shall be provided. A minimum of 2 - 0.148" wires continuous at 4'-0" maximum to be used. Locate reinforcement in joints that are at the approximate midpoint between bond beams.

Note C: Horizontal joints shall be tooled concave or may be weathered.

Vertical joints shall be tooled concave or may be raked.

Note D: All masonry to be high strength unless otherwise noted.

Note E: For location of expansion joint, see Elevation - (Right Widen) and Mirrored Elevation - (Left Widen)

**NOTE:**

The Contractor shall verify all controlling field dimensions before ordering or fabricating any materials.

**NOTE:**

1. Barrier, Deck and Concrete Masonry are designed by the Strength Design Method.

DESIGN OVERSIGHT Jon Hamaguchi
6-9-09
SIGN OFF DATE

| | BY | CHECKED |
|---|---|---|
| DESIGN | M. Desai / J. Powell | M. Atiqullah / A. Issa |
| DETAILS | M. Desai / J. Powell | M. Atiqullah / A. Issa |
| QUANTITIES | J. Powell | E. Cutler |

PREPARED FOR THE STATE OF CALIFORNIA DEPARTMENT OF TRANSPORTATION

Ayman Salama
PROJECT ENGINEER

BRIDGE NO. 55-0483
POST MILE 19.33

# ROLLING HILLS DRIVE UC (WIDEN)
# SOUNDWALL DETAILS NO. 1

DESIGN DETAIL SHEET (ENGLISH) (REV. 2/25/05)

ORIGINAL SCALE IN INCHES FOR REDUCED PLANS 0 1 2 3

CU 12220
EA 0F0321

DISREGARD PRINTS BEARING EARLIER REVISION DATES

REVISION DATES (PRELIMINARY STAGE ONLY) 12/12/08 04/07/09 06/08/09

SHEET 17 OF 24

FILE => 55-0483-t-swdt01.dgn

USERNAME => trlenard DATE PLOTTED => 25-JAN-2010 TIME PLOTTED => 08:17

| DIST | COUNTY | ROUTE | POST MILES TOTAL PROJECT | SHEET No | TOTAL SHEETS |
|---|---|---|---|---|---|
| 12 | Ora | 57 | 18.4/20.9 | 641 | 856 |

REGISTERED CIVIL ENGINEER 06/08/09 DATE

1-25-10
PLANS APPROVAL DATE

REGISTERED PROFESSIONAL ENGINEER JOHN W. POWELL No. C71463 Exp. 12/31/09 CIVIL STATE OF CALIFORNIA

*The State of California or its officers or agents shall not be responsible for the accuracy or completeness of electronic copies of this plan sheet.*

OCTA
550 S. MAIN STREET
ORANGE, CA 92863

CH2M HILL
6 HUTTON CENTRE DRIVE, SUITE 700
SANTA ANA, CA 92707

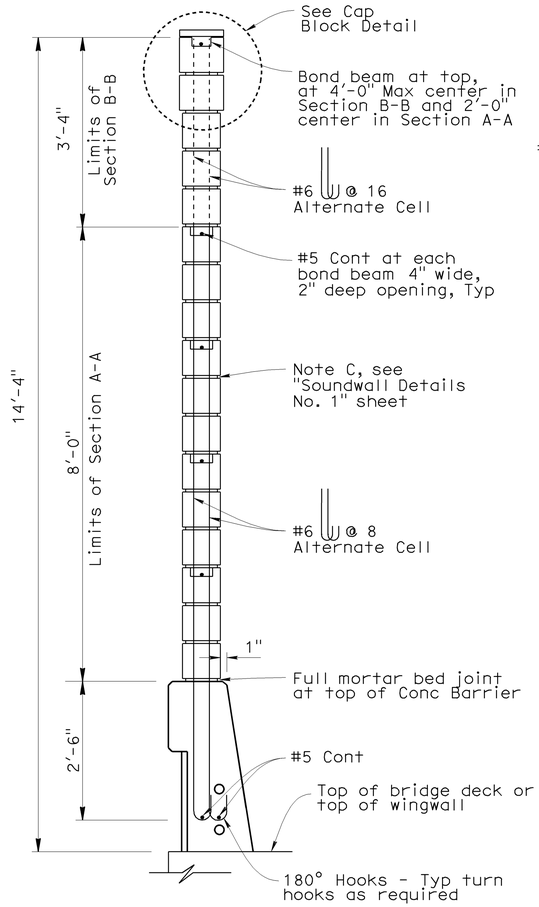


## SOUNDWALL SECTION

¾" = 1'-0"

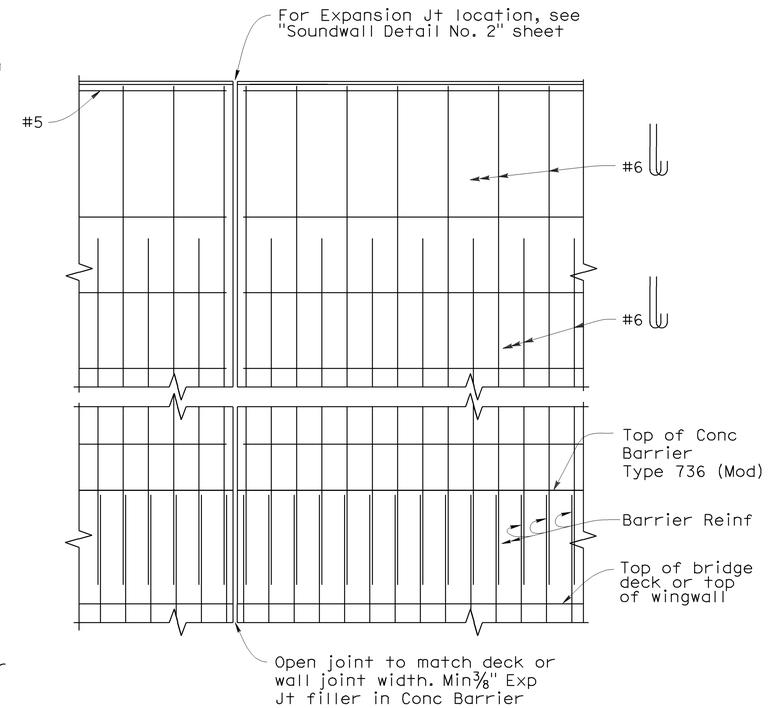


## WALL JOINT DETAIL

No Scale

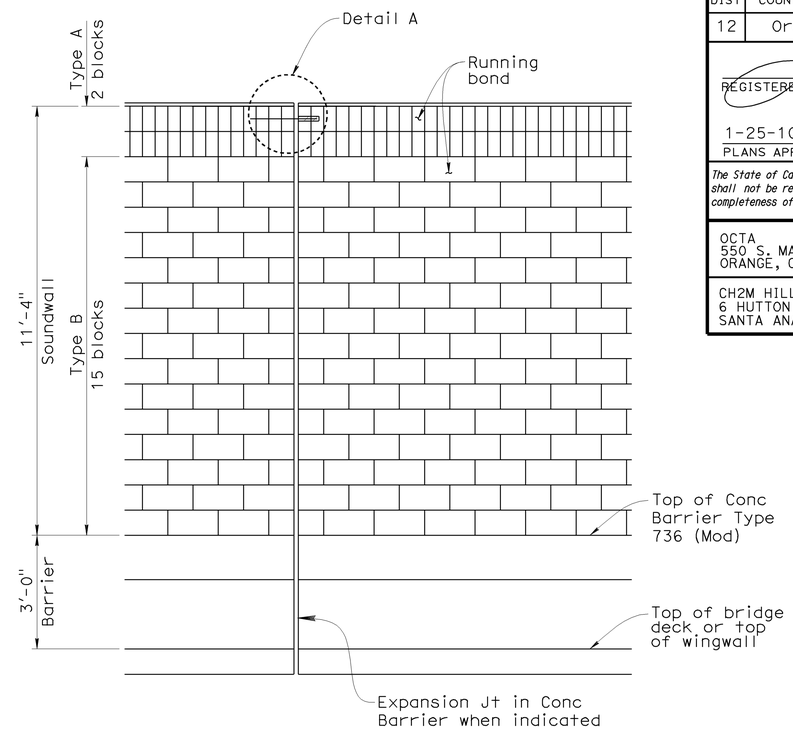


## SOUNDWALL - ARCHITECTURAL TREATMENT DETAIL

½"=1'-0"

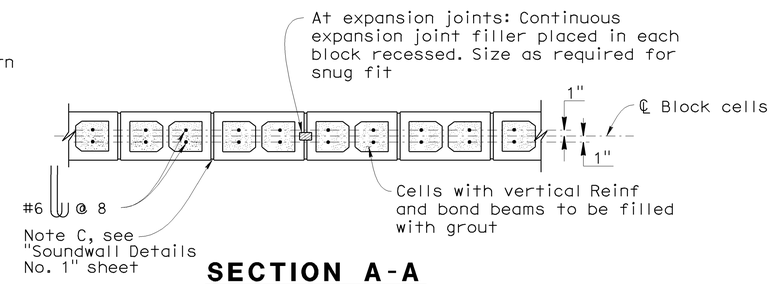


## SECTION A-A

No Scale

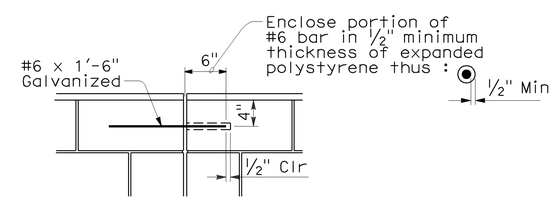


## DETAIL A

No Scale

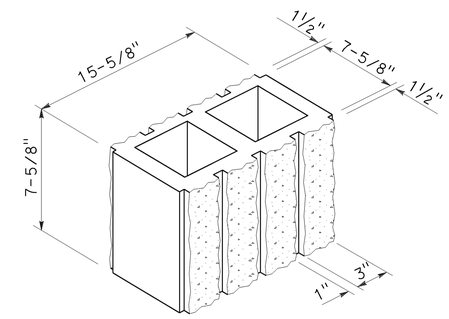


## DETAIL B

No Scale

8" WIDE 3-SCORE SPLIT FACE BOTH SIDES

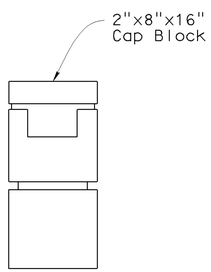


## CAP BLOCK DETAIL

No Scale

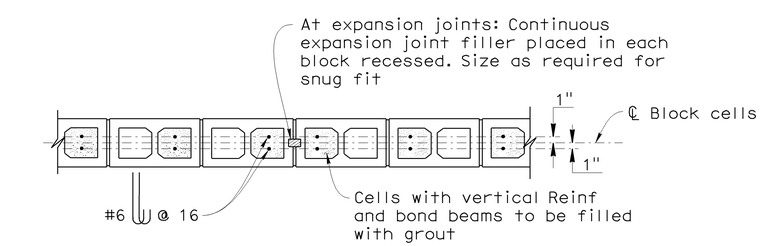


## SECTION B-B

No Scale

**NOTE:**

The Contractor shall verify all controlling field dimensions before ordering or fabricating any materials.

| MASONRY BLOCK TYPE TABLE | |
|---|---|
| Block Type | Block Description |
| A | Wall cap rows (Tan scored split face concrete) 3 scored, see Detail B |
| B | Main wall surface (Tan split face concrete) |

DESIGN OVERSIGHT Jon Hamaguchi
6-9-09
SIGN OFF DATE

| | BY | CHECKED |
|---|---|---|
| DESIGN | M. Desai / J. Powell | M. Atiqullah / A. Issa |
| DETAILS | M. Desai / J. Powell | M. Atiqullah / A. Issa |
| QUANTITIES | J. Powell | E. Cutler |

PREPARED FOR THE STATE OF CALIFORNIA DEPARTMENT OF TRANSPORTATION

Ayman Salama
PROJECT ENGINEER

BRIDGE NO. 55-0483
POST MILE 19.33

# ROLLING HILLS DRIVE UC (WIDEN)
# SOUNDWALL DETAILS NO. 2

DESIGN DETAIL SHEET (ENGLISH) (REV. 2/25/05)

ORIGINAL SCALE IN INCHES FOR REDUCED PLANS 0 1 2 3

CU 12220
EA 0F0321

DISREGARD PRINTS BEARING EARLIER REVISION DATES

REVISION DATES (PRELIMINARY STAGE ONLY) 12/17/08 04/07/09 06/08/09

SHEET 18 OF 24

FILE => 55-0483-t-swdt02.dgn

USERNAME => triehard DATE PLOTTED => 25-JAN-2010 TIME PLOTTED => 08:17

| DIST | COUNTY | ROUTE | POST MILES TOTAL PROJECT | SHEET No | TOTAL SHEETS |
|---|---|---|---|---|---|
| 12 | Ora | 57 | 18.4/20.9 | 642 | 856 |

REGISTERED CIVIL ENGINEER 06/08/09 DATE

1-25-10
PLANS APPROVAL DATE

REGISTERED PROFESSIONAL ENGINEER JOHN W. POWELL No. C71463 Exp. 12/31/09 CIVIL STATE OF CALIFORNIA

*The State of California or its officers or agents shall not be responsible for the accuracy or completeness of electronic copies of this plan sheet.*

OCTA
550 S. MAIN STREET
ORANGE, CA 92863

CH2M HILL
6 HUTTON CENTRE DRIVE, SUITE 700
SANTA ANA, CA 92707

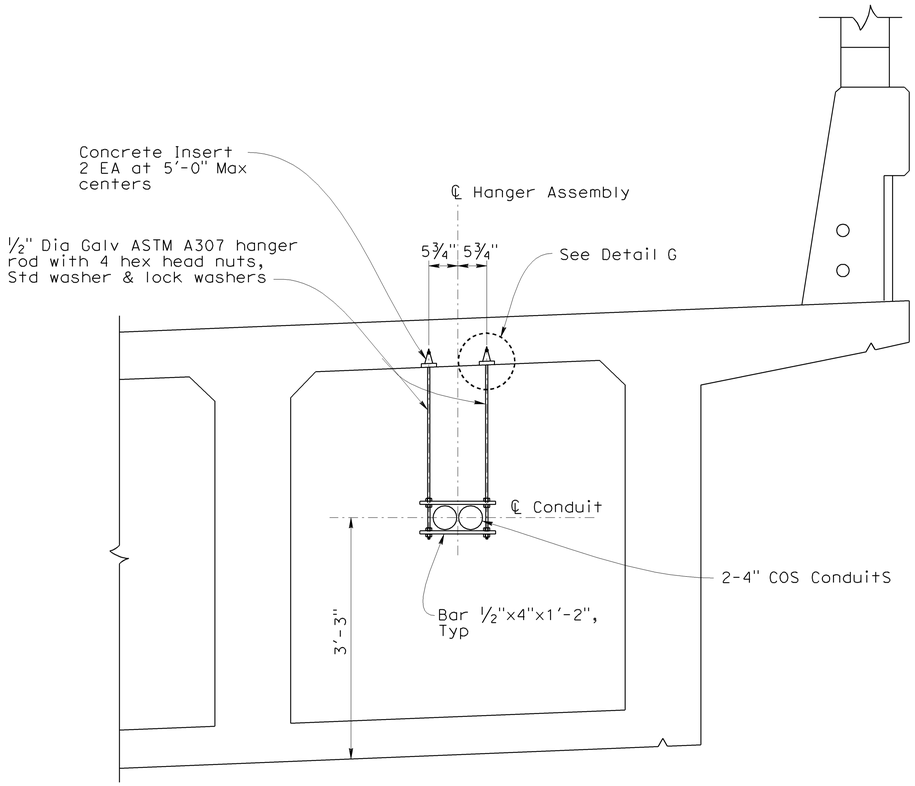


## COS CONDUIT HANGER SUPPORT DETAIL

1" = 1'-0"

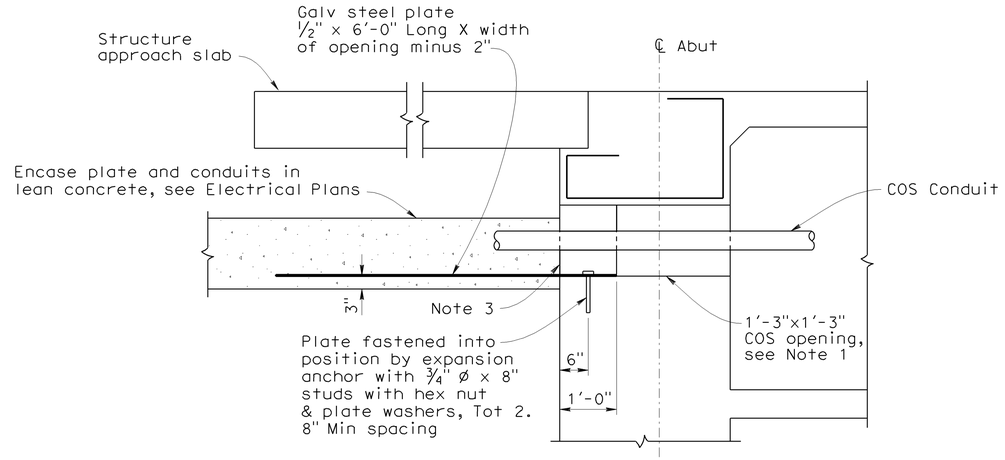


## DETAIL AT ABUTMENT OPENING FOR COS CONDUITS

¾"=1'-0"

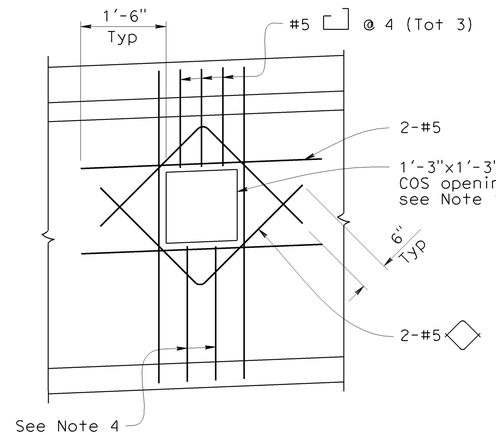


## ABUTMENT DIAPHRAGM

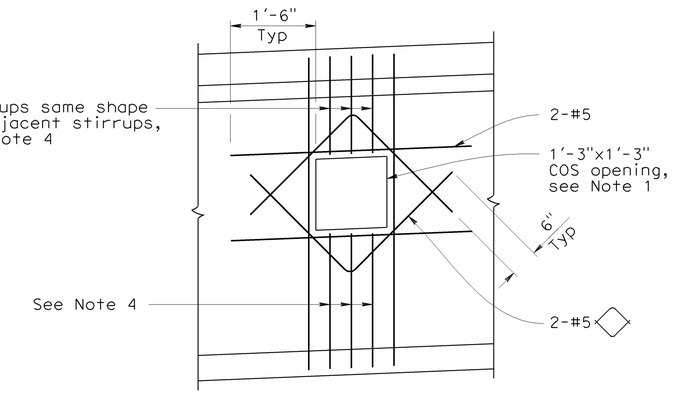


## INTERMEDIATE DIAPHRAGM

## COS CONDUIT OPENING DETAIL

¾"=1'-0"

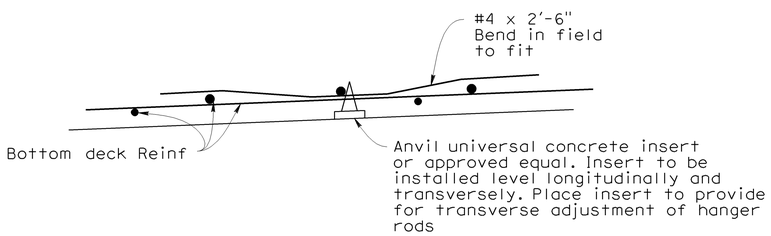


## DETAIL G

No Scale

NOTE:

The Contractor shall verify all controlling field dimensions before ordering or fabricating any materials.

NOTES:

1. The exact location, elevation, size and direction of COS openings, see "Abutment 1 Layout", "Abutment 2 Layout" and "Typical Section" sheets.
2. All reinforcement detailed to be placed in addition to reinforcement shown on Project Plans.
3. Seal conduits at abutments with concrete or mortar, after tightly wrapping utility with 2 layers of 15 LBS building paper.
4. Reinforcement to be same bar size, and ⅔ the spacing of adjacent reinforcement shown on Project Plans.
5. Reinforcement to be same bar size and shape as adjacent reinforcement shown on Project Plans.
6. When there is insufficient space to place reinforcement as shown, hook reinforcement into exterior girder.

DESIGN OVERSIGHT Jon Hamaguchi
6-9-09
SIGN OFF DATE

| | BY | CHECKED |
|---|---|---|
| DESIGN | M. Desai / J. Powell | M. Atiqullah / A. Issa |
| DETAILS | M. Desai / J. Powell | M. Atiqullah / A. Issa |
| QUANTITIES | J. Powell | E. Cutler |

PREPARED FOR THE STATE OF CALIFORNIA DEPARTMENT OF TRANSPORTATION

Ayman Salama
PROJECT ENGINEER

BRIDGE NO. 55-0483
POST MILE 19.33

# ROLLING HILLS DRIVE UC (WIDEN)
# MISCELLANEOUS DETAILS

DESIGN DETAIL SHEET (ENGLISH) (REV. 2/25/05)

ORIGINAL SCALE IN INCHES FOR REDUCED PLANS 0 1 2 3

CU 12220
EA 0F0321

DISREGARD PRINTS BEARING EARLIER REVISION DATES

REVISION DATES (PRELIMINARY STAGE ONLY) 12/12/08 04/07/09 06/08/09

SHEET 19 OF 24

USERNAME => trlenard
DGN FILE => 55-0483-u-miscdt01.dgn

TIME PLOTTED => 25-JAN-2010 08:17

| DIST. | COUNTY | ROUTE | POST MILES TOTAL PROJECT | SHEET NO. | TOTAL SHEETS |
|---|---|---|---|---|---|
| 12 | Ora | 57 | 18.4/20.9 | 643 | 856 |

REGISTERED ENGINEER - CIVIL 06/08/09

1-25-10
PLANS APPROVAL DATE

REGISTERED PROFESSIONAL ENGINEER JOHN W. POWELL No. C71463 Exp. 12/31/09 CIVIL STATE OF CALIFORNIA

The State of California or its officers or agents shall not be responsible for the accuracy or completeness of electronic copies of this plan sheet.

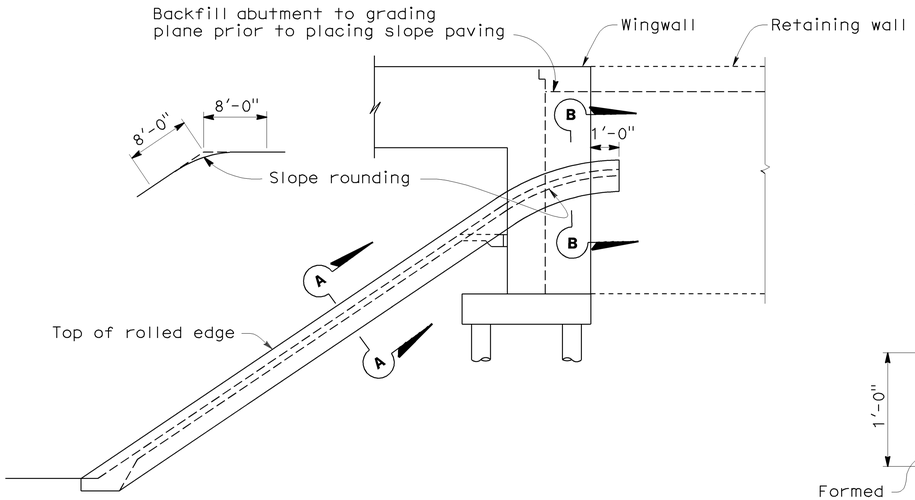


## ◇2 WINGWALL/RETAINING WALL ELEVATION

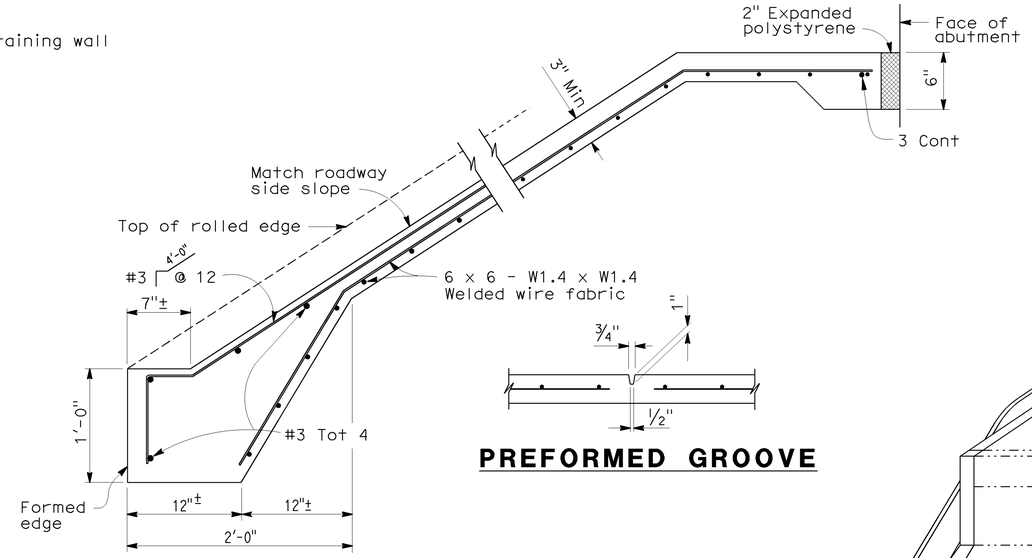


## TYPICAL SECTION - CONCRETE PAVING




## PREFORMED GROOVE

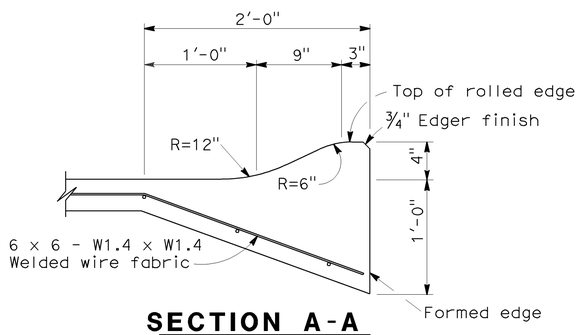


## SECTION A-A

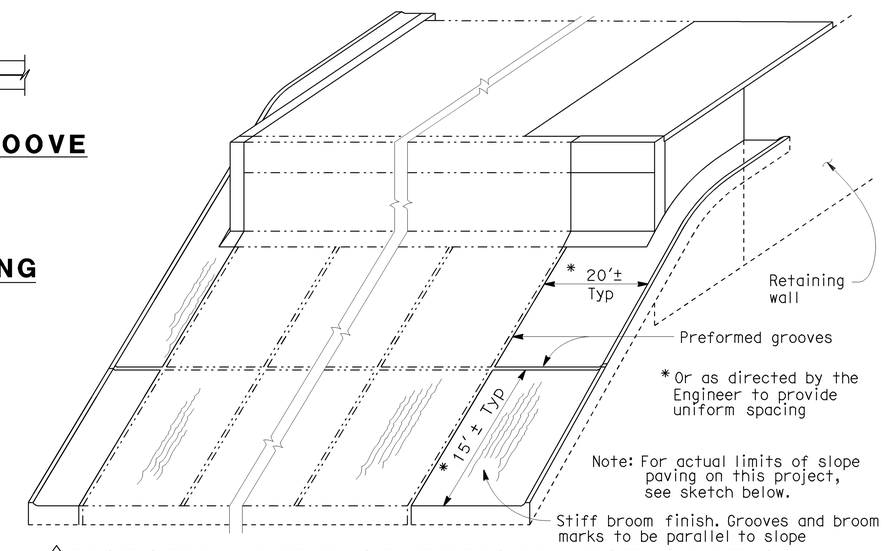


## ◇2 PICTORIAL VIEW OF TYPICAL INSTALLATION

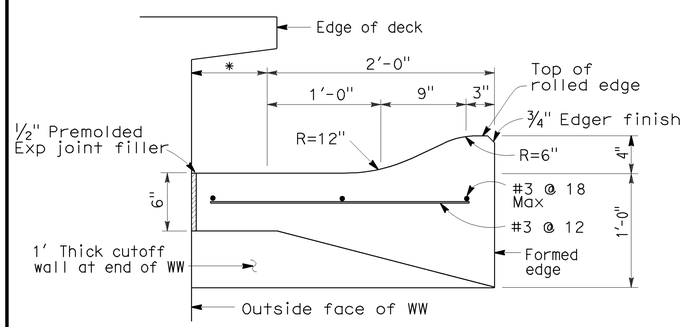


## ◇2 SECTION B-B

* This dimension becomes zero when edge of deck is at outside face of WW

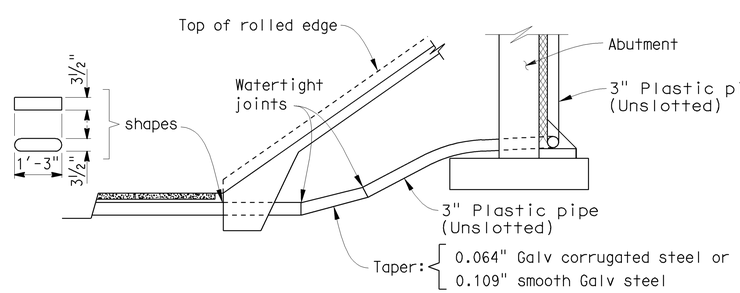


## DRAINAGE DETAILS AT SIDEWALK

◇2

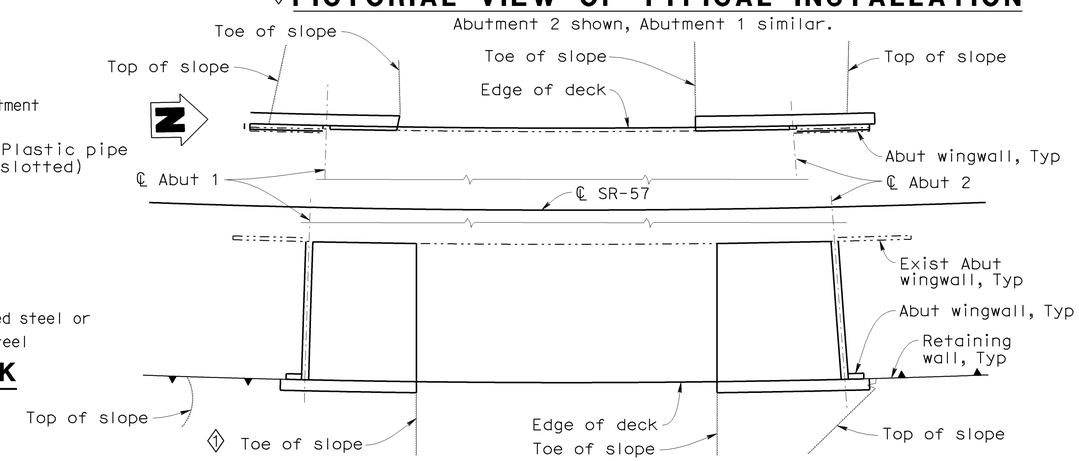


## LIMITS OF SLOPE PAVING & DRAINAGE LAYOUT

NO SCALE

ALL DIMENSIONS ARE IN MILLIMETERS UNLESS OTHERWISE SHOWN

NOTE:

The Contractor shall verify all controlling field dimensions before ordering or fabricating any materials.

| STANDARD DRAWING | | | | |
|---|---|---|---|---|
| RELEASE DATE REVISED | DESIGN | BY | CHECKED | RELEASED BY |
| | DETAILS | BY R. YEE | CHECKED | |
| FILE NO. xs4-210 | SUBMITTED | BY C.W. PURKISS | DRAWING DATE 3/89 | OFFICE CHIEF |

◇1 Added Detail
◇2 Revised Details
◇3 Converted metric to feet & inches

STATE OF CALIFORNIA
DEPARTMENT OF TRANSPORTATION

DIVISION OF ENGINEERING SERVICES

BRIDGE NO. 55-0483
POST MILES 19.33

# ROLLING HILLS DRIVE UC (WIDEN)
# SLOPE PAVING - FULL SLOPE

DS OSD 2147A (METRIC) (REV. 2/25/97)

ORIGINAL SCALE IN INCHES FOR REDUCED PLANS 0 1 2 3

CU 12220
EA 0F0321

DISREGARD PRINTS BEARING EARLIER REVISION DATES

REVISION DATES (PRELIMINARY STAGE ONLY) 12/12/08 04/07/09 06/08/09

SHEET 20 OF 24

FILE => 55-0483-u-slp.dgn

USERNAME => friendard DATE PLOTTED => 25-JAN-2010 TIME PLOTTED => 08:17

| DIST | COUNTY | ROUTE | POST MILES TOTAL PROJECT | SHEET No | TOTAL SHEETS |
|---|---|---|---|---|---|
| 12 | Ora | 57 | 18.4/20.9 | 644 | 856 |

Hisham Nofal 06/08/09
GEOTECHNICAL PROFESSIONAL DATE

REGISTERED PROFESSIONAL ENGINEER HISHAM M. NOFAL No. 2765 Exp. 09/30/09 GEOTECHNICAL STATE OF CALIFORNIA

1-25-10
PLANS APPROVAL DATE

*The State of California or its officers or agents shall not be responsible for the accuracy or completeness of electronic copies of this plan sheet.*

OCTA
550 S. MAIN STREET
ORANGE, CA 92863

CH2M HILL
6 HUTTON CENTRE DRIVE, SUITE 700
SANTA ANA, CA 92707

## BENCHMARKS AND DATUM:

Horizontal coordinates are CCS NaAD-83, Zone 6.
Vertical control based on North American Vertical Datum 1988.
Pt 1049: N2276409.426, E6066857.705, Elev 348.344
Pt 1065: N2276096.906, E6066849.261, Elev 345.199

SAMPLER TYPES:

California modified ring sampler
standard penetration test sampler

HAMMER TYPE:

Automatic hammer

CORRECTION FACTOR:

To convert from California modified ring sampler blow count to equivalent standard penetration test sampler blow count, for granular and cohesive soil, multiply by 0.67.

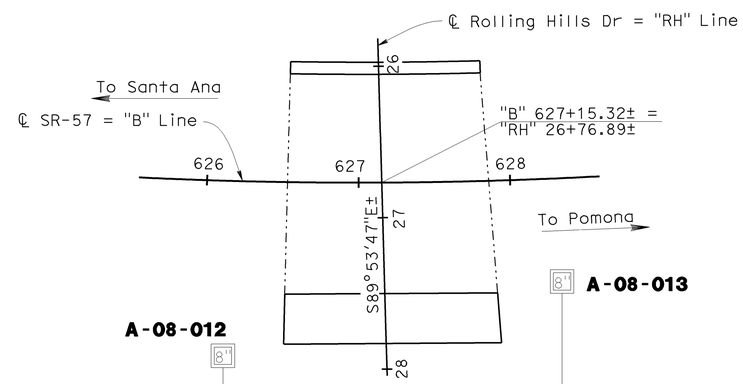


**PLAN**
1"=50'

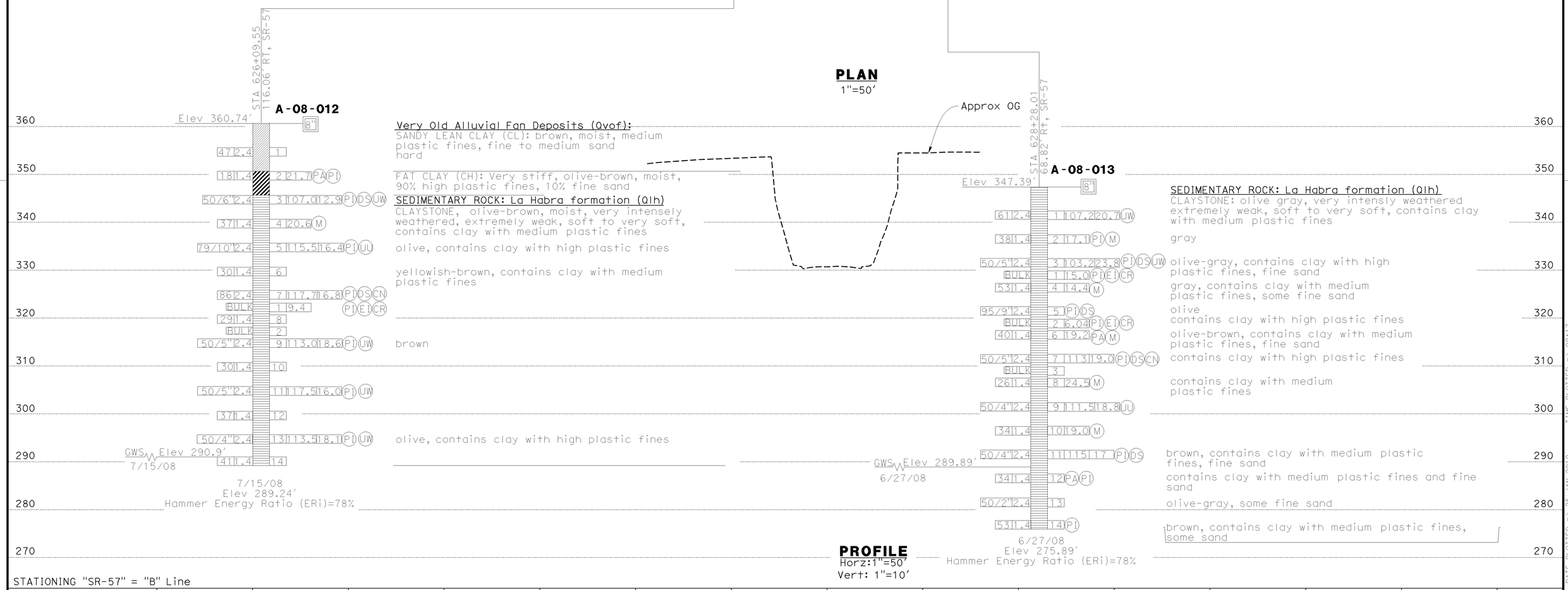


**PROFILE**
Horz:1"=50'
Vert: 1"=10'

| | | | |
|---|---|---|---|
| Jon Hamaguchi DESIGN OVERSIGHT 6-9-09 SIGN OFF DATE | DRAWN BY K. Reyes | CHECKED BY H. Nofal | R. Bethapudi FIELD INVESTIGATION BY: DATE |

PREPARED FOR THE STATE OF CALIFORNIA DEPARTMENT OF TRANSPORTATION

Ayman Salama
PROJECT ENGINEER

BRIDGE NO. 55-0483
POST MILES 19.33

# ROLLING HILLS DRIVE UC (WIDEN)
# LOG OF TEST BORINGS SHEET 1 OF 4

ORIGINAL SCALE IN INCHES FOR REDUCED PLANS 0 1 2 3

CU 12220
EA 0F0321

DISREGARD PRINTS BEARING EARLIER REVISION DATES

REVISION DATES (PRELIMINARY STAGE ONLY) 12/18/08 04/07/09 06/08/09

SHEET 21 OF 24

FILE => 55-0483-z-ltb01.dgn

USERNAME => friernard DATE PLOTTED => 25-JAN-2010 TIME PLOTTED => 08:17

| DIST | COUNTY | ROUTE | POST MILES TOTAL PROJECT | SHEET No | TOTAL SHEETS |
|---|---|---|---|---|---|
| 12 | Ora | 57 | 18.4/20.9 | 645 | 856 |

Hisham Nofal 06/08/09
GEOTECHNICAL PROFESSIONAL DATE

1-25-10
PLANS APPROVAL DATE

REGISTERED PROFESSIONAL ENGINEER HISHAM M. NOFAL No. 2765 Exp. 09/30/09 GEOTECHNICAL STATE OF CALIFORNIA

*The State of California or its officers or agents shall not be responsible for the accuracy or completeness of electronic copies of this plan sheet.*

OCTA
550 S. MAIN STREET
ORANGE, CA 92863

CH2M HILL
6 HUTTON CENTRE DRIVE, SUITE 700
SANTA ANA, CA 92707

REFERENCE: CALTRANS SOIL & ROCK LOGGING, CLASSIFICATION, AND PRESENTATION MANUAL (JUNE 2007)

## GROUP SYMBOLS AND NAMES

| Graphic/Symbol | Group Names |
|---|---|
| GW | Well-graded GRAVEL<br>Well-graded GRAVEL with SAND |
| GP | Poorly graded GRAVEL<br>Poorly graded GRAVEL with SAND |
| GW-GM | Well-graded GRAVEL with SILT<br>Well-graded GRAVEL with SILT and SAND |
| GW-GC | Well-graded GRAVEL with CLAY (or SILTY CLAY)<br>Well-graded GRAVEL with CLAY and SAND (or SILTY CLAY and SAND) |
| GP-GM | Poorly graded GRAVEL with SILT<br>Poorly graded GRAVEL with SILT and SAND |
| GP-GC | Poorly graded GRAVEL with CLAY (or SILTY CLAY)<br>Poorly graded GRAVEL with CLAY and SAND (or SILTY CLAY and SAND) |
| GM | SILTY GRAVEL<br>SILTY GRAVEL with SAND |
| GC | CLAYEY GRAVEL<br>CLAYEY GRAVEL with SAND |
| GC-GM | SILTY, CLAYEY GRAVEL<br>SILTY, CLAYEY GRAVEL with SAND |
| SW | Well-graded SAND<br>Well-graded SAND with GRAVEL |
| SP | Poorly graded SAND<br>Poorly graded SAND with GRAVEL |
| SW-SM | Well-graded SAND with SILT<br>Well-graded SAND with SILT and GRAVEL |
| SW-SC | Well-graded SAND with CLAY (or SILTY CLAY)<br>Well-graded SAND with CLAY and GRAVEL (or SILTY CLAY and GRAVEL) |
| SP-SM | Poorly graded SAND with SILT<br>Poorly graded SAND with SILT and GRAVEL |
| SP-SC | Poorly graded SAND with CLAY (or SILTY CLAY)<br>Poorly graded SAND with CLAY and GRAVEL (or SILTY CLAY and GRAVEL) |
| SM | SILTY SAND<br>SILTY SAND with GRAVEL |
| SC | CLAYEY SAND<br>CLAYEY SAND with GRAVEL |
| SC-SM | SILTY, CLAYEY SAND<br>SILTY, CLAYEY SAND with GRAVEL |
| PT | PEAT |
| | COBBLES<br>COBBLES and BOULDERS<br>BOULDERS |

| Graphic/Symbol | Group Names |
|---|---|
| CL | Lean CLAY<br>Lean CLAY with SAND<br>Lean CLAY with GRAVEL<br>SANDY lean CLAY<br>SANDY lean CLAY with GRAVEL<br>GRAVELLY lean CLAY<br>GRAVELLY lean CLAY with SAND |
| CL-ML | SILTY CLAY<br>SILTY CLAY with SAND<br>SILTY CLAY with GRAVEL<br>SANDY SILTY CLAY<br>SANDY SILTY CLAY with GRAVEL<br>GRAVELLY SILTY CLAY<br>GRAVELLY SILTY CLAY with SAND |
| ML | SILT<br>SILT with SAND<br>SILT with GRAVEL<br>SANDY SILT<br>SANDY SILT with GRAVEL<br>GRAVELLY SILT<br>GRAVELLY SILT with SAND |
| OL | ORGANIC lean CLAY<br>ORGANIC lean CLAY with SAND<br>ORGANIC lean CLAY with GRAVEL<br>SANDY ORGANIC lean CLAY<br>SANDY ORGANIC lean CLAY with GRAVEL<br>GRAVELLY ORGANIC lean CLAY<br>GRAVELLY ORGANIC lean CLAY with SAND |
| OL | ORGANIC SILT<br>ORGANIC SILT with SAND<br>ORGANIC SILT with GRAVEL<br>SANDY ORGANIC SILT<br>SANDY ORGANIC SILT with GRAVEL<br>GRAVELLY ORGANIC SILT<br>GRAVELLY ORGANIC SILT with SAND |
| CH | Fat CLAY<br>Fat CLAY with SAND<br>Fat CLAY with GRAVEL<br>SANDY fat CLAY<br>SANDY fat CLAY with GRAVEL<br>GRAVELLY fat CLAY<br>GRAVELLY fat CLAY with SAND |
| MH | Elastic SILT<br>Elastic SILT with SAND<br>Elastic SILT with GRAVEL<br>SANDY elastic SILT<br>SANDY elastic SILT with GRAVEL<br>GRAVELLY elastic SILT<br>GRAVELLY elastic SILT with SAND |
| OH | ORGANIC fat CLAY<br>ORGANIC fat CLAY with SAND<br>ORGANIC fat CLAY with GRAVEL<br>SANDY ORGANIC fat CLAY<br>SANDY ORGANIC fat CLAY with GRAVEL<br>GRAVELLY ORGANIC fat CLAY<br>GRAVELLY ORGANIC fat CLAY with SAND |
| OH | ORGANIC elastic SILT<br>ORGANIC elastic SILT with SAND<br>ORGANIC elastic SILT with GRAVEL<br>SANDY ORGANIC elastic SILT<br>SANDY ORGANIC elastic SILT with GRAVEL<br>GRAVELLY ORGANIC elastic SILT<br>GRAVELLY ORGANIC elastic SILT with SAND |
| OL/OH | ORGANIC SOIL<br>ORGANIC SOIL with SAND<br>ORGANIC SOIL with GRAVEL<br>SANDY ORGANIC SOIL<br>SANDY ORGANIC SOIL with GRAVEL<br>GRAVELLY ORGANIC SOIL<br>GRAVELLY ORGANIC SOIL with SAND |

## FIELD AND LABORATORY TESTING

- (C) Consolidation (ASTM D 2435)
- (CL) Collapse Potential (ASTM D 5333)
- (CP) Compaction Curve (CTM 216)
- (CR) Corrosivity Testing (CTM 643, CTM 422, CTM 417)
- (CU) Consolidated Undrained Triaxial (ASTM D 4767)
- (DS) Direct Shear (ASTM D 3080)
- (EI) Expansion Index (ASTM D 4829)
- (M) Moisture Content (ASTM D 2216)
- (OC) Organic Content-% (ASTM D 2974)
- (P) Permeability (CTM 220)
- (PA) Particle Size Analysis (ASTM D 422)
- (PI) Plasticity Index (AASHTO T 90) Liquid Limit (AASHTO T 89)
- (PL) Point Load Index (ASTM D 5731)
- (PM) Pressure Meter
- (PP) Pocket Penetrometer
- (R) R-Value (CTM 301)
- (SE) Sand Equivalent (CTM 217)
- (SG) Specific Gravity (AASHTO T 100)
- (SL) Shrinkage Limit (ASTM D 427)
- (SW) Swell Potential (ASTM D 4546)
- (TV) Pocket Torvane
- (UC) Unconfined Compression-Soil (ASTM D 2166) Unconfined Compression-Rock (ASTM D 2938)
- (UU) Unconsolidated Undrained Triaxial (ASTM D 2850)
- (UW) Unit Weight (ASTM D 4767)
- (VS) Vane Shear (AASHTO T 223)

## APPARENT DENSITY OF COHESIONLESS SOILS

| Description | SPT $N_{60}$ (Blows / 12 inches) |
|---|---|
| Very loose | 0 - 4 |
| Loose | 5 - 10 |
| Medium Dense | 11 - 30 |
| Dense | 31 - 50 |
| Very Dense | > 50 |

## MOISTURE

| Description | Criteria |
|---|---|
| Dry | Absence of moisture, dusty, dry to the touch |
| Moist | Damp but no visible water |
| Wet | Visible free water, usually soil is below water table |

## PERCENT OR PROPORTION OF SOILS

| Description | Criteria |
|---|---|
| Trace | Particles are present but estimated to be less than 5% |
| Few | 5 to 10% |
| Little | 15 to 25% |
| Some | 30 to 45% |
| Mostly | 50 to 100% |

## PARTICLE SIZE

| Description | | Size |
|---|---|---|
| Boulder | | > 12" |
| Cobble | | 3" to 12" |
| Gravel | Coarse | 3/4" to 3" |
| | Fine | No. 4 to 3/4" |
| Sand | Coarse | No. 10 to No. 4 |
| | Medium | No. 40 to No. 10 |
| | Fine | No. 200 to No. 40 |

## CEMENTATION

| Description | Criteria |
|---|---|
| Weak | Crumbles or breaks with handling or little finger pressure. |
| Moderate | Crumbles or breaks with considerable finger pressure. |
| Strong | Will not crumble or break with finger pressure. |

## CONSISTENCY OF COHESIVE SOILS

| Description | Unconfined Compressive Strength (tsf) | Pocket Penetrometer Measurement (tsf) | Torvane Measurement (tsf) | Field Approximation |
|---|---|---|---|---|
| Very Soft | < 0.25 | < 0.25 | < 0.12 | Easily penetrated several inches by fist |
| Soft | 0.25 to 0.50 | 0.25 to 0.50 | 0.12 to 0.25 | Easily penetrated several inches by thumb |
| Medium Stiff | 0.50 to 1.0 | 0.50 to 1.0 | 0.25 to 0.50 | Penetrated several inches by thumb with moderate effort |
| Stiff | 1 to 2 | 1 to 2 | 0.50 to 1.0 | Readily indented by thumb but penetrated only with great effort |
| Very Stiff | 2 to 4 | 2 to 4 | 1.0 to 2.0 | Readily indented by thumbnail |
| Hard | > 4.0 | > 4.0 | > 2.0 | Indented by thumbnail with difficulty |

## PLASTICITY OF FINE-GRAINED SOILS

| Description | Criteria |
|---|---|
| Nonplastic | A 1/8-inch thread cannot be rolled at any water content. |
| Low | The thread can barely be rolled and the lump cannot be formed when drier than the plastic limit. |
| Medium | The thread is easy to roll and not much time is required to reach the plastic limit. The thread cannot be rerolled after reaching the plastic limit. The lump crumbles when drier than the plastic limit. |
| High | It takes considerable time rolling and kneading to reach the plastic limit. The thread can be rerolled several times after reaching the plastic limit. The lump can be formed without crumbling when drier than the plastic limit. |

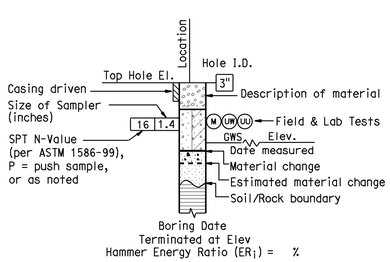


ROTARY BORING

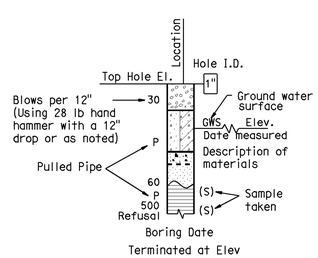


HAND BORING

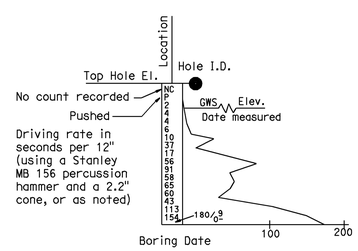


DYNAMIC CONE PENETRATION BORING

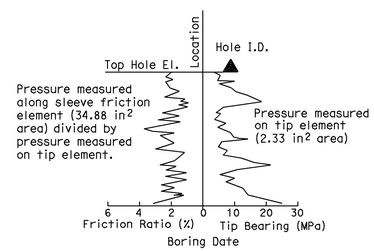


CONE PENETRATION TEST (CPT) SOUNDING

## BOREHOLE IDENTIFICATION

| Symbol | Hole Type | Description |
|---|---|---|
| Size | A | Auger Boring |
| Size | R<br>P | Rotary drilled boring<br>Rotary percussion boring (air) |
| Size HQ | R | Rotary drilled diamond core |
| Size | HD<br>HA | Hand driven (1-inch soil tube)<br>Hand Auger |
| ● | D | Dynamic Cone Penetration Boring |
| ◕ | B | Hollow Stem Auger Boring (HSA) |
| ▲ | CPT | Cone Penetration Test (ASTM D 5778-95) |
| ⬚ | O | Other |

**Note: Size in inches.**

# ROLLING HILLS DRIVE UC (WIDEN)

# SOIL LEGEND

# LOG OF TEST BORINGS SHEET 2 OF 4

DESIGN OVERSIGHT Jon Hamaguchi
6-9-09
SIGN OFF DATE

DRAWN BY K. Reyes
CHECKED BY H. Nofal

R. Bethapudi
FIELD INVESTIGATION BY:
DATE

PREPARED FOR THE STATE OF CALIFORNIA DEPARTMENT OF TRANSPORTATION

Ayman Salama
PROJECT ENGINEER

BRIDGE NO. 55-0483
POST MILES 19.33

ORIGINAL SCALE IN INCHES FOR REDUCED PLANS 0 1 2 3

CU 12220
EA 0F0321

DISREGARD PRINTS BEARING EARLIER REVISION DATES
REVISION DATES (PRELIMINARY STAGE ONLY) 12/08/08 04/07/09 06/08/09

SHEET 22 OF 24

FILE => 55-0483-z-1tb02.dgn

USERNAME => trlenard DATE PLOTTED => 25-JAN-2010 TIME PLOTTED => 08:18

REFERENCE: CALTRANS SOIL & ROCK LOGGING, CLASSIFICATION, AND PRESENTATION MANUAL (JUNE 2007)

| DIST | COUNTY | ROUTE | POST MILES TOTAL PROJECT | SHEET No | TOTAL SHEETS |
|---|---|---|---|---|---|
| 12 | Ora | 57 | 18.4/20.9 | 646 | 856 |

Hisham Nofal 06/08/09
GEOTECHNICAL PROFESSIONAL DATE

REGISTERED PROFESSIONAL ENGINEER HISHAM M. NOFAL No. 2765 Exp. 09/30/09 GEOTECHNICAL STATE OF CALIFORNIA

1-25-10
PLANS APPROVAL DATE

*The State of California or its officers or agents shall not be responsible for the accuracy or completeness of electronic copies of this plan sheet.*

OCTA
550 S. MAIN STREET
ORANGE, CA 92863

CH2M HILL
6 HUTTON CENTRE DRIVE, SUITE 700
SANTA ANA, CA 92707

## PERCENT CORE RECOVERY (REC) & ROCK QUALITY DESIGNATION (RQD)

$$REC = \frac{\sum \text{Length of the recovered core pieces (inches)}}{\text{Total length of core run (inches)}} \times 100\%$$

$$RQD = \frac{\sum \text{Length of intact core pieces} \geq 4''}{\text{Total length of core run (inches)}} \times 100\%$$

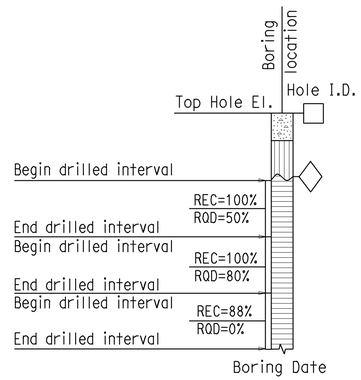


## RELATIVE STRENGTH OF INTACT ROCK

| Term | Uniaxial Compressive Strength (PSI) |
|---|---|
| Extremely Strong | > 30,000 |
| Very Strong | 14,500 - 30,000 |
| Strong | 7,000 - 14,500 |
| Medium Strong | 3,500 - 7,000 |
| Weak | 700 - 3,500 |
| Very Weak | 150 - 700 |
| Extremely Weak | < 150 |

## BEDDING SPACING

| Description | Thickness / Spacing |
|---|---|
| Massive | Greater than 10 ft |
| Very thickly bedded | 3 to 10 ft |
| Thickly bedded | 1 to 3 ft |
| Moderately bedded | 3-5/8" to 1 ft |
| Thinly bedded | 1-1/4" to 3-5/8" |
| Very thinly bedded | 3/8" to 1-1/4" |
| Laminated | Less than 3/8" |

## LEGEND OF ROCK MATERIALS

- IGNEOUS ROCK
- SEDIMENTARY ROCK
- METAMORPHIC ROCK

## ROCK HARDNESS

| Description | Criteria |
|---|---|
| Extremely Hard | Specimen cannot be scratched with a pocket knife or sharp pick; can only be chipped with repeated heavy hammer blows. |
| Very Hard | Specimen cannot be scratched with a pocket knife or sharp pick. Breaks with repeated heavy hammer blows. |
| Hard | Specimen can be scratched with a pocket knife or sharp pick with difficulty (heavy pressure). Heavy hammer blows required to break specimen. |
| Moderately Hard | Specimen can be scratched with pocket knife or sharp pick with light or moderate pressure. Core breaks with moderate hammer pressure. |
| Moderately Soft | Specimen can be grooved 1/6" deep with a pocket knife or sharp pick with moderate or heavy pressure. Breaks with light hammer blow or heavy manual pressure. |
| Soft | Specimen can be grooved or gouged easily by a pocket knife or sharp pick with light pressure, can be scratched with fingernail. Breaks with light to moderate manual pressure. |
| Very Soft | Specimen can be readily indented, grooved or gouged with fingernail, or carved with a pocket knife. Breaks with light manual pressure. |

## FRACTURE DENSITY

| Description | Observed Fracture Density |
|---|---|
| Unfractured | No fractures. |
| Very slightly fractured | Lengths greater than 3 feet. |
| Slightly fractured | Lengths from 1 to 3 feet with few lengths less than 1 foot or greater than 3 feet. |
| Moderately fractured | Lengths mostly in 4" to 1 foot range with most lengths about 8" |
| Intensely fractured | Lengths average from 1 to 4" with scattered fragmented intervals with lengths less than 4" |
| Very intensely fractured | Mostly chips and fragments with a few scattered short core lengths. |

Combination descriptors (such as "Very intensely to intensely fractured") are used where equal distribution of both fracture density characteristics is present over a significant interval or exposure, or where characteristics are "in between" the descriptor definitions. Only two adjacent descriptors may be combined.

## WEATHERING DESCRIPTORS FOR INTACT ROCK

| Description | Diagnostic features | | | | | General Characteristics |
|---|---|---|---|---|---|---|
| | Chemical Weathering-Discoloration and/or oxidation | | Mechanical Weathering-Grain boundary conditions (disaggregation) primarily for granitics and some coarse-grained sediments | Texture and Solutioning | | |
| | Body of Rock | Fracture Surfaces | | Texture | Solutioning | |
| Fresh | No discoloration, not oxidized. | No discoloration or oxidation. | No separation, intact (tight). | No change. | No solutioning. | Hammer rings when crystalline rocks are struck. |
| Slightly Weathered | Discoloration or oxidation is limited to surface of, or short distance from, fractures; some feldspar crystals are dull. | Minor to complete discoloration or oxidation of most surfaces. | No visible separation, intact (tight). | Preserved. | Minor leaching of some soluble minerals may be noted. | Hammer rings when crystalline rocks are struck. Body of rock not weakened. |
| Moderately Weathered | Discoloration or oxidation extends from fractures usually throughout; Fe-Mg minerals are "rusty," feldspar crystals are "cloudy." | All fracture surfaces are discolored or oxidized. | Partial separation of boundaries visible. | Generally preserved. | Soluble minerals may be mostly leached. | Hammer does not ring when rock is struck. Body of rock is slightly weakened. |
| Intensely Weathered | Discoloration or oxidation throughout; all feldspars and Fe-Mg minerals are altered to clay to some extent; or chemical alteration produces in-situ disaggregation, see grain boundary conditions. | All fracture surfaces are discolored or oxidized, surfaces friable. | Partial separation, rock is friable; in semiarid conditions granitics are disaggregated. | Texture altered by chemical disintegration (hydration, argillation). | Leaching of soluble minerals may be complete. | Dull sound when struck with hammer, usually can be broken with moderate to heavy manual pressure or by light hammer blow without reference to planes of weakness such as incipient or hairline fractures, or veinlets. Rock is significantly weakened. |
| Decomposed | Discolored or oxidized throughout, but resistant minerals such as quartz may be unaltered; all feldspars and Fe-Mg minerals are completely altered to clay. | | Complete separation of grain boundaries (disaggregated). | Resembles a soil, partial or complete remnant rock structure may be preserved; leaching of soluble minerals usually complete. | | Can be granulated by hand. Resistant minerals such as quartz may be present as "stringers" or "dikes." |

Combination descriptors (such as "slightly weathered to fresh") are permissible where equal distribution of both weathering characteristics is present over significant intervals or where characteristics present are "in between" the diagnostic feature. However, combination descriptors should not be used where significant, identifiable zones can be delineated. Only two adjacent descriptors may be combined. "Very intensely weathered" is the combination descriptor for "intensely weathered to decomposed."

# ROLLING HILLS DRIVE UC (WIDEN)

## ROCK LEGEND

## LOG OF TEST BORINGS SHEET 3 OF 4

Jon Hamaguchi
DESIGN OVERSIGHT Jon Hamaguchi
6-9-09
SIGN OFF DATE

| DRAWN BY | K. Reyes |
|---|---|
| CHECKED BY | H. Nofal |

R. Bethapudi
FIELD INVESTIGATION BY:
DATE

PREPARED FOR THE STATE OF CALIFORNIA DEPARTMENT OF TRANSPORTATION

Ayman Salama
PROJECT ENGINEER

BRIDGE NO. 55-0483
POST MILES 19.33

ORIGINAL SCALE IN INCHES FOR REDUCED PLANS 0 1 2 3

CU 12220
EA 0F0321

DISREGARD PRINTS BEARING EARLIER REVISION DATES 12/12/08 04/07/09 06/08/09

REVISION DATES

SHEET 23 OF 24

FILE => 55-0483-z-1tb03.dgn

USERNAME => trlenard DATE PLOTTED => 25-JAN-2010 TIME PLOTTED => 08:18

| FED. ROAD DIV. NO. | STATE | F. A. PROJECT NO. | SHEET NO. | TOTAL SHEETS |
|---|---|---|---|---|
| 7 | CALIF. | | | |

| DIST. | COUNTY | ROUTE | BRIDGE NO. | SHEET NO. | TOTAL SHEETS |
|---|---|---|---|---|---|
| 07 | ORA. | 57 | 55-0483 | 160 | 180 |

Date approved September 30, 1968

## LEGEND OF BORING OPERATIONS

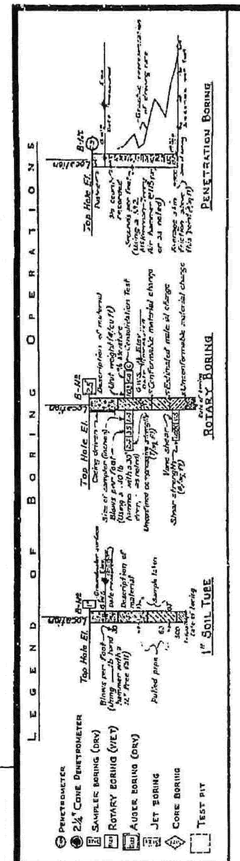


## LEGEND OF EARTH MATERIALS

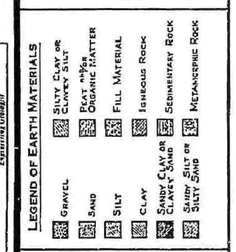


## CLASSIFICATION OF MATERIAL, BASED ON STANDARD GRADE SIZE LIMITS

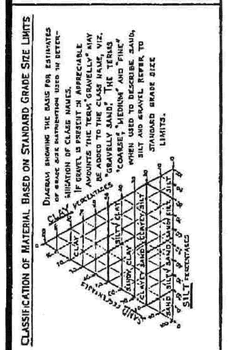


NOTE: Classification of earth material as shown on this sheet is based upon field inspection and is not to be construed to imply mechanical analysis.

| | | |
|---|---|---|
| FIELD STUDY | by W. Calvo | 4-27-67 |
| DRAWN | by J. Allen | 4-27-67 |
| CHECKED | by R. Corbin | 4-24-67 |

Approved Recommended: Exploration Geologist

BRIDGE DEPARTMENT
ENGINEERING GEOLOGY SECTION

160

## BENCH MARK

B.M.# 629-D-66 — Elev. 361.18
Fd. anchor bolt on top of northeast pedestal of Hathaway Oil Well No. 6

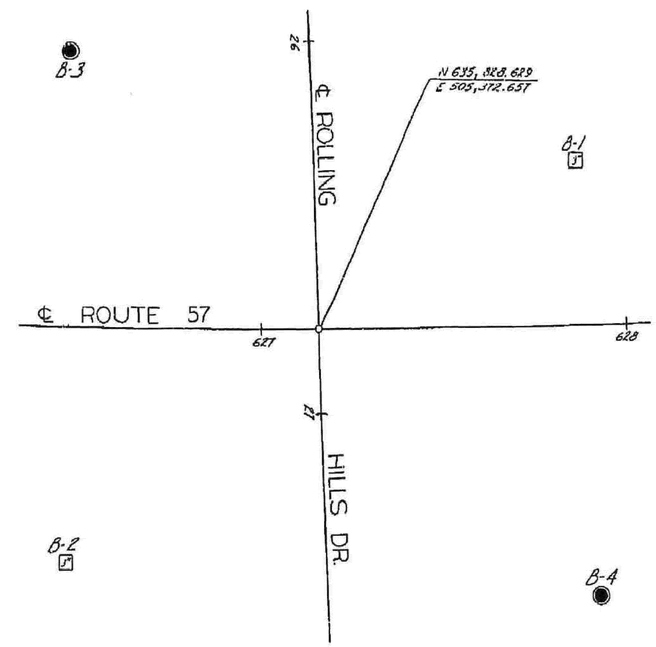


## PLAN

Scale: 1" = 20'

| DIVISION OF ENGINEERING SERVICES - GEOTECHNICAL SERVICES | | | | | |
|---|---|---|---|---|---|
| As-Built Log of Test Borings sheet is considered an informational document only. As such, the State of California registration seal with signature, license number and registration certificate expiration date confirm that this is a true and accurate copy of the original document. This drawing is available and presented only for the convenience of any bidder, contractor or other interested party. | | | | | |
| DIST. | COUNTY | ROUTE | POST MILES-TOTAL PROJECT | Sheet No. | Total Sheets |
| 12 | Ora | 57 | 18.4/20.9 | 647 | 856 |
| Hisham M. Nofal — REGISTERED CIVIL ENGINEER | | | | 06/08/09 DATE | |
| ROLLING HILLS DRIVE UC (WIDEN) | | | | | |
| LOG OF TEST BORINGS SHEET 4 OF 4 | | | | | |
| NOTE: A COPY OF THIS LOG OF TEST BORINGS IS AVAILABLE AT OFFICE OF STRUCTURE MAINTENANCE AND INVESTIGATIONS, SACRAMENTO, CALIFORNIA | | | CU: 12220 EA: 0F0321 | BRIDGE No. 55-0483 | |
| To accompany plans dated 1-25-10 | | | | Sheet 24 | of 24 |

REGISTERED PROFESSIONAL ENGINEER — HISHAM M. NOFAL — No. 2765 — Exp. 09/30/09 — GEOTECHNICAL — STATE OF CALIFORNIA

NO GROUND WATER ENCOUNTERED DURING THIS INVESTIGATION
BRIDGE DEPT. GEOLOGY SECTION
DATE April, 1967

INFORMATION ON ACTUAL FOUNDATION CONDITIONS ENCOUNTERED IS ON FILE IN BRIDGE GEOLOGY SECTION

## PROFILE

Scale: Vert. 1" = 10'
Horiz. 1" = 20'

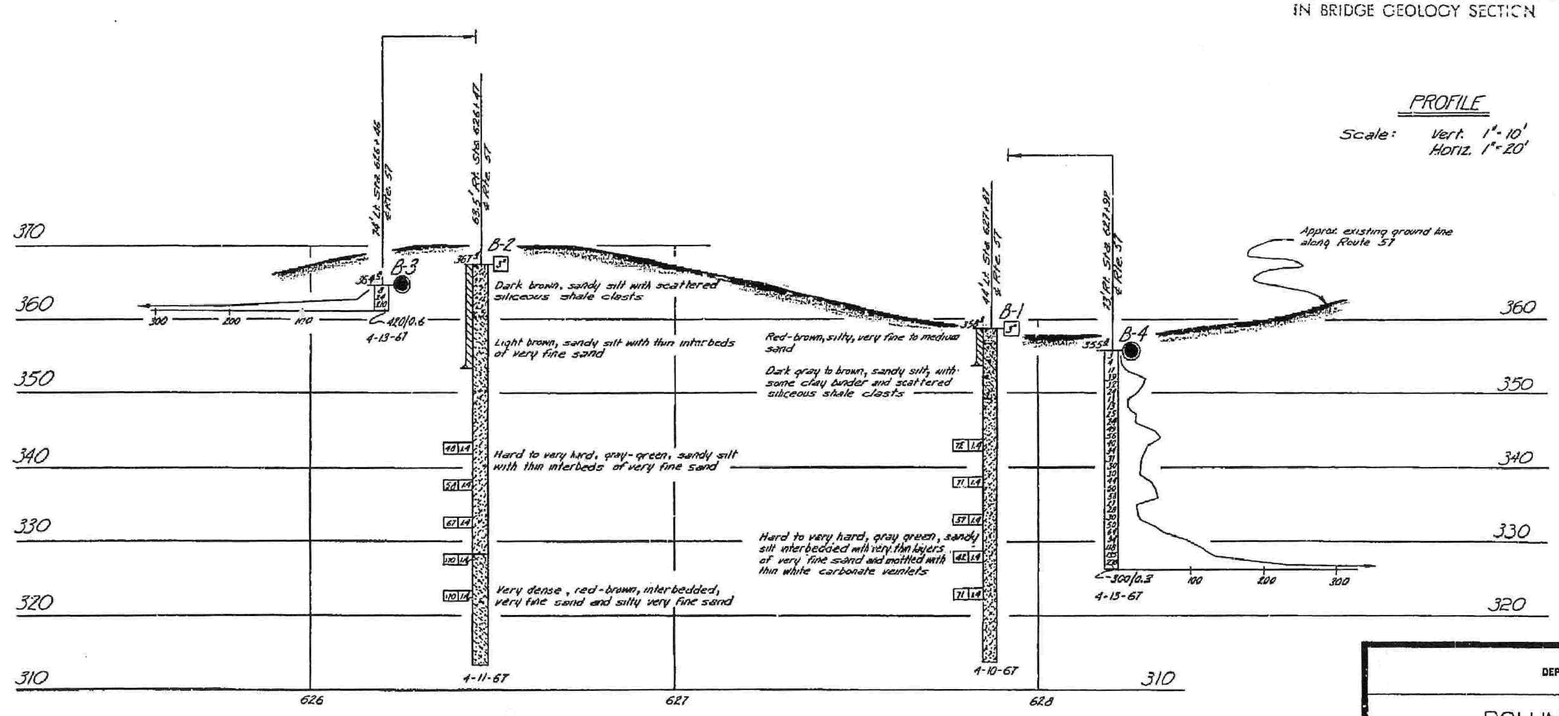


AS BUILT PLANS
Contract No. 07-032134
Date Completed
Document No. 70001578

STATE OF CALIFORNIA
DEPARTMENT OF PUBLIC WORKS
DIVISION OF HIGHWAYS

ROLLING HILLS DRIVE UNDERCROSSING

LOG OF TEST BORINGS

| SHEET | OF | SCALE As Noted | BRIDGE 55-0483 | FILE | DRAWING S 50 of 13-7 |
|---|---|---|---|---|---|
| 10 | 10 | | | | |

Chg. 07208
W.A. 038131
Disregard prints bearing earlier numbers
PREL. DRAWING No. PR-

FILENAME => 55-0483-z-1tb04.tif

USERNAME => nmorales DATE PLOTTED => 04-JUN-2009 TIME PLOTTED => 12:22

| DIST | COUNTY | ROUTE | POST MILES TOTAL PROJECT | SHEET No | TOTAL SHEETS |
|---|---|---|---|---|---|
| 12 | Ora | 57 | 18.4/20.9 | 648 | 856 |

REGISTERED CIVIL ENGINEER 06/08/09 DATE

1-25-10
PLANS APPROVAL DATE

REGISTERED PROFESSIONAL ENGINEER C. DANIEL SUN No. 40064 Exp. 12/31/11 CIVIL STATE OF CALIFORNIA

*The State of California or its officers or agents shall not be responsible for the accuracy or completeness of electronic copies of this plan sheet.*

OCTA
550 S. MAIN STREET
ORANGE, CA 92863

CH2M HILL
6 HUTTON CENTRE DRIVE, SUITE 700
SANTA ANA, CA 92707

**LEGEND**

- Indicates Existing Structure
- Indicates New Construction
- (1) Paint "Birch Street Undercrossing"
- (2) Paint "Bridge No. 55-0485" and Year Constructed
- (3) Structure Approach Type N(30D)
- (4) Remove Existing Type 9 Barrier, Metal Railing & Overhang
- Denotes Point of Minimum Vertical Clearance
- Bridge Removal (Portion)
- * Match Existing Grade & Cross Slope

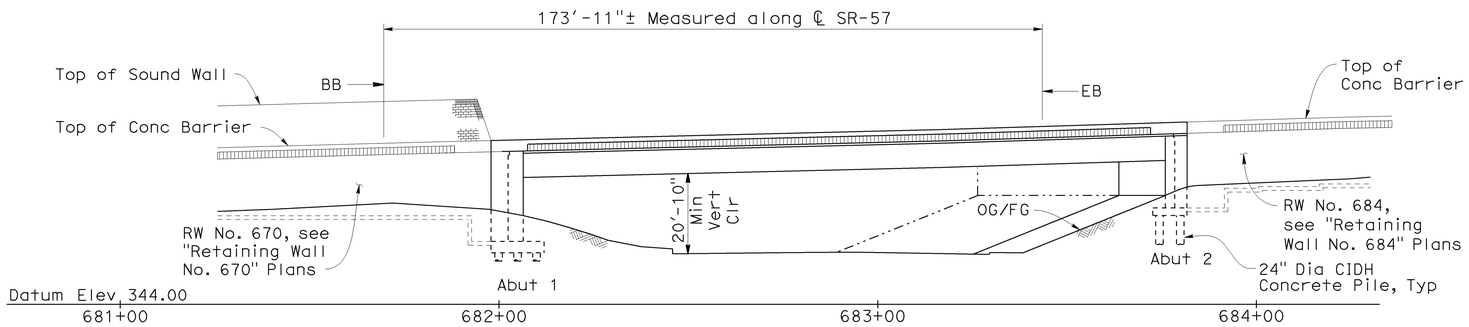


## ELEVATION
1"=20'

**CURVE DATA**

(1) ℄ Route 57
R = 5000'±
Δ = 21°18'33"±
T = 940.66'±
L = 1859.58'±

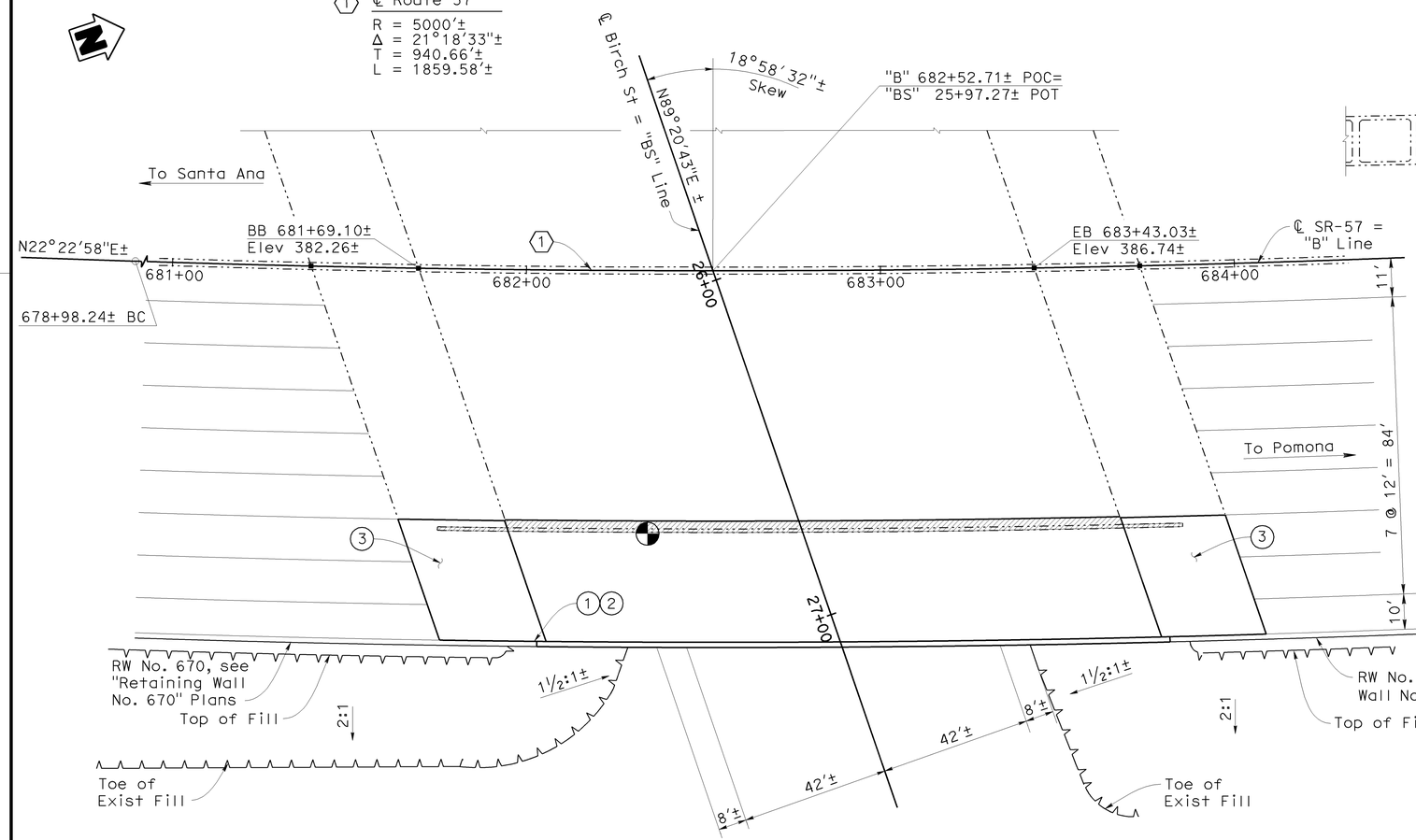


## PLAN
1"=20'

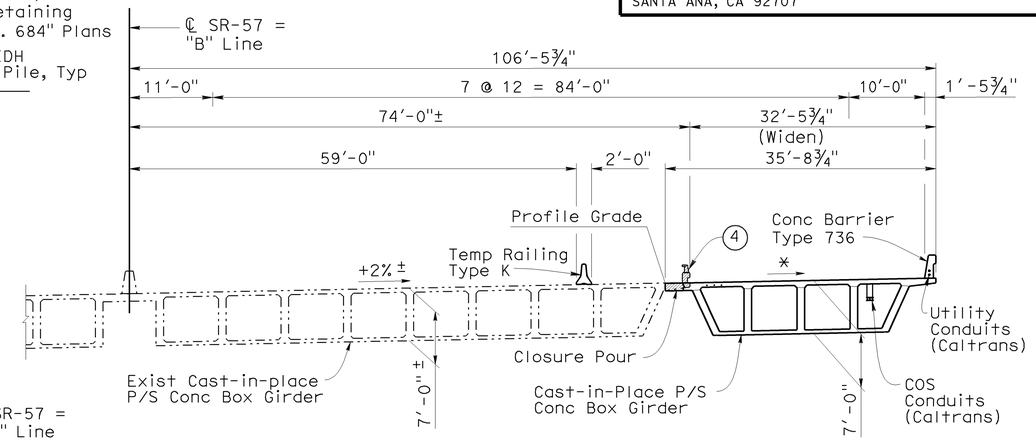


## TYPICAL SECTION
1"=10'

**NOTES:**

1. The Contractor shall verify all controlling field dimensions before ordering or fabricating any materials.
2. For Pile Data Table and General Notes, see "General Notes" sheet.
3. Approach Slab will be built at the widened section only.

BIRCH STREET UC (WIDEN) BR NO 55-0485
QUANTITIES

| | | |
|---|---|---|
| BRIDGE REMOVAL (PORTION), LOCATION D | LUMP | SUM |
| STRUCTURE EXCAVATION (BRIDGE) | 1,520 | CY |
| STRUCTURE EXCAVATION (TYPE Y-1) (AERIALLY DEPOSITED LEAD) | 85 | CY |
| STRUCTURE BACKFILL (BRIDGE) | 1,710 | CY |
| 24" CAST-IN-DRILLED-HOLE CONCRETE PILING | 784 | LF |
| PRESTRESSING CAST-IN-PLACE CONCRETE | LUMP | SUM |
| STRUCTURAL CONCRETE, BRIDGE FOOTING | 80 | CY |
| STRUCTURAL CONCRETE, BRIDGE | 595 | CY |
| STRUCTURAL CONCRETE, APPROACH SLAB (TYPE N) | 80 | CY |
| FRACTURED RIB TEXTURE | 335 | SQFT |
| DRILL AND BOND DOWEL | 20 | LF |
| JOINT SEAL (MR 1½") | 72 | LF |
| BAR REINFORCING STEEL (BRIDGE) | 96,500 | LB |
| 3" PLASTIC PIPE DOWNDRAIN | 170 | LF |
| MISCELLANEOUS METAL (BRIDGE) | 670 | LB |
| CONCRETE BARRIER (TYPE 736) | 183 | LF |

| | | | |
|---|---|---|---|
| DESIGN OVERSIGHT Jon Hamaguchi | DESIGN | BY D. Sun / J. Powell | CHECKED M. Atiqullah / E. Cutler |
| 6-9-09 SIGN OFF DATE | DETAILS | BY D. Sun / J. Powell | CHECKED M. Atiqullah / E. Cutler |
| | QUANTITIES | BY J. Powell | CHECKED E. Cutler |

LOAD FACTOR DESIGN — LIVE LOADING: HL-93 AND PERMIT (P-15) DESIGN LOAD
LAYOUT — BY N. Morales — CHECKED M. Atiqullah
SPECIFICATIONS — BY M. Remolador — PLANS AND SPECS COMPARED M. Atiqullah

PREPARED FOR THE STATE OF CALIFORNIA DEPARTMENT OF TRANSPORTATION

Ayman Salama
PROJECT ENGINEER

BRIDGE NO. 55-0485
POST MILES 20.38

# BIRCH STREET UC (WIDEN)
# GENERAL PLAN

DESIGN GENERAL PLAN SHEET (ENGLISH) (REV. 2/25/05)

ORIGINAL SCALE IN INCHES FOR REDUCED PLANS 0 1 2 3

CU 12220
EA 0F0321

DISREGARD PRINTS BEARING EARLIER REVISION DATES
REVISION DATES (PRELIMINARY STAGE ONLY) 12/08/08 12/04/08 12/10/08 04/07/09 06/08/09

SHEET 1 OF 18

FILE => 55-0485-a-gp01.dgn

USERNAME => trlenard DATE PLOTTED => 25-JAN-2010 TIME PLOTTED => 08:18

| DIST | COUNTY | ROUTE | POST MILES TOTAL PROJECT | SHEET No | TOTAL SHEETS |
|---|---|---|---|---|---|
| 12 | Ora | 57 | 18.4/20.9 | 649 | 856 |

REGISTERED CIVIL ENGINEER — DATE 06/08/09

1-25-10
PLANS APPROVAL DATE

REGISTERED PROFESSIONAL ENGINEER — C. DANIEL SUN — No. 40064 — Exp. 12/31/11 — CIVIL — STATE OF CALIFORNIA

*The State of California or its officers or agents shall not be responsible for the accuracy or completeness of electronic copies of this plan sheet.*

OCTA
550 S. MAIN STREET
ORANGE, CA 92863

CH2M HILL
6 HUTTON CENTRE DRIVE, SUITE 700
SANTA ANA, CA 92707

## INDEX TO PLANS


| SHEET NO. | TITLE |
|---|---|
| 1. | GENERAL PLAN |
| 2. | INDEX TO PLANS |
| 3. | GENERAL NOTES |
| 4. | FOUNDATION PLAN |
| 5. | ABUTMENT 1 LAYOUT |
| 6. | ABUTMENT 2 LAYOUT |
| 7. | ABUTMENT DETAILS NO. 1 |
| 8. | ABUTMENT DETAILS NO. 2 |
| 9. | ABUTMENT DETAILS NO. 3 |
| 10. | TYPICAL SECTION |
| 11. | GIRDER LAYOUT |
| 12. | GIRDER REINFORCEMENT |
| 13. | STRUCTURE APPROACH TYPE N(30D) |
| 14. | STRUCTURE APPROACH DRAINAGE DETAILS |
| 15. | MISCELLANEOUS DETAILS |
| 16. | LOG OF TEST BORINGS SHEET 1 OF 3 |
| 17. | LOG OF TEST BORINGS SHEET 2 OF 3 |
| 18. | LOG OF TEST BORINGS SHEET 3 OF 3 |


## STANDARD PLANS DATED MAY 2006

| | |
|---|---|
| A10A | ACRONYMS AND ABBREVIATIONS (SHEET 1 OF 2) |
| A10B | ACRONYMS AND ABBREVIATIONS (SHEET 2 OF 2) |
| A10C | SYMBOLS (SHEET 1 OF 2) |
| A10D | SYMBOLS (SHEET 2 OF 2) |
| A62C | LIMITS OF PAYMENT FOR EXCAVATION AND BACKFILL - BRIDGE |
| B0-1 | BRIDGE DETAILS |
| B0-3 | BRIDGE DETAILS |
| B0-5 | BRIDGE DETAILS |
| B0-13 | BRIDGE DETAILS |
| B2-3 | 16" AND 24" CAST-IN-DRILLED HOLE CONCRETE PILE |
| B6-21 | JOINT SEALS (MAXIMUM MOVEMENT RATING = 2") |
| B7-1 | BOX GIRDER DETAILS |
| B7-10 | UTILITY OPENING BOX GIRDER |
| B8-5 | CAST-IN-PLACE PRESTRESSED GIRDER DETAILS |
| B11-56 | CONCRETE BARRIER TYPE 736 |
| B14-5 | WATER SUPPLY LINE (DETAILS) (PIPE SIZE LESS THAN 4") |

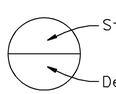


**ABBREVIATION**

COS Corridor Operating System

**NOTE:**

The Contractor shall verify all controlling field dimensions before ordering or fabricating any materials.

## CONCRETE STRENGTH AND TYPE LIMITS

NO SCALE

**LEGEND**

= Structural Concrete, Bridge, See Prestressing Notes on "Girder Layout" Sheet.

= Structural Concrete, Bridge Footing

= Structural Concrete, Approach Slab

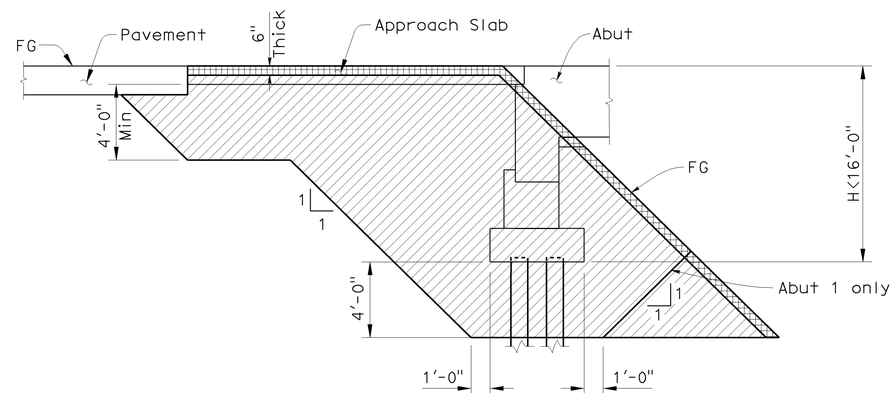


## LIMITS OF STRUCTURE EXCAVATION

No scale

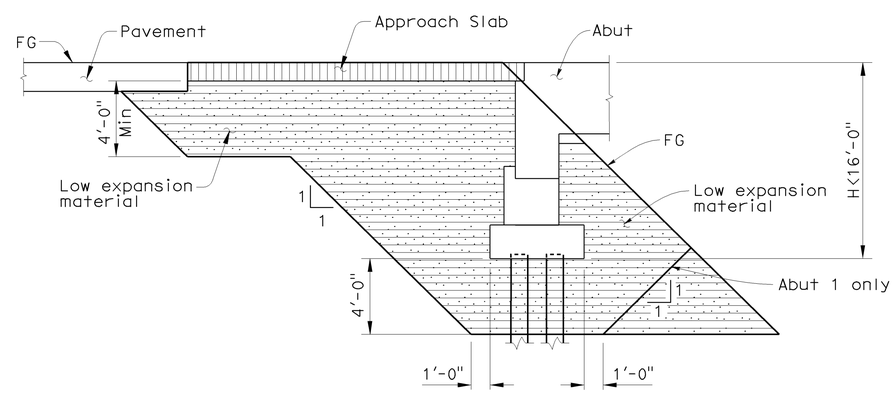


## LOW EXPANSION MATERIAL BACKFILL LIMITS

No scale

**NOTES:**

1. Expansion Index to be determined by ASTM D4829
2. Low Expansion material shall be EI<50 or SE>20 at New Construction only.
3. Backfill shall be placed simultaneously at both abutments after the deck is completed.

**LEGEND**

= Structure Excavation (Bridge)

= Structure Backfill (Bridge) (Low Expansion)

= Structure Excavation (Type Y-1) (Aerially Deposited Lead)

DESIGN OVERSIGHT — Jon Hamaguchi
6-9-09
SIGN OFF DATE

| | BY | CHECKED |
|---|---|---|
| DESIGN | D. Sun | M. Atiqullah / E. Cutler |
| DETAILS | P. Walker | M. Atiqullah / E. Cutler |
| QUANTITIES | J. Powell | E. Cutler |

PREPARED FOR THE STATE OF CALIFORNIA DEPARTMENT OF TRANSPORTATION

Ayman Salama
PROJECT ENGINEER

BRIDGE NO. 55-0485
POST MILE 20.38

# BIRCH STREET UC (WIDEN)
# INDEX TO PLANS

DESIGN DETAIL SHEET (ENGLISH) (REV. 2/25/05)

ORIGINAL SCALE IN INCHES FOR REDUCED PLANS 0 1 2 3

CU 12220
EA 0F0321

DISREGARD PRINTS BEARING EARLIER REVISION DATES → REVISION DATES (PRELIMINARY STAGE ONLY) 12/06/08 12/04/08 12/10/08 04/07/09 06/08/09

SHEET 2 OF 18

FILE => 55-0485-a-itp.dgn

USERNAME => trlenard DATE PLOTTED => 25-JAN-2010 TIME PLOTTED => 08:18

| DIST | COUNTY | ROUTE | POST MILES TOTAL PROJECT | SHEET No | TOTAL SHEETS |
|---|---|---|---|---|---|
| 12 | Ora | 57 | 18.4/20.9 | 650 | 856 |

REGISTERED CIVIL ENGINEER — DATE 06/08/09

1-25-10
PLANS APPROVAL DATE

REGISTERED PROFESSIONAL ENGINEER — C. DANIEL SUN — No. 40064 — Exp. 12/31/11 — CIVIL — STATE OF CALIFORNIA

*The State of California or its officers or agents shall not be responsible for the accuracy or completeness of electronic copies of this plan sheet.*

OCTA
550 S. MAIN STREET
ORANGE, CA 92863

CH2M HILL
6 HUTTON CENTRE DRIVE, SUITE 700
SANTA ANA, CA 92707

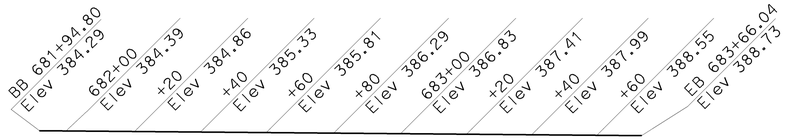


70'-9" RIGHT ℄ SR-57 = "B" Line

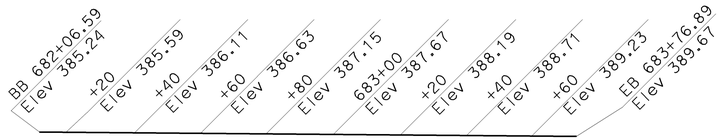


106'-5¾" RIGHT ℄ SR-57 = "B" Line

## PROFILE GRADE

No Scale

**LEGEND**

+XX.XX / XXX.XX — Denotes station & elevation at top of exist deck.

| PILE DATA TABLE | | | | | |
|---|---|---|---|---|---|
| Location | Pile Type | Nominal Resistance (kips) | | Design tip elevation (ft) | Specified tip elevation (ft) |
| | | Compression | Tension | | |
| Abut 1 (Step 1) | 24" CIDH Conc Pile | 370 | 0 | 326.00 (a)<br>340.25 (c)<br>345.25 (d) | 326 |
| Abut 1 (Step 2) | 24" CIDH Conc Pile | 380 | 0 | 329.00 (a)<br>343.25 (c)<br>348.25 (d) | 329 |
| Abut 2 | 24" CIDH Conc Pile | 400 | 0 | 335.00 (a)<br>346.25 (c)<br>353.25 (d) | 335 |

Design Tip Elevation controlled by following demand:
(a) Compression; (c) Settlement; (d) Lateral Capacity.

**NOTE:**
The Contractor shall verify all controlling field dimensions before ordering or fabricating any materials.

## GENERAL NOTES
## LOAD AND RESISTANCE FACTOR DESIGN (LRFD)

Design: AASHTO LRFD Bridge Design Specifications, 3rd edition with interims through 2006 and the Caltrans Amendments 3.06.01; except that abutments, earth retaining systems, Bridge details taken from Standard Plans March 2006 and earlier versions, and Standard Bridge Details, XS sheets, are designed using Bridge Design Specifications (1996 AASHTO w/ Revisions by Caltrans).

Seismic Design: Caltrans Seismic Design Criteria (SDC) Version 1.4 June 2006

Dead Load: Includes 35 psf for future wearing surface.

Live Loading: LRFD: HL-93 and permit (P-15) Design Load

Seismic Loading: Caltrans SDC - ARS Curve Fig B-8 for Soil Profile D (Modified) (Magnitude = 7.25± 0.25). (Peak bed rock acceleration = 0.7 g) (Increased by 20% for periods greater than 1.0 second, no increase for periods less than 0.5 second, and linear interpolation between 0.5 and 1.0 second).

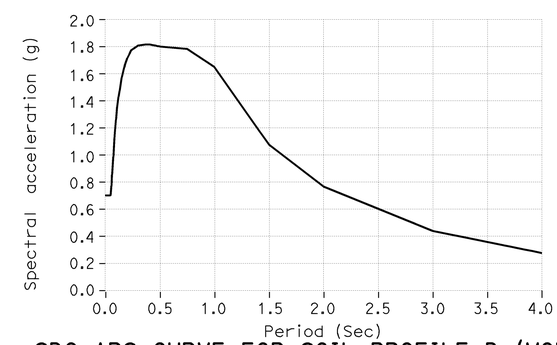


SDC ARS CURVE FOR SOIL PROFILE D (MODIFIED)

Reinforced Concrete:
New Concrete (Bridge)
fy = 60,000 psi
f'c = 3,600 psi, Unless otherwise noted
n = 8

Prestressed Concrete:
See prestressing notes, on "Girder Layout" sheet.

DESIGN OVERSIGHT — Jon Hamaguchi
6-9-09
SIGN OFF DATE

| | BY | CHECKED |
|---|---|---|
| DESIGN | D. Sun | M. Atiqullah / E. Cutler |
| DETAILS | P. Walker | M. Atiqullah / E. Cutler |
| QUANTITIES | J. Powell | E. Cutler |

PREPARED FOR THE STATE OF CALIFORNIA DEPARTMENT OF TRANSPORTATION

Ayman Salama
PROJECT ENGINEER

BRIDGE NO. 55-0485
POST MILE 20.38

# BIRCH STREET UC (WIDEN)
# GENERAL NOTES

DESIGN DETAIL SHEET (ENGLISH) (REV. 2/25/05)

ORIGINAL SCALE IN INCHES FOR REDUCED PLANS 0 1 2 3

CU 12220
EA 0F0321

DISREGARD PRINTS BEARING EARLIER REVISION DATES

REVISION DATES (PRELIMINARY STAGE ONLY) 12/02/08 12/04/08 12/10/08 04/07/09 06/08/09

SHEET 3 OF 18

FILE => 55-0485-b-gnotes.dgn

USERNAME => rtrenord DATE PLOTTED => 25-JAN-2010 TIME PLOTTED => 08:18

| DIST | COUNTY | ROUTE | POST MILES TOTAL PROJECT | SHEET No | TOTAL SHEETS |
|---|---|---|---|---|---|
| 12 | Ora | 57 | 18.4/20.9 | 651 | 856 |

REGISTERED CIVIL ENGINEER 06/08/09 DATE

1-25-10
PLANS APPROVAL DATE

REGISTERED PROFESSIONAL ENGINEER C. DANIEL SUN No. 40064 Exp. 12/31/11 CIVIL STATE OF CALIFORNIA

*The State of California or its officers or agents shall not be responsible for the accuracy or completeness of electronic copies of this plan sheet.*

OCTA
550 S. MAIN STREET
ORANGE, CA 92863

CH2M HILL
6 HUTTON CENTRE DRIVE, SUITE 700
SANTA ANA, CA 92707

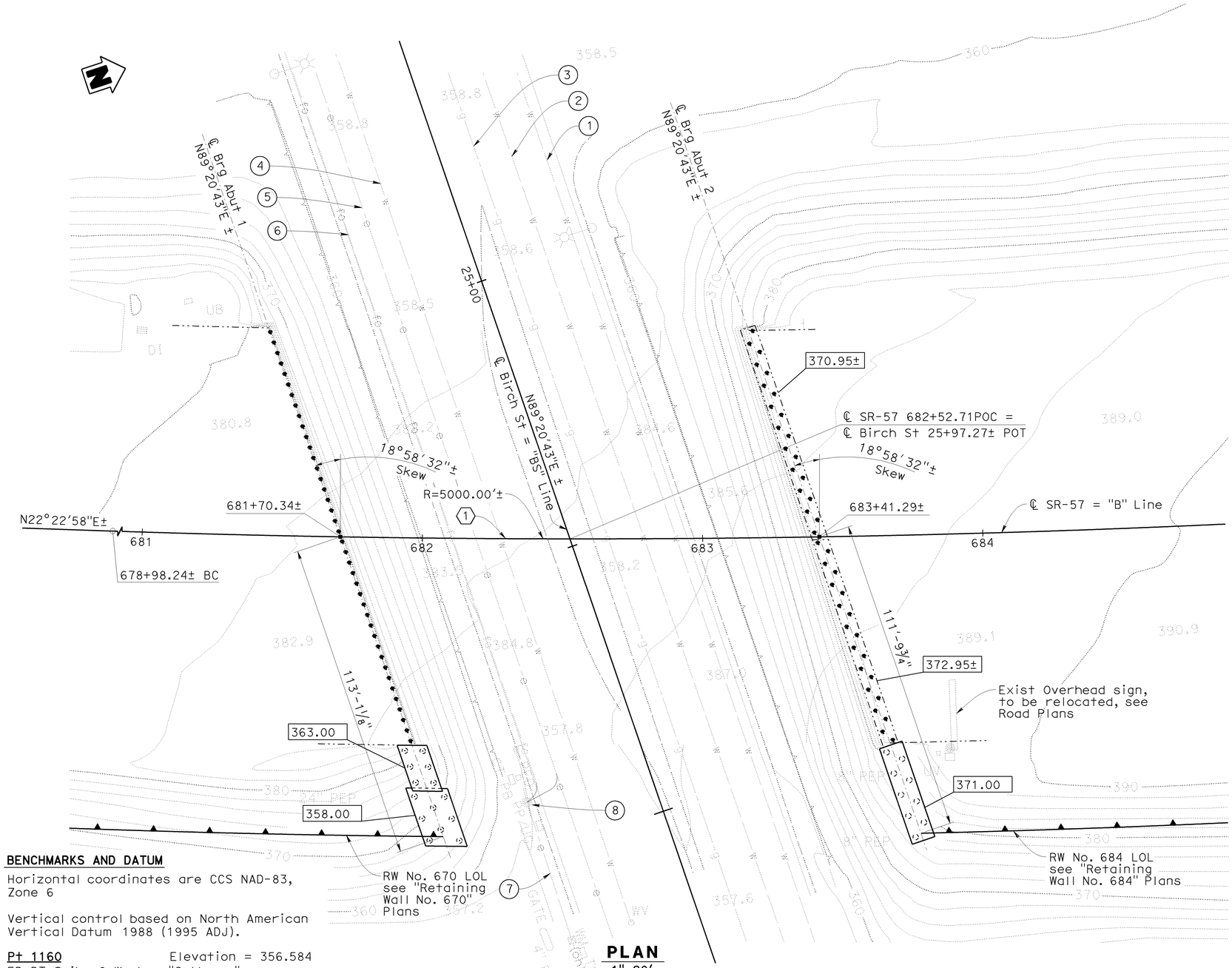


**PLAN**
1"=20'

## EXISTING UTILITY LINES TABLE
(BASED ON AS-BUILT DATA)

| NO. | UTILITY | ACTION |
|---|---|---|
| 1 | 12" CI Water (City of Brea) | Protect in place |
| 2 | 36" HP Water Main (City of Brea) | Protect in place |
| 3 | 4" PE Gas | Protect in place |
| 4 | 12" CI Water (City of Brea) | Protect in place |
| 5 | 12 KV UG Elec SCE | To be Relocated |
| 6 | UG Fiber Time Warner 3'4" Comm AT&T | To be Relocated |
| 7 | 12 KV OH Elec SCE OH Fiber Time Warner 3'4" Comm AT&T | To be Relocated |
| 8 | Exist Overhead pole | To be Relocated |

**LEGEND**

- Indicates Existing Structure
- Indicates New Construction
- Indicates New CIDH Conc Piles
- Indicates Exist CIDH Conc Piles
- Denotes Existing Electrolier
- Denotes Existing Sign
- Denotes Existing Overhead Sign
- Denotes Existing Power Pole
- UV Denotes Existing Utility Vault
- UB Denotes Existing Utility Cabinet
- Denotes Existing Sewer Manhole
- XXX.XX Indicates bottom of footing Elevation

**NOTES:**

1. The Contractor shall verify all controlling field dimensions before ordering or fabricating any materials.
2. For new & existing Utility location and details see Utility Plans.

**BENCHMARKS AND DATUM**

Horizontal coordinates are CCS NAD-83, Zone 6

Vertical control based on North American Vertical Datum 1988 (1995 ADJ).

Pt 1160 Elevation = 356.584
FD BT Spike & Washer "Caltrans"
Northing 2281521.621 Easting 6067030.125

Pt 1161 Elevation = 358.878
FD 2" Brass Disk "CDOT" in Monument Well
Northing 2281518.249 Easting 6066737.110

GEOTECHNICAL PROFESSIONAL APPROVAL DATE 06/08/09

DESIGN OVERSIGHT Jon Hamaguchi
6-9-09
SIGN OFF DATE

SCALE: 1"=20' VERT.DATUM NAVD-88 (1995 ADJ) HORZ.DATUM NAD83
PHOTOGRAMMETRY AS OF: ALIGNMENT TIES
SURVEYED BY R. Williams DRAFTED BY
FIELD CHECKED BY M. Wilson CHECKED BY

DESIGN BY D. Sun CHECKED M. Atiqullah / E. Cutler
DETAILS BY N. Morales CHECKED M. Atiqullah / E. Cutler
QUANTITIES BY J. Powell CHECKED E. Cutler

PREPARED FOR THE STATE OF CALIFORNIA DEPARTMENT OF TRANSPORTATION

Ayman Salama
PROJECT ENGINEER

BRIDGE NO. 55-0485
POST MILE 20.38

# BIRCH STREET UC (WIDEN)
# FOUNDATION PLAN

FOUNDATION PLAN SHEET (ENGLISH) (REV. 2-25-05)

ORIGINAL SCALE IN INCHES FOR REDUCED PLANS 0 1 2 3

CU 12220
EA 0F0321

DISREGARD PRINTS BEARING EARLIER REVISION DATES

REVISION DATES (PRELIMINARY STAGE ONLY) 12/08/08 12/09/08 12/10/08 04/07/09 06/08/09

SHEET 4 OF 18

FILE => 55-0485-e-fdp101.dgn

USERNAME => trlenard DATE PLOTTED => 25-JAN-2010 TIME PLOTTED => 08:21

| DIST | COUNTY | ROUTE | POST MILES TOTAL PROJECT | SHEET No | TOTAL SHEETS |
|---|---|---|---|---|---|
| 12 | Ora | 57 | 18.4/20.9 | 652 | 856 |

REGISTERED CIVIL ENGINEER 06/08/09 DATE

1-25-10
PLANS APPROVAL DATE

*The State of California or its officers or agents shall not be responsible for the accuracy or completeness of electronic copies of this plan sheet.*

REGISTERED PROFESSIONAL ENGINEER C. DANIEL SUN No. 40064 Exp. 12/31/11 CIVIL STATE OF CALIFORNIA

OCTA
550 S. MAIN STREET
ORANGE, CA 92863

CH2M HILL
6 HUTTON CENTRE DRIVE, SUITE 700
SANTA ANA, CA 92707

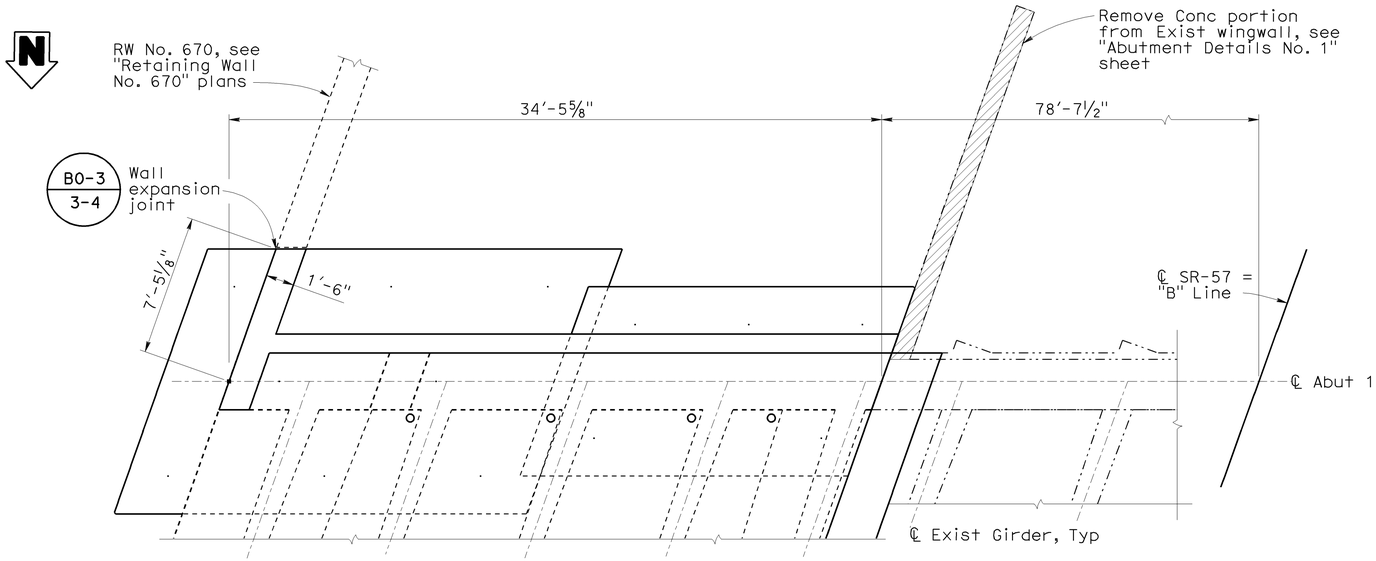


**PLAN**
¼" = 1'-0"

**LEGEND**

Bridge removal (Portion)

Closure Pour

* Match Existing grade

**NOTES:**

1. For Sections A-A and B-B, see "Abutment Details No. 1" sheet.
2. For Sections C-C, D-D and E-E see "Abutment Details No. 3" sheet.

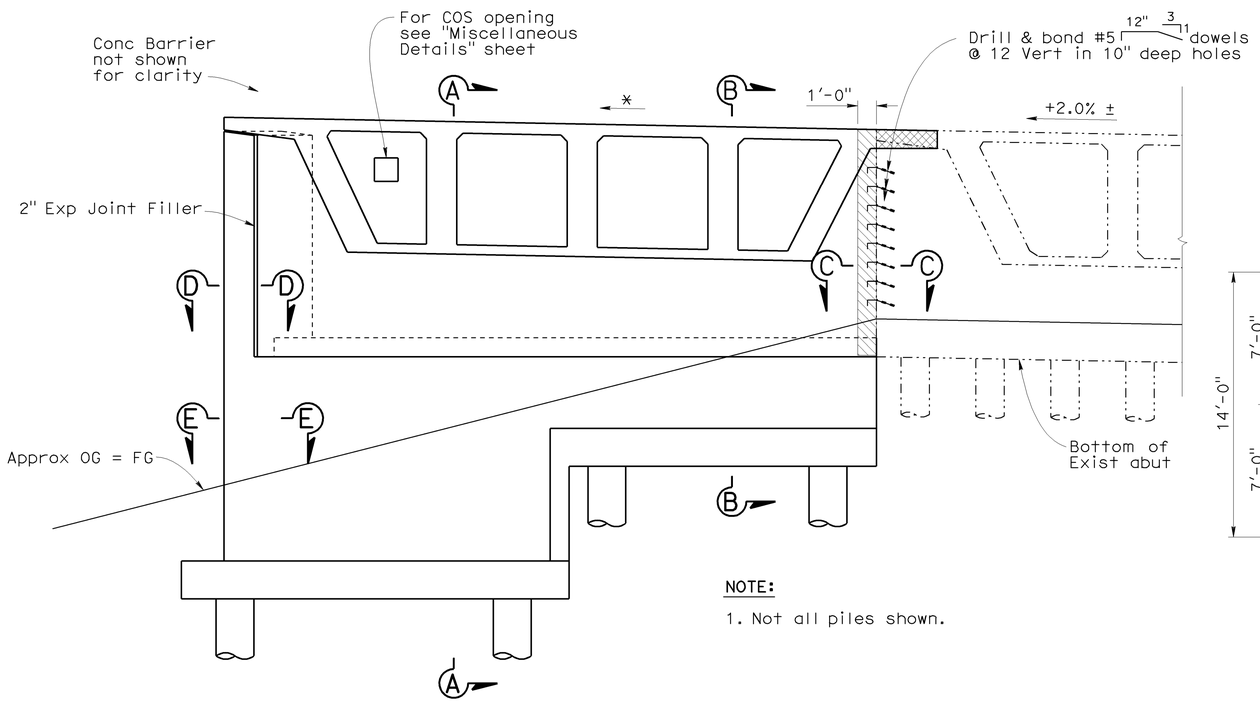


**NOTE:**

1. Not all piles shown.

**ELEVATION**
¼" = 1'-0"

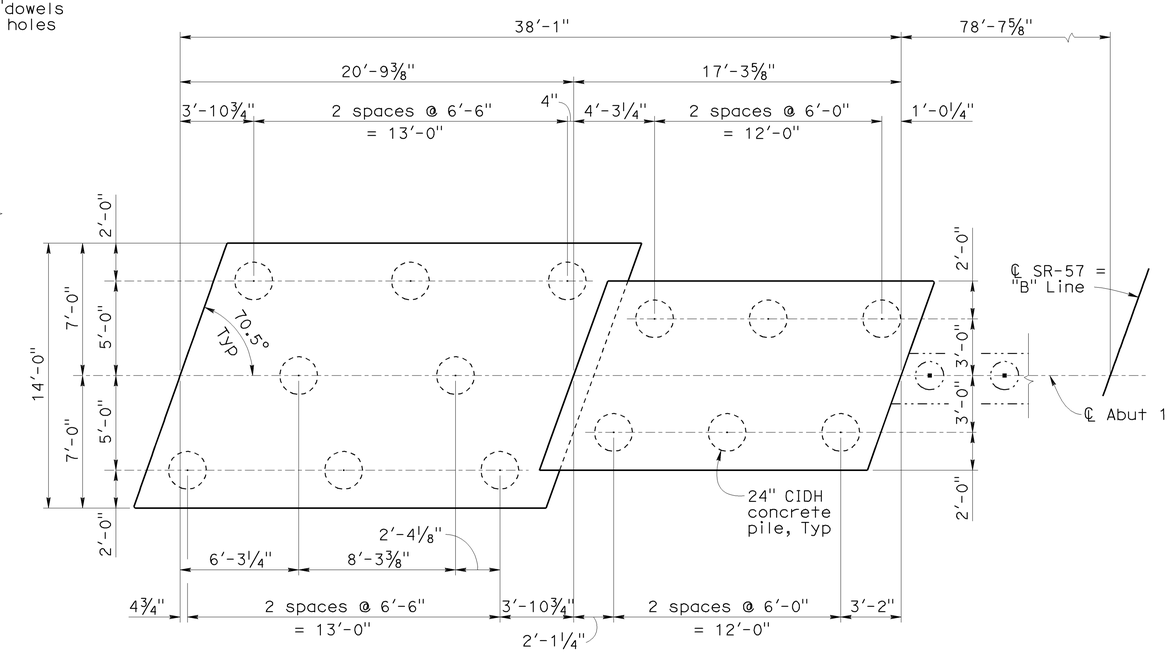


**PILE LAYOUT**
¼" = 1'-0"

**NOTE:**

The Contractor shall verify all controlling field dimensions before ordering or fabricating any materials.

DESIGN OVERSIGHT Jon Hamaguchi
6-9-09
SIGN OFF DATE

| | BY | CHECKED |
|---|---|---|
| DESIGN | D. Sun | M. Atiqullah / E. Cutler |
| DETAILS | P. Walker | M. Atiqullah / E. Cutler |
| QUANTITIES | J. Powell | E. Cutler |

PREPARED FOR THE STATE OF CALIFORNIA DEPARTMENT OF TRANSPORTATION

Ayman Salama
PROJECT ENGINEER

BRIDGE NO. 55-0485
POST MILE 20.38

# BIRCH STREET UC (WIDEN)
# ABUTMENT 1 LAYOUT

DESIGN DETAIL SHEET (ENGLISH) (REV. 2/25/05)

ORIGINAL SCALE IN INCHES FOR REDUCED PLANS 0 1 2 3

CU 12220
EA 0F0321

DISREGARD PRINTS BEARING EARLIER REVISION DATES

REVISION DATES (PRELIMINARY STAGE ONLY) 12/02/08 12/04/08 12/10/08 04/07/09 06/08/09

SHEET 5 OF 18

FILE => 55-0485-f-a01_lo1.dgn

USERNAME => rtrenord DATE PLOTTED => 25-JAN-2010 TIME PLOTTED => 08:21

| DIST | COUNTY | ROUTE | POST MILES TOTAL PROJECT | SHEET No | TOTAL SHEETS |
|---|---|---|---|---|---|
| 12 | Ora | 57 | 18.4/20.9 | 653 | 856 |

REGISTERED CIVIL ENGINEER 06/08/09 DATE

1-25-10
PLANS APPROVAL DATE

REGISTERED PROFESSIONAL ENGINEER C. DANIEL SUN No. 40064 Exp. 12/31/11 CIVIL STATE OF CALIFORNIA

*The State of California or its officers or agents shall not be responsible for the accuracy or completeness of electronic copies of this plan sheet.*

OCTA
550 S. MAIN STREET
ORANGE, CA 92863

CH2M HILL
6 HUTTON CENTRE DRIVE, SUITE 700
SANTA ANA, CA 92707

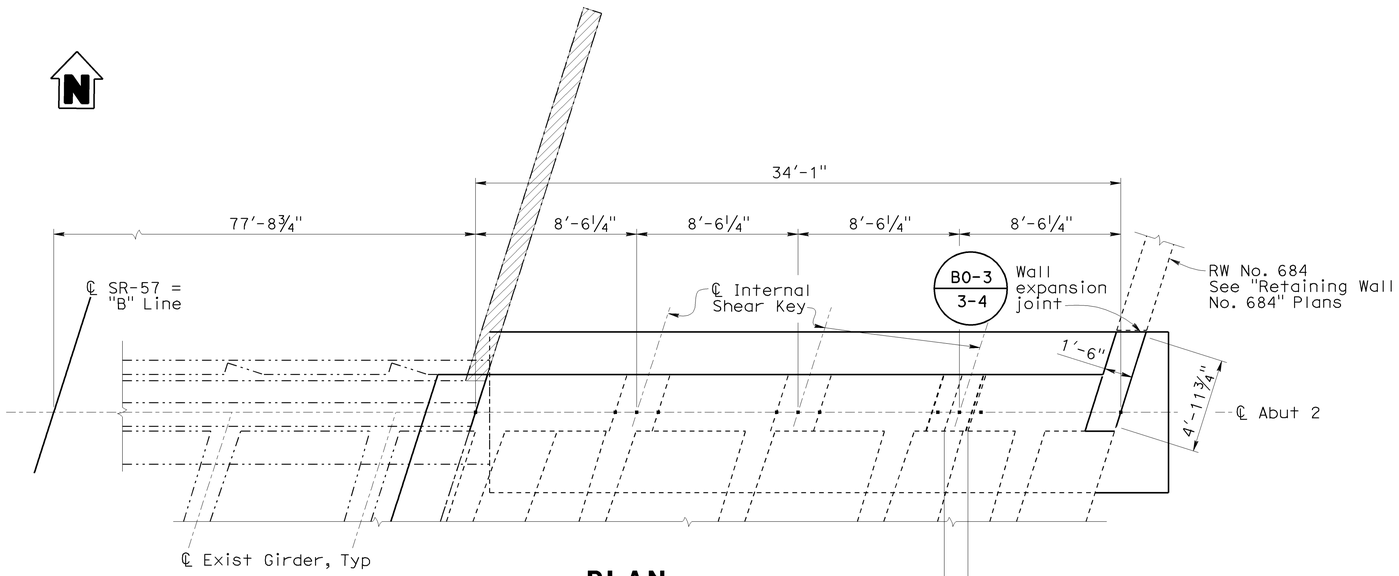


## PLAN
¼" = 1'-0"

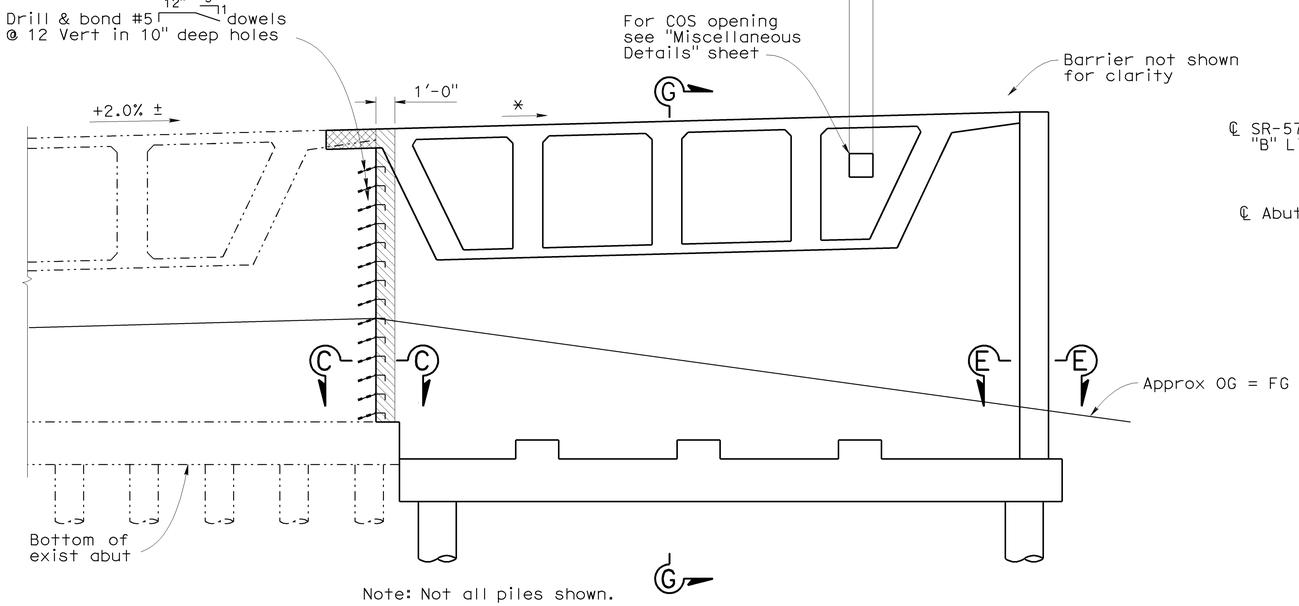


Note: Not all piles shown.

## ELEVATION
¼" = 1'-0"

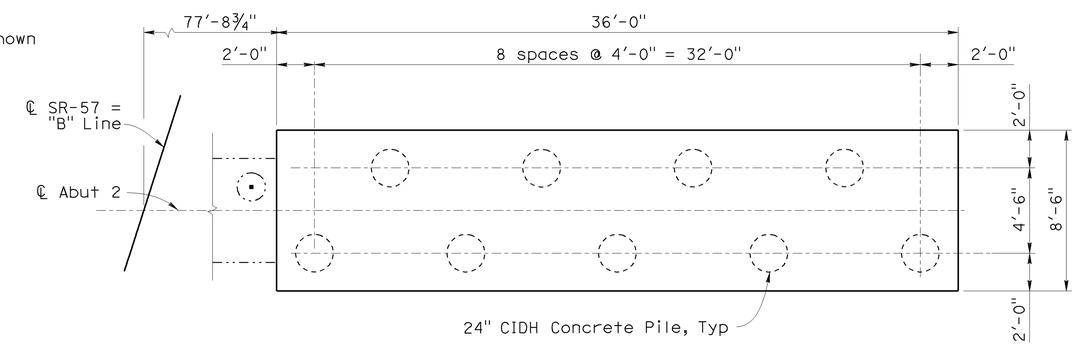


## PILE LAYOUT
¼" = 1'-0"

**LEGEND**

- Bridge removal (Portion)
- Closure Pour
- * Match Existing grade

**NOTES:**

1. For Section G-G, see "Abutment Details No. 2" sheet.
2. For Sections C-C and E-E, see "Abutment Details No. 3" sheet.

**NOTE:**

The Contractor shall verify all controlling field dimensions before ordering or fabricating any materials.

DESIGN OVERSIGHT Jon Hamaguchi
6-9-09
SIGN OFF DATE

| | BY | CHECKED |
|---|---|---|
| DESIGN | D. Sun | M. Atiqullah / E. Cutler |
| DETAILS | P. Walker | M. Atiqullah / E. Cutler |
| QUANTITIES | J. Powell | E. Cutler |

PREPARED FOR THE STATE OF CALIFORNIA DEPARTMENT OF TRANSPORTATION

Ayman Salama
PROJECT ENGINEER

BRIDGE NO. 55-0485
POST MILE 20.38

# BIRCH STREET UC (WIDEN)
# ABUTMENT 2 LAYOUT

DESIGN DETAIL SHEET (ENGLISH) (REV. 2/25/05)

ORIGINAL SCALE IN INCHES FOR REDUCED PLANS 0 1 2 3

CU 12220
EA 0F0321

DISREGARD PRINTS BEARING EARLIER REVISION DATES

REVISION DATES (PRELIMINARY STAGE ONLY) 12/02/08 12/04/08 12/30/08 04/07/09 06/08/09

SHEET 6 OF 18

FILE => 55-0485-f-a01_1o2.dgn

USERNAME => friehard DATE PLOTTED => 25-JAN-2010 TIME PLOTTED => 08:21

| DIST | COUNTY | ROUTE | POST MILES TOTAL PROJECT | SHEET No | TOTAL SHEETS |
|---|---|---|---|---|---|
| 12 | Ora | 57 | 18.4/20.9 | 654 | 856 |

REGISTERED CIVIL ENGINEER 06/08/09 DATE

1-25-10
PLANS APPROVAL DATE

REGISTERED PROFESSIONAL ENGINEER C. DANIEL SUN No. 40064 Exp. 12/31/11 CIVIL STATE OF CALIFORNIA

*The State of California or its officers or agents shall not be responsible for the accuracy or completeness of electronic copies of this plan sheet.*

OCTA
550 S. MAIN STREET
ORANGE, CA 92863

CH2M HILL
6 HUTTON CENTRE DRIVE, SUITE 700
SANTA ANA, CA 92707

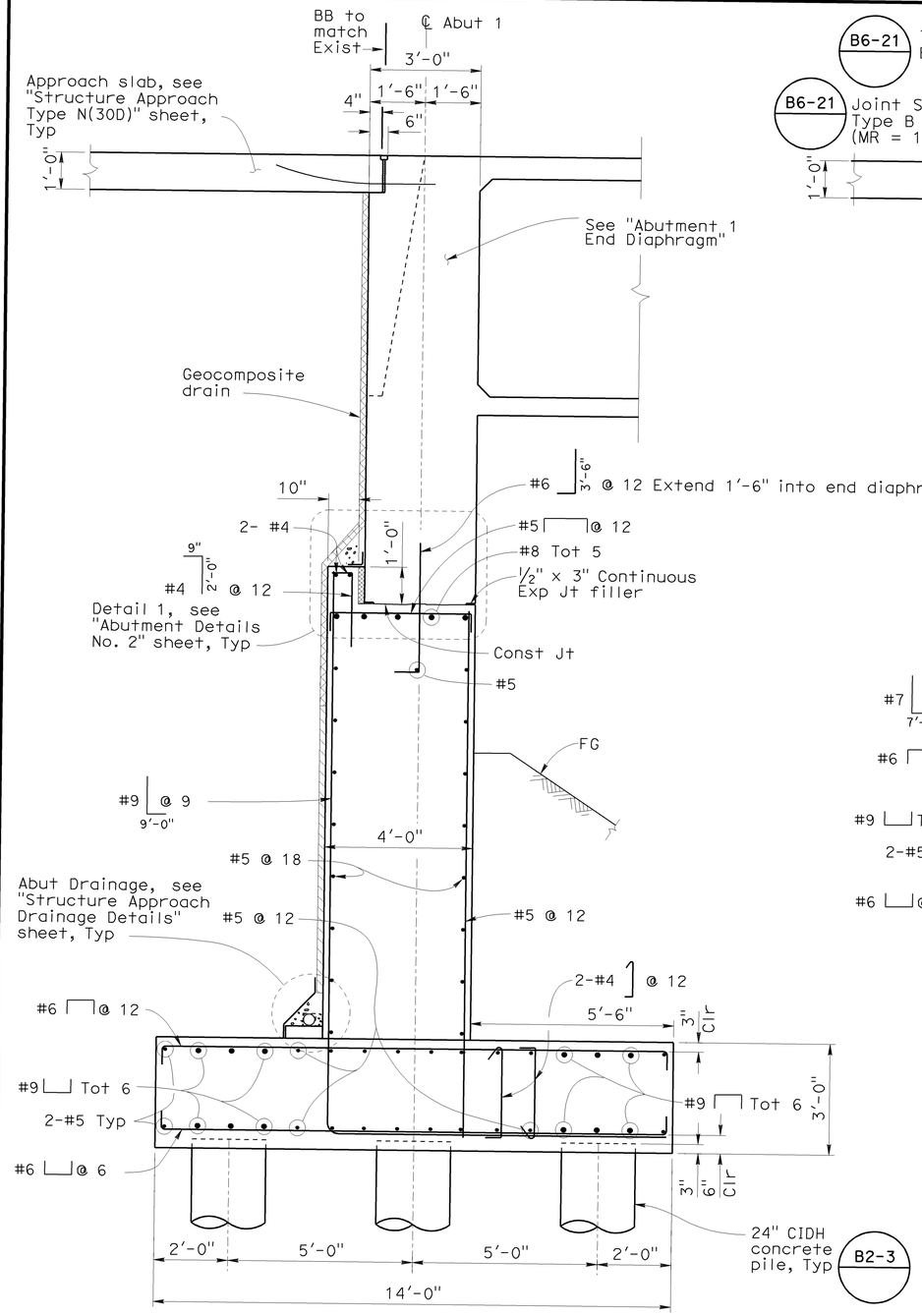


## SECTION A-A (B8-5)
1/2" = 1'-0"

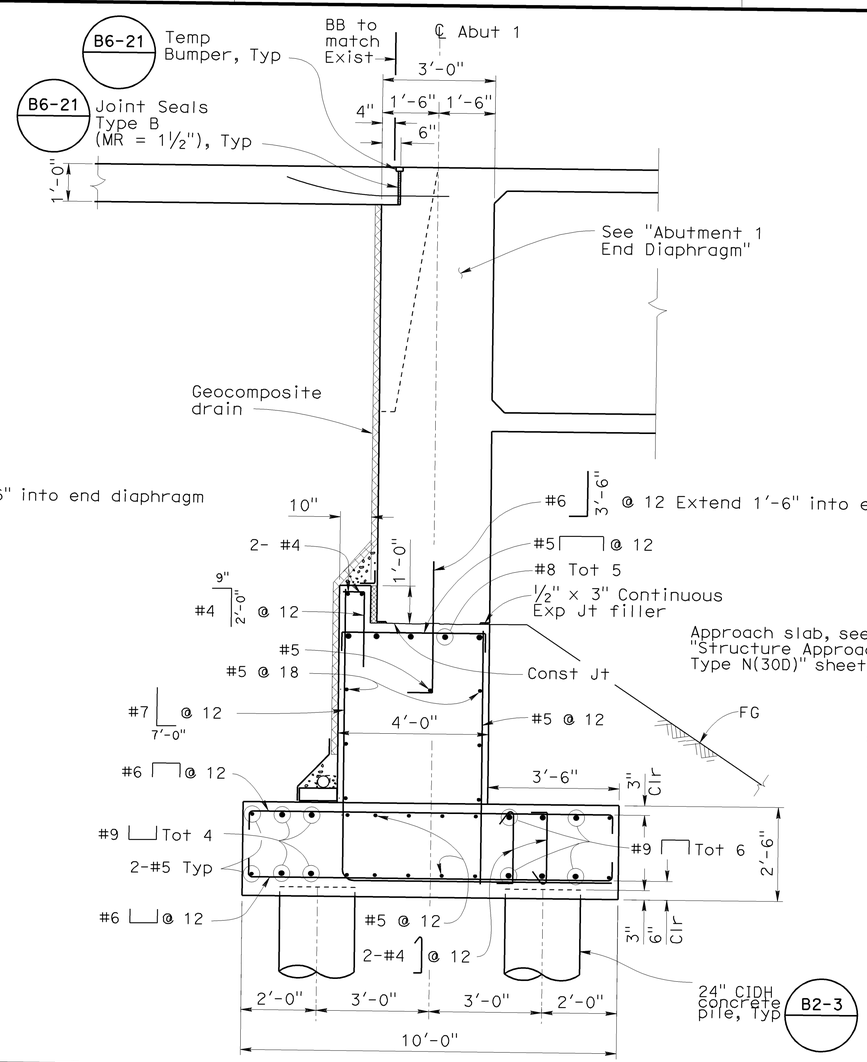


## SECTION B-B (B8-5)
1/2" = 1'-0"

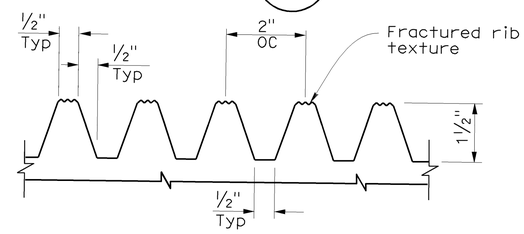


## FRACTURED RIB TEXTURE DETAIL
No scale
(Elastomer Formliner)

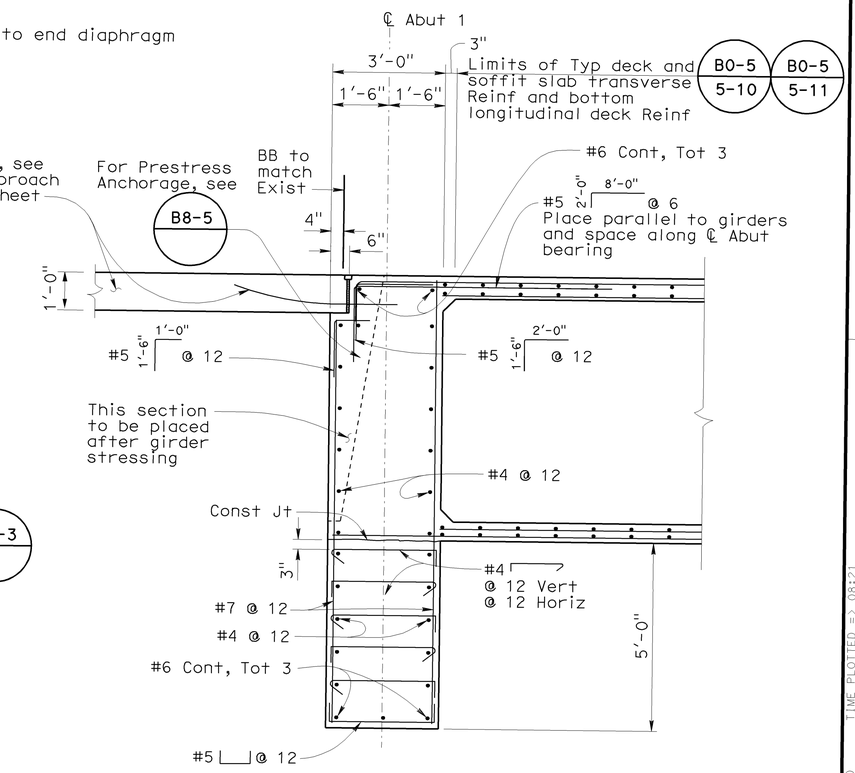


## ABUTMENT 1 END DIAPHRAGM (B8-5)
1/2" = 1'-0"

**NOTE:**
The Contractor shall verify all controlling field dimensions before ordering or fabricating any materials.

| | | | | | |
|---|---|---|---|---|---|
| DESIGN OVERSIGHT Jon Hamaguchi 6-9-09 SIGN OFF DATE | DESIGN | BY D. Sun | CHECKED M. Atiqullah / E. Cutler | PREPARED FOR THE STATE OF CALIFORNIA DEPARTMENT OF TRANSPORTATION | Ayman Salama PROJECT ENGINEER |
| | DETAILS | BY P. Walker | CHECKED M. Atiqullah / E. Cutler | | |
| | QUANTITIES | BY J. Powell | CHECKED E. Cutler | | |

DESIGN DETAIL SHEET (ENGLISH) (REV. 2/25/05)

ORIGINAL SCALE IN INCHES FOR REDUCED PLANS 0 1 2 3

CU 12220
EA 0F0321

BRIDGE NO. 55-0485
POST MILE 20.38

# BIRCH STREET UC (WIDEN)
# ABUTMENT DETAILS NO. 1

DISREGARD PRINTS BEARING EARLIER REVISION DATES → REVISION DATES (PRELIMINARY STAGE ONLY) 12/20/06 12/20/07 12/20/08 04/27/09 06/08/09

SHEET 7 OF 18

FILE => 55-0485-f-a01dt01.dgn

USERNAME => friendard DATE PLOTTED => 25-JAN-2010 TIME PLOTTED => 08:21

| DIST | COUNTY | ROUTE | POST MILES TOTAL PROJECT | SHEET No | TOTAL SHEETS |
|---|---|---|---|---|---|
| 12 | Ora | 57 | 18.4/20.9 | 655 | 856 |

REGISTERED CIVIL ENGINEER 06/08/09 DATE

1-25-10
PLANS APPROVAL DATE

*The State of California or its officers or agents shall not be responsible for the accuracy or completeness of electronic copies of this plan sheet.*

REGISTERED PROFESSIONAL ENGINEER C. DANIEL SUN No. 40064 Exp. 12/31/11 CIVIL STATE OF CALIFORNIA

OCTA
550 S. MAIN STREET
ORANGE, CA 92863

CH2M HILL
6 HUTTON CENTRE DRIVE, SUITE 700
SANTA ANA, CA 92707

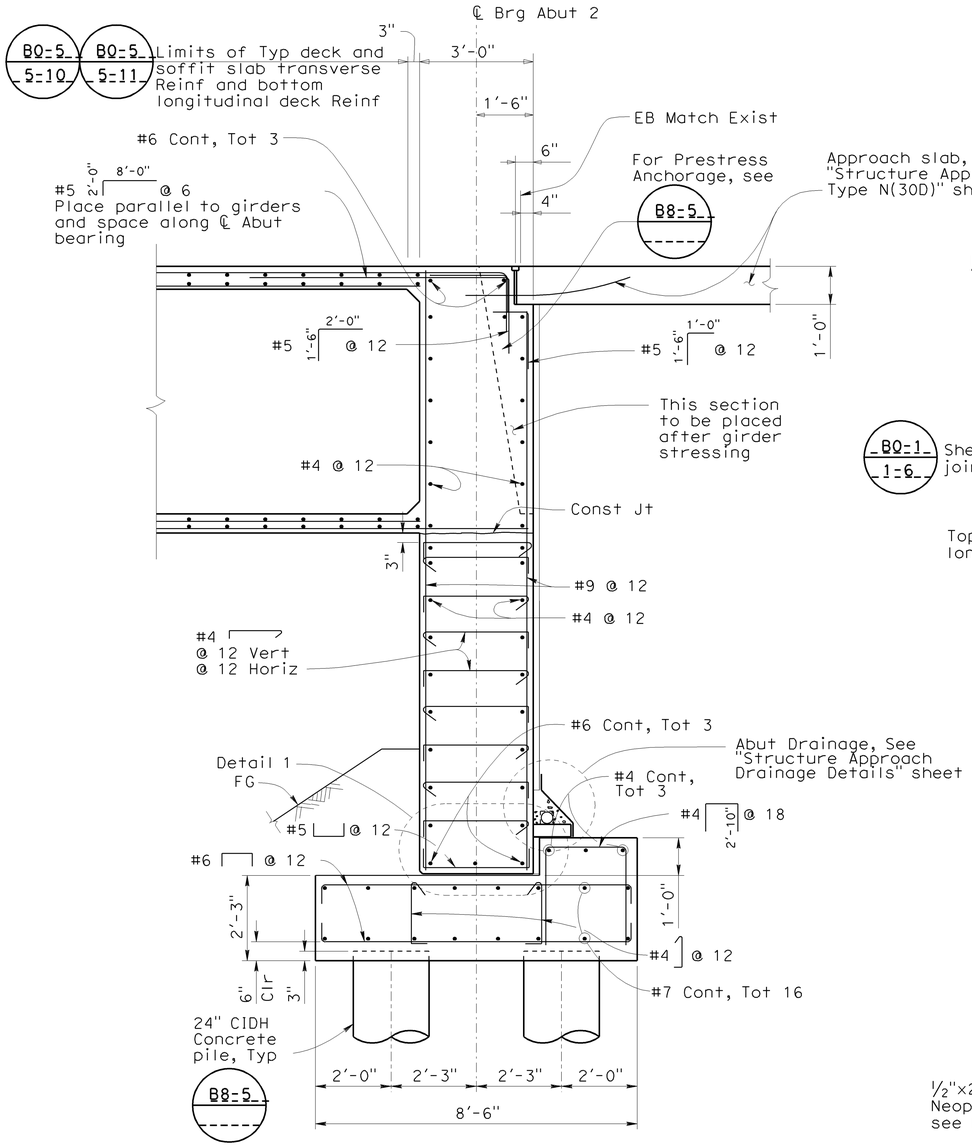


## SECTION G-G
B8-5
½" = 1'-0"

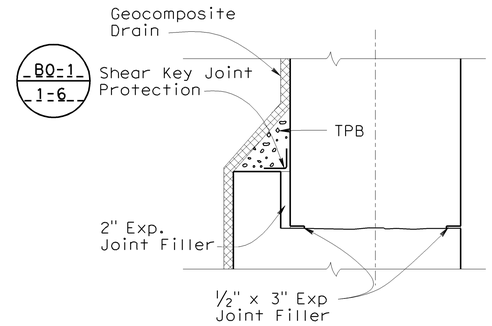


## DETAIL 1
No Scale

**NOTES:**

1. For location of Detail 1, see "Abutment Details No. 1" sheet.
2. For location of Section G-G, see "Abutment 2 Layout" sheet.

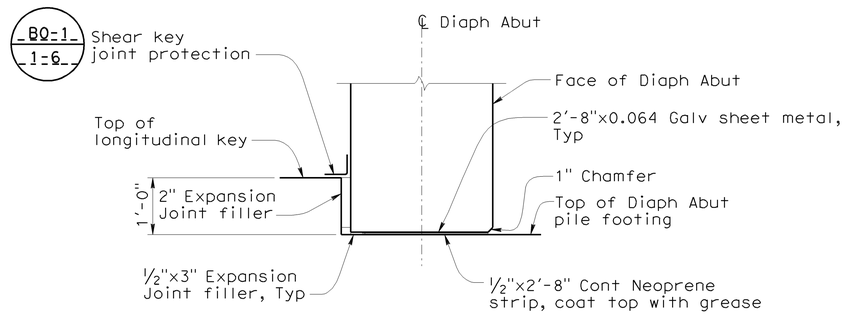


## DETAIL 2
No Scale

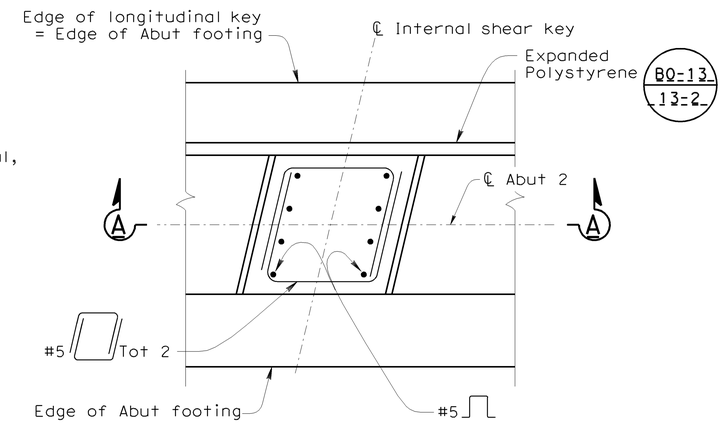


## INTERNAL SHEAR KEY
¾"=1'-0"

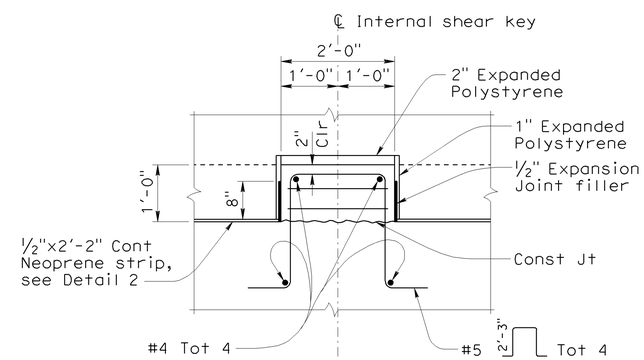


## SECTION A-A
¾"=1'-0"

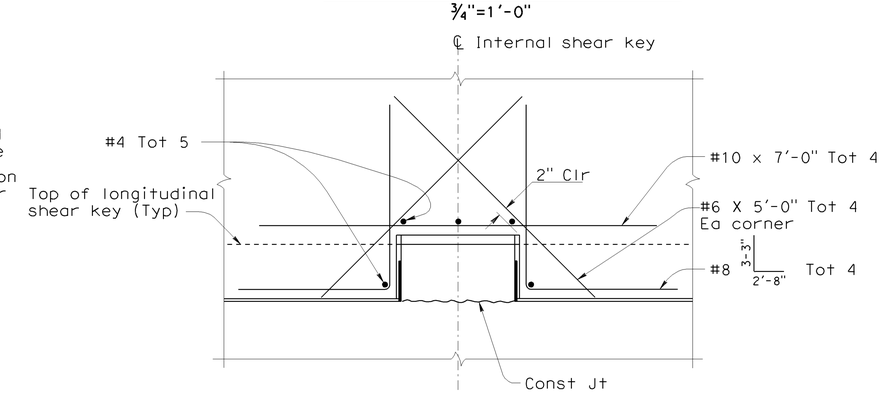


## DIAPHRAGM DETAIL AT SHEAR KEY
¾"=1'-0"

**NOTE:**

The Contractor shall verify all controlling field dimensions before ordering or fabricating any materials.

| | | | |
|---|---|---|---|
| DESIGN OVERSIGHT Jon Hamaguchi | DESIGN | BY D. Sun | CHECKED M. Atiqullah / E. Cutler |
| 6-9-09 SIGN OFF DATE | DETAILS | BY P. Walker | CHECKED M. Atiqullah / E. Cutler |
| | QUANTITIES | BY J. Powell | CHECKED E. Cutler |

PREPARED FOR THE STATE OF CALIFORNIA DEPARTMENT OF TRANSPORTATION

Ayman Salama
PROJECT ENGINEER

BRIDGE NO. 55-0485
POST MILE 20.38

# BIRCH STREET UC (WIDEN)
# ABUTMENT DETAILS NO. 2

DESIGN DETAIL SHEET (ENGLISH) (REV. 2/25/05)

ORIGINAL SCALE IN INCHES FOR REDUCED PLANS 0 1 2 3

CU 12220
EA 0F0321

DISREGARD PRINTS BEARING EARLIER REVISION DATES

REVISION DATES (PRELIMINARY STAGE ONLY) 12/05/08 12/04/06 12/10/06 04/07/09 06/08/09

SHEET 8 OF 18

TIME PLOTTED => 25-JAN-2010 08:21

USERNAME => trienard
DGN FILE => 55-0485-f-a01dt02.dgn

| DIST | COUNTY | ROUTE | POST MILES TOTAL PROJECT | SHEET No | TOTAL SHEETS |
|---|---|---|---|---|---|
| 12 | Ora | 57 | 18.4/20.9 | 656 | 856 |

REGISTERED CIVIL ENGINEER 06/08/09 DATE

1-25-10
PLANS APPROVAL DATE

REGISTERED PROFESSIONAL ENGINEER C. DANIEL SUN No. 40064 Exp. 12/31/11 CIVIL STATE OF CALIFORNIA

*The State of California or its officers or agents shall not be responsible for the accuracy or completeness of electronic copies of this plan sheet.*

OCTA
550 S. MAIN STREET
ORANGE, CA 92863

CH2M HILL
6 HUTTON CENTRE DRIVE, SUITE 700
SANTA ANA, CA 92707

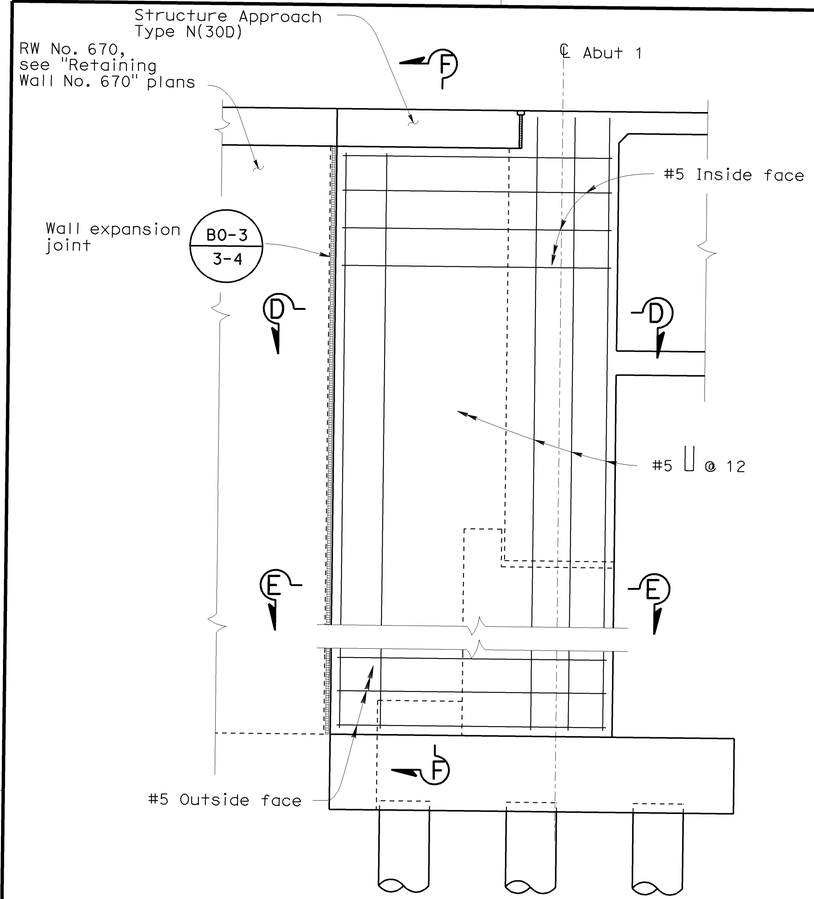


## ABUTMENT 1 WINGWALL

½"=1'-0"

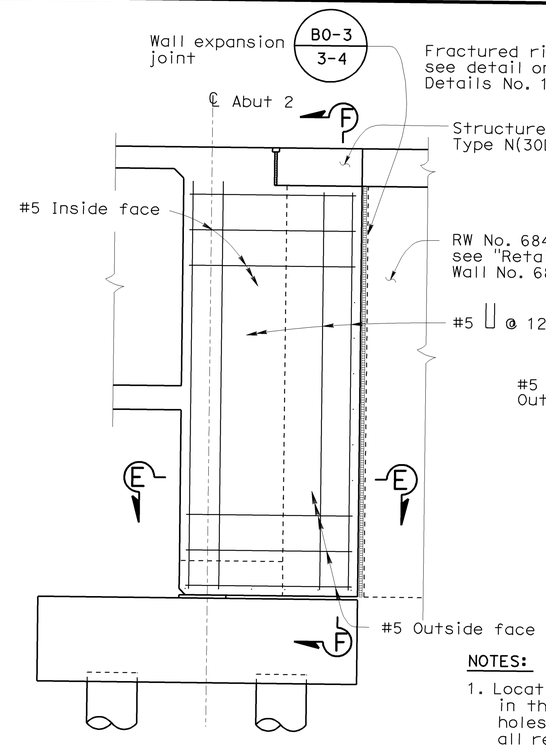


## ABUTMENT 2 WINGWALL

½"=1'-0"

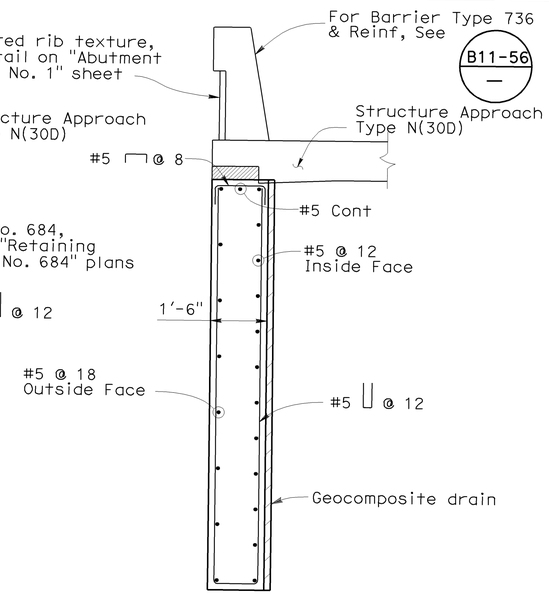


## SECTION F-F

½"=1'-0"

NOTES:

1. Locations of cored and drilled holes shown in the plans are approximate. Prior to placing holes in concrete, the Contractor shall locate all reinforcing steel and adjust the locations of the holes to clear all reinforcing bars (except as Noted). Final hole locations are subject to the approval of the Engineer.
2. Space new reinforcement to avoid existing reinforcement.

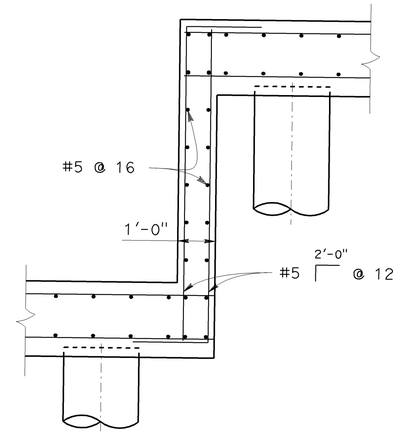


## ABUTMENT 1 FOOTING STEP

½"=1'-0"

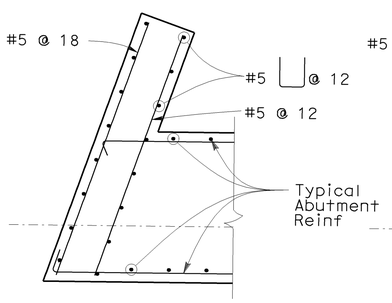


## SECTION E-E

½"=1'-0"

(Abutment 1 shown, Abutment 2 similar)

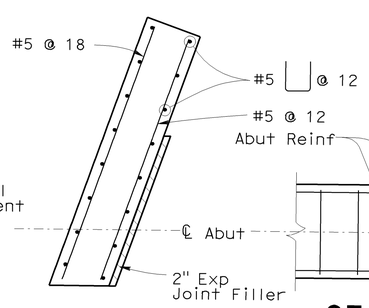


## SECTION D-D

½"=1'-0"

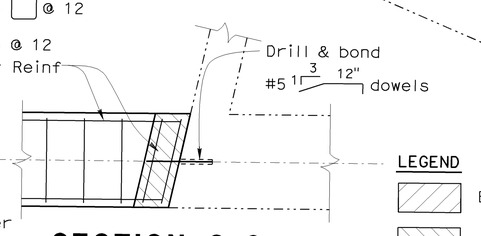


## SECTION C-C

½"=1'-0"

NOTE:

The Contractor shall verify all controlling field dimensions before ordering or fabricating any materials.

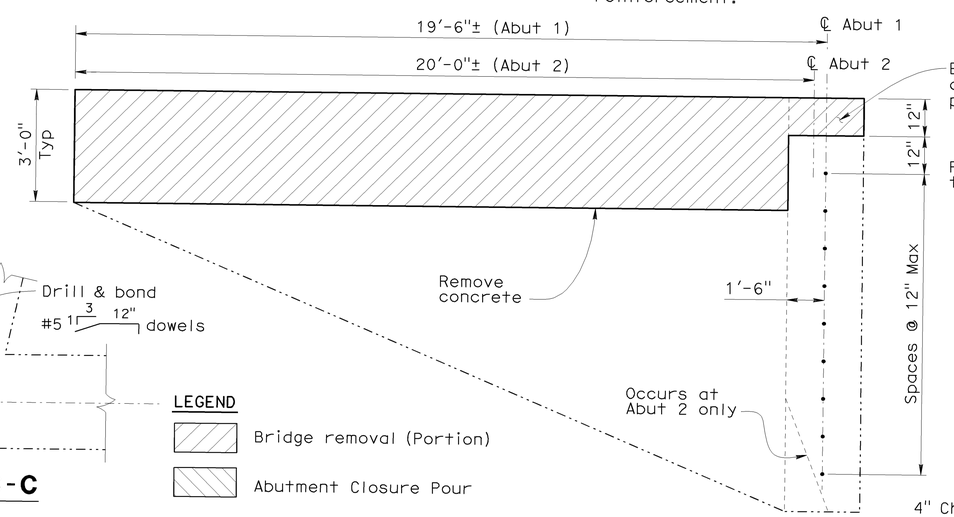


## LIMITS OF CONCRETE REMOVAL EXISTING ABUTMENT

½"=1'-0"

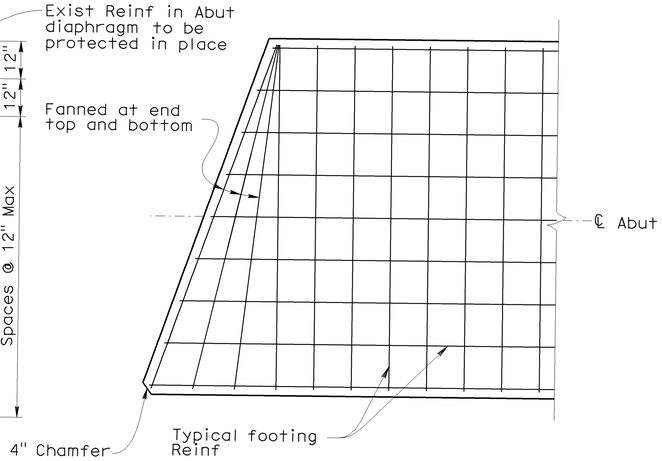


## ABUTMENT 1 FOOTING CORNER

½"=1'-0"

DESIGN OVERSIGHT Jon Hamaguchi
6-9-09
SIGN OFF DATE

DESIGN DETAIL SHEET (ENGLISH) (REV. 2/25/05)

| | BY | CHECKED |
|---|---|---|
| DESIGN | D. Sun | M. Atiqullah / E. Cutler |
| DETAILS | P. Walker | M. Atiqullah / E. Cutler |
| QUANTITIES | J. Powell | E. Cutler |

ORIGINAL SCALE IN INCHES FOR REDUCED PLANS 0 1 2 3

PREPARED FOR THE STATE OF CALIFORNIA DEPARTMENT OF TRANSPORTATION

Ayman Salama
PROJECT ENGINEER

CU 12220
EA 0F0321

BRIDGE NO. 55-0485
POST MILE 20.38

# BIRCH STREET UC (WIDEN)
# ABUTMENT DETAILS NO. 3

DISREGARD PRINTS BEARING EARLIER REVISION DATES

REVISION DATES (PRELIMINARY STAGE ONLY) 12/28/08 12/04/08 12/18/08 04/07/09 06/08/09

SHEET 9 OF 18

FILE => 55-0485-f-a01dt03.dgn

USERNAME => trlenard DATE PLOTTED => 25-JAN-2010 TIME PLOTTED => 08:21

| DIST | COUNTY | ROUTE | POST MILES TOTAL PROJECT | SHEET No | TOTAL SHEETS |
|---|---|---|---|---|---|
| 12 | Ora | 57 | 18.4/20.9 | 657 | 856 |

REGISTERED CIVIL ENGINEER — DATE 06/08/09

1-25-10
PLANS APPROVAL DATE

REGISTERED PROFESSIONAL ENGINEER — C. DANIEL SUN — No. 40064 — Exp. 12/31/11 — CIVIL — STATE OF CALIFORNIA

*The State of California or its officers or agents shall not be responsible for the accuracy or completeness of electronic copies of this plan sheet.*

OCTA
550 S. MAIN STREET
ORANGE, CA 92863

CH2M HILL
6 HUTTON CENTRE DRIVE, SUITE 700
SANTA ANA, CA 92707

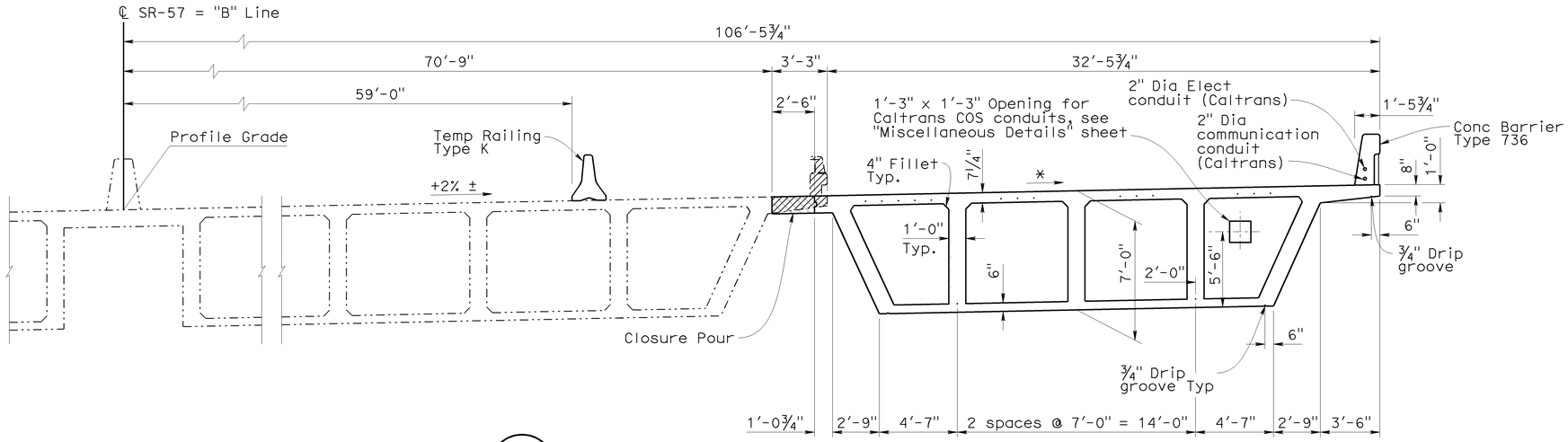


**LEGEND**

- Indicates Existing Structure
- Indicates New Structure
- Bridge removal (Portion)
- Closure pour
- * Match Existing Grade & Cross Slope

## TYPICAL SECTION

¼" = 1'-0"

#5, S= ‖ — B0-5 / 5-10
or
S= ‖ — B0-5 / 5-11

Place parallel to ℄ Abutment and space along "B" Line

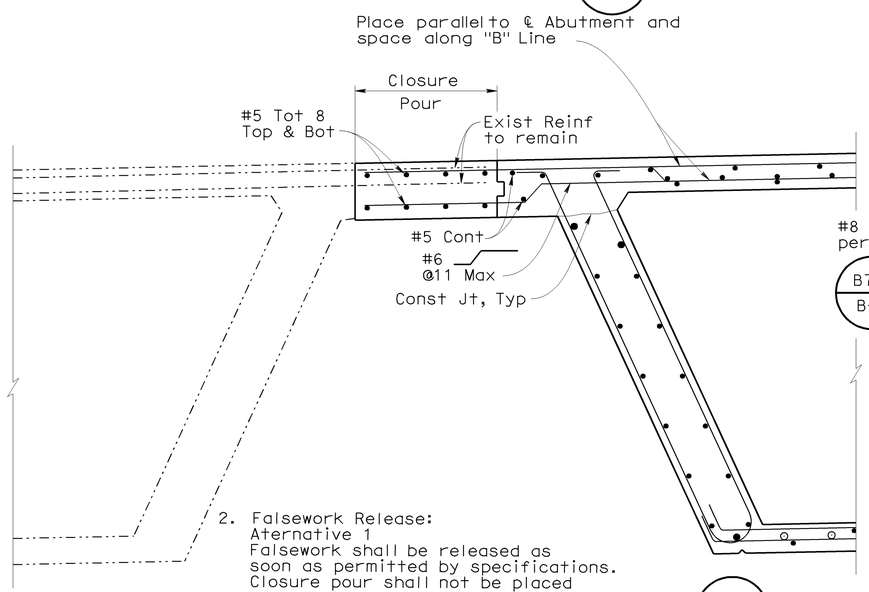


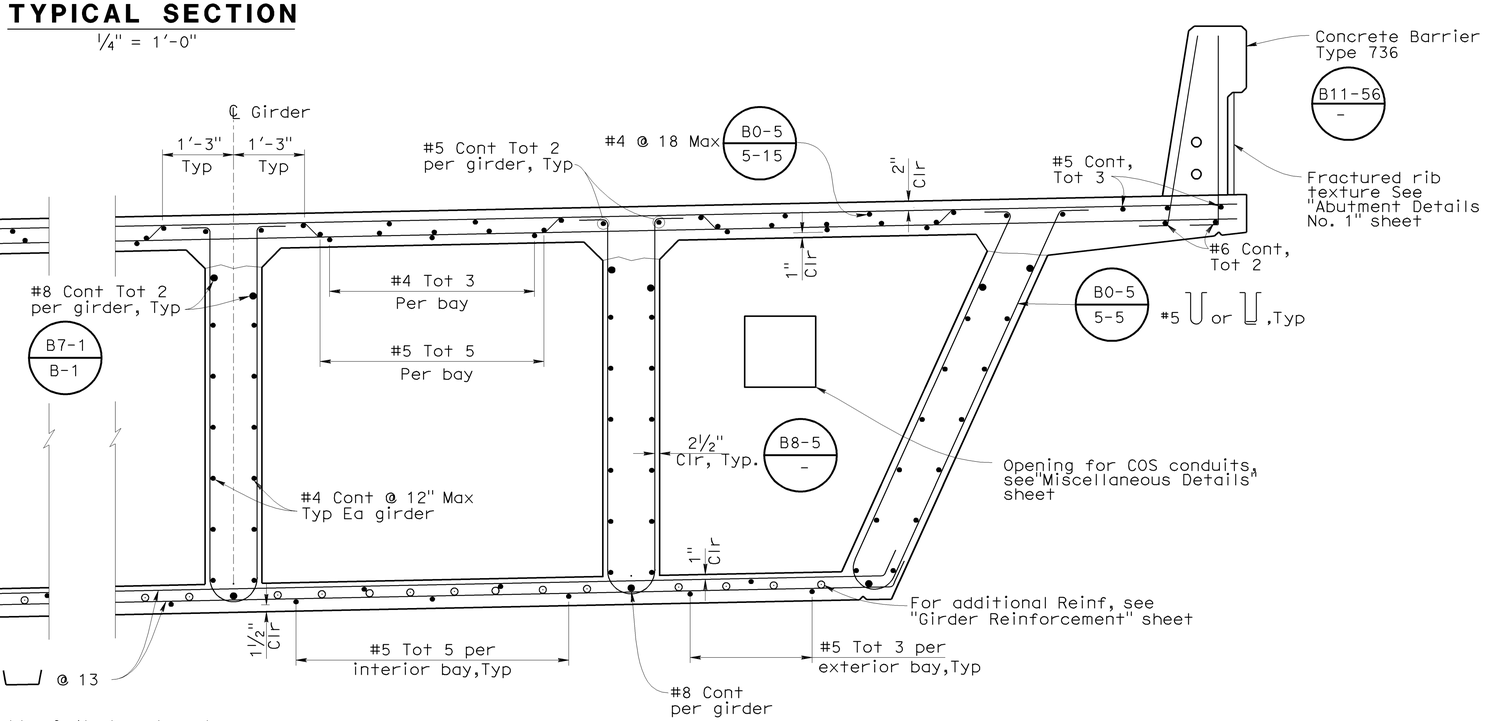


**NOTES:**

1. The Contractor shall verify all controlling field dimensions before ordering or fabricating any materials.
2. Falsework Release:
   Aternative 1
   Falsework shall be released as soon as permitted by specifications. Closure pour shall not be placed sooner than 60 days after the falsework has been released.

   Alternative 2
   Falsework shall not be released less 14 days after the last concrete has been placed. Closure pour shall not be placed sooner than 14 days after the falsework has been released.

## PARTIAL TYPICAL SECTION

¾" = 1'-0"

DESIGN OVERSIGHT — Jon Hamaguchi — 6-9-09 — SIGN OFF DATE

| | BY | CHECKED |
|---|---|---|
| DESIGN | D. Sun | M. Atiqullah / E. Cutler |
| DETAILS | P. Walker | M. Atiqullah / E. Cutler |
| QUANTITIES | J. Powell | E. Cutler |

PREPARED FOR THE STATE OF CALIFORNIA DEPARTMENT OF TRANSPORTATION

Ayman Salama — PROJECT ENGINEER

BRIDGE NO. 55-0485
POST MILE 20.38

# BIRCH STREET UC (WIDEN)
# TYPICAL SECTION

DESIGN DETAIL SHEET (ENGLISH) (REV. 2/25/05)

ORIGINAL SCALE IN INCHES FOR REDUCED PLANS 0 1 2 3

CU 12220
EA 0F0321

DISREGARD PRINTS BEARING EARLIER REVISION DATES

REVISION DATES (PRELIMINARY STAGE ONLY): 12/02/08 12/04/08 12/18/08 04/07/09 06/08/09

SHEET 10 OF 18

FILE => 55-0485-k-ts01.dgn

USERNAME => rtrenord DATE PLOTTED => 25-JAN-2010 TIME PLOTTED => 08:21

| DIST | COUNTY | ROUTE | POST MILES TOTAL PROJECT | SHEET No | TOTAL SHEETS |
|---|---|---|---|---|---|
| 12 | Ora | 57 | 18.4/20.9 | 658 | 856 |

REGISTERED CIVIL ENGINEER 06/08/09 DATE

1-25-10
PLANS APPROVAL DATE

REGISTERED PROFESSIONAL ENGINEER C. DANIEL SUN No. 40064 Exp. 12/31/11 CIVIL STATE OF CALIFORNIA

*The State of California or its officers or agents shall not be responsible for the accuracy or completeness of electronic copies of this plan sheet.*

OCTA
550 S. MAIN STREET
ORANGE, CA 92863

CH2M HILL
6 HUTTON CENTRE DRIVE, SUITE 700
SANTA ANA, CA 92707

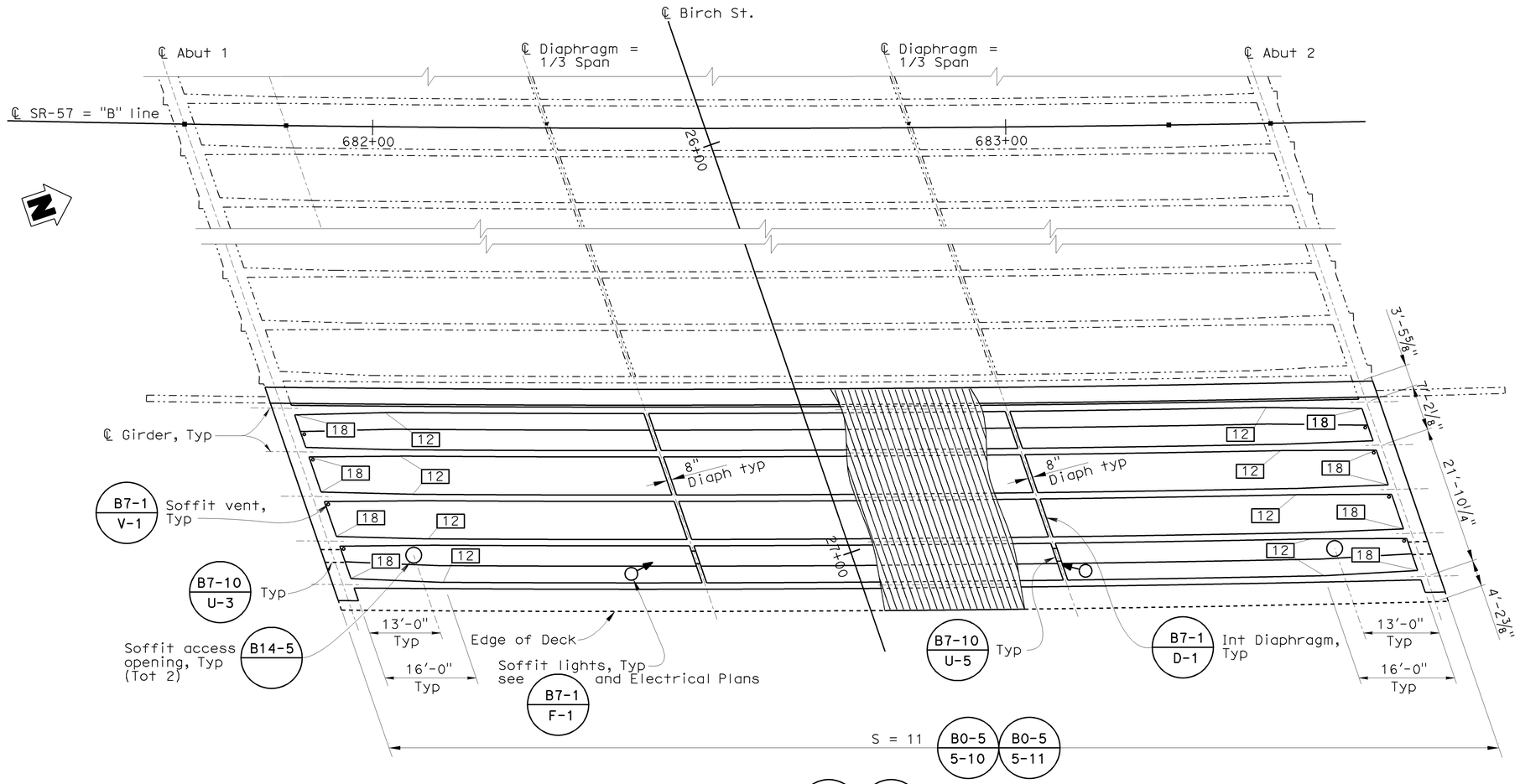


## GIRDER LAYOUT

1"=10'

B7-1 B0-5

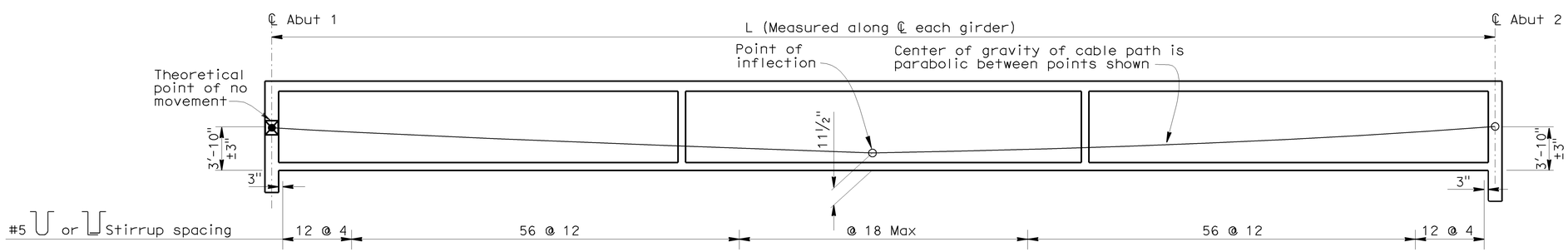


**NOTE:**
The Contractor shall verify all controlling field dimensions before ordering or fabricating any materials.

## LONGITUDINAL SECTION

No Scale

**LEGEND**

XX Indicates girder stem width

## PRESTRESSING NOTES:

270 ksi low relaxation strand:

Pjack = 14,500 kips
Anchor set = 3/8"
K=0.0002 K/ft $\mu$ = 0.15
Total number of girders = 5

Distribution of prestress force (Pjack) between girders shall not exceed the ratio of 3:2. Maximum final force variation between girders shall not exceed 725 kip.

Concrete:
f'c = 6,500 psi @ 28 days
f'ci = 3,500 psi @ time of stressing

Contractor shall submit elongation calculations based on initial stress at ☒ = 0.945 times jacking stress. One-end stressing shall be performed from Abut 2 only.

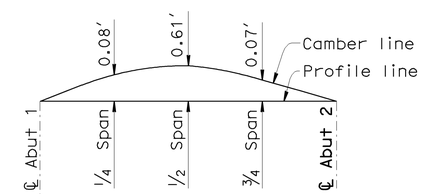


## CAMBER DIAGRAM

No Scale

**NOTE:**
Camber diagram does not include allowance for falsework settlement.

| | | | |
|---|---|---|---|
| DESIGN OVERSIGHT Jon Hamaguchi | DESIGN | BY D. Sun | CHECKED M. Atiqullah / E. Cutler |
| 6-9-09 SIGN OFF DATE | DETAILS | BY P. Walker | CHECKED M. Atiqullah / E. Cutler |
| | QUANTITIES | BY J. Powell | CHECKED E. Cutler |

PREPARED FOR THE STATE OF CALIFORNIA DEPARTMENT OF TRANSPORTATION

Ayman Salama
PROJECT ENGINEER

BRIDGE NO. 55-0485
POST MILE 20.38

# BIRCH STREET UC (WIDEN)
# GIRDER LAYOUT

DESIGN DETAIL SHEET (ENGLISH) (REV. 2/25/05)

ORIGINAL SCALE IN INCHES FOR REDUCED PLANS 0 1 2 3

CU 12220
EA 0F0321

DISREGARD PRINTS BEARING EARLIER REVISION DATES

REVISION DATES (PRELIMINARY STAGE ONLY) 12/06/08 12/04/08 12/30/08 04/07/09 06/08/09

SHEET 11 OF 18

FILE => 55-0485-1-g_1001.dgn

USERNAME => rfrenford DATE PLOTTED => 25-JAN-2010 TIME PLOTTED => 08:22

| DIST | COUNTY | ROUTE | POST MILES TOTAL PROJECT | SHEET No | TOTAL SHEETS |
|---|---|---|---|---|---|
| 12 | Ora | 57 | 18.4/20.9 | 659 | 856 |

REGISTERED CIVIL ENGINEER 06/08/09 DATE

1-25-10
PLANS APPROVAL DATE

REGISTERED PROFESSIONAL ENGINEER C. DANIEL SUN No. 40064 Exp. 12/31/11 CIVIL STATE OF CALIFORNIA

*The State of California or its officers or agents shall not be responsible for the accuracy or completeness of electronic copies of this plan sheet.*

OCTA
550 S. MAIN STREET
ORANGE, CA 92863

CH2M HILL
6 HUTTON CENTRE DRIVE, SUITE 700
SANTA ANA, CA 92707

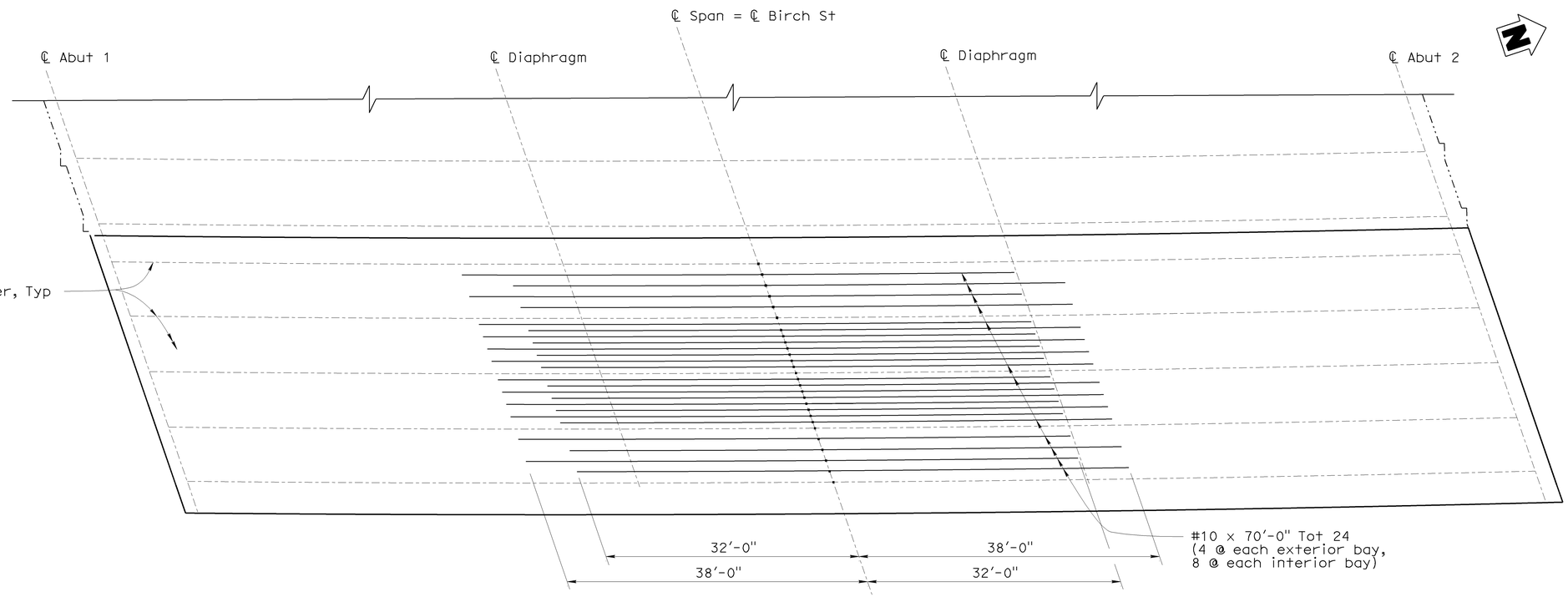


## ADDITIONAL GIRDER BOTTOM REINFORCEMENT

1/8" = 1'-0"

**NOTE:**
Added girder reinforcement shall have "Service" butt splice.

**NOTE:**
The Contractor shall verify all controlling field dimensions before ordering or fabricating any materials.

DESIGN OVERSIGHT Jon Hamaguchi
6-9-09
SIGN OFF DATE

| | BY | CHECKED |
|---|---|---|
| DESIGN | D. Sun | M. Atiqullah / E. Cutler |
| DETAILS | P. Walker | M. Atiqullah / E. Cutler |
| QUANTITIES | J. Powell | E. Cutler |

PREPARED FOR THE STATE OF CALIFORNIA DEPARTMENT OF TRANSPORTATION

Ayman Salama
PROJECT ENGINEER

BRIDGE NO. 55-0485
POST MILE 20.38

# BIRCH STREET UC (WIDEN)
# GIRDER REINFORCEMENT

DESIGN DETAIL SHEET (ENGLISH) (REV. 2/25/05)

ORIGINAL SCALE IN INCHES FOR REDUCED PLANS 0 1 2 3

CU 12220
EA 0F0321

DISREGARD PRINTS BEARING EARLIER REVISION DATES

REVISION DATES (PRELIMINARY STAGE ONLY) 12/02/08 12/04/08 12/10/08 04/07/09 06/08/09

SHEET 12 OF 18

FILE => 55-0485-o-gir_rf01.dgn

USERNAME => rtrenord DATE PLOTTED => 25-JAN-2010 TIME PLOTTED => 08:22

| DIST. | COUNTY | ROUTE | POST MILES TOTAL PROJECT | SHEET NO. | TOTAL SHEETS |
|---|---|---|---|---|---|
| 12 | Ora | 57 | 18.4/20.9 | 660 | 856 |

REGISTERED ENGINEER - CIVIL DATE 06/08/09

1-25-10
PLANS APPROVAL DATE

REGISTERED PROFESSIONAL ENGINEER C. DANIEL SUN No. 40064 Exp. 12/31/11 CIVIL STATE OF CALIFORNIA

The State of California or its officers or agents shall not be responsible for the accuracy or completeness of electronic copies of this plan sheet.

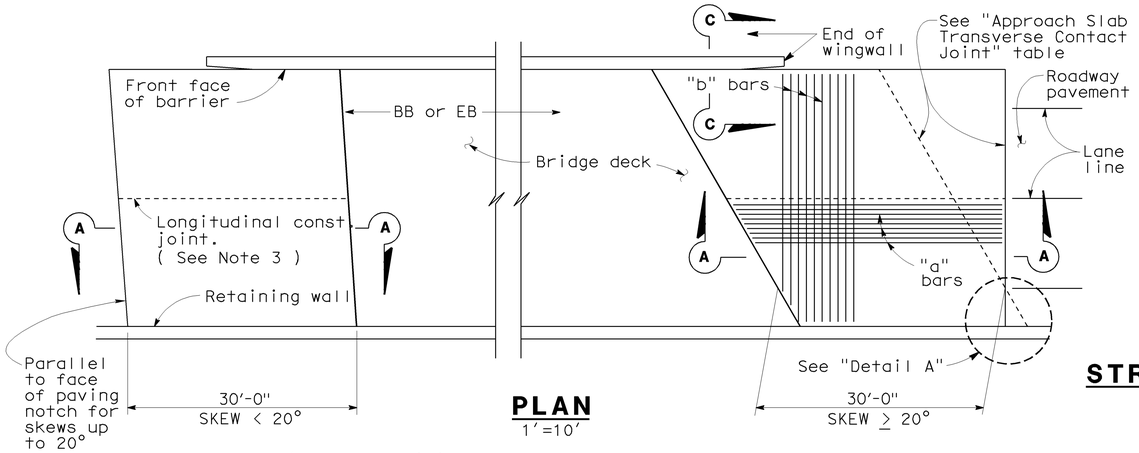


## PLAN
1"=10'

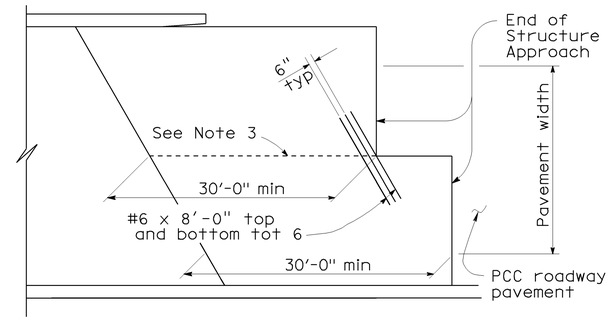


## STRUCTURE APPROACH - END STAGGER DETAIL
No Scale

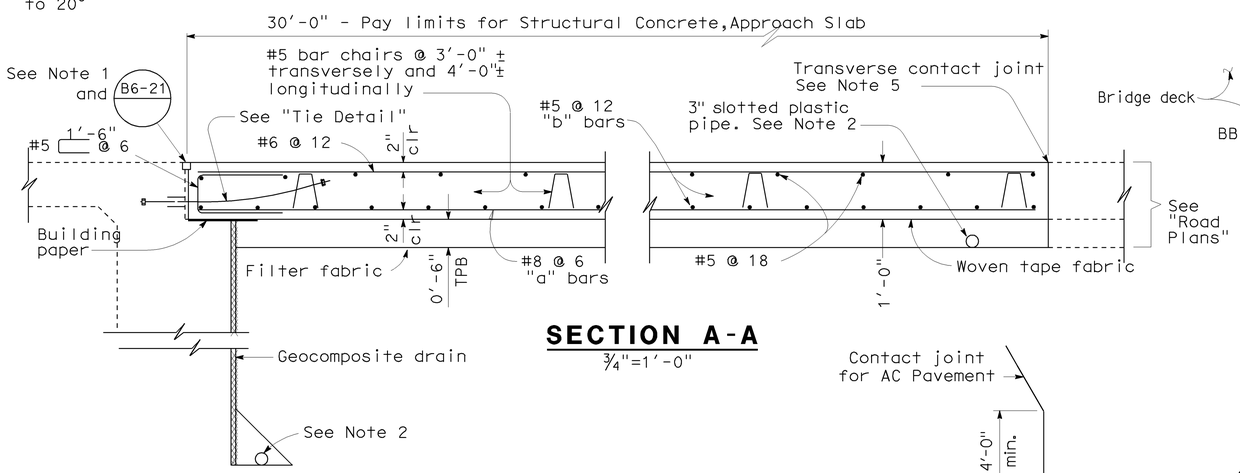


## SECTION A-A
¾"=1'-0"

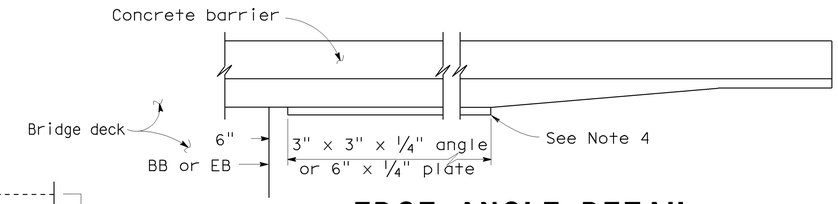


## EDGE ANGLE DETAIL
½"=1'-0"

| APPROACH SLAB TRANSVERSE CONTACT JOINT | | |
|---|---|---|
| APPROACH SKEW | WITH AC ROADWAY PAVEMENT | WITH PCC ROADWAY PAVEMENT |
| < 20° | Parallel to face of paving notch | Parallel to face of paving notch |
| 20°- 45° | Parallel to face of P N use (Detail A) | Stagger lines 24' to 36' apart |
| > 45° | Parallel to face of P N use (Detail A) | Stagger at each lane line |

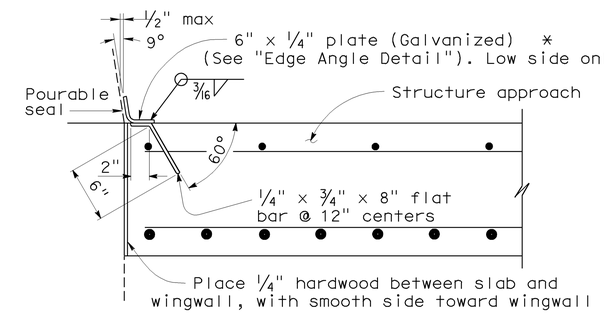


*** (TO BE USED WITH TYPE 732 OR TYPE 736 CONCRETE BARRIER)**

## DETAIL B
1½"=1'-0"

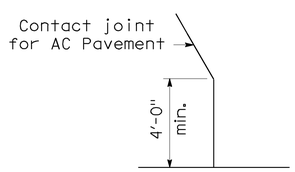


## DETAIL A
No Scale

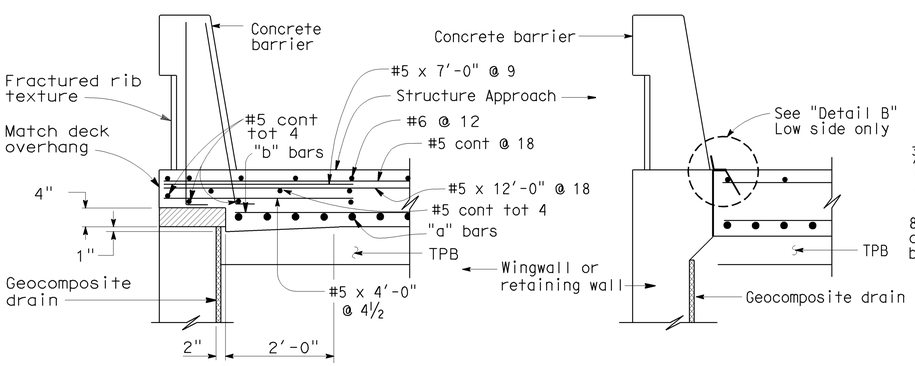


1 TYPE E-1 TYPE E-2

## SECTION C-C
¾"=1'-0"
( Type E-1 to be used, unless otherwise shown on plans )

**NOTE:**
The Contractor shall verify all controlling field dimensions before ordering or fabricating any materials.

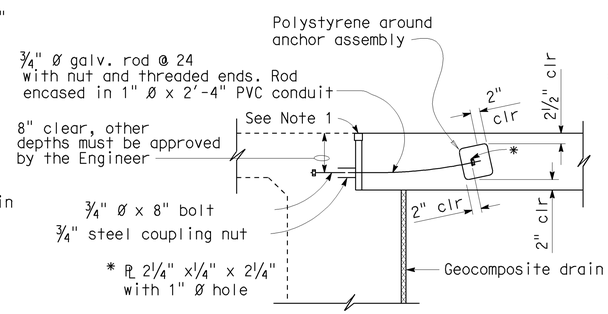


## TIE DETAIL
¾"=1'-0"

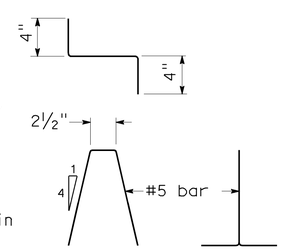


## BAR CHAIR DETAIL
1½"=1'-0"

**NOTES:**

1. For details not noted or shown, see Structure Plans.
2. For drainage details, see "Structure Approach Drainage Details" sheet.
3. Longitudinal construction joints, when permitted by the Engineer, shall be located on lane lines.
4. End angle or plate at beginning of barrier transition, end of wingwall or end of structure approach, as applicable.
5. For transverse contact joint with new PCC paving, refer to Standard Plan P10.
6. At the contractor's option, approach slab transverse reinforcement may be placed parallel to paving notch. Spacing of transverse reinforcement is measured along ℄ roadway.

Polystyrene to be removed.

STANDARD DRAWING

FILE NO. xs3-180e

APPROVED BY M. Ha (RESPONSIBLE TECHNICAL SPECIALIST)
APPROVAL DATE 8-12-08

RELEASED BY O. Alcantara (RESPONSIBLE OFFICE CHIEF)
RELEASE DATE 8-12-08

1 Section C-C Type E-1 revised
2 Type 25 or Type 27 Conc Barrier on Det B removed

STATE OF CALIFORNIA DEPARTMENT OF TRANSPORTATION

DIVISION OF ENGINEERING SERVICES

CU 12220
EA 0F0321

BRIDGE NO. 55-0485
POST MILE 20.38

# BIRCH STREET UC (WIDEN)
## STRUCTURE APPROACH TYPE N(30D)

DS OSD 2147A (ENGLISH STANDARD DRAWING "XS" BORDER REV. 01/11/08)

ORIGINAL SCALE IN INCHES FOR REDUCED PLANS 0 1 2 3

DISREGARD PRINTS BEARING EARLIER REVISION DATES 12/08/08 4/07/09 06/08/09

SHEET 13 OF 18

USERNAME => trlenard

55-0485-r-sap01.dgn

DATE PLOTTED => 25-JAN-2010 TIME PLOTTED => 08:22

| DIST. | COUNTY | ROUTE | POST MILE TOTAL PROJECT | SHEET NO. | TOTAL SHEETS |
|---|---|---|---|---|---|
| 12 | Ora | 57 | 18.4/20.9 | 661 | 856 |

REGISTERED ENGINEER - CIVIL DATE 06/08/09

1-25-10
PLANS APPROVAL DATE

REGISTERED PROFESSIONAL ENGINEER C. DANIEL SUN No. 40064 Exp. 12/31/11 CIVIL STATE OF CALIFORNIA

The State of California or its officers or agents shall not be responsible for the accuracy or completeness of electronic copies of this plan sheet.

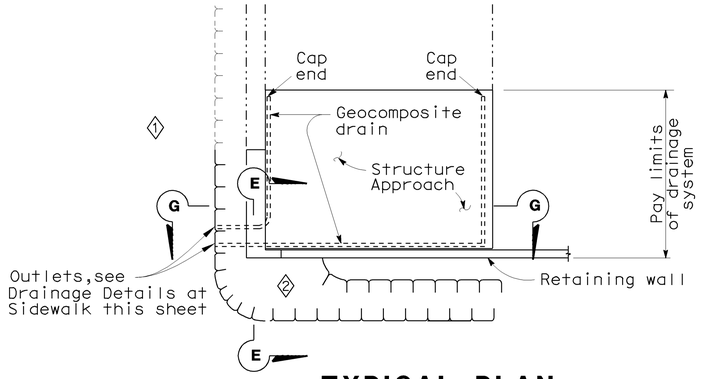


## TYPICAL PLAN

No Scale

*For pipe layout at staggered end, see "Detail B".

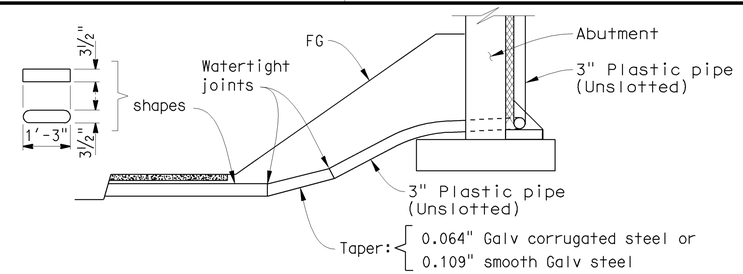


## DRAINAGE DETAILS AT SIDEWALK

3

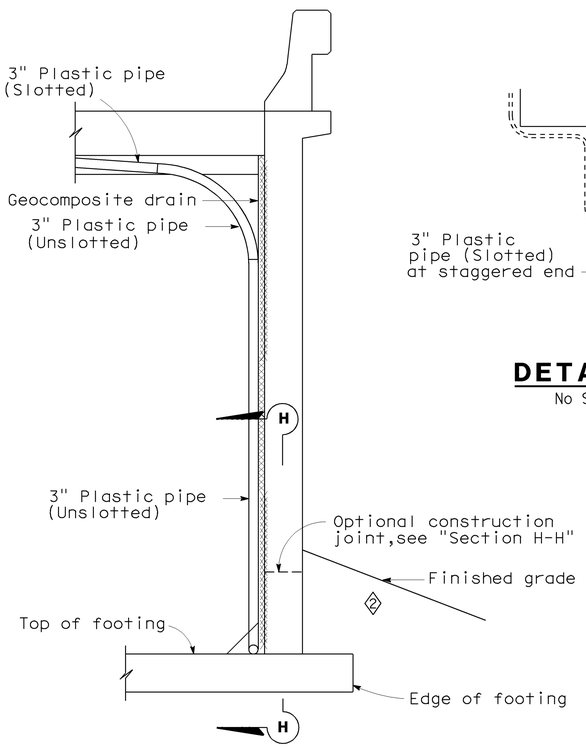


## SECTION E-E

1/2"=1'-0"

NOTE: Bends and junctions in 3" plastic pipe are 30" radius Min

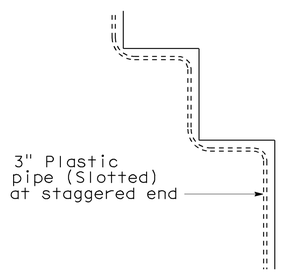


## DETAIL B

No Scale

1

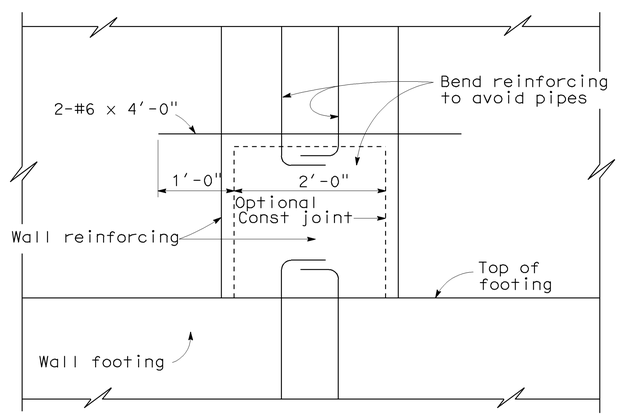


## SECTION H-H

1"=1'-0"

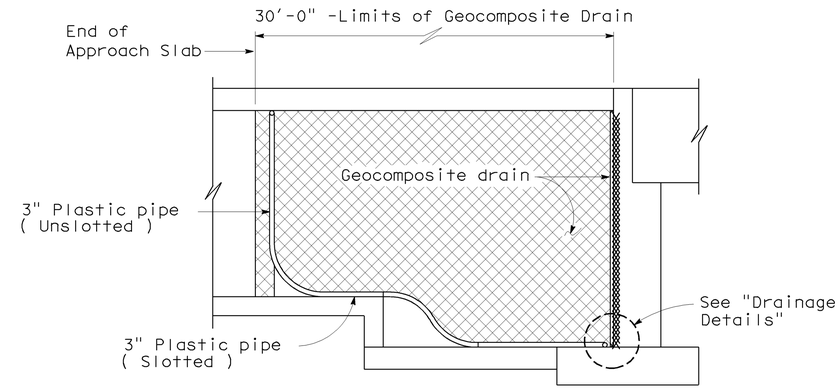


## RETAINING WALL WINGWALL

## SECTION G-G

1/4"=1'-0"

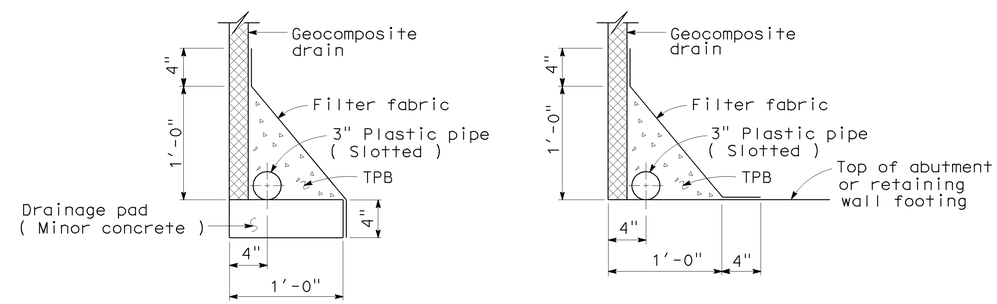


WITHOUT FOOTING

WITH FOOTING

## DRAINAGE DETAILS

1 1/2"=1'-0"

NOTE:
The Contractor shall verify all controlling field dimensions before ordering or fabricating any materials.

| STANDARD DRAWING | | | | |
|---|---|---|---|---|
| RELEASE DATE 4/23/98 | DESIGN | BY M.TRAFFALIS | CHECKED E.THORKILDSEN | RELEASED BY |
| FILE NO. xs3-110e | DETAILS | BY R.YEE | CHECKED E.THORKILDSEN | |
| | SUBMITTED | BY M.HA | DRAWING DATE 4/98 | OFFICE CHIEF |

DS OSD 2147A (ENGLISH) (REV. X/XX/XX)

1 Removed Section F-F
2 Revised outlet direction
3 Added Drainage Detail at Sidewalk

STATE OF CALIFORNIA
DEPARTMENT OF TRANSPORTATION

DIVISION OF ENGINEERING SERVICES

ORIGINAL SCALE IN INCHES FOR REDUCED PLANS 0 1 2 3

CU 12220
EA 0F0321

BRIDGE NO. 55-0485
POST MILE 20.38

# BIRCH STREET UC (WIDEN)

# STRUCTURE APPROACH DRAINAGE DETAILS

DISREGARD PRINTS BEARING EARLIER REVISION DATES

REVISION DATES (PRELIMINARY STAGE ONLY) 12/19/08 04/07/09 06/08/09

SHEET 14 OF 18

USERNAME => trlenard

55-0485-s-sadd.dgn

DATE PLOTTED => 25-JAN-2010 TIME PLOTTED => 08:22

| DIST | COUNTY | ROUTE | POST MILES TOTAL PROJECT | SHEET No | TOTAL SHEETS |
|---|---|---|---|---|---|
| 12 | Ora | 57 | 18.4/20.9 | 662 | 856 |

REGISTERED CIVIL ENGINEER 06/08/09 DATE

1-25-10
PLANS APPROVAL DATE

*The State of California or its officers or agents shall not be responsible for the accuracy or completeness of electronic copies of this plan sheet.*

REGISTERED PROFESSIONAL ENGINEER C. DANIEL SUN No. 40064 Exp. 12/31/11 CIVIL STATE OF CALIFORNIA

OCTA
550 S. MAIN STREET
ORANGE, CA 92863

CH2M HILL
6 HUTTON CENTRE DRIVE, SUITE 700
SANTA ANA, CA 92707

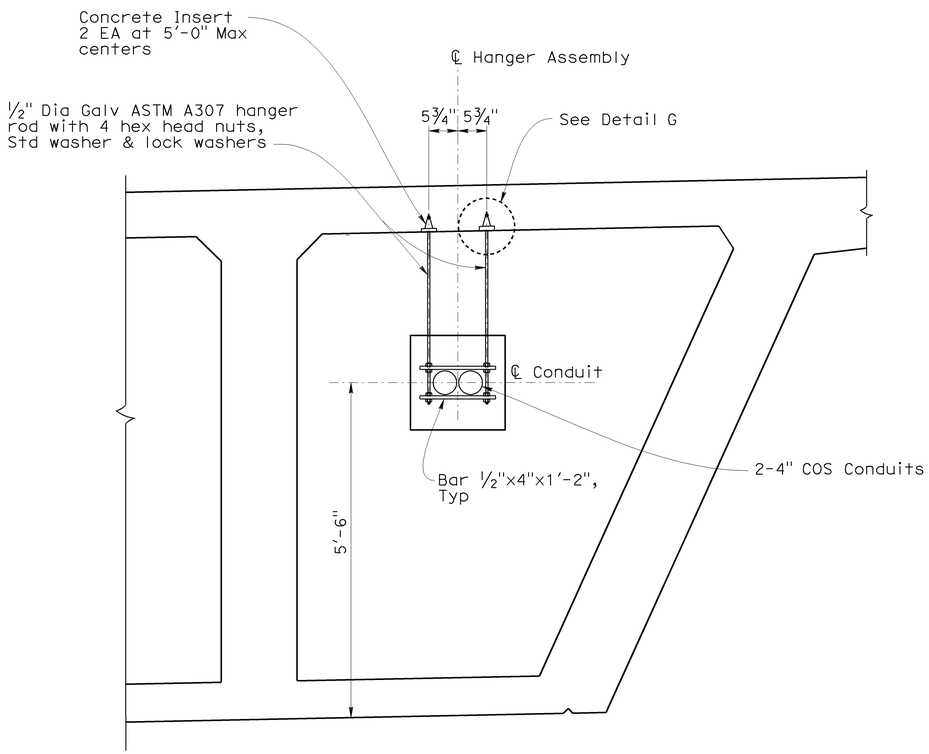


## COS CONDUIT HANGER SUPPORT DETAIL

1" = 1'-0"

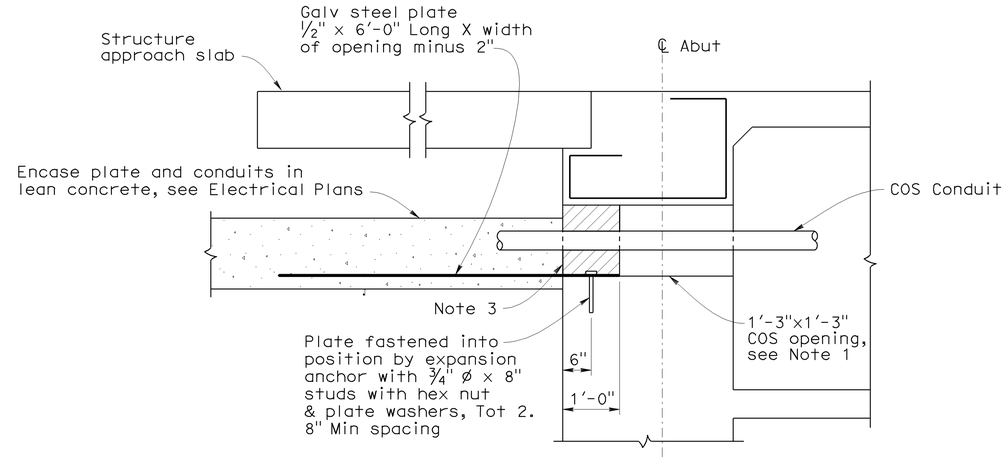


## DETAIL AT ABUTMENT OPENING FOR COS CONDUITS

¾"=1'-0"

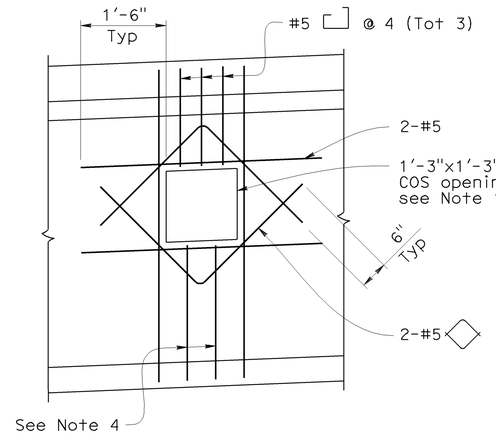


## ABUTMENT DIAPHRAGM

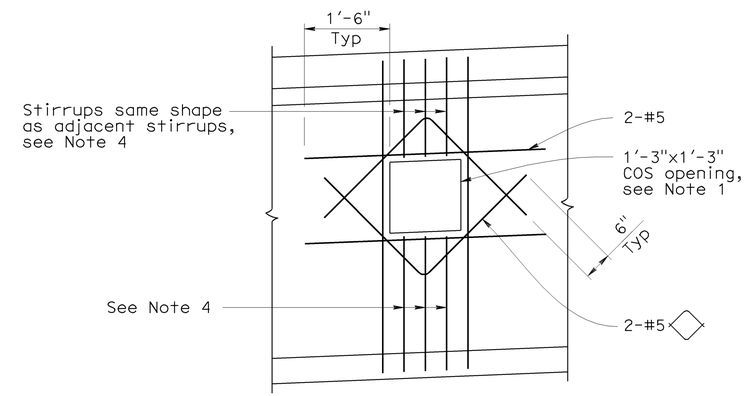


## INTERMEDIATE DIAPHRAGM

## COS CONDUIT OPENING DETAIL

¾"=1'-0"

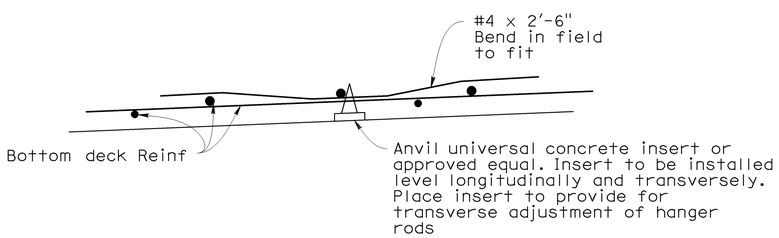


## DETAIL G

No Scale

**NOTE:**

The Contractor shall verify all controlling field dimensions before ordering or fabricating any materials.

**NOTES:**

1. The exact location, elevation, size and direction of COS openings, see "Abutment 1 Layout", "Abutment 2 Layout" and "Typical Section" sheets.
2. All reinforcement detailed to be placed in addition to reinforcement shown on Project Plans.
3. Seal conduits at abutments with concrete or mortar, after tightly wrapping utility with 2 layers of 15 LBS building paper.
4. Reinforcement to be same bar size, and ⅔ the spacing of adjacent reinforcement shown on Project Plans.
5. Reinforcement to be same bar size and shape as adjacent reinforcement shown on Project Plans.
6. When there is insufficient space to place reinforcement as shown, hook reinforcement into exterior girder.

DESIGN OVERSIGHT Jon Hamaguchi
6-9-09
SIGN OFF DATE

| | BY | CHECKED |
|---|---|---|
| DESIGN | D. Sun | M. Atiqullah / E. Cutler |
| DETAILS | P. Walker | M. Atiqullah / E. Cutler |
| QUANTITIES | J. Powell | E. Cutler |

PREPARED FOR THE STATE OF CALIFORNIA DEPARTMENT OF TRANSPORTATION

Ayman Salama
PROJECT ENGINEER

BRIDGE NO. 55-0485
POST MILE 20.38

# BIRCH STREET UC (WIDEN)
# MISCELLANEOUS DETAILS

DESIGN DETAIL SHEET (ENGLISH) (REV. 2/25/05)

ORIGINAL SCALE IN INCHES FOR REDUCED PLANS 0 1 2 3

CU 12220
EA 0F0321

DISREGARD PRINTS BEARING EARLIER REVISION DATES

REVISION DATES (PRELIMINARY STAGE ONLY) 12/05/08 12/04/06 12/10/08 04/07/09 06/08/09

SHEET 15 OF 18

FILE => 55-0485-u-miscdt01.dgn

USERNAME => trlenard DATE PLOTTED => 25-JAN-2010 TIME PLOTTED => 08:22

| DIST | COUNTY | ROUTE | POST MILES TOTAL PROJECT | SHEET No | TOTAL SHEETS |
|---|---|---|---|---|---|
| 12 | Ora | 57 | 18.4/20.9 | 663 | 856 |

GEOTECHNICAL PROFESSIONAL — DATE 06/08/09

1-25-10
PLANS APPROVAL DATE

REGISTERED PROFESSIONAL ENGINEER — HISHAM M. NOFAL No. 2765 Exp. 09/30/09 GEOTECHNICAL STATE OF CALIFORNIA

*The State of California or its officers or agents shall not be responsible for the accuracy or completeness of electronic copies of this plan sheet.*

OCTA
550 S. MAIN STREET
ORANGE, CA 92863

CH2M HILL
6 HUTTON CENTRE DRIVE, SUITE 700
SANTA ANA, CA 92707

**BENCHMARK:**

Horizontal coordinates are CCS NAD-83, Zone 6.
Vertical control based on North American Vertical Datum 1988.
Pt 1160: N2281521.621, E6067030.125, Elev 356.584
Pt 1161: N2281518.249, E6066737.110, Elev 358.878

**SAMPLER TYPES:**

California modified ring sampler
standard penetration test sampler

**HAMMER TYPE:**

Automatic hammer

**CORRECTION FACTOR:**

To convert from California modified ring sampler blow count to equivalent standard penetration test sampler blow count, for granular and cohesive soil, multiply by 0.67.

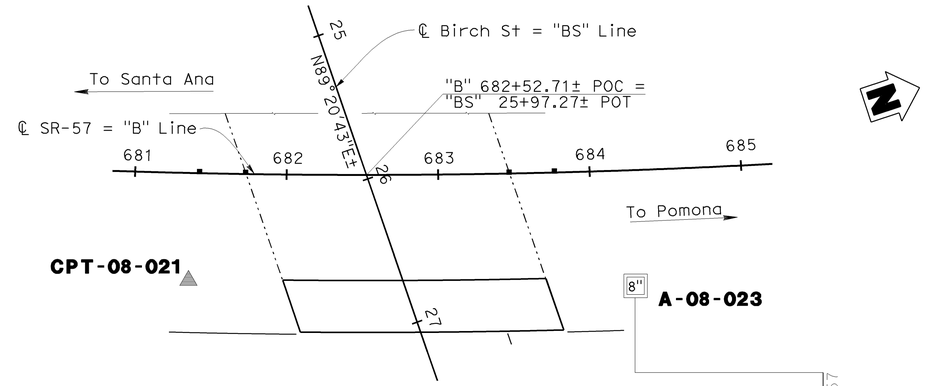


**PLAN**
1"=50'

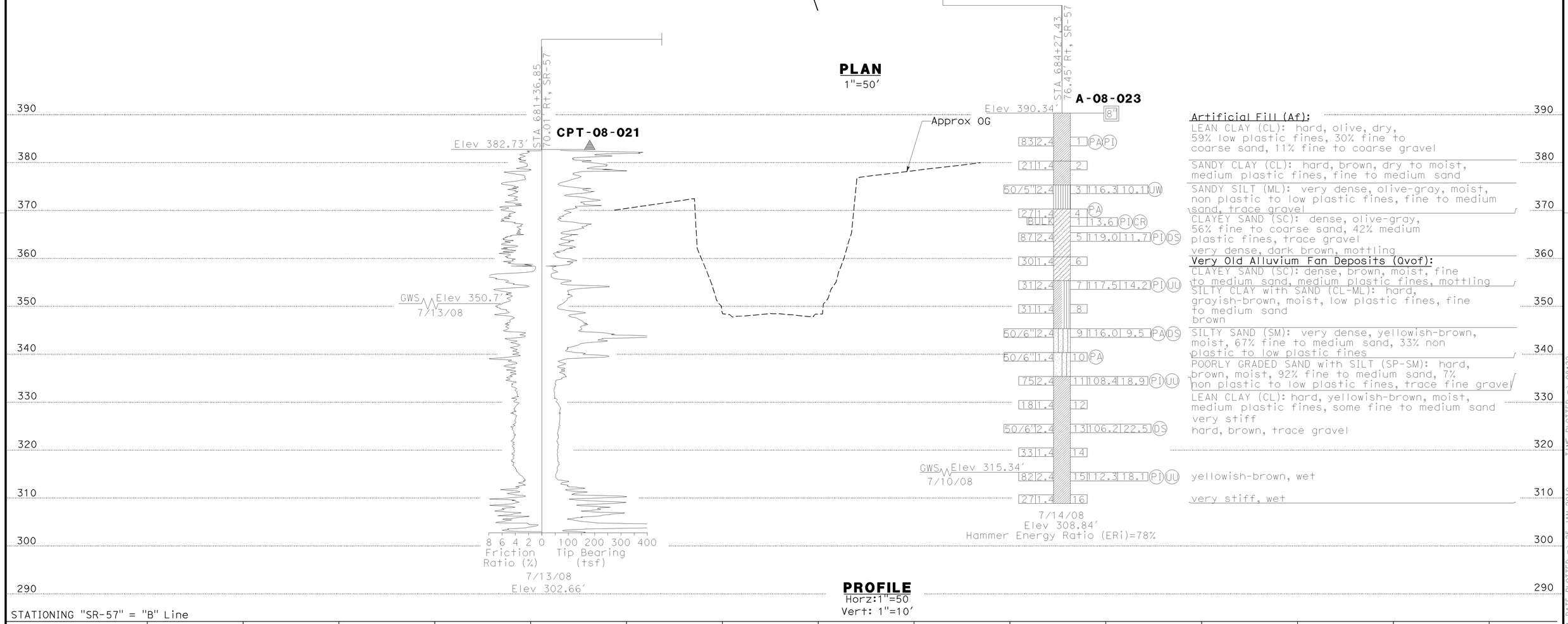


**PROFILE**
Horz:1"=50
Vert: 1"=10'

STATIONING "SR-57" = "B" Line
676 677 678 679 680 681 682 683 684 685 686 687 688 689 690

| | | | |
|---|---|---|---|
| DESIGN OVERSIGHT Jon Hamaguchi | DRAWN BY | K. Reyes | R. Bethapudi — FIELD INVESTIGATION BY: |
| 6-9-09 SIGN OFF DATE | CHECKED BY | H. Nofal | DATE |

PREPARED FOR THE STATE OF CALIFORNIA DEPARTMENT OF TRANSPORTATION

Ayman Salama — PROJECT ENGINEER

BRIDGE NO. 55-0485
POST MILES 20.38

# BIRCH STREET UC (WIDEN)
# LOG OF TEST BORINGS SHEET 1 OF 3

ORIGINAL SCALE IN INCHES FOR REDUCED PLANS 0 1 2 3

CU 12220
EA 0F0321

DISREGARD PRINTS BEARING EARLIER REVISION DATES — REVISION DATES (PRELIMINARY STAGE ONLY) 12/09/08 04/07/09 06/08/09

SHEET 16 OF 18

FILE => 55-0485-z-ltb01.dgn

USERNAME => rtrienard DATE PLOTTED => 25-JAN-2010 TIME PLOTTED => 08:22

REFERENCE: CALTRANS SOIL & ROCK LOGGING, CLASSIFICATION, AND PRESENTATION MANUAL (JUNE 2007)

| DIST | COUNTY | ROUTE | POST MILES TOTAL PROJECT | SHEET No | TOTAL SHEETS |
|---|---|---|---|---|---|
| 12 | Ora | 57 | 18.4/20.9 | 664 | 856 |

Hisham Nofal
GEOTECHNICAL PROFESSIONAL — 06/08/09 DATE

1-25-10
PLANS APPROVAL DATE

REGISTERED PROFESSIONAL ENGINEER — HISHAM M. NOFAL No. 2765 Exp. 09/30/09 GEOTECHNICAL STATE OF CALIFORNIA

*The State of California or its officers or agents shall not be responsible for the accuracy or completeness of electronic copies of this plan sheet.*

OCTA
550 S. MAIN STREET
ORANGE, CA 92863

CH2M HILL
6 HUTTON CENTRE DRIVE, SUITE 700
SANTA ANA, CA 92707

## GROUP SYMBOLS AND NAMES

| Graphic/Symbol | Group Names |
|---|---|
| GW | Well-graded GRAVEL<br>Well-graded GRAVEL with SAND |
| GP | Poorly graded GRAVEL<br>Poorly graded GRAVEL with SAND |
| GW-GM | Well-graded GRAVEL with SILT<br>Well-graded GRAVEL with SILT and SAND |
| GW-GC | Well-graded GRAVEL with CLAY (or SILTY CLAY)<br>Well-graded GRAVEL with CLAY and SAND (or SILTY CLAY and SAND) |
| GP-GM | Poorly graded GRAVEL with SILT<br>Poorly graded GRAVEL with SILT and SAND |
| GP-GC | Poorly graded GRAVEL with CLAY (or SILTY CLAY)<br>Poorly graded GRAVEL with CLAY and SAND (or SILTY CLAY and SAND) |
| GM | SILTY GRAVEL<br>SILTY GRAVEL with SAND |
| GC | CLAYEY GRAVEL<br>CLAYEY GRAVEL with SAND |
| GC-GM | SILTY, CLAYEY GRAVEL<br>SILTY, CLAYEY GRAVEL with SAND |
| SW | Well-graded SAND<br>Well-graded SAND with GRAVEL |
| SP | Poorly graded SAND<br>Poorly graded SAND with GRAVEL |
| SW-SM | Well-graded SAND with SILT<br>Well-graded SAND with SILT and GRAVEL |
| SW-SC | Well-graded SAND with CLAY (or SILTY CLAY)<br>Well-graded SAND with CLAY and GRAVEL (or SILTY CLAY and GRAVEL) |
| SP-SM | Poorly graded SAND with SILT<br>Poorly graded SAND with SILT and GRAVEL |
| SP-SC | Poorly graded SAND with CLAY (or SILTY CLAY)<br>Poorly graded SAND with CLAY and GRAVEL (or SILTY CLAY and GRAVEL) |
| SM | SILTY SAND<br>SILTY SAND with GRAVEL |
| SC | CLAYEY SAND<br>CLAYEY SAND with GRAVEL |
| SC-SM | SILTY, CLAYEY SAND<br>SILTY, CLAYEY SAND with GRAVEL |
| PT | PEAT |
| | COBBLES<br>COBBLES and BOULDERS<br>BOULDERS |

| Graphic/Symbol | Group Names |
|---|---|
| CL | Lean CLAY<br>Lean CLAY with SAND<br>Lean CLAY with GRAVEL<br>SANDY lean CLAY<br>SANDY lean CLAY with GRAVEL<br>GRAVELLY lean CLAY<br>GRAVELLY lean CLAY with SAND |
| CL-ML | SILTY CLAY<br>SILTY CLAY with SAND<br>SILTY CLAY with GRAVEL<br>SANDY SILTY CLAY<br>SANDY SILTY CLAY with GRAVEL<br>GRAVELLY SILTY CLAY<br>GRAVELLY SILTY CLAY with SAND |
| ML | SILT<br>SILT with SAND<br>SILT with GRAVEL<br>SANDY SILT<br>SANDY SILT with GRAVEL<br>GRAVELLY SILT<br>GRAVELLY SILT with SAND |
| OL | ORGANIC lean CLAY<br>ORGANIC lean CLAY with SAND<br>ORGANIC lean CLAY with GRAVEL<br>SANDY ORGANIC lean CLAY<br>SANDY ORGANIC lean CLAY with GRAVEL<br>GRAVELLY ORGANIC lean CLAY<br>GRAVELLY ORGANIC lean CLAY with SAND |
| OL | ORGANIC SILT<br>ORGANIC SILT with SAND<br>ORGANIC SILT with GRAVEL<br>SANDY ORGANIC SILT<br>SANDY ORGANIC SILT with GRAVEL<br>GRAVELLY ORGANIC SILT<br>GRAVELLY ORGANIC SILT with SAND |
| CH | Fat CLAY<br>Fat CLAY with SAND<br>Fat CLAY with GRAVEL<br>SANDY fat CLAY<br>SANDY fat CLAY with GRAVEL<br>GRAVELLY fat CLAY<br>GRAVELLY fat CLAY with SAND |
| MH | Elastic SILT<br>Elastic SILT with SAND<br>Elastic SILT with GRAVEL<br>SANDY elastic SILT<br>SANDY elastic SILT with GRAVEL<br>GRAVELLY elastic SILT<br>GRAVELLY elastic SILT with SAND |
| OH | ORGANIC fat CLAY<br>ORGANIC fat CLAY with SAND<br>ORGANIC fat CLAY with GRAVEL<br>SANDY ORGANIC fat CLAY<br>SANDY ORGANIC fat CLAY with GRAVEL<br>GRAVELLY ORGANIC fat CLAY<br>GRAVELLY ORGANIC fat CLAY with SAND |
| OH | ORGANIC elastic SILT<br>ORGANIC elastic SILT with SAND<br>ORGANIC elastic SILT with GRAVEL<br>SANDY ORGANIC elastic SILT<br>SANDY ORGANIC elastic SILT with GRAVEL<br>GRAVELLY ORGANIC elastic SILT<br>GRAVELLY ORGANIC elastic SILT with SAND |
| OL/OH | ORGANIC SOIL<br>ORGANIC SOIL with SAND<br>ORGANIC SOIL with GRAVEL<br>SANDY ORGANIC SOIL<br>SANDY ORGANIC SOIL with GRAVEL<br>GRAVELLY ORGANIC SOIL<br>GRAVELLY ORGANIC SOIL with SAND |

## FIELD AND LABORATORY TESTING

- (C) Consolidation (ASTM D 2435)
- (CL) Collapse Potential (ASTM D 5333)
- (CP) Compaction Curve (CTM 216)
- (CR) Corrosivity Testing (CTM 643, CTM 422, CTM 417)
- (CU) Consolidated Undrained Triaxial (ASTM D 4767)
- (DS) Direct Shear (ASTM D 3080)
- (EI) Expansion Index (ASTM D 4829)
- (M) Moisture Content (ASTM D 2216)
- (OC) Organic Content-% (ASTM D 2974)
- (P) Permeability (CTM 220)
- (PA) Particle Size Analysis (ASTM D 422)
- (PI) Plasticity Index (AASHTO T 90) Liquid Limit (AASHTO T 89)
- (PL) Point Load Index (ASTM D 5731)
- (PM) Pressure Meter
- (PP) Pocket Penetrometer
- (R) R-Value (CTM 301)
- (SE) Sand Equivalent (CTM 217)
- (SG) Specific Gravity (AASHTO T 100)
- (SL) Shrinkage Limit (ASTM D 427)
- (SW) Swell Potential (ASTM D 4546)
- (TV) Pocket Torvane
- (UC) Unconfined Compression-Soil (ASTM D 2166) Unconfined Compression-Rock (ASTM D 2938)
- (UU) Unconsolidated Undrained Triaxial (ASTM D 2850)
- (UW) Unit Weight (ASTM D 4767)
- (VS) Vane Shear (AASHTO T 223)

## APPARENT DENSITY OF COHESIONLESS SOILS

| Description | SPT $N_{60}$ (Blows / 12 inches) |
|---|---|
| Very loose | 0 - 4 |
| Loose | 5 - 10 |
| Medium Dense | 11 - 30 |
| Dense | 31 - 50 |
| Very Dense | > 50 |

## MOISTURE

| Description | Criteria |
|---|---|
| Dry | Absence of moisture, dusty, dry to the touch |
| Moist | Damp but no visible water |
| Wet | Visible free water, usually soil is below water table |

## PERCENT OR PROPORTION OF SOILS

| Description | Criteria |
|---|---|
| Trace | Particles are present but estimated to be less than 5% |
| Few | 5 to 10% |
| Little | 15 to 25% |
| Some | 30 to 45% |
| Mostly | 50 to 100% |

## PARTICLE SIZE

| Description | | Size |
|---|---|---|
| Boulder | | > 12" |
| Cobble | | 3" to 12" |
| Gravel | Coarse | 3/4" to 3" |
| | Fine | No. 4 to 3/4" |
| Sand | Coarse | No. 10 to No. 4 |
| | Medium | No. 40 to No. 10 |
| | Fine | No. 200 to No. 40 |

## CEMENTATION

| Description | Criteria |
|---|---|
| Weak | Crumbles or breaks with handling or little finger pressure. |
| Moderate | Crumbles or breaks with considerable finger pressure. |
| Strong | Will not crumble or break with finger pressure. |

## CONSISTENCY OF COHESIVE SOILS

| Description | Unconfined Compressive Strength (tsf) | Pocket Penetrometer Measurement (tsf) | Torvane Measurement (tsf) | Field Approximation |
|---|---|---|---|---|
| Very Soft | < 0.25 | < 0.25 | < 0.12 | Easily penetrated several inches by fist |
| Soft | 0.25 to 0.50 | 0.25 to 0.50 | 0.12 to 0.25 | Easily penetrated several inches by thumb |
| Medium Stiff | 0.50 to 1.0 | 0.50 to 1.0 | 0.25 to 0.50 | Penetrated several inches by thumb with moderate effort |
| Stiff | 1 to 2 | 1 to 2 | 0.50 to 1.0 | Readily indented by thumb but penetrated only with great effort |
| Very Stiff | 2 to 4 | 2 to 4 | 1.0 to 2.0 | Readily indented by thumbnail |
| Hard | > 4.0 | > 4.0 | > 2.0 | Indented by thumbnail with difficulty |

## PLASTICITY OF FINE-GRAINED SOILS

| Description | Criteria |
|---|---|
| Nonplastic | A 1/8-inch thread cannot be rolled at any water content. |
| Low | The thread can barely be rolled and the lump cannot be formed when drier than the plastic limit. |
| Medium | The thread is easy to roll and not much time is required to reach the plastic limit. The thread cannot be rerolled after reaching the plastic limit. The lump crumbles when drier than the plastic limit. |
| High | It takes considerable time rolling and kneading to reach the plastic limit. The thread can be rerolled several times after reaching the plastic limit. The lump can be formed without crumbling when drier than the plastic limit. |

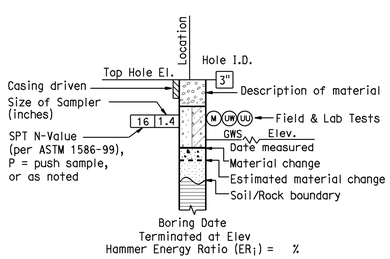


**ROTARY BORING**

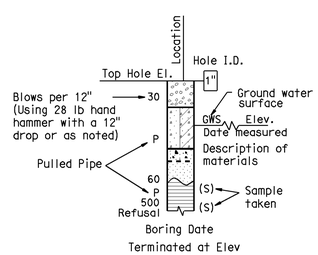


**HAND BORING**

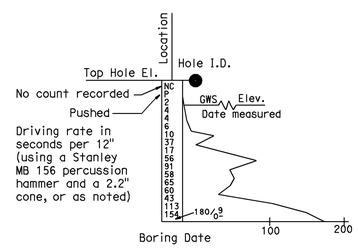


**DYNAMIC CONE PENETRATION BORING**

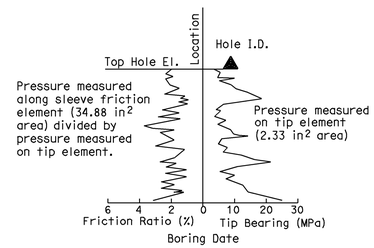


**CONE PENETRATION TEST (CPT) SOUNDING**

## BOREHOLE IDENTIFICATION

| Symbol | Hole Type | Description |
|---|---|---|
| Size | A | Auger Boring |
| Size | R<br>P | Rotary drilled boring<br>Rotary percussion boring (air) |
| Size HQ | R | Rotary drilled diamond core |
| Size | HD<br>HA | Hand driven (1-inch soil tube)<br>Hand Auger |
| ● | D | Dynamic Cone Penetration Boring |
| ◕ | B | Hollow Stem Auger Boring (HSA) |
| ▲ | CPT | Cone Penetration Test (ASTM D 5778-95) |
| ⬚ | O | Other |

**Note: Size in inches.**

# BIRCH STREET UC (WIDEN)

# SOIL LEGEND

# LOG OF TEST BORINGS SHEET 2 OF 3

Jon Hamaguchi
DESIGN OVERSIGHT — Jon Hamaguchi
6-9-09
SIGN OFF DATE

DRAWN BY: K. Reyes
CHECKED BY: H. Nofal

R. Bethapudi
FIELD INVESTIGATION BY:
DATE

PREPARED FOR THE STATE OF CALIFORNIA DEPARTMENT OF TRANSPORTATION

Ayman Salama
PROJECT ENGINEER

BRIDGE NO. 55-0485
POST MILES 20.38

ORIGINAL SCALE IN INCHES FOR REDUCED PLANS 0 1 2 3

CU 12220
EA 0F0321

DISREGARD PRINTS BEARING EARLIER REVISION DATES
REVISION DATES (PRELIMINARY STAGE ONLY) 12/18/08 04/07/09 06/08/09

SHEET 17 OF 18

FILE => 55-0485-z-1tb02.dgn

USERNAME => trlenard DATE PLOTTED => 25-JAN-2010 TIME PLOTTED => 08:22

| FED. ROAD DIV. NO. | STATE | F. A. PROJECT NO. | SHEET NO. | TOTAL SHEETS |
|---|---|---|---|---|
| 7 | CALIF. | | | |

| DIST. | COUNTY | ROUTE | SECTION | SHEET NO. | TOTAL SHEETS |
|---|---|---|---|---|---|
| 07 | ORA | 57 | 18.4/20.9 | 149 | 177 |

REGISTERED CIVIL ENGINEER

DATE APPROVED March 24, 1969

## LEGEND OF BORING OPERATIONS

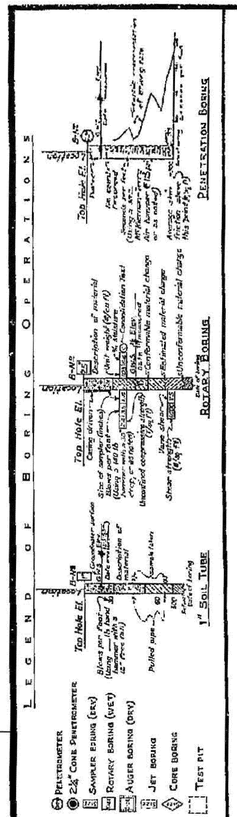


## LEGEND OF EARTH MATERIALS

GRAVEL · SAND · SILT · CLAY · SANDY CLAY OR CLAYEY SAND · SANDY SILT OR SILTY SAND · SILTY CLAY OR CLAYEY SILT · SILT WITH ORGANIC MATTER · FILL MATERIAL · IGNEOUS ROCK · SEDIMENTARY ROCK · METAMORPHIC ROCK

## CLASSIFICATION OF MATERIAL BASED ON STANDARD GRAIN SIZE LIMITS

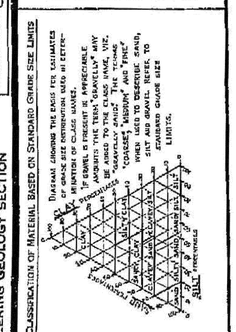


NOTE: Classification of earth material as shown on this sheet is based upon field inspection and is not to be construed to imply mechanical analysis.

| | | |
|---|---|---|
| FIELD STUDY | L. G. Miller | 11-3-67 |
| DRAWN | J. A. Allen | 11-21-67 |
| CHECKED | L. G. Miller, J. Schenk, Jr. | 11-21-67 |

Approval Recommended: Supervising Engineer (Geology)

BRIDGE DEPARTMENT
ENGINEERING GEOLOGY SECTION

14

## BENCH MARK

B.M. # 68A-E-66 Elev. 357.46
Rd. Union Oil Co Mon. stamped G and L. No. 16, 1.5 1966, 0.5' deep 302' west of Stat. 633-39 "P" Line.

NO GROUND WATER ENCOUNTERED DURING THIS INVESTIGATION BY BRIDGE DEPT. GEOLOGY SECTION
DATE Nov. 1967

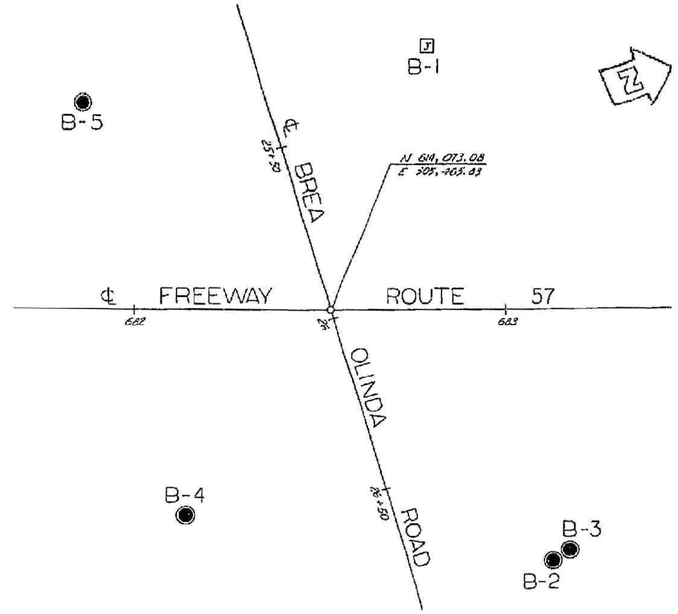


## PLAN

Scale: 1" = 20'

| DIVISION OF ENGINEERING SERVICES - GEOTECHNICAL SERVICES | | | | | |
|---|---|---|---|---|---|
| As-Built Log of Test Borings sheet is considered an informational document only. As such, the State of California registration seal with signature, license number and registration certificate expiration date confirm that this is a true and accurate copy of the original document. This drawing is available and presented only for the convenience of any bidder, contractor or other interested party. | | | | | |
| DIST. | COUNTY | ROUTE | POST MILE-TOTAL PROJECT | Sheet No. | Total Sheets |
| 12 | Ora | 57 | 18.4/20.9 | 665 | 856 |
| REGISTERED CIVIL ENGINEER: Hisham M. Nofal | | | DATE: 06/08/09 | | |
| BIRCH STREET UC (WIDEN) | | | | | |
| LOG OF TEST BORINGS SHEET 3 of 3 | | | | | |
| NOTE: A COPY OF THIS LOG OF TEST BORINGS IS AVAILABLE AT OFFICE OF STRUCTURE MAINTENANCE AND INVESTIGATIONS, SACRAMENTO, CALIFORNIA | | | CU: 12220 EA: 0F0321 | BRIDGE No. 55-0485 | |
| To accompany plans dated 1-25-10 | | | | Sheet 18 | of 18 |

REGISTERED PROFESSIONAL ENGINEER
HISHAM M. NOFAL
No. 2765
Exp. 09/30/09
GEOTECHNICAL
STATE OF CALIFORNIA

## PROFILE

Scale: Vert. 1" = 10'
Horiz. 1" = 20'

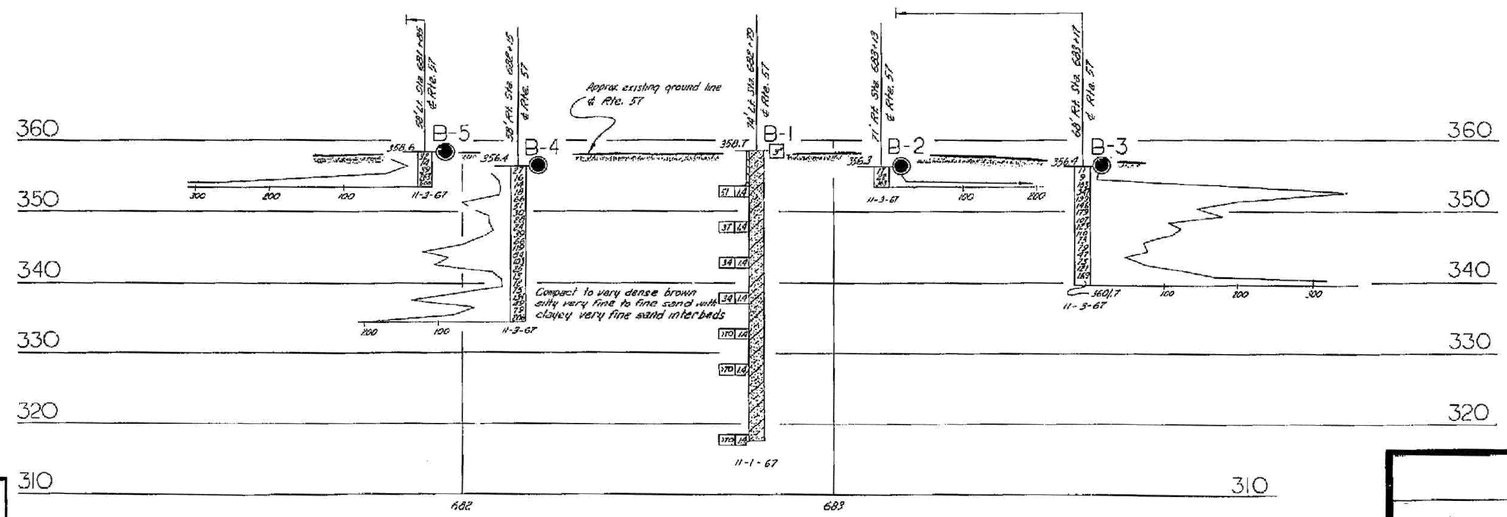


AS BUILT
CONTRACTOR J. W. Hansen
CONTRACT NO. 07-032204
DATE 8-31-71
WD 11-3-71

SHEET 13 OF 13

AS BUILT PLANS
Contract No. 07-032204
Date Completed
Document No. 2C00 5907

STATE OF CALIFORNIA
DEPARTMENT OF PUBLIC WORKS
DIVISION OF HIGHWAYS

BIRCH STREET UNDERCROSSING

LOG OF TEST BORINGS

| SCALE As Noted | BRIDGE 55-485 | FILE | DRAWING 55-485-7 |
|---|---|---|---|

I HEREBY CERTIFY THAT THIS IS A TRUE AND ACCURATE COPY OF THE ABOVE DOCUMENT TAKEN UNDER MY DIRECTION AND CONTROL ON THIS DATE IN SACRAMENTO, CALIFORNIA PURSUANT TO AUTHORIZATION BY THE DIRECTOR OF PUBLIC WORKS.

DATE 15 Feb. 73 SIGNATURE James E. Court TITLE Sr. Rmo

Charge 01203
W.A. 032501

Disregard prints bearing earlier numbers →

PREL. DRAWING NO. PR-

FILENAME => 55-0485-z-ltb03.tif

| DIST | COUNTY | ROUTE | POST MILES TOTAL PROJECT | SHEET No | TOTAL SHEETS |
|---|---|---|---|---|---|
| 12 | Ora | 57 | 18.4/20.9 | 666 | 856 |

REGISTERED CIVIL ENGINEER — DATE 06/08/09

1-25-10
PLANS APPROVAL DATE

*The State of California or its officers or agents shall not be responsible for the accuracy or completeness of electronic copies of this plan sheet.*

REGISTERED PROFESSIONAL ENGINEER — SHAFI SHARIFAN — No. 49697 — Exp. 09-30-10 — CIVIL — STATE OF CALIFORNIA

OCTA
550 S. MAIN STREET
ORANGE, CA 92863

IDC CONSULTING ENGINEERS, INC.
203 WEST CERRITOS AVENUE
ANAHEIM, CA 92805

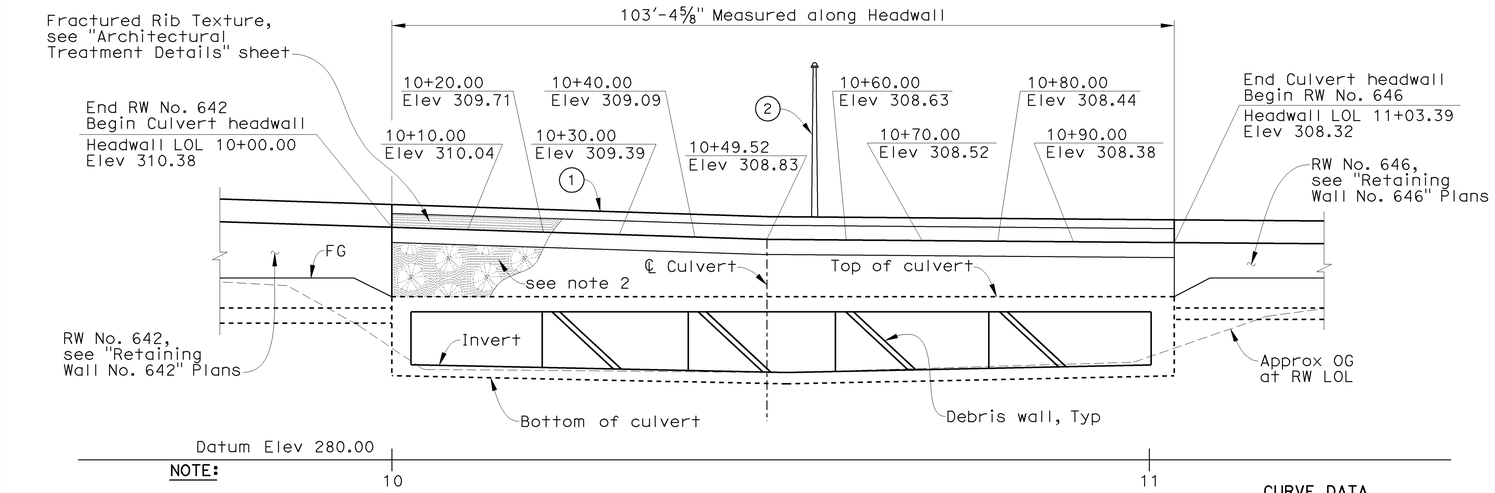


NOTE:

1. For Sections "A-A", "B-B" & "C-C", See "Miscellaneous Details" sheet
2. Architectural Surface (Textured Concrete) See "Architectural Treatment Details" sheet

## ELEVATION

1"=10'

**CURVE DATA**

(A) Headwall LOL
R = 715.52'
Δ = 8°11'36"
T = 51.25'
L = 102.32'

(B) Headwall LOL
R = 566.52'
Δ = 0°6'29"
T = 0.54'
L = 1.07'

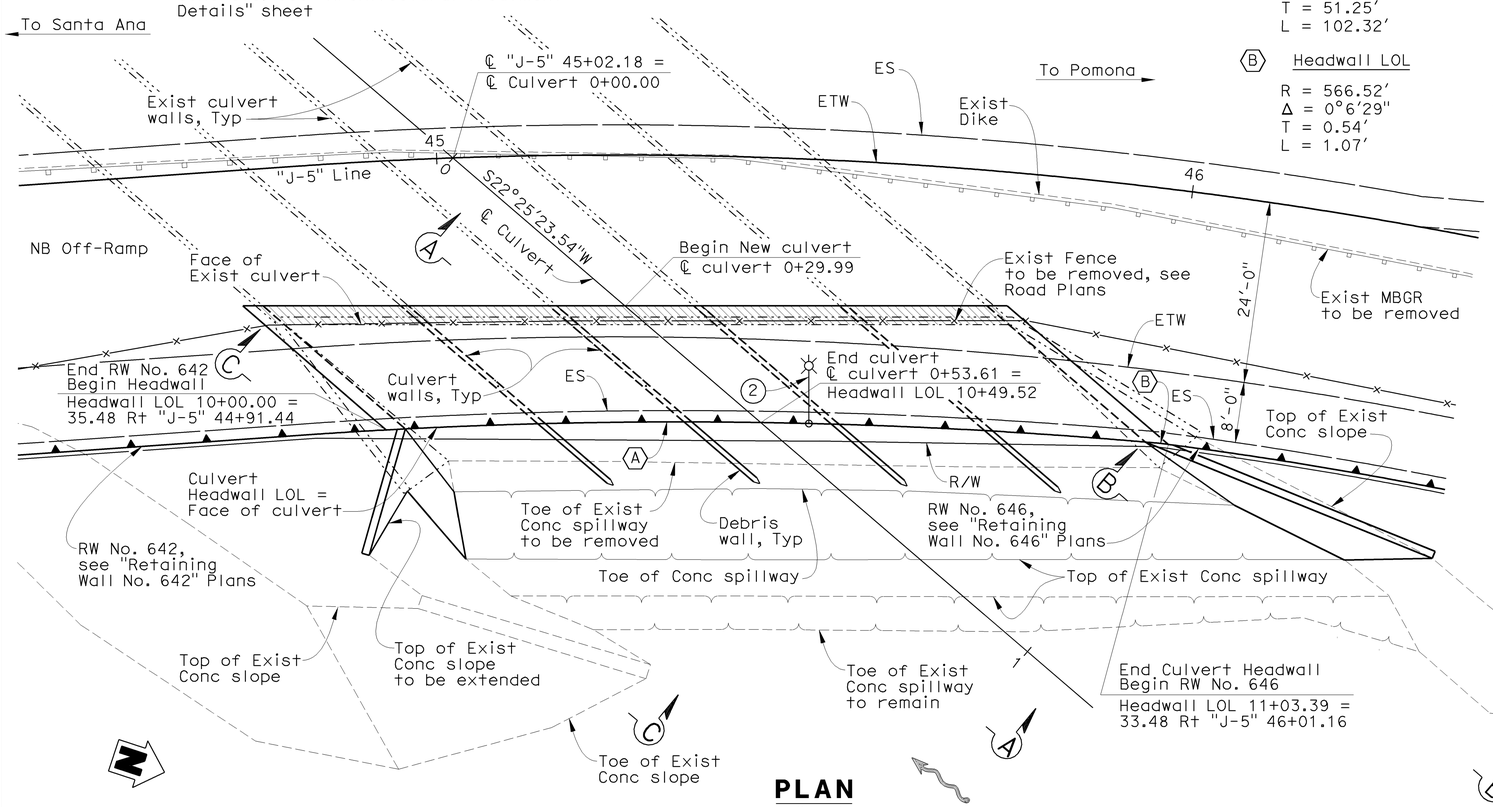


## PLAN

1"=10'

**LEGEND**

- Denotes structure removal (Portion)
- (1) Conc Barrier Type 736
- (2) Light Pole, See Road Plans
- Indicates New Structure
- Indicates Existing Structure
- Indicates Culvert Headwall
- (A) Section Identification
- (A) Curve Identification

## STANDARD PLANS DATED MAY 2006

| | |
|---|---|
| A10A | ACRONYMS AND ABBREVIATIONS (A-L) |
| A10B | ACRONYMS AND ABBREVIATIONS (M-Z) |
| A10C | SYMBOLS (SHEET 1 OF 2) |
| A10D | SYMBOLS (SHEET 2 OF 2) |
| B11-56 | CONCRETE BARRIER TYPE 736 |
| D82 | CONCRETE BOX CULVERT MISCELLANEOUS DETAILS |
| D86A | BOX CULVERT WARPED WINGWALLS |
| ES-6A | ELECTRICAL SYSTEMS |
| ES-6B | ELECTRICAL SYSTEMS |

Standard Plan Sheet No.
Detail No.

## INDEX TO PLANS


| SHEET No. | TITLE |
|---|---|
| 1 | GENERAL PLAN |
| 2 | MISCELLANEOUS DETAILS |
| 3 | TYPICAL SECTION |
| 4 | ARCHITECTURAL TREATMENT DETAILS |
| 5 | LOG OF TEST BORINGS (SHEET 1 OF 2) |
| 6 | LOG OF TEST BORINGS (SHEET 2 OF 2) |


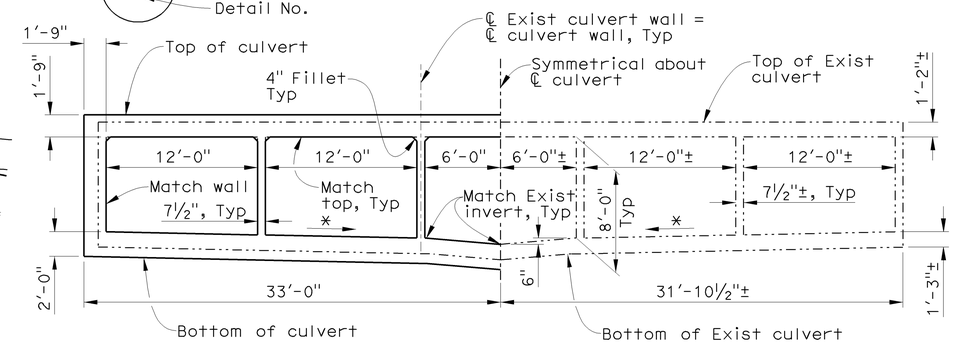


NOTE: For clarity not all shown
* Slope match existing

PROPOSED — EXISTING

## TYPICAL SECTION (CULVERT)

No Scale

LOFTUS CHANNEL MOFICATION BR NO 55-0528
QUANTITIES

| | | |
|---|---|---|
| REMOVE REINFORCED CONCRETE BOX CULVERT (PORTION) | LUMP | SUM |
| STRUCTURE EXCAVATION (CULVERT) | 430 | CY |
| STRUCTURE BACKFILL (CULVERT) | 350 | CY |
| STRUCTURAL CONCRETE, BOX CULVERT | 350 | CY |
| STRUCTURAL CONCRETE, WINGWALL | 70 | CY |
| FORMED RELIEF TEXTURE (FLOWERED PATTERN) | 305 | SQFT |
| FRACTURED RIB TEXTURE | 495 | SQFT |
| BAR REINFORCING STEEL (BOX CULVERT) | 67,000 | LB |
| MISCELLANEOUS METAL (BRIDGE) | 200 | LB |
| CONCRETE BARRIER (TYPE 736 MODIFIED) | 103 | LF |

NOTE:
The Contractor shall verify all controlling field dimensions before ordering or fabricating any materials.

DESIGN OVERSIGHT — Jon Hamaguchi
6-9-09
SIGN OFF DATE

| | BY | CHECKED | | | |
|---|---|---|---|---|---|
| DESIGN | S. Sharifan | X. Wu | LOAD FACTOR DESIGN | LIVE LOADING: HL-93 AND PERMIT (P-15) DESIGN LOAD | |
| DETAILS | S. Sharifan | X. Wu | LAYOUT | F. Hakemi | S. Sharifan |
| QUANTITIES | F. Hakemi | S. Tavazoei | SPECIFICATIONS | S. Sharifan | PLANS AND SPECS COMPARED |

PREPARED FOR THE STATE OF CALIFORNIA DEPARTMENT OF TRANSPORTATION

Xiaoyun Wu
PROJECT ENGINEER

CU 12220
EA 0F0321

BRIDGE NO. 55-0528
POST MILES 19.66

# LOFTUS CHANNEL MODIFICATION
# GENERAL PLAN

DISREGARD PRINTS BEARING EARLIER REVISION DATES — REVISION DATES (PRELIMINARY STAGE ONLY) 02/18/09 04/07/09 06/08/09

SHEET 1 OF 6

DESIGN GENERAL PLAN SHEET (ENGLISH) (REV. 2/25/05)

ORIGINAL SCALE IN INCHES FOR REDUCED PLANS 0 1 2 3

FILE => 55-0528-a-gp01.dgn

USERNAME => friehard DATE PLOTTED => 25-JAN-2010 TIME PLOTTED => 08:22

| DIST | COUNTY | ROUTE | POST MILES TOTAL PROJECT | SHEET No | TOTAL SHEETS |
|---|---|---|---|---|---|
| 12 | Org | 57 | 18.4/20.9 | 667 | 856 |

REGISTERED CIVIL ENGINEER — DATE 06/08/09

1-25-10
PLANS APPROVAL DATE

*The State of California or its officers or agents shall not be responsible for the accuracy or completeness of electronic copies of this plan sheet.*

REGISTERED PROFESSIONAL ENGINEER — SHAFI SHARIFAN No. 49697 Exp. 09-30-10 CIVIL — STATE OF CALIFORNIA

OCTA
550 S. MAIN STREET
ORANGE, CA 92863

IDC CONSULTING ENGINEERS, INC.
203 WEST CERRITOS AVENUE
ANAHEIM, CA 92805

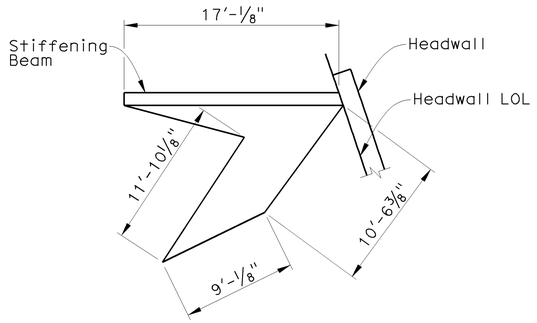


## RC WARPED WINGHEADWALL PLAN

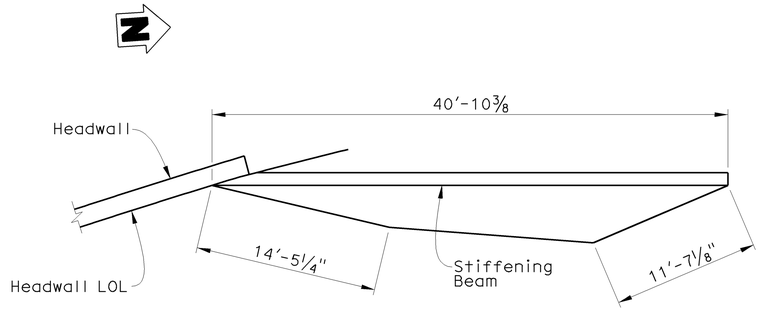


NOTES:

1. For dimensions and reinforcing not shown on RC Spillway and Warped Wingheadwall, see "Standard Plans D86A" sheet Construct Warped Wingwall in accord with details for it greater than 18"
2. For "Detail 1" & "Detail 2" , see "Typical Section" sheet
3. For location of sections "A-A" , "B-B" & "C-C" , See "General Plan" sheet

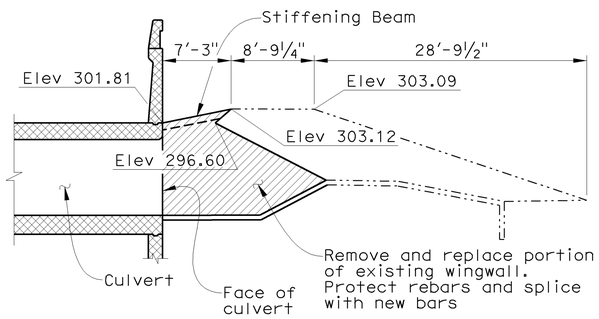


## PROFILE

## SECTION C-C

1/8" = 1'-0"

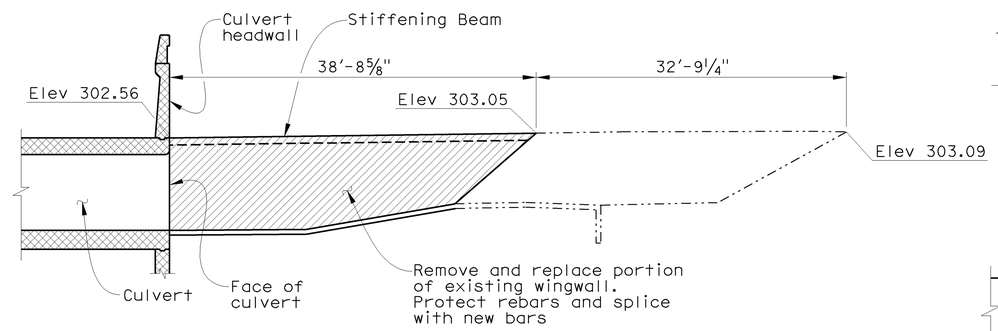


## PROFILE

## SECTION B-B

1/8" = 1'-0"

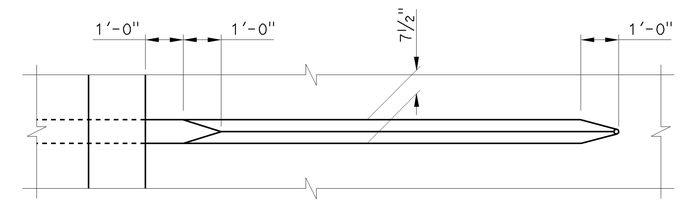


## PLAN

LEGEND

- Denotes structure removal
- Denotes structural concrete class 1
- Denotes structural concrete class 2
- (1) Conc Barrier Type 736

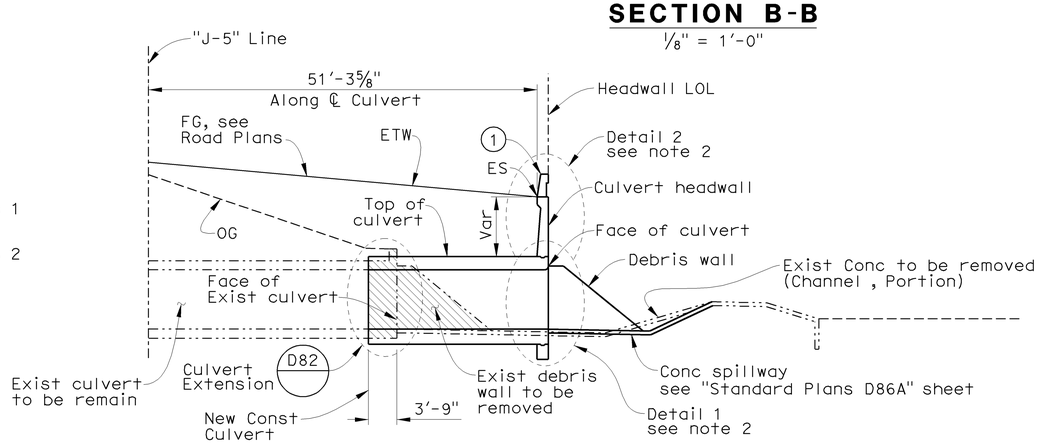


## SECTION A-A

1"=10'

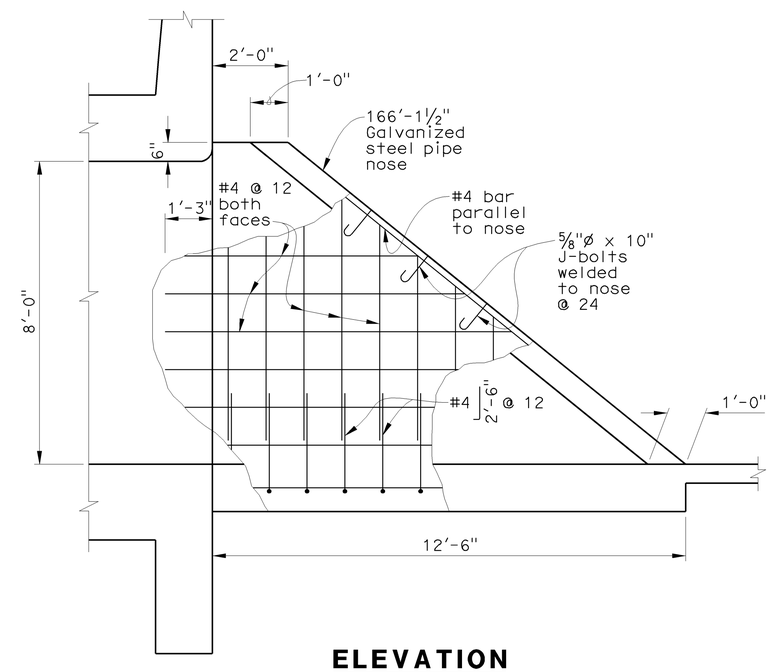


## ELEVATION

## DEBRIS WALL DETAILS

1/2" = 1'-0"

NOTE:
The Contractor shall verify all controlling field dimensions before ordering or fabricating any materials.

DESIGN OVERSIGHT — Jon Hamaguchi
6-9-09
SIGN OFF DATE

| | BY | CHECKED |
|---|---|---|
| DESIGN | S. Sharifan | X. Wu |
| DETAILS | S. Sharifan | X. Wu |
| QUANTITIES | F. Hakemi | S. Tavazoei |

PREPARED FOR THE STATE OF CALIFORNIA DEPARTMENT OF TRANSPORTATION

Xiaoyun Wu
PROJECT ENGINEER

BRIDGE NO. 55-0528
POST MILE 19.66

# LOFTUS CHANNEL MODIFICATION
# MISCELLANEOUS DETAILS

DESIGN DETAIL SHEET (ENGLISH) (REV. 2/25/05)

ORIGINAL SCALE IN INCHES FOR REDUCED PLANS 0 1 2 3

CU 12220
EA 0F0321

DISREGARD PRINTS BEARING EARLIER REVISION DATES

REVISION DATES (PRELIMINARY STAGE ONLY) 02/18/09 04/07/09 06/08/09

SHEET 2 OF 6

FILE => 55-0528-u-miscdt01.dgn

USERNAME => rfrehard DATE PLOTTED => 25-JAN-2010 TIME PLOTTED => 08:22

| DIST | COUNTY | ROUTE | POST MILES TOTAL PROJECT | SHEET No | TOTAL SHEETS |
|---|---|---|---|---|---|
| 12 | Ora | 57 | 18.4/20.9 | 668 | 856 |

REGISTERED CIVIL ENGINEER 06/08/09 DATE

1-25-10
PLANS APPROVAL DATE

*The State of California or its officers or agents shall not be responsible for the accuracy or completeness of electronic copies of this plan sheet.*

REGISTERED PROFESSIONAL ENGINEER SHAFI SHARIFAN No. 49697 Exp. 09-30-10 CIVIL STATE OF CALIFORNIA

OCTA
550 S. MAIN STREET
ORANGE, CA 92863

IDC CONSULTING ENGINEERS, INC.
203 WEST CERRITOS AVENUE
ANAHEIM, CA 92805

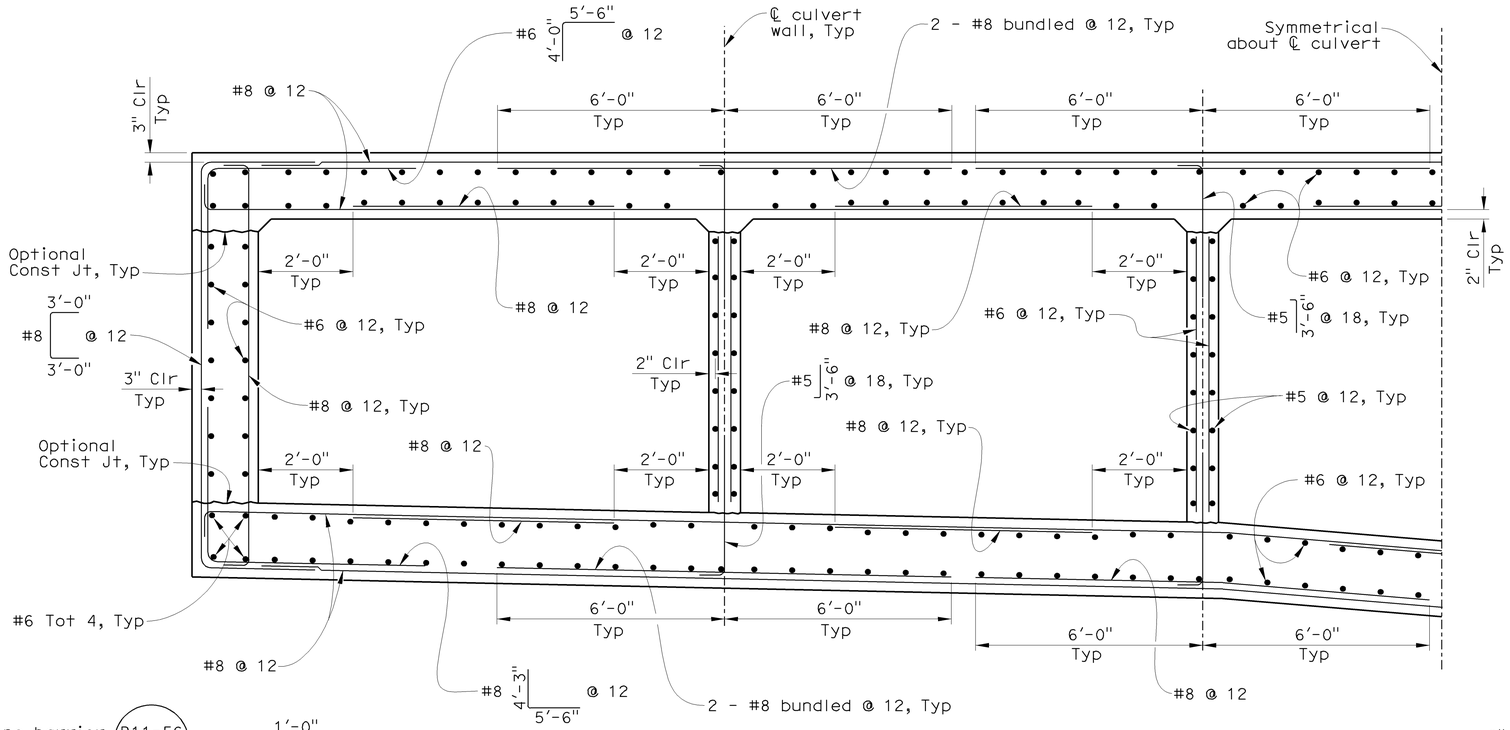


## PARTIAL BOX CULVERT SECTION (SKEWED) REINFORCEMENT

½" = 1'-0"

**NOTES:**

* Remove 2'-6" of existing culvert . Protect the existing reinforcement and spliced with new #6 bars . For culvert extension detail , see "Standard Plans D82" sheet

** Rebar to be layout perpendicular to headwall layout line

*** For Architectural Surface (Textured Concrete) and Fractured Rib Texture detail, see "Architectural Treatment Details" sheet

**GENERAL NOTES**

Design Criteria:
AASHTO Bridge Specification 2000 with Revision by Caltrans

Load Combination (LFD): 1.3D+1.3E+2.17L+1.3S+1.3B
D=dead load
E=earth pressure
L=live load
S=surcharge
B=bouyancy

Reinforcement: fy=60 ksi

Concrete: f'c=4000 psi

Others: See "Standard Plan D82" sheet for information not shown

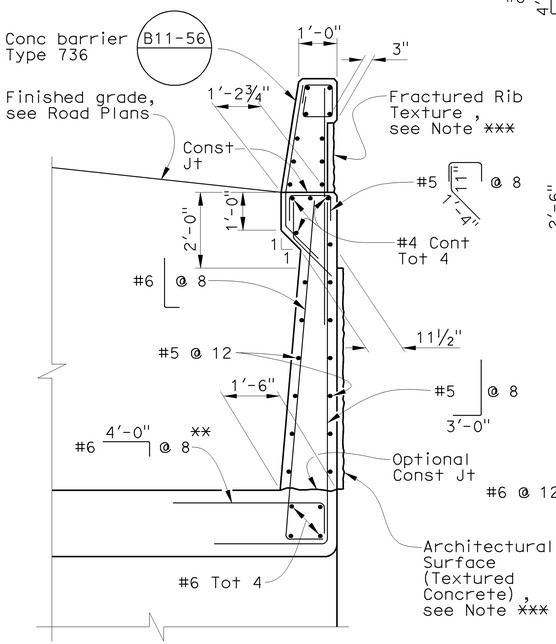


## DETAIL 2

½" = 1'-0"

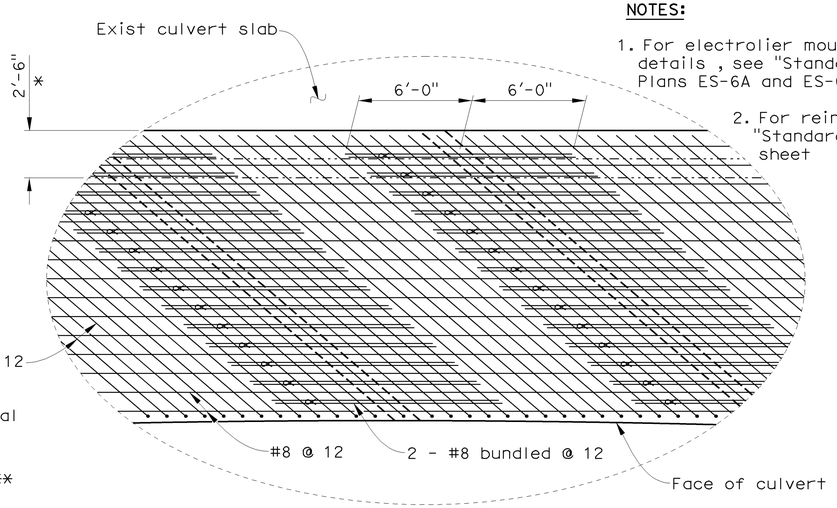


## PART SLAB REINFORCEMENT PLAN (TOP LAYER)

¼" = 1'-0"

**NOTES:**

1. For electrolier mounting details , see "Standard Plans ES-6A and ES-6B" sheet
2. For reinforcing , see "Standard Plans B11-56" sheet

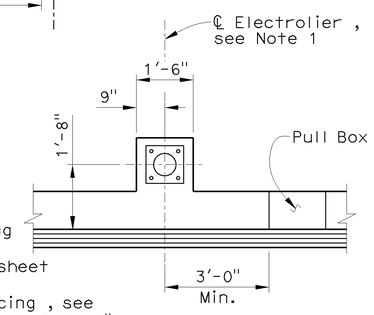


## PLAN

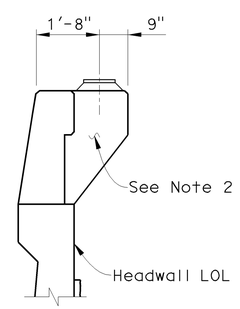


## ELEVATION

## PEDESTAL DETAILS

½" = 1'-0"

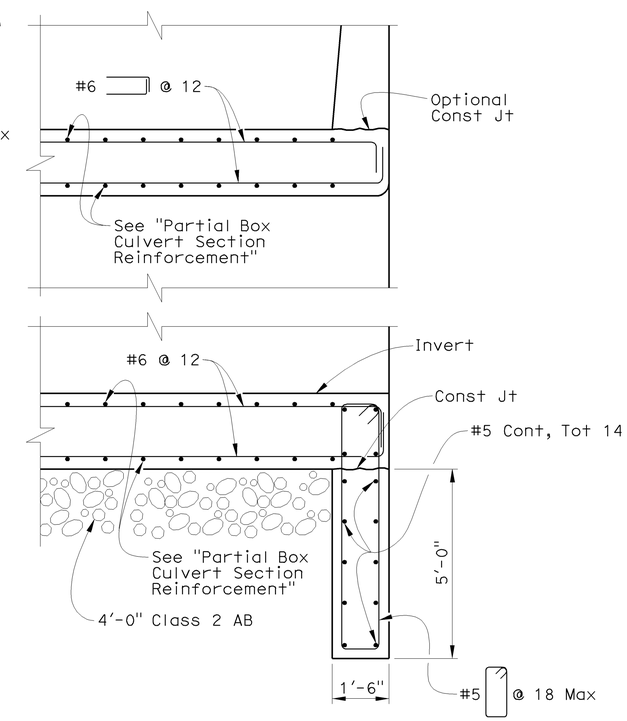


## DETAIL 1

½" = 1'-0"

NOTE:
The Contractor shall verify all controlling field dimensions before ordering or fabricating any materials.

DESIGN OVERSIGHT Jon Hamaguchi
6-9-09
SIGN OFF DATE

| | BY | CHECKED |
|---|---|---|
| DESIGN | S. Sharifan | X. Wu |
| DETAILS | S. Sharifan | X. Wu |
| QUANTITIES | F. Hakemi | S. Tavazoei |

PREPARED FOR THE STATE OF CALIFORNIA DEPARTMENT OF TRANSPORTATION

Xiaoyun Wu
PROJECT ENGINEER

BRIDGE NO. 55-0528
POST MILE 19.66

# LOFTUS CHANNEL MODIFICATION
# TYPICAL SECTION

DESIGN DETAIL SHEET (ENGLISH) (REV. 2/25/05)

ORIGINAL SCALE IN INCHES FOR REDUCED PLANS 0 1 2 3

CU 12220
EA 0F0321

DISREGARD PRINTS BEARING EARLIER REVISION DATES

REVISION DATES (PRELIMINARY STAGE ONLY) 02/18/09 04/07/09 06/08/09

SHEET 3 OF 6

FILE => 55-0528-k-ts01.dgn

USERNAME => rtrenford DATE PLOTTED => 25-JAN-2010 TIME PLOTTED => 08:22

| DIST | COUNTY | ROUTE | POST MILES TOTAL PROJECT | SHEET No | TOTAL SHEETS |
|---|---|---|---|---|---|
| 12 | Ora | 57 | 18.4/20.9 | 669 | 856 |

REGISTERED CIVIL ENGINEER 06/08/09 DATE

1-25-10
PLANS APPROVAL DATE

REGISTERED PROFESSIONAL ENGINEER SHAFI SHARIFAN No. 49697 Exp. 09-30-10 CIVIL STATE OF CALIFORNIA

*The State of California or its officers or agents shall not be responsible for the accuracy or completeness of electronic copies of this plan sheet.*

OCTA
550 S. MAIN STREET
ORANGE, CA 92863

IDC CONSULTING ENGINEERS, INC.
203 WEST CERRITOS AVENUE
ANAHEIM, CA 92805

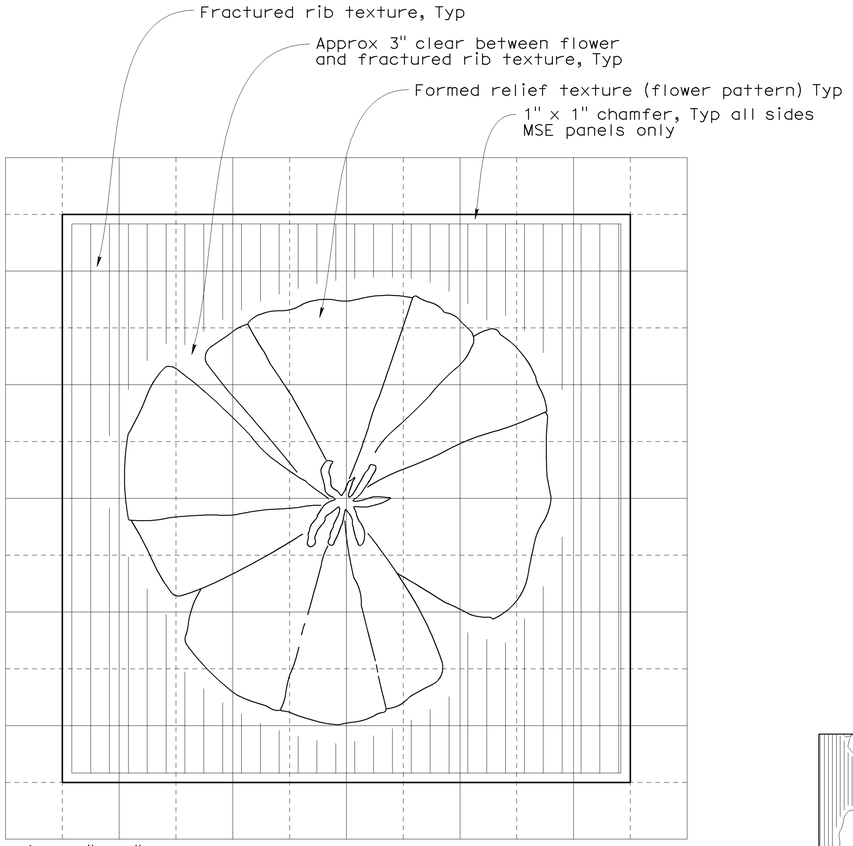


## ARCHITECTURAL SURFACE (TEXTURED CONCRETE) FOR MSE PANEL

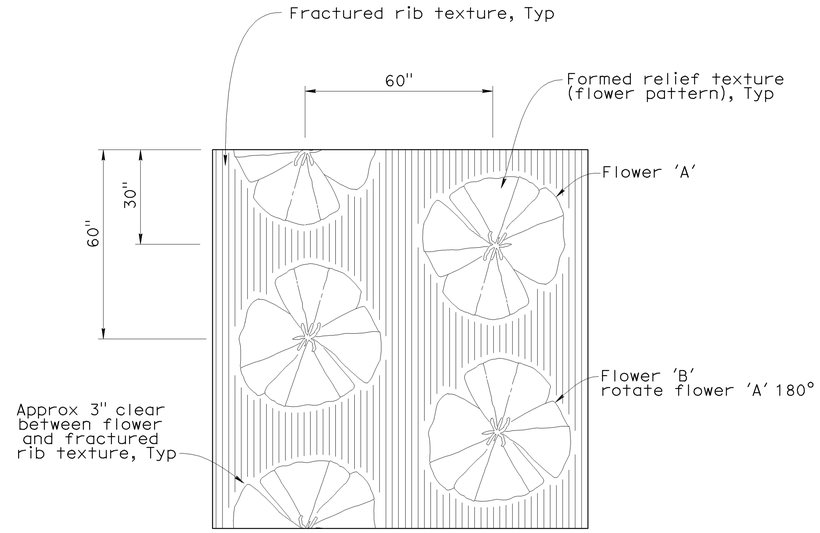


## ARCHITECTURAL SURFACE (TEXTURED CONCRETE) PATTERN

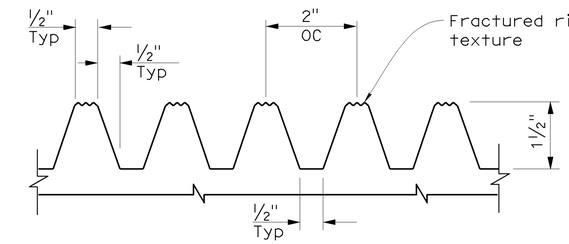


## FRACTURED RIB TEXTURE DETAIL

(Elastomer Formliner)

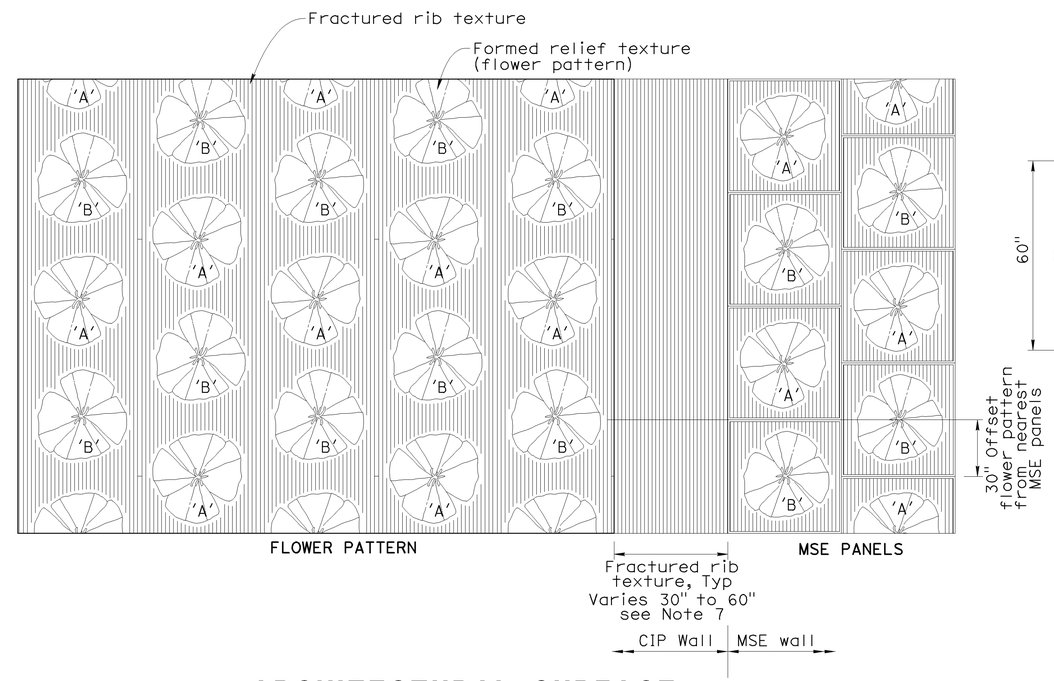


## ARCHITECTURAL SURFACE (TEXTURED CONCRETE) ELEVATION

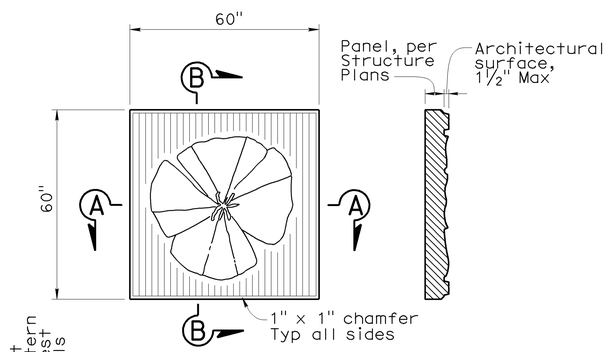


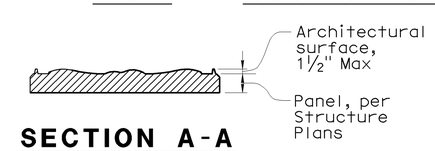


## SECTION A-A

## MSE PANEL

NOTES:

1. Identical flower images, scale and spacing shall be used for flower pattern and MSE wall panels.
2. Within a vertical column, flower images shall alternate between flowers 'A' and 'B'. Vertical columns shall be offset 30" from adjacent columns.
3. Where placed on walls bounded by concrete barriers, finished grade or top of wall, flower pattern shall be continued without concern for partial flower images, except as noted.
4. Refer to structural details for width of smooth band to be applied at edges of structures.
5. Where the flower pattern will be used adjacent to a horizontal limit such as a bridge abutment, adjoining MSE wall or overhead sign structure support, flower pattern shall be discontinued from a section not less than 30" and not greater than 60" wide from the horizontal limit to avoid truncation of flower images. Fractured rib texture shall be inserted in the resulting gap to create a continuous buffer between pattern areas.
6. The nearest column of flower images (flower pattern) shall be offset vertically 30" from the panels.
7. Vary fractured rib texture width (30" to 60") to provide complete flower pattern on cip wall side.

NOTE:
The Contractor shall verify all controlling field dimensions before ordering or fabricating any materials.

No scale

DESIGN OVERSIGHT Jon Hamaguchi
6-9-09
SIGN OFF DATE

| | BY | CHECKED |
|---|---|---|
| DESIGN | S. Sharifan | X. Wu |
| DETAILS | S. Sharifan | X. Wu |
| QUANTITIES | F. Hakemi | S. Tavazoei |

PREPARED FOR THE STATE OF CALIFORNIA DEPARTMENT OF TRANSPORTATION

Xiaoyun Wu
PROJECT ENGINEER

BRIDGE NO. 55-0528
POST MILE 19.66

# LOFTUS CHANNEL MODIFICATION
# ARCHITECTURAL TREATMENT DETAILS

DESIGN DETAIL SHEET (ENGLISH) (REV. 2/25/05)

ORIGINAL SCALE IN INCHES FOR REDUCED PLANS 0 1 2 3

CU 12220
EA 0F0321

DISREGARD PRINTS BEARING EARLIER REVISION DATES

REVISION DATES (PRELIMINARY STAGE ONLY) 06/08/09

SHEET 4 OF 6

FILE => 55-0528-t-arcdt01.dgn

USERNAME => trienard DATE PLOTTED => 25-JAN-2010 TIME PLOTTED => 08:23

| DIST | COUNTY | ROUTE | POST MILES TOTAL PROJECT | SHEET No | TOTAL SHEETS |
|---|---|---|---|---|---|
| 12 | Ora | 57 | 18.4/20.9 | 670 | 856 |

GEOTECHNICAL PROFESSIONAL — DATE 06/08/09

1-25-10
PLANS APPROVAL DATE

*The State of California or its officers or agents shall not be responsible for the accuracy or completeness of electronic copies of this plan sheet.*

REGISTERED PROFESSIONAL ENGINEER — HISHAM M. NOFAL No. 2765 Exp. 09/30/09 GEOTECHNICAL — STATE OF CALIFORNIA

OCTA
550 S. MAIN STREET
ORANGE, CA 92863

CH2M HILL
6 HUTTON CENTRE DRIVE, SUITE 700
SANTA ANA, CA 92707

BENCHMARK:

Horizontal coordinates are CCS NAD-83, Zone 6.
Vertical control based on North American Vertical Datum 1988.
Pt 1151: N2277718.273, E6066549.702, Elev 322.224
Pt 1068: N2277999.248, E6066394.642, Elev 310.252
Pt 1069: N2278210.836, E6066285.157, Elev 305.442

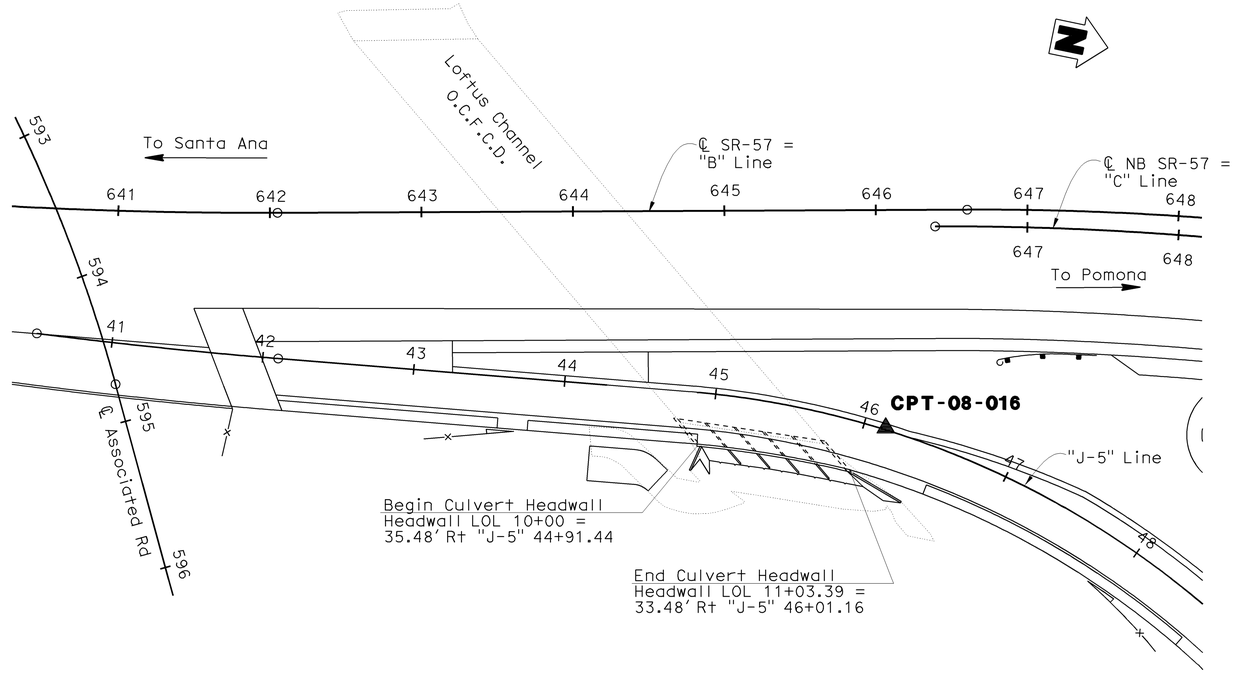


**PLAN**
1"=50′

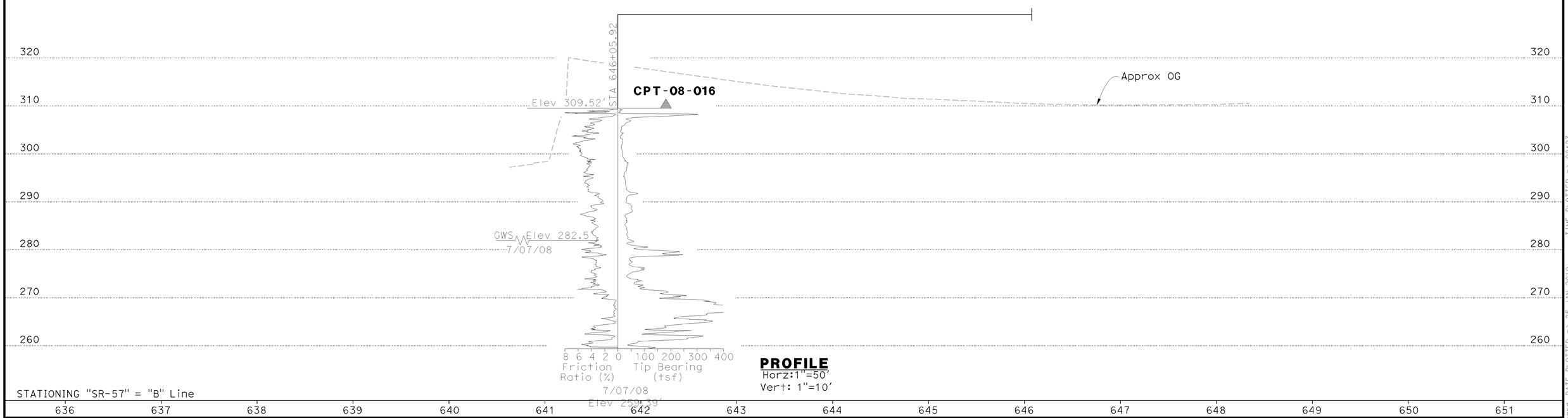


**PROFILE**
Horz:1"=50′
Vert: 1"=10′

DESIGN OVERSIGHT — Jon Hamaguchi
6-9-09
SIGN OFF DATE

DRAWN BY K. Reyes
CHECKED BY H. Nofal

R. Bethapudi
FIELD INVESTIGATION BY:
DATE

PREPARED FOR THE
STATE OF CALIFORNIA
DEPARTMENT OF TRANSPORTATION

Ayman Salama
PROJECT ENGINEER

BRIDGE NO. 55-0528
POST MILES 19.66

# LOFTUS CHANNEL MODIFICATIONS
## LOG OF TEST BORINGS SHEET 1 OF 2

ORIGINAL SCALE IN INCHES FOR REDUCED PLANS 0 1 2 3

CU 12220
EA 0F0321

DISREGARD PRINTS BEARING EARLIER REVISION DATES
REVISION DATES (PRELIMINARY STAGE ONLY) 02/18/09 04/07/09 06/08/09

SHEET 5 OF 6

FILE => 55-0528-z-1tb01.dgn

USERNAME => friehard DATE PLOTTED => 25-JAN-2010 TIME PLOTTED => 08:23

| DIST | COUNTY | ROUTE | POST MILES TOTAL PROJECT | SHEET No | TOTAL SHEETS |
|---|---|---|---|---|---|
| 12 | Ora | 57 | 18.4/20.9 | 671 | 856 |

Hisham Nofal 06/08/09
GEOTECHNICAL PROFESSIONAL DATE

1-25-10
PLANS APPROVAL DATE

REGISTERED PROFESSIONAL ENGINEER HISHAM M. NOFAL No. 2765 Exp. 09/30/09 GEOTECHNICAL STATE OF CALIFORNIA

*The State of California or its officers or agents shall not be responsible for the accuracy or completeness of electronic copies of this plan sheet.*

OCTA
550 S. MAIN STREET
ORANGE, CA 92863

CH2M HILL
6 HUTTON CENTRE DRIVE, SUITE 700
SANTA ANA, CA 92707

REFERENCE: CALTRANS SOIL & ROCK LOGGING, CLASSIFICATION, AND PRESENTATION MANUAL (JUNE 2007)

## GROUP SYMBOLS AND NAMES

| Graphic/Symbol | Group Names |
|---|---|
| GW | Well-graded GRAVEL<br>Well-graded GRAVEL with SAND |
| GP | Poorly graded GRAVEL<br>Poorly graded GRAVEL with SAND |
| GW-GM | Well-graded GRAVEL with SILT<br>Well-graded GRAVEL with SILT and SAND |
| GW-GC | Well-graded GRAVEL with CLAY (or SILTY CLAY)<br>Well-graded GRAVEL with CLAY and SAND (or SILTY CLAY and SAND) |
| GP-GM | Poorly graded GRAVEL with SILT<br>Poorly graded GRAVEL with SILT and SAND |
| GP-GC | Poorly graded GRAVEL with CLAY (or SILTY CLAY)<br>Poorly graded GRAVEL with CLAY and SAND (or SILTY CLAY and SAND) |
| GM | SILTY GRAVEL<br>SILTY GRAVEL with SAND |
| GC | CLAYEY GRAVEL<br>CLAYEY GRAVEL with SAND |
| GC-GM | SILTY, CLAYEY GRAVEL<br>SILTY, CLAYEY GRAVEL with SAND |
| SW | Well-graded SAND<br>Well-graded SAND with GRAVEL |
| SP | Poorly graded SAND<br>Poorly graded SAND with GRAVEL |
| SW-SM | Well-graded SAND with SILT<br>Well-graded SAND with SILT and GRAVEL |
| SW-SC | Well-graded SAND with CLAY (or SILTY CLAY)<br>Well-graded SAND with CLAY and GRAVEL (or SILTY CLAY and GRAVEL) |
| SP-SM | Poorly graded SAND with SILT<br>Poorly graded SAND with SILT and GRAVEL |
| SP-SC | Poorly graded SAND with CLAY (or SILTY CLAY)<br>Poorly graded SAND with CLAY and GRAVEL (or SILTY CLAY and GRAVEL) |
| SM | SILTY SAND<br>SILTY SAND with GRAVEL |
| SC | CLAYEY SAND<br>CLAYEY SAND with GRAVEL |
| SC-SM | SILTY, CLAYEY SAND<br>SILTY, CLAYEY SAND with GRAVEL |
| PT | PEAT |
| | COBBLES<br>COBBLES and BOULDERS<br>BOULDERS |

| Graphic/Symbol | Group Names |
|---|---|
| CL | Lean CLAY<br>Lean CLAY with SAND<br>Lean CLAY with GRAVEL<br>SANDY lean CLAY<br>SANDY lean CLAY with GRAVEL<br>GRAVELLY lean CLAY<br>GRAVELLY lean CLAY with SAND |
| CL-ML | SILTY CLAY<br>SILTY CLAY with SAND<br>SILTY CLAY with GRAVEL<br>SANDY SILTY CLAY<br>SANDY SILTY CLAY with GRAVEL<br>GRAVELLY SILTY CLAY<br>GRAVELLY SILTY CLAY with SAND |
| ML | SILT<br>SILT with SAND<br>SILT with GRAVEL<br>SANDY SILT<br>SANDY SILT with GRAVEL<br>GRAVELLY SILT<br>GRAVELLY SILT with SAND |
| OL | ORGANIC lean CLAY<br>ORGANIC lean CLAY with SAND<br>ORGANIC lean CLAY with GRAVEL<br>SANDY ORGANIC lean CLAY<br>SANDY ORGANIC lean CLAY with GRAVEL<br>GRAVELLY ORGANIC lean CLAY<br>GRAVELLY ORGANIC lean CLAY with SAND |
| OL | ORGANIC SILT<br>ORGANIC SILT with SAND<br>ORGANIC SILT with GRAVEL<br>SANDY ORGANIC SILT<br>SANDY ORGANIC SILT with GRAVEL<br>GRAVELLY ORGANIC SILT<br>GRAVELLY ORGANIC SILT with SAND |
| CH | Fat CLAY<br>Fat CLAY with SAND<br>Fat CLAY with GRAVEL<br>SANDY fat CLAY<br>SANDY fat CLAY with GRAVEL<br>GRAVELLY fat CLAY<br>GRAVELLY fat CLAY with SAND |
| MH | Elastic SILT<br>Elastic SILT with SAND<br>Elastic SILT with GRAVEL<br>SANDY elastic SILT<br>SANDY elastic SILT with GRAVEL<br>GRAVELLY elastic SILT<br>GRAVELLY elastic SILT with SAND |
| OH | ORGANIC fat CLAY<br>ORGANIC fat CLAY with SAND<br>ORGANIC fat CLAY with GRAVEL<br>SANDY ORGANIC fat CLAY<br>SANDY ORGANIC fat CLAY with GRAVEL<br>GRAVELLY ORGANIC fat CLAY<br>GRAVELLY ORGANIC fat CLAY with SAND |
| OH | ORGANIC elastic SILT<br>ORGANIC elastic SILT with SAND<br>ORGANIC elastic SILT with GRAVEL<br>SANDY ORGANIC elastic SILT<br>SANDY ORGANIC elastic SILT with GRAVEL<br>GRAVELLY ORGANIC elastic SILT<br>GRAVELLY ORGANIC elastic SILT with SAND |
| OL/OH | ORGANIC SOIL<br>ORGANIC SOIL with SAND<br>ORGANIC SOIL with GRAVEL<br>SANDY ORGANIC SOIL<br>SANDY ORGANIC SOIL with GRAVEL<br>GRAVELLY ORGANIC SOIL<br>GRAVELLY ORGANIC SOIL with SAND |

## FIELD AND LABORATORY TESTING

- (C) Consolidation (ASTM D 2435)
- (CL) Collapse Potential (ASTM D 5333)
- (CP) Compaction Curve (CTM 216)
- (CR) Corrosivity Testing (CTM 643, CTM 422, CTM 417)
- (CU) Consolidated Undrained Triaxial (ASTM D 4767)
- (DS) Direct Shear (ASTM D 3080)
- (EI) Expansion Index (ASTM D 4829)
- (M) Moisture Content (ASTM D 2216)
- (OC) Organic Content-% (ASTM D 2974)
- (P) Permeability (CTM 220)
- (PA) Particle Size Analysis (ASTM D 422)
- (PI) Plasticity Index (AASHTO T 90) Liquid Limit (AASHTO T 89)
- (PL) Point Load Index (ASTM D 5731)
- (PM) Pressure Meter
- (PP) Pocket Penetrometer
- (R) R-Value (CTM 301)
- (SE) Sand Equivalent (CTM 217)
- (SG) Specific Gravity (AASHTO T 100)
- (SL) Shrinkage Limit (ASTM D 427)
- (SW) Swell Potential (ASTM D 4546)
- (TV) Pocket Torvane
- (UC) Unconfined Compression-Soil (ASTM D 2166) Unconfined Compression-Rock (ASTM D 2938)
- (UU) Unconsolidated Undrained Triaxial (ASTM D 2850)
- (UW) Unit Weight (ASTM D 4767)
- (VS) Vane Shear (AASHTO T 223)

## APPARENT DENSITY OF COHESIONLESS SOILS

| Description | SPT $N_{60}$ (Blows / 12 inches) |
|---|---|
| Very loose | 0 - 4 |
| Loose | 5 - 10 |
| Medium Dense | 11 - 30 |
| Dense | 31 - 50 |
| Very Dense | > 50 |

## MOISTURE

| Description | Criteria |
|---|---|
| Dry | Absence of moisture, dusty, dry to the touch |
| Moist | Damp but no visible water |
| Wet | Visible free water, usually soil is below water table |

## PERCENT OR PROPORTION OF SOILS

| Description | Criteria |
|---|---|
| Trace | Particles are present but estimated to be less than 5% |
| Few | 5 to 10% |
| Little | 15 to 25% |
| Some | 30 to 45% |
| Mostly | 50 to 100% |

## PARTICLE SIZE

| Description | | Size |
|---|---|---|
| Boulder | | > 12" |
| Cobble | | 3" to 12" |
| Gravel | Coarse | 3/4" to 3" |
| | Fine | No. 4 to 3/4" |
| Sand | Coarse | No. 10 to No. 4 |
| | Medium | No. 40 to No. 10 |
| | Fine | No. 200 to No. 40 |

## CEMENTATION

| Description | Criteria |
|---|---|
| Weak | Crumbles or breaks with handling or little finger pressure. |
| Moderate | Crumbles or breaks with considerable finger pressure. |
| Strong | Will not crumble or break with finger pressure. |

## CONSISTENCY OF COHESIVE SOILS

| Description | Unconfined Compressive Strength (tsf) | Pocket Penetrometer Measurement (tsf) | Torvane Measurement (tsf) | Field Approximation |
|---|---|---|---|---|
| Very Soft | < 0.25 | < 0.25 | < 0.12 | Easily penetrated several inches by fist |
| Soft | 0.25 to 0.50 | 0.25 to 0.50 | 0.12 to 0.25 | Easily penetrated several inches by thumb |
| Medium Stiff | 0.50 to 1.0 | 0.50 to 1.0 | 0.25 to 0.50 | Penetrated several inches by thumb with moderate effort |
| Stiff | 1 to 2 | 1 to 2 | 0.50 to 1.0 | Readily indented by thumb but penetrated only with great effort |
| Very Stiff | 2 to 4 | 2 to 4 | 1.0 to 2.0 | Readily indented by thumbnail |
| Hard | > 4.0 | > 4.0 | > 2.0 | Indented by thumbnail with difficulty |

## PLASTICITY OF FINE-GRAINED SOILS

| Description | Criteria |
|---|---|
| Nonplastic | A 1/8-inch thread cannot be rolled at any water content. |
| Low | The thread can barely be rolled and the lump cannot be formed when drier than the plastic limit. |
| Medium | The thread is easy to roll and not much time is required to reach the plastic limit. The thread cannot be rerolled after reaching the plastic limit. The lump crumbles when drier than the plastic limit. |
| High | It takes considerable time rolling and kneading to reach the plastic limit. The thread can be rerolled several times after reaching the plastic limit. The lump can be formed without crumbling when drier than the plastic limit. |

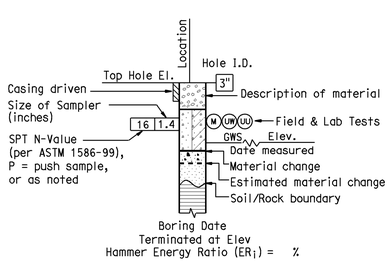


**ROTARY BORING**

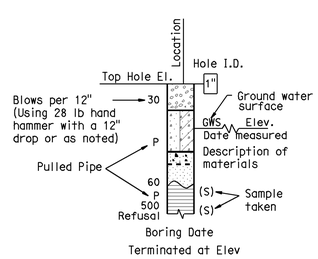


**HAND BORING**

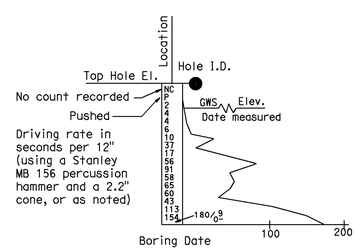


**DYNAMIC CONE PENETRATION BORING**

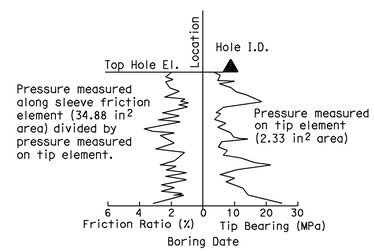


**CONE PENETRATION TEST (CPT) SOUNDING**

## BOREHOLE IDENTIFICATION

| Symbol | Hole Type | Description |
|---|---|---|
| Size | A | Auger Boring |
| Size | R<br>P | Rotary drilled boring<br>Rotary percussion boring (air) |
| Size HQ | R | Rotary drilled diamond core |
| Size | HD<br>HA | Hand driven (1-inch soil tube)<br>Hand Auger |
| ● | D | Dynamic Cone Penetration Boring |
| ◕ | B | Hollow Stem Auger Boring (HSA) |
| ▲ | CPT | Cone Penetration Test (ASTM D 5778-95) |
| ⬚ | O | Other |

**Note: Size in inches.**

# LOFTUS CHANNEL MODIFICATIONS

## SOIL LEGEND

## LOG OF TEST BORINGS SHEET 2 OF 2

Jon Hanaguchi
DESIGN OVERSIGHT Jon Hanaguchi
6-9-09
SIGN OFF DATE

DRAWN BY K. Reyes
CHECKED BY H. Nofal

R. Bethapudi
FIELD INVESTIGATION BY:
DATE

PREPARED FOR THE STATE OF CALIFORNIA DEPARTMENT OF TRANSPORTATION

Ayman Salama
PROJECT ENGINEER

BRIDGE NO. 55-0528
POST MILES 19.66

ORIGINAL SCALE IN INCHES FOR REDUCED PLANS 0 1 2 3

CU 12220
EA 0F0321

DISREGARD PRINTS BEARING EARLIER REVISION DATES
REVISION DATES (PRELIMINARY STAGE ONLY) 02/18/09 04/07/09 06/08/09

SHEET 6 OF 6

FILE => 55-0528-z-1tb02.dgn

USERNAME => trlenard DATE PLOTTED => 25-JAN-2010 TIME PLOTTED => 08:23

| DIST | COUNTY | ROUTE | POST MILES TOTAL PROJECT | SHEET No | TOTAL SHEETS |
|---|---|---|---|---|---|
| 12 | Ora | 57 | 18.4/20.9 | 672 | 856 |

REGISTERED CIVIL ENGINEER 06/08/09
DATE

1-25-10
PLANS APPROVAL DATE

*The State of California or its officers or agents shall not be responsible for the accuracy or completeness of electronic copies of this plan sheet.*

REGISTERED PROFESSIONAL ENGINEER
JOHN W. POWELL
No. C71463
Exp. 12/31/09
CIVIL
STATE OF CALIFORNIA

OCTA
550 S. MAIN STREET
ORANGE, CA 92863

CH2M HILL
6 HUTTON CENTRE DRIVE, SUITE 700
SANTA ANA, CA 92707

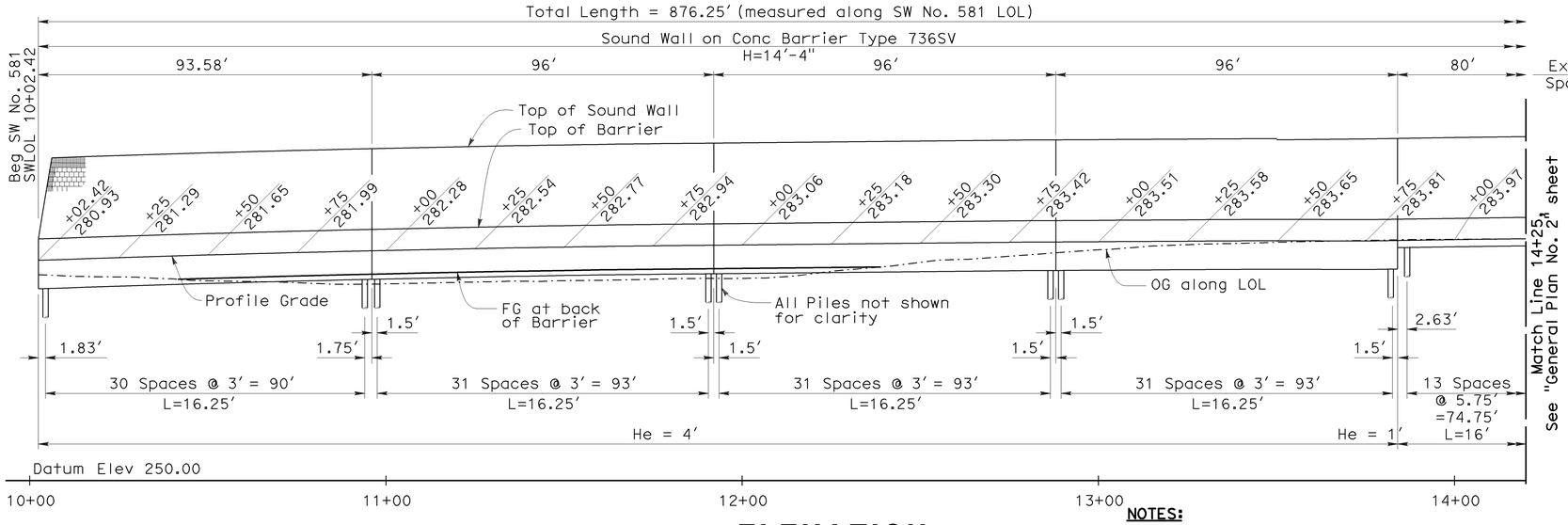


## ELEVATION

Horiz 1"=20'
Vert 1"=10'

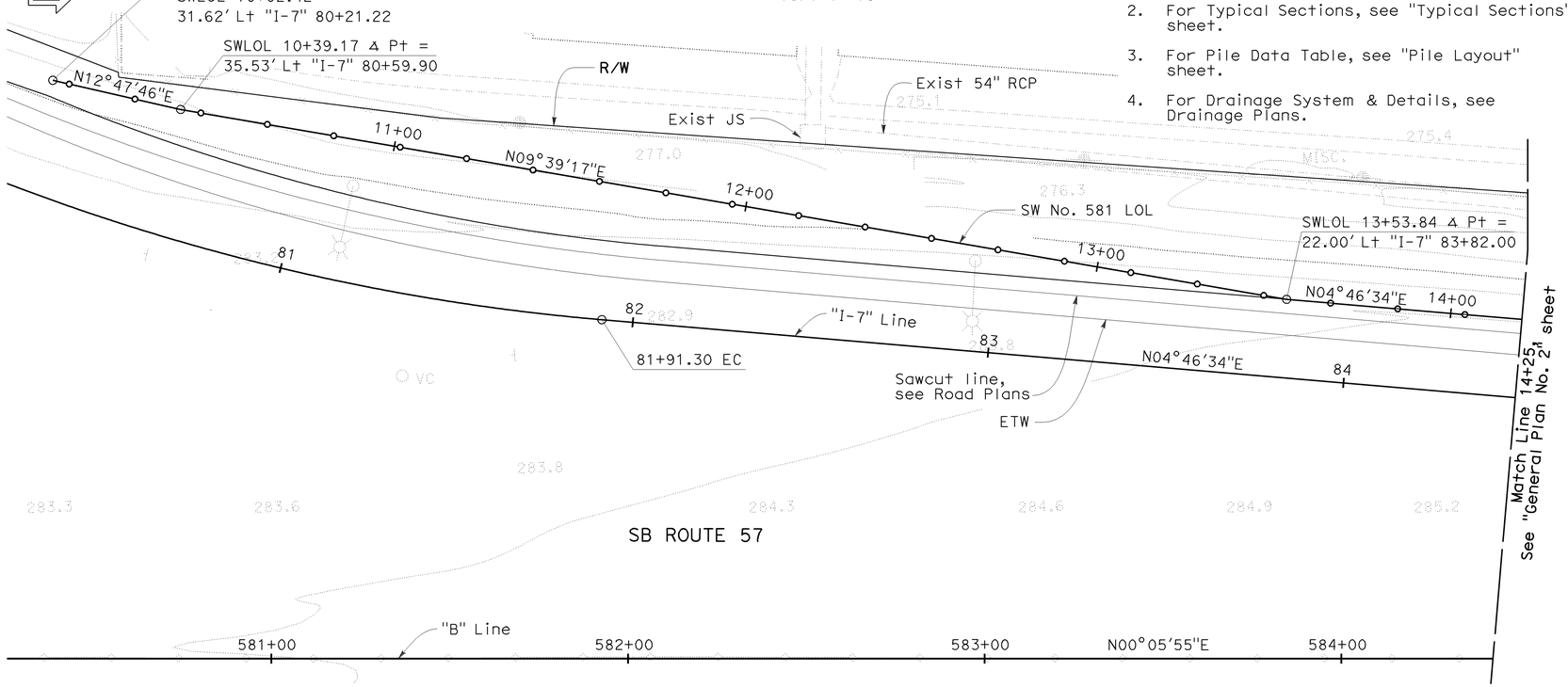


## PLAN

SCALE 1"=20'

**NOTES:**

1. Contractor to field verify all utility locations prior to retaining wall construction.
2. For Typical Sections, see "Typical Sections" sheet.
3. For Pile Data Table, see "Pile Layout" sheet.
4. For Drainage System & Details, see Drainage Plans.

## INDEX TO PLANS


| Sheet No. | Title |
|---|---|
| 1. | GENERAL PLAN NO. 1 |
| 2. | GENERAL PLAN NO. 2 |
| 3. | TYPICAL SECTIONS |
| 4. | PILE LAYOUT |
| 5. | RETAINING WALL TYPE 1SWBP - DETAILS NO. 1 |
| 6. | RETAINING WALL TYPE 1SWBP - DETAILS NO. 2 |
| 7. | SOUND WALL - MASONRY BLOCK WITH BARRIER ON RETAINING WALL DETAILS NO. 1 |
| 8. | SOUND WALL - MASONRY BLOCK WITH BARRIER ON RETAINING WALL DETAILS NO. 2 |
| 9. | SOUND WALL MASONRY BLOCK MISCELLANEOUS DETAILS |
| 10. | ARCHITECTURAL TREATMENT DETAILS |
| 11. | LOG OF TEST BORINGS SHEET 1 OF 2 |
| 12. | LOG OF TEST BORINGS SHEET 2 OF 2 |


**NOTE:**

1. For Standard Plans list see "General Plan No. 2" sheet.

RETAINING WALL NO 581
QUANTITIES

| | | |
|---|---|---|
| STRUCTURE EXCAVATION (RETAINING WALL) | 275 | CY |
| STRUCTURE EXCAVATION (TYPE Y-1) (AERIALLY DEPOSITED LEAD) | 152 | CY |
| STRUCTURE BACKFILL (RETAINING WALL) | 355 | CY |
| 16" CAST-IN-DRILLED-HOLE CONCRETE PILING | 1,600 | LF |
| 16" CAST-IN-DRILLED-HOLE CONCRETE PILING (BARRIER) | 3,230 | LF |
| STRUCTURAL CONCRETE, RETAINING WALL | 152 | CY |
| FORMED RELIEF TEXTURE (FLOWERED PATTERN) | 385 | SQFT |
| FRACTURED RIB TEXTURE | 765 | SQFT |
| SOUND WALL (BARRIER)(MASONRY BLOCK) | 9,900 | SQFT |
| BAR REINFORCING STEEL (RETAINING WALL) | 12,460 | LB |
| CONCRETE BARRIER (TYPE 736 MODIFIED) | 195 | LF |
| CONCRETE BARRIER (TYPE 736SV) | 682 | LF |

DESIGN OVERSIGHT Jon Hamaguchi
11-24-09
SIGN OFF DATE

| | BY | CHECKED |
|---|---|---|
| DESIGN | J. Powell | M. Atiqullah / A. Issa |
| DETAILS | J. Powell | M. Atiqullah / A. Issa |
| QUANTITIES | Y. Chiu | B. Ho |

LRFD — LIVE LOADING: HL-93 AND PERMIT (P-15) DESIGN LOAD

| | BY | CHECKED |
|---|---|---|
| LAYOUT | N. Morales | M. Atiqullah |
| SPECIFICATIONS | M. Remolador | PLANS AND SPECS COMPARED M. Atiqullah |

PREPARED FOR THE STATE OF CALIFORNIA DEPARTMENT OF TRANSPORTATION

Ayman Salama
PROJECT ENGINEER

BRIDGE NO. 55E0088
POST MILES 18.46

# SOUND WALL NO. 581
# GENERAL PLAN NO. 1

DESIGN GENERAL PLAN SHEET (ENGLISH) (REV. 2/25/05)

ORIGINAL SCALE IN INCHES FOR REDUCED PLANS 0 1 2 3

CU 12220
EA 0F0321

DISREGARD PRINTS BEARING EARLIER REVISION DATES

REVISION DATES (PRELIMINARY STAGE ONLY) 02/18/09 04/07/09 04/17/09 06/08/09

SHEET 1 OF 12

FILE => 55e0088-a-gp01.dgn

USERNAME => rfriehard DATE PLOTTED => 25-JAN-2010 TIME PLOTTED => 08:23

| DIST | COUNTY | ROUTE | POST MILES TOTAL PROJECT | SHEET No | TOTAL SHEETS |
|---|---|---|---|---|---|
| 12 | Ora | 57 | 18.4/20.9 | 673 | 856 |

REGISTERED CIVIL ENGINEER 06/08/09 DATE

1-25-10
PLANS APPROVAL DATE

REGISTERED PROFESSIONAL ENGINEER JOHN W. POWELL No. C71463 Exp. 12/31/09 CIVIL STATE OF CALIFORNIA

*The State of California or its officers or agents shall not be responsible for the accuracy or completeness of electronic copies of this plan sheet.*

OCTA
550 S. MAIN STREET
ORANGE, CA 92863

CH2M HILL
6 HUTTON CENTRE DRIVE, SUITE 700
SANTA ANA, CA 92707

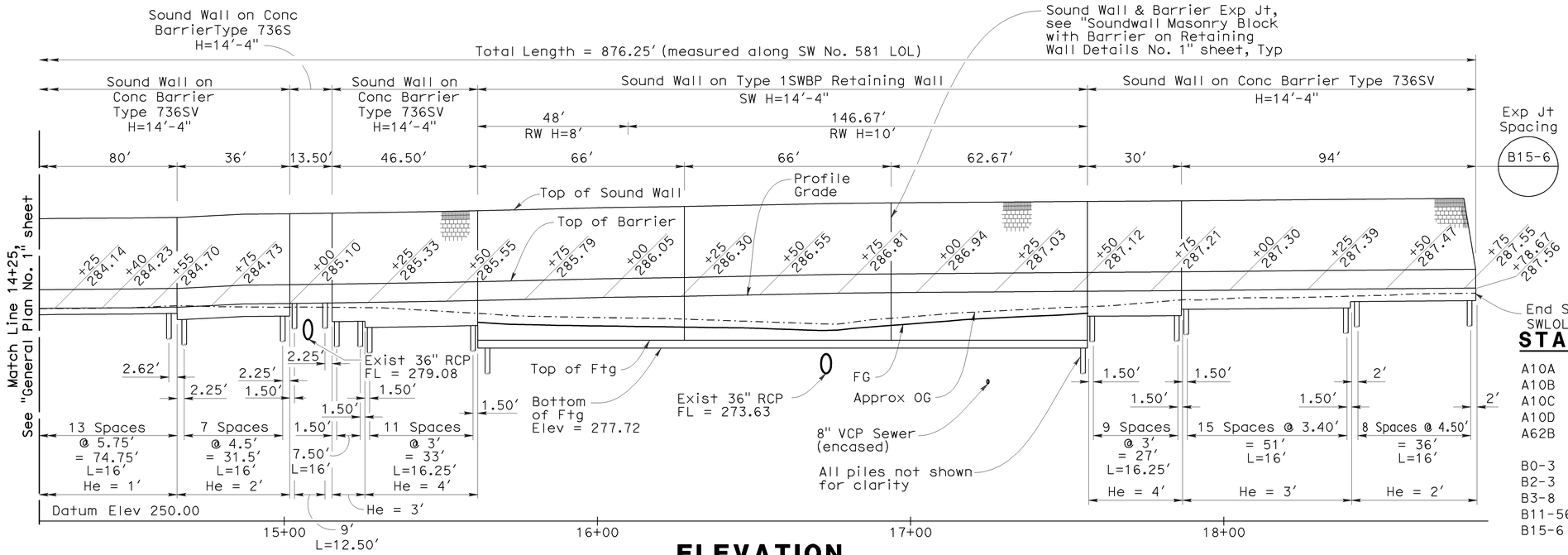


## ELEVATION

Horiz 1"=20'
Vert 1"=10'

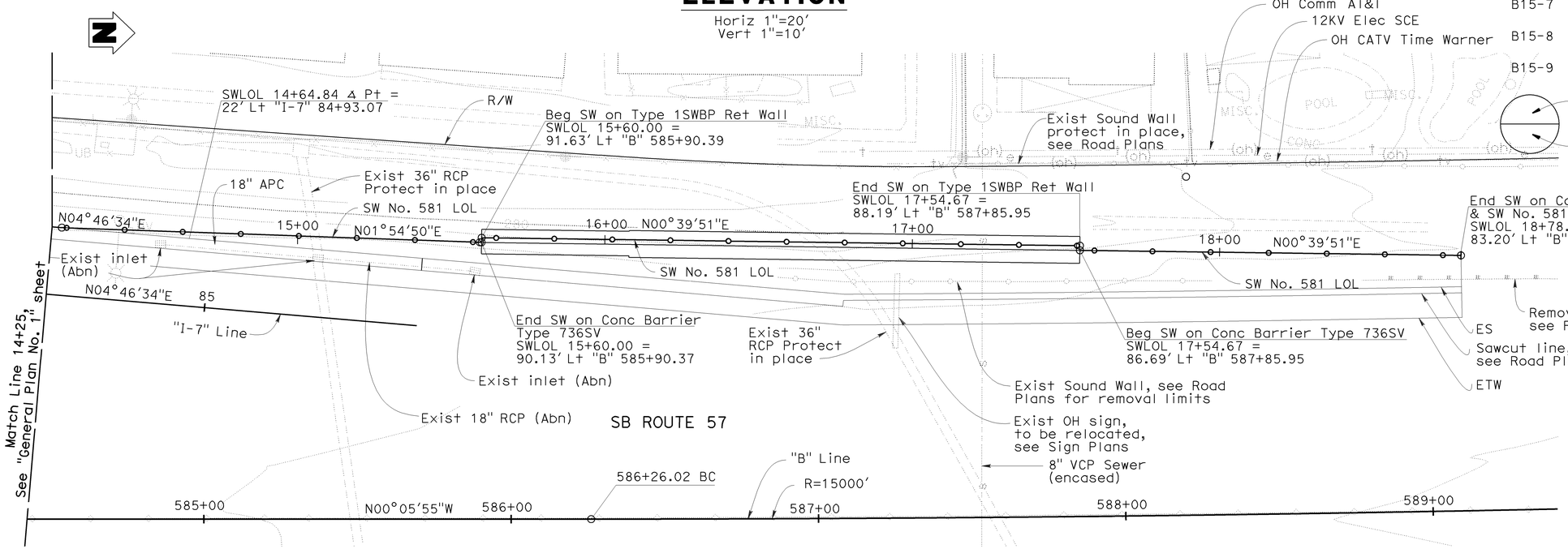


## PLAN

1"=20'

## STANDARD PLANS DATED MAY 2006

| | |
|---|---|
| A10A | ACRONYMS AND ABBREVIATIONS (SHEET 1 OF 2) |
| A10B | ACRONYMS AND ABBREVIATIONS (SHEET 2 OF 2) |
| A10C | SYMBOLS (SHEET 1 OF 2) |
| A10D | SYMBOLS (SHEET 2 OF 2) |
| A62B | LIMITS OF PAYMENT FOR EXCAVATION AND BACKFILL BRIDGE SURCHARGE AND WALL |
| B0-3 | BRIDGE DETAILS |
| B2-3 | 16" AND 24" CAST-IN-DRILLED-HOLE CONCRETE PILE |
| B3-8 | RETAINING WALL DETAILS NO. 1 |
| B11-56 | CONCRETE BARRIER TYPE 736 |
| B15-6 | SOUND WALL MASONRY BLOCK ON TYPE 736S / SV BARRIER DETAILS (1) |
| B15-7 | SOUND WALL MASONRY BLOCK ON TYPE 736S / SV BARRIER DETAILS (2) |
| B15-8 | SOUND WALL MASONRY BLOCK ON TYPE 736S / SV BARRIER DETAILS (3) |
| B15-9 | SOUND WALL MASONRY BLOCK MISCELLANEOUS DETAILS |

Standard Plan Sheet No.

Detail No.

**NOTES:**

1. Contractor to field verify all utility locations prior to retaining wall construction.
2. For Typical Sections, see "Typical Sections" sheet.
3. For Pile Data Table, see "Pile Layout" sheet.
4. For Drainage System & Details, see Drainage Plans.

| | | | | | |
|---|---|---|---|---|---|
| DESIGN OVERSIGHT Jon Hamaguchi 11-24-09 SIGN OFF DATE | DESIGN | BY M. Atiqullah / J. Powell | CHECKED M. Atiqullah / A. Issa | LRFD | LIVE LOADING: HL-93 AND PERMIT (P-15) DESIGN LOAD |
| | DETAILS | BY J. Powell | CHECKED M. Atiqullah / A. Issa | LAYOUT | BY N. Morales / CHECKED M. Atiqullah |
| | QUANTITIES | BY Y. Chiu | CHECKED B. HO | SPECIFICATIONS | BY M. Remolador / PLANS AND SPECS COMPARED M. Atiqullah |

DESIGN GENERAL PLAN SHEET (ENGLISH) (REV. 2/25/05)

ORIGINAL SCALE IN INCHES FOR REDUCED PLANS 0 1 2 3

PREPARED FOR THE STATE OF CALIFORNIA DEPARTMENT OF TRANSPORTATION

Ayman Salama
PROJECT ENGINEER

CU 12220
EA 0F0321

BRIDGE NO. 55E0088
POST MILES 18.46

# SOUND WALL NO. 581
# GENERAL PLAN NO. 2

DISREGARD PRINTS BEARING EARLIER REVISION DATES

REVISION DATES (PRELIMINARY STAGE ONLY) 02/18/09 04/07/09 04/17/09 06/08/09

SHEET 2 OF 12

FILE => 55e0088-a-gp02.dgn

USERNAME => rfrierard DATE PLOTTED => 25-JAN-2010 TIME PLOTTED => 08:23

| DIST | COUNTY | ROUTE | POST MILES TOTAL PROJECT | SHEET No | TOTAL SHEETS |
|---|---|---|---|---|---|
| 12 | Ora | 57 | 18.4/20.9 | 674 | 856 |

REGISTERED CIVIL ENGINEER 06/08/09 DATE

1-25-10
PLANS APPROVAL DATE

REGISTERED PROFESSIONAL ENGINEER JOHN W. POWELL No. C71463 Exp. 12/31/09 CIVIL STATE OF CALIFORNIA

*The State of California or its officers or agents shall not be responsible for the accuracy or completeness of electronic copies of this plan sheet.*

OCTA
550 S. MAIN STREET
ORANGE, CA 92863

CH2M HILL
6 HUTTON CENTRE DRIVE, SUITE 700
SANTA ANA, CA 92707

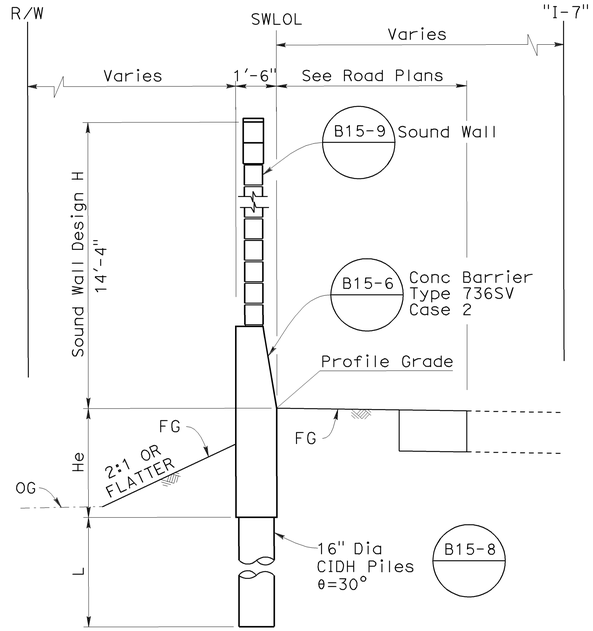


**TYPICAL SECTION** B15-7
No Scale
10+02.42 TO 13+53.84

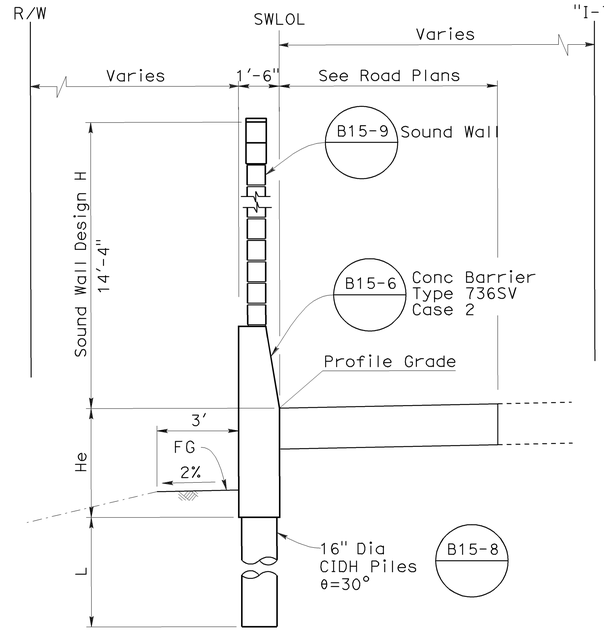


**TYPICAL SECTION** B15-7
No Scale
13+53.84 TO 15+00.00
AND
15+13.50 TO 15+60.00
AND
17+54.67 to 18+78.67

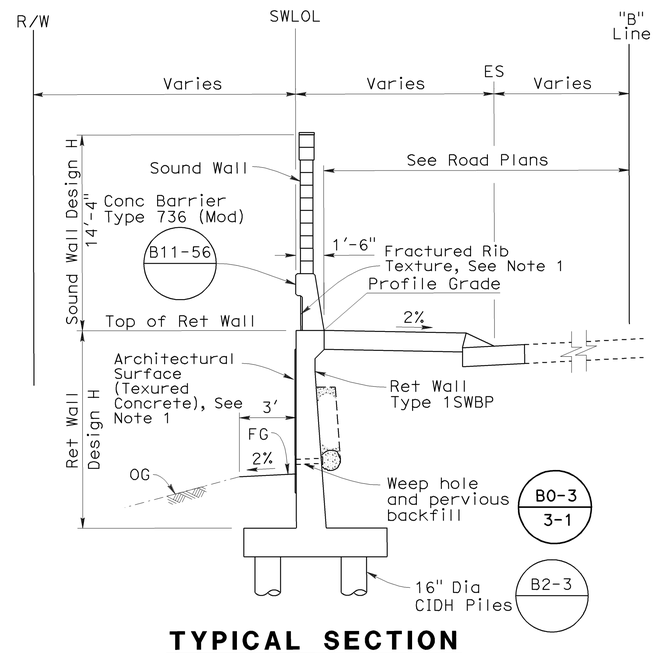


**TYPICAL SECTION**
1/4"=1'-0"
15+60.00 TO 17+54.67

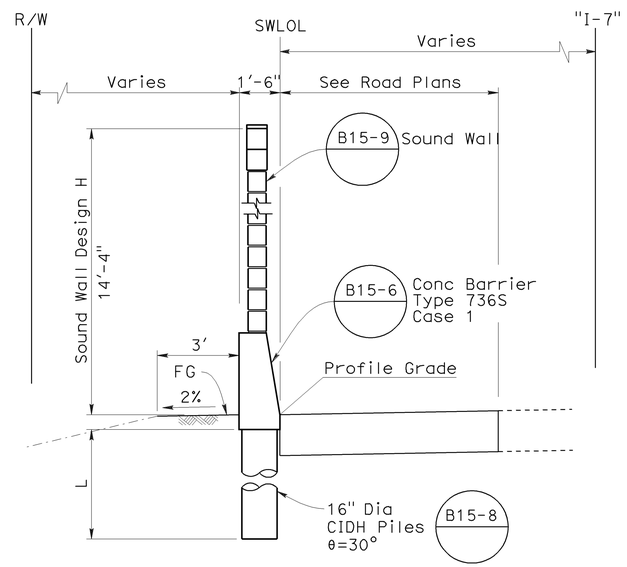


**TYPICAL SECTION** B15-7
No Scale
15+00.00 TO 15+13.50

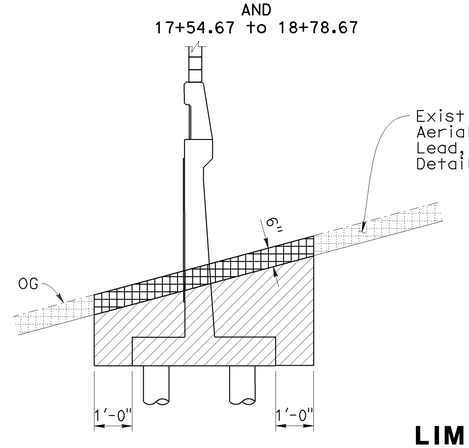


**IN CUT**

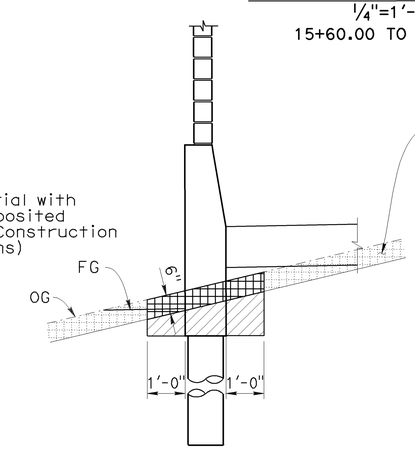


**IN CUT**

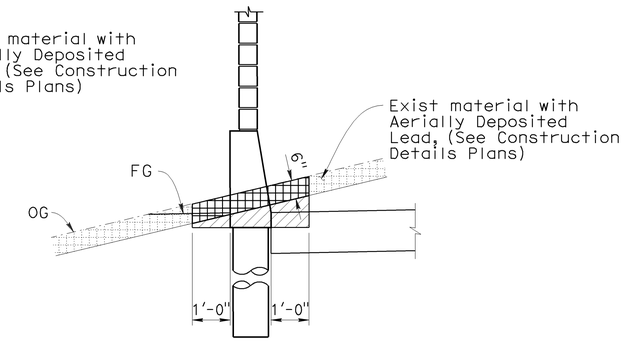


**IN CUT**

## LIMITS OF PAYMENT OF EXCAVATION FOR RETAINING WALL

No Scale

Note:
For Backfill see Caltrans Standard Plans

LEGEND

Indicates Structure Excavation (Type Y-1) (Aerially Deposited Lead)

Structure Excavation (Retaining Wall)

Note:

1. For Fractured Rib Texture and Architectural Surface (Textured Concrete) details, see "Architectural Treatment Details" sheet.

DESIGN OVERSIGHT Jon Hamaguchi
11-24-09
SIGN OFF DATE

| | BY | CHECKED |
|---|---|---|
| DESIGN | J. Powell | M. Atiqullah / A. Issa |
| DETAILS | J. Powell | M. Atiqullah / A. Issa |
| QUANTITIES | Y. Chiu | B. Ho |

PREPARED FOR THE STATE OF CALIFORNIA DEPARTMENT OF TRANSPORTATION

Ayman Salama
PROJECT ENGINEER

BRIDGE NO. 55E0088
POST MILE 18.46

# SOUND WALL NO. 581
# TYPICAL SECTIONS

DESIGN DETAIL SHEET (ENGLISH) (REV. 2/25/05)

ORIGINAL SCALE IN INCHES FOR REDUCED PLANS 0 1 2 3

CU 12220
EA 0F0321

DISREGARD PRINTS BEARING EARLIER REVISION DATES

REVISION DATES (PRELIMINARY STAGE ONLY) 02/18/09 04/07/09 04/17/09 06/08/09

SHEET 3 OF 12

FILE => 55e0088-a-ts01.dgn

USERNAME => trlenard DATE PLOTTED => 25-JAN-2010 TIME PLOTTED => 08:23

| DIST | COUNTY | ROUTE | POST MILES TOTAL PROJECT | SHEET No | TOTAL SHEETS |
|---|---|---|---|---|---|
| 12 | Ora | 57 | 18.4/20.9 | 675 | 856 |

REGISTERED CIVIL ENGINEER 06/08/09 DATE

1-25-10
PLANS APPROVAL DATE

REGISTERED PROFESSIONAL ENGINEER JOHN W. POWELL No. C71463 Exp. 12/31/09 CIVIL STATE OF CALIFORNIA

*The State of California or its officers or agents shall not be responsible for the accuracy or completeness of electronic copies of this plan sheet.*

OCTA
550 S. MAIN STREET
ORANGE, CA 92863

CH2M HILL
6 HUTTON CENTRE DRIVE, SUITE 700
SANTA ANA, CA 92707

## PILE DATA TABLE

| Location | Pile Type | Nominal Resistance (kips) | | Design Tip Elevation (ft) | Specified Tip Elevation (ft) |
|---|---|---|---|---|---|
| | | Compression | Tension | | |
| Sta 15+60.00 to 17+54.67 | 16" CIDH Conc Pile | 180 | 0 | 252.00(a) 262.97(c) 264.97(d) | 252 |

Design Tip Elevation is controlled by following demand:
(a) Compression; (c) Settlement; (d) Lateral Capacity.

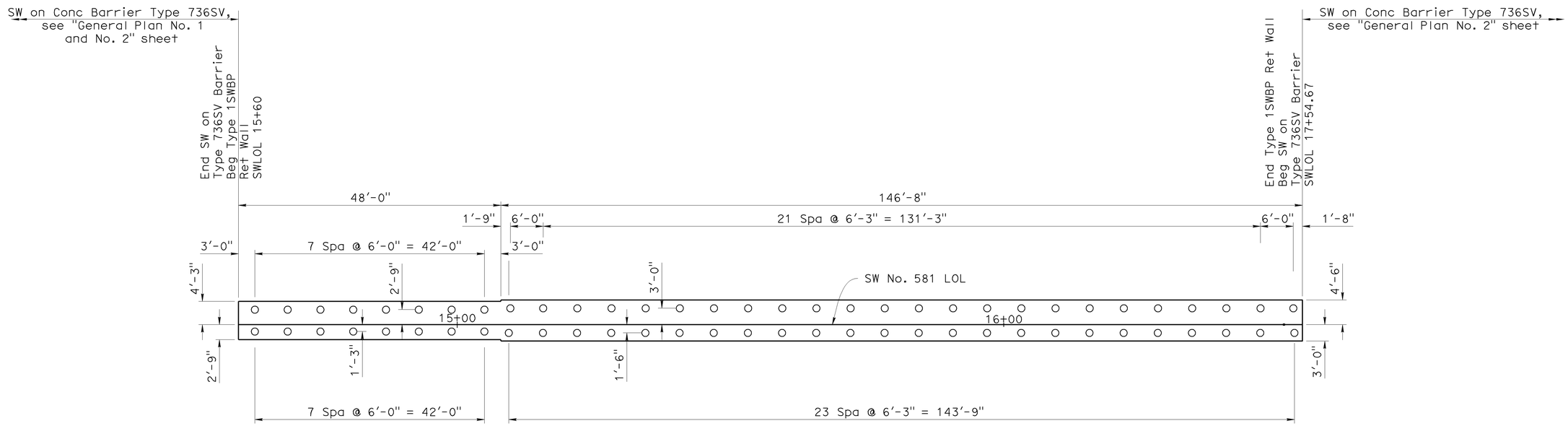


**PLAN**
1"=10'

NOTE:
1. All dimensions are measured along SWLOL.

DESIGN OVERSIGHT Jon Hamaguchi
8-31-09
SIGN OFF DATE

| | BY | CHECKED |
|---|---|---|
| DESIGN | M. Atiqullah / J. Powell | A. Issa |
| DETAILS | M. Atiqullah / J. Powell | A. Issa |
| QUANTITIES | L. Ros | A. Issa |

PREPARED FOR THE STATE OF CALIFORNIA DEPARTMENT OF TRANSPORTATION

Ayman Salama
PROJECT ENGINEER

BRIDGE NO. 55E0088
POST MILE 18.46

# SOUND WALL NO. 581
# PILE LAYOUT

DESIGN DETAIL SHEET (ENGLISH) (REV. 2/25/05)

ORIGINAL SCALE IN INCHES FOR REDUCED PLANS 0 1 2 3

CU 12220
EA 0F0321

DISREGARD PRINTS BEARING EARLIER REVISION DATES

REVISION DATES (PRELIMINARY STAGE ONLY) 04/17/09 06/08/09

SHEET 4 OF 12

FILE => 55e0088-e-pl01.dgn

USERNAME => friehard DATE PLOTTED => 25-JAN-2010 TIME PLOTTED => 08:23

| DIST. | COUNTY | ROUTE | POST MILES TOTAL PROJECT | SHEET NO. | TOTAL SHEETS |
|---|---|---|---|---|---|
| 12 | Ora | 57 | 18.4/20.9 | 676 | 856 |

REGISTERED ENGINEER - CIVIL DATE 06/08/09

1-25-10
PLANS APPROVAL DATE

REGISTERED PROFESSIONAL ENGINEER JOHN W. POWELL No. C71463 Exp.12/31/09 CIVIL STATE OF CALIFORNIA

The State of California or its officers or agents shall not be responsible for the accuracy or completeness of electronic copies of this plan sheet.

2

| TABLE OF PILE SPACING: 16" CIDH - CONCRETE PILES | | |
|---|---|---|
| DESIGN H | 8' | 10' |
| W | 7'-0" | 7'-6" |
| C | 2'-9" | 3'-0" |
| B | 4'-3" | 4'-6" |
| F | 1'-4" | 1'-4" |
| M | 1'-3" | 1'-6" |
| N | 2'-9" | 3'-0" |
| ROW 1 | 6'-0" | 6'-3" |
| ROW 2 | 6'-0" | 6'-3" |
| ROW 3 | | |
| ROW 4 | | |
| CONFIGURATION | I | I |

2

| TABLE 1: TABLE OF REINFORCING STEEL DIMENSIONS AND DATA | | |
|---|---|---|
| | STEM WITH HAUNCH | |
| DESIGN H | 8' | 10' |
| STEM BATTER | ½:12 | ½:12 |
| STEM THICKNESS @ TOP | 1'-6" | 1'-6" |
| STEM THICKNESS @ HAUNCH | 1'-0" | 1'-0" |
| (a) BARS | | |
| X | | |
| Y | | |
| (b) BARS | #5 @ 16 | #5 @ 12 |
| X | CONT | CONT |
| Y | CONT | CONT |
| (c) BARS | | |
| (d) BARS | #5 @ 12 | #5 @ 12 |
| TOTAL (e) BARS | 12 #7 | 12 #7 |
| TOTAL (f) BARS | 10 #8 | 10 #7 |
| TOTAL (g) BARS | #5@6 | #5@6 |

2

CONT = CONTINUOUS

* = (a) AND (b) BARS ARE BUNDLED TOGETHER.

** = ALTERNATE (a) AND (b) BARS AS SHOWN IN DETAIL A.

1

## DESIGN DATA

**DESIGN:** LOAD FACTOR DESIGN (LFD)

**CONCRETE:** REINFORCED CONCRETE, f'c = 3600 psi
fy = 60000 psi

**LOADING CASE:**

LEVEL GROUND WITH 240 psf LIVE LOAD SURCHARGE AND 14'-4" SOUNDWALL.
SEISMIC LOAD = 0.57 DEAD LOAD
WIND LOAD = 33 psf
DEAD LOAD OF SOUNDWALL = 1000 lb/lf
DEAD LOAD OF BARRIER = 470 lb/lf

**SEISMIC LOAD: SOIL**

Kh = 0.3g
Kv = 0.0
Kae : MONONOBE-OKABE METHOD

**SOIL:** Ø = 34° γ = 120 pcf

EQUIVALENT FLUID PRESSURE:
= 36 pcf FOR DETERMINATION OF TOE PRESSURE
= 27 pcf FOR DETERMINATION OF HEEL PRESSURE

**LOAD COMBINATIONS:**

GROUP A : βD+1.7E+1.7SC
GROUP B : βD+1.7E+1.7SC+W
GROUP C :
STEM : 1.0D+1.0E+1.0EQD+1.0EQE
FOOTING : D+PYM

WHERE : β = 1.0 OR 1.3 WHICHEVER CONTROLS DESIGN
D = DEAD LOAD
E = LATERAL EARTH PRESSURE
SC = SURCHARGE
W = WIND LOAD
EQD = SEISMIC DEAD LOAD
EQE = SEISMIC LATERAL EARTH PRESSURE
PYM = PROBABLE YIELD MOMENT (1.3* NOMINAL YIELD MOMENT OF STEM)

3

## GENERAL NOTES

1. 16" CIDH-CONCRETE PILES WERE USED FOR THE DESIGN.
2. MINIMUM DISTANCE BETWEEN CENTER PILE AND EDGE OF FOOTING IS 1'-6".
3. REDUCTION FACTORS:
   GROUPS A & B : Ø = 0.75
   GROUP C & X1: Ø = 1.0
4. LATERAL RESISTANCE OF EACH PILE:
   GROUPS A & B : = 30 kip
   GROUP C & X1: = 40 kip
5. MAXIMUM SPACING BETWEEN PILES IS SHOWN IN THE TABLE. REDUCE TO SUIT THE LENGHTH OF FOOTING.
6. MINIMUM DISTANCE BETWEEN ANY TWO PILES IS 4'-0".
7. LIMIT OF NO SPLICING FOR REBARS = 3 TIMES THE BOTTOM THICKNESS OF STEM.

# SPECIAL DETAILS

STANDARD DRAWING

FILE NO. xs14-320-1e

APPROVED BY G. WANG
RESPONSIBLE TECHNICAL SPECIALIST
APPROVAL DATE 5-13-08

RELEASED BY ROBERTO LACALLE
RESPONSIBLE OFFICE CHIEF
RELEASE DATE REVISED

1 Revised design data
2 Revised Tables and removed Table 2
3 Revised General Notes

STATE OF CALIFORNIA
DEPARTMENT OF TRANSPORTATION

DIVISION OF ENGINEERING SERVICES

BRIDGE NO. 55E0088
POST MILE 18.46

SOUND WALL NO. 581
RETAINING WALL TYPE 1SWBP - DETAIL NO. 1

DS OSD 2147A (ENGLISH STANDARD DRAWING "XS" BORDER REV. 01/11/08)

ORIGINAL SCALE IN INCHES FOR REDUCED PLANS 0 1 2 3

CU 12220
EA 0F0321

DISREGARD PRINTS BEARING EARLIER REVISION DATES 02/18/09 04/07/09 04/17/09 06/08/09

REVISION DATES (PRELIMINARY STAGE ONLY)

SHEET 5 OF 12

USERNAME => trlenard

55e0088-f-d01.dgn

DATE PLOTTED => 25-JAN-2010 TIME PLOTTED => 08:23

| DIST. | COUNTY | ROUTE | POST MILES TOTAL PROJECT | SHEET NO. | TOTAL SHEETS |
|---|---|---|---|---|---|
| 12 | Ora | 57 | 18.4/20.9 | 677 | 856 |

REGISTERED ENGINEER - CIVIL DATE 06/08/09

1-25-10
PLANS APPROVAL DATE

REGISTERED PROFESSIONAL ENGINEER JOHN W. POWELL No. C71463 Exp. 12/31/09 CIVIL STATE OF CALIFORNIA

The State of California or its officers or agents shall not be responsible for the accuracy or completeness of electronic copies of this plan sheet.

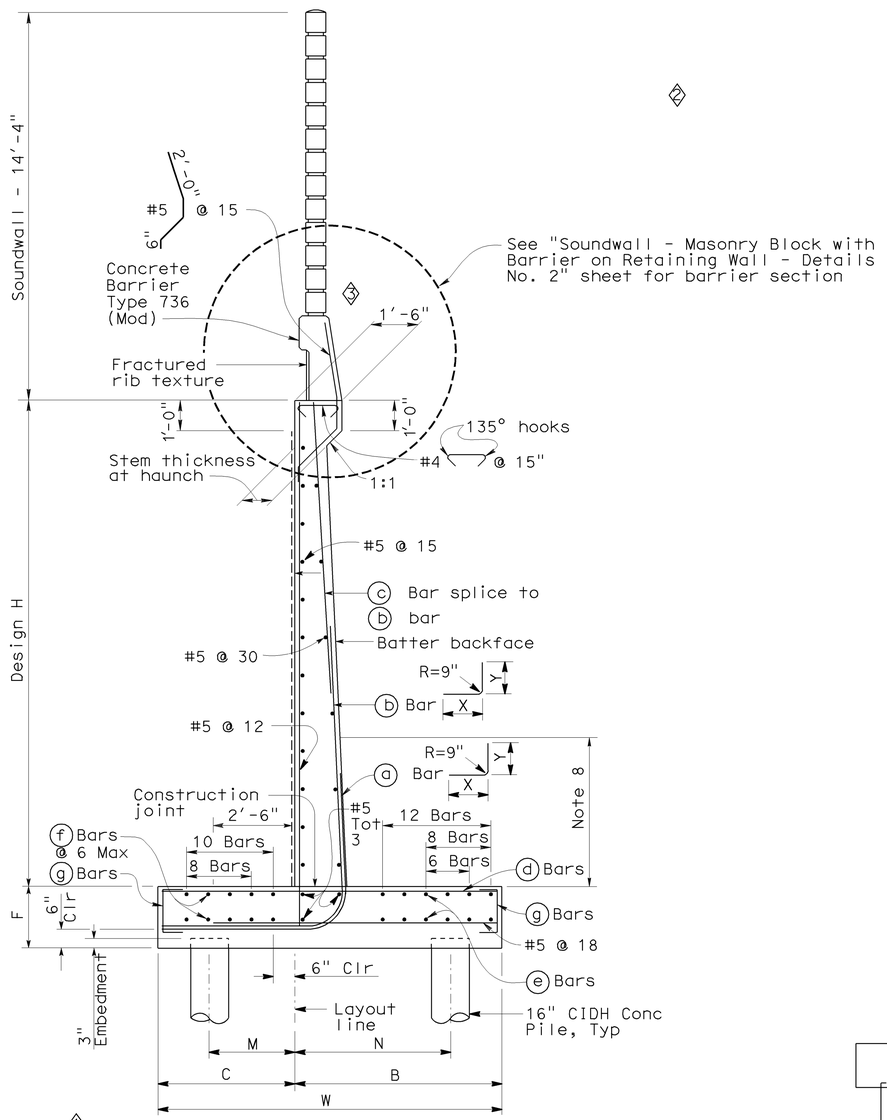


## 16" CIDH PILE FOOTING SECTION

NO SCALE

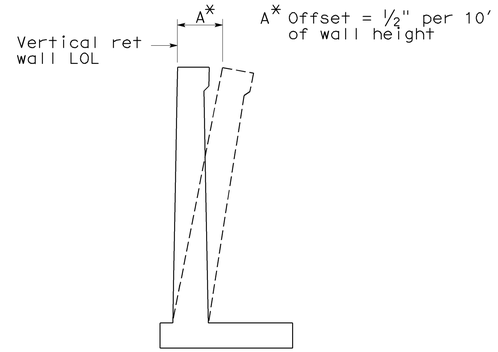


## WALL OFFSET

NO SCALE

Values for offsetting forms to be determined by the engineer

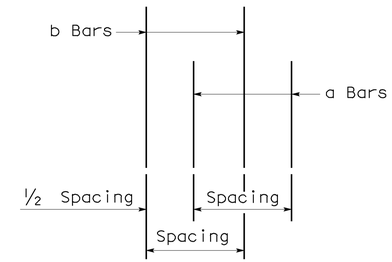


## DETAIL A

NO SCALE

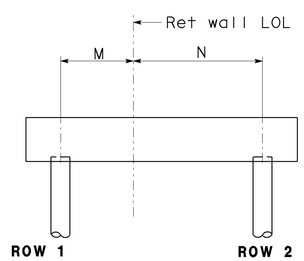


## CONFIGURATION I

### NOTES

1. For soundwall and retaining wall architectural finish or texture, see details elsewhere in project plans.
2. For details not shown and drainage notes, see B3-8
3. Footing cover, 1'-6" minimum.
4. For soundwall and barrier reinforcement, see "Soundwall Masonry Block on Barriers" Sheets in Standard Plans.

# SPECIAL DETAILS

STANDARD DRAWING

FILE NO. xs14-320-2e

APPROVED BY G. WANG — RESPONSIBLE TECHNICAL SPECIALIST

APPROVAL DATE 5-13-08

RELEASED BY ROBERTO LACALLE — RESPONSIBLE OFFICE CHIEF

RELEASE DATE REVISED

1 Revised 45T Pile Ftg Section and Configuration I
2 Removed Configuration II & III and Spread Ftg Sect Without Haunch
3 Revised Barrier

STATE OF CALIFORNIA DEPARTMENT OF TRANSPORTATION

DIVISION OF ENGINEERING SERVICES

BRIDGE NO. 55E0088

POST MILE 18.46

SOUND WALL NO. 581

RETAINING WALL TYPE 1SWBP - DETAIL NO. 2

DS OSD 2147A (ENGLISH STANDARD DRAWING "XS" BORDER REV. 01/11/08)

ORIGINAL SCALE IN INCHES FOR REDUCED PLANS 0 1 2 3

CU 12220
EA 0F0321

DISREGARD PRINTS BEARING EARLIER REVISION DATES

REVISION DATES (PRELIMINARY STAGE ONLY) 02/18/09 04/07/09 04/17/09 06/08/09

SHEET 6 OF 12

USERNAME => trlenard

55e0088-f-d02.dgn

DATE PLOTTED => 25-JAN-2010 TIME PLOTTED => 08:24

| DIST. | COUNTY | ROUTE | POST MILES TOTAL PROJECT | SHEET NO. | TOTAL SHEETS |
|---|---|---|---|---|---|
| 12 | Ora | 57 | 18.4/20.9 | 678 | 856 |

REGISTERED ENGINEER - CIVIL DATE 06/08/09

1-25-10
PLANS APPROVAL DATE

REGISTERED PROFESSIONAL ENGINEER JOHN W. POWELL No. C71463 Exp. 12/31/09 CIVIL STATE OF CALIFORNIA

The State of California or its officers or agents shall not be responsible for the accuracy or completeness of electronic copies of this plan sheet.

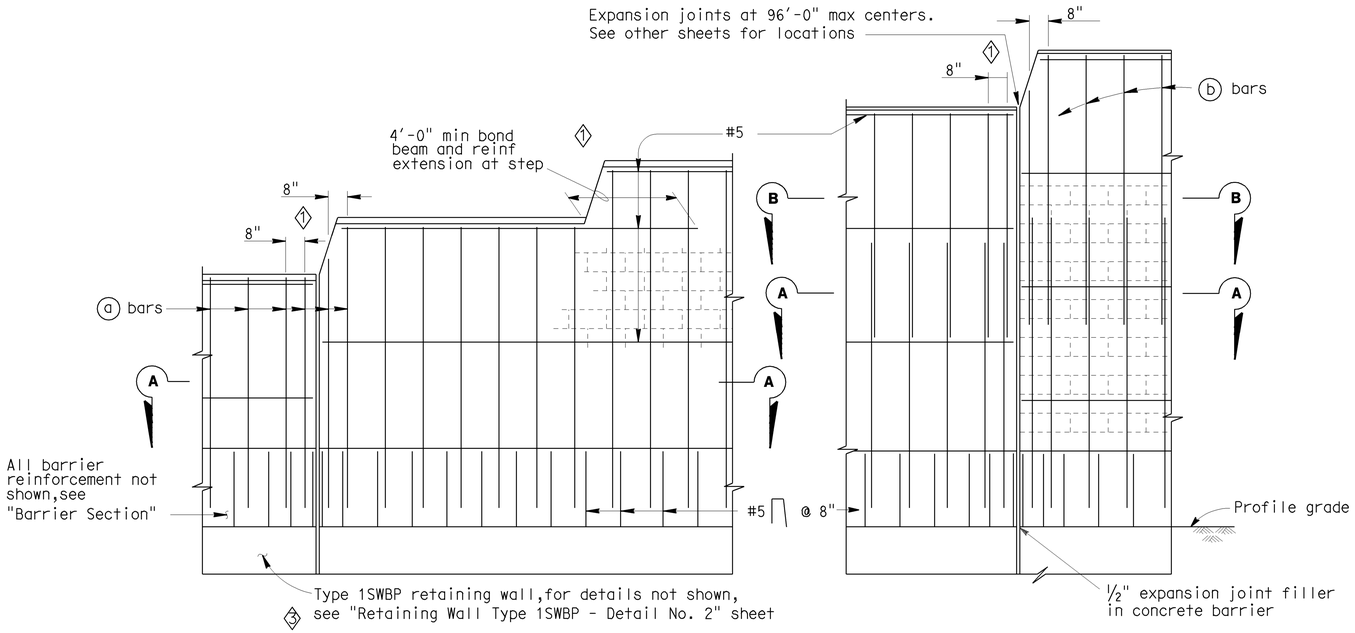


## PART ELEVATIONS

## SOUNDWALL REINFORCEMENT TABLE

| Maximum H | (a) bars @ 1'-4" max | (b) bars @ 1'-4" max | "y" | f'm (KSI) | Compressive Strength of CMU (KSI) | Maximum H |
|---|---|---|---|---|---|---|
| 6'-4" | # 4 | ——— | ——— | 1.5 | 1.9 | 6'-4" |
| 8'-4" | # 4 | ——— | ——— | 1.5 | 1.9 | 8'-4" |
| 10'-4" | # 4 | ——— | ——— | 1.5 | 1.9 | 10'-4" |
| 12'-4" | # 5 | # 4 | 5'-0" | 1.5 | 1.9 | 12'-4" |
| 14'-4" | # 6 | # 4 | 7'-0" | 1.5 | 1.9 | 14'-4" |
| 16'-4" | # 6 | # 4 | 9'-0" | 2.5 | 3.7 | 16'-4" |

Note I : For details not shown,see "SOUNDWALL WITH BARRIER ON RETAINING WALL - MASONRY BLOCK -- DETAILS NO.2" sheet.

Note II : Slope ground at traffic side of barrier to drain. Maximum slope ±10%.

Note III: See "SOUNDWALL MASONRY BLOCK - MISCELLANEOUS DETAILS" sheet for other details.

## GENERAL NOTES

Note A: For type of block and joint finish, see other sheets.

Note B: When blocks are laid in stacked bond, ladder type, galvanized joint reinforcement shall be provided. A minimum of 0.07"-0.14" wire continuous at 4'-0" maximum to be used. Locate reinforcement in joints that are at the approximate midpoint between bond beams.

Note C: Horizontal joints shall be tooled concave or may be weathered.
Vertical joints shall be tooled concave or may be raked.

Note D: For intermediate wall heights that are between the "H's" given. Use the tabular information for the next higher "H".

Note E: Masonry strengths are listed in "SOUNDWALL REINFORCEMENT TABLE".

Note F: Class 2 concrete to be used for the barrier.

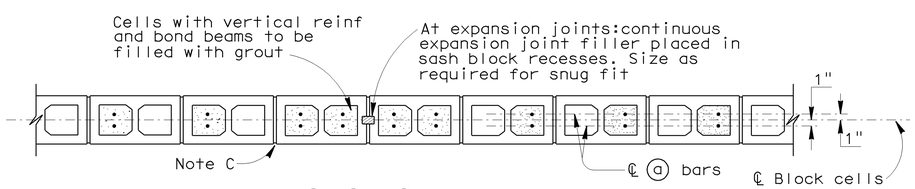


## SECTION A-A

For details not shown,see other details

**H=6'-4" THRU H=10'-4"**

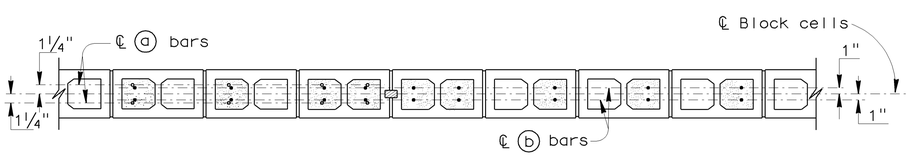


## SECTION A-A

## SECTION B-B

For details not shown,see other details

**H=12'-4" THRU H=16'-4"**

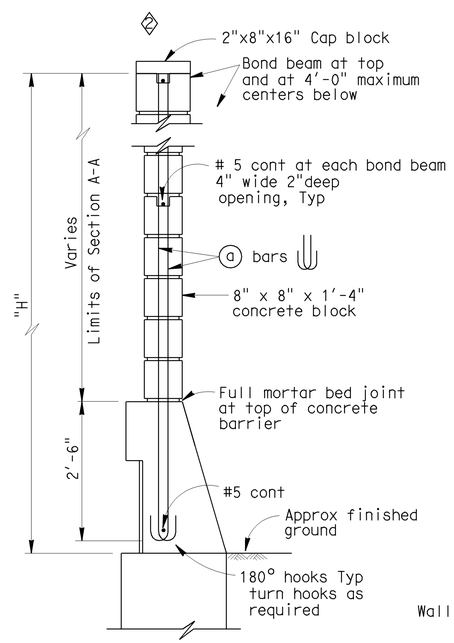


**H=6'-4" THRU H=10'-4"**

For details not shown,see H=12'-4" thru H=16'-4"

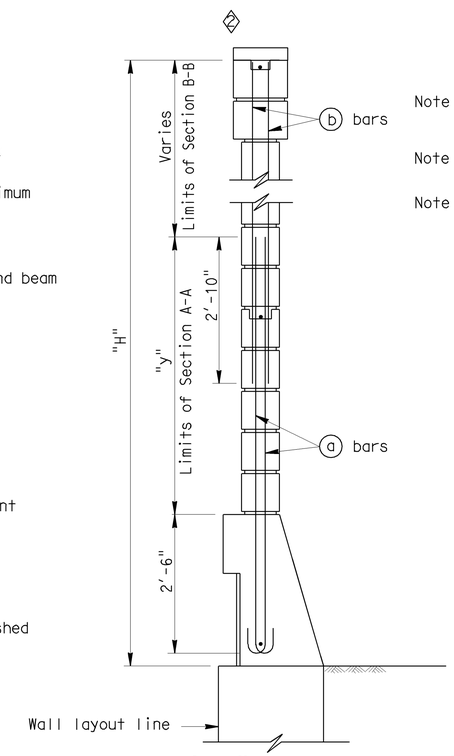


**H=12'-4" THRU H=16'-4"**

For details not shown,see H=6'-4" thru H=10'-4"

## TYPICAL SECTIONS

## SPECIAL DETAILS

**SOUND WALL NO. 581**

**SOUNDWALL - MASONRY BLOCK WITH BARRIER ON RETAINING WALL**

**DETAILS NO. 1**

STANDARD DRAWING

FILE NO. xs15-130-1e

APPROVED BY T SATTER — RESPONSIBLE TECHNICAL SPECIALIST
APPROVAL DATE 9-2-08

RELEASED BY ROBERTO LACALLE — RESPONSIBLE OFFICE CHIEF
RELEASE DATE REVISED

1 Revised Step
2 Revised cap blocks
3 Revised callout

STATE OF CALIFORNIA DEPARTMENT OF TRANSPORTATION

DIVISION OF ENGINEERING SERVICES

BRIDGE NO. 55E0088
POST MILE 18.46

CU 12220
EA 0F0321

DISREGARD PRINTS BEARING EARLIER REVISION DATES

REVISION DATES (PRELIMINARY STAGE ONLY) 02/18/09 04/07/09 04/17/09 06/08/09

SHEET 7 OF 12

DS OSD 2147A (ENGLISH STANDARD DRAWING "XS" BORDER REV. 01/11/08)

ORIGINAL SCALE IN INCHES FOR REDUCED PLANS 0 1 2 3

USERNAME => trlenard

55e0088-g-rwdt01.dgn

DATE PLOTTED => 25-JAN-2010 TIME PLOTTED => 08:24

| DIST. | COUNTY | ROUTE | POST MILES TOTAL PROJECT | SHEET NO. | TOTAL SHEETS |
|---|---|---|---|---|---|
| 12 | Ora | 57 | 18.4/20.9 | 679 | 856 |

REGISTERED ENGINEER - CIVIL DATE 06/08/09

1-25-10
PLANS APPROVAL DATE

REGISTERED PROFESSIONAL ENGINEER JOHN W. POWELL No. C71463 Exp. 12/31/09 CIVIL STATE OF CALIFORNIA

The State of California or its officers or agents shall not be responsible for the accuracy or completeness of electronic copies of this plan sheet.

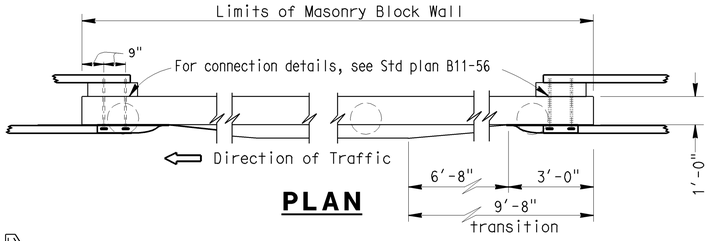


## PLAN

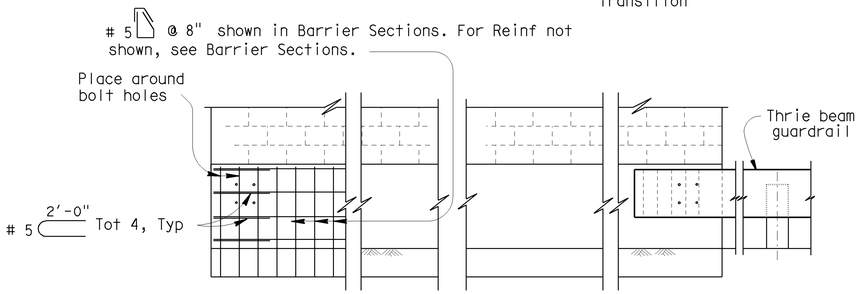


## ELEVATION

## METAL BEAM GUARDRAIL ANCHORAGE

For details not shown, see Std plan B11-56.

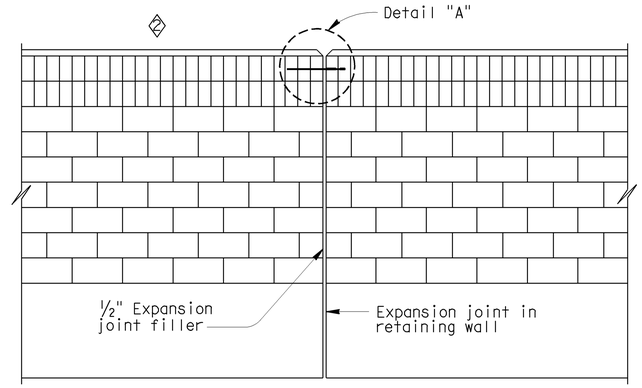


## ALIGNMENT KEY DETAIL

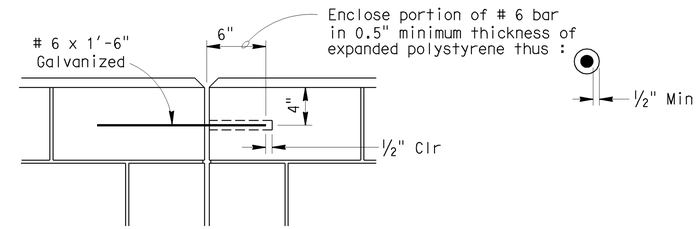


## DETAIL A

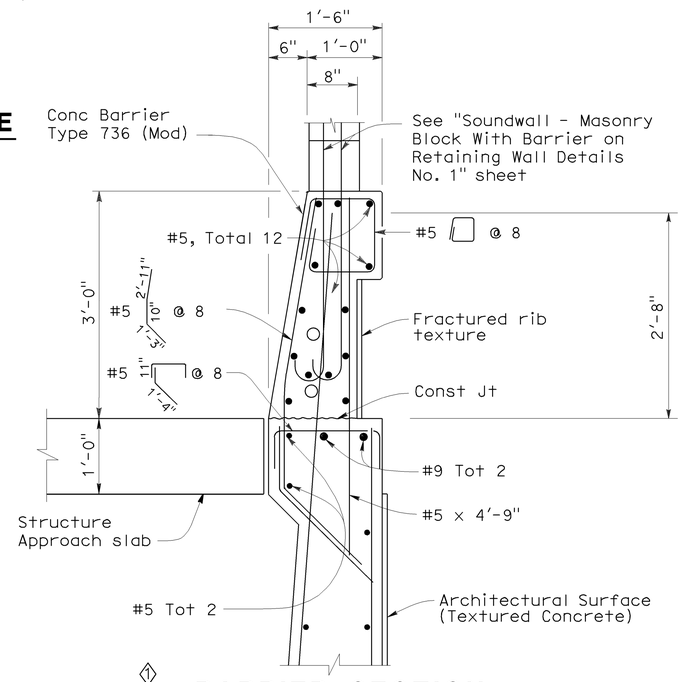


## BARRIER SECTION

**NOTES:**

I : For details not shown,see "Retaining Wall Details No. 1 & No. 2" sheet.

II : Slope ground at traffic side of barrier to drain. Maximum slope ±10%. See Standard Plan B11-56, Note D.

## DESIGN NOTES

**DESIGN**

Uniform Building Code,1997 Edition and the Bridge Design Specifications.

**DESIGN WIND LOAD**

33 PSF

**DESIGN SEISMIC LOAD**

0.57 Dead load

**REINFORCED CONCRETE**

f'c = 3250 PSI
fy = 60 KSI

**CONCRETE MASONRY**

| REGULAR STRENGTH | HIGH STRENGTH | |
|---|---|---|
| f'm = 1500 PSI | f'm = 2000 PSI | f'm = 2500 PSI |
| fb = 1500 PSI | fb = 660 PSI | fb = 830 PSI |
| fs = 24.0 KSI | fs = 24.0 KSI | fs = 24000 PSI |
| n = 25.8 | n = 19.3 | n = 15.5 |

**LOAD FACTORS AND LOAD COMBINATIONS**

Working Stress Design ( WSD ) Percentage of unit stress

Group 1: D + E + SC 100%
Group 2: D + W + SC + E 100%
Group 3: D + 0.71 EQD + E 100%

Where:

D = Dead load
E = Lateral earth pressure
SC = Live load surcharge
W = Wind load
EQD = Seismic dead load

Load Factor Design ( LFD )

Group A: βD +1.7 E + 1.7 SC
Group B: βD +1.7 E + 1.3 W
Group C: βD +1.3 E + 1.0 EQE
Group D: βD +1.3 E + 1.0 EQD
Group E: βD +1.1 E + 0.85 ( EQE + EQD )

Where : β = 0.9 or 1.2, whichever controls in design
D = Dead load
E = Lateral earth pressure
SC = Live load surcharge
W = Wind load
EQD = Seismic dead load
EQE = Seismic earth load

**STRENGTH REDUCTION FACTORS, Ø**

Reinforced concrete:
For flexure ---------- Ø=0.90
For shear ---------- Ø=0.85

Concrete masonry:
For flexure ---------- Ø=0.80
For shear ---------- Ø=0.60

Foundations :

See "RETAINING WALL WITH SOUNDWALL" sheets.

# SPECIAL DETAILS

## SOUND WALL NO. 581

## SOUNDWALL - MASONRY BLOCK WITH BARRIER ON RETAINING WALL

## DETAILS NO. 2

STANDARD DRAWING

FILE NO. xs15-130-2e

APPROVED BY T SATTER — RESPONSIBLE TECHNICAL SPECIALIST
APPROVAL DATE 4-15-08

RELEASED BY ROBERTO LACALLE — RESPONSIBLE OFFICE CHIEF
RELEASE DATE REVISED

1. Revised Barrier Section
2. Revised Alignment Key Detail
3. Delete Clearance Detail
4. Revised Note

STATE OF CALIFORNIA DEPARTMENT OF TRANSPORTATION

DIVISION OF ENGINEERING SERVICES

BRIDGE NO. 55E0088
POST MILE 18.46

CU 12220
EA 0F0321

DISREGARD PRINTS BEARING EARLIER REVISION DATES 02/18/09 04/07/09 04/17/09 06/08/09

SHEET 8 OF 12

DS OSD 2147A (ENGLISH STANDARD DRAWING "XS" BORDER REV. 01/11/08)

ORIGINAL SCALE IN INCHES FOR REDUCED PLANS 0 1 2 3

USERNAME => trlenard

55e0088-g-rwdt02.dgn

DATE PLOTTED => 25-JAN-2010 TIME PLOTTED => 08:25:24

| DIST | COUNTY | ROUTE | POST MILES TOTAL PROJECT | SHEET No | TOTAL SHEETS |
|---|---|---|---|---|---|
| 12 | Ora | 57 | 18.4/20.9 | 680 | 856 |

REGISTERED CIVIL ENGINEER 06/08/09 DATE

1-25-10
PLANS APPROVAL DATE

REGISTERED PROFESSIONAL ENGINEER JOHN W. POWELL No. C71463 Exp. 12/31/09 CIVIL STATE OF CALIFORNIA

*The State of California or its officers or agents shall not be responsible for the accuracy or completeness of electronic copies of this plan sheet.*

OCTA
550 S. MAIN STREET
ORANGE, CA 92863

CH2M HILL
6 HUTTON CENTRE DRIVE, SUITE 700
SANTA ANA, CA 92707

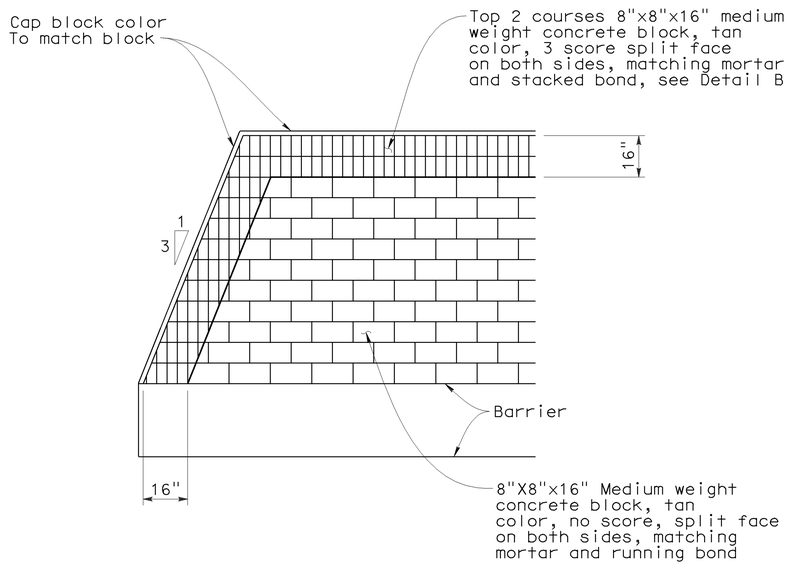


## END WALL ELEVATION

## CONCRETE BLOCK TYPE, COLOR AND PLACEMENT

No Scale

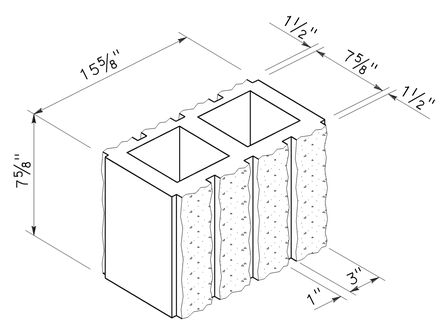


## DETAIL B

No Scale

8" WIDE 3-SCORE SPLIT FACE BOTH SIDES

DESIGN OVERSIGHT Jon Hamaguchi
6-9-09
SIGN OFF DATE

| | BY | CHECKED |
|---|---|---|
| DESIGN | J. Powell | M. Atiqullah / A. Issa |
| DETAILS | J. Powell | M. Atiqullah / A. Issa |
| QUANTITIES | Y. Chiu | B. Ho |

PREPARED FOR THE STATE OF CALIFORNIA DEPARTMENT OF TRANSPORTATION

Ayman Salama
PROJECT ENGINEER

BRIDGE NO. 55E0088
POST MILE 18.46

# SOUND WALL NO. 581

## SOUNDWALL MASONRY BLOCK MISCELLANEOUS DETAILS

DESIGN DETAIL SHEET (ENGLISH) (REV. 2/25/05)

ORIGINAL SCALE IN INCHES FOR REDUCED PLANS 0 1 2 3

CU 12220
EA 0F0321

DISREGARD PRINTS BEARING EARLIER REVISION DATES

REVISION DATES (PRELIMINARY STAGE ONLY) 02/18/09 04/07/09 04/17/09 06/08/09

SHEET 9 OF 12

FILE => 55e0088-u-miscdt01.dgn

USERNAME => friehard DATE PLOTTED => 25-JAN-2010 TIME PLOTTED => 08:24

| DIST | COUNTY | ROUTE | POST MILES TOTAL PROJECT | SHEET No | TOTAL SHEETS |
|---|---|---|---|---|---|
| 12 | Ora | 57 | 18.4/20.9 | 681 | 856 |

REGISTERED CIVIL ENGINEER — DATE 06/08/09

1-25-10
PLANS APPROVAL DATE

REGISTERED PROFESSIONAL ENGINEER — MOHAMMED ATIQULLAH — No. C47027 — Exp. 12/31/09 — CIVIL — STATE OF CALIFORNIA

*The State of California or its officers or agents shall not be responsible for the accuracy or completeness of electronic copies of this plan sheet.*

OCTA
550 S. MAIN STREET
ORANGE, CA 92863

CH2M HILL
6 HUTTON CENTRE DRIVE, SUITE 700
SANTA ANA, CA 92707

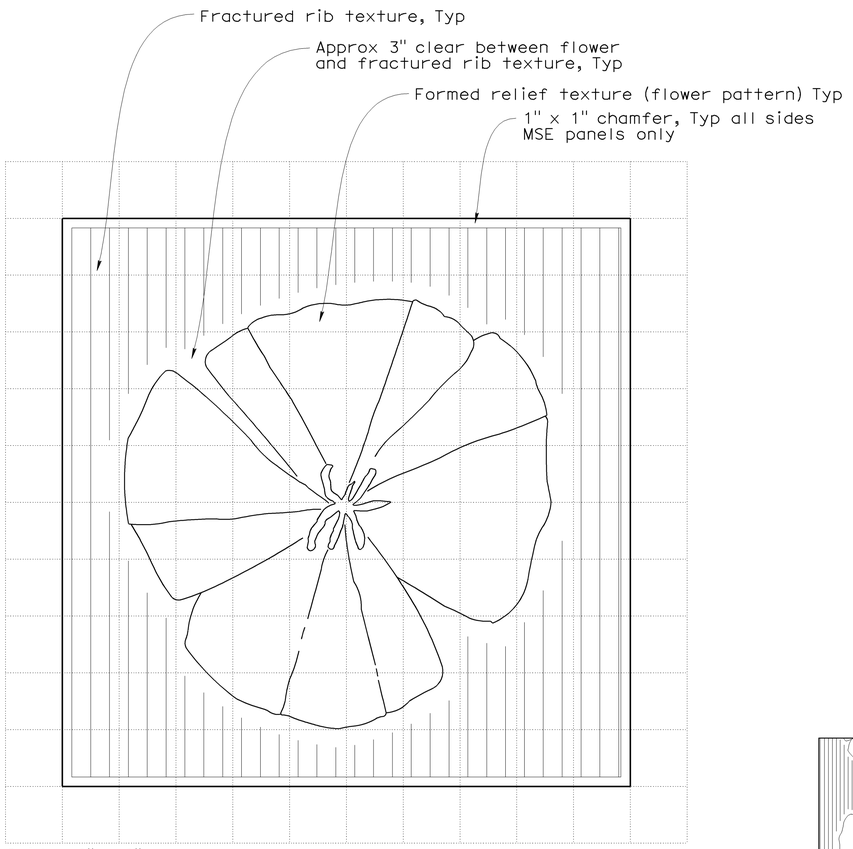


## ARCHITECTURAL SURFACE (TEXTURED CONCRETE) FOR MSE PANEL

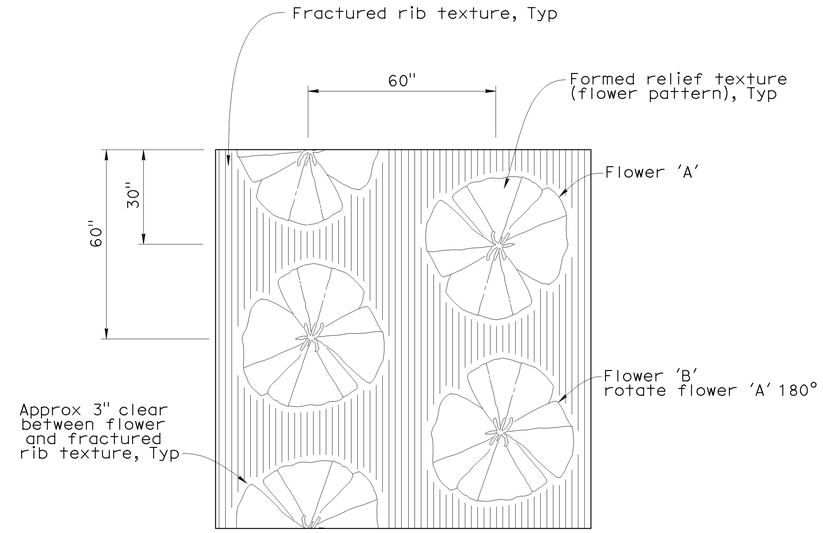


## ARCHITECTURAL SURFACE (TEXTURED CONCRETE) PATTERN

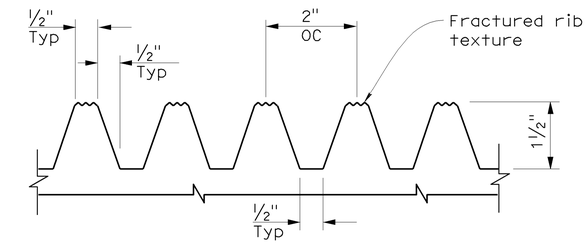


## FRACTURED RIB TEXTURE DETAIL

(Elastomer Formliner)

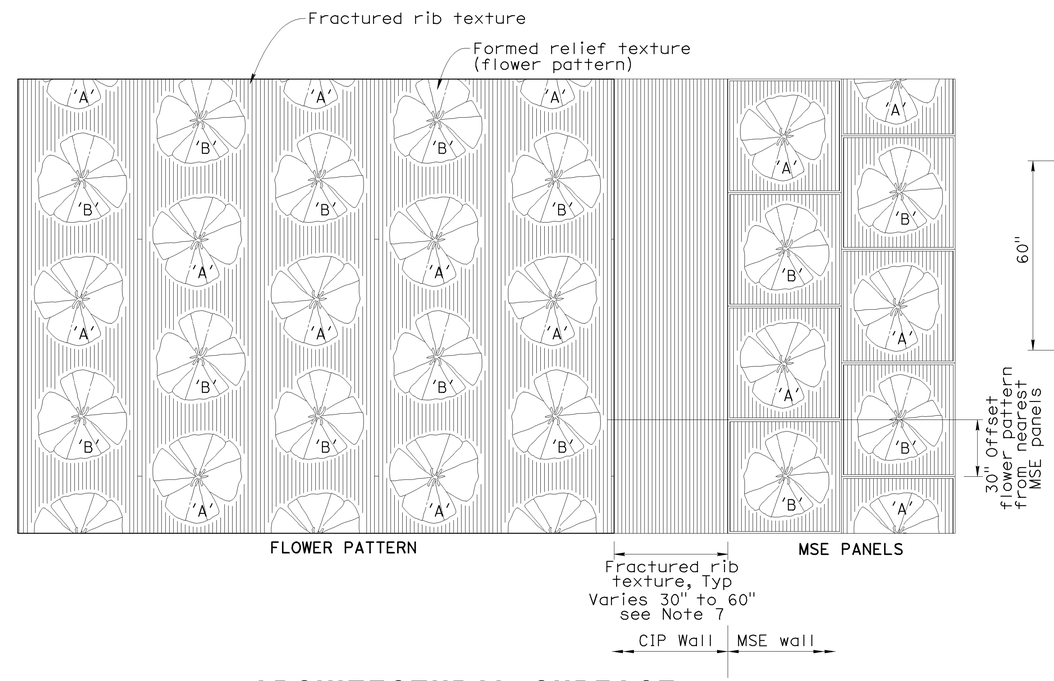


## ARCHITECTURAL SURFACE (TEXTURED CONCRETE) ELEVATION

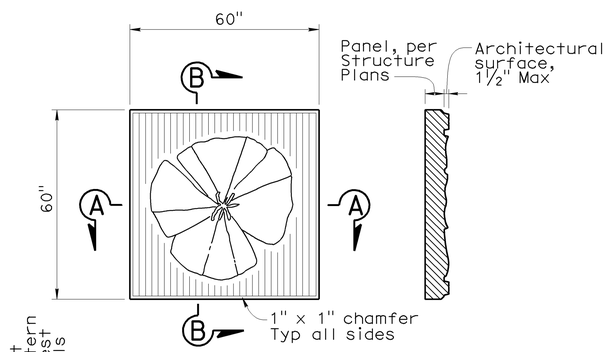


## VIEW

## SECTION B-B

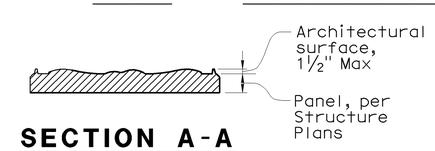


## SECTION A-A

## MSE PANEL

No scale

NOTES:

1. Identical flower images, scale and spacing shall be used for flower pattern and MSE wall panels.
2. Within a vertical column, flower images shall alternate between flowers 'A' and 'B'. Vertical columns shall be offset 30" from adjacent columns.
3. Where placed on walls bounded by concrete barriers, finished grade or top of wall, flower pattern shall be continued without concern for partial flower images, except as noted.
4. Refer to structural details for width of smooth band to be applied at edges of structures.
5. Where the flower pattern will be used adjacent to a horizontal limit such as a bridge abutment, adjoining MSE wall or overhead sign structure support, flower pattern shall be discontinued from a section not less than 30" and not greater than 60" wide from the horizontal limit to avoid truncation of flower images. Fractured rib texture shall be inserted in the resulting gap to create a continuous buffer between pattern areas.
6. The nearest column of flower images (flower pattern) shall be offset vertically 30" from the panels.
7. Vary fractured rib texture width (30" to 60") to provide complete flower pattern on cip wall side.

DESIGN OVERSIGHT — Jon Hamaguchi
6-9-09
SIGN OFF DATE

| | BY | CHECKED |
|---|---|---|
| DESIGN | M. Atiqullah | E. Cutler |
| DETAILS | M. Atiqullah | E. Cutler |
| QUANTITIES | Y. Chiu | B. Ho |

PREPARED FOR THE STATE OF CALIFORNIA DEPARTMENT OF TRANSPORTATION

Ayman Salama
PROJECT ENGINEER

BRIDGE NO. 55E0088
POST MILE 18.46

# SOUND WALL NO. 581

# ARCHITECTURAL TREATMENT DETAILS

DESIGN DETAIL SHEET (ENGLISH) (REV. 2/25/05)

ORIGINAL SCALE IN INCHES FOR REDUCED PLANS 0 1 2 3

CU 12220
EA 0F0321

DISREGARD PRINTS BEARING EARLIER REVISION DATES

REVISION DATES (PRELIMINARY STAGE ONLY) 06/08/09

SHEET 10 OF 12

FILE => 55e0088-u-tarcdt01.dgn

USERNAME => friehard DATE PLOTTED => 25-JAN-2010 TIME PLOTTED => 08:24

| DIST | COUNTY | ROUTE | POST MILES TOTAL PROJECT | SHEET No | TOTAL SHEETS |
|---|---|---|---|---|---|
| 12 | Ora | 57 | 18.4/20.9 | 682 | 856 |

GEOTECHNICAL PROFESSIONAL — DATE 06/08/09

1-25-10
PLANS APPROVAL DATE

REGISTERED PROFESSIONAL ENGINEER — HISHAM M. NOFAL No. 2765 Exp. 09/30/09 GEOTECHNICAL — STATE OF CALIFORNIA

*The State of California or its officers or agents shall not be responsible for the accuracy or completeness of electronic copies of this plan sheet.*

OCTA
550 S. MAIN STREET
ORANGE, CA 92863

CH2M HILL
6 HUTTON CENTRE DRIVE, SUITE 700
SANTA ANA, CA 92707

BENCHMARK:

Horizontal Coordinates are CCS NAD-83, Zone 6.
Vertical control based on North American Vertical Datum 1988.
Pt 1057: N2273578.007, E6066831.271, Elev 294.844

SAMPLER TYPES:

California modified ring sampler
standard penetration test sampler

HAMMER TYPE:

Automatic hammer

CORRECTION FACTOR:

To convert from California modified ring sampler blow count to equivalent standard penetration test sampler blow count, for granular and cohesive soil, multiply by 0.67.

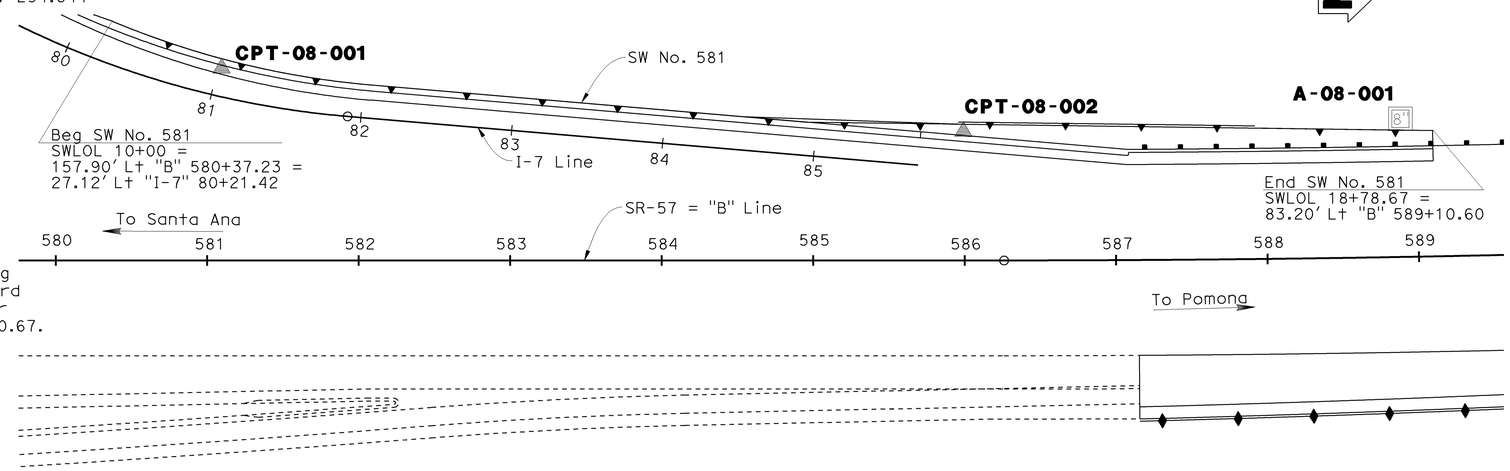


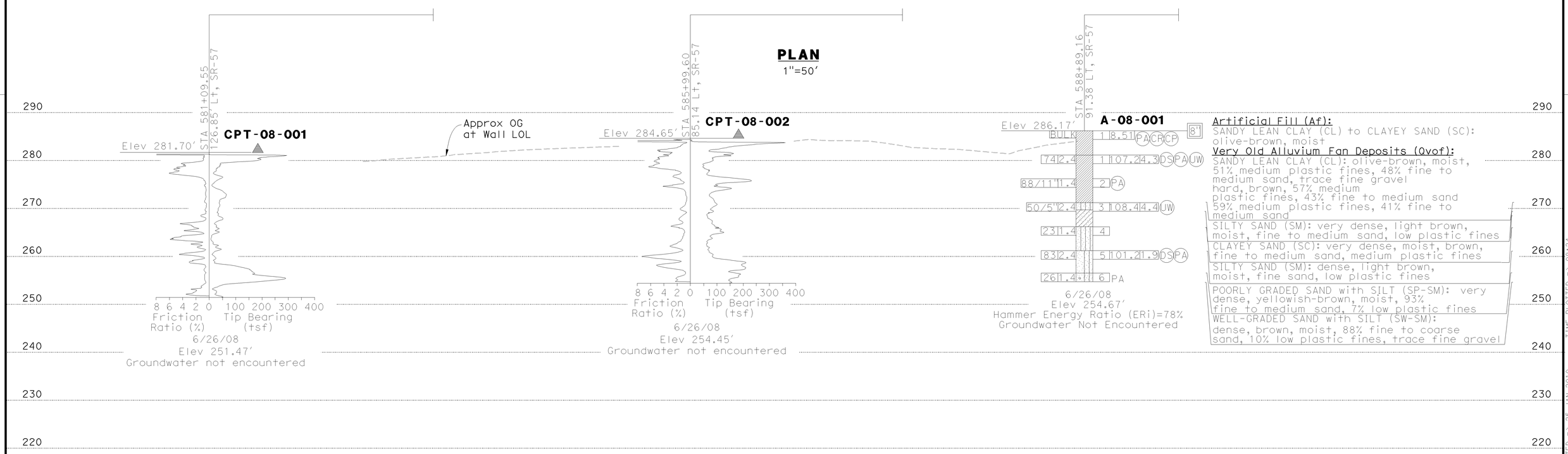


PROFILE
Horz:1"=50'
Vert: 1"=10'

STATIONING ℄ SR-57 = "B" Line

584 585 586 587 588 589 590 591 592 593 594 595 596 597 598 599

| | | | |
|---|---|---|---|
| DESIGN OVERSIGHT Jon Hamaguchi | DRAWN BY | K. Reyes | R. Bethapudi FIELD INVESTIGATION BY: |
| 6-9-09 SIGN OFF DATE | CHECKED BY | H. Nofal | DATE |

PREPARED FOR THE STATE OF CALIFORNIA DEPARTMENT OF TRANSPORTATION

Ayman Salama
PROJECT ENGINEER

BRIDGE NO. 55E0088
POST MILES 18.46

# SOUND WALL No. 581

# LOG OF TEST BORINGS SHEET 1 OF 2

ORIGINAL SCALE IN INCHES FOR REDUCED PLANS 0 1 2 3

CU 12220
EA 0F0321

DISREGARD PRINTS BEARING EARLIER REVISION DATES

REVISION DATES (PRELIMINARY STAGE ONLY) 02/18/09 04/07/09 04/17/09 06/08/09

SHEET 11 OF 12

FILE => 55e0088-z-ltb01.dgn

USERNAME => rtlenord DATE PLOTTED => 25-JAN-2010 TIME PLOTTED => 08:24

| DIST | COUNTY | ROUTE | POST MILES TOTAL PROJECT | SHEET No | TOTAL SHEETS |
|---|---|---|---|---|---|
| 12 | Ora | 57 | 18.4/20.9 | 683 | 856 |

Hisham Nofal 06/08/09
GEOTECHNICAL PROFESSIONAL DATE

1-25-10
PLANS APPROVAL DATE

REGISTERED PROFESSIONAL ENGINEER HISHAM M. NOFAL No. 2765 Exp. 09/30/09 GEOTECHNICAL STATE OF CALIFORNIA

*The State of California or its officers or agents shall not be responsible for the accuracy or completeness of electronic copies of this plan sheet.*

OCTA
550 S. MAIN STREET
ORANGE, CA 92863

CH2M HILL
6 HUTTON CENTRE DRIVE, SUITE 700
SANTA ANA, CA 92707

REFERENCE: CALTRANS SOIL & ROCK LOGGING, CLASSIFICATION, AND PRESENTATION MANUAL (JUNE 2007)

## GROUP SYMBOLS AND NAMES

| Graphic/Symbol | Group Names |
|---|---|
| GW | Well-graded GRAVEL<br>Well-graded GRAVEL with SAND |
| GP | Poorly graded GRAVEL<br>Poorly graded GRAVEL with SAND |
| GW-GM | Well-graded GRAVEL with SILT<br>Well-graded GRAVEL with SILT and SAND |
| GW-GC | Well-graded GRAVEL with CLAY (or SILTY CLAY)<br>Well-graded GRAVEL with CLAY and SAND (or SILTY CLAY and SAND) |
| GP-GM | Poorly graded GRAVEL with SILT<br>Poorly graded GRAVEL with SILT and SAND |
| GP-GC | Poorly graded GRAVEL with CLAY (or SILTY CLAY)<br>Poorly graded GRAVEL with CLAY and SAND (or SILTY CLAY and SAND) |
| GM | SILTY GRAVEL<br>SILTY GRAVEL with SAND |
| GC | CLAYEY GRAVEL<br>CLAYEY GRAVEL with SAND |
| GC-GM | SILTY, CLAYEY GRAVEL<br>SILTY, CLAYEY GRAVEL with SAND |
| SW | Well-graded SAND<br>Well-graded SAND with GRAVEL |
| SP | Poorly graded SAND<br>Poorly graded SAND with GRAVEL |
| SW-SM | Well-graded SAND with SILT<br>Well-graded SAND with SILT and GRAVEL |
| SW-SC | Well-graded SAND with CLAY (or SILTY CLAY)<br>Well-graded SAND with CLAY and GRAVEL (or SILTY CLAY and GRAVEL) |
| SP-SM | Poorly graded SAND with SILT<br>Poorly graded SAND with SILT and GRAVEL |
| SP-SC | Poorly graded SAND with CLAY (or SILTY CLAY)<br>Poorly graded SAND with CLAY and GRAVEL (or SILTY CLAY and GRAVEL) |
| SM | SILTY SAND<br>SILTY SAND with GRAVEL |
| SC | CLAYEY SAND<br>CLAYEY SAND with GRAVEL |
| SC-SM | SILTY, CLAYEY SAND<br>SILTY, CLAYEY SAND with GRAVEL |
| PT | PEAT |
| | COBBLES<br>COBBLES and BOULDERS<br>BOULDERS |

| Graphic/Symbol | Group Names |
|---|---|
| CL | Lean CLAY<br>Lean CLAY with SAND<br>Lean CLAY with GRAVEL<br>SANDY lean CLAY<br>SANDY lean CLAY with GRAVEL<br>GRAVELLY lean CLAY<br>GRAVELLY lean CLAY with SAND |
| CL-ML | SILTY CLAY<br>SILTY CLAY with SAND<br>SILTY CLAY with GRAVEL<br>SANDY SILTY CLAY<br>SANDY SILTY CLAY with GRAVEL<br>GRAVELLY SILTY CLAY<br>GRAVELLY SILTY CLAY with SAND |
| ML | SILT<br>SILT with SAND<br>SILT with GRAVEL<br>SANDY SILT<br>SANDY SILT with GRAVEL<br>GRAVELLY SILT<br>GRAVELLY SILT with SAND |
| OL | ORGANIC lean CLAY<br>ORGANIC lean CLAY with SAND<br>ORGANIC lean CLAY with GRAVEL<br>SANDY ORGANIC lean CLAY<br>SANDY ORGANIC lean CLAY with GRAVEL<br>GRAVELLY ORGANIC lean CLAY<br>GRAVELLY ORGANIC lean CLAY with SAND |
| OL | ORGANIC SILT<br>ORGANIC SILT with SAND<br>ORGANIC SILT with GRAVEL<br>SANDY ORGANIC SILT<br>SANDY ORGANIC SILT with GRAVEL<br>GRAVELLY ORGANIC SILT<br>GRAVELLY ORGANIC SILT with SAND |
| CH | Fat CLAY<br>Fat CLAY with SAND<br>Fat CLAY with GRAVEL<br>SANDY fat CLAY<br>SANDY fat CLAY with GRAVEL<br>GRAVELLY fat CLAY<br>GRAVELLY fat CLAY with SAND |
| MH | Elastic SILT<br>Elastic SILT with SAND<br>Elastic SILT with GRAVEL<br>SANDY elastic SILT<br>SANDY elastic SILT with GRAVEL<br>GRAVELLY elastic SILT<br>GRAVELLY elastic SILT with SAND |
| OH | ORGANIC fat CLAY<br>ORGANIC fat CLAY with SAND<br>ORGANIC fat CLAY with GRAVEL<br>SANDY ORGANIC fat CLAY<br>SANDY ORGANIC fat CLAY with GRAVEL<br>GRAVELLY ORGANIC fat CLAY<br>GRAVELLY ORGANIC fat CLAY with SAND |
| OH | ORGANIC elastic SILT<br>ORGANIC elastic SILT with SAND<br>ORGANIC elastic SILT with GRAVEL<br>SANDY ORGANIC elastic SILT<br>SANDY ORGANIC elastic SILT with GRAVEL<br>GRAVELLY ORGANIC elastic SILT<br>GRAVELLY ORGANIC elastic SILT with SAND |
| OL/OH | ORGANIC SOIL<br>ORGANIC SOIL with SAND<br>ORGANIC SOIL with GRAVEL<br>SANDY ORGANIC SOIL<br>SANDY ORGANIC SOIL with GRAVEL<br>GRAVELLY ORGANIC SOIL<br>GRAVELLY ORGANIC SOIL with SAND |

## FIELD AND LABORATORY TESTING

- (C) Consolidation (ASTM D 2435)
- (CL) Collapse Potential (ASTM D 5333)
- (CP) Compaction Curve (CTM 216)
- (CR) Corrosivity Testing (CTM 643, CTM 422, CTM 417)
- (CU) Consolidated Undrained Triaxial (ASTM D 4767)
- (DS) Direct Shear (ASTM D 3080)
- (EI) Expansion Index (ASTM D 4829)
- (M) Moisture Content (ASTM D 2216)
- (OC) Organic Content-% (ASTM D 2974)
- (P) Permeability (CTM 220)
- (PA) Particle Size Analysis (ASTM D 422)
- (PI) Plasticity Index (AASHTO T 90) Liquid Limit (AASHTO T 89)
- (PL) Point Load Index (ASTM D 5731)
- (PM) Pressure Meter
- (PP) Pocket Penetrometer
- (R) R-Value (CTM 301)
- (SE) Sand Equivalent (CTM 217)
- (SG) Specific Gravity (AASHTO T 100)
- (SL) Shrinkage Limit (ASTM D 427)
- (SW) Swell Potential (ASTM D 4546)
- (TV) Pocket Torvane
- (UC) Unconfined Compression-Soil (ASTM D 2166) Unconfined Compression-Rock (ASTM D 2938)
- (UU) Unconsolidated Undrained Triaxial (ASTM D 2850)
- (UW) Unit Weight (ASTM D 4767)
- (VS) Vane Shear (AASHTO T 223)

## APPARENT DENSITY OF COHESIONLESS SOILS

| Description | SPT $N_{60}$ (Blows / 12 inches) |
|---|---|
| Very loose | 0 - 4 |
| Loose | 5 - 10 |
| Medium Dense | 11 - 30 |
| Dense | 31 - 50 |
| Very Dense | > 50 |

## MOISTURE

| Description | Criteria |
|---|---|
| Dry | Absence of moisture, dusty, dry to the touch |
| Moist | Damp but no visible water |
| Wet | Visible free water, usually soil is below water table |

## PERCENT OR PROPORTION OF SOILS

| Description | Criteria |
|---|---|
| Trace | Particles are present but estimated to be less than 5% |
| Few | 5 to 10% |
| Little | 15 to 25% |
| Some | 30 to 45% |
| Mostly | 50 to 100% |

## PARTICLE SIZE

| Description | | Size |
|---|---|---|
| Boulder | | > 12" |
| Cobble | | 3" to 12" |
| Gravel | Coarse | 3/4" to 3" |
| | Fine | No. 4 to 3/4" |
| Sand | Coarse | No. 10 to No. 4 |
| | Medium | No. 40 to No. 10 |
| | Fine | No. 200 to No. 40 |

## CEMENTATION

| Description | Criteria |
|---|---|
| Weak | Crumbles or breaks with handling or little finger pressure. |
| Moderate | Crumbles or breaks with considerable finger pressure. |
| Strong | Will not crumble or break with finger pressure. |

## CONSISTENCY OF COHESIVE SOILS

| Description | Unconfined Compressive Strength (tsf) | Pocket Penetrometer Measurement (tsf) | Torvane Measurement (tsf) | Field Approximation |
|---|---|---|---|---|
| Very Soft | < 0.25 | < 0.25 | < 0.12 | Easily penetrated several inches by fist |
| Soft | 0.25 to 0.50 | 0.25 to 0.50 | 0.12 to 0.25 | Easily penetrated several inches by thumb |
| Medium Stiff | 0.50 to 1.0 | 0.50 to 1.0 | 0.25 to 0.50 | Penetrated several inches by thumb with moderate effort |
| Stiff | 1 to 2 | 1 to 2 | 0.50 to 1.0 | Readily indented by thumb but penetrated only with great effort |
| Very Stiff | 2 to 4 | 2 to 4 | 1.0 to 2.0 | Readily indented by thumbnail |
| Hard | > 4.0 | > 4.0 | > 2.0 | Indented by thumbnail with difficulty |

## PLASTICITY OF FINE-GRAINED SOILS

| Description | Criteria |
|---|---|
| Nonplastic | A 1/8-inch thread cannot be rolled at any water content. |
| Low | The thread can barely be rolled and the lump cannot be formed when drier than the plastic limit. |
| Medium | The thread is easy to roll and not much time is required to reach the plastic limit. The thread cannot be rerolled after reaching the plastic limit. The lump crumbles when drier than the plastic limit. |
| High | It takes considerable time rolling and kneading to reach the plastic limit. The thread can be rerolled several times after reaching the plastic limit. The lump can be formed without crumbling when drier than the plastic limit. |

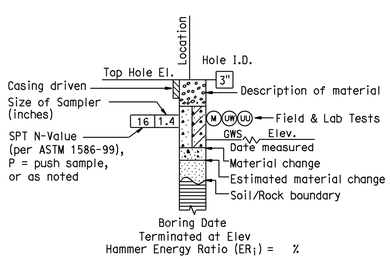


**ROTARY BORING**

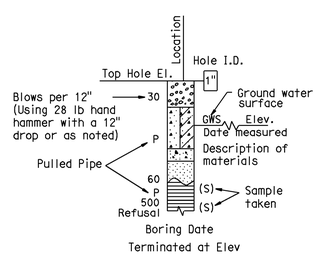


**HAND BORING**

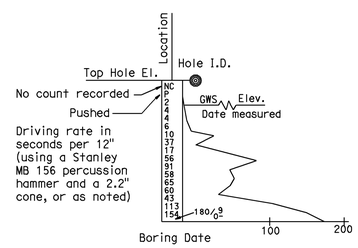


**DYNAMIC CONE PENETRATION BORING**

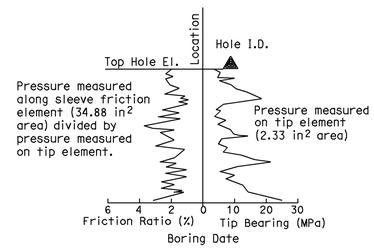


**CONE PENETRATION TEST (CPT) SOUNDING**

## BOREHOLE IDENTIFICATION

| Symbol | Hole Type | Description |
|---|---|---|
| Size | A | Auger Boring |
| Size | R<br>P | Rotary drilled boring<br>Rotary percussion boring (air) |
| Size HQ | R | Rotary drilled diamond core |
| Size | HD<br>HA | Hand driven (1-inch soil tube)<br>Hand Auger |
| ● | D | Dynamic Cone Penetration Boring |
| ◕ | B | Hollow Stem Auger Boring (HSA) |
| ▲ | CPT | Cone Penetration Test (ASTM D 5778-95) |
| □ | O | Other |

Note: Size in inches.

Jon Hamaguchi
DESIGN OVERSIGHT Jon Hamaguchi

6-9-09
SIGN OFF DATE

DRAWN BY K. Reyes
CHECKED BY H. Nofal

R. Bethapudi
FIELD INVESTIGATION BY:
DATE

PREPARED FOR THE STATE OF CALIFORNIA DEPARTMENT OF TRANSPORTATION

Ayman Salama
PROJECT ENGINEER

BRIDGE NO. 55E0088
POST MILES 18.46

# SOUND WALL NO. 581
# SOIL LEGEND
# LOG OF TEST BORINGS SHEET 2 OF 2

ORIGINAL SCALE IN INCHES FOR REDUCED PLANS 0 1 2 3

CU 12220
EA 0F0321

DISREGARD PRINTS BEARING EARLIER REVISION DATES

REVISION DATES (PRELIMINARY STAGE ONLY) 02/27/09 04/07/09 04/27/09 06/08/09

SHEET 12 OF 12

FILE => 55e0088-z-1tb02.dgn

USERNAME => trlenard DATE PLOTTED => 25-JAN-2010 TIME PLOTTED => 08:24

| DIST | COUNTY | ROUTE | POST MILES TOTAL PROJECT | SHEET No | TOTAL SHEETS |
|---|---|---|---|---|---|
| 12 | Ora | 57 | 18.4/20.9 | 684 | 856 |

REGISTERED CIVIL ENGINEER 06/08/09 DATE

1-25-10
PLANS APPROVAL DATE

REGISTERED PROFESSIONAL ENGINEER JENNIFER L. ELWOOD No. C64034 Exp. 9/30/10 CIVIL STATE OF CALIFORNIA

*The State of California or its officers or agents shall not be responsible for the accuracy or completeness of electronic copies of this plan sheet.*

OCTA
550 S. MAIN STREET
ORANGE, CA 92863

CH2M HILL
6 HUTTON CENTRE DRIVE, SUITE 700
SANTA ANA, CA 92707

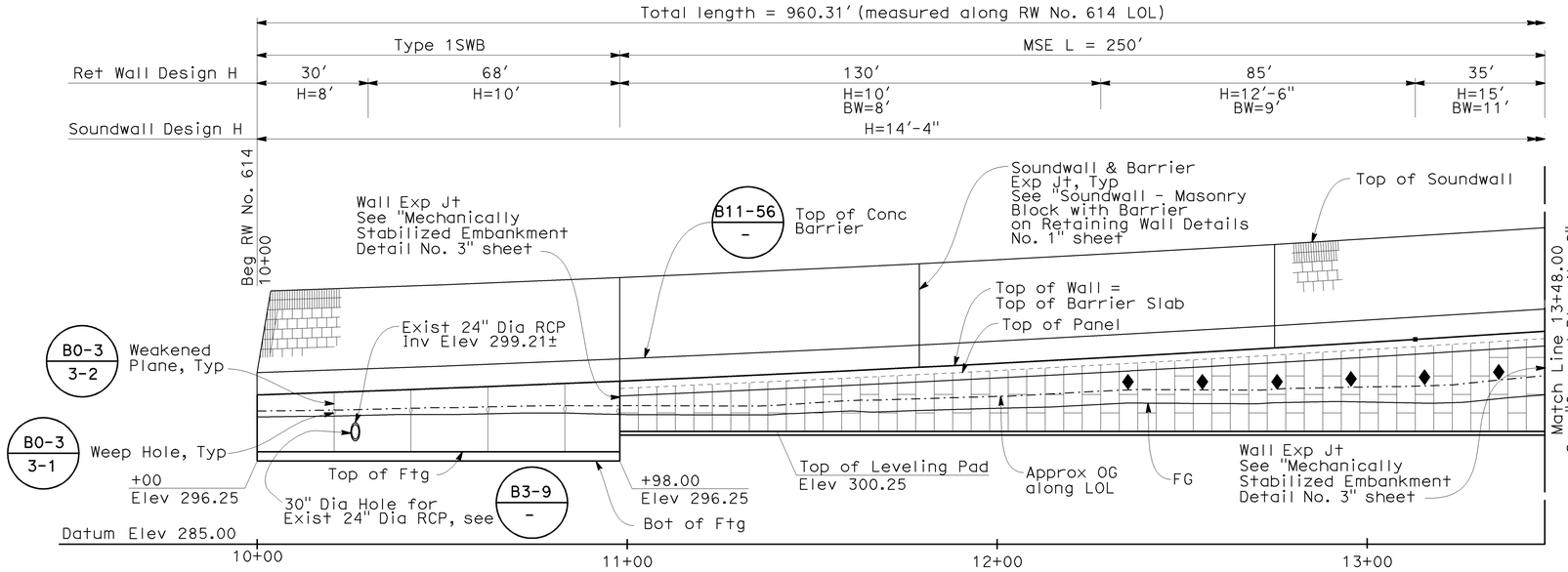


## ELEVATION

Horiz 1"=20′
Vert 1"=10′

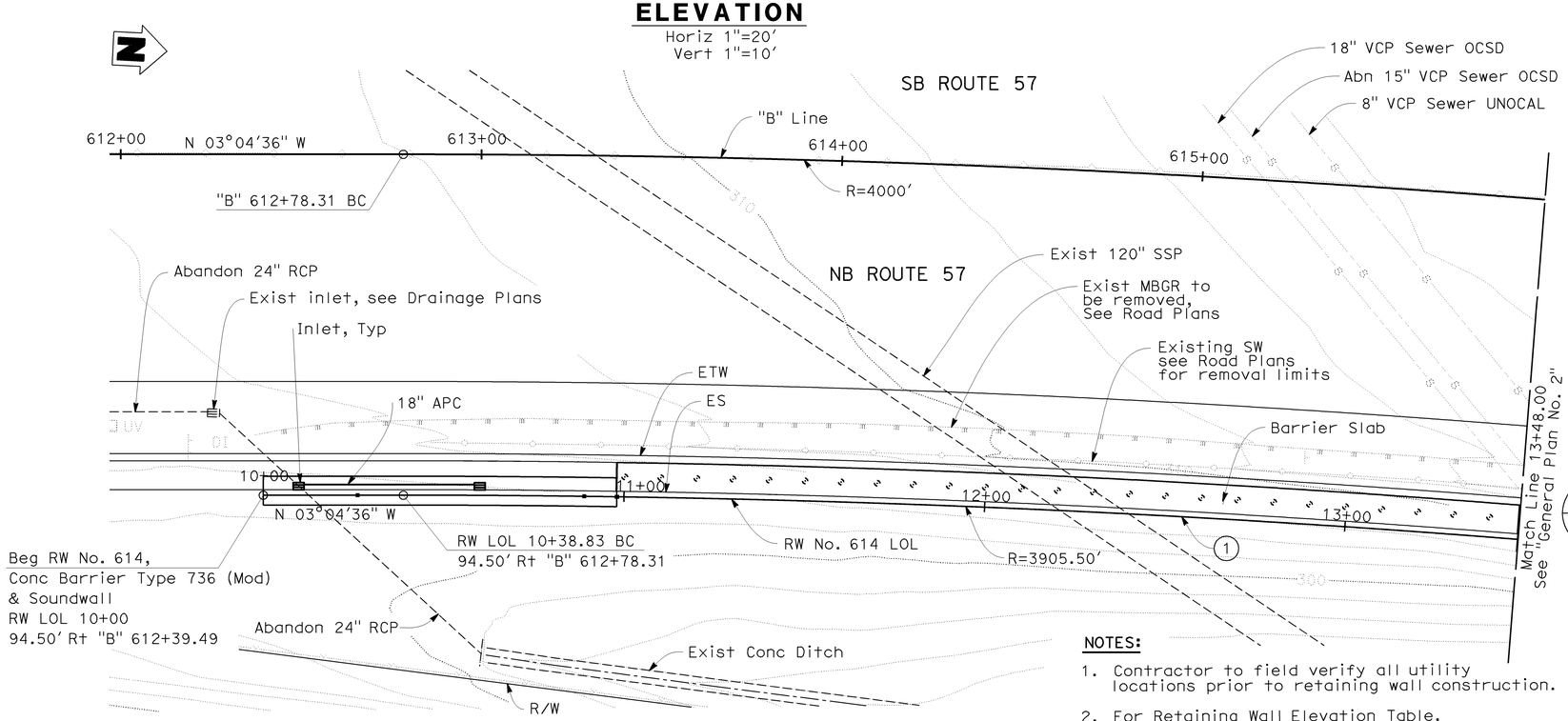


## PLAN

1"=20′

### CURVE DATA

| NO | R | Δ | T | L |
|---|---|---|---|---|
| 1 | 3905.50′ | 09°12′51" | 314.72′ | 628.07′ |

**LEGEND:**

◆ Indicates Inspection Wire, for details see "Mechanically Stabilized Embankment Details No. 3" sheet.

## INDEX TO PLANS


| SHEET NO. | TITLE |
|---|---|
| 1. | GENERAL PLAN NO. 1 |
| 2. | GENERAL PLAN NO. 2 |
| 3. | GENERAL PLAN NO. 3 |
| 4. | TYPICAL SECTIONS |
| 5. | RETAINING WALL TYPE 1SW |
| 6. | RETAINING WALL TYPE 1SWB |
| 7. | RETAINING WALL DETAILS |
| 8. | CONCRETE BARRIER TRANSITION DETAILS |
| 9. | MECHANICALLY STABILIZED EMBANKMENT DETAIL NO. 1 |
| 10. | MECHANICALLY STABILIZED EMBANKMENT DETAIL NO. 2 |
| 11. | MECHANICALLY STABILIZED EMBANKMENT DETAIL NO. 3 |
| 12. | MECHANICALLY STABILIZED EMBANKMENT DETAIL NO. 5 |
| 13. | MECHANICALLY STABILIZED EMBANKMENT DETAIL NO. 6 |
| 14. | SOUNDWALL ON RETAINING WALL - MASONRY BLOCK DETAILS NO. 1 |
| 15. | SOUNDWALL ON RETAINING WALL - MASONRY BLOCK DETAILS NO. 2 |
| 16. | SOUNDWALL - MASONRY BLOCK WITH BARRIER ON RETAINING WALL DETAILS NO. 1 |
| 17. | SOUNDWALL - MASONRY BLOCK WITH BARRIER ON RETAINING WALL DETAILS NO. 2 |
| 18. | SOUNDWALL MASONRY BLOCK MISCELLANEOUS DETAILS |
| 19. | ARCHITECTURAL TREATMENT DETAILS |
| 20. | LOG OF TEST BORINGS SHEET 1 OF 2 |
| 21. | LOG OF TEST BORINGS SHEET 2 OF 2 |


## STANDARD PLANS DATED MAY 2006

| | |
|---|---|
| A10A | ACRONYMS AND ABBREVIATIONS (SHEET 1 OF 2) |
| A10B | ACRONYMS AND ABBREVIATIONS (SHEET 2 OF 2) |
| A10C | SYMBOLS (SHEET 1 OF 2) |
| A10D | SYMBOLS (SHEET 2 OF 2) |
| A76A | CONCRETE BARRIER TYPE 60 |
| B0-3 | BRIDGE DETAILS |
| B3-8 | RETAINING WALL DETAILS NO. 1 |
| B3-9 | RETAINING WALL DETAILS NO. 2 |
| B11-47 | CABLE RAILING |
| B11-56 | CONCRETE BARRIER TYPE 736 |
| D102 | UNDERDRAINS |

Standard Plan Sheet No.

Detail No.

RETAINING WALL NO 614

| QUANTITIES | | |
|---|---|---|
| STRUCTURE EXCAVATION (RETAINING WALL) | 2,020 | CY |
| STRUCTURE EXCAVATION (TYPE Y-1) (AERIALLY DEPOSITED LEAD) | 101 | CY |
| STRUCTURE BACKFILL (RETAINING WALL) | 1,525 | CY |
| EARTH RETAINING STRUCTURE (MECHANICALLY STABILIZED EARTH WALL) | 6,250 | SQFT |
| 18" CAST-IN-DRILLED-HOLE CONCRETE PILING | 1,418 | LF |
| STRUCTURAL CONCRETE, RETAINING WALL | 447 | CY |
| STRUCTURAL CONCRETE, BARRIER SLAB | 317 | CY |
| FORMED RELIEF TEXTURE (FLOWERED PATTERN) | 1,310 | SQFT |
| FRACTURED RIB TEXTURE | 2,775 | SQFT |
| SOUND WALL (BARRIER)(MASONRY BLOCK) | 8,549 | SQFT |
| SOUND WALL (MASONRY BLOCK) | 1,403 | SQFT |
| BAR REINFORCING STEEL (RETAINING WALL) | 45,900 | LB |
| MINOR CONCRETE (MISCELLANEOUS CONSTRUCTION) | 7 | CY |
| CABLE RAILING | 20 | LF |
| CONCRETE BARRIER (TYPE 60D) | 206 | LF |
| CONCRETE BARRIER (TYPE 736 MODIFIED) | 755 | LF |

**NOTES:**

1. Contractor to field verify all utility locations prior to retaining wall construction.
2. For Retaining Wall Elevation Table, see "Retaining Wall Details" sheet.
3. For Typical Sections, see "Typical Sections" sheet.
4. For Drainage System & Details, see Drainage Plans.

DESIGN OVERSIGHT Jon Hamaguchi
8-31-09
SIGN OFF DATE

| | BY | CHECKED |
|---|---|---|
| DESIGN | J. Elwood | D. Sun |
| DETAILS | J. Elwood | D. Sun |
| QUANTITIES | B. Ho | L. Ros |

| | BY | CHECKED |
|---|---|---|
| LRFD | LIVE LOADING: HL-93 AND PERMIT (P-15) DESIGN LOAD | |
| LAYOUT | P. Walker | M. Atiqullah |
| SPECIFICATIONS | M. Remolador | PLANS AND SPECS COMPARED M. Atiqullah |

PREPARED FOR THE STATE OF CALIFORNIA DEPARTMENT OF TRANSPORTATION

Ayman Salama
PROJECT ENGINEER

BRIDGE NO. 55E0089
POST MILES 19.06

# RETAINING WALL NO. 614
# GENERAL PLAN NO. 1

DESIGN GENERAL PLAN SHEET (ENGLISH) (REV. 2/25/05)

ORIGINAL SCALE IN INCHES FOR REDUCED PLANS 0 1 2 3

CU 12220
EA 0F0321

DISREGARD PRINTS BEARING EARLIER REVISION DATES

REVISION DATES (PRELIMINARY STAGE ONLY) 02/18/09 04/07/09 04/17/09 06/08/09

SHEET 1 OF 21

FILE => 55e0089-a-gp01.dgn

USERNAME => friehard DATE PLOTTED => 25-JAN-2010 TIME PLOTTED => 08:24

| DIST | COUNTY | ROUTE | POST MILES TOTAL PROJECT | SHEET No | TOTAL SHEETS |
|---|---|---|---|---|---|
| 12 | Ora | 57 | 18.4/20.9 | 685 | 856 |

REGISTERED CIVIL ENGINEER 06/08/09 DATE

1-25-10
PLANS APPROVAL DATE

REGISTERED PROFESSIONAL ENGINEER JENNIFER L. ELWOOD No. C64034 Exp. 9/30/10 CIVIL STATE OF CALIFORNIA

*The State of California or its officers or agents shall not be responsible for the accuracy or completeness of electronic copies of this plan sheet.*

OCTA
550 S. MAIN STREET
ORANGE, CA 92863

CH2M HILL
6 HUTTON CENTRE DRIVE, SUITE 700
SANTA ANA, CA 92707

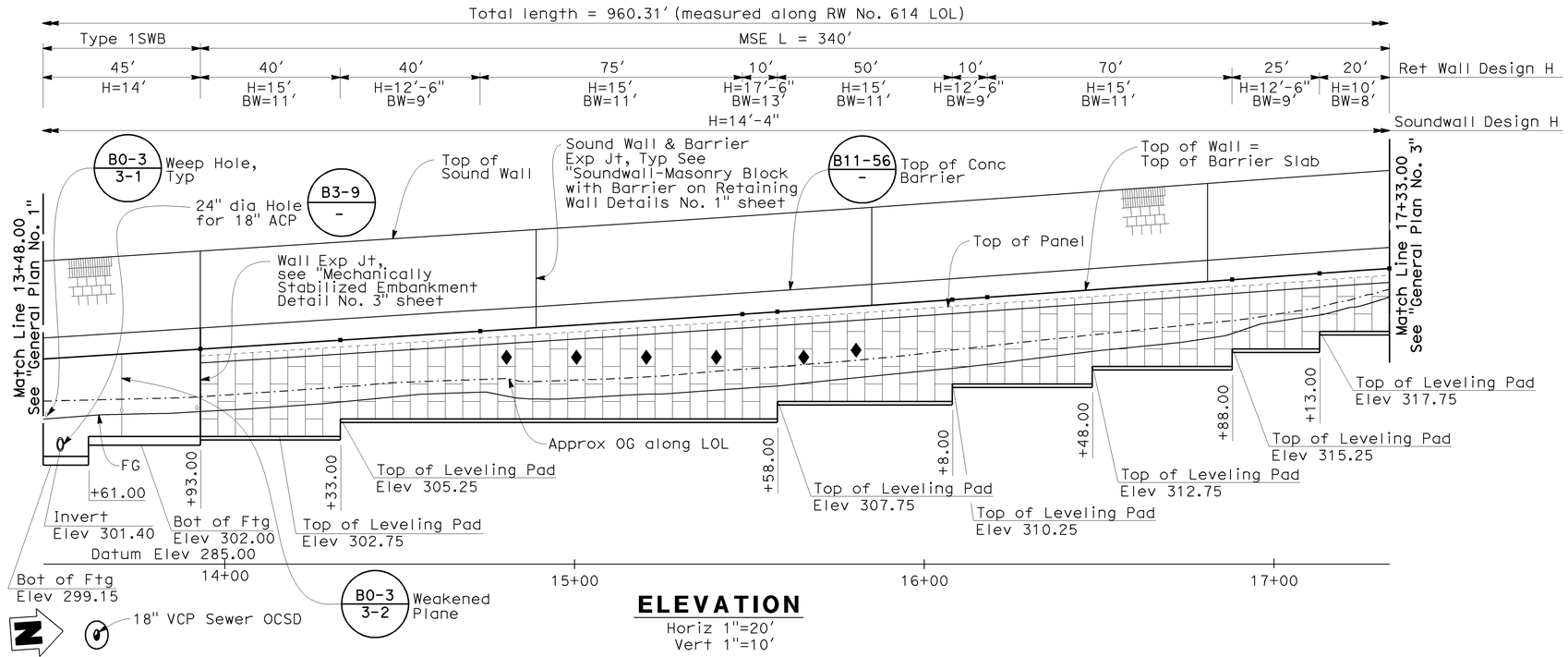


## ELEVATION

Horiz 1"=20'
Vert 1"=10'

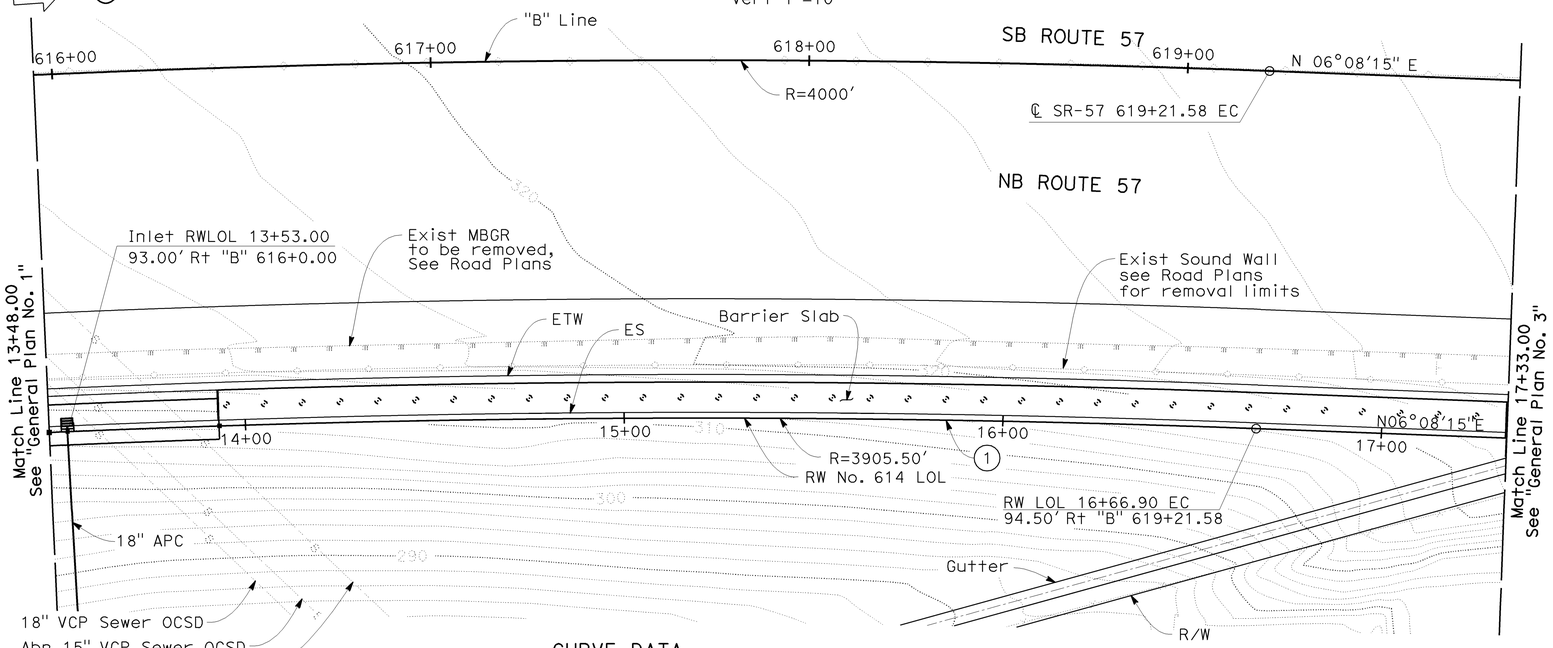


## PLAN

1"=20'

CURVE DATA

| NO | R | Δ | T | L |
|---|---|---|---|---|
| 1 | 3905.50' | 09°12'51" | 314.72' | 628.07' |

NOTE:

1. For General Notes and Legend, see "General Plan No. 1" sheet.

| | | | | | | | |
|---|---|---|---|---|---|---|---|
| DESIGN OVERSIGHT Jon Hamaguchi 6-9-09 SIGN OFF DATE | DESIGN | BY J. Elwood | CHECKED D. Sun | LRFD | LIVE LOADING: HL-93 AND PERMIT (P-15) DESIGN LOAD | | |
| | DETAILS | BY J. Elwood | CHECKED D. Sun | LAYOUT | BY P. Walker | CHECKED M. Atiqullah | |
| | QUANTITIES | BY B. Ho | CHECKED L. Ros | SPECIFICATIONS | BY M. Remolador | PLANS AND SPECS COMPARED M. Atiqullah | |

PREPARED FOR THE STATE OF CALIFORNIA DEPARTMENT OF TRANSPORTATION

Ayman Salama
PROJECT ENGINEER

BRIDGE NO. 55E0089
POST MILES 19.06

# RETAINING WALL NO. 614
# GENERAL PLAN NO. 2

DESIGN GENERAL PLAN SHEET (ENGLISH) (REV. 2/25/05)

ORIGINAL SCALE IN INCHES FOR REDUCED PLANS 0 1 2 3

CU 12220
EA 0F0321

DISREGARD PRINTS BEARING EARLIER REVISION DATES

REVISION DATES (PRELIMINARY STAGE ONLY) 02/18/09 04/07/09 04/17/09 06/08/09

SHEET 2 OF 20

FILE => 55e0089-a-gp02.dgn

USERNAME => trlenard DATE PLOTTED => 25-JAN-2010 TIME PLOTTED => 08:24

| DIST | COUNTY | ROUTE | POST MILES TOTAL PROJECT | SHEET No | TOTAL SHEETS |
|---|---|---|---|---|---|
| 12 | Ora | 57 | 18.4/20.9 | 686 | 856 |

REGISTERED CIVIL ENGINEER 06/08/09 DATE

1-25-10
PLANS APPROVAL DATE

REGISTERED PROFESSIONAL ENGINEER JENNIFER L. ELWOOD No. C64034 Exp. 9/30/10 CIVIL STATE OF CALIFORNIA

*The State of California or its officers or agents shall not be responsible for the accuracy or completeness of electronic copies of this plan sheet.*

OCTA
550 S. MAIN STREET
ORANGE, CA 92863

CH2M HILL
6 HUTTON CENTRE DRIVE, SUITE 700
SANTA ANA, CA 92707

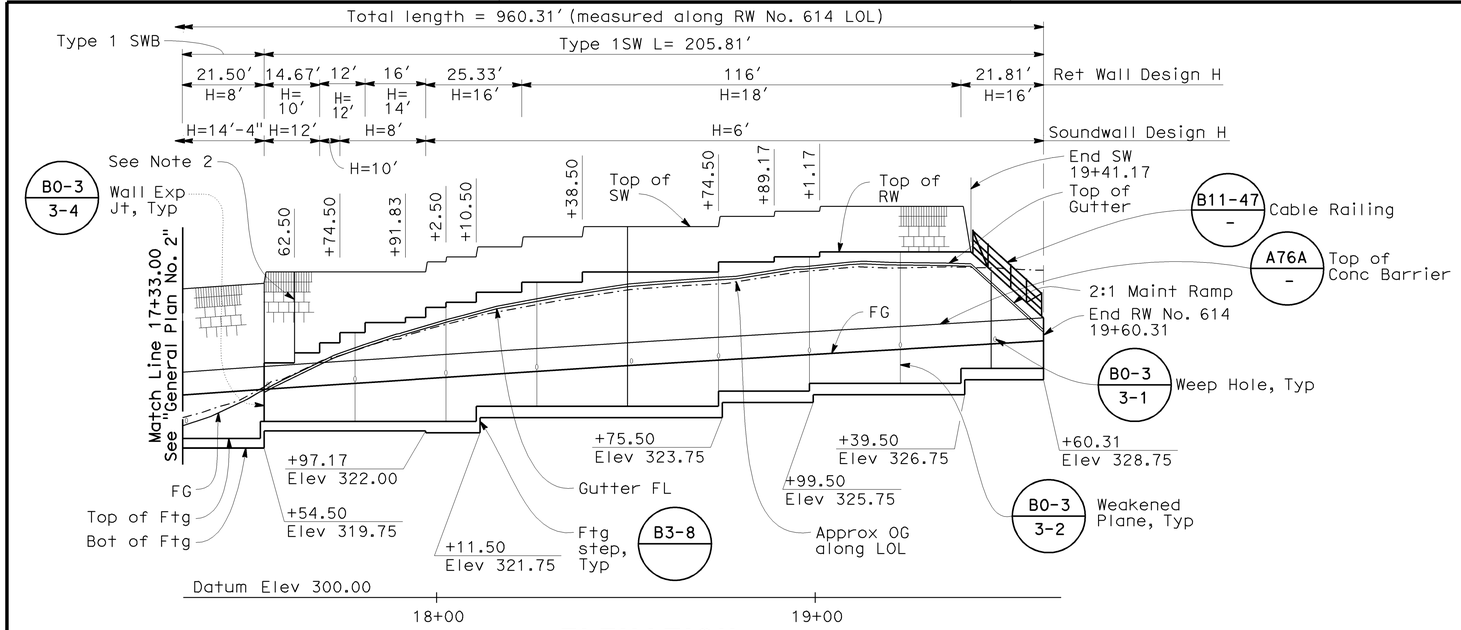


## ELEVATION

Horiz 1″=20′
Vert 1″=10′

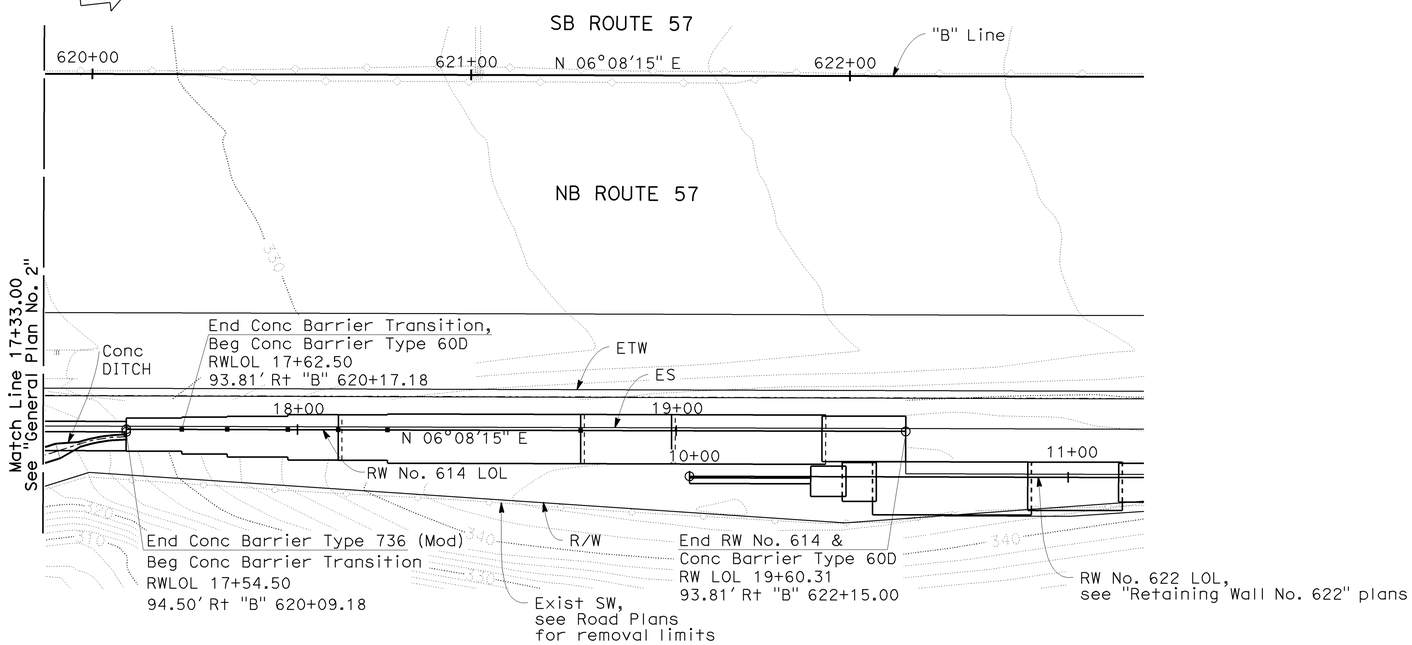


## PLAN

1″=20′

**NOTE:**

1. For General Notes, see "General Plan No. 1" sheet.
2. Exp Jt in Soundwall only, see "Concrete Barrier Transition Detail" sheet.

| | | | | | | | |
|---|---|---|---|---|---|---|---|
| DESIGN OVERSIGHT Jon Hamaguchi 6-9-09 SIGN OFF DATE | DESIGN | BY J. Elwood | CHECKED D. Sun | LRFD | LIVE LOADING: HL-93 AND PERMIT (P-15) DESIGN LOAD | | |
| | DETAILS | BY J. Elwood | CHECKED D. Sun | LAYOUT | BY P. Walker | CHECKED M. Atiqullah | |
| | QUANTITIES | BY B. Ho | CHECKED L. Ros | SPECIFICATIONS | BY M. Remolador | PLANS AND SPECS COMPARED M. Atiqullah | |

DESIGN GENERAL PLAN SHEET (ENGLISH) (REV. 2/25/05)

ORIGINAL SCALE IN INCHES FOR REDUCED PLANS 0 1 2 3

PREPARED FOR THE STATE OF CALIFORNIA DEPARTMENT OF TRANSPORTATION

Ayman Salama
PROJECT ENGINEER

CU 12220
EA 0F0321

BRIDGE NO. 55E0089
POST MILES 19.06

# RETAINING WALL NO. 614
# GENERAL PLAN NO. 3

DISREGARD PRINTS BEARING EARLIER REVISION DATES → REVISION DATES (PRELIMINARY STAGE ONLY) 02/18/09 04/07/09 04/17/09 06/08/09

SHEET 3 OF 21

FILE => 55e0089-a-gp03.dgn

USERNAME => friehard DATE PLOTTED => 25-JAN-2010 TIME PLOTTED => 08:24

| DIST | COUNTY | ROUTE | POST MILES TOTAL PROJECT | SHEET No | TOTAL SHEETS |
|---|---|---|---|---|---|
| 12 | Ora | 57 | 18.4/20.9 | 687 | 856 |

REGISTERED CIVIL ENGINEER 06/08/09 DATE

1-25-10
PLANS APPROVAL DATE

*The State of California or its officers or agents shall not be responsible for the accuracy or completeness of electronic copies of this plan sheet.*

REGISTERED PROFESSIONAL ENGINEER JENNIFER L. ELWOOD No. C64034 Exp. 9/30/10 CIVIL STATE OF CALIFORNIA

OCTA
550 S. MAIN STREET
ORANGE, CA 92863

CH2M HILL
6 HUTTON CENTRE DRIVE, SUITE 700
SANTA ANA, CA 92707

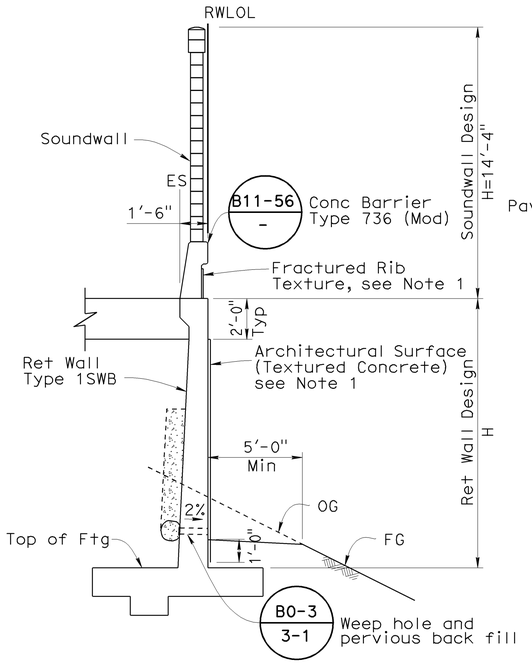


## TYPICAL SECTION

1/4"=1'-0"

Sta 10+00 to 10+98.00
and Sta 13+48.00 to 13+93.00
and Sta 17+33.00 to 17+54.50

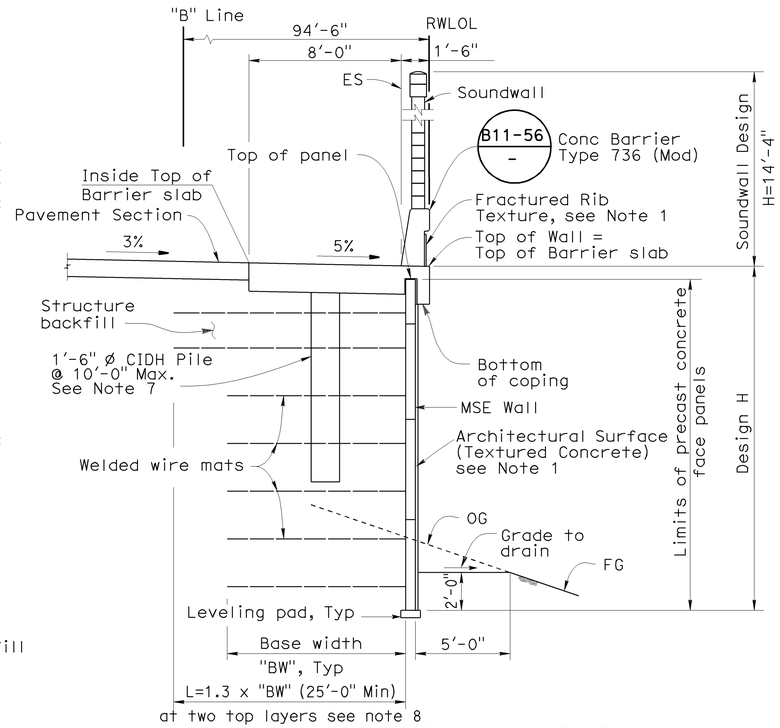


## MSE WALL TYPICAL SECTION

1/4"=1'-0"

Sta 10+98.00 to 13+48.00
and Sta 13+93.00 to 17+33.00

**MSE NOTES:**

1. For design height "H", base width "BW", see "General Plan No.1, No.2, & No.3" sheets. For limits of excavation & backfill, see "Mechanically Stabilized Embankment Details No. 6" sheet.
2. For welded wire mats, see Welded Wire Mat Schedule on "Retaining Wall Details" sheet.
3. For Barrier slab details, see "Mechanically Stabilized Embankment Details No. 5" sheet.
4. For panel details, see "Mechanically Stabilized Embankment Details No. 1" sheet.
5. For General Notes and wire mat details, see "Mechanically Stabilized Embankment Details No. 2" sheet.
6. ◆ Indicates locations of inspection wires. For inspection wire details, see "Mechanically Stabilized Embankment Details No. 3" sheet.
7. Spacing between CIDH Piles is at 10'-0" maximum. Contractor must revise the spacing of CIDH piles before drilling so the pile remains minimum 4'-0" clear from the existing utilities.
8. The MSE Wall Designer/Manufacturer should verify the (BW) value based on additional surcharge applied from the sound wall.

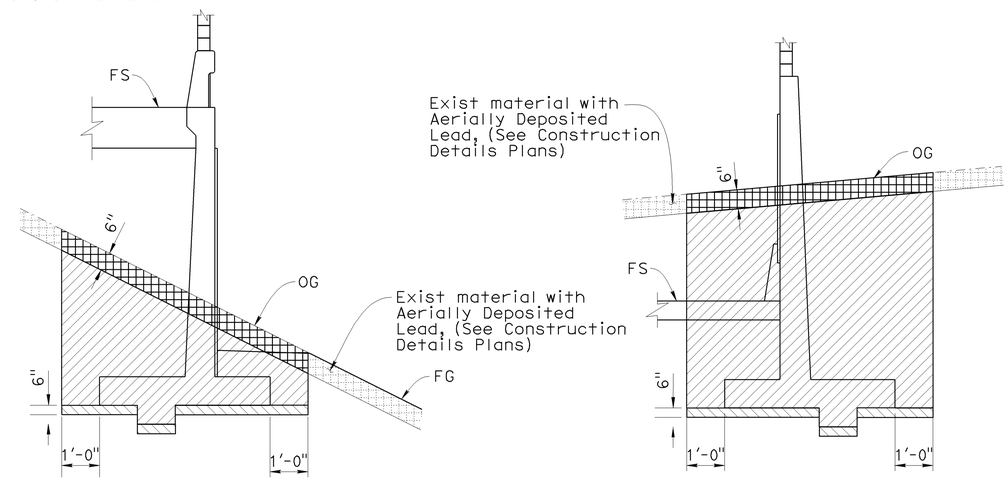


**IN FILL** **IN CUT**

## LIMITS OF PAYMENT OF EXCAVATION FOR RETAINING WALL

No Scale

Note:
For Backfill see Caltrans Standard Plans

**LEGEND**

- Indicates Structure Excavation (Type Y-1) (Aerially Deposited Lead)
- Structure Excavation (Retaining Wall)
- Structure Overexcavation (From Sta 17+33.00 to 19+60.31 only)

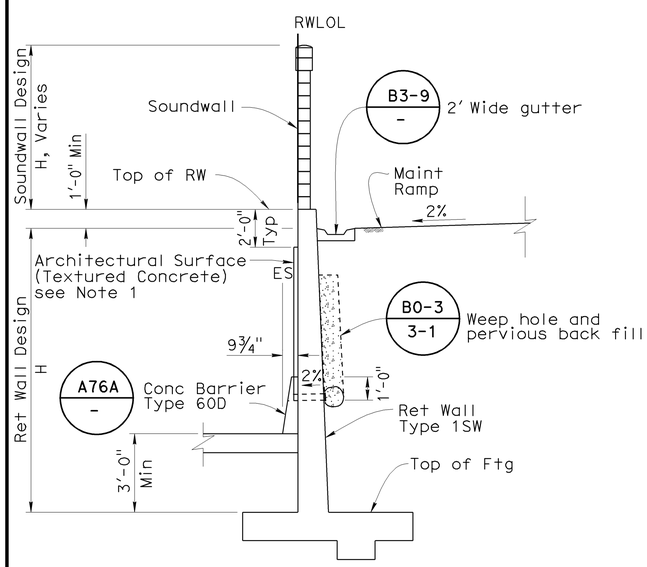


## TYPICAL SECTION

1/4"=1'-0"

Sta 17+54.50 to 19+41.17

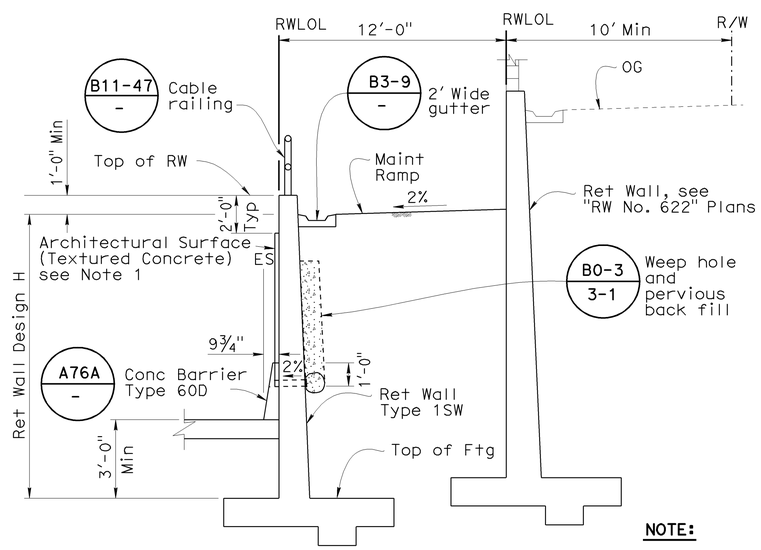


## TYPICAL SECTION

1/4"=1'-0"

Sta 19+41.17 to 19+60.31

**NOTE:**

1. For Fractured Rib Texture and Architectural Surface (Textured Concrete) Details see "Architectural Treatment Details" sheet.

Jon Hamaguchi
DESIGN OVERSIGHT Jon Hamaguchi
8-31-09
SIGN OFF DATE

DESIGN DETAIL SHEET (ENGLISH) (REV. 2/25/05)

| | BY | CHECKED |
|---|---|---|
| DESIGN | J. Elwood | D. Sun |
| DETAILS | P. Walker | D. Sun |
| QUANTITIES | B. Ho | L. Ros |

ORIGINAL SCALE IN INCHES FOR REDUCED PLANS 0 1 2 3

PREPARED FOR THE STATE OF CALIFORNIA DEPARTMENT OF TRANSPORTATION

Ayman Salama
PROJECT ENGINEER

CU 12220
EA 0F0321

BRIDGE NO. 55E0089
POST MILE 19.06

# RETAINING WALL NO. 614
# TYPICAL SECTIONS

DISREGARD PRINTS BEARING EARLIER REVISION DATES

REVISION DATES (PRELIMINARY STAGE ONLY) 02/18/09 04/07/09 04/17/09 06/08/09

SHEET 4 OF 21

FILE => 55e0089-a-ts01.dgn

USERNAME => friehard DATE PLOTTED => 25-JAN-2010 TIME PLOTTED => 08:24

| DIST | COUNTY | ROUTE | POST MILES TOTAL PROJECT | SHEET No | TOTAL SHEETS |
|---|---|---|---|---|---|
| 12 | Ora | 57 | 18.4/20.9 | 688 | 856 |

REGISTERED ENGINEER - CIVIL DATE 06/08/09

1-25-10
PLANS APPROVAL DATE

The State of California or its officers or agents shall not be responsible for the accuracy or completeness of electronic copies of this plan sheet.

REGISTERED PROFESSIONAL ENGINEER JENNIFER L. ELWOOD No. C64034 Exp. 9/30/10 CIVIL STATE OF CALIFORNIA

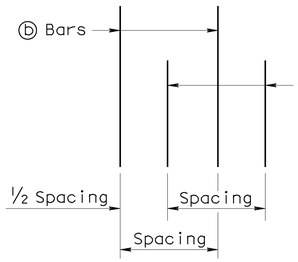


**DETAIL B**
No Scale

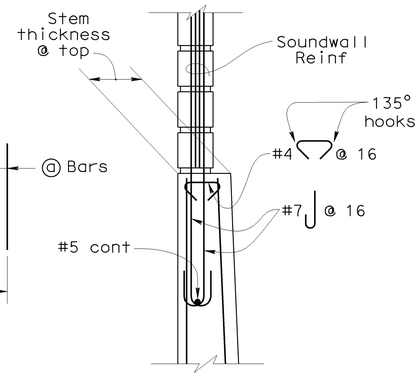


**DETAIL A**
No Scale

## GENERAL NOTES

1. For soundwall and retaining wall architectural finish or texture, see details elsewhere in project plans.
2. For details not shown and drainage notes, see B3-8
3. Footing cover, 1'-6" minimum.
4. Limit of no splicing rebars = 3 times the bottom thickness of the stem.
5. Placement of reinforcements:
   ⓑ & ⓒ bars are spliced together.
   * ⓐ & ⓑ bars are bundled together.
   ** Alternate ⓐ & ⓑ bars are shown in "Detail B".
   Cont = Continuous.
6. For soundwall reinforcements, see "Soundwall Wall Masonry Block" sheets in Standard Plans.

3

| TABLE OF REINFORCING STEEL DIMENSIONS AND DATA | | | | | | |
|---|---|---|---|---|---|---|
| Design H | 10' | 12' | 14' | 16' | 18' | 20' |
| W | 8'-9" | 9'-9" | 10'-9" | 12'-0" | 13'-0" | 14'-3" |
| C | 3'-0" | 3'-3" | 3'-6" | 4'-0" | 4'-3" | 4'-9" |
| B | 5'-9" | 6'-6" | 7'-3" | 8'-0" | 8'-9" | 9'-6" |
| F Spread footing | 1'-3" | 1'-3" | 1'-3" | 1'-6" | 1'-6" | 1'-9" |
| Batter | ½:12 | ½:12 | ½:12 | ½:12 | ½:12 | ½:12 |
| Stem thcknss @ top | 1'-0" | 1'-0" | 1'-0" | 1'-0" | 1'-0" | 1'-0" |
| ⓐ Bars | | #6 @18XX | #7 @18XX | #8 @18XX | #9 @18XX | #10 @18XX |
| X | | Cont | Cont | Cont | Cont | Cont |
| Y | | 8'-0" | 6'-6" | 7'-6" | 8'-6" | 9'-6" |
| ⓑ Bars | #5 @ 9 | #6 @18XX | #7 @18XX | #8 @18XX | #9 @18XX | #10 @18XX |
| X | Cont | Cont | Cont | Cont | Cont | Cont |
| Y | Cont | Cont | 10'-6" | 13'-0" | 15'-0" | 17'-6" |
| ⓒ Bars | | | #6 @18 | #6 @18 | #6 @18 | #6 @18 |
| ⓓ Bars | #5 @12 | #5 @ 9 | #6 @ 9 | #6 @ 9 | #6 @ 6 | #8 @ 9 |
| Ultimate Bearing Capacity Req'd k/sf | 6.1 | 6.6 | 7.3 | 8.1 | 9.0 | 9.9 |

3

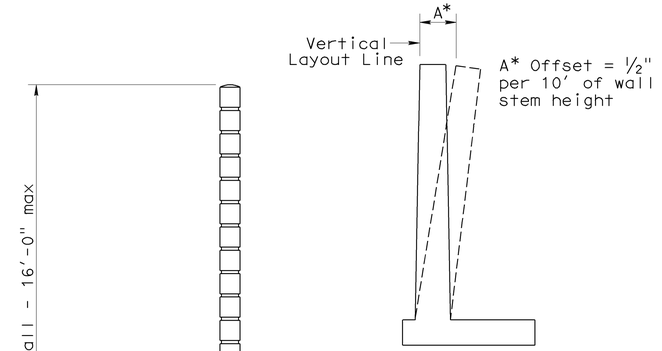


**WALL OFFSET**
No Scale

Values for offsetting forms to be determined by the Engineer

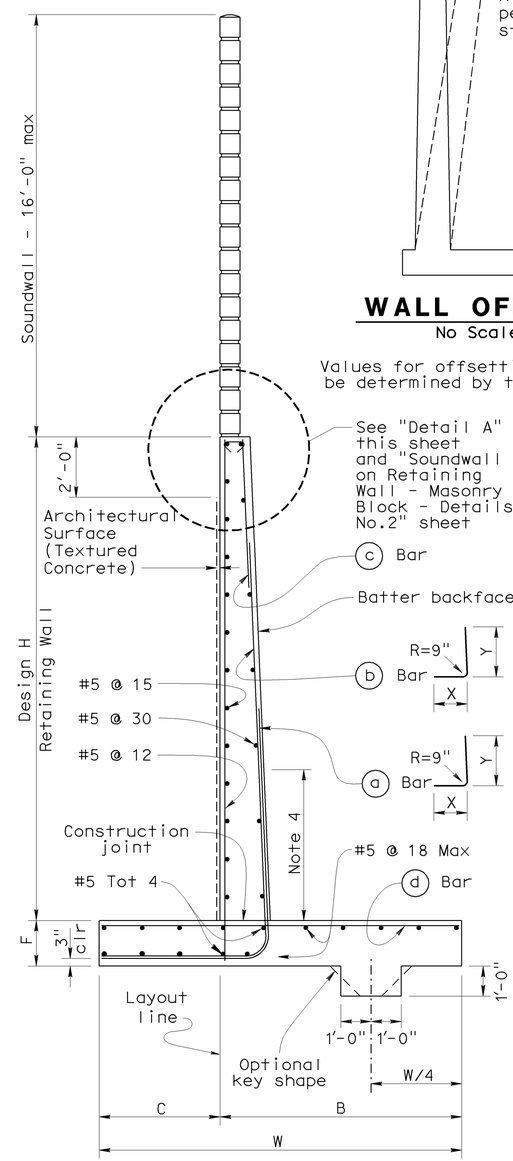


**SPREAD FOOTING SECTION**
No Scale

## DESIGN DATA

DESIGN: Load Factor Design (LFD)

CONCRETE: Reinforced Concrete, f'c = 3600 psi
fy = 60,000 psi

LOADING CASE:
Case 1: Level ground with 240 psf surcharge and 16' Soundwall
Case 2: Sloping ground and 16' Soundwall 2

Seismic Load = 0.57 Dead Load
Wind Load = 33 psf
Dead Load of Soundwall = 1414 lb/ft 1

SEISMIC LOAD: SOIL
Kh = 0.3g
Kv = 0.0
Kae : Mononobe-Okabe Method

SOIL: $\phi$ = 34° $\gamma$ = 120 pcf
Equivalent fluid pressure:
= 36 pcf for determination of toe pressure
= 27 pcf for determination of heel pressure

EXTERNAL STABILITY:
Group 1 : D + E + SC
Group 2 : D + E + SC + W
Group 3 : D + PYM

INTERNAL STABILITY (LFD):
Group A : $\beta$D + 1.7E + 1.7SC
Group B : $\beta$D + 1.7E + 1.3W
Group C (stem) : 1.0D + 1.0E + 1.0EQD + 1.0EQE
Group C (footing) : D + PYM

Where : $\beta$ = 1.0 or 1.3 whichever controls design
D = Dead Load
E = Lateral Earth Pressure
SC = Surcharge
W = Wind load
EQD = Seismic Dead Load
EQE = Seismic Lateral Earth Pressure
PYM = Probable Yield Moment (1.3 x Nominal Yield Moment of Stem)

# SPECIAL DETAILS

STANDARD DRAWING

FILE NO. xs14-210e Revised

APPROVED BY G. WANG, RESPONSIBLE TECHNICAL SPECIALIST
APPROVAL DATE 5-19-08

RELEASED BY ROBERTO LACALLE, RESPONSIBLE OFFICE CHIEF
RELEASE DATE REVISED

1 Revised Seismic and Wind Loads
2 Revised Cases
3 Revised Table

STATE OF CALIFORNIA DEPARTMENT OF TRANSPORTATION

DIVISION OF ENGINEERING SERVICES

BRIDGE NO. 55E0089
POST MILE 19.06

# RETAINING WALL NO. 614
# RETAINING WALL TYPE 1SW

DS OSD 2147A (ENGLISH STANDARD DRAWING "XS" BORDER REV. 01/11/08)

ORIGINAL SCALE IN INCHES FOR REDUCED PLANS 0 1 2 3

CU 12220
EA 0F0321

DISREGARD PRINTS BEARING EARLIER REVISION DATES

REVISION DATES (PRELIMINARY STAGE ONLY) 02/18/09 04/07/09 04/17/09 06/08/09

SHEET 5 OF 21

USERNAME => trlenard

55e0089-g-1SW.dgn

DATE PLOTTED => 25-JAN-2010 TIME PLOTTED => 08:25

| DIST | COUNTY | ROUTE | POST MILES TOTAL PROJECT | SHEET No | TOTAL SHEETS |
|---|---|---|---|---|---|
| 12 | Ora | 57 | 18.4/20.9 | 689 | 856 |

REGISTERED ENGINEER - CIVIL DATE 06/08/09

1-25-10
PLANS APPROVAL DATE

REGISTERED PROFESSIONAL ENGINEER JENNIFER L. ELWOOD No. C64034 Exp. 9/30/10 CIVIL STATE OF CALIFORNIA

The State of California or its officers or agents shall not be responsible for the accuracy or completeness of electronic copies of this plan sheet.

## GENERAL NOTES

1. For soundwall and retaining wall architectural finish or texture, see details elsewhere in project plans.
2. For details not shown and drainage notes, see B3-8
3. Footing cover, 1'-6" minimum.
4. Limit of no splicing rebars = 3 times the bottom thickness of the stem.
5. Placement of reinforcements :
   - ⓑ & ⓒ bars are spliced together.
   - ✳ ⓐ & ⓑ bars are bundled together.
   - ✳✳ Alternate ⓐ & ⓑ bars are shown in "Detail B".
   - Cont = Continuous.
6. For Soundwall & Barrier reinforcement, see "Soundwall Masonry Block on Barriers" sheets in Standard Plans.

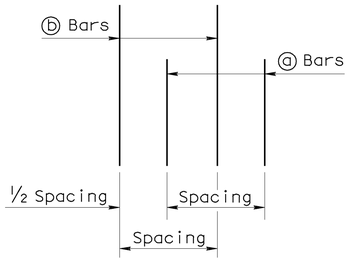


## DETAIL B
No Scale

TABLE 1: TABLE OF REINFORCING STEEL DIMENSIONS AND DATA

| | Stem With Haunch | | | | | | | | | | |
|---|---|---|---|---|---|---|---|---|---|---|---|
| Design H | 6' | 8' | 10' | 12' | 14' | 16' | 18' | 20' | 22' | 24' | 26' |
| W | 7'-9" | 8'-0" | 8'-9" | 9'-9" | 10'-9" | 12'-0" | 13'-0" | 14'-3" | 15'-3" | 16'-6" | 18'-6" |
| C | 2'-9" | 2'-9" | 3'-0" | 3'-3" | 3'-6" | 4'-0" | 4'-3" | 4'-9" | 5'-0" | 5'-6" | 6'-3" |
| B | 5'-0" | 5'-3" | 5'-9" | 6'-6" | 7'-3" | 8'-0" | 8'-9" | 9'-6" | 10'-3" | 11'-0" | 12'-3" |
| F Spread footing | 1'-3" | 1'-3" | 1'-3" | 1'-3" | 1'-3" | 1'-6" | 1'-6" | 1'-9" | 2'-0" | 2'-3" | 2'-9" |
| Batter | 0 | ½ :12 | ½ :12 | ½ :12 | ½ :12 | ½ :12 | ½ :12 | ½ :12 | ½ :12 | ⅝ :12 | ¾ :12 |
| Stem thickn @ Haunch | 1'-0" | 1'-0" | 1'-0" | 1'-0" | 1'-0" | 1'-0" | 1'-0" | 1'-0" | 1'-0" | 1'-0" | 1'-0" |
| ⓐ Bars | | | | #6 @18✳✳ | #7 @18✳✳ | #8 @18✳✳ | #9 @18✳✳ | #10 @18✳✳ | #8 @ 9✳ | #8 @ 9✳ | #7 @ 6✳ |
| X | | | | Cont | Cont | Cont | Cont | Cont | Cont | Cont | Cont |
| Y | | | | 8'-0" | 6'-6" | 7'-6" | 8'-6" | 9'-6" | 9'-6" | 11'-0" | 11'-6" |
| ⓑ Bars | #5 @12 | #5 @12 | #5 @ 9 | #6 @18✳✳ | #7 @18✳✳ | #8 @18✳✳ | #9 @18✳✳ | #10 @18✳✳ | #8 @ 9✳ | #8 @ 9✳ | #7 @ 6✳ |
| X | Cont | Cont | Cont | Cont | Cont | Cont | Cont | Cont | Cont | 5'-6" | 6'-6" |
| Y | Cont | Cont | Cont | Cont | 10'-6" | 13'-0" | 15'-0" | 17'-6" | 19'-6" | 21'-0" | 18'-6" |
| ⓒ Bars | | | | | #6 @18 | #6 @18 | #6 @18 | #6 @18 | #6 @18 | #6 @18 | #6 @12 |
| ⓓ Bars | #5 @12 | #5 @12 | #5 @12 | #5 @ 9 | #6 @ 9 | #6 @ 9 | #6 @ 6 | #8 @ 9 | #8 @ 9 | #8 @ 9 | #7 @ 6 |
| Ultimate Bearing Capacity Req'd k/sf | 4.6 | 5.5 | 6.1 | 6.6 | 7.3 | 8.1 | 9.0 | 9.9 | 11.3 | 12.2 | 12.5 |

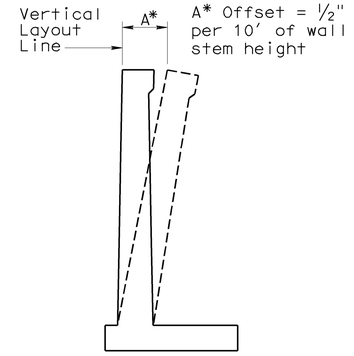


## WALL OFFSET
No Scale

Values for offsetting forms to be determined by the Engineer.

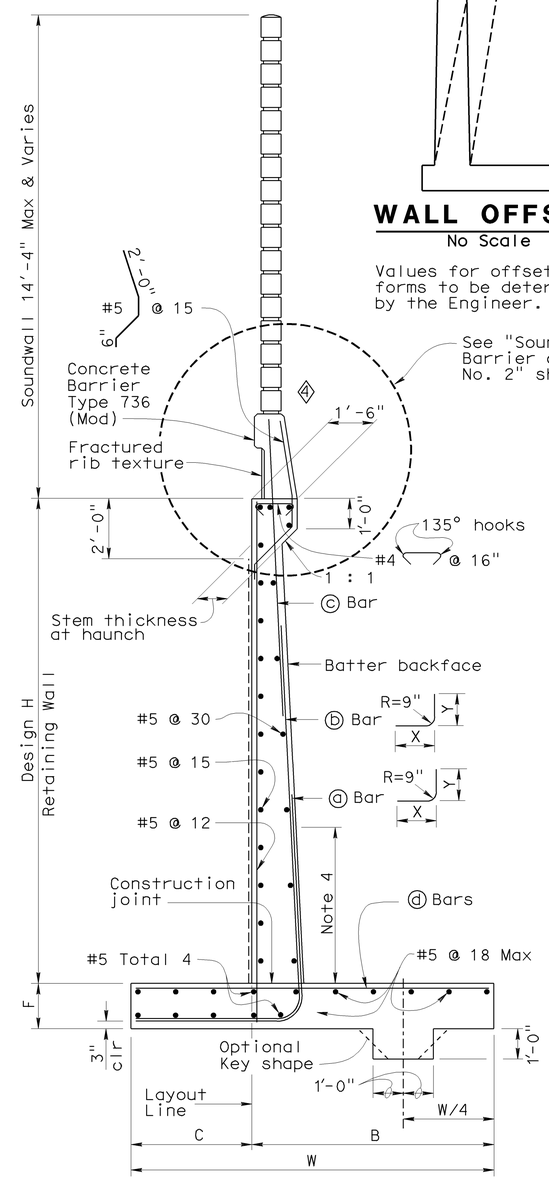


## SPREAD FOOTING SECTION
No Scale

## DESIGN DATA

DESIGN: Load Factor Design (LFD)

CONCRETE: Reinforced Concrete, f'c = 3600 psi
fy = 60,000 psi

LOADING CASE:
Level ground with 240 psf surcharge and 16' Soundwall

Seismic Load = 0.57 Dead Load
Wind Load = 33 psf
Dead Load of Soundwall = 1414 lb/ft
Dead Load of Barrier = 470 lb/ft

SEISMIC LOAD: SOIL
Kh = 0.3g
Kv = 0.0
Kae : Mononobe-Okabe Method

SOIL: Ø = 34° γ = 120 pcf
Equivalent fluid pressure:
= 36 pcf for determination of toe pressure
= 27 pcf for determination of heel pressure

EXTERNAL STABILITY:
Group 1 : D + E + SC
Group 2 : D + E + SC + W
Group 3 : D + PYM

INTERNAL STABILITY (LFD):
Group A : βD + 1.7E + 1.7SC
Group B : βD + 1.7E + 1.3W
Group C (stem) : 1.0D + 1.0E + 1.0EQD + 1.0EQE
Group C (footing) : D + PYM

Where : β = 1.0 or 1.3 whichever controls design
D = Dead Load
E = Lateral Earth Pressure
SC = Surcharge
W = Wind load
EQD = Seismic Dead Load
EQE = Seismic Lateral Earth Pressure
PYM = Probable Yield Moment (1.3 x Nominal Yield Moment of Stem)

## SPECIAL DETAILS

STANDARD DRAWING

FILE NO. xs14-220e Revised

APPROVED BY G. WANG — RESPONSIBLE TECHNICAL SPECIALIST
APPROVAL DATE 5-19-08

RELEASED BY ROBERTO LACALLE — RESPONSIBLE OFFICE CHIEF
RELEASE DATE REVISED

1. Revised Seismic, Wind Loads & DL of Barrier
2. Removed without haunch detail
3. Revised Table
4. Revised Barrier

STATE OF CALIFORNIA
DEPARTMENT OF TRANSPORTATION

DIVISION OF ENGINEERING SERVICES

BRIDGE NO. 55E0089
POST MILE 19.06

RETAINING WALL NO. 614
RETAINING WALL TYPE 1SWB

DS OSD 2147A (ENGLISH STANDARD DRAWING "XS" BORDER REV. 01/11/08)

ORIGINAL SCALE IN INCHES FOR REDUCED PLANS 0 1 2 3

CU 12220
EA 0F0321

DISREGARD PRINTS BEARING EARLIER REVISION DATES 02/15/09 04/07/09 04/27/09 06/08/09

REVISION DATES (PRELIMINARY STAGE ONLY)

SHEET 6 OF 21

USERNAME => trlenard

55e0089-g-1SWB.dgn

DATE PLOTTED => 25-JAN-2010 TIME PLOTTED => 08:25

| DIST | COUNTY | ROUTE | POST MILES TOTAL PROJECT | SHEET No | TOTAL SHEETS |
|---|---|---|---|---|---|
| 12 | Ora | 57 | 18.4/20.9 | 690 | 856 |

REGISTERED CIVIL ENGINEER — DATE 06/08/09

1-25-10
PLANS APPROVAL DATE

REGISTERED PROFESSIONAL ENGINEER — JENNIFER L. ELWOOD — No. C64034 — Exp. 9/30/10 — CIVIL — STATE OF CALIFORNIA

*The State of California or its officers or agents shall not be responsible for the accuracy or completeness of electronic copies of this plan sheet.*

OCTA
550 S. MAIN STREET
ORANGE, CA 92863

CH2M HILL
6 HUTTON CENTRE DRIVE, SUITE 700
SANTA ANA, CA 92707

**WELDED WIRE MAT SCHEDULE (LOADING CASE 1)**

| MAXIMUM HEIGHT | 10 | 12.5 | 15 | 17.5 | 20 | 22.5 |
|---|---|---|---|---|---|---|
| MINIMUM BASE WIDTH | 8 | 9 | 11 | 12 | 14 | 16 |
| TOP LEVELS OF MESH OVER | 2 @ W11 x W11 + 6" x 9"<br>2 @ W11 x W11 + 6" x 12" | 2 @ W11 x W11 + 6" x 9"<br>2 @ W11 x W11 + 6" x 12"<br>1 @ W11 x W11 + 6" x 18" | 2 @ W11 x W11 + 6" x 9"<br>2 @ W11 x W11 + 6" x 12"<br>1 @ W11 x W11 + 6" x 18"<br>1 @ W11 x W11 + 6" x 24" | 2 @ W11 x W11 + 6" x 9"<br>2 @ W11 x W11 + 6" x 12"<br>1 @ W11 x W11 + 6" x 18"<br>2 @ W11 x W11 + 6" x 24" | 2 @ W11 x W11 + 6" x 9"<br>3 @ W11 x W11 + 6" x 18"<br>3 @ W11 x W11 + 6" x 24" | 5 @ W11 x W11 + 6" x 18"<br>4 @ W11 x W11 + 6" x 24" |

**LEGEND:**

2 @ W11 x W11 + 6" x 9"

- Longitudinal wire spacing X Transverse wire spacing
- Longitudinal wire size X Transverse wire size
- Number of welded wire mats

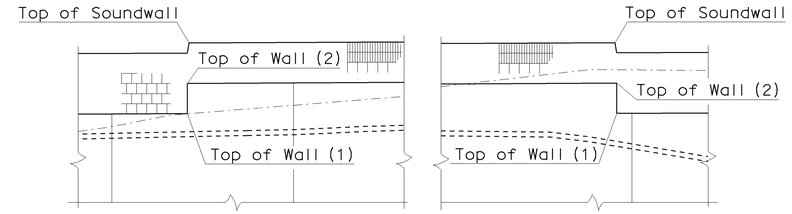


**LOCATION OF WALL ELEVATION**
No scale

## RETAINING WALL ELEVATIONS - Sta 10+00.00 TO 17+54.49

| RW NO. 614 LOL STA | TOP OF WALL Elev | FG Elev | TOP OF SW Elev |
|---|---|---|---|
| 10+00 | 305.18 | 302.32 | 319.21 |
| 10+10 | 305.35 | 302.39 | 319.38 |
| 10+20 | 305.52 | 302.45 | 319.55 |
| 10+30 | 305.70 | 302.57 | 319.73 |
| 10+40 | 305.88 | 302.66 | 319.91 |
| 10+50 | 306.06 | 302.65 | 320.09 |
| 10+60 | 306.26 | 302.73 | 320.29 |
| 10+70 | 306.46 | 302.84 | 320.49 |
| 10+80 | 306.66 | 302.85 | 320.69 |
| 10+90 | 306.86 | 302.78 | 320.90 |
| 11+00 | 307.08 | 302.64 | 321.11 |
| 11+10 | 307.29 | 302.62 | 321.33 |
| 11+20 | 307.52 | 302.61 | 321.55 |
| 11+30 | 307.74 | 302.60 | 321.78 |
| 11+40 | 307.97 | 302.64 | 322.01 |
| 11+50 | 308.21 | 302.90 | 322.24 |
| 11+60 | 308.44 | 303.13 | 322.48 |
| 11+70 | 308.69 | 303.06 | 322.73 |
| 11+80 | 308.93 | 303.21 | 322.97 |
| 11+90 | 309.19 | 303.36 | 323.23 |
| 12+00 | 309.45 | 303.50 | 323.48 |
| 12+10 | 309.71 | 303.62 | 323.75 |
| 12+20 | 309.98 | 303.82 | 324.01 |
| 12+30 | 310.25 | 304.07 | 324.28 |
| 12+40 | 310.52 | 304.21 | 324.56 |
| 12+50 | 310.80 | 304.17 | 324.84 |
| 12+60 | 311.09 | 304.14 | 325.13 |
| 12+70 | 311.38 | 304.11 | 325.42 |
| 12+80 | 311.67 | 304.30 | 325.71 |
| 12+90 | 311.98 | 304.41 | 326.01 |

| RW NO. 614 LOL STA | TOP OF WALL Elev | FG Elev | TOP OF SW Elev |
|---|---|---|---|
| 13+00 | 312.28 | 304.36 | 326.31 |
| 13+10 | 312.59 | 304.26 | 326.62 |
| 13+20 | 312.90 | 304.21 | 326.93 |
| 13+30 | 313.22 | 304.50 | 327.25 |
| 13+40 | 313.53 | 305.00 | 327.56 |
| 13+50 | 313.85 | 305.40 | 327.88 |
| 13+60 | 314.17 | 305.80 | 328.20 |
| 13+70 | 314.49 | 306.03 | 328.52 |
| 13+80 | 314.81 | 306.13 | 328.84 |
| 13+90 | 315.13 | 306.33 | 329.16 |
| 14+00 | 315.45 | 306.62 | 329.47 |
| 14+10 | 315.77 | 306.91 | 329.79 |
| 14+20 | 316.09 | 307.26 | 330.11 |
| 14+30 | 316.41 | 307.63 | 330.43 |
| 14+40 | 316.73 | 308.12 | 330.75 |
| 14+50 | 317.05 | 308.60 | 331.06 |
| 14+60 | 317.37 | 308.96 | 331.38 |
| 14+70 | 317.69 | 309.14 | 331.70 |
| 14+80 | 318.01 | 308.74 | 332.02 |
| 14+90 | 318.33 | 308.22 | 332.34 |
| 15+00 | 318.65 | 308.32 | 332.66 |
| 15+10 | 318.98 | 308.61 | 332.98 |
| 15+20 | 319.30 | 308.89 | 333.31 |
| 15+30 | 319.64 | 309.09 | 333.64 |
| 15+40 | 319.97 | 309.44 | 333.97 |
| 15+50 | 320.30 | 309.79 | 334.30 |
| 15+60 | 320.64 | 310.15 | 334.64 |
| 15+70 | 320.99 | 310.69 | 334.98 |
| 15+80 | 321.33 | 311.21 | 335.32 |
| 15+90 | 321.68 | 311.71 | 335.67 |

| RW NO. 614 LOL STA | TOP OF WALL Elev | FG Elev | TOP OF SW Elev |
|---|---|---|---|
| 16+00 | 322.03 | 312.20 | 336.02 |
| 16+10 | 322.38 | 312.68 | 336.37 |
| 16+20 | 322.74 | 313.24 | 336.72 |
| 16+30 | 323.10 | 313.87 | 337.07 |
| 16+40 | 323.46 | 314.49 | 337.43 |
| 16+50 | 323.82 | 315.09 | 337.79 |
| 16+60 | 324.19 | 315.62 | 338.16 |
| 16+70 | 324.56 | 316.11 | 338.52 |
| 16+80 | 324.92 | 316.76 | 338.88 |
| 16+90 | 325.29 | 317.79 | 339.24 |
| 17+00 | 325.65 | 319.19 | 339.60 |
| 17+10 | 326.01 | 319.95 | 339.96 |
| 17+20 | 326.37 | 320.98 | 340.31 |
| 17+30 | 326.72 | 322.20 | 340.66 |
| 17+40 | 327.07 | 323.84 | 341.01 |
| 17+50 | 327.42 | 326.12 | 341.35 |
| 17+54.49 | 327.51 | 330.98 | 342.98 |

## RETAINING WALL ELEVATIONS - Sta 17+54.49 TO 19+60.00

| RW NO. 614 LOL STA | TOP OF RW Elev (1) | TOP OF RW Elev (2) | TOP OF SW Elev |
|---|---|---|---|
| 17+54.49 | 330.99 | - | 342.99 |
| 17+62.49 | 330.99 | 332.32 | 342.99 |
| 17+69.16 | 332.32 | 333.65 | 342.99 |
| 17+74.49 | 333.65 | 334.99 | 342.99 |
| 17+81.16 | 334.99 | 336.32 | 342.99 |
| 17+91.82 | 336.32 | 336.99 | 342.99 |
| 17+97.16 | 336.99 | 338.32 | 342.99 |
| 17+97.60 | - | - | 344.32 |
| 18+02.49 | 338.32 | 338.99 | 344.32 |
| 18+02.71 | - | - | 344.99 |
| 18+10.49 | 338.99 | 340.32 | 344.99 |
| 18+10.93 | - | - | 346.32 |
| 18+22.49 | 340.32 | 341.65 | 346.32 |
| 18+22.93 | - | - | 347.65 |
| 18+38.49 | 341.65 | 342.99 | 347.65 |
| 18+38.93 | - | - | 348.99 |
| 18+74.49 | 342.99 | 344.32 | 348.99 |
| 18+74.93 | - | - | 350.32 |
| 18+89.16 | 344.32 | 344.99 | 350.32 |
| 18+89.38 | - | - | 350.99 |
| 19+01.16 | 344.99 | 345.65 | 350.99 |
| 19+01.38 | - | - | 351.65 |
| 19+41.16 | 345.65 | - | - |
| 19+50.00 | 341.23 | - | - |
| 19+60.31 | 336.22 | - | - |

DESIGN OVERSIGHT — Jon Hamaguchi
6-9-09
SIGN OFF DATE

| | BY | CHECKED |
|---|---|---|
| DESIGN | J. Elwood | D. Sun |
| DETAILS | P. Walker | D. Sun |
| QUANTITIES | B. Ho | L. Ros |

PREPARED FOR THE STATE OF CALIFORNIA DEPARTMENT OF TRANSPORTATION

Ayman Salama
PROJECT ENGINEER

BRIDGE NO. 55E0089
POST MILE 19.06

# RETAINING WALL NO. 614
# RETAINING WALL DETAILS

DESIGN DETAIL SHEET (ENGLISH) (REV. 2/25/05)

ORIGINAL SCALE IN INCHES FOR REDUCED PLANS 0 1 2 3

CU 12220
EA 0F0321

DISREGARD PRINTS BEARING EARLIER REVISION DATES
REVISION DATES (PRELIMINARY STAGE ONLY) 02/18/09 04/07/09 04/17/09 06/08/09

SHEET 7 OF 21

FILE => 55e0089-g-det01.dgn

USERNAME => trhenord DATE PLOTTED => 25-JAN-2010 TIME PLOTTED => 08:25

| DIST | COUNTY | ROUTE | POST MILES TOTAL PROJECT | SHEET No | TOTAL SHEETS |
|---|---|---|---|---|---|
| 12 | Ora | 57 | 18.4/20.9 | 691 | 856 |

REGISTERED CIVIL ENGINEER 06/08/09 DATE

1-25-10
PLANS APPROVAL DATE

REGISTERED PROFESSIONAL ENGINEER JENNIFER L. ELWOOD No. C64034 Exp. 9/30/10 CIVIL STATE OF CALIFORNIA

*The State of California or its officers or agents shall not be responsible for the accuracy or completeness of electronic copies of this plan sheet.*

OCTA
550 S. MAIN STREET
ORANGE, CA 92863

CH2M HILL
6 HUTTON CENTRE DRIVE, SUITE 700
SANTA ANA, CA 92707

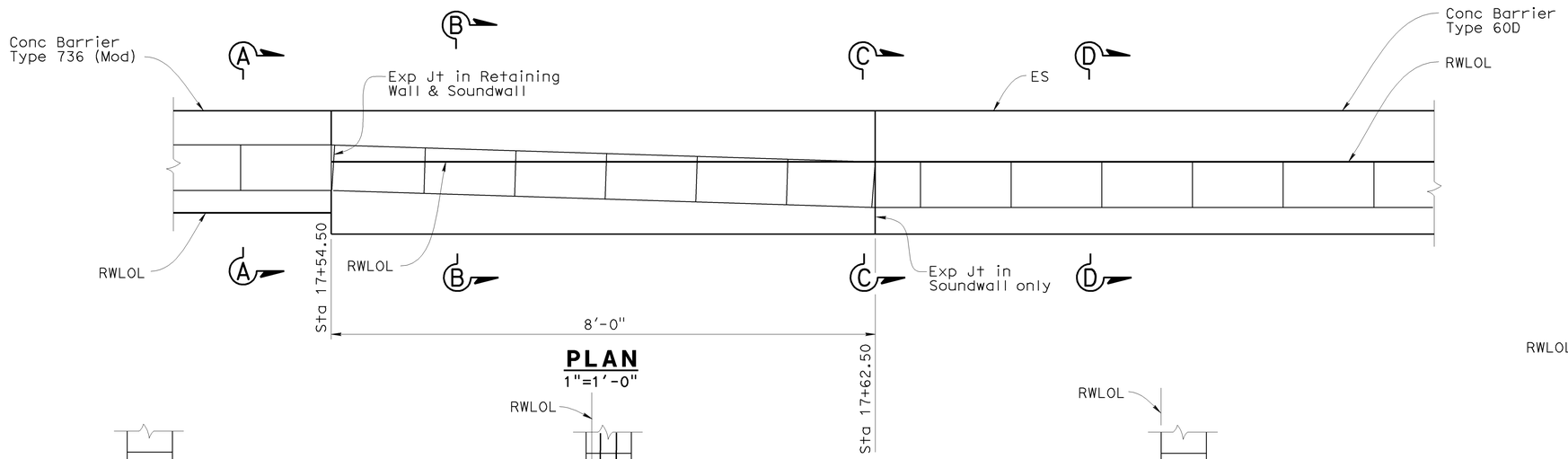


**PLAN**
1"=1'-0"

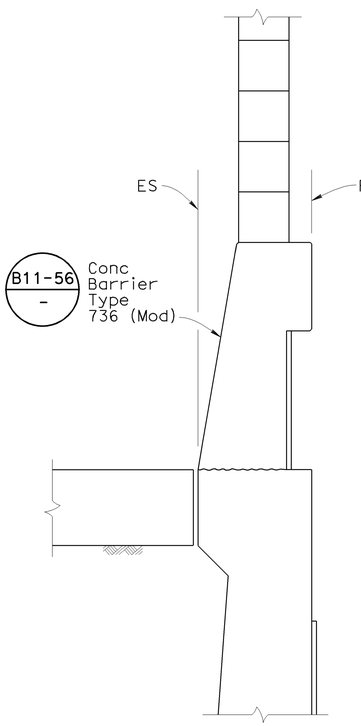


**SECTION A-A**

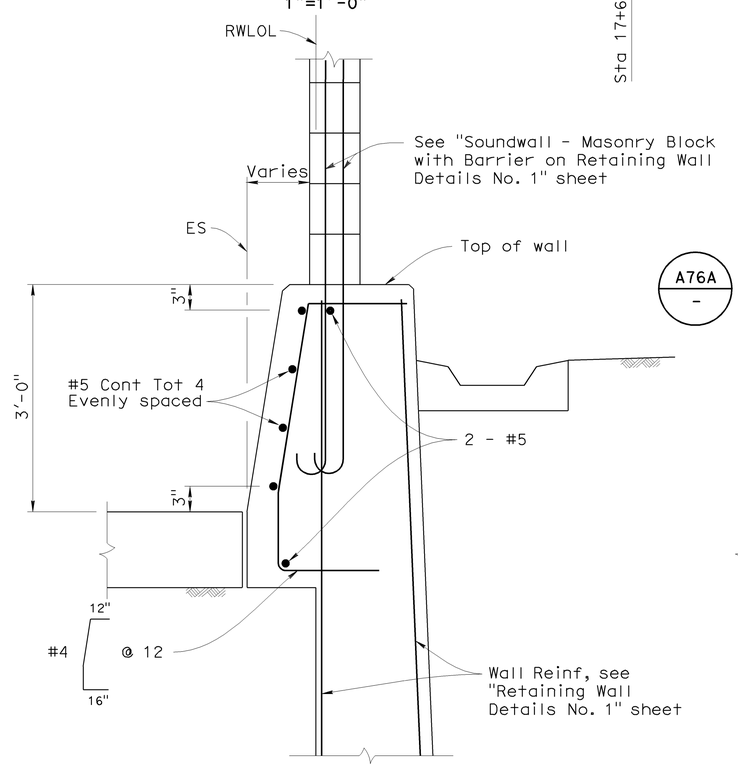


**SECTION B-B**

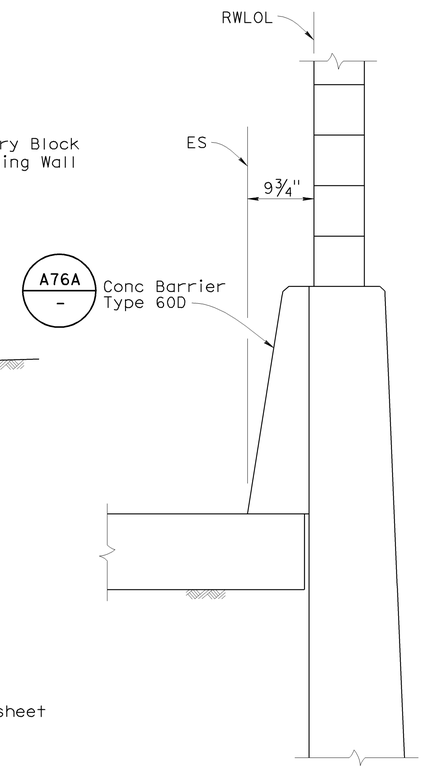


**SECTION C-C**

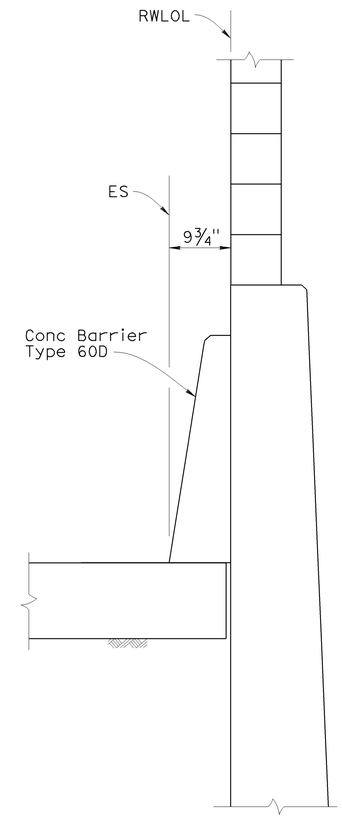


**SECTION D-D**

## CONCRETE BARRIER TRANSITION DETAIL
1"=1'-0"

Jon Hamaguchi
DESIGN OVERSIGHT Jon Hamaguchi
6-9-09
SIGN OFF DATE

DESIGN DETAIL SHEET (ENGLISH) (REV. 2/25/05)

| | BY | CHECKED |
|---|---|---|
| DESIGN | J. Elwood | D. Sun |
| DETAILS | P. Walker | D. Sun |
| QUANTITIES | B. Ho | L. Ros |

ORIGINAL SCALE IN INCHES FOR REDUCED PLANS 0 1 2 3

PREPARED FOR THE STATE OF CALIFORNIA DEPARTMENT OF TRANSPORTATION

Ayman Salama
PROJECT ENGINEER

CU 12220
EA 0F0321

BRIDGE NO. 55E0089
POST MILE 19.06

# RETAINING WALL NO. 614
## CONCRETE BARRIER TRANSITION DETAIL

DISREGARD PRINTS BEARING EARLIER REVISION DATES

REVISION DATES (PRELIMINARY STAGE ONLY) 02/18/09 04/07/09 04/17/09 06/08/09

SHEET 8 OF 21

FILE => 55e0089-g-det02.dgn

USERNAME => rfriehard DATE PLOTTED => 25-JAN-2010 TIME PLOTTED => 08:25

| DIST | COUNTY | ROUTE | POST MILES TOTAL PROJECT | SHEET No | TOTAL SHEETS |
|---|---|---|---|---|---|
| 12 | Ora | 57 | 18.4/20.9 | 692 | 856 |

Jennifer Elwood 06/08/09
REGISTERED ENGINEER - CIVIL DATE

1-25-10
PLANS APPROVAL DATE

REGISTERED PROFESSIONAL ENGINEER JENNIFER L. ELWOOD No. C64034 Exp. 9/30/10 CIVIL STATE OF CALIFORNIA

The State of California or its officers or agents shall not be responsible for the accuracy or completeness of electronic copies of this plan sheet.

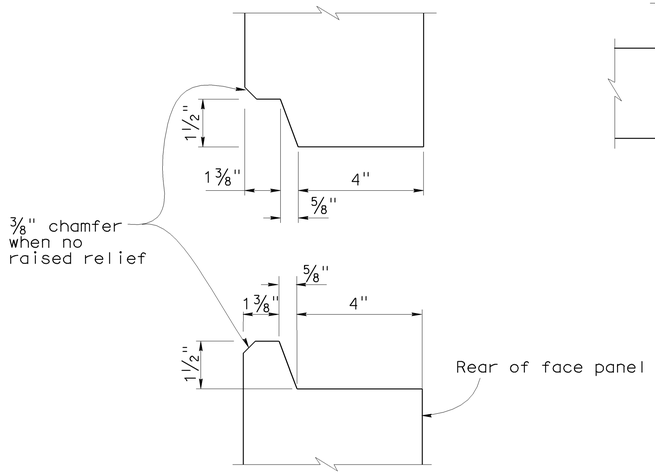


## HORIZONTAL JOINT DETAIL
No Scale

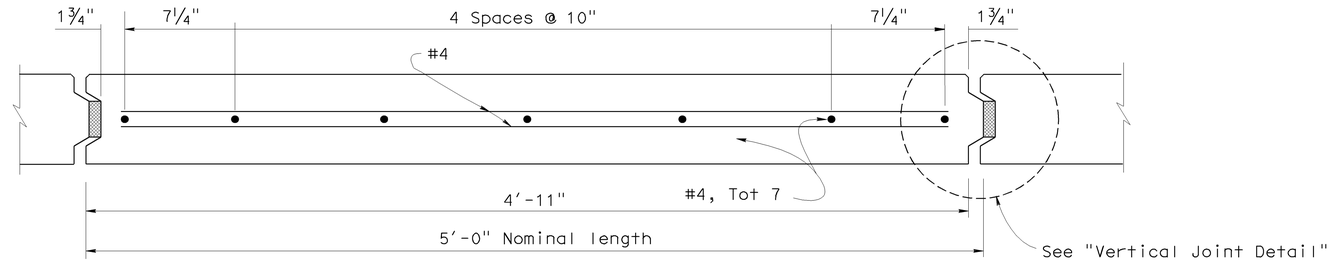


## PLAN - FACE PANEL
No Scale

NOTES:

1. Architectural treatment not shown. Architectural Surface (Textured Concrete) extends beyond face of panel. See "Architectural Treatment Details" sheet. 2
2. Place reinforced elastomeric bearing pads in all of the panel joints between the panels. Place one in each vertical joint where the horizontal joint intersects it. Place two per panel in each horizontal joint.
   3/4" x 2 3/8" x 6" for vertical joints
   3/4" x 4" x 6" for horizontal joints.
3. Bond a strip of filter fabric, 1' - 0" wide, over the full length of all panel joints.

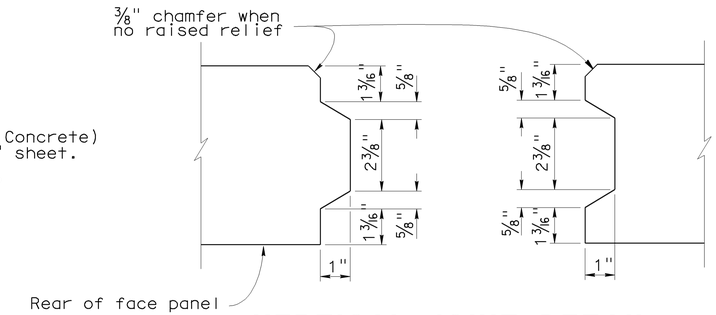


## VERTICAL JOINT DETAIL
No Scale

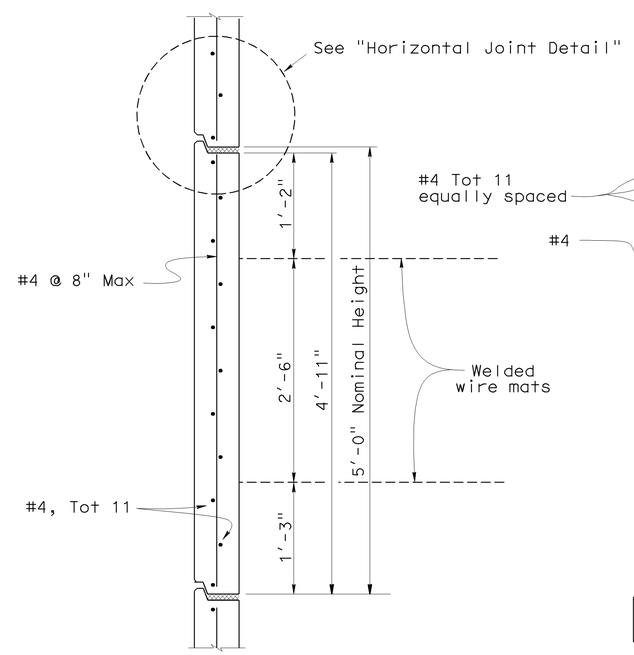


## INTERMEDIATE PANEL
No Scale

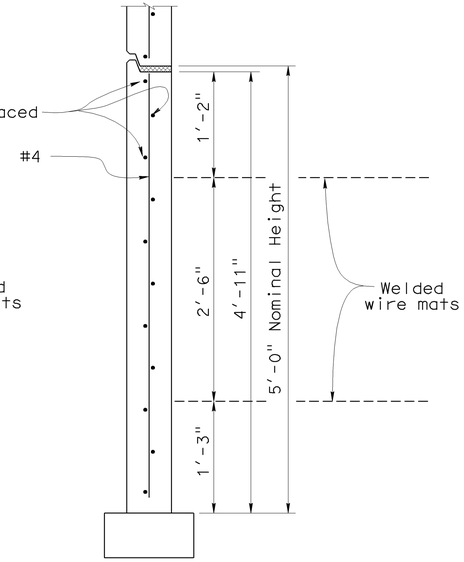


## BOTTOM PANEL
No Scale

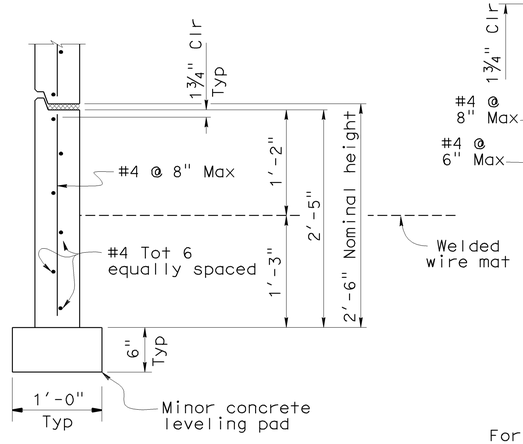


## BOTTOM HALF PANEL
No Scale

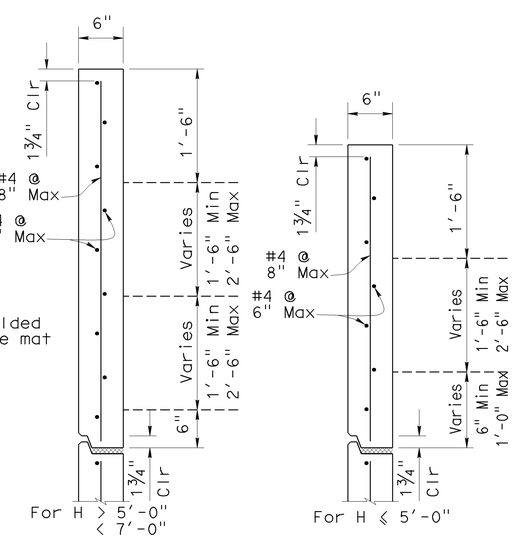


## TOP PANEL
No Scale

1

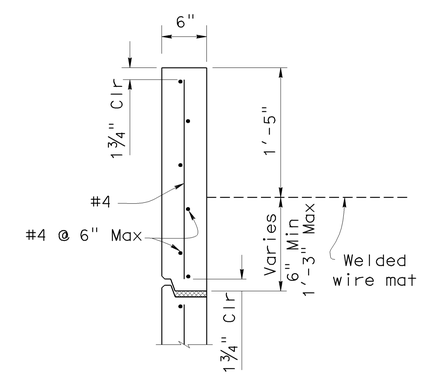


## TOP HALF PANEL
No Scale

## SPECIAL DETAILS

| STANDARD DRAWING | | | |
|---|---|---|---|
| FILE NO. xs13-020-1e | APPROVED BY K. GRISWELL (RESPONSIBLE TECHNICAL SPECIALIST) | RELEASED BY ROBERTO LACALLE (RESPONSIBLE OFFICE CHIEF) | |
| | APPROVAL DATE 5-6-08 | RELEASE DATE REVISED | |

1 Added Top Panel Details
2 Revised Note

STATE OF CALIFORNIA DEPARTMENT OF TRANSPORTATION

DIVISION OF ENGINEERING SERVICES

BRIDGE NO. 55E0089
POST MILE 19.06

# RETAINING WALL NO. 614
# MECHANICALLY STABILIZED EMBANKMENT
# DETAIL NO. 1

DS OSD 2147A (ENGLISH STANDARD DRAWING "XS" BORDER REV. 01/11/08)

ORIGINAL SCALE IN INCHES FOR REDUCED PLANS 0 1 2 3

CU 12220
EA 0F0321

DISREGARD PRINTS BEARING EARLIER REVISION DATES 02/18/09 04/07/09 04/17/09 06/08/09

REVISION DATES (PRELIMINARY STAGE ONLY)

SHEET 9 OF 21

USERNAME => trlenard

DATE PLOTTED => 25-JAN-2010 TIME PLOTTED => 08:25

55e0089-g-rw_msedt01.

| DIST | COUNTY | ROUTE | POST MILES TOTAL PROJECT | SHEET NO | TOTAL SHEETS |
|---|---|---|---|---|---|
| 12 | Ora | 57 | 18.4/20.9 | 693 | 856 |

REGISTERED ENGINEER - CIVIL DATE 06/08/09

1-25-10
PLANS APPROVAL DATE

REGISTERED PROFESSIONAL ENGINEER JENNIFER L. ELWOOD No. C64034 Exp. 9/30/10 CIVIL STATE OF CALIFORNIA

The State of California or its officers or agents shall not be responsible for the accuracy or completeness of electronic copies of this plan sheet.

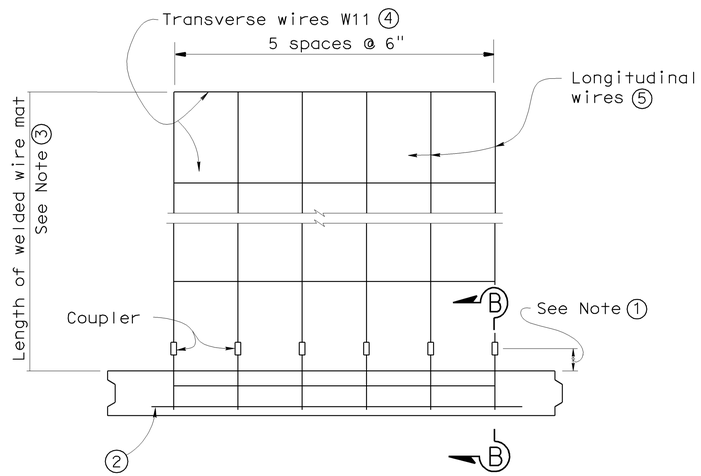


## PLAN OF PANEL WITH WELDED WIRE MAT

No scale

## GENERAL NOTES (MSE WALLS)

Live loading: Surcharge = 240 lb/ft$^2$

Soil parameters:

Internal design $\phi$ = 34°, $\gamma$ = 120 lb/ft$^3$
External design $\phi$(Backfill) = 34°, $\gamma$ = 120 lb/ft$^3$
$\phi$(Foundation) = 30°

Precast concrete panels:

f′c = 4,000 psi (Concrete compressive strength at 28 days)
fy = 60,000 psi (Yield strength of reinforcement)

Soil reinforcement:

Welded wire mats: fy = 65,000 psi (Yield strength)
Coupler: fy = 36,000 psi (Yield strength)
Corrosion rate = 1.1 mils/year

Reinforced concrete:

f′c = 3,600 psi, except as noted
(Concrete compressive strength at 28 days)

fy = 60,000 psi (Yield strength of reinforcement)

MSE = Mechanically stabilized embankment

NOTES:

① Distance as required to permit coupler to be swaged.

② Place #4 bar, 3′ - 2" long, centered on connector mat, but not welded to it.

③ Length equals "Base width" of wall, except it shall not be less than 16′ for the top 2 levels of mats at the top of the wall.

④ All Transverse Wires size W11 at various spacings as shown elsewhere in plans.

⑤ All Longitudinal Wires at 6" spacing, of various sizes, as shown elsewhere in plans.

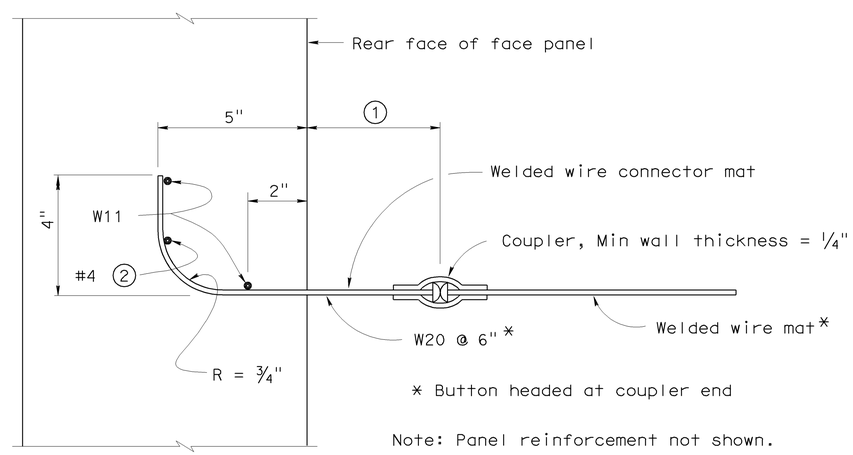


## SECTION B-B

No Scale

STANDARD DRAWING

FILE NO. xs13-020-2e

APPROVED BY K. GRISWELL
RESPONSIBLE TECHNICAL SPECIALIST
APPROVAL DATE 5-6-08

RELEASED BY ROBERTO LACALLE
RESPONSIBLE OFFICE CHIEF
RELEASE DATE 5-6-08

STATE OF CALIFORNIA DEPARTMENT OF TRANSPORTATION

DIVISION OF ENGINEERING SERVICES

BRIDGE NO. 55E0089
POST MILE 19.06

# RETAINING WALL NO. 614
# MECHANICALLY STABILIZED EMBANKMENT
# DETAIL NO. 2

DS OSD 2147A (ENGLISH STANDARD DRAWING "XS" BORDER REV. 01/11/08)

ORIGINAL SCALE IN INCHES FOR REDUCED PLANS 0 1 2 3

CU 12220
EA 0F0321

DISREGARD PRINTS BEARING EARLIER REVISION DATES

REVISION DATES (PRELIMINARY STAGE ONLY) 02/18/09 04/07/09 04/17/09 06/08/09

SHEET 10 OF 21

USERNAME => trlenard

55e0089-g-rw_msedt02.

DATE PLOTTED => 25-JAN-2010 TIME PLOTTED => 08:25

| DIST | COUNTY | ROUTE | POST MILES TOTAL PROJECT | SHEET No | TOTAL SHEETS |
|---|---|---|---|---|---|
| 12 | Ora | 57 | 18.4/20.9 | 694 | 856 |

Jennifer Elwood 06/08/09
REGISTERED ENGINEER - CIVIL DATE

1-25-10
PLANS APPROVAL DATE

REGISTERED PROFESSIONAL ENGINEER JENNIFER L. ELWOOD No. C64034 Exp. 9/30/10 CIVIL STATE OF CALIFORNIA

The State of California or its officers or agents shall not be responsible for the accuracy or completeness of electronic copies of this plan sheet.

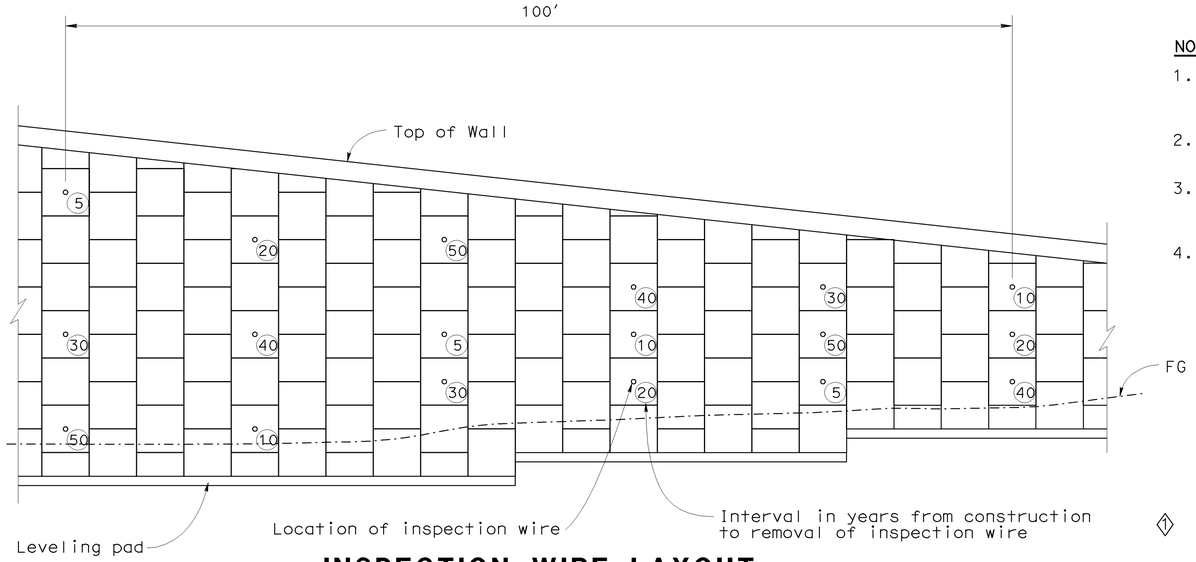


## INSPECTION WIRE LAYOUT

No Scale

**NOTES:**

1. A set of 18 inspection wires is required for every MSE section of at least 100 feet long and a height equal to or greater than 17 feet.
2. Sets should be located approximately 500 feet apart, along the LOL.
3. Place wires in every fourth panel column along the LOL (20 feet apart) and number them according to the typical layout shown.
4. Walls which do not require a set of inspection wires based on the criteria in Note 1 shall have single level of inspection wires installed at a uniform spacing of 20 feet along this level. The location of this level shall be at the first panels above the base of the wall which will be fully exposed after completion of the wall. A minimum of 6 inspection wires shall be installed.

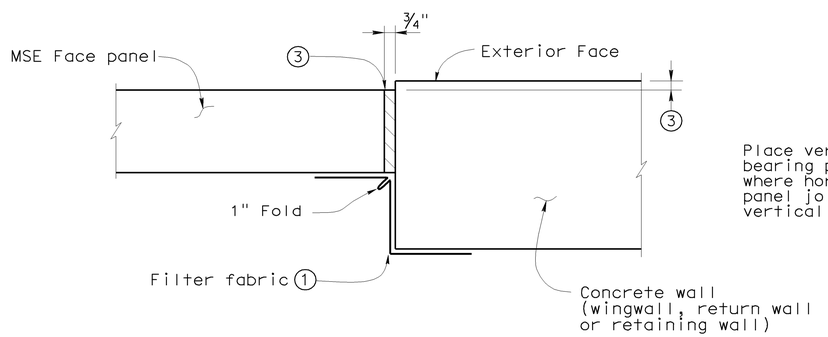


## MSE FACE PANEL-TO-CONCRETE WALL JOINT DETAIL

No Scale

**LEGEND**

1. Bond a strip of filter fabric, 1'-6" wide, to back of MSE panels and the adjacent concrete wall for entire length of vertical joint.
2. Bond expansion joint material to the concrete wall.
3. Offset between face of MSE face panel and face of the concrete wall as dictated by location of layout lines shown elsewhere in Project Plans.

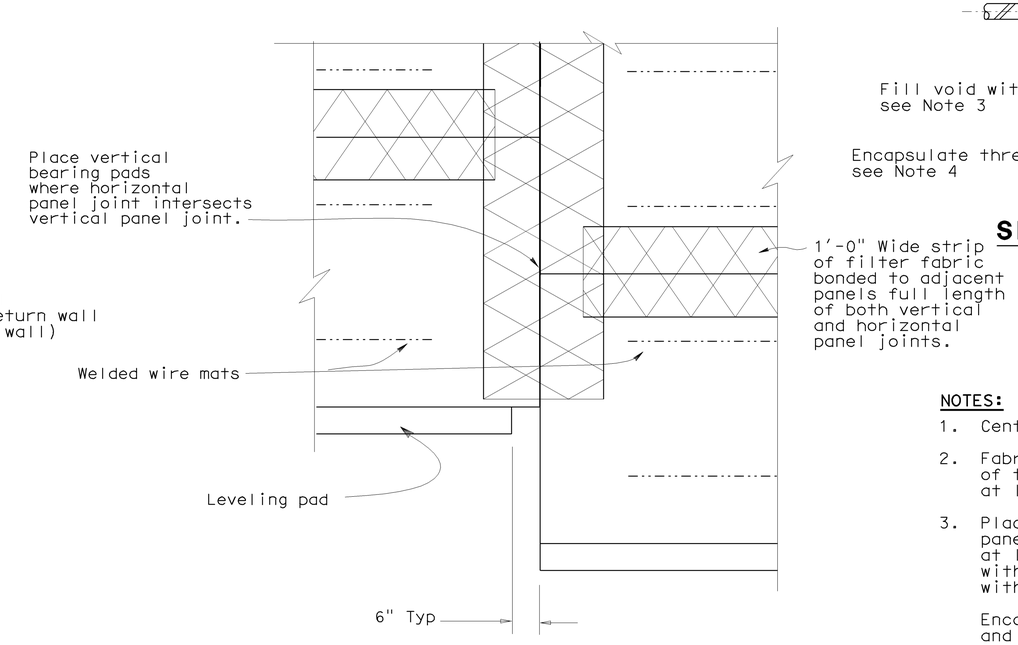


## REAR ELEVATION

No Scale

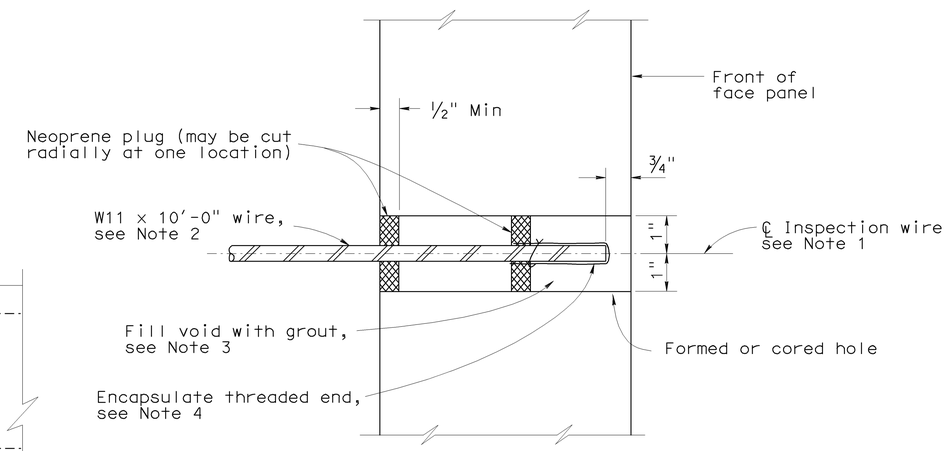


## SECTION THRU INSPECTION WIRE

No Scale

**NOTES:**

1. Center inspection wire in face panel.
2. Fabricate inspection wires from W11 wire representative of the welded wire mats, with 3/8" dia - 16 UNC threads for at least 1 1/2" of one end.
3. Place inspection wire horizontal and perpendicular to the wall panel prior to backfilling. After backfill placement to a level at least 2'-0" above the inspection wire, dry pack opening with 1000 to 1500 psi mortar. Trowel mortar smooth and flush with face of panel.

   Encapsulate threaded end with corrosion inhibiting mastic, and secure round vinyl cover with nylon tie.
4. UNC = Unified coarse threads

# SPECIAL DETAILS

## RETAINING WALL NO. 614

## MECHANICALLY STABILIZED EMBANKMENT

## DETAIL NO. 3

STANDARD DRAWING

FILE NO. xs13-020-3e

APPROVED BY K. GRISWELL
RESPONSIBLE TECHNICAL SPECIALIST
APPROVAL DATE 5-6-08

RELEASED BY ROBERTO LACALLE
RESPONSIBLE OFFICE CHIEF
RELEASE DATE REVISED

1 Added Inspection Wire Layout & Notes from Bridge Design Aids 3-8

STATE OF CALIFORNIA DEPARTMENT OF TRANSPORTATION

DIVISION OF ENGINEERING SERVICES

BRIDGE NO. 55E0089
POST MILE 19.06

CU 12220
EA 0F0321

DISREGARD PRINTS BEARING EARLIER REVISION DATES 12/18/09 04/07/09 04/17/08 06/08/09

SHEET 11 OF 21

DS OSD 2147A (ENGLISH STANDARD DRAWING "XS" BORDER REV. 01/11/08)

ORIGINAL SCALE IN INCHES FOR REDUCED PLANS 0 1 2 3

USERNAME => trlenard

55e0089-g-rw_msedt03.dgn

DATE PLOTTED => 25-JAN-2010 TIME PLOTTED => 08:25

| DIST | COUNTY | ROUTE | POST MILES TOTAL PROJECT | SHEET No | TOTAL SHEETS |
|---|---|---|---|---|---|
| 12 | Ora | 57 | 18.4/20.9 | 695 | 856 |

Jennifer Elwood 06/08/09
REGISTERED ENGINEER - CIVIL DATE

1-25-10
PLANS APPROVAL DATE

REGISTERED PROFESSIONAL ENGINEER JENNIFER L. ELWOOD No. C64034 Exp. 9/30/10 CIVIL STATE OF CALIFORNIA

The State of California or its officers or agents shall not be responsible for the accuracy or completeness of electronic copies of this plan sheet.

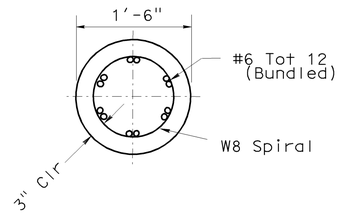


## SECTION A-A

No Scale

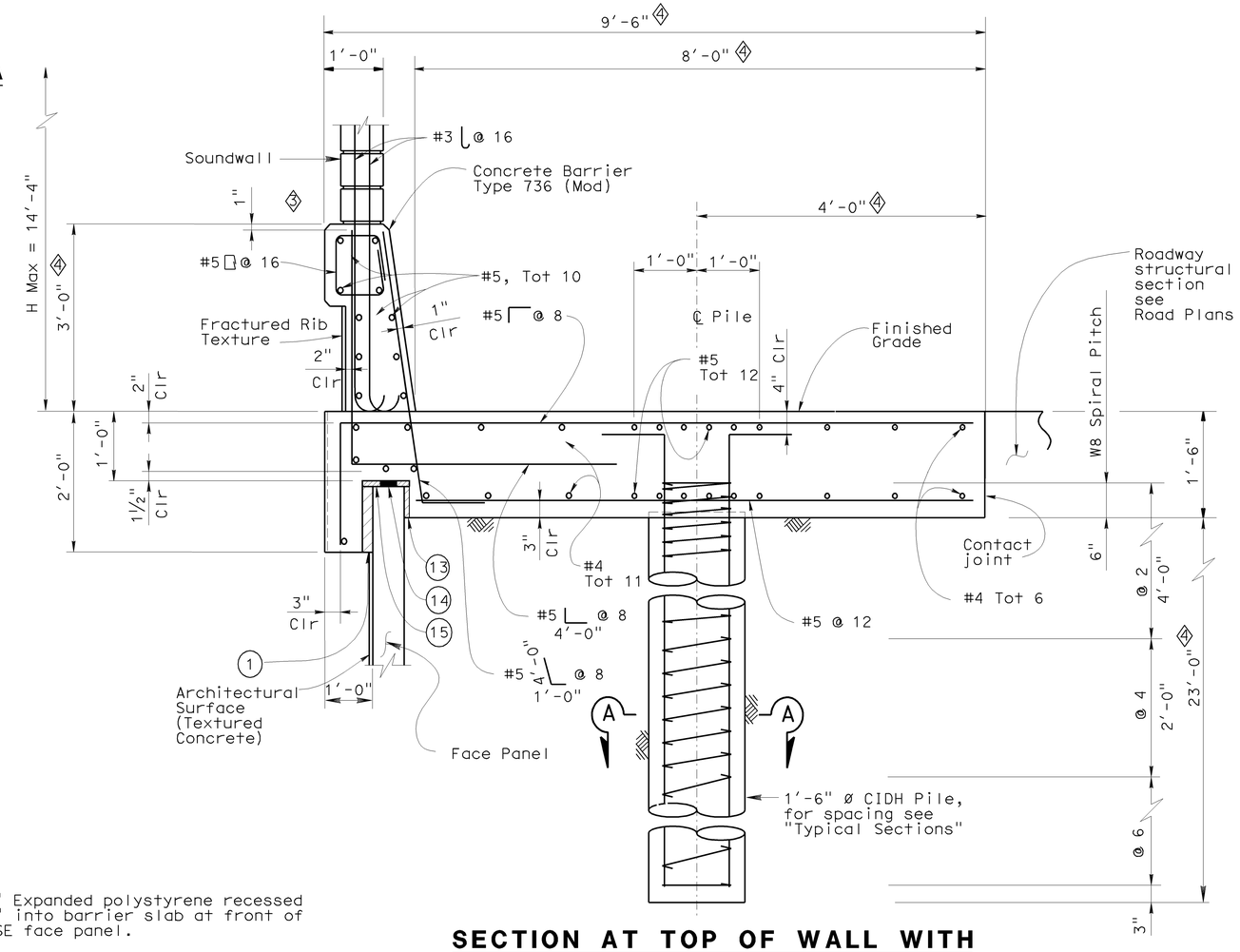


## SECTION AT TOP OF WALL WITH SOUNDWALL AND CONCRETE BARRIER

No Scale

LEGEND

(1) 2" Expanded polystyrene recessed 2" into barrier slab at front of MSE face panel.

(2)

(13) 1" Expanded polystyrene.

(14) Five elastomeric bearing pads ¾" x 4" x 6" bonded to top of MSE face panel.

(15) 0.5" Expanded polystyrene.

# SPECIAL DETAILS

## RETAINING WALL NO. 614

## MECHANICALLY STABILIZED EMBANKMENT

## DETAIL NO. 5

STANDARD DRAWING

FILE NO. xs13-020-5e

APPROVED BY K. GRISWELL
RESPONSIBLE TECHNICAL SPECIALIST
APPROVAL DATE REVISED

RELEASED BY ROBERTO LACALLE
RESPONSIBLE OFFICE CHIEF
RELEASE DATE REVISED

(1) Removed Detail & Notes
(2) Removed Notes (2) through (12)
(3) Revised Barrier to (Type 736)
(4) Revised dimension & detail

STATE OF CALIFORNIA
DEPARTMENT OF TRANSPORTATION

DIVISION OF ENGINEERING SERVICES

BRIDGE NO. 55E0089
POST MILE 19.06

DS OSD 2147A (ENGLISH STANDARD DRAWING "XS" BORDER REV. 01/11/08)

ORIGINAL SCALE IN INCHES FOR REDUCED PLANS 0 1 2 3

CU 12220
EA 0F0321

DISREGARD PRINTS BEARING EARLIER REVISION DATES

REVISION DATES (PRELIMINARY STAGE ONLY) 02/18/09 04/07/09 04/17/09 06/08/09

SHEET 12 OF 21

USERNAME => trlenard

55e0089-g-rw_msedt05.

DATE PLOTTED => 25-JAN-2010 TIME PLOTTED => 08:25

| DIST | COUNTY | ROUTE | POST MILES TOTAL PROJECT | SHEET No | TOTAL SHEETS |
|---|---|---|---|---|---|
| 12 | Ora | 57 | 18.4/20.9 | 696 | 856 |

REGISTERED ENGINEER - CIVIL DATE 06/08/09

1-25-10
PLANS APPROVAL DATE

REGISTERED PROFESSIONAL ENGINEER JENNIFER L. ELWOOD No. C64034 Exp. 9/30/10 CIVIL STATE OF CALIFORNIA

The State of California or its officers or agents shall not be responsible for the accuracy or completeness of electronic copies of this plan sheet.

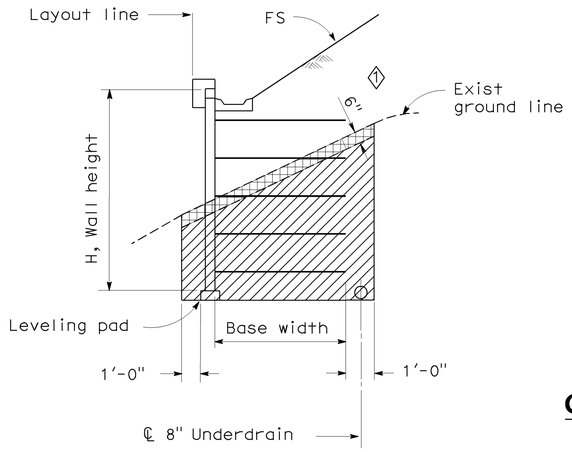


## LIMITS OF EXCAVATION

No Scale

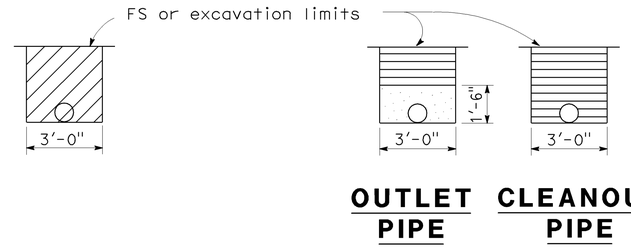


## OUTLET OR CLEANOUT PIPE FOR UNDERDRAIN

No Scale

**ABBREVIATIONS**

| | |
|---|---|
| OG | Original ground |
| FS | Planned finished surface |
| GP | Planned grading plane |

**LEGEND**

- Limits of structure excavation
- Limits of structure backfill
- Limits of permeable material
- ◇2 Indicates Structure Excavation (Type Y-1) (Aerially Deposited Lead)

**NOTES:**

1. Limits to FS except to GP when in roadway section.
2. Locate 8" perforated underdrain below bottom level of welded wire mats.
3. Maximum spacing of outlet pipes is 200 ft.
4. At sags in profile of underdrain, install outlet pipe for each direction of flow.

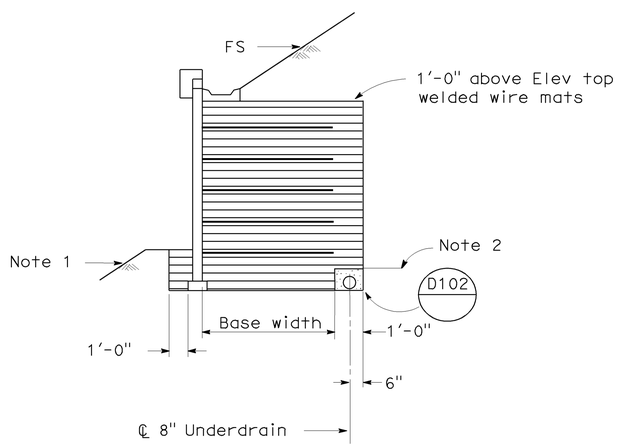


## SLOPING FINISHED SURFACE

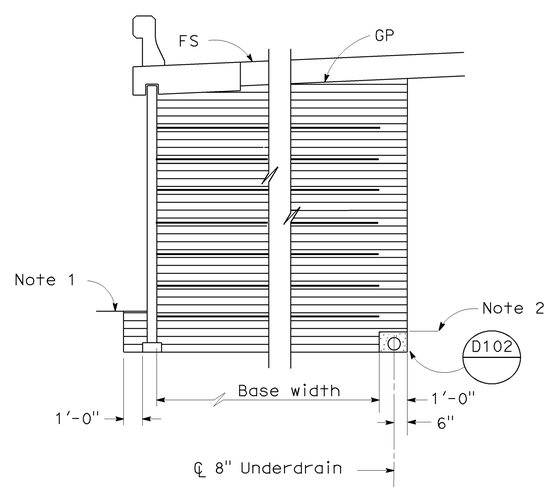


## ROADWAY SECTION WITH BASE WIDTH 16' OR GREATER

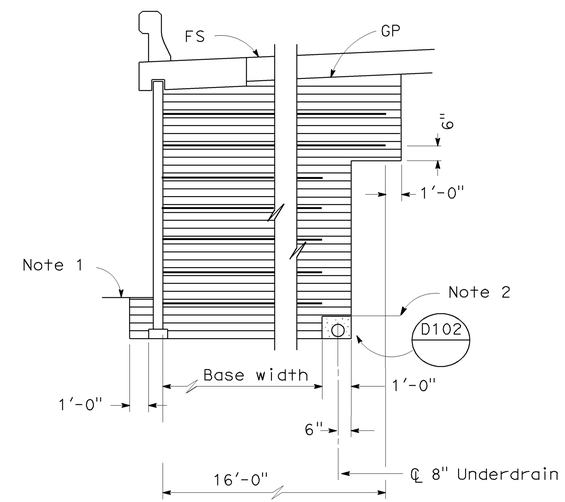


## ROADWAY SECTION WITH BASE WIDTH LESS THAN 16'

## LIMITS OF BACKFILL

No Scale

## SPECIAL DETAILS

## RETAINING WALL NO. 614

## MECHANICALLY STABILIZED EMBANKMENT

## DETAIL NO. 6

STANDARD DRAWING

FILE NO. xs13-020-6e

APPROVED BY K. GRISWELL — RESPONSIBLE TECHNICAL SPECIALIST
APPROVAL DATE 5-6-08

RELEASED BY ROBERTO LACALLE — RESPONSIBLE OFFICE CHIEF
RELEASE DATE REVISED

1 Added Limits of ADL Excavation
2 Added ADL Excavation Legend

STATE OF CALIFORNIA DEPARTMENT OF TRANSPORTATION

DIVISION OF ENGINEERING SERVICES

BRIDGE NO. 55E0089
POST MILE 19.06

DS OSD 2147A (ENGLISH STANDARD DRAWING "XS" BORDER REV. 01/11/08)

ORIGINAL SCALE IN INCHES FOR REDUCED PLANS 0 1 2 3

CU 12220
EA 0F0321

DISREGARD PRINTS BEARING EARLIER REVISION DATES 02/18/09 04/07/09 04/17/09 06/08/09

REVISION DATES (PRELIMINARY STAGE ONLY)

SHEET 13 OF 21

USERNAME => trlenard

55e0089-g-rw_msedt06.dgn

DATE PLOTTED => 25-JAN-2010 TIME PLOTTED => 08:25

| DIST | COUNTY | ROUTE | POST MILES TOTAL PROJECT | SHEET No | TOTAL SHEETS |
|---|---|---|---|---|---|
| 12 | Ora | 57 | 18.4/20.9 | 697 | 856 |

REGISTERED ENGINEER - CIVIL DATE 06/08/09

1-25-10
PLANS APPROVAL DATE

REGISTERED PROFESSIONAL ENGINEER JENNIFER L. ELWOOD No. C64034 Exp. 9/30/10 CIVIL STATE OF CALIFORNIA

The State of California or its officers or agents shall not be responsible for the accuracy or completeness of electronic copies of this plan sheet.

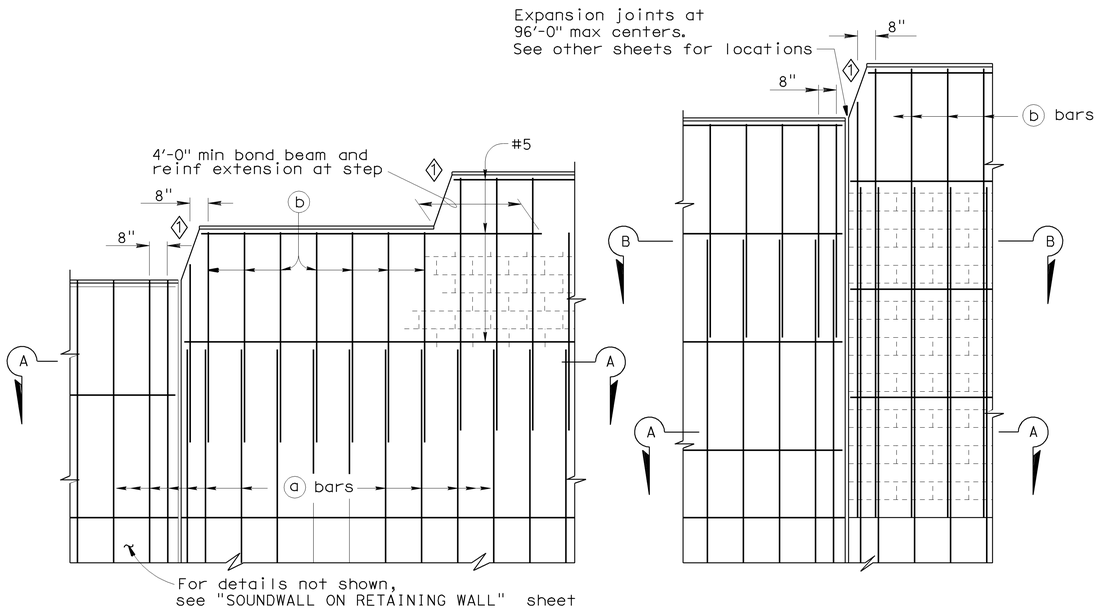


## PART ELEVATIONS

No Scale

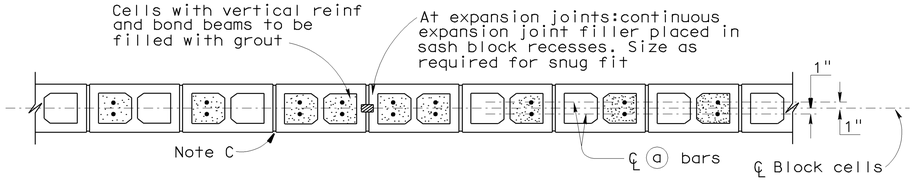


## SECTION A-A

For details not shown,see other details

**H=6'-0" THRU H=12'-0"**

No Scale

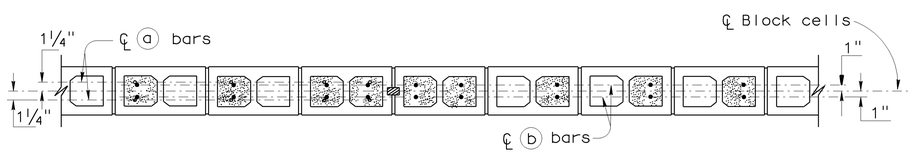


## SECTION A-A

## SECTION B-B

For details not shown,see other details

**H=12'-0" THRU H=16'-0"**

No Scale

## DESIGN NOTES

DESIGN

Uniform Building Code,1997 Edition and the Bridge Design Specifications.

DESIGN WIND LOAD

33 psf

DESIGN SEISMIC LOAD

0.57 Dead load

REINFORCED CONCRETE

f'c = 3.250 ksi
fy = 60 ksi

CONCRETE MASONRY

| REGULAR STRENGTH | HIGH STRENGTH | |
|---|---|---|
| f'm = 1500 psi | f'm = 2000 psi | f'm = 2500 psi |
| $f_b$ = 495 psi | $f_b$ = 660 psi | $f_b$ = 830 psi |
| fs = 24000 psi | fs = 24000 psi | fs = 24000 psi |
| n = 25.8 | n = 19.3 | n = 15.5 |

LOAD FACTORS AND LOAD COMBINATIONS

Working Stress Design ( WSD ) Percentage of unit stress

Group 1: D + E + SC 100%
Group 2: D + W + SC + E 100%
Group 3: D + 0.71 EQD + E 100%

Where:

D = Dead load
E = Lateral earth pressure
SC = Live load surcharge
W = Wind load
EQD = Seismic dead load

Load Factor Design ( LFD )

Group A: βD +1.7 E + 1.7 SC
Group B: βD +1.7 E + 1.3 W
Group C: βD +1.3 E + 1.0 EQE
Group D: βD +1.3 E + 1.0 EQD
Group E: βD +1.1 E + 0.85 ( EQE + EQD )

Where : β = 0.9 or 1.2, whichever controls in design
D = Dead load
E = Lateral earth pressure
SC = Live load surcharge
W = Wind load
EQD = Seismic dead load
EQE = Seismic earth load

STRENGTH REDUCTION FACTORS, Ø

Reinforced concrete:
For flexure ——— Ø=0.90
For shear ——— Ø=0.85

Concrete masonry:
For flexure ——— Ø=0.80
For shear ——— Ø=0.60

Foundations:
See "RETAINING WALL WITH SOUNDWALL" sheets

## GENERAL NOTES

Note A: For type of block and joint finish, See other sheets.

Note B: When blocks are laid in stacked bond, ladder type, galvanized joint reinforcement shall be provided. A minimum of 2 - 9 gauge wires continuous at 4'-0" maximum to be used. Locate reinforcement in joints that are at the approximate midpoint between bond beams.

Note C: Horizontal joints shall be tooled concave or may be weathered.
Vertical joints shall be tooled concave or may be raked.

Note D: For intermediate wall heights that are between the "H's" given. Use the tabular information for the next higher "H".

Note E: Masonry strengths are listed in the "SOUNDWALL REINFORCEMENT TABLE".

## SOUNDWALL REINFORCEMENT TABLE

| Maximum H | a bars @ 406 max | b bars @ 406 max | "y" | f'm (psi) | Compressive Strength of CMU (psi) | Maximum H |
|---|---|---|---|---|---|---|
| 6'-0" | #4 | ——— | ——— | 1500 | 1.9 | 6'-0" |
| 8'-0" | #4 | ——— | ——— | 1500 | 1900 | 8'-0" |
| 10'-0" | #4 | ——— | ——— | 1500 | 1900 | 10'-0" |
| 12'-0" | #5 | #4 | 6'-0" | 2000 | 2800 | 12'-0" |
| 14'-0" | #6 | #4 | 8'-0" | 2500 | 3750 | 14'-0" |
| 16'-0" | #6 | #4 | 10'-0" | 2500 | 3750 | 16'-0" |

## SPECIAL DETAILS

**RETAINING WALL NO. 614**

**SOUNDWALL ON RETAINING WALL-MASONRY BLOCK**

**DETAILS NO. 1**

STANDARD DRAWING

FILE NO. xs15-120-1e

APPROVED BY T SATTER
RESPONSIBLE TECHNICAL SPECIALIST
APPROVAL DATE 4-15-08

RELEASED BY ROBERTO LACALLE
RESPONSIBLE OFFICE CHIEF
RELEASE DATE REVISED

1 Revised Step

STATE OF CALIFORNIA
DEPARTMENT OF TRANSPORTATION

DIVISION OF ENGINEERING SERVICES

BRIDGE NO. 55E0089
POST MILE 19.06

CU 12220
EA 0F0321

DISREGARD PRINTS BEARING EARLIER REVISION DATES

REVISION DATES (PRELIMINARY STAGE ONLY) 02/18/09 04/07/09 04/17/09 06/08/09

SHEET 14 OF 21

DS OSD 2147A (ENGLISH STANDARD DRAWING "XS" BORDER REV. 01/11/08)

ORIGINAL SCALE IN INCHES FOR REDUCED PLANS 0 1 2 3

USERNAME => trlenard

55e0089-g-RWSWdet01.dgn

DATE PLOTTED => 25-JAN-2010 TIME PLOTTED => 08:25

| DIST | COUNTY | ROUTE | POST MILES TOTAL PROJECT | SHEET No | TOTAL SHEETS |
|---|---|---|---|---|---|
| 12 | Ora | 57 | 18.4/20.9 | 698 | 856 |

REGISTERED ENGINEER - CIVIL DATE 06/08/09

1-25-10
PLANS APPROVAL DATE

REGISTERED PROFESSIONAL ENGINEER JENNIFER L. ELWOOD No. C64034 Exp. 9/30/10 CIVIL STATE OF CALIFORNIA

The State of California or its officers or agents shall not be responsible for the accuracy or completeness of electronic copies of this plan sheet.

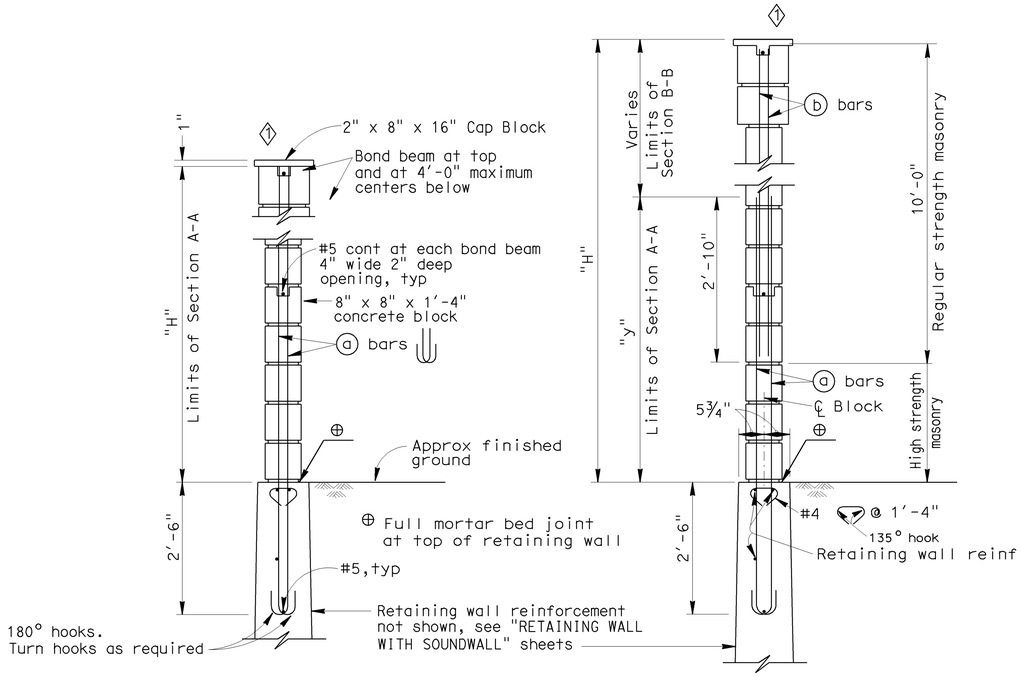


## H=6'-0" THRU H=10'-0"

For details not shown, see H=12'-0" thru H=16'-0"

## H=12'-0" THRU H=16'-0"

For details not shown, see H=6'-0" thru H=10'-0"

## TYPICAL SECTIONS

No Scale

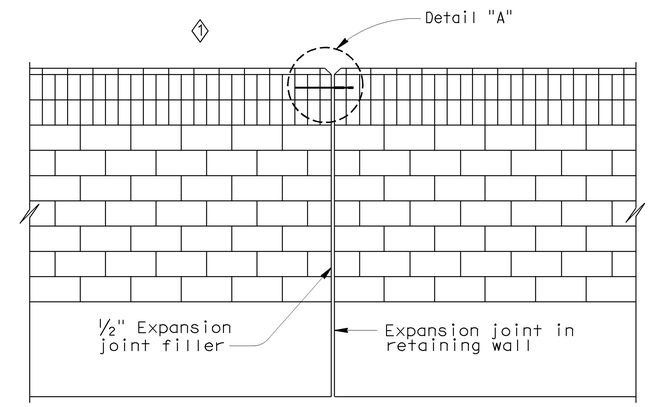


## ALIGNMENT KEY DETAIL

No Scale

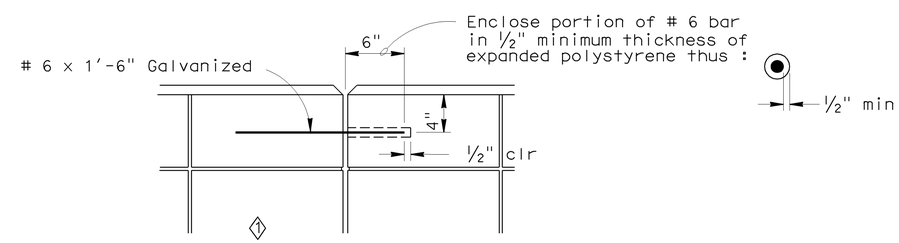


## DETAIL A

No Scale

## SPECIAL DETAILS

## RETAINING WALL NO. 614

## SOUNDWALL ON RETAINING WALL-MASONRY BLOCK

## DETAILS NO. 2

STANDARD DRAWING

FILE NO. xs15-120-2e

APPROVED BY T SATTER — RESPONSIBLE TECHNICAL SPECIALIST
APPROVAL DATE 4-15-08

RELEASED BY ROBERTO LACALLE — RESPONSIBLE OFFICE CHIEF
RELEASE DATE REVISED

1 Revised Cap Blocks

STATE OF CALIFORNIA DEPARTMENT OF TRANSPORTATION

DIVISION OF ENGINEERING SERVICES

BRIDGE NO. 55E0089
POST MILE 19.06

CU 12220
EA 0F0321

DISREGARD PRINTS BEARING EARLIER REVISION DATES

REVISION DATES (PRELIMINARY STAGE ONLY) 02/18/09 04/07/09 04/17/09 06/08/09

SHEET 15 OF 21

DS OSD 2147A (ENGLISH STANDARD DRAWING "XS" BORDER REV. 01/11/08)

ORIGINAL SCALE IN INCHES FOR REDUCED PLANS 0 1 2 3

USERNAME => trlenard

DATE PLOTTED => 25-JAN-2010 TIME PLOTTED => 08:25

55e0089-g-RWSWdet02.dgn

| DIST | COUNTY | ROUTE | POST MILES TOTAL PROJECT | SHEET No | TOTAL SHEETS |
|---|---|---|---|---|---|
| 12 | Ora | 57 | 18.4/20.9 | 699 | 856 |

REGISTERED ENGINEER - CIVIL DATE 06/08/09

1-25-10
PLANS APPROVAL DATE

REGISTERED PROFESSIONAL ENGINEER JENNIFER L. ELWOOD No. C64034 Exp. 9/30/10 CIVIL STATE OF CALIFORNIA

The State of California or its officers or agents shall not be responsible for the accuracy or completeness of electronic copies of this plan sheet.

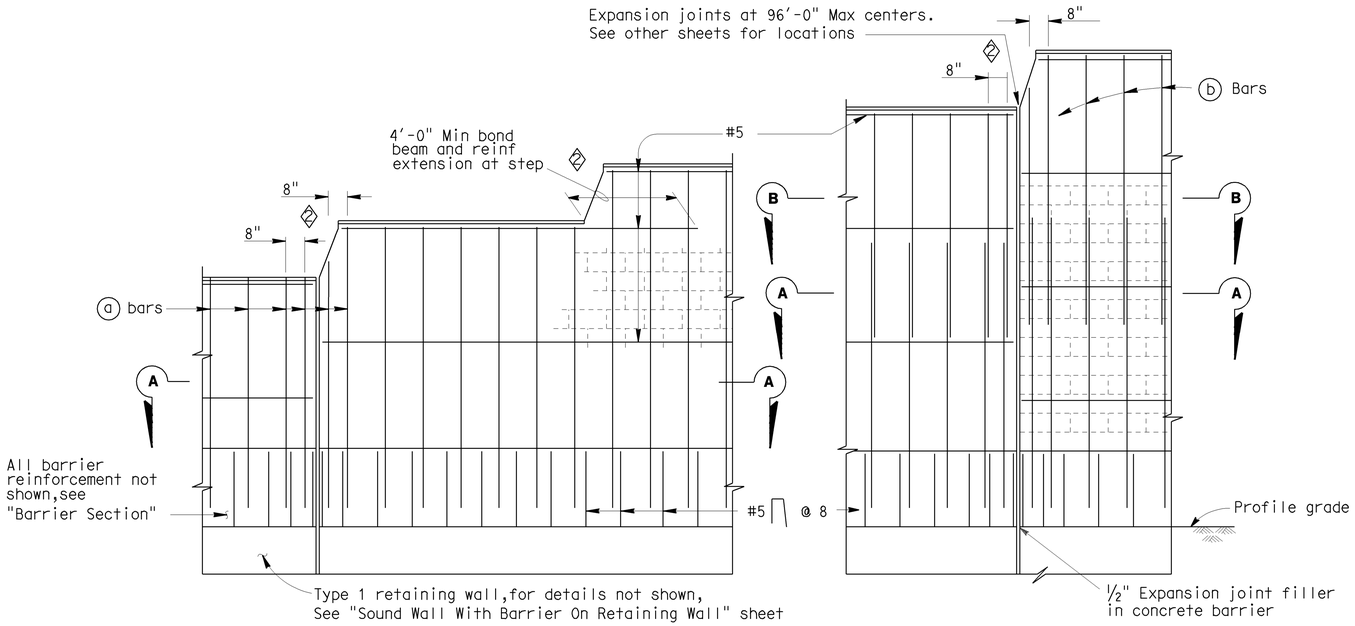


## PART ELEVATIONS

No Scale

## SOUNDWALL REINFORCEMENT TABLE

| Maximum H | (a) Bars @ 1'-4" Max | (B) bars @ 1'-4" Max | "y" | f'm (KSI) | Compressive Strength of CMU (KSI) | Maximum H |
|---|---|---|---|---|---|---|
| 6'-4" | # 4 | ——— | ——— | 1.5 | 1.9 | 6'-4" |
| 8'-4" | # 4 | ——— | ——— | 1.5 | 1.9 | 8'-4" |
| 10'-4" | # 4 | ——— | ——— | 1.5 | 1.9 | 10'-4" |
| 12'-4" | # 5 | # 4 | 5'-0" | 1.5 | 1.9 | 12'-4" |
| 14'-4" | # 6 | # 4 | 7'-0" | 1.5 | 1.9 | 14'-4" |
| 16'-4" | # 6 | # 4 | 9'-0" | 2.5 | 3.7 | 16'-4" |

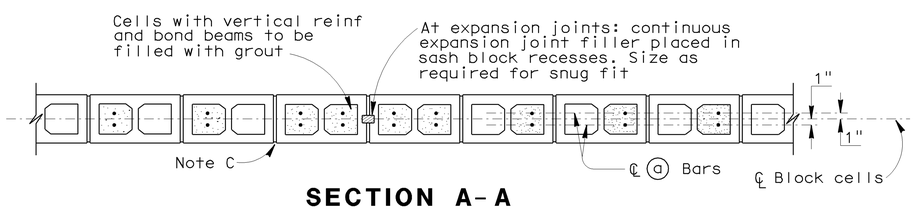


## SECTION A-A

For details not shown,see other details

## H=6'-4" THRU H=10'-4"

No Scale

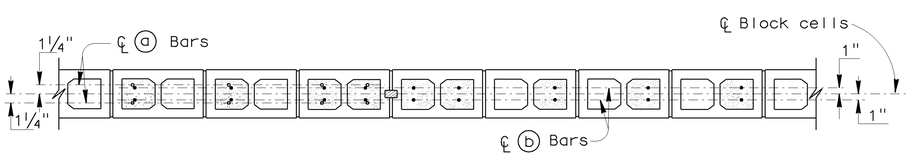


## SECTION A-A

## SECTION B-B

For details not shown,see other details

## H=12'-4" THRU H=16'-4"

No Scale

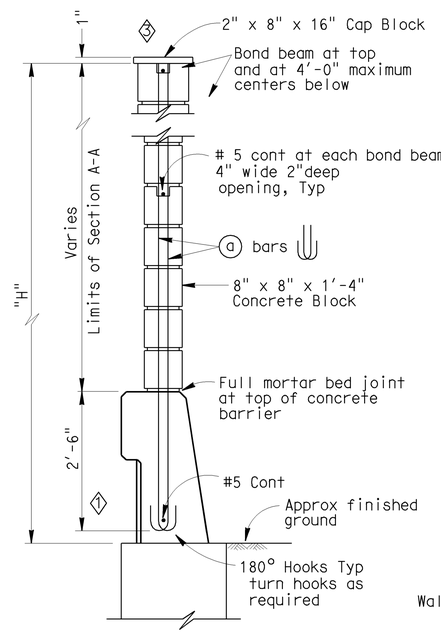


## H=6'-4" THRU H=10'-4"

For details not shown,see H=12'-4" thru H=16'-4"

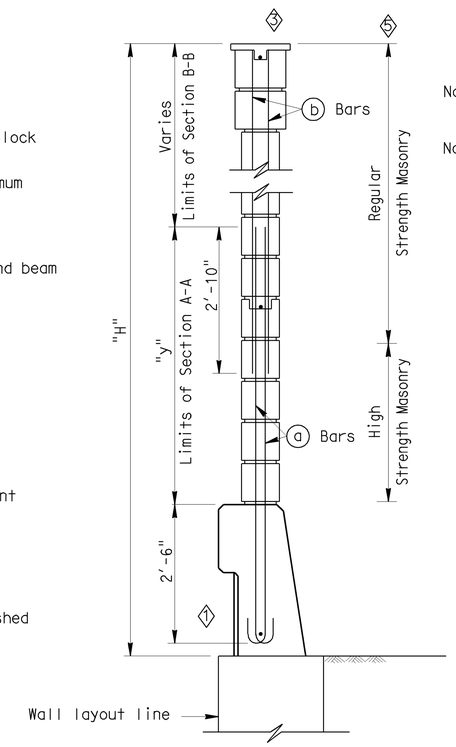


## H=12'-4" THRU H=16'-4"

For details not shown,see H=6'-4" thru H=10'-4"

## TYPICAL SECTIONS

No Scale

Note I : For details not shown,see "Sound Wall With Barrier On Retaining Wall - Masonry Block - Details No.2" sheet.

Note II : Slope ground at traffic side of barrier to drain. Maximum slope ±10%.

## GENERAL NOTES

Note A: For type of block and joint finish, see other sheets.

Note B: When blocks are laid in stacked bond, ladder type, galvanized joint reinforcement shall be provided. A minimum of 2-9 gauge wire continuous at 4'-0" maximum to be used. Locate reinforcement in joints that are at the approximate midpoint between bond beams.

Note C: Horizontal joints shall be tooled concave or may be weathered.
Vertical joints shall be tooled concave or may be raked.

Note D: For intermediate wall heights that are between the "H's" given. Use the tabular information for the next higher "H".

Note E: Masonry strengths are listed in "SOUNDWALL REINFORCEMENT TABLE".

Note F: Class 2 concrete to be used for the barrier.

## SPECIAL DETAILS

## RETAINING WALL NO. 614

## SOUNDWALL - MASONRY BLOCK WITH BARRIER ON RETAINING WALL

## DETAILS NO. 1

STANDARD DRAWING

FILE NO. xs15-130-1e

APPROVED BY T SATTER — RESPONSIBLE TECHNICAL SPECIALIST
APPROVAL DATE 9-2-08

RELEASED BY ROBERTO LACALLE — RESPONSIBLE OFFICE CHIEF
RELEASE DATE REVISED

1. Revised Barrier
2. Revised Step
3. Revised Cap Blocks
4. Removed Note
5. Added Limits of Masonry Strength

STATE OF CALIFORNIA
DEPARTMENT OF TRANSPORTATION

DIVISION OF ENGINEERING SERVICES

BRIDGE NO. 55E0089
POST MILE 19.06

CU 12220
EA 0F0321

DISREGARD PRINTS BEARING EARLIER REVISION DATES 02/18/09 04/07/09 04/17/09 06/08/09

SHEET 16 OF 21

DS OSD 2147A (ENGLISH STANDARD DRAWING "XS" BORDER REV. 01/11/08)

ORIGINAL SCALE IN INCHES FOR REDUCED PLANS 0 1 2 3

USERNAME => trlenard

55e0089-g-SWdet01.dgn

DATE PLOTTED => 25-JAN-2010 TIME PLOTTED => 08:26

| DIST | COUNTY | ROUTE | POST MILES TOTAL PROJECT | SHEET No | TOTAL SHEETS |
|---|---|---|---|---|---|
| 12 | Ora | 57 | 18.4/20.9 | 700 | 856 |

Jennifer Elwood 06/08/09
REGISTERED ENGINEER - CIVIL DATE

1-25-10
PLANS APPROVAL DATE

REGISTERED PROFESSIONAL ENGINEER JENNIFER L. ELWOOD No. C64034 Exp. 9/30/10 CIVIL STATE OF CALIFORNIA

The State of California or its officers or agents shall not be responsible for the accuracy or completeness of electronic copies of this plan sheet.

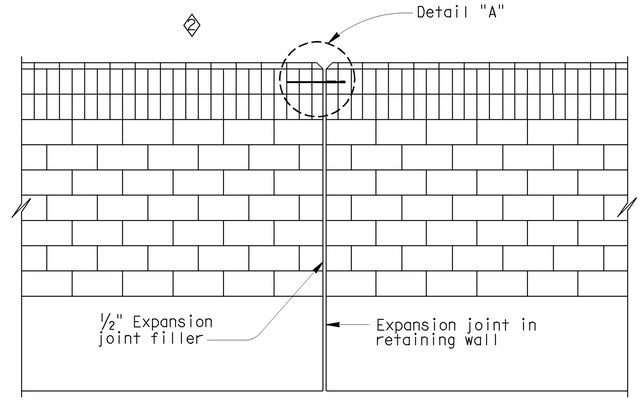


## ALIGNMENT KEY DETAIL

No Scale

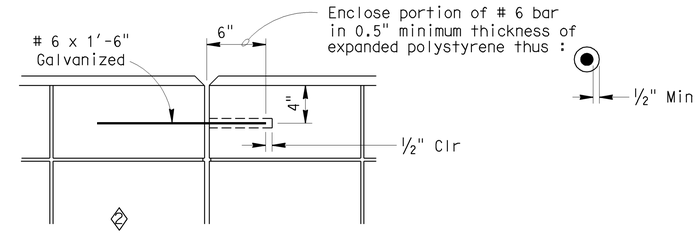


## DETAIL A

No Scale

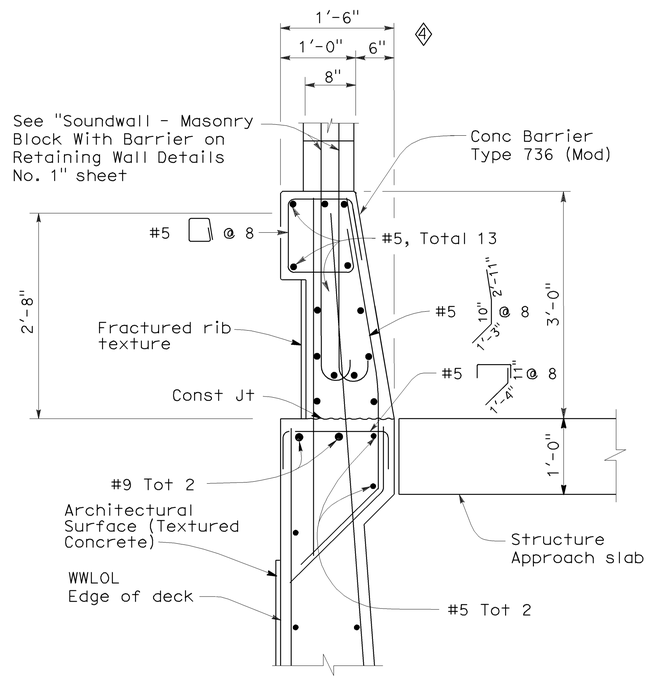


## BARRIER SECTION

No Scale

**NOTES:**

I : For details not shown, see "Retaining Wall Type 1SWB" sheets.

II : Slope ground at traffic side of barrier to drain. Maximum slope ±10%. See Standard Plan B11-56, Note D.

## DESIGN NOTES

**DESIGN**

Uniform Building Code, 1997 Edition and the Bridge Design Specifications.

**DESIGN WIND LOAD**

33 PSF

**DESIGN SEISMIC LOAD**

0.57 Dead load

**REINFORCED CONCRETE**

f'c = 3250 PSI
fy = 60 KSI

**CONCRETE MASONRY**

| REGULAR STRENGTH | HIGH STRENGTH | |
|---|---|---|
| f'm = 1500 PSI | f'm = 2000 PSI | f'm = 2500 PSI |
| fb = 1500 PSI | fb = 660 PSI | fb = 830 PSI |
| fs = 24.0 KSI | fs = 24.0 KSI | fs = 24000 PSI |
| n = 25.8 | n = 19.3 | n = 15.5 |

**LOAD FACTORS AND LOAD COMBINATIONS**

Working Stress Design ( WSD ) Percentage of unit stress

Group 1: D + E + SC 100%
Group 2: D + W + SC + E 100%
Group 3: D + 0.71 EQD + E 100%

Where:

D = Dead load
E = Lateral earth pressure
SC = Live load surcharge
W = Wind load
EQD = Seismic dead load

Load Factor Design ( LFD )

Group A: BD + 1.7 E + 1.7 SC
Group B: BD + 1.7 E + 1.3 W
Group C: BD + 1.3 E + 1.0 EQE
Group D: BD + 1.3 E + 1.0 EQD
Group E: BD + 1.1 E + 0.85 ( EQE + EQD )

Where : B = 0.9 or 1.2, whichever controls in design
D = Dead load
E = Lateral earth pressure
SC = Live load surcharge
W = Wind load
EQD = Seismic dead load
EQE = Seismic earth load

**STRENGTH REDUCTION FACTORS, Ø**

Reinforced concrete:
For flexure ---------- Ø=0.90
For shear ---------- Ø=0.85

Concrete masonry:
For flexure ---------- Ø=0.80
For shear ---------- Ø=0.60

Foundations :

See "RETAINING WALL WITH SOUNDWALL" sheets.

# SPECIAL DETAILS

## RETAINING WALL NO. 614

STANDARD DRAWING

FILE NO. xs15-130-2e
APPROVED BY T SATTER — RESPONSIBLE TECHNICAL SPECIALIST
APPROVAL DATE 4-15-08
RELEASED BY ROBERTO LACALLE — RESPONSIBLE OFFICE CHIEF
RELEASE DATE REVISED

1 Revised Barrier
2 Revised Cap Blocks
3 Removed Detail
4 Revised Dimension

STATE OF CALIFORNIA DEPARTMENT OF TRANSPORTATION

DIVISION OF ENGINEERING SERVICES

BRIDGE NO. 55E0089
POST MILE 19.06

SOUNDWALL - MASONRY BLOCK WITH BARRIER ON RETAINING WALL

DETAILS NO. 2

DS OSD 2147A (ENGLISH STANDARD DRAWING "XS" BORDER REV. 01/11/08)

ORIGINAL SCALE IN INCHES FOR REDUCED PLANS 0 1 2 3

CU 12220
EA 0F0321

DISREGARD PRINTS BEARING EARLIER REVISION DATES

REVISION DATES (PRELIMINARY STAGE ONLY) 02/18/09 04/07/09 04/17/09 06/08/09

SHEET 17 OF 21

USERNAME => trlenard

DATE PLOTTED => 25-JAN-2010 TIME PLOTTED => 08:15:36

55e0089-g-SWdet02.dgn