DIST	COUNTY	ROUTE	POST MILES TOTAL PROJECT	SHEET No	TOTAL SHEETS
12	Ora	57	18.4/20.9	301	856

Hisham Nofal 06/15/09
GEOTECHNICAL PROFESSIONAL DATE

REGISTERED PROFESSIONAL ENGINEER
HISHAM M. NOFAL
No. 2765
Exp. 09/30/09
GEOTECHNICAL
STATE OF CALIFORNIA

1-25-10
PLANS APPROVAL DATE

The State of California or its officers or agents shall not be responsible for the accuracy or completeness of electronic copies of this plan sheet.

OCTA
550 S. MAIN STREET
ORANGE, CA 92863

CH2M HILL
6 HUTTON CENTRE DRIVE, SUITE 700
SANTA ANA, CA 92707

BENCHMARK:

HORIZONTAL COORDINATES ARE CCS NAD-83, ZONE 6.
VERTICAL CONTROL BASED ON NORTH AMERICAN VERTICAL DATUM 1988.
Pt 1058: N2274248.722, E6066795.515, Elev 299.982

SAMPLER TYPES:

CALIFORNIA MODIFIED RING SAMPLER
STANDARD PENETRATION TEST SAMPLER

HAMMER TYPE:

AUTOMATIC HAMMER

CORRECTION FACTOR:

TO CONVERT FROM CALIFORNIA MODIFIED RING SAMPLER BLOW COUNT TO EQUIVALENT STANDARD PENETRATION TEST SAMPLER BLOW COUNT, FOR GRANULAR AND COHESIVE SOIL, MULTIPLY BY 0.67.

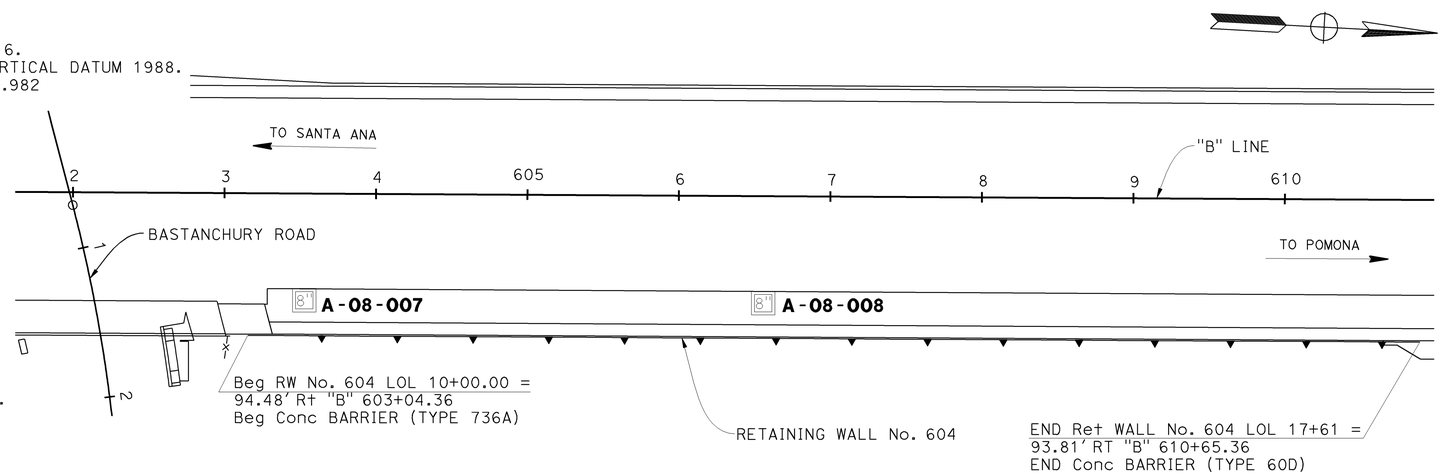

PLAN
1"=50'

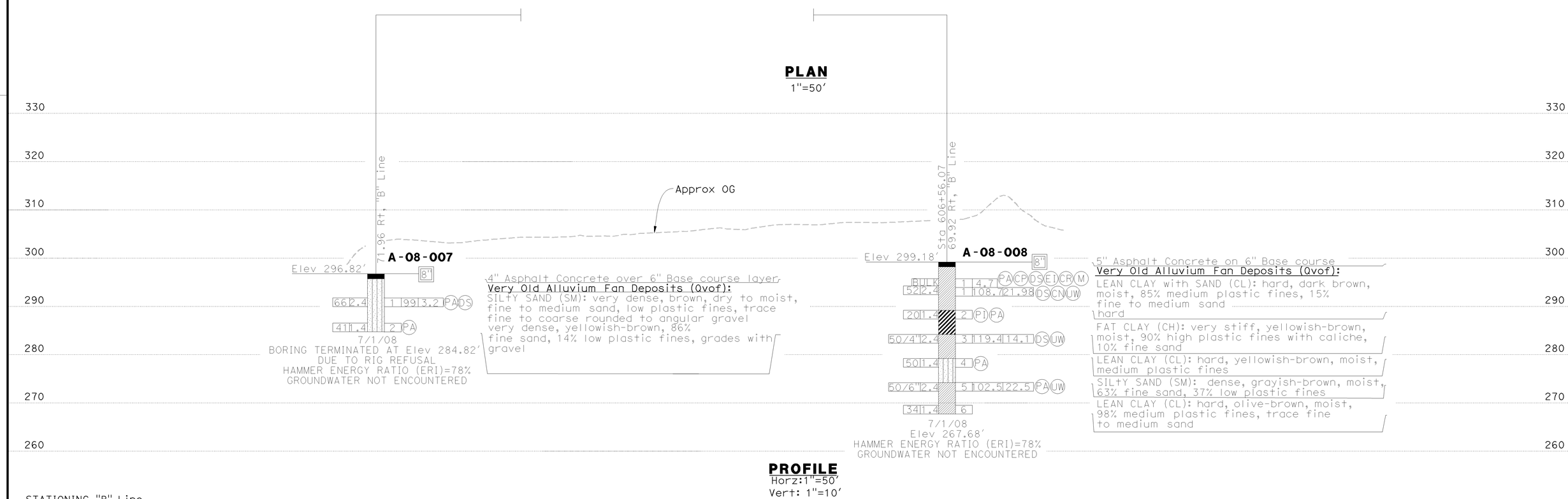

PROFILE
Horz:1"=50'
Vert: 1"=10'

STATIONING "B" Line
9 600 1 2 3 4 605 6 7 8 9 610 1 2 3 4

DESIGN OVERSIGHT	DRAWN BY	K. Reyes	R. Bethapudi FIELD INVESTIGATION BY:	PREPARED FOR THE STATE OF CALIFORNIA DEPARTMENT OF TRANSPORTATION	Ayman Salama PROJECT ENGINEER	BRIDGE NO.
SIGN OFF DATE	CHECKED BY	H. Nofal	DATE			POST MILES

RETAINING WALL No. 604

LOG OF TEST BORINGS SHEET 1 OF 3 R-16

ORIGINAL SCALE IN INCHES FOR REDUCED PLANS 0 1 2 3

CU 12220
EA 0F0321

DISREGARD PRINTS BEARING EARLIER REVISION DATES

REVISION DATES (PRELIMINARY STAGE ONLY) 02/17/09 04/07/09 06/15/09 SHEET OF

FILE => c0F032qc005.dgn

USERNAME => trmikesl DATE PLOTTED => 25-JAN-2010 TIME PLOTTED => 09:55

REFERENCE: CALTRANS SOIL & ROCK LOGGING, CLASSIFICATION, AND PRESENTATION MANUAL (JUNE 2007)

DIST	COUNTY	ROUTE	POST MILES TOTAL PROJECT	SHEET No	TOTAL SHEETS
12	Ora	57	18.4/20.9	302	856

HishamNofal 06/15/09
GEOTECHNICAL PROFESSIONAL DATE

1-25-10
PLANS APPROVAL DATE

REGISTERED PROFESSIONAL ENGINEER HISHAM M. NOFAL No. 2765 Exp. 09/30/09 GEOTECHNICAL STATE OF CALIFORNIA

The State of California or its officers or agents shall not be responsible for the accuracy or completeness of electronic copies of this plan sheet.

OCTA
550 S. MAIN STREET
ORANGE, CA 92863

CH2M HILL
6 HUTTON CENTRE DRIVE, SUITE 700
SANTA ANA, CA 92707

GROUP SYMBOLS AND NAMES

Graphic/Symbol	Group Names	Graphic/Symbol	Group Names
GW	Well-graded GRAVEL Well-graded GRAVEL with SAND	CL	Lean CLAY Lean CLAY with SAND Lean CLAY with GRAVEL SANDY lean CLAY SANDY lean CLAY with GRAVEL GRAVELLY lean CLAY GRAVELLY lean CLAY with SAND
GP	Poorly graded GRAVEL Poorly graded GRAVEL with SAND		
GW-GM	Well-graded GRAVEL with SILT Well-graded GRAVEL with SILT and SAND	CL-ML	SILTY CLAY SILTY CLAY with SAND SILTY CLAY with GRAVEL SANDY SILTY CLAY SANDY SILTY CLAY with GRAVEL GRAVELLY SILTY CLAY GRAVELLY SILTY CLAY with SAND
GW-GC	Well-graded GRAVEL with CLAY (or SILTY CLAY) Well-graded GRAVEL with CLAY and SAND (or SILTY CLAY and SAND)		
GP-GM	Poorly graded GRAVEL with SILT Poorly graded GRAVEL with SILT and SAND	ML	SILT SILT with SAND SILT with GRAVEL SANDY SILT SANDY SILT with GRAVEL GRAVELLY SILT GRAVELLY SILT with SAND
GP-GC	Poorly graded GRAVEL with CLAY (or SILTY CLAY) Poorly graded GRAVEL with CLAY and SAND (or SILTY CLAY and SAND)		
GM	SILTY GRAVEL SILTY GRAVEL with SAND	OL	ORGANIC lean CLAY ORGANIC lean CLAY with SAND ORGANIC lean CLAY with GRAVEL SANDY ORGANIC lean CLAY SANDY ORGANIC lean CLAY with GRAVEL GRAVELLY ORGANIC lean CLAY GRAVELLY ORGANIC lean CLAY with SAND
GC	CLAYEY GRAVEL CLAYEY GRAVEL with SAND		
GC-GM	SILTY, CLAYEY GRAVEL SILTY, CLAYEY GRAVEL with SAND	OL	ORGANIC SILT ORGANIC SILT with SAND ORGANIC SILT with GRAVEL SANDY ORGANIC SILT SANDY ORGANIC SILT with GRAVEL GRAVELLY ORGANIC SILT GRAVELLY ORGANIC SILT with SAND
SW	Well-graded SAND Well-graded SAND with GRAVEL		
SP	Poorly graded SAND Poorly graded SAND with GRAVEL	CH	Fat CLAY Fat CLAY with SAND Fat CLAY with GRAVEL SANDY fat CLAY SANDY fat CLAY with GRAVEL GRAVELLY fat CLAY GRAVELLY fat CLAY with SAND
SW-SM	Well-graded SAND with SILT Well-graded SAND with SILT and GRAVEL		
SW-SC	Well-graded SAND with CLAY (or SILTY CLAY) Well-graded SAND with CLAY and GRAVEL (or SILTY CLAY and GRAVEL)	MH	Elastic SILT Elastic SILT with SAND Elastic SILT with GRAVEL SANDY elastic SILT SANDY elastic SILT with GRAVEL GRAVELLY elastic SILT GRAVELLY elastic SILT with SAND
SP-SM	Poorly graded SAND with SILT Poorly graded SAND with SILT and GRAVEL		
SP-SC	Poorly graded SAND with CLAY (or SILTY CLAY) Poorly graded SAND with CLAY and GRAVEL (or SILTY CLAY and GRAVEL)	OH	ORGANIC fat CLAY ORGANIC fat CLAY with SAND ORGANIC fat CLAY with GRAVEL SANDY ORGANIC fat CLAY SANDY ORGANIC fat CLAY with GRAVEL GRAVELLY ORGANIC fat CLAY GRAVELLY ORGANIC fat CLAY with SAND
SM	SILTY SAND SILTY SAND with GRAVEL		
SC	CLAYEY SAND CLAYEY SAND with GRAVEL	OH	ORGANIC elastic SILT ORGANIC elastic SILT with SAND ORGANIC elastic SILT with GRAVEL SANDY ORGANIC elastic SILT SANDY ORGANIC elastic SILT with GRAVEL GRAVELLY ORGANIC elastic SILT GRAVELLY ORGANIC elastic SILT with SAND
SC-SM	SILTY, CLAYEY SAND SILTY, CLAYEY SAND with GRAVEL		
PT	PEAT	OL/OH	ORGANIC SOIL ORGANIC SOIL with SAND ORGANIC SOIL with GRAVEL SANDY ORGANIC SOIL SANDY ORGANIC SOIL with GRAVEL GRAVELLY ORGANIC SOIL GRAVELLY ORGANIC SOIL with SAND
	COBBLES COBBLES and BOULDERS BOULDERS		

FIELD AND LABORATORY TESTING

- (C) Consolidation (ASTM D 2435)
- (CL) Collapse Potential (ASTM D 5333)
- (CP) Compaction Curve (CTM 216)
- (CR) Corrosivity Testing (CTM 643, CTM 422, CTM 417)
- (CU) Consolidated Undrained Triaxial (ASTM D 4767)
- (DS) Direct Shear (ASTM D 3080)
- (EI) Expansion Index (ASTM D 4829)
- (M) Moisture Content (ASTM D 2216)
- (OC) Organic Content-% (ASTM D 2974)
- (P) Permeability (CTM 220)
- (PA) Particle Size Analysis (ASTM D 422)
- (PI) Plasticity Index (AASHTO T 90) Liquid Limit (AASHTO T 89)
- (PL) Point Load Index (ASTM D 5731)
- (PM) Pressure Meter
- (PP) Pocket Penetrometer
- (R) R-Value (CTM 301)
- (SE) Sand Equivalent (CTM 217)
- (SG) Specific Gravity (AASHTO T 100)
- (SL) Shrinkage Limit (ASTM D 427)
- (SW) Swell Potential (ASTM D 4546)
- (TV) Pocket Torvane
- (UC) Unconfined Compression-Soil (ASTM D 2166) Unconfined Compression-Rock (ASTM D 2938)
- (UU) Unconsolidated Undrained Triaxial (ASTM D 2850)
- (UW) Unit Weight (ASTM D 4767)
- (VS) Vane Shear (AASHTO T 223)

APPARENT DENSITY OF COHESIONLESS SOILS

Description	SPT N_{60} (Blows / 12 inches)
Very loose	0 - 4
Loose	5 - 10
Medium Dense	11 - 30
Dense	31 - 50
Very Dense	> 50

MOISTURE

Description	Criteria
Dry	Absence of moisture, dusty, dry to the touch
Moist	Damp but no visible water
Wet	Visible free water, usually soil is below water table

PERCENT OR PROPORTION OF SOILS

Description	Criteria
Trace	Particles are present but estimated to be less than 5%
Few	5 to 10%
Little	15 to 25%
Some	30 to 45%
Mostly	50 to 100%

PARTICLE SIZE

Description		Size
Boulder		> 12"
Cobble		3" to 12"
Gravel	Coarse	3/4" to 3"
	Fine	No. 4 to 3/4"
Sand	Coarse	No. 10 to No. 4
	Medium	No. 40 to No. 10
	Fine	No. 200 to No. 40

CEMENTATION

Description	Criteria
Weak	Crumbles or breaks with handling or little finger pressure.
Moderate	Crumbles or breaks with considerable finger pressure.
Strong	Will not crumble or break with finger pressure.

CONSISTENCY OF COHESIVE SOILS

Description	Unconfined Compressive Strength (tsf)	Pocket Penetrometer Measurement (tsf)	Torvane Measurement (tsf)	Field Approximation
Very Soft	< 0.25	< 0.25	< 0.12	Easily penetrated several inches by fist
Soft	0.25 to 0.50	0.25 to 0.50	0.12 to 0.25	Easily penetrated several inches by thumb
Medium Stiff	0.50 to 1.0	0.50 to 1.0	0.25 to 0.50	Penetrated several inches by thumb with moderate effort
Stiff	1 to 2	1 to 2	0.50 to 1.0	Readily indented by thumb but penetrated only with great effort
Very Stiff	2 to 4	2 to 4	1.0 to 2.0	Readily indented by thumbnail
Hard	> 4.0	> 4.0	> 2.0	Indented by thumbnail with difficulty

PLASTICITY OF FINE-GRAINED SOILS

Description	Criteria
Nonplastic	A 1/8-inch thread cannot be rolled at any water content.
Low	The thread can barely be rolled and the lump cannot be formed when drier than the plastic limit.
Medium	The thread is easy to roll and not much time is required to reach the plastic limit. The thread cannot be rerolled after reaching the plastic limit. The lump crumbles when drier than the plastic limit.
High	It takes considerable time rolling and kneading to reach the plastic limit. The thread can be rerolled several times after reaching the plastic limit. The lump can be formed without crumbling when drier than the plastic limit.

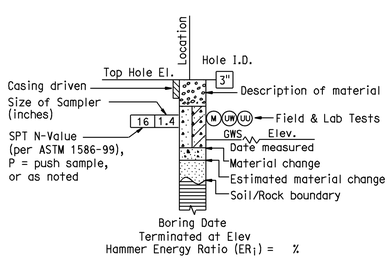

ROTARY BORING

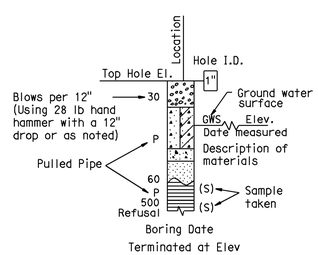

HAND BORING

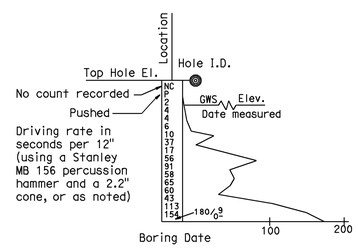

DYNAMIC CONE PENETRATION BORING

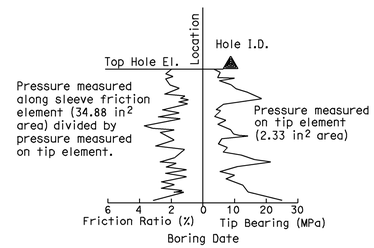

CONE PENETRATION TEST (CPT) SOUNDING

BOREHOLE IDENTIFICATION

Symbol	Hole Type	Description
Size	A	Auger Boring
Size	R P	Rotary drilled boring Rotary percussion boring (air)
Size HQ	R	Rotary drilled diamond core
Size	HD HA	Hand driven (1-inch soil tube) Hand Auger
●	D	Dynamic Cone Penetration Boring
◕	B	Hollow Stem Auger Boring (HSA)
▲	CPT	Cone Penetration Test (ASTM D 5778-95)
□	O	Other

Note: Size in inches.

DESIGN OVERSIGHT

SIGN OFF DATE

DRAWN BY K. Reyes

CHECKED BY H. Nofal

R. Bethapudi
FIELD INVESTIGATION BY:

DATE

PREPARED FOR THE STATE OF CALIFORNIA DEPARTMENT OF TRANSPORTATION

Ayman Salama
PROJECT ENGINEER

BRIDGE NO.

POST MILES

SOIL LEGEND

RETAINING WALL No. 604

LOG OF TEST BORINGS SHEET 2 OF 3

R-17

ORIGINAL SCALE IN INCHES FOR REDUCED PLANS 0 1 2 3

CU 12220
EA 0F0321

DISREGARD PRINTS BEARING EARLIER REVISION DATES

REVISION DATES (PRELIMINARY STAGE ONLY) 02/27/09 04/27/09 06/15/09

SHEET OF

FILE => c0F032qc006.dgn

USERNAME => trcarol DATE PLOTTED => 25-JAN-2010 TIME PLOTTED => 12:56

FED. ROAD DIV. No.	STATE	F.A. PROJECT No.	SHEET No.	TOTAL SHEETS
7	CALIF.			

DIST.	COUNTY	ROUTE	SECTION	SHEET No.	TOTAL SHEETS
07	ORA	57	18.4/20.9	150	180

Date Approved September 30, 1968

BENCH MARK

BM 35-19A-56 Elev. 281.90
Set ch. knob on S.W. cor of drop inlet @ W. end of conc. flume 234' E. of Sta. 53B-74' P Line ℄ 1320'± No. of Pioneer Ave.

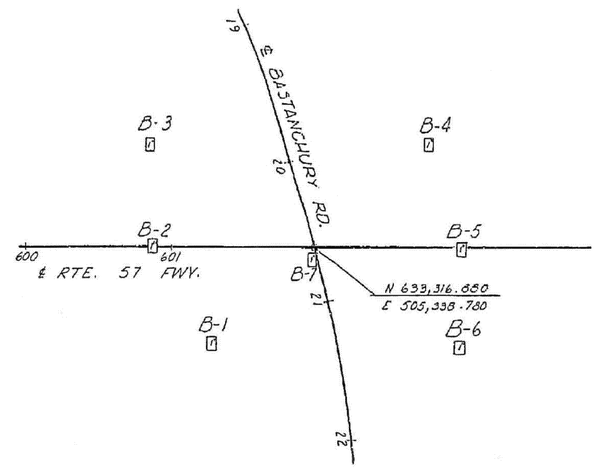

PLAN
Scale 1"=50'

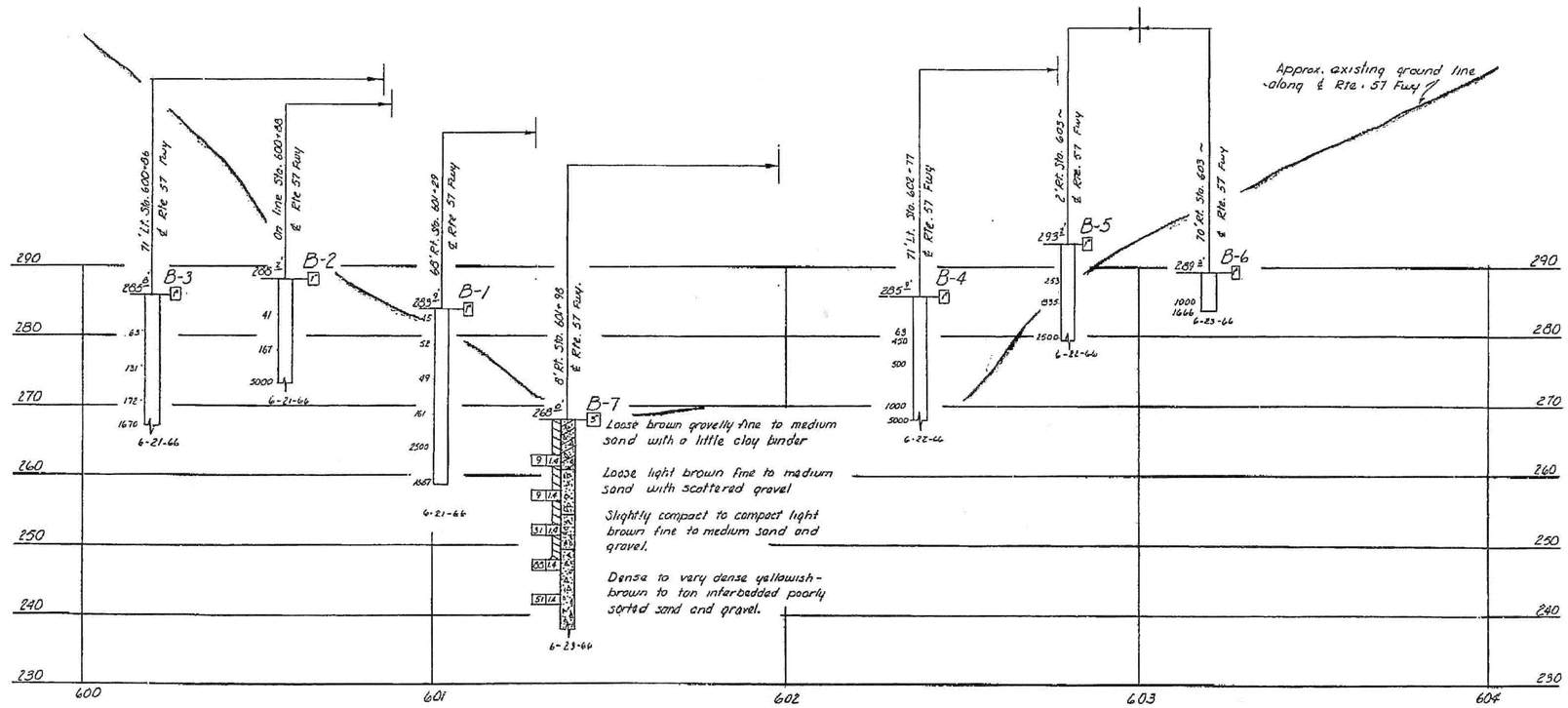

PROFILE
Scale Vert. 1"=10'
Horiz. 1"=20'

INFORMATION ON ACTUAL FOUNDATION CONDITIONS ENCOUNTERED IS ON FILE IN BRIDGE GEOLOGY SECTION

NO AS Built Corrections
AS BUILT
CORRECTIONS BY
CONTRACT NO.
DATE

NO GROUND WATER ENCOUNTERED DURING THIS INVESTIGATION BY BRIDGE DEPT. GEOLOGY SECTION
DATE June 1966

DIVISION OF ENGINEERING SERVICES - GEOTECHNICAL SERVICES

As-Built Log of Test Borings sheet is considered an informational document only. As such, the State of California registration seal with signature, license number and registration certificate expiration date confirm that this is a true and accurate copy of the original document. This drawing is available and presented only for the convenience of any bidder, contractor or other interested party.

DIST.	COUNTY	ROUTE	POST MILES-TOTAL PROJECT	Sheet No.	Total Sheets
12	Ora	57	18.4/20.9	303	856

Hisham Nofal — 06/08/09
REGISTERED CIVIL ENGINEER — DATE

REGISTERED PROFESSIONAL ENGINEER
HISHAM M. NOFAL
No. 2765
Exp. 09/30/11
GEOTECHNICAL
STATE OF CALIFORNIA

RETAINING WALL NO. 604

LOG OF TEST BORINGS SHEET 3 OF 3

NOTE: A COPY OF THIS LOG OF TEST BORINGS IS AVAILABLE AT OFFICE OF STRUCTURE MAINTENANCE AND INVESTIGATIONS, SACRAMENTO, CALIFORNIA

CU: -12220
EA: 0F0231

BRIDGE No.
Sheet of

To Accompany Plans Dated 1-25-10

LEGEND OF BORING OPERATIONS

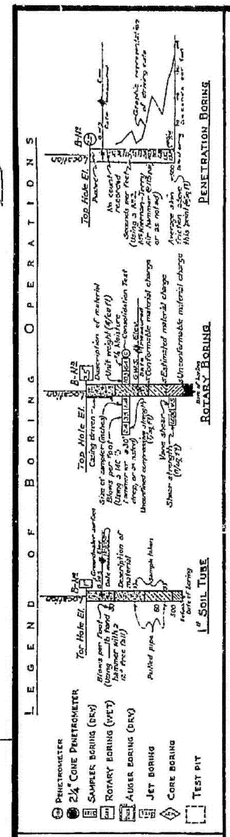

LEGEND OF EARTH MATERIALS

GRAVEL, SAND, SILT, CLAY, SANDY CLAY OR CLAYEY SAND, SILTY CLAY OR CLAYEY SILT, CLAY AND ORGANIC MATTER, FILL MATERIAL, IGNEOUS ROCK, SANDY SILT OR SILTY SAND, SEDIMENTARY ROCK, METAMORPHIC ROCK

CLASSIFICATION OF MATERIAL BASED ON STANDARD GRADE SIZE LIMITS

DIAGRAM SHOWING THE BASIS FOR ESTIMATED GRADING CHARACTERISTICS AND IN CERTAIN DESIGNATION OF CLASS NAMES.

IF GRAVEL IS PRESENT IN APPRECIABLE QUANTITY THE TERM "GRAVELLY" MAY BE ADDED TO THE CLASS NAME. EX. "GRAVELLY SAND". THE TERMS "COARSE", "MEDIUM" AND "FINE" MAY BE USED TO DESCRIBE SAND, SILT AND GRAVEL, REFER TO STANDARD GRADE SIZE LIMITS.

NOTE: Classification of earth material as shown on this sheet is based upon field inspection and is not to be construed to imply mechanical analysis.

FIELD STUDY by D. CRAWFORD 6-23-66
DRAWN by M. ALLEGRO 7-1-66
CHECKED by C. Bacon 7-8-66
Approved Recommendation: Engineering Geologist

BRIDGE DEPARTMENT
ENGINEERING GEOLOGY SECTION

150

AS BUILT PLANS
Contract No. 07-032134
Date Completed
Document No. 7000157 8

STATE OF CALIFORNIA
DEPARTMENT OF PUBLIC WORKS
DIVISION OF HIGHWAYS

BASTANCHURY ROAD UNDERCROSSING

LOG OF TEST BORINGS

SCALE As Noted | BRIDGE 55-465 | FILE | DRAWING 55465-7

PREL. DRAWING No. PR-

Champ 07200
W.A. 032131

Diazoprint prints beach

c0F032qc007.tif

Dist	COUNTY	ROUTE	POST MILES TOTAL PROJECT	SHEET No.	TOTAL SHEETS
12	Ora	57	18.4/20.9	304	856

REGISTERED CIVIL ENGINEER 06/15/09 DATE

1-25-10
PLANS APPROVAL DATE

REGISTERED PROFESSIONAL ENGINEER JOHN W. POWELL No. C71463 Exp.12/31/09 CIVIL STATE OF CALIFORNIA

THE STATE OF CALIFORNIA OR ITS OFFICERS OR AGENTS SHALL NOT BE RESPONSIBLE FOR THE ACCURACY OR COMPLETENESS OF SCANNED COPIES OF THIS PLAN SHEET.

CH2M HILL
6 HUTTON CENTRE DRIVE,
SUITE 700
SANTA ANA, CA 92707

OCTA
550 S. MAIN STREET
ORANGE, CA 92863

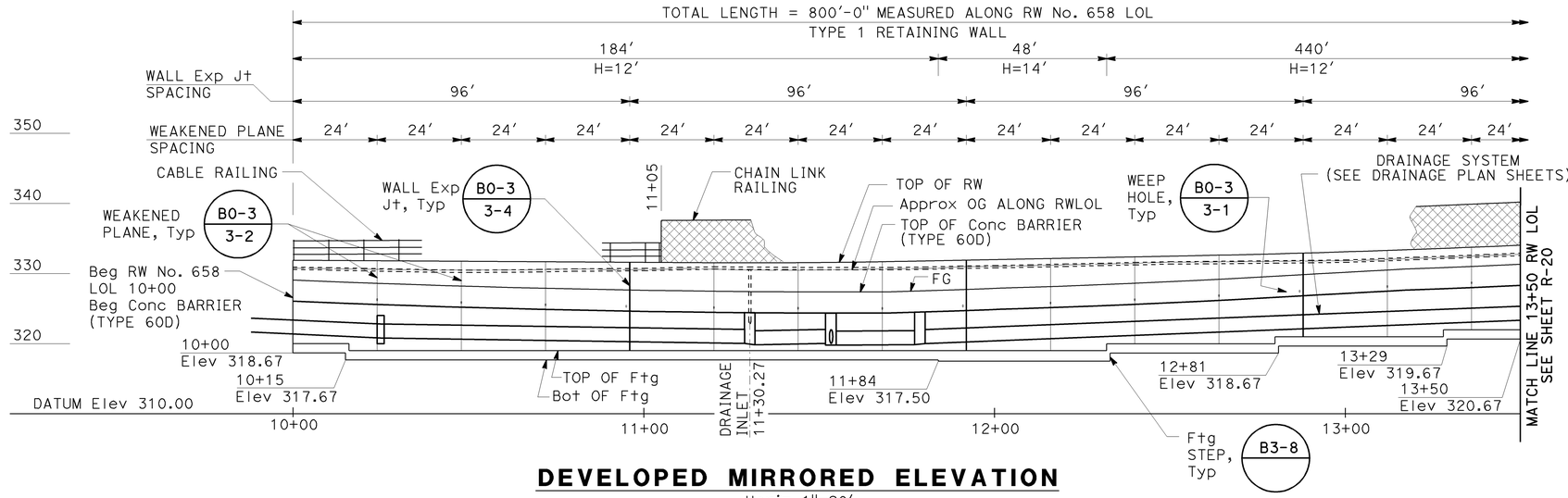

DEVELOPED MIRRORED ELEVATION

Horiz 1"=20'
Vert 1"=10'

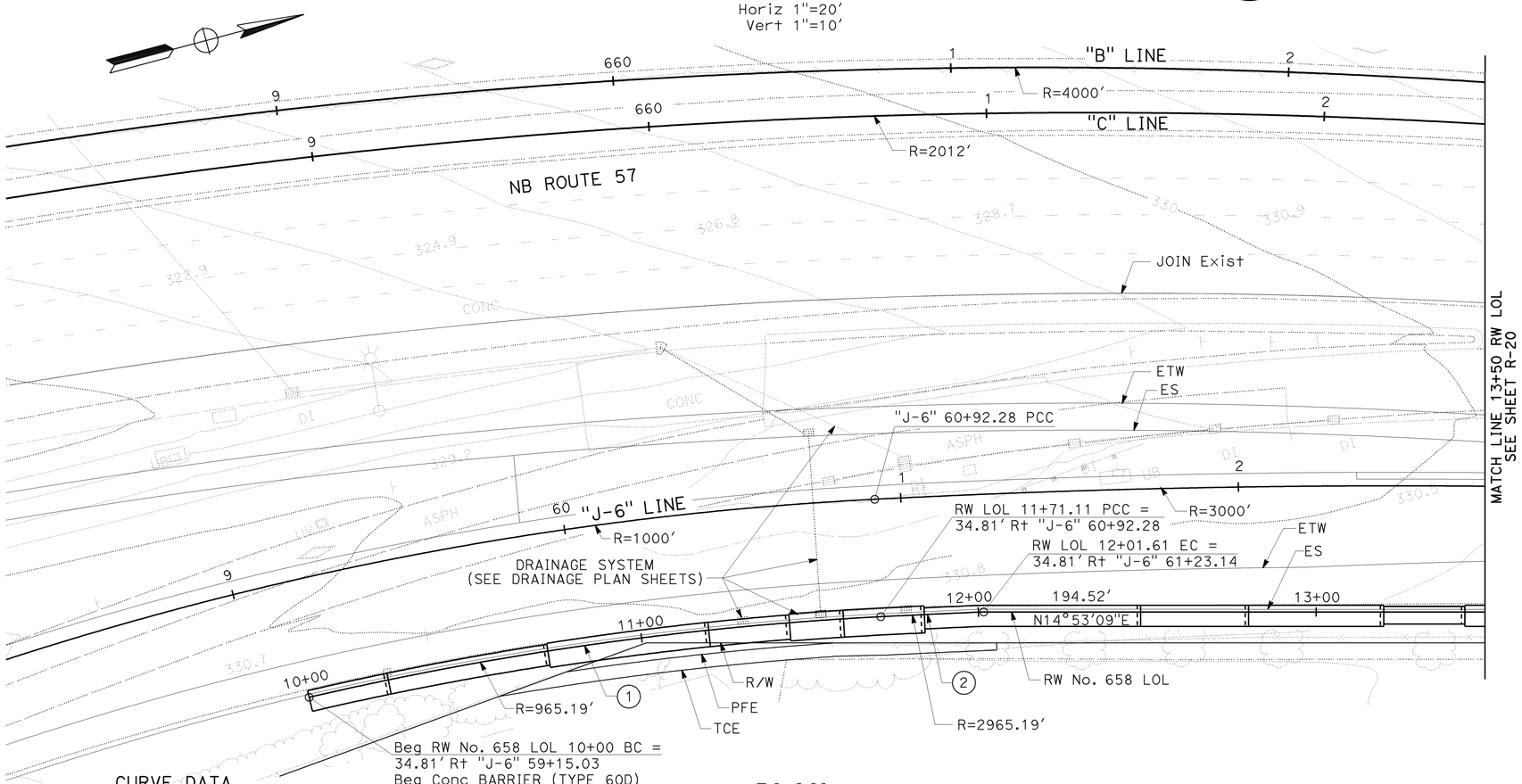

PLAN

1"=20'

CURVE DATA

NO	R	Δ	T	L
1	965.19'	10°09'27"	85.78'	171.11'
2	2965.19'	0°03'22"	15.25'	30.51'
3	2964.52'	1°54'41"	49.45'	98.90'
4	2969.52'	0°50'19"	21.74'	43.47'

LEGEND:

(X) CURVE NUMBER

NOTES:

1. CONTRACTOR TO FIELD VERIFY ALL UTILITY LOCATIONS PRIOR TO RETAINING WALL CONSTRUCTION.
2. FOR RETAINING WALL ELEVATION TABLE, SEE SHEET R-21.
3. FOR TYPICAL SECTIONS, SEE R-22

THIS PLAN ACCURATE FOR RETAINING WALL WORK ONLY.

RETAINING WALL PLAN
RW No. 658

SCALE AS SHOWN

R-19

STATE OF CALIFORNIA - DEPARTMENT OF TRANSPORTATION
CONSULTANT FUNCTIONAL SUPERVISOR: THOMAS IONTA
CALCULATED-DESIGNED BY: JOHN POWELL
CHECKED BY: MARK FRICKE
REVISED BY / DATE REVISED

LAST REVISION 06-15-09
DATE PLOTTED => 25-JAN-2010
TIME PLOTTED => 11:12

Dist	COUNTY	ROUTE	POST MILES TOTAL PROJECT	SHEET No.	TOTAL SHEETS
12	Ora	57	18.4/20.9	305	856

REGISTERED CIVIL ENGINEER 06/15/09 DATE

1-25-10
PLANS APPROVAL DATE

REGISTERED PROFESSIONAL ENGINEER JOHN W. POWELL No. C71463 Exp.12/31/09 CIVIL STATE OF CALIFORNIA

THE STATE OF CALIFORNIA OR ITS OFFICERS OR AGENTS SHALL NOT BE RESPONSIBLE FOR THE ACCURACY OR COMPLETENESS OF SCANNED COPIES OF THIS PLAN SHEET.

CH2M HILL
6 HUTTON CENTRE DRIVE,
SUITE 700
SANTA ANA, CA 92707

OCTA
550 S. MAIN STREET
ORANGE, CA 92863

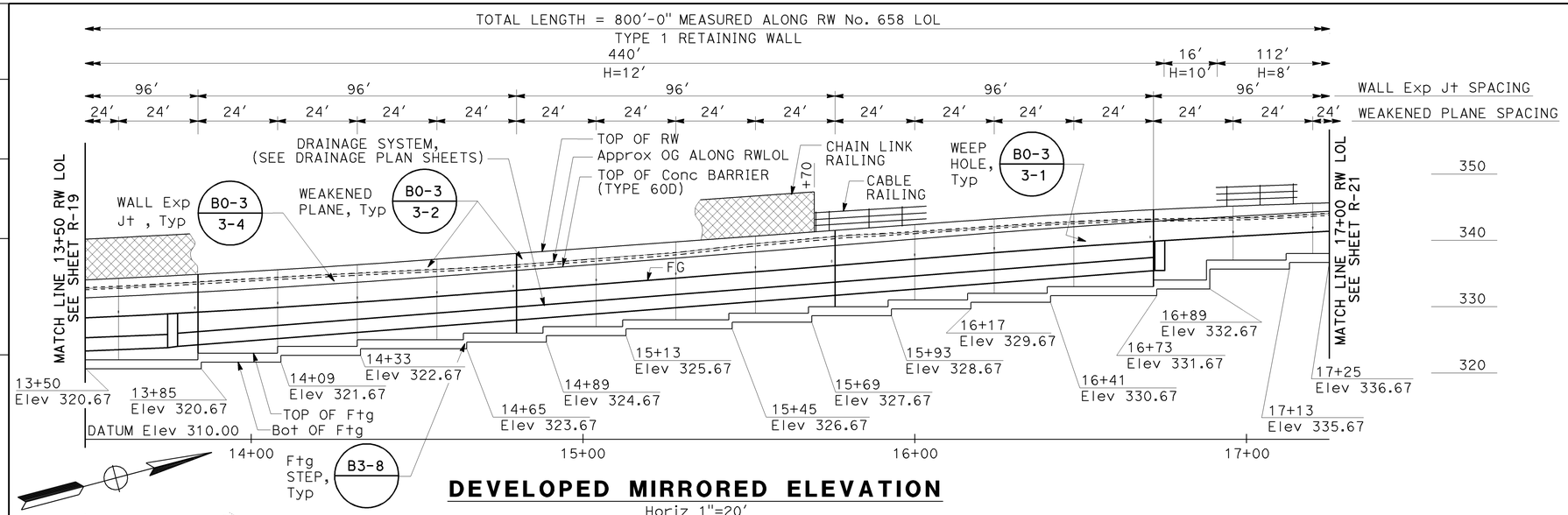

DEVELOPED MIRRORED ELEVATION

Horiz 1"=20'
Vert 1"=10'

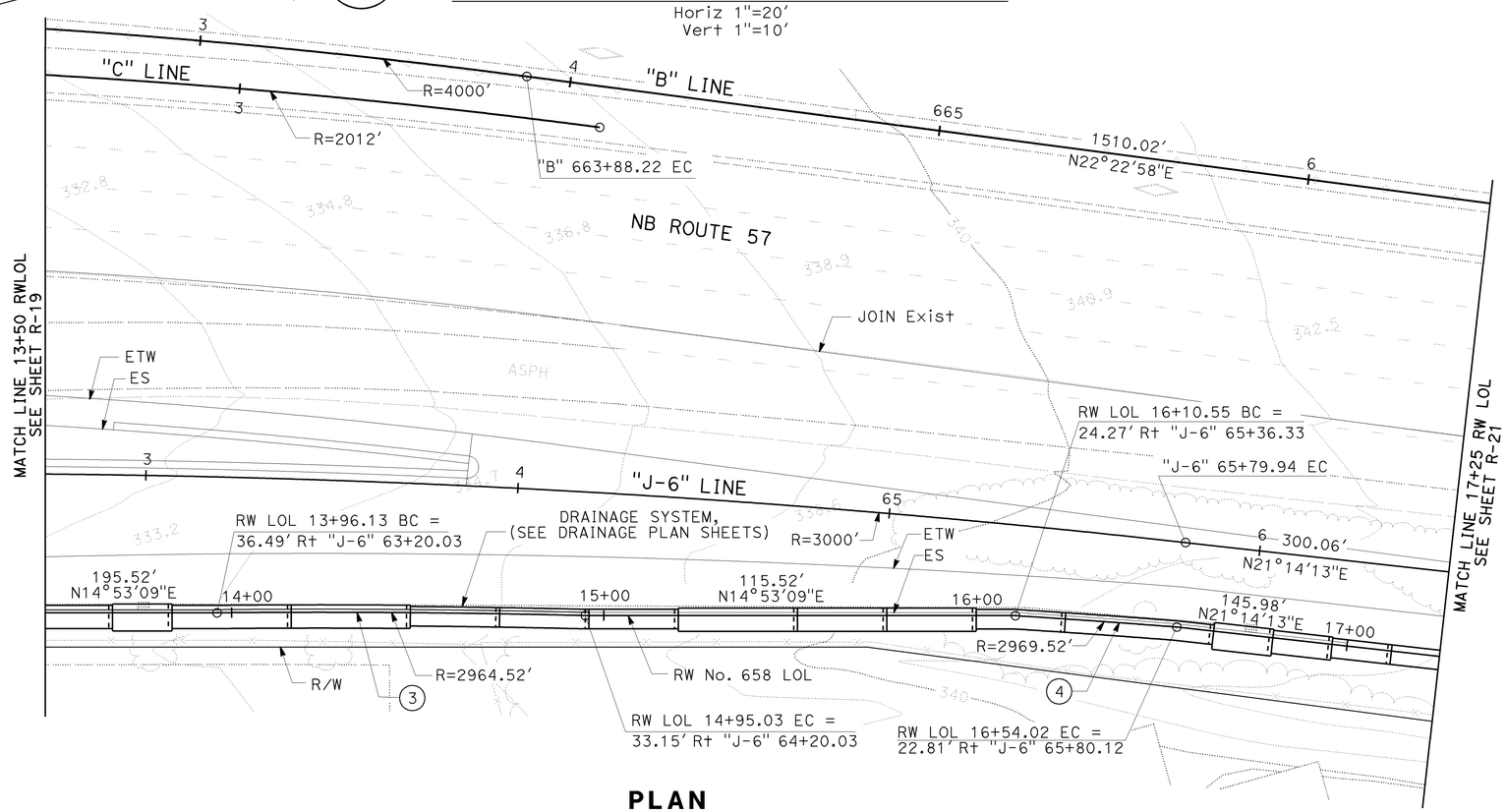

PLAN

1"=20'

NOTES:

1. FOR NOTES, CURVE DATA AND LEGEND, SEE SHEET R-19.
2. FOR RETAINING WALL ELEVATIONS TABLE, SEE SHEET R-21.
3. FOR TYPICAL SECTIONS, SEE SHEET R-22

RETAINING WALL PLAN
RW No. 658

SCALE AS SHOWN

R-20

THIS PLAN ACCURATE FOR RETAINING WALL WORK ONLY.

REVISED BY | DATE REVISED
JOHN POWELL | MARK FRICKE
CALCULATED-DESIGNED BY | CHECKED BY
CONSULTANT FUNCTIONAL SUPERVISOR | THOMAS IONTA

STATE OF CALIFORNIA - DEPARTMENT OF TRANSPORTATION
Caltrans

LAST REVISION 06-15-09 | DATE PLOTTED => 25-JAN-2010 | TIME PLOTTED => 11:12

Dist	COUNTY	ROUTE	POST MILES TOTAL PROJECT	SHEET No.	TOTAL SHEETS
12	Ora	57	18.4/20.9	306	856

REGISTERED CIVIL ENGINEER 06/15/09 DATE

1-25-10
PLANS APPROVAL DATE

REGISTERED PROFESSIONAL ENGINEER JOHN W. POWELL No. C71463 Exp.12/31/09 CIVIL STATE OF CALIFORNIA

THE STATE OF CALIFORNIA OR ITS OFFICERS OR AGENTS SHALL NOT BE RESPONSIBLE FOR THE ACCURACY OR COMPLETENESS OF SCANNED COPIES OF THIS PLAN SHEET.

CH2M HILL
6 HUTTON CENTRE DRIVE,
SUITE 700
SANTA ANA, CA 92707

OCTA
550 S. MAIN STREET
ORANGE, CA 92863

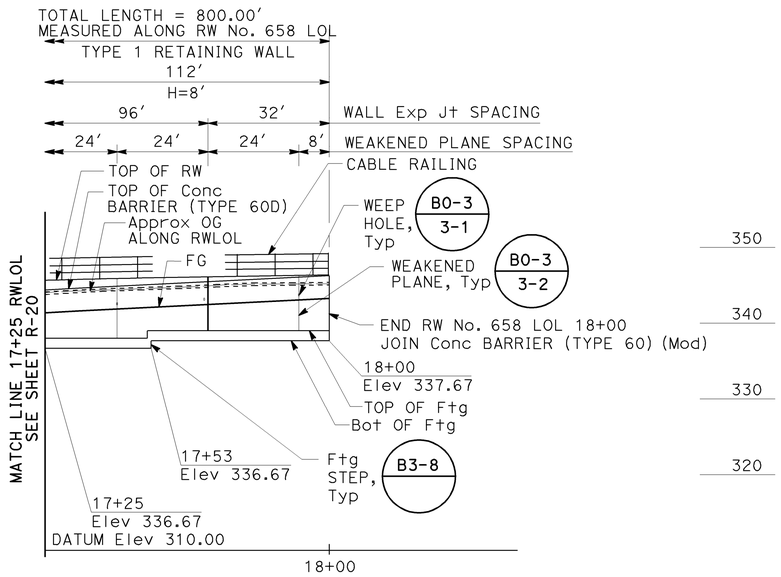

DEVELOPED MIRRORED ELEVATION

Horiz 1"=20'
Vert 1"=10'

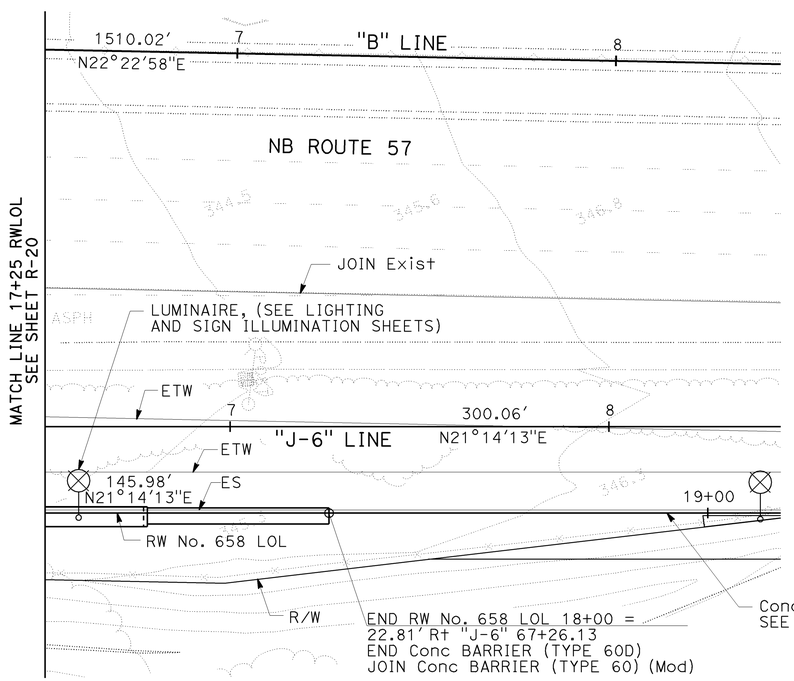

PLAN

1"=20'

RETAINING WALL ELEVATIONS

RW LOL STA	TOP OF WALL	RW LOL STA	TOP OF WALL
10+00	331.82	14+00	335.51
10+10	331.84	14+10	335.82
10+20	331.87	14+20	336.14
10+30	331.90	14+30	336.48
10+40	331.93	14+40	336.83
10+50	331.96	14+50	337.20
10+60	331.98	14+60	337.58
10+70	332.01	14+70	337.97
10+80	332.04	14+80	338.36
10+90	332.07	14+90	338.75
11+00	332.09	15+00	339.14
11+10	332.12	15+10	339.53
11+20	332.15	15+20	339.92
11+30	332.18	15+30	340.31
11+40	332.21	15+40	340.69
11+50	332.23	15+50	341.06
11+60	332.26	15+60	341.41
11+70	332.29	15+70	341.75
11+80	332.32	15+80	342.08
11+90	332.34	15+90	342.40
12+00	332.37	16+00	342.70
12+10	332.40	16+10	343.00
12+20	332.43	16+20	343.28
12+30	332.48	16+30	343.54
12+40	332.54	16+40	343.80
12+50	332.62	16+50	344.04
12+60	332.71	16+60	344.27
12+70	332.82	16+70	344.49
12+80	332.94	16+80	344.70
12+90	333.07	16+90	344.89
13+00	333.22	17+00	345.08
13+10	333.38	17+10	345.25
13+20	333.56	17+20	345.40
13+30	333.75	17+30	345.55
13+40	333.96	17+40	345.68
13+50	334.18	17+50	345.80
13+60	334.42	17+60	345.91
13+70	334.67	17+70	346.01
13+80	334.94	17+80	346.09
13+90	335.22	17+90	346.18
		18+00	346.26

NOTES:

1. FOR NOTES, CURVE DATA AND LEGEND, SEE SHEET R-19.
2. FOR TYPICAL SECTIONS , SEE SHEET R-22.

THIS PLAN ACCURATE FOR RETAINING WALL WORK ONLY.

RETAINING WALL PLAN
RW No. 658

SCALE AS SHOWN

R-21

STATE OF CALIFORNIA - DEPARTMENT OF TRANSPORTATION
Caltrans

CONSULTANT FUNCTIONAL SUPERVISOR: THOMAS IONTA
CALCULATED-DESIGNED BY: JOHN POWELL
CHECKED BY: MARK FRICKE
REVISED BY
DATE REVISED

LAST REVISION 06-15-09
DATE PLOTTED => 25-JAN-2010
TIME PLOTTED => 11:12

Dist	COUNTY	ROUTE	POST MILES TOTAL PROJECT	SHEET No.	TOTAL SHEETS
12	Ora	57	18.4/20.9	307	856

REGISTERED CIVIL ENGINEER 06/15/09 DATE

1-25-10
PLANS APPROVAL DATE

REGISTERED PROFESSIONAL ENGINEER
JOHN W. POWELL
No. C71463
Exp.12/31/09
CIVIL
STATE OF CALIFORNIA

THE STATE OF CALIFORNIA OR ITS OFFICERS OR AGENTS SHALL NOT BE RESPONSIBLE FOR THE ACCURACY OR COMPLETENESS OF SCANNED COPIES OF THIS PLAN SHEET.

CH2M HILL
6 HUTTON CENTRE DRIVE,
SUITE 700
SANTA ANA, CA 92707

OCTA
550 S. MAIN STREET
ORANGE, CA 92863

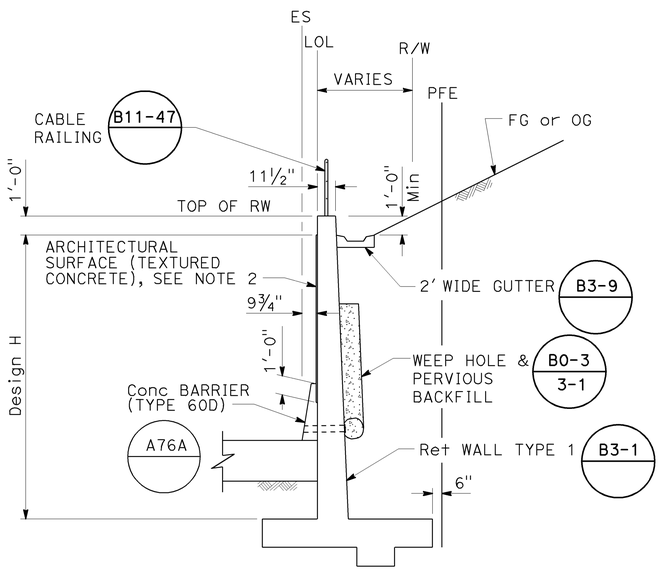

TYPICAL SECTION

¼"=1'-0"

Sta 10+00 TO Sta 11+05
AND
STA 15+70 TO Sta 18+00

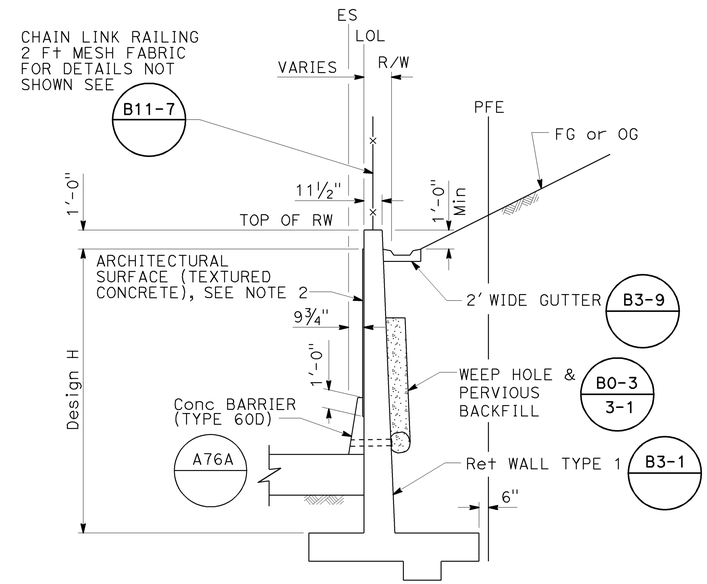

TYPICAL SECTION

¼"=1'-0"

Sta 11+05 TO STA 15+70

NOTES:

1. FOR NOTES SEE SHEET R-19.
2. SEE RETAINING WALL DETAILS SHEET.

TYPICAL SECTIONS
RW No. 658

SCALE AS SHOWN

R-22

STATE OF CALIFORNIA - DEPARTMENT OF TRANSPORTATION
Caltrans

CONSULTANT FUNCTIONAL SUPERVISOR: THOMAS IONTA
CALCULATED-DESIGNED BY: JOHN POWELL
CHECKED BY: MARK FRICKE
REVISED BY
DATE REVISED

LAST REVISION 06-15-09
DATE PLOTTED => 25-JAN-2010
TIME PLOTTED => 11:12

Dist	COUNTY	ROUTE	POST MILES TOTAL PROJECT	SHEET No.	TOTAL SHEETS
12	Ora	57	18.4/20.9	308	856

REGISTERED CIVIL ENGINEER 06/15/09 DATE

1-25-10
PLANS APPROVAL DATE

REGISTERED PROFESSIONAL ENGINEER JOHN W. POWELL No. C71463 Exp.12/31/09 CIVIL STATE OF CALIFORNIA

THE STATE OF CALIFORNIA OR ITS OFFICERS OR AGENTS SHALL NOT BE RESPONSIBLE FOR THE ACCURACY OR COMPLETENESS OF SCANNED COPIES OF THIS PLAN SHEET.

CH2M HILL
6 HUTTON CENTRE DRIVE,
SUITE 700
SANTA ANA, CA 92707

OCTA
550 S. MAIN STREET
ORANGE, CA 92863

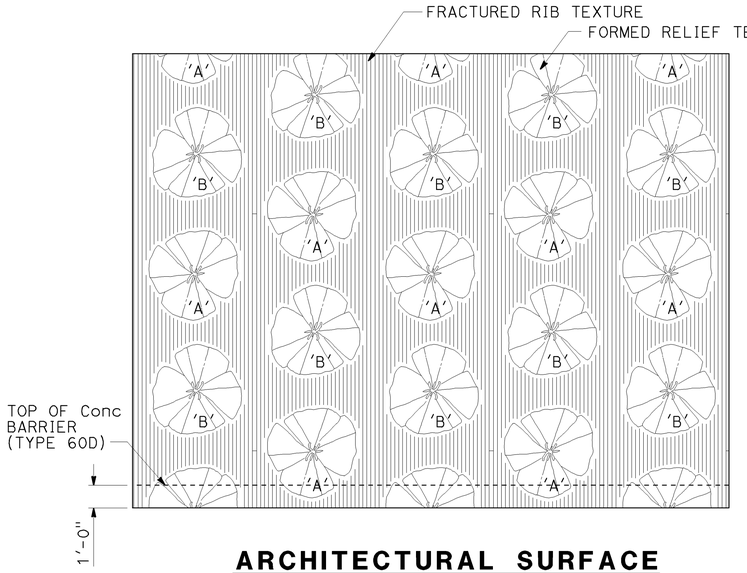

ARCHITECTURAL SURFACE (TEXTURED CONCRETE) ELEVATION

NOTES:

1. IDENTICAL FLOWER IMAGES, SCALE AND SPACING SHALL BE USED FOR FLOWER PATTERN.
2. WITHIN A VERTICAL COLUMN, FLOWER IMAGES SHALL ALTERNATE BETWEEN FLOWERS 'A' AND 'B'. VERTICAL COLUMNS SHALL BE OFFSET 30" FROM ADJACENT COLUMNS.
3. WHERE PLACED ON WALLS BOUNDED BY CONCRETE BARRIERS, FINISHED GRADE OR TOP OF WALL, FLOWER PATTERN SHALL BE CONTINUED WITHOUT CONCERN FOR PARTIAL FLOWER IMAGES, EXCEPT AS NOTED.

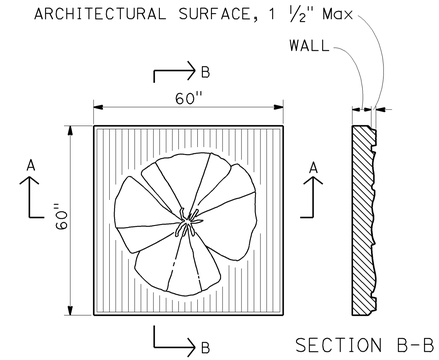

FLOWER PATTERN DETAILS

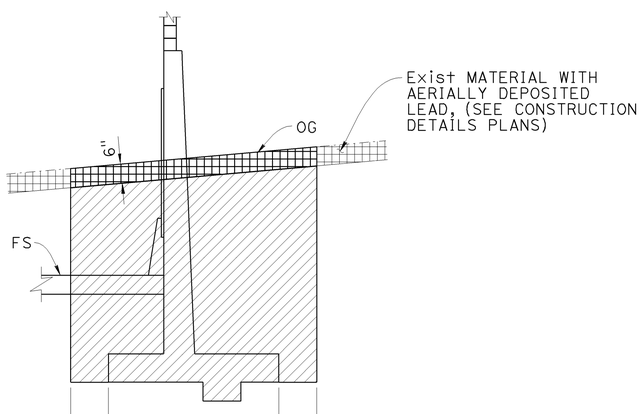

IN CUT

LIMITS OF PAYMENT OF EXCAVATION FOR RETAINING WALL

NOTE:
FOR BACKFILL SEE CALTRANS STANDARD PLANS

LEGEND

INDICATES STRUCTURE EXCAVATION (TYPE Y-1) (AERIALLY DEPOSITED LEAD)

STRUCTURE EXCAVATION (RETAINING WALL)

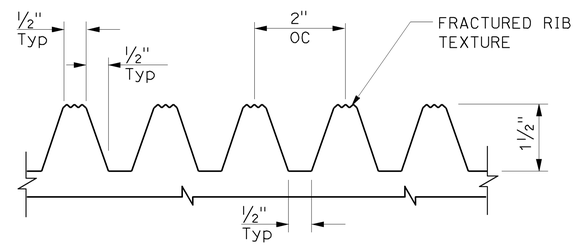

FRACTURED RIB TEXTURE DETAIL

(ELASTOMER FORMLINER)

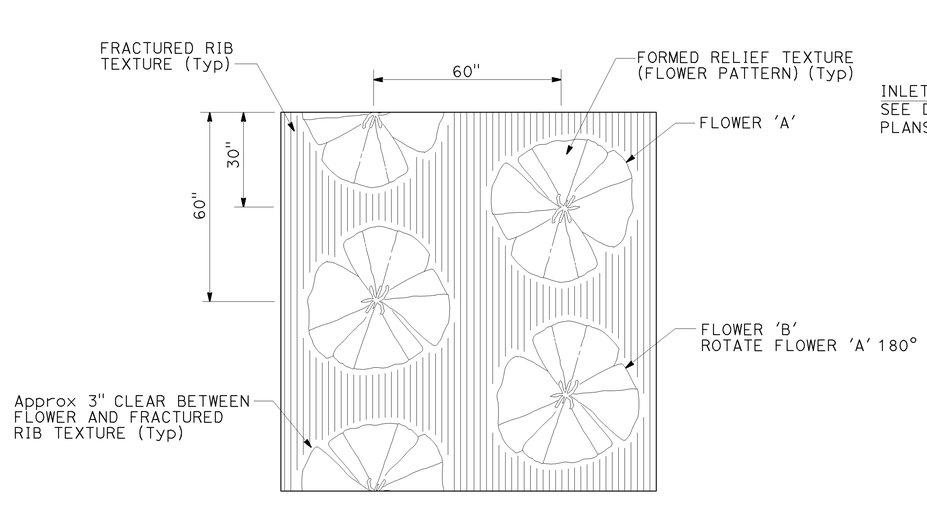

ARCHITECTURAL SURFACE (TEXTURED CONCRETE) PATTERN

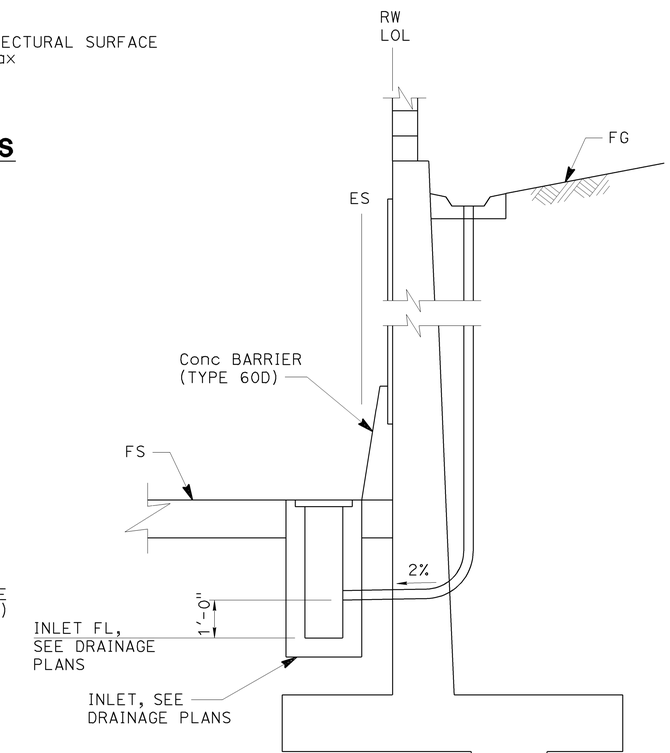

WALL GUTTER DRAIN DETAIL

RETAINING WALL DETAILS
RW No. 658

NO SCALE

R-23

STATE OF CALIFORNIA - DEPARTMENT OF TRANSPORTATION
Caltrans

CONSULTANT FUNCTIONAL SUPERVISOR: THOMAS IONTA
CALCULATED-DESIGNED BY: JOHN POWELL
CHECKED BY: MARK FRICKE
REVISED BY
DATE REVISED

LAST REVISION 06-15-09
DATE PLOTTED => 25-JAN-2010
TIME PLOTTED => 11:12

DIST	COUNTY	ROUTE	POST MILES TOTAL PROJECT	SHEET No	TOTAL SHEETS
12	Ora	57	18.4/20.9	309	856

Hisham Nofal 06/15/09
GEOTECHNICAL PROFESSIONAL DATE

1-25-10
PLANS APPROVAL DATE

REGISTERED PROFESSIONAL ENGINEER HISHAM M. NOFAL No. 2765 Exp. 09/30/09 GEOTECHNICAL STATE OF CALIFORNIA

The State of California or its officers or agents shall not be responsible for the accuracy or completeness of electronic copies of this plan sheet.

OCTA
550 S. MAIN STREET
ORANGE, CA 92863

CH2M HILL
6 HUTTON CENTRE DRIVE, SUITE 700
SANTA ANA, CA 92707

BENCHMARK:

HORIZONTAL COORDINATES ARE CCS NAD-83, ZONE 6.
VERTICAL CONTROL BASED ON NORTH AMERICAN VERTICAL DATUM 1988.
Pt 1050: N2279503.786, E6066168.912, Elev 326.908

SAMPLER TYPES:

CALIFORNIA MODIFIED RING SAMPLER
STANDARD PENETRATION TEST SAMPLER

HAMMER TYPE:

AUTOMATIC HAMMER

CORRECTION FACTOR:

TO CONVERT FROM CALIFORNIA MODIFIED RING SAMPLER BLOW COUNT TO EQUIVALENT STANDARD PENETRATION TEST SAMPLER BLOW COUNT, FOR GRANULAR AND COHESIVE SOIL, MULTIPLY BY 0.67.

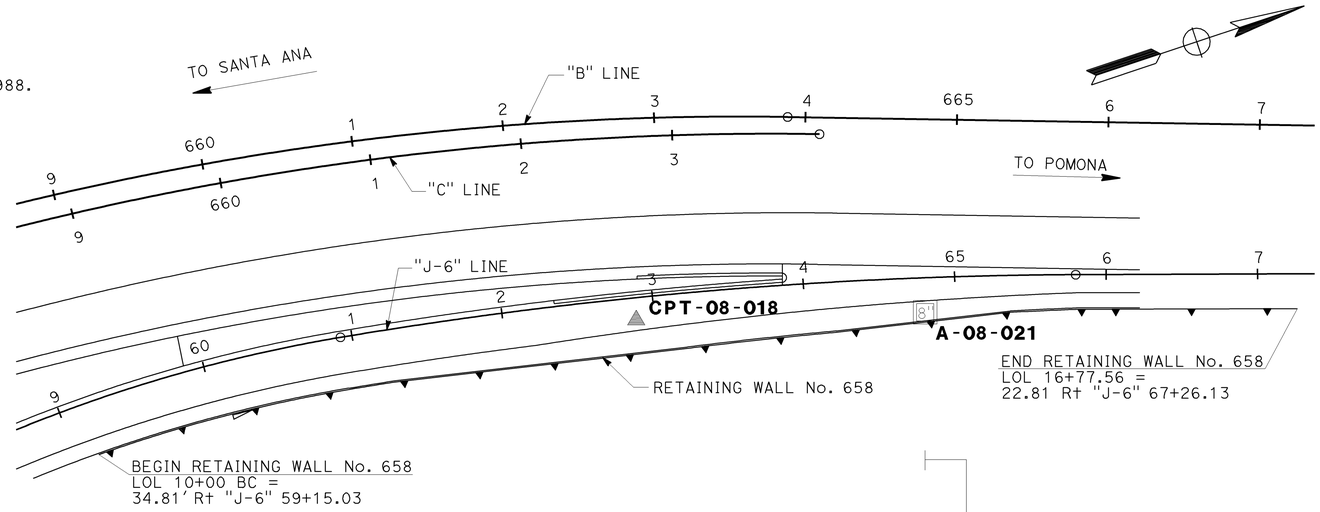

PLAN
1"=50'

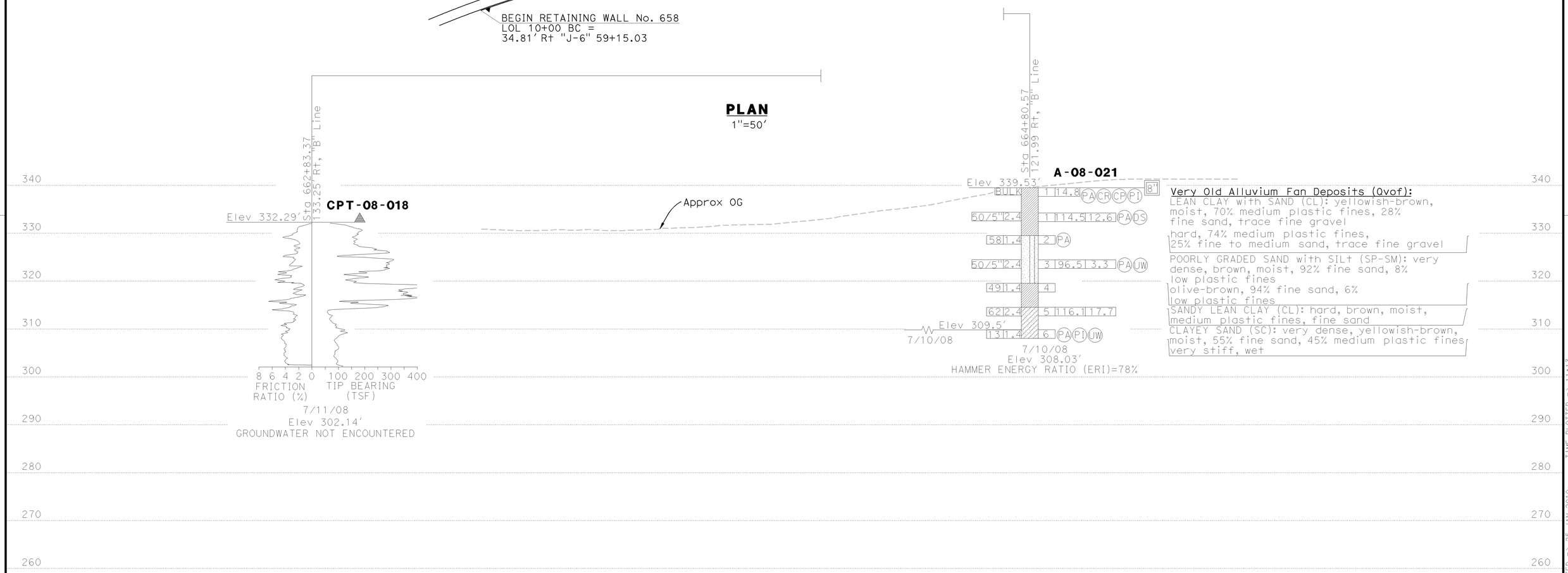

PROFILE
Horz:1"=50'
Vert: 1"=10'

STATIONING "B" LINE

5 6 7 8 9 660 1 2 3 4 665 6 7 8 9 670

DESIGN OVERSIGHT	DRAWN BY	K. Reyes	R. Bethapudi FIELD INVESTIGATION BY:	PREPARED FOR THE STATE OF CALIFORNIA DEPARTMENT OF TRANSPORTATION	Ayman Salama PROJECT ENGINEER
SIGN OFF DATE	CHECKED BY	H. Nofal	DATE		

BRIDGE NO.
POST MILES

RETAINING WALL No. 658

LOG OF TEST BORINGS SHEET 1 OF 2 R-24

ORIGINAL SCALE IN INCHES FOR REDUCED PLANS 0 1 2 3

CU 12220
EA 0F0321

DISREGARD PRINTS BEARING EARLIER REVISION DATES

REVISION DATES (PRELIMINARY STAGE ONLY) 02/27/09 04/07/09 06/15/09 SHEET OF

FILE => c0F032qd006.dgn

USERNAME => trcarol DATE PLOTTED => 25-JAN-2010 TIME PLOTTED => 11:13

DIST	COUNTY	ROUTE	POST MILES TOTAL PROJECT	SHEET No	TOTAL SHEETS
12	Ora	57	18.4/20.9	310	856

Hisham Nofal 06/16/09
GEOTECHNICAL PROFESSIONAL DATE

1-25-10
PLANS APPROVAL DATE

REGISTERED PROFESSIONAL ENGINEER HISHAM M. NOFAL No. 2765 Exp. 09/30/09 GEOTECHNICAL STATE OF CALIFORNIA

The State of California or its officers or agents shall not be responsible for the accuracy or completeness of electronic copies of this plan sheet.

OCTA
550 S. MAIN STREET
ORANGE, CA 92863

CH2M HILL
6 HUTTON CENTRE DRIVE, SUITE 700
SANTA ANA, CA 92707

REFERENCE: CALTRANS SOIL & ROCK LOGGING, CLASSIFICATION, AND PRESENTATION MANUAL (JUNE 2007)

GROUP SYMBOLS AND NAMES

Graphic/Symbol	Group Names
GW	Well-graded GRAVEL Well-graded GRAVEL with SAND
GP	Poorly graded GRAVEL Poorly graded GRAVEL with SAND
GW-GM	Well-graded GRAVEL with SILT Well-graded GRAVEL with SILT and SAND
GW-GC	Well-graded GRAVEL with CLAY (or SILTY CLAY) Well-graded GRAVEL with CLAY and SAND (or SILTY CLAY and SAND)
GP-GM	Poorly graded GRAVEL with SILT Poorly graded GRAVEL with SILT and SAND
GP-GC	Poorly graded GRAVEL with CLAY (or SILTY CLAY) Poorly graded GRAVEL with CLAY and SAND (or SILTY CLAY and SAND)
GM	SILTY GRAVEL SILTY GRAVEL with SAND
GC	CLAYEY GRAVEL CLAYEY GRAVEL with SAND
GC-GM	SILTY, CLAYEY GRAVEL SILTY, CLAYEY GRAVEL with SAND
SW	Well-graded SAND Well-graded SAND with GRAVEL
SP	Poorly graded SAND Poorly graded SAND with GRAVEL
SW-SM	Well-graded SAND with SILT Well-graded SAND with SILT and GRAVEL
SW-SC	Well-graded SAND with CLAY (or SILTY CLAY) Well-graded SAND with CLAY and GRAVEL (or SILTY CLAY and GRAVEL)
SP-SM	Poorly graded SAND with SILT Poorly graded SAND with SILT and GRAVEL
SP-SC	Poorly graded SAND with CLAY (or SILTY CLAY) Poorly graded SAND with CLAY and GRAVEL (or SILTY CLAY and GRAVEL)
SM	SILTY SAND SILTY SAND with GRAVEL
SC	CLAYEY SAND CLAYEY SAND with GRAVEL
SC-SM	SILTY, CLAYEY SAND SILTY, CLAYEY SAND with GRAVEL
PT	PEAT
	COBBLES COBBLES and BOULDERS BOULDERS

Graphic/Symbol	Group Names
CL	Lean CLAY Lean CLAY with SAND Lean CLAY with GRAVEL SANDY lean CLAY SANDY lean CLAY with GRAVEL GRAVELLY lean CLAY GRAVELLY lean CLAY with SAND
CL-ML	SILTY CLAY SILTY CLAY with SAND SILTY CLAY with GRAVEL SANDY SILTY CLAY SANDY SILTY CLAY with GRAVEL GRAVELLY SILTY CLAY GRAVELLY SILTY CLAY with SAND
ML	SILT SILT with SAND SILT with GRAVEL SANDY SILT SANDY SILT with GRAVEL GRAVELLY SILT GRAVELLY SILT with SAND
OL	ORGANIC lean CLAY ORGANIC lean CLAY with SAND ORGANIC lean CLAY with GRAVEL SANDY ORGANIC lean CLAY SANDY ORGANIC lean CLAY with GRAVEL GRAVELLY ORGANIC lean CLAY GRAVELLY ORGANIC lean CLAY with SAND
OL	ORGANIC SILT ORGANIC SILT with SAND ORGANIC SILT with GRAVEL SANDY ORGANIC SILT SANDY ORGANIC SILT with GRAVEL GRAVELLY ORGANIC SILT GRAVELLY ORGANIC SILT with SAND
CH	Fat CLAY Fat CLAY with SAND Fat CLAY with GRAVEL SANDY fat CLAY SANDY fat CLAY with GRAVEL GRAVELLY fat CLAY GRAVELLY fat CLAY with SAND
MH	Elastic SILT Elastic SILT with SAND Elastic SILT with GRAVEL SANDY elastic SILT SANDY elastic SILT with GRAVEL GRAVELLY elastic SILT GRAVELLY elastic SILT with SAND
OH	ORGANIC fat CLAY ORGANIC fat CLAY with SAND ORGANIC fat CLAY with GRAVEL SANDY ORGANIC fat CLAY SANDY ORGANIC fat CLAY with GRAVEL GRAVELLY ORGANIC fat CLAY GRAVELLY ORGANIC fat CLAY with SAND
OH	ORGANIC elastic SILT ORGANIC elastic SILT with SAND ORGANIC elastic SILT with GRAVEL SANDY ORGANIC elastic SILT SANDY ORGANIC elastic SILT with GRAVEL GRAVELLY ORGANIC elastic SILT GRAVELLY ORGANIC elastic SILT with SAND
OL/OH	ORGANIC SOIL ORGANIC SOIL with SAND ORGANIC SOIL with GRAVEL SANDY ORGANIC SOIL SANDY ORGANIC SOIL with GRAVEL GRAVELLY ORGANIC SOIL GRAVELLY ORGANIC SOIL with SAND

FIELD AND LABORATORY TESTING

- (C) Consolidation (ASTM D 2435)
- (CL) Collapse Potential (ASTM D 5333)
- (CP) Compaction Curve (CTM 216)
- (CR) Corrosivity Testing (CTM 643, CTM 422, CTM 417)
- (CU) Consolidated Undrained Triaxial (ASTM D 4767)
- (DS) Direct Shear (ASTM D 3080)
- (EI) Expansion Index (ASTM D 4829)
- (M) Moisture Content (ASTM D 2216)
- (OC) Organic Content-% (ASTM D 2974)
- (P) Permeability (CTM 220)
- (PA) Particle Size Analysis (ASTM D 422)
- (PI) Plasticity Index (AASHTO T 90) Liquid Limit (AASHTO T 89)
- (PL) Point Load Index (ASTM D 5731)
- (PM) Pressure Meter
- (PP) Pocket Penetrometer
- (R) R-Value (CTM 301)
- (SE) Sand Equivalent (CTM 217)
- (SG) Specific Gravity (AASHTO T 100)
- (SL) Shrinkage Limit (ASTM D 427)
- (SW) Swell Potential (ASTM D 4546)
- (TV) Pocket Torvane
- (UC) Unconfined Compression-Soil (ASTM D 2166) Unconfined Compression-Rock (ASTM D 2938)
- (UU) Unconsolidated Undrained Triaxial (ASTM D 2850)
- (UW) Unit Weight (ASTM D 4767)
- (VS) Vane Shear (AASHTO T 223)

APPARENT DENSITY OF COHESIONLESS SOILS

Description	SPT N_{60} (Blows / 12 inches)
Very loose	0 - 4
Loose	5 - 10
Medium Dense	11 - 30
Dense	31 - 50
Very Dense	> 50

MOISTURE

Description	Criteria
Dry	Absence of moisture, dusty, dry to the touch
Moist	Damp but no visible water
Wet	Visible free water, usually soil is below water table

PERCENT OR PROPORTION OF SOILS

Description	Criteria
Trace	Particles are present but estimated to be less than 5%
Few	5 to 10%
Little	15 to 25%
Some	30 to 45%
Mostly	50 to 100%

PARTICLE SIZE

Description		Size
Boulder		> 12"
Cobble		3" to 12"
Gravel	Coarse	3/4" to 3"
	Fine	No. 4 to 3/4"
Sand	Coarse	No. 10 to No. 4
	Medium	No. 40 to No. 10
	Fine	No. 200 to No. 40

CEMENTATION

Description	Criteria
Weak	Crumbles or breaks with handling or little finger pressure.
Moderate	Crumbles or breaks with considerable finger pressure.
Strong	Will not crumble or break with finger pressure.

CONSISTENCY OF COHESIVE SOILS

Description	Unconfined Compressive Strength (tsf)	Pocket Penetrometer Measurement (tsf)	Torvane Measurement (tsf)	Field Approximation
Very Soft	< 0.25	< 0.25	< 0.12	Easily penetrated several inches by fist
Soft	0.25 to 0.50	0.25 to 0.50	0.12 to 0.25	Easily penetrated several inches by thumb
Medium Stiff	0.50 to 1.0	0.50 to 1.0	0.25 to 0.50	Penetrated several inches by thumb with moderate effort
Stiff	1 to 2	1 to 2	0.50 to 1.0	Readily indented by thumb but penetrated only with great effort
Very Stiff	2 to 4	2 to 4	1.0 to 2.0	Readily indented by thumbnail
Hard	> 4.0	> 4.0	> 2.0	Indented by thumbnail with difficulty

PLASTICITY OF FINE-GRAINED SOILS

Description	Criteria
Nonplastic	A 1/8-inch thread cannot be rolled at any water content.
Low	The thread can barely be rolled and the lump cannot be formed when drier than the plastic limit.
Medium	The thread is easy to roll and not much time is required to reach the plastic limit. The thread cannot be rerolled after reaching the plastic limit. The lump crumbles when drier than the plastic limit.
High	It takes considerable time rolling and kneading to reach the plastic limit. The thread can be rerolled several times after reaching the plastic limit. The lump can be formed without crumbling when drier than the plastic limit.

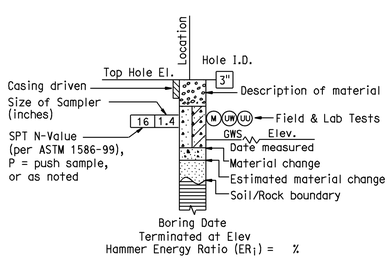

ROTARY BORING

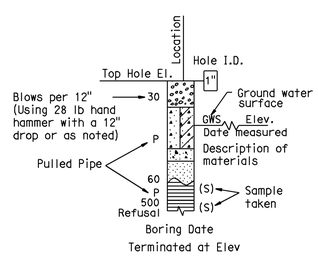

HAND BORING

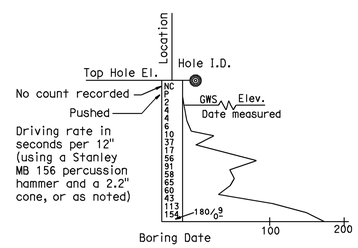

DYNAMIC CONE PENETRATION BORING

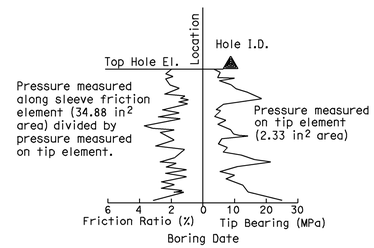

CONE PENETRATION TEST (CPT) SOUNDING

BOREHOLE IDENTIFICATION

Symbol	Hole Type	Description
Size	A	Auger Boring
Size	R P	Rotary drilled boring Rotary percussion boring (air)
Size	R	Rotary drilled diamond core
Size	HD HA	Hand driven (1-inch soil tube) Hand Auger
●	D	Dynamic Cone Penetration Boring
◕	B	Hollow Stem Auger Boring (HSA)
▲	CPT	Cone Penetration Test (ASTM D 5778-95)
□	O	Other

Note: Size in inches.

DESIGN OVERSIGHT

SIGN OFF DATE

DRAWN BY K. Reyes

CHECKED BY H. Nofal

R. Bethapudi
FIELD INVESTIGATION BY:

DATE

PREPARED FOR THE
STATE OF CALIFORNIA
DEPARTMENT OF TRANSPORTATION

Ayman Salama
PROJECT ENGINEER

BRIDGE NO.

POST MILES

SOIL LEGEND

RETAINING WALL No. 658

LOG OF TEST BORINGS SHEET 2 OF 2

R-25

ORIGINAL SCALE IN INCHES FOR REDUCED PLANS 0 1 2 3

CU 12220
EA 0F0321

DISREGARD PRINTS BEARING EARLIER REVISION DATES

REVISION DATES (PRELIMINARY STAGE ONLY) 02/27/09 04/27/09 06/15/09

SHEET OF

FILE => c0F032qd007.dgn

USERNAME => trcarol DATE PLOTTED => 25-JAN-2010 TIME PLOTTED => 11:13

Dist	COUNTY	ROUTE	POST MILES TOTAL PROJECT	SHEET No.	TOTAL SHEETS
12	Ora	57	18.4/20.9	311	856

REGISTERED CIVIL ENGINEER 06/15/09 DATE

1-25-10
PLANS APPROVAL DATE

REGISTERED PROFESSIONAL ENGINEER JOHN W. POWELL No. C71463 Exp. 12/31/09 CIVIL STATE OF CALIFORNIA

THE STATE OF CALIFORNIA OR ITS OFFICERS OR AGENTS SHALL NOT BE RESPONSIBLE FOR THE ACCURACY OR COMPLETENESS OF SCANNED COPIES OF THIS PLAN SHEET.

CH2M HILL
6 HUTTON CENTRE DRIVE,
SUITE 700
SANTA ANA, CA 92707

OCTA
550 S. MAIN STREET
ORANGE, CA 92863

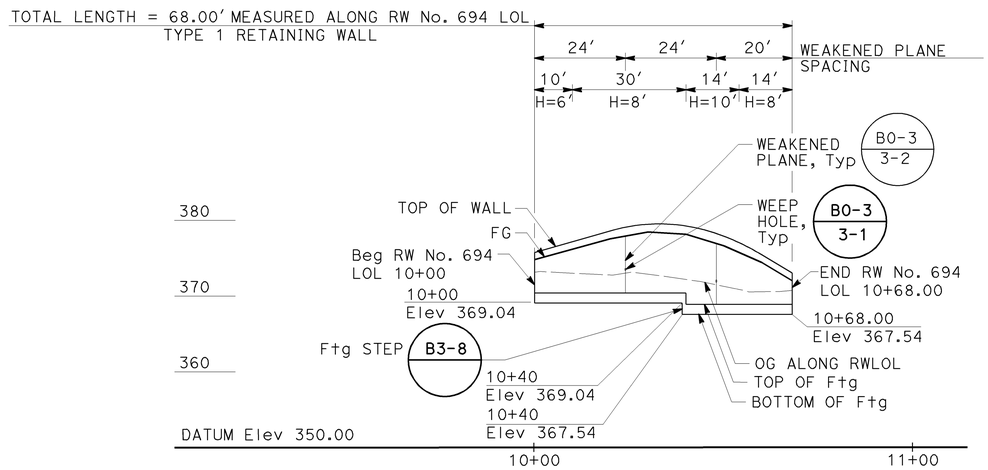

ELEVATION

Horiz 1"=20'
Vert 1"=10'

RETAINING WALL ELEVATIONS

RW LOL STA	TOP OF WALL
10+00.00	375.71
10+10.00	377.15
10+20.00	378.58
10+30.00	379.46
10+40.00	379.23
10+50.00	377.88
10+60.00	375.42
10+68.00	373.01

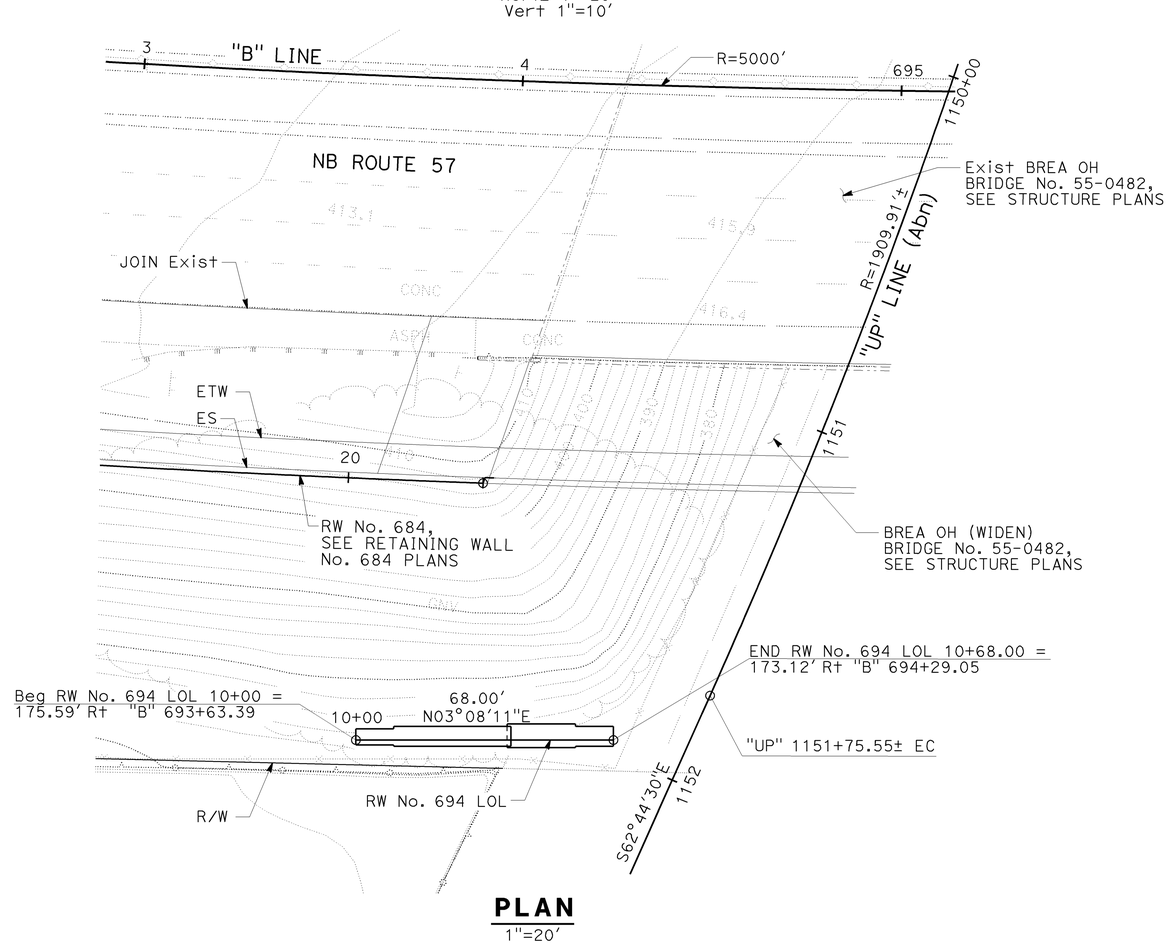

PLAN

1"=20'

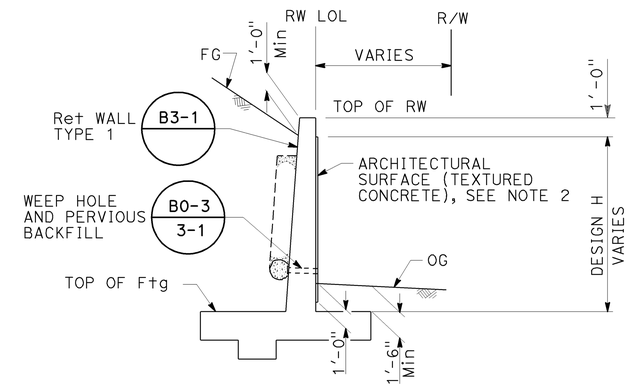

TYPICAL SECTION

1/4"=1'-0"

NOTES:

1. CONTRACTOR TO FIELD VERIFY ALL UTILITY LOCATIONS PRIOR TO RETAINING WALL CONSTRUCTION.
2. SEE RETAINING WALL DETAILS SHEET.

THIS PLAN ACCURATE FOR RETAINING WALL WORK ONLY.

RETAINING WALL PLAN
RW No. 694

SCALE AS SHOWN

R-26

STATE OF CALIFORNIA - DEPARTMENT OF TRANSPORTATION
Caltrans

CONSULTANT FUNCTIONAL SUPERVISOR: THOMAS IONTA
CALCULATED-DESIGNED BY: JOHN POWELL
CHECKED BY: MARK FRICKE
REVISED BY
DATE REVISED

LAST REVISION 06-15-09
DATE PLOTTED => 25-JAN-2010
TIME PLOTTED => 12:56

Dist	COUNTY	ROUTE	POST MILES TOTAL PROJECT	SHEET No.	TOTAL SHEETS
12	Ora	57	18.4/20.9	312	856

REGISTERED CIVIL ENGINEER 06/15/09 DATE

1-25-10
PLANS APPROVAL DATE

REGISTERED PROFESSIONAL ENGINEER JOHN W. POWELL No. C71463 Exp.12/31/09 CIVIL STATE OF CALIFORNIA

THE STATE OF CALIFORNIA OR ITS OFFICERS OR AGENTS SHALL NOT BE RESPONSIBLE FOR THE ACCURACY OR COMPLETENESS OF SCANNED COPIES OF THIS PLAN SHEET.

CH2M HILL
6 HUTTON CENTRE DRIVE,
SUITE 700
SANTA ANA, CA 92707

OCTA
550 S. MAIN STREET
ORANGE, CA 92863

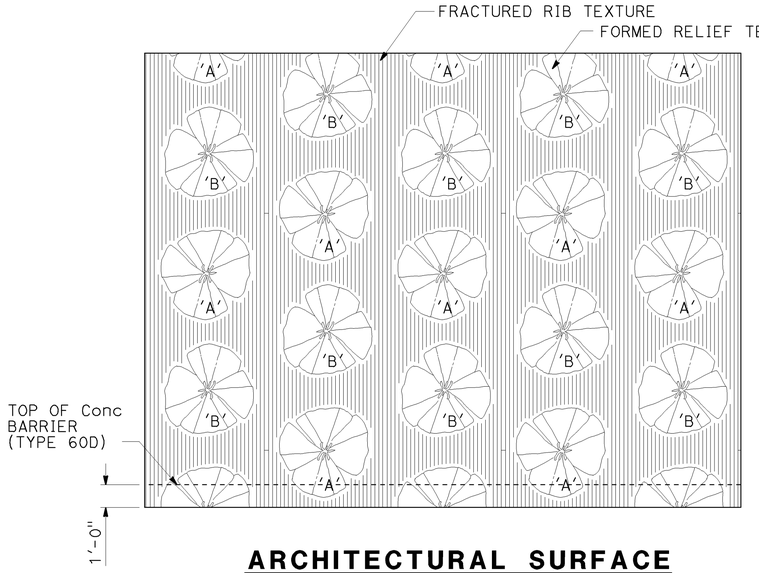

ARCHITECTURAL SURFACE (TEXTURED CONCRETE) ELEVATION

NOTES:

1. IDENTICAL FLOWER IMAGES, SCALE AND SPACING SHALL BE USED FOR FLOWER PATTERN.
2. WITHIN A VERTICAL COLUMN, FLOWER IMAGES SHALL ALTERNATE BETWEEN FLOWERS 'A' AND 'B'. VERTICAL COLUMNS SHALL BE OFFSET 30" FROM ADJACENT COLUMNS.
3. WHERE PLACED ON WALLS BOUNDED BY CONCRETE BARRIERS, FINISHED GRADE OR TOP OF WALL, FLOWER PATTERN SHALL BE CONTINUED WITHOUT CONCERN FOR PARTIAL FLOWER IMAGES, EXCEPT AS NOTED.

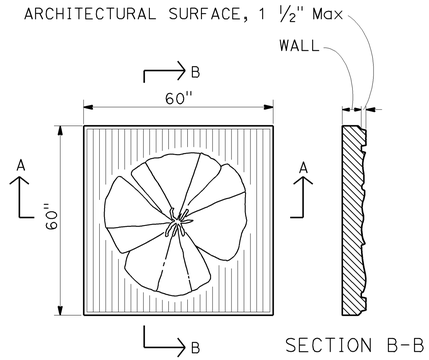

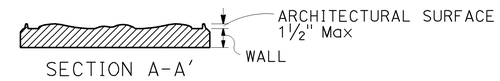

FLOWER PATTERN DETAILS

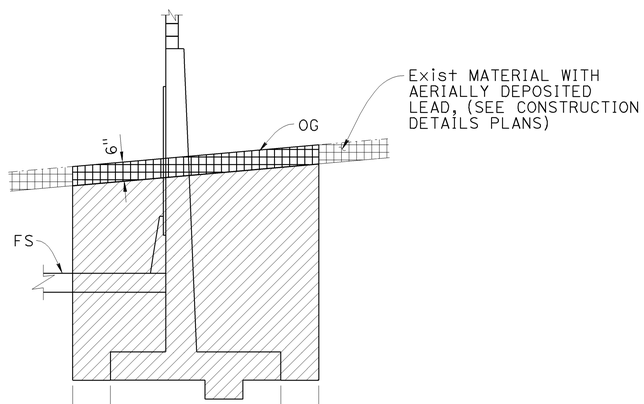

IN CUT

LIMITS OF PAYMENT OF EXCAVATION FOR RETAINING WALL

NOTE:
FOR BACKFILL SEE CALTRANS STANDARD PLANS

LEGEND

INDICATES STRUCTURE EXCAVATION (TYPE Y-1) (AERIALLY DEPOSITED LEAD)

STRUCTURE EXCAVATION (RETAINING WALL)

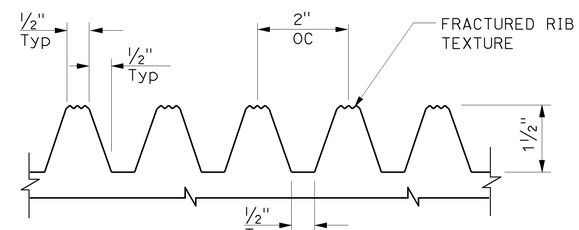

FRACTURED RIB TEXTURE DETAIL

(ELASTOMER FORMLINER)

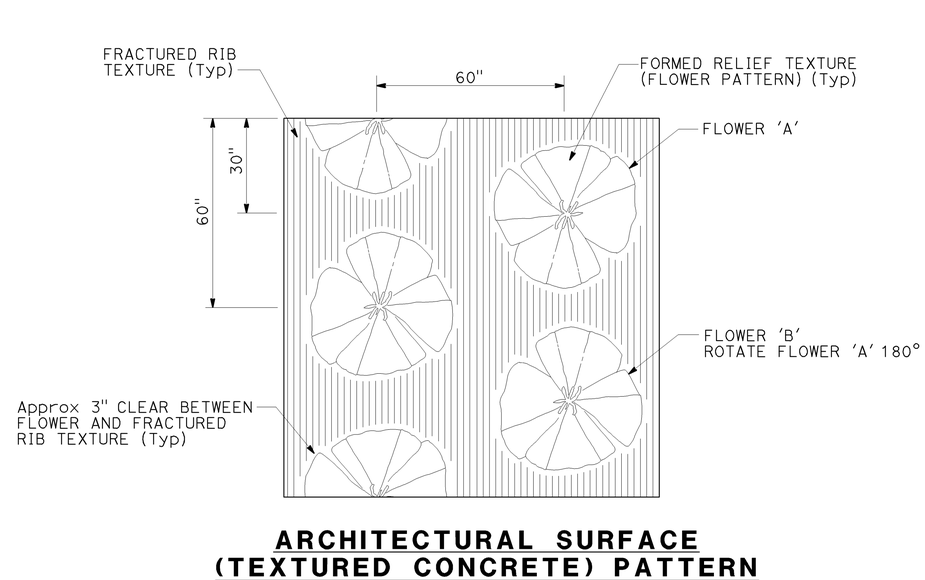

ARCHITECTURAL SURFACE (TEXTURED CONCRETE) PATTERN

RETAINING WALL DETAILS
RW No. 694

NO SCALE

R-27

STATE OF CALIFORNIA - DEPARTMENT OF TRANSPORTATION
Caltrans

CONSULTANT FUNCTIONAL SUPERVISOR: THOMAS IONTA
CALCULATED-DESIGNED BY: JOHN POWELL
CHECKED BY: MARK FRICKE
REVISED BY
DATE REVISED

LAST REVISION 06-15-09
DATE PLOTTED => 25-JAN-2010
TIME PLOTTED => 11:13

DIST	COUNTY	ROUTE	POST MILES TOTAL PROJECT	SHEET No	TOTAL SHEETS
12	Ora	57	18.4/20.9	313	856

GEOTECHNICAL PROFESSIONAL — DATE 06/15/09

1-25-10
PLANS APPROVAL DATE

The State of California or its officers or agents shall not be responsible for the accuracy or completeness of electronic copies of this plan sheet.

REGISTERED PROFESSIONAL ENGINEER — HISHAM M. NOFAL No. 2765 Exp. 09/30/09 GEOTECHNICAL — STATE OF CALIFORNIA

OCTA
550 S. MAIN STREET
ORANGE, CA 92863

CH2M HILL
6 HUTTON CENTRE DRIVE, SUITE 700
SANTA ANA, CA 92707

BENCHMARK:

HORIZONTAL COORDINATES ARE CCS NAD-83, ZONE 6.
VERTICAL CONTROL BASED ON NORTH AMERICAN VERTICAL DATUM 1988.
Pt 1079: N2282339.808, E6067144.835, Elev 407.210
Pt 1081: N2282931.290, E6067198.604, Elev 422.355

SAMPLER TYPES:

CALIFORNIA MODIFIED RING SAMPLER
STANDARD PENETRATION TEST SAMPLER

HAMMER TYPE:

AUTOMATIC HAMMER

CORRECTION FACTOR:

TO CONVERT FROM CALIFORNIA MODIFIED RING SAMPLER BLOW COUNT TO EQUIVALENT STANDARD PENETRATION TEST SAMPLER BLOW COUNT, FOR GRANULAR AND COHESIVE SOIL, MULTIPLY BY 0.67.

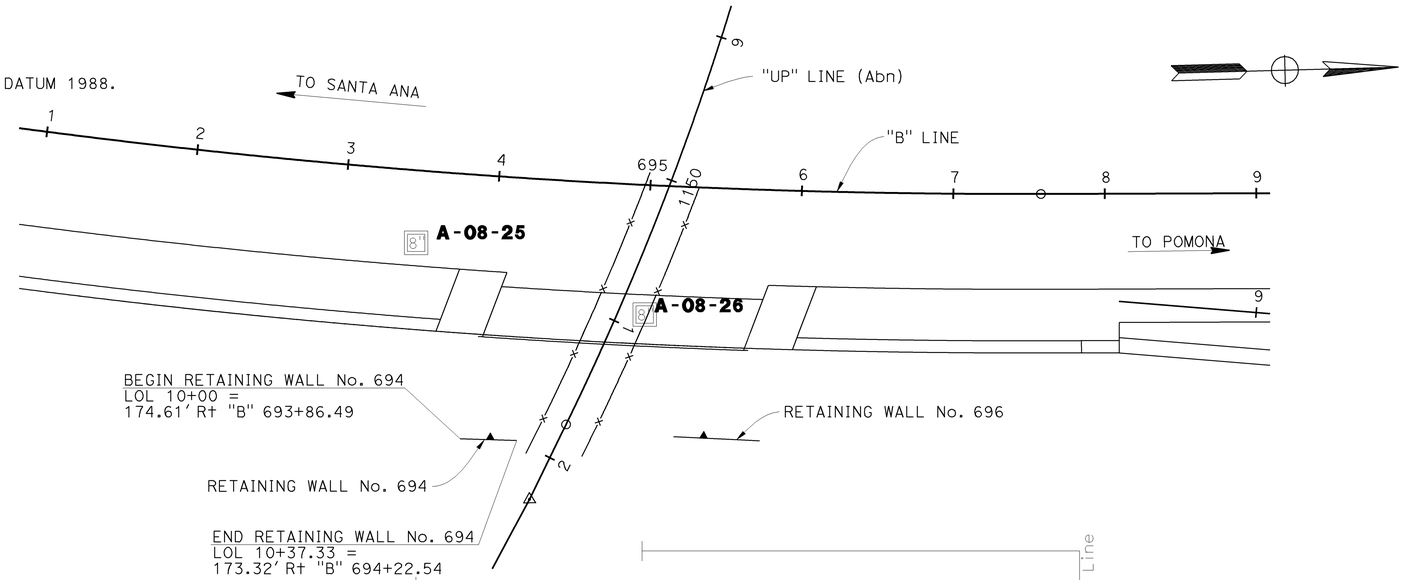

PLAN
1"=50'

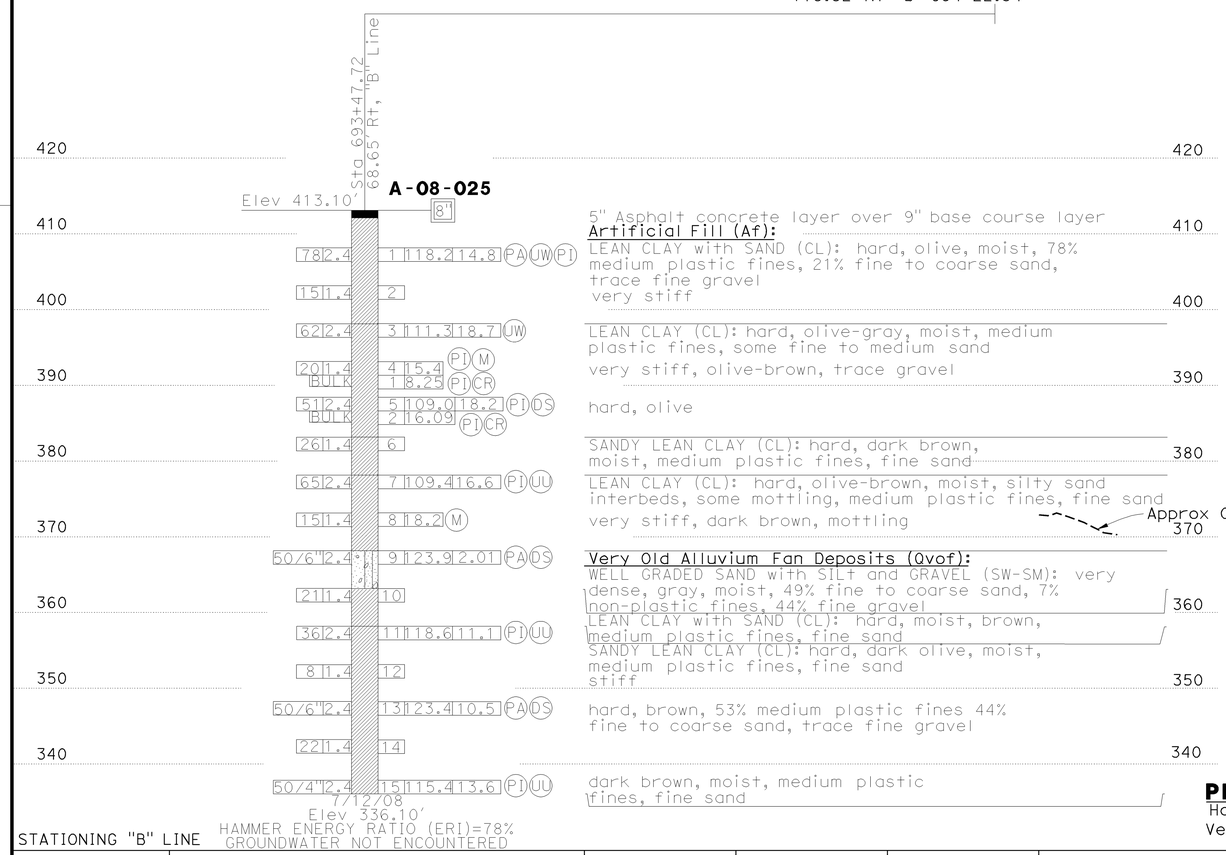

5" Asphalt concrete layer over 9" base course layer

Artificial Fill (Af):

LEAN CLAY with SAND (CL): hard, olive, moist, 78% medium plastic fines, 21% fine to coarse sand, trace fine gravel very stiff

LEAN CLAY (CL): hard, olive-gray, moist, medium plastic fines, some fine to medium sand very stiff, olive-brown, trace gravel

hard, olive

SANDY LEAN CLAY (CL): hard, dark brown, moist, medium plastic fines, fine sand

LEAN CLAY (CL): hard, olive-brown, moist, silty sand interbeds, some mottling, medium plastic fines, fine sand very stiff, dark brown, mottling

Very Old Alluvium Fan Deposits (Qvof):

WELL GRADED SAND with SILt and GRAVEL (SW-SM): very dense, gray, moist, 49% fine to coarse sand, 7% non-plastic fines, 44% fine gravel

LEAN CLAY with SAND (CL): hard, moist, brown, medium plastic fines, fine sand

SANDY LEAN CLAY (CL): hard, dark olive, moist, medium plastic fines, fine sand stiff

hard, brown, 53% medium plastic fines 44% fine to coarse sand, trace fine gravel

dark brown, moist, medium plastic fines, fine sand

PROFILE
Horz:1"=50'
Vert: 1"=10'

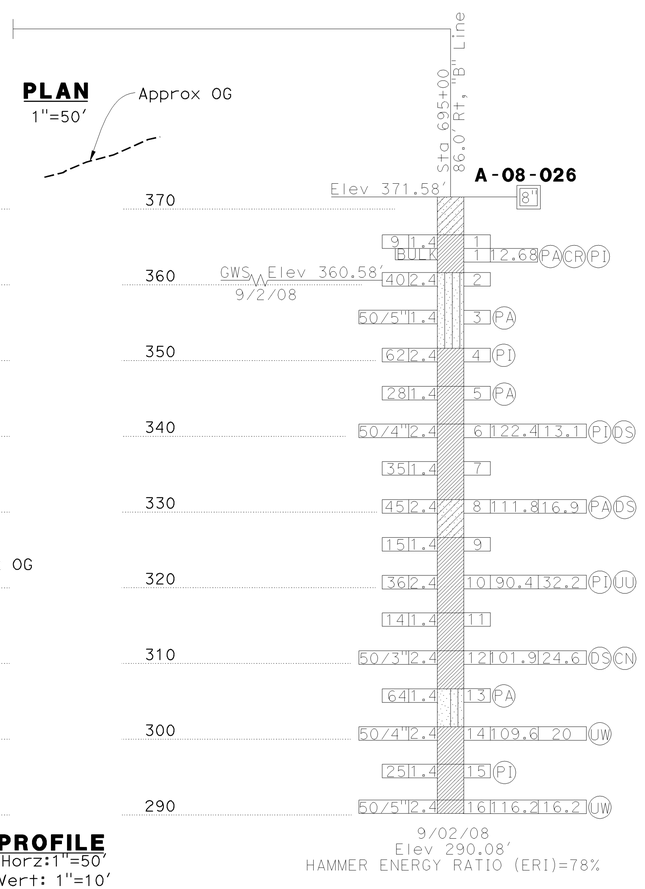

Very Old Alluvium Fan Deposits (Qvof):

CLAYEY SAND (SC): gray, moist, fine to coarse sand, medium plastic fines

SANDY LEAN CLAY (CL): stiff, yellowish-brown, moist, 67% medium plastic fines, 31% fine to coarse sand and trace fine gravel

SILTY SAND with GRAVEL (SM): dense, light olive-brown, moist, 51% fine to coarse sand 22% low plastic fines, 27% fine to coarse gravel very dense, wet

LEAN CLAY (CL): hard, dark brown, wet, medium plastic fines, trace fine sand

SANDY LEAN CLAY (CL): hard, light olive-brown,wet, 55% medium plastic fines, 45% fine to coarse sand

LEAN CLAY (CL): hard, yellowish-brown, wet, medium plastic fines, some fine sand, trace fine gravel

CLAYEY SAND (SC): dense, yellowish-brown, wet, 54% fine sand, 42% medium plastic fines, trace fine gravel

LEAN CLAY (CL): very stiff, light brown, wet, medium plastic fines, some fine sand hard, yellowish-brown

LEAN CLAY with SAND (CL): very stiff, brown, wet, medium plastic fines, fine sand

LEAN CLAY (CL): hard, brown, wet, medium plastic fines, some fine sand

POORLY GRADED SAND with SILt (SP-SM): very dense, yellowish-brown, wet, 89% medium to fine, 11% non plastic fines

LEAN CLAY (CL): hard, brown, wet, medium plastic fines, trace fine to medium sand

LEAN CLAY with SAND (CL): hard, brown, wet, medium plastic fines, fine sand

LEAN CLAY (CL): hard, light brown, wet, medium plastic fines

DESIGN OVERSIGHT	DRAWN BY	K. Reyes	R. Bethapudi — FIELD INVESTIGATION BY:
SIGN OFF DATE	CHECKED BY	H. Nofal	DATE

PREPARED FOR THE STATE OF CALIFORNIA DEPARTMENT OF TRANSPORTATION

Ayman Salama — PROJECT ENGINEER

BRIDGE NO. / POST MILES

RETAINING WALL No. 694

LOG OF TEST BORINGS SHEET 1 OF 2 — R-28

ORIGINAL SCALE IN INCHES FOR REDUCED PLANS 0 1 2 3

CU 12220
EA 0F0321

DISREGARD PRINTS BEARING EARLIER REVISION DATES — REVISION DATES (PRELIMINARY STAGE ONLY) 02/17/09 04/07/09 06/15/09 — SHEET OF

FILE => c0F032qe003.dgn

USERNAME => trcarol DATE PLOTTED => 25-JAN-2010 TIME PLOTTED => 11:13

REFERENCE: CALTRANS SOIL & ROCK LOGGING, CLASSIFICATION, AND PRESENTATION MANUAL (JUNE 2007)

DIST	COUNTY	ROUTE	POST MILES TOTAL PROJECT	SHEET No	TOTAL SHEETS
12	Ora	57	18.4/20.9	314	856

HishamNofal 06/25/09
GEOTECHNICAL PROFESSIONAL DATE

1-25-10
PLANS APPROVAL DATE

REGISTERED PROFESSIONAL ENGINEER HISHAM M. NOFAL No. 2765 Exp. 09/30/09 GEOTECHNICAL STATE OF CALIFORNIA

The State of California or its officers or agents shall not be responsible for the accuracy or completeness of electronic copies of this plan sheet.

OCTA
550 S. MAIN STREET
ORANGE, CA 92863

CH2M HILL
6 HUTTON CENTRE DRIVE, SUITE 700
SANTA ANA, CA 92707

GROUP SYMBOLS AND NAMES

Graphic/Symbol	Group Names	Graphic/Symbol	Group Names
GW	Well-graded GRAVEL Well-graded GRAVEL with SAND	CL	Lean CLAY Lean CLAY with SAND Lean CLAY with GRAVEL SANDY lean CLAY SANDY lean CLAY with GRAVEL GRAVELLY lean CLAY GRAVELLY lean CLAY with SAND
GP	Poorly graded GRAVEL Poorly graded GRAVEL with SAND		
GW-GM	Well-graded GRAVEL with SILT Well-graded GRAVEL with SILT and SAND	CL-ML	SILTY CLAY SILTY CLAY with SAND SILTY CLAY with GRAVEL SANDY SILTY CLAY SANDY SILTY CLAY with GRAVEL GRAVELLY SILTY CLAY GRAVELLY SILTY CLAY with SAND
GW-GC	Well-graded GRAVEL with CLAY (or SILTY CLAY) Well-graded GRAVEL with CLAY and SAND (or SILTY CLAY and SAND)		
GP-GM	Poorly graded GRAVEL with SILT Poorly graded GRAVEL with SILT and SAND	ML	SILT SILT with SAND SILT with GRAVEL SANDY SILT SANDY SILT with GRAVEL GRAVELLY SILT GRAVELLY SILT with SAND
GP-GC	Poorly graded GRAVEL with CLAY (or SILTY CLAY) Poorly graded GRAVEL with CLAY and SAND (or SILTY CLAY and SAND)		
GM	SILTY GRAVEL SILTY GRAVEL with SAND	OL	ORGANIC lean CLAY ORGANIC lean CLAY with SAND ORGANIC lean CLAY with GRAVEL SANDY ORGANIC lean CLAY SANDY ORGANIC lean CLAY with GRAVEL GRAVELLY ORGANIC lean CLAY GRAVELLY ORGANIC lean CLAY with SAND
GC	CLAYEY GRAVEL CLAYEY GRAVEL with SAND		
GC-GM	SILTY, CLAYEY GRAVEL SILTY, CLAYEY GRAVEL with SAND	OL	ORGANIC SILT ORGANIC SILT with SAND ORGANIC SILT with GRAVEL SANDY ORGANIC SILT SANDY ORGANIC SILT with GRAVEL GRAVELLY ORGANIC SILT GRAVELLY ORGANIC SILT with SAND
SW	Well-graded SAND Well-graded SAND with GRAVEL		
SP	Poorly graded SAND Poorly graded SAND with GRAVEL	CH	Fat CLAY Fat CLAY with SAND Fat CLAY with GRAVEL SANDY fat CLAY SANDY fat CLAY with GRAVEL GRAVELLY fat CLAY GRAVELLY fat CLAY with SAND
SW-SM	Well-graded SAND with SILT Well-graded SAND with SILT and GRAVEL		
SW-SC	Well-graded SAND with CLAY (or SILTY CLAY) Well-graded SAND with CLAY and GRAVEL (or SILTY CLAY and GRAVEL)	MH	Elastic SILT Elastic SILT with SAND Elastic SILT with GRAVEL SANDY elastic SILT SANDY elastic SILT with GRAVEL GRAVELLY elastic SILT GRAVELLY elastic SILT with SAND
SP-SM	Poorly graded SAND with SILT Poorly graded SAND with SILT and GRAVEL		
SP-SC	Poorly graded SAND with CLAY (or SILTY CLAY) Poorly graded SAND with CLAY and GRAVEL (or SILTY CLAY and GRAVEL)	OH	ORGANIC fat CLAY ORGANIC fat CLAY with SAND ORGANIC fat CLAY with GRAVEL SANDY ORGANIC fat CLAY SANDY ORGANIC fat CLAY with GRAVEL GRAVELLY ORGANIC fat CLAY GRAVELLY ORGANIC fat CLAY with SAND
SM	SILTY SAND SILTY SAND with GRAVEL		
SC	CLAYEY SAND CLAYEY SAND with GRAVEL	OH	ORGANIC elastic SILT ORGANIC elastic SILT with SAND ORGANIC elastic SILT with GRAVEL SANDY ORGANIC elastic SILT SANDY ORGANIC elastic SILT with GRAVEL GRAVELLY ORGANIC elastic SILT GRAVELLY ORGANIC elastic SILT with SAND
SC-SM	SILTY, CLAYEY SAND SILTY, CLAYEY SAND with GRAVEL		
PT	PEAT	OL/OH	ORGANIC SOIL ORGANIC SOIL with SAND ORGANIC SOIL with GRAVEL SANDY ORGANIC SOIL SANDY ORGANIC SOIL with GRAVEL GRAVELLY ORGANIC SOIL GRAVELLY ORGANIC SOIL with SAND
	COBBLES COBBLES and BOULDERS BOULDERS		

FIELD AND LABORATORY TESTING

- (C) Consolidation (ASTM D 2435)
- (CL) Collapse Potential (ASTM D 5333)
- (CP) Compaction Curve (CTM 216)
- (CR) Corrosivity Testing (CTM 643, CTM 422, CTM 417)
- (CU) Consolidated Undrained Triaxial (ASTM D 4767)
- (DS) Direct Shear (ASTM D 3080)
- (EI) Expansion Index (ASTM D 4829)
- (M) Moisture Content (ASTM D 2216)
- (OC) Organic Content-% (ASTM D 2974)
- (P) Permeability (CTM 220)
- (PA) Particle Size Analysis (ASTM D 422)
- (PI) Plasticity Index (AASHTO T 90) Liquid Limit (AASHTO T 89)
- (PL) Point Load Index (ASTM D 5731)
- (PM) Pressure Meter
- (PP) Pocket Penetrometer
- (R) R-Value (CTM 301)
- (SE) Sand Equivalent (CTM 217)
- (SG) Specific Gravity (AASHTO T 100)
- (SL) Shrinkage Limit (ASTM D 427)
- (SW) Swell Potential (ASTM D 4546)
- (TV) Pocket Torvane
- (UC) Unconfined Compression-Soil (ASTM D 2166) Unconfined Compression-Rock (ASTM D 2938)
- (UU) Unconsolidated Undrained Triaxial (ASTM D 2850)
- (UW) Unit Weight (ASTM D 4767)
- (VS) Vane Shear (AASHTO T 223)

APPARENT DENSITY OF COHESIONLESS SOILS

Description	SPT N_{60} (Blows / 12 inches)
Very loose	0 - 4
Loose	5 - 10
Medium Dense	11 - 30
Dense	31 - 50
Very Dense	> 50

MOISTURE

Description	Criteria
Dry	Absence of moisture, dusty, dry to the touch
Moist	Damp but no visible water
Wet	Visible free water, usually soil is below water table

PERCENT OR PROPORTION OF SOILS

Description	Criteria
Trace	Particles are present but estimated to be less than 5%
Few	5 to 10%
Little	15 to 25%
Some	30 to 45%
Mostly	50 to 100%

PARTICLE SIZE

Description		Size
Boulder		> 12"
Cobble		3" to 12"
Gravel	Coarse	3/4" to 3"
	Fine	No. 4 to 3/4"
Sand	Coarse	No. 10 to No. 4
	Medium	No. 40 to No. 10
	Fine	No. 200 to No. 40

CEMENTATION

Description	Criteria
Weak	Crumbles or breaks with handling or little finger pressure.
Moderate	Crumbles or breaks with considerable finger pressure.
Strong	Will not crumble or break with finger pressure.

CONSISTENCY OF COHESIVE SOILS

Description	Unconfined Compressive Strength (tsf)	Pocket Penetrometer Measurement (tsf)	Torvane Measurement (tsf)	Field Approximation
Very Soft	< 0.25	< 0.25	< 0.12	Easily penetrated several inches by fist
Soft	0.25 to 0.50	0.25 to 0.50	0.12 to 0.25	Easily penetrated several inches by thumb
Medium Stiff	0.50 to 1.0	0.50 to 1.0	0.25 to 0.50	Penetrated several inches by thumb with moderate effort
Stiff	1 to 2	1 to 2	0.50 to 1.0	Readily indented by thumb but penetrated only with great effort
Very Stiff	2 to 4	2 to 4	1.0 to 2.0	Readily indented by thumbnail
Hard	> 4.0	> 4.0	> 2.0	Indented by thumbnail with difficulty

PLASTICITY OF FINE-GRAINED SOILS

Description	Criteria
Nonplastic	A 1/8-inch thread cannot be rolled at any water content.
Low	The thread can barely be rolled and the lump cannot be formed when drier than the plastic limit.
Medium	The thread is easy to roll and not much time is required to reach the plastic limit. The thread cannot be rerolled after reaching the plastic limit. The lump crumbles when drier than the plastic limit.
High	It takes considerable time rolling and kneading to reach the plastic limit. The thread can be rerolled several times after reaching the plastic limit. The lump can be formed without crumbling when drier than the plastic limit.

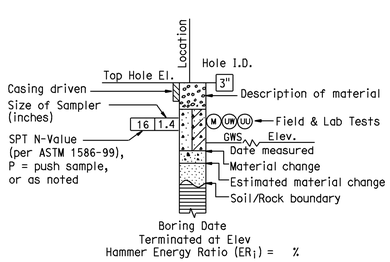

ROTARY BORING

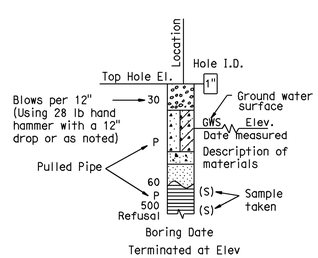

HAND BORING

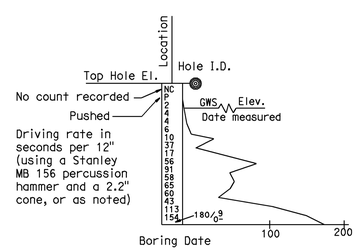

DYNAMIC CONE PENETRATION BORING

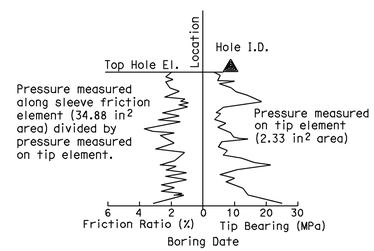

CONE PENETRATION TEST (CPT) SOUNDING

BOREHOLE IDENTIFICATION

Symbol	Hole Type	Description
Size	A	Auger Boring
Size	R P	Rotary drilled boring Rotary percussion boring (air)
Size	R	Rotary drilled diamond core
Size	HD HA	Hand driven (1-inch soil tube) Hand Auger
●	D	Dynamic Cone Penetration Boring
◕	B	Hollow Stem Auger Boring (HSA)
▲	CPT	Cone Penetration Test (ASTM D 5778-95)
□	O	Other

Note: Size in inches.

SOIL LEGEND

RETAINING WALL No. 694

LOG OF TEST BORINGS SHEET 2 OF 2

R-29

DESIGN OVERSIGHT

SIGN OFF DATE

DRAWN BY K. Reyes

CHECKED BY H. Nofal

R. Bethapudi
FIELD INVESTIGATION BY:

DATE

PREPARED FOR THE STATE OF CALIFORNIA DEPARTMENT OF TRANSPORTATION

Ayman Salama
PROJECT ENGINEER

BRIDGE NO.

POST MILES

ORIGINAL SCALE IN INCHES FOR REDUCED PLANS 0 1 2 3

CU 12220
EA 0F0321

DISREGARD PRINTS BEARING EARLIER REVISION DATES

REVISION DATES (PRELIMINARY STAGE ONLY) 02/27/09 04/27/09 06/15/09

SHEET OF

FILE => c0F032qe004.dgn

USERNAME => trcarol DATE PLOTTED => 25-JAN-2010 TIME PLOTTED => 11:13

Dist	COUNTY	ROUTE	POST MILES TOTAL PROJECT	SHEET No.	TOTAL SHEETS
12	Ora	57	18.4/20.9	315	856

REGISTERED CIVIL ENGINEER 06/15/09 DATE

1-25-10
PLANS APPROVAL DATE

REGISTERED PROFESSIONAL ENGINEER JOHN W. POWELL No. C71463 Exp.12/31/09 CIVIL STATE OF CALIFORNIA

THE STATE OF CALIFORNIA OR ITS OFFICERS OR AGENTS SHALL NOT BE RESPONSIBLE FOR THE ACCURACY OR COMPLETENESS OF SCANNED COPIES OF THIS PLAN SHEET.

CH2M HILL
6 HUTTON CENTRE DRIVE,
SUITE 700
SANTA ANA, CA 92707

OCTA
550 S. MAIN STREET
ORANGE, CA 92863

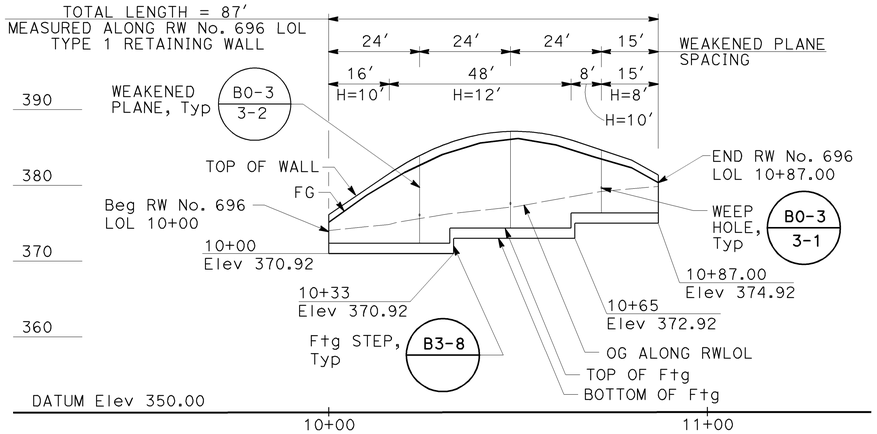

ELEVATION

Horiz 1"=20'
Vert 1"=10'

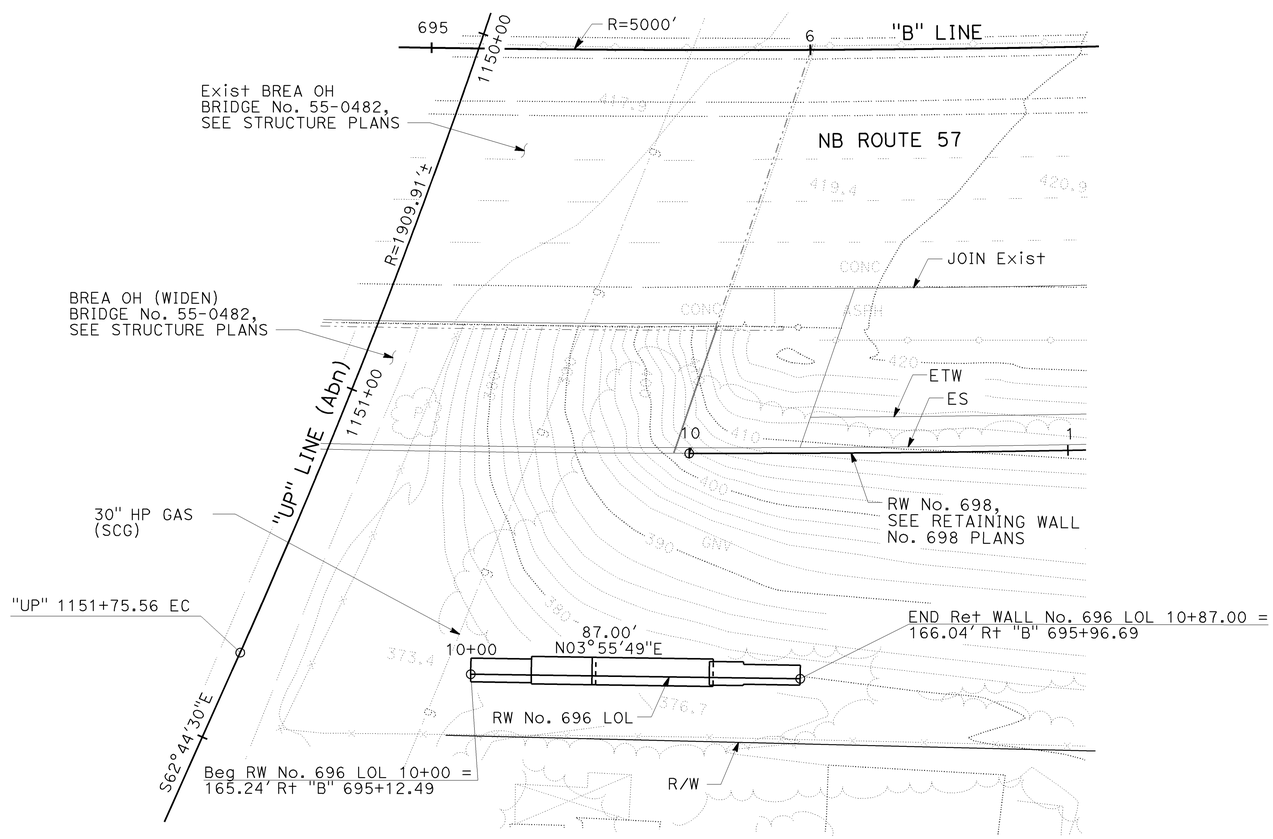

PLAN

1"=20'

RETAINING WALL ELEVATIONS

RW LOL STA	TOP OF WALL
10+00.00	376.02
10+10.00	379.42
10+20.00	382.73
10+30.00	385.18
10+40.00	386.61
10+50.00	387.03
10+60.00	386.43
10+70.00	384.91
10+80.00	383.23
10+87.00	381.28

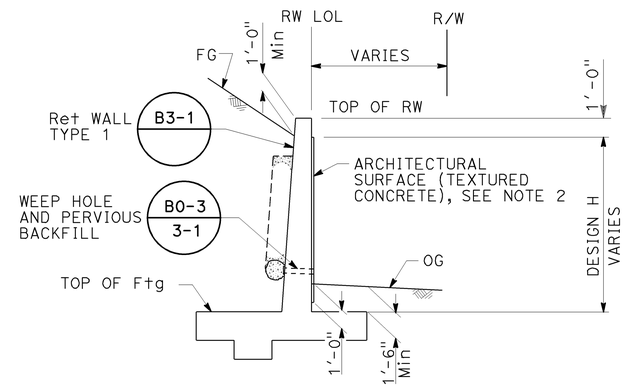

TYPICAL SECTION

1/4"=1'-0"

NOTES:

1. CONTRACTOR TO FIELD VERIFY ALL UTILITY LOCATIONS PRIOR TO RETAINING WALL CONSTRUCTION.
2. SEE RETAINING WALL DETAILS SHEET.

THIS PLAN ACCURATE FOR RETAINING WALL WORK ONLY.

RETAINING WALL PLAN
RW No. 696

SCALE AS SHOWN

R-30

STATE OF CALIFORNIA - DEPARTMENT OF TRANSPORTATION
Caltrans

CONSULTANT FUNCTIONAL SUPERVISOR: THOMAS IONTA
CALCULATED-DESIGNED BY: JOHN POWELL
CHECKED BY: MARK FRICKE
REVISED BY
DATE REVISED

LAST REVISION 06-15-09
DATE PLOTTED => 25-JAN-2010
TIME PLOTTED => 11:13

Dist	COUNTY	ROUTE	POST MILES TOTAL PROJECT	SHEET No.	TOTAL SHEETS
12	Ora	57	18.4/20.9	316	856

REGISTERED CIVIL ENGINEER 06/15/09 DATE

1-25-10
PLANS APPROVAL DATE

REGISTERED PROFESSIONAL ENGINEER JOHN W. POWELL No. C71463 Exp.12/31/09 CIVIL STATE OF CALIFORNIA

THE STATE OF CALIFORNIA OR ITS OFFICERS OR AGENTS SHALL NOT BE RESPONSIBLE FOR THE ACCURACY OR COMPLETENESS OF SCANNED COPIES OF THIS PLAN SHEET.

CH2M HILL
6 HUTTON CENTRE DRIVE,
SUITE 700
SANTA ANA, CA 92707

OCTA
550 S. MAIN STREET
ORANGE, CA 92863

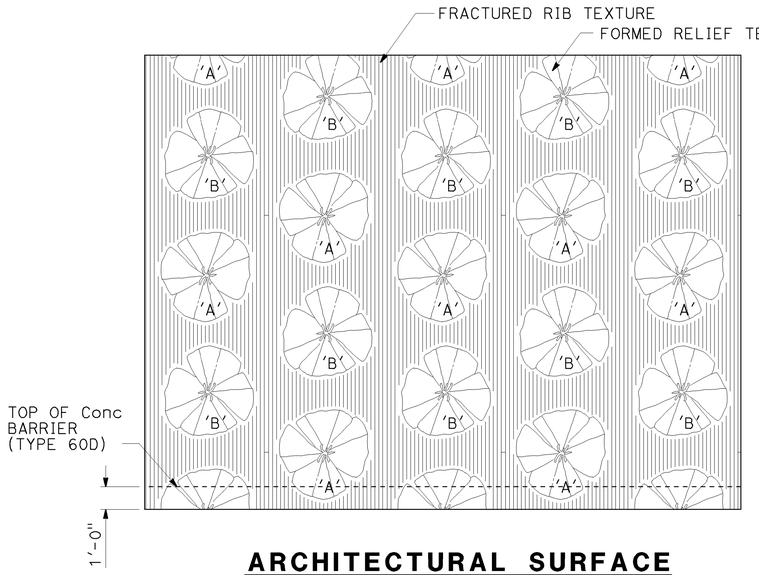

ARCHITECTURAL SURFACE (TEXTURED CONCRETE) ELEVATION

NOTES:

1. IDENTICAL FLOWER IMAGES, SCALE AND SPACING SHALL BE USED FOR FLOWER PATTERN.
2. WITHIN A VERTICAL COLUMN, FLOWER IMAGES SHALL ALTERNATE BETWEEN FLOWERS 'A' AND 'B'. VERTICAL COLUMNS SHALL BE OFFSET 30" FROM ADJACENT COLUMNS.
3. WHERE PLACED ON WALLS BOUNDED BY CONCRETE BARRIERS, FINISHED GRADE OR TOP OF WALL, FLOWER PATTERN SHALL BE CONTINUED WITHOUT CONCERN FOR PARTIAL FLOWER IMAGES, EXCEPT AS NOTED.

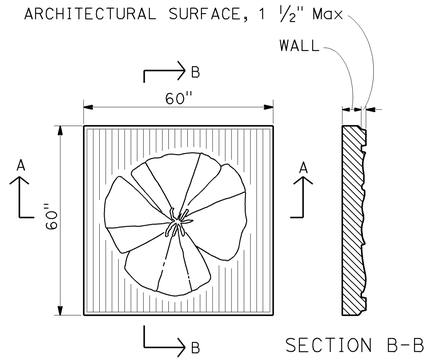

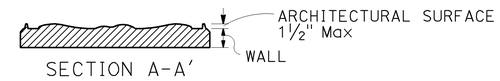

FLOWER PATTERN DETAILS

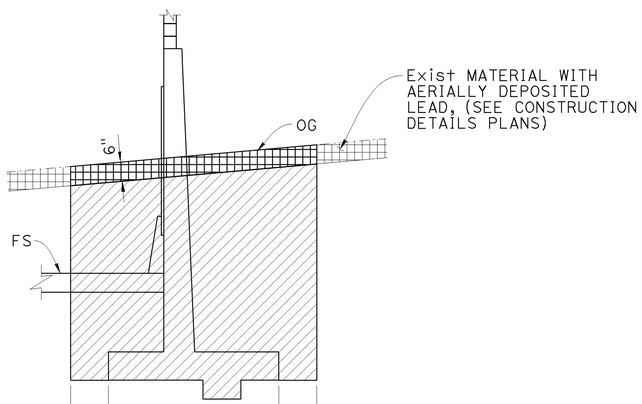

IN CUT

LIMITS OF PAYMENT OF EXCAVATION FOR RETAINING WALL

NOTE:
FOR BACKFILL SEE CALTRANS STANDARD PLANS

LEGEND

INDICATES STRUCTURE EXCAVATION (TYPE Y-1) (AERIALLY DEPOSITED LEAD)

STRUCTURE EXCAVATION (RETAINING WALL)

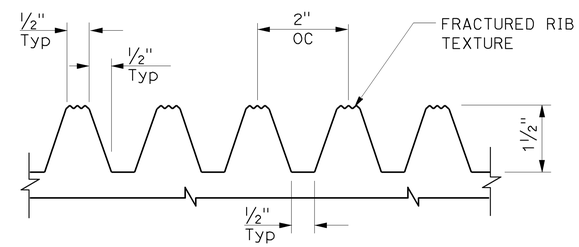

FRACTURED RIB TEXTURE DETAIL

(ELASTOMER FORMLINER)

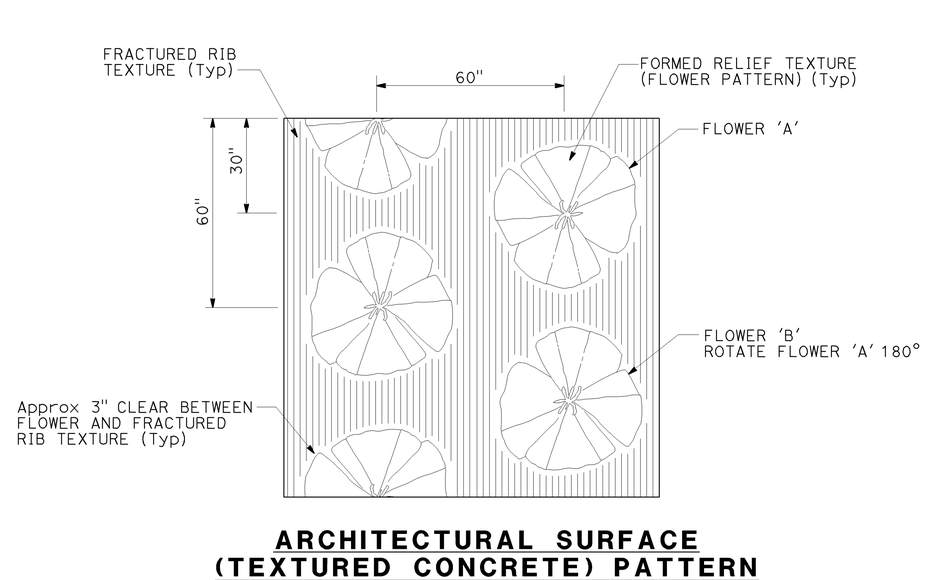

ARCHITECTURAL SURFACE (TEXTURED CONCRETE) PATTERN

RETAINING WALL DETAILS
RW No. 696

NO SCALE

R-31

STATE OF CALIFORNIA - DEPARTMENT OF TRANSPORTATION
Caltrans

CONSULTANT FUNCTIONAL SUPERVISOR: THOMAS IONTA
CALCULATED-DESIGNED BY: JOHN POWELL
CHECKED BY: MARK FRICKE
REVISED BY / DATE REVISED

LAST REVISION 06-15-09 | DATE PLOTTED => 25-JAN-2010 | TIME PLOTTED => 11:13

DIST	COUNTY	ROUTE	POST MILES TOTAL PROJECT	SHEET No	TOTAL SHEETS
12	Ora	57	18.4/20.9	317	856

Hisham Nofal 06/15/09
GEOTECHNICAL PROFESSIONAL DATE

1-25-10
PLANS APPROVAL DATE

REGISTERED PROFESSIONAL ENGINEER HISHAM M. NOFAL No. 2765 Exp. 09/30/09 GEOTECHNICAL STATE OF CALIFORNIA

The State of California or its officers or agents shall not be responsible for the accuracy or completeness of electronic copies of this plan sheet.

OCTA
550 S. MAIN STREET
ORANGE, CA 92863

CH2M HILL
6 HUTTON CENTRE DRIVE, SUITE 700
SANTA ANA, CA 92707

BENCHMARK:

HORIZONTAL COORDINATES ARE CCS NAD-83, ZONE 6.
VERTICAL CONTROL BASED ON NORTH AMERICAN VERTICAL DATUM 1988.
Pt 1079: N2282339.808, E6067144.835, Elev 407.210
Pt 1081: N2282931.290, E6067198.604, Elev 422.355

SAMPLER TYPES:

CALIFORNIA MODIFIED RING SAMPLER
STANDARD PENETRATION TEST SAMPLER

HAMMER TYPE:

AUTOMATIC HAMMER

CORRECTION FACTOR:

TO CONVERT FROM CALIFORNIA MODIFIED RING SAMPLER BLOW COUNT TO EQUIVALENT STANDARD PENETRATION TEST SAMPLER BLOW COUNT, FOR GRANULAR AND COHESIVE SOIL, MULTIPLY BY 0.67.

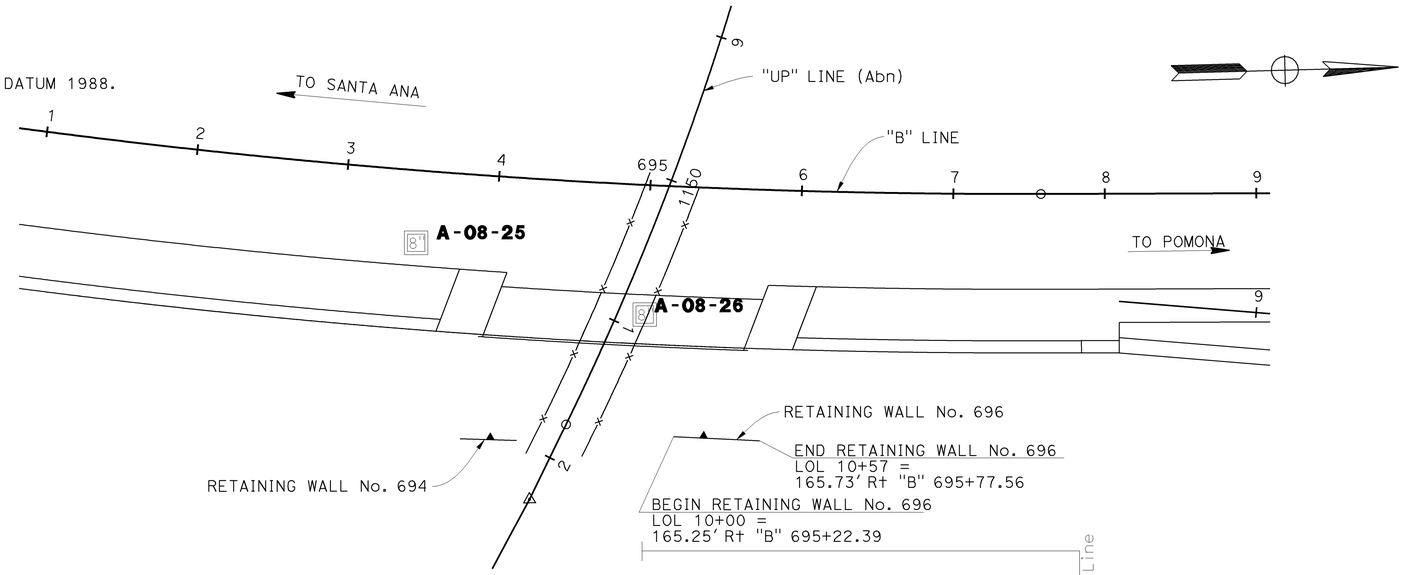

PLAN
1"=50'

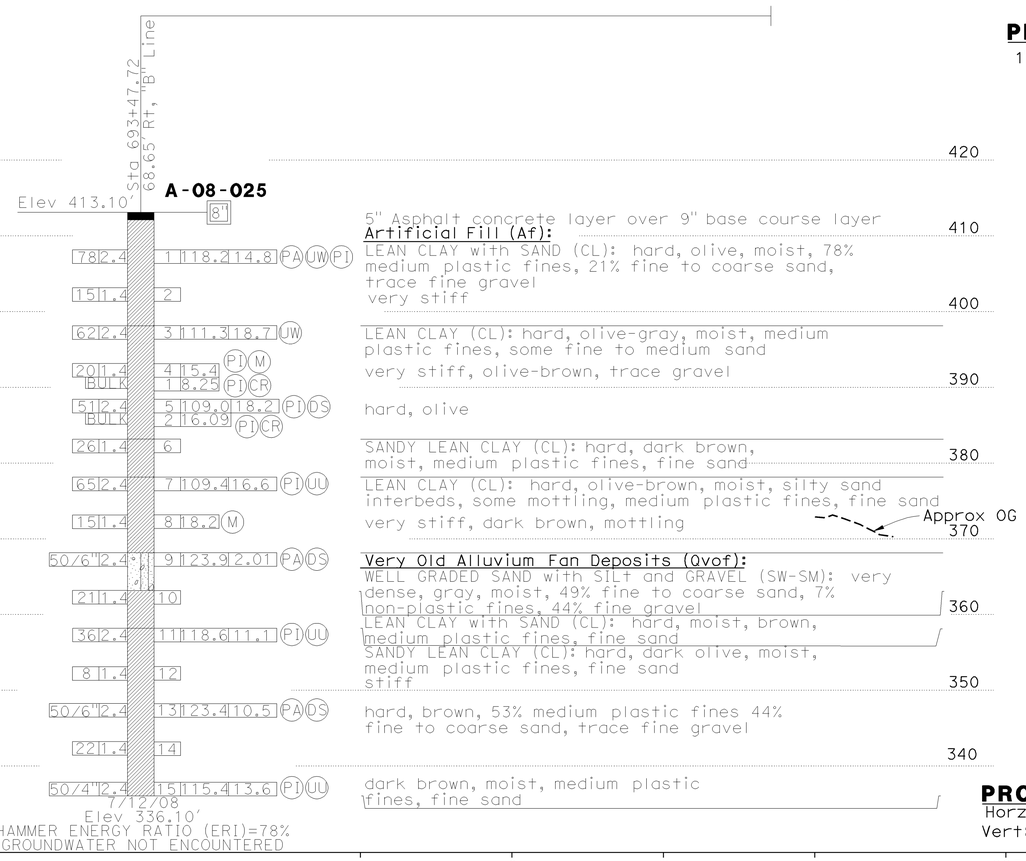

5" Asphalt concrete layer over 9" base course layer

Artificial Fill (Af):
LEAN CLAY with SAND (CL): hard, olive, moist, 78% medium plastic fines, 21% fine to coarse sand, trace fine gravel very stiff
LEAN CLAY (CL): hard, olive-gray, moist, medium plastic fines, some fine to medium sand very stiff, olive-brown, trace gravel
hard, olive
SANDY LEAN CLAY (CL): hard, dark brown, moist, medium plastic fines, fine sand
LEAN CLAY (CL): hard, olive-brown, moist, silty sand interbeds, some mottling, medium plastic fines, fine sand very stiff, dark brown, mottling

Very Old Alluvium Fan Deposits (Qvof):
WELL GRADED SAND with SILt and GRAVEL (SW-SM): very dense, gray, moist, 49% fine to coarse sand, 7% non-plastic fines, 44% fine gravel
LEAN CLAY with SAND (CL): hard, moist, brown, medium plastic fines, fine sand
SANDY LEAN CLAY (CL): hard, dark olive, moist, medium plastic fines, fine sand stiff
hard, brown, 53% medium plastic fines 44% fine to coarse sand, trace fine gravel
dark brown, moist, medium plastic fines, fine sand

PROFILE
Horz:1"=50'
Vert: 1"=10'

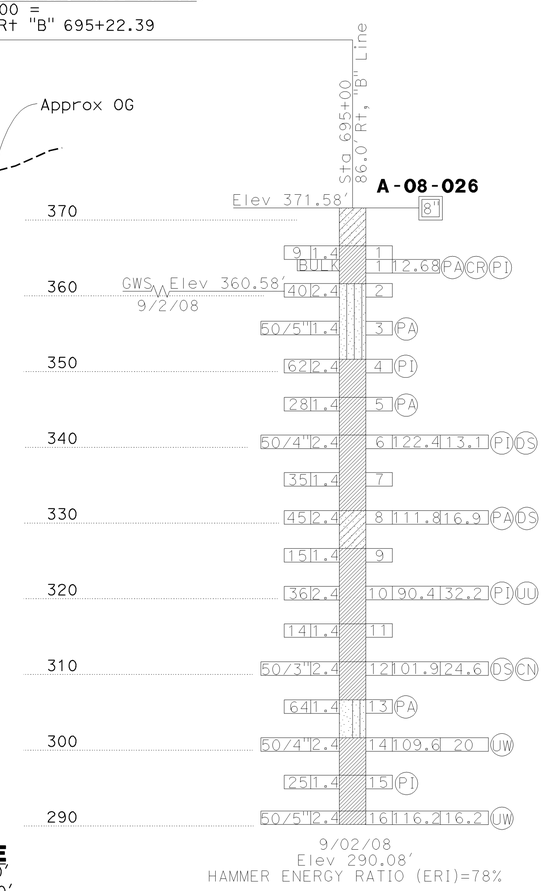

Very Old Alluvium Fan Deposits (Qvof):
CLAYEY SAND (SC): gray, moist, fine to coarse sand, medium plastic fines
SANDY LEAN CLAY (CL): stiff, yellowish-brown, moist, 67% medium plastic fines, 31% fine to coarse sand and trace fine gravel
SILTY SAND with GRAVEL (SM): dense, light olive-brown, moist, 51% fine to coarse sand 22% low plastic fines, 27% fine to coarse gravel very dense, wet
LEAN CLAY (CL): hard, dark brown, wet, medium plastic fines, trace fine sand
SANDY LEAN CLAY (CL): hard, light olive-brown,wet, 55% medium plastic fines, 45% fine to coarse sand
LEAN CLAY (CL): hard, yellowish-brown, wet, medium plastic fines, some fine sand, trace fine gravel
CLAYEY SAND (SC): dense, yellowish-brown, wet, 54% fine sand, 42% medium plastic fines, trace fine gravel
LEAN CLAY (CL): very stiff, light brown, wet, medium plastic fines, some fine sand
hard, yellowish-brown
LEAN CLAY with SAND (CL): very stiff, brown, wet, medium plastic fines, fine sand
LEAN CLAY (CL): hard, brown, wet, medium plastic fines, some fine sand
POORLY GRADED SAND with SILt (SP-SM): very dense, yellowish-brown, wet, 89% medium to fine, 11% non plastic fines
LEAN CLAY (CL): hard, brown, wet, medium plastic fines, trace fine to medium sand
LEAN CLAY with SAND (CL): hard, brown, wet, medium plastic fines, fine sand
LEAN CLAY (CL): hard, light brown, wet, medium plastic fines

STATIONING "B" LINE

DESIGN OVERSIGHT	DRAWN BY	K. Reyes	R. Bethapudi FIELD INVESTIGATION BY:
SIGN OFF DATE	CHECKED BY	H. Nofal	DATE

PREPARED FOR THE STATE OF CALIFORNIA DEPARTMENT OF TRANSPORTATION

Ayman Salama
PROJECT ENGINEER

BRIDGE NO.
POST MILES

RETAINING WALL No. 696

LOG OF TEST BORINGS SHEET 1 OF 2

R-32

ORIGINAL SCALE IN INCHES FOR REDUCED PLANS 0 1 2 3

CU 12220
EA 0F0321

DISREGARD PRINTS BEARING EARLIER REVISION DATES
REVISION DATES (PRELIMINARY STAGE ONLY) 02/07/09 04/07/09 06/15/09
SHEET OF

FILE => c0F032qf003.dgn

USERNAME => trcarol DATE PLOTTED => 25-JAN-2010 TIME PLOTTED => 11:13

DIST	COUNTY	ROUTE	POST MILES TOTAL PROJECT	SHEET No	TOTAL SHEETS
12	Ora	57	18.4/20.9	318	856

Hisham Nofal 06/15/09
GEOTECHNICAL PROFESSIONAL DATE

1-25-10
PLANS APPROVAL DATE

REGISTERED PROFESSIONAL ENGINEER HISHAM M. NOFAL No. 2765 Exp. 09/30/09 GEOTECHNICAL STATE OF CALIFORNIA

The State of California or its officers or agents shall not be responsible for the accuracy or completeness of electronic copies of this plan sheet.

OCTA
550 S. MAIN STREET
ORANGE, CA 92863

CH2M HILL
6 HUTTON CENTRE DRIVE, SUITE 700
SANTA ANA, CA 92707

REFERENCE: CALTRANS SOIL & ROCK LOGGING, CLASSIFICATION, AND PRESENTATION MANUAL (JUNE 2007)

GROUP SYMBOLS AND NAMES

Graphic/Symbol	Group Names	Graphic/Symbol	Group Names
GW	Well-graded GRAVEL Well-graded GRAVEL with SAND	CL	Lean CLAY Lean CLAY with SAND Lean CLAY with GRAVEL SANDY lean CLAY SANDY lean CLAY with GRAVEL GRAVELLY lean CLAY GRAVELLY lean CLAY with SAND
GP	Poorly graded GRAVEL Poorly graded GRAVEL with SAND		
GW-GM	Well-graded GRAVEL with SILT Well-graded GRAVEL with SILT and SAND	CL-ML	SILTY CLAY SILTY CLAY with SAND SILTY CLAY with GRAVEL SANDY SILTY CLAY SANDY SILTY CLAY with GRAVEL GRAVELLY SILTY CLAY GRAVELLY SILTY CLAY with SAND
GW-GC	Well-graded GRAVEL with CLAY (or SILTY CLAY) Well-graded GRAVEL with CLAY and SAND (or SILTY CLAY and SAND)		
GP-GM	Poorly graded GRAVEL with SILT Poorly graded GRAVEL with SILT and SAND	ML	SILT SILT with SAND SILT with GRAVEL SANDY SILT SANDY SILT with GRAVEL GRAVELLY SILT GRAVELLY SILT with SAND
GP-GC	Poorly graded GRAVEL with CLAY (or SILTY CLAY) Poorly graded GRAVEL with CLAY and SAND (or SILTY CLAY and SAND)		
GM	SILTY GRAVEL SILTY GRAVEL with SAND	OL	ORGANIC lean CLAY ORGANIC lean CLAY with SAND ORGANIC lean CLAY with GRAVEL SANDY ORGANIC lean CLAY SANDY ORGANIC lean CLAY with GRAVEL GRAVELLY ORGANIC lean CLAY GRAVELLY ORGANIC lean CLAY with SAND
GC	CLAYEY GRAVEL CLAYEY GRAVEL with SAND		
GC-GM	SILTY, CLAYEY GRAVEL SILTY, CLAYEY GRAVEL with SAND	OL	ORGANIC SILT ORGANIC SILT with SAND ORGANIC SILT with GRAVEL SANDY ORGANIC SILT SANDY ORGANIC SILT with GRAVEL GRAVELLY ORGANIC SILT GRAVELLY ORGANIC SILT with SAND
SW	Well-graded SAND Well-graded SAND with GRAVEL		
SP	Poorly graded SAND Poorly graded SAND with GRAVEL	CH	Fat CLAY Fat CLAY with SAND Fat CLAY with GRAVEL SANDY fat CLAY SANDY fat CLAY with GRAVEL GRAVELLY fat CLAY GRAVELLY fat CLAY with SAND
SW-SM	Well-graded SAND with SILT Well-graded SAND with SILT and GRAVEL		
SW-SC	Well-graded SAND with CLAY (or SILTY CLAY) Well-graded SAND with CLAY and GRAVEL (or SILTY CLAY and GRAVEL)	MH	Elastic SILT Elastic SILT with SAND Elastic SILT with GRAVEL SANDY elastic SILT SANDY elastic SILT with GRAVEL GRAVELLY elastic SILT GRAVELLY elastic SILT with SAND
SP-SM	Poorly graded SAND with SILT Poorly graded SAND with SILT and GRAVEL		
SP-SC	Poorly graded SAND with CLAY (or SILTY CLAY) Poorly graded SAND with CLAY and GRAVEL (or SILTY CLAY and GRAVEL)	OH	ORGANIC fat CLAY ORGANIC fat CLAY with SAND ORGANIC fat CLAY with GRAVEL SANDY ORGANIC fat CLAY SANDY ORGANIC fat CLAY with GRAVEL GRAVELLY ORGANIC fat CLAY GRAVELLY ORGANIC fat CLAY with SAND
SM	SILTY SAND SILTY SAND with GRAVEL		
SC	CLAYEY SAND CLAYEY SAND with GRAVEL	OH	ORGANIC elastic SILT ORGANIC elastic SILT with SAND ORGANIC elastic SILT with GRAVEL SANDY ORGANIC elastic SILT SANDY ORGANIC elastic SILT with GRAVEL GRAVELLY ORGANIC elastic SILT GRAVELLY ORGANIC elastic SILT with SAND
SC-SM	SILTY, CLAYEY SAND SILTY, CLAYEY SAND with GRAVEL		
PT	PEAT	OL/OH	ORGANIC SOIL ORGANIC SOIL with SAND ORGANIC SOIL with GRAVEL SANDY ORGANIC SOIL SANDY ORGANIC SOIL with GRAVEL GRAVELLY ORGANIC SOIL GRAVELLY ORGANIC SOIL with SAND
	COBBLES COBBLES and BOULDERS BOULDERS		

FIELD AND LABORATORY TESTING

- (C) Consolidation (ASTM D 2435)
- (CL) Collapse Potential (ASTM D 5333)
- (CP) Compaction Curve (CTM 216)
- (CR) Corrosivity Testing (CTM 643, CTM 422, CTM 417)
- (CU) Consolidated Undrained Triaxial (ASTM D 4767)
- (DS) Direct Shear (ASTM D 3080)
- (EI) Expansion Index (ASTM D 4829)
- (M) Moisture Content (ASTM D 2216)
- (OC) Organic Content-% (ASTM D 2974)
- (P) Permeability (CTM 220)
- (PA) Particle Size Analysis (ASTM D 422)
- (PI) Plasticity Index (AASHTO T 90) Liquid Limit (AASHTO T 89)
- (PL) Point Load Index (ASTM D 5731)
- (PM) Pressure Meter
- (PP) Pocket Penetrometer
- (R) R-Value (CTM 301)
- (SE) Sand Equivalent (CTM 217)
- (SG) Specific Gravity (AASHTO T 100)
- (SL) Shrinkage Limit (ASTM D 427)
- (SW) Swell Potential (ASTM D 4546)
- (TV) Pocket Torvane
- (UC) Unconfined Compression-Soil (ASTM D 2166) Unconfined Compression-Rock (ASTM D 2938)
- (UU) Unconsolidated Undrained Triaxial (ASTM D 2850)
- (UW) Unit Weight (ASTM D 4767)
- (VS) Vane Shear (AASHTO T 223)

APPARENT DENSITY OF COHESIONLESS SOILS

Description	SPT N_{60} (Blows / 12 inches)
Very loose	0 - 4
Loose	5 - 10
Medium Dense	11 - 30
Dense	31 - 50
Very Dense	> 50

MOISTURE

Description	Criteria
Dry	Absence of moisture, dusty, dry to the touch
Moist	Damp but no visible water
Wet	Visible free water, usually soil is below water table

PERCENT OR PROPORTION OF SOILS

Description	Criteria
Trace	Particles are present but estimated to be less than 5%
Few	5 to 10%
Little	15 to 25%
Some	30 to 45%
Mostly	50 to 100%

PARTICLE SIZE

Description		Size
Boulder		> 12"
Cobble		3" to 12"
Gravel	Coarse	3/4" to 3"
	Fine	No. 4 to 3/4"
Sand	Coarse	No. 10 to No. 4
	Medium	No. 40 to No. 10
	Fine	No. 200 to No. 40

CEMENTATION

Description	Criteria
Weak	Crumbles or breaks with handling or little finger pressure.
Moderate	Crumbles or breaks with considerable finger pressure.
Strong	Will not crumble or break with finger pressure.

CONSISTENCY OF COHESIVE SOILS

Description	Unconfined Compressive Strength (tsf)	Pocket Penetrometer Measurement (tsf)	Torvane Measurement (tsf)	Field Approximation
Very Soft	< 0.25	< 0.25	< 0.12	Easily penetrated several inches by fist
Soft	0.25 to 0.50	0.25 to 0.50	0.12 to 0.25	Easily penetrated several inches by thumb
Medium Stiff	0.50 to 1.0	0.50 to 1.0	0.25 to 0.50	Penetrated several inches by thumb with moderate effort
Stiff	1 to 2	1 to 2	0.50 to 1.0	Readily indented by thumb but penetrated only with great effort
Very Stiff	2 to 4	2 to 4	1.0 to 2.0	Readily indented by thumbnail
Hard	> 4.0	> 4.0	> 2.0	Indented by thumbnail with difficulty

PLASTICITY OF FINE-GRAINED SOILS

Description	Criteria
Nonplastic	A 1/8-inch thread cannot be rolled at any water content.
Low	The thread can barely be rolled and the lump cannot be formed when drier than the plastic limit.
Medium	The thread is easy to roll and not much time is required to reach the plastic limit. The thread cannot be rerolled after reaching the plastic limit. The lump crumbles when drier than the plastic limit.
High	It takes considerable time rolling and kneading to reach the plastic limit. The thread can be rerolled several times after reaching the plastic limit. The lump can be formed without crumbling when drier than the plastic limit.

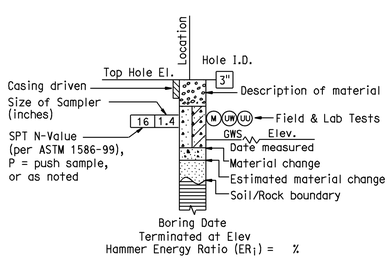

ROTARY BORING

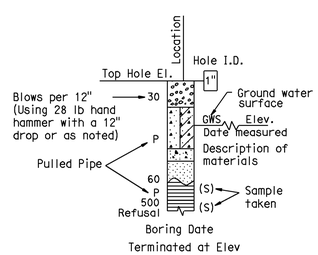

HAND BORING

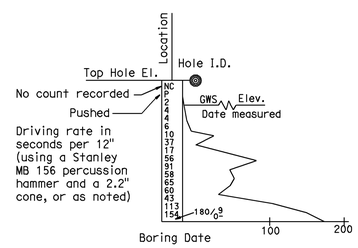

DYNAMIC CONE PENETRATION BORING

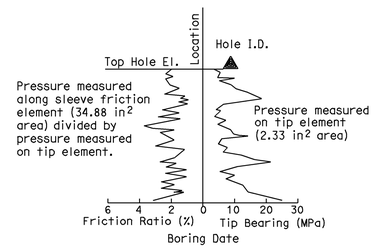

CONE PENETRATION TEST (CPT) SOUNDING

BOREHOLE IDENTIFICATION

Symbol	Hole Type	Description
Size	A	Auger Boring
Size	R P	Rotary drilled boring Rotary percussion boring (air)
Size	R	Rotary drilled diamond core
Size	HD HA	Hand driven (1-inch soil tube) Hand Auger
●	D	Dynamic Cone Penetration Boring
◕	B	Hollow Stem Auger Boring (HSA)
▲	CPT	Cone Penetration Test (ASTM D 5778-95)
□	O	Other

Note: Size in inches.

DESIGN OVERSIGHT

SIGN OFF DATE

DRAWN BY K. Reyes

CHECKED BY H. Nofal

R. Bethapudi
FIELD INVESTIGATION BY:

DATE

PREPARED FOR THE STATE OF CALIFORNIA DEPARTMENT OF TRANSPORTATION

Ayman Salama
PROJECT ENGINEER

BRIDGE NO.

POST MILES

SOIL LEGEND

RETAINING WALL No. 696

LOG OF TEST BORINGS SHEET 2 OF 2

R-33

ORIGINAL SCALE IN INCHES FOR REDUCED PLANS 0 1 2 3

CU 12220
EA 0F0321

DISREGARD PRINTS BEARING EARLIER REVISION DATES

REVISION DATES (PRELIMINARY STAGE ONLY) 02/27/09 04/27/09 06/15/09

SHEET OF

FILE => c0F032qf004.dgn

USERNAME => trcarol DATE PLOTTED => 25-JAN-2010 TIME PLOTTED => 11:13

Dist	COUNTY	ROUTE	POST MILES TOTAL PROJECT	SHEET No.	TOTAL SHEETS
12	Ora	57	18.4/20.9	319	856

REGISTERED CIVIL ENGINEER 06/15/09 DATE

1-25-10
PLANS APPROVAL DATE

REGISTERED PROFESSIONAL ENGINEER
JOHN W. POWELL
No. C71463
Exp.12/31/09
CIVIL
STATE OF CALIFORNIA

THE STATE OF CALIFORNIA OR ITS OFFICERS OR AGENTS SHALL NOT BE RESPONSIBLE FOR THE ACCURACY OR COMPLETENESS OF SCANNED COPIES OF THIS PLAN SHEET.

CH2M HILL
6 HUTTON CENTRE DRIVE,
SUITE 700
SANTA ANA, CA 92707

OCTA
550 S. MAIN STREET
ORANGE, CA 92863

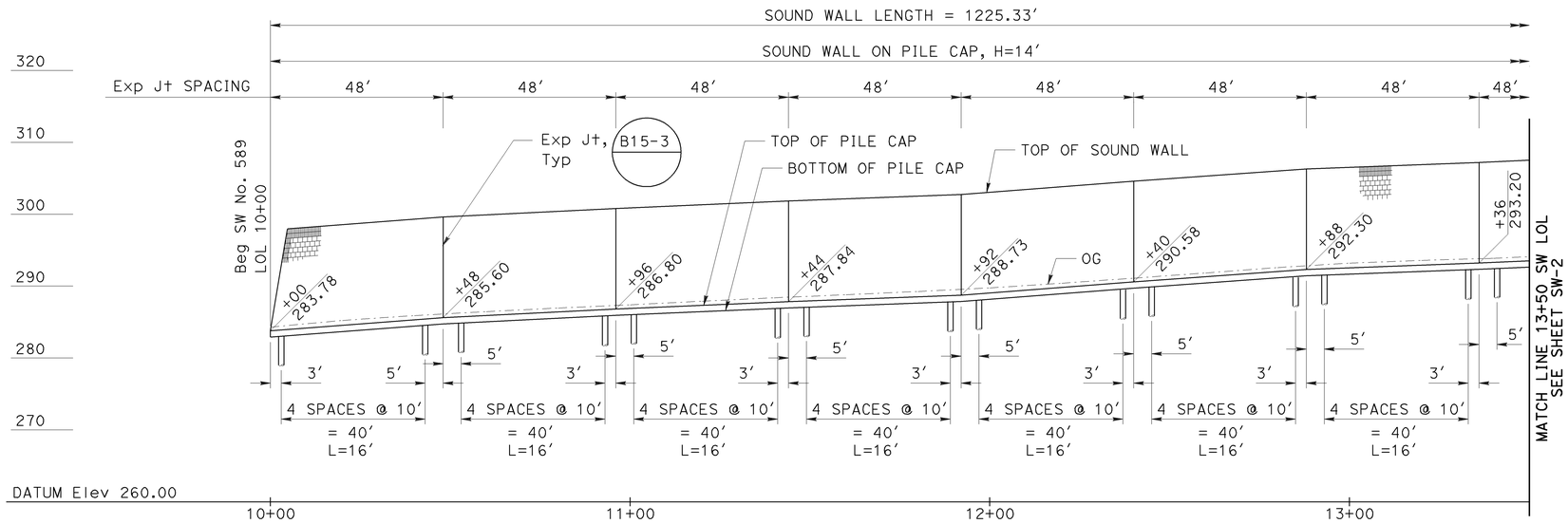

DEVELOPED ELEVATION

Horiz 1"=20′
Vert 1"=10′

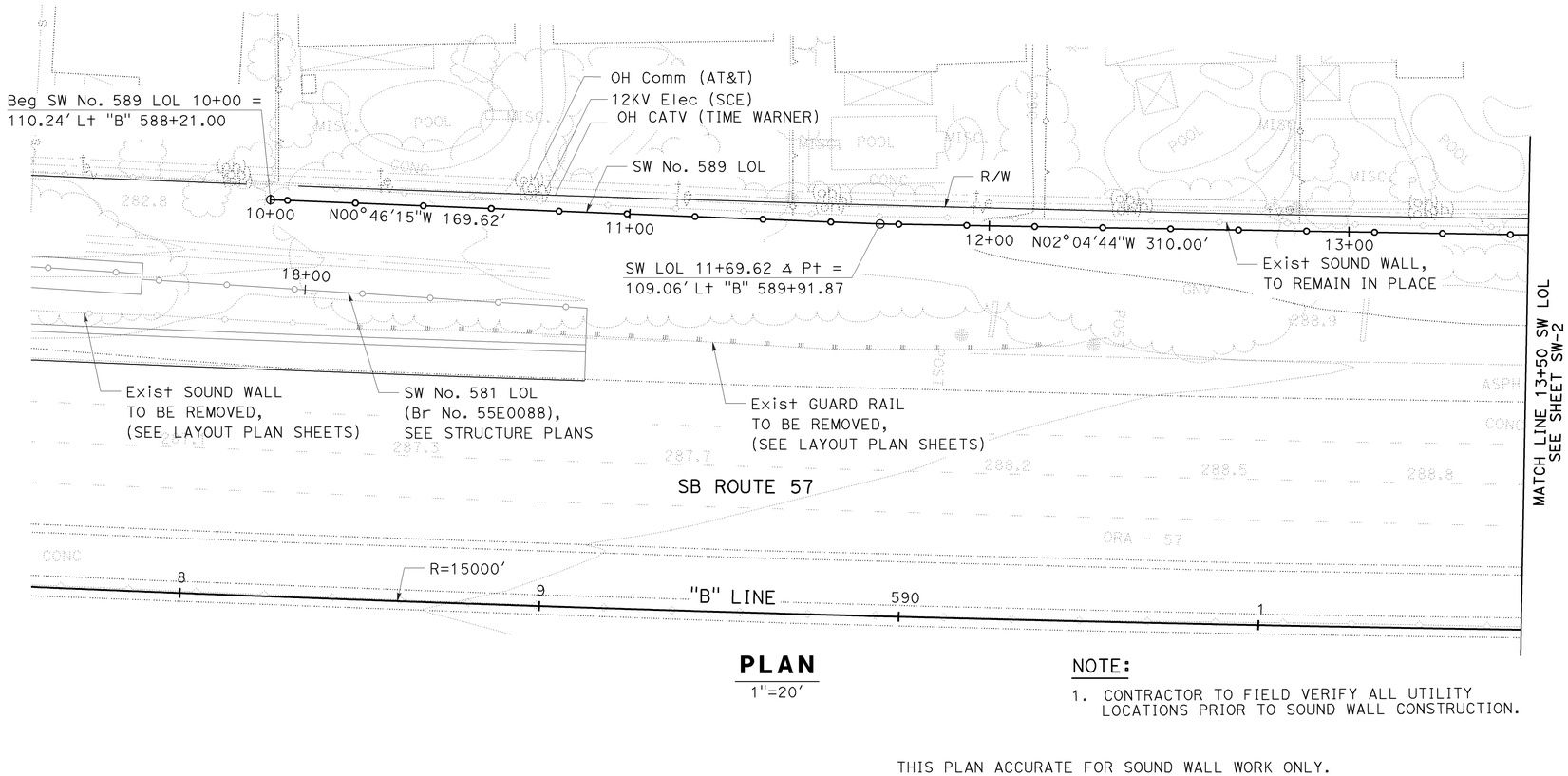

PLAN

1"=20′

NOTE:

1. CONTRACTOR TO FIELD VERIFY ALL UTILITY LOCATIONS PRIOR TO SOUND WALL CONSTRUCTION.

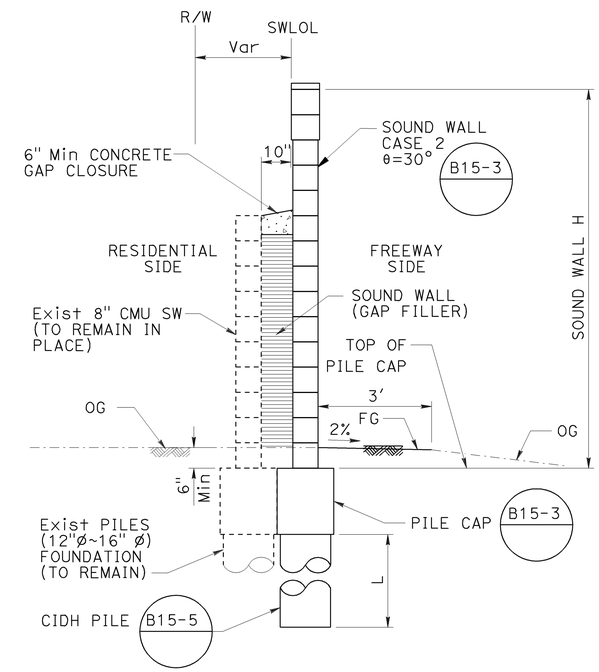

TYPICAL SECTION

NO SCALE

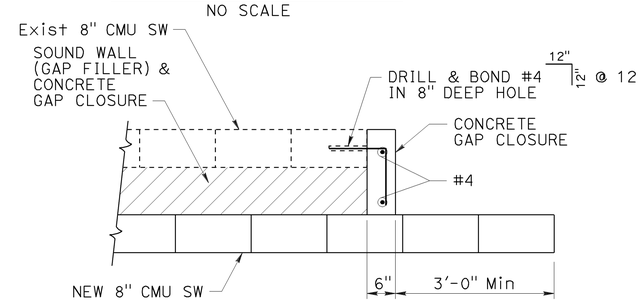

PARTIAL PLAN

NO SCALE

SOUND WALL PLAN
SW No. 589

SCALE AS SHOWN

SW-1

THIS PLAN ACCURATE FOR SOUND WALL WORK ONLY.

STATE OF CALIFORNIA - DEPARTMENT OF TRANSPORTATION
Caltrans

CONSULTANT FUNCTIONAL SUPERVISOR: THOMAS IONTA
CALCULATED-DESIGNED BY: JOHN POWELL
CHECKED BY: MARK FRICKE
REVISED BY
DATE REVISED

LAST REVISION 06-15-09
DATE PLOTTED => 25-JAN-2010
TIME PLOTTED => 11:14

Dist	COUNTY	ROUTE	POST MILES TOTAL PROJECT	SHEET No.	TOTAL SHEETS
12	Ora	57	18.4/20.9	320	856

REGISTERED CIVIL ENGINEER 06/15/09 DATE

1-25-10
PLANS APPROVAL DATE

REGISTERED PROFESSIONAL ENGINEER
JOHN W. POWELL
No. C71463
Exp.12/31/09
CIVIL
STATE OF CALIFORNIA

THE STATE OF CALIFORNIA OR ITS OFFICERS OR AGENTS SHALL NOT BE RESPONSIBLE FOR THE ACCURACY OR COMPLETENESS OF SCANNED COPIES OF THIS PLAN SHEET.

CH2M HILL
6 HUTTON CENTRE DRIVE,
SUITE 700
SANTA ANA, CA 92707

OCTA
550 S. MAIN STREET
ORANGE, CA 92863

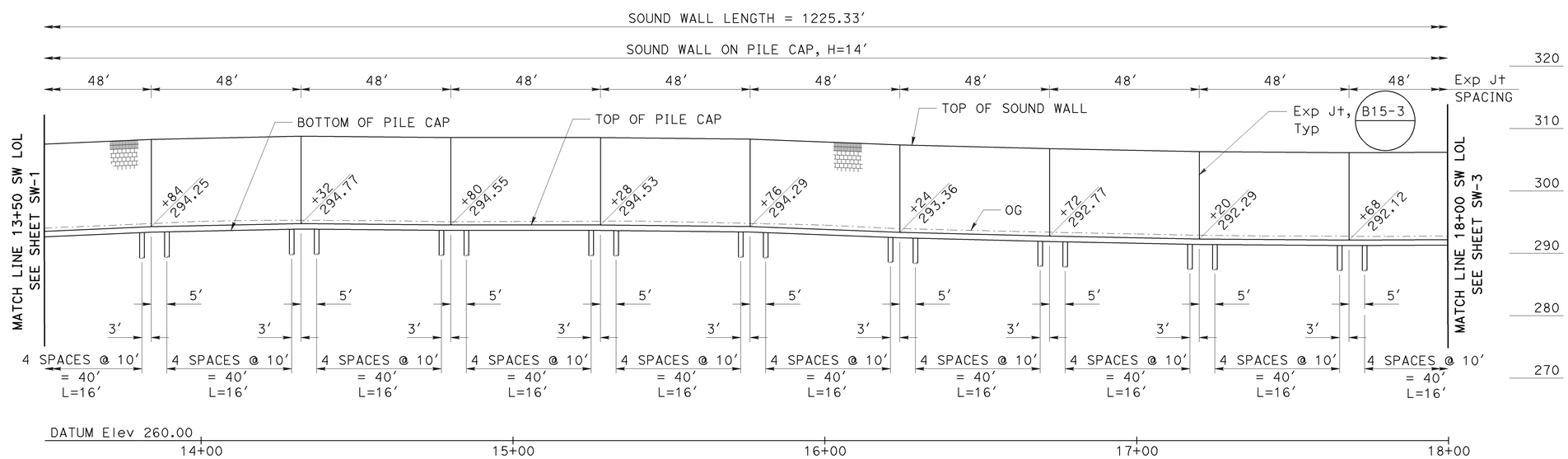

DEVELOPED ELEVATION

Horiz 1"=20'
Vert 1"=10'

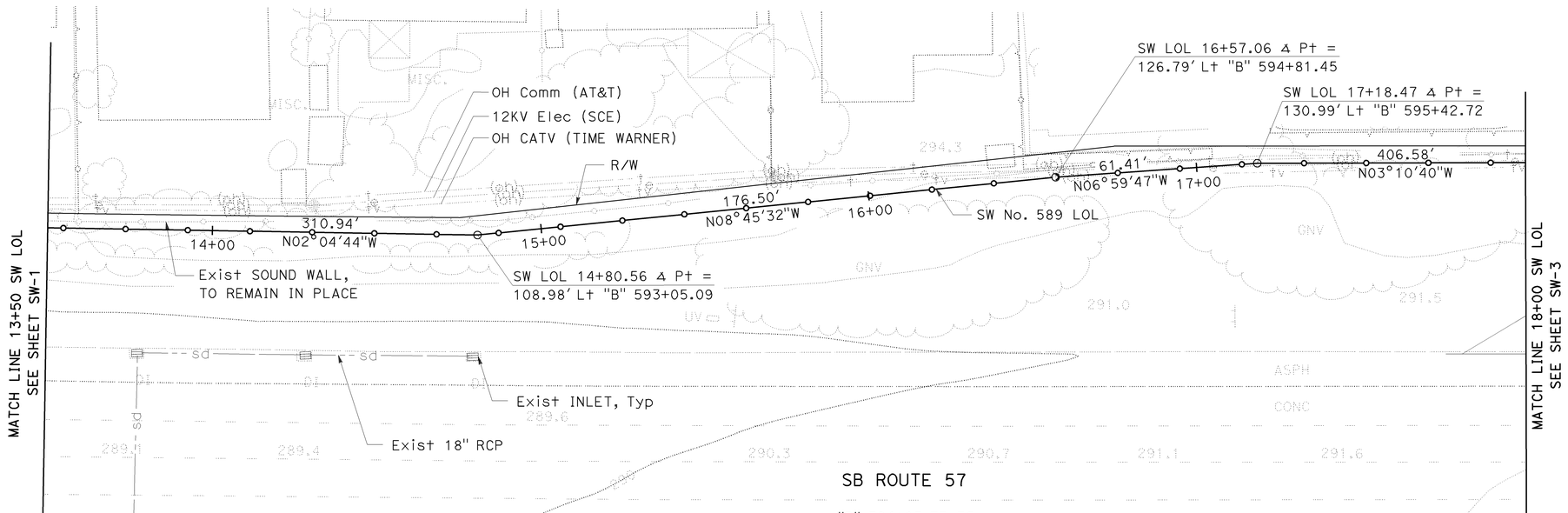

PLAN

1"=20'

NOTE:

1. FOR NOTE AND TYPICAL SECTION SEE SHEET SW-1.

THIS PLAN ACCURATE FOR SOUND WALL WORK ONLY.

SOUND WALL PLAN
SW No. 589

SCALE AS SHOWN

SW-2

REVISED BY	DATE REVISED

CALCULATED-DESIGNED BY	CHECKED BY
JOHN POWELL	MARK FRICKE

CONSULTANT FUNCTIONAL SUPERVISOR: THOMAS IONTA

STATE OF CALIFORNIA - DEPARTMENT OF TRANSPORTATION
Caltrans

LAST REVISION 06-15-09
DATE PLOTTED => 25-JAN-2010
TIME PLOTTED => 11:14

Dist	COUNTY	ROUTE	POST MILES TOTAL PROJECT	SHEET No.	TOTAL SHEETS
12	Ora	57	18.4/20.9	321	856

REGISTERED CIVIL ENGINEER 06/15/09 DATE

1-25-10
PLANS APPROVAL DATE

REGISTERED PROFESSIONAL ENGINEER
JOHN W. POWELL
No. C71463
Exp.12/31/09
CIVIL
STATE OF CALIFORNIA

THE STATE OF CALIFORNIA OR ITS OFFICERS OR AGENTS SHALL NOT BE RESPONSIBLE FOR THE ACCURACY OR COMPLETENESS OF SCANNED COPIES OF THIS PLAN SHEET.

CH2M HILL
6 HUTTON CENTRE DRIVE,
SUITE 700
SANTA ANA, CA 92707

OCTA
550 S. MAIN STREET
ORANGE, CA 92863

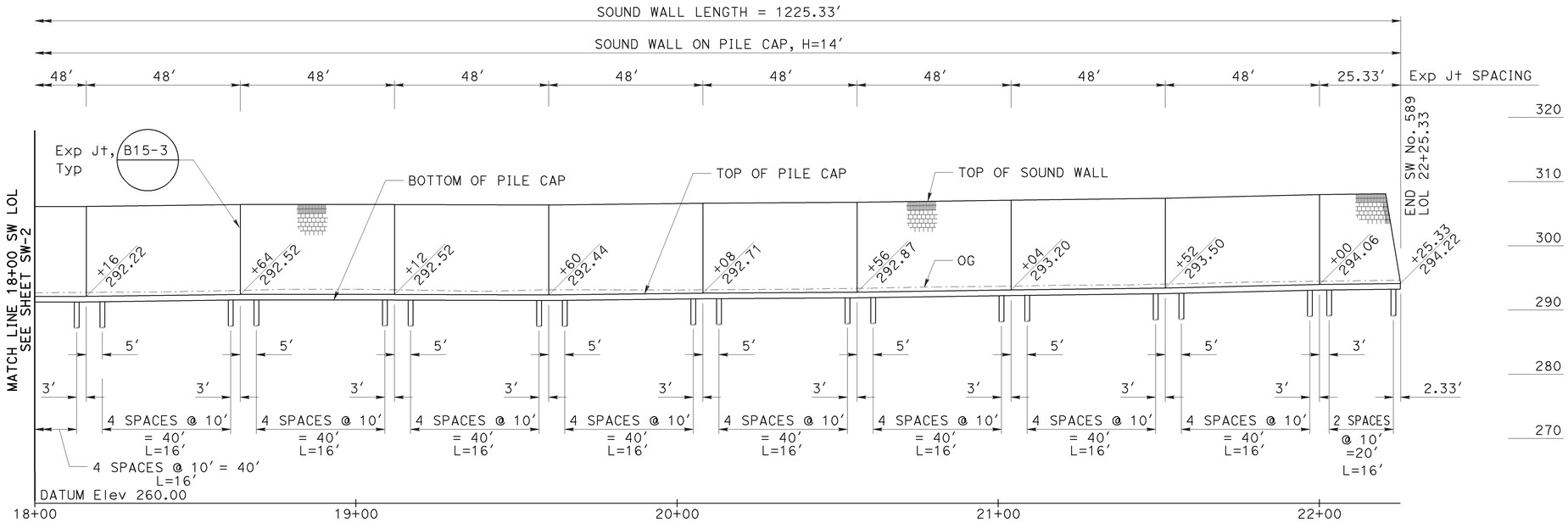

DEVELOPED ELEVATION

Horiz 1"=20'
Vert 1"=10'

NOTE:

1. FOR NOTE AND TYPICAL SECTION SEE SHEET SW-1.

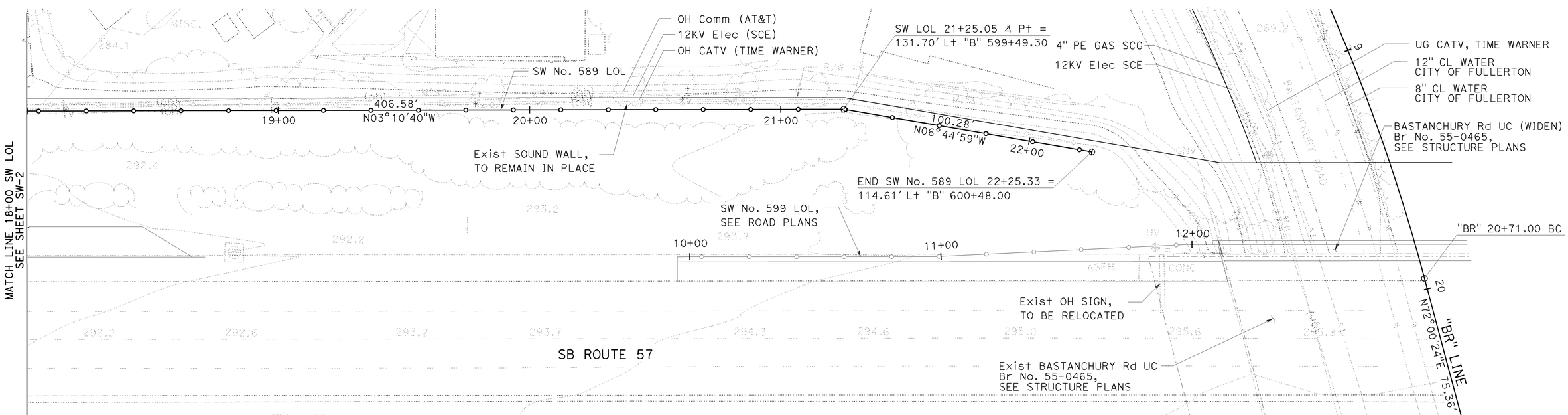

PLAN

1"=20'

SOUND WALL PLAN
SW No. 589

SCALE AS SHOWN

SW-3

THIS PLAN ACCURATE FOR SOUND WALL WORK ONLY.

STATE OF CALIFORNIA - DEPARTMENT OF TRANSPORTATION
Caltrans

CONSULTANT FUNCTIONAL SUPERVISOR: THOMAS IONTA
CALCULATED-DESIGNED BY: JOHN POWELL
CHECKED BY: MARK FRICKE
REVISED BY
DATE REVISED

LAST REVISION 06-15-09
DATE PLOTTED => 25-JAN-2010
TIME PLOTTED => 11:14

Dist	COUNTY	ROUTE	POST MILES TOTAL PROJECT	SHEET No.	TOTAL SHEETS
12	Ora	57	18.4/20.9	322	856

REGISTERED CIVIL ENGINEER 06/15/09 DATE

1-25-10
PLANS APPROVAL DATE

REGISTERED PROFESSIONAL ENGINEER
JOHN W. POWELL
No. C71463
Exp.12/31/09
CIVIL
STATE OF CALIFORNIA

THE STATE OF CALIFORNIA OR ITS OFFICERS OR AGENTS SHALL NOT BE RESPONSIBLE FOR THE ACCURACY OR COMPLETENESS OF SCANNED COPIES OF THIS PLAN SHEET.

CH2M HILL
6 HUTTON CENTRE DRIVE,
SUITE 700
SANTA ANA, CA 92707

OCTA
550 S. MAIN STREET
ORANGE, CA 92863

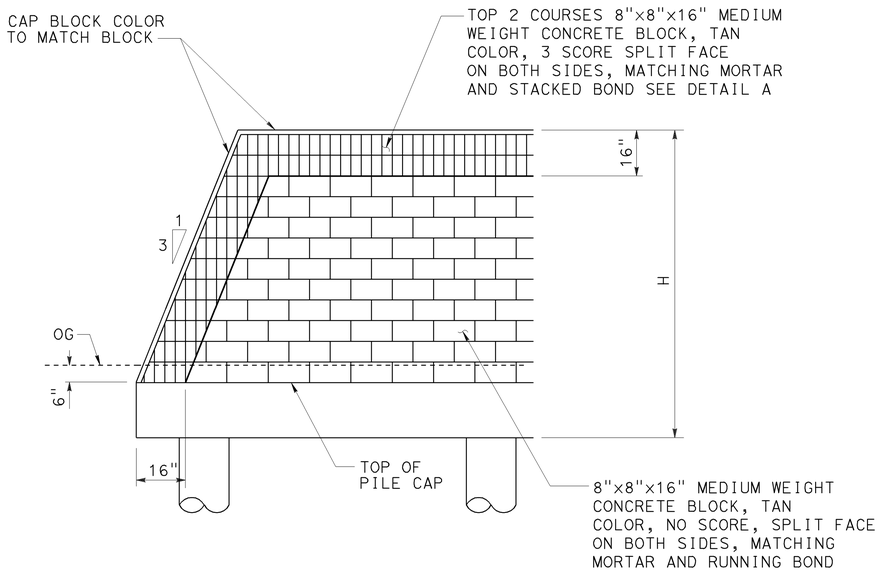

END WALL ELEVATION

CONCRETE BLOCK TYPE, COLOR AND PLACEMENT

NO SCALE

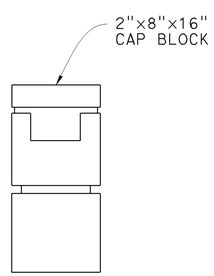

CAP BLOCK DETAIL

NO SCALE

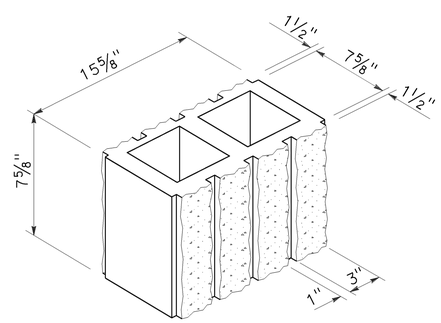

DETAIL A

NO SCALE

8" WIDE 3-SCORE SPLIT FACE BOTH SIDES

SOUND WALL DETAILS
SW No. 589

SCALE AS SHOWN

SW-4

STATE OF CALIFORNIA - DEPARTMENT OF TRANSPORTATION
Caltrans®

CONSULTANT FUNCTIONAL SUPERVISOR: THOMAS IONTA

CALCULATED-DESIGNED BY: JOHN POWELL
CHECKED BY: MARK FRICKE

REVISED BY | DATE REVISED

LAST REVISION 06-15-09
DATE PLOTTED => 25-JAN-2010
TIME PLOTTED => 11:14

DIST	COUNTY	ROUTE	POST MILES TOTAL PROJECT	SHEET No	TOTAL SHEETS
12	Ora	57	18.4/20.9	323	856

Hisham Nofal 06/15/09
GEOTECHNICAL PROFESSIONAL DATE

REGISTERED PROFESSIONAL ENGINEER
HISHAM M. NOFAL
No. 2765
Exp. 09/30/09
GEOTECHNICAL
STATE OF CALIFORNIA

1-25-10
PLANS APPROVAL DATE

The State of California or its officers or agents shall not be responsible for the accuracy or completeness of electronic copies of this plan sheet.

OCTA
550 S. MAIN STREET
ORANGE, CA 92863

CH2M HILL
6 HUTTON CENTRE DRIVE, SUITE 700
SANTA ANA, CA 92707

BENCHMARK:

HORIZONTAL COORDINATES ARE CCS NAD-83, ZONE 6.
VERTICAL CONTROL BASED ON NORTH AMERICAN VERTICAL DATUM 1988.
Pt 1057: N2273578.007, E6066831.271, Elev 294.844

SAMPLER TYPES:

CALIFORNIA MODIFIED RING SAMPLER
STANDARD PENETRATION TEST SAMPLER

HAMMER TYPE:

AUTOMATIC HAMMER

CORRECTION FACTOR:

TO CONVERT FROM CALIFORNIA MODIFIED RING SAMPLER BLOW COUNT TO EQUIVALENT STANDARD PENETRATION TEST SAMPLER BLOW COUNT, FOR GRANULAR AND COHESIVE SOIL, MULTIPLY BY 0.67.

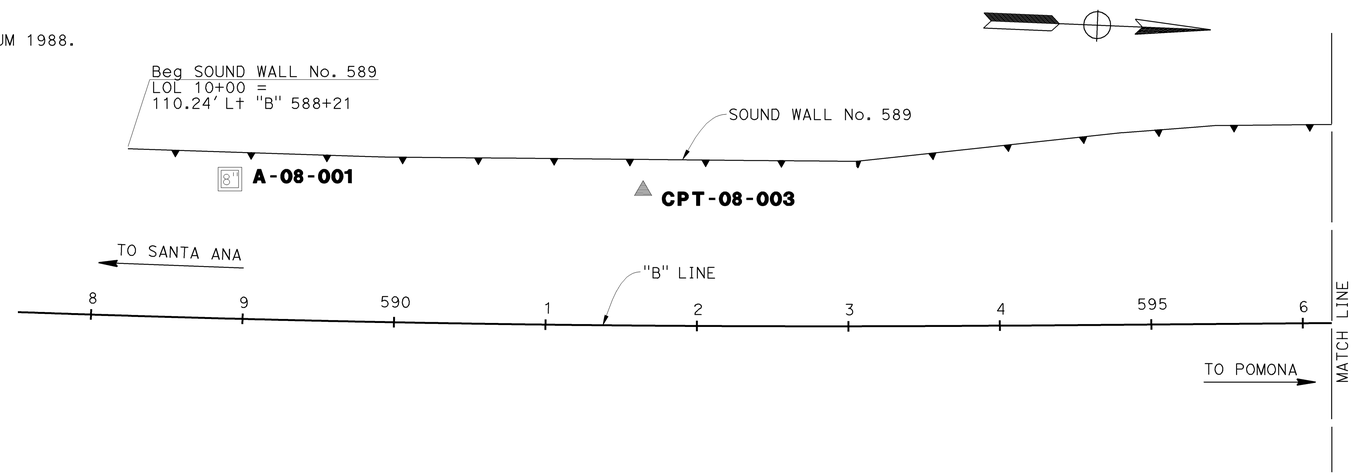

DESIGN OVERSIGHT	DRAWN BY	K. Reyes	R Bethapudi FIELD INVESTIGATION BY:
SIGN OFF DATE	CHECKED BY	H. Nofal	DATE

PREPARED FOR THE STATE OF CALIFORNIA DEPARTMENT OF TRANSPORTATION

Ayman Salama
PROJECT ENGINEER

BRIDGE NO.
POST MILES

SOUND WALL NO. 589

LOG OF TEST BORINGS SHEET 1 OF 3 SW-5

ORIGINAL SCALE IN INCHES FOR REDUCED PLANS 0 1 2 3

CU 12220
EA 0F0321

DISREGARD PRINTS BEARING EARLIER REVISION DATES

REVISION DATES (PRELIMINARY STAGE ONLY) 02/27/09 04/07/09 06/15/09

SHEET OF

FILE => c0F032ra005.dgn

USERNAME => trcarol DATE PLOTTED => 25-JAN-2010 TIME PLOTTED => 11:14

DIST	COUNTY	ROUTE	POST MILES TOTAL PROJECT	SHEET No	TOTAL SHEETS
12	Ora	57	18.4/20.9	324	856

GEOTECHNICAL PROFESSIONAL — DATE 06/15/09

1-25-10
PLANS APPROVAL DATE

The State of California or its officers or agents shall not be responsible for the accuracy or completeness of electronic copies of this plan sheet.

REGISTERED PROFESSIONAL ENGINEER — HISHAM M. NOFAL No. 2765 Exp. 09/30/09 GEOTECHNICAL — STATE OF CALIFORNIA

OCTA
550 S. MAIN STREET
ORANGE, CA 92863

CH2M HILL
6 HUTTON CENTRE DRIVE, SUITE 700
SANTA ANA, CA 92707

BENCHMARK:

HORIZONTAL COORDINATES ARE CCS NAD-83, ZONE 6.
VERTICAL CONTROL BASED ON NORTH AMERICAN VERTICAL DATUM 1988.
Pt 1057: N2273578.007, E6066831.271, Elev 294.844

SAMPLER TYPES:

CALIFORNIA MODIFIED RING SAMPLER
STANDARD PENETRATION TEST SAMPLER

HAMMER TYPE:

AUTOMATIC HAMMER

CORRECTION FACTOR:

TO CONVERT FROM CALIFORNIA MODIFIED RING SAMPLER BLOW COUNT TO EQUIVALENT STANDARD PENETRATION TEST SAMPLER BLOW COUNT, FOR GRANULAR AND COHESIVE SOIL, MULTIPLY BY 0.67.

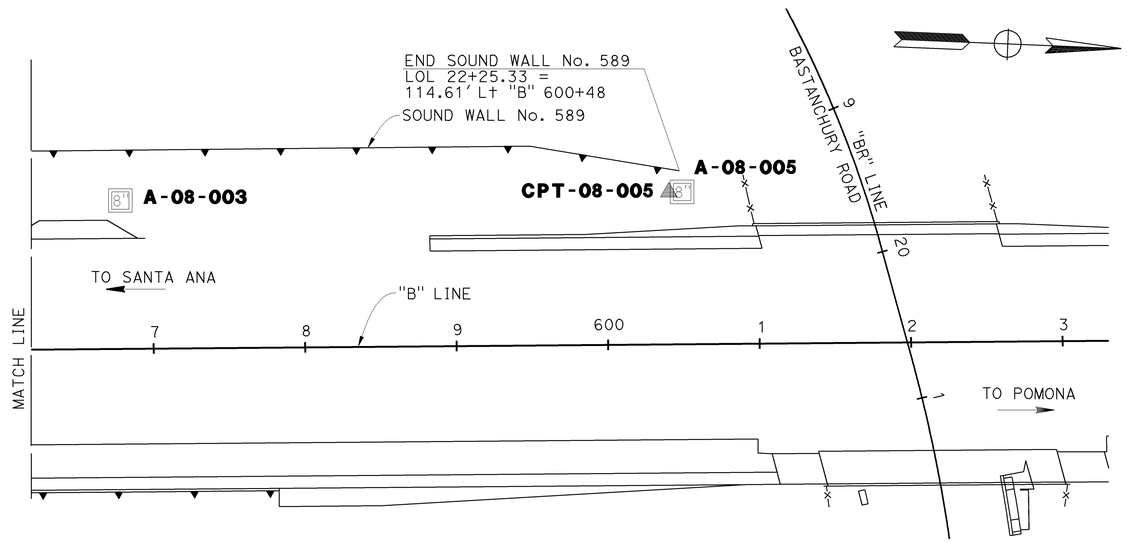

PLAN
1"=50'

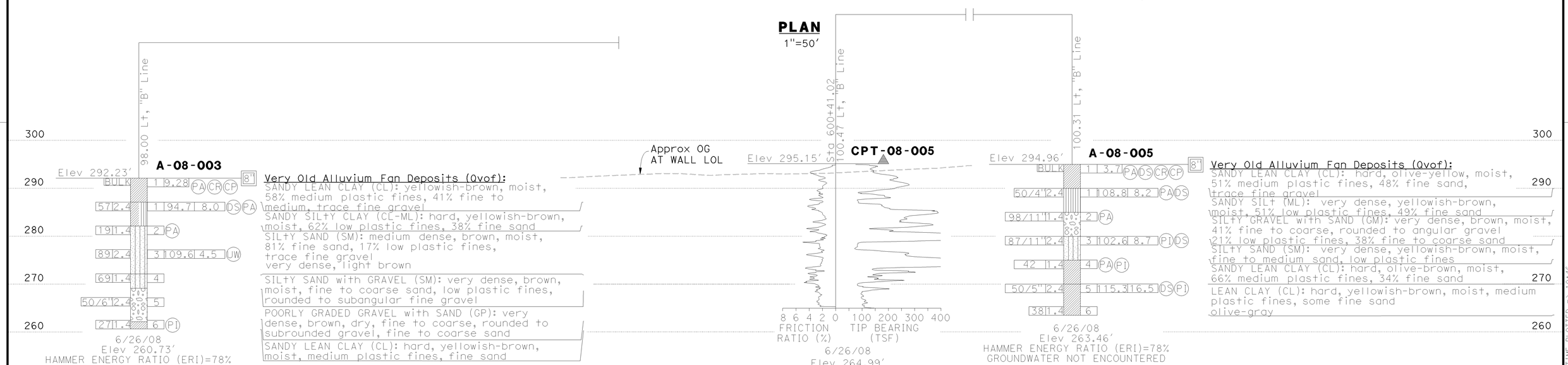

PROFILE
Horz:1"=50'
Vert: 1"=10'

STATIONING "B" LINE

1 2 3 4 595 6 7 8 9 600 1 2 3 4 605 6

DESIGN OVERSIGHT

SIGN OFF DATE

DRAWN BY K. Reyes

CHECKED BY H. Nofal

R. Bethapudi
FIELD INVESTIGATION BY:

DATE

PREPARED FOR THE
STATE OF CALIFORNIA
DEPARTMENT OF TRANSPORTATION

Ayman Salama
PROJECT ENGINEER

BRIDGE NO.

POST MILES

SOUND WALL NO. 589

LOG OF TEST BORINGS SHEET 2 OF 3 — SW-6

ORIGINAL SCALE IN INCHES FOR REDUCED PLANS 0 1 2 3

CU 12220
EA 0F0321

DISREGARD PRINTS BEARING EARLIER REVISION DATES

REVISION DATES (PRELIMINARY STAGE ONLY) 02/07/09 04/07/09 06/15/09

SHEET OF

FILE => c0F032ra006.dgn

USERNAME => trmnguye DATE PLOTTED => 25-JAN-2010 TIME PLOTTED => 10:46

DIST	COUNTY	ROUTE	POST MILES TOTAL PROJECT	SHEET No	TOTAL SHEETS
12	Ora	57	18.4/20.9	325	856

Hisham Nofal 06/15/09
GEOTECHNICAL PROFESSIONAL DATE

1-25-10
PLANS APPROVAL DATE

REGISTERED PROFESSIONAL ENGINEER HISHAM M. NOFAL No. 2765 Exp. 09/30/09 GEOTECHNICAL STATE OF CALIFORNIA

The State of California or its officers or agents shall not be responsible for the accuracy or completeness of electronic copies of this plan sheet.

OCTA
550 S. MAIN STREET
ORANGE, CA 92863

CH2M HILL
6 HUTTON CENTRE DRIVE, SUITE 700
SANTA ANA, CA 92707

REFERENCE: CALTRANS SOIL & ROCK LOGGING, CLASSIFICATION, AND PRESENTATION MANUAL (JUNE 2007)

GROUP SYMBOLS AND NAMES

Graphic/Symbol	Group Names
GW	Well-graded GRAVEL Well-graded GRAVEL with SAND
GP	Poorly graded GRAVEL Poorly graded GRAVEL with SAND
GW-GM	Well-graded GRAVEL with SILT Well-graded GRAVEL with SILT and SAND
GW-GC	Well-graded GRAVEL with CLAY (or SILTY CLAY) Well-graded GRAVEL with CLAY and SAND (or SILTY CLAY and SAND)
GP-GM	Poorly graded GRAVEL with SILT Poorly graded GRAVEL with SILT and SAND
GP-GC	Poorly graded GRAVEL with CLAY (or SILTY CLAY) Poorly graded GRAVEL with CLAY and SAND (or SILTY CLAY and SAND)
GM	SILTY GRAVEL SILTY GRAVEL with SAND
GC	CLAYEY GRAVEL CLAYEY GRAVEL with SAND
GC-GM	SILTY, CLAYEY GRAVEL SILTY, CLAYEY GRAVEL with SAND
SW	Well-graded SAND Well-graded SAND with GRAVEL
SP	Poorly graded SAND Poorly graded SAND with GRAVEL
SW-SM	Well-graded SAND with SILT Well-graded SAND with SILT and GRAVEL
SW-SC	Well-graded SAND with CLAY (or SILTY CLAY) Well-graded SAND with CLAY and GRAVEL (or SILTY CLAY and GRAVEL)
SP-SM	Poorly graded SAND with SILT Poorly graded SAND with SILT and GRAVEL
SP-SC	Poorly graded SAND with CLAY (or SILTY CLAY) Poorly graded SAND with CLAY and GRAVEL (or SILTY CLAY and GRAVEL)
SM	SILTY SAND SILTY SAND with GRAVEL
SC	CLAYEY SAND CLAYEY SAND with GRAVEL
SC-SM	SILTY, CLAYEY SAND SILTY, CLAYEY SAND with GRAVEL
PT	PEAT
	COBBLES COBBLES and BOULDERS BOULDERS

Graphic/Symbol	Group Names
CL	Lean CLAY Lean CLAY with SAND Lean CLAY with GRAVEL SANDY lean CLAY SANDY lean CLAY with GRAVEL GRAVELLY lean CLAY GRAVELLY lean CLAY with SAND
CL-ML	SILTY CLAY SILTY CLAY with SAND SILTY CLAY with GRAVEL SANDY SILTY CLAY SANDY SILTY CLAY with GRAVEL GRAVELLY SILTY CLAY GRAVELLY SILTY CLAY with SAND
ML	SILT SILT with SAND SILT with GRAVEL SANDY SILT SANDY SILT with GRAVEL GRAVELLY SILT GRAVELLY SILT with SAND
OL	ORGANIC lean CLAY ORGANIC lean CLAY with SAND ORGANIC lean CLAY with GRAVEL SANDY ORGANIC lean CLAY SANDY ORGANIC lean CLAY with GRAVEL GRAVELLY ORGANIC lean CLAY GRAVELLY ORGANIC lean CLAY with SAND
OL	ORGANIC SILT ORGANIC SILT with SAND ORGANIC SILT with GRAVEL SANDY ORGANIC SILT SANDY ORGANIC SILT with GRAVEL GRAVELLY ORGANIC SILT GRAVELLY ORGANIC SILT with SAND
CH	Fat CLAY Fat CLAY with SAND Fat CLAY with GRAVEL SANDY fat CLAY SANDY fat CLAY with GRAVEL GRAVELLY fat CLAY GRAVELLY fat CLAY with SAND
MH	Elastic SILT Elastic SILT with SAND Elastic SILT with GRAVEL SANDY elastic SILT SANDY elastic SILT with GRAVEL GRAVELLY elastic SILT GRAVELLY elastic SILT with SAND
OH	ORGANIC fat CLAY ORGANIC fat CLAY with SAND ORGANIC fat CLAY with GRAVEL SANDY ORGANIC fat CLAY SANDY ORGANIC fat CLAY with GRAVEL GRAVELLY ORGANIC fat CLAY GRAVELLY ORGANIC fat CLAY with SAND
OH	ORGANIC elastic SILT ORGANIC elastic SILT with SAND ORGANIC elastic SILT with GRAVEL SANDY ORGANIC elastic SILT SANDY ORGANIC elastic SILT with GRAVEL GRAVELLY ORGANIC elastic SILT GRAVELLY ORGANIC elastic SILT with SAND
OL/OH	ORGANIC SOIL ORGANIC SOIL with SAND ORGANIC SOIL with GRAVEL SANDY ORGANIC SOIL SANDY ORGANIC SOIL with GRAVEL GRAVELLY ORGANIC SOIL GRAVELLY ORGANIC SOIL with SAND

FIELD AND LABORATORY TESTING

- (C) Consolidation (ASTM D 2435)
- (CL) Collapse Potential (ASTM D 5333)
- (CP) Compaction Curve (CTM 216)
- (CR) Corrosivity Testing (CTM 643, CTM 422, CTM 417)
- (CU) Consolidated Undrained Triaxial (ASTM D 4767)
- (DS) Direct Shear (ASTM D 3080)
- (EI) Expansion Index (ASTM D 4829)
- (M) Moisture Content (ASTM D 2216)
- (OC) Organic Content-% (ASTM D 2974)
- (P) Permeability (CTM 220)
- (PA) Particle Size Analysis (ASTM D 422)
- (PI) Plasticity Index (AASHTO T 90) Liquid Limit (AASHTO T 89)
- (PL) Point Load Index (ASTM D 5731)
- (PM) Pressure Meter
- (PP) Pocket Penetrometer
- (R) R-Value (CTM 301)
- (SE) Sand Equivalent (CTM 217)
- (SG) Specific Gravity (AASHTO T 100)
- (SL) Shrinkage Limit (ASTM D 427)
- (SW) Swell Potential (ASTM D 4546)
- (TV) Pocket Torvane
- (UC) Unconfined Compression-Soil (ASTM D 2166) Unconfined Compression-Rock (ASTM D 2938)
- (UU) Unconsolidated Undrained Triaxial (ASTM D 2850)
- (UW) Unit Weight (ASTM D 4767)
- (VS) Vane Shear (AASHTO T 223)

APPARENT DENSITY OF COHESIONLESS SOILS

Description	SPT N_{60} (Blows / 12 inches)
Very loose	0 - 4
Loose	5 - 10
Medium Dense	11 - 30
Dense	31 - 50
Very Dense	> 50

MOISTURE

Description	Criteria
Dry	Absence of moisture, dusty, dry to the touch
Moist	Damp but no visible water
Wet	Visible free water, usually soil is below water table

PERCENT OR PROPORTION OF SOILS

Description	Criteria
Trace	Particles are present but estimated to be less than 5%
Few	5 to 10%
Little	15 to 25%
Some	30 to 45%
Mostly	50 to 100%

PARTICLE SIZE

Description		Size
Boulder		> 12"
Cobble		3" to 12"
Gravel	Coarse	3/4" to 3"
	Fine	No. 4 to 3/4"
Sand	Coarse	No. 10 to No. 4
	Medium	No. 40 to No. 10
	Fine	No. 200 to No. 40

CEMENTATION

Description	Criteria
Weak	Crumbles or breaks with handling or little finger pressure.
Moderate	Crumbles or breaks with considerable finger pressure.
Strong	Will not crumble or break with finger pressure.

CONSISTENCY OF COHESIVE SOILS

Description	Unconfined Compressive Strength (tsf)	Pocket Penetrometer Measurement (tsf)	Torvane Measurement (tsf)	Field Approximation
Very Soft	< 0.25	< 0.25	< 0.12	Easily penetrated several inches by fist
Soft	0.25 to 0.50	0.25 to 0.50	0.12 to 0.25	Easily penetrated several inches by thumb
Medium Stiff	0.50 to 1.0	0.50 to 1.0	0.25 to 0.50	Penetrated several inches by thumb with moderate effort
Stiff	1 to 2	1 to 2	0.50 to 1.0	Readily indented by thumb but penetrated only with great effort
Very Stiff	2 to 4	2 to 4	1.0 to 2.0	Readily indented by thumbnail
Hard	> 4.0	> 4.0	> 2.0	Indented by thumbnail with difficulty

PLASTICITY OF FINE-GRAINED SOILS

Description	Criteria
Nonplastic	A 1/8-inch thread cannot be rolled at any water content.
Low	The thread can barely be rolled and the lump cannot be formed when drier than the plastic limit.
Medium	The thread is easy to roll and not much time is required to reach the plastic limit. The thread cannot be rerolled after reaching the plastic limit. The lump crumbles when drier than the plastic limit.
High	It takes considerable time rolling and kneading to reach the plastic limit. The thread can be rerolled several times after reaching the plastic limit. The lump can be formed without crumbling when drier than the plastic limit.

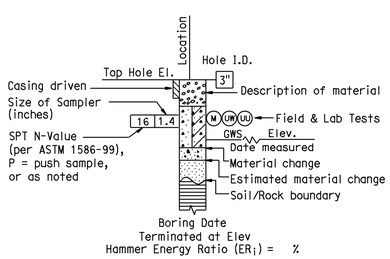

ROTARY BORING

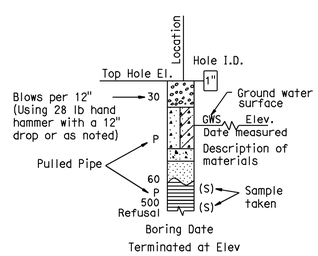

HAND BORING

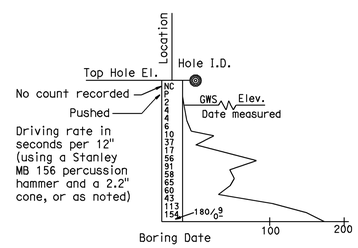

DYNAMIC CONE PENETRATION BORING

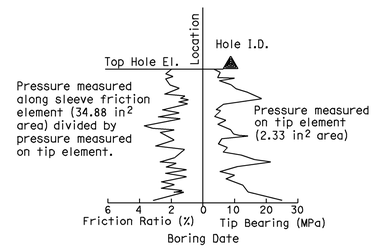

CONE PENETRATION TEST (CPT) SOUNDING

BOREHOLE IDENTIFICATION

Symbol	Hole Type	Description
Size	A	Auger Boring
Size	R P	Rotary drilled boring Rotary percussion boring (air)
Size	R	Rotary drilled diamond core
Size	HD HA	Hand driven (1-inch soil tube) Hand Auger
●	D	Dynamic Cone Penetration Boring
◕	B	Hollow Stem Auger Boring (HSA)
▲	CPT	Cone Penetration Test (ASTM D 5778-95)
□	O	Other

Note: Size in inches.

DESIGN OVERSIGHT	DRAWN BY	K. Reyes	R. Bethapudi FIELD INVESTIGATION BY:
SIGN OFF DATE	CHECKED BY	H. Nofal	DATE

PREPARED FOR THE STATE OF CALIFORNIA DEPARTMENT OF TRANSPORTATION

Ayman Salama
PROJECT ENGINEER

BRIDGE NO.
POST MILES

SOIL LEGEND
SOUND WALL No. 589
LOG OF TEST BORINGS SHEET 3 OF 3 SW-7

ORIGINAL SCALE IN INCHES FOR REDUCED PLANS 0 1 2 3

CU 12220
EA 0F0321

DISREGARD PRINTS BEARING EARLIER REVISION DATES 02/27/09 04/27/09 06/15/09

REVISION DATES (PRELIMINARY STAGE ONLY) SHEET OF

FILE => c0F032ra007.dgn

USERNAME => trmnguye DATE PLOTTED => 25-JAN-2010 TIME PLOTTED => 10:46

Dist	COUNTY	ROUTE	POST MILES TOTAL PROJECT	SHEET No.	TOTAL SHEETS
12	Ora	57	18.4/20.9	326	856

REGISTERED CIVIL ENGINEER 06/15/09 DATE

1-25-10
PLANS APPROVAL DATE

REGISTERED PROFESSIONAL ENGINEER JOHN W. POWELL No. C71463 Exp.12/31/09 CIVIL STATE OF CALIFORNIA

THE STATE OF CALIFORNIA OR ITS OFFICERS OR AGENTS SHALL NOT BE RESPONSIBLE FOR THE ACCURACY OR COMPLETENESS OF SCANNED COPIES OF THIS PLAN SHEET.

CH2M HILL
6 HUTTON CENTRE DRIVE,
SUITE 700
SANTA ANA, CA 92707

OCTA
550 S. MAIN STREET
ORANGE, CA 92863

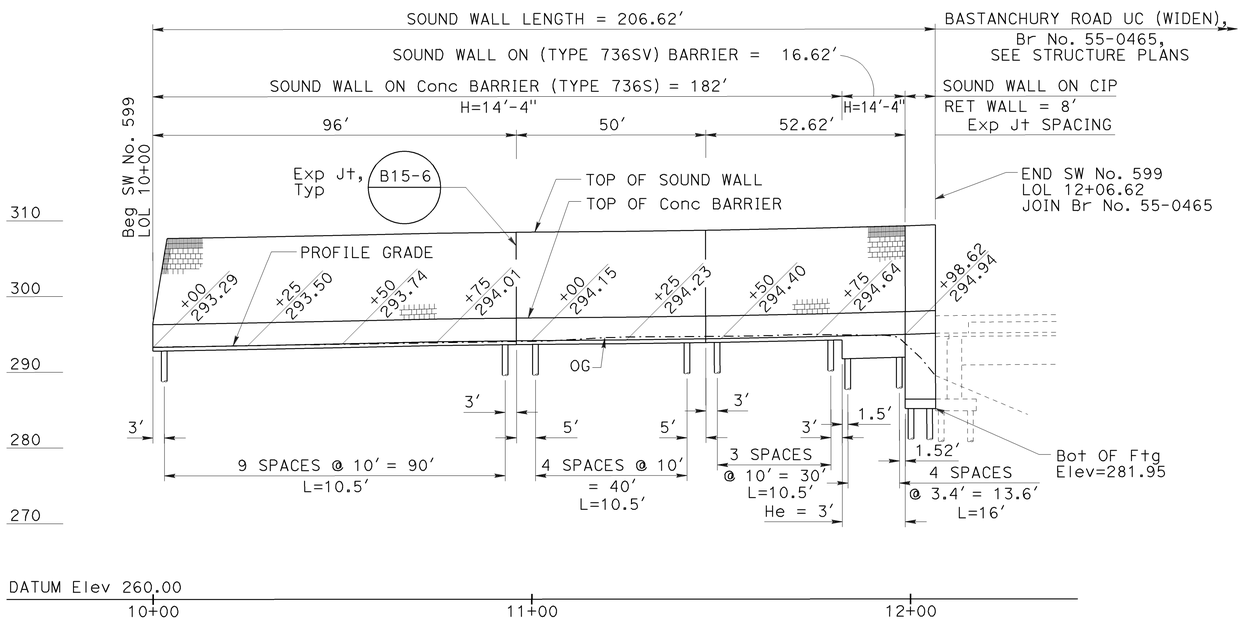

ELEVATION

Horiz 1"=20'
Vert 1"=10'

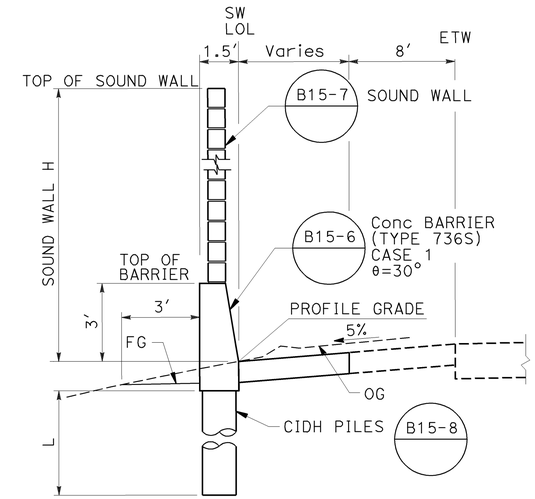

TYPICAL SECTION

NO SCALE
STA 10+00 TO 11+82

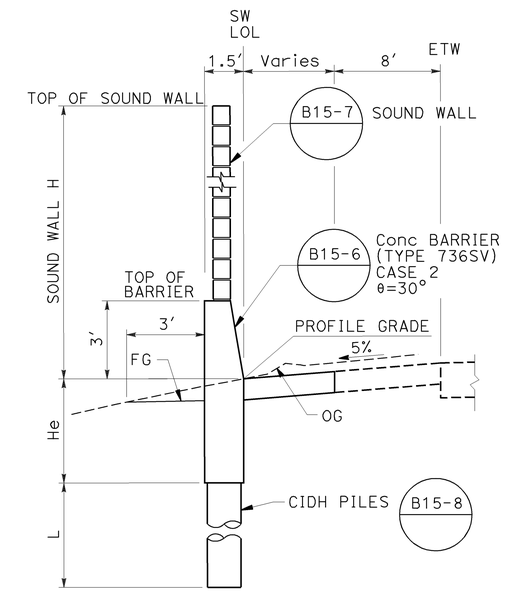

TYPICAL SECTION

NO SCALE
STA 11+82 TO 11+98.62

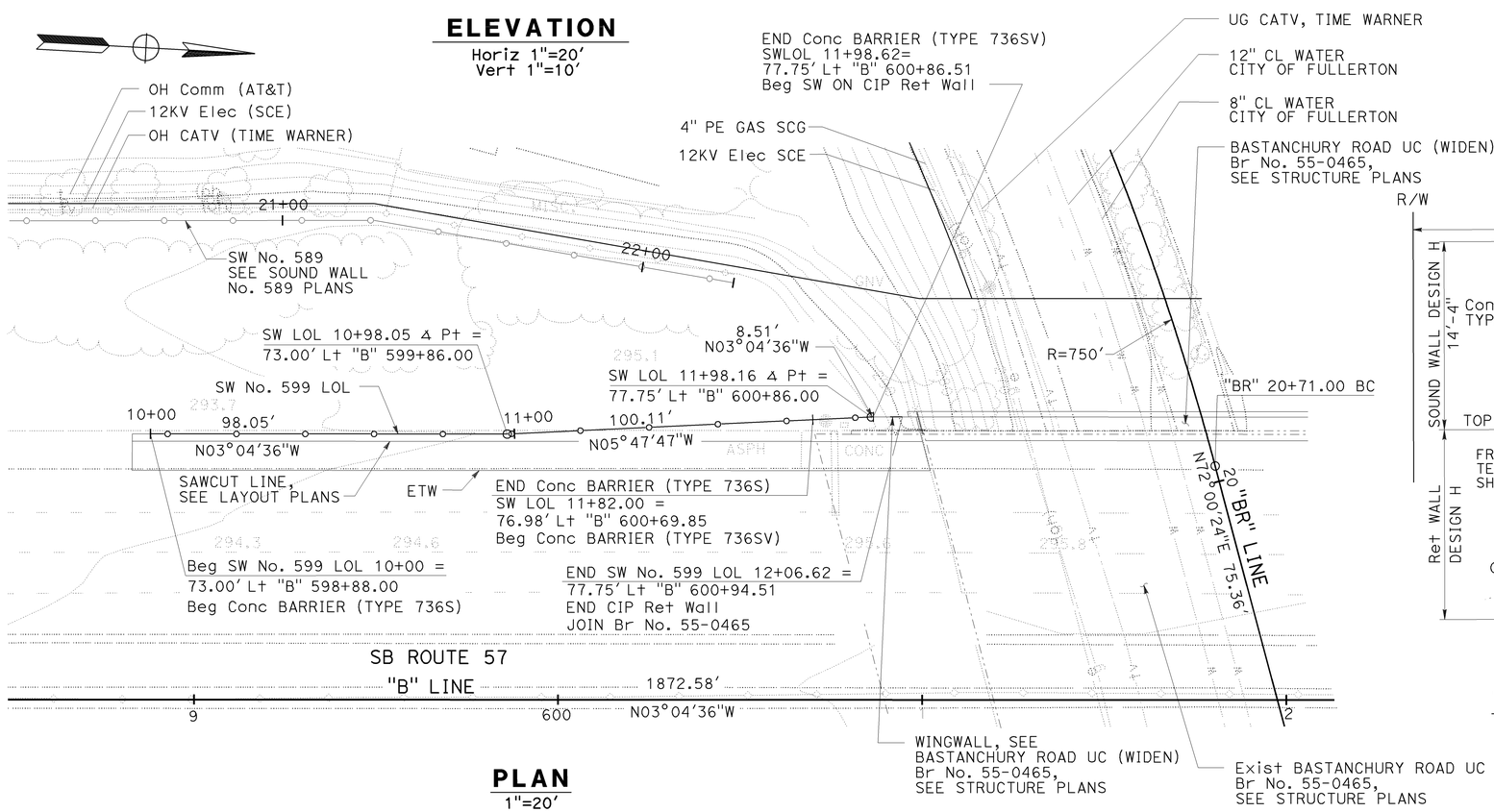

PLAN

1"=20'

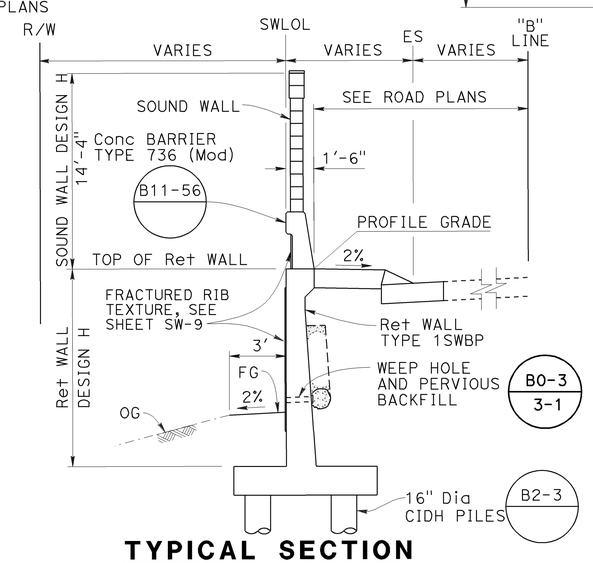

TYPICAL SECTION

NO SCALE
11+98.62 TO 12+06.62

NOTE:

1. CONTRACTOR TO FIELD VERIFY ALL UTILITY LOCATIONS PRIOR TO SOUND WALL CONSTRUCTION.

THIS PLAN ACCURATE FOR SOUND WALL WORK ONLY.

SOUND WALL PLAN
SW No. 599

SCALE AS SHOWN

SW-8

STATE OF CALIFORNIA - DEPARTMENT OF TRANSPORTATION
Caltrans

CONSULTANT FUNCTIONAL SUPERVISOR: THOMAS IONTA
CALCULATED-DESIGNED BY: JOHN POWELL
CHECKED BY: MARK FRICKE
REVISED BY / DATE REVISED

LAST REVISION 06-15-09
DATE PLOTTED => 25-JAN-2010
TIME PLOTTED => 10:47

Dist	COUNTY	ROUTE	POST MILES TOTAL PROJECT	SHEET No.	TOTAL SHEETS
12	Ora	57	18.4/20.9	327	856

REGISTERED CIVIL ENGINEER 06/15/09 DATE

1-25-10
PLANS APPROVAL DATE

REGISTERED PROFESSIONAL ENGINEER JOHN W. POWELL No. C71463 Exp.12/31/09 CIVIL STATE OF CALIFORNIA

THE STATE OF CALIFORNIA OR ITS OFFICERS OR AGENTS SHALL NOT BE RESPONSIBLE FOR THE ACCURACY OR COMPLETENESS OF SCANNED COPIES OF THIS PLAN SHEET.

CH2M HILL
6 HUTTON CENTRE DRIVE,
SUITE 700
SANTA ANA, CA 92707

OCTA
550 S. MAIN STREET
ORANGE, CA 92863

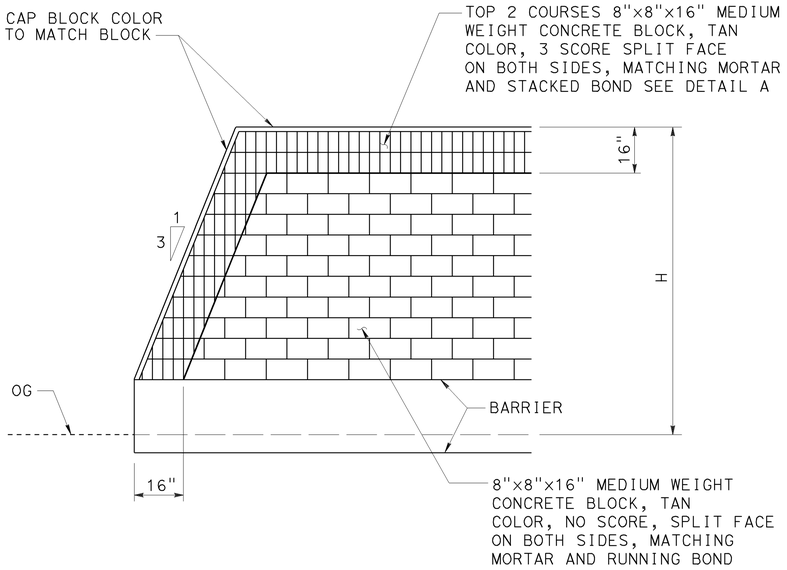

END WALL ELEVATION

CONCRETE BLOCK TYPE, COLOR AND PLACEMENT

NO SCALE

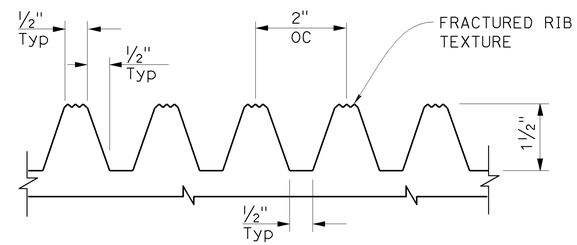

FRACTURED RIB TEXTURE DETAIL

(ELASTOMER FORMLINER)
NO SCALE

PILE DATA TABLE					
LOCATION	PILE TYPE	NOMINAL RESISTANCE (kips)		DESIGN TIP ELEVATION (ft)	SPECIFIED TIP ELEVATION (ft)
		COMPRESSION	TENSION		
Sta 11+98.62 TO 12+06.62	16" CIDH Conc PILE	180	0	252.00(a) 261.44(c) 264.97(d)	252.00

DESIGN TIP ELEVATION IS CONTROLLED BY FOLLOWING DEMAND:
(a) COMPRESSION; (c) SETTLEMENT; (d) LATERAL CAPACITY

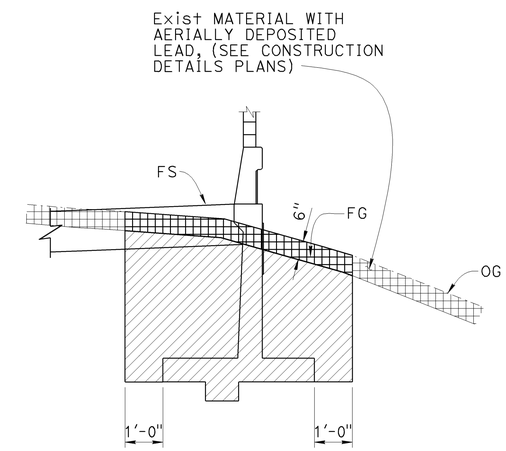

IN FILL

LIMITS OF PAYMENT OF EXCAVATION FOR RETAINING WALL

NO SCALE

NOTE:
FOR BACKFILL SEE CALTRANS STANDARD PLANS

LEGEND

INDICATES STRUCTURE EXCAVATION (TYPE Y-1) (AERIALLY DEPOSITED LEAD)

STRUCTURE EXCAVATION (RETAINING WALL)

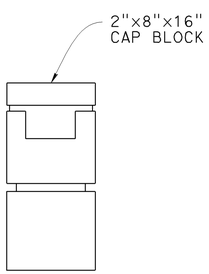

CAP BLOCK DETAIL

NO SCALE

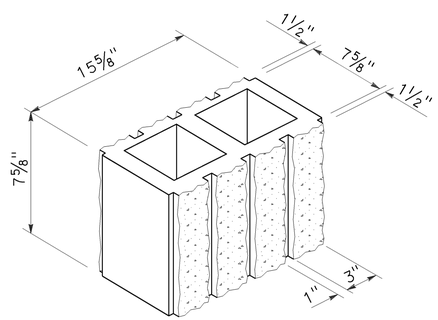

DETAIL A

NO SCALE
8" WIDE 3-SCORE SPLIT FACE BOTH SIDES

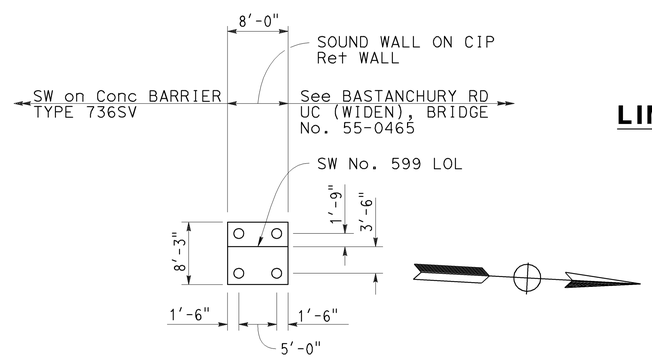

PILE LAYOUT PLAN

1"=10'

SOUND WALL DETAILS
SW No. 599

SCALE AS SHOWN

SW-9

STATE OF CALIFORNIA - DEPARTMENT OF TRANSPORTATION
Caltrans
CONSULTANT FUNCTIONAL SUPERVISOR: THOMAS IONTA
CALCULATED-DESIGNED BY: JOHN POWELL
CHECKED BY: MARK FRICKE
REVISED BY
DATE REVISED

LAST REVISION 06-15-09
DATE PLOTTED => 25-JAN-2010
TIME PLOTTED => 10:47

Dist	COUNTY	ROUTE	POST MILES TOTAL PROJECT	SHEET No.	TOTAL SHEETS
12	Ora	57	18.4/20.9	328	856

REGISTERED CIVIL ENGINEER 06/15/09 DATE

1-25-10
PLANS APPROVAL DATE

REGISTERED PROFESSIONAL ENGINEER JOHN W. POWELL No. C71463 Exp.12/31/09 CIVIL STATE OF CALIFORNIA

THE STATE OF CALIFORNIA OR ITS OFFICERS OR AGENTS SHALL NOT BE RESPONSIBLE FOR THE ACCURACY OR COMPLETENESS OF SCANNED COPIES OF THIS PLAN SHEET.

CH2M HILL
6 HUTTON CENTRE DRIVE,
SUITE 700
SANTA ANA, CA 92707

OCTA
550 S. MAIN STREET
ORANGE, CA 92863

TABLE OF PILE SPACING: 16" CIDH - CONCRETE PILES	
DESIGN H	12'
W	8'-3"
C	3'-3"
B	5'-0"
F	1'-9"
M	1'-9"
N	3'-6"
ROW 1	5'-0"
ROW 2	5'-0"
ROW 3	
ROW 4	
CONFIGURATION	I

TABLE 1: TABLE OF REINFORCING STEEL DIMENSIONS AND DATA	
	STEM WITH HAUNCH
DESIGN H	12'
STEM BATTER	½:12
STEM THICKNESS @ TOP	1'-6"
STEM THICKNESS @ HAUNCH	1'-0"
(a) BARS	#6 @ 14
X	
Y	
(b) BARS	#6 @ 14
X	CONT
Y	CONT
(c) BARS	
(d) BARS	#5 @ 12
TOTAL (e) BARS	6 #5
TOTAL (f) BARS	6 #5

DESIGN DATA

DESIGN: LOAD FACTOR DESIGN (LFD)

CONCRETE: REINFORCED CONCRETE, f'c = 3600 psi
fy = 60000 psi

LOADING CASE:

LEVEL GROUND WITH 240 psf LIVE LOAD SURCHARGE AND 14'-4" SOUNDWALL.
SEISMIC LOAD = 0.57 DEAD LOAD
WIND LOAD = 33 psf
DEAD LOAD OF SOUNDWALL = 1000 lb/lf
DEAD LOAD OF BARRIER = 470 lb/lf

SEISMIC LOAD: SOIL

Kh = 0.3g
Kv = 0.0
Kae : MONONOBE-OKABE METHOD

SOIL: Ø = 34° γ = 120 pcf

EQUIVALENT FLUID PRESSURE:
= 36 pcf FOR DETERMINATION OF TOE PRESSURE
= 27 pcf FOR DETERMINATION OF HEEL PRESSURE

LOAD COMBINATIONS:

GROUP A : βD+1.7E+1.7SC
GROUP B : βD+1.7E+1.7SC+W
GROUP C :
STEM : 1.0D+1.0E+1.0EQD+1.0EQE
FOOTING : D+PYM

WHERE : β = 1.0 OR 1.3 WHICHEVER CONTROLS DESIGN
D = DEAD LOAD
E = LATERAL EARTH PRESSURE
SC = SURCHARGE
W = WIND LOAD
EQD = SEISMIC DEAD LOAD
EQE = SEISMIC LATERAL EARTH PRESSURE
PYM = PROBABLE YIELD MOMENT (1.3* NOMINAL YIELD MOMENT OF STEM)

CONT = CONTINUOUS
* = (a) AND (b) BARS ARE BUNDLED TOGETHER.
** = ALTERNATE (a) AND (b) BARS AS SHOWN IN DETAIL A.

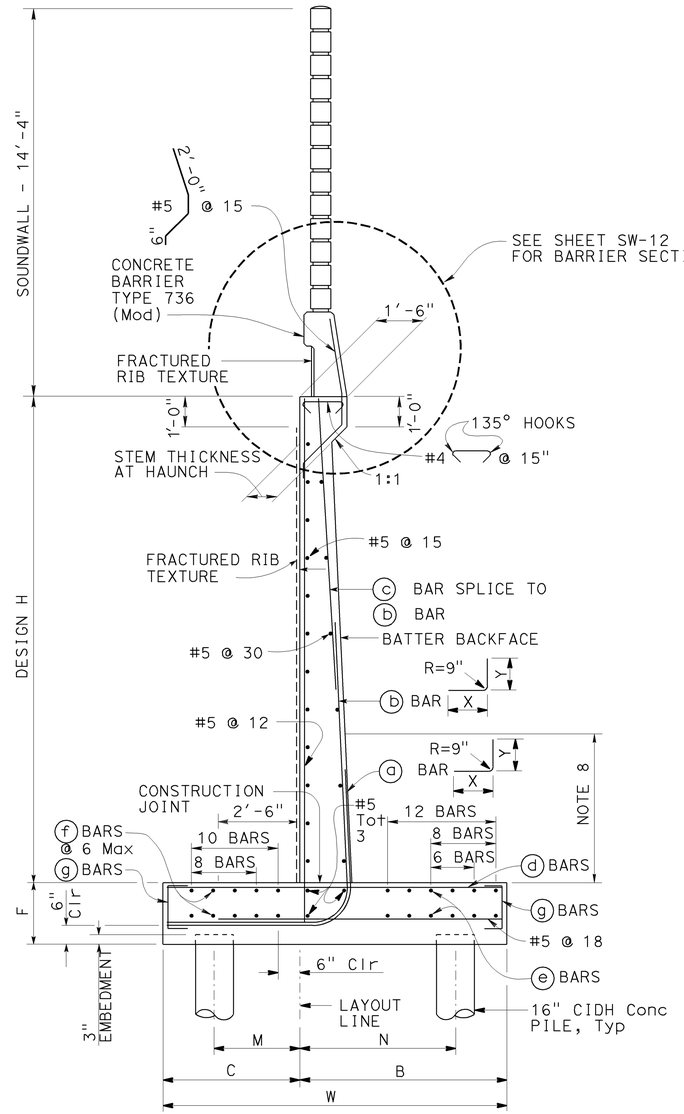

16" CIDH PILE FOOTING SECTION

NO SCALE

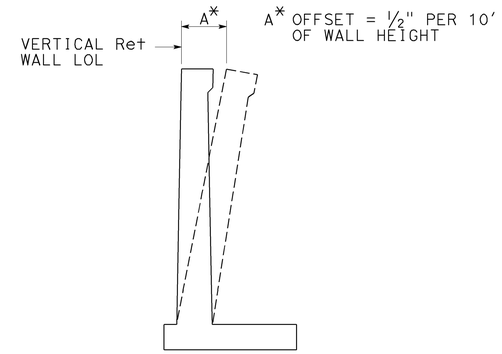

WALL OFFSET

NO SCALE
VALUES FOR OFFSETTING FORMS TO BE DETERMINED BY THE ENGINEER

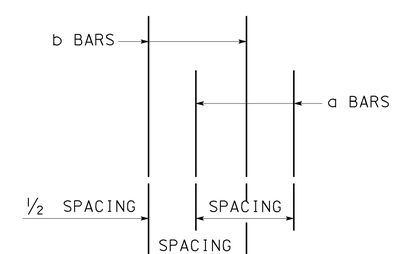

DETAIL A

NO SCALE

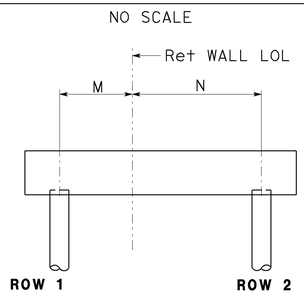

PILE CONFIGURATION

GENERAL NOTES

1. 16" CIDH-CONCRETE PILES WERE USED FOR THE DESIGN.
2. MINIMUM DISTANCE BETWEEN CENTER PILE AND EDGE OF FOOTING IS 1'-6".
3. REDUCTION FACTORS:
   GROUPS A & B : Ø = 0.75
   GROUP C & X1: Ø = 1.0
4. LATERAL RESISTANCE OF EACH PILE:
   GROUPS A & B : = 30 kip
   GROUP C & X1: = 40 kip
5. MAXIMUM SPACING BETWEEN PILES IS SHOWN IN THE TABLE. REDUCE TO SUIT THE LENGTH OF FOOTING.
6. MINIMUM DISTANCE BETWEEN ANY TWO PILES IS 4'-0".
7. LIMIT OF NO SPLICING FOR REBARS = 3 TIMES THE BOTTOM THICKNESS OF STEM.

NOTES

1. FOR SOUNDWALL AND RETAINING WALL ARCHITECTURAL FINISH OR TEXTURE, SEE DETAILS ELSEWHERE IN PROJECT PLANS.
2. FOR DETAILS NOT SHOWN AND DRAINAGE NOTES, SEE B3-8
3. FOOTING COVER, 1'-6" MINIMUM.
4. FOR SOUNDWALL AND BARRIER REINFORCEMENT, SEE SHEETS SW-11 & SW-12.

SOUND WALL DETAILS
RETAINING WALL DETAILS
SW No. 599
SCALE AS SHOWN

SW-10

STATE OF CALIFORNIA - DEPARTMENT OF TRANSPORTATION
Caltrans
CONSULTANT FUNCTIONAL SUPERVISOR: THOMAS IONTA
CALCULATED-DESIGNED BY: JOHN POWELL
CHECKED BY: MARK FRICKE
REVISED BY
DATE REVISED

LAST REVISION 06-15-09
DATE PLOTTED => 25-JAN-2010
TIME PLOTTED => 10:47

Dist	COUNTY	ROUTE	POST MILES TOTAL PROJECT	SHEET No.	TOTAL SHEETS
12	Ora	57	18.4/20.9	329	856

REGISTERED CIVIL ENGINEER 06/15/09 DATE

1-25-10
PLANS APPROVAL DATE

REGISTERED PROFESSIONAL ENGINEER JOHN W. POWELL No. C71463 Exp.12/31/09 CIVIL STATE OF CALIFORNIA

THE STATE OF CALIFORNIA OR ITS OFFICERS OR AGENTS SHALL NOT BE RESPONSIBLE FOR THE ACCURACY OR COMPLETENESS OF SCANNED COPIES OF THIS PLAN SHEET.

CH2M HILL
6 HUTTON CENTRE DRIVE,
SUITE 700
SANTA ANA, CA 92707

OCTA
550 S. MAIN STREET
ORANGE, CA 92863

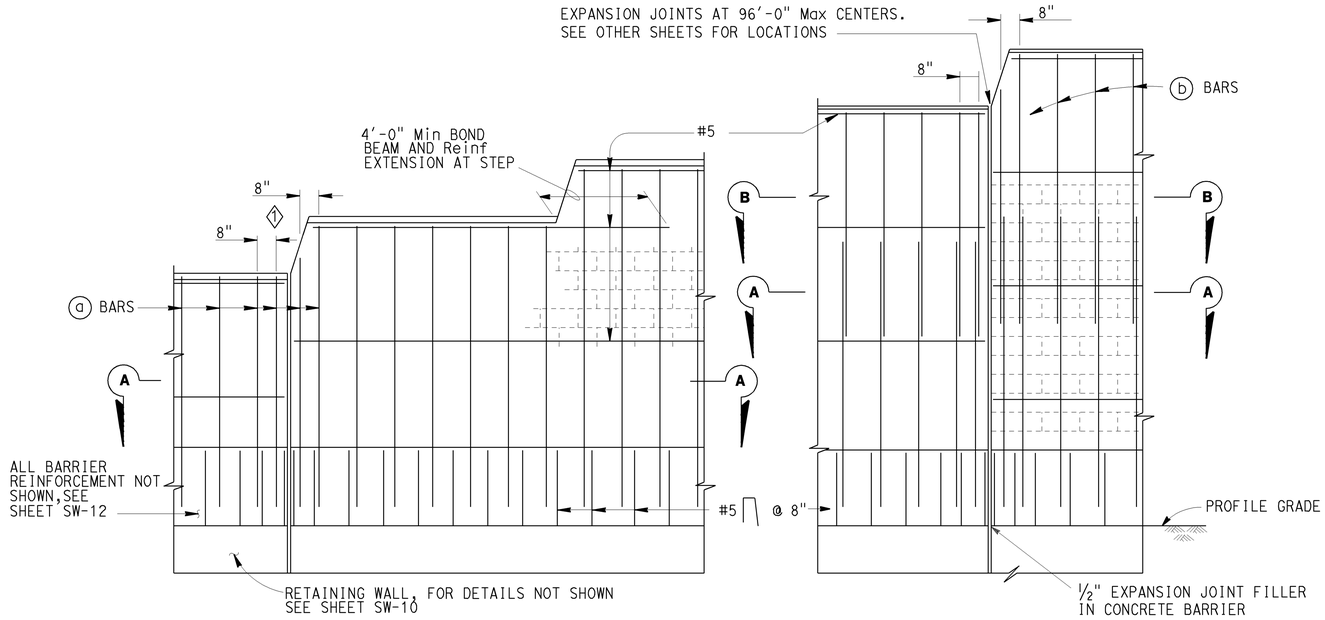

PART ELEVATIONS

SOUNDWALL REINFORCEMENT TABLE

MAXIMUM H	ⓐ BARS @ 1'-4" Max	ⓑ BARS @ 1'-4" Max	"y"	f'm (KSI)	COMPRESSIVE STRENGTH OF CMU (KSI)	MAXIMUM H
6'-4"	# 4	———	———	1.5	1.9	6'-4"
8'-4"	# 4	———	———	1.5	1.9	8'-4"
10'-4"	# 4	———	———	1.5	1.9	10'-4"
12'-4"	# 5	# 4	5'-0"	1.5	1.9	12'-4"
14'-4"	# 6	# 4	7'-0"	1.5	1.9	14'-4"
16'-4"	# 6	# 4	9'-0"	2.5	3.7	16'-4"

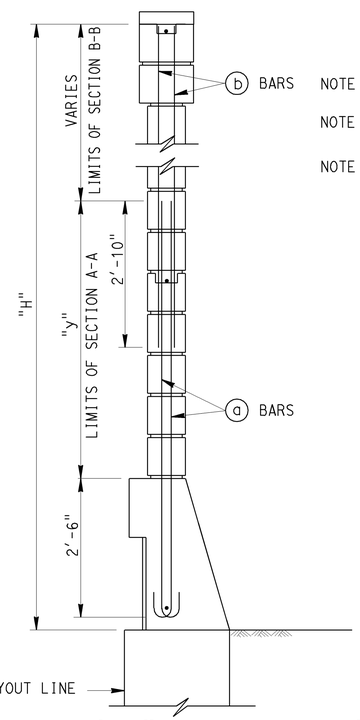

NOTE I : FOR DETAILS NOT SHOWN,SEE SHEET SW-12

NOTE II : SLOPE GROUND AT TRAFFIC SIDE OF BARRIER TO DRAIN. MAXIMUM SLOPE ±10%.

NOTE III: SEE SHEET SW-9 FOR OTHER DETAILS.

GENERAL NOTES

NOTE A: FOR TYPE OF BLOCK AND JOINT FINISH, SEE OTHER SHEETS.

NOTE B: WHEN BLOCKS ARE LAID IN STACKED BOND, LADDER TYPE, GALVANIZED JOINT REINFORCEMENT SHALL BE PROVIDED. A MINIMUM OF 0.07"-0.14" WIRE CONTINUOUS AT 4'-0" MAXIMUM TO BE USED. LOCATE REINFORCEMENT IN JOINTS THAT ARE AT THE APPROXIMATE MIDPOINT BETWEEN BOND BEAMS.

NOTE C: HORIZONTAL JOINTS SHALL BE TOOLED CONCAVE OR MAY BE WEATHERED.
VERTICAL JOINTS SHALL BE TOOLED CONCAVE OR MAY BE RAKED.

NOTE D: FOR INTERMEDIATE WALL HEIGHTS THAT ARE BETWEEN THE "H'S" GIVEN. USE THE TABULAR INFORMATION FOR THE NEXT HIGHER "H".

NOTE E: MASONRY STRENGTHS ARE LISTED IN "SOUNDWALL REINFORCEMENT TABLE".

NOTE F: CLASS 2 CONCRETE TO BE USED FOR THE BARRIER.

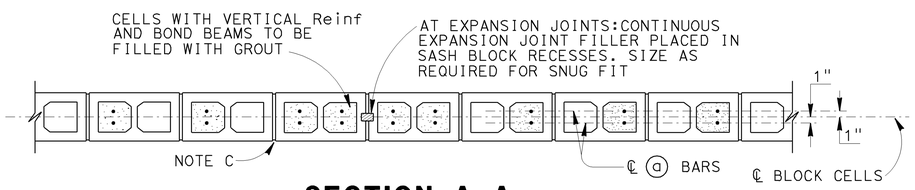

SECTION A-A

FOR DETAILS NOT SHOWN,SEE OTHER DETAILS

H=6'-4" THRU H=10'-4"

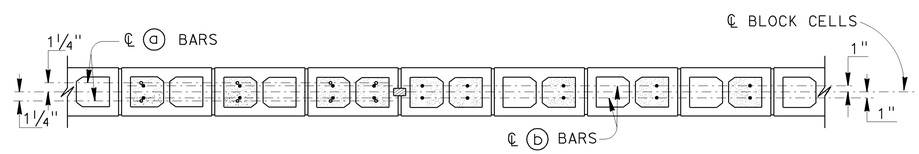

SECTION A-A **SECTION B-B**

FOR DETAILS NOT SHOWN, SEE OTHER DETAILS

H=12'-4" THRU H=16'-4"

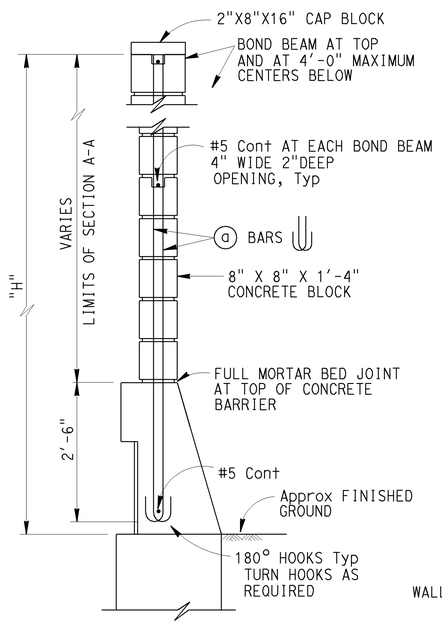

H=6'-4" THRU H=10'-4"

FOR DETAILS NOT SHOWN, SEE H=12'-4" THRU H=16'-4"

H=12'-4" THRU H=16'-4"

FOR DETAILS NOT SHOWN, SEE H=6'-4" THRU H=10'-4"

TYPICAL SECTIONS

SOUND WALL DETAILS

SOUND WALL - MASONRY BLOCK WITH
BARRIER ON RETAINING WALL
DETAILS No. 1

SW No. 599

NO SCALE

SW-11

STATE OF CALIFORNIA - DEPARTMENT OF TRANSPORTATION
Caltrans

CONSULTANT FUNCTIONAL SUPERVISOR: THOMAS IONTA
CALCULATED-DESIGNED BY: JOHN POWELL
CHECKED BY: MARK FRICKE
REVISED BY
DATE REVISED

LAST REVISION 06-15-09
DATE PLOTTED => 25-JAN-2010
TIME PLOTTED => 10:47

Dist	COUNTY	ROUTE	POST MILES TOTAL PROJECT	SHEET No.	TOTAL SHEETS
12	Ora	57	18.4/20.9	330	856

REGISTERED CIVIL ENGINEER 06/15/09 DATE

1-25-10
PLANS APPROVAL DATE

REGISTERED PROFESSIONAL ENGINEER JOHN W. POWELL No. C71463 Exp.12/31/09 CIVIL STATE OF CALIFORNIA

THE STATE OF CALIFORNIA OR ITS OFFICERS OR AGENTS SHALL NOT BE RESPONSIBLE FOR THE ACCURACY OR COMPLETENESS OF SCANNED COPIES OF THIS PLAN SHEET.

CH2M HILL
6 HUTTON CENTRE DRIVE,
SUITE 700
SANTA ANA, CA 92707

OCTA
550 S. MAIN STREET
ORANGE, CA 92863

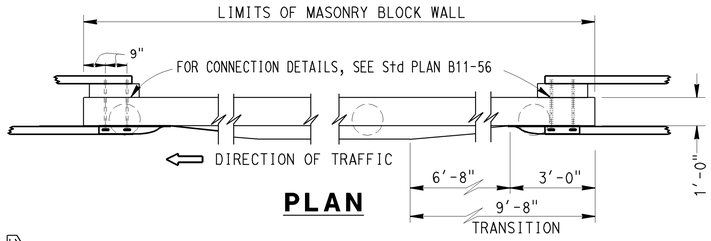

PLAN

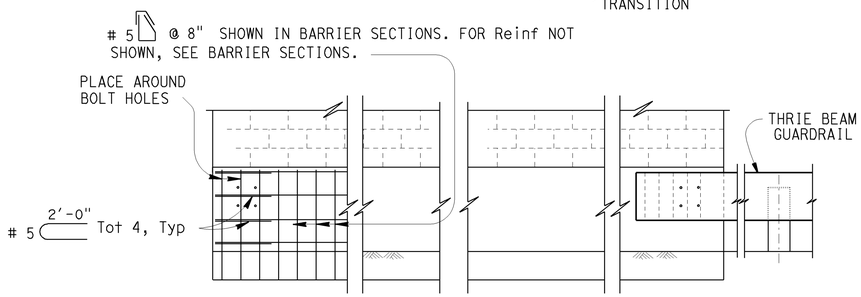

ELEVATION

METAL BEAM GUARDRAIL ANCHORAGE

FOR DETAILS NOT SHOWN, SEE Std PLAN B11-56.

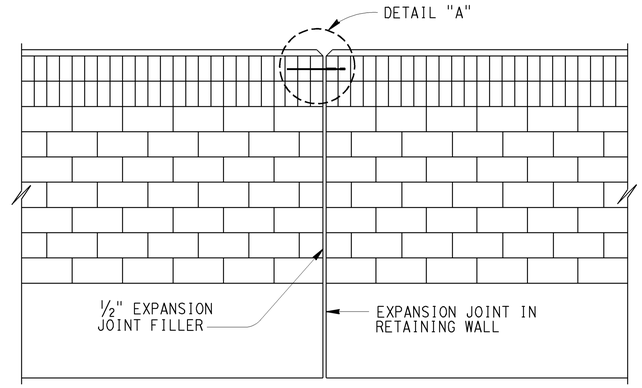

ALIGNMENT KEY DETAIL

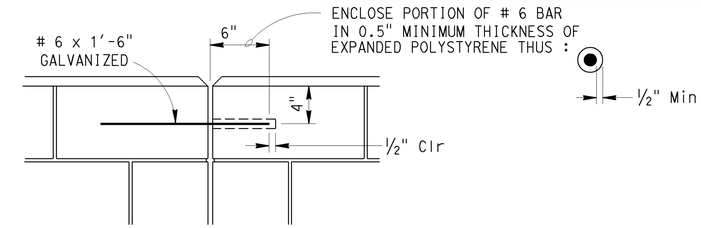

DETAIL A

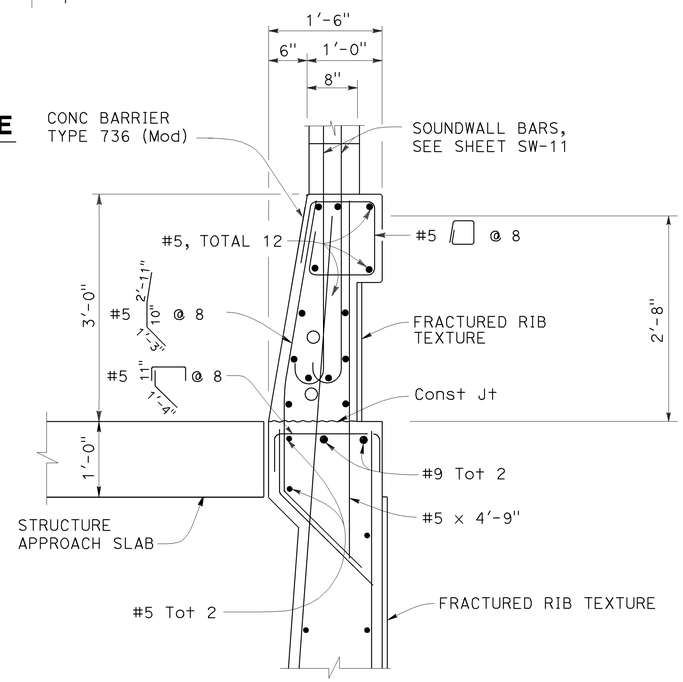

BARRIER SECTION

NOTES:

I : FOR RETAINING WALL DETAILS NOT SHOWN,SEE SHEET SW-10.

II : SLOPE GROUND AT TRAFFIC SIDE OF BARRIER TO DRAIN.
MAXIMUM SLOPE ±10%.
SEE STANDARD PLAN B11-56, NOTE D.

DESIGN NOTES

DESIGN

UNIFORM BUILDING CODE,1997 EDITION AND THE BRIDGE DESIGN SPECIFICATIONS.

DESIGN WIND LOAD

33 PSF

DESIGN SEISMIC LOAD

0.57 Dead load

REINFORCED CONCRETE

f'c = 3250 PSI
fy = 60 KSI

CONCRETE MASONRY

REGULAR STRENGTH	HIGH STRENGTH	
f'm = 1500 PSI	f'm = 2000 PSI	f'm = 2500 PSI
f_b = 1500 PSI	f_b = 660 PSI	f_b = 830 PSI
fs = 24.0 KSI	fs = 24.0 KSI	fs = 24000 PSI
n = 25.8	n = 19.3	n = 15.5

LOAD FACTORS AND LOAD COMBINATIONS

WORKING STRESS DESIGN (WSD) PERCENTAGE OF UNIT STRESS

Group 1: D + E + SC 100%
Group 2: D + W + SC + E 100%
Group 3: D + 0.71 EQD + E 100%

Where:

D = DEAD LOAD
E = LATERAL EARTH PRESSURE
SC = LIVE LOAD SURCHARGE
W = WIND LOAD
EQD = SEISMIC DEAD LOAD

LOAD FACTOR DESIGN (LFD)

Group A: βD +1.7 E + 1.7 SC
Group B: βD +1.7 E + 1.3 W
Group C: βD +1.3 E + 1.0 EQE
Group D: βD +1.3 E + 1.0 EQD
Group E: βD +1.1 E + 0.85 (EQE + EQD)

Where : β = 0.9 OR 1.2, WHICHEVER CONTROLS IN DESIGN
D = DEAD LOAD
E = LATERAL EARTH PRESSURE
SC = LIVE LOAD SURCHARGE
W = WIND LOAD
EQD = SEISMIC DEAD LOAD
EQE = SEISMIC EARTH LOAD

STRENGTH REDUCTION FACTORS, Ø

REINFORCED CONCRETE:
FOR FLEXURE ---------- Ø=0.90
FOR SHEAR ---------- Ø=0.85

CONCRETE MASONRY:
FOR FLEXURE ---------- Ø=0.80
FOR SHEAR ---------- Ø=0.60

FOUNDATIONS :

SEE SHEET SW-9

SOUND WALL DETAILS

SOUND WALL - MASONRY BLOCK WITH BARRIER ON RETAINING WALL DETAILS No. 2

SW No. 599

NO SCALE

SW-12

STATE OF CALIFORNIA - DEPARTMENT OF TRANSPORTATION
Caltrans
CONSULTANT FUNCTIONAL SUPERVISOR THOMAS IONTA
CALCULATED-DESIGNED BY JOHN POWELL
CHECKED BY MARK FRICKE
REVISED BY
DATE REVISED

LAST REVISION 06-15-09
DATE PLOTTED => 25-JAN-2010
TIME PLOTTED => 10:47

DIST	COUNTY	ROUTE	POST MILES TOTAL PROJECT	SHEET No	TOTAL SHEETS
12	Ora	57	18.4/20.9	331	856

GEOTECHNICAL PROFESSIONAL — DATE 06/15/09

1-25-10
PLANS APPROVAL DATE

The State of California or its officers or agents shall not be responsible for the accuracy or completeness of electronic copies of this plan sheet.

REGISTERED PROFESSIONAL ENGINEER — HISHAM M. NOFAL No. 2765 Exp. 09/30/09 GEOTECHNICAL — STATE OF CALIFORNIA

OCTA
550 S. MAIN STREET
ORANGE, CA 92863

CH2M HILL
6 HUTTON CENTRE DRIVE, SUITE 700
SANTA ANA, CA 92707

BENCHMARK:

HORIZONTAL COORDINATES ARE CCS NAD-83, ZONE 6.
VERTICAL CONTROL BASED ON NORTH AMERICAN VERTICAL DATUM 1988.
Pt 1057: N2273578.007, E6066831.271, Elev 294.844

SAMPLER TYPES:

CALIFORNIA MODIFIED RING SAMPLER
STANDARD PENETRATION TEST SAMPLER

HAMMER TYPE:

AUTOMATIC HAMMER

CORRECTION FACTOR:

TO CONVERT FROM CALIFORNIA MODIFIED RING SAMPLER BLOW COUNT TO EQUIVALENT STANDARD PENETRATION TEST SAMPLER BLOW COUNT, FOR GRANULAR AND COHESIVE SOIL, MULTIPLY BY 0.67.

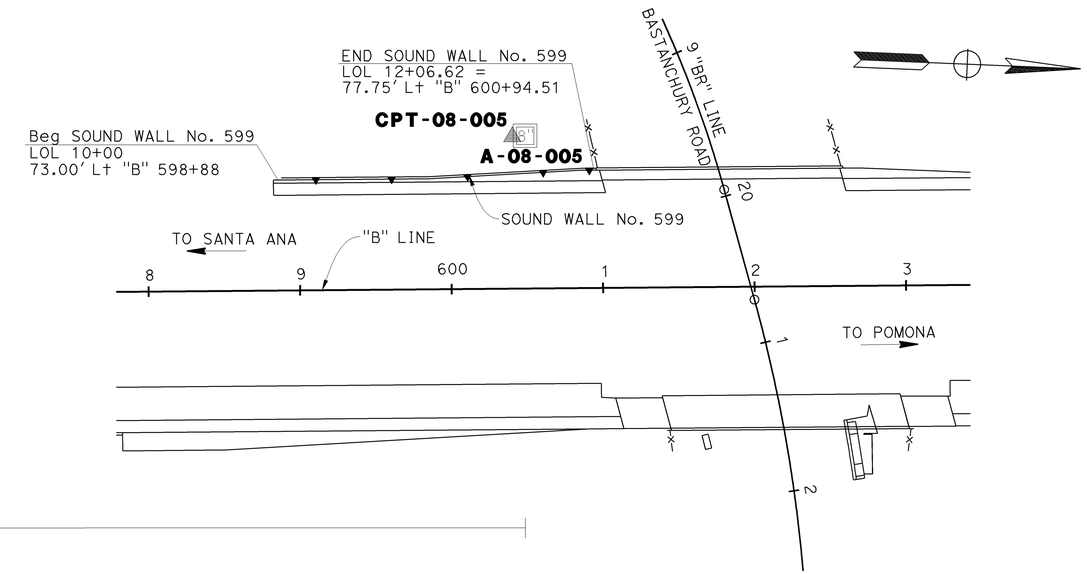

PLAN
1"=50'

PROFILE
Horz:1"=50'
Vert: 1"=10'

STATIONING "B" Line
2 3 4 595 6 7 8 9 600 1 2 3 4 605 6 7

DESIGN OVERSIGHT	DRAWN BY	K. Reyes	R. Bethapudi — FIELD INVESTIGATION BY:
SIGN OFF DATE	CHECKED BY	H. Nofal	DATE

PREPARED FOR THE STATE OF CALIFORNIA DEPARTMENT OF TRANSPORTATION

Ayman Salama — PROJECT ENGINEER

BRIDGE NO.
POST MILES

SOUND WALL NO. 599

LOG OF TEST BORINGS SHEET 1 OF 3 — SW-13

ORIGINAL SCALE IN INCHES FOR REDUCED PLANS 0 1 2 3

CU 12220
EA 0F0321

DISREGARD PRINTS BEARING EARLIER REVISION DATES

REVISION DATES (PRELIMINARY STAGE ONLY): 02/27/09 04/07/09 06/15/09

SHEET OF

FILE => c0F032rb006.dgn

USERNAME => trmnguye DATE PLOTTED => 25-JAN-2010 TIME PLOTTED => 10:47

DIST	COUNTY	ROUTE	POST MILES TOTAL PROJECT	SHEET No	TOTAL SHEETS
12	Ora	57	18.4/20.9	332	856

Hisham Nofal 06/15/09
GEOTECHNICAL PROFESSIONAL DATE

1-25-10
PLANS APPROVAL DATE

REGISTERED PROFESSIONAL ENGINEER HISHAM M. NOFAL No. 2765 Exp. 09/30/09 GEOTECHNICAL STATE OF CALIFORNIA

The State of California or its officers or agents shall not be responsible for the accuracy or completeness of electronic copies of this plan sheet.

OCTA
550 S. MAIN STREET
ORANGE, CA 92863

CH2M HILL
6 HUTTON CENTRE DRIVE, SUITE 700
SANTA ANA, CA 92707

REFERENCE: CALTRANS SOIL & ROCK LOGGING, CLASSIFICATION, AND PRESENTATION MANUAL (JUNE 2007)

GROUP SYMBOLS AND NAMES

Graphic/Symbol	Group Names
GW	Well-graded GRAVEL Well-graded GRAVEL with SAND
GP	Poorly graded GRAVEL Poorly graded GRAVEL with SAND
GW-GM	Well-graded GRAVEL with SILT Well-graded GRAVEL with SILT and SAND
GW-GC	Well-graded GRAVEL with CLAY (or SILTY CLAY) Well-graded GRAVEL with CLAY and SAND (or SILTY CLAY and SAND)
GP-GM	Poorly graded GRAVEL with SILT Poorly graded GRAVEL with SILT and SAND
GP-GC	Poorly graded GRAVEL with CLAY (or SILTY CLAY) Poorly graded GRAVEL with CLAY and SAND (or SILTY CLAY and SAND)
GM	SILTY GRAVEL SILTY GRAVEL with SAND
GC	CLAYEY GRAVEL CLAYEY GRAVEL with SAND
GC-GM	SILTY, CLAYEY GRAVEL SILTY, CLAYEY GRAVEL with SAND
SW	Well-graded SAND Well-graded SAND with GRAVEL
SP	Poorly graded SAND Poorly graded SAND with GRAVEL
SW-SM	Well-graded SAND with SILT Well-graded SAND with SILT and GRAVEL
SW-SC	Well-graded SAND with CLAY (or SILTY CLAY) Well-graded SAND with CLAY and GRAVEL (or SILTY CLAY and GRAVEL)
SP-SM	Poorly graded SAND with SILT Poorly graded SAND with SILT and GRAVEL
SP-SC	Poorly graded SAND with CLAY (or SILTY CLAY) Poorly graded SAND with CLAY and GRAVEL (or SILTY CLAY and GRAVEL)
SM	SILTY SAND SILTY SAND with GRAVEL
SC	CLAYEY SAND CLAYEY SAND with GRAVEL
SC-SM	SILTY, CLAYEY SAND SILTY, CLAYEY SAND with GRAVEL
PT	PEAT
	COBBLES COBBLES and BOULDERS BOULDERS

Graphic/Symbol	Group Names
CL	Lean CLAY Lean CLAY with SAND Lean CLAY with GRAVEL SANDY lean CLAY SANDY lean CLAY with GRAVEL GRAVELLY lean CLAY GRAVELLY lean CLAY with SAND
CL-ML	SILTY CLAY SILTY CLAY with SAND SILTY CLAY with GRAVEL SANDY SILTY CLAY SANDY SILTY CLAY with GRAVEL GRAVELLY SILTY CLAY GRAVELLY SILTY CLAY with SAND
ML	SILT SILT with SAND SILT with GRAVEL SANDY SILT SANDY SILT with GRAVEL GRAVELLY SILT GRAVELLY SILT with SAND
OL	ORGANIC lean CLAY ORGANIC lean CLAY with SAND ORGANIC lean CLAY with GRAVEL SANDY ORGANIC lean CLAY SANDY ORGANIC lean CLAY with GRAVEL GRAVELLY ORGANIC lean CLAY GRAVELLY ORGANIC lean CLAY with SAND
OL	ORGANIC SILT ORGANIC SILT with SAND ORGANIC SILT with GRAVEL SANDY ORGANIC SILT SANDY ORGANIC SILT with GRAVEL GRAVELLY ORGANIC SILT GRAVELLY ORGANIC SILT with SAND
CH	Fat CLAY Fat CLAY with SAND Fat CLAY with GRAVEL SANDY fat CLAY SANDY fat CLAY with GRAVEL GRAVELLY fat CLAY GRAVELLY fat CLAY with SAND
MH	Elastic SILT Elastic SILT with SAND Elastic SILT with GRAVEL SANDY elastic SILT SANDY elastic SILT with GRAVEL GRAVELLY elastic SILT GRAVELLY elastic SILT with SAND
OH	ORGANIC fat CLAY ORGANIC fat CLAY with SAND ORGANIC fat CLAY with GRAVEL SANDY ORGANIC fat CLAY SANDY ORGANIC fat CLAY with GRAVEL GRAVELLY ORGANIC fat CLAY GRAVELLY ORGANIC fat CLAY with SAND
OH	ORGANIC elastic SILT ORGANIC elastic SILT with SAND ORGANIC elastic SILT with GRAVEL SANDY ORGANIC elastic SILT SANDY ORGANIC elastic SILT with GRAVEL GRAVELLY ORGANIC elastic SILT GRAVELLY ORGANIC elastic SILT with SAND
OL/OH	ORGANIC SOIL ORGANIC SOIL with SAND ORGANIC SOIL with GRAVEL SANDY ORGANIC SOIL SANDY ORGANIC SOIL with GRAVEL GRAVELLY ORGANIC SOIL GRAVELLY ORGANIC SOIL with SAND

FIELD AND LABORATORY TESTING

- (C) Consolidation (ASTM D 2435)
- (CL) Collapse Potential (ASTM D 5333)
- (CP) Compaction Curve (CTM 216)
- (CR) Corrosivity Testing (CTM 643, CTM 422, CTM 417)
- (CU) Consolidated Undrained Triaxial (ASTM D 4767)
- (DS) Direct Shear (ASTM D 3080)
- (EI) Expansion Index (ASTM D 4829)
- (M) Moisture Content (ASTM D 2216)
- (OC) Organic Content-% (ASTM D 2974)
- (P) Permeability (CTM 220)
- (PA) Particle Size Analysis (ASTM D 422)
- (PI) Plasticity Index (AASHTO T 90) Liquid Limit (AASHTO T 89)
- (PL) Point Load Index (ASTM D 5731)
- (PM) Pressure Meter
- (PP) Pocket Penetrometer
- (R) R-Value (CTM 301)
- (SE) Sand Equivalent (CTM 217)
- (SG) Specific Gravity (AASHTO T 100)
- (SL) Shrinkage Limit (ASTM D 427)
- (SW) Swell Potential (ASTM D 4546)
- (TV) Pocket Torvane
- (UC) Unconfined Compression-Soil (ASTM D 2166) Unconfined Compression-Rock (ASTM D 2938)
- (UU) Unconsolidated Undrained Triaxial (ASTM D 2850)
- (UW) Unit Weight (ASTM D 4767)
- (VS) Vane Shear (AASHTO T 223)

APPARENT DENSITY OF COHESIONLESS SOILS

Description	SPT N_{60} (Blows / 12 inches)
Very loose	0 - 4
Loose	5 - 10
Medium Dense	11 - 30
Dense	31 - 50
Very Dense	> 50

MOISTURE

Description	Criteria
Dry	Absence of moisture, dusty, dry to the touch
Moist	Damp but no visible water
Wet	Visible free water, usually soil is below water table

PERCENT OR PROPORTION OF SOILS

Description	Criteria
Trace	Particles are present but estimated to be less than 5%
Few	5 to 10%
Little	15 to 25%
Some	30 to 45%
Mostly	50 to 100%

PARTICLE SIZE

Description		Size
Boulder		> 12"
Cobble		3" to 12"
Gravel	Coarse	3/4" to 3"
	Fine	No. 4 to 3/4"
Sand	Coarse	No. 10 to No. 4
	Medium	No. 40 to No. 10
	Fine	No. 200 to No. 40

CEMENTATION

Description	Criteria
Weak	Crumbles or breaks with handling or little finger pressure.
Moderate	Crumbles or breaks with considerable finger pressure.
Strong	Will not crumble or break with finger pressure.

CONSISTENCY OF COHESIVE SOILS

Description	Unconfined Compressive Strength (tsf)	Pocket Penetrometer Measurement (tsf)	Torvane Measurement (tsf)	Field Approximation
Very Soft	< 0.25	< 0.25	< 0.12	Easily penetrated several inches by fist
Soft	0.25 to 0.50	0.25 to 0.50	0.12 to 0.25	Easily penetrated several inches by thumb
Medium Stiff	0.50 to 1.0	0.50 to 1.0	0.25 to 0.50	Penetrated several inches by thumb with moderate effort
Stiff	1 to 2	1 to 2	0.50 to 1.0	Readily indented by thumb but penetrated only with great effort
Very Stiff	2 to 4	2 to 4	1.0 to 2.0	Readily indented by thumbnail
Hard	> 4.0	> 4.0	> 2.0	Indented by thumbnail with difficulty

PLASTICITY OF FINE-GRAINED SOILS

Description	Criteria
Nonplastic	A 1/8-inch thread cannot be rolled at any water content.
Low	The thread can barely be rolled and the lump cannot be formed when drier than the plastic limit.
Medium	The thread is easy to roll and not much time is required to reach the plastic limit. The thread cannot be rerolled after reaching the plastic limit. The lump crumbles when drier than the plastic limit.
High	It takes considerable time rolling and kneading to reach the plastic limit. The thread can be rerolled several times after reaching the plastic limit. The lump can be formed without crumbling when drier than the plastic limit.

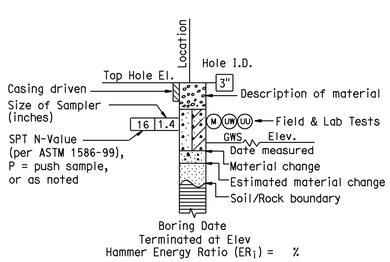

ROTARY BORING

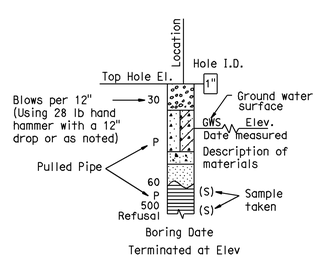

HAND BORING

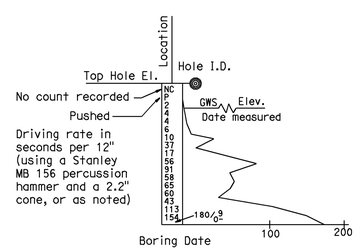

DYNAMIC CONE PENETRATION BORING

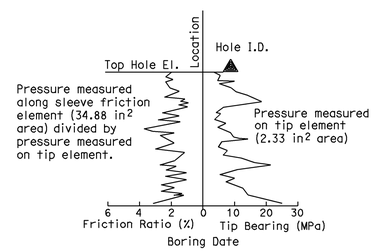

CONE PENETRATION TEST (CPT) SOUNDING

BOREHOLE IDENTIFICATION

Symbol	Hole Type	Description
Size	A	Auger Boring
Size	R P	Rotary drilled boring Rotary percussion boring (air)
Size	R	Rotary drilled diamond core
Size	HD HA	Hand driven (1-inch soil tube) Hand Auger
●	D	Dynamic Cone Penetration Boring
◕	B	Hollow Stem Auger Boring (HSA)
▲	CPT	Cone Penetration Test (ASTM D 5778-95)
□	O	Other

Note: Size in inches.

SOIL LEGEND

SOUND WALL NO. 599

LOG OF TEST BORINGS SHEET 2 OF 3

SW-14

DESIGN OVERSIGHT

SIGN OFF DATE

DRAWN BY K. Reyes

CHECKED BY H. Nofal

R. Bethapudi
FIELD INVESTIGATION BY:

DATE

PREPARED FOR THE STATE OF CALIFORNIA DEPARTMENT OF TRANSPORTATION

Ayman Salama
PROJECT ENGINEER

BRIDGE NO.

POST MILES

ORIGINAL SCALE IN INCHES FOR REDUCED PLANS 0 1 2 3

CU 12220
EA 0F0321

DISREGARD PRINTS BEARING EARLIER REVISION DATES

REVISION DATES (PRELIMINARY STAGE ONLY) 02/27/09 04/27/09 06/15/09

SHEET OF

FILE => c0F032rb007.dgn

USERNAME => trmikest DATE PLOTTED => 25-JAN-2010 TIME PLOTTED => 10:24

FED. ROAD DIV. No.	STATE	F.A. PROJECT No.	SHEET No.	TOTAL SHEETS
7	CALIF.			

DIST.	COUNTY	ROUTE	SECTION	SHEET No.	TOTAL SHEETS
07	ORA	57	18.4/20.2	150	180

Date Approved September 30, 1968

BENCH MARK

BM 35-19A-56 Elev. 281.90
Set ch. knob on S.W. cor of drop inlet @ W. end of conc. flume 234' E. of Sta. 53B-74' P Line & 1320'± No. of Pioneer Ave.

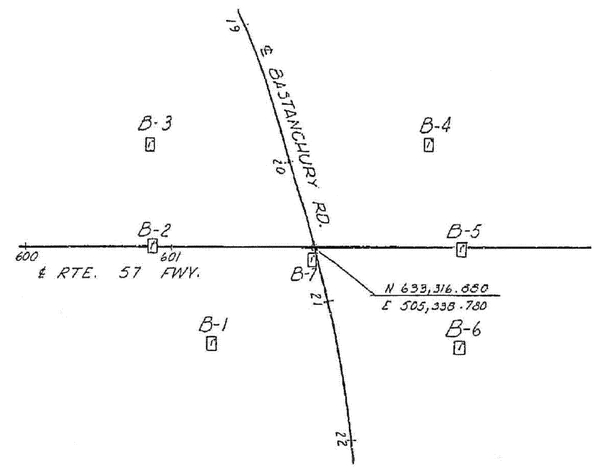

PLAN
Scale 1"=50'

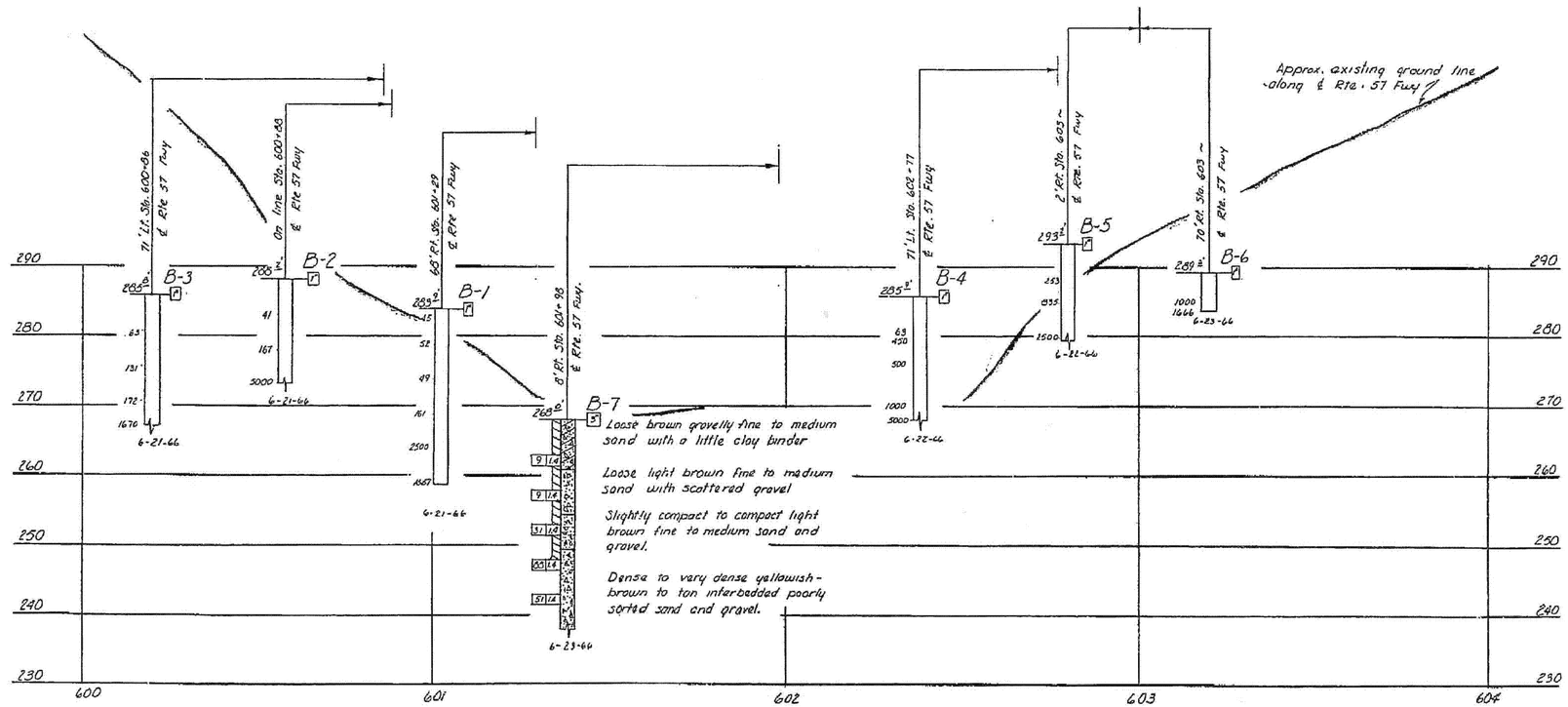

PROFILE
Scale Vert. 1"=10'
Horiz. 1"=20'

INFORMATION ON ACTUAL FOUNDATION CONDITIONS ENCOUNTERED IS ON FILE IN BRIDGE GEOLOGY SECTION

NO AS Built Corrections
AS BUILT
CORRECTIONS BY
CONTRACT NO.
DATE

NO GROUND WATER ENCOUNTERED DURING THIS INVESTIGATION BY BRIDGE DEPT. GEOLOGY SECTION
DATE June 1966

DIVISION OF ENGINEERING SERVICES - GEOTECHNICAL SERVICES

As-Built Log of Test Borings sheet is considered an informational document only. As such, the State of California registration seal with signature, license number and registration certificate expiration date confirm that this is a true and accurate copy of the original document. This drawing is available and presented only for the convenience of any bidder, contractor or other interested party.

DIST.	COUNTY	ROUTE	POST MILES-TOTAL PROJECT	Sheet No.	Total Sheets
12	Ora	57	18.4/20.9	333	856

Hisham Nofal — 06/08/09
REGISTERED CIVIL ENGINEER — DATE

REGISTERED PROFESSIONAL ENGINEER HISHAM M. NOFAL No. 2765 Exp. 09/30/11 GEOTECHNICAL STATE OF CALIFORNIA

SOUND WALL NO. 599

LOG OF TEST BORINGS SHEET 3 OF 3 | SW-15

NOTE: A COPY OF THIS LOG OF TEST BORINGS IS AVAILABLE AT OFFICE OF STRUCTURE MAINTENANCE AND INVESTIGATIONS, SACRAMENTO, CALIFORNIA

CU: -12220
EA: 0F0231

BRIDGE No.
Sheet of

To accompany plans dated 1-25-10

LEGEND OF BORING OPERATIONS

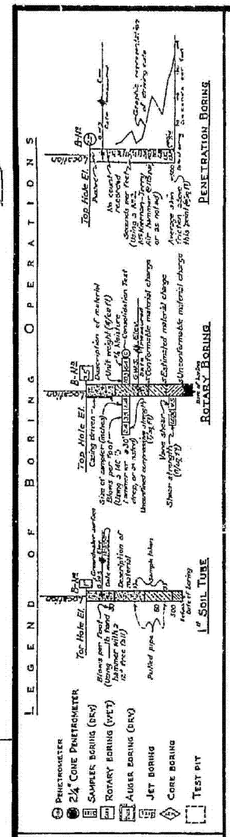

LEGEND OF EARTH MATERIALS

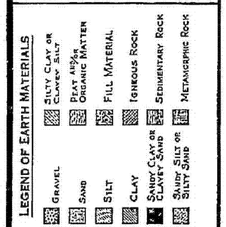

CLASSIFICATION OF MATERIAL BASED ON STANDARD GRADE SIZE LIMITS

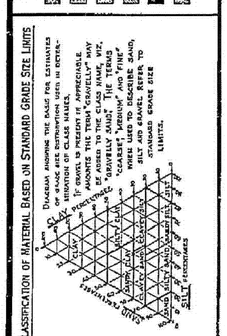

NOTE: Classification of earth material as shown on this sheet is based upon field inspection and is not to be construed to imply mechanical analysis.

FIELD STUDY	Jr.	D. CRAWFORD 6-23-66
DRAWN	Jr.	M. ALLEGRO 7-1-66
CHECKED	Sr.	C. Bacon 7-8-66
Approved Recommendation		Engineering Geologist

BRIDGE DEPARTMENT
ENGINEERING GEOLOGY SECTION

150

AS BUILT PLANS
Contract No. 07-032134
Date Completed
Document No. 7000157 8

STATE OF CALIFORNIA
DEPARTMENT OF PUBLIC WORKS
DIVISION OF HIGHWAYS

BASTANCHURY ROAD UNDERCROSSING

LOG OF TEST BORINGS

SHEET	OF	SCALE	BRIDGE	FILE	DRAWING
1	11	As Noted	55-465		55465-7

Champ 07208
W.A. 032131

Diazofoil prints become ... years

PREL. DRAWING No. PR-

c0F032rb008.tif

Dist	COUNTY	ROUTE	POST MILES TOTAL PROJECT	SHEET No.	TOTAL SHEETS
12	Ora	57	18.4/20.9	334	856

REGISTERED CIVIL ENGINEER 06/15/09 DATE

1-25-10
PLANS APPROVAL DATE

REGISTERED PROFESSIONAL ENGINEER
JOHN W. POWELL
No. C71463
Exp.12/31/09
CIVIL
STATE OF CALIFORNIA

THE STATE OF CALIFORNIA OR ITS OFFICERS OR AGENTS SHALL NOT BE RESPONSIBLE FOR THE ACCURACY OR COMPLETENESS OF SCANNED COPIES OF THIS PLAN SHEET.

CH2M HILL
6 HUTTON CENTRE DRIVE,
SUITE 700
SANTA ANA, CA 92707

OCTA
550 S. MAIN STREET
ORANGE, CA 92863

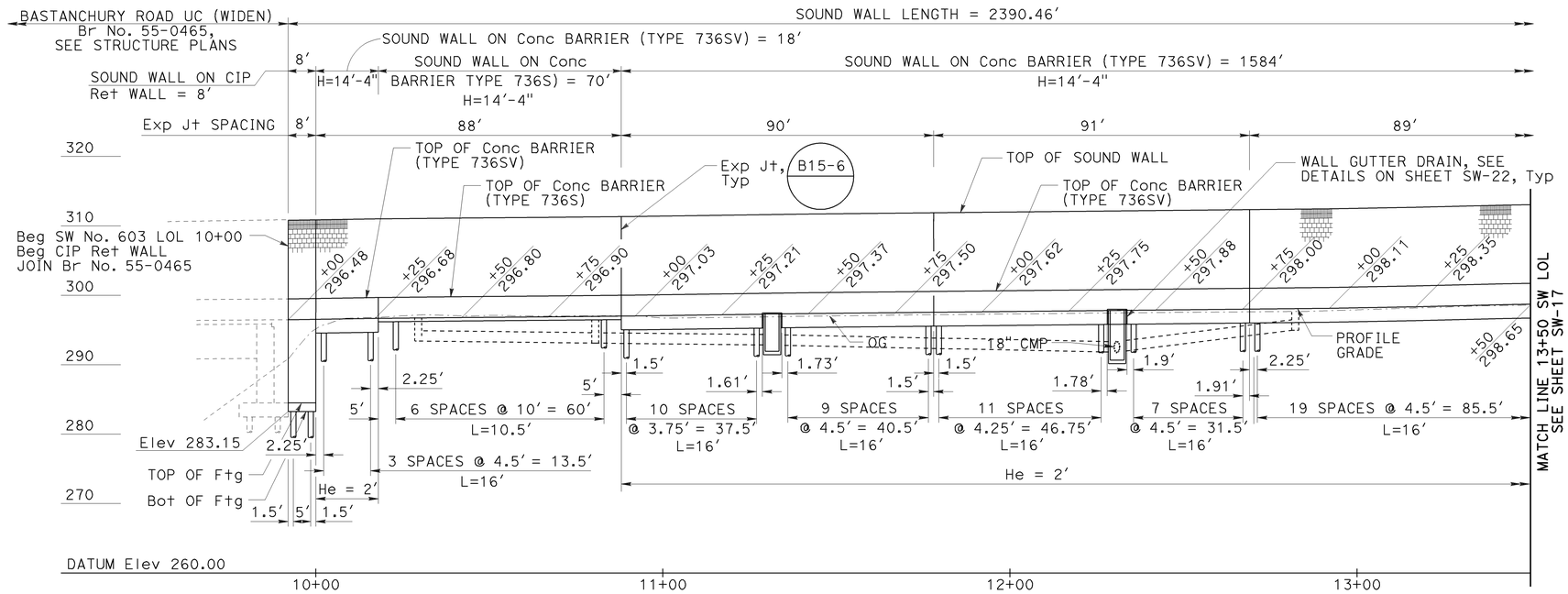

DEVELOPED ELEVATION

Horiz 1"=20'
Vert 1"=10'

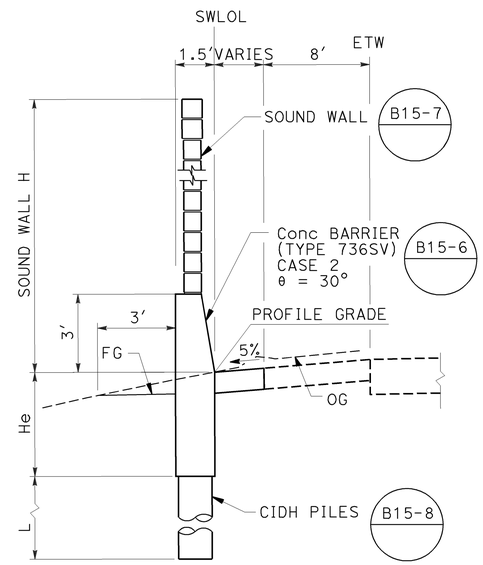

SECTION

Sta 10+08.00 TO 10+26.00
Sta 10+96.00 TO 26+80.00
Sta 33+64.79 TO 33+82.46
NO SCALE

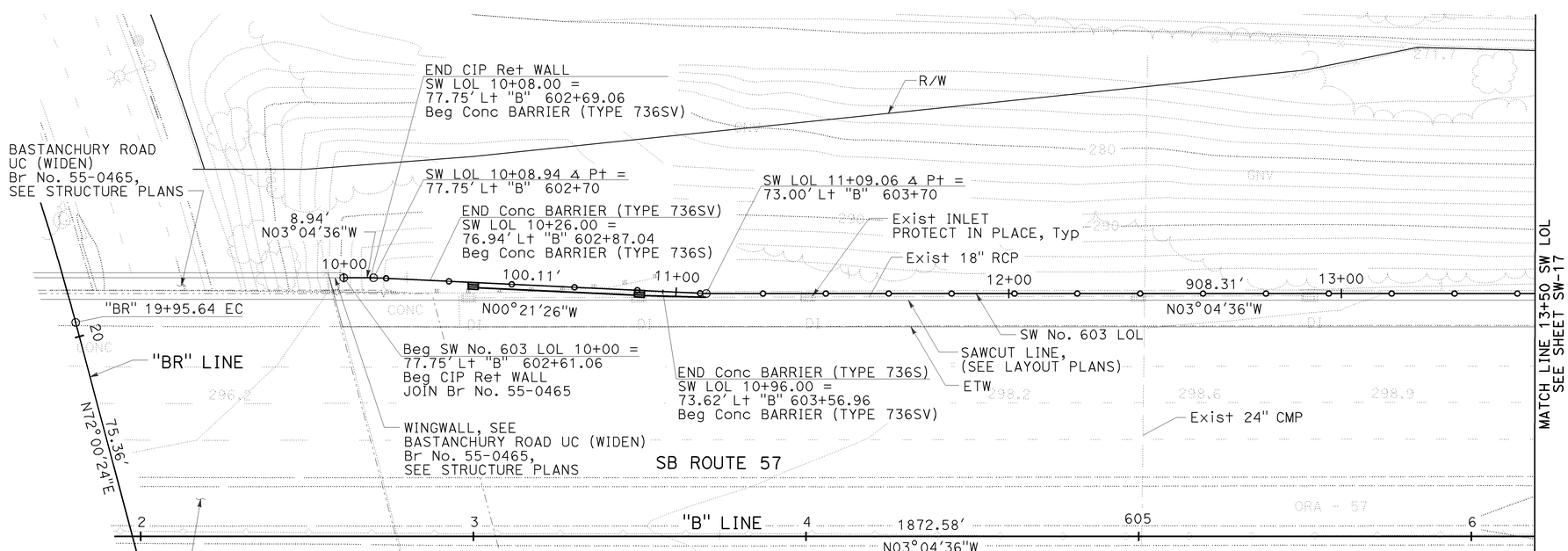

PLAN

1"=20'

THIS PLAN ACCURATE FOR SOUND WALL WORK ONLY.

NOTES:

1. CONTRACTOR TO FIELD VERIFY ALL UTILITY LOCATIONS PRIOR TO SOUND WALL CONSTRUCTION.
2. FOR SOUND WALL ON Conc BARRIER (TYPE 736S) SECTION, SEE SHEET SW-17.

SOUND WALL PLAN
SW No. 603

SCALE AS SHOWN

SW-16

REVISED BY | DATE REVISED
JOHN POWELL | MARK FRICKE
CALCULATED-DESIGNED BY | CHECKED BY
CONSULTANT FUNCTIONAL SUPERVISOR | THOMAS IONTA
STATE OF CALIFORNIA - DEPARTMENT OF TRANSPORTATION
Caltrans

LAST REVISION 06-15-09 | DATE PLOTTED => 25-JAN-2010 | TIME PLOTTED => 10:24

Dist	COUNTY	ROUTE	POST MILES TOTAL PROJECT	SHEET No.	TOTAL SHEETS
12	Ora	57	18.4/20.9	335	856

REGISTERED CIVIL ENGINEER 06/15/09 DATE

1-25-10
PLANS APPROVAL DATE

REGISTERED PROFESSIONAL ENGINEER JOHN W. POWELL No. C71463 Exp.12/31/09 CIVIL STATE OF CALIFORNIA

THE STATE OF CALIFORNIA OR ITS OFFICERS OR AGENTS SHALL NOT BE RESPONSIBLE FOR THE ACCURACY OR COMPLETENESS OF SCANNED COPIES OF THIS PLAN SHEET.

CH2M HILL
6 HUTTON CENTRE DRIVE,
SUITE 700
SANTA ANA, CA 92707

OCTA
550 S. MAIN STREET
ORANGE, CA 92863

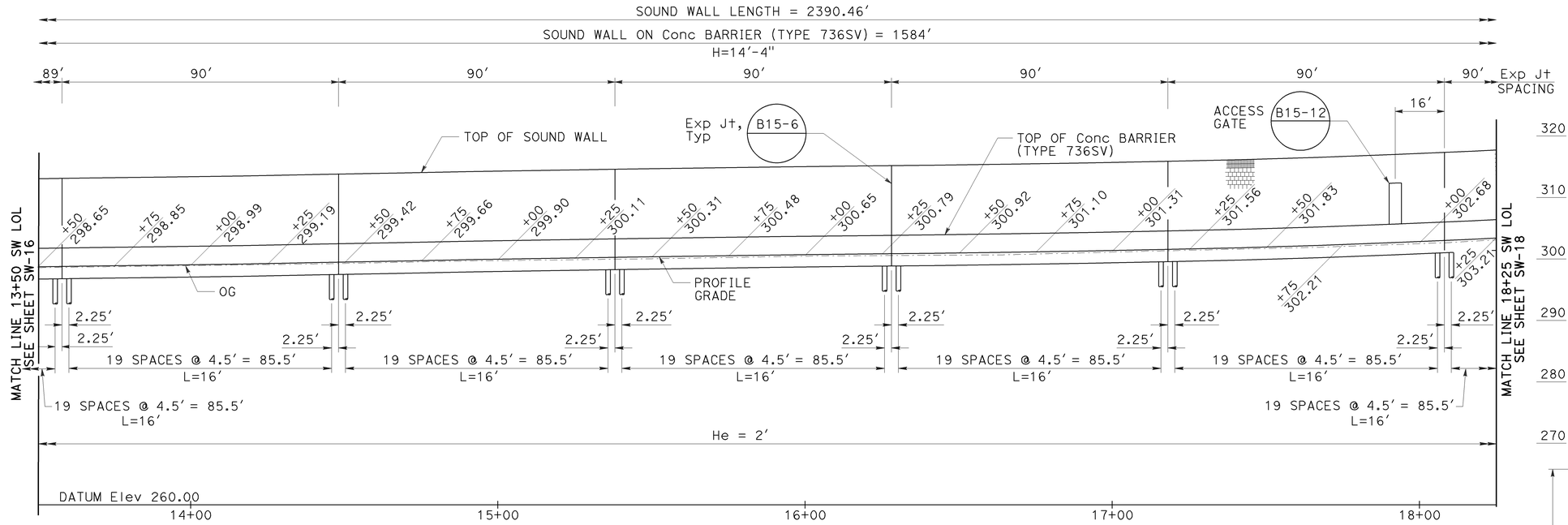

DEVELOPED ELEVATION

Horiz 1"=20′
Vert 1"=10′

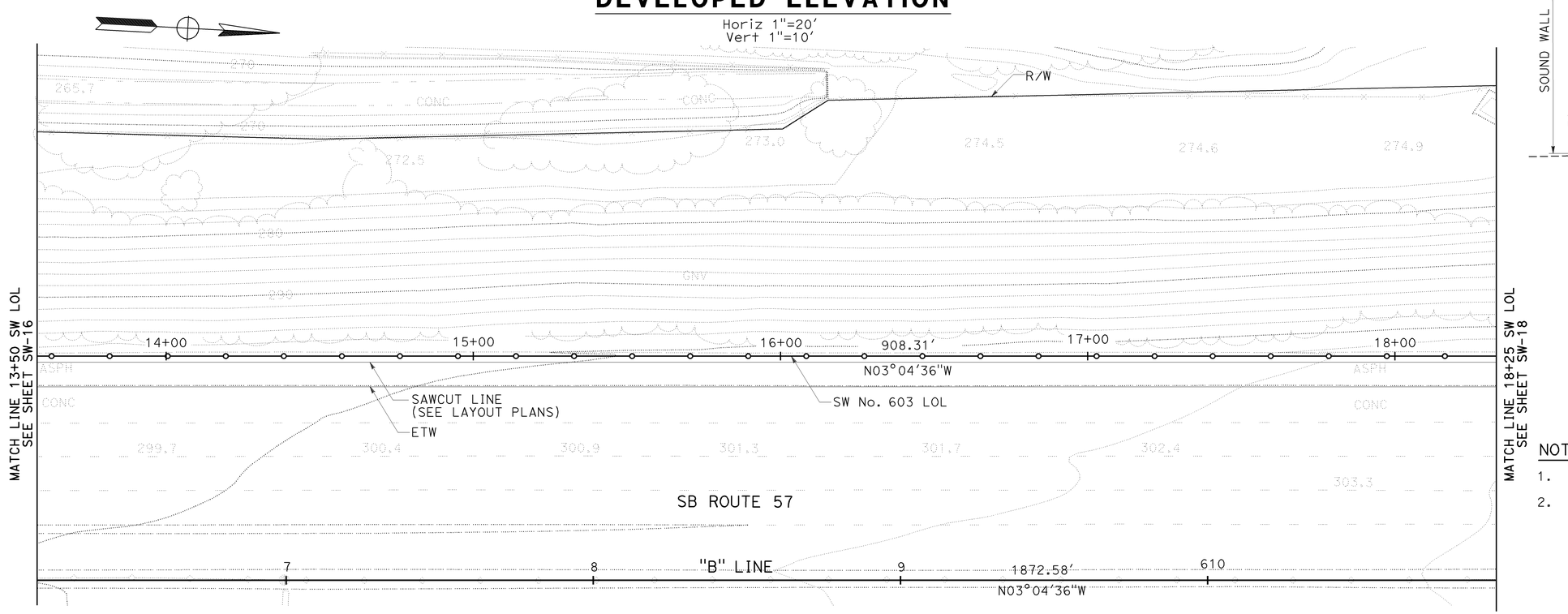

PLAN

1"=20′

THIS PLAN ACCURATE FOR SOUND WALL WORK ONLY.

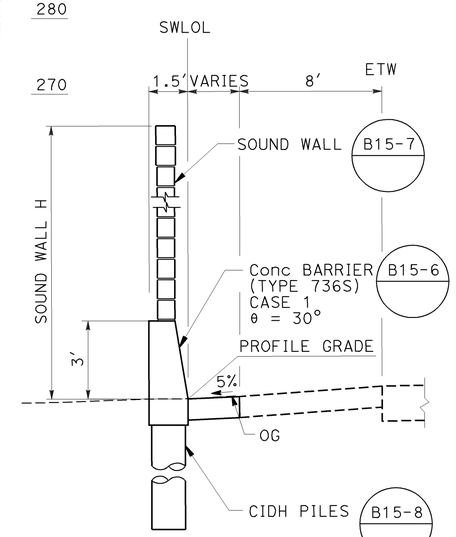

SECTION

Sta 10+26.00 TO 10+96.00
Sta 26+80.00 TO 27+76.00
NO SCALE

NOTES:

1. FOR NOTES SEE SHEET SW-16.
2. FOR SOUND WALL ON Conc BARRIER (TYPE 736SV) SECTION, SEE SHEET SW-16.

SOUND WALL PLAN
SW No. 603

SCALE AS SHOWN

SW-17

REVISED BY | DATE REVISED
JOHN POWELL | MARK FRICKE
CALCULATED-DESIGNED BY | CHECKED BY
CONSULTANT FUNCTIONAL SUPERVISOR: THOMAS IONTA
STATE OF CALIFORNIA - DEPARTMENT OF TRANSPORTATION
Caltrans

LAST REVISION 06-15-09 | DATE PLOTTED => 25-JAN-2010 | TIME PLOTTED => 10:24

Dist	COUNTY	ROUTE	POST MILES TOTAL PROJECT	SHEET No.	TOTAL SHEETS
12	Ora	57	18.4/20.9	336	856

REGISTERED CIVIL ENGINEER 06/15/09 DATE

1-25-10
PLANS APPROVAL DATE

REGISTERED PROFESSIONAL ENGINEER JOHN W. POWELL No. C71463 Exp.12/31/09 CIVIL STATE OF CALIFORNIA

THE STATE OF CALIFORNIA OR ITS OFFICERS OR AGENTS SHALL NOT BE RESPONSIBLE FOR THE ACCURACY OR COMPLETENESS OF SCANNED COPIES OF THIS PLAN SHEET.

CH2M HILL
6 HUTTON CENTRE DRIVE,
SUITE 700
SANTA ANA, CA 92707

OCTA
550 S. MAIN STREET
ORANGE, CA 92863

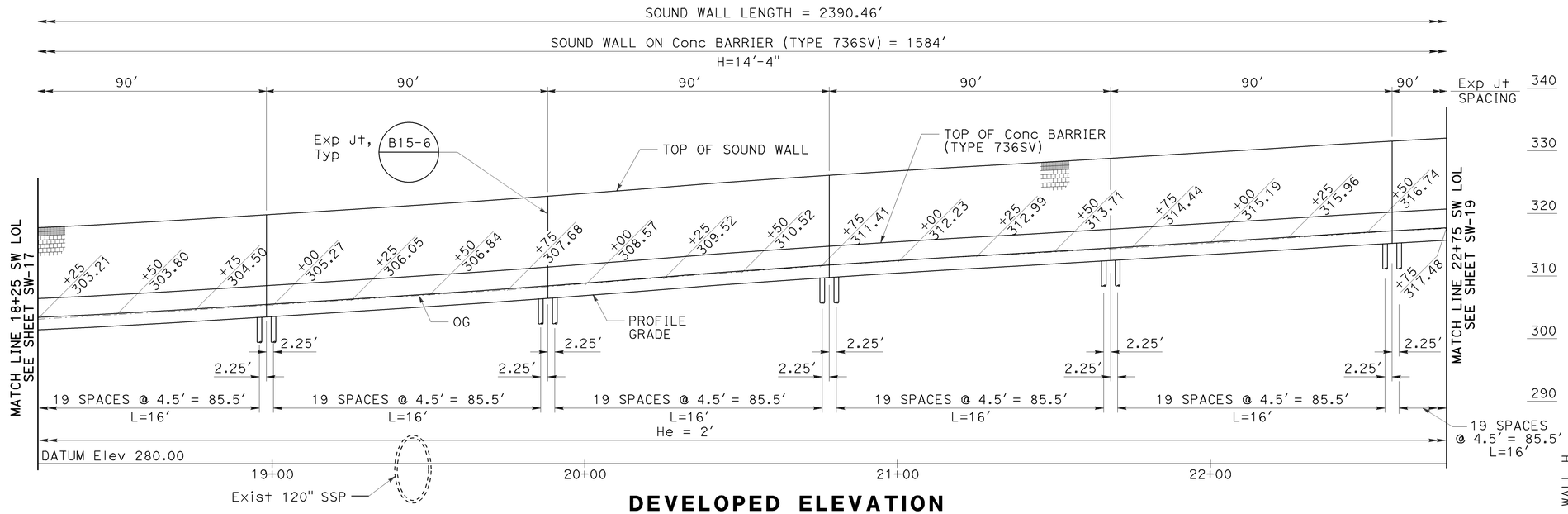

DEVELOPED ELEVATION

Horiz 1"=20'
Vert 1"=10'

30' AREA OF COMMON USE WITH ORANGE COUNTY SANITATION DISTRICT No. 2

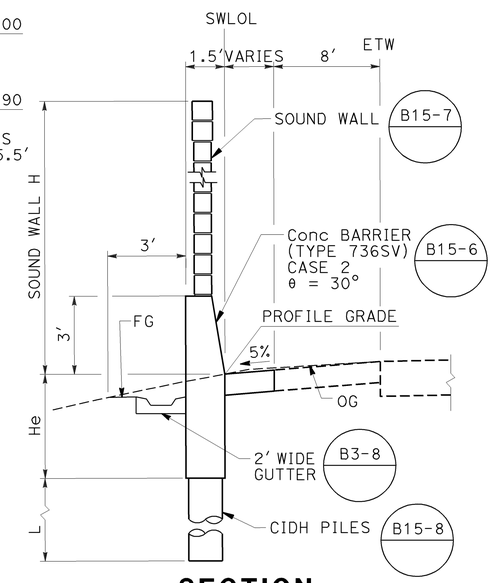

SECTION

Sta 27+76.00 TO 28+72.00
Sta 32+32.00 TO 33+64+79
NO SCALE

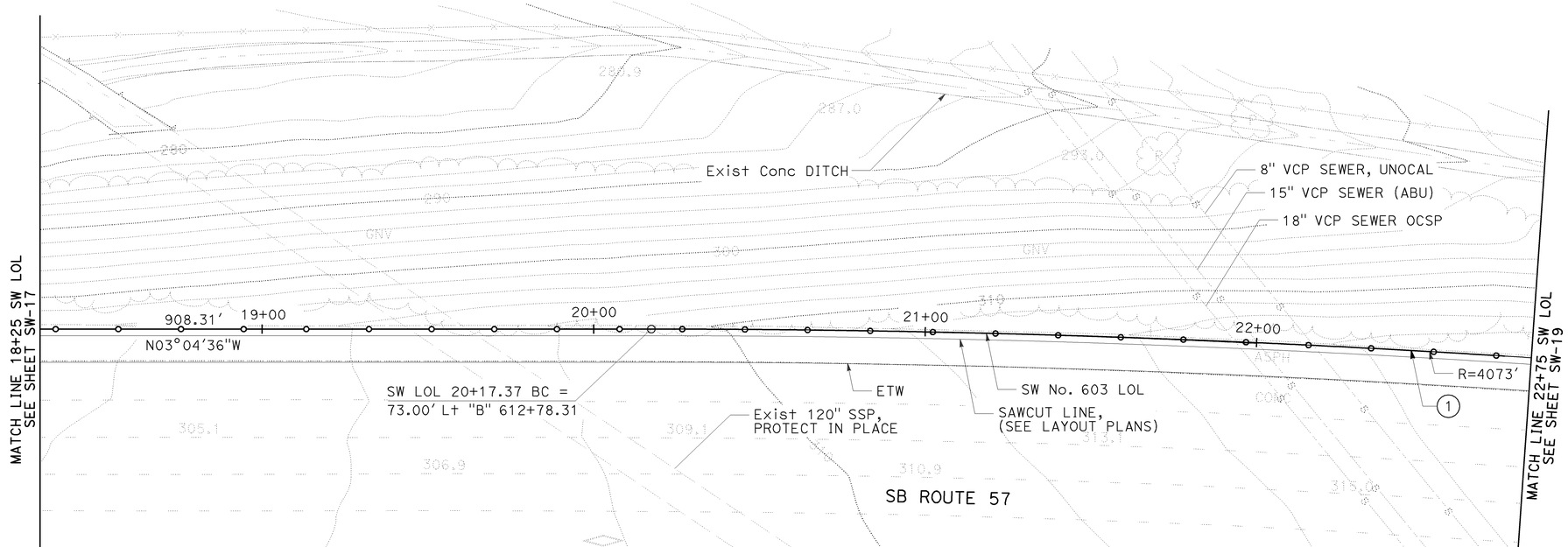

PLAN

1"=20'

LEGEND:

(X) CURVE NUMBER

NOTES:

1. FOR NOTES SEE SHEET SW-16.
2. FOR CURVE DATA, SEE SHEET SW-21
3. FOR SOUND WALL ON Conc BARRIER (TYPE 736SV) SECTION, SEE SHEET SW-16.

THIS PLAN ACCURATE FOR SOUND WALL WORK ONLY.

SOUND WALL PLAN
SW No. 603

SCALE AS SHOWN

SW-18

STATE OF CALIFORNIA - DEPARTMENT OF TRANSPORTATION
Caltrans

CONSULTANT FUNCTIONAL SUPERVISOR: THOMAS IONTA
CALCULATED-DESIGNED BY: JOHN POWELL
CHECKED BY: MARK FRICKE
REVISED BY
DATE REVISED

LAST REVISION 06-15-09
DATE PLOTTED => 25-JAN-2010
TIME PLOTTED => 10:24

Dist	COUNTY	ROUTE	POST MILES TOTAL PROJECT	SHEET No.	TOTAL SHEETS
12	Ora	57	18.4/20.9	337	856

REGISTERED CIVIL ENGINEER 06/15/09 DATE

1-25-10
PLANS APPROVAL DATE

REGISTERED PROFESSIONAL ENGINEER JOHN W. POWELL No. C71463 Exp.12/31/09 CIVIL STATE OF CALIFORNIA

THE STATE OF CALIFORNIA OR ITS OFFICERS OR AGENTS SHALL NOT BE RESPONSIBLE FOR THE ACCURACY OR COMPLETENESS OF SCANNED COPIES OF THIS PLAN SHEET.

CH2M HILL
6 HUTTON CENTRE DRIVE,
SUITE 700
SANTA ANA, CA 92707

OCTA
550 S. MAIN STREET
ORANGE, CA 92863

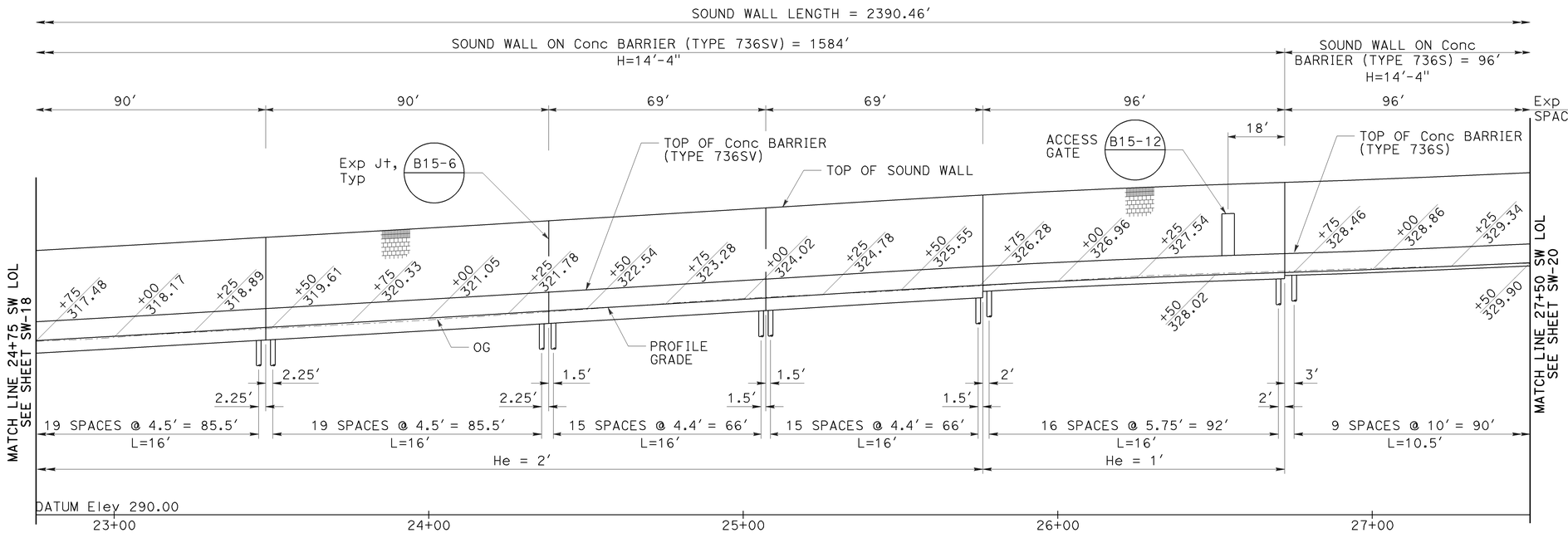

DEVELOPED ELEVATION

Horiz 1"=20′
Vert 1"=10′

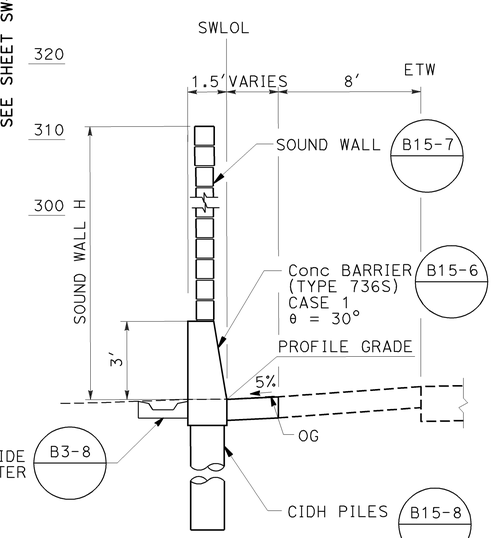

SECTION

Sta 28+72.00 to 32+32.00
NO SCALE

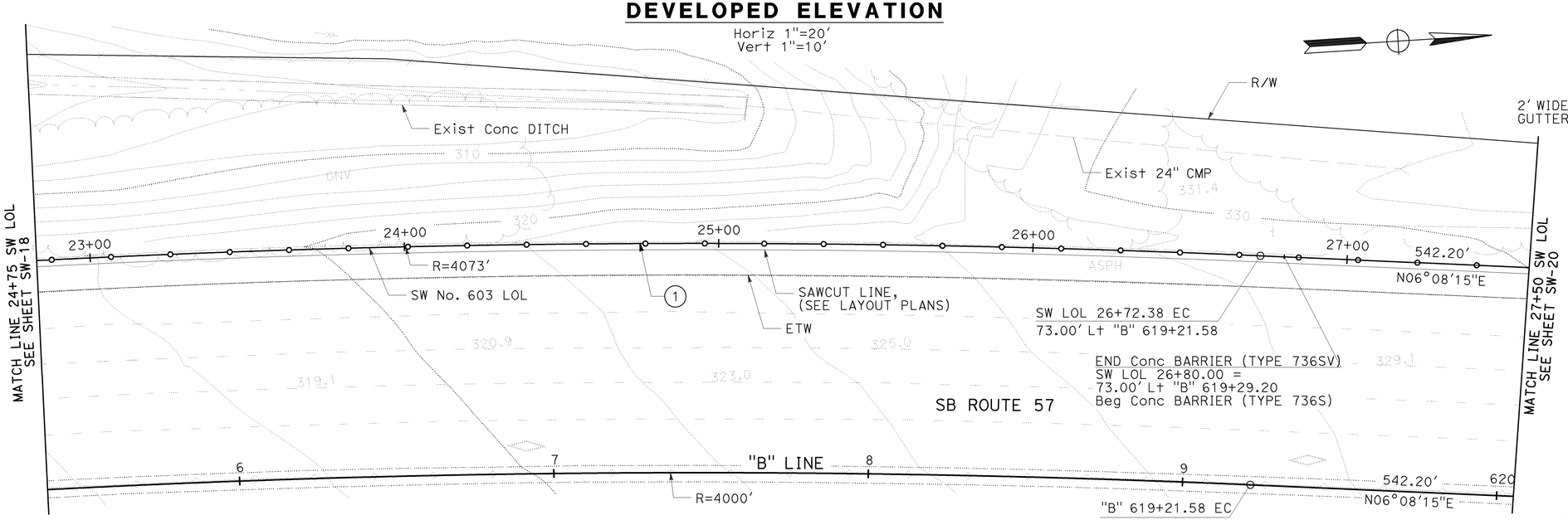

PLAN

1"=20′

THIS PLAN ACCURATE FOR SOUND WALL WORK ONLY.

NOTES:

1. FOR NOTES SHEET SW-16.
2. FOR CURVE DATA, SEE SHEET SW-21.
3. FOR SOUND WALL ON (TYPE 736SV) BARRIER SECTION, SEE SHEET SW-16.
4. FOR SOUND WALL ON (TYPE 736S) BARRIER SECTION, SEE SHEET SW-17.
5. FOR LEGEND SEE SHEET SW-18.

SOUND WALL PLAN
SW No. 603

SCALE AS SHOWN

SW-19

STATE OF CALIFORNIA - DEPARTMENT OF TRANSPORTATION
Caltrans

CONSULTANT FUNCTIONAL SUPERVISOR: THOMAS IONTA
CALCULATED-DESIGNED BY: JOHN POWELL
CHECKED BY: MARK FRICKE
REVISED BY
DATE REVISED

LAST REVISION 06-15-09
DATE PLOTTED => 25-JAN-2010
TIME PLOTTED => 10:24

Dist	COUNTY	ROUTE	POST MILES TOTAL PROJECT	SHEET No.	TOTAL SHEETS
12	Ora	57	18.4/20.9	338	856

REGISTERED CIVIL ENGINEER 06/15/09 DATE

1-25-10
PLANS APPROVAL DATE

REGISTERED PROFESSIONAL ENGINEER JOHN W. POWELL No. C71463 Exp.12/31/09 CIVIL STATE OF CALIFORNIA

THE STATE OF CALIFORNIA OR ITS OFFICERS OR AGENTS SHALL NOT BE RESPONSIBLE FOR THE ACCURACY OR COMPLETENESS OF SCANNED COPIES OF THIS PLAN SHEET.

CH2M HILL
6 HUTTON CENTRE DRIVE,
SUITE 700
SANTA ANA, CA 92707

OCTA
550 S. MAIN STREET
ORANGE, CA 92863

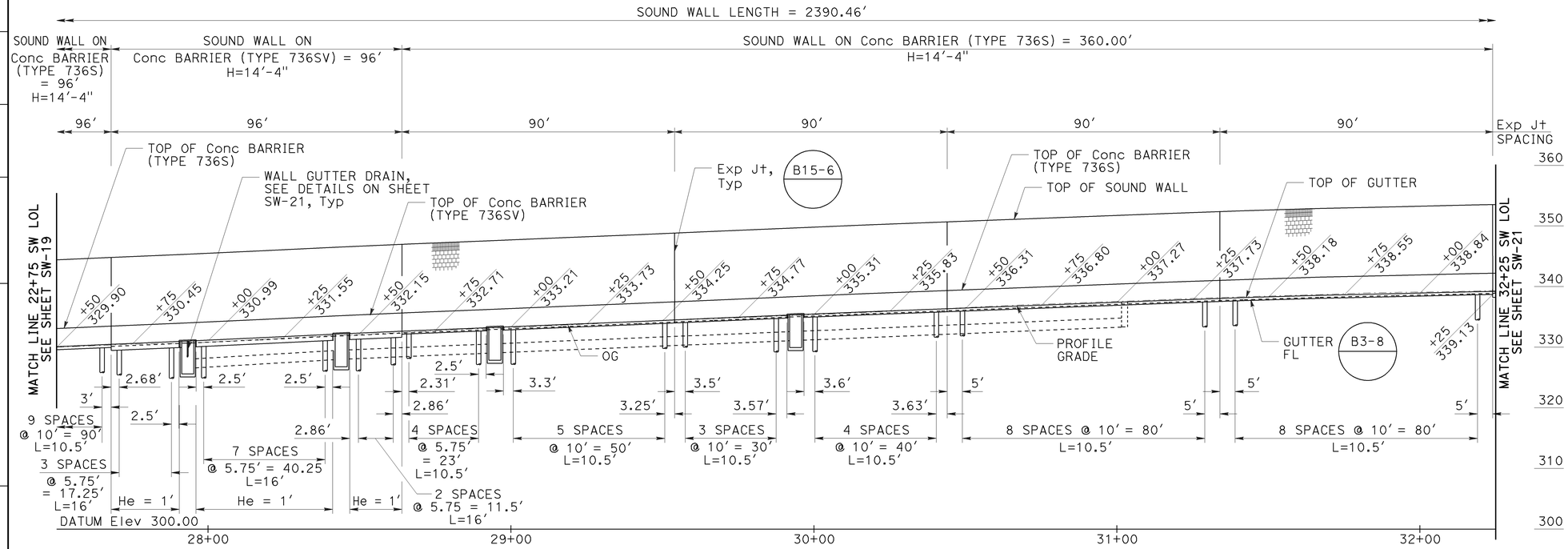

DEVELOPED ELEVATION

Horiz 1"=20'
Vert 1"=10'

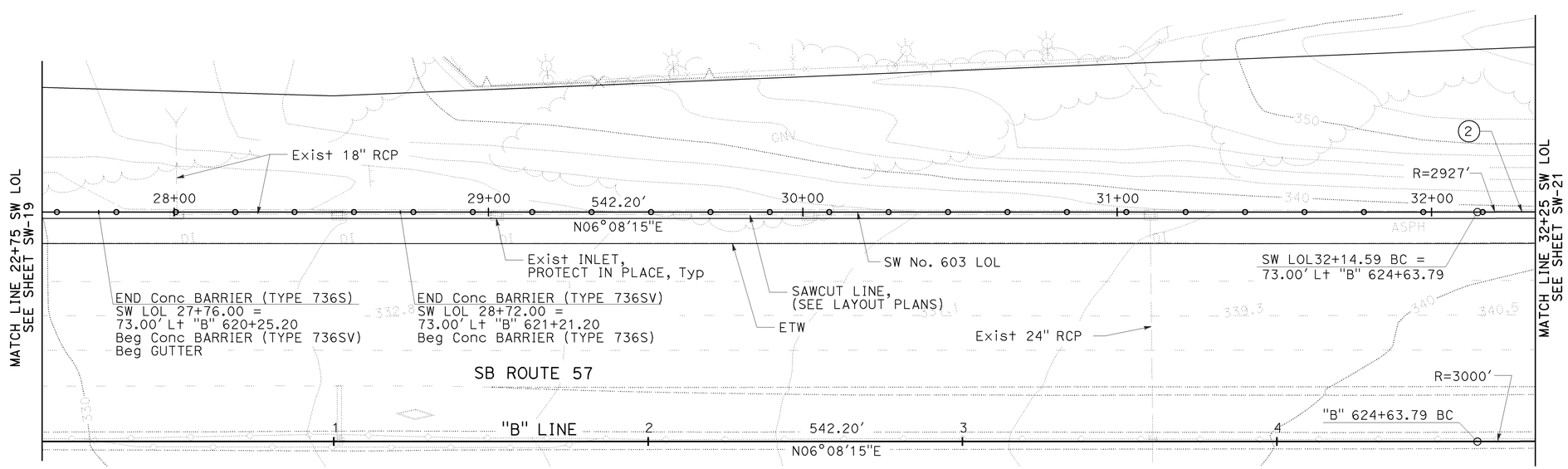

PLAN

1"=20'

THIS PLAN ACCURATE FOR SOUND WALL WORK ONLY.

NOTES:

1. FOR NOTES SEE SHEET SW-16.
3. FOR CURVE DATA, SEE SHEET SW-21.
3. FOR SOUND WALL ON (TYPE 736SV) BARRIER SECTION, SEE SHEET SW-16.
4. FOR SOUND WALL ON (TYPE 736S) BARRIER SECTION, SEE SHEET SW-17.
5. FOR LEGEND SEE SHEET SW-18

SOUND WALL PLAN
SW No. 603

SCALE AS SHOWN

SW-20

STATE OF CALIFORNIA - DEPARTMENT OF TRANSPORTATION
Caltrans

CONSULTANT FUNCTIONAL SUPERVISOR: THOMAS IONTA
CALCULATED-DESIGNED BY: JOHN POWELL
CHECKED BY: MARK FRICKE
REVISED BY
DATE REVISED

LAST REVISION 06-15-09
DATE PLOTTED => 25-JAN-2010
TIME PLOTTED => 10:24

Dist	COUNTY	ROUTE	POST MILES TOTAL PROJECT	SHEET No.	TOTAL SHEETS
12	Ora	57	18.4/20.9	339	856

REGISTERED CIVIL ENGINEER 06/15/09 DATE

1-25-10
PLANS APPROVAL DATE

REGISTERED PROFESSIONAL ENGINEER JOHN W. POWELL No. C71463 Exp.12/31/09 CIVIL STATE OF CALIFORNIA

THE STATE OF CALIFORNIA OR ITS OFFICERS OR AGENTS SHALL NOT BE RESPONSIBLE FOR THE ACCURACY OR COMPLETENESS OF SCANNED COPIES OF THIS PLAN SHEET.

CH2M HILL
6 HUTTON CENTRE DRIVE,
SUITE 700
SANTA ANA, CA 92707

OCTA
550 S. MAIN STREET
ORANGE, CA 92863

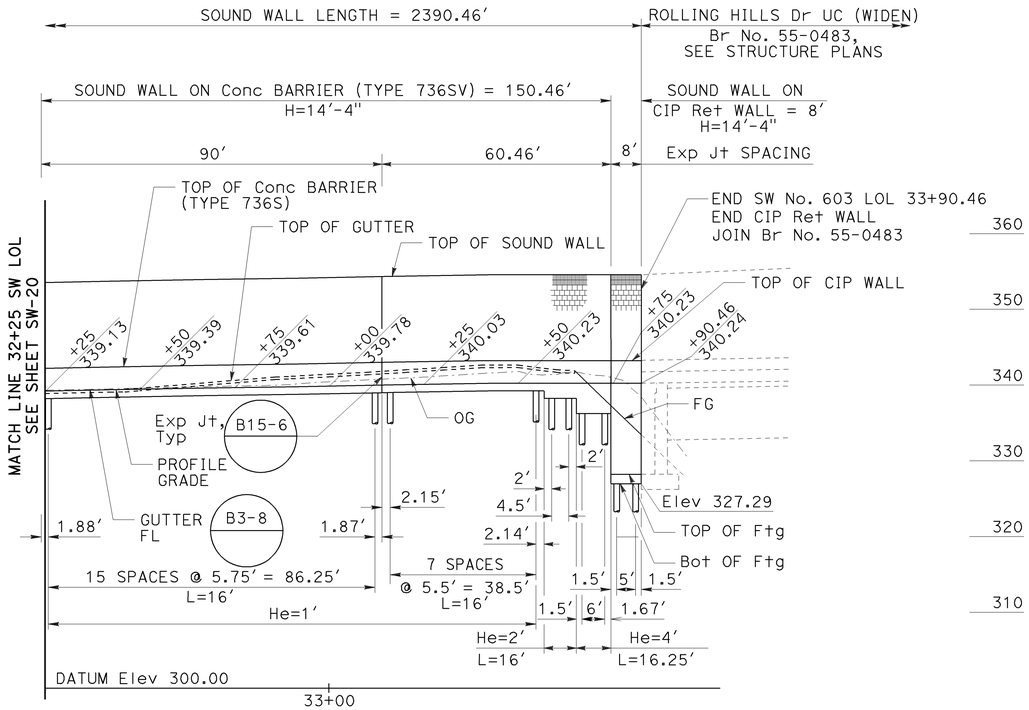

DEVELOPED ELEVATION

Horiz 1"=20'
Vert 1"=10'

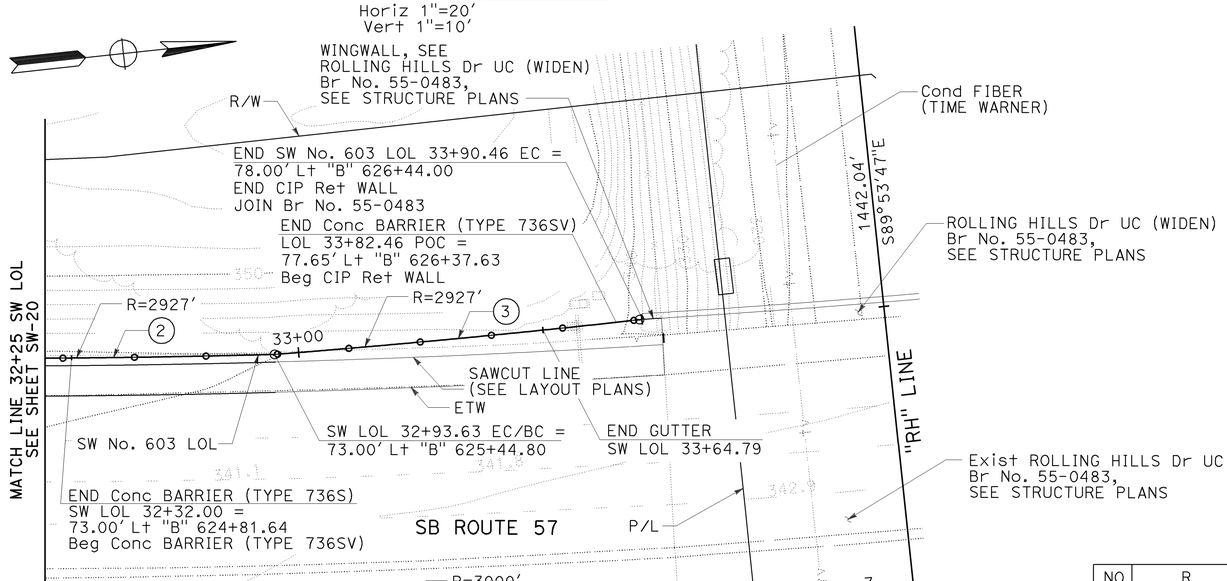

PLAN

1"=20'

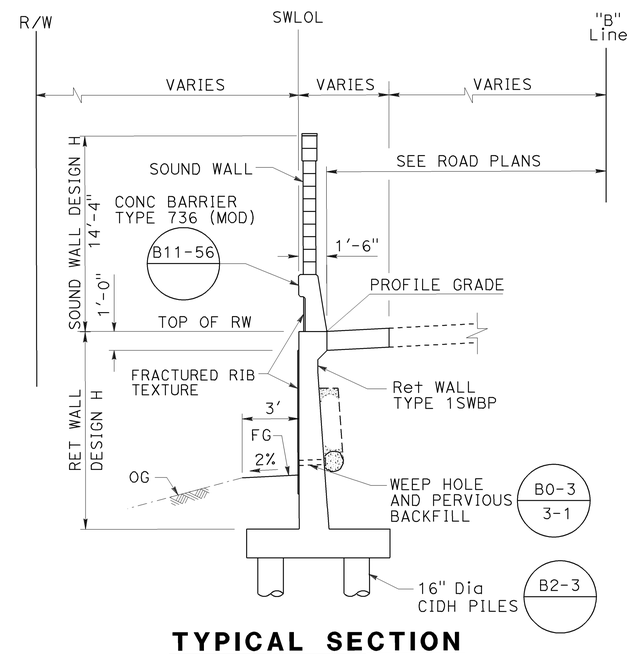

TYPICAL SECTION

1/4"=1'-0"
10+00.00 TO 10+08.00
33+82.46 TO 33+90.46

CURVE DATA

NO	R	Δ	T	L
1	4073.00'	9°12'51"	328.21'	655.01'
2	2927.00'	1°32'50"	39.52'	79.04'
3	2927.00'	1°54'26"	48.72'	97.44'

NOTES:

1. FOR NOTES SEE SHEET SW-16.
2. FOR SOUND WALL ON (TYPE 736SV) BARRIER SECTION, SEE SHEET SW-16.
3. FOR SOUND WALL ON (TYPE 736S) BARRIER SECTION, SEE SHEET SW-17.
4. FOR LEGEND SEE SHEET SW-18.

SOUND WALL PLAN
SW No. 603

SCALE AS SHOWN

SW-21

THIS PLAN ACCURATE FOR SOUND WALL WORK ONLY.

STATE OF CALIFORNIA - DEPARTMENT OF TRANSPORTATION
Caltrans

CONSULTANT FUNCTIONAL SUPERVISOR: THOMAS IONTA
CALCULATED-DESIGNED BY: JOHN POWELL
CHECKED BY: MARK FRICKE
REVISED BY
DATE REVISED

LAST REVISION 06-15-09
DATE PLOTTED => 25-JAN-2010
TIME PLOTTED => 10:25

Dist	COUNTY	ROUTE	POST MILES TOTAL PROJECT	SHEET No.	TOTAL SHEETS
12	Ora	57	18.4/20.9	340	856

REGISTERED CIVIL ENGINEER 06/15/09 DATE

1-25-10
PLANS APPROVAL DATE

REGISTERED PROFESSIONAL ENGINEER JOHN W. POWELL No. C71463 Exp.12/31/09 CIVIL STATE OF CALIFORNIA

THE STATE OF CALIFORNIA OR ITS OFFICERS OR AGENTS SHALL NOT BE RESPONSIBLE FOR THE ACCURACY OR COMPLETENESS OF SCANNED COPIES OF THIS PLAN SHEET.

CH2M HILL
6 HUTTON CENTRE DRIVE,
SUITE 700
SANTA ANA, CA 92707

OCTA
550 S. MAIN STREET
ORANGE, CA 92863

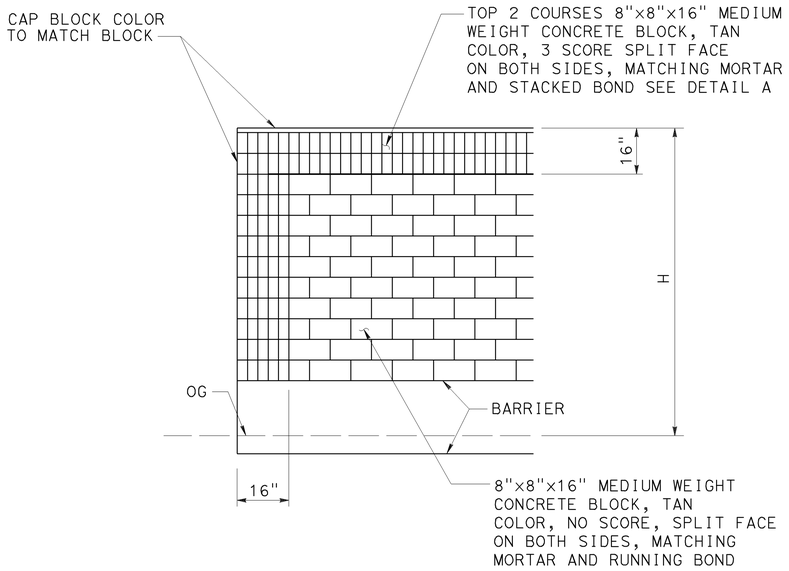

END WALL ELEVATION

CONCRETE BLOCK TYPE, COLOR AND PLACEMENT

NO SCALE

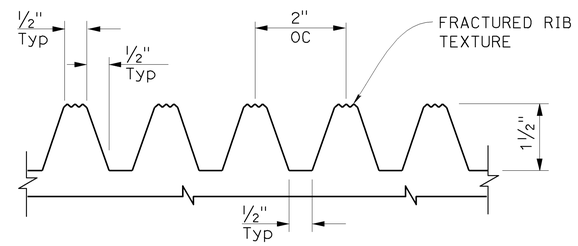

FRACTURED RIB TEXTURE DETAIL

(ELASTOMER FORMLINER)
NO SCALE

PILE DATA TABLE					
LOCATION	PILE TYPE	NOMINAL RESISTANCE (kips)		DESIGN TIP ELEVATION (Ft)	SPECIFIED TIP ELEVATION (Ft)
		COMPRESSION	TENSION		
Sta 10+00 TO 10+08	16" CIDH Conc Pile	180	0	252.00(a) 262.64(c) 272.15(d)	252.00
Sta 33+82.46 TO 33+90.46	16" CIDH Conc Pile	180	0	308.00(a) 313.71(c) 311.29(d)	308.00

DESIGN TIP ELEVATION IS CONTROLLED BY FOLLOWING DEMAND:
(a) COMPRESSION; (c) SETTLEMENT; (d) LATERAL CAPACITY.

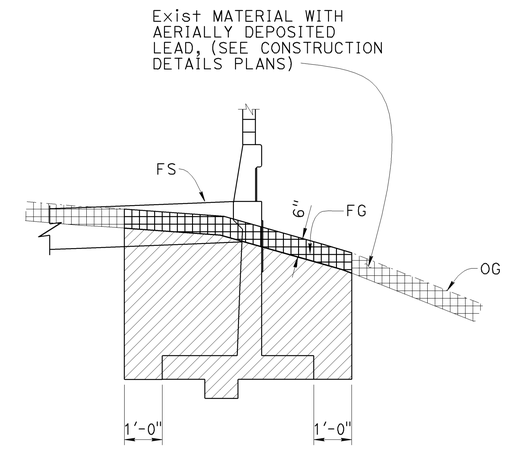

IN FILL

LIMITS OF PAYMENT OF EXCAVATION FOR RETAINING WALL

NO SCALE

NOTE:
FOR BACKFILL SEE CALTRANS STANDARD PLANS

LEGEND

INDICATES STRUCTURE EXCAVATION (TYPE Y-1) (AERIALLY DEPOSITED LEAD)

STRUCTURE EXCAVATION (RETAINING WALL)

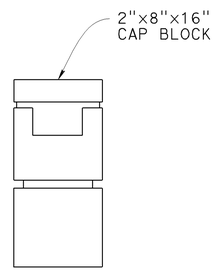

CAP BLOCK DETAIL

NO SCALE

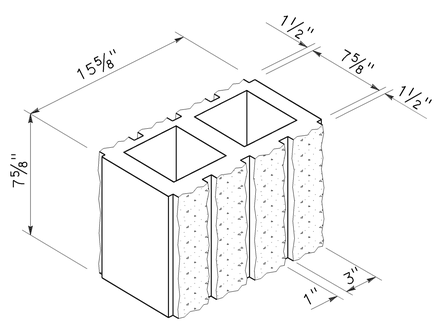

DETAIL A

NO SCALE
8" WIDE 3-SCORE SPLIT FACE BOTH SIDES

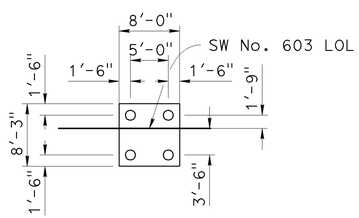

PILE LAYOUT PLAN

1"=10'
Sta 10+00 TO 10+08
Sta 33+82.46 TO 33+90.46

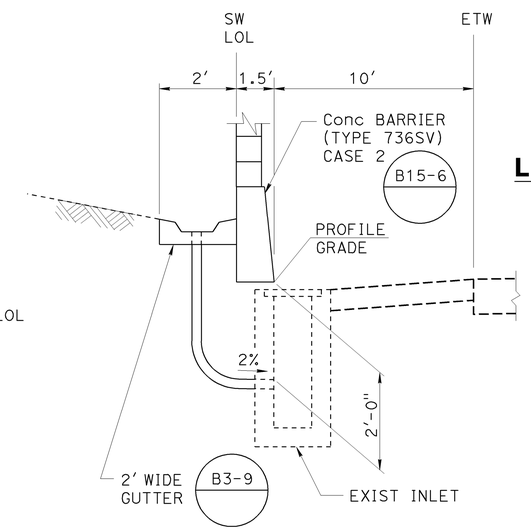

GUTTER DRAIN DETAIL

NO SCALE
Sta 28+01.43

SOUND WALL DETAILS
SW No. 603

SCALE AS SHOWN

SW-22

STATE OF CALIFORNIA - DEPARTMENT OF TRANSPORTATION
Caltrans
CONSULTANT FUNCTIONAL SUPERVISOR: THOMAS IONTA
CALCULATED-DESIGNED BY: JOHN POWELL
CHECKED BY: MARK FRICKE
REVISED BY
DATE REVISED

LAST REVISION 06-15-09
DATE PLOTTED => 25-JAN-2010
TIME PLOTTED => 10:25

Dist	COUNTY	ROUTE	POST MILES TOTAL PROJECT	SHEET No.	TOTAL SHEETS
12	Ora	57	18.4/20.9	341	856

REGISTERED CIVIL ENGINEER 06/15/09 DATE

1-25-10
PLANS APPROVAL DATE

REGISTERED PROFESSIONAL ENGINEER JOHN W. POWELL No. C71463 Exp.12/31/09 CIVIL STATE OF CALIFORNIA

THE STATE OF CALIFORNIA OR ITS OFFICERS OR AGENTS SHALL NOT BE RESPONSIBLE FOR THE ACCURACY OR COMPLETENESS OF SCANNED COPIES OF THIS PLAN SHEET.

CH2M HILL
6 HUTTON CENTRE DRIVE,
SUITE 700
SANTA ANA, CA 92707

OCTA
550 S. MAIN STREET
ORANGE, CA 92863

TABLE OF PILE SPACING: 16" CIDH - CONCRETE PILES	
DESIGN H	12'
W	8'-3"
C	3'-3"
B	5'-0"
F	1'-9"
M	1'-9"
N	3'-6"
ROW 1	5'-0"
ROW 2	5'-0"
ROW 3	
ROW 4	
CONFIGURATION	I

TABLE 1: TABLE OF REINFORCING STEEL DIMENSIONS AND DATA	
	STEM WITH HAUNCH
DESIGN H	12'
STEM BATTER	½:12
STEM THICKNESS @ TOP	1'-6"
STEM THICKNESS @ HAUNCH	1'-0"
(a) BARS	#6 @ 14
X	
Y	
(b) BARS	#6 @ 14
X	CONT
Y	CONT
(c) BARS	
(d) BARS	#5 @ 12
TOTAL (e) BARS	6 #5
TOTAL (f) BARS	6 #5

DESIGN DATA

DESIGN: LOAD FACTOR DESIGN (LFD)

CONCRETE: REINFORCED CONCRETE, f'c = 3600 psi
fy = 60000 psi

LOADING CASE:

LEVEL GROUND WITH 240 psf LIVE LOAD SURCHARGE AND 14'-4" SOUNDWALL.
SEISMIC LOAD = 0.57 DEAD LOAD
WIND LOAD = 33 psf
DEAD LOAD OF SOUNDWALL = 1000 lb/lf
DEAD LOAD OF BARRIER = 470 lb/lf

SEISMIC LOAD: SOIL

Kh = 0.3g
Kv = 0.0
Kae : MONONOBE-OKABE METHOD

SOIL: Ø = 34° γ = 120 pcf

EQUIVALENT FLUID PRESSURE:
= 36 pcf FOR DETERMINATION OF TOE PRESSURE
= 27 pcf FOR DETERMINATION OF HEEL PRESSURE

LOAD COMBINATIONS:

GROUP A : βD+1.7E+1.7SC
GROUP B : βD+1.7E+1.7SC+W
GROUP C :
STEM : 1.0D+1.0E+1.0EQD+1.0EQE
FOOTING : D+PYM

WHERE : β = 1.0 OR 1.3 WHICHEVER CONTROLS DESIGN
D = DEAD LOAD
E = LATERAL EARTH PRESSURE
SC = SURCHARGE
W = WIND LOAD
EQD = SEISMIC DEAD LOAD
EQE = SEISMIC LATERAL EARTH PRESSURE
PYM = PROBABLE YIELD MOMENT (1.3* NOMINAL YIELD MOMENT OF STEM)

CONT = CONTINUOUS
* = (a) AND (b) BARS ARE BUNDLED TOGETHER.
** = ALTERNATE (a) AND (b) BARS AS SHOWN IN DETAIL A.

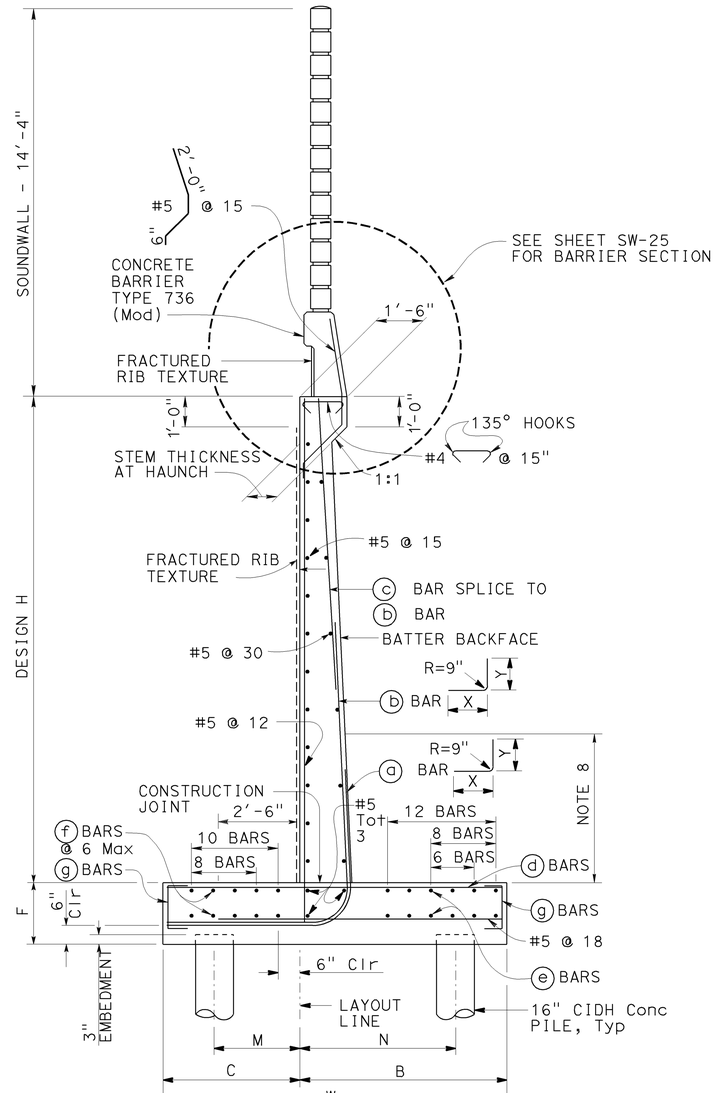

16" CIDH PILE FOOTING SECTION

NO SCALE

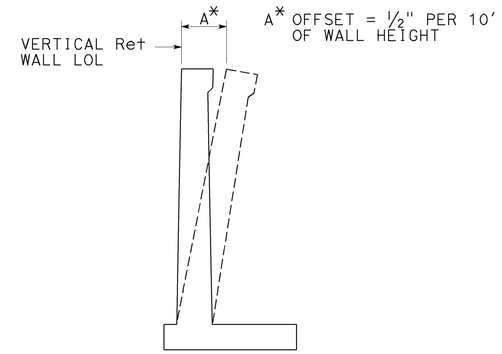

WALL OFFSET

NO SCALE
VALUES FOR OFFSETTING FORMS TO BE DETERMINED BY THE ENGINEER

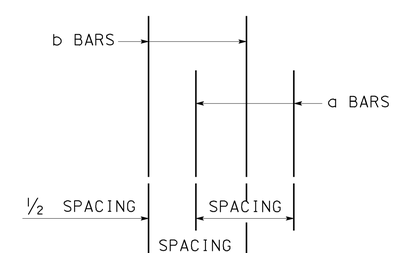

DETAIL A

NO SCALE

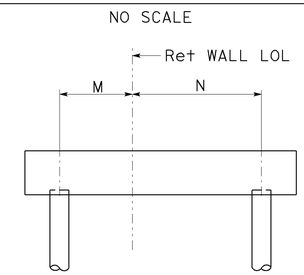

PILE CONFIGURATION

GENERAL NOTES

1. 16" CIDH-CONCRETE PILES WERE USED FOR THE DESIGN.
2. MINIMUM DISTANCE BETWEEN CENTER PILE AND EDGE OF FOOTING IS 1'-6".
3. REDUCTION FACTORS:
   GROUPS A & B : Ø = 0.75
   GROUP C & X1: Ø = 1.0
4. LATERAL RESISTANCE OF EACH PILE:
   GROUPS A & B : = 30 kip
   GROUP C & X1: = 40 kip
5. MAXIMUM SPACING BETWEEN PILES IS SHOWN IN THE TABLE. REDUCE TO SUIT THE LENGTH OF FOOTING.
6. MINIMUM DISTANCE BETWEEN ANY TWO PILES IS 4'-0".
7. LIMIT OF NO SPLICING FOR REBARS = 3 TIMES THE BOTTOM THICKNESS OF STEM.

NOTES

1. FOR SOUNDWALL AND RETAINING WALL ARCHITECTURAL FINISH OR TEXTURE, SEE DETAILS ELSEWHERE IN PROJECT PLANS.
2. FOR DETAILS NOT SHOWN AND DRAINAGE NOTES, SEE B3-8
3. FOOTING COVER, 1'-6" MINIMUM.
4. FOR SOUNDWALL AND BARRIER REINFORCEMENT, SEE SHEETS SW-24 & SW-25.

SOUND WALL DETAILS

RETAINING WALL DETAILS

SW No. 603

SCALE AS SHOWN

SW-23

STATE OF CALIFORNIA - DEPARTMENT OF TRANSPORTATION
Caltrans
CONSULTANT FUNCTIONAL SUPERVISOR: THOMAS IONTA
CALCULATED-DESIGNED BY: JOHN POWELL
CHECKED BY: MARK FRICKE
REVISED BY
DATE REVISED

LAST REVISION 06-15-09
DATE PLOTTED => 25-JAN-2010
TIME PLOTTED => 10:25

Dist	COUNTY	ROUTE	POST MILES TOTAL PROJECT	SHEET No.	TOTAL SHEETS
12	Ora	57	18.4/20.9	342	856

REGISTERED CIVIL ENGINEER 06/15/09 DATE

1-25-10
PLANS APPROVAL DATE

REGISTERED PROFESSIONAL ENGINEER JOHN W. POWELL No. C71463 Exp.12/31/09 CIVIL STATE OF CALIFORNIA

THE STATE OF CALIFORNIA OR ITS OFFICERS OR AGENTS SHALL NOT BE RESPONSIBLE FOR THE ACCURACY OR COMPLETENESS OF SCANNED COPIES OF THIS PLAN SHEET.

CH2M HILL
6 HUTTON CENTRE DRIVE,
SUITE 700
SANTA ANA, CA 92707

OCTA
550 S. MAIN STREET
ORANGE, CA 92863

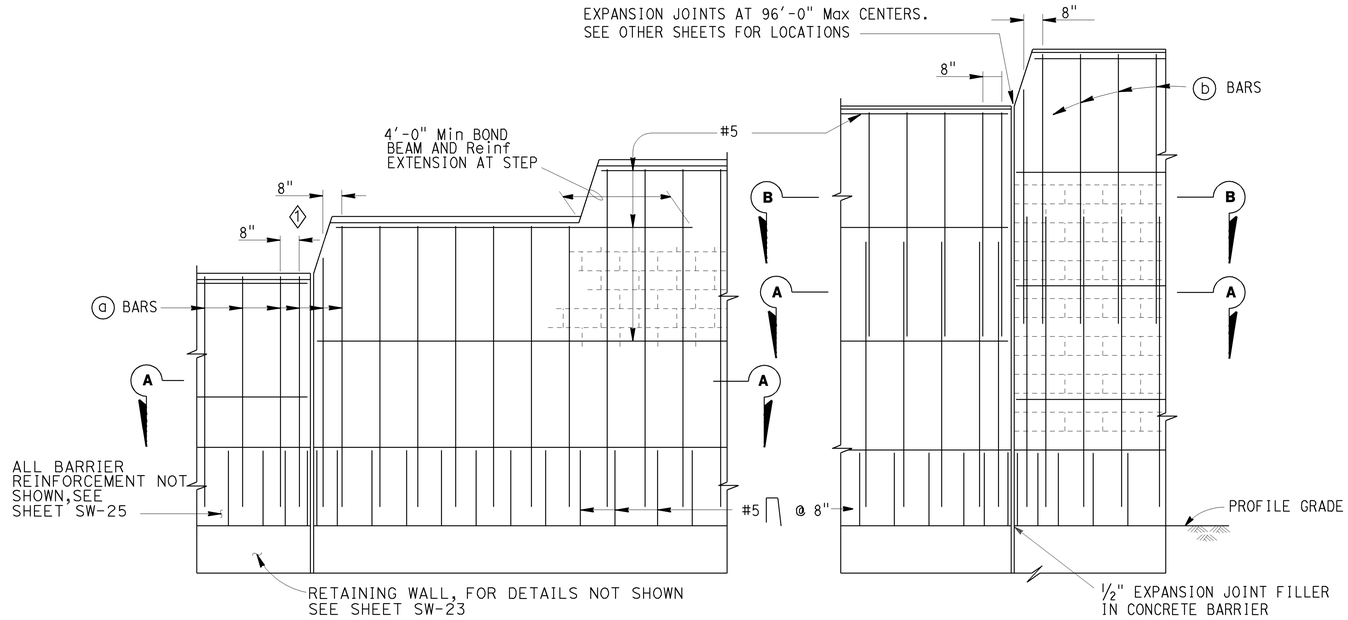

PART ELEVATIONS

SOUNDWALL REINFORCEMENT TABLE

MAXIMUM H	ⓐ BARS @ 1'-4" Max	ⓑ BARS @ 1'-4" Max	"y"	f'm (KSI)	COMPRESSIVE STRENGTH OF CMU (KSI)	MAXIMUM H
6'-4"	# 4	———	———	1.5	1.9	6'-4"
8'-4"	# 4	———	———	1.5	1.9	8'-4"
10'-4"	# 4	———	———	1.5	1.9	10'-4"
12'-4"	# 5	# 4	5'-0"	1.5	1.9	12'-4"
14'-4"	# 6	# 4	7'-0"	1.5	1.9	14'-4"
16'-4"	# 6	# 4	9'-0"	2.5	3.7	16'-4"

NOTE I : FOR DETAILS NOT SHOWN,SEE SHEET SW-25

NOTE II : SLOPE GROUND AT TRAFFIC SIDE OF BARRIER TO DRAIN. MAXIMUM SLOPE ±10%.

NOTE III: SEE SHEET SW-22 FOR OTHER DETAILS.

GENERAL NOTES:

NOTE A: FOR TYPE OF BLOCK AND JOINT FINISH, SEE OTHER SHEETS.

NOTE B: WHEN BLOCKS ARE LAID IN STACKED BOND, LADDER TYPE, GALVANIZED JOINT REINFORCEMENT SHALL BE PROVIDED. A MINIMUM OF 0.07"-0.14" WIRE CONTINUOUS AT 4'-0" MAXIMUM TO BE USED. LOCATE REINFORCEMENT IN JOINTS THAT ARE AT THE APPROXIMATE MIDPOINT BETWEEN BOND BEAMS.

NOTE C: HORIZONTAL JOINTS SHALL BE TOOLED CONCAVE OR MAY BE WEATHERED.
VERTICAL JOINTS SHALL BE TOOLED CONCAVE OR MAY BE RAKED.

NOTE D: FOR INTERMEDIATE WALL HEIGHTS THAT ARE BETWEEN THE "H'S" GIVEN. USE THE TABULAR INFORMATION FOR THE NEXT HIGHER "H".

NOTE E: MASONRY STRENGTHS ARE LISTED IN "SOUNDWALL REINFORCEMENT TABLE".

NOTE F: CLASS 2 CONCRETE TO BE USED FOR THE BARRIER.

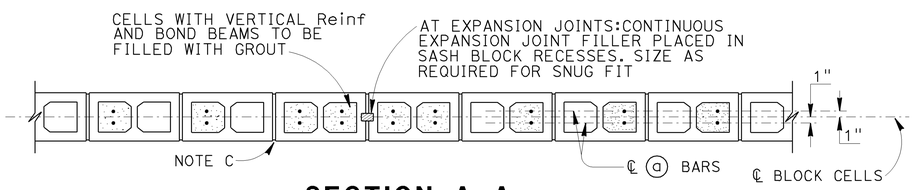

SECTION A-A

FOR DETAILS NOT SHOWN,SEE OTHER DETAILS

H=6'-4" THRU H=10'-4"

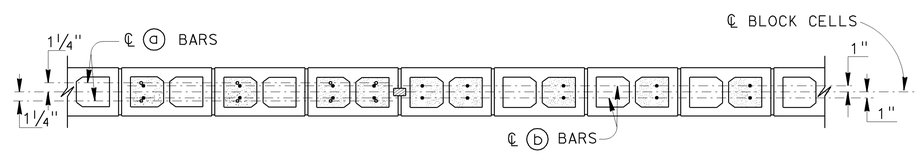

SECTION A-A **SECTION B-B**

FOR DETAILS NOT SHOWN, SEE OTHER DETAILS

H=12'-4" THRU H=16'-4"

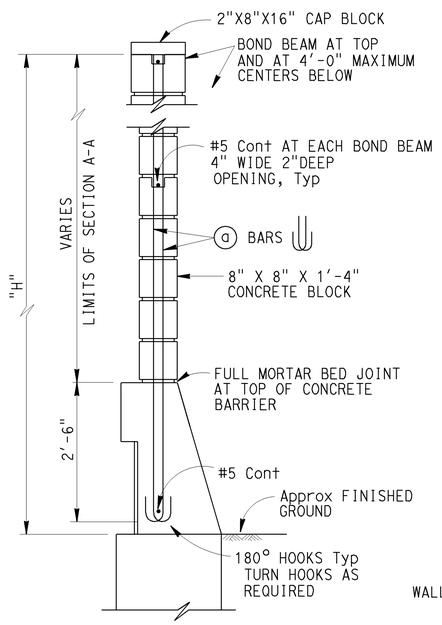

H=6'-4" THRU H=10'-4"

FOR DETAILS NOT SHOWN, SEE H=12'-4" THRU H=16'-4"

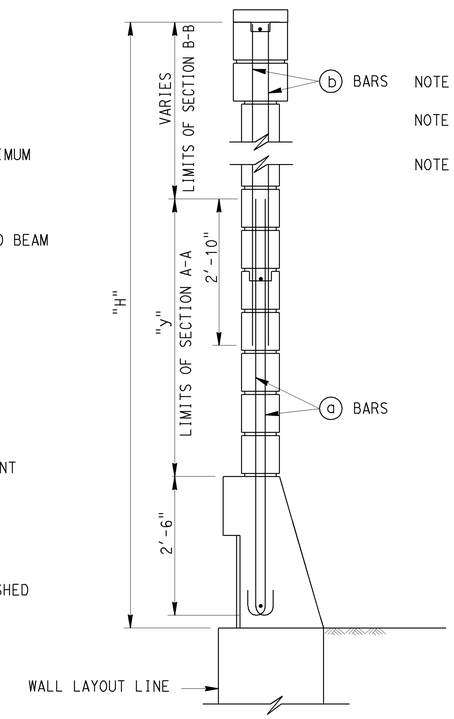

H=12'-4" THRU H=16'-4"

FOR DETAILS NOT SHOWN, SEE H=6'-4" THRU H=10'-4"

TYPICAL SECTIONS

SOUND WALL DETAILS

SOUND WALL - MASONRY BLOCK WITH
BARRIER ON RETAINING WALL
DETAILS No. 1

SW No. 603

NO SCALE

SW-24

STATE OF CALIFORNIA - DEPARTMENT OF TRANSPORTATION
Caltrans

CONSULTANT FUNCTIONAL SUPERVISOR: THOMAS IONTA
CALCULATED-DESIGNED BY: JOHN POWELL
CHECKED BY: MARK FRICKE
REVISED BY
DATE REVISED

LAST REVISION 06-15-09
DATE PLOTTED => 25-JAN-2010
TIME PLOTTED => 10:47

Dist	COUNTY	ROUTE	POST MILES TOTAL PROJECT	SHEET No.	TOTAL SHEETS
12	Ora	57	18.4/20.9	343	856

REGISTERED CIVIL ENGINEER 06/15/09 DATE

1-25-10
PLANS APPROVAL DATE

REGISTERED PROFESSIONAL ENGINEER JOHN W. POWELL No. C71463 Exp.12/31/09 CIVIL STATE OF CALIFORNIA

THE STATE OF CALIFORNIA OR ITS OFFICERS OR AGENTS SHALL NOT BE RESPONSIBLE FOR THE ACCURACY OR COMPLETENESS OF SCANNED COPIES OF THIS PLAN SHEET.

CH2M HILL
6 HUTTON CENTRE DRIVE,
SUITE 700
SANTA ANA, CA 92707

OCTA
550 S. MAIN STREET
ORANGE, CA 92863

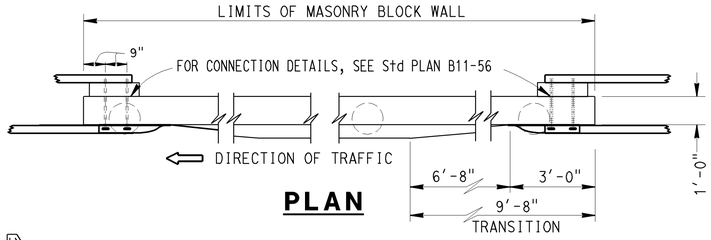

PLAN

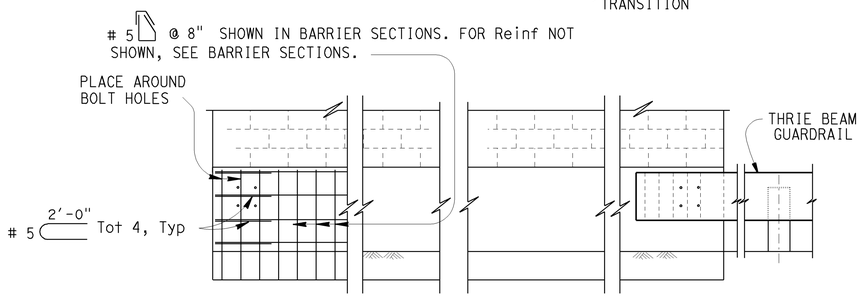

ELEVATION

METAL BEAM GUARDRAIL ANCHORAGE

FOR DETAILS NOT SHOWN, SEE Std PLAN B11-56.

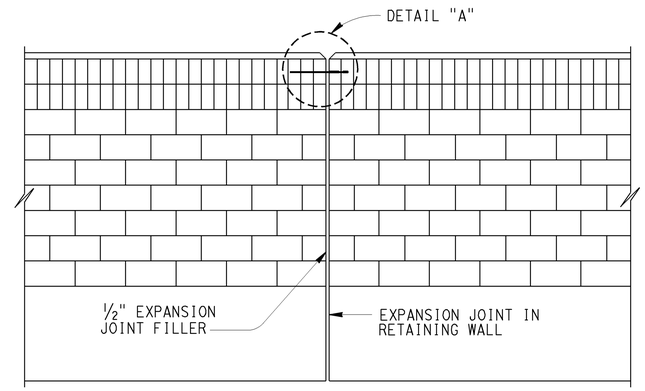

ALIGNMENT KEY DETAIL

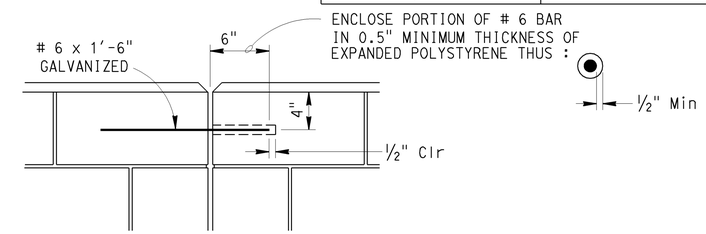

DETAIL A

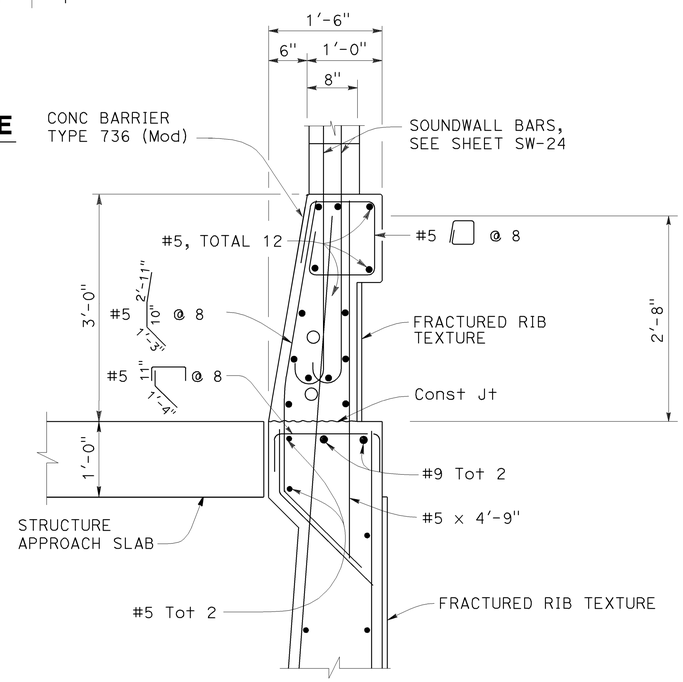

BARRIER SECTION

NOTES:

I : FOR RETAINING WALL DETAILS NOT SHOWN,SEE SHEET SW-23.

II : SLOPE GROUND AT TRAFFIC SIDE OF BARRIER TO DRAIN.
MAXIMUM SLOPE ±10%.
SEE STANDARD PLAN B11-56, NOTE D.

DESIGN NOTES

DESIGN

UNIFORM BUILDING CODE,1997 EDITION AND THE BRIDGE DESIGN SPECIFICATIONS.

DESIGN WIND LOAD

33 PSF

DESIGN SEISMIC LOAD

0.57 Dead load

REINFORCED CONCRETE

f'c = 3250 PSI
fy = 60 KSI

CONCRETE MASONRY

REGULAR STRENGTH	HIGH STRENGTH	
f'm = 1500 PSI	f'm = 2000 PSI	f'm = 2500 PSI
f_b = 1500 PSI	f_b = 660 PSI	f_b = 830 PSI
fs = 24.0 KSI	fs = 24.0 KSI	fs = 24000 PSI
n = 25.8	n = 19.3	n = 15.5

LOAD FACTORS AND LOAD COMBINATIONS

WORKING STRESS DESIGN (WSD) PERCENTAGE OF UNIT STRESS

Group 1: D + E + SC 100%
Group 2: D + W + SC + E 100%
Group 3: D + 0.71 EQD + E 100%

Where:

D = DEAD LOAD
E = LATERAL EARTH PRESSURE
SC = LIVE LOAD SURCHARGE
W = WIND LOAD
EQD = SEISMIC DEAD LOAD

LOAD FACTOR DESIGN (LFD)

Group A: BD +1.7 E + 1.7 SC
Group B: BD +1.7 E + 1.3 W
Group C: BD +1.3 E + 1.0 EQE
Group D: BD +1.3 E + 1.0 EQD
Group E: BD +1.1 E + 0.85 (EQE + EQD)

Where : B = 0.9 OR 1.2, WHICHEVER CONTROLS IN DESIGN
D = DEAD LOAD
E = LATERAL EARTH PRESSURE
SC = LIVE LOAD SURCHARGE
W = WIND LOAD
EQD = SEISMIC DEAD LOAD
EQE = SEISMIC EARTH LOAD

STRENGTH REDUCTION FACTORS, Ø

REINFORCED CONCRETE:
FOR FLEXURE ---------- Ø=0.90
FOR SHEAR ---------- Ø=0.85

CONCRETE MASONRY:
FOR FLEXURE ---------- Ø=0.80
FOR SHEAR ---------- Ø=0.60

FOUNDATIONS :

SEE SHEET SW-22

SOUND WALL DETAILS

SOUND WALL - MASONRY BLOCK WITH BARRIER ON RETAINING WALL DETAILS No. 2

SW No. 603

NO SCALE

SW-25

STATE OF CALIFORNIA - DEPARTMENT OF TRANSPORTATION
Caltrans
CONSULTANT FUNCTIONAL SUPERVISOR THOMAS IONTA
CALCULATED-DESIGNED BY JOHN POWELL
CHECKED BY MARK FRICKE
REVISED BY
DATE REVISED

LAST REVISION 06-15-09
DATE PLOTTED => 25-JAN-2010
TIME PLOTTED => 10:47

DIST	COUNTY	ROUTE	POST MILES TOTAL PROJECT	SHEET No	TOTAL SHEETS
12	Ora	57	18.4/20.9	344	856

GEOTECHNICAL PROFESSIONAL — DATE 06/15/09

1-25-10
PLANS APPROVAL DATE

The State of California or its officers or agents shall not be responsible for the accuracy or completeness of electronic copies of this plan sheet.

REGISTERED PROFESSIONAL ENGINEER — HISHAM M. NOFAL No. 2765 Exp. 09/30/09 GEOTECHNICAL — STATE OF CALIFORNIA

OCTA
550 S. MAIN STREET
ORANGE, CA 92863

CH2M HILL
6 HUTTON CENTRE DRIVE, SUITE 700
SANTA ANA, CA 92707

BENCHMARK:

HORIZONTAL COORDINATES ARE CCS NAD-83, ZONE 6.
VERTICAL CONTROL BASED ON NORTH AMERICAN VERTICAL DATUM 1988.
Pt 1048: N2273923.989, E6066816.158, Elev 297.698
Pt 1065: N2276096.906, E6066849.261, Elev 345.199

SAMPLER TYPES:

CALIFORNIA MODIFIED RING SAMPLER
STANDARD PENETRATION TEST SAMPLER

HAMMER TYPE:

AUTOMATIC HAMMER

CORRECTION FACTOR:

TO CONVERT FROM CALIFORNIA MODIFIED RING SAMPLER BLOW COUNT TO EQUIVALENT STANDARD PENETRATION TEST SAMPLER BLOW COUNT, FOR GRANULAR AND COHESIVE SOIL, MULTIPLY BY 0.67.

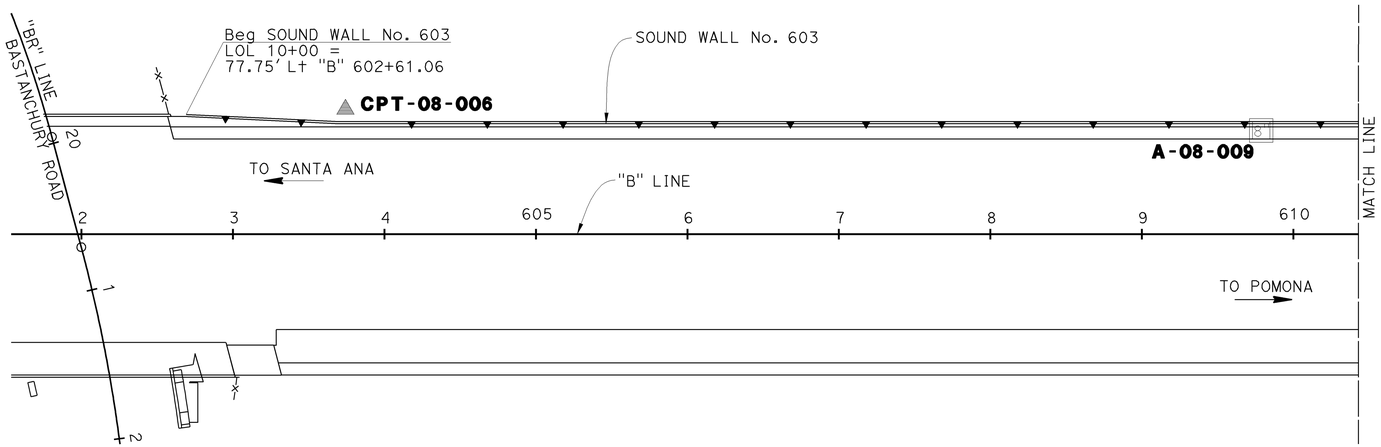

PLAN
SCALE: 1" = 50'

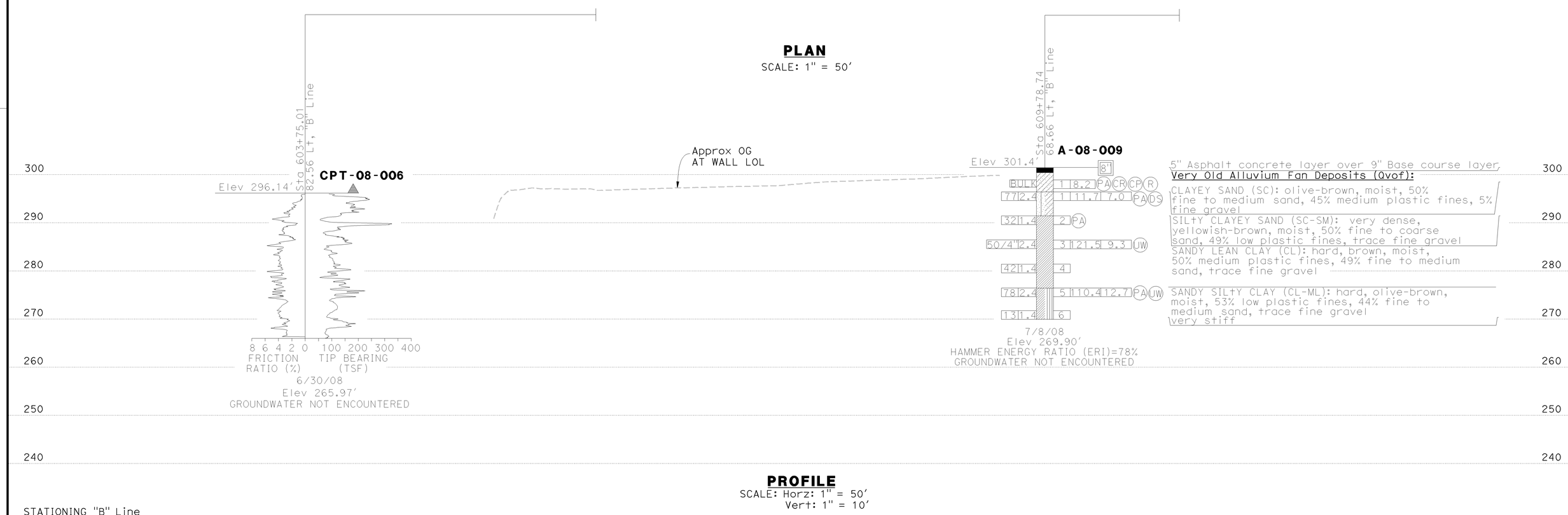

PROFILE
SCALE: Horz: 1" = 50'
Vert: 1" = 10'

STATIONING "B" Line
8 9 600 1 2 3 4 605 6 7 8 9 610 1 2 3

DESIGN OVERSIGHT	DRAWN BY	K. Reyes	R. Bethapudi — FIELD INVESTIGATION BY:
SIGN OFF DATE	CHECKED BY	H. Nofal	DATE

PREPARED FOR THE STATE OF CALIFORNIA DEPARTMENT OF TRANSPORTATION

Ayman Salama — PROJECT ENGINEER

BRIDGE NO. / POST MILES

SOUND WALL NO. 603

LOG OF TEST BORINGS SHEET 1 OF 6 — SW-26

ORIGINAL SCALE IN INCHES FOR REDUCED PLANS 0 1 2 3

CU 12220
EA 0F0321

DISREGARD PRINTS BEARING EARLIER REVISION DATES

REVISION DATES (PRELIMINARY STAGE ONLY): 02/07/09 04/07/09 06/15/09

SHEET OF

FILE => c0F032rc011.dgn

USERNAME => trmartin DATE PLOTTED => 25-JAN-2010 TIME PLOTTED => 10:47

DIST	COUNTY	ROUTE	POST MILES TOTAL PROJECT	SHEET No	TOTAL SHEETS
12	Ora	57	18.4/20.9	345	856

Hisham Nofal 06/15/09
GEOTECHNICAL PROFESSIONAL DATE

REGISTERED PROFESSIONAL ENGINEER
HISHAM M. NOFAL
No. 2765
Exp. 09/30/09
GEOTECHNICAL
STATE OF CALIFORNIA

1-25-10
PLANS APPROVAL DATE

The State of California or its officers or agents shall not be responsible for the accuracy or completeness of electronic copies of this plan sheet.

OCTA
550 S. MAIN STREET
ORANGE, CA 92863

CH2M HILL
6 HUTTON CENTRE DRIVE, SUITE 700
SANTA ANA, CA 92707

BENCHMARK:

HORIZONTAL COORDINATES ARE CCS NAD-83, ZONE 6.
VERTICAL CONTROL BASED ON NORTH AMERICAN VERTICAL DATUM 1988.
Pt 1048: N2273923.989, E6066816.158, Elev 297.698
Pt 1065: N2276096.906, E6066849.261, Elev 345.199

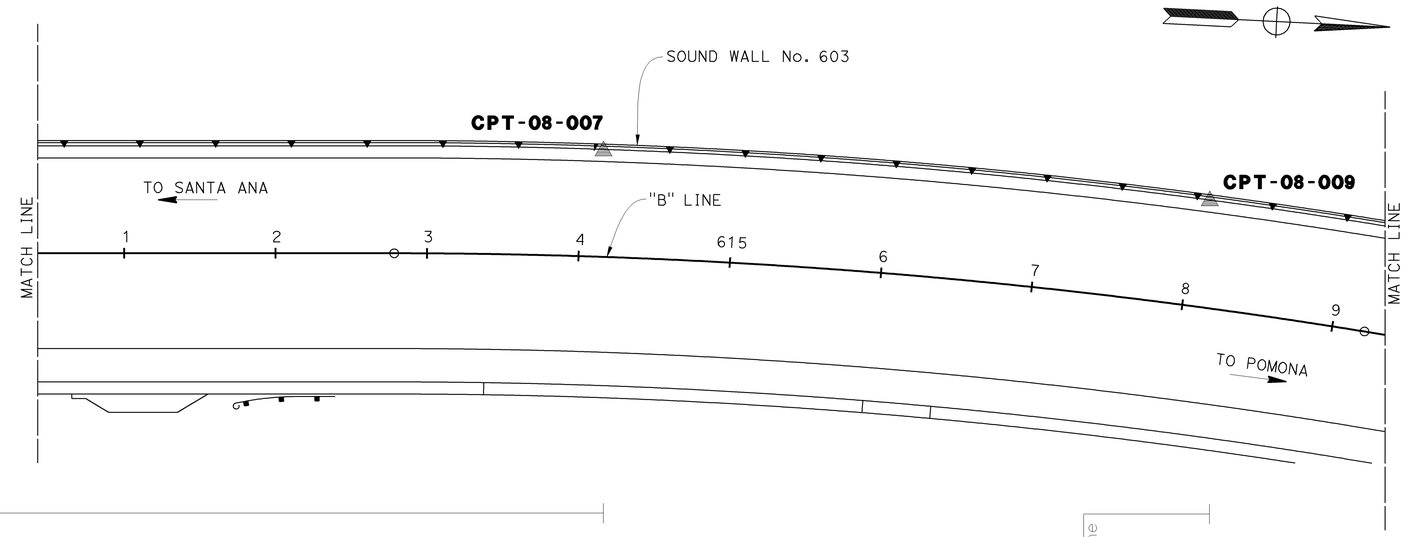

PLAN
SCALE: 1" = 50'

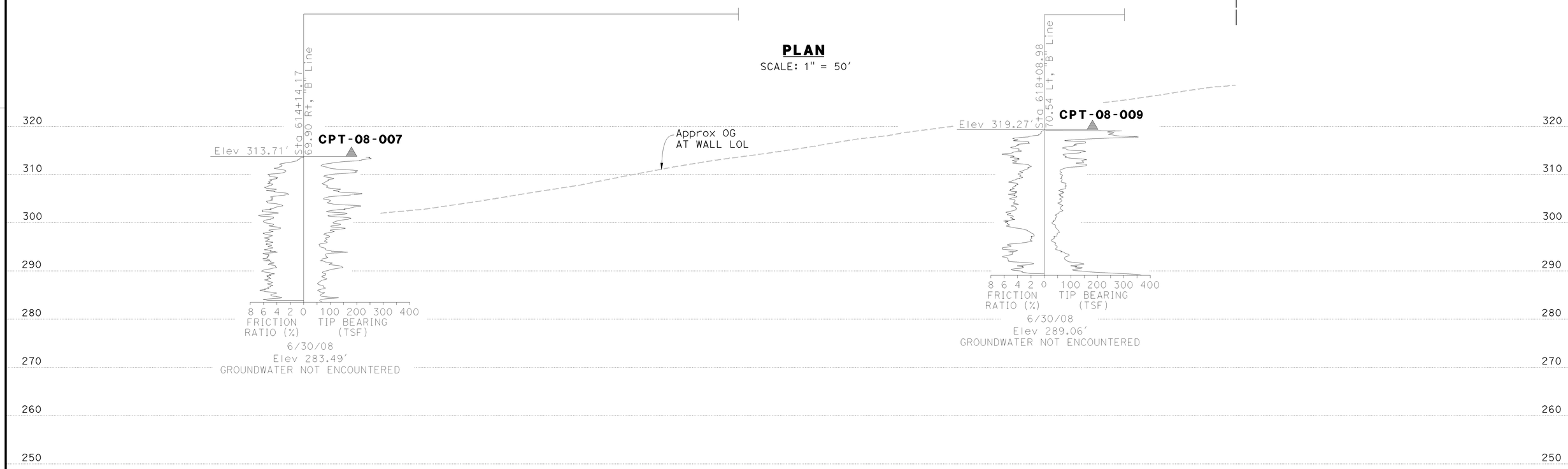

PROFILE
SCALE: Horz: 1" = 50'
Vert: 1" = 10'

STATIONING "B" Line
7 8 9 610 1 2 3 4 615 6 7 8 9 620 1 2

DESIGN OVERSIGHT	DRAWN BY	K. Reyes	R. Bethapudi FIELD INVESTIGATION BY:	PREPARED FOR THE STATE OF CALIFORNIA DEPARTMENT OF TRANSPORTATION	Ayman Salama PROJECT ENGINEER
SIGN OFF DATE	CHECKED BY	H. Nofal	DATE		

BRIDGE NO.
POST MILES

SOUND WALL NO. 603
LOG OF TEST BORINGS SHEET 2 OF 6 SW-27

ORIGINAL SCALE IN INCHES FOR REDUCED PLANS 0 1 2 3

CU 12220
EA 0F0321

DISREGARD PRINTS BEARING EARLIER REVISION DATES
REVISION DATES (PRELIMINARY STAGE ONLY): 02/17/09 04/07/09 06/15/09
SHEET OF

FILE => c0F032rc012.dgn

USERNAME => trmartin DATE PLOTTED => 25-JAN-2010 TIME PLOTTED => 10:47

DIST	COUNTY	ROUTE	POST MILES TOTAL PROJECT	SHEET No	TOTAL SHEETS
12	Ora	57	18.4/20.9	346	856

Hisham Nofal 06/15/09
GEOTECHNICAL PROFESSIONAL DATE

1-25-10
PLANS APPROVAL DATE

REGISTERED PROFESSIONAL ENGINEER HISHAM M. NOFAL No. 2765 Exp. 09/30/09 GEOTECHNICAL STATE OF CALIFORNIA

The State of California or its officers or agents shall not be responsible for the accuracy or completeness of electronic copies of this plan sheet.

OCTA
550 S. MAIN STREET
ORANGE, CA 92863

CH2M HILL
6 HUTTON CENTRE DRIVE, SUITE 700
SANTA ANA, CA 92707

BENCHMARK:

HORIZONTAL COORDINATES ARE CCS NAD-83, ZONE 6.
VERTICAL CONTROL BASED ON NORTH AMERICAN VERTICAL DATUM 1988.
Pt 1048: N2273923.989, E6066816.158, Elev 297.698
Pt 1065: N2276096.906, E6066849.261, Elev 345.199

SAMPLER TYPES:

CALIFORNIA MODIFIED RING SAMPLER
STANDARD PENETRATION TEST SAMPLER

HAMMER TYPE:

AUTOMATIC HAMMER

CORRECTION FACTOR:

TO CONVERT FROM CALIFORNIA MODIFIED RING SAMPLER BLOW COUNT TO EQUIVALENT STANDARD PENETRATION TEST SAMPLER BLOW COUNT, FOR GRANULAR AND COHESIVE SOIL, MULTIPLY BY 0.67.

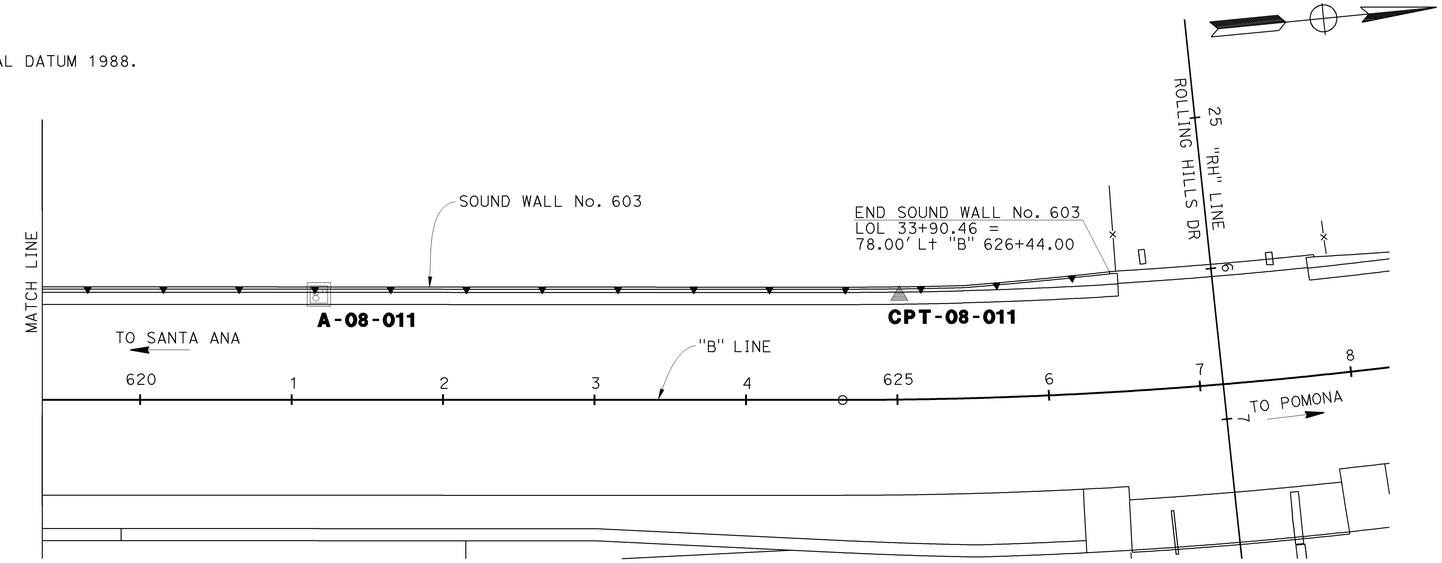

PLAN

SCALE: 1" = 50'

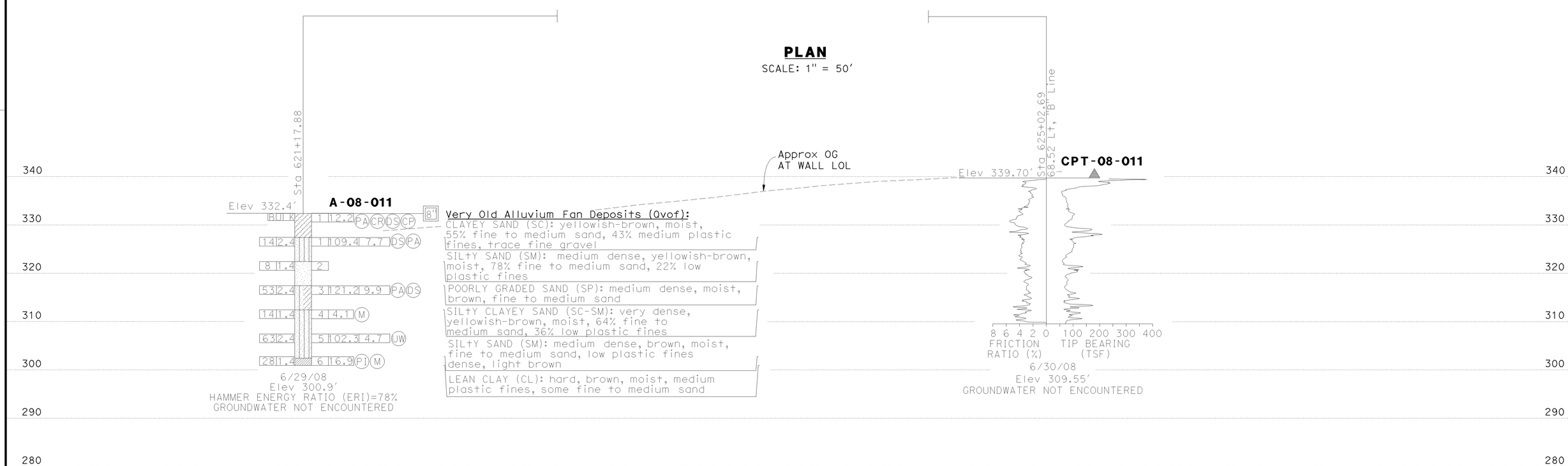

PROFILE

SCALE: Horz: 1" = 50'
Vert: 1" = 10'

STATIONING "B" Line

6 7 8 9 620 1 2 3 4 625 6 7 8 9 630 1

DESIGN OVERSIGHT	DRAWN BY	K. Reyes	R. Bethapudi FIELD INVESTIGATION BY:
SIGN OFF DATE	CHECKED BY	H. Nofal	DATE

PREPARED FOR THE STATE OF CALIFORNIA DEPARTMENT OF TRANSPORTATION

Ayman Salama
PROJECT ENGINEER

BRIDGE NO.
POST MILES

SOUND WALL NO. 603

LOG OF TEST BORINGS SHEET 3 OF 6 SW-28

ORIGINAL SCALE IN INCHES FOR REDUCED PLANS 0 1 2 3

CU 12220
EA 0F0321

DISREGARD PRINTS BEARING EARLIER REVISION DATES

REVISION DATES (PRELIMINARY STAGE ONLY) 02/17/09 04/07/09 06/15/09 SHEET OF

FILE => c0F032rc013.dgn

USERNAME => trmartin DATE PLOTTED => 25-JAN-2010 TIME PLOTTED => 10:47

REFERENCE: CALTRANS SOIL & ROCK LOGGING, CLASSIFICATION, AND PRESENTATION MANUAL (JUNE 2007)

DIST	COUNTY	ROUTE	POST MILES TOTAL PROJECT	SHEET No	TOTAL SHEETS
12	Ora	57	18.4/20.9	347	856

HishamNofal 06/15/09
GEOTECHNICAL PROFESSIONAL DATE

1-25-10
PLANS APPROVAL DATE

REGISTERED PROFESSIONAL ENGINEER HISHAM M. NOFAL No. 2765 Exp. 09/30/09 GEOTECHNICAL STATE OF CALIFORNIA

The State of California or its officers or agents shall not be responsible for the accuracy or completeness of electronic copies of this plan sheet.

OCTA
550 S. MAIN STREET
ORANGE, CA 92863

CH2M HILL
6 HUTTON CENTRE DRIVE, SUITE 700
SANTA ANA, CA 92707

GROUP SYMBOLS AND NAMES

Graphic/Symbol	Group Names	Graphic/Symbol	Group Names
GW	Well-graded GRAVEL Well-graded GRAVEL with SAND	CL	Lean CLAY Lean CLAY with SAND Lean CLAY with GRAVEL SANDY lean CLAY SANDY lean CLAY with GRAVEL GRAVELLY lean CLAY GRAVELLY lean CLAY with SAND
GP	Poorly graded GRAVEL Poorly graded GRAVEL with SAND		
GW-GM	Well-graded GRAVEL with SILT Well-graded GRAVEL with SILT and SAND	CL-ML	SILTY CLAY SILTY CLAY with SAND SILTY CLAY with GRAVEL SANDY SILTY CLAY SANDY SILTY CLAY with GRAVEL GRAVELLY SILTY CLAY GRAVELLY SILTY CLAY with SAND
GW-GC	Well-graded GRAVEL with CLAY (or SILTY CLAY) Well-graded GRAVEL with CLAY and SAND (or SILTY CLAY and SAND)		
GP-GM	Poorly graded GRAVEL with SILT Poorly graded GRAVEL with SILT and SAND	ML	SILT SILT with SAND SILT with GRAVEL SANDY SILT SANDY SILT with GRAVEL GRAVELLY SILT GRAVELLY SILT with SAND
GP-GC	Poorly graded GRAVEL with CLAY (or SILTY CLAY) Poorly graded GRAVEL with CLAY and SAND (or SILTY CLAY and SAND)		
GM	SILTY GRAVEL SILTY GRAVEL with SAND	OL	ORGANIC lean CLAY ORGANIC lean CLAY with SAND ORGANIC lean CLAY with GRAVEL SANDY ORGANIC lean CLAY SANDY ORGANIC lean CLAY with GRAVEL GRAVELLY ORGANIC lean CLAY GRAVELLY ORGANIC lean CLAY with SAND
GC	CLAYEY GRAVEL CLAYEY GRAVEL with SAND		
GC-GM	SILTY, CLAYEY GRAVEL SILTY, CLAYEY GRAVEL with SAND	OL	ORGANIC SILT ORGANIC SILT with SAND ORGANIC SILT with GRAVEL SANDY ORGANIC SILT SANDY ORGANIC SILT with GRAVEL GRAVELLY ORGANIC SILT GRAVELLY ORGANIC SILT with SAND
SW	Well-graded SAND Well-graded SAND with GRAVEL		
SP	Poorly graded SAND Poorly graded SAND with GRAVEL	CH	Fat CLAY Fat CLAY with SAND Fat CLAY with GRAVEL SANDY fat CLAY SANDY fat CLAY with GRAVEL GRAVELLY fat CLAY GRAVELLY fat CLAY with SAND
SW-SM	Well-graded SAND with SILT Well-graded SAND with SILT and GRAVEL		
SW-SC	Well-graded SAND with CLAY (or SILTY CLAY) Well-graded SAND with CLAY and GRAVEL (or SILTY CLAY and GRAVEL)	MH	Elastic SILT Elastic SILT with SAND Elastic SILT with GRAVEL SANDY elastic SILT SANDY elastic SILT with GRAVEL GRAVELLY elastic SILT GRAVELLY elastic SILT with SAND
SP-SM	Poorly graded SAND with SILT Poorly graded SAND with SILT and GRAVEL		
SP-SC	Poorly graded SAND with CLAY (or SILTY CLAY) Poorly graded SAND with CLAY and GRAVEL (or SILTY CLAY and GRAVEL)	OH	ORGANIC fat CLAY ORGANIC fat CLAY with SAND ORGANIC fat CLAY with GRAVEL SANDY ORGANIC fat CLAY SANDY ORGANIC fat CLAY with GRAVEL GRAVELLY ORGANIC fat CLAY GRAVELLY ORGANIC fat CLAY with SAND
SM	SILTY SAND SILTY SAND with GRAVEL		
SC	CLAYEY SAND CLAYEY SAND with GRAVEL	OH	ORGANIC elastic SILT ORGANIC elastic SILT with SAND ORGANIC elastic SILT with GRAVEL SANDY ORGANIC elastic SILT SANDY ORGANIC elastic SILT with GRAVEL GRAVELLY ORGANIC elastic SILT GRAVELLY ORGANIC elastic SILT with SAND
SC-SM	SILTY, CLAYEY SAND SILTY, CLAYEY SAND with GRAVEL		
PT	PEAT	OL/OH	ORGANIC SOIL ORGANIC SOIL with SAND ORGANIC SOIL with GRAVEL SANDY ORGANIC SOIL SANDY ORGANIC SOIL with GRAVEL GRAVELLY ORGANIC SOIL GRAVELLY ORGANIC SOIL with SAND
	COBBLES COBBLES and BOULDERS BOULDERS		

FIELD AND LABORATORY TESTING

- (C) Consolidation (ASTM D 2435)
- (CL) Collapse Potential (ASTM D 5333)
- (CP) Compaction Curve (CTM 216)
- (CR) Corrosivity Testing (CTM 643, CTM 422, CTM 417)
- (CU) Consolidated Undrained Triaxial (ASTM D 4767)
- (DS) Direct Shear (ASTM D 3080)
- (EI) Expansion Index (ASTM D 4829)
- (M) Moisture Content (ASTM D 2216)
- (OC) Organic Content-% (ASTM D 2974)
- (P) Permeability (CTM 220)
- (PA) Particle Size Analysis (ASTM D 422)
- (PI) Plasticity Index (AASHTO T 90) Liquid Limit (AASHTO T 89)
- (PL) Point Load Index (ASTM D 5731)
- (PM) Pressure Meter
- (PP) Pocket Penetrometer
- (R) R-Value (CTM 301)
- (SE) Sand Equivalent (CTM 217)
- (SG) Specific Gravity (AASHTO T 100)
- (SL) Shrinkage Limit (ASTM D 427)
- (SW) Swell Potential (ASTM D 4546)
- (TV) Pocket Torvane
- (UC) Unconfined Compression-Soil (ASTM D 2166) Unconfined Compression-Rock (ASTM D 2938)
- (UU) Unconsolidated Undrained Triaxial (ASTM D 2850)
- (UW) Unit Weight (ASTM D 4767)
- (VS) Vane Shear (AASHTO T 223)

APPARENT DENSITY OF COHESIONLESS SOILS

Description	SPT N_{60} (Blows / 12 inches)
Very loose	0 - 4
Loose	5 - 10
Medium Dense	11 - 30
Dense	31 - 50
Very Dense	> 50

MOISTURE

Description	Criteria
Dry	Absence of moisture, dusty, dry to the touch
Moist	Damp but no visible water
Wet	Visible free water, usually soil is below water table

PERCENT OR PROPORTION OF SOILS

Description	Criteria
Trace	Particles are present but estimated to be less than 5%
Few	5 to 10%
Little	15 to 25%
Some	30 to 45%
Mostly	50 to 100%

PARTICLE SIZE

Description		Size
Boulder		> 12"
Cobble		3" to 12"
Gravel	Coarse	3/4" to 3"
	Fine	No. 4 to 3/4"
Sand	Coarse	No. 10 to No. 4
	Medium	No. 40 to No. 10
	Fine	No. 200 to No. 40

CEMENTATION

Description	Criteria
Weak	Crumbles or breaks with handling or little finger pressure.
Moderate	Crumbles or breaks with considerable finger pressure.
Strong	Will not crumble or break with finger pressure.

CONSISTENCY OF COHESIVE SOILS

Description	Unconfined Compressive Strength (tsf)	Pocket Penetrometer Measurement (tsf)	Torvane Measurement (tsf)	Field Approximation
Very Soft	< 0.25	< 0.25	< 0.12	Easily penetrated several inches by fist
Soft	0.25 to 0.50	0.25 to 0.50	0.12 to 0.25	Easily penetrated several inches by thumb
Medium Stiff	0.50 to 1.0	0.50 to 1.0	0.25 to 0.50	Penetrated several inches by thumb with moderate effort
Stiff	1 to 2	1 to 2	0.50 to 1.0	Readily indented by thumb but penetrated only with great effort
Very Stiff	2 to 4	2 to 4	1.0 to 2.0	Readily indented by thumbnail
Hard	> 4.0	> 4.0	> 2.0	Indented by thumbnail with difficulty

PLASTICITY OF FINE-GRAINED SOILS

Description	Criteria
Nonplastic	A 1/8-inch thread cannot be rolled at any water content.
Low	The thread can barely be rolled and the lump cannot be formed when drier than the plastic limit.
Medium	The thread is easy to roll and not much time is required to reach the plastic limit. The thread cannot be rerolled after reaching the plastic limit. The lump crumbles when drier than the plastic limit.
High	It takes considerable time rolling and kneading to reach the plastic limit. The thread can be rerolled several times after reaching the plastic limit. The lump can be formed without crumbling when drier than the plastic limit.

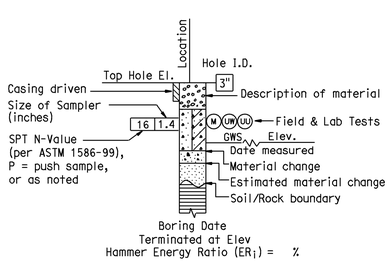

ROTARY BORING

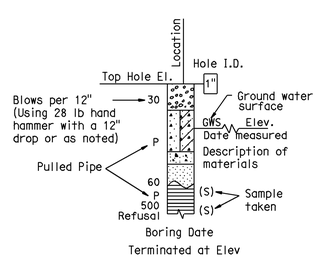

HAND BORING

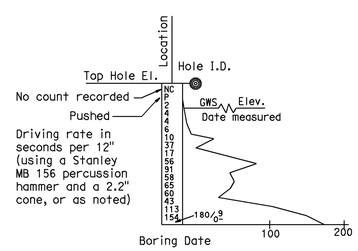

DYNAMIC CONE PENETRATION BORING

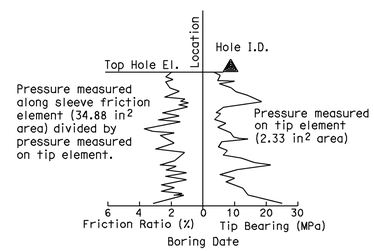

CONE PENETRATION TEST (CPT) SOUNDING

BOREHOLE IDENTIFICATION

Symbol	Hole Type	Description
Size	A	Auger Boring
Size	R P	Rotary drilled boring Rotary percussion boring (air)
Size	R	Rotary drilled diamond core
Size	HD HA	Hand driven (1-inch soil tube) Hand Auger
●	D	Dynamic Cone Penetration Boring
◕	B	Hollow Stem Auger Boring (HSA)
▲	CPT	Cone Penetration Test (ASTM D 5778-95)
□	O	Other

Note: Size in inches.

DESIGN OVERSIGHT

SIGN OFF DATE

DRAWN BY K. Reyes

CHECKED BY H. Nofal

R. Bethapudi
FIELD INVESTIGATION BY:

DATE

PREPARED FOR THE STATE OF CALIFORNIA DEPARTMENT OF TRANSPORTATION

Ayman Salama
PROJECT ENGINEER

BRIDGE NO.

POST MILES

SOIL LEGEND

SOUND WALL No. 603

LOG OF TEST BORINGS SHEET 4 OF 6

SW-29

ORIGINAL SCALE IN INCHES FOR REDUCED PLANS 0 1 2 3

CU 12220
EA 0F0321

DISREGARD PRINTS BEARING EARLIER REVISION DATES

REVISION DATES (PRELIMINARY STAGE ONLY) 02/18/09 04/07/09 06/15/09

SHEET OF

FILE => c0F032rc014.dgn

USERNAME => trmartin DATE PLOTTED => 25-JAN-2010 TIME PLOTTED => 10:47

FED. ROAD DIV. No.	STATE	F.A. PROJECT No.	SHEET No.	TOTAL SHEETS
7	CALIF.			

DIST.	COUNTY	ROUTE	SECTION	SHEET No.	TOTAL SHEETS
07	ORA	57	18.4/20.2	150	180

Date Approved September 30, 1968

BENCH MARK

BM 35-19A-56 Elev. 281.90
Set ch. knob on S.W. cor of drop inlet @ W. end of conc. flume 234' E. of Sta. 53B-74' P Line ℄ 1320'± No. of Pioneer Ave.

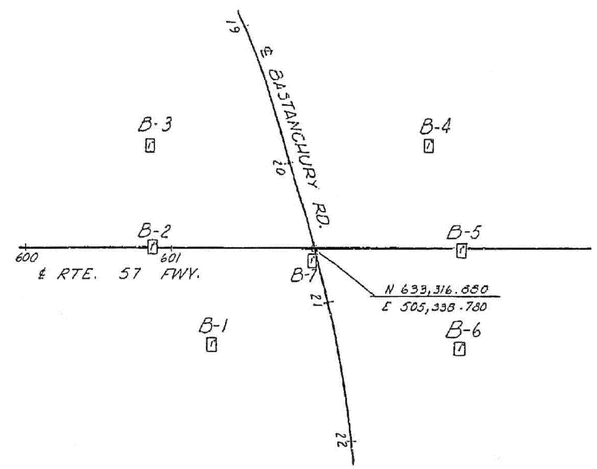

PLAN
Scale 1"=50'

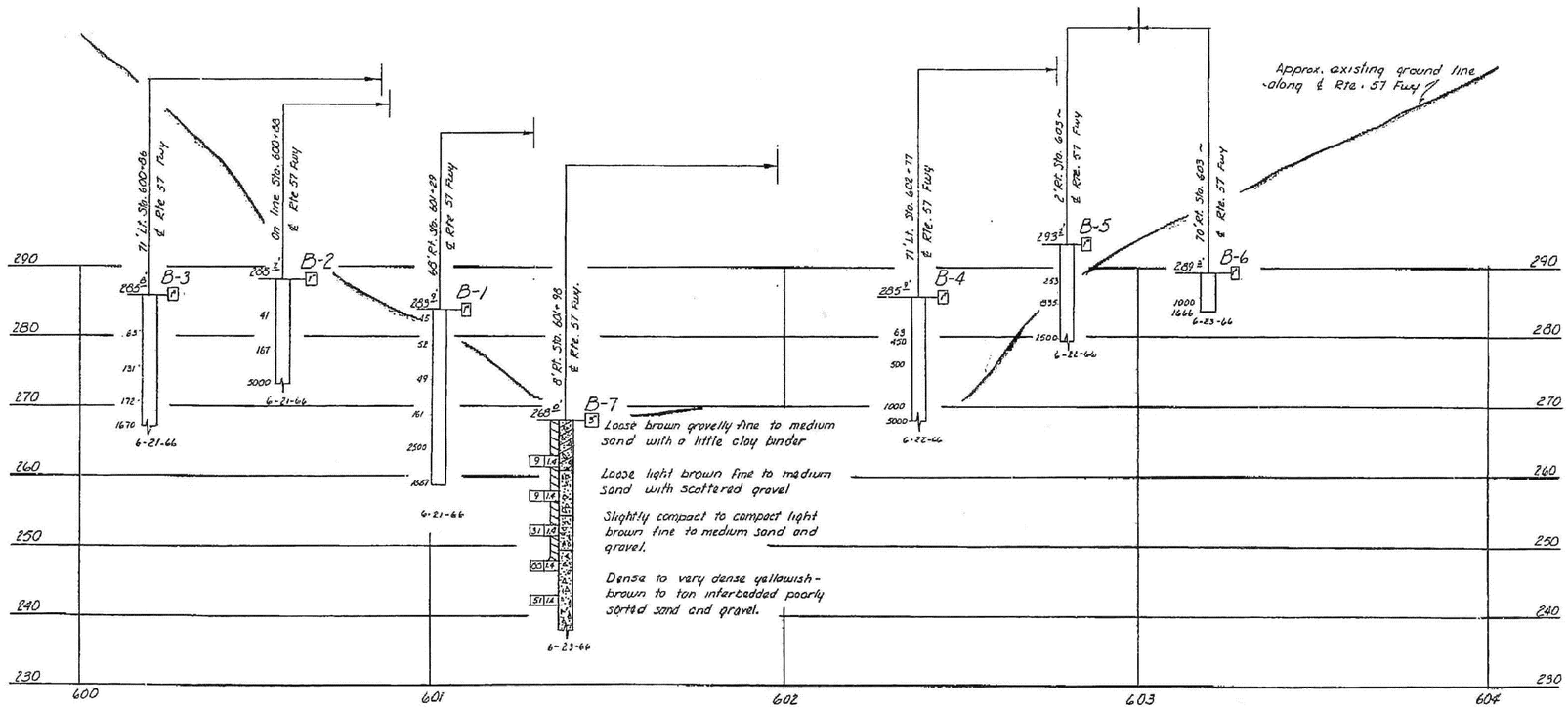

PROFILE
Scale Vert. 1"=10'
Horiz. 1"=20'

INFORMATION ON ACTUAL FOUNDATION CONDITIONS ENCOUNTERED IS ON FILE IN BRIDGE GEOLOGY SECTION

NO AS Built Corrections
AS BUILT
CORRECTIONS BY
CONTRACT NO.
DATE

NO GROUND WATER ENCOUNTERED DURING THIS INVESTIGATION BY BRIDGE DEPT. GEOLOGY SECTION
DATE June 1966

LEGEND OF BORING OPERATIONS

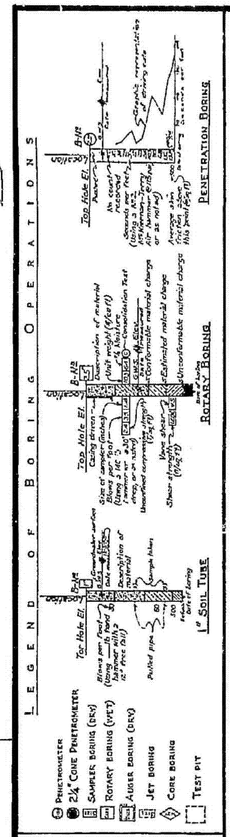

LEGEND OF EARTH MATERIALS

GRAVEL, SILTY CLAY OR CLAYEY SILT, SAND, CLAY AND ORGANIC MATTER, SILT, FILL MATERIAL, CLAY, IGNEOUS ROCK, SANDY CLAY OR CLAYEY SAND, SEDIMENTARY ROCK, SANDY SILT OR SILTY SAND, METAMORPHIC ROCK

CLASSIFICATION OF MATERIAL BASED ON STANDARD GRADE SIZE LIMITS

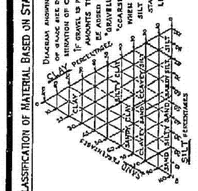

NOTE: Classification of earth material as shown on this sheet is based upon field inspection and is not to be construed to imply mechanical analysis.

FIELD STUDY	by	D. CRAWFORD 6-23-66
DRAWN	by	M. ALLEGRO 7-1-66
CHECKED	by	C. Bacon 7-8-66

Approved Recommendation: Engineering Geologist

BRIDGE DEPARTMENT
ENGINEERING GEOLOGY SECTION

150

DIVISION OF ENGINEERING SERVICES - GEOTECHNICAL SERVICES

As-Built Log of Test Borings sheet is considered an informational document only. As such, the State of California registration seal with signature, license number and registration certificate expiration date confirm that this is a true and accurate copy of the original document. This drawing is available and presented only for the convenience of any bidder, contractor or other interested party.

DIST.	COUNTY	ROUTE	POST MILES-TOTAL PROJECT	Sheet No.	Total Sheets
12	Ora	57	18.4/20.9	348	856

Hisham Nofal — 06/08/09
REGISTERED CIVIL ENGINEER — DATE

REGISTERED PROFESSIONAL ENGINEER HISHAM M. NOFAL No. 2765 Exp. 09/30/11 GEOTECHNICAL STATE OF CALIFORNIA

SOUND WALL NO. 603

LOG OF TEST BORINGS SHEET 5 OF 6 SW-30

NOTE: A COPY OF THIS LOG OF TEST BORINGS IS AVAILABLE AT OFFICE OF STRUCTURE MAINTENANCE AND INVESTIGATIONS, SACRAMENTO, CALIFORNIA

CU: -12220
EA: 0F0231

BRIDGE No.
Sheet of

To accompany plans dated 1-25-10

SW-30

STATE OF CALIFORNIA
DEPARTMENT OF PUBLIC WORKS
DIVISION OF HIGHWAYS

BASTANCHURY ROAD UNDERCROSSING

LOG OF TEST BORINGS

SCALE As Noted | BRIDGE 55-465 | FILE | DRAWING 55465-7

PREL. DRAWING No. PR- 130/67

AS BUILT PLANS
Contract No. 07-032134
Date Completed
Document No. 7000157 8

Champ 07200
W.A. 032131

Dimensions printed by permission of the State Highway Engineer

c0F032rc015.tif

FED ROAD DIV. No.	STATE	F. A. PROJECT NO.	SHEET No.	TOTAL SHEETS
7	CALIF.			

Dist.	County	Route	Section	Sheet No.	Total Sheets
12	Ora.	57	PM 18.2	160	180

Date of Completion: September 30, 1968

LEGEND OF BORING OPERATIONS

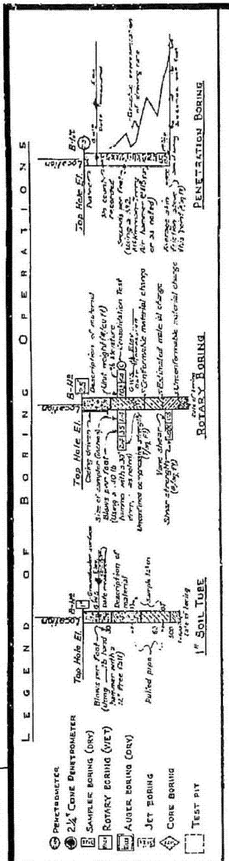

LEGEND OF EARTH MATERIALS

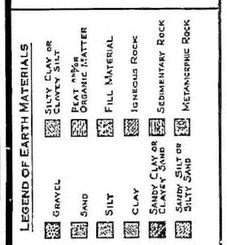

CLASSIFICATION OF MATERIAL BASED ON STANDARD GRADE SIZE LIMITS

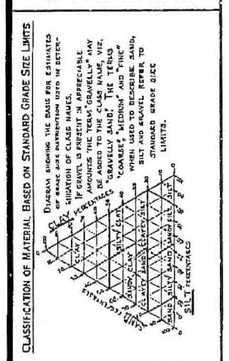

NOTE: Classification of earth material as shown on this sheet is based upon field inspection and is not to be construed to imply mechanical analysis.

FIELD STUDY: H. M. Gill 4-18-67
DRAWN: H. A. Allen 4-17-67
CHECKED: H. R. Cornejo 4-24-67
Approval Recommended: Engineering Geologist

BRIDGE DEPARTMENT
ENGINEERING GEOLOGY SECTION

160

BENCH MARK

B.M. # 629-D-66 Elev. 361.18
Fd. anchor bolt on top of northeast pedestal of Hathaway Oil Well No. 8

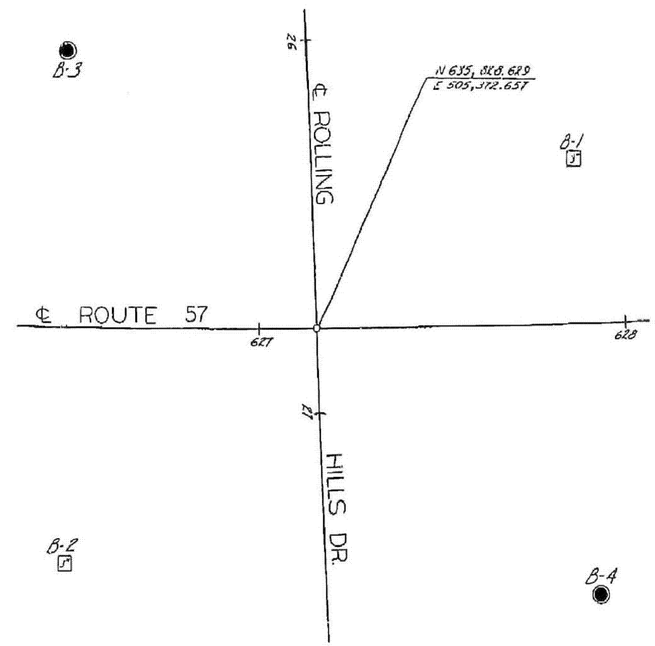

PLAN

Scale: 1" = 20' To accompany plans dated 1-25-10

DIVISION OF ENGINEERING SERVICES - GEOTECHNICAL SERVICES					
As-Built Log of Test Borings sheet is considered an informational document only. As such, the State of California registration seal with signature, license number and registration certificate expiration date confirm that this is a true and accurate copy of the original document. This drawing is available and presented only for the convenience of any bidder, contractor or other interested party.					
DIST.	COUNTY	ROUTE	POST MILES-TOTAL PROJECT	Sheet No.	Total Sheets
12	Ora	57	18.4/20.9	349	856
Hisham M. Nofal — REGISTERED CIVIL ENGINEER			06/08/09 — DATE		
SOUND WALL NO. 603					
LOG OF TEST BORINGS SHEET 6 OF 6				SW-31	
NOTE: A COPY OF THIS LOG OF TEST BORINGS IS AVAILABLE AT OFFICE OF STRUCTURE MAINTENANCE AND INVESTIGATIONS, SACRAMENTO, CALIFORNIA		CU: 12220 EA: 0F0321		BRIDGE No.	
				Sheet	of

REGISTERED PROFESSIONAL ENGINEER — HISHAM M. NOFAL — No. 2765 — Exp. 09/30/11 — GEOTECHNICAL — STATE OF CALIFORNIA

NO GROUND WATER ENCOUNTERED DURING THIS INVESTIGATION
BRIDGE DEPT. GEOLOGY SECTION
DATE April 1, 1967

INFORMATION ON ACTUAL FOUNDATION CONDITIONS ENCOUNTERED IS ON FILE IN BRIDGE GEOLOGY SECTION

PROFILE

Scale: Vert. 1" = 10'
Horiz. 1" = 20'

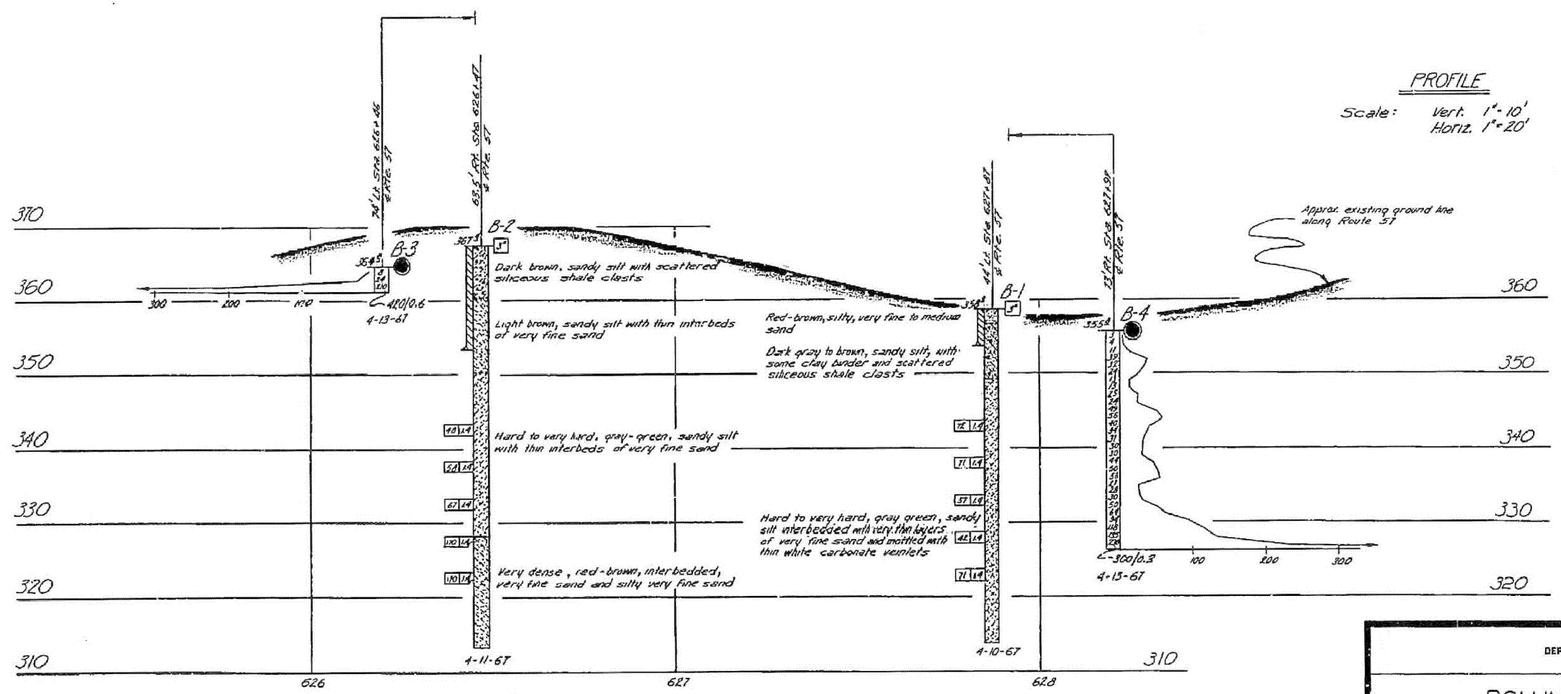

SW-31

STATE OF CALIFORNIA
DEPARTMENT OF PUBLIC WORKS
DIVISION OF HIGHWAYS

ROLLING HILLS DRIVE UNDERCROSSING

LOG OF TEST BORINGS

SHEET	OF	SCALE: As Noted	BRIDGE 55-0483	FILE	DRAWING 55-0483-7
10	10				

AS BUILT PLANS
Contract No. 07-032134
Date Completed
Document No. 70001578

Chg. 07208
W.A. 038131
FILE => $REQUEST

Disregard prints bearing earlier numbers → PREL. DRAWING No. PR-

USERNAME => $USER DATE PLOTTED => $DATE TIME PLOTTED => $TIME

c0F032rc016.tif

Dist	COUNTY	ROUTE	POST MILES TOTAL PROJECT	SHEET No.	TOTAL SHEETS
12	Ora	57	18.4/20.9	350	856

REGISTERED CIVIL ENGINEER 06/15/09 DATE

1-25-10
PLANS APPROVAL DATE

REGISTERED PROFESSIONAL ENGINEER JOHN W. POWELL No. C71463 Exp.12/31/09 CIVIL STATE OF CALIFORNIA

THE STATE OF CALIFORNIA OR ITS OFFICERS OR AGENTS SHALL NOT BE RESPONSIBLE FOR THE ACCURACY OR COMPLETENESS OF SCANNED COPIES OF THIS PLAN SHEET.

CH2M HILL
6 HUTTON CENTRE DRIVE,
SUITE 700
SANTA ANA, CA 92707

OCTA
550 S. MAIN STREET
ORANGE, CA 92863

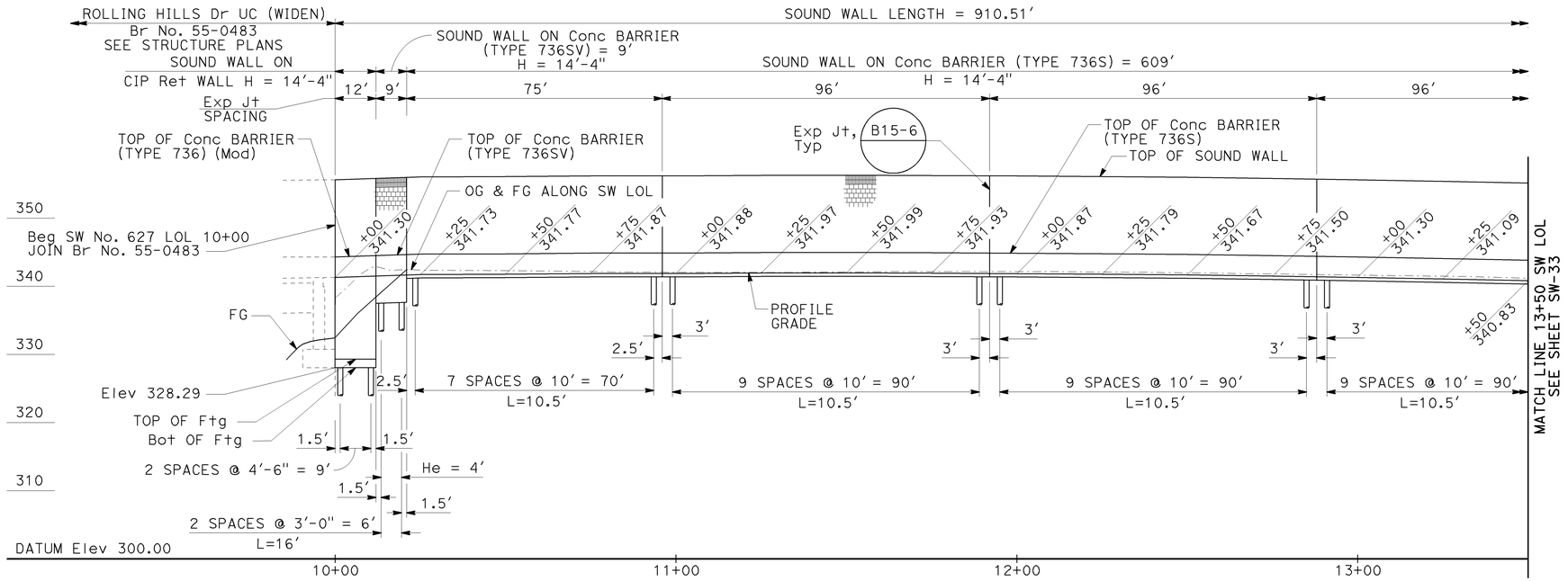

DEVELOPED ELEVATION

SCALE: Horiz 1" = 20'
Vert 1" = 10'

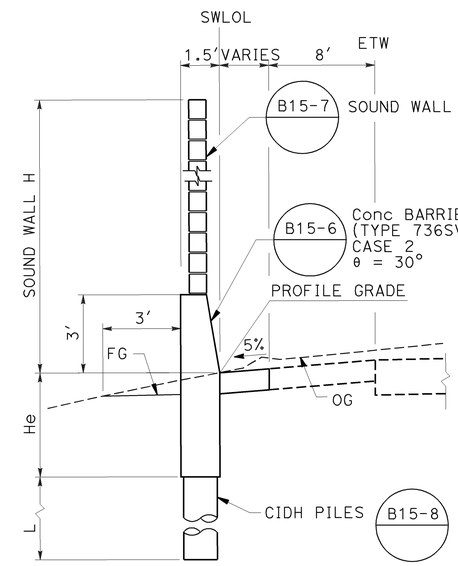

SECTION

Sta 10+12.00 to 10+21.00
Sta 16+30.00 to 19+10.51
NO SCALE

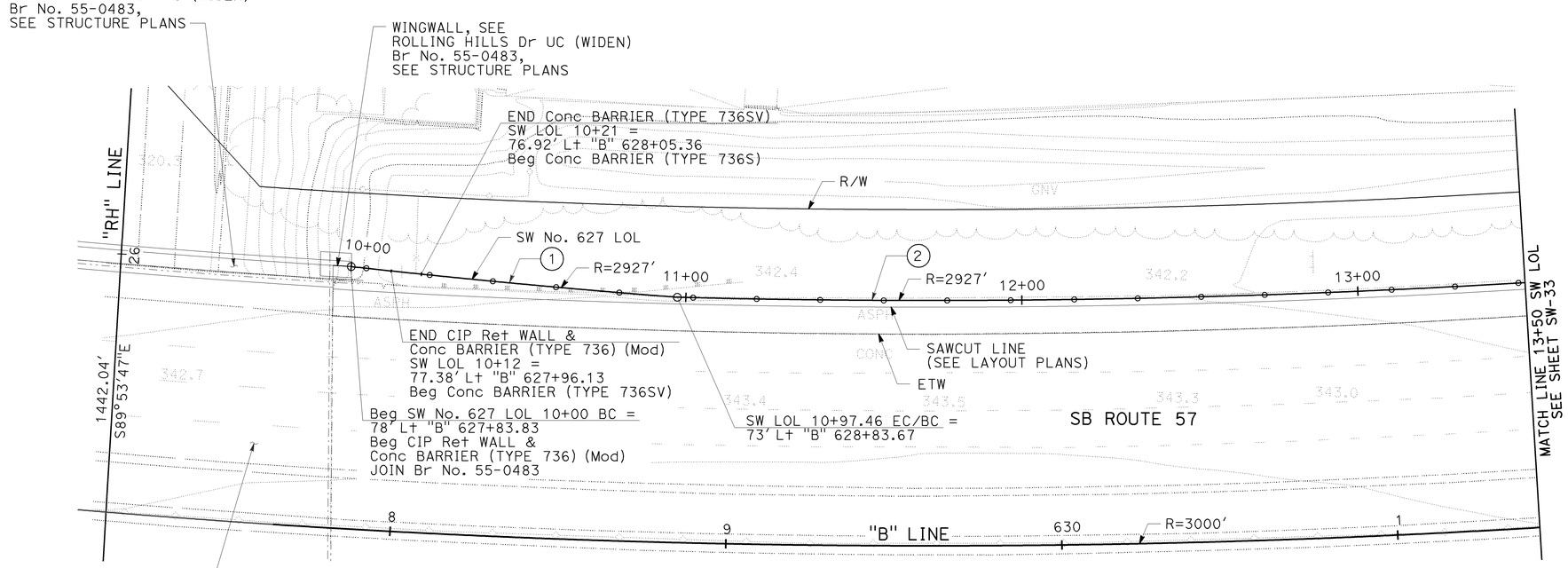

No.	R	Δ	T	L
1	2927.00'	1°54'28"	48.73'	97.46'
2	2927.00'	15°54'56"	409.16'	813.05'

PLAN

SCALE: 1" = 20'

THIS PLAN ACCURATE FOR SOUND WALL WORK ONLY.

LEGEND:

(X) CURVE NUMBER

NOTES:

1. CONTRACTOR TO FIELD VERIFY ALL UTILITY LOCATIONS PRIOR TO SOUND WALL CONSTRUCTION.
2. FOR SOUNDWALL ON Conc BARRIER (TYPE 736S) SECTION, SEE SHEET SW-30.
3. FOR SOUNDWALL ON CIP RETAINING WALL SECTION, SEE SHEET SW-31.

SOUND WALL PLAN
SW No. 627

SCALE AS SHOWN

SW-32

STATE OF CALIFORNIA - DEPARTMENT OF TRANSPORTATION
Caltrans

CONSULTANT FUNCTIONAL SUPERVISOR: THOMAS IONTA
CALCULATED-DESIGNED BY: JOHN POWELL
CHECKED BY: MARK FRICKE
REVISED BY
DATE REVISED

LAST REVISION 06-15-09
DATE PLOTTED => 25-JAN-2010
TIME PLOTTED => 10:48

Dist	COUNTY	ROUTE	POST MILES TOTAL PROJECT	SHEET No.	TOTAL SHEETS
12	Ora	57	18.4/20.9	351	856

REGISTERED CIVIL ENGINEER 06/15/09 DATE

1-25-10
PLANS APPROVAL DATE

REGISTERED PROFESSIONAL ENGINEER
JOHN W. POWELL
No. C71463
Exp.12/31/09
CIVIL
STATE OF CALIFORNIA

THE STATE OF CALIFORNIA OR ITS OFFICERS OR AGENTS SHALL NOT BE RESPONSIBLE FOR THE ACCURACY OR COMPLETENESS OF SCANNED COPIES OF THIS PLAN SHEET.

CH2M HILL
6 HUTTON CENTRE DRIVE,
SUITE 700
SANTA ANA, CA 92707

OCTA
550 S. MAIN STREET
ORANGE, CA 92863

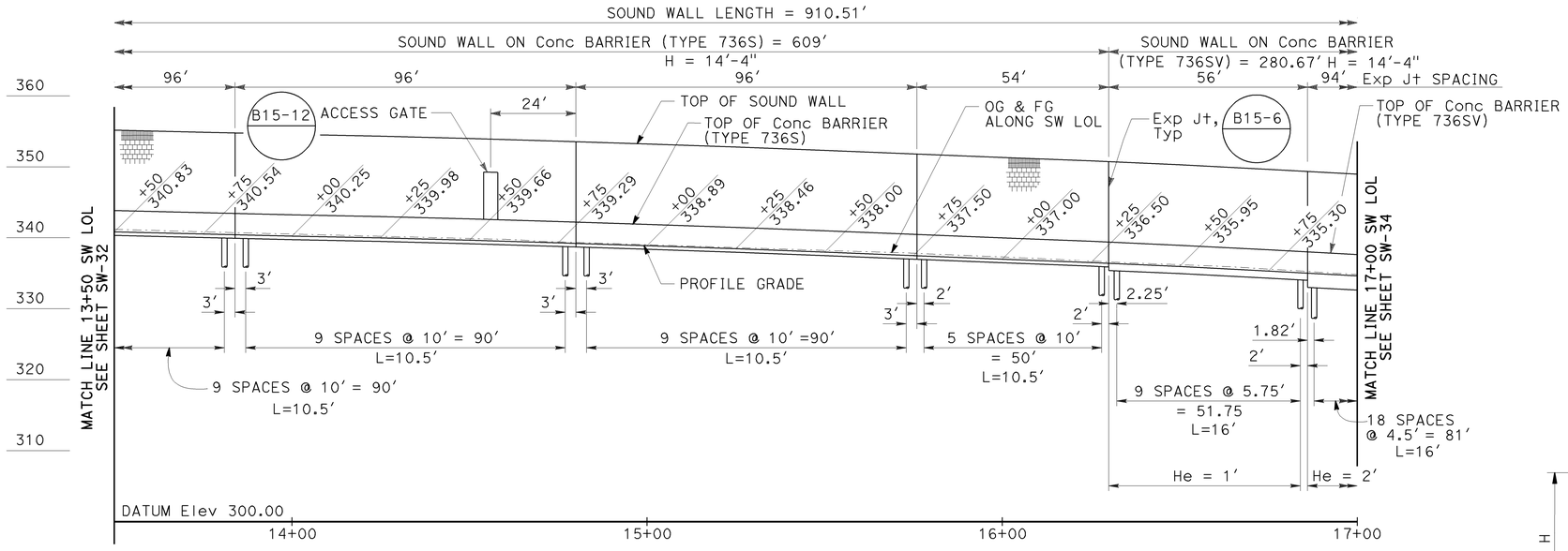

DEVELOPED ELEVATION

SCALE: Horiz 1" = 20′
Vert 1" = 10′

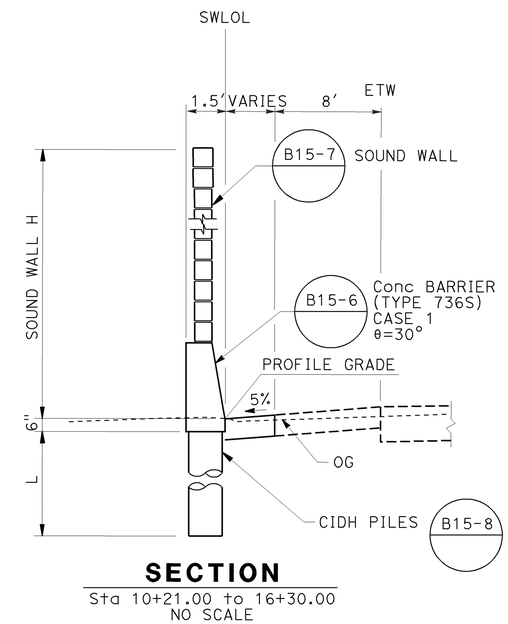

SECTION

Sta 10+21.00 to 16+30.00
NO SCALE

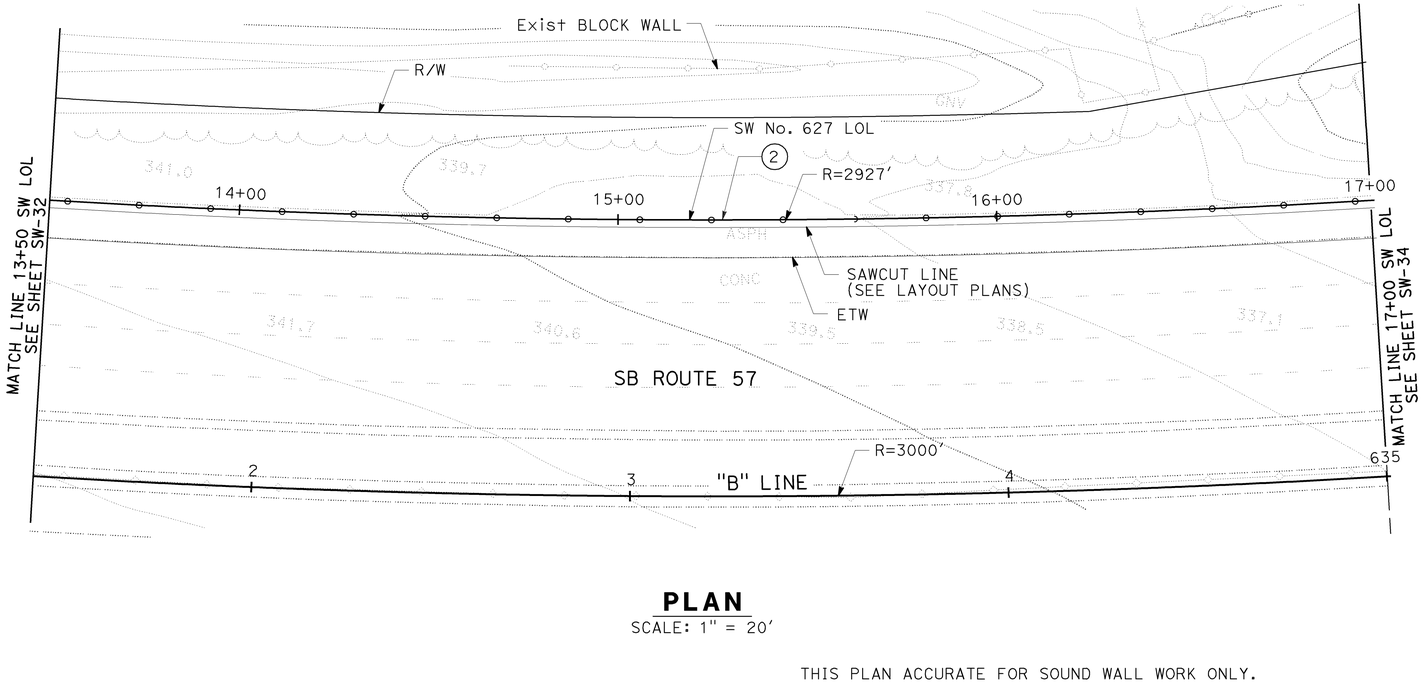

PLAN

SCALE: 1" = 20′

NOTES:

1. FOR NOTES, CURVE DATA AND LEGEND, SEE SHEET SW-32.
2. FOR SOUNDWALL Conc BARRIER (TYPE 736SV) SECTION, SEE SHEET SW-32.

THIS PLAN ACCURATE FOR SOUND WALL WORK ONLY.

SOUND WALL PLAN
SW No. 627

SCALE AS SHOWN

SW-33

STATE OF CALIFORNIA - DEPARTMENT OF TRANSPORTATION
Caltrans

CONSULTANT FUNCTIONAL SUPERVISOR: THOMAS IONTA
CALCULATED-DESIGNED BY: JOHN POWELL
CHECKED BY: MARK FRICKE
REVISED BY
DATE REVISED

LAST REVISION 06-15-09
DATE PLOTTED => 25-JAN-2010
TIME PLOTTED => 10:48

Dist	COUNTY	ROUTE	POST MILES TOTAL PROJECT	SHEET No.	TOTAL SHEETS
12	Ora	57	18.4/20.9	352	856

REGISTERED CIVIL ENGINEER 06/15/09 DATE

1-25-10
PLANS APPROVAL DATE

REGISTERED PROFESSIONAL ENGINEER
JOHN W. POWELL
No. C71463
Exp.12/31/09
CIVIL
STATE OF CALIFORNIA

THE STATE OF CALIFORNIA OR ITS OFFICERS OR AGENTS SHALL NOT BE RESPONSIBLE FOR THE ACCURACY OR COMPLETENESS OF SCANNED COPIES OF THIS PLAN SHEET.

CH2M HILL
6 HUTTON CENTRE DRIVE,
SUITE 700
SANTA ANA, CA 92707

OCTA
550 S. MAIN STREET
ORANGE, CA 92863

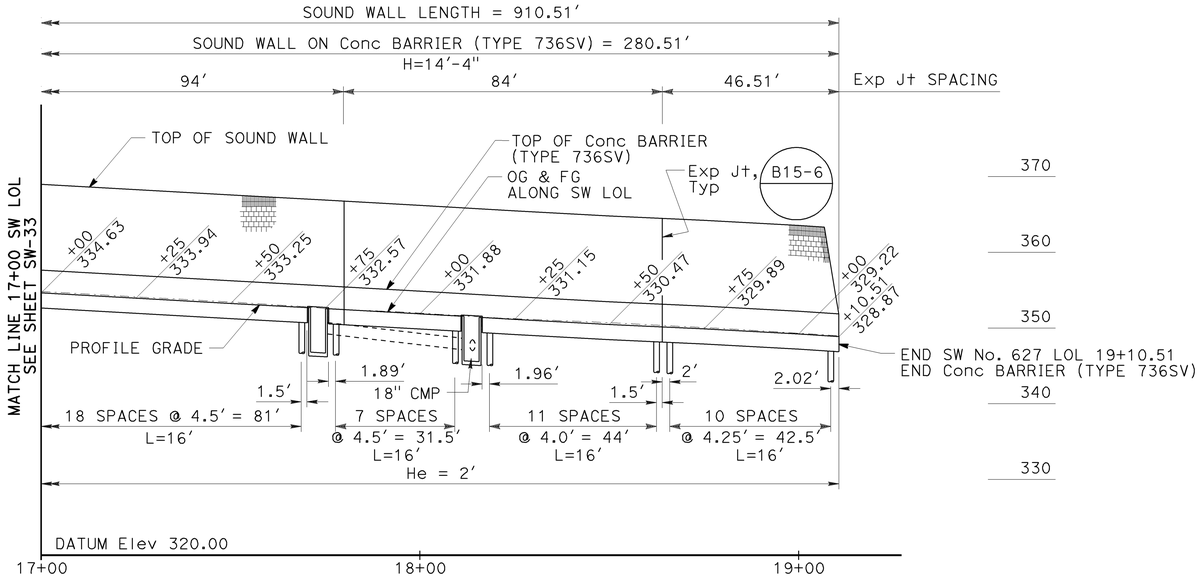

DEVELOPED ELEVATION

Horiz 1"=20'
Vert 1"=10'

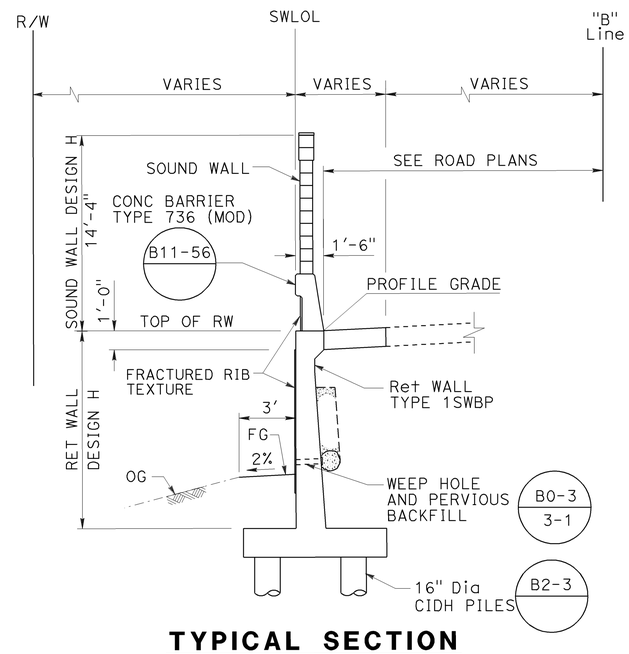

TYPICAL SECTION

1/4"=1'-0"
10+00.00 TO 10+12.00

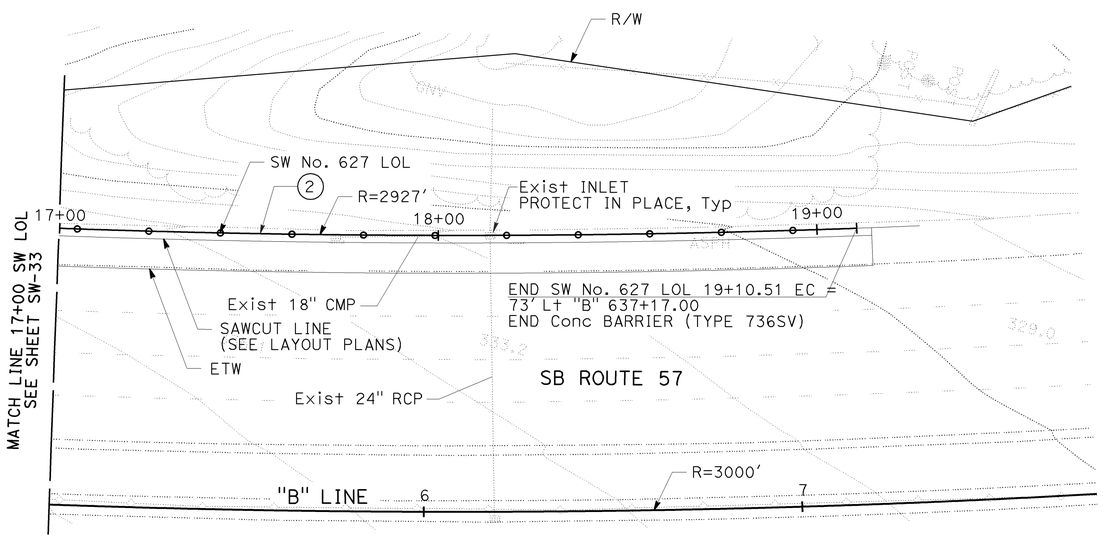

PLAN

1"=20'

NOTES:

1. FOR NOTES, CURVE DATA AND LEGEND, SEE SHEET SW-32.
2. FOR SOUNDWALL ON Conc BARRIER (TYPE 7636SV) SECTION, SEE SHEET SW-32.

SOUND WALL PLAN
SW No. 627

SCALE AS SHOWN

SW-34

THIS PLAN ACCURATE FOR SOUND WALL WORK ONLY.

REVISED BY | DATE REVISED
JOHN POWELL | MARK FRICKE
CALCULATED-DESIGNED BY | CHECKED BY
CONSULTANT FUNCTIONAL SUPERVISOR | THOMAS IONTA
STATE OF CALIFORNIA - DEPARTMENT OF TRANSPORTATION
Caltrans

LAST REVISION 06-15-09
DATE PLOTTED => 25-JAN-2010
TIME PLOTTED => 10:51

Dist	COUNTY	ROUTE	POST MILES TOTAL PROJECT	SHEET No.	TOTAL SHEETS
12	Ora	57	18.4/20.9	353	856

REGISTERED CIVIL ENGINEER 06/15/09 DATE

1-25-10
PLANS APPROVAL DATE

REGISTERED PROFESSIONAL ENGINEER JOHN W. POWELL No. C71463 Exp.12/31/09 CIVIL STATE OF CALIFORNIA

THE STATE OF CALIFORNIA OR ITS OFFICERS OR AGENTS SHALL NOT BE RESPONSIBLE FOR THE ACCURACY OR COMPLETENESS OF SCANNED COPIES OF THIS PLAN SHEET.

CH2M HILL
6 HUTTON CENTRE DRIVE,
SUITE 700
SANTA ANA, CA 92707

OCTA
550 S. MAIN STREET
ORANGE, CA 92863

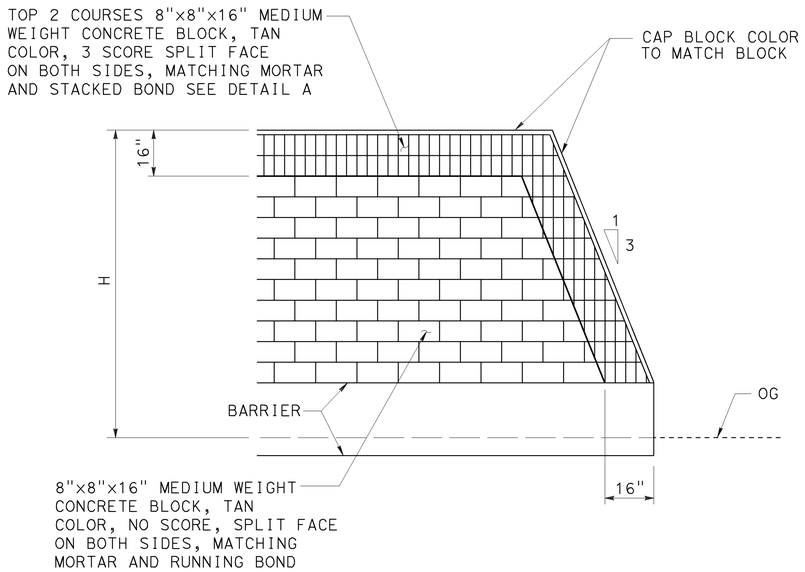

END WALL ELEVATION

CONCRETE BLOCK TYPE, COLOR AND PLACEMENT

NO SCALE

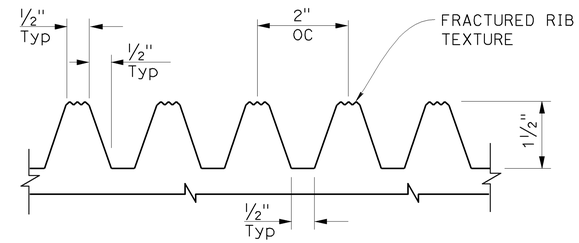

FRACTURED RIB TEXTURE DETAIL

(ELASTOMER FORMLINER)

PILE DATA TABLE					
LOCATION	PILE TYPE	NOMINAL RESISTANCE (kips)		DESIGN TIP ELEVATION (Ft)	SPECIFIED TIP ELEVATION (Ft)
		COMPRESSION	TENSION		
Sta 10+00 TO 10+12	16" CIDH Conc Pile	180	0	317.08(a) NA(c) 316.00(d)	316.00

DESIGN TIP ELEVATION IS CONTROLLED BY FOLLOWING DEMAND:
(a) COMPRESSION; (c) SETTLEMENT; (d) LATERAL CAPACITY.

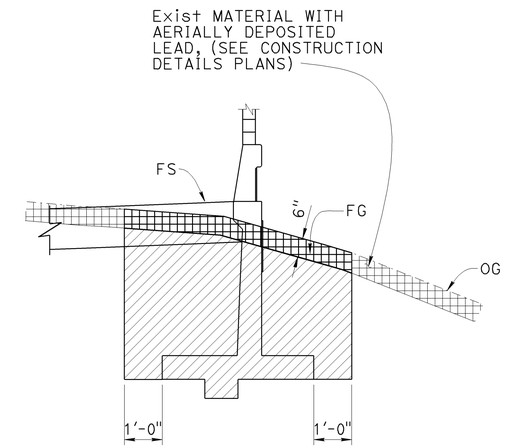

IN FILL

LIMITS OF PAYMENT OF EXCAVATION FOR RETAINING WALL

NO SCALE

NOTE:
FOR BACKFILL SEE CALTRANS STANDARD PLANS

LEGEND

INDICATES STRUCTURE EXCAVATION (TYPE Y-1) (AERIALLY DEPOSITED LEAD)

STRUCTURE EXCAVATION (RETAINING WALL)

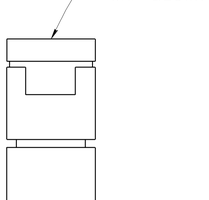

CAP BLOCK DETAIL

NO SCALE

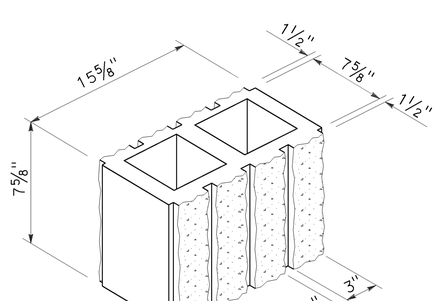

DETAIL A

NO SCALE

8" WIDE 3-SCORE SPLIT FACE BOTH SIDES

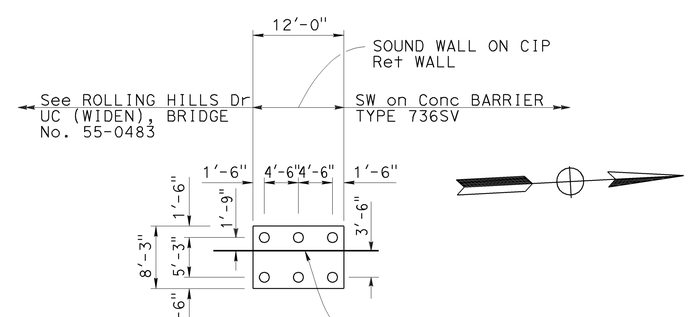

PILE LAYOUT PLAN

1"=10'
Sta 10+00 TO 10+12

SOUND WALL DETAILS
SW No. 627

SCALE AS SHOWN

SW-35

STATE OF CALIFORNIA - DEPARTMENT OF TRANSPORTATION
Caltrans
CONSULTANT FUNCTIONAL SUPERVISOR: THOMAS IONTA
CALCULATED-DESIGNED BY: JOHN POWELL
CHECKED BY: MARK FRICKE
REVISED BY
DATE REVISED

LAST REVISION 06-15-09
DATE PLOTTED => 25-JAN-2010
TIME PLOTTED => 10:51

Dist	COUNTY	ROUTE	POST MILES TOTAL PROJECT	SHEET No.	TOTAL SHEETS
12	Ora	57	18.4/20.9	354	856

REGISTERED CIVIL ENGINEER 06/15/09 DATE

1-25-10
PLANS APPROVAL DATE

REGISTERED PROFESSIONAL ENGINEER JOHN W. POWELL No. C71463 Exp.12/31/09 CIVIL STATE OF CALIFORNIA

THE STATE OF CALIFORNIA OR ITS OFFICERS OR AGENTS SHALL NOT BE RESPONSIBLE FOR THE ACCURACY OR COMPLETENESS OF SCANNED COPIES OF THIS PLAN SHEET.

CH2M HILL
6 HUTTON CENTRE DRIVE,
SUITE 700
SANTA ANA, CA 92707

OCTA
550 S. MAIN STREET
ORANGE, CA 92863

TABLE OF PILE SPACING: 16" CIDH - CONCRETE PILES	
DESIGN H	12'
W	8'-3"
C	3'-3"
B	5'-0"
F	1'-9"
M	1'-9"
N	3'-6"
ROW 1	4'-6"
ROW 2	4'-6"
ROW 3	
ROW 4	
CONFIGURATION	I

TABLE 1: TABLE OF REINFORCING STEEL DIMENSIONS AND DATA	
	STEM WITH HAUNCH
DESIGN H	12'
STEM BATTER	½:12
STEM THICKNESS @ TOP	1'-6"
STEM THICKNESS @ HAUNCH	1'-0"
(a) BARS	#6 @ 14
X	
Y	
(b) BARS	#6 @ 14
X	CONT
Y	CONT
(c) BARS	
(d) BARS	#5 @ 12
TOTAL (e) BARS	6 #5
TOTAL (f) BARS	6 #5

DESIGN DATA

DESIGN: LOAD FACTOR DESIGN (LFD)

CONCRETE: REINFORCED CONCRETE, f'c = 3600 psi
fy = 60000 psi

LOADING CASE:

LEVEL GROUND WITH 240 psf LIVE LOAD SURCHARGE AND 14'-4" SOUNDWALL.
SEISMIC LOAD = 0.57 DEAD LOAD
WIND LOAD = 33 psf
DEAD LOAD OF SOUNDWALL = 1000 lb/lf
DEAD LOAD OF BARRIER = 470 lb/lf

SEISMIC LOAD: SOIL

Kh = 0.3g
Kv = 0.0
Kae : MONONOBE-OKABE METHOD

SOIL: Ø = 34° γ = 120 pcf

EQUIVALENT FLUID PRESSURE:
= 36 pcf FOR DETERMINATION OF TOE PRESSURE
= 27 pcf FOR DETERMINATION OF HEEL PRESSURE

LOAD COMBINATIONS:

GROUP A : βD+1.7E+1.7SC
GROUP B : βD+1.7E+1.7SC+W
GROUP C :
STEM : 1.0D+1.0E+1.0EQD+1.0EQE
FOOTING : D+PYM

WHERE : β = 1.0 OR 1.3 WHICHEVER CONTROLS DESIGN
D = DEAD LOAD
E = LATERAL EARTH PRESSURE
SC = SURCHARGE
W = WIND LOAD
EQD = SEISMIC DEAD LOAD
EQE = SEISMIC LATERAL EARTH PRESSURE
PYM = PROBABLE YIELD MOMENT (1.3* NOMINAL YIELD MOMENT OF STEM)

CONT = CONTINUOUS
* = (a) AND (b) BARS ARE BUNDLED TOGETHER.
** = ALTERNATE (a) AND (b) BARS AS SHOWN IN DETAIL A.

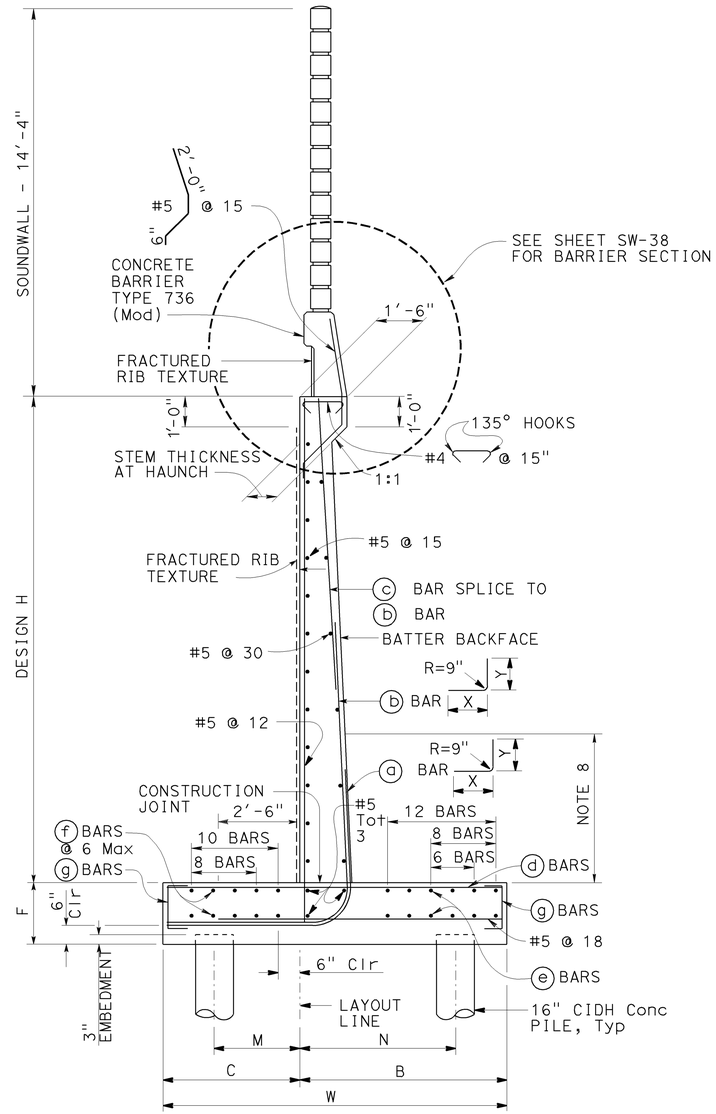

16" CIDH PILE FOOTING SECTION

NO SCALE

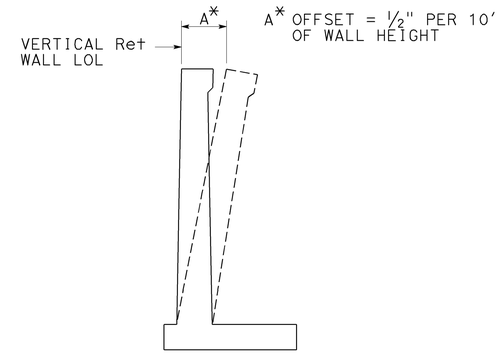

WALL OFFSET

NO SCALE
VALUES FOR OFFSETTING FORMS TO BE DETERMINED BY THE ENGINEER

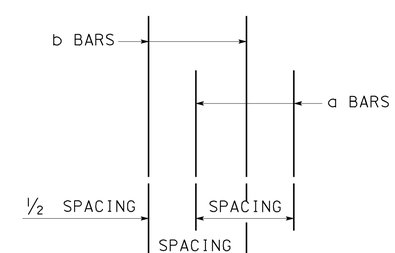

DETAIL A

NO SCALE

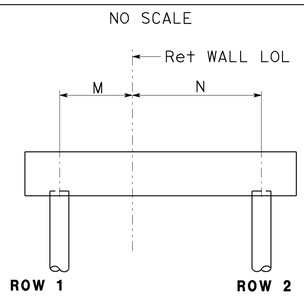

PILE CONFIGURATION

GENERAL NOTES

1. 16" CIDH-CONCRETE PILES WERE USED FOR THE DESIGN.
2. MINIMUM DISTANCE BETWEEN CENTER PILE AND EDGE OF FOOTING IS 1'-6".
3. REDUCTION FACTORS:
   GROUPS A & B : Ø = 0.75
   GROUP C & X1: Ø = 1.0
4. LATERAL RESISTANCE OF EACH PILE:
   GROUPS A & B : = 30 kip
   GROUP C & X1: = 40 kip
5. MAXIMUM SPACING BETWEEN PILES IS SHOWN IN THE TABLE. REDUCE TO SUIT THE LENGTH OF FOOTING.
6. MINIMUM DISTANCE BETWEEN ANY TWO PILES IS 4'-0".
7. LIMIT OF NO SPLICING FOR REBARS = 3 TIMES THE BOTTOM THICKNESS OF STEM.

NOTES

1. FOR SOUNDWALL AND RETAINING WALL ARCHITECTURAL FINISH OR TEXTURE, SEE DETAILS ELSEWHERE IN PROJECT PLANS.
2. FOR DETAILS NOT SHOWN AND DRAINAGE NOTES, SEE B3-8
3. FOOTING COVER, 1'-6" MINIMUM.
4. FOR SOUNDWALL AND BARRIER REINFORCEMENT, SEE SHEETS SW-37 & SW-38.

SOUND WALL DETAILS
RETAINING WALL DETAILS
SW No. 627
SCALE AS SHOWN

SW-36

STATE OF CALIFORNIA - DEPARTMENT OF TRANSPORTATION
Caltrans
CONSULTANT FUNCTIONAL SUPERVISOR: THOMAS IONTA
CALCULATED-DESIGNED BY: JOHN POWELL
CHECKED BY: MARK FRICKE
REVISED BY
DATE REVISED

LAST REVISION 06-15-09
DATE PLOTTED => 25-JAN-2010
TIME PLOTTED => 10:51

Dist	COUNTY	ROUTE	POST MILES TOTAL PROJECT	SHEET No.	TOTAL SHEETS
12	Ora	57	18.4/20.9	355	856

REGISTERED CIVIL ENGINEER 06/15/09 DATE

1-25-10
PLANS APPROVAL DATE

REGISTERED PROFESSIONAL ENGINEER
JOHN W. POWELL
No. C71463
Exp.12/31/09
CIVIL
STATE OF CALIFORNIA

THE STATE OF CALIFORNIA OR ITS OFFICERS OR AGENTS SHALL NOT BE RESPONSIBLE FOR THE ACCURACY OR COMPLETENESS OF SCANNED COPIES OF THIS PLAN SHEET.

CH2M HILL
6 HUTTON CENTRE DRIVE,
SUITE 700
SANTA ANA, CA 92707

OCTA
550 S. MAIN STREET
ORANGE, CA 92863

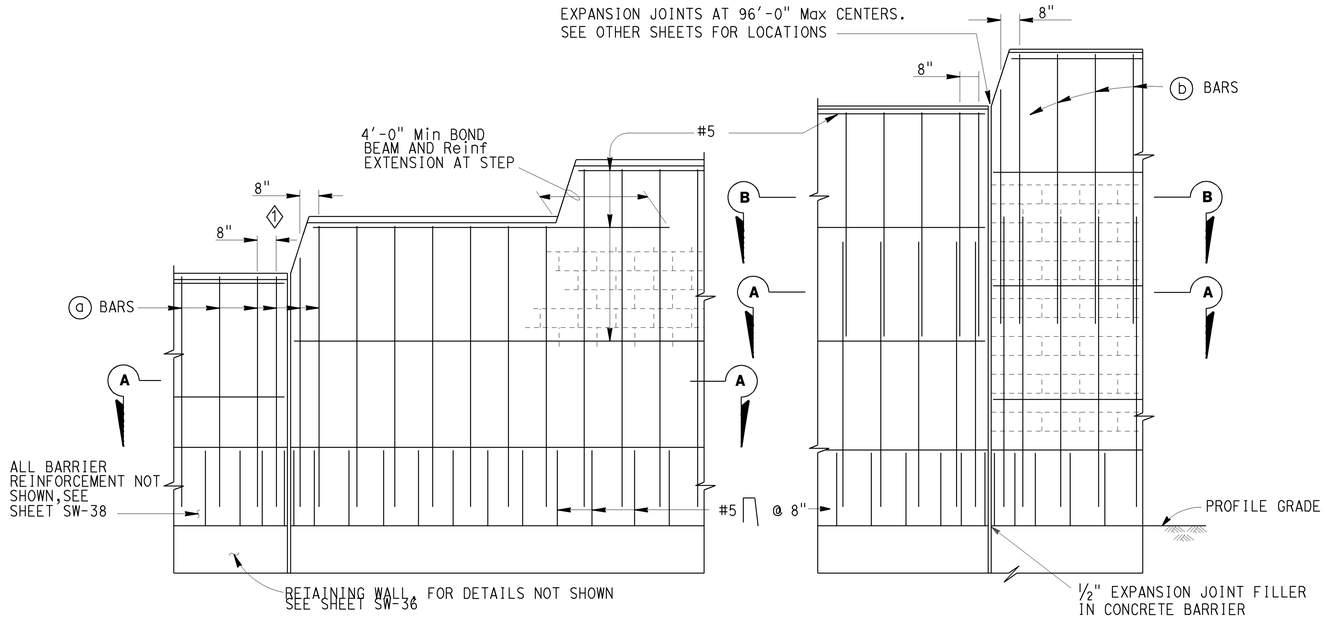

PART ELEVATIONS

SOUNDWALL REINFORCEMENT TABLE

MAXIMUM H	ⓐ BARS @ 1'-4" Max	ⓑ BARS @ 1'-4" Max	"y"	f'm (KSI)	COMPRESSIVE STRENGTH OF CMU (KSI)	MAXIMUM H
6'-4"	# 4	———	———	1.5	1.9	6'-4"
8'-4"	# 4	———	———	1.5	1.9	8'-4"
10'-4"	# 4	———	———	1.5	1.9	10'-4"
12'-4"	# 5	# 4	5'-0"	1.5	1.9	12'-4"
14'-4"	# 6	# 4	7'-0"	1.5	1.9	14'-4"
16'-4"	# 6	# 4	9'-0"	2.5	3.7	16'-4"

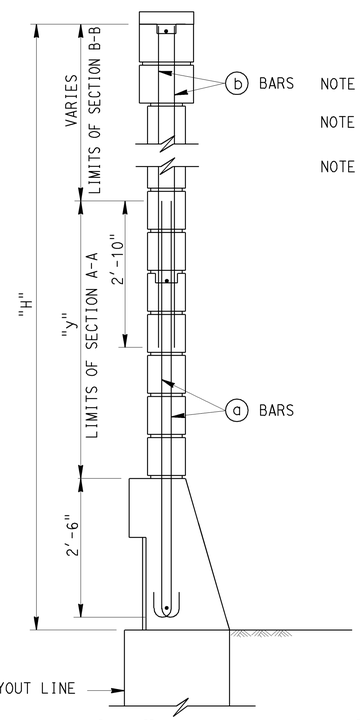

NOTE I : FOR DETAILS NOT SHOWN,SEE SHEET SW-38

NOTE II : SLOPE GROUND AT TRAFFIC SIDE OF BARRIER TO DRAIN. MAXIMUM SLOPE ±10%.

NOTE III: SEE SHEET SW-35 FOR OTHER DETAILS.

GENERAL NOTES

NOTE A: FOR TYPE OF BLOCK AND JOINT FINISH, SEE OTHER SHEETS.

NOTE B: WHEN BLOCKS ARE LAID IN STACKED BOND, LADDER TYPE, GALVANIZED JOINT REINFORCEMENT SHALL BE PROVIDED. A MINIMUM OF 0.07"-0.14" WIRE CONTINUOUS AT 4'-0" MAXIMUM TO BE USED. LOCATE REINFORCEMENT IN JOINTS THAT ARE AT THE APPROXIMATE MIDPOINT BETWEEN BOND BEAMS.

NOTE C: HORIZONTAL JOINTS SHALL BE TOOLED CONCAVE OR MAY BE WEATHERED.
VERTICAL JOINTS SHALL BE TOOLED CONCAVE OR MAY BE RAKED.

NOTE D: FOR INTERMEDIATE WALL HEIGHTS THAT ARE BETWEEN THE "H'S" GIVEN. USE THE TABULAR INFORMATION FOR THE NEXT HIGHER "H".

NOTE E: MASONRY STRENGTHS ARE LISTED IN "SOUNDWALL REINFORCEMENT TABLE".

NOTE F: CLASS 2 CONCRETE TO BE USED FOR THE BARRIER.

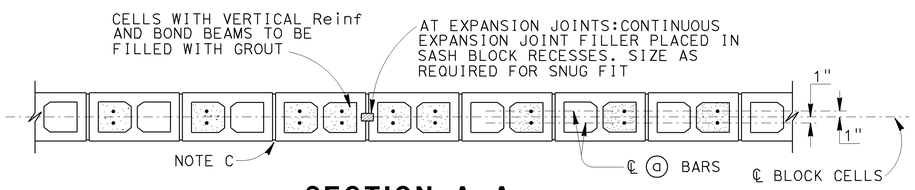

SECTION A-A

FOR DETAILS NOT SHOWN,SEE OTHER DETAILS

H=6'-4" THRU H=10'-4"

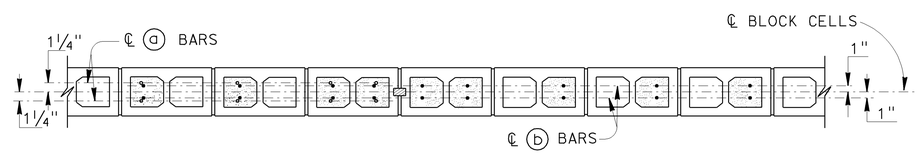

SECTION A-A **SECTION B-B**

FOR DETAILS NOT SHOWN, SEE OTHER DETAILS

H=12'-4" THRU H=16'-4"

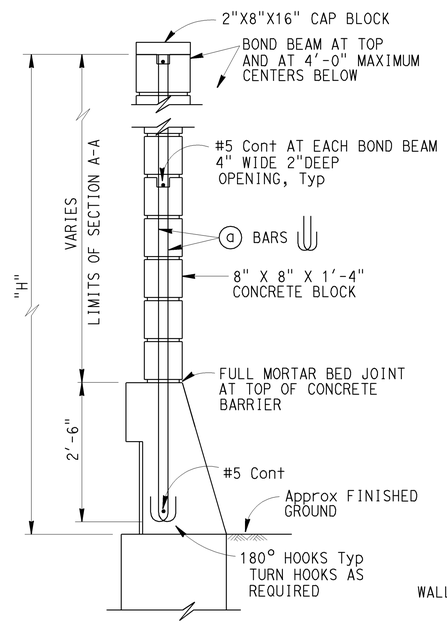

H=6'-4" THRU H=10'-4"

FOR DETAILS NOT SHOWN, SEE H=12'-4" THRU H=16'-4"

H=12'-4" THRU H=16'-4"

FOR DETAILS NOT SHOWN, SEE H=6'-4" THRU H=10'-4"

TYPICAL SECTIONS

SOUND WALL DETAILS

SOUND WALL - MASONRY BLOCK WITH
BARRIER ON RETAINING WALL
DETAILS No. 1

SW No. 627

NO SCALE

SW-37

STATE OF CALIFORNIA - DEPARTMENT OF TRANSPORTATION
Caltrans

CONSULTANT FUNCTIONAL SUPERVISOR: THOMAS IONTA
CALCULATED-DESIGNED BY: JOHN POWELL
CHECKED BY: MARK FRICKE
REVISED BY
DATE REVISED

LAST REVISION 06-15-09
DATE PLOTTED => 25-JAN-2010
TIME PLOTTED => 10:51

Dist	COUNTY	ROUTE	POST MILES TOTAL PROJECT	SHEET No.	TOTAL SHEETS
12	Ora	57	18.4/20.9	356	856

REGISTERED CIVIL ENGINEER 06/15/09 DATE

1-25-10
PLANS APPROVAL DATE

REGISTERED PROFESSIONAL ENGINEER JOHN W. POWELL No. C71463 Exp.12/31/09 CIVIL STATE OF CALIFORNIA

THE STATE OF CALIFORNIA OR ITS OFFICERS OR AGENTS SHALL NOT BE RESPONSIBLE FOR THE ACCURACY OR COMPLETENESS OF SCANNED COPIES OF THIS PLAN SHEET.

CH2M HILL
6 HUTTON CENTRE DRIVE,
SUITE 700
SANTA ANA, CA 92707

OCTA
550 S. MAIN STREET
ORANGE, CA 92863

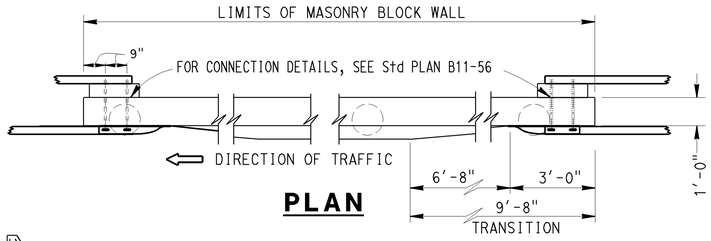

PLAN

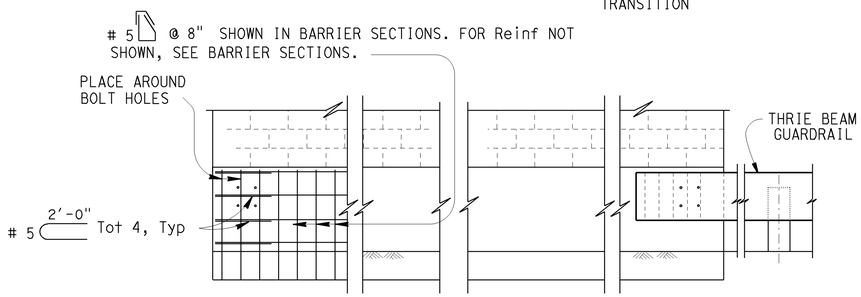

ELEVATION

METAL BEAM GUARDRAIL ANCHORAGE

FOR DETAILS NOT SHOWN, SEE Std PLAN B11-56.

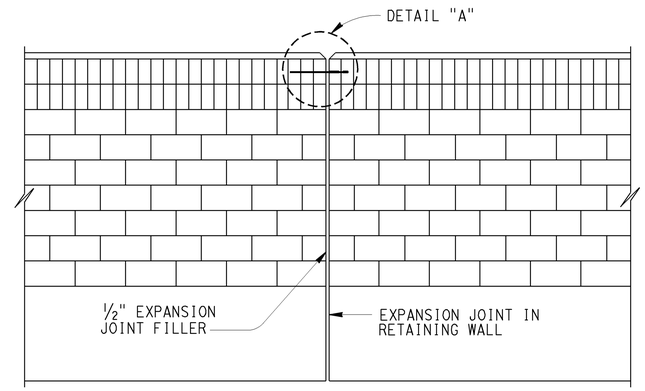

ALIGNMENT KEY DETAIL

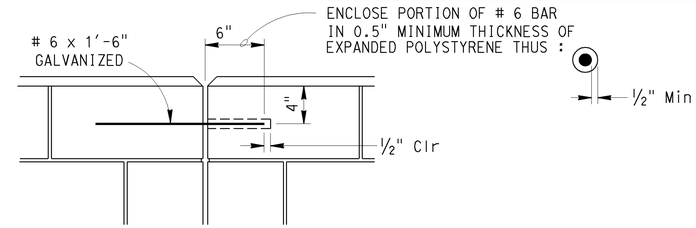

DETAIL A

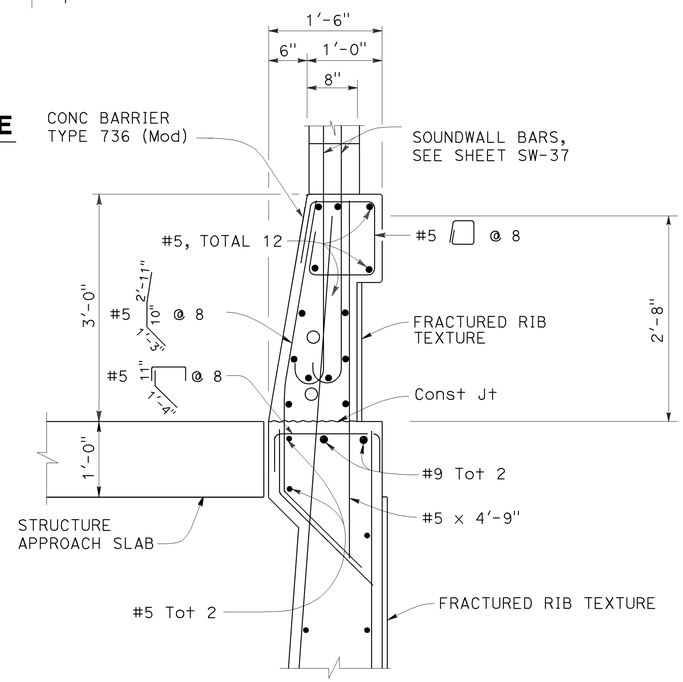

BARRIER SECTION

NOTES:

I : FOR RETAINING WALL DETAILS NOT SHOWN,SEE SHEET SW-36.

II : SLOPE GROUND AT TRAFFIC SIDE OF BARRIER TO DRAIN.
MAXIMUM SLOPE ±10%.
SEE STANDARD PLAN B11-56, NOTE D.

DESIGN NOTES

DESIGN

UNIFORM BUILDING CODE,1997 EDITION AND THE BRIDGE DESIGN SPECIFICATIONS.

DESIGN WIND LOAD

33 PSF

DESIGN SEISMIC LOAD

0.57 Dead load

CONCRETE MASONRY

REINFORCED CONCRETE	REGULAR STRENGTH	HIGH STRENGTH	
f'c = 3250 PSI	f'm = 1500 PSI	f'm = 2000 PSI	f'm = 2500 PSI
fy = 60 KSI	f_b = 1500 PSI	f_b = 660 PSI	f_b = 830 PSI
	fs = 24.0 KSI	fs = 24.0 KSI	fs = 24000 PSI
	n = 25.8	n = 19.3	n = 15.5

LOAD FACTORS AND LOAD COMBINATIONS

WORKING STRESS DESIGN (WSD) PERCENTAGE OF UNIT STRESS

Group 1: D + E + SC 100%
Group 2: D + W + SC + E 100%
Group 3: D + 0.71 EQD + E 100%

Where:

D = DEAD LOAD
E = LATERAL EARTH PRESSURE
SC = LIVE LOAD SURCHARGE
W = WIND LOAD
EQD = SEISMIC DEAD LOAD

LOAD FACTOR DESIGN (LFD)

Group A: BD +1.7 E + 1.7 SC
Group B: BD +1.7 E + 1.3 W
Group C: BD +1.3 E + 1.0 EQE
Group D: BD +1.3 E + 1.0 EQD
Group E: BD +1.1 E + 0.85 (EQE + EQD)

Where : B = 0.9 OR 1.2, WHICHEVER CONTROLS IN DESIGN
D = DEAD LOAD
E = LATERAL EARTH PRESSURE
SC = LIVE LOAD SURCHARGE
W = WIND LOAD
EQD = SEISMIC DEAD LOAD
EQE = SEISMIC EARTH LOAD

STRENGTH REDUCTION FACTORS, Ø

REINFORCED CONCRETE:
FOR FLEXURE ---------- Ø=0.90
FOR SHEAR ---------- Ø=0.85

CONCRETE MASONRY:
FOR FLEXURE ---------- Ø=0.80
FOR SHEAR ---------- Ø=0.60

FOUNDATIONS :

SEE SHEET SW-35

SOUND WALL DETAILS

SOUND WALL - MASONRY BLOCK WITH BARRIER ON RETAINING WALL DETAILS No. 2

SW No. 627

NO SCALE

SW-38

REVISED BY	DATE REVISED
JOHN POWELL	MARK FRICKE

CALCULATED-DESIGNED BY / CHECKED BY

CONSULTANT FUNCTIONAL SUPERVISOR: THOMAS IONTA

STATE OF CALIFORNIA - DEPARTMENT OF TRANSPORTATION

Caltrans

DATE PLOTTED => 25-JAN-2010
TIME PLOTTED => 10:51
LAST REVISION 06-15-09

DIST	COUNTY	ROUTE	POST MILES TOTAL PROJECT	SHEET No	TOTAL SHEETS
12	Ora	57	18.4/20.9	357	856

Hisham Nofal 06/15/09
GEOTECHNICAL PROFESSIONAL DATE

1-25-10
PLANS APPROVAL DATE

REGISTERED PROFESSIONAL ENGINEER HISHAM M. NOFAL No. 2765 Exp. 09/30/09 GEOTECHNICAL STATE OF CALIFORNIA

The State of California or its officers or agents shall not be responsible for the accuracy or completeness of electronic copies of this plan sheet.

OCTA
550 S. MAIN STREET
ORANGE, CA 92863

CH2M HILL
6 HUTTON CENTRE DRIVE, SUITE 700
SANTA ANA, CA 92707

BENCHMARK:

HORIZONTAL COORDINATES ARE CCS NAD-83, ZONE 6.
VERTICAL CONTROL BASED ON NORTH AMERICAN VERTICAL DATUM 1988.
Pt 1049: N2276409.426, E6066857.705, Elev 348.344
Pt 1050: N2277373.804, E6066685.179, Elev 331.888

SAMPLER TYPES:

CALIFORNIA MODIFIED RING SAMPLER
STANDARD PENETRATION TEST SAMPLER

HAMMER TYPE:

AUTOMATIC HAMMER

CORRECTION FACTOR:

TO CONVERT FROM CALIFORNIA MODIFIED RING SAMPLER BLOW COUNT TO EQUIVALENT STANDARD PENETRATION TEST SAMPLER BLOW COUNT, FOR GRANULAR AND COHESIVE SOIL, MULTIPLY BY 0.67.

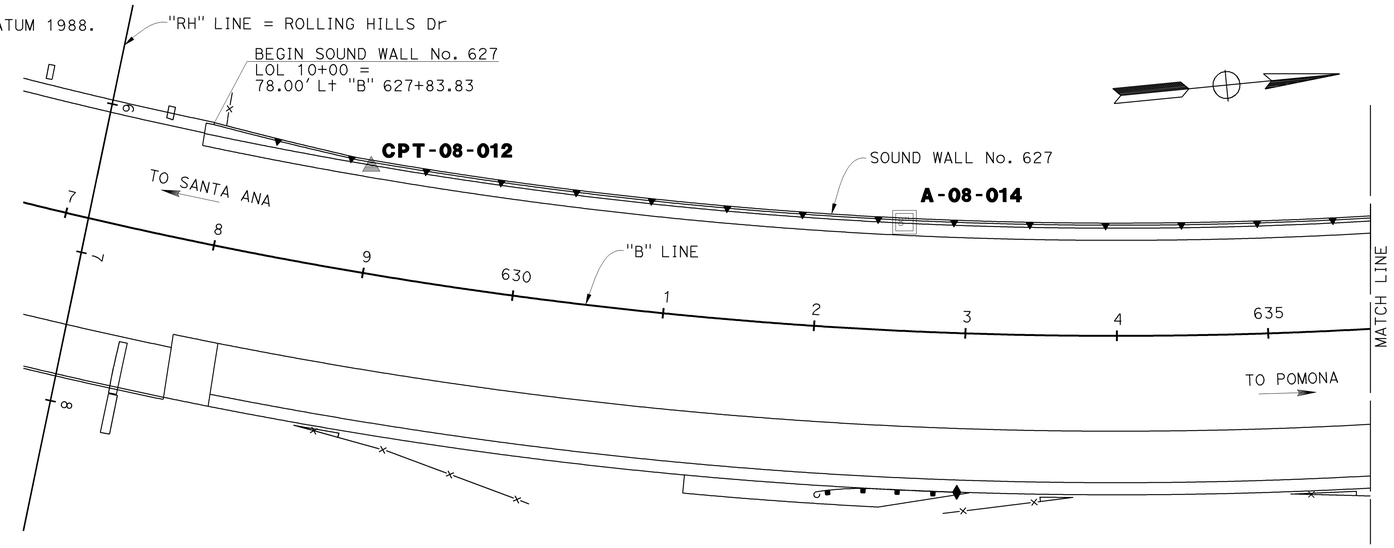

PLAN
1"=50'

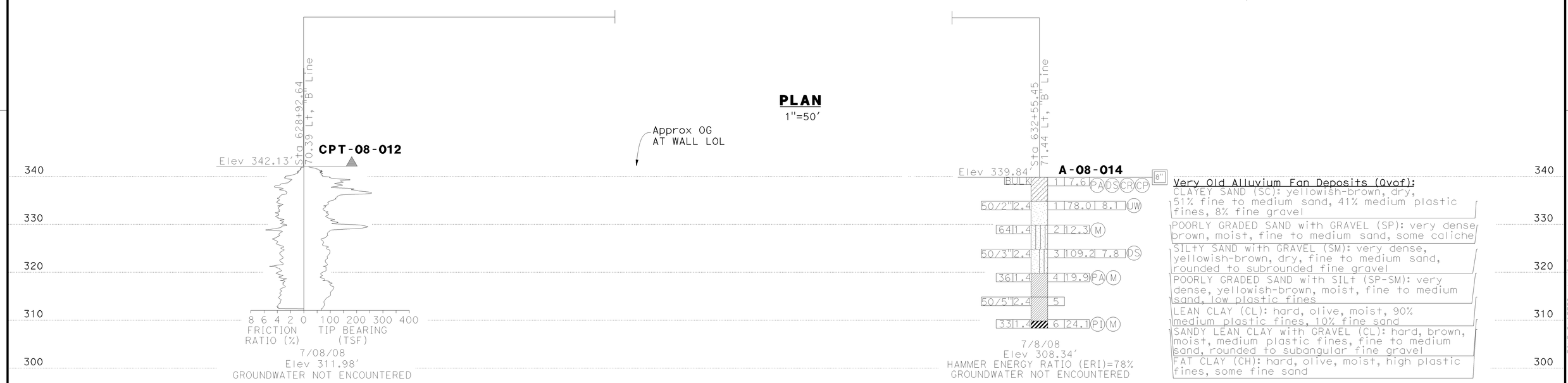

PROFILE
Horz:1"=50'
Vert: 1"=10'

STATIONING "B" LINE
3 4 625 6 7 8 9 630 1 2 3 4 635 6 7 8

DESIGN OVERSIGHT	DRAWN BY	K. Reyes	R. Bethapudi FIELD INVESTIGATION BY:
SIGN OFF DATE	CHECKED BY	H. Nofal	DATE

PREPARED FOR THE STATE OF CALIFORNIA DEPARTMENT OF TRANSPORTATION

Ayman Salama
PROJECT ENGINEER

BRIDGE NO.
POST MILES

SOUND WALL NO. 627

LOG OF TEST BORINGS SHEET 1 OF 4

SW-39

ORIGINAL SCALE IN INCHES FOR REDUCED PLANS 0 1 2 3

CU 12220
EA 0F0321

DISREGARD PRINTS BEARING EARLIER REVISION DATES

REVISION DATES (PRELIMINARY STAGE ONLY) 02/17/09 04/07/09 06/15/09

SHEET OF

FILE => c0F032rd008.dgn

USERNAME => frmnguye DATE PLOTTED => 25-JAN-2010 TIME PLOTTED => 10:51

DIST	COUNTY	ROUTE	POST MILES TOTAL PROJECT	SHEET No	TOTAL SHEETS
12	Ora	57	18.4/20.9	358	856

Hisham Nofal 06/15/09
GEOTECHNICAL PROFESSIONAL DATE

1-25-10
PLANS APPROVAL DATE

REGISTERED PROFESSIONAL ENGINEER HISHAM M. NOFAL No. 2765 Exp. 09/30/09 GEOTECHNICAL STATE OF CALIFORNIA

The State of California or its officers or agents shall not be responsible for the accuracy or completeness of electronic copies of this plan sheet.

OCTA
550 S. MAIN STREET
ORANGE, CA 92863

CH2M HILL
6 HUTTON CENTRE DRIVE, SUITE 700
SANTA ANA, CA 92707

BENCHMARK:

HORIZONTAL COORDINATES ARE CCS NAD-83, ZONE 6.
VERTICAL CONTROL BASED ON NORTH AMERICAN VERTICAL DATUM 1988.
Pt 1049: N2276409.426, E6066857.705, Elev 348.344
Pt 1050: N2277373.804, E6066685.179, Elev 331.888

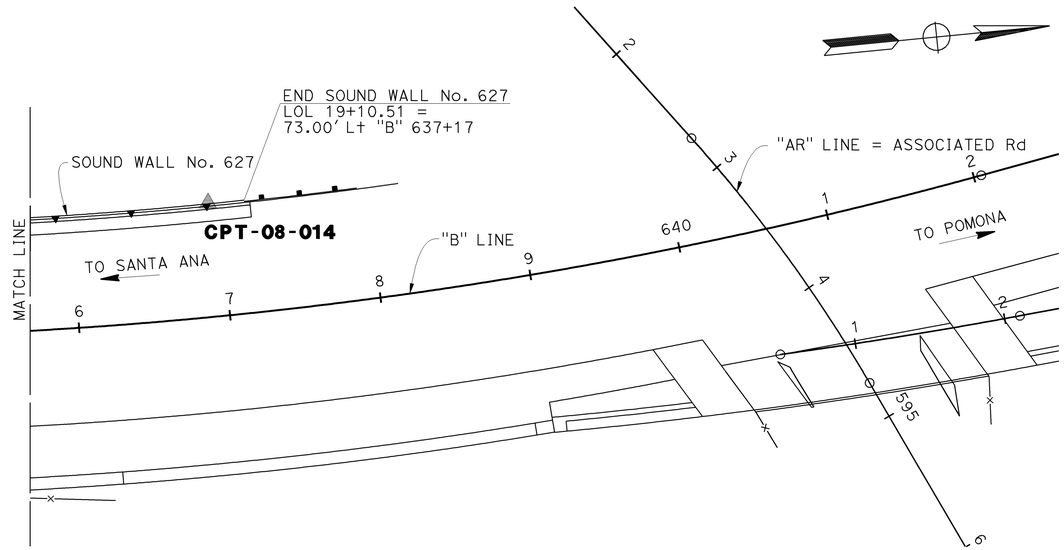

PLAN
1"=50'

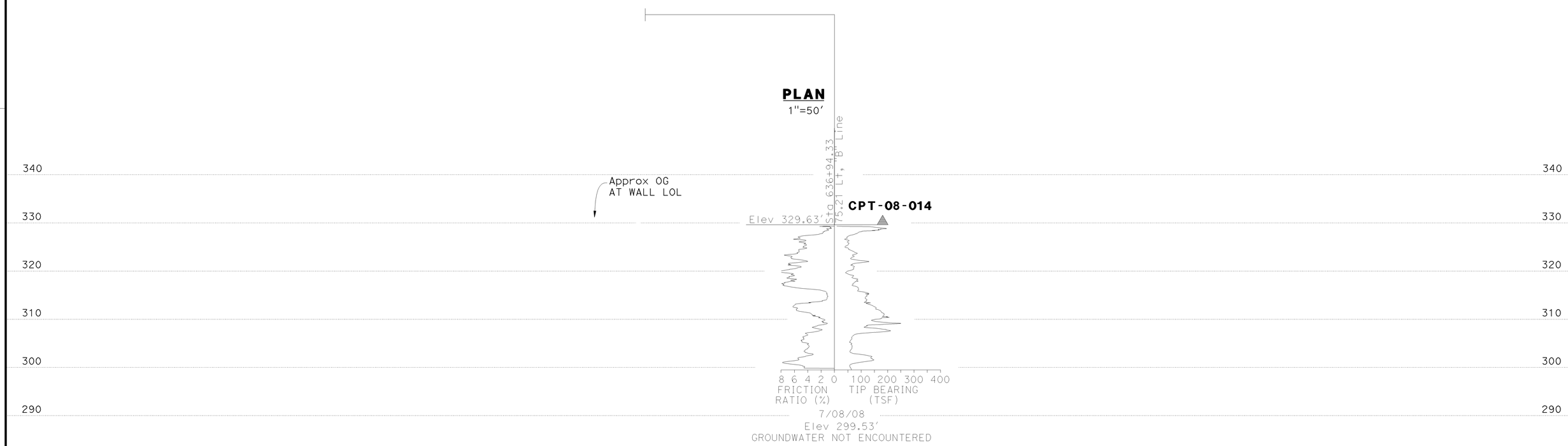

PROFILE
Horz:1"=50'
Vert: 1"=10'

STATIONING "B" LINE
1 2 3 4 635 6 7 8 9 640 1 2 3 4 645 6

DESIGN OVERSIGHT	DRAWN BY	K. Reyes	R. Bethapudi FIELD INVESTIGATION BY:
SIGN OFF DATE	CHECKED BY	H. Nofal	DATE

PREPARED FOR THE STATE OF CALIFORNIA DEPARTMENT OF TRANSPORTATION

Ayman Salama
PROJECT ENGINEER

BRIDGE NO.
POST MILES

SOUND WALL NO. 627

LOG OF TEST BORINGS SHEET 2 OF 4

SW-40

ORIGINAL SCALE IN INCHES FOR REDUCED PLANS 0 1 2 3

CU 12220
EA 0F0321

DISREGARD PRINTS BEARING EARLIER REVISION DATES

REVISION DATES (PRELIMINARY STAGE ONLY) 02/17/09 04/07/09 06/15/09

SHEET OF

FILE => c0F032rd009.dgn

USERNAME => trmnguye DATE PLOTTED => 25-JAN-2010 TIME PLOTTED => 10:51

DIST	COUNTY	ROUTE	POST MILES TOTAL PROJECT	SHEET No	TOTAL SHEETS
12	Ora	57	18.4/20.9	359	856

Hisham Nofal 06/15/09
GEOTECHNICAL PROFESSIONAL DATE

1-25-10
PLANS APPROVAL DATE

REGISTERED PROFESSIONAL ENGINEER HISHAM M. NOFAL No. 2765 Exp. 09/30/09 GEOTECHNICAL STATE OF CALIFORNIA

The State of California or its officers or agents shall not be responsible for the accuracy or completeness of electronic copies of this plan sheet.

OCTA
550 S. MAIN STREET
ORANGE, CA 92863

CH2M HILL
6 HUTTON CENTRE DRIVE, SUITE 700
SANTA ANA, CA 92707

REFERENCE: CALTRANS SOIL & ROCK LOGGING, CLASSIFICATION, AND PRESENTATION MANUAL (JUNE 2007)

GROUP SYMBOLS AND NAMES

Graphic/Symbol	Group Names
GW	Well-graded GRAVEL Well-graded GRAVEL with SAND
GP	Poorly graded GRAVEL Poorly graded GRAVEL with SAND
GW-GM	Well-graded GRAVEL with SILT Well-graded GRAVEL with SILT and SAND
GW-GC	Well-graded GRAVEL with CLAY (or SILTY CLAY) Well-graded GRAVEL with CLAY and SAND (or SILTY CLAY and SAND)
GP-GM	Poorly graded GRAVEL with SILT Poorly graded GRAVEL with SILT and SAND
GP-GC	Poorly graded GRAVEL with CLAY (or SILTY CLAY) Poorly graded GRAVEL with CLAY and SAND (or SILTY CLAY and SAND)
GM	SILTY GRAVEL SILTY GRAVEL with SAND
GC	CLAYEY GRAVEL CLAYEY GRAVEL with SAND
GC-GM	SILTY, CLAYEY GRAVEL SILTY, CLAYEY GRAVEL with SAND
SW	Well-graded SAND Well-graded SAND with GRAVEL
SP	Poorly graded SAND Poorly graded SAND with GRAVEL
SW-SM	Well-graded SAND with SILT Well-graded SAND with SILT and GRAVEL
SW-SC	Well-graded SAND with CLAY (or SILTY CLAY) Well-graded SAND with CLAY and GRAVEL (or SILTY CLAY and GRAVEL)
SP-SM	Poorly graded SAND with SILT Poorly graded SAND with SILT and GRAVEL
SP-SC	Poorly graded SAND with CLAY (or SILTY CLAY) Poorly graded SAND with CLAY and GRAVEL (or SILTY CLAY and GRAVEL)
SM	SILTY SAND SILTY SAND with GRAVEL
SC	CLAYEY SAND CLAYEY SAND with GRAVEL
SC-SM	SILTY, CLAYEY SAND SILTY, CLAYEY SAND with GRAVEL
PT	PEAT
	COBBLES COBBLES and BOULDERS BOULDERS

Graphic/Symbol	Group Names
CL	Lean CLAY Lean CLAY with SAND Lean CLAY with GRAVEL SANDY lean CLAY SANDY lean CLAY with GRAVEL GRAVELLY lean CLAY GRAVELLY lean CLAY with SAND
CL-ML	SILTY CLAY SILTY CLAY with SAND SILTY CLAY with GRAVEL SANDY SILTY CLAY SANDY SILTY CLAY with GRAVEL GRAVELLY SILTY CLAY GRAVELLY SILTY CLAY with SAND
ML	SILT SILT with SAND SILT with GRAVEL SANDY SILT SANDY SILT with GRAVEL GRAVELLY SILT GRAVELLY SILT with SAND
OL	ORGANIC lean CLAY ORGANIC lean CLAY with SAND ORGANIC lean CLAY with GRAVEL SANDY ORGANIC lean CLAY SANDY ORGANIC lean CLAY with GRAVEL GRAVELLY ORGANIC lean CLAY GRAVELLY ORGANIC lean CLAY with SAND
OL	ORGANIC SILT ORGANIC SILT with SAND ORGANIC SILT with GRAVEL SANDY ORGANIC SILT SANDY ORGANIC SILT with GRAVEL GRAVELLY ORGANIC SILT GRAVELLY ORGANIC SILT with SAND
CH	Fat CLAY Fat CLAY with SAND Fat CLAY with GRAVEL SANDY fat CLAY SANDY fat CLAY with GRAVEL GRAVELLY fat CLAY GRAVELLY fat CLAY with SAND
MH	Elastic SILT Elastic SILT with SAND Elastic SILT with GRAVEL SANDY elastic SILT SANDY elastic SILT with GRAVEL GRAVELLY elastic SILT GRAVELLY elastic SILT with SAND
OH	ORGANIC fat CLAY ORGANIC fat CLAY with SAND ORGANIC fat CLAY with GRAVEL SANDY ORGANIC fat CLAY SANDY ORGANIC fat CLAY with GRAVEL GRAVELLY ORGANIC fat CLAY GRAVELLY ORGANIC fat CLAY with SAND
OH	ORGANIC elastic SILT ORGANIC elastic SILT with SAND ORGANIC elastic SILT with GRAVEL SANDY ORGANIC elastic SILT SANDY ORGANIC elastic SILT with GRAVEL GRAVELLY ORGANIC elastic SILT GRAVELLY ORGANIC elastic SILT with SAND
OL/OH	ORGANIC SOIL ORGANIC SOIL with SAND ORGANIC SOIL with GRAVEL SANDY ORGANIC SOIL SANDY ORGANIC SOIL with GRAVEL GRAVELLY ORGANIC SOIL GRAVELLY ORGANIC SOIL with SAND

FIELD AND LABORATORY TESTING

- (C) Consolidation (ASTM D 2435)
- (CL) Collapse Potential (ASTM D 5333)
- (CP) Compaction Curve (CTM 216)
- (CR) Corrosivity Testing (CTM 643, CTM 422, CTM 417)
- (CU) Consolidated Undrained Triaxial (ASTM D 4767)
- (DS) Direct Shear (ASTM D 3080)
- (EI) Expansion Index (ASTM D 4829)
- (M) Moisture Content (ASTM D 2216)
- (OC) Organic Content-% (ASTM D 2974)
- (P) Permeability (CTM 220)
- (PA) Particle Size Analysis (ASTM D 422)
- (PI) Plasticity Index (AASHTO T 90) Liquid Limit (AASHTO T 89)
- (PL) Point Load Index (ASTM D 5731)
- (PM) Pressure Meter
- (PP) Pocket Penetrometer
- (R) R-Value (CTM 301)
- (SE) Sand Equivalent (CTM 217)
- (SG) Specific Gravity (AASHTO T 100)
- (SL) Shrinkage Limit (ASTM D 427)
- (SW) Swell Potential (ASTM D 4546)
- (TV) Pocket Torvane
- (UC) Unconfined Compression-Soil (ASTM D 2166) Unconfined Compression-Rock (ASTM D 2938)
- (UU) Unconsolidated Undrained Triaxial (ASTM D 2850)
- (UW) Unit Weight (ASTM D 4767)
- (VS) Vane Shear (AASHTO T 223)

APPARENT DENSITY OF COHESIONLESS SOILS

Description	SPT N_{60} (Blows / 12 inches)
Very loose	0 - 4
Loose	5 - 10
Medium Dense	11 - 30
Dense	31 - 50
Very Dense	> 50

MOISTURE

Description	Criteria
Dry	Absence of moisture, dusty, dry to the touch
Moist	Damp but no visible water
Wet	Visible free water, usually soil is below water table

PERCENT OR PROPORTION OF SOILS

Description	Criteria
Trace	Particles are present but estimated to be less than 5%
Few	5 to 10%
Little	15 to 25%
Some	30 to 45%
Mostly	50 to 100%

PARTICLE SIZE

Description		Size
Boulder		> 12"
Cobble		3" to 12"
Gravel	Coarse	3/4" to 3"
	Fine	No. 4 to 3/4"
Sand	Coarse	No. 10 to No. 4
	Medium	No. 40 to No. 10
	Fine	No. 200 to No. 40

CEMENTATION

Description	Criteria
Weak	Crumbles or breaks with handling or little finger pressure.
Moderate	Crumbles or breaks with considerable finger pressure.
Strong	Will not crumble or break with finger pressure.

CONSISTENCY OF COHESIVE SOILS

Description	Unconfined Compressive Strength (tsf)	Pocket Penetrometer Measurement (tsf)	Torvane Measurement (tsf)	Field Approximation
Very Soft	< 0.25	< 0.25	< 0.12	Easily penetrated several inches by fist
Soft	0.25 to 0.50	0.25 to 0.50	0.12 to 0.25	Easily penetrated several inches by thumb
Medium Stiff	0.50 to 1.0	0.50 to 1.0	0.25 to 0.50	Penetrated several inches by thumb with moderate effort
Stiff	1 to 2	1 to 2	0.50 to 1.0	Readily indented by thumb but penetrated only with great effort
Very Stiff	2 to 4	2 to 4	1.0 to 2.0	Readily indented by thumbnail
Hard	> 4.0	> 4.0	> 2.0	Indented by thumbnail with difficulty

PLASTICITY OF FINE-GRAINED SOILS

Description	Criteria
Nonplastic	A 1/8-inch thread cannot be rolled at any water content.
Low	The thread can barely be rolled and the lump cannot be formed when drier than the plastic limit.
Medium	The thread is easy to roll and not much time is required to reach the plastic limit. The thread cannot be rerolled after reaching the plastic limit. The lump crumbles when drier than the plastic limit.
High	It takes considerable time rolling and kneading to reach the plastic limit. The thread can be rerolled several times after reaching the plastic limit. The lump can be formed without crumbling when drier than the plastic limit.

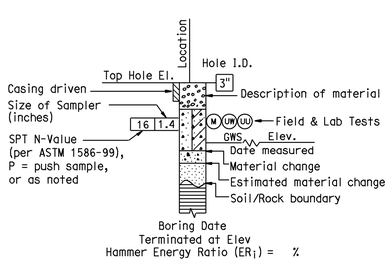

ROTARY BORING

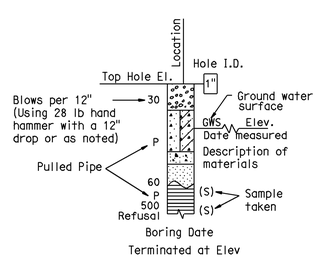

HAND BORING

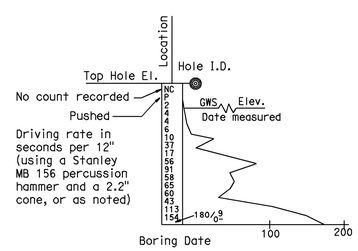

DYNAMIC CONE PENETRATION BORING

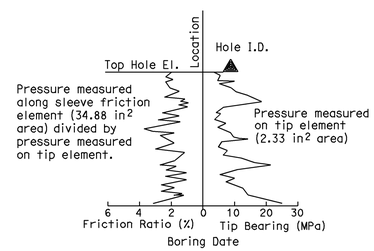

CONE PENETRATION TEST (CPT) SOUNDING

BOREHOLE IDENTIFICATION

Symbol	Hole Type	Description
Size	A	Auger Boring
Size	R P	Rotary drilled boring Rotary percussion boring (air)
Size	R	Rotary drilled diamond core
Size	HD HA	Hand driven (1-inch soil tube) Hand Auger
●	D	Dynamic Cone Penetration Boring
◕	B	Hollow Stem Auger Boring (HSA)
▲	CPT	Cone Penetration Test (ASTM D 5778-95)
□	O	Other

Note: Size in inches.

SOIL LEGEND

SOUND WALL No. 627

LOG OF TEST BORINGS SHEET 3 OF 4

SW-41

DESIGN OVERSIGHT

SIGN OFF DATE

DRAWN BY K. Reyes

CHECKED BY H. Nofal

R. Bethapudi
FIELD INVESTIGATION BY:

DATE

PREPARED FOR THE STATE OF CALIFORNIA DEPARTMENT OF TRANSPORTATION

Ayman Salama
PROJECT ENGINEER

BRIDGE NO.

POST MILES

ORIGINAL SCALE IN INCHES FOR REDUCED PLANS 0 1 2 3

CU 12220
EA 0F0321

DISREGARD PRINTS BEARING EARLIER REVISION DATES

REVISION DATES (PRELIMINARY STAGE ONLY) 02/27/09 04/27/09 06/15/09

SHEET OF

FILE => c0F032rd010.dgn

USERNAME => trmnguye DATE PLOTTED => 25-JAN-2010 TIME PLOTTED => 10:51

FED ROAD DIV. No.	STATE	F. A. PROJECT NO.	SHEET No.	TOTAL SHEETS
7	CALIF.			

Dist.	County	Route	Section	Sheet No.	Total Sheets
07	Ora.	57	7/1/02	160	180

Date of Completion: September 30, 1968

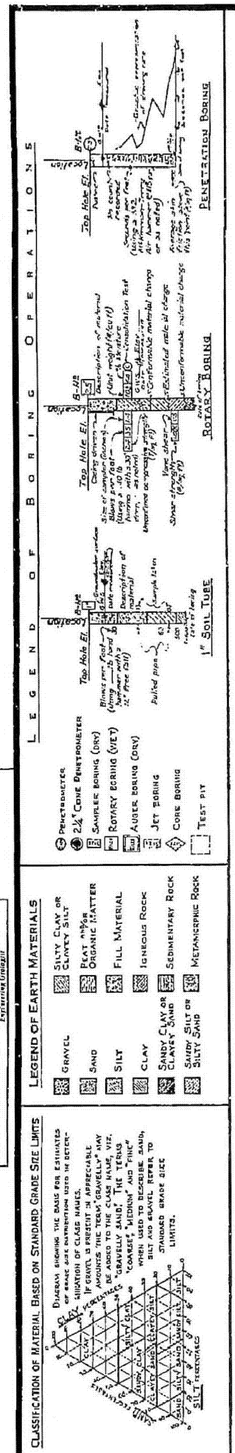

NOTE: Classification of earth material as shown on this sheet is based upon field inspection and is not to be construed to imply mechanical analysis.

BRIDGE DEPARTMENT
ENGINEERING GEOLOGY SECTION

FIELD STUDY: H. McCann 4-18-67
DRAWN: H. Allison 4-17-67
CHECKED: R. Corbaley 4-24-67
Approval Recommended: Charles S. Sand, Engineering Geologist

160

BENCH MARK

B.M. # 629-D-66 Elev. 361.18
Fd. anchor bolt on top of northeast pedestal of Hathaway Oil Well No. 8

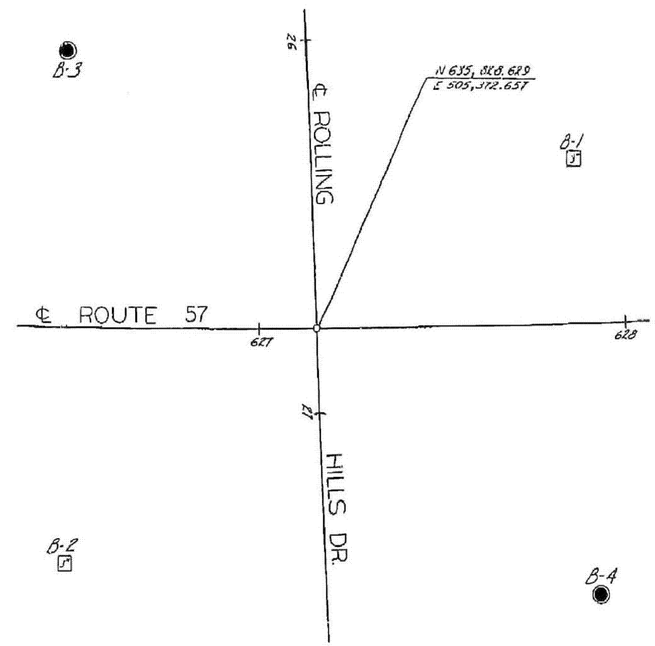

PLAN

Scale: 1" = 20'

To accompany plans dated 1-25-10

DIVISION OF ENGINEERING SERVICES - GEOTECHNICAL SERVICES					
As-Built Log of Test Borings sheet is considered an informational document only. As such, the State of California registration seal with signature, license number and registration certificate expiration date confirm that this is a true and accurate copy of the original document. This drawing is available and presented only for the convenience of any bidder, contractor or other interested party.					
DIST.	COUNTY	ROUTE	POST MILES-TOTAL PROJECT	Sheet No.	Total Sheets
12	Ora	57	18.4/20.9	360	856
Hisham M. Nofal — REGISTERED CIVIL ENGINEER			06/08/09 — DATE		
SOUND WALL NO. 627					
LOG OF TEST BORINGS SHEET 4 OF 4				SW-42	
NOTE: A COPY OF THIS LOG OF TEST BORINGS IS AVAILABLE AT OFFICE OF STRUCTURE MAINTENANCE AND INVESTIGATIONS, SACRAMENTO, CALIFORNIA		CU: 12220 EA: 0F0321		BRIDGE No.	
				Sheet	of

REGISTERED PROFESSIONAL ENGINEER — HISHAM M. NOFAL — No. 2765 — Exp. 09/30/11 — GEOTECHNICAL — STATE OF CALIFORNIA

NO GROUND WATER ENCOUNTERED DURING THIS INVESTIGATION
BRIDGE DEPT. GEOLOGY SECTION
DATE April 1, 1967

INFORMATION ON ACTUAL FOUNDATION CONDITIONS ENCOUNTERED IS ON FILE IN BRIDGE GEOLOGY SECTION

PROFILE

Scale: Vert. 1" = 10'
Horiz. 1" = 20'

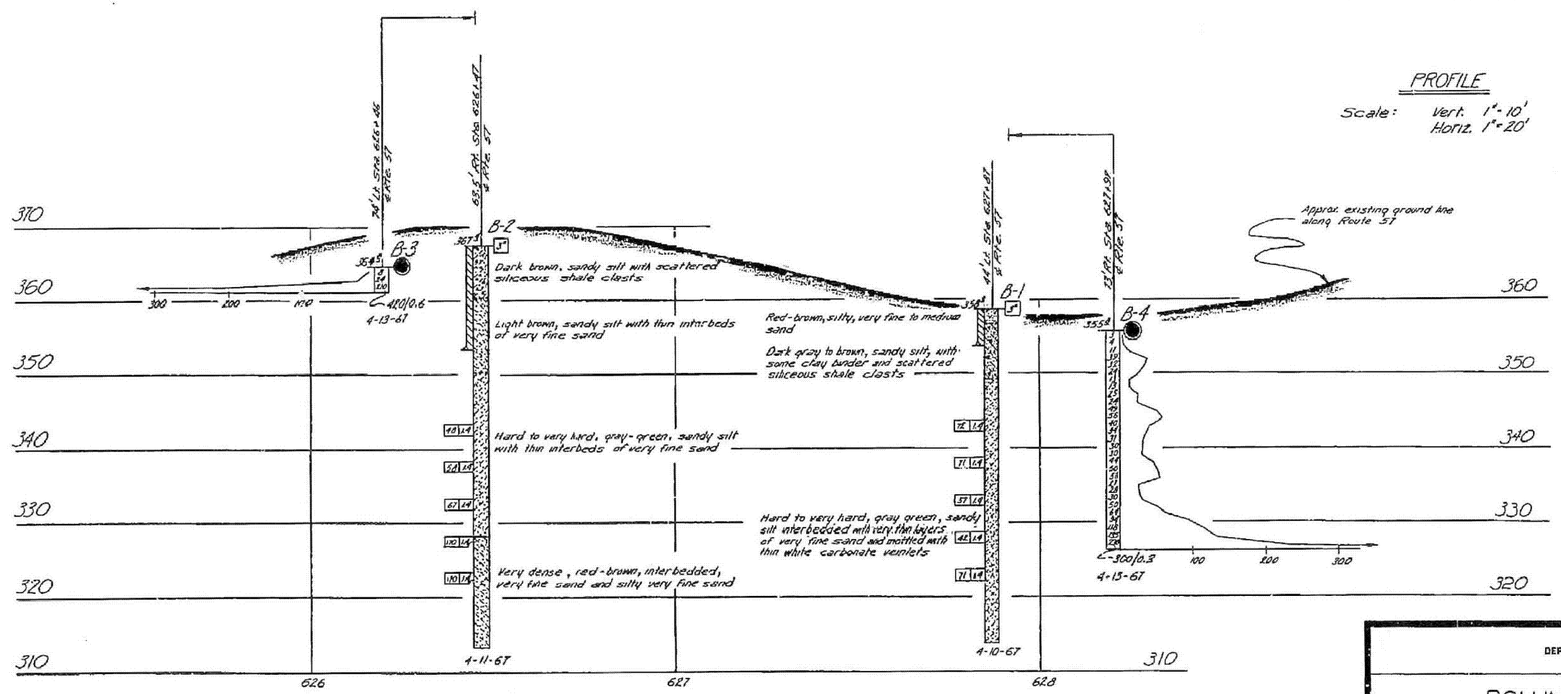

SW-42

STATE OF CALIFORNIA
DEPARTMENT OF PUBLIC WORKS
DIVISION OF HIGHWAYS

ROLLING HILLS DRIVE UNDERCROSSING

LOG OF TEST BORINGS

SHEET	OF	SCALE: As Noted	BRIDGE 55-0483	FILE	DRAWING 55-0483-7
10	10				

AS BUILT PLANS
Contract No. 07-032134
Date Completed
Document No. 70001578

Chg. 07208
W.A. 038131
FILE => $REQUEST

Disregard prints bearing earlier numbers → PREL. DRAWING No. PR-

USERNAME => $USER DATE PLOTTED => $DATE TIME PLOTTED => $TIME

c0F032rd011.tif

Dist	COUNTY	ROUTE	POST MILES TOTAL PROJECT	SHEET No.	TOTAL SHEETS
12	Ora	57	18.4/20.9	361	856

REGISTERED CIVIL ENGINEER 06/15/09 DATE

1-25-10
PLANS APPROVAL DATE

REGISTERED PROFESSIONAL ENGINEER JOHN W. POWELL No. C71463 Exp.12/31/09 CIVIL STATE OF CALIFORNIA

THE STATE OF CALIFORNIA OR ITS OFFICERS OR AGENTS SHALL NOT BE RESPONSIBLE FOR THE ACCURACY OR COMPLETENESS OF SCANNED COPIES OF THIS PLAN SHEET.

CH2M HILL
6 HUTTON CENTRE DRIVE,
SUITE 700
SANTA ANA, CA 92707

OCTA
550 S. MAIN STREET
ORANGE, CA 92863

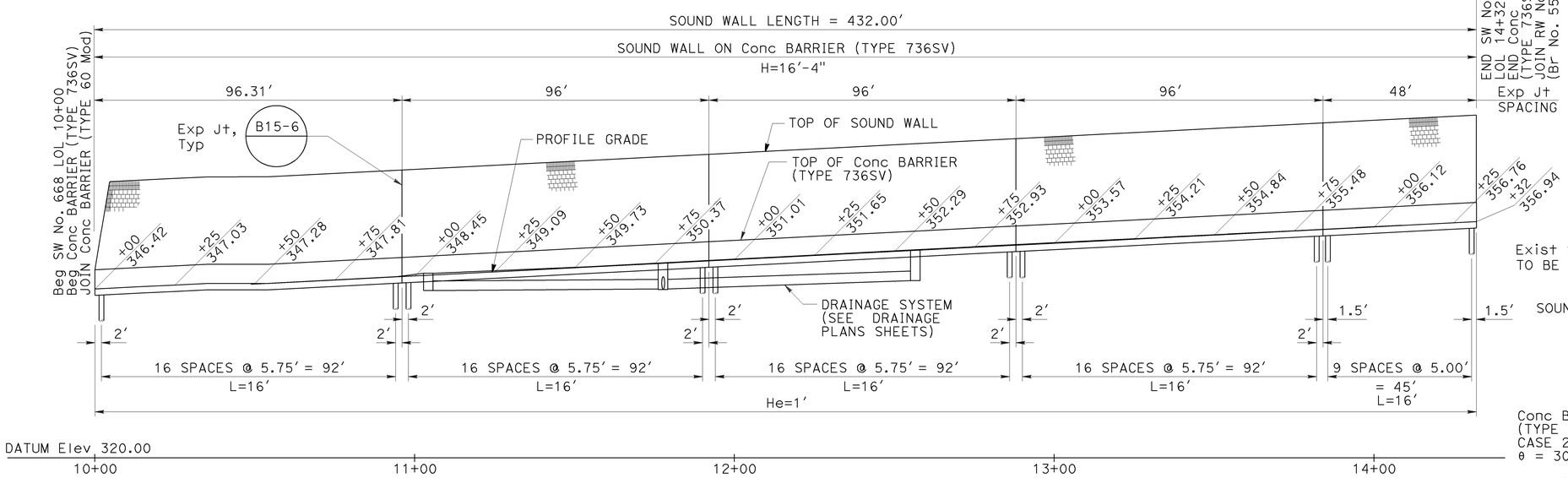

DEVELOPED ELEVATION

Horiz 1"=20'
Vert 1"=10'

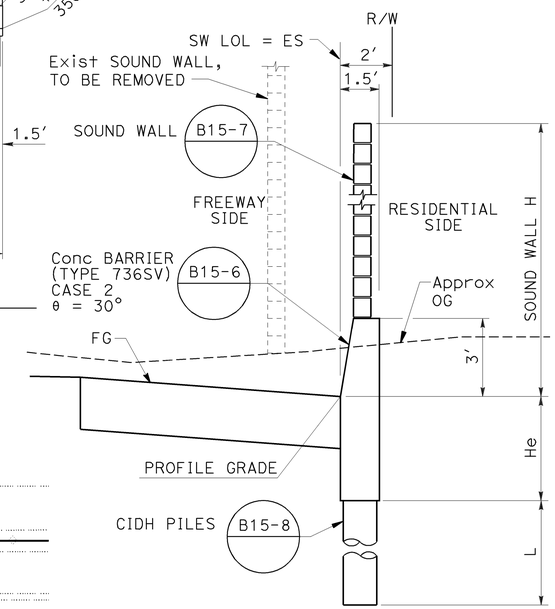

TYPICAL SECTION

NO SCALE

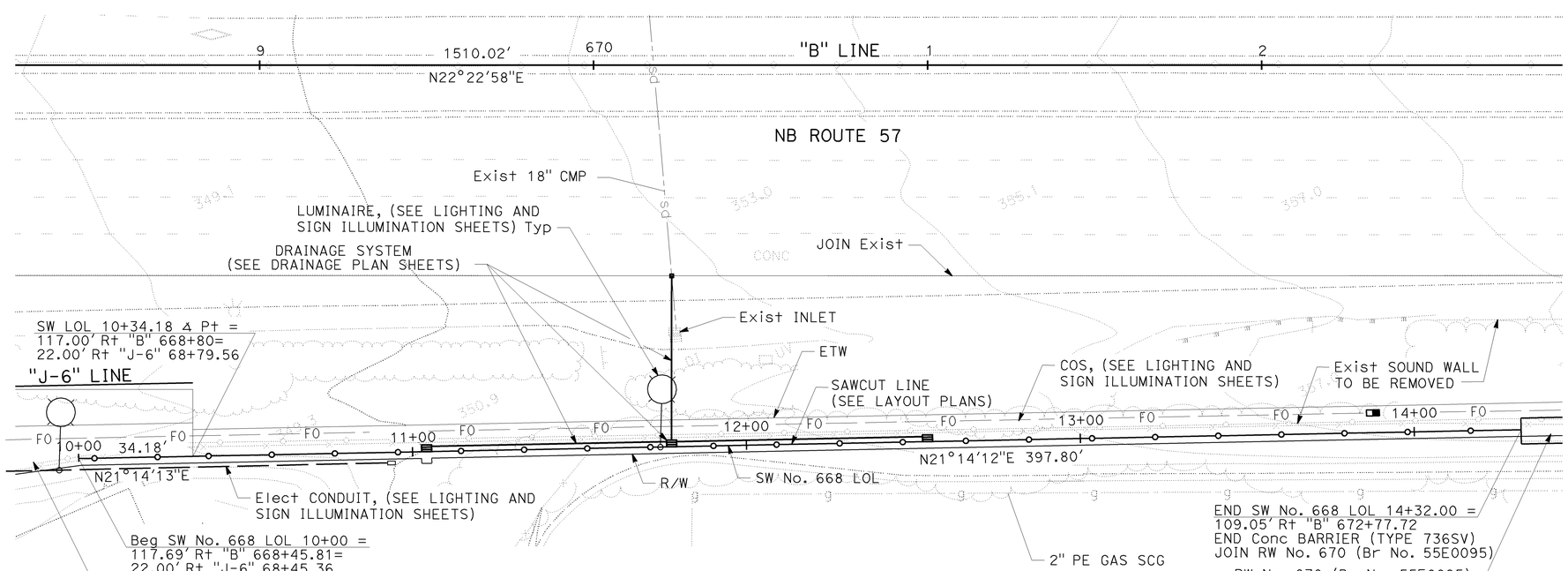

PLAN

1"=20'

NOTE:

1. CONTRACTOR TO FIELD VERIFY ALL UTILITY LOCATIONS PRIOR TO SOUND WALL CONSTRUCTION.

THIS PLAN ACCURATE FOR SOUND WALL WORK ONLY.

SOUND WALL PLAN
SW No. 668

SCALE AS SHOWN

SW-43

STATE OF CALIFORNIA - DEPARTMENT OF TRANSPORTATION

Caltrans

CONSULTANT FUNCTIONAL SUPERVISOR: THOMAS IONTA

CALCULATED-DESIGNED BY: JOHN POWELL
CHECKED BY: MARK FRICKE
REVISED BY
DATE REVISED

LAST REVISION 06-15-09
DATE PLOTTED => 25-JAN-2010
TIME PLOTTED => 10:52

Dist	COUNTY	ROUTE	POST MILES TOTAL PROJECT	SHEET No.	TOTAL SHEETS
12	Ora	57	18.4/20.9	362	856

REGISTERED CIVIL ENGINEER 06/15/09 DATE

1-25-10
PLANS APPROVAL DATE

REGISTERED PROFESSIONAL ENGINEER
JOHN W. POWELL
No. C71463
Exp.12/31/09
CIVIL
STATE OF CALIFORNIA

THE STATE OF CALIFORNIA OR ITS OFFICERS OR AGENTS SHALL NOT BE RESPONSIBLE FOR THE ACCURACY OR COMPLETENESS OF SCANNED COPIES OF THIS PLAN SHEET.

CH2M HILL
6 HUTTON CENTRE DRIVE,
SUITE 700
SANTA ANA, CA 92707

OCTA
550 S. MAIN STREET
ORANGE, CA 92863

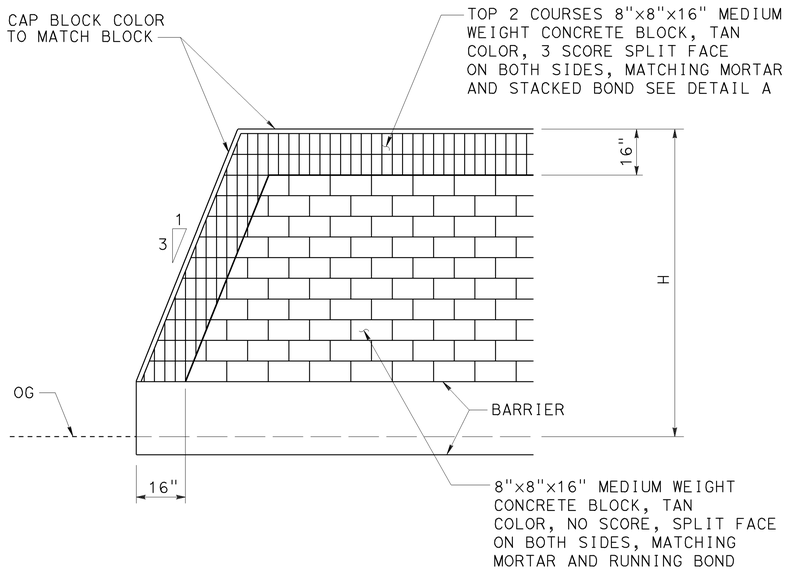

END WALL ELEVATION

CONCRETE BLOCK TYPE, COLOR AND PLACEMENT

NO SCALE

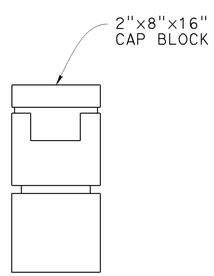

CAP BLOCK DETAIL

NO SCALE

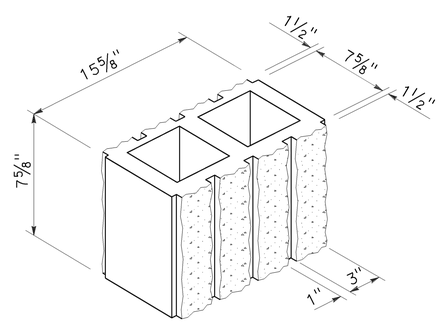

DETAIL A

NO SCALE

8" WIDE 3-SCORE SPLIT FACE BOTH SIDES

SOUND WALL DETAILS
SW No. 668

SCALE AS SHOWN

SW-44

STATE OF CALIFORNIA - DEPARTMENT OF TRANSPORTATION
Caltrans

CONSULTANT FUNCTIONAL SUPERVISOR: THOMAS IONTA

CALCULATED-DESIGNED BY: JOHN POWELL
CHECKED BY: MARK FRICKE

REVISED BY | DATE REVISED

LAST REVISION 06-15-09 | DATE PLOTTED => 25-JAN-2010 | TIME PLOTTED => 10:52

DIST	COUNTY	ROUTE	POST MILES TOTAL PROJECT	SHEET No	TOTAL SHEETS
12	Ora	57	18.4/20.9	363	856

Hisham Nofal 06/15/09
GEOTECHNICAL PROFESSIONAL DATE

1-25-10
PLANS APPROVAL DATE

REGISTERED PROFESSIONAL ENGINEER HISHAM M. NOFAL No. 2765 Exp. 09/30/09 GEOTECHNICAL STATE OF CALIFORNIA

The State of California or its officers or agents shall not be responsible for the accuracy or completeness of electronic copies of this plan sheet.

OCTA
550 S. MAIN STREET
ORANGE, CA 92863

CH2M HILL
6 HUTTON CENTRE DRIVE, SUITE 700
SANTA ANA, CA 92707

BENCHMARK:

Horizontal coordinates are cCCS NAD-83, Zone 6.
vertical control based on North American Vertical Datum 1988.
Pt 1050: N2279503.786, E6066168.912, Elev 326.908
Pt 1160: N2281521.621, E6067030.125, Elev 356.584

SAMPLER TYPES:

CALIFORNIA MODIFIED RING SAMPLER
STANDARD PENETRATION TEST SAMPLER

HAMMER TYPE:

AUTOMATIC HAMMER

CORRECTION FACTOR:

TO CONVERT FROM CALIFORNIA MODIFIED RING SAMPLER BLOW COUNT TO EQUIVALENT STANDARD PENETRATION TEST SAMPLER BLOW COUNT, FOR GRANULAR AND COHESIVE SOIL, MULTIPLY BY 0.67.

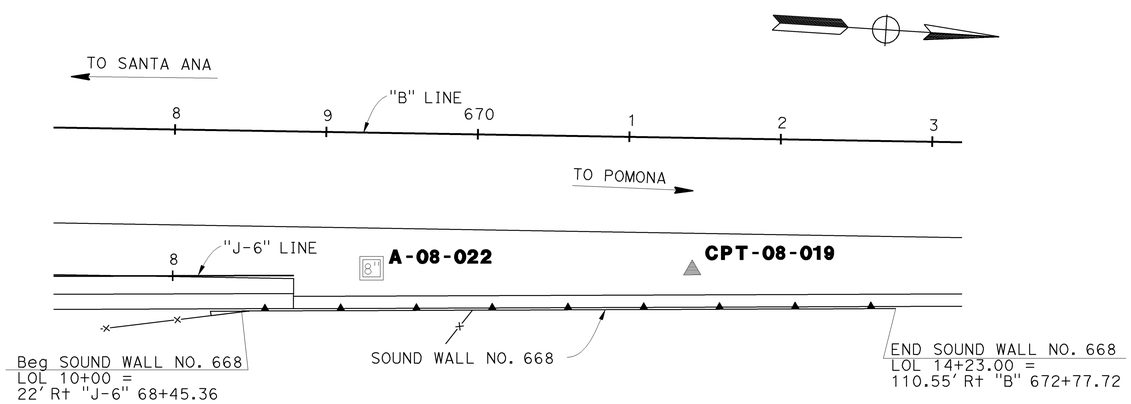

PLAN
1"=50'

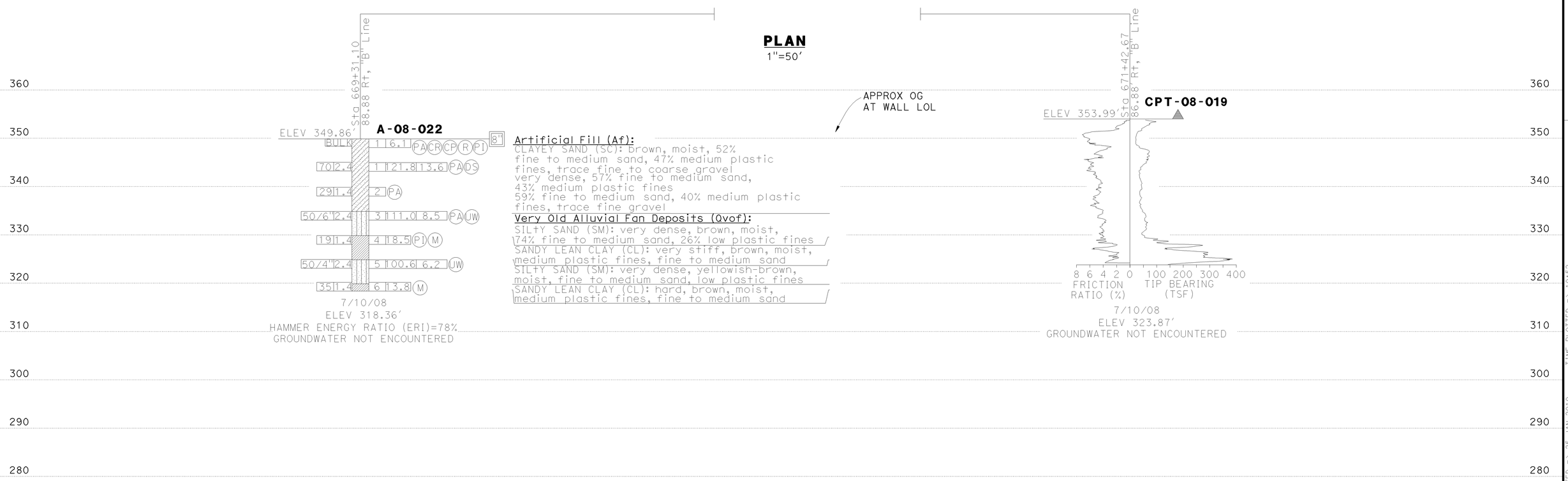

PROFILE
Horz:1"=50'
Vert: 1"=10'

STATIONING "B" LINE
3 4 665 6 7 8 9 670 1 2 3 4 675 6 7 8

DESIGN OVERSIGHT	DRAWN BY	K. Reyes	R. Bethapudi FIELD INVESTIGATION BY:
SIGN OFF DATE	CHECKED BY	H. Nofal	DATE

PREPARED FOR THE STATE OF CALIFORNIA DEPARTMENT OF TRANSPORTATION

Ayman Salama
PROJECT ENGINEER

BRIDGE NO.
POST MILES

SOUND WALL NO. 668

LOG OF TEST BORINGS SHEET 1 OF 2 SW-45

ORIGINAL SCALE IN INCHES FOR REDUCED PLANS 0 1 2 3

CU 12220
EA 0F0321

DISREGARD PRINTS BEARING EARLIER REVISION DATES

REVISION DATES (PRELIMINARY STAGE ONLY) 02/17/09 04/07/09 06/15/09 SHEET OF

FILE => c0F032re003.dgn

USERNAME => ttmnguye DATE PLOTTED => 25-JAN-2010 TIME PLOTTED => 10:52

REFERENCE: CALTRANS SOIL & ROCK LOGGING, CLASSIFICATION, AND PRESENTATION MANUAL (JUNE 2007)

DIST	COUNTY	ROUTE	POST MILES TOTAL PROJECT	SHEET No	TOTAL SHEETS
12	Ora	57	18.4/20.9	364	856

HishamNofal 06/15/09
GEOTECHNICAL PROFESSIONAL DATE

1-25-10
PLANS APPROVAL DATE

REGISTERED PROFESSIONAL ENGINEER HISHAM M. NOFAL No. 2765 Exp. 09/30/09 GEOTECHNICAL STATE OF CALIFORNIA

The State of California or its officers or agents shall not be responsible for the accuracy or completeness of electronic copies of this plan sheet.

OCTA
550 S. MAIN STREET
ORANGE, CA 92863

CH2M HILL
6 HUTTON CENTRE DRIVE, SUITE 700
SANTA ANA, CA 92707

GROUP SYMBOLS AND NAMES

Graphic/Symbol	Group Names	Graphic/Symbol	Group Names
GW	Well-graded GRAVEL Well-graded GRAVEL with SAND	CL	Lean CLAY Lean CLAY with SAND Lean CLAY with GRAVEL SANDY lean CLAY SANDY lean CLAY with GRAVEL GRAVELLY lean CLAY GRAVELLY lean CLAY with SAND
GP	Poorly graded GRAVEL Poorly graded GRAVEL with SAND		
GW-GM	Well-graded GRAVEL with SILT Well-graded GRAVEL with SILT and SAND	CL-ML	SILTY CLAY SILTY CLAY with SAND SILTY CLAY with GRAVEL SANDY SILTY CLAY SANDY SILTY CLAY with GRAVEL GRAVELLY SILTY CLAY GRAVELLY SILTY CLAY with SAND
GW-GC	Well-graded GRAVEL with CLAY (or SILTY CLAY) Well-graded GRAVEL with CLAY and SAND (or SILTY CLAY and SAND)		
GP-GM	Poorly graded GRAVEL with SILT Poorly graded GRAVEL with SILT and SAND	ML	SILT SILT with SAND SILT with GRAVEL SANDY SILT SANDY SILT with GRAVEL GRAVELLY SILT GRAVELLY SILT with SAND
GP-GC	Poorly graded GRAVEL with CLAY (or SILTY CLAY) Poorly graded GRAVEL with CLAY and SAND (or SILTY CLAY and SAND)		
GM	SILTY GRAVEL SILTY GRAVEL with SAND	OL	ORGANIC lean CLAY ORGANIC lean CLAY with SAND ORGANIC lean CLAY with GRAVEL SANDY ORGANIC lean CLAY SANDY ORGANIC lean CLAY with GRAVEL GRAVELLY ORGANIC lean CLAY GRAVELLY ORGANIC lean CLAY with SAND
GC	CLAYEY GRAVEL CLAYEY GRAVEL with SAND		
GC-GM	SILTY, CLAYEY GRAVEL SILTY, CLAYEY GRAVEL with SAND	OL	ORGANIC SILT ORGANIC SILT with SAND ORGANIC SILT with GRAVEL SANDY ORGANIC SILT SANDY ORGANIC SILT with GRAVEL GRAVELLY ORGANIC SILT GRAVELLY ORGANIC SILT with SAND
SW	Well-graded SAND Well-graded SAND with GRAVEL		
SP	Poorly graded SAND Poorly graded SAND with GRAVEL	CH	Fat CLAY Fat CLAY with SAND Fat CLAY with GRAVEL SANDY fat CLAY SANDY fat CLAY with GRAVEL GRAVELLY fat CLAY GRAVELLY fat CLAY with SAND
SW-SM	Well-graded SAND with SILT Well-graded SAND with SILT and GRAVEL		
SW-SC	Well-graded SAND with CLAY (or SILTY CLAY) Well-graded SAND with CLAY and GRAVEL (or SILTY CLAY and GRAVEL)	MH	Elastic SILT Elastic SILT with SAND Elastic SILT with GRAVEL SANDY elastic SILT SANDY elastic SILT with GRAVEL GRAVELLY elastic SILT GRAVELLY elastic SILT with SAND
SP-SM	Poorly graded SAND with SILT Poorly graded SAND with SILT and GRAVEL		
SP-SC	Poorly graded SAND with CLAY (or SILTY CLAY) Poorly graded SAND with CLAY and GRAVEL (or SILTY CLAY and GRAVEL)	OH	ORGANIC fat CLAY ORGANIC fat CLAY with SAND ORGANIC fat CLAY with GRAVEL SANDY ORGANIC fat CLAY SANDY ORGANIC fat CLAY with GRAVEL GRAVELLY ORGANIC fat CLAY GRAVELLY ORGANIC fat CLAY with SAND
SM	SILTY SAND SILTY SAND with GRAVEL		
SC	CLAYEY SAND CLAYEY SAND with GRAVEL	OH	ORGANIC elastic SILT ORGANIC elastic SILT with SAND ORGANIC elastic SILT with GRAVEL SANDY ORGANIC elastic SILT SANDY ORGANIC elastic SILT with GRAVEL GRAVELLY ORGANIC elastic SILT GRAVELLY ORGANIC elastic SILT with SAND
SC-SM	SILTY, CLAYEY SAND SILTY, CLAYEY SAND with GRAVEL		
PT	PEAT	OL/OH	ORGANIC SOIL ORGANIC SOIL with SAND ORGANIC SOIL with GRAVEL SANDY ORGANIC SOIL SANDY ORGANIC SOIL with GRAVEL GRAVELLY ORGANIC SOIL GRAVELLY ORGANIC SOIL with SAND
	COBBLES COBBLES and BOULDERS BOULDERS		

FIELD AND LABORATORY TESTING

- (C) Consolidation (ASTM D 2435)
- (CL) Collapse Potential (ASTM D 5333)
- (CP) Compaction Curve (CTM 216)
- (CR) Corrosivity Testing (CTM 643, CTM 422, CTM 417)
- (CU) Consolidated Undrained Triaxial (ASTM D 4767)
- (DS) Direct Shear (ASTM D 3080)
- (EI) Expansion Index (ASTM D 4829)
- (M) Moisture Content (ASTM D 2216)
- (OC) Organic Content-% (ASTM D 2974)
- (P) Permeability (CTM 220)
- (PA) Particle Size Analysis (ASTM D 422)
- (PI) Plasticity Index (AASHTO T 90) Liquid Limit (AASHTO T 89)
- (PL) Point Load Index (ASTM D 5731)
- (PM) Pressure Meter
- (PP) Pocket Penetrometer
- (R) R-Value (CTM 301)
- (SE) Sand Equivalent (CTM 217)
- (SG) Specific Gravity (AASHTO T 100)
- (SL) Shrinkage Limit (ASTM D 427)
- (SW) Swell Potential (ASTM D 4546)
- (TV) Pocket Torvane
- (UC) Unconfined Compression-Soil (ASTM D 2166) Unconfined Compression-Rock (ASTM D 2938)
- (UU) Unconsolidated Undrained Triaxial (ASTM D 2850)
- (UW) Unit Weight (ASTM D 4767)
- (VS) Vane Shear (AASHTO T 223)

APPARENT DENSITY OF COHESIONLESS SOILS

Description	SPT N_{60} (Blows / 12 inches)
Very loose	0 - 4
Loose	5 - 10
Medium Dense	11 - 30
Dense	31 - 50
Very Dense	> 50

MOISTURE

Description	Criteria
Dry	Absence of moisture, dusty, dry to the touch
Moist	Damp but no visible water
Wet	Visible free water, usually soil is below water table

PERCENT OR PROPORTION OF SOILS

Description	Criteria
Trace	Particles are present but estimated to be less than 5%
Few	5 to 10%
Little	15 to 25%
Some	30 to 45%
Mostly	50 to 100%

PARTICLE SIZE

Description		Size
Boulder		> 12"
Cobble		3" to 12"
Gravel	Coarse	3/4" to 3"
	Fine	No. 4 to 3/4"
Sand	Coarse	No. 10 to No. 4
	Medium	No. 40 to No. 10
	Fine	No. 200 to No. 40

CEMENTATION

Description	Criteria
Weak	Crumbles or breaks with handling or little finger pressure.
Moderate	Crumbles or breaks with considerable finger pressure.
Strong	Will not crumble or break with finger pressure.

CONSISTENCY OF COHESIVE SOILS

Description	Unconfined Compressive Strength (tsf)	Pocket Penetrometer Measurement (tsf)	Torvane Measurement (tsf)	Field Approximation
Very Soft	< 0.25	< 0.25	< 0.12	Easily penetrated several inches by fist
Soft	0.25 to 0.50	0.25 to 0.50	0.12 to 0.25	Easily penetrated several inches by thumb
Medium Stiff	0.50 to 1.0	0.50 to 1.0	0.25 to 0.50	Penetrated several inches by thumb with moderate effort
Stiff	1 to 2	1 to 2	0.50 to 1.0	Readily indented by thumb but penetrated only with great effort
Very Stiff	2 to 4	2 to 4	1.0 to 2.0	Readily indented by thumbnail
Hard	> 4.0	> 4.0	> 2.0	Indented by thumbnail with difficulty

PLASTICITY OF FINE-GRAINED SOILS

Description	Criteria
Nonplastic	A 1/8-inch thread cannot be rolled at any water content.
Low	The thread can barely be rolled and the lump cannot be formed when drier than the plastic limit.
Medium	The thread is easy to roll and not much time is required to reach the plastic limit. The thread cannot be rerolled after reaching the plastic limit. The lump crumbles when drier than the plastic limit.
High	It takes considerable time rolling and kneading to reach the plastic limit. The thread can be rerolled several times after reaching the plastic limit. The lump can be formed without crumbling when drier than the plastic limit.

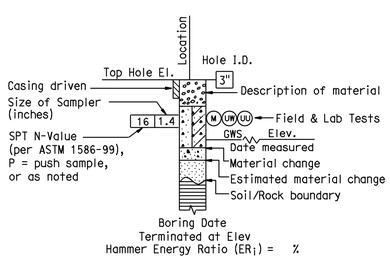

ROTARY BORING

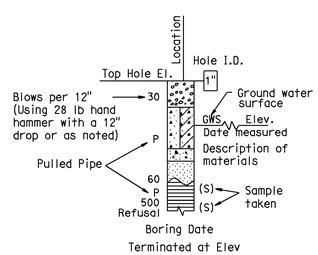

HAND BORING

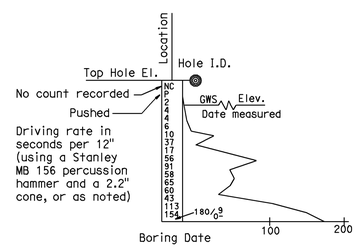

DYNAMIC CONE PENETRATION BORING

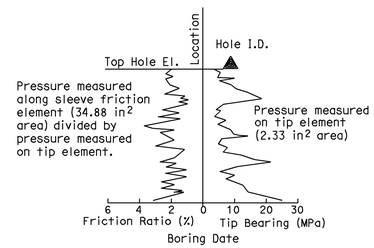

CONE PENETRATION TEST (CPT) SOUNDING

BOREHOLE IDENTIFICATION

Symbol	Hole Type	Description
Size	A	Auger Boring
Size	R P	Rotary drilled boring Rotary percussion boring (air)
Size HQ	R	Rotary drilled diamond core
Size	HD HA	Hand driven (1-inch soil tube) Hand Auger
●	D	Dynamic Cone Penetration Boring
◕	B	Hollow Stem Auger Boring (HSA)
▲	CPT	Cone Penetration Test (ASTM D 5778-95)
□	O	Other

Note: Size in inches.

DESIGN OVERSIGHT

SIGN OFF DATE

DRAWN BY K. Reyes

CHECKED BY H. Nofal

R. Bethapudi
FIELD INVESTIGATION BY:

DATE

PREPARED FOR THE
STATE OF CALIFORNIA
DEPARTMENT OF TRANSPORTATION

Ayman Salama
PROJECT ENGINEER

BRIDGE NO.

POST MILES

SOIL LEGEND

SOUND WALL No. 668

LOG OF TEST BORINGS SHEET 2 OF 2

SW-46

ORIGINAL SCALE IN INCHES FOR REDUCED PLANS 0 1 2 3

CU 12220
EA 0F0321

DISREGARD PRINTS BEARING EARLIER REVISION DATES

REVISION DATES (PRELIMINARY STAGE ONLY) 02/27/09 04/27/09 06/15/09

SHEET OF

FILE => c0F032re004.dgn

USERNAME => trmnguye DATE PLOTTED => 25-JAN-2010 TIME PLOTTED => 10:52

Dist	COUNTY	ROUTE	POST MILES TOTAL PROJECT	SHEET No.	TOTAL SHEETS
12	Ora	57	18.4/20.9	365	856

11-16-09
LICENSED LANDSCAPE ARCHITECT

1-25-10
PLANS APPROVAL DATE

LICENSED LANDSCAPE ARCHITECT
PATRICK L. HIRSCH
NO. 1710
03-31-11
RENEWAL DATE
11-16-09
DATE
STATE OF CALIFORNIA

THE STATE OF CALIFORNIA OR ITS OFFICERS OR AGENTS SHALL NOT BE RESPONSIBLE FOR THE ACCURACY OR COMPLETENESS OF SCANNED COPIES OF THIS PLAN SHEET.

HIRSCH & ASSOCIATES, INC
2221 EAST WINSTON ROAD,
SUITE A
ANAHEIM, CA 92806

OCTA
550 S. MAIN STREET
ORANGE, CA 92863

NOTE:

FOR ACCURATE RIGHT OF WAY AND ACCESS DATA,
CONTACT RIGHT OF WAY ENGINEERING AT THE DISTRICT OFFICE.

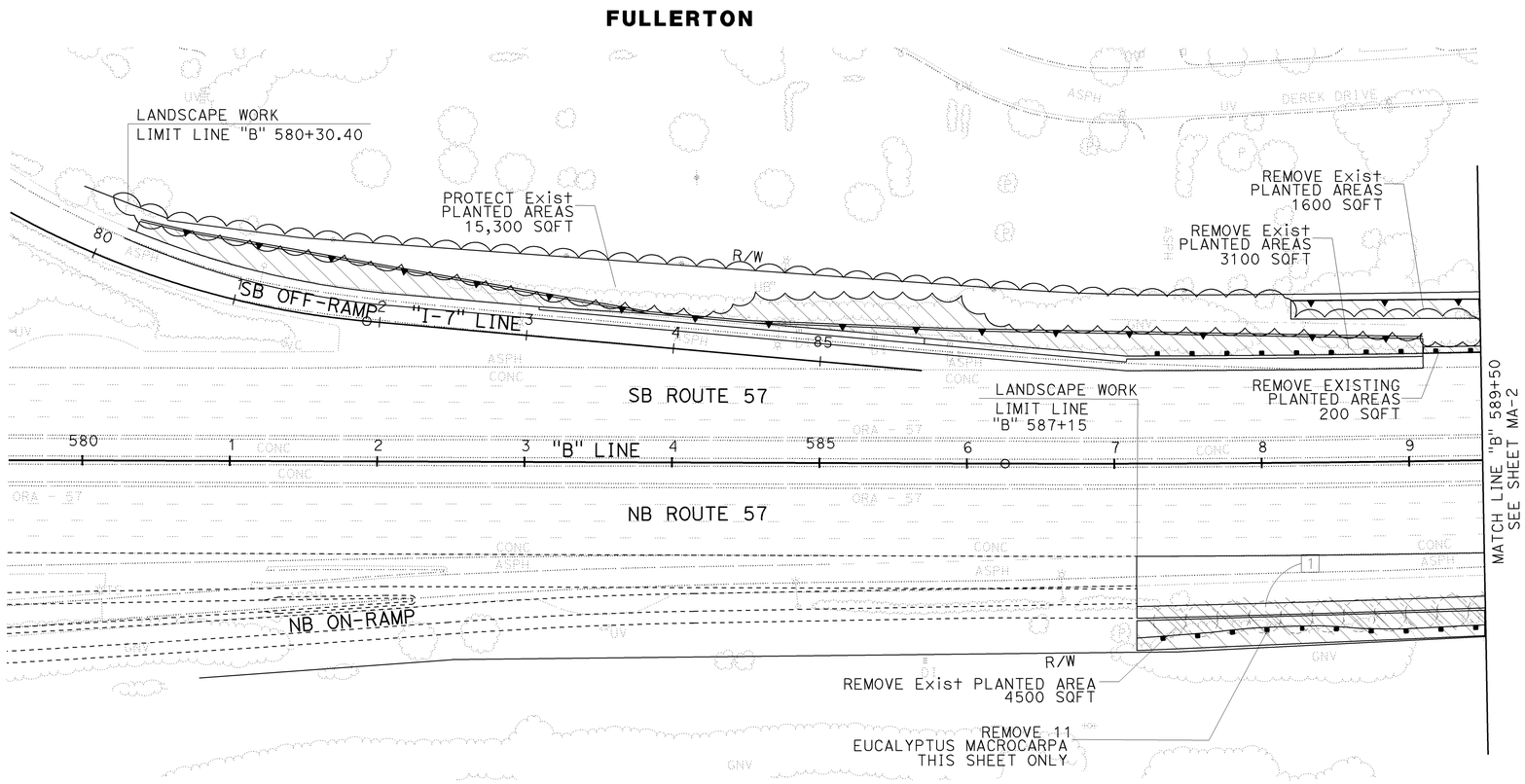

KEYNOTES

1 REMOVE EXISTING TREE/SHRUBS (Typ)

LEGEND

PROTECT EXISTING PLANTED AREAS

REMOVE EXISTING PLANTED AREAS

REMOVE EXISTING TREES & SHRUBS

THIS PLAN ACCURATE FOR MAINTAIN EXISTING PLANTS WORK ONLY

MAINTAIN EXISTING PLANTS PLAN

SCALE: 1" = 50'

MA-1

STATE OF CALIFORNIA - DEPARTMENT OF TRANSPORTATION
Caltrans

CONSULTANT SENIOR LANDSCAPE ARCHITECT: PATRICK HIRSCH
CALCULATED-DESIGNED BY: MORGAN ITZEL
CHECKED BY: JEFF YAMAMOTO
REVISED BY
DATE REVISED

LAST REVISION 00-00-00
DATE PLOTTED => 25-JAN-2010
TIME PLOTTED => 11:02

Dist	COUNTY	ROUTE	POST MILES TOTAL PROJECT	SHEET No.	TOTAL SHEETS
12	Ora	57	18.4/20.9	366	856

06-15-09
LICENSED LANDSCAPE ARCHITECT

1-25-10
PLANS APPROVAL DATE

LICENSED LANDSCAPE ARCHITECT
PATRICK L. HIRSCH
NO. 1710
03-31-11
RENEWAL DATE
06-15-09
DATE
STATE OF CALIFORNIA

THE STATE OF CALIFORNIA OR ITS OFFICERS OR AGENTS SHALL NOT BE RESPONSIBLE FOR THE ACCURACY OR COMPLETENESS OF SCANNED COPIES OF THIS PLAN SHEET.

HIRSCH & ASSOCIATES, INC
2221 EAST WINSTON ROAD,
SUITE A
ANAHEIM, CA 92806

OCTA
550 S. MAIN STREET
ORANGE, CA 92863

NOTE:

FOR ACCURATE RIGHT OF WAY AND ACCESS DATA,
CONTACT RIGHT OF WAY ENGINEERING AT THE DISTRICT OFFICE.

FULLERTON

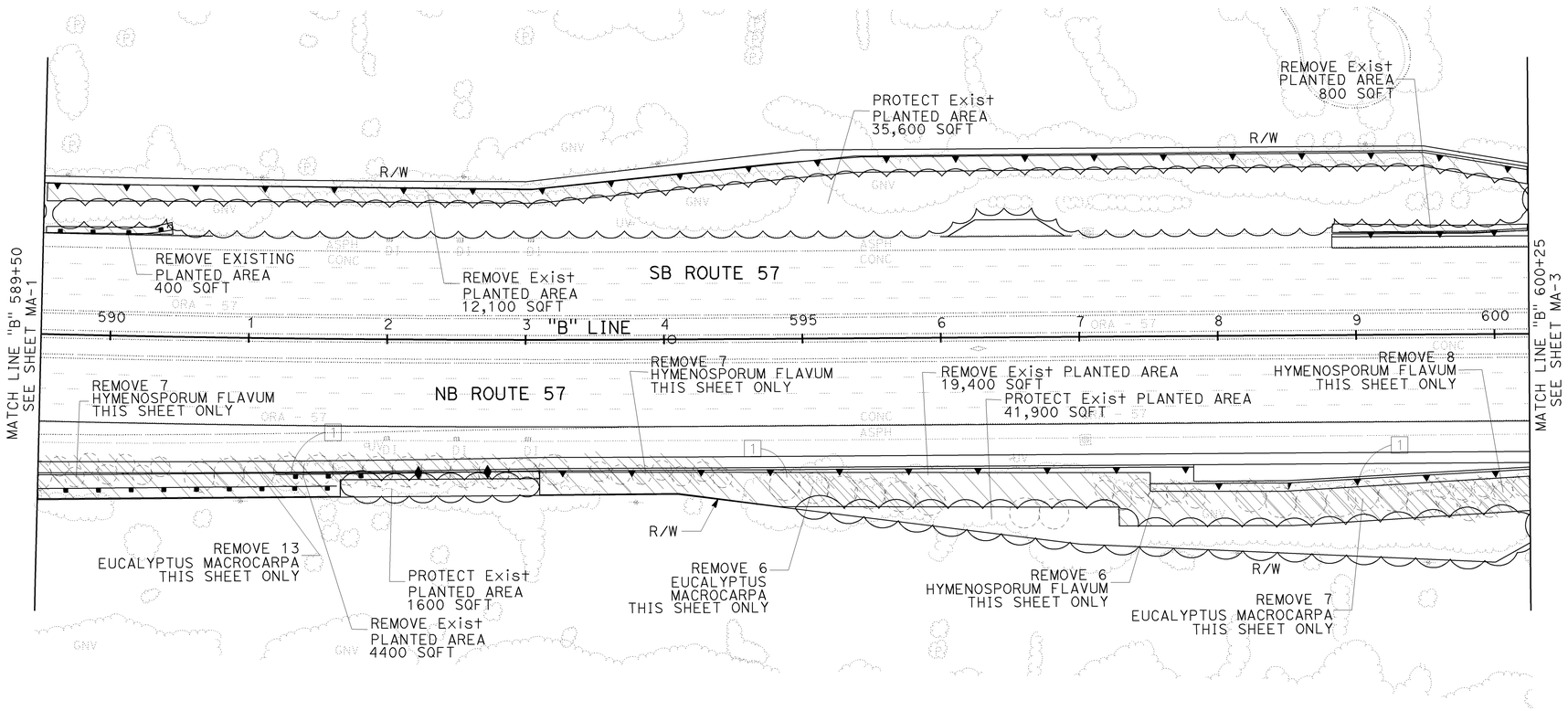

MAINTAIN EXISTING PLANTS PLAN

SCALE: 1" = 50'

THIS PLAN ACCURATE FOR MAINTAIN EXISTING PLANTS WORK ONLY

MA-2

STATE OF CALIFORNIA - DEPARTMENT OF TRANSPORTATION
Caltrans

CONSULTANT SENIOR LANDSCAPE ARCHITECT: PATRICK HIRSCH

CALCULATED-DESIGNED BY: MORGAN ITZEL
CHECKED BY: JEFF YAMAMOTO

REVISED BY
DATE REVISED

LAST REVISION 00-00-00
DATE PLOTTED => 25-JAN-2010
TIME PLOTTED => 11:03

Dist	COUNTY	ROUTE	POST MILES TOTAL PROJECT	SHEET No.	TOTAL SHEETS
12	Ora	57	18.4/20.9	367	856

11-16-09
LICENSED LANDSCAPE ARCHITECT

1-25-10
PLANS APPROVAL DATE

LICENSED LANDSCAPE ARCHITECT
PATRICK L. HIRSCH
NO. 1710
03-31-11
RENEWAL DATE
11-16-09
DATE
STATE OF CALIFORNIA

THE STATE OF CALIFORNIA OR ITS OFFICERS OR AGENTS SHALL NOT BE RESPONSIBLE FOR THE ACCURACY OR COMPLETENESS OF SCANNED COPIES OF THIS PLAN SHEET.

HIRSCH & ASSOCIATES, INC
2221 EAST WINSTON ROAD,
SUITE A
ANAHEIM, CA 92806

OCTA
550 S. MAIN STREET
ORANGE, CA 92863

NOTE:

FOR ACCURATE RIGHT OF WAY AND ACCESS DATA,
CONTACT RIGHT OF WAY ENGINEERING AT THE DISTRICT OFFICE.

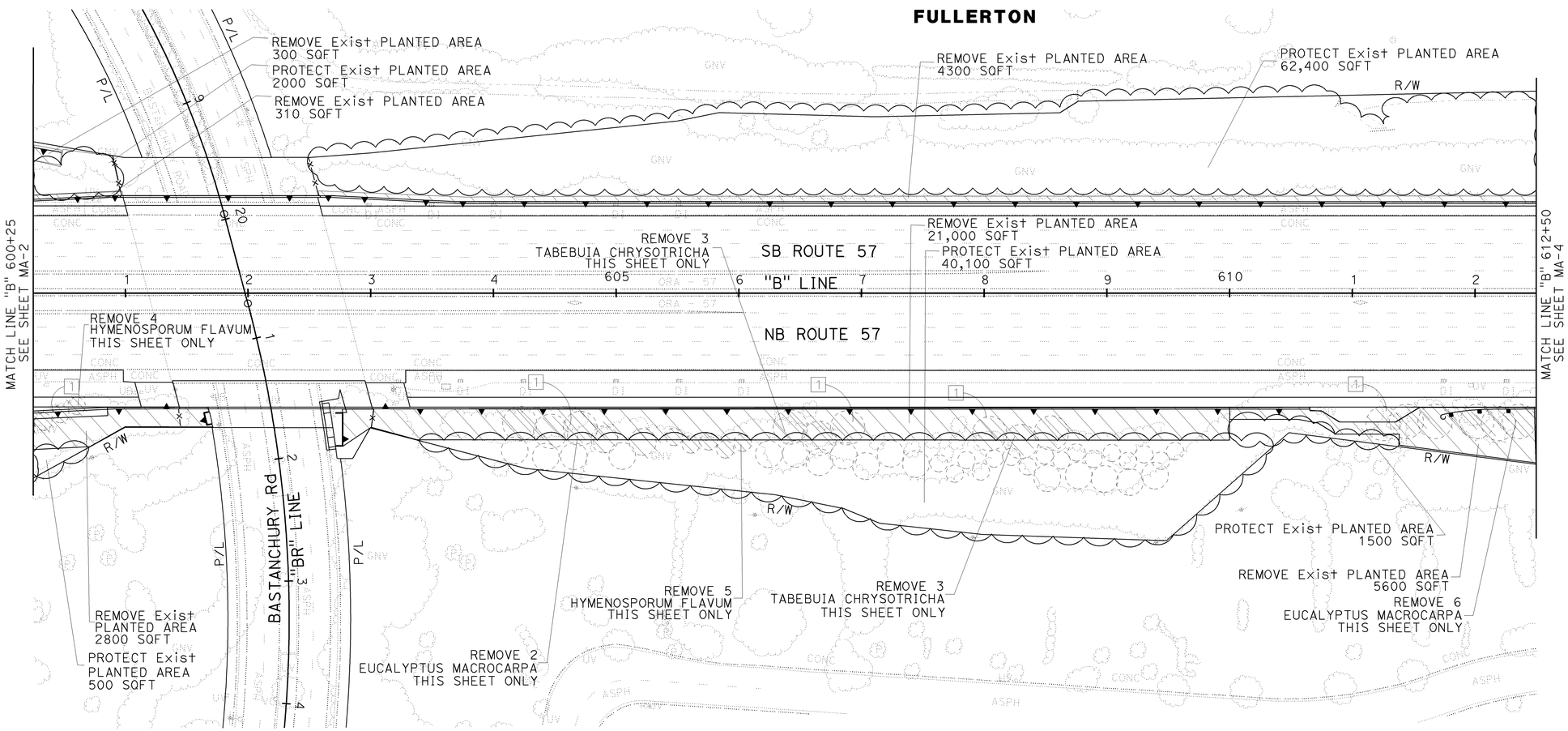

THIS PLAN ACCURATE FOR MAINTAIN EXISTING PLANTS WORK ONLY

MAINTAIN EXISTING PLANTS PLAN

SCALE: 1" = 50'

MA-3

STATE OF CALIFORNIA - DEPARTMENT OF TRANSPORTATION
Caltrans®

CONSULTANT SENIOR LANDSCAPE ARCHITECT: PATRICK HIRSCH
CALCULATED-DESIGNED BY: MORGAN ITZEL
CHECKED BY: JEFF YAMAMOTO
REVISED BY
DATE REVISED

LAST REVISION 00-00-00
DATE PLOTTED => 25-JAN-2010
TIME PLOTTED => 11:03

Dist	COUNTY	ROUTE	POST MILES TOTAL PROJECT	SHEET No.	TOTAL SHEETS
12	Ora	57	18.4/20.9	368	856

06-15-09
LICENSED LANDSCAPE ARCHITECT

1-25-10
PLANS APPROVAL DATE

LICENSED LANDSCAPE ARCHITECT
PATRICK L. HIRSCH
NO. 1710
03-31-11
RENEWAL DATE
06-15-09
DATE
STATE OF CALIFORNIA

THE STATE OF CALIFORNIA OR ITS OFFICERS OR AGENTS SHALL NOT BE RESPONSIBLE FOR THE ACCURACY OR COMPLETENESS OF SCANNED COPIES OF THIS PLAN SHEET.

HIRSCH & ASSOCIATES, INC
2221 EAST WINSTON ROAD,
SUITE A
ANAHEIM, CA 92806

OCTA
550 S. MAIN STREET
ORANGE, CA 92863

NOTE:

FOR ACCURATE RIGHT OF WAY AND ACCESS DATA,
CONTACT RIGHT OF WAY ENGINEERING AT THE DISTRICT OFFICE.

FULLERTON

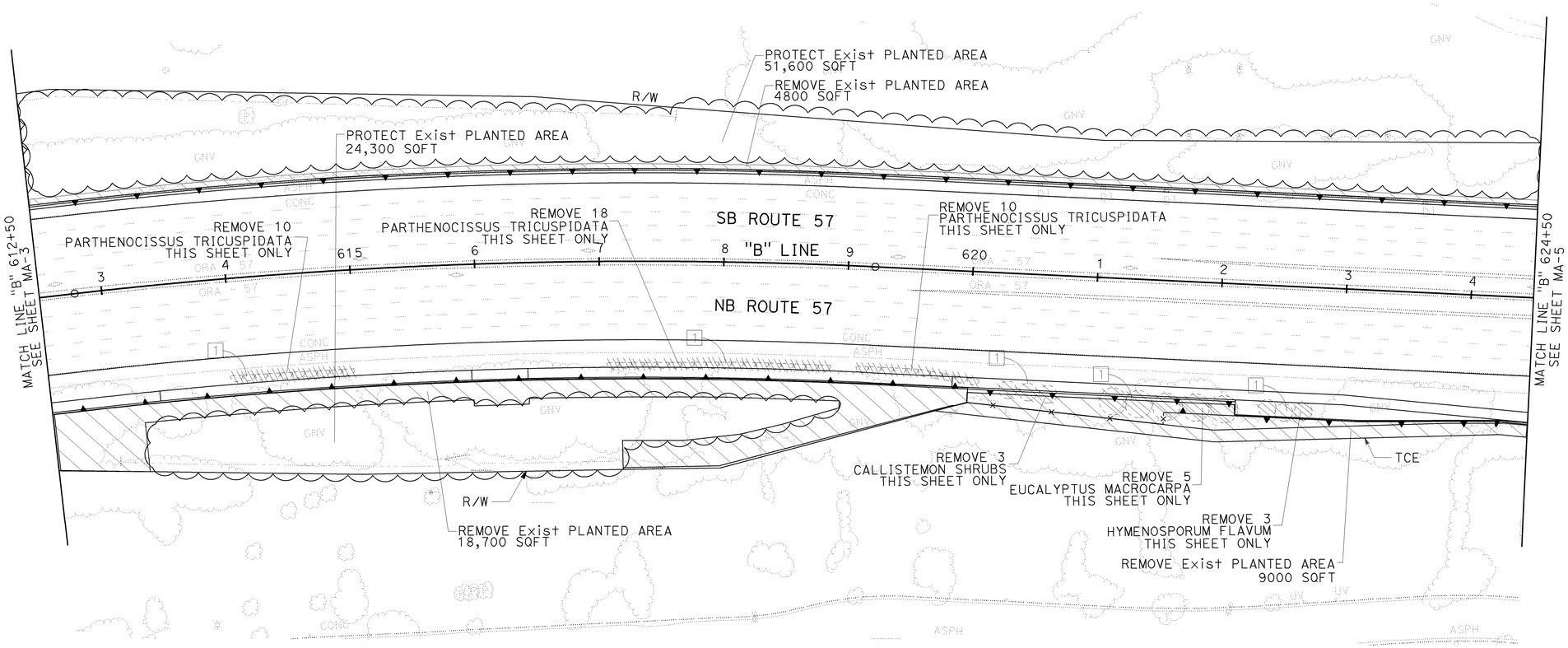

MAINTAIN EXISTING PLANTS PLAN

SCALE: 1" = 50'

MA-4

THIS PLAN ACCURATE FOR MAINTAIN EXISTING PLANTS WORK ONLY

STATE OF CALIFORNIA - DEPARTMENT OF TRANSPORTATION
Caltrans

CONSULTANT SENIOR LANDSCAPE ARCHITECT
PATRICK HIRSCH

CALCULATED-DESIGNED BY MORGAN ITZEL
CHECKED BY JEFF YAMAMOTO
REVISED BY
DATE REVISED

LAST REVISION 00-00-00
DATE PLOTTED => 25-JAN-2010
TIME PLOTTED => 11:03

Dist	COUNTY	ROUTE	POST MILES TOTAL PROJECT	SHEET No.	TOTAL SHEETS
12	Ora	57	18.4/20.9	369	856

11-16-09
LICENSED LANDSCAPE ARCHITECT

1-25-10
PLANS APPROVAL DATE

LICENSED LANDSCAPE ARCHITECT PATRICK L. HIRSCH NO. 1710 03-31-11 RENEWAL DATE 11-16-09 DATE STATE OF CALIFORNIA

THE STATE OF CALIFORNIA OR ITS OFFICERS OR AGENTS SHALL NOT BE RESPONSIBLE FOR THE ACCURACY OR COMPLETENESS OF SCANNED COPIES OF THIS PLAN SHEET.

HIRSCH & ASSOCIATES, INC
2221 EAST WINSTON ROAD,
SUITE A
ANAHEIM, CA 92806

OCTA
550 S. MAIN STREET
ORANGE, CA 92863

NOTE:

FOR ACCURATE RIGHT OF WAY AND ACCESS DATA,
CONTACT RIGHT OF WAY ENGINEERING AT THE DISTRICT OFFICE.

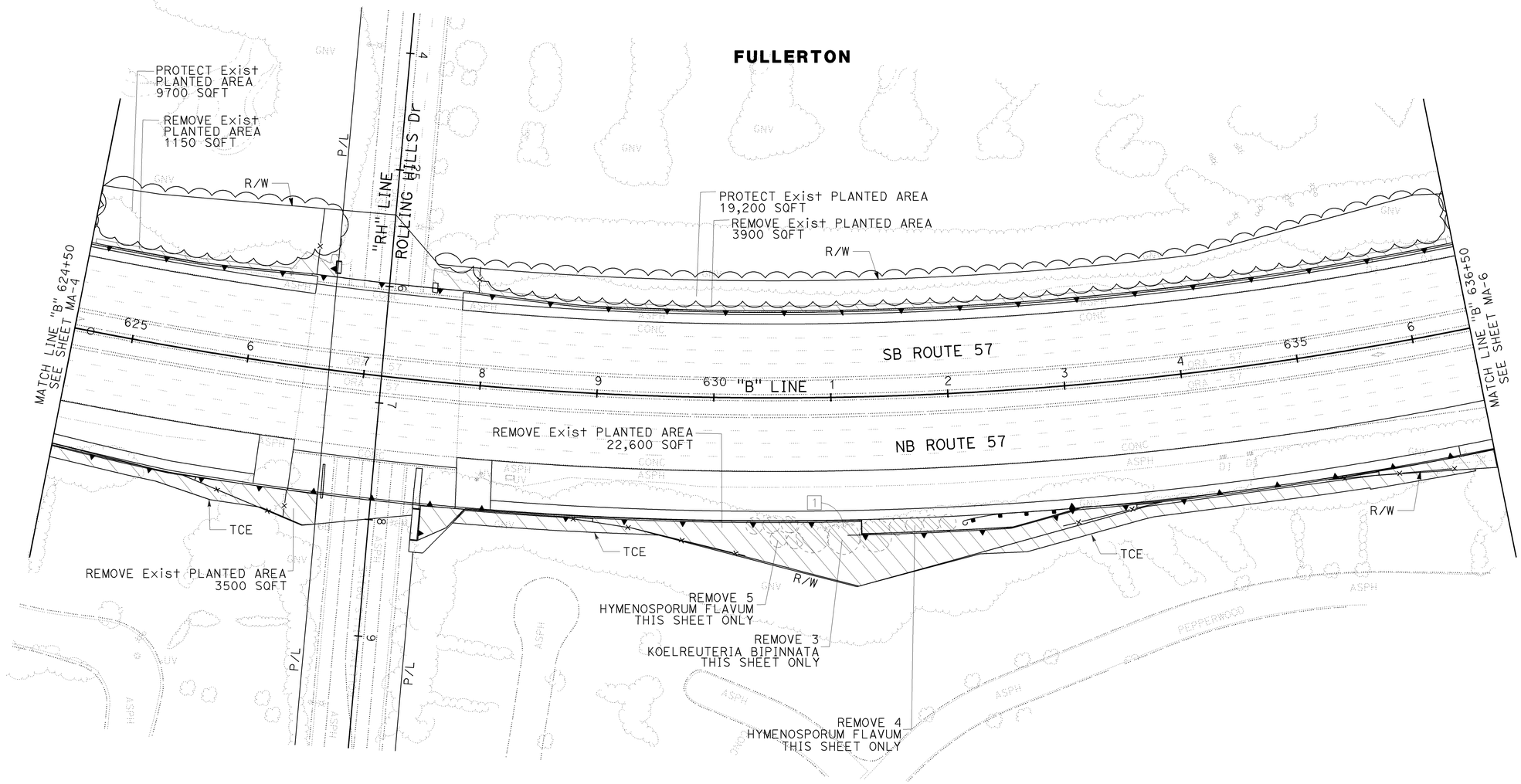

MAINTAIN EXISTING PLANTS PLAN

SCALE: 1" = 50'

MA-5

THIS PLAN ACCURATE FOR MAINTAIN EXISTING PLANTS WORK ONLY

STATE OF CALIFORNIA - DEPARTMENT OF TRANSPORTATION

Caltrans

CONSULTANT SENIOR LANDSCAPE ARCHITECT: PATRICK HIRSCH

CALCULATED-DESIGNED BY: MORGAN ITZEL
CHECKED BY: JEFF YAMAMOTO

REVISED BY
DATE REVISED

LAST REVISION 00-00-00
DATE PLOTTED => 25-JAN-2010
TIME PLOTTED => 11:03

Dist	COUNTY	ROUTE	POST MILES TOTAL PROJECT	SHEET No.	TOTAL SHEETS
12	Ora	57	18.4/20.9	370	856

06-15-09
LICENSED LANDSCAPE ARCHITECT

1-25-10
PLANS APPROVAL DATE

LICENSED LANDSCAPE ARCHITECT
PATRICK L. HIRSCH
NO. 1710
03-31-11
RENEWAL DATE
06-15-09
DATE
STATE OF CALIFORNIA

THE STATE OF CALIFORNIA OR ITS OFFICERS OR AGENTS SHALL NOT BE RESPONSIBLE FOR THE ACCURACY OR COMPLETENESS OF SCANNED COPIES OF THIS PLAN SHEET.

HIRSCH & ASSOCIATES, INC
2221 EAST WINSTON ROAD,
SUITE A
ANAHEIM, CA 92806

OCTA
550 S. MAIN STREET
ORANGE, CA 92863

NOTE:

FOR ACCURATE RIGHT OF WAY AND ACCESS DATA,
CONTACT RIGHT OF WAY ENGINEERING AT THE DISTRICT OFFICE.

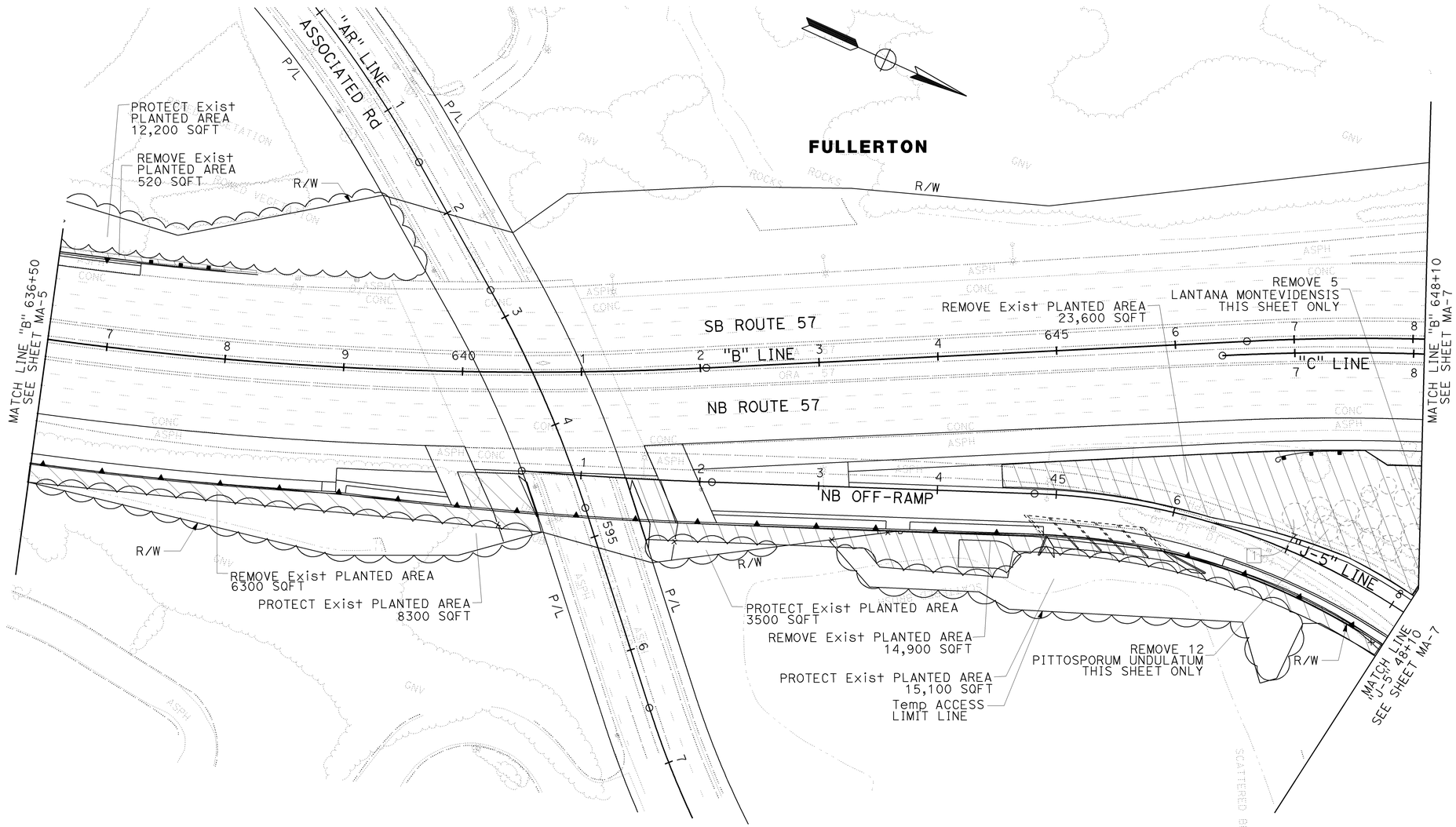

MAINTAIN EXISTING PLANTS PLAN

SCALE: 1" = 50'

MA-6

THIS PLAN ACCURATE FOR MAINTAIN EXISTING PLANTS WORK ONLY

STATE OF CALIFORNIA - DEPARTMENT OF TRANSPORTATION
Caltrans

CONSULTANT SENIOR LANDSCAPE ARCHITECT: PATRICK HIRSCH
CALCULATED-DESIGNED BY: MORGAN ITZEL
CHECKED BY: JEFF YAMAMOTO
REVISED BY
DATE REVISED

LAST REVISION 00-00-00
DATE PLOTTED => 25-JAN-2010
TIME PLOTTED => 11:03

BORDER LAST REVISED 4/11/2008
RELATIVE BORDER SCALE IS IN INCHES 0 1 2 3
USERNAME => trstrk
DGN FILE => c0f032th006.dgn
CU 12220
EA 0F0321

Dist	COUNTY	ROUTE	POST MILES TOTAL PROJECT	SHEET No.	TOTAL SHEETS
12	Ora	57	18.4/20.9	371	856

06-15-09
LICENSED LANDSCAPE ARCHITECT

1-25-10
PLANS APPROVAL DATE

LICENSED LANDSCAPE ARCHITECT
PATRICK L. HIRSCH
NO. 1710
03-31-11
RENEWAL DATE
06-15-09
DATE
STATE OF CALIFORNIA

THE STATE OF CALIFORNIA OR ITS OFFICERS OR AGENTS SHALL NOT BE RESPONSIBLE FOR THE ACCURACY OR COMPLETENESS OF SCANNED COPIES OF THIS PLAN SHEET.

HIRSCH & ASSOCIATES, INC
2221 EAST WINSTON ROAD,
SUITE A
ANAHEIM, CA 92806

OCTA
550 S. MAIN STREET
ORANGE, CA 92863

NOTE:

FOR ACCURATE RIGHT OF WAY AND ACCESS DATA, CONTACT RIGHT OF WAY ENGINEERING AT THE DISTRICT OFFICE.

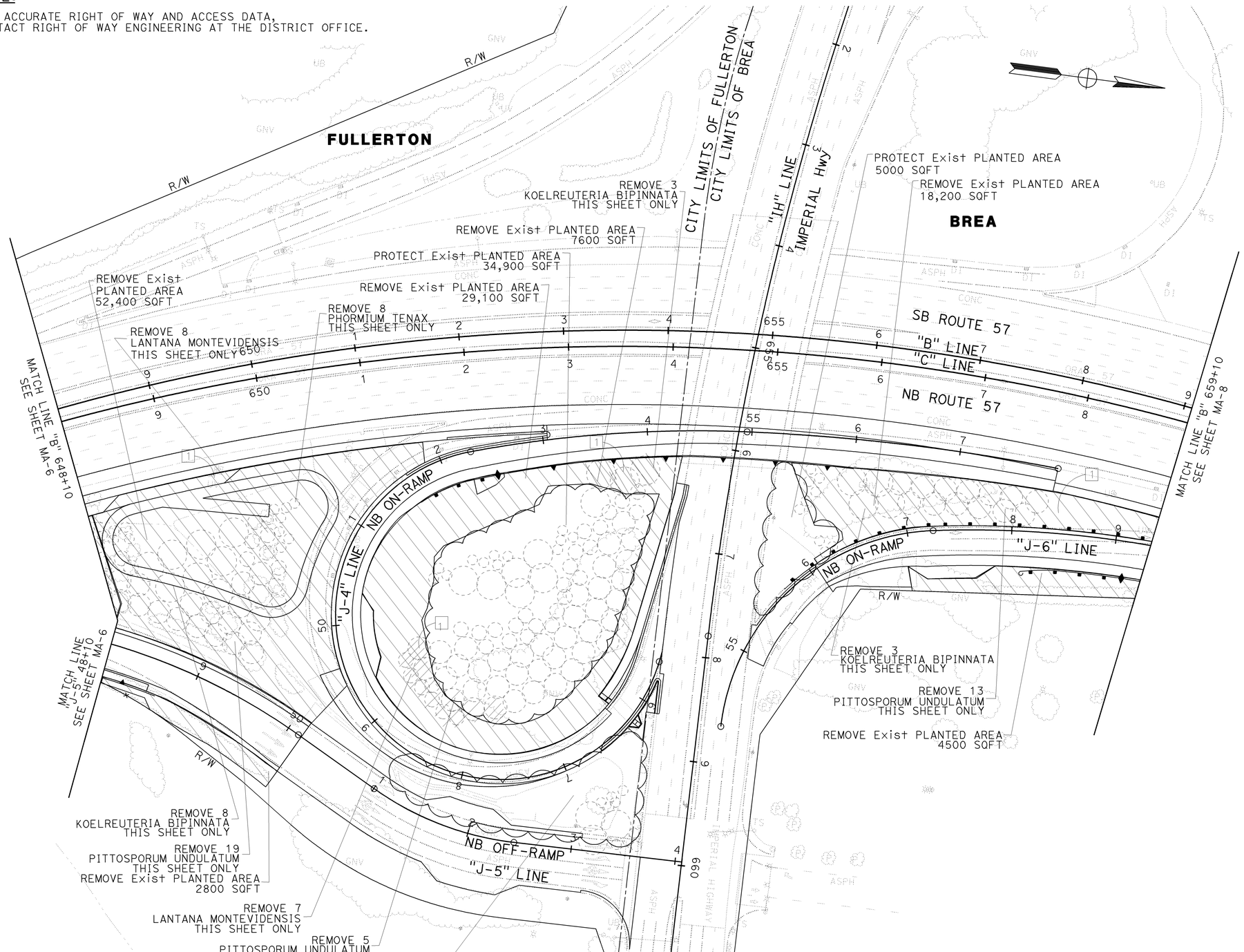

THIS PLAN ACCURATE FOR MAINTAIN EXISTING PLANTS WORK ONLY

MAINTAIN EXISTING PLANTS PLAN

SCALE: 1" = 50'

MA-7

STATE OF CALIFORNIA - DEPARTMENT OF TRANSPORTATION
Caltrans

CONSULTANT SENIOR LANDSCAPE ARCHITECT: PATRICK HIRSCH

CALCULATED-DESIGNED BY: MORGAN ITZEL
CHECKED BY: JEFF YAMAMOTO
REVISED BY
DATE REVISED

LAST REVISION 00-00-00
DATE PLOTTED => 25-JAN-2010
TIME PLOTTED => 11:03

Dist	COUNTY	ROUTE	POST MILES TOTAL PROJECT	SHEET No.	TOTAL SHEETS
12	Ora	57	18.4/20.9	372	856

06-15-09
LICENSED LANDSCAPE ARCHITECT

1-25-10
PLANS APPROVAL DATE

LICENSED LANDSCAPE ARCHITECT
PATRICK L. HIRSCH
NO. 1710
03-31-11
RENEWAL DATE
06-15-09
DATE
STATE OF CALIFORNIA

THE STATE OF CALIFORNIA OR ITS OFFICERS OR AGENTS SHALL NOT BE RESPONSIBLE FOR THE ACCURACY OR COMPLETENESS OF SCANNED COPIES OF THIS PLAN SHEET.

HIRSCH & ASSOCIATES, INC
2221 EAST WINSTON ROAD,
SUITE A
ANAHEIM, CA 92806

OCTA
550 S. MAIN STREET
ORANGE, CA 92863

NOTE:

FOR ACCURATE RIGHT OF WAY AND ACCESS DATA,
CONTACT RIGHT OF WAY ENGINEERING AT THE DISTRICT OFFICE.

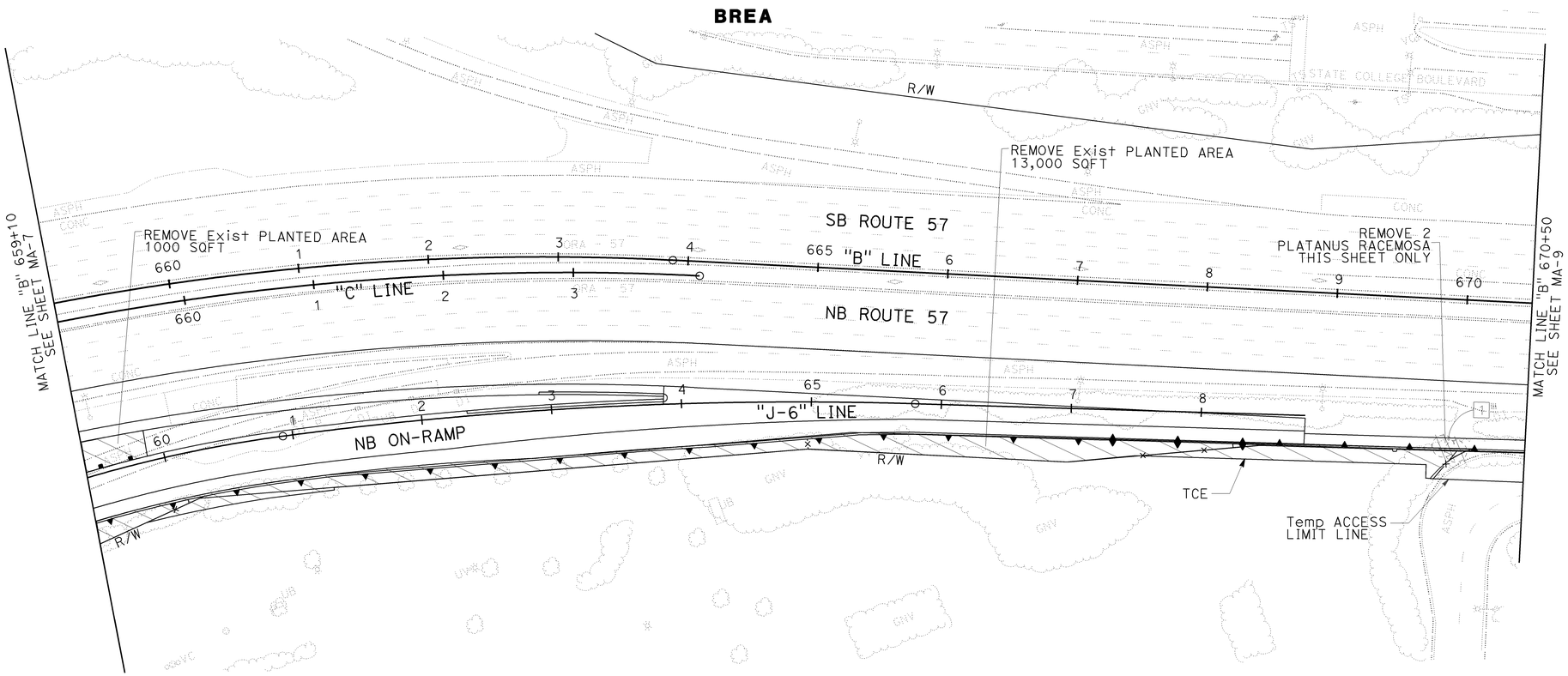

MAINTAIN EXISTING PLANTS PLAN

SCALE: 1" = 50'

THIS PLAN ACCURATE FOR MAINTAIN EXISTING PLANTS WORK ONLY

MA-8

STATE OF CALIFORNIA - DEPARTMENT OF TRANSPORTATION
Caltrans

CONSULTANT SENIOR LANDSCAPE ARCHITECT: PATRICK HIRSCH

CALCULATED-DESIGNED BY: MORGAN ITZEL
CHECKED BY: JEFF YAMAMOTO

REVISED BY
DATE REVISED

LAST REVISION 00-00-00
DATE PLOTTED => 25-JAN-2010
TIME PLOTTED => 11:03

BORDER LAST REVISED 4/11/2008
RELATIVE BORDER SCALE IS IN INCHES 0 1 2 3
USERNAME => trstrk
DGN FILE => c0f032th008.dgn
CU 12220
EA 0F0321

Dist	COUNTY	ROUTE	POST MILES TOTAL PROJECT	SHEET No.	TOTAL SHEETS
12	Ora	57	18.4/20.9	373	856

11-16-09
LICENSED LANDSCAPE ARCHITECT

1-25-10
PLANS APPROVAL DATE

LICENSED LANDSCAPE ARCHITECT
PATRICK L. HIRSCH
NO. 1710
03-31-11
RENEWAL DATE
11-16-09
DATE
STATE OF CALIFORNIA

THE STATE OF CALIFORNIA OR ITS OFFICERS OR AGENTS SHALL NOT BE RESPONSIBLE FOR THE ACCURACY OR COMPLETENESS OF SCANNED COPIES OF THIS PLAN SHEET.

HIRSCH & ASSOCIATES, INC
2221 EAST WINSTON ROAD,
SUITE A
ANAHEIM, CA 92806

OCTA
550 S. MAIN STREET
ORANGE, CA 92863

NOTE:

FOR ACCURATE RIGHT OF WAY AND ACCESS DATA,
CONTACT RIGHT OF WAY ENGINEERING AT THE DISTRICT OFFICE.

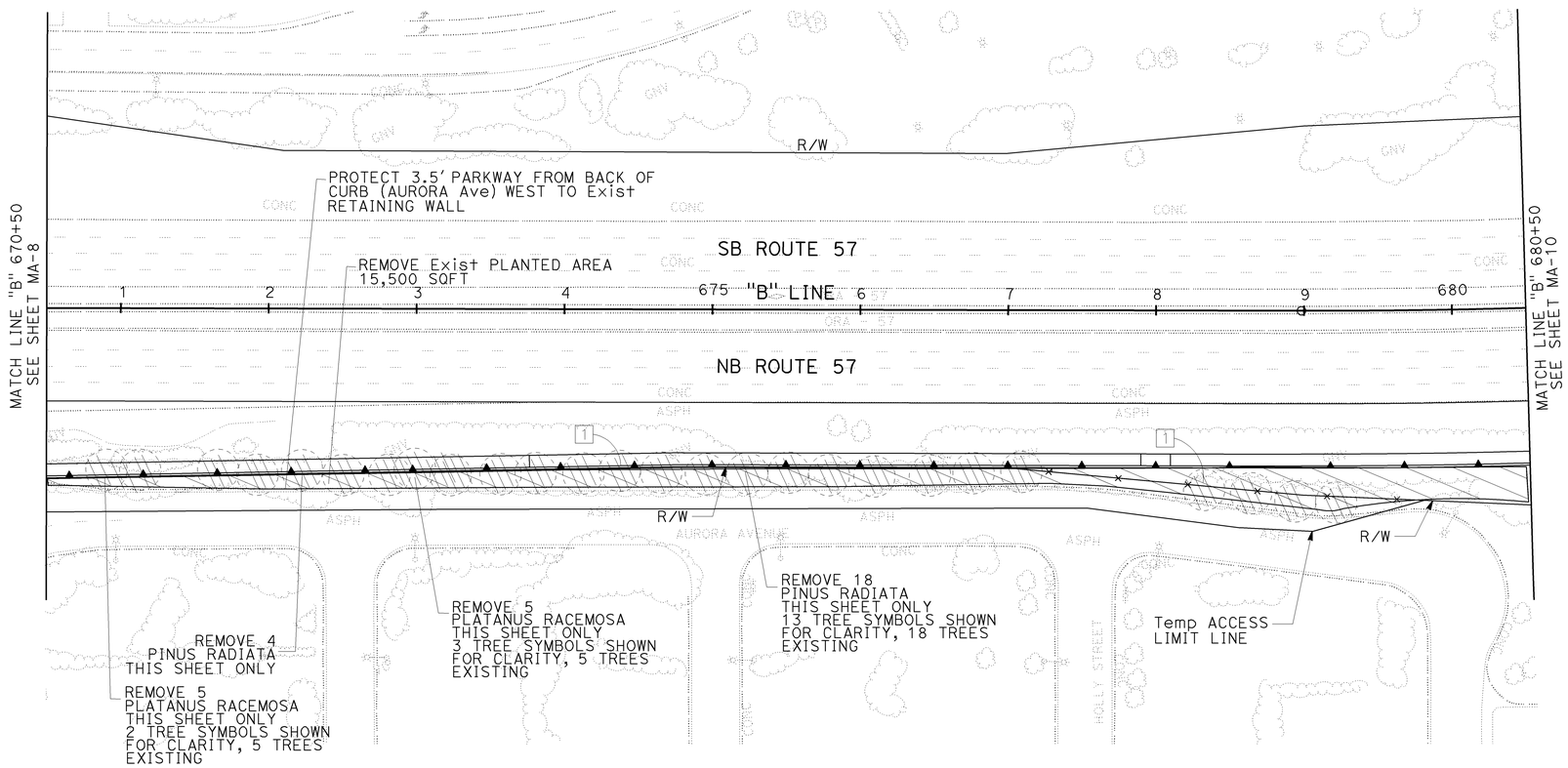

MAINTAIN EXISTING PLANTS PLAN

SCALE: 1" = 50'

MA-9

THIS PLAN ACCURATE FOR MAINTAIN EXISTING PLANTS WORK ONLY

STATE OF CALIFORNIA - DEPARTMENT OF TRANSPORTATION
Caltrans

CONSULTANT SENIOR LANDSCAPE ARCHITECT
PATRICK HIRSCH

CALCULATED-DESIGNED BY
MORGAN ITZEL

CHECKED BY
JEFF YAMAMOTO

REVISED BY

DATE REVISED

LAST REVISION 00-00-00
DATE PLOTTED => 25-JAN-2010
TIME PLOTTED => 11:03

Dist	COUNTY	ROUTE	POST MILES TOTAL PROJECT	SHEET No.	TOTAL SHEETS
12	Ora	57	18.4/20.9	374	856

06-15-09
LICENSED LANDSCAPE ARCHITECT

1-25-10
PLANS APPROVAL DATE

LICENSED LANDSCAPE ARCHITECT
PATRICK L. HIRSCH
NO. 1710
03-31-11
RENEWAL DATE
06-15-09
DATE
STATE OF CALIFORNIA

THE STATE OF CALIFORNIA OR ITS OFFICERS OR AGENTS SHALL NOT BE RESPONSIBLE FOR THE ACCURACY OR COMPLETENESS OF SCANNED COPIES OF THIS PLAN SHEET.

HIRSCH & ASSOCIATES, INC
2221 EAST WINSTON ROAD,
SUITE A
ANAHEIM, CA 92806

OCTA
550 S. MAIN STREET
ORANGE, CA 92863

NOTE:

FOR ACCURATE RIGHT OF WAY AND ACCESS DATA,
CONTACT RIGHT OF WAY ENGINEERING AT THE DISTRICT OFFICE.

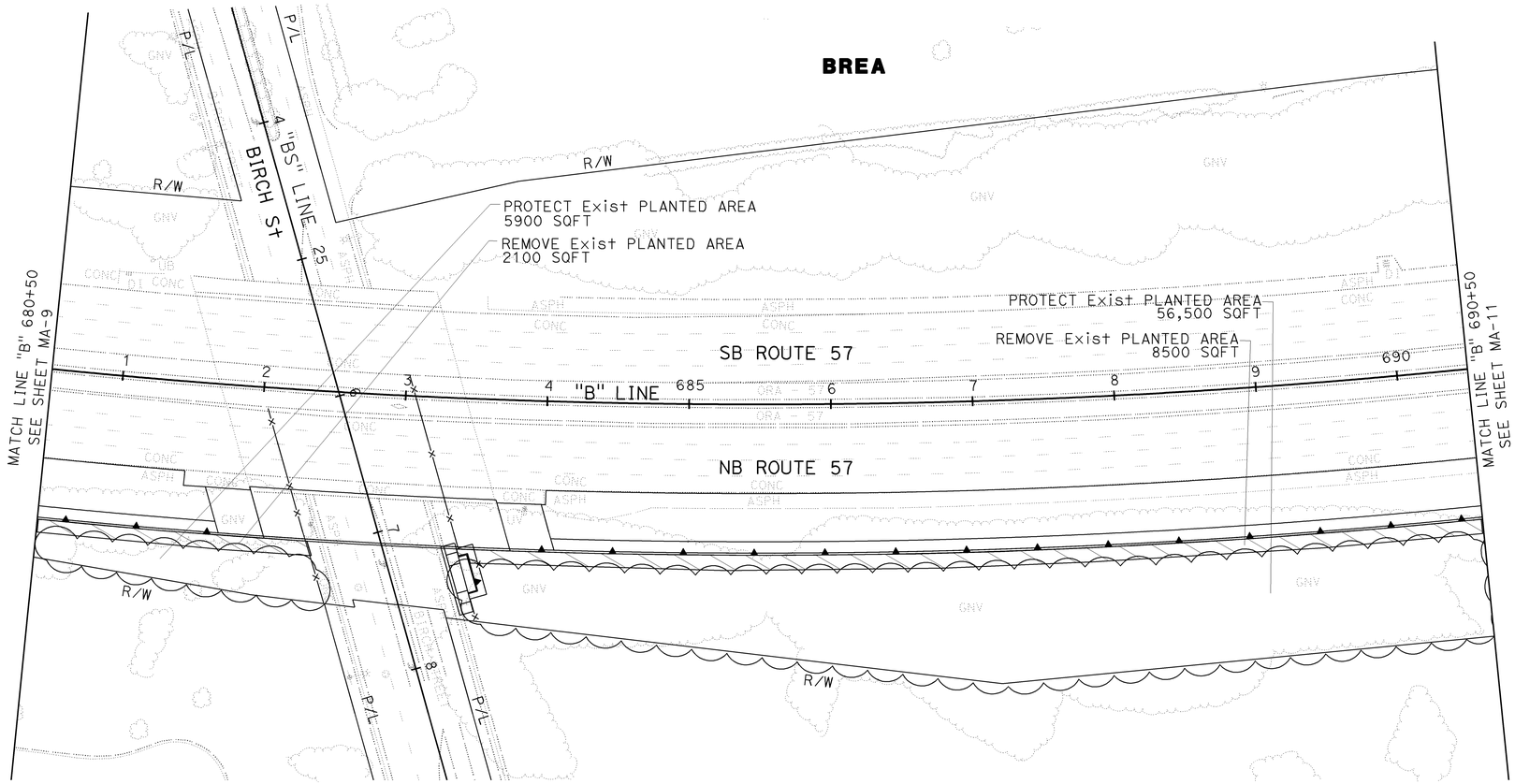

THIS PLAN ACCURATE FOR MAINTAIN EXISTING PLANTS WORK ONLY

MAINTAIN EXISTING PLANTS PLAN

SCALE: 1" = 50'

MA-10

STATE OF CALIFORNIA - DEPARTMENT OF TRANSPORTATION
Caltrans

CONSULTANT SENIOR LANDSCAPE ARCHITECT: PATRICK HIRSCH
CALCULATED-DESIGNED BY: MORGAN ITZEL
CHECKED BY: JEFF YAMAMOTO
REVISED BY
DATE REVISED

LAST REVISION 00-00-00
DATE PLOTTED => 25-JAN-2010
TIME PLOTTED => 11:03

BORDER LAST REVISED 4/11/2008
RELATIVE BORDER SCALE IS IN INCHES 0 1 2 3
USERNAME => trstrk
DGN FILE => c0f032th010.dgn
CU 12220
EA 0F0321

Dist	COUNTY	ROUTE	POST MILES TOTAL PROJECT	SHEET No.	TOTAL SHEETS
12	Ora	57	18.4/20.9	375	856

06-15-09
LICENSED LANDSCAPE ARCHITECT

1-25-10
PLANS APPROVAL DATE

LICENSED LANDSCAPE ARCHITECT
PATRICK L. HIRSCH
NO. 1710
03-31-11
RENEWAL DATE
06-15-09
DATE
STATE OF CALIFORNIA

THE STATE OF CALIFORNIA OR ITS OFFICERS OR AGENTS SHALL NOT BE RESPONSIBLE FOR THE ACCURACY OR COMPLETENESS OF SCANNED COPIES OF THIS PLAN SHEET.

HIRSCH & ASSOCIATES, INC
2221 EAST WINSTON ROAD,
SUITE A
ANAHEIM, CA 92806

OCTA
550 S. MAIN STREET
ORANGE, CA 92863

NOTE:

FOR ACCURATE RIGHT OF WAY AND ACCESS DATA,
CONTACT RIGHT OF WAY ENGINEERING AT THE DISTRICT OFFICE.

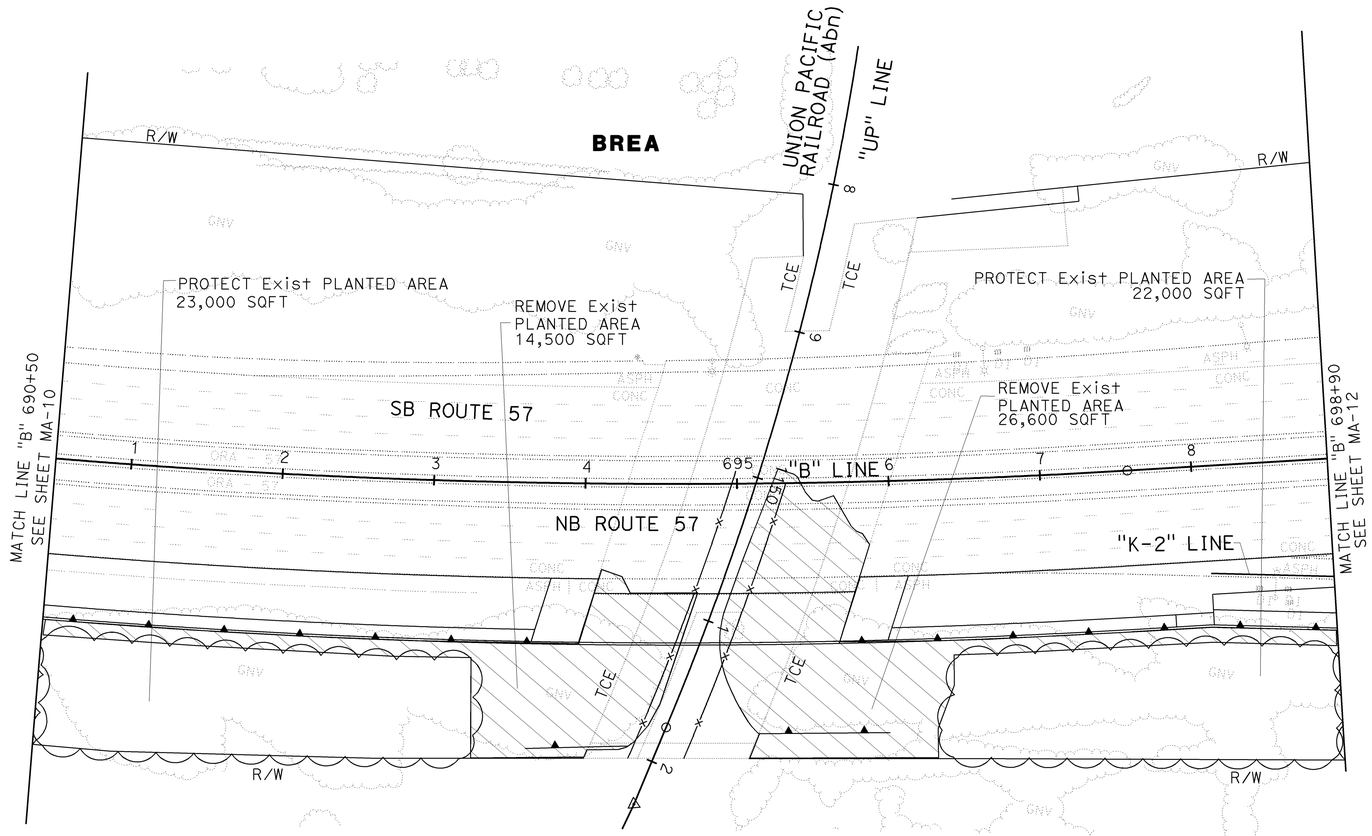

THIS PLAN ACCURATE FOR MAINTAIN EXISTING PLANTS WORK ONLY

MAINTAIN EXISTING PLANTS PLAN

SCALE: 1" = 50'

MA-11

STATE OF CALIFORNIA - DEPARTMENT OF TRANSPORTATION
Caltrans

CONSULTANT SENIOR LANDSCAPE ARCHITECT: PATRICK HIRSCH
CALCULATED-DESIGNED BY: MORGAN ITZEL
CHECKED BY: JEFF YAMAMOTO
REVISED BY
DATE REVISED

LAST REVISION 00-00-00
DATE PLOTTED => 25-JAN-2010
TIME PLOTTED => 11:03

Dist	COUNTY	ROUTE	POST MILES TOTAL PROJECT	SHEET No.	TOTAL SHEETS
12	Ora	57	18.4/20.9	376	856

06-15-09
LICENSED LANDSCAPE ARCHITECT

1-25-10
PLANS APPROVAL DATE

LICENSED LANDSCAPE ARCHITECT
PATRICK L. HIRSCH
NO. 1710
03-31-11
RENEWAL DATE
06-15-09
DATE
STATE OF CALIFORNIA

THE STATE OF CALIFORNIA OR ITS OFFICERS OR AGENTS SHALL NOT BE RESPONSIBLE FOR THE ACCURACY OR COMPLETENESS OF SCANNED COPIES OF THIS PLAN SHEET.

HIRSCH & ASSOCIATES, INC
2221 EAST WINSTON ROAD,
SUITE A
ANAHEIM, CA 92806

OCTA
550 S. MAIN STREET
ORANGE, CA 92863

NOTE:

FOR ACCURATE RIGHT OF WAY AND ACCESS DATA,
CONTACT RIGHT OF WAY ENGINEERING AT THE DISTRICT OFFICE.

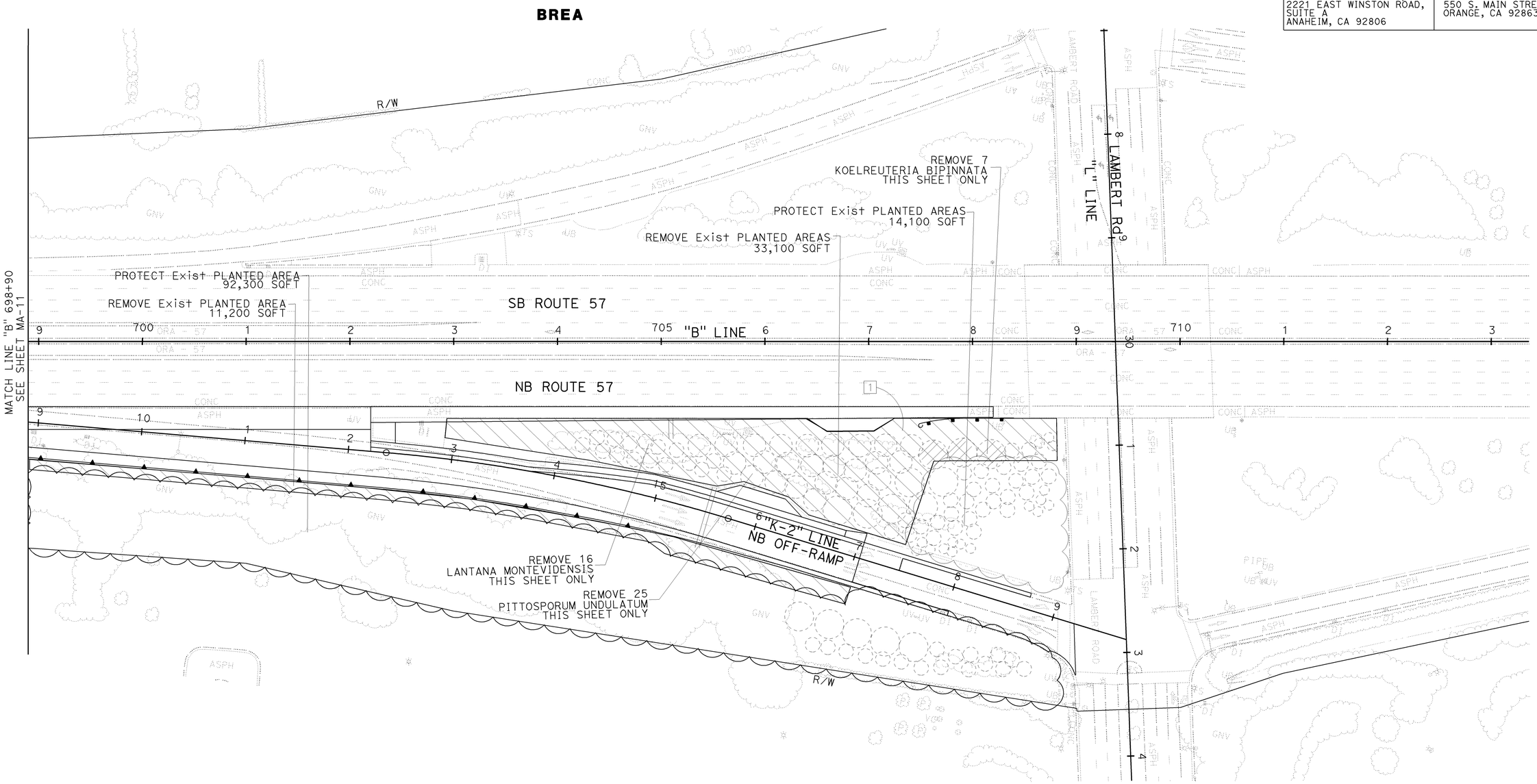

THIS PLAN ACCURATE FOR MAINTAIN EXISTING PLANTS WORK ONLY

MAINTAIN EXISTING PLANTS PLAN

SCALE: 1" = 50'

MA-12

STATE OF CALIFORNIA - DEPARTMENT OF TRANSPORTATION
Caltrans

CONSULTANT SENIOR LANDSCAPE ARCHITECT: PATRICK HIRSCH

CALCULATED-DESIGNED BY: MORGAN ITZEL
CHECKED BY: JEFF YAMAMOTO
REVISED BY
DATE REVISED

LAST REVISION 00-00-00
DATE PLOTTED => 25-JAN-2010
TIME PLOTTED => 11:04

Dist	COUNTY	ROUTE	POST MILES TOTAL PROJECT	SHEET No.	TOTAL SHEETS
12	Ora	57	18.4/20.9	377	856

11-16-09
LICENSED LANDSCAPE ARCHITECT

1-25-10
PLANS APPROVAL DATE

LICENSED LANDSCAPE ARCHITECT
PATRICK L. HIRSCH
NO. 1710
03-31-11
RENEWAL DATE
11-16-09
DATE
STATE OF CALIFORNIA

THE STATE OF CALIFORNIA OR ITS OFFICERS OR AGENTS SHALL NOT BE RESPONSIBLE FOR THE ACCURACY OR COMPLETENESS OF SCANNED COPIES OF THIS PLAN SHEET.

HIRSCH & ASSOCIATES, INC
2221 EAST WINSTON ROAD,
SUITE A
ANAHEIM, CA 92806

OCTA
550 S. MAIN STREET
ORANGE, CA 92863

NOTE:

FOR ACCURATE RIGHT OF WAY AND ACCESS DATA, CONTACT RIGHT OF WAY ENGINEERING AT THE DISTRICT OFFICE.

FULLERTON

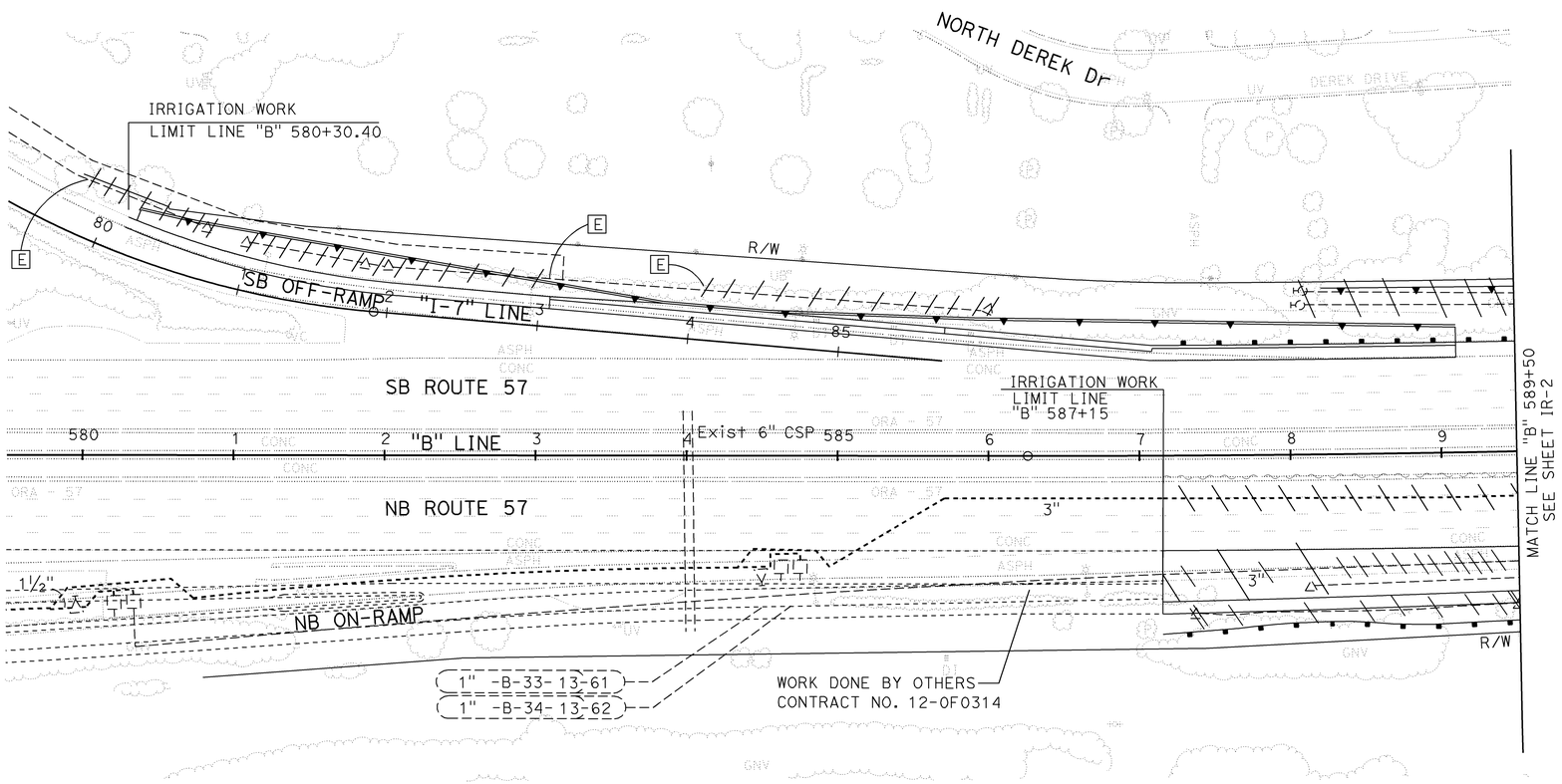

KEYNOTES

- [A] SALVAGE GATE VALVE
- [B] RELOCATE CONTROLLER (SEE IRRIGATION PLANS-IP)
- [C] RELOCATE BACKFLOW PREVENTER/FLOW MONITOR/ RCVM (SEE IRRIGATION PLANS-IP)
- [D] ATTACH TO NEW IRRIGATION (SEE IRRIGATION PLANS-IP)
- [E] CUT AND CAP
- [F] ABANDON MAINLINE

LEGEND

- △ EXISTING SPRINKLER HEAD (B-1)
- (5) EXISTING SPRINKLER HEAD (A-5)
- [5] EXISTING SPRINKLER HEAD (A-5)
- (6) EXISTING SPRINKLER HEAD (A-6)
- ↺ EXISTING SPRINKLER HEAD (C-2)

THIS PLAN ACCURATE FOR IRRIGATION REMOVAL WORK ONLY

IRRIGATION REMOVAL PLAN

SCALE: 1" = 50'

IR-1

STATE OF CALIFORNIA - DEPARTMENT OF TRANSPORTATION
Caltrans

CONSULTANT SENIOR LANDSCAPE ARCHITECT: PATRICK HIRSCH
CALCULATED-DESIGNED BY: MORGAN ITZEL
CHECKED BY: JEFF YAMAMOTO
REVISED BY
DATE REVISED

LAST REVISION 00-00-00
DATE PLOTTED => 25-JAN-2010
TIME PLOTTED => 13:11

Dist	COUNTY	ROUTE	POST MILES TOTAL PROJECT	SHEET No.	TOTAL SHEETS
12	Ora	57	18.4/20.9	378	856

11-16-09
LICENSED LANDSCAPE ARCHITECT

1-25-10
PLANS APPROVAL DATE

LICENSED LANDSCAPE ARCHITECT
PATRICK L. HIRSCH
NO. 1710
03-31-11
RENEWAL DATE
11-16-09
DATE
STATE OF CALIFORNIA

THE STATE OF CALIFORNIA OR ITS OFFICERS OR AGENTS SHALL NOT BE RESPONSIBLE FOR THE ACCURACY OR COMPLETENESS OF SCANNED COPIES OF THIS PLAN SHEET.

HIRSCH & ASSOCIATES, INC
2221 EAST WINSTON ROAD,
SUITE A
ANAHEIM, CA 92806

OCTA
550 S. MAIN STREET
ORANGE, CA 92863

NOTE:

FOR ACCURATE RIGHT OF WAY AND ACCESS DATA, CONTACT RIGHT OF WAY ENGINEERING AT THE DISTRICT OFFICE.

FULLERTON

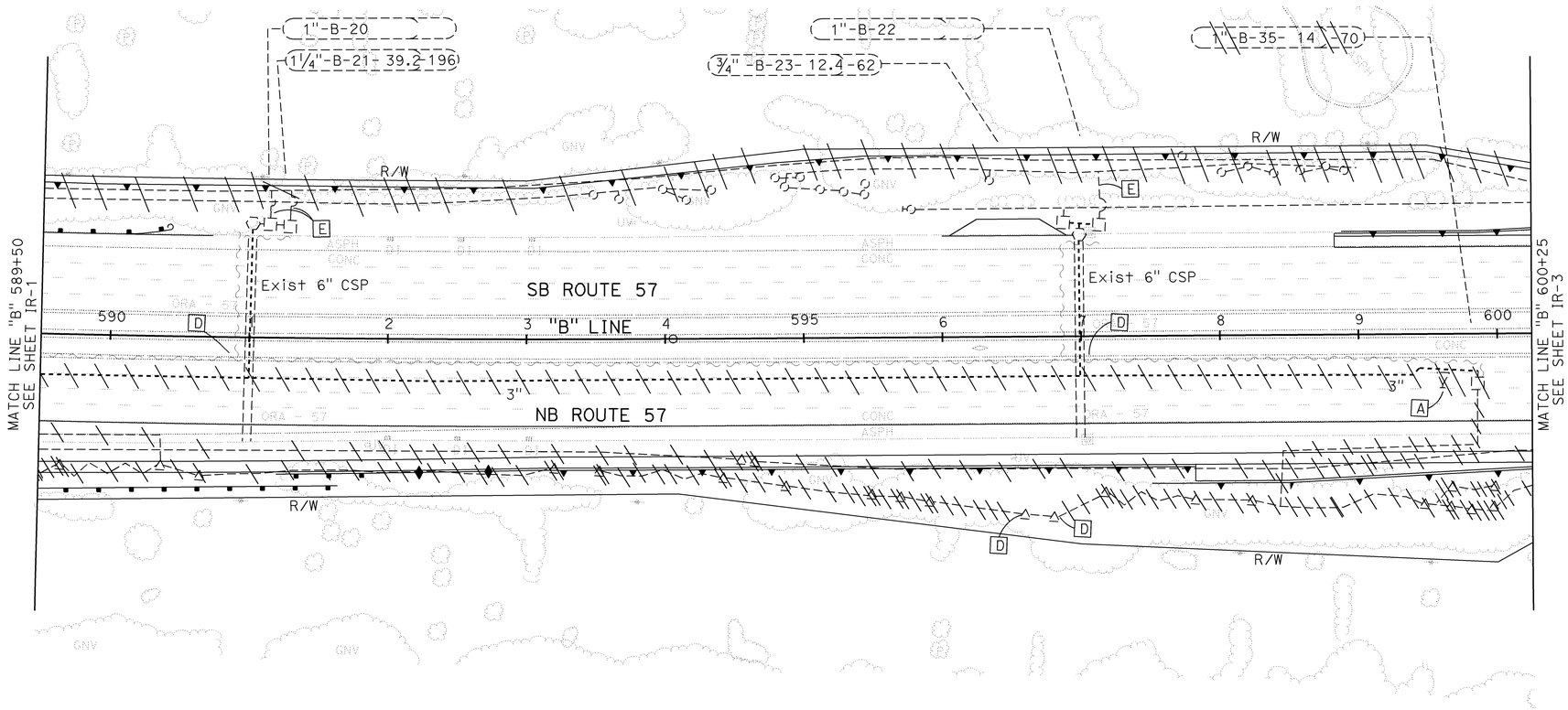

THIS PLAN ACCURATE FOR IRRIGATION REMOVAL WORK ONLY

IRRIGATION REMOVAL PLAN

SCALE: 1" = 50'

IR-2

STATE OF CALIFORNIA - DEPARTMENT OF TRANSPORTATION
Caltrans

CONSULTANT SENIOR LANDSCAPE ARCHITECT: PATRICK HIRSCH

CALCULATED-DESIGNED BY: MORGAN ITZEL
CHECKED BY: JEFF YAMAMOTO

REVISED BY
DATE REVISED

LAST REVISION 00-00-00
DATE PLOTTED => 25-JAN-2010
TIME PLOTTED => 13:11

Dist	COUNTY	ROUTE	POST MILES TOTAL PROJECT	SHEET No.	TOTAL SHEETS
12	Ora	57	18.4/20.9	379	856

11-16-09
LICENSED LANDSCAPE ARCHITECT

1-25-10
PLANS APPROVAL DATE

LICENSED LANDSCAPE ARCHITECT
PATRICK L. HIRSCH
NO. 1710
03-31-11
RENEWAL DATE
11-16-09
DATE
STATE OF CALIFORNIA

THE STATE OF CALIFORNIA OR ITS OFFICERS OR AGENTS SHALL NOT BE RESPONSIBLE FOR THE ACCURACY OR COMPLETENESS OF SCANNED COPIES OF THIS PLAN SHEET.

HIRSCH & ASSOCIATES, INC
2221 EAST WINSTON ROAD,
SUITE A
ANAHEIM, CA 92806

OCTA
550 S. MAIN STREET
ORANGE, CA 92863

NOTE:

FOR ACCURATE RIGHT OF WAY AND ACCESS DATA, CONTACT RIGHT OF WAY ENGINEERING AT THE DISTRICT OFFICE.

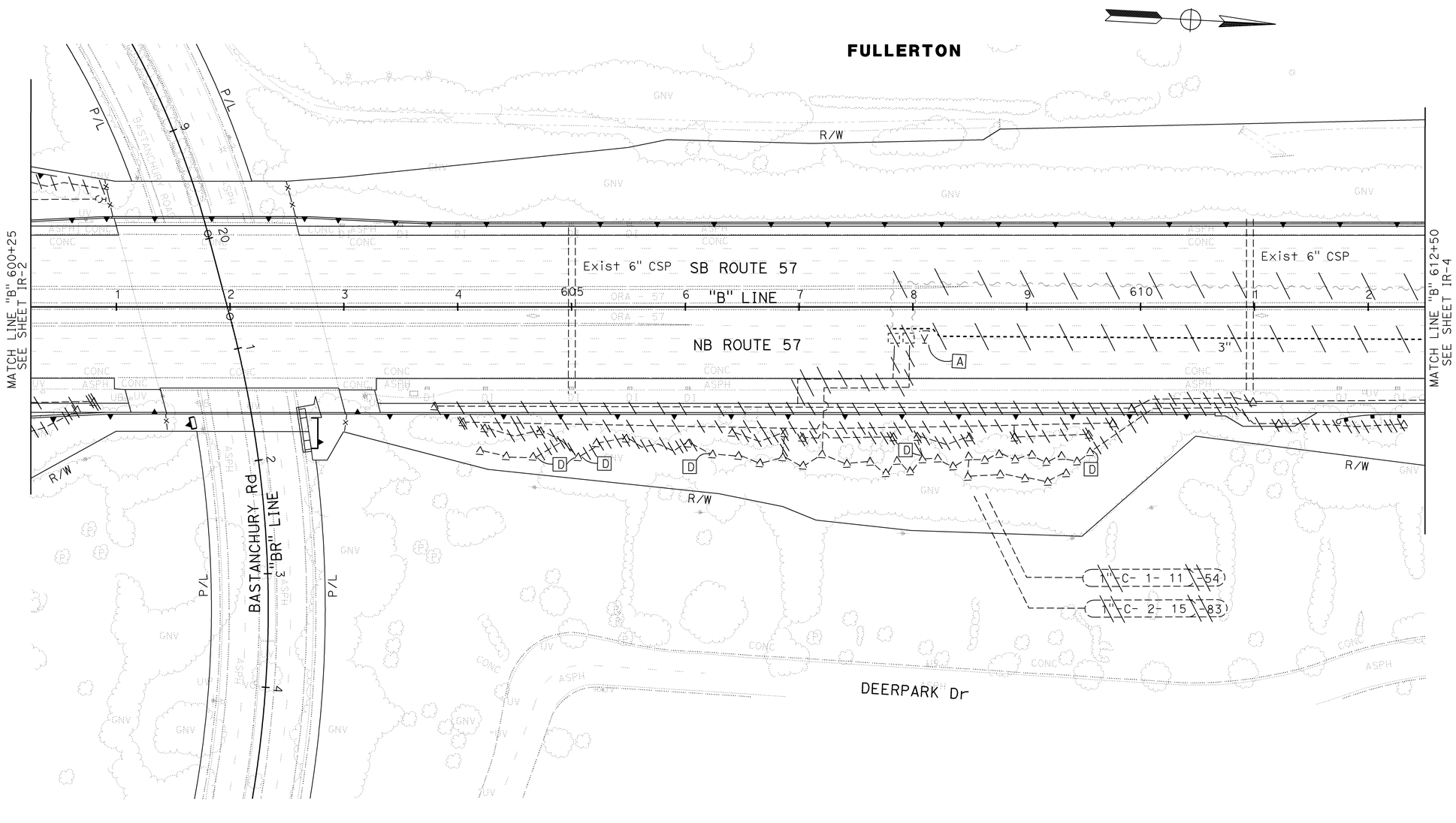

IRRIGATION REMOVAL PLAN

THIS PLAN ACCURATE FOR IRRIGATION REMOVAL WORK ONLY

SCALE: 1" = 50'

IR-3

STATE OF CALIFORNIA - DEPARTMENT OF TRANSPORTATION
Caltrans

CONSULTANT SENIOR LANDSCAPE ARCHITECT: PATRICK HIRSCH
CALCULATED-DESIGNED BY: MORGAN ITZEL
CHECKED BY: JEFF YAMAMOTO
REVISED BY / DATE REVISED

LAST REVISION 00-00-00
DATE PLOTTED => 28-JAN-2010
TIME PLOTTED => 09:47

Dist	COUNTY	ROUTE	POST MILES TOTAL PROJECT	SHEET No.	TOTAL SHEETS
12	Ora	57	18.4/20.9	380	856

11-16-09
LICENSED LANDSCAPE ARCHITECT

1-25-10
PLANS APPROVAL DATE

LICENSED LANDSCAPE ARCHITECT
PATRICK L. HIRSCH
NO. 1710
03-31-11
RENEWAL DATE
11-16-09
DATE
STATE OF CALIFORNIA

THE STATE OF CALIFORNIA OR ITS OFFICERS OR AGENTS SHALL NOT BE RESPONSIBLE FOR THE ACCURACY OR COMPLETENESS OF SCANNED COPIES OF THIS PLAN SHEET.

HIRSCH & ASSOCIATES, INC
2221 EAST WINSTON ROAD,
SUITE A
ANAHEIM, CA 92806

OCTA
550 S. MAIN STREET
ORANGE, CA 92863

NOTE:

FOR ACCURATE RIGHT OF WAY AND ACCESS DATA, CONTACT RIGHT OF WAY ENGINEERING AT THE DISTRICT OFFICE.

FULLERTON

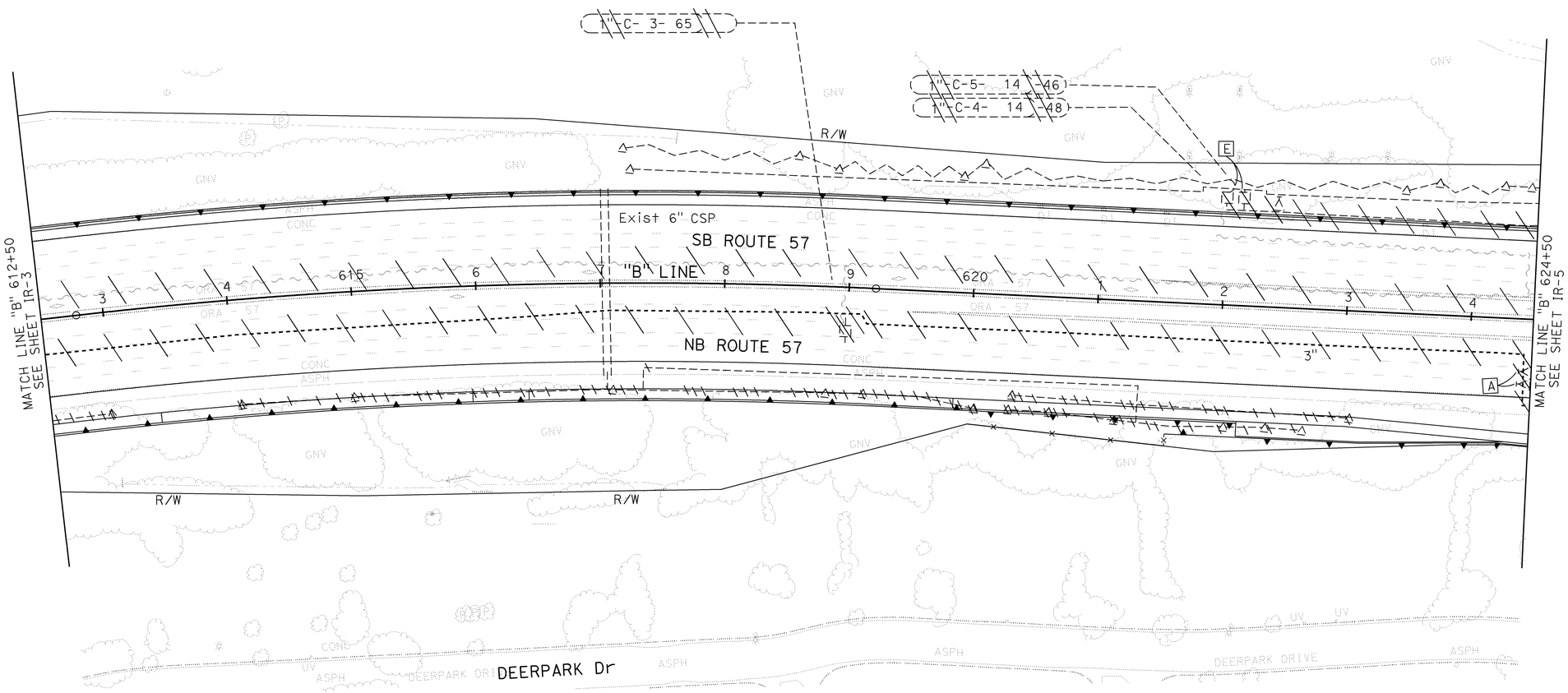

THIS PLAN ACCURATE FOR IRRIGATION REMOVAL WORK ONLY

IRRIGATION REMOVAL PLAN

SCALE: 1" = 50'

IR-4

STATE OF CALIFORNIA - DEPARTMENT OF TRANSPORTATION
Caltrans

CONSULTANT SENIOR LANDSCAPE ARCHITECT: PATRICK HIRSCH
CALCULATED-DESIGNED BY: MORGAN ITZEL
CHECKED BY: JEFF YAMAMOTO
REVISED BY
DATE REVISED

LAST REVISION 00-00-00
DATE PLOTTED => 25-JAN-2010
TIME PLOTTED => 13:11

Dist	COUNTY	ROUTE	POST MILES TOTAL PROJECT	SHEET No.	TOTAL SHEETS
12	Ora	57	18.4/20.9	381	856

11-16-09
LICENSED LANDSCAPE ARCHITECT

1-25-10
PLANS APPROVAL DATE

LICENSED LANDSCAPE ARCHITECT
PATRICK L. HIRSCH
NO. 1710
03-31-11
RENEWAL DATE
11-16-09
DATE
STATE OF CALIFORNIA

THE STATE OF CALIFORNIA OR ITS OFFICERS OR AGENTS SHALL NOT BE RESPONSIBLE FOR THE ACCURACY OR COMPLETENESS OF SCANNED COPIES OF THIS PLAN SHEET.

HIRSCH & ASSOCIATES, INC
2221 EAST WINSTON ROAD,
SUITE A
ANAHEIM, CA 92806

OCTA
550 S. MAIN STREET
ORANGE, CA 92863

NOTE:

FOR ACCURATE RIGHT OF WAY AND ACCESS DATA, CONTACT RIGHT OF WAY ENGINEERING AT THE DISTRICT OFFICE.

FULLERTON

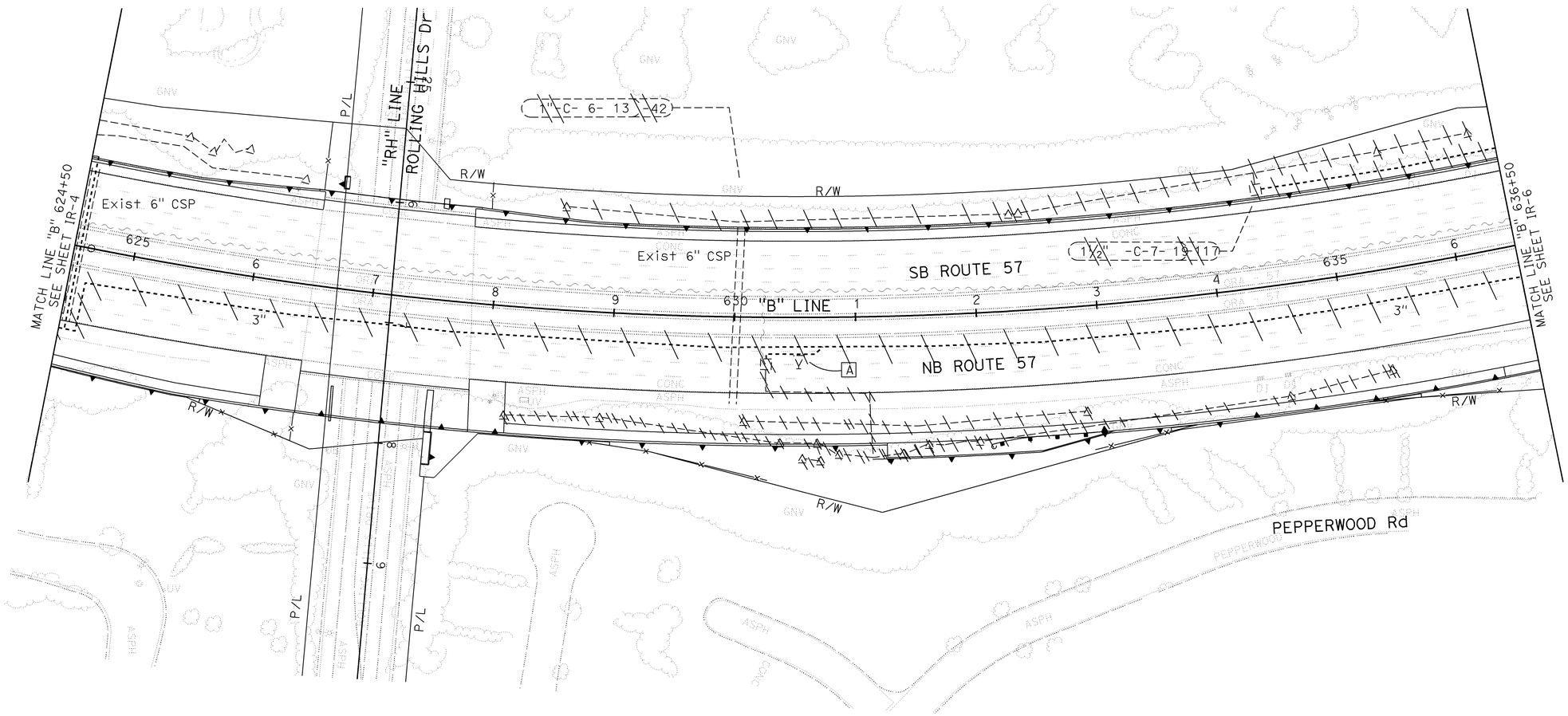

THIS PLAN ACCURATE FOR IRRIGATION REMOVAL WORK ONLY

IRRIGATION REMOVAL PLAN

SCALE: 1" = 50'

IR-5

STATE OF CALIFORNIA - DEPARTMENT OF TRANSPORTATION
Caltrans

CONSULTANT SENIOR LANDSCAPE ARCHITECT: PATRICK HIRSCH
CALCULATED-DESIGNED BY: MORGAN ITZEL
CHECKED BY: JEFF YAMAMOTO
REVISED BY
DATE REVISED

LAST REVISION 00-00-00
DATE PLOTTED => 25-JAN-2010
TIME PLOTTED => 13:11

Dist	COUNTY	ROUTE	POST MILES TOTAL PROJECT	SHEET No.	TOTAL SHEETS
12	Ora	57	18.4/20.9	382	856

11-16-09
LICENSED LANDSCAPE ARCHITECT

1-25-10
PLANS APPROVAL DATE

LICENSED LANDSCAPE ARCHITECT
PATRICK L. HIRSCH
NO. 1710
03-31-11
RENEWAL DATE
11-16-09
DATE
STATE OF CALIFORNIA

THE STATE OF CALIFORNIA OR ITS OFFICERS OR AGENTS SHALL NOT BE RESPONSIBLE FOR THE ACCURACY OR COMPLETENESS OF SCANNED COPIES OF THIS PLAN SHEET.

HIRSCH & ASSOCIATES, INC
2221 EAST WINSTON ROAD,
SUITE A
ANAHEIM, CA 92806

OCTA
550 S. MAIN STREET
ORANGE, CA 92863

NOTE:

FOR ACCURATE RIGHT OF WAY AND ACCESS DATA, CONTACT RIGHT OF WAY ENGINEERING AT THE DISTRICT OFFICE.

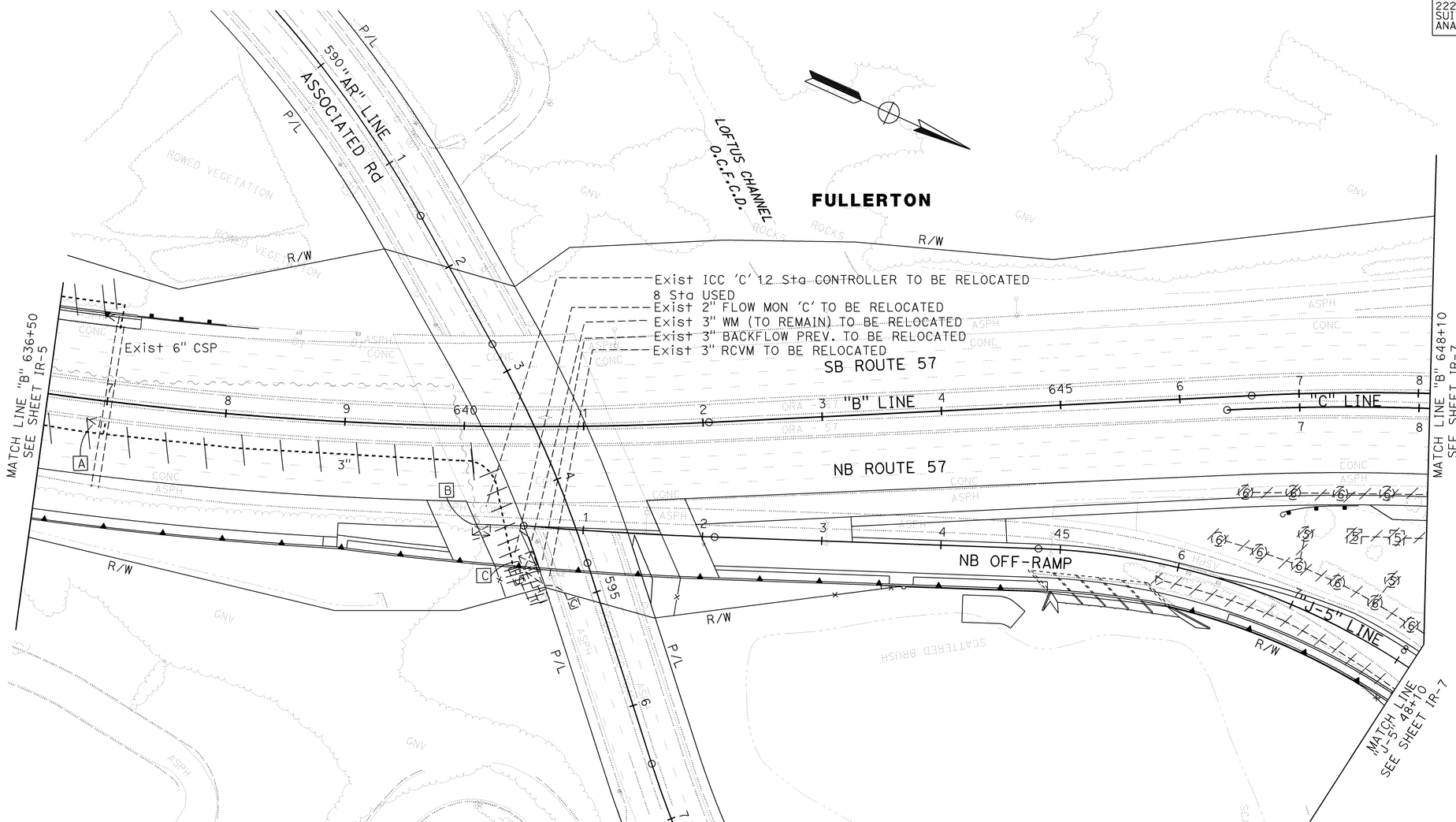

THIS PLAN ACCURATE FOR IRRIGATION REMOVAL WORK ONLY

IRRIGATION REMOVAL PLAN

SCALE: 1" = 50'

IR-6

STATE OF CALIFORNIA - DEPARTMENT OF TRANSPORTATION

Caltrans

CONSULTANT SENIOR LANDSCAPE ARCHITECT: PATRICK HIRSCH

CALCULATED-DESIGNED BY: MORGAN ITZEL

CHECKED BY: JEFF YAMAMOTO

REVISED BY

DATE REVISED

LAST REVISION 00-00-00

DATE PLOTTED => 25-JAN-2010
TIME PLOTTED => 13:12

Dist	COUNTY	ROUTE	POST MILES TOTAL PROJECT	SHEET No.	TOTAL SHEETS
12	Ora	57	18.4/20.9	383	856

11-16-09
LICENSED LANDSCAPE ARCHITECT

1-25-10
PLANS APPROVAL DATE

LICENSED LANDSCAPE ARCHITECT
PATRICK L. HIRSCH
NO. 1710
03-31-11
RENEWAL DATE
11-16-09
DATE
STATE OF CALIFORNIA

THE STATE OF CALIFORNIA OR ITS OFFICERS OR AGENTS SHALL NOT BE RESPONSIBLE FOR THE ACCURACY OR COMPLETENESS OF SCANNED COPIES OF THIS PLAN SHEET.

HIRSCH & ASSOCIATES, INC
2221 EAST WINSTON ROAD,
SUITE A
ANAHEIM, CA 92806

OCTA
550 S. MAIN STREET
ORANGE, CA 92863

NOTE:
FOR ACCURATE RIGHT OF WAY AND ACCESS DATA, CONTACT RIGHT OF WAY ENGINEERING AT THE DISTRICT OFFICE.

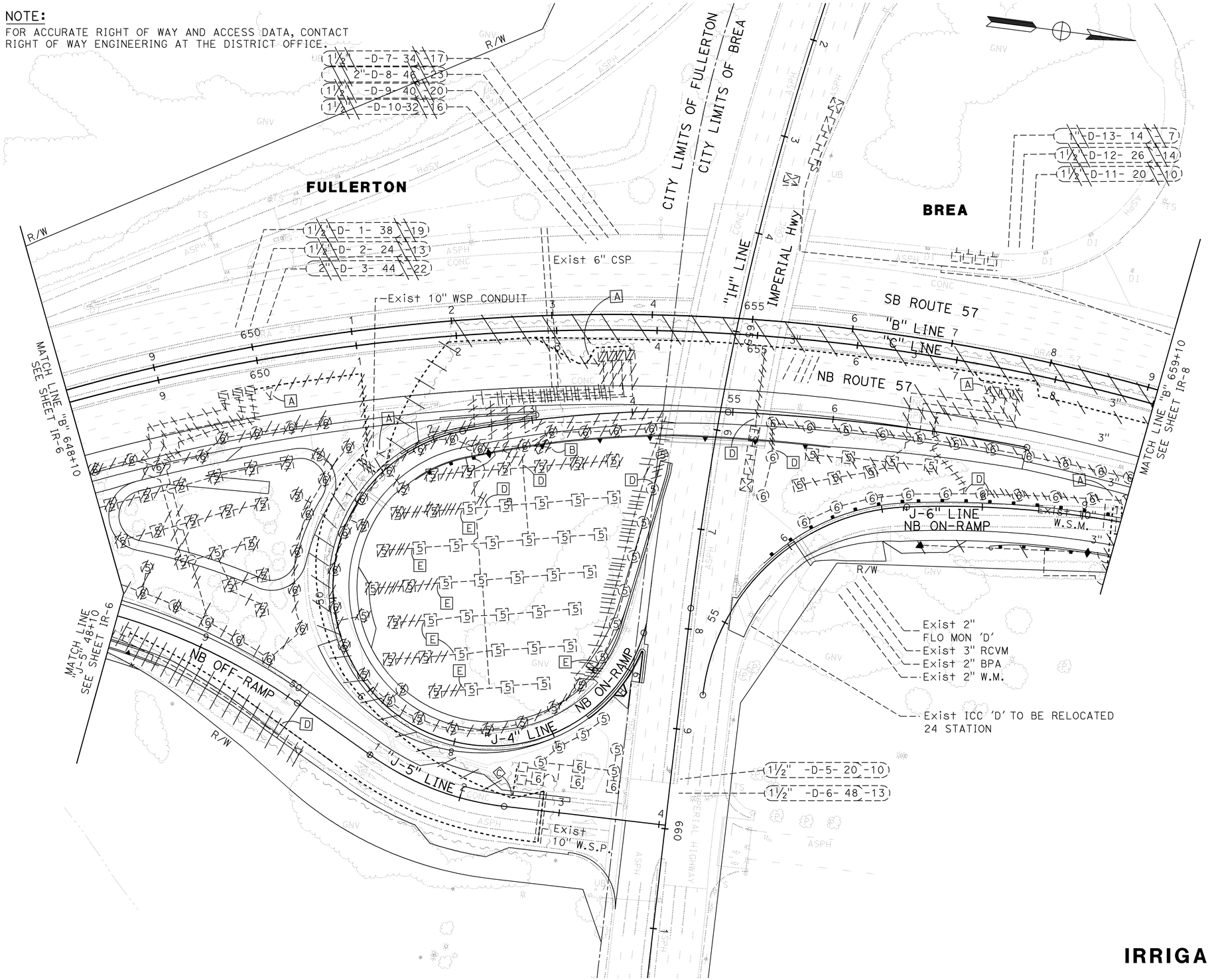

THIS PLAN ACCURATE FOR IRRIGATION REMOVAL WORK ONLY

IRRIGATION REMOVAL PLAN

SCALE: 1" = 50'

IR-7

STATE OF CALIFORNIA - DEPARTMENT OF TRANSPORTATION
Caltrans

CONSULTANT SENIOR LANDSCAPE ARCHITECT: PATRICK HIRSCH
CALCULATED-DESIGNED BY: MORGAN ITZEL
CHECKED BY: JEFF YAMAMOTO
REVISED BY
DATE REVISED

LAST REVISION 00-00-00
DATE PLOTTED => 25-JAN-2010
TIME PLOTTED => 13:12

BORDER LAST REVISED 4/11/2008
RELATIVE BORDER SCALE IS IN INCHES 0 1 2 3
USERNAME => trmikesl
DGN FILE => c0f032tk007.dgn
CU 12220
EA 0F0321

Dist	COUNTY	ROUTE	POST MILES TOTAL PROJECT	SHEET No.	TOTAL SHEETS
12	Ora	57	18.4/20.9	384	856

11-16-09
LICENSED LANDSCAPE ARCHITECT

1-25-10
PLANS APPROVAL DATE

LICENSED LANDSCAPE ARCHITECT
PATRICK L. HIRSCH
NO. 1710
03-31-11
RENEWAL DATE
11-16-09
DATE
STATE OF CALIFORNIA

THE STATE OF CALIFORNIA OR ITS OFFICERS OR AGENTS SHALL NOT BE RESPONSIBLE FOR THE ACCURACY OR COMPLETENESS OF SCANNED COPIES OF THIS PLAN SHEET.

HIRSCH & ASSOCIATES, INC
2221 EAST WINSTON ROAD,
SUITE A
ANAHEIM, CA 92806

OCTA
550 S. MAIN STREET
ORANGE, CA 92863

NOTE:

FOR ACCURATE RIGHT OF WAY AND ACCESS DATA, CONTACT RIGHT OF WAY ENGINEERING AT THE DISTRICT OFFICE.

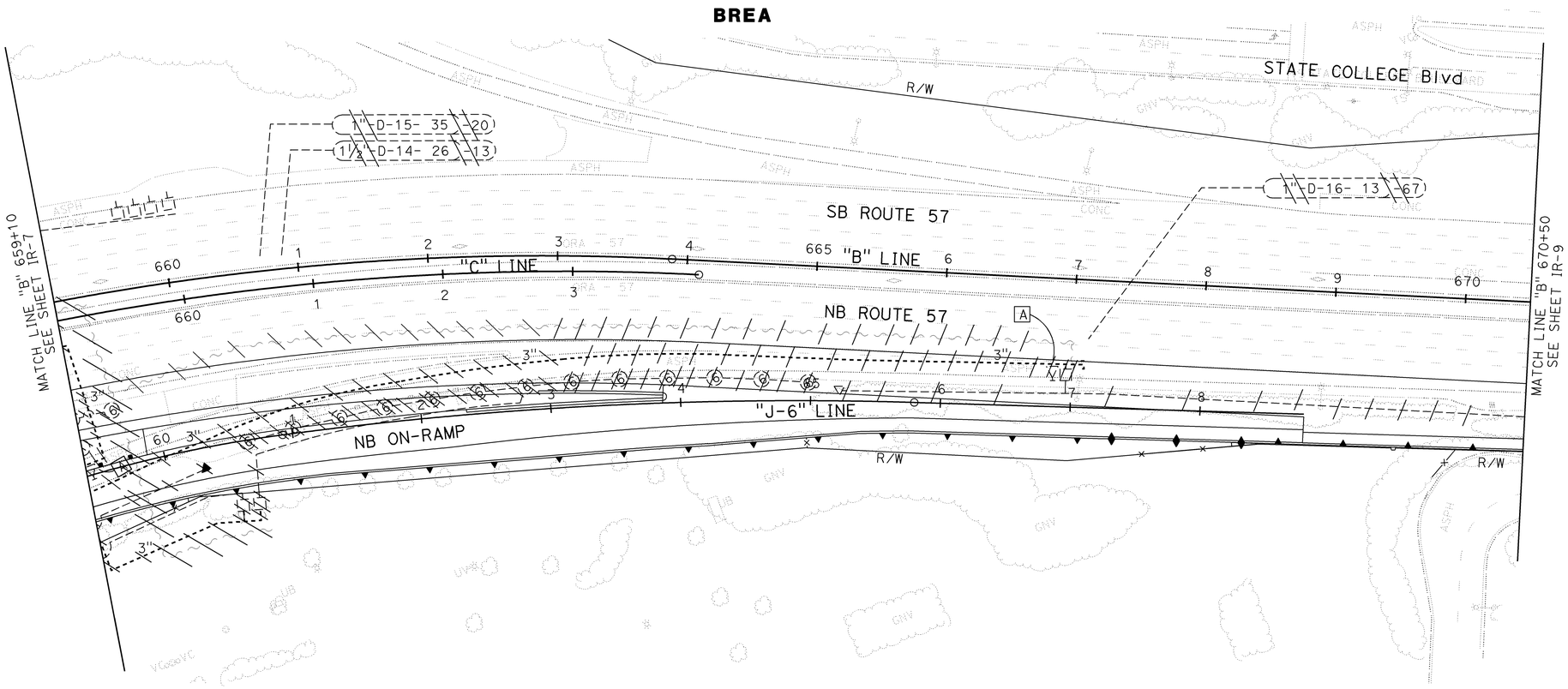

THIS PLAN ACCURATE FOR IRRIGATION REMOVAL WORK ONLY

IRRIGATION REMOVAL PLAN

SCALE: 1" = 50'

IR-8

STATE OF CALIFORNIA - DEPARTMENT OF TRANSPORTATION

Caltrans

CONSULTANT SENIOR LANDSCAPE ARCHITECT: PATRICK HIRSCH

CALCULATED-DESIGNED BY: MORGAN ITZEL
CHECKED BY: JEFF YAMAMOTO

REVISED BY
DATE REVISED

LAST REVISION 00-00-00
DATE PLOTTED => 25-JAN-2010
TIME PLOTTED => 13:12

Dist	COUNTY	ROUTE	POST MILES TOTAL PROJECT	SHEET No.	TOTAL SHEETS
12	Ora	57	18.4/20.9	385	856

11-16-09
LICENSED LANDSCAPE ARCHITECT

1-25-10
PLANS APPROVAL DATE

LICENSED LANDSCAPE ARCHITECT
PATRICK L. HIRSCH
NO. 1710
03-31-11
RENEWAL DATE
11-16-09
DATE
STATE OF CALIFORNIA

THE STATE OF CALIFORNIA OR ITS OFFICERS OR AGENTS SHALL NOT BE RESPONSIBLE FOR THE ACCURACY OR COMPLETENESS OF SCANNED COPIES OF THIS PLAN SHEET.

HIRSCH & ASSOCIATES, INC
2221 EAST WINSTON ROAD,
SUITE A
ANAHEIM, CA 92806

OCTA
550 S. MAIN STREET
ORANGE, CA 92863

NOTE:

FOR ACCURATE RIGHT OF WAY AND ACCESS DATA, CONTACT RIGHT OF WAY ENGINEERING AT THE DISTRICT OFFICE.

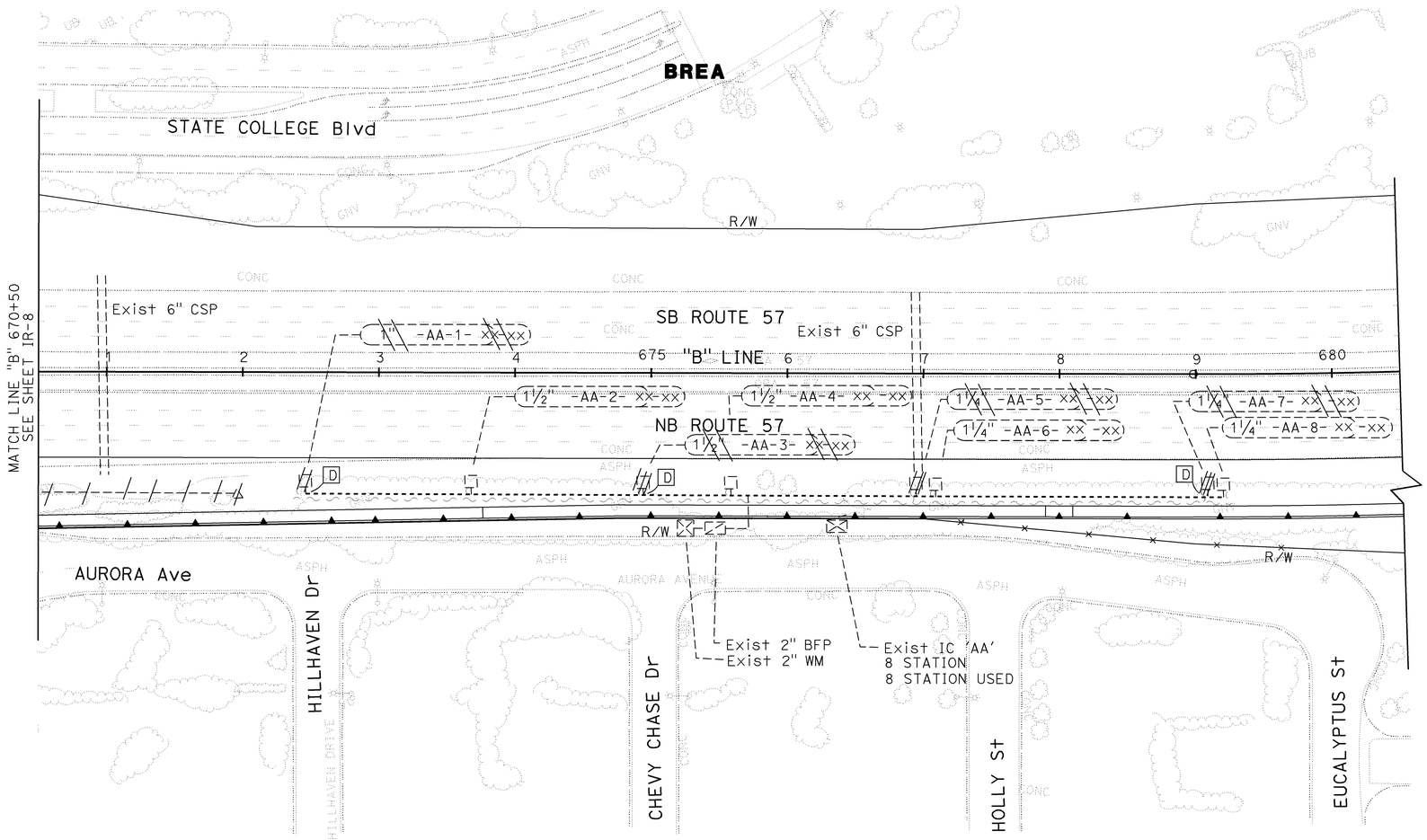

THIS PLAN ACCURATE FOR IRRIGATION REMOVAL WORK ONLY

IRRIGATION REMOVAL PLAN

SCALE: 1" = 50'

IR-9

STATE OF CALIFORNIA - DEPARTMENT OF TRANSPORTATION
Caltrans

CONSULTANT SENIOR LANDSCAPE ARCHITECT: PATRICK HIRSCH
CALCULATED-DESIGNED BY: MORGAN ITZEL
CHECKED BY: JEFF YAMAMOTO
REVISED BY
DATE REVISED

LAST REVISION 00-00-00
DATE PLOTTED => 25-JAN-2010
TIME PLOTTED => 13:12

Dist	COUNTY	ROUTE	POST MILES TOTAL PROJECT	SHEET No.	TOTAL SHEETS
12	Ora	57	18.4/20.9	386	856

11-16-09
LICENSED LANDSCAPE ARCHITECT

1-25-10
PLANS APPROVAL DATE

LICENSED LANDSCAPE ARCHITECT
PATRICK L. HIRSCH
NO. 1710
03-31-11
RENEWAL DATE
11-16-09
DATE
STATE OF CALIFORNIA

THE STATE OF CALIFORNIA OR ITS OFFICERS OR AGENTS SHALL NOT BE RESPONSIBLE FOR THE ACCURACY OR COMPLETENESS OF SCANNED COPIES OF THIS PLAN SHEET.

HIRSCH & ASSOCIATES, INC
2221 EAST WINSTON ROAD,
SUITE A
ANAHEIM, CA 92806

OCTA
550 S. MAIN STREET
ORANGE, CA 92863

NOTE:

FOR ACCURATE RIGHT OF WAY AND ACCESS DATA, CONTACT RIGHT OF WAY ENGINEERING AT THE DISTRICT OFFICE.

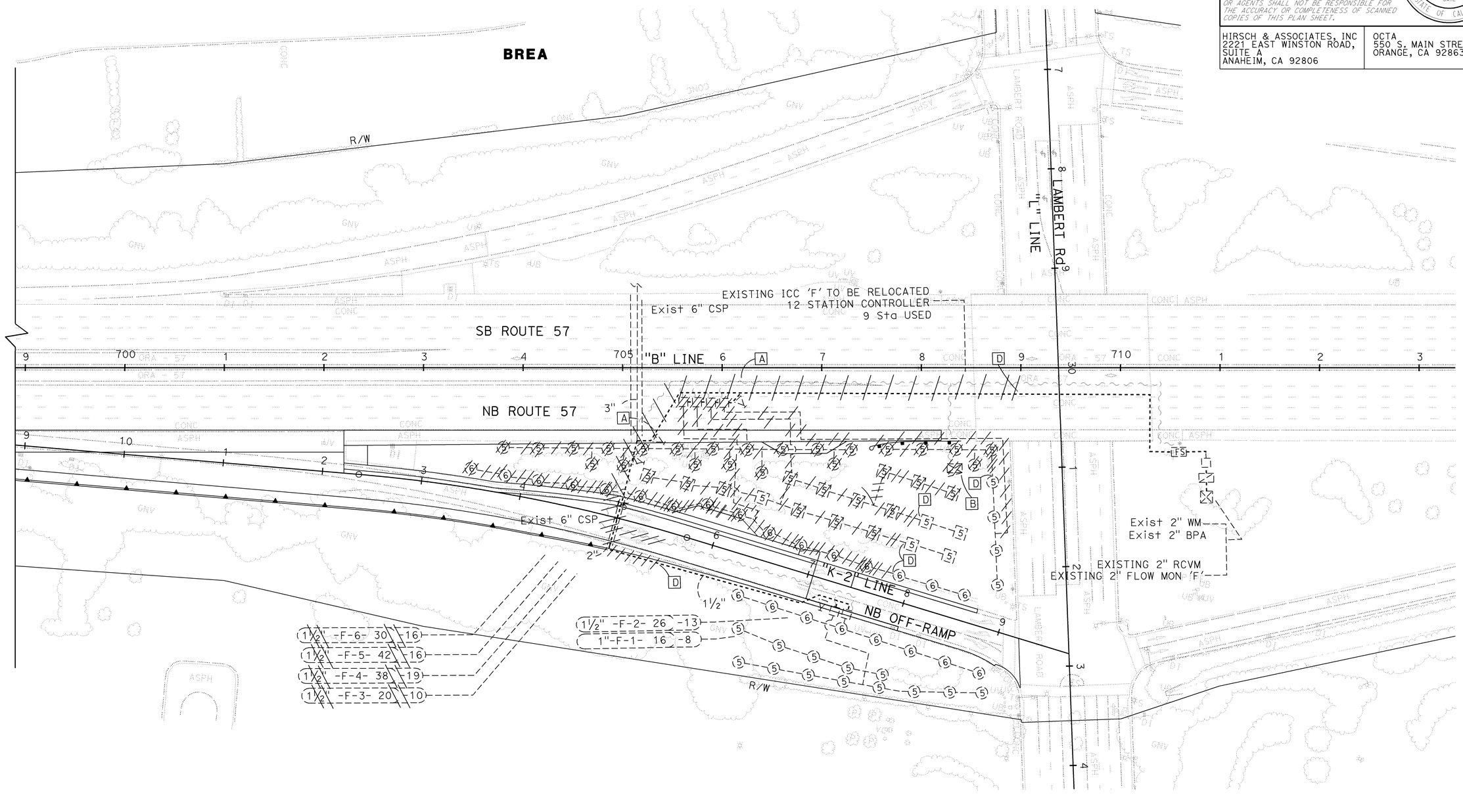

THIS PLAN ACCURATE FOR IRRIGATION REMOVAL WORK ONLY

IRRIGATION REMOVAL PLAN

SCALE: 1" = 50'

IR-10

STATE OF CALIFORNIA - DEPARTMENT OF TRANSPORTATION
Caltrans

CONSULTANT SENIOR LANDSCAPE ARCHITECT: PATRICK HIRSCH

CALCULATED-DESIGNED BY: MORGAN ITZEL
CHECKED BY: JEFF YAMAMOTO

REVISED BY | DATE REVISED

LAST REVISION 00-00-00
DATE PLOTTED => 28-JAN-2010
TIME PLOTTED => 09:47

Dist	COUNTY	ROUTE	POST MILES TOTAL PROJECT	SHEET No.	TOTAL SHEETS
12	Ora	57	18.4/20.9	387	856

11-16-09
LICENSED LANDSCAPE ARCHITECT

1-25-10
PLANS APPROVAL DATE

LICENSED LANDSCAPE ARCHITECT
PATRICK L. HIRSCH
NO. 1710
03-31-11
RENEWAL DATE
11-16-09
DATE
STATE OF CALIFORNIA

THE STATE OF CALIFORNIA OR ITS OFFICERS OR AGENTS SHALL NOT BE RESPONSIBLE FOR THE ACCURACY OR COMPLETENESS OF SCANNED COPIES OF THIS PLAN SHEET.

HIRSCH & ASSOCIATES, INC
2221 EAST WINSTON ROAD,
SUITE A
ANAHEIM, CA 92806

OCTA
550 S. MAIN STREET
ORANGE, CA 92863

NOTES:

1. FOR ACCURATE RIGHT OF WAY AND ACCESS DATA, CONTACT RIGHT OF WAY ENGINEERING AT THE DISTRICT OFFICE.
2. IRRIGATION TO BE INSTALLED IN PLANTER AREAS ONLY (BEHIND WALLS WHEN APPROPRIATE). CONTRACTOR TO FOLLOW ALL CALTRANS SET BACK REQUIREMENTS.
3. ALL IRRIGATION EQUIPMENT SIZES ARE SHOWN IN INCHES (DIAMETER NOMINAL) UNLESS OTHERWISE NOTED.

FULLERTON

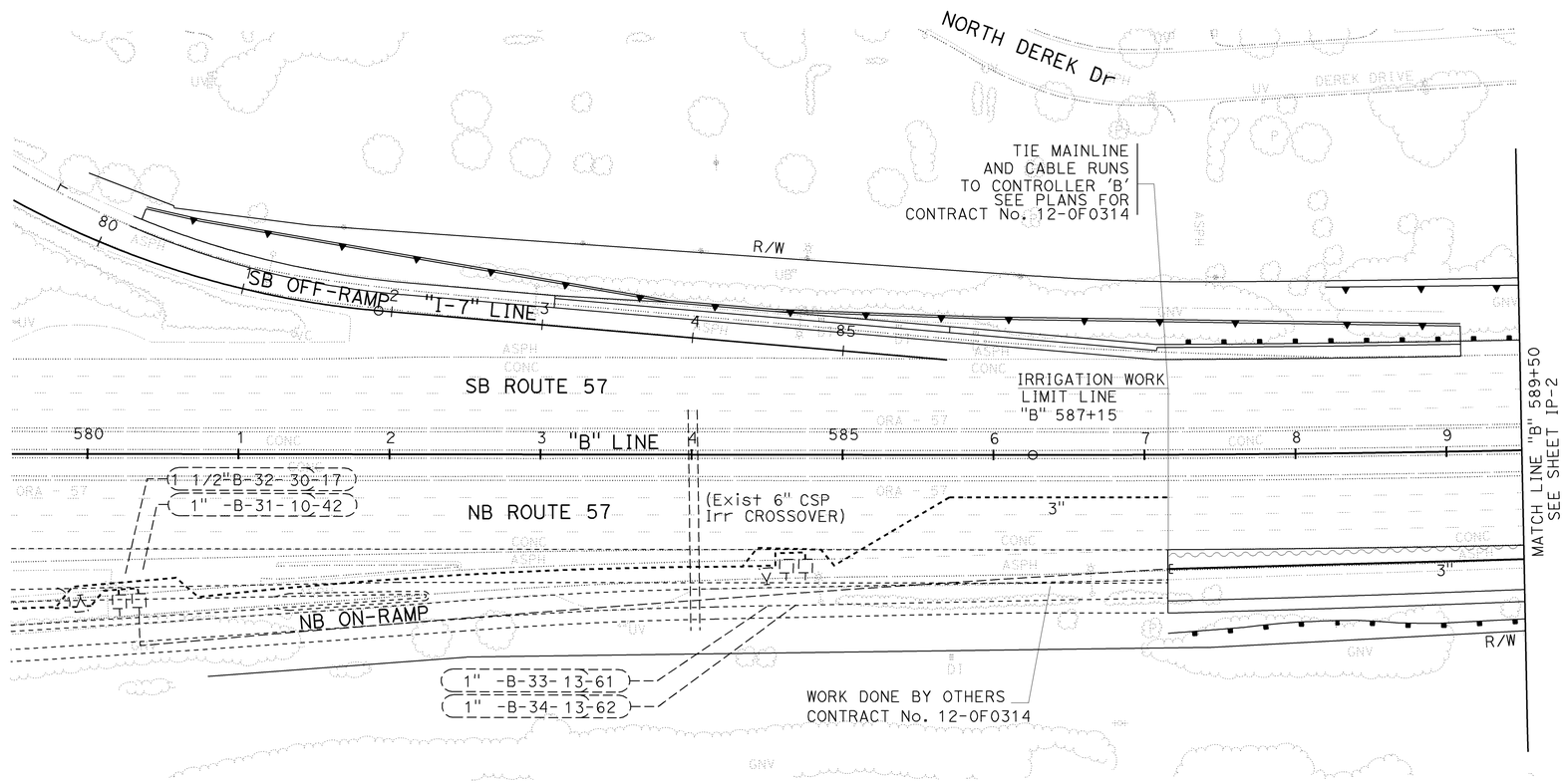

KEYNOTES

- [A] PROVIDE STUBOUT IN VALVE BOX WITH LOOP WIRES (4')
- [B] SEE IRRIGATION REMOVAL PLANS
- [C] CONNECTION TO EXISTING IRRIGATION
- [D] MAINLINE TO BE LOCATED UNDER AC SHOULDER IN CHDPE CONDUIT
- [E] PULLBOX WITH TRAFFIC LID. LOCATION FOR MAINLINE STUBOUT.

LEGEND

- △ EXISTING SPRINKLER HEAD (B-2)
- (5) EXISTING SPRINKLER HEAD (A-5)
- [5] EXISTING SPRINKLER HEAD (A-5)
- (6) EXISTING SPRINKLER HEAD (A-6)

THIS PLAN ACCURATE FOR IRRIGATION WORK ONLY

IRRIGATION PLAN

SCALE: 1" = 50'

IP-1

REVISED BY | DATE REVISED
MORGAN ITZEL | JEFF YAMAMOTO
CALCULATED-DESIGNED BY | CHECKED BY
CONSULTANT SENIOR LANDSCAPE ARCHITECT | PATRICK HIRSCH
STATE OF CALIFORNIA - DEPARTMENT OF TRANSPORTATION
Caltrans

LAST REVISION 00-00-00 | DATE PLOTTED => 25-JAN-2010 | TIME PLOTTED => 11:30

Dist	COUNTY	ROUTE	POST MILES TOTAL PROJECT	SHEET No.	TOTAL SHEETS
12	Ora	57	18.4/20.9	388	856

11-16-09
LICENSED LANDSCAPE ARCHITECT

1-25-10
PLANS APPROVAL DATE

LICENSED LANDSCAPE ARCHITECT
PATRICK L. HIRSCH
NO. 1710
03-31-11
RENEWAL DATE
11-16-09
DATE
STATE OF CALIFORNIA

THE STATE OF CALIFORNIA OR ITS OFFICERS OR AGENTS SHALL NOT BE RESPONSIBLE FOR THE ACCURACY OR COMPLETENESS OF SCANNED COPIES OF THIS PLAN SHEET.

HIRSCH & ASSOCIATES, INC
2221 EAST WINSTON ROAD,
SUITE A
ANAHEIM, CA 92806

OCTA
550 S. MAIN STREET
ORANGE, CA 92863

NOTES:

1. FOR ACCURATE RIGHT OF WAY AND ACCESS DATA, CONTACT RIGHT OF WAY ENGINEERING AT THE DISTRICT OFFICE.
2. IRRIGATION TO BE INSTALLED IN PLANTER AREAS ONLY (BEHIND WALLS WHEN APPROPRIATE). CONTRACTOR TO FOLLOW ALL CALTRANS SET BACK REQUIREMENTS.
3. ALL IRRIGATION EQUIPMENT SIZES ARE SHOWN IN INCHES (DIAMETER NOMINAL) UNLESS OTHERWISE NOTED.

FULLERTON

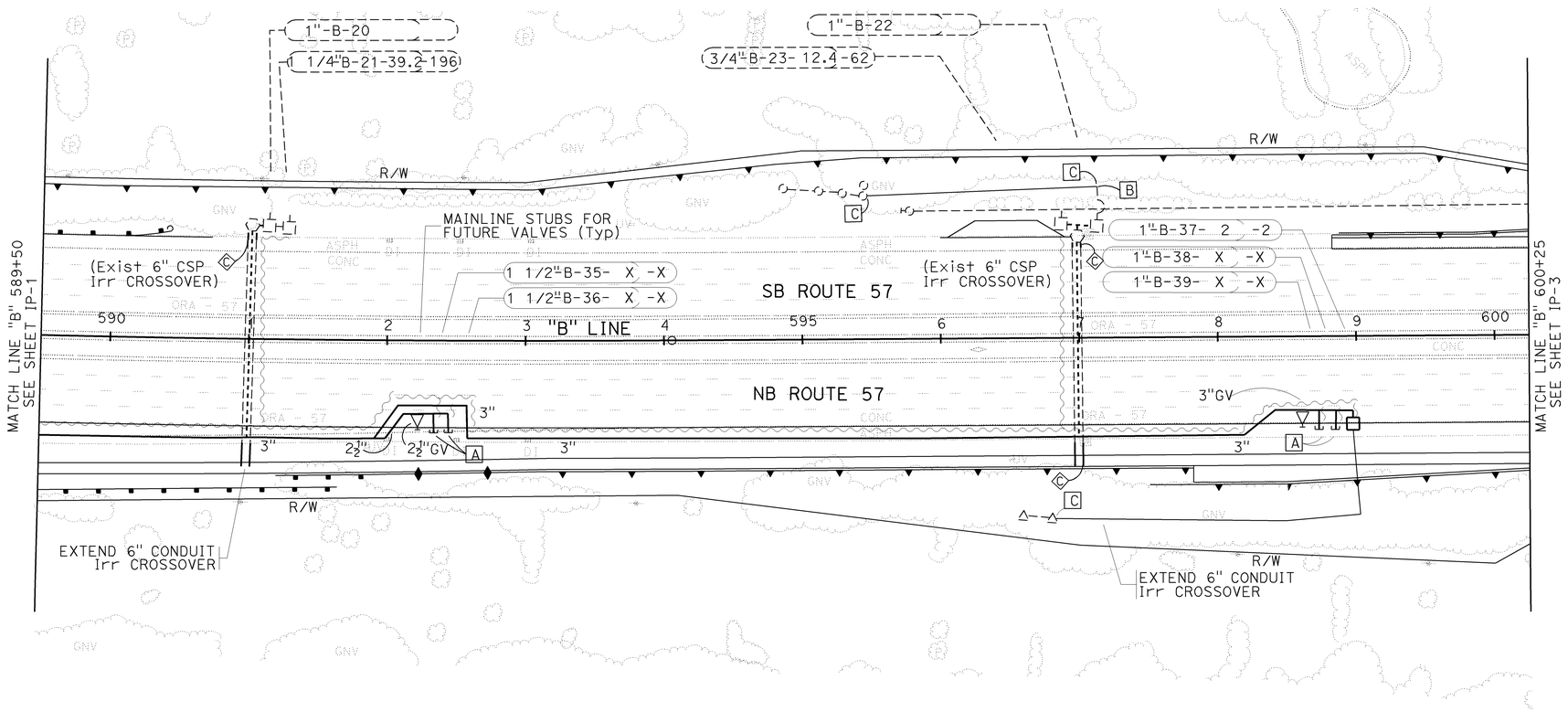

THIS PLAN ACCURATE FOR IRRIGATION WORK ONLY

IRRIGATION PLAN

SCALE: 1" = 50'

IP-2

STATE OF CALIFORNIA - DEPARTMENT OF TRANSPORTATION
Caltrans

CONSULTANT SENIOR LANDSCAPE ARCHITECT
PATRICK HIRSCH

CALCULATED-DESIGNED BY
CHECKED BY

MORGAN ITZEL
JEFF YAMAMOTO

REVISED BY
DATE REVISED

LAST REVISION 00-00-00
DATE PLOTTED => 25-JAN-2010
TIME PLOTTED => 11:30

Dist	COUNTY	ROUTE	POST MILES TOTAL PROJECT	SHEET No.	TOTAL SHEETS
12	Ora	57	18.4/20.9	389	856

11-16-09
LICENSED LANDSCAPE ARCHITECT

1-25-10
PLANS APPROVAL DATE

LICENSED LANDSCAPE ARCHITECT
PATRICK L. HIRSCH
NO. 1710
03-31-11
RENEWAL DATE
11-16-09
DATE
STATE OF CALIFORNIA

THE STATE OF CALIFORNIA OR ITS OFFICERS OR AGENTS SHALL NOT BE RESPONSIBLE FOR THE ACCURACY OR COMPLETENESS OF SCANNED COPIES OF THIS PLAN SHEET.

HIRSCH & ASSOCIATES, INC
2221 EAST WINSTON ROAD,
SUITE A
ANAHEIM, CA 92806

OCTA
550 S. MAIN STREET
ORANGE, CA 92863

NOTES:

1. FOR ACCURATE RIGHT OF WAY AND ACCESS DATA, CONTACT RIGHT OF WAY ENGINEERING AT THE DISTRICT OFFICE.
2. IRRIGATION TO BE INSTALLED IN PLANTER AREAS ONLY (BEHIND WALLS WHEN APPROPRIATE). CONTRACTOR TO FOLLOW ALL CALTRANS SET BACK REQUIREMENTS.
3. ALL IRRIGATION EQUIPMENT SIZES ARE SHOWN IN INCHES (DIAMETER NOMINAL) UNLESS OTHERWISE NOTED.

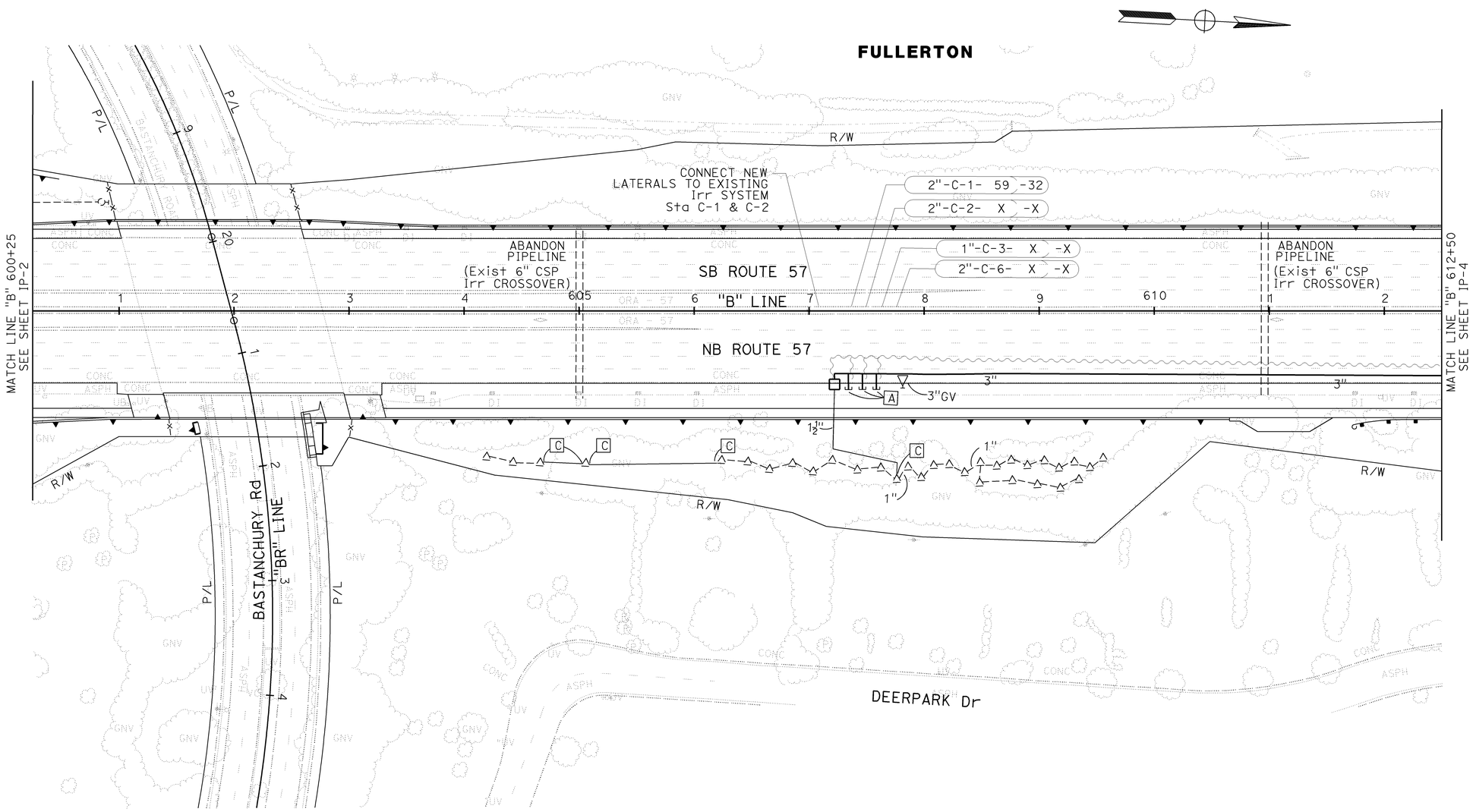

IRRIGATION PLAN

SCALE: 1" = 50'

THIS PLAN ACCURATE FOR IRRIGATION WORK ONLY

IP-3

STATE OF CALIFORNIA - DEPARTMENT OF TRANSPORTATION
Caltrans

CONSULTANT SENIOR LANDSCAPE ARCHITECT: PATRICK HIRSCH

CALCULATED-DESIGNED BY: MORGAN ITZEL
CHECKED BY: JEFF YAMAMOTO

REVISED BY
DATE REVISED

LAST REVISION 00-00-00
DATE PLOTTED => 25-JAN-2010
TIME PLOTTED => 11:30

Dist	COUNTY	ROUTE	POST MILES TOTAL PROJECT	SHEET No.	TOTAL SHEETS
12	Ora	57	18.4/20.9	390	856

11-16-09
LICENSED LANDSCAPE ARCHITECT

1-25-10
PLANS APPROVAL DATE

LICENSED LANDSCAPE ARCHITECT
PATRICK L. HIRSCH
NO. 1710
03-31-11
RENEWAL DATE
11-16-09
DATE
STATE OF CALIFORNIA

THE STATE OF CALIFORNIA OR ITS OFFICERS OR AGENTS SHALL NOT BE RESPONSIBLE FOR THE ACCURACY OR COMPLETENESS OF SCANNED COPIES OF THIS PLAN SHEET.

HIRSCH & ASSOCIATES, INC
2221 EAST WINSTON ROAD,
SUITE A
ANAHEIM, CA 92806

OCTA
550 S. MAIN STREET
ORANGE, CA 92863

NOTES:

1. FOR ACCURATE RIGHT OF WAY AND ACCESS DATA, CONTACT RIGHT OF WAY ENGINEERING AT THE DISTRICT OFFICE.
2. IRRIGATION TO BE INSTALLED IN PLANTER AREAS ONLY (BEHIND WALLS WHEN APPROPRIATE). CONTRACTOR TO FOLLOW ALL CALTRANS SET BACK REQUIREMENTS.
3. ALL IRRIGATION EQUIPMENT SIZES ARE SHOWN IN INCHES (DIAMETER NOMINAL) UNLESS OTHERWISE NOTED.

FULLERTON

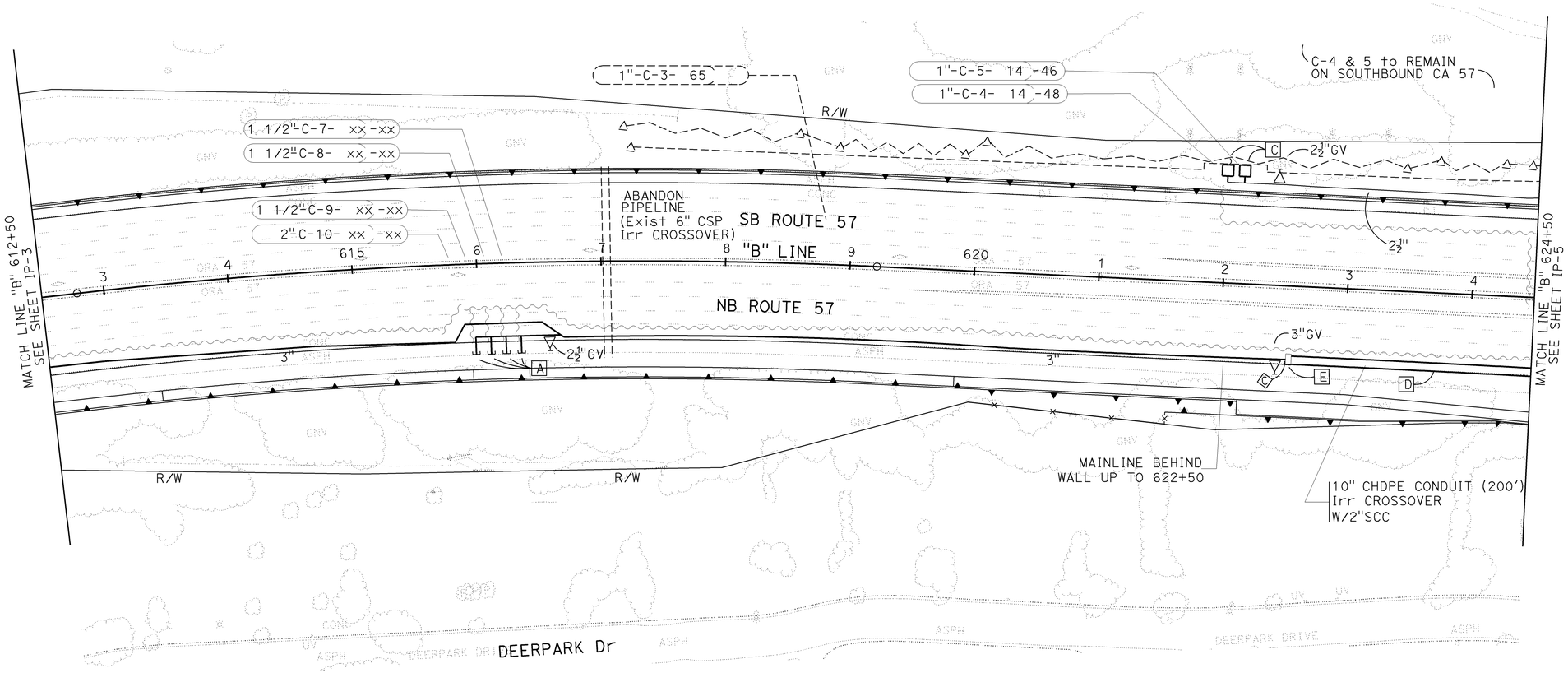

THIS PLAN ACCURATE FOR IRRIGATION WORK ONLY

IRRIGATION PLAN

SCALE: 1" = 50'

IP-4

STATE OF CALIFORNIA - DEPARTMENT OF TRANSPORTATION
Caltrans

CONSULTANT SENIOR LANDSCAPE ARCHITECT: PATRICK HIRSCH
CALCULATED-DESIGNED BY: MORGAN ITZEL
CHECKED BY: JEFF YAMAMOTO
REVISED BY
DATE REVISED

LAST REVISION 00-00-00
DATE PLOTTED => 25-JAN-2010
TIME PLOTTED => 11:30

Dist	COUNTY	ROUTE	POST MILES TOTAL PROJECT	SHEET No.	TOTAL SHEETS
12	Ora	57	18.4/20.9	391	856

11-16-09
LICENSED LANDSCAPE ARCHITECT

1-25-10
PLANS APPROVAL DATE

LICENSED LANDSCAPE ARCHITECT
PATRICK L. HIRSCH
NO. 1710
03-31-11
RENEWAL DATE
11-16-09
DATE
STATE OF CALIFORNIA

THE STATE OF CALIFORNIA OR ITS OFFICERS OR AGENTS SHALL NOT BE RESPONSIBLE FOR THE ACCURACY OR COMPLETENESS OF SCANNED COPIES OF THIS PLAN SHEET.

HIRSCH & ASSOCIATES, INC
2221 EAST WINSTON ROAD,
SUITE A
ANAHEIM, CA 92806

OCTA
550 S. MAIN STREET
ORANGE, CA 92863

NOTES:

1. FOR ACCURATE RIGHT OF WAY AND ACCESS DATA, CONTACT RIGHT OF WAY ENGINEERING AT THE DISTRICT OFFICE.
2. IRRIGATION TO BE INSTALLED IN PLANTER AREAS ONLY (BEHIND WALLS WHEN APPROPRIATE). CONTRACTOR TO FOLLOW ALL CALTRANS SET BACK REQUIREMENTS.
3. ALL IRRIGATION EQUIPMENT SIZES ARE SHOWN IN INCHES (DIAMETER NOMINAL) UNLESS OTHERWISE NOTED.

FULLERTON

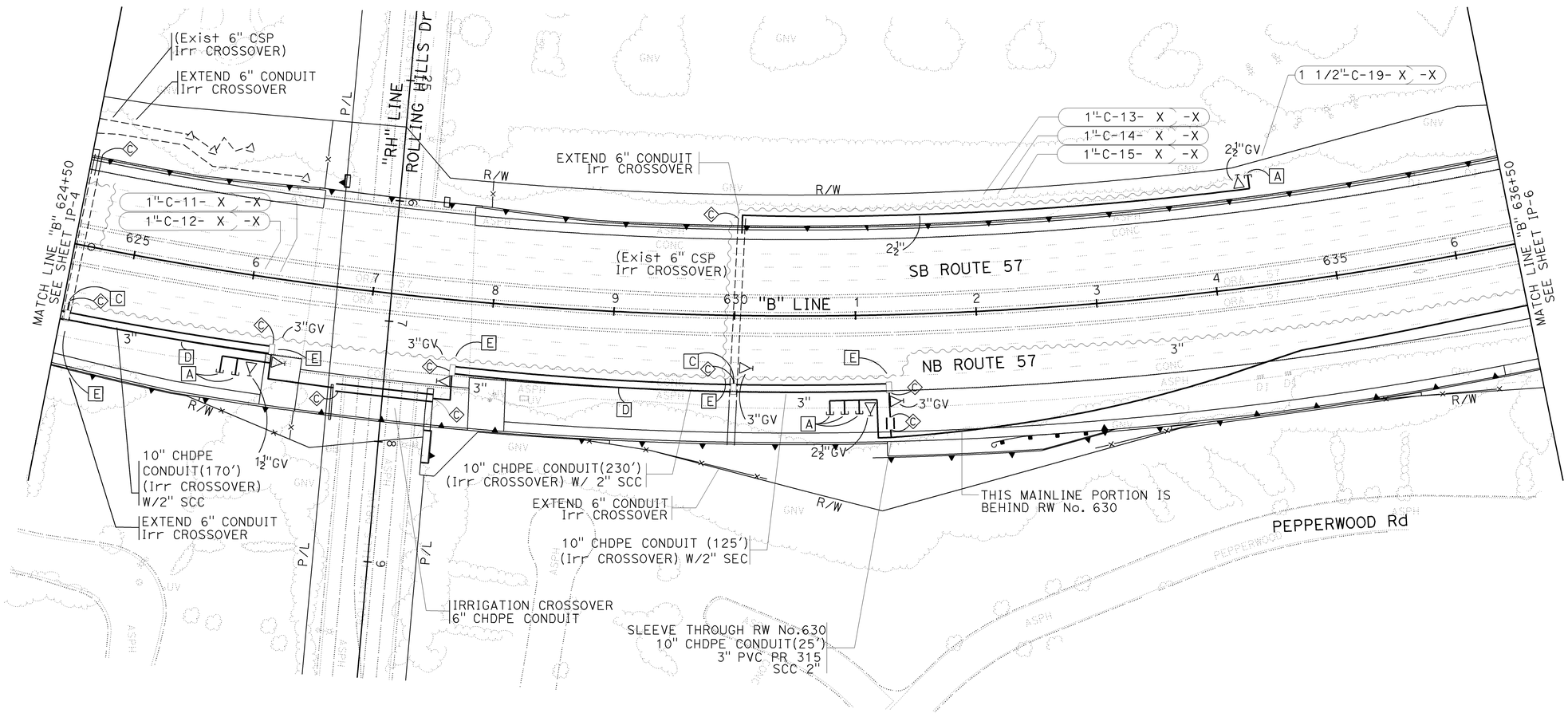

THIS PLAN ACCURATE FOR IRRIGATION WORK ONLY

IRRIGATION PLAN

SCALE: 1" = 50'

IP-5

STATE OF CALIFORNIA - DEPARTMENT OF TRANSPORTATION
Caltrans

CONSULTANT SENIOR LANDSCAPE ARCHITECT: PATRICK HIRSCH
CALCULATED-DESIGNED BY: MORGAN ITZEL
CHECKED BY: JEFF YAMAMOTO
REVISED BY / DATE REVISED

LAST REVISION 00-00-00
DATE PLOTTED => 25-JAN-2010
TIME PLOTTED => 13:50

Dist	COUNTY	ROUTE	POST MILES TOTAL PROJECT	SHEET No.	TOTAL SHEETS
12	Ora	57	18.4/20.9	392	856

11-16-09
LICENSED LANDSCAPE ARCHITECT

1-25-10
PLANS APPROVAL DATE

LICENSED LANDSCAPE ARCHITECT
PATRICK L. HIRSCH
NO. 1710
03-31-11
RENEWAL DATE
11-16-09
DATE
STATE OF CALIFORNIA

THE STATE OF CALIFORNIA OR ITS OFFICERS OR AGENTS SHALL NOT BE RESPONSIBLE FOR THE ACCURACY OR COMPLETENESS OF SCANNED COPIES OF THIS PLAN SHEET.

HIRSCH & ASSOCIATES, INC
2221 EAST WINSTON ROAD,
SUITE A
ANAHEIM, CA 92806

OCTA
550 S. MAIN STREET
ORANGE, CA 92863

NOTES:

1. FOR ACCURATE RIGHT OF WAY AND ACCESS DATA, CONTACT RIGHT OF WAY ENGINEERING AT THE DISTRICT OFFICE.
2. IRRIGATION TO BE INSTALLED IN PLANTER AREAS ONLY (BEHIND WALLS WHEN APPROPRIATE). CONTRACTOR TO FOLLOW ALL CALTRANS SET BACK REQUIREMENTS.
3. ALL IRRIGATION EQUIPMENT SIZES ARE SHOWN IN INCHES (DIAMETER NOMINAL) UNLESS OTHERWISE NOTED.

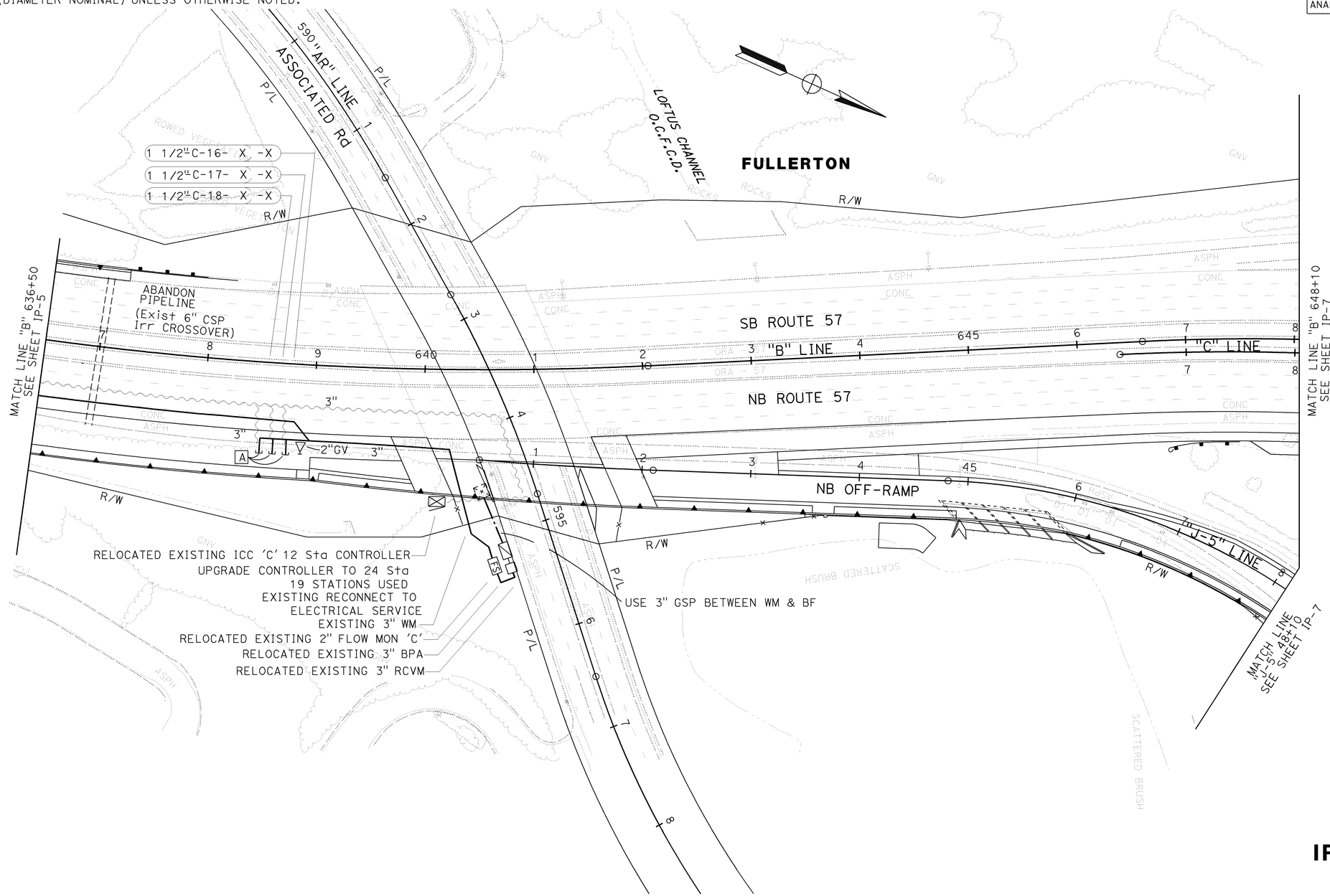

IRRIGATION PLAN

SCALE: 1" = 50'

IP-6

STATE OF CALIFORNIA - DEPARTMENT OF TRANSPORTATION
Caltrans

CONSULTANT SENIOR LANDSCAPE ARCHITECT: PATRICK HIRSCH
CALCULATED-DESIGNED BY: MORGAN ITZEL
CHECKED BY: JEFF YAMAMOTO
REVISED BY
DATE REVISED

LAST REVISION 00-00-00
DATE PLOTTED => 26-JAN-2010
TIME PLOTTED => 09:48

Dist	COUNTY	ROUTE	POST MILES TOTAL PROJECT	SHEET No.	TOTAL SHEETS
12	Ora	57	18.4/20.9	393	856

11-16-09
LICENSED LANDSCAPE ARCHITECT

1-25-10
PLANS APPROVAL DATE

LICENSED LANDSCAPE ARCHITECT
PATRICK L. HIRSCH
NO. 1710
03-31-11
RENEWAL DATE
11-16-09
DATE
STATE OF CALIFORNIA

THE STATE OF CALIFORNIA OR ITS OFFICERS OR AGENTS SHALL NOT BE RESPONSIBLE FOR THE ACCURACY OR COMPLETENESS OF SCANNED COPIES OF THIS PLAN SHEET.

HIRSCH & ASSOCIATES, INC
2221 EAST WINSTON ROAD,
SUITE A
ANAHEIM, CA 92806

OCTA
550 S. MAIN STREET
ORANGE, CA 92863

NOTES:

1. FOR ACCURATE RIGHT OF WAY AND ACCESS DATA, CONTACT RIGHT OF WAY ENGINEERING AT THE DISTRICT OFFICE.
2. IRRIGATION TO BE INSTALLED IN PLANTER AREAS ONLY (BEHIND WALLS WHEN APPROPRIATE). CONTRACTOR TO FOLLOW ALL CALTRANS SET BACK REQUIREMENTS.
3. ALL IRRIGATION EQUIPMENT SIZES ARE SHOWN IN INCHES (DIAMETER NOMINAL) UNLESS OTHERWISE NOTED.

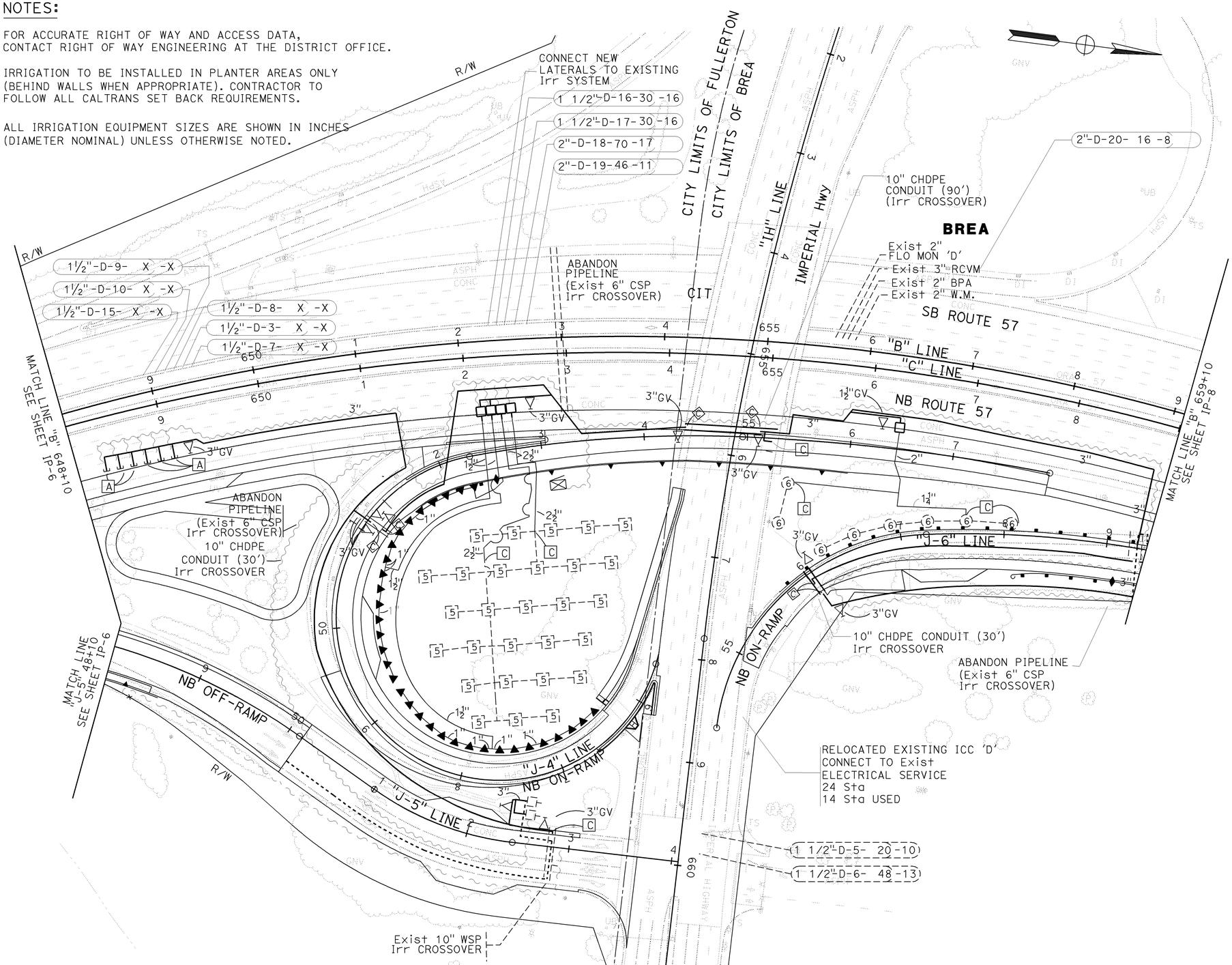

THIS PLAN ACCURATE FOR IRRIGATION WORK ONLY

IRRIGATION PLAN

SCALE: 1" = 50'

IP-7

STATE OF CALIFORNIA - DEPARTMENT OF TRANSPORTATION
Caltrans

CONSULTANT SENIOR LANDSCAPE ARCHITECT: PATRICK HIRSCH
CALCULATED-DESIGNED BY: MORGAN ITZEL
CHECKED BY: JEFF YAMAMOTO
REVISED BY
DATE REVISED

LAST REVISION 00-00-00
DATE PLOTTED => 28-JAN-2010
TIME PLOTTED => 09:48

Dist	COUNTY	ROUTE	POST MILES TOTAL PROJECT	SHEET No.	TOTAL SHEETS
12	Ora	57	18.4/20.9	394	856

11-16-09
LICENSED LANDSCAPE ARCHITECT

1-25-10
PLANS APPROVAL DATE

LICENSED LANDSCAPE ARCHITECT
PATRICK L. HIRSCH
NO. 1710
03-31-11
RENEWAL DATE
11-16-09
DATE
STATE OF CALIFORNIA

THE STATE OF CALIFORNIA OR ITS OFFICERS OR AGENTS SHALL NOT BE RESPONSIBLE FOR THE ACCURACY OR COMPLETENESS OF SCANNED COPIES OF THIS PLAN SHEET.

HIRSCH & ASSOCIATES, INC
2221 EAST WINSTON ROAD,
SUITE A
ANAHEIM, CA 92806

OCTA
550 S. MAIN STREET
ORANGE, CA 92863

NOTES:

1. FOR ACCURATE RIGHT OF WAY AND ACCESS DATA, CONTACT RIGHT OF WAY ENGINEERING AT THE DISTRICT OFFICE.
2. IRRIGATION TO BE INSTALLED IN PLANTER AREAS ONLY (BEHIND WALLS WHEN APPROPRIATE). CONTRACTOR TO FOLLOW ALL CALTRANS SET BACK REQUIREMENTS.
3. ALL IRRIGATION EQUIPMENT SIZES ARE SHOWN IN INCHES (DIAMETER NOMINAL) UNLESS OTHERWISE NOTED.

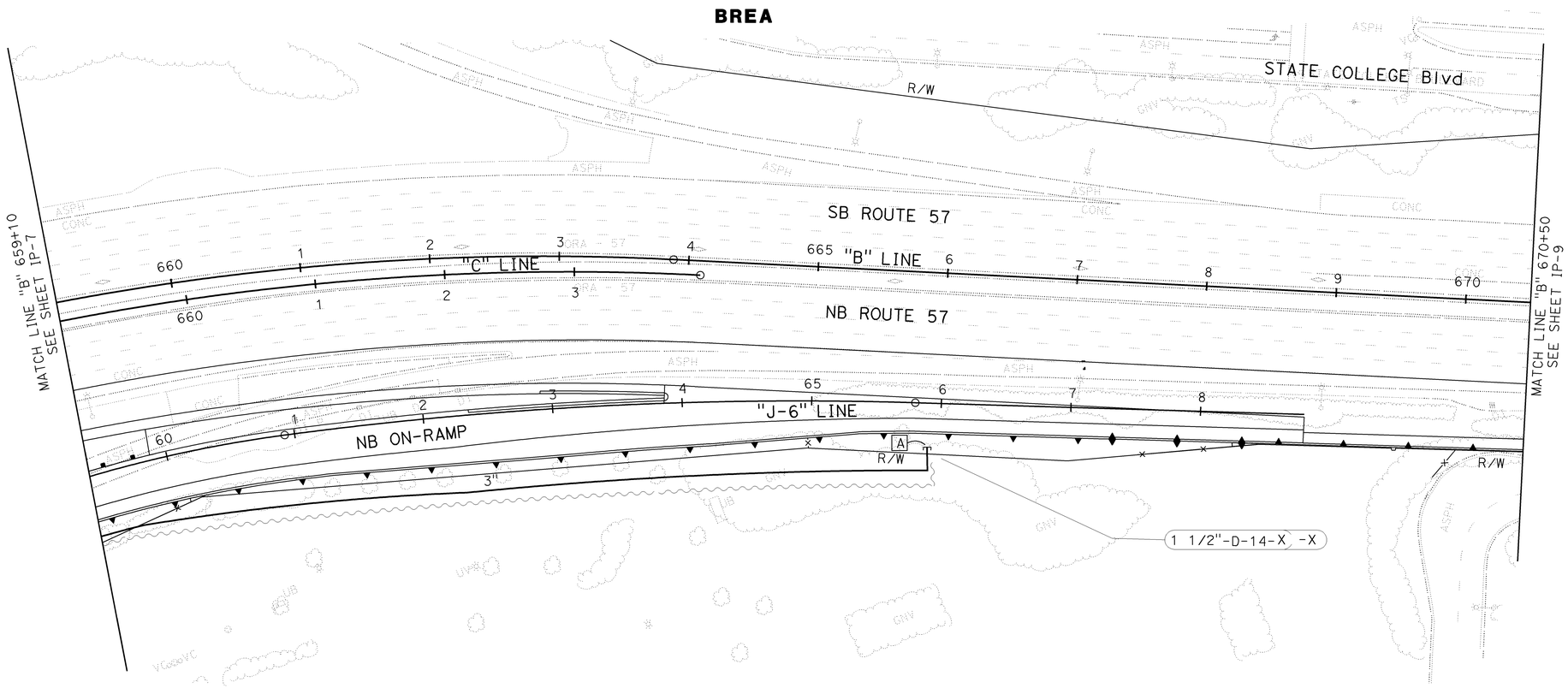

THIS PLAN ACCURATE FOR IRRIGATION WORK ONLY

IRRIGATION PLAN

SCALE: 1" = 50'

IP-8

STATE OF CALIFORNIA - DEPARTMENT OF TRANSPORTATION
Caltrans

CONSULTANT SENIOR LANDSCAPE ARCHITECT: PATRICK HIRSCH
CALCULATED-DESIGNED BY: MORGAN ITZEL
CHECKED BY: JEFF YAMAMOTO
REVISED BY
DATE REVISED

LAST REVISION 00-00-00
DATE PLOTTED => 25-JAN-2010
TIME PLOTTED => 13:51

Dist	COUNTY	ROUTE	POST MILES TOTAL PROJECT	SHEET No.	TOTAL SHEETS
12	Ora	57	18.4/20.9	395	856

11-16-09
LICENSED LANDSCAPE ARCHITECT

1-25-10
PLANS APPROVAL DATE

LICENSED LANDSCAPE ARCHITECT
PATRICK L. HIRSCH
NO. 1710
03-31-11
RENEWAL DATE
11-16-09
DATE
STATE OF CALIFORNIA

THE STATE OF CALIFORNIA OR ITS OFFICERS OR AGENTS SHALL NOT BE RESPONSIBLE FOR THE ACCURACY OR COMPLETENESS OF SCANNED COPIES OF THIS PLAN SHEET.

HIRSCH & ASSOCIATES, INC
2221 EAST WINSTON ROAD,
SUITE A
ANAHEIM, CA 92806

OCTA
550 S. MAIN STREET
ORANGE, CA 92863

NOTES:

1. FOR ACCURATE RIGHT OF WAY AND ACCESS DATA, CONTACT RIGHT OF WAY ENGINEERING AT THE DISTRICT OFFICE.
2. IRRIGATION TO BE INSTALLED IN PLANTER AREAS ONLY (BEHIND WALLS WHEN APPROPRIATE). CONTRACTOR TO FOLLOW ALL CALTRANS SET BACK REQUIREMENTS.
3. ALL IRRIGATION EQUIPMENT SIZES ARE SHOWN IN INCHES (DIAMETER NOMINAL) UNLESS OTHERWISE NOTED.

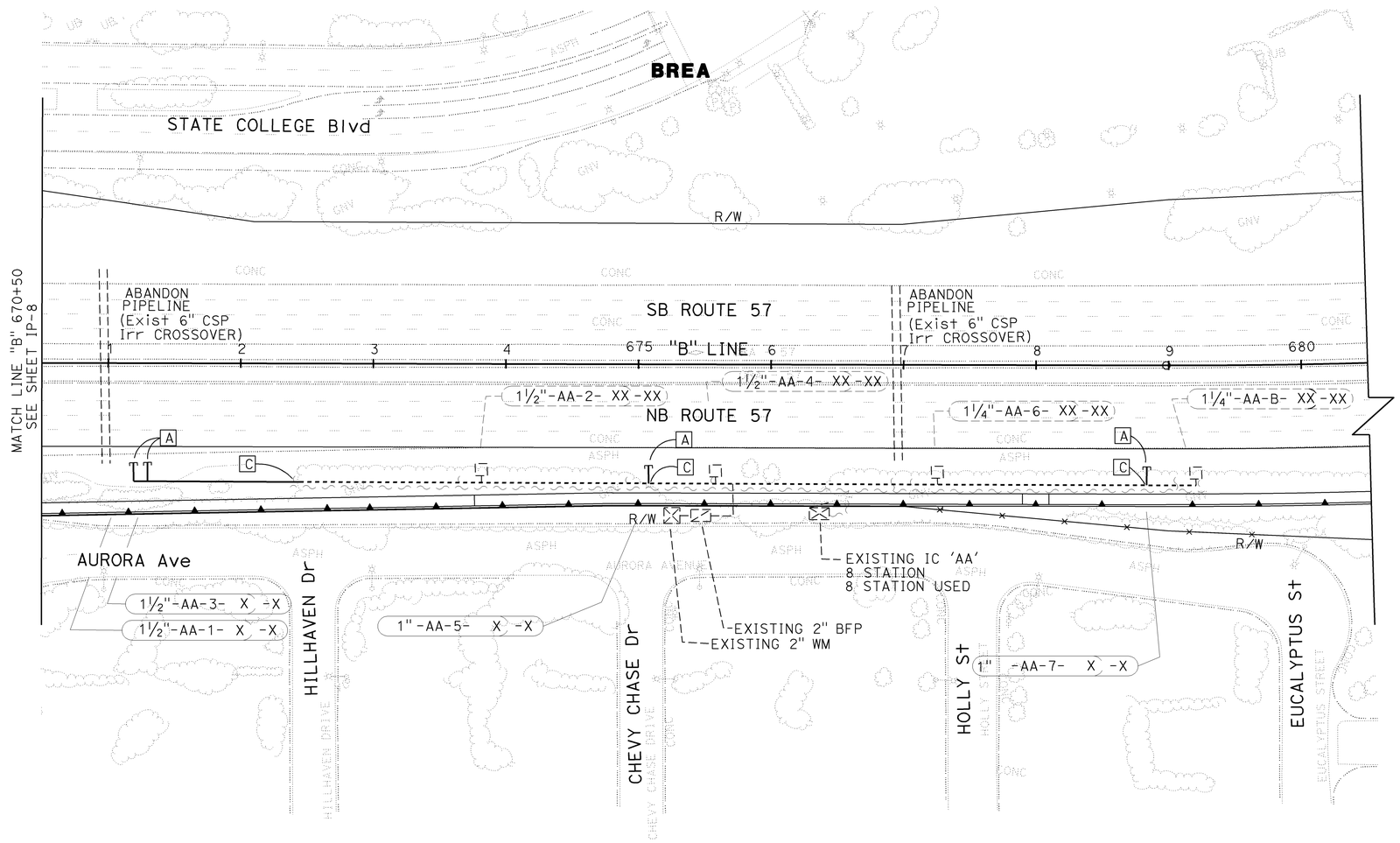

THIS PLAN ACCURATE FOR IRRIGATION WORK ONLY

IRRIGATION PLAN

SCALE: 1" = 50'

IP-9

STATE OF CALIFORNIA - DEPARTMENT OF TRANSPORTATION
Caltrans

CONSULTANT SENIOR LANDSCAPE ARCHITECT: PATRICK HIRSCH
CALCULATED-DESIGNED BY: MORGAN ITZEL
CHECKED BY: JEFF YAMAMOTO
REVISED BY / DATE REVISED

LAST REVISION 00-00-00 | DATE PLOTTED => 28-JAN-2010 | TIME PLOTTED => 09:48

Dist	COUNTY	ROUTE	POST MILES TOTAL PROJECT	SHEET No.	TOTAL SHEETS
12	Ora	57	18.4/20.9	396	856

06-15-09
LICENSED LANDSCAPE ARCHITECT

1-25-10
PLANS APPROVAL DATE

LICENSED LANDSCAPE ARCHITECT
PATRICK L. HIRSCH
NO. 1710
03-31-11
RENEWAL DATE
06-15-09
DATE
STATE OF CALIFORNIA

THE STATE OF CALIFORNIA OR ITS OFFICERS OR AGENTS SHALL NOT BE RESPONSIBLE FOR THE ACCURACY OR COMPLETENESS OF SCANNED COPIES OF THIS PLAN SHEET.

HIRSCH & ASSOCIATES, INC
2221 EAST WINSTON ROAD,
SUITE A
ANAHEIM, CA 92806

OCTA
550 S. MAIN STREET
ORANGE, CA 92863

NOTES:

1. FOR ACCURATE RIGHT OF WAY AND ACCESS DATA, CONTACT RIGHT OF WAY ENGINEERING AT THE DISTRICT OFFICE.
2. IRRIGATION TO BE INSTALLED IN PLANTER AREAS ONLY (BEHIND WALLS WHEN APPROPRIATE). CONTRACTOR TO FOLLOW ALL CALTRANS SET BACK REQUIREMENTS.
3. ALL IRRIGATION EQUIPMENT SIZES ARE SHOWN IN INCHES (DIAMETER NOMINAL) UNLESS OTHERWISE NOTED.

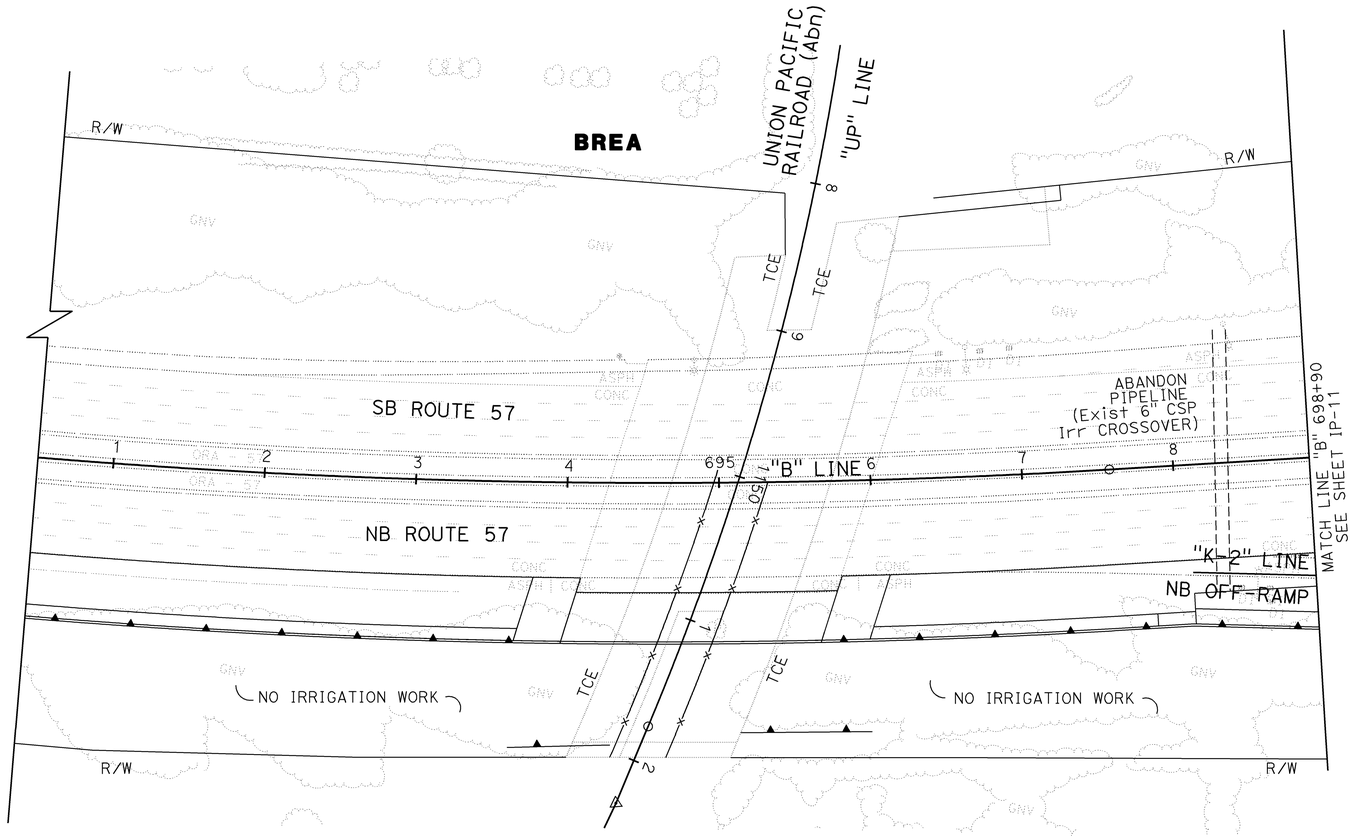

THIS PLAN ACCURATE FOR IRRIGATION WORK ONLY

IRRIGATION PLAN

SCALE: 1" = 50'

IP-10

STATE OF CALIFORNIA - DEPARTMENT OF TRANSPORTATION
Caltrans

CONSULTANT SENIOR LANDSCAPE ARCHITECT: PATRICK HIRSCH
CALCULATED-DESIGNED BY: MORGAN ITZEL
CHECKED BY: JEFF YAMAMOTO
REVISED BY
DATE REVISED

LAST REVISION 00-00-00
DATE PLOTTED => 25-JAN-2010
TIME PLOTTED => 13:51

Dist	COUNTY	ROUTE	POST MILES TOTAL PROJECT	SHEET No.	TOTAL SHEETS
12	Ora	57	18.4/20.9	397	856

11-16-09
LICENSED LANDSCAPE ARCHITECT

1-25-10
PLANS APPROVAL DATE

LICENSED LANDSCAPE ARCHITECT
PATRICK L. HIRSCH
NO. 1710
03-31-11
RENEWAL DATE
11-16-09
DATE
STATE OF CALIFORNIA

THE STATE OF CALIFORNIA OR ITS OFFICERS OR AGENTS SHALL NOT BE RESPONSIBLE FOR THE ACCURACY OR COMPLETENESS OF SCANNED COPIES OF THIS PLAN SHEET.

HIRSCH & ASSOCIATES, INC
2221 EAST WINSTON ROAD,
SUITE A
ANAHEIM, CA 92806

OCTA
550 S. MAIN STREET
ORANGE, CA 92863

NOTES:

1. FOR ACCURATE RIGHT OF WAY AND ACCESS DATA, CONTACT RIGHT OF WAY ENGINEERING AT THE DISTRICT OFFICE.
2. IRRIGATION TO BE INSTALLED IN PLANTER AREAS ONLY (BEHIND WALLS WHEN APPROPRIATE). CONTRACTOR TO FOLLOW ALL CALTRANS SET BACK REQUIREMENTS.
3. ALL IRRIGATION EQUIPMENT SIZES ARE SHOWN IN INCHES (DIAMETER NOMINAL) UNLESS OTHERWISE NOTED.

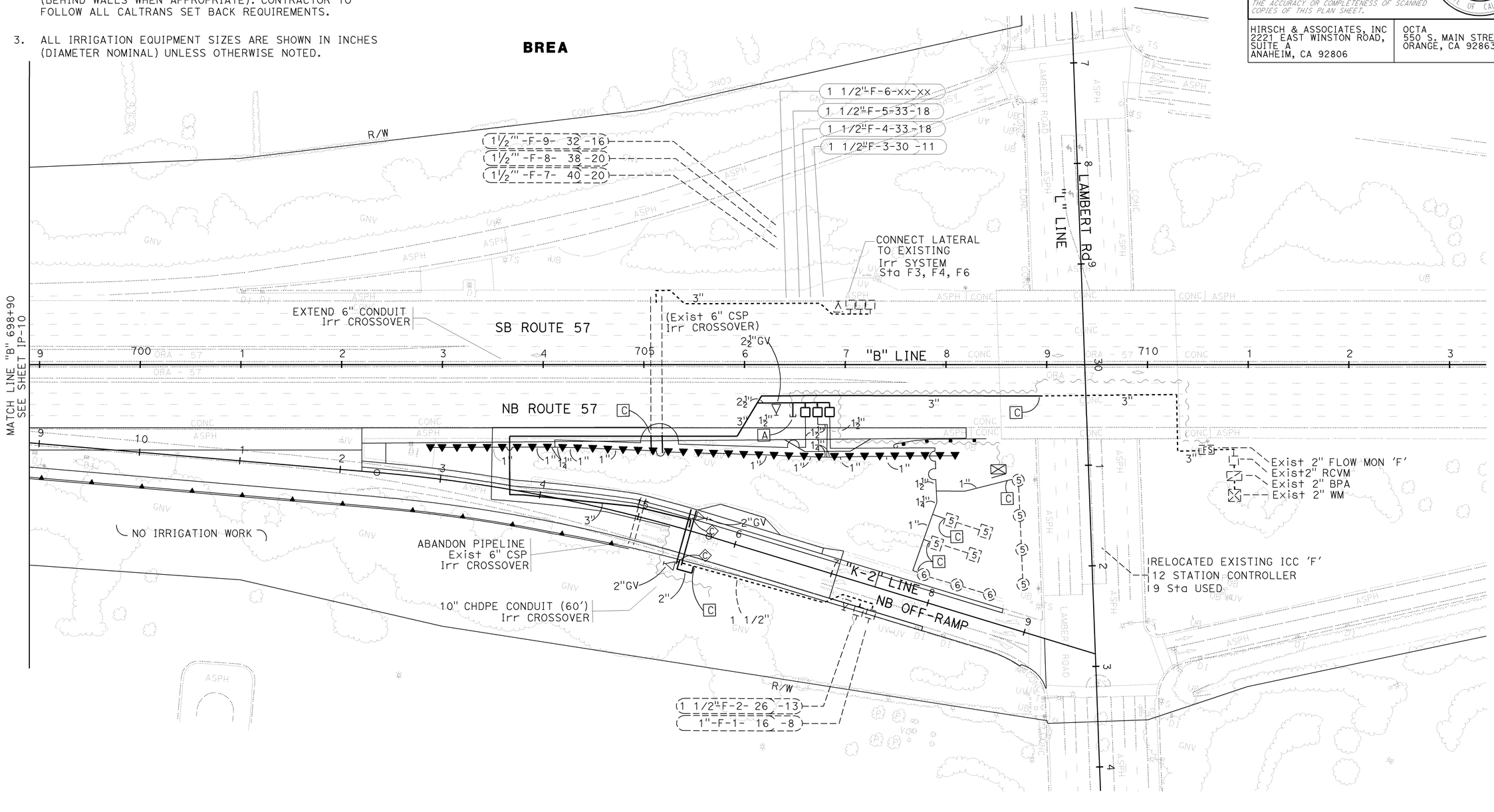

IRRIGATION PLAN

SCALE: 1" = 50'

THIS PLAN ACCURATE FOR IRRIGATION WORK ONLY

IP-11

REVISED BY	DATE REVISED
MORGAN ITZEL	JEFF YAMAMOTO
CALCULATED-DESIGNED BY	CHECKED BY
CONSULTANT SENIOR LANDSCAPE ARCHITECT	PATRICK HIRSCH

STATE OF CALIFORNIA - DEPARTMENT OF TRANSPORTATION
Caltrans

LAST REVISION 00-00-00 | DATE PLOTTED => 25-JAN-2010 | TIME PLOTTED => 13:51

Dist	COUNTY	ROUTE	POST MILES TOTAL PROJECT	SHEET No.	TOTAL SHEETS
12	Ora	57	18.4/20.9	398	856

06-15-09
LICENSED LANDSCAPE ARCHITECT

1-25-10
PLANS APPROVAL DATE

LICENSED LANDSCAPE ARCHITECT
PATRICK L. HIRSCH
NO. 1710
03-31-11
RENEWAL DATE
06-15-09
DATE
STATE OF CALIFORNIA

THE STATE OF CALIFORNIA OR ITS OFFICERS OR AGENTS SHALL NOT BE RESPONSIBLE FOR THE ACCURACY OR COMPLETENESS OF SCANNED COPIES OF THIS PLAN SHEET.

HIRSCH & ASSOCIATES, INC
2221 EAST WINSTON ROAD,
SUITE A
ANAHEIM, CA 92806

OCTA
550 S. MAIN STREET
ORANGE, CA 92863

SPRINKLER SCHEDULE

SYMBOL	TYPE	DESCRIPTION	SPRAY PATTERN	OPERATING PRESSURE (PSI)	PRESSURE COMPENSATING	PLUS/MINUS 5% ② DISCHARGE: GALLONS PER MINUTE (GPM)	GALLONS PER HOUR (GPH)	RADIUS (Ft)	WIDTH x LENGTH (Ft)	MATERIAL	INLET CONNECTION (NPT INCH)	POSITIVE-LOCKING ADJ ARC STOP	BACKSPLASH PREVENTER	DIFFUSER PIN	DISTANCE CONTROL FLAP	ADJ DISCHARGE	RISER: TYPE	RISER MATERIAL: PLASTIC	RISER MATERIAL: GALVANIZED	RISER: SIZE (IPS INCH)	RISER: HEIGHT (INCH)	RISER: FLOW SHUTOFF DEVICE	⑤ SWING JOINT (TYPE)	RISER SUPPORT	SPRINKLER PROTECTOR (TYPE)	REMARKS
▲	B-2	SHRUB SPRAY	Q/H	30	X	1.85/.92	-	15	-	PL	1/2"	-	-	-	-	X	I	X	-	1/2"	-	X	I	-	I	12" POP UP

X IN BOX DENOTES REQUIREMENT

APPLICABLE WHEN CIRCLED BELOW:

1 - See Special Provisions.
2 - If a pressure compensating device is specified, the discharge and radii shown reflect its use.
3 - Arc Stop shall be fitted with a nut and bolt.
4 - Vinyl-coated cast iron housing.
5 - Swing Joints required adjacent to shoulders, curbs, sidewalks, and dikes.
6 - Unless otherwise shown on plans.

ABBREVIATIONS

F	full circle	Ft	feet/foot
P	part circle	GPM	gallons per minute
F/P	full/part circle	GPH	gallons per hour
Q	quarter circle	Adj	adjustable
T	third circle	PL	plastic
H	half circle	B/B	brass/bronze
TT	two third circle	B/PL	brass/plastic
TQ	three quarter circle	B/B/PL	brass/bronze/plastic
CST	center strip	NPT	national pipe thread
SST	side strip	IPS	iron pipe size
EST	end strip	PSI	pounds per square inch

RCV SIZE (INCH)
IRRIGATION CONTROLLER
CONTROLLER STATION
VALVE IN PARALLEL (IF APPLICABLE)
GPM
QUANTITY OF SPRINKLERS (WHEN SHOWN)

* 2½"A-2b-500 -60

THIS PLAN ACCURATE FOR IRRIGATION WORK ONLY

LANDSCAPE DETAILS

LD-1

REVISED BY	DATE REVISED

CALCULATED-DESIGNED BY: MORGAN ITZEL
CHECKED BY: JEFF YAMAMOTO

CONSULTANT SENIOR LANDSCAPE ARCHITECT: PATRICK HIRSCH

STATE OF CALIFORNIA - DEPARTMENT OF TRANSPORTATION
Caltrans

LAST REVISION 00-00-00 | DATE PLOTTED => 25-JAN-2010 | TIME PLOTTED => 10:46

Dist	COUNTY	ROUTE	POST MILES TOTAL PROJECT	SHEET No.	TOTAL SHEETS
12	Ora	57	18.4/20.9	399	399

11-16-09
LICENSED LANDSCAPE ARCHITECT

1-25-10
PLANS APPROVAL DATE

LICENSED LANDSCAPE ARCHITECT
PATRICK L. HIRSCH
NO. 1710
03-31-11
RENEWAL DATE
11-16-09
DATE
STATE OF CALIFORNIA

THE STATE OF CALIFORNIA OR ITS OFFICERS OR AGENTS SHALL NOT BE RESPONSIBLE FOR THE ACCURACY OR COMPLETENESS OF SCANNED COPIES OF THIS PLAN SHEET.

HIRSCH & ASSOCIATES, INC
2221 EAST WINSTON ROAD, SUITE A
ANAHEIM, CA 92806

OCTA
550 S. MAIN STREET
ORANGE, CA 92863

EXTEND IRRIGATION CROSSOVERS

LOCATION		SIDE		EXTEND CONDUIT SIZE (INCH) / LENGTH (LF)		CB	OL	(N) WATER LINE CROSSOVER SIZE (INCH)	(N) SPRINKLER CONTROL CROSSOVER SIZE (INCH)
LINE	STATION	R†	L†	6	10				
B	591+00	X	-	30	-	X	-	2½	2
B	597+00	X	-	30	-	X	-	2½	2
B	624+50	X	X	45	-	X	-	3	2
B	630+00	X	X	45	-	X	-	3	2
B	705+10	X	-	20	-	X	-	3	2
TOTAL				170					

(N) - NOT A SEPARATE PAY ITEM FOR INFORMATION ONLY
X - DENOTES REQUIREMENT
CB - COUPLING BAND
OL - OVERLAP

Size of Pipe	Quantity Of Sprinklers △Type B1
¾"	1-12
1"	13-20
1¼"	21-32
1½"	33-44
2"	45-69
2 ½"	70-101
3"	102-151

Size of Pipe	Quantity Of Sprinklers ▲Type B2
¾"	1-5
1"	6-8
1¼"	9-14
1½"	15-18
2"	19-29
2 ½"	30-43
3"	44-64

Size of Pipe	Quantity Of Sprinklers ⑤ ⑥ Type A5/A6
¾"	1-5
1"	6-8
1¼"	9-13
1½"	14-18
2"	19-28
2 ½"	29-41
3"	42-62

Size of Pipe	Quantity Of Sprinklers [5] Type A5
¾"	1-2
1"	2-3
1¼"	4-6
1½"	7-8
2"	9-13
2 ½"	14-19
3"	20-29

ABANDON PIPELINE

LOCATION				ABANDON PIPELINE
LINE	STATION	SIZE (INCH)	DESCRIPTION	EA
B	605+00	6"	CSP	1
B	610+96	6"	CSP	1
B	617+05	6"	CSP	1
B	637+00	6"	CSP	1
B	653+00	6"	CSP	1
J-4	51+33	6"	CSP	1
J-6	59+30	6"	CSP	1
B	670+97	6"	CSP	1
B	676+95	6"	CSP	1
B	698+33	6"	CSP	1
K-2	15+00	6"	CSP	1
			TOTAL	11

IRRIGATION CROSSOVERS

LOCATION		SIDE		CONDUIT TYPE ③ SIZE (INCH) / LENGTH (LF)		(N) WATER LINE CROSSOVER SIZE (INCH)	(N) SPRINKLER CONTROL CROSSOVER SIZE (INCH)
LINE	STATION	R†	L†	10	12		
J-4	51+11	-	-	30	-	3	2
IH	655+80	-	-	90	-	3	2
J-6	56+10	-	-	30	-	3	2
K-2	15+50	-	-	60	-	3	2
B*	622+50	-	-	200	-	3	2
B*	624+50	-	-	170	-	3	2
B*	627+70	-	-	230	-	3	2
B*	630+00	-	-	125	-	3	2
B	631+25	-	-	25	-	3	2
B*	626+80	-	-	85	-	3	2
TOTAL				1045			

(N) - NOT A SEPARATE PAY ITEM FOR INFORMATION ONLY
X - DENOTES REQUIREMENT
* - DENOTES CROSSOVER PARALLEL TO LINE LOCATED IN AC SHOULDER (NB ONLY)

CONDUIT TYPE
(Applicable when circled below and shown under the 'CONDUIT TYPE' column heading)

1 BITUMINOUS COATED CORRUGATED STEEL PIPE (0.064 INCH THICK)
2 CORRUGATED STEEL PIPE (0.064 INCH THICK)
③ CORRUGATED HIGH DENSITY POLYETHYLENE PIPE
4 ALTERNATIVE CONDUIT

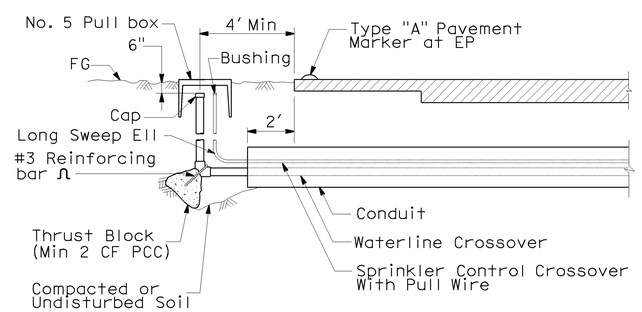

SECTION

IRRIGATION CROSSOVER

THIS PLAN ACCURATE FOR IRRIGATION WORK ONLY

LANDSCAPE DETAILS

LD-2

STATE OF CALIFORNIA - DEPARTMENT OF TRANSPORTATION
Caltrans
CONSULTANT SENIOR LANDSCAPE ARCHITECT
PATRICK HIRSCH
CALCULATED-DESIGNED BY
CHECKED BY
MORGAN ITZEL
JEFF YAMAMOTO
REVISED BY
DATE REVISED

LAST REVISION 00-00-00
DATE PLOTTED => 25-JAN-2010
TIME PLOTTED => 10:54

Dist	COUNTY	ROUTE	POST MILES TOTAL PROJECT	SHEET No.	TOTAL SHEETS
12	Ora	57	18.4/20.9	400	856

REGISTERED CIVIL ENGINEER 11-16-09 DATE

1-25-10
PLANS APPROVAL DATE

REGISTERED PROFESSIONAL ENGINEER SAN-FU YEH No. C 31032 Exp. 3/31/10 CIVIL STATE OF CALIFORNIA

THE STATE OF CALIFORNIA OR ITS OFFICERS OR AGENTS SHALL NOT BE RESPONSIBLE FOR THE ACCURACY OR COMPLETENESS OF SCANNED COPIES OF THIS PLAN SHEET.

ACT CONSULTING ENGINEERS, INC.
5 CORPORATE PARK
SUITE 268
IRVINE, CA 92606

OCTA
550 S. MAIN STREET
ORANGE, CA 92863

NOTE:

FOR ACCURATE RIGHT OF WAY DATA, CONTACT RIGHT OF WAY RECORD ENGINEERING AT THE DISTRICT OFFICE.

PROJECT NOTES: (FOR E-1 TO E-12)

1. FOR WIRING DIAGRAMS, SEE SHEET E-13.

2 RL ON STAGE CONSTRUCTION.
SEE LIGHTING (STAGE CONSTRUCTION) PLANS.

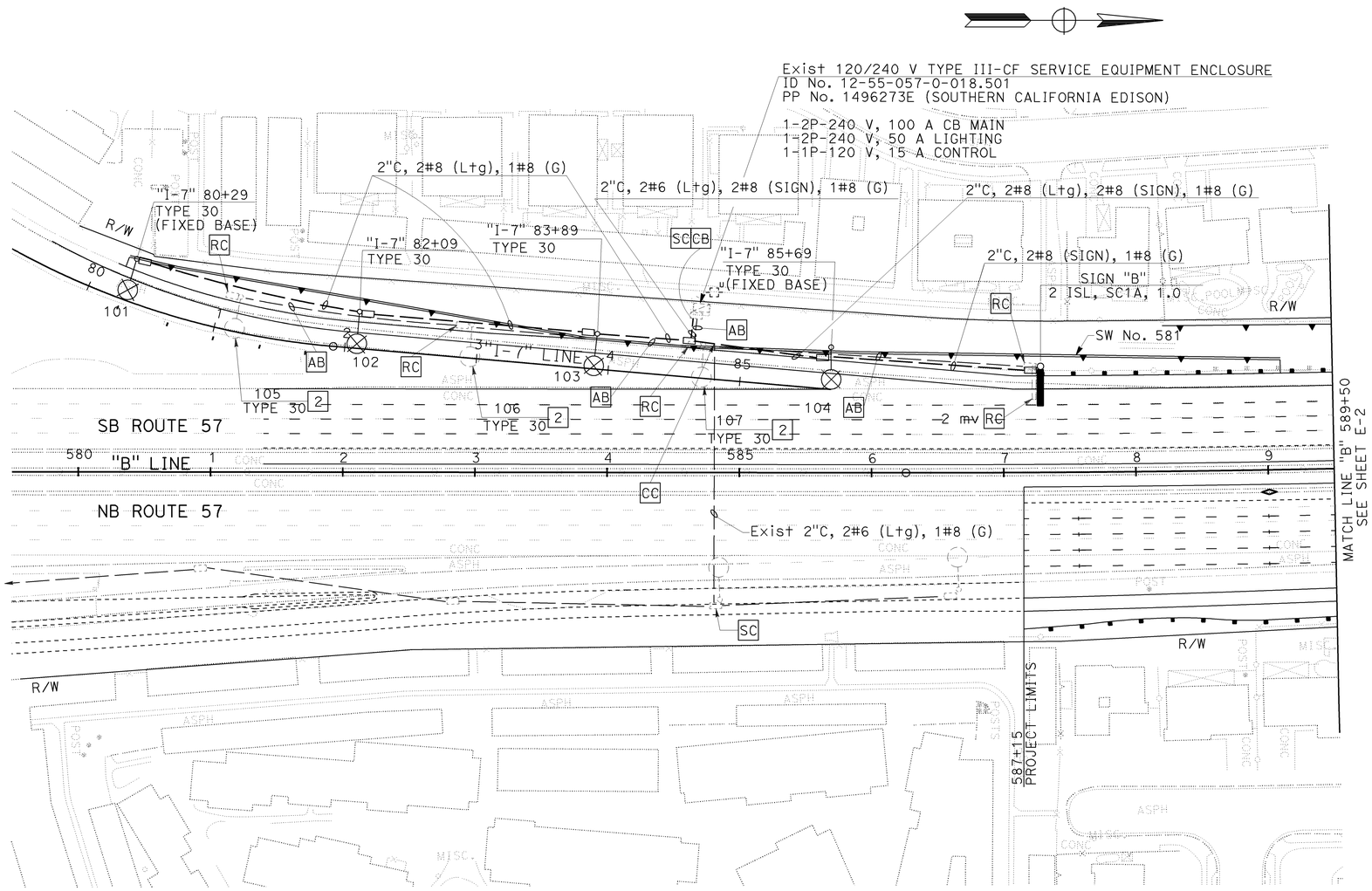

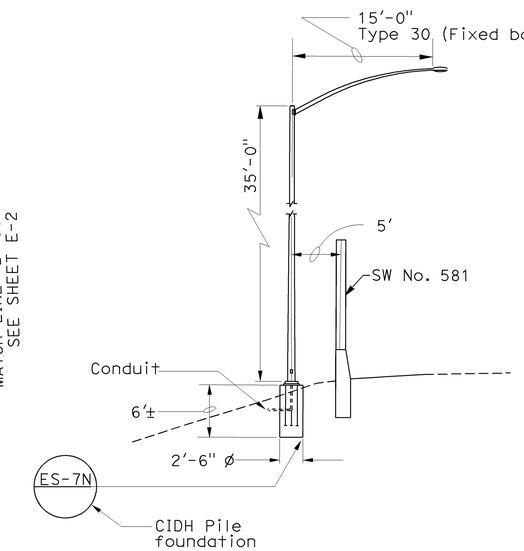

ELECTROLIER LAYOUT (Typ)
(SW No. 581 ONLY)
NO SCALE

THIS PLAN IS ACCURATE FOR ELECTRICAL WORK ONLY.

LIGHTING AND SIGN ILLUMINATION

SCALE: 1" = 50'

E-1

STATE OF CALIFORNIA - DEPARTMENT OF TRANSPORTATION
Caltrans

CONSULTANT FUNCTIONAL SUPERVISOR: THOMAS IONTA
CALCULATED-DESIGNED BY: SANFU YEH
CHECKED BY: HON YOW
REVISED BY
DATE REVISED

LAST REVISION 00-00-00
DATE PLOTTED => 25-JAN-2010
TIME PLOTTED => 12:47