DIST	COUNTY	ROUTE	POST MILES TOTAL PROJECT	SHEET No	TOTAL SHEETS
12	Ora	57	16.2/18.6	901	960

REGISTERED CIVIL ENGINEER 6-17-09 DATE

12-14-09
PLANS APPROVAL DATE

The State of California or its officers or agents shall not be responsible for the accuracy or completeness of electronic copies of this plan sheet.

REGISTERED PROFESSIONAL ENGINEER T.A. Kirilov No. C67708 Exp. 6/30/11 CIVIL STATE OF CALIFORNIA

OCTA
550 S MAIN STREET
ORANGE, CA 92868

RBF CONSULTING
14725 ALTON PKWY
IRVINE, CA 92618

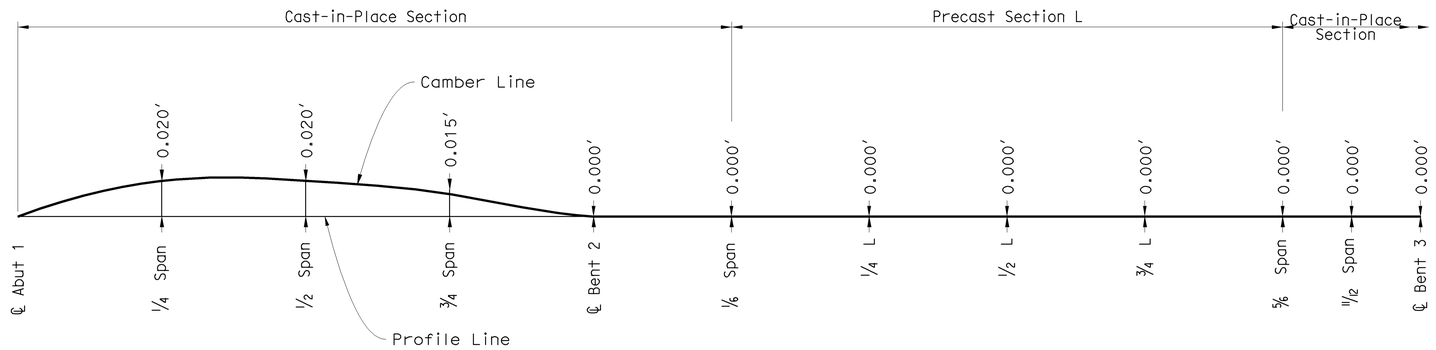

CAMBER DIAGRAM SPAN 1 & 2

No Scale

NOTES:

1. Camber Diagram does not include allowance for falsework settlement. See note on falsework release regarding camber on "Typical Section" sheets.

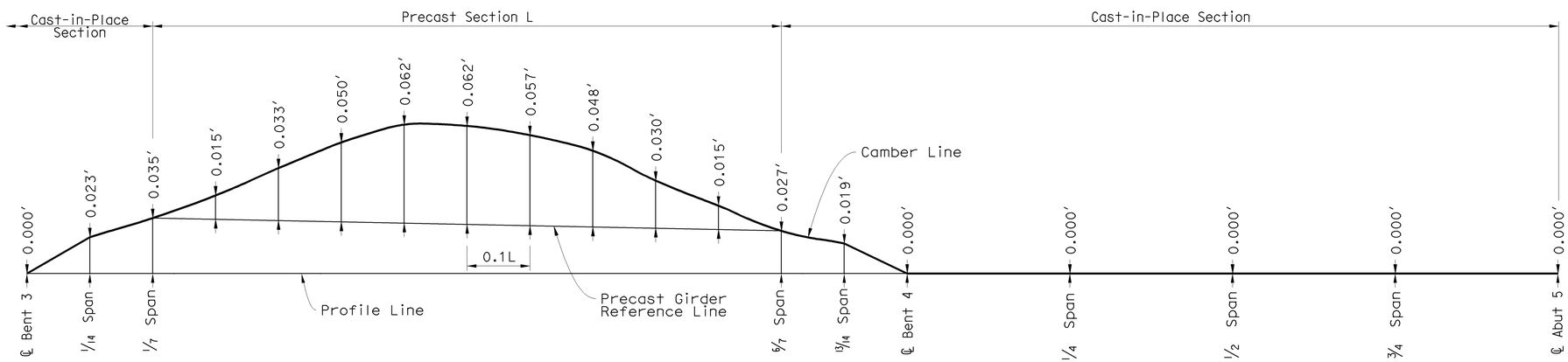

CAMBER DIAGRAM SPAN 3 & 4

No Scale

NOTE:
THE CONTRACTOR SHALL VERIFY ALL CONTROLLING FIELD DIMENSIONS BEFORE ORDERING OR FABRICATING ANY MATERIAL.

DESIGN OVERSIGHT Jon Hamaguchi
6-24-09
SIGN OFF DATE

DESIGN DETAIL SHEET (ENGLISH) (REV. 2/25/05)

	BY	CHECKED
DESIGN	T. A. Kirilov	F. Sanchez
DETAILS	J. Saldana	H. Montoya
QUANTITIES	CC/CS/SM	VT/KC

ORIGINAL SCALE IN INCHES FOR REDUCED PLANS 0 1 2 3

PREPARED FOR THE STATE OF CALIFORNIA DEPARTMENT OF TRANSPORTATION

Romeo M. Firme
PROJECT ENGINEER

CU 12
EA 0F0311

BRIDGE NO. 55-0460
POST MILE 17.1

PLACENTIA AVENUE UC (WIDEN)
CAMBER DIAGRAM

DISREGARD PRINTS BEARING EARLIER REVISION DATES

REVISION DATES (PRELIMINARY STAGE ONLY) 2/13/09 4/6/09 6/17/09

SHEET 24 OF 42

FILE => 55-0460-1-g_1o03.dgn

USERNAME => trmnguye DATE PLOTTED => 17-DEC-2009 TIME PLOTTED => 09:45

DIST	COUNTY	ROUTE	POST MILES TOTAL PROJECT	SHEET No	TOTAL SHEETS
12	Ora	57	16.2/18.6	902	960

REGISTERED CIVIL ENGINEER — DATE 6-17-09

12-14-09
PLANS APPROVAL DATE

REGISTERED PROFESSIONAL ENGINEER — T.A. Kirilov — No. C67708 — Exp. 6/30/11 — CIVIL — STATE OF CALIFORNIA

The State of California or its officers or agents shall not be responsible for the accuracy or completeness of electronic copies of this plan sheet.

OCTA
550 S MAIN STREET
ORANGE, CA 92868

RBF CONSULTING
14725 ALTON PKWY
IRVINE, CA 92618

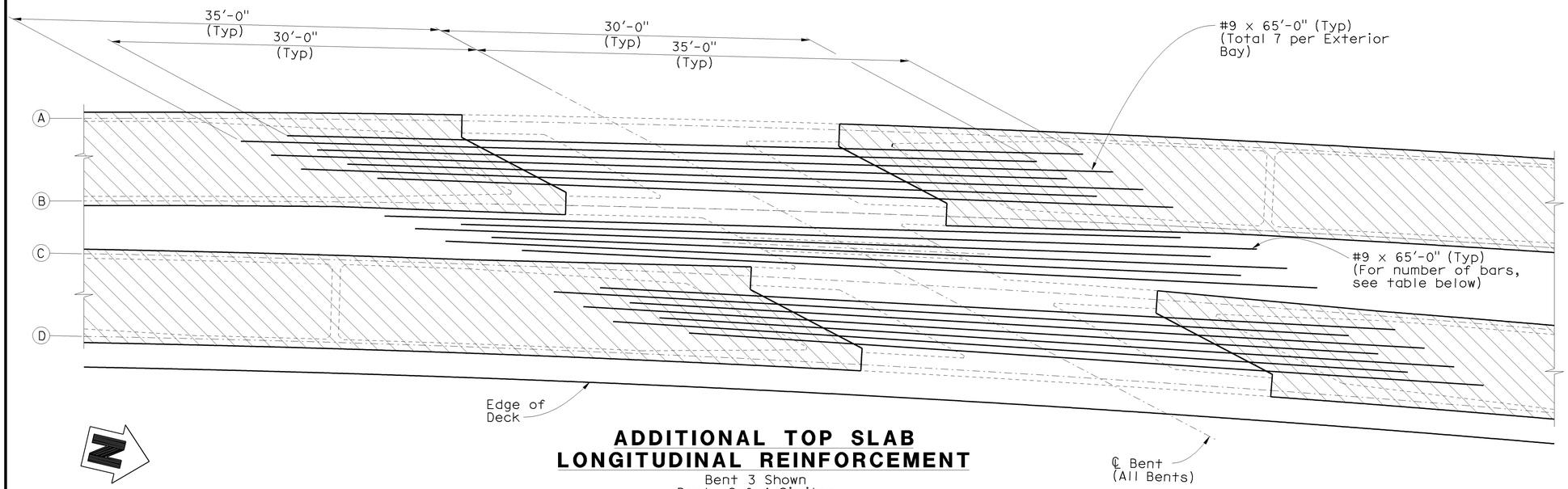

ADDITIONAL TOP SLAB LONGITUDINAL REINFORCEMENT

Bent 3 Shown
Bents 2 & 4 Similar
1" = 5'

INTERIOR BAY ADDITIONAL TOP SLAB BARS	
Bent 2	Total 4
Bent 3	Total 6
Bent 4	Total 8

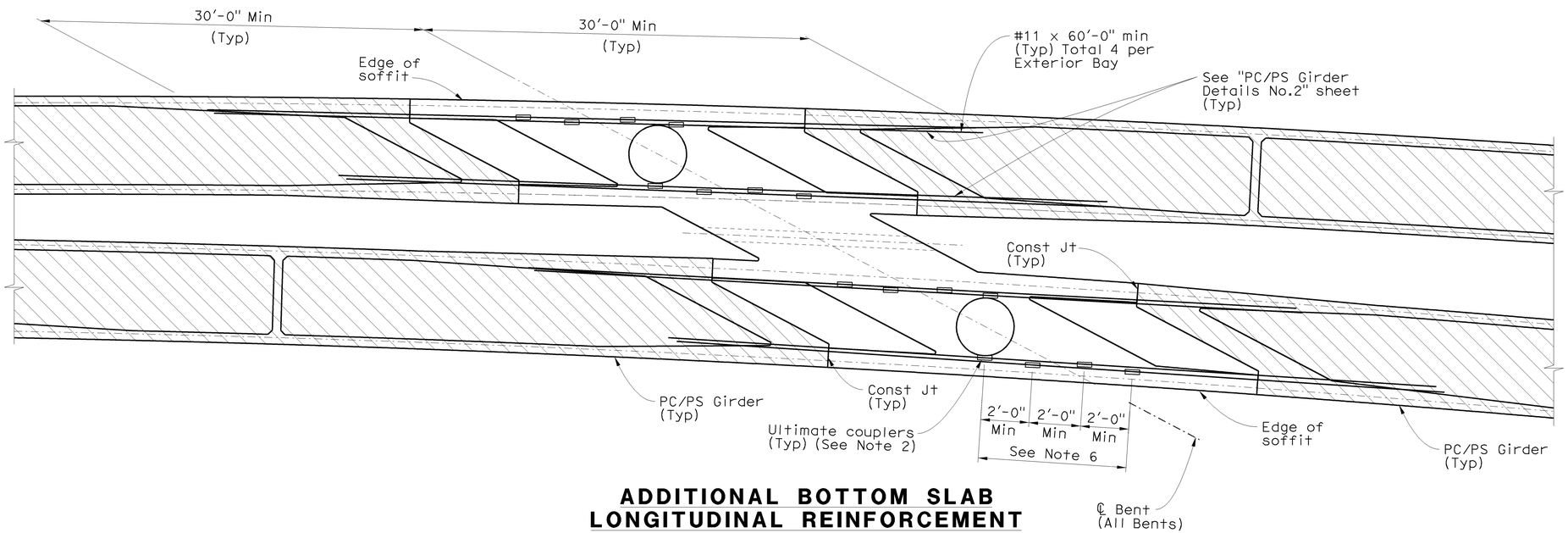

ADDITIONAL BOTTOM SLAB LONGITUDINAL REINFORCEMENT

Bent 3 Shown
Bents 2 & 4 Similar
1" = 5'

NOTES:

1. No splices permitted in additional top slab reinforcement.
2. Additional bottom slab reinforcement couplers shall be staggered.
3. For additional bar location information, see "Typical Section" sheets.
4. Additional bottom slab reinforcement shall clear column main reinforcement.
5. Additional top slab reinforcement shall be equally spaced within bays.
6. Couplers shall be placed within limits of bent cap.

LEGEND:

Indicates Precast Girders

Indicates Ultimate Coupler

NOTE:
THE CONTRACTOR SHALL VERIFY ALL CONTROLLING FIELD DIMENSIONS BEFORE ORDERING OR FABRICATING ANY MATERIAL.

DESIGN OVERSIGHT — Jon Hamaguchi
6-24-09
SIGN OFF DATE

	BY	CHECKED
DESIGN	T. A. Kirilov	F. Sanchez
DETAILS	J. Saldana	H. Montoya
QUANTITIES	CC/CS/SM	VT/KC

PREPARED FOR THE STATE OF CALIFORNIA DEPARTMENT OF TRANSPORTATION

Romeo M. Firme
PROJECT ENGINEER

BRIDGE NO. 55-0460
POST MILE 17.1

PLACENTIA AVENUE UC (WIDEN)
ADDITIONAL GIRDER REINFORCEMENT

DESIGN DETAIL SHEET (ENGLISH) (REV. 2/25/05)

ORIGINAL SCALE IN INCHES FOR REDUCED PLANS 0 1 2 3

CU 12
EA 0F0311

DISREGARD PRINTS BEARING EARLIER REVISION DATES

REVISION DATES (PRELIMINARY STAGE ONLY): 2/13/09 4/06/09 6/17/09

SHEET 25 OF 42

FILE => 55-0460-1-gdt001.dgn

USERNAME => rtrmnguye DATE PLOTTED => 17-DEC-2009 TIME PLOTTED => 09:45

DIST	COUNTY	ROUTE	POST MILES TOTAL PROJECT	SHEET No	TOTAL SHEETS
12	Ora	57	16.2/18.6	903	960

REGISTERED CIVIL ENGINEER — DATE 6-17-09

12-14-09
PLANS APPROVAL DATE

The State of California or its officers or agents shall not be responsible for the accuracy or completeness of electronic copies of this plan sheet.

REGISTERED PROFESSIONAL ENGINEER — T.A. Kirilov — No. C67708 — Exp. 6/30/11 — CIVIL — STATE OF CALIFORNIA

OCTA
550 S MAIN STREET
ORANGE, CA 92868

RBF CONSULTING
14725 ALTON PKWY
IRVINE, CA 92618

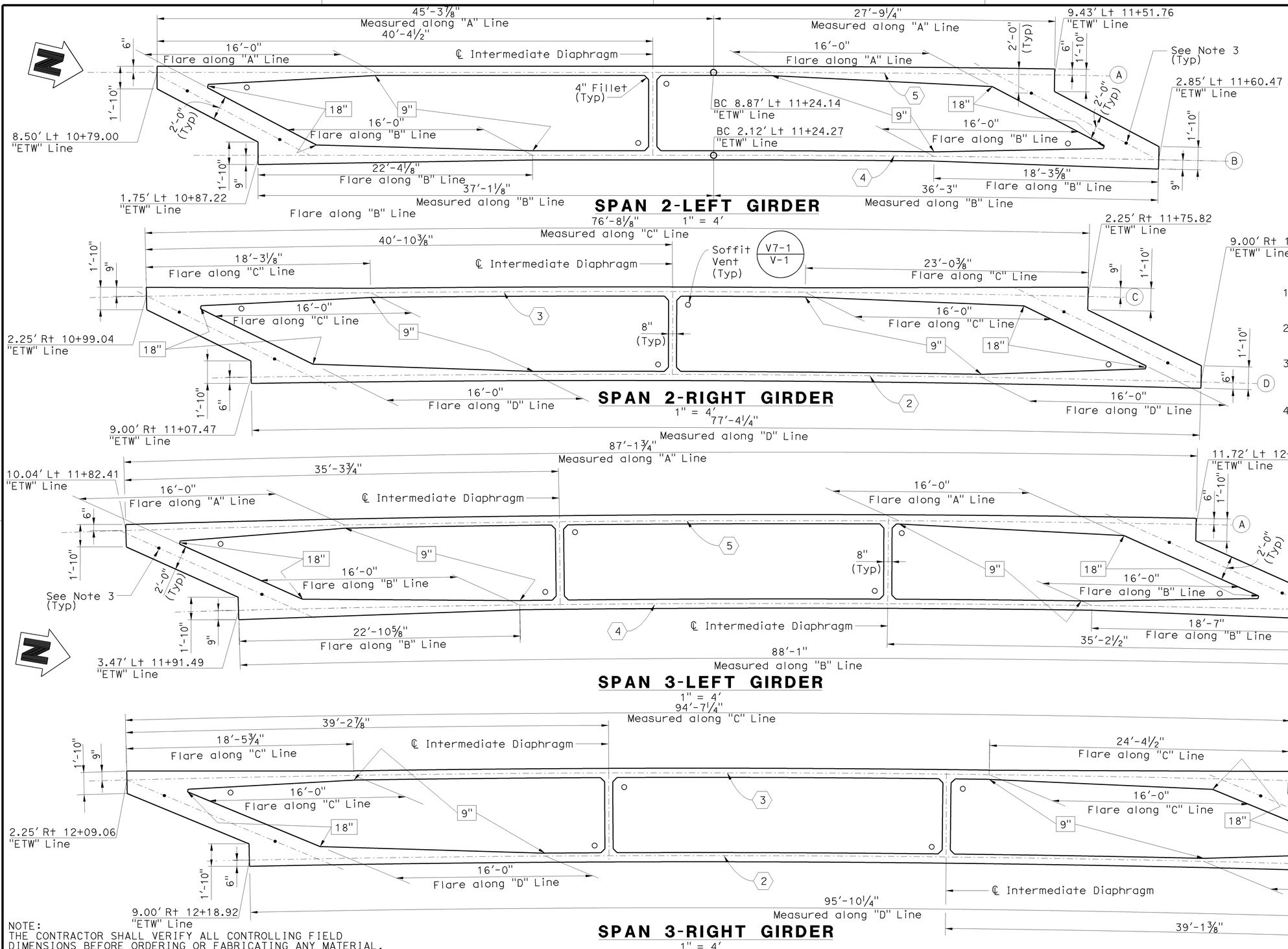

NOTES:

1. For Curve Data see "Girder Layout No. 1" sheet.
2. For prestressing notes see "PC/PS Girder Details No. 2" sheet.
3. Erection pick up points. Contractor shall provide details to be approved by the Engineer.
4. All acute corners shall be chamfered 4" min.

LEGEND:

XX — Indicates girder stem width

o — Indicates Soffit Vent

NOTE:
THE CONTRACTOR SHALL VERIFY ALL CONTROLLING FIELD DIMENSIONS BEFORE ORDERING OR FABRICATING ANY MATERIAL.

DESIGN OVERSIGHT — Jon Hamaguchi
6-24-09
SIGN OFF DATE

	BY	CHECKED
DESIGN	T. A. Kirilov	F. Sanchez
DETAILS	J. Saldana	H. Montoya
QUANTITIES	CC/CS/SM	VT/KC

PREPARED FOR THE STATE OF CALIFORNIA DEPARTMENT OF TRANSPORTATION

Romeo M. Firme
PROJECT ENGINEER

CU 12
EA 0F0311

BRIDGE NO. 55-0460
POST MILE 17.1

PLACENTIA AVENUE UC (WIDEN)
PC/PS GIRDER DETAILS NO. 1

DESIGN DETAIL SHEET (ENGLISH) (REV. 2/25/05)

ORIGINAL SCALE IN INCHES FOR REDUCED PLANS 0 1 2 3

DISREGARD PRINTS BEARING EARLIER REVISION DATES — REVISION DATES (PRELIMINARY STAGE ONLY) 2/13/09 4/6/09 6/17/09

SHEET 26 OF 42

FILE => 55-0460-1-gdt01.dgn

USERNAME => ttmnguye DATE PLOTTED => 17-DEC-2009 TIME PLOTTED => 09:45

DIST	COUNTY	ROUTE	POST MILES TOTAL PROJECT	SHEET No	TOTAL SHEETS
12	Ora	57	16.2/18.6	904	960

REGISTERED CIVIL ENGINEER — DATE 6-17-09

12-14-09
PLANS APPROVAL DATE

The State of California or its officers or agents shall not be responsible for the accuracy or completeness of electronic copies of this plan sheet.

REGISTERED PROFESSIONAL ENGINEER — T. A. Kirilov — No. C67708 — Exp. 06/30/09 — CIVIL — STATE OF CALIFORNIA

OCTA
550 S MAIN STREET
ORANGE, CA 92868

RBF CONSULTING
14725 ALTON PKWY
IRVINE, CA 92618

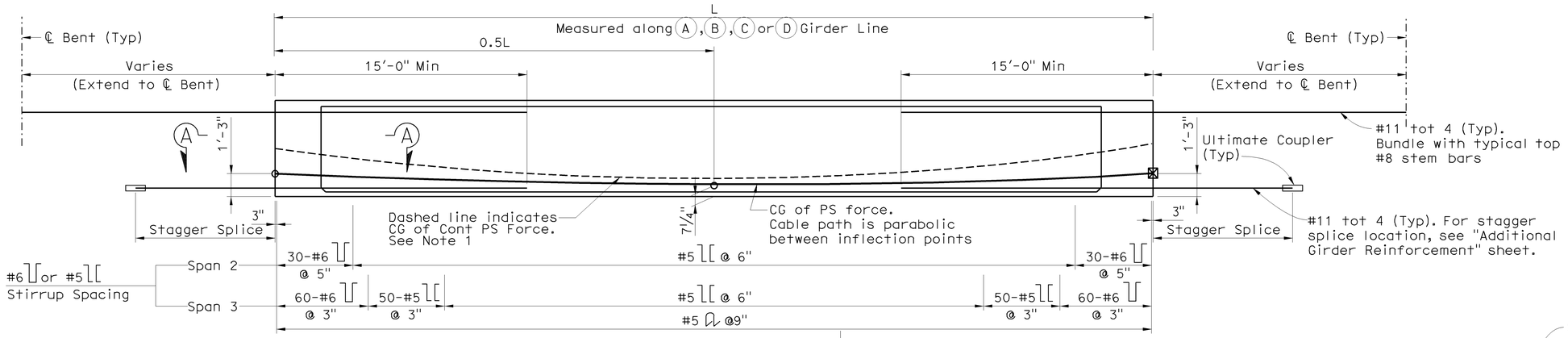

LONGITUDINAL SECTION

No Scale

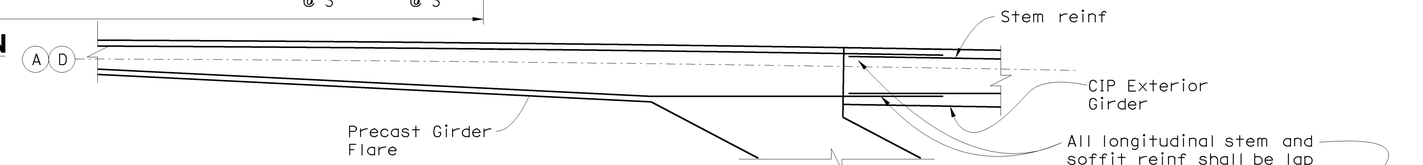

EXTERIOR GIRDER FLARE DETAIL

1" = 2'

Note: Not all reinf shown.

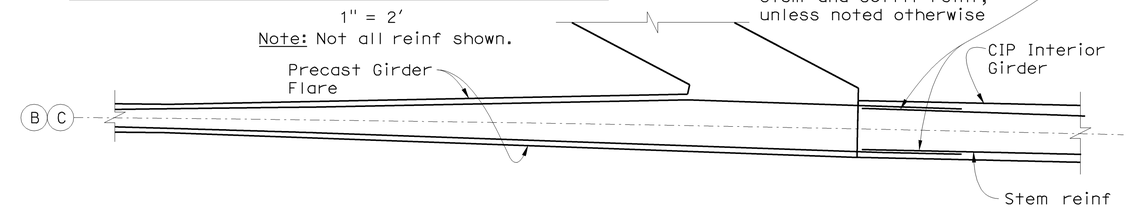

INTERIOR GIRDER FLARE DETAIL

1" = 2'

PRESTRESSING NOTES (SPAN 2)

270 KSI Low Relaxation Strand:

P_{jack} = 396 kips/stem

Force per Preast Girder Stem

Anchor Set = 3/8 in

Concrete: f'_c = 5.0 ksi: @ 28 days

f'_{ci} = 3.5 ksi: @ time of stressing

Contractor shall submit elongation calculations based on initial stress at

⊠ = 0.975 times jacking stress.

One end stressing shall be performed.

NOTES:

1. For cable path layout of Cont PS Force, see "Girder Layout No. 1" sheet. Contractor shall determine location and layout of Cont PS ducts into the precast girders and submit to Engineer for approval.
2. For Section A-A, see "PC/PS Girder Details No. 3" sheet.

LEGEND:

⊠ Indicates Theoretical Point of no Movement

PRESTRESSING NOTES (SPAN 3)

270 KSI Low Relaxation Strand:

P_{jack} = 660 kips/stem

Force per Preast Girder Stem

Anchor Set = 3/8 in

Concrete: f'_c = 5.0 ksi: @ 28 days

f'_{ci} = 3.5 ksi: @ time of stressing

Contractor shall submit elongation calculations based on initial stress at

⊠ = 0.973 times jacking stress.

One end stressing shall be performed.

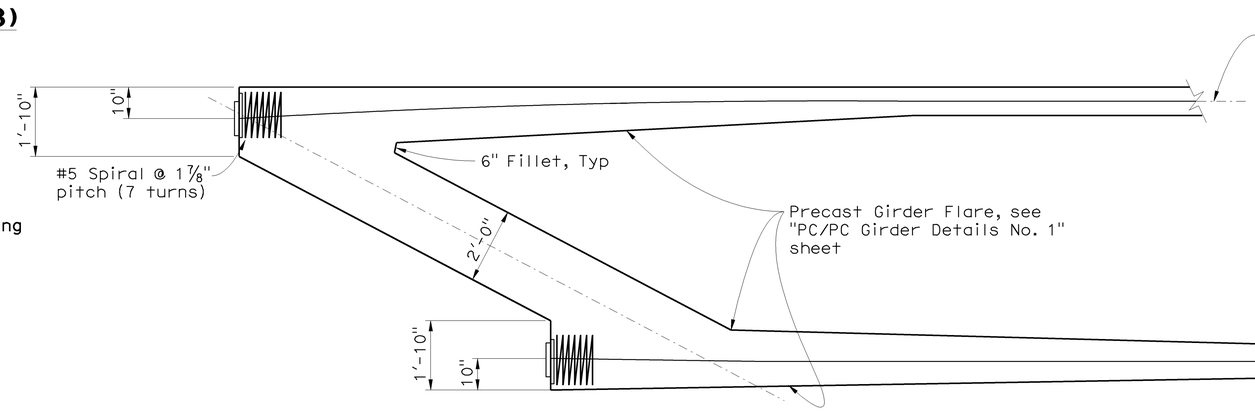

PLAN

Note: Stem and soffit reinf not shown.

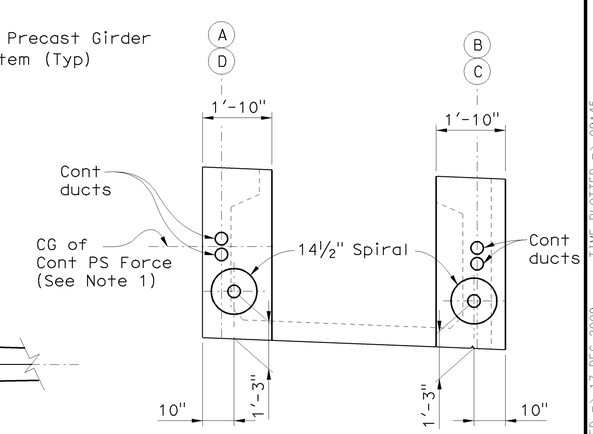

END VIEW

ANCHORAGE DETAIL

1" = 2'

NOTE:
THE CONTRACTOR SHALL VERIFY ALL CONTROLLING FIELD DIMENSIONS BEFORE ORDERING OR FABRICATING ANY MATERIAL.

DESIGN OVERSIGHT — Jon Hamaguchi
6-24-09
SIGN OFF DATE

	BY	CHECKED
DESIGN	T. A. Kirilov	F. Sanchez
DETAILS	J. Saldana	H. Montoya
QUANTITIES	CC/CS/SM	VT/KC

PREPARED FOR THE STATE OF CALIFORNIA DEPARTMENT OF TRANSPORTATION

Romeo M. Firme
PROJECT ENGINEER

BRIDGE NO. 55-0460
POST MILE 17.1

PLACENTIA AVENUE UC (WIDEN)
PC/PS GIRDER DETAILS NO.2

DESIGN DETAIL SHEET (ENGLISH) (REV. 2/25/05)

ORIGINAL SCALE IN INCHES FOR REDUCED PLANS 0 1 2 3

CU 12
EA 0F0311

DISREGARD PRINTS BEARING EARLIER REVISION DATES — REVISION DATES (PRELIMINARY STAGE ONLY) 2/23/09 3/26/09 6/17/09

SHEET 27 OF 42

FILE => 55-0460-1-gdt02.dgn

USERNAME => trmoguye DATE PLOTTED => 17-DEC-2009 TIME PLOTTED => 09:45

DIST	COUNTY	ROUTE	POST MILES TOTAL PROJECT	SHEET No	TOTAL SHEETS
12	Ora	57	16.2/18.6	905	960

REGISTERED CIVIL ENGINEER 6-17-09 DATE

12-14-09
PLANS APPROVAL DATE

The State of California or its officers or agents shall not be responsible for the accuracy or completeness of electronic copies of this plan sheet.

REGISTERED PROFESSIONAL ENGINEER T.A. Kirilov No. C67708 Exp. 6/30/11 CIVIL STATE OF CALIFORNIA

OCTA
550 S MAIN STREET
ORANGE, CA 92868

RBF CONSULTING
14725 ALTON PKWY
IRVINE, CA 92618

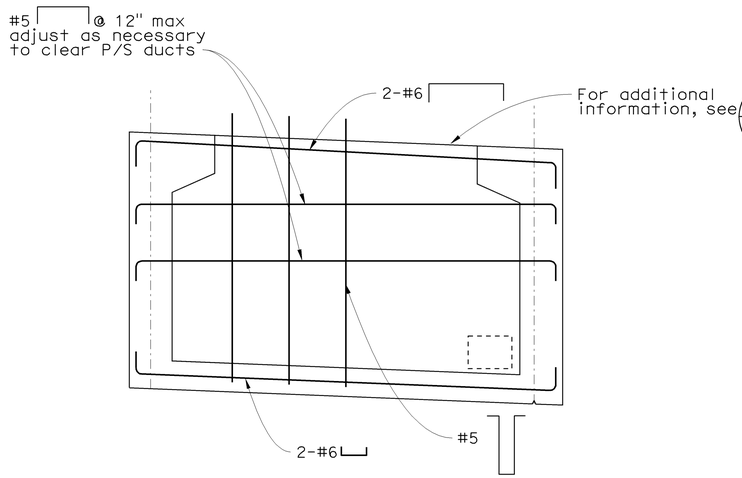

INTERMEDIATE DIAPHRAGM

¾" = 1'-0"

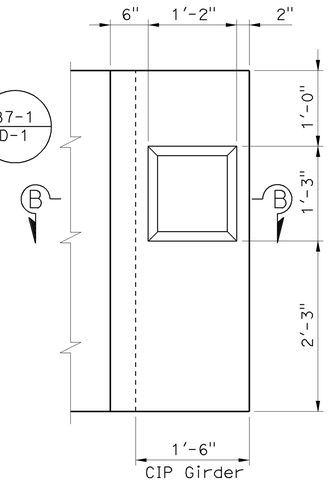

END VIEW

DETAIL 1

1"= 1'-0"

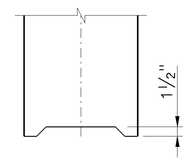

SECTION B-B

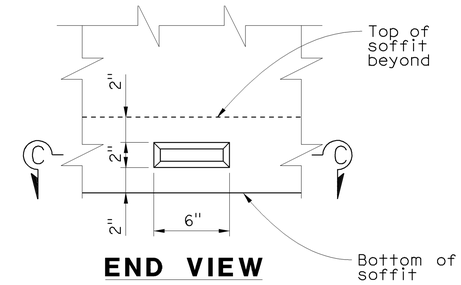

END VIEW

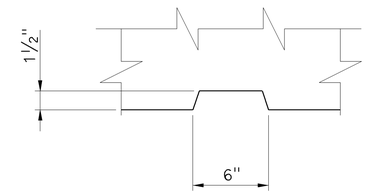

SECTION C-C

DETAIL 2

½"= 1'-0"

NOTES:

1. For girder stirrups spacing, see "PC/PS Girder Details No.2" sheet.
2. For longitudinal stem and soffit reinf, see "PC/PS Typical Section" sheet.

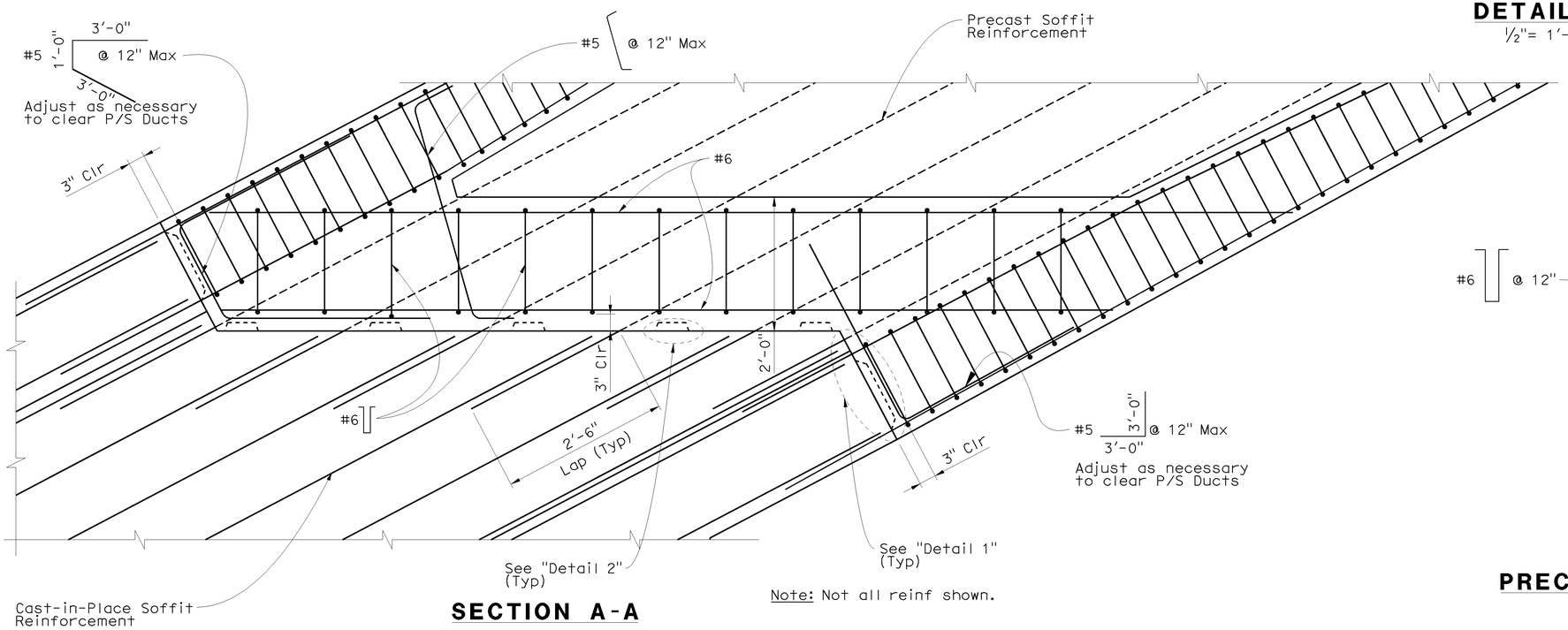

SECTION A-A

1" = 1'-0"

Note: Not all reinf shown.

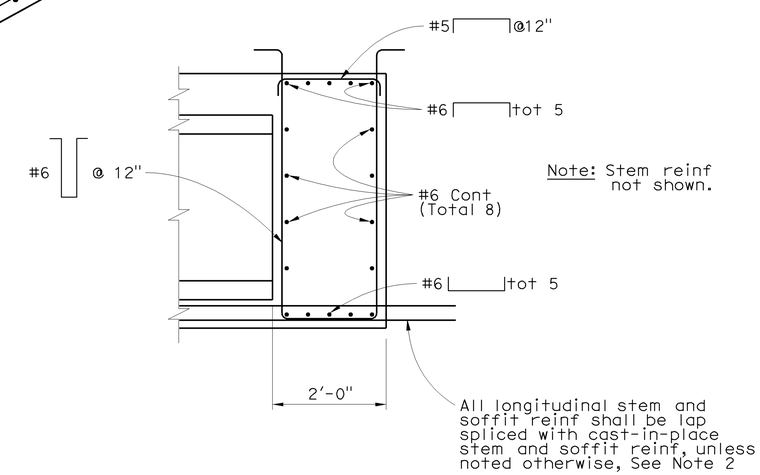

Note: Stem reinf not shown.

PRECAST END DIAPHRAGM

¾" = 1'-0"

NOTE:
THE CONTRACTOR SHALL VERIFY ALL CONTROLLING FIELD DIMENSIONS BEFORE ORDERING OR FABRICATING ANY MATERIAL.

DESIGN OVERSIGHT Jon Hamaguchi
6-24-09
SIGN OFF DATE

	BY	CHECKED
DESIGN	T. A. Kirilov	F. Sanchez
DETAILS	J. Saldana	H. Montoya
QUANTITIES	CC/CS/SM	VT/KC

PREPARED FOR THE STATE OF CALIFORNIA DEPARTMENT OF TRANSPORTATION

Romeo M. Firme
PROJECT ENGINEER

BRIDGE NO. 55-0460
POST MILE 17.1

PLACENTIA AVENUE UC (WIDEN)
PC/PS GIRDER DETAILS NO. 3

DESIGN DETAIL SHEET (ENGLISH) (REV. 2/25/05)

ORIGINAL SCALE IN INCHES FOR REDUCED PLANS 0 1 2 3

CU 12
EA 0F0311

DISREGARD PRINTS BEARING EARLIER REVISION DATES

REVISION DATES (PRELIMINARY STAGE ONLY) 2/13/09 3/16/09 6/17/09

SHEET 28 OF 42

FILE => 55-0460-1-gdt03.dgn

USERNAME => trmnguye DATE PLOTTED => 17-DEC-2009 TIME PLOTTED => 09:45

DIST.	COUNTY	ROUTE	KILOMETER POST TOTAL PROJECT	SHEET NO.	TOTAL SHEETS
12	Ora	57	16.2/18.6	906	960

T. Kirilov 6-17-09
REGISTERED ENGINEER - CIVIL

12-14-09
PLANS APPROVAL DATE

REGISTERED PROFESSIONAL ENGINEER T.A. Kirilov No. C67708 Exp. 6/30/11 CIVIL STATE OF CALIFORNIA

The State of California or its officers or agents shall not be responsible for the accuracy or completeness of electronic copies of this plan sheet.

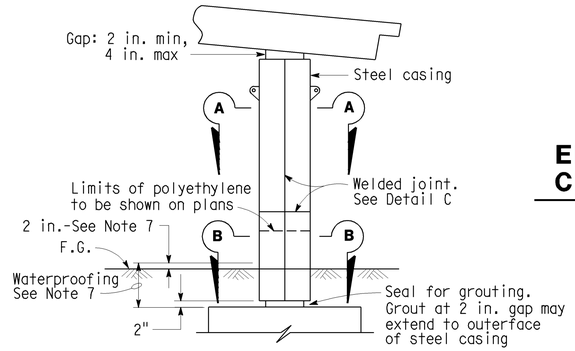

CLASS P/F COLUMN

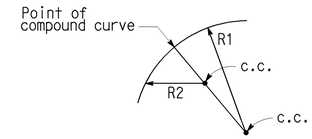

ELLIPTICAL CASING DETAIL CLASS F AND P/F COLUMN

Radii R1 and R2 to be determined by the Contractor subject to the approval of the Engineer

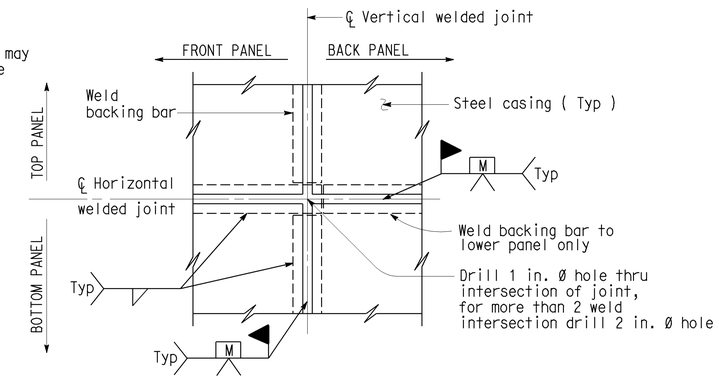

(TWO WELDED INTERSECTION JOINT)

DETAIL C

1

1

1

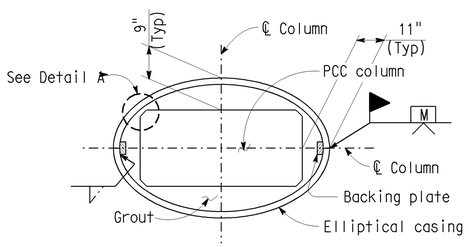

SECTION A-A RECTANGULAR COLUMN

2

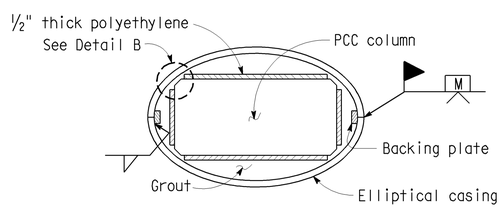

SECTION B-B RECTANGULAR COLUMN

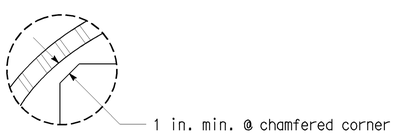

DETAIL A

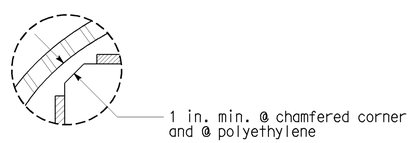

DETAIL B

1

NOTES:

1) For varying thickness steel casing inside surface to remain flush. Minimum clearance from PCC column to casing shall be maintained.
2) Appropriate injection nozzles to be provided on casing, but removed and ground flush following completion of grouting operation.
3) All voids between steel casing and polyethylene (Class P/F), and steel casing and PCC column (Class F) to be filled with grout.
4) Location and number of vertical and horizontal welds to be determined by the Contractor, and subject to the approval of the Engineer. The location of casing welds are for illustration. No skip welds allowed.
5) Circular steel casing to be ¼" thick minimum for casings with a 4'-4" diameter or less; all other steel casings to be ⅜" thick unless noted differently on contract plans. Backing plates to be the same thickness as casing up to maximum ½" thick.
6) Contractor shall remove 12 in. polyethylene strip behind backing plate if backing plate is closer than 2" from face of column.
7) Waterproof limits for steel casings. Typical for Classe "F" and "P/F".
8) For pipe extensions, opening shall be no more than ¼" greater than the pipe extension diameter. For other openings, the opening diameter to be determined by the Engineer.

NO SCALE

STANDARD DRAWING

RELEASE DATE	11-16-06	DESIGN	BY BRIAN MARONEY	CHECKED R.J. ZELINSKI	RELEASED BY Michael D. Keever OFFICE CHIEF
FILE NO.	xs7-010e	DETAILS	BY R. YEE	CHECKED PAT HIPLEY	
		SUBMITTED	BY R.J. ZELINSKI	DRAWING DATE 8/93	

STRUCTURES DESIGN DETAIL SHEET (ENGLISH) (REV. 10/25/05)

1 Deleted Detail
2 Revised Detail

ORIGINAL SCALE IN INCHES FOR REDUCED PLANS 0 1 2 3

STATE OF CALIFORNIA DEPARTMENT OF TRANSPORTATION

DIVISION OF ENGINEERING SERVICES

CU 12
EA 0F0311

BRIDGE NO. 55-0460
KILOMETER POST 17.1

PLACENTIA AVENUE UC (WIDEN)
STEEL COLUMN CASINGS

DISREGARD PRINTS BEARING EARLIER REVISION DATES 6/17/09

REVISION DATES (PRELIMINARY STAGE ONLY)

SHEET 29 OF 42

USERNAME => trmnguye

55-0460-s-ciso.dgn

DATE PLOTTED => 17-DEC-2009 TIME PLOTTED => 09:46

DIST	COUNTY	ROUTE	POST MILES TOTAL PROJECT	SHEET No	TOTAL SHEETS
12	Ora	57	16.2/18.6	907	960

REGISTERED CIVIL ENGINEER 6-17-09 DATE

12-14-09
PLANS APPROVAL DATE

The State of California or its officers or agents shall not be responsible for the accuracy or completeness of electronic copies of this plan sheet.

REGISTERED PROFESSIONAL ENGINEER T.A. Kirilov No. C67708 Exp. 6/30/11 CIVIL STATE OF CALIFORNIA

OCTA
550 S MAIN STREET
ORANGE, CA 92868

RBF CONSULTING
14725 ALTON PKWY
IRVINE, CA 92618

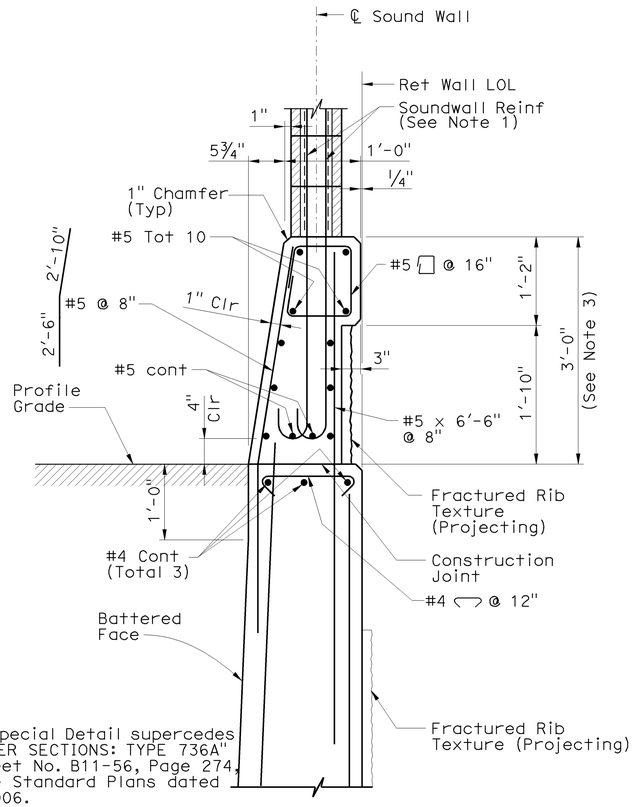

NOTE:

This Special Detail supercedes "BARRIER SECTIONS: TYPE 736A" on Sheet No. B11-56, Page 274, of the Standard Plans dated May 2006.

SOUND WALL ON BARRIER TYPE 736A (MODIFIED) ON WINGWALL

1" = 1'-0"

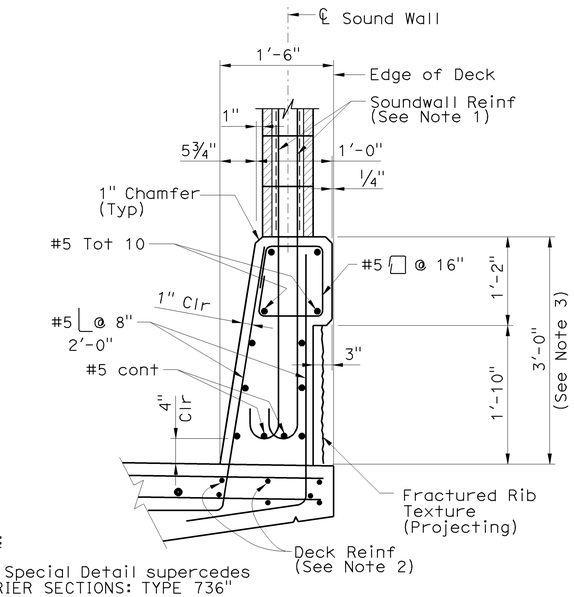

NOTE:

This Special Detail supercedes "BARRIER SECTIONS: TYPE 736" on Sheet No. B11-56, Page 274, of the Standard Plans dated May 2006.

SOUND WALL ON BARRIER TYPE 736 (MODIFIED) ON BRIDGE DECK

1" = 1'-0"

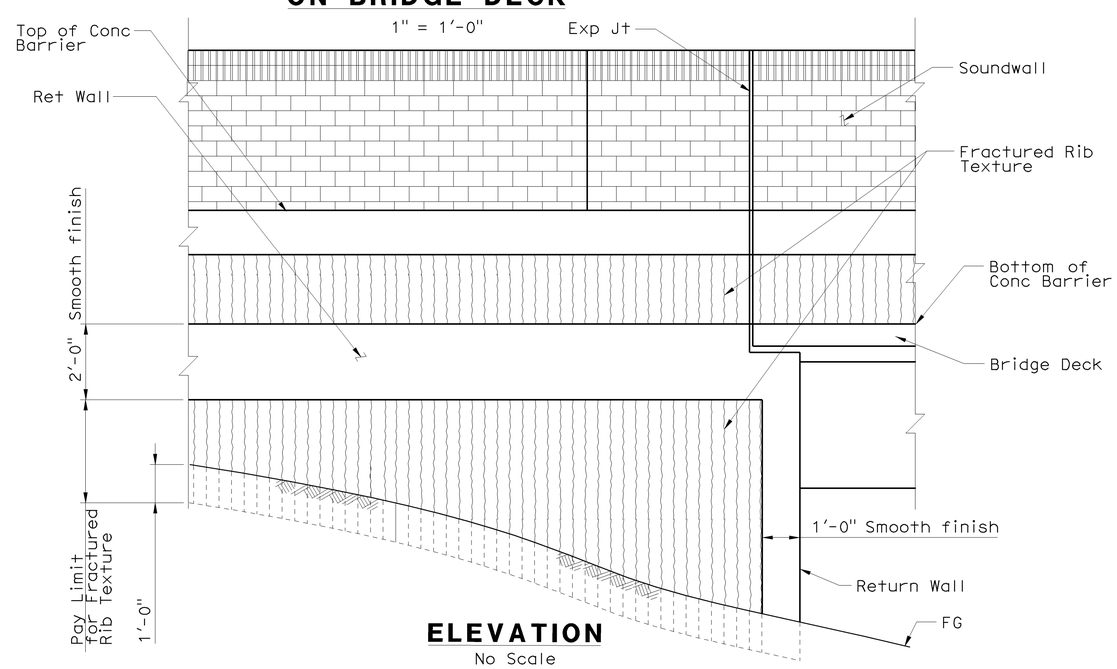

ELEVATION

No Scale

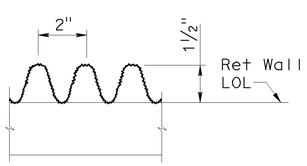

FRACTURED RIB TEXTURE (PROJECTING)

No Scale

NOTES

1. For additional Soundwall Information, See "Soundwall-Masonry Block" sheets.
2. For Conc Deck Overhang Reinf under Soundwall, See "Typical Section" sheets.
3. Dimension may vary with roadway cross slope, and with certain thickness of surfacing.
4. Longitudinal Reinf to stop at all Exp Joints.

NOTE:
THE CONTRACTOR SHALL VERIFY ALL CONTROLLING FIELD DIMENSIONS BEFORE ORDERING OR FABRICATING ANY MATERIAL.

DESIGN OVERSIGHT Jon Hamaguchi
6-24-09
SIGN OFF DATE

	BY	CHECKED
DESIGN	C. Harden	M. Strahota
DETAILS	Iyad Karkoutli	M. Strahota
QUANTITIES	CC/CS/SM	VT/KC

PREPARED FOR THE STATE OF CALIFORNIA DEPARTMENT OF TRANSPORTATION

Romeo M. Firme
PROJECT ENGINEER

BRIDGE NO. 55-0460
POST MILE 17.1

PLACENTIA AVENUE UC (WIDEN)
CONCRETE BARRIER TYPE 736 (MOD)

DESIGN DETAIL SHEET (ENGLISH) (REV. 2/25/05)

ORIGINAL SCALE IN INCHES FOR REDUCED PLANS 0 1 2 3

CU 12
EA 0F0311

DISREGARD PRINTS BEARING EARLIER REVISION DATES

REVISION DATES (PRELIMINARY STAGE ONLY) 2/13/09 4/06/09 6/17/09

SHEET 30 OF 42

FILE => 55-0460-t-brdt.dgn

USERNAME => trimnguye DATE PLOTTED => 17-DEC-2009 TIME PLOTTED => 09:46

DIST	COUNTY	ROUTE	POST MILES TOTAL PROJECT	SHEET No	TOTAL SHEETS
12	Ora	57	16.2/18.6	908	960

REGISTERED CIVIL ENGINEER 6-17-09 DATE

12-14-09
PLANS APPROVAL DATE

REGISTERED PROFESSIONAL ENGINEER T. A. Kirilov No. C67708 Exp. 6/30/11 CIVIL STATE OF CALIFORNIA

The State of California or its officers or agents shall not be responsible for the accuracy or completeness of electronic copies of this plan sheet.

OCTA
550 S MAIN STREET
ORANGE, CA 92868

RBF CONSULTING
14725 ALTON PKWY
IRVINE, CA 92618

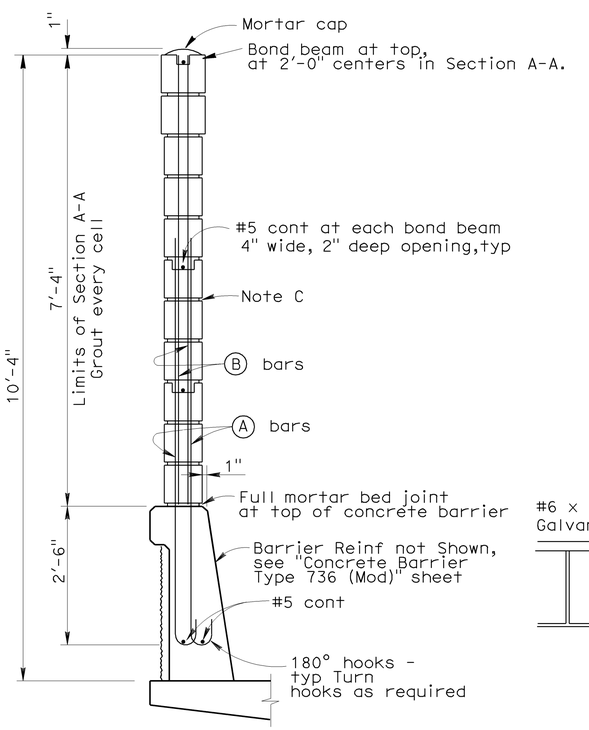

SOUNDWALL SECTION
No Scale

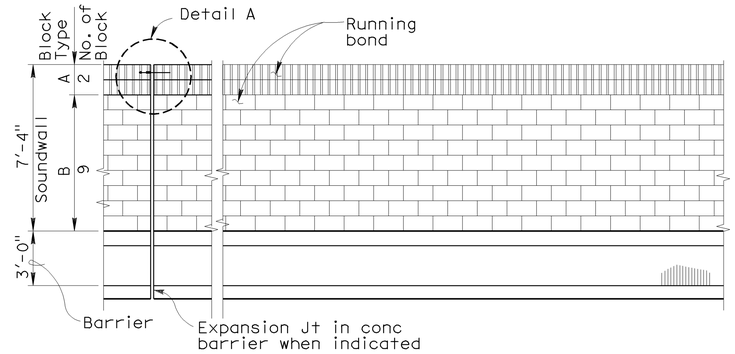

SOUNDWALL - ARCHITECTURAL TREATMENT DETAIL
No Scale

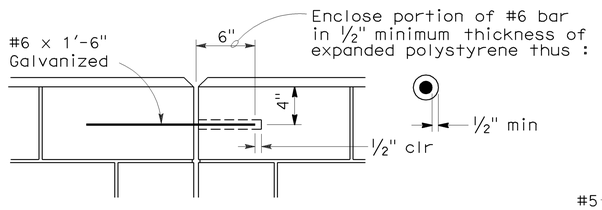

DETAIL A
No Scale

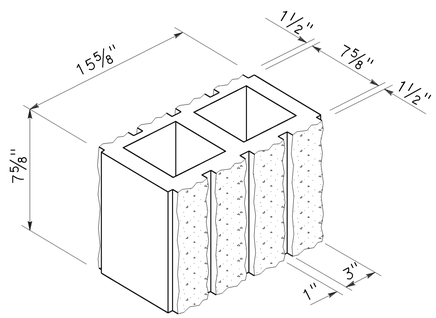

DETAIL B
No Scale
8" Wide 3-Score split face both sides

REBAR LEGENDS

A #6 5'-10" @ 1'-4"

B #5 x 7'-3" @ 1'-4"

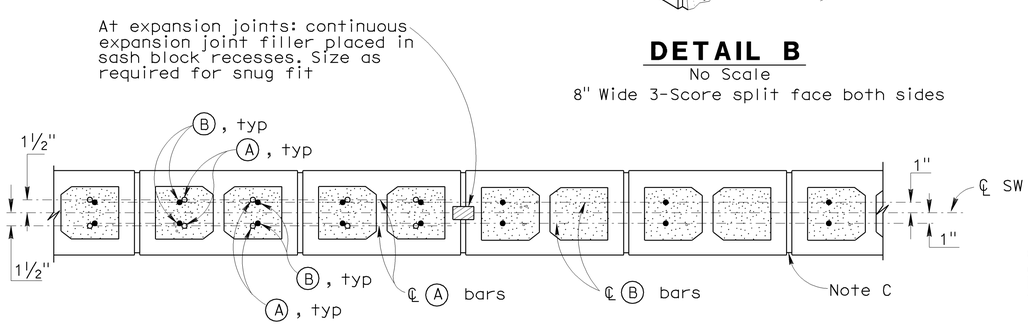

SECTION A-A
No Scale

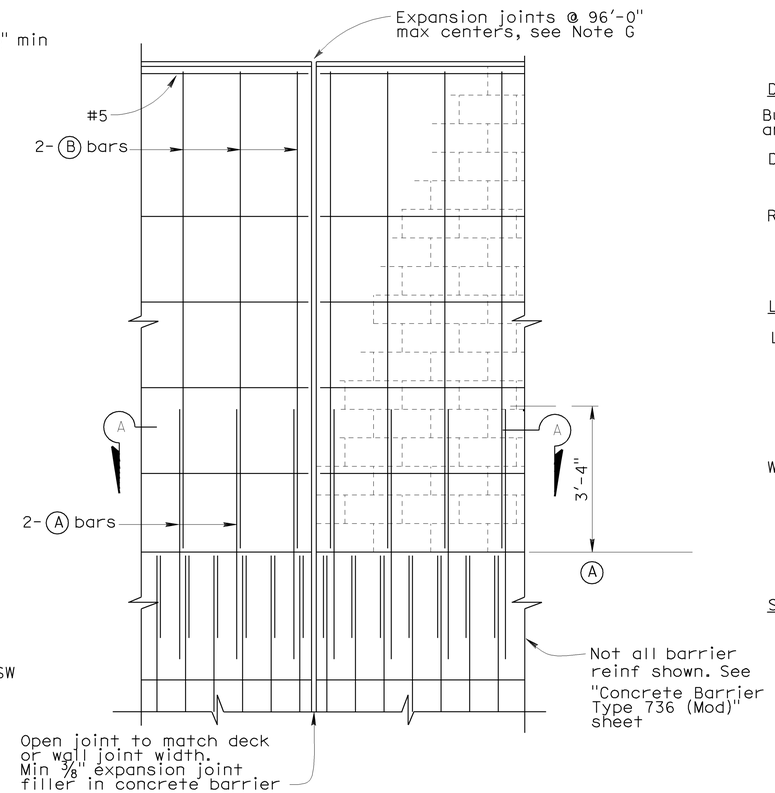

DECK AND WALL JOINT ELEVATION
No Scale

GENERAL NOTES

Note A: Nominal block size shall be 8" x 8" x 16" For type of block, see "Masonry Block Type Table."

Note B: When blocks are laid in stacked bond, ladder type, galvanized joint reinforcement shall be provided. A minimum of 2 - 0.148" wires continuous at 4'-0" maximum to be used. Locate reinforcement in joints that are at the approximate midpoint between bond beams.

Note C: Horizontal joints shall be tooled concave or may be weathered. Vertical joints shall be tooled concave or may be raked.

Note D: All masonry to be high strength unless otherwise noted.

Note E: Class 2 concrete to be used for barrier.

Note F: Expansion joints in concrete barrier and masonry block to match deck joints and at ends of wingwalls.

Note G: Expansion joints in soundwall (Masonry Block) shall be at centerline of bents and spans, and at ends of each wingwall.

Note H: See "Concrete Barrier Type 736 (Mod)" sheet for architectural treatment at concrete barrier recess.

MASONRY BLOCK TYPE TABLE

Block Type	Block Description
A	Wall cap rows (Tan scored split face concrete) 3-scored, see Detail B.
B	Main Wall surface (Tan split face concrete)

DESIGN NOTES

DESIGN

Building Code Requirement for Masonry structures (ACI 530-05) and the Bridge Design Specifications.

DESIGN WIND LOAD
37 psf

DESIGN SEISMIC LOAD
2.0 Dead load

REINFORCED CONCRETE
f'c = 3,600 psi
fy = 60,000 psi

CONCRETE MASONRY
HIGH STRENGTH
f'm = 2,500 psi
fy = 60,000 psi

LOAD FACTORS AND LOAD COMBINATIONS

Load Factor Design (LFD)

Group A: βD+1.7 E+1.7 SC
Group B: βD+1.7 E+1.3 SC
Group C: βD+1.3 E+1.0 EQE
Group D: βD+1.3 E+1.0 EQD
Group E: βD+1.1 E+0.85 (EQE + EQD)
Group XI: 1.0D + 1.0 CT

Where : β = 0.9 or 1.2, whichever controls in design
D = Dead load
E = Lateral earth pressure
SC = Live load surcharge
W = Wind load
EQD = Seismic dead load
EQE = Seismic earth load
CT = Collision Load

STRENGTH REDUCTION FACTORS, Ø

Reinforced Concrete :
For flexure ..... Ø = 0.90
For shear ..... Ø = 0.85

Concrete masonry:
For flexure ..... Ø = 0.80
For shear ..... Ø = 0.60

Note 1:
Barrier, Deck and Concrete Masonry are designed by the Strength Design Method.

DESIGN OVERSIGHT Jon Hamaguchi
6-24-09
SIGN OFF DATE

	BY	CHECKED
DESIGN	C. Harden	M. Strahota
DETAILS	Iyad Karkoutli	M. Strahota
QUANTITIES	CC/CS/SM	VT/KC

PREPARED FOR THE STATE OF CALIFORNIA DEPARTMENT OF TRANSPORTATION

Romeo M. Firme
PROJECT ENGINEER

BRIDGE NO. 55-0460
POST MILE 17.1

PLACENTIA AVENUE UC (WIDEN)
SOUNDWALL - MASONRY BLOCK ON BRIDGE

DESIGN DETAIL SHEET (ENGLISH) (REV. 2/25/05)

ORIGINAL SCALE IN INCHES FOR REDUCED PLANS 0 1 2 3

CU 12
EA 0F0311

DISREGARD PRINTS BEARING EARLIER REVISION DATES

REVISION DATES (PRELIMINARY STAGE ONLY) 2/23/09 3/26/09 6/17/09

SHEET 31 OF 42

FILE => 55-0460-t-brdt02.dgn

USERNAME => trmnguye DATE PLOTTED => 17-DEC-2009 TIME PLOTTED => 09:46

DIST.	COUNTY	ROUTE	POST MILES TOTAL PROJECT	SHEET NO.	TOTAL SHEETS
12	Ora	57	16.2/18.6	909	960

REGISTERED ENGINEER - CIVIL 6-17-09

12-14-09
PLANS APPROVAL DATE

REGISTERED PROFESSIONAL ENGINEER T.A. Kirilov No. C67708 Exp. 6/30/11 CIVIL STATE OF CALIFORNIA

The State of California or its officers or agents shall not be responsible for the accuracy or completeness of electronic copies of this plan sheet.

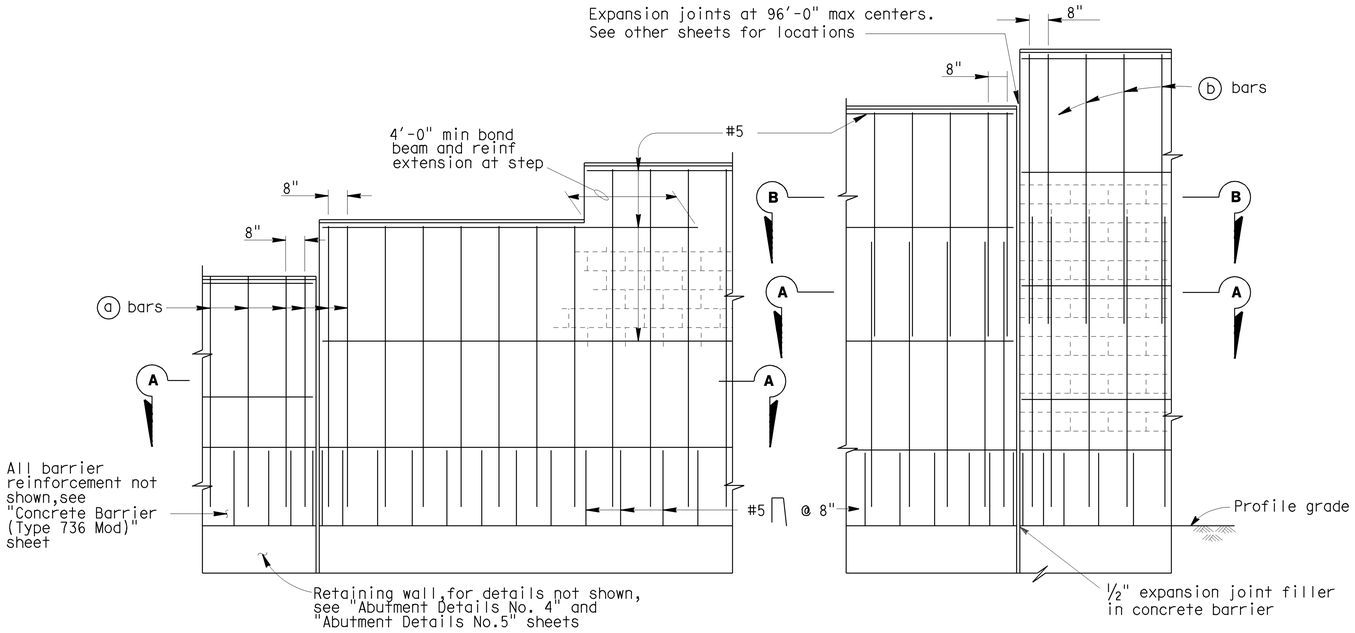

◇2 PART ELEVATIONS

SOUNDWALL REINFORCEMENT TABLE

Maximum H	ⓐ bars @ 1'-4" max	ⓑ bars @ 1'-4" max	"y"	f'm (KSI)	Compressive Strength of CMU (KSI)	Maximum H
10'-4"	# 4	———	———	1.5	1.9	10'-4"

◇2

For details not shown,see "Concrete Barrier Type 736 (Mod)" and "Soundwall-Masonry Block With Barrier on Retaining Wall -Details No. 2" sheets.

Slope ground at traffic side of barrier to drain. Maximum slope ±10%.

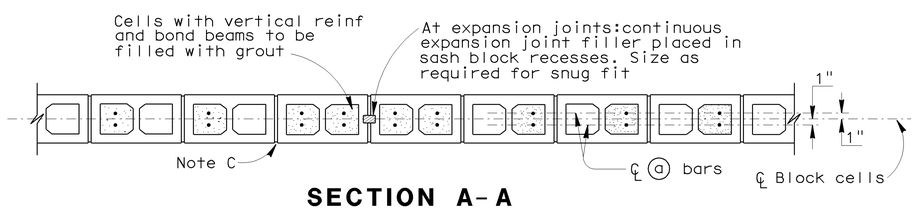

SECTION A-A

For details not shown,see other details

H=6'-4" THRU H=10'-4"

◇1

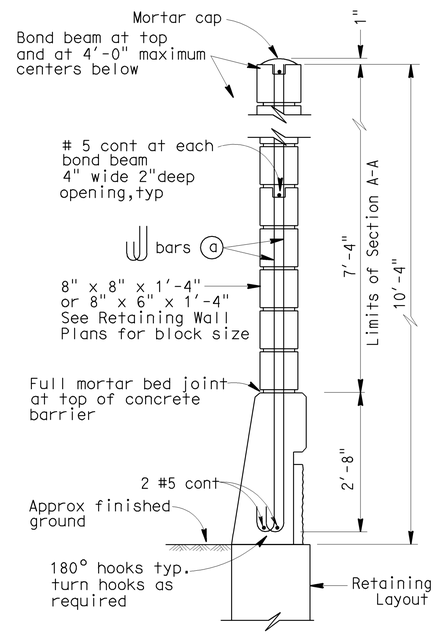

H=6'-4" THRU H=10'-4" ◇2

TYPICAL SECTIONS

GENERAL NOTES

Note A: For type of block and joint finish, see other sheets.

Note B: When blocks are laid in stacked bond, ladder type, galvanized joint reinforcement shall be provided. A minimum of 0.07"-0.14" wire continuous at 4'-0" maximum to be used. Locate reinforcement in joints that are at the approximate midpoint between bond beams.

Note C: Horizontal joints shall be tooled concave or may be weathered.
Vertical joints shall be tooled concave or may be raked.

Note D: For intermediate wall heights that are between the "H's" given. Use the tabular information for the next higher "H".

Note E: Masonry strengths are listed in "SOUNDWALL REINFORCEMENT TABLE".

Note F: Concrete to be used for the barrier shall contain not less than 590 pounds of cementious material per cubic yard.

◇1

STANDARD DRAWING

FILE NO. xs15-130-1e

APPROVED BY T SATTER — RESPONSIBLE TECHNICAL SPECIALIST
APPROVAL DATE 9-2-08

RELEASED BY ROBERTO LACALLE — RESPONSIBLE OFFICE CHIEF
RELEASE DATE 9-2-08

◇1 Deleted Detail
◇2 Revised Detail

STATE OF CALIFORNIA DEPARTMENT OF TRANSPORTATION

DIVISION OF ENGINEERING SERVICES

BRIDGE NO. 55-0460
POST MILE 17.1

PLACENTIA AVENUE UC (WIDEN)

SOUNDWALL - MASONRY BLOCK WITH BARRIER ON RETAINING WALL - DETAILS NO. 1

DS OSD 2147A (ENGLISH STANDARD DRAWING "XS" BORDER REV. 01/11/08)

ORIGINAL SCALE IN INCHES FOR REDUCED PLANS 0 1 2 3

CU 12
EA 0F0311

DISREGARD PRINTS BEARING EARLIER REVISION DATES

REVISION DATES (PRELIMINARY STAGE ONLY) 4/8/09 6/17/09

SHEET 32 OF 42

USERNAME => trmnguye

55-0460-t-brdt03.dgn

DATE PLOTTED => 17-DEC-2009 TIME PLOTTED => 09:46

DIST.	COUNTY	ROUTE	POST MILES TOTAL PROJECT	SHEET NO.	TOTAL SHEETS
12	Ora	57	16.2/18.6	910	960

REGISTERED ENGINEER - CIVIL 6-17-09

12-14-09
PLANS APPROVAL DATE

REGISTERED PROFESSIONAL ENGINEER T.A. Kirilov No. C67708 Exp. 6/30/11 CIVIL STATE OF CALIFORNIA

The State of California or its officers or agents shall not be responsible for the accuracy or completeness of electronic copies of this plan sheet.

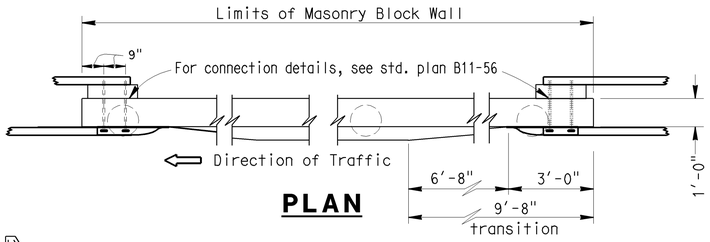

PLAN

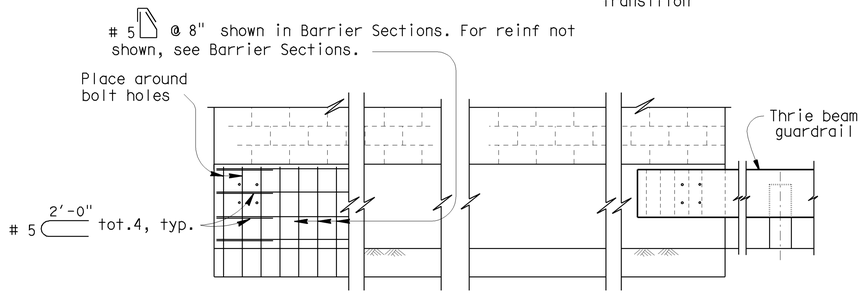

ELEVATION
METAL BEAM GUARDRAIL ANCHORAGE

For details not shown, see std. plan B11-56.

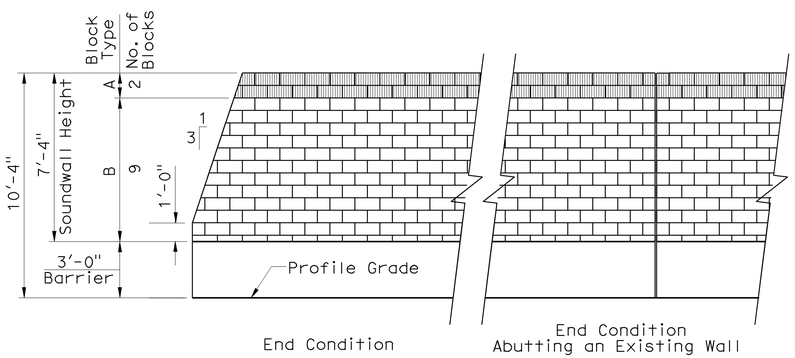

SOUNDWALL AESTHETICS 3

No Scale

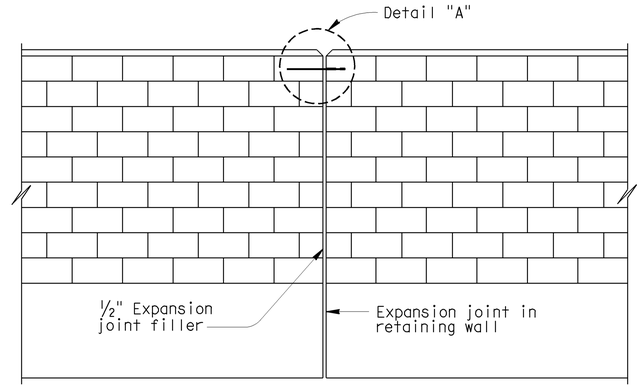

ALIGNMENT KEY DETAIL

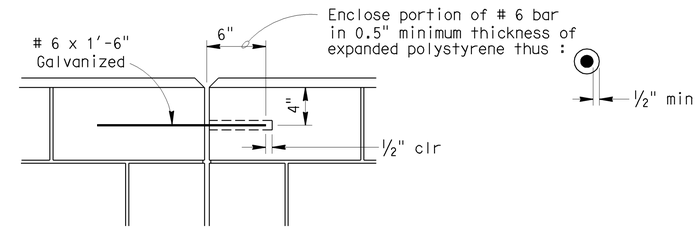

DETAIL A

DESIGN NOTES

DESIGN

Uniform Building Code,1997 Edition and the Bridge Design Specifications.

DESIGN WIND LOAD

33 PSF

DESIGN SEISMIC LOAD

0.57 Dead load

REINFORCED CONCRETE

f'c = 3250 PSI
fy = 60 KSI

CONCRETE MASONRY

REGULAR STRENGTH	HIGH STRENGTH	
f'm = 1500 PSI	f'm = 2000 PSI	f'm = 2500 PSI
fb = 1500 PSI	fb = 660 PSI	fb = 830 PSI
fs = 24.0 KSI	fs = 24.0 KSI	fs = 24000 PSI
n = 25.8	n = 19.3	n = 15.5

LOAD FACTORS AND LOAD COMBINATIONS

Working Stress Design (WSD) Percentage of unit stress

Group 1: D + E + SC 100%
Group 2: D + W + SC + E 100%
Group 3: D + 0.71 EQD + E 100%

Where:

D = Dead load
E = Lateral earth pressure
SC = Live load surcharge
W = Wind load
EQD = Seismic dead load

Load Factor Design (LFD)

Group A: βD +1.7 E + 1.7 SC
Group B: βD +1.7 E + 1.3 W
Group C: βD +1.3 E + 1.0 EQE
Group D: βD +1.3 E + 1.0 EQD
Group E: βD +1.1 E + 0.85 (EQE + EQD)

Where : β = 0.9 or 1.2, whichever controls in design
D = Dead load
E = Lateral earth pressure
SC = Live load surcharge
W = Wind load
EQD = Seismic dead load
EQE = Seismic earth load

STRENGTH REDUCTION FACTORS, Ø

Reinforced concrete:
For flexure ---------- Ø=0.90
For shear ---------- Ø=0.85

Concrete masonry:
For flexure ---------- Ø=0.80
For shear ---------- Ø=0.60

Foundations :

See "RETAINING WALL WITH SOUNDWALL" sheets.

MASONRY BLOCK TYPE TABLE 3

Block Type	Block Description
A	Wall cap rows (Tan scored split face concrete) 3-scored
B	Main Wall surface (Tan split face concrete)

NOTES:

2 I : For details not shown,see "Concrete Barrier Type 736 (Mod)" sheet.

II : Slope ground at traffic side of barrier to drain. Maximum slope ±10%. See Standard Plan B11-56, Note D.

III : Dimension may vary with roadway cross slope, and with certain thickness of surfacing.

STANDARD DRAWING

FILE NO. xs15-130-2e

APPROVED BY T SATTER — RESPONSIBLE TECHNICAL SPECIALIST
APPROVAL DATE 4-15-08
RELEASED BY ROBERTO LACALLE — RESPONSIBLE OFFICE CHIEF
RELEASE DATE 4-15-08

1 Deleted Detail
2 Revised Detail
3 Added Detail

STATE OF CALIFORNIA DEPARTMENT OF TRANSPORTATION

DIVISION OF ENGINEERING SERVICES

CU 12
EA 0F01311

BRIDGE NO. 55-0460
POST MILE 17.1

PLACENTIA AVENUE UC (WIDEN)
SOUNDWALL - MASONRY BLOCK WITH BARRIER ON RETAINING WALL - DETAILS NO. 2

DS OSD 2147A (ENGLISH STANDARD DRAWING "XS" BORDER REV. 01/11/08)

ORIGINAL SCALE IN INCHES FOR REDUCED PLANS 0 1 2 3

DISREGARD PRINTS BEARING EARLIER REVISION DATES 4/8/09 6/17/09

REVISION DATES (PRELIMINARY STAGE ONLY)

SHEET 33 OF 42

USERNAME => trmnguye

55-0460-t-brdt04.dgn

DATE PLOTTED => 17-DEC-2009 TIME PLOTTED => 0935:46

DIST	COUNTY	ROUTE	POST MILES TOTAL PROJECT	SHEET No	TOTAL SHEETS
12	Ora	57	16.2/18.6	911	960

REGISTERED CIVIL ENGINEER 6-17-09 DATE

12-14-09
PLANS APPROVAL DATE

The State of California or its officers or agents shall not be responsible for the accuracy or completeness of electronic copies of this plan sheet.

REGISTERED PROFESSIONAL ENGINEER T. A. Kirilov No. C67708 Exp. 6/30/11 CIVIL STATE OF CALIFORNIA

OCTA
550 S MAIN STREET
ORANGE, CA 92868

RBF CONSULTING
14725 ALTON PKWY
IRVINE, CA 92618

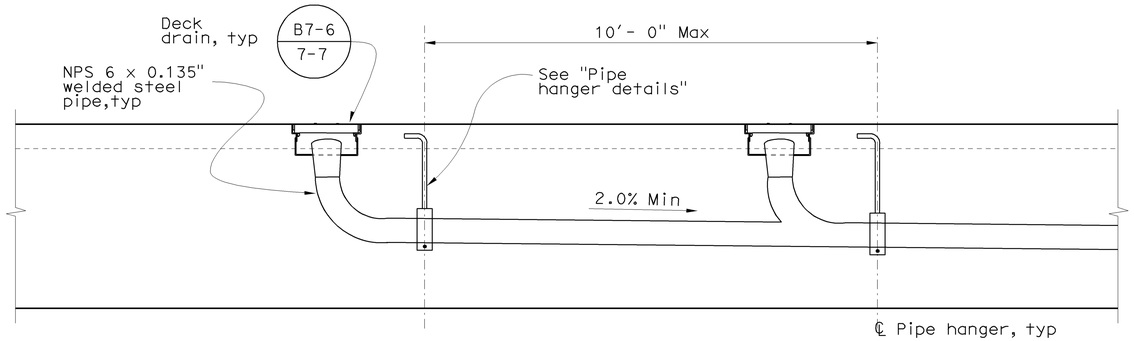

ELEVATION - DECK DRAINAGE PIPING (B7-8)

No Scale

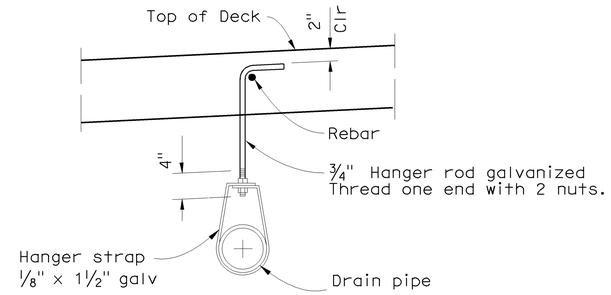

PIPE HANGER DETAILS

No Scale

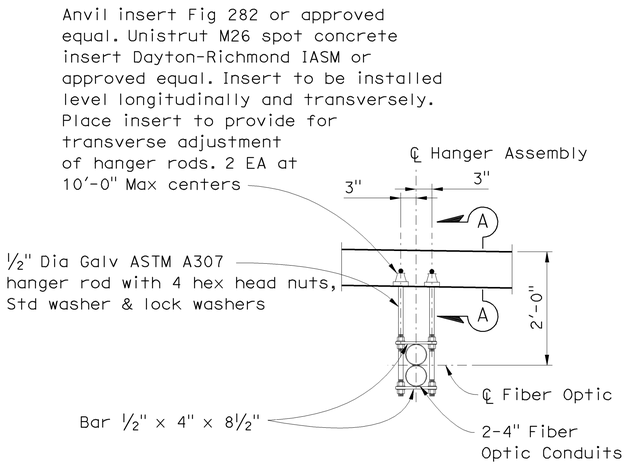

FIBER OPTIC CONDUIT HANGER SUPPORT DETAIL

3/4" = 1'-0"

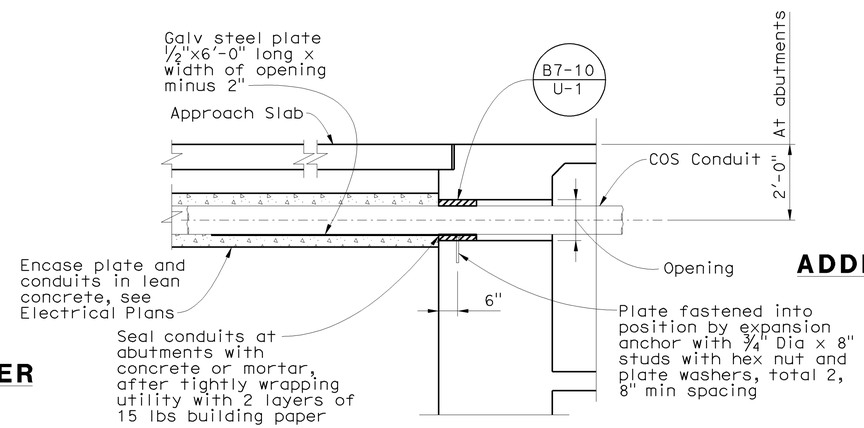

DETAIL AT ABUTMENT OPENING FOR FIBER OPTIC CONDUIT

1/2" = 1'-0"

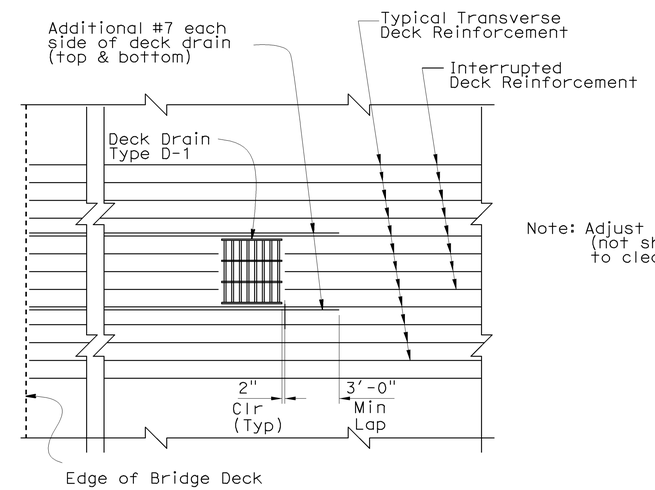

Note: Adjust longit deck reinf (not shown) as necessary to clear deck drains.

ADDITIONAL DECK DRAIN REINF DETAIL

No Scale

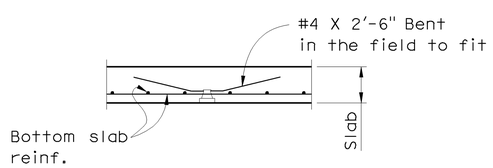

SECTION A-A

3/4" = 1'-0"

NOTES

1. For deck drain locations and piping layout, see "CIP/PS Typical Section No. 1" and "Girder Layout No. 2" sheets.

NOTE:
THE CONTRACTOR SHALL VERIFY ALL CONTROLLING FIELD DIMENSIONS BEFORE ORDERING OR FABRICATING ANY MATERIAL.

DESIGN OVERSIGHT Jon Hamaguchi
6-24-09
SIGN OFF DATE

	BY	CHECKED
DESIGN	T. A. Kirilov	F. Sanchez
DETAILS	J. Saldana	H. Montoya
QUANTITIES	CC/CS/SM	VT/KC

PREPARED FOR THE STATE OF CALIFORNIA DEPARTMENT OF TRANSPORTATION

Romeo M. Firme
PROJECT ENGINEER

BRIDGE NO. 55-0460
POST MILE 17.1

PLACENTIA AVENUE UC (WIDEN)
MISCELLANEOUS DETAILS

DESIGN DETAIL SHEET (ENGLISH) (REV. 2/25/05)

ORIGINAL SCALE IN INCHES FOR REDUCED PLANS 0 1 2 3

CU 12
EA 0F0311

DISREGARD PRINTS BEARING EARLIER REVISION DATES

REVISION DATES (PRELIMINARY STAGE ONLY) 2/13/09 4/08/09 6/17/09

SHEET 34 OF 42

FILE => 55-0460-u-miscdt01.dgn

USERNAME => rrmikest DATE PLOTTED => 17-DEC-2009 TIME PLOTTED => 08:50

DIST.	COUNTY	ROUTE	POST MILES TOTAL PROJECT	SHEET NO.	TOTAL SHEETS
12	Ora	57	16.2/18.6	912	960

REGISTERED ENGINEER - CIVIL 6-17-09

12-14-09
PLANS APPROVAL DATE

REGISTERED PROFESSIONAL ENGINEER T. A. Kirilov No. C67708 Exp. 6/30/11 CIVIL STATE OF CALIFORNIA

The State of California or its officers or agents shall not be responsible for the accuracy or completeness of electronic copies of this plan sheet.

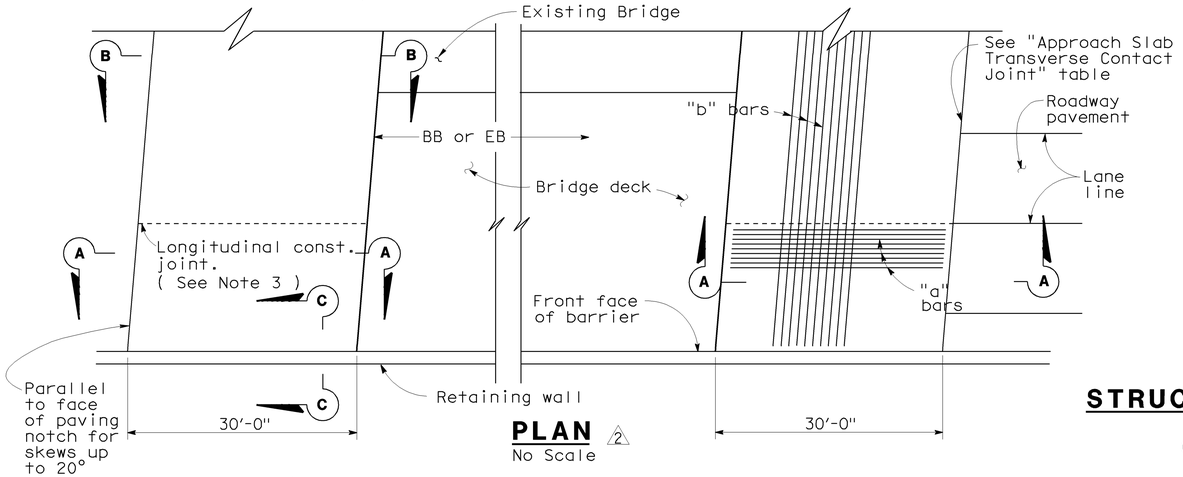

PLAN 2
No Scale

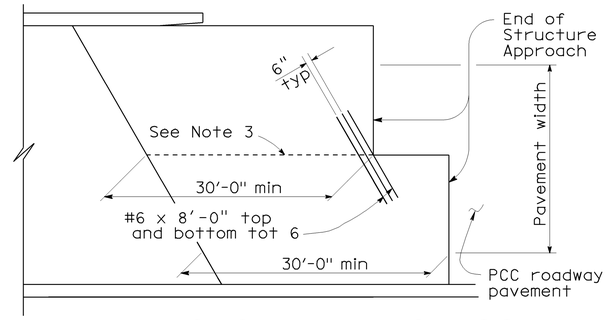

STRUCTURE APPROACH - END STAGGER DETAIL
No Scale

APPROACH SLAB TRANSVERSE CONTACT JOINT		
APPROACH SKEW	WITH AC ROADWAY PAVEMENT	WITH PCC ROADWAY PAVEMENT
> 45°	Parallel to face of P N use (Detail A)	Stagger at each lane line

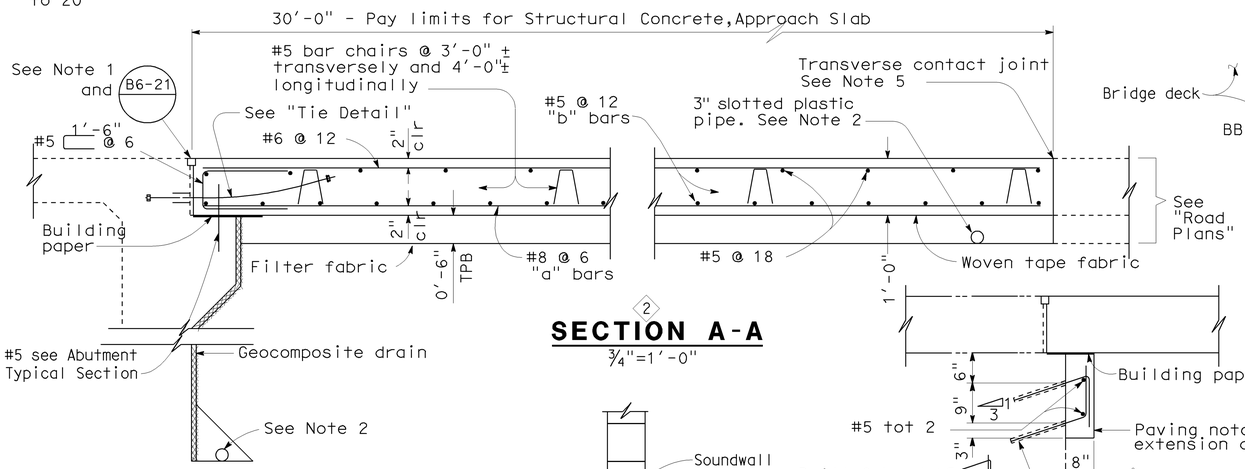

SECTION A-A 2
¾"=1'-0"

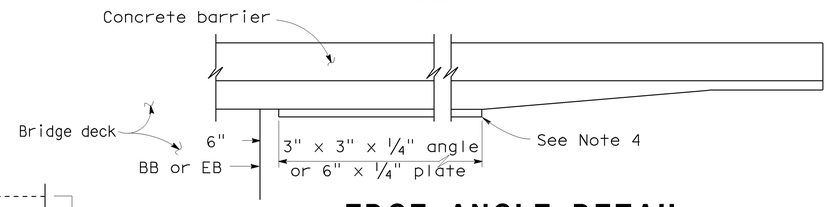

EDGE ANGLE DETAIL
½"=1'-0"

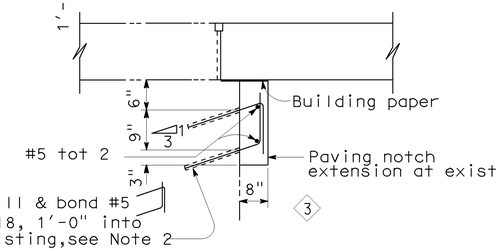

SECTION B-B 3
¾" = 1'-0"

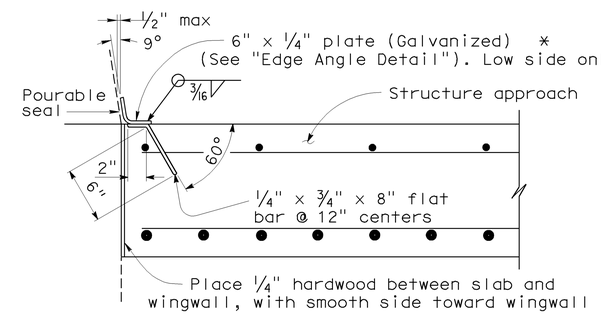

***(TO BE USED WITH TYPE 732 OR TYPE 736 CONCRETE BARRIER)**

DETAIL B
1½"=1'-0"

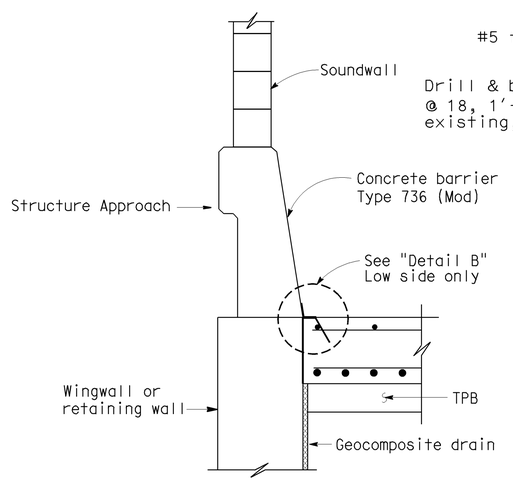

TYPE E-2

SECTION C-C
¾"=1'-0"

(Type E-1 to be used, unless otherwise shown on plans)

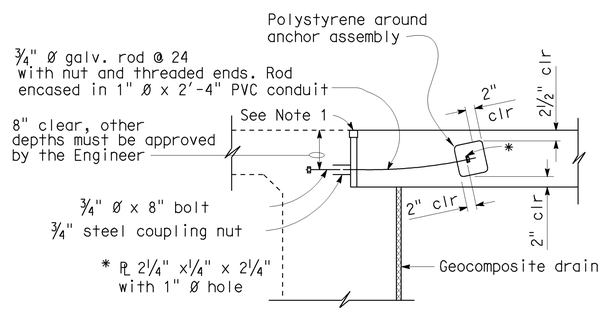

TIE DETAIL
¾"=1'-0"

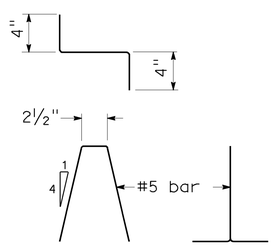

BAR CHAIR DETAIL
1½"=1'-0"

NOTES:

1. For details not noted or shown, see Structure Plans.
2. For drainage details, see "Structure Approach Drainage Details" sheet.
3. Longitudinal construction joints, when permitted by the Engineer, shall be located on lane lines.
4. End angle or plate at beginning of barrier transition, end of wingwall or end of structure approach, as applicable.
5. For transverse contact joint with new PCC paving, refer to Standard Plan P10.
6. At the contractor's option, approach slab transverse reinforcement may be placed parallel to paving notch. Spacing of transverse reinforcement is measured along ℄ roadway.

Polystyrene to be removed.

STANDARD DRAWING

FILE NO. xs3-180e

APPROVED BY M. Ha RESPONSIBLE TECHNICAL SPECIALIST
APPROVAL DATE 8-12-08

RELEASED BY O. Alcantara RESPONSIBLE OFFICE CHIEF
RELEASE DATE 8-12-08

1 Deleted detail
2 Revised detail
3 Added detail

STATE OF CALIFORNIA DEPARTMENT OF TRANSPORTATION

DIVISION OF ENGINEERING SERVICES

CU 12
EA 0F0311

BRIDGE NO. 55-0460
POST MILE 17.1

PLACENTIA AVENUE UC (WIDEN)
STRUCTURE APPROACH TYPE N(30D)

DS OSD 2147A (ENGLISH STANDARD DRAWING "XS" BORDER REV. 01/11/08)

ORIGINAL SCALE IN INCHES FOR REDUCED PLANS 0 1 2 3

DISREGARD PRINTS BEARING EARLIER REVISION DATES 6/17/09

REVISION DATES (PRELIMINARY STAGE ONLY)

SHEET 35 OF 42

USERNAME => trmikesl

55-0460-v-sa30d.dgn

DATE PLOTTED => 17-DEC-2009 TIME PLOTTED => 08:50

DIST.	COUNTY	ROUTE	MILE POST TOTAL PROJECT	SHEET NO.	TOTAL SHEETS
12	Ora	57	16.2/18.6	913	960

T. Kirilov 6-17-09
REGISTERED ENGINEER - CIVIL

12-14-09
PLANS APPROVAL DATE

REGISTERED PROFESSIONAL ENGINEER T.A. Kirilov No. C67708 Exp. 6/30/11 CIVIL STATE OF CALIFORNIA

The State of California or its officers or agents shall not be responsible for the accuracy or completeness of electronic copies of this plan sheet.

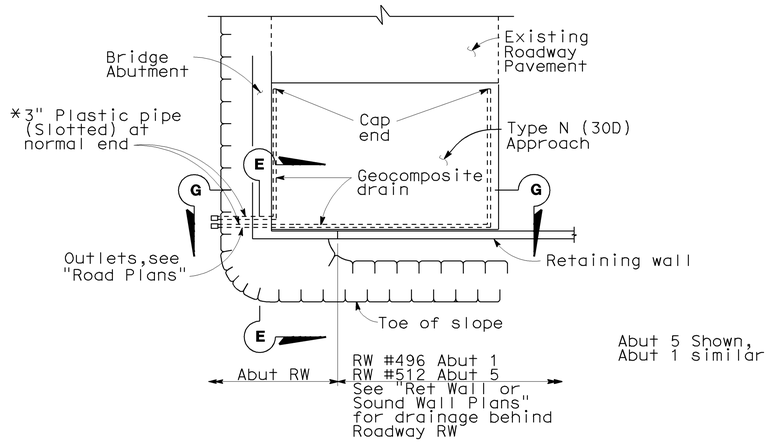

TYPICAL PLAN 2

1"=10'

*For pipe layout at staggered end, see "Detail B".

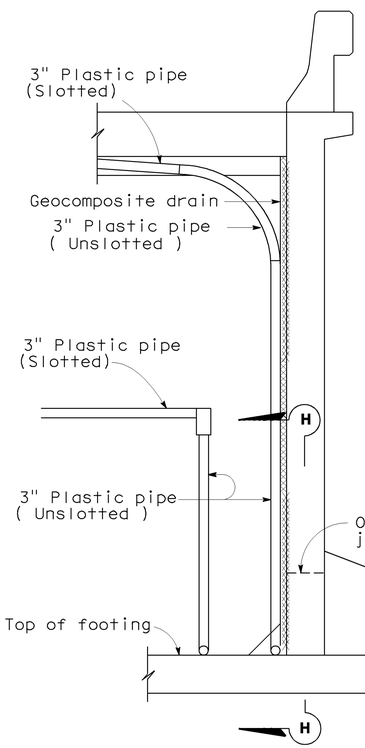

SECTION E-E 2

½"=1'-0"

NOTE: Bends and junctions in 3" plastic pipe are 30" radius min.

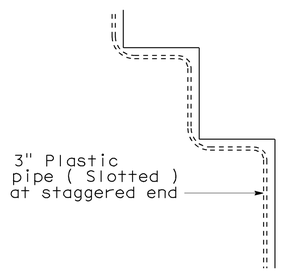

DETAIL B

No Scale

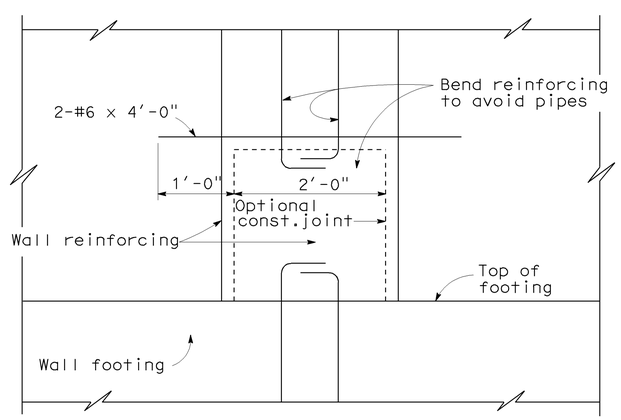

SECTION H-H

1"=1'-0"

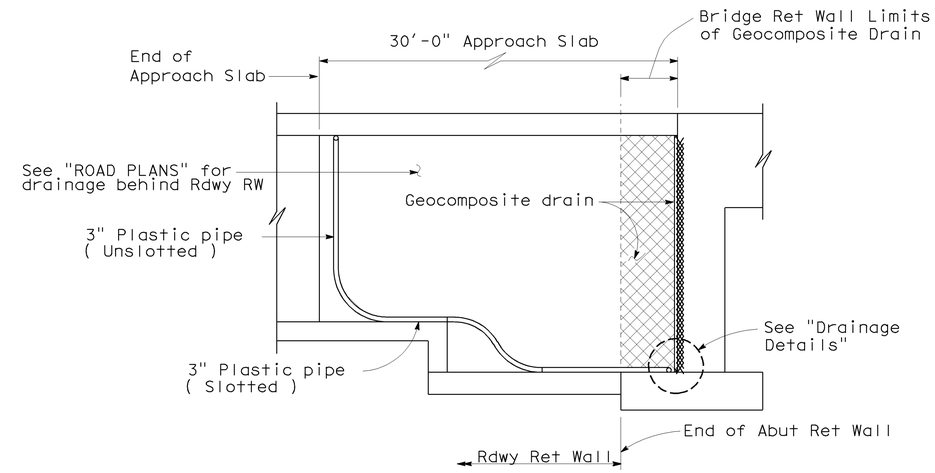

SECTION G-G 2

¼"=1'-0"

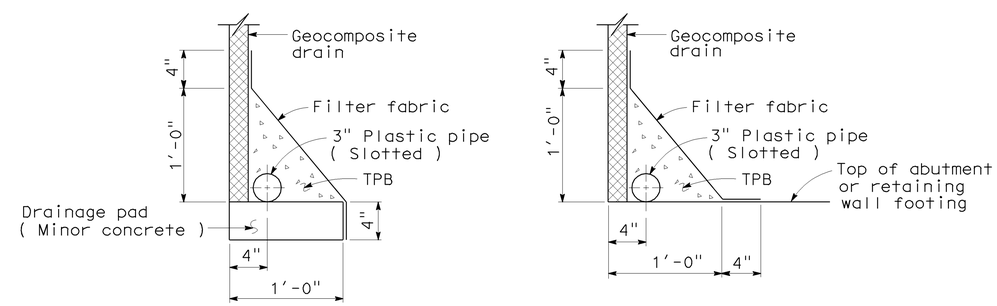

WITHOUT FOOTING

WITH FOOTING

DRAINAGE DETAILS

1½"=1'-0"

STANDARD DRAWING				
RELEASE DATE 4/23/98	DESIGN	BY M.TRAFFALIS	CHECKED E.THORKILDSEN	RELEASED BY
FILE NO. xs3-110e	DETAILS	BY R.YEE	CHECKED E.THORKILDSEN	OFFICE CHIEF
	SUBMITTED	BY M.HA	DRAWING DATE 4/98	

1 Deleted Detail
2 Revised Detail

STATE OF CALIFORNIA
DEPARTMENT OF TRANSPORTATION

DIVISION OF ENGINEERING SERVICES

BRIDGE NO. 55-0460
MILE POST 17.1

PLACENTIA AVENUE UC (WIDEN)

STRUCTURE APPROACH DRAINAGE DETAILS

DS OSD 2147A (ENGLISH) (REV. X/XX/XX)

ORIGINAL SCALE IN INCHES FOR REDUCED PLANS 0 1 2 3

CU 12
EA 0F0311

DISREGARD PRINTS BEARING EARLIER REVISION DATES 6/17/09

REVISION DATES (PRELIMINARY STAGE ONLY)

SHEET 36 OF 42

USERNAME => trmikesi

55-0460-v-sadd.dgn

DATE PLOTTED => 17-DEC-2009 TIME PLOTTED => 08:50

RELEASED 10-30-97

DIST.	COUNTY	ROUTE	POST MILES TOTAL PROJECT	SHEET NO.	TOTAL SHEETS
12	Ora	57	16.2/18.6	914	960

REGISTERED ENGINEER - CIVIL 6-17-09

REGISTERED PROFESSIONAL ENGINEER T.A. Kirilov No. C67708 Exp. 6/30/11 CIVIL STATE OF CALIFORNIA

12-14-09
PLANS APPROVAL DATE

The State of California or its officers or agents shall not be responsible for the accuracy or completeness of electronic copies of this plan sheet.

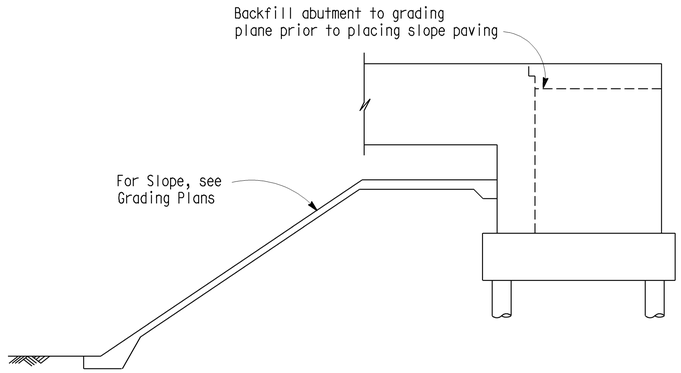

② **WINGWALL ELEVATION**

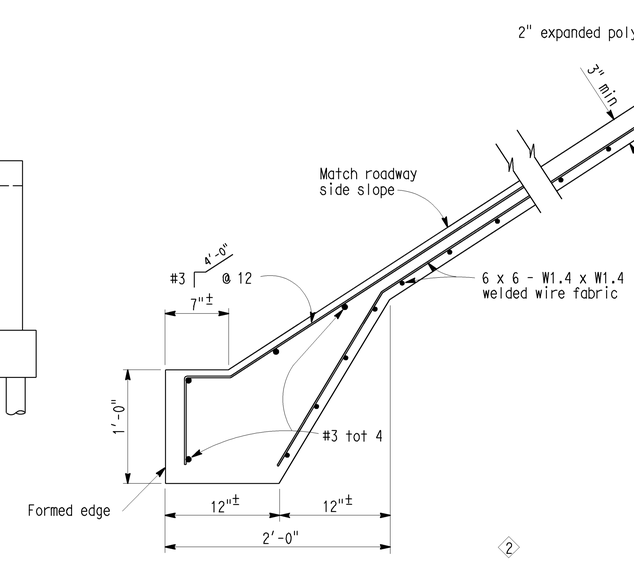

② **TYPICAL SECTION - CONCRETE PAVING**

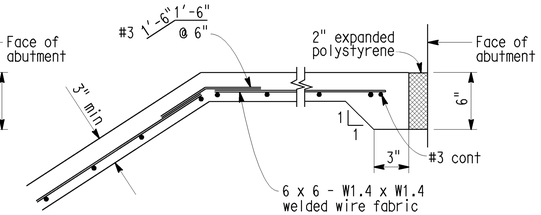

WITH BENCH ③

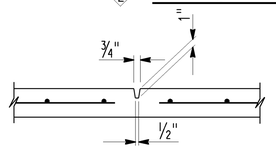

PREFORMED GROOVE

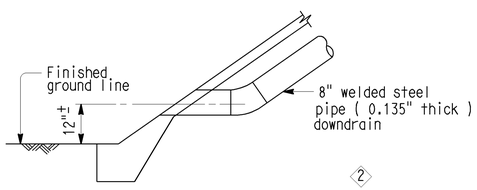

① ② **TYPICAL - NO CURB**

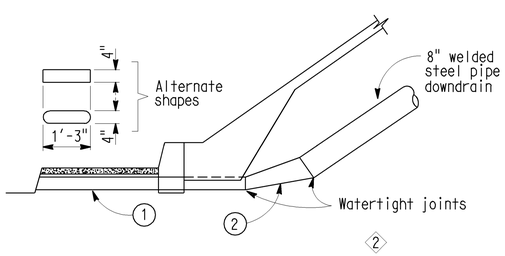

① ② **TYPICAL - WITH SIDEWALK**

DRAINAGE DETAILS

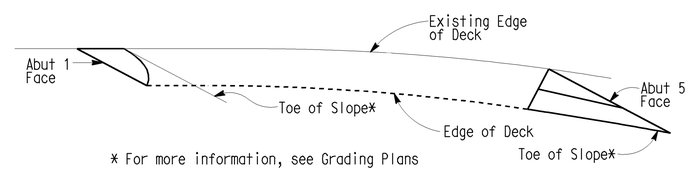

* For more information, see Grading Plans

LIMITS OF SLOPE PAVING & DRAINAGE LAYOUT

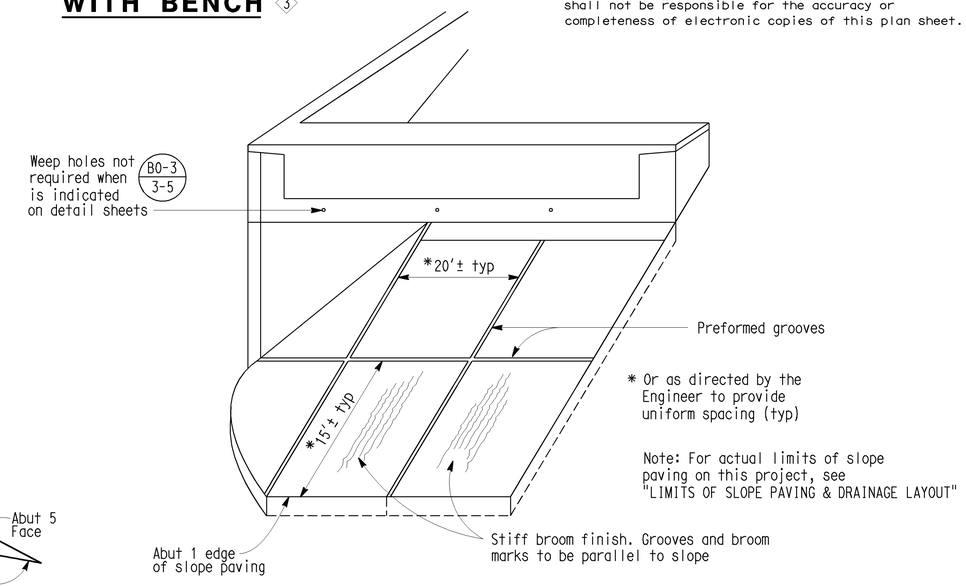

* Or as directed by the Engineer to provide uniform spacing (typ)

Note: For actual limits of slope paving on this project, see "LIMITS OF SLOPE PAVING & DRAINAGE LAYOUT"

② **ABUT 1**

② ① Conduit: 0.109" smooth galv steel

② Taper: 0.109" smooth galv steel

③ 8" welded steel pipe (0.135" thick) behind abutment. Connect to downdrain as shown on Drainage Plans.

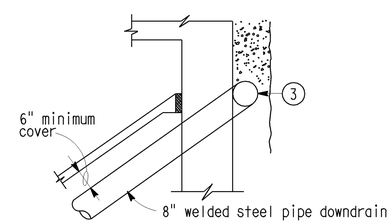

TYPICAL - DRAIN CONNECTION ②

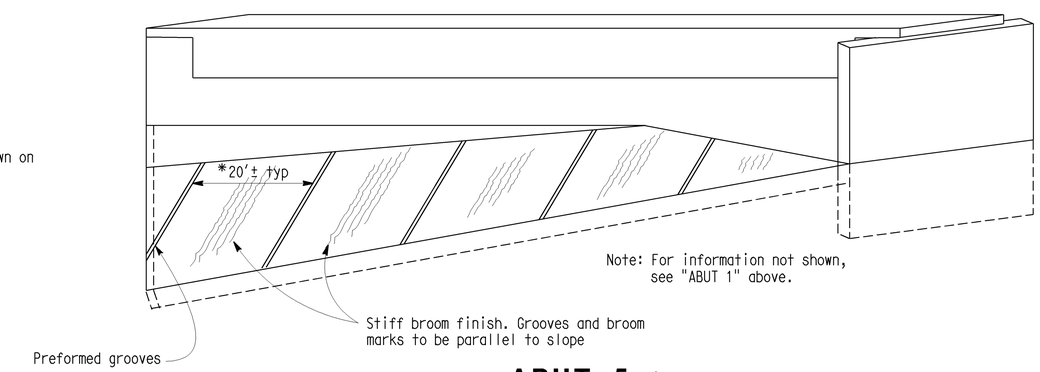

Note: For information not shown, see "ABUT 1" above.

ABUT 5 ③

PICTORIAL VIEW OF TYPICAL INSTALLATION

STANDARD DRAWING

FILE NO. XS 22-11	DESIGN	BY	CHECKED	APPROVAL RECOMMENDED BY
DESIGN DATE 3/89	DETAILS	BY R. YEE	CHECKED	DESIGN SUPERVISOR
	SUBMITTED BY C.W. PURKISS			

① Deleted Detail ② Revised Detail ③ Added Detail

STATE OF CALIFORNIA DEPARTMENT OF TRANSPORTATION

DIVISION OF STRUCTURES STRUCTURE DESIGN

BRIDGE NO. 55-0460 POST MILE 17.1

PLACENTIA AVENUE UC (WIDEN)

SLOPE PAVING - FULL SLOPE

DS OSD 2147A (CADD 7/97)

ORIGINAL SCALE IN INCHES FOR REDUCED PLANS 0 1 2 3

CU 12 EA 0F0311

DISREGARD PRINTS BEARING EARLIER REVISION DATES → 4/8/09 6/17/09

REVISION DATES (PRELIMINARY STAGE ONLY)

SHEET 37 OF 42

XS2211.DGN VI=I

DIST	COUNTY	ROUTE	POST MILES TOTAL PROJECT	SHEET No	TOTAL SHEETS
12	Ora	57	16.2/18.6	915	960

Lino Cheang 6-17-09
REGISTERED ENGINEER DATE

12-14-09
PLANS APPROVAL DATE

REGISTERED PROFESSIONAL ENGINEER L. CHEANG NO. GE 2345 EXP. 9-30-09 GEOTECHNICAL STATE OF CALIFORNIA

The State of California or its officers or agents shall not be responsible for the accuracy or completeness of electronic copies of this plan sheet.

ORANGE COUNTY TRANSPORTATION AUTHORITY
550 S. MAIN STREET
ORANGE, CA 92863-1584

EARTH MECHANICS, INC.
17660 NEWHOPE STREET, SUITE E
FOUNTAIN VALLEY, CA 92708

BENCHMARKS:

Vertical Datum NAVD 88

Designation: 1L-54-82 Elev = 153.171
Described by OCS 2002 - Found 3¾" OCS Aluminum Benchmark Disk Stamped "1L-54-82", set in the Top of a 6 in. by 6 in. Concrete Post. Monument is located along the Westerly Levee of the Santa Ana River, 0.25 Miles Northerly along Levee from the Centerline of Orangewood Avenue, 200 ft. Northeasterly of the Easterly Leg of the Anaheim Angels 200 ft. tall sign, 69 ft. Westerly of the Centerline of the Bike Trail and 1.5 ft. Westerly of a Steel OCS Witness Post. Monument is set 0.3 below the Ground.

Designation: 2G-25-70 Elev = 275.872
Described by OCS 2003 - Found 3¾" OCS Aluminum Benchmark Disk Stamped "2G-25-70", set in the Southeasterly Corner of a 4 ft by 6 ft Concrete Catch Basin. Monument is Located in the Northwesterly Corner of the Intersection of Yorba Linda Boulevard and Deerpark Drive, 75 ft Westerly of the Centerline of Deerpark and 46 ft Northerly of the Centerline of Yorba Linda. Monument is set Level with the Sidewalk.

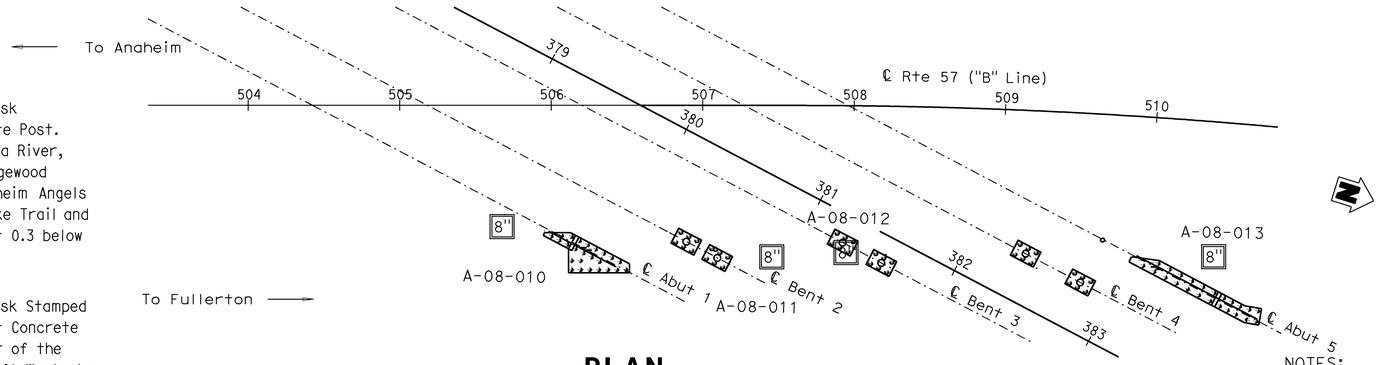

PLAN

1" = 50'

NOTES:

(1) This LOTB sheet was prepared in accordance with the Caltrans Soil and Rock Logging, Classification and Presentation Manual (June 2007)
(2) 2.4" samples were taken using a California Modified Sampler.
(3) An automatic trip hammer system consisting of a hammer weight of 140 lbs falling a distance of 30" was used to advance the drive sampler.
(4) Conversion factor from 2.4" Modified California Ring Sampler blowcounts to Standard Penetration Test (SPT) blowcounts is 0.5.

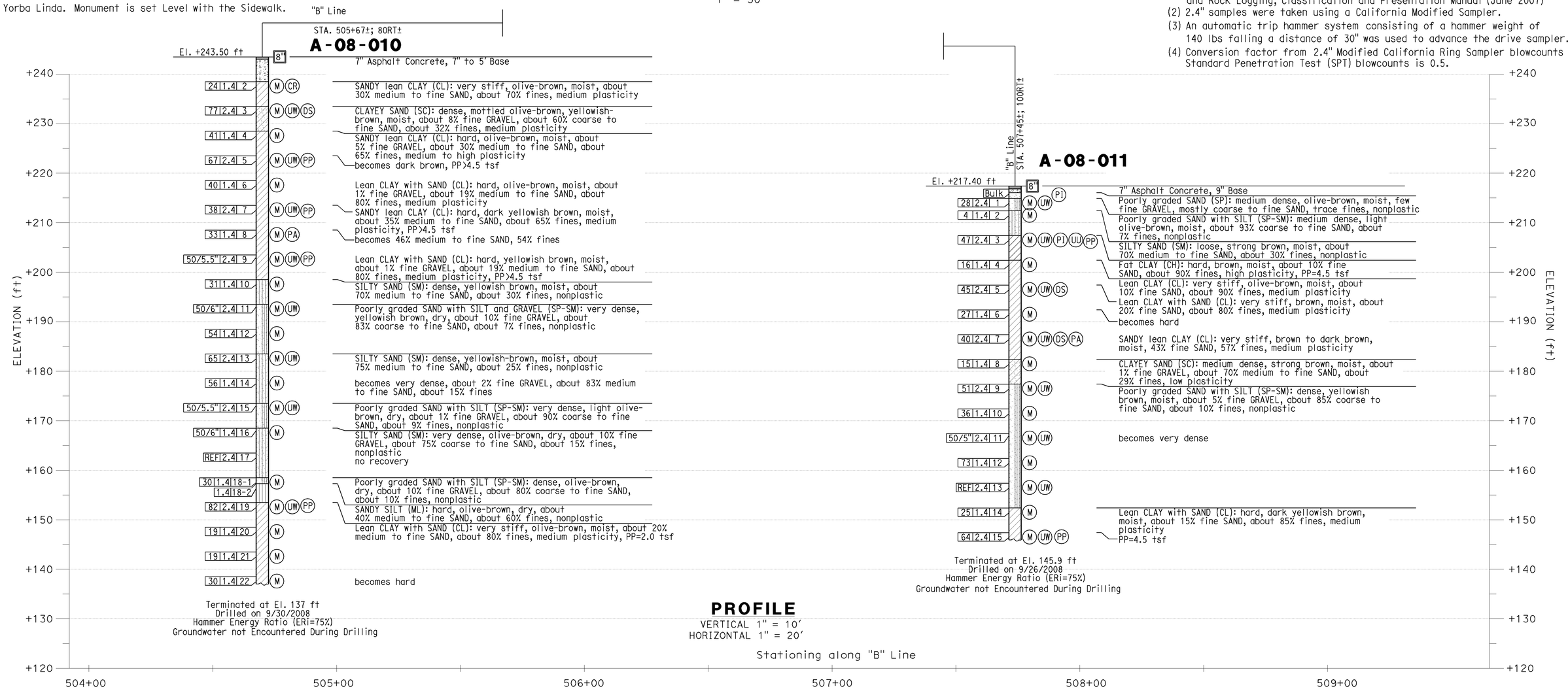

PROFILE

VERTICAL 1" = 10'
HORIZONTAL 1" = 20'

Jon Hamaguchi
DESIGN OVERSIGHT Jon Hamaguchi
6-24-09
SIGN OFF DATE

DRAWN BY: J.Fang
CHECKED BY: L.Cheang

FIELD INVESTIGATION BY:
R.Jie

PREPARED FOR THE STATE OF CALIFORNIA DEPARTMENT OF TRANSPORTATION

L.Cheang
PROJECT ENGINEER

BRIDGE NO. 55-0460
POST MILES 17.1

PLACENTIA AVENUE UC (WIDEN)
LOG OF TEST BORINGS NO. 1

DESIGN GENERAL PLAN SHEET (ENGLISH) (REV. 2/25/05)

ORIGINAL SCALE IN INCHES FOR REDUCED PLANS 0 1 2 3

CU 12
EA 0F0311

DISREGARD PRINTS BEARING EARLIER REVISION DATES 4/30/09

REVISION DATES (PRELIMINARY STAGE ONLY)

SHEET 38 OF 42

FILE => 55-0460-Z-LOTB01.dgn

USERNAME => trmikes1 DATE PLOTTED => 17-DEC-2009 TIME PLOTTED => 08:50

DIST	COUNTY	ROUTE	POST MILES TOTAL PROJECT	SHEET No	TOTAL SHEETS
12	Ora	57	16.2/18.6	916	960

Lino Cheang
REGISTERED ENGINEER — DATE 6-17-09

12-14-09
PLANS APPROVAL DATE

REGISTERED PROFESSIONAL ENGINEER — L. CHEANG — NO. GE 2345 — EXP. 9-30-09 — GEOTECHNICAL — STATE OF CALIFORNIA

The State of California or its officers or agents shall not be responsible for the accuracy or completeness of electronic copies of this plan sheet.

ORANGE COUNTY TRANSPORTATION AUTHORITY
550 S. MAIN STREET
ORANGE, CA 92863-1584

EARTH MECHANICS, INC.
17660 NEWHOPE STREET, SUITE E
FOUNTAIN VALLEY, CA 92708

BENCHMARKS:

Vertical Datum NAVD 88

Designation: 1L-54-82 Elev = 153.171
Described by OCS 2002 - Found 3¾" OCS Aluminum Benchmark Disk Stamped "1L-54-82", set in the Top of a 6 in. by 6 in. Concrete Post. Monument is located along the Westerly Levee of the Santa Ana River, 0.25 Miles Northerly along Levee from the Centerline of Orangewood Avenue, 200 ft. Northeasterly of the Easterly Leg of the Anaheim Angels 200 ft. tall sign, 69 ft. Westerly of the Centerline of the Bike Trail and 1.5 ft. Westerly of a Steel OCS Witness Post. Monument is set 0.3 below the Ground.

Designation: 2G-25-70 Elev = 275.872
Described by OCS 2003 - Found 3¾" OCS Aluminum Benchmark Disk Stamped "2G-25-70", set in the Southeasterly Corner of a 4 ft by 6 ft Concrete Catch Basin. Monument is Located in the Northwesterly Corner of the Intersection of Yorba Linda Boulevard and Deerpark Drive, 75 ft Westerly of the Centerline of Deerpark and 46 ft Northerly of the Centerline of Yorba Linda. Monument is set Level with the Sidewalk.

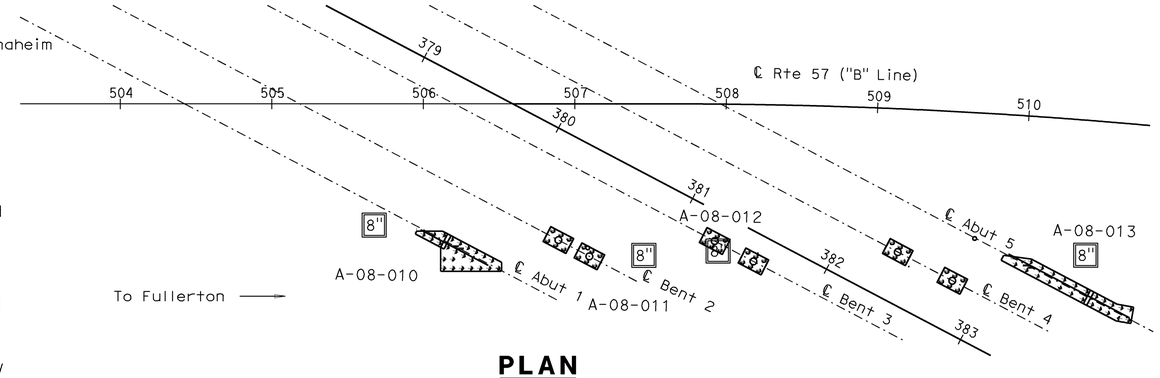

PLAN

1" = 50'

NOTES:

(1) This LOTB sheet was prepared in accordance with the Caltrans Soil and Rock Logging, Classification and Presentation Manual (June 2007)
(2) 2.4" samples were taken using a California Modified Sampler.
(3) An automatic trip hammer system consisting of a hammer weight of 140 lbs falling a distance of 30" was used to advance the drive sampler.
(4) Conversion factor from 2.4" Modified California Ring Sampler blowcounts to Standard Penetration Test (SPT) blowcounts is 0.5.

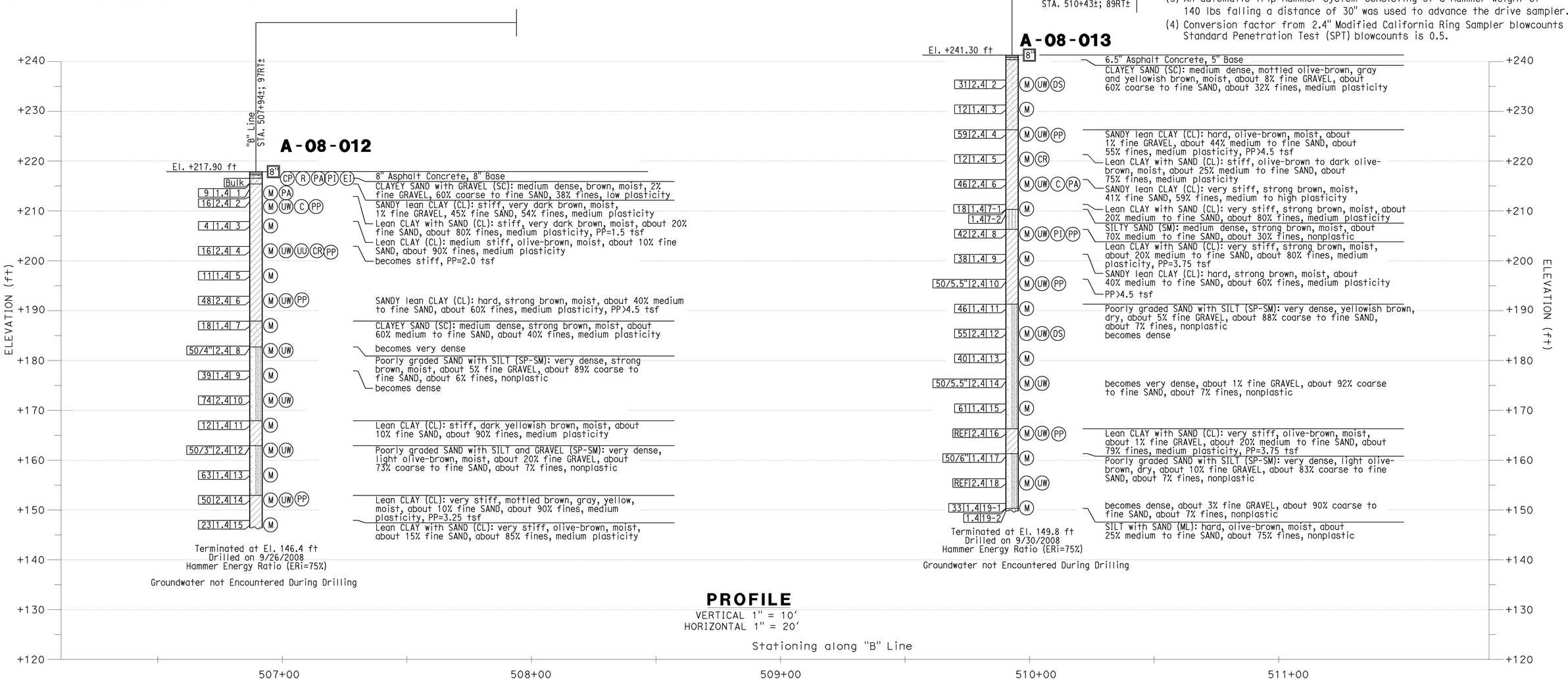

PROFILE

VERTICAL 1" = 10'
HORIZONTAL 1" = 20'

Jan Hanaguchi
DESIGN OVERSIGHT — Jan Hanaguchi
6-24-09
SIGN OFF DATE

DRAWN BY: J.Fang
CHECKED BY: L.Cheang

FIELD INVESTIGATION BY:
R.Jie

PREPARED FOR THE STATE OF CALIFORNIA DEPARTMENT OF TRANSPORTATION

L.Cheang
PROJECT ENGINEER

BRIDGE NO. 55-0460
POST MILES 17.1

PLACENTIA AVENUE UC (WIDEN)
LOG OF TEST BORINGS NO. 2

DESIGN GENERAL PLAN SHEET (ENGLISH) (REV. 2/25/05)

ORIGINAL SCALE IN INCHES FOR REDUCED PLANS 0 1 2 3

CU 12
EA 0F0311

DISREGARD PRINTS BEARING EARLIER REVISION DATES 4/30/09

REVISION DATES (PRELIMINARY STAGE ONLY)

SHEET 39 OF 42

FILE => 55-0460-Z-LOTB02.dgn

USERNAME => trmikest DATE PLOTTED => 17-DEC-2009 TIME PLOTTED => 08:50

DIST	COUNTY	ROUTE	POST MILES TOTAL PROJECT	SHEET No	TOTAL SHEETS
12	Ora	57	16.2/18.6	917	960

Lino Cheang 6-17-09
REGISTERED ENGINEER DATE

12-14-09
PLANS APPROVAL DATE

REGISTERED PROFESSIONAL ENGINEER L. CHEANG NO. GE 2345 EXP. 9-30-09 GEOTECHNICAL STATE OF CALIFORNIA

The State of California or its officers or agents shall not be responsible for the accuracy or completeness of electronic copies of this plan sheet.

OCTA
550 S MAIN STREET
ORANGE, CA 92868

EARTH MECHANICS, INC.
17660, NEWHOPE STREET, SUITE E
FOUNTAIN VALLEY, CA 92708

REFERENCE: CALTRANS SOIL & ROCK LOGGING, CLASSIFICATION, AND PRESENTATION MANUAL (JUNE 2007)

CEMENTATION

Description	Criteria
Weak	Crumbles or breaks with handling or little finger pressure.
Moderate	Crumbles or breaks with considerable finger pressure.
Strong	Will not crumble or break with finger pressure.

CONSISTENCY OF COHESIVE SOILS

Description	Unconfined Compressive Strength (tsf)	Pocket Penetrometer Measurement (tsf)	Torvane Measurement (tsf)	Field Approximation
Very Soft	< 0.25	< 0.25	< 0.12	Easily penetrated several inches by fist
Soft	0.25 to 0.50	0.25 to 0.50	0.12 to 0.25	Easily penetrated several inches by thumb
Medium Stiff	0.50 to 1.0	0.50 to 1.0	0.25 to 0.50	Penetrated several inches by thumb with moderate effort
Stiff	1 to 2	1 to 2	0.50 to 1.0	Readily indented by thumb but penetrated only with great effort
Very Stiff	2 to 4	2 to 4	1.0 to 2.0	Readily indented by thumbnail
Hard	> 4.0	> 4.0	> 2.0	Indented by thumbnail with difficulty

BOREHOLE IDENTIFICATION

Symbol	Hole Type	Description
Size	A	Auger Boring
Size	R P	Rotary drilled boring Rotary percussion boring (air)
Size	R	Rotary drilled diamond core
Size	HD HA	Hand driven (1-inch soil tube) Hand Auger
●	D	Dynamic Cone Penetration Boring
▲	CPT	Cone Penetration Test (ASTM D 5778-95)
⬚	O	Other

Note: Size in inches.

PLASTICITY OF FINE-GRAINED SOILS

Description	Criteria
Nonplastic	A 1/8-inch thread cannot be rolled at any water content.
Low	The thread can barely be rolled and the lump cannot be formed when drier than the plastic limit.
Medium	The thread is easy to roll and not much time is required to reach the plastic limit. The thread cannot be rerolled after reaching the plastic limit. The lump crumbles when drier than the plastic limit.
High	It takes considerable time rolling and kneading to reach the plastic limit. The thread can be rerolled several times after reaching the plastic limit. The lump can be formed without crumbling when drier than the plastic limit.

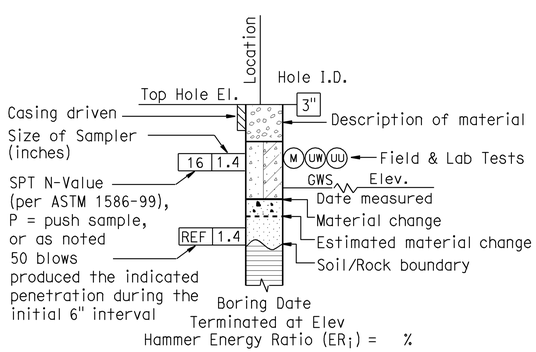

ROTARY BORING

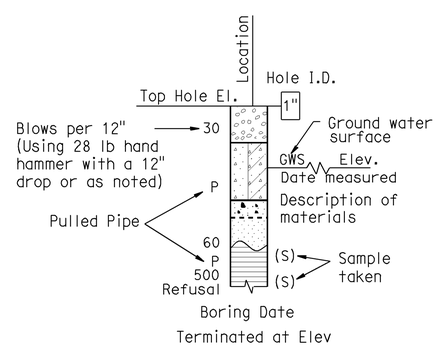

HAND BORING

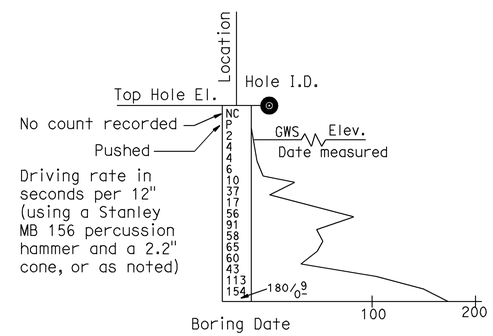

DYNAMIC CONE PENETRATION BORING

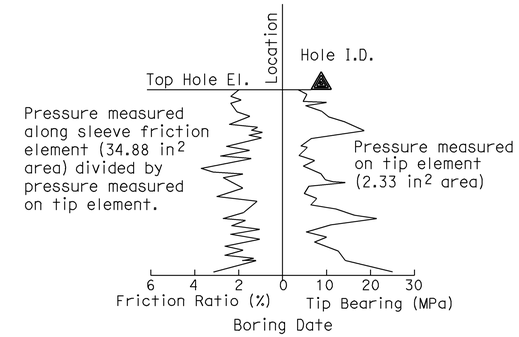

CONE PENETRATION TEST (CPT) SOUNDING

Jon Hamaguchi
DESIGN OVERSIGHT
6-24-09
SIGN OFF DATE

DRAWN BY: J.Fang
CHECKED BY: L.Cheang

FIELD INVESTIGATION BY:
R.Jie

PREPARED FOR THE STATE OF CALIFORNIA DEPARTMENT OF TRANSPORTATION

L.Cheang
PROJECT ENGINEER

BRIDGE NO. 55-0460
POST MILES 17.1

PLACENTIA AVENUE UC (WIDEN)
LOG OF TEST BORINGS NO. 3

DESIGN GENERAL PLAN SHEET (ENGLISH) (REV. 2/25/05)

ORIGINAL SCALE IN INCHES FOR REDUCED PLANS 0 1 2 3

CU 12
EA 0F0311

DISREGARD PRINTS BEARING EARLIER REVISION DATES

REVISION DATES (PRELIMINARY STAGE ONLY)

SHEET 40 OF 42

FILE => 55-0460-Z-LOTB03.dgn

USERNAME => ttmirkes1 DATE PLOTTED => 17-DEC-2009 TIME PLOTTED => 08:50

REFERENCE: CALTRANS SOIL & ROCK LOGGING, CLASSIFICATION, AND PRESENTATION MANUAL (JUNE 2007)

GROUP SYMBOLS AND NAMES

Graphic/Symbol	Group Names
GW	Well-graded GRAVEL Well-graded GRAVEL with SAND
GP	Poorly graded GRAVEL Poorly graded GRAVEL with SAND
GW-GM	Well-graded GRAVEL with SILT Well-graded GRAVEL with SILT and SAND
GW-GC	Well-graded GRAVEL with CLAY (or SILTY CLAY) Well-graded GRAVEL with CLAY and SAND (or SILTY CLAY and SAND)
GP-GM	Poorly graded GRAVEL with SILT Poorly graded GRAVEL with SILT and SAND
GP-GC	Poorly graded GRAVEL with CLAY (or SILTY CLAY) Poorly graded GRAVEL with CLAY and SAND (or SILTY CLAY and SAND)
GM	SILTY GRAVEL SILTY GRAVEL with SAND
GC	CLAYEY GRAVEL CLAYEY GRAVEL with SAND
GC-GM	SILTY, CLAYEY GRAVEL SILTY, CLAYEY GRAVEL with SAND
SW	Well-graded SAND Well-graded SAND with GRAVEL
SP	Poorly graded SAND Poorly graded SAND with GRAVEL
SW-SM	Well-graded SAND with SILT Well-graded SAND with SILT and GRAVEL
SW-SC	Well-graded SAND with CLAY (or SILTY CLAY) Well-graded SAND with CLAY and GRAVEL (or SILTY CLAY and GRAVEL)
SP-SM	Poorly graded SAND with SILT Poorly graded SAND with SILT and GRAVEL
SP-SC	Poorly graded SAND with CLAY (or SILTY CLAY) Poorly graded SAND with CLAY and GRAVEL (or SILTY CLAY and GRAVEL)
SM	SILTY SAND SILTY SAND with GRAVEL
SC	CLAYEY SAND CLAYEY SAND with GRAVEL
SC-SM	SILTY, CLAYEY SAND SILTY, CLAYEY SAND with GRAVEL
PT	PEAT
	COBBLES COBBLES and BOULDERS BOULDERS

Graphic/Symbol	Group Names
CL	Lean CLAY Lean CLAY with SAND Lean CLAY with GRAVEL SANDY lean CLAY SANDY lean CLAY with GRAVEL GRAVELLY lean CLAY GRAVELLY lean CLAY with SAND
CL-ML	SILTY CLAY SILTY CLAY with SAND SILTY CLAY with GRAVEL SANDY SILTY CLAY SANDY SILTY CLAY with GRAVEL GRAVELLY SILTY CLAY GRAVELLY SILTY CLAY with SAND
ML	SILT SILT with SAND SILT with GRAVEL SANDY SILT SANDY SILT with GRAVEL GRAVELLY SILT GRAVELLY SILT with SAND
OL	ORGANIC lean CLAY ORGANIC lean CLAY with SAND ORGANIC lean CLAY with GRAVEL SANDY ORGANIC lean CLAY SANDY ORGANIC lean CLAY with GRAVEL GRAVELLY ORGANIC lean CLAY GRAVELLY ORGANIC lean CLAY with SAND
OL	ORGANIC SILT ORGANIC SILT with SAND ORGANIC SILT with GRAVEL SANDY ORGANIC SILT SANDY ORGANIC SILT with GRAVEL GRAVELLY ORGANIC SILT GRAVELLY ORGANIC SILT with SAND
CH	Fat CLAY Fat CLAY with SAND Fat CLAY with GRAVEL SANDY fat CLAY SANDY fat CLAY with GRAVEL GRAVELLY fat CLAY GRAVELLY fat CLAY with SAND
MH	Elastic SILT Elastic SILT with SAND Elastic SILT with GRAVEL SANDY elastic SILT SANDY elastic SILT with GRAVEL GRAVELLY elastic SILT GRAVELLY elastic SILT with SAND
OH	ORGANIC fat CLAY ORGANIC fat CLAY with SAND ORGANIC fat CLAY with GRAVEL SANDY ORGANIC fat CLAY SANDY ORGANIC fat CLAY with GRAVEL GRAVELLY ORGANIC fat CLAY GRAVELLY ORGANIC fat CLAY with SAND
OH	ORGANIC elastic SILT ORGANIC elastic SILT with SAND ORGANIC elastic SILT with GRAVEL SANDY ORGANIC elastic SILT SANDY ORGANIC elastic SILT with GRAVEL GRAVELLY ORGANIC elastic SILT GRAVELLY ORGANIC elastic SILT with SAND
OL/OH	ORGANIC SOIL ORGANIC SOIL with SAND ORGANIC SOIL with GRAVEL SANDY ORGANIC SOIL SANDY ORGANIC SOIL with GRAVEL GRAVELLY ORGANIC SOIL GRAVELLY ORGANIC SOIL with SAND

FIELD AND LABORATORY TESTING

- (C) Consolidation (ASTM D 2435)
- (CL) Collapse Potential (ASTM D 5333)
- (CP) Compaction Curve (CTM 216)
- (CR) Corrosivity Testing (CTM 643, CTM 422, CTM 417)
- (CU) Consolidated Undrained Triaxial (ASTM D 4767)
- (DS) Direct Shear (ASTM D 3080)
- (EI) Expansion Index (ASTM D 4829)
- (M) Moisture Content (ASTM D 2216)
- (OC) Organic Content-% (ASTM D 2974)
- (P) Permeability (CTM 220)
- (PA) Particle Size Analysis (ASTM D 422)
- (PI) Plasticity Index (AASHTO T 90) Liquid Limit (AASHTO T 89)
- (PL) Point Load Index (ASTM D 5731)
- (PM) Pressure Meter
- (PP) Pocket Penetrometer
- (R) R-Value (CTM 301)
- (SE) Sand Equivalent (CTM 217)
- (SG) Specific Gravity (AASHTO T 100)
- (SL) Shrinkage Limit (ASTM D 427)
- (SW) Swell Potential (ASTM D 4546)
- (TV) Pocket Torvane
- (UC) Unconfined Compression-Soil (ASTM D 2166) Unconfined Compression-Rock (ASTM D 2938)
- (UU) Unconsolidated Undrained Triaxial (ASTM D 2850)
- (UW) Unit Weight (ASTM D 4767)
- (VS) Vane Shear (AASHTO T 223)

DIST	COUNTY	ROUTE	POST MILES TOTAL PROJECT	SHEET No	TOTAL SHEETS
12	Ora	57	16.2/18.6	918	960

Lino Cheang 6-17-09
REGISTERED ENGINEER DATE

12-14-09
PLANS APPROVAL DATE

REGISTERED PROFESSIONAL ENGINEER L. CHEANG NO. GE 2345 EXP. 9-30-09 GEOTECHNICAL STATE OF CALIFORNIA

The State of California or its officers or agents shall not be responsible for the accuracy or completeness of electronic copies of this plan sheet.

OCTA
550 S MAIN STREET
ORANGE, CA 92868

EARTH MECHANICS, INC.
17660, NEWHOPE STREET, SUITE E
FOUNTAIN VALLEY, CA 92708

APPARENT DENSITY OF COHESIONLESS SOILS

Description	SPT N_{60} (Blows / 12 inches)
Very loose	0 - 4
Loose	5 - 10
Medium Dense	11 - 30
Dense	31 - 50
Very Dense	> 50

MOISTURE

Description	Criteria
Dry	Absence of moisture, dusty, dry to the touch
Moist	Damp but no visible water
Wet	Visible free water, usually soil is below water table

PERCENT OR PROPORTION OF SOILS

Description	Criteria
Trace	Particles are present but estimated to be less than 5%
Few	5 to 10%
Little	15 to 25%
Some	30 to 45%
Mostly	50 to 100%

PARTICLE SIZE

Description		Size
Boulder		> 12"
Cobble		3" to 12"
Gravel	Coarse	3/4" to 3"
	Fine	No. 4 to 3/4"
Sand	Coarse	No. 10 to No. 4
	Medium	No. 40 to No. 10
	Fine	No. 200 to No. 40

Jon Hamaguchi
DESIGN OVERSIGHT Jon Hamaguchi
6-24-09
SIGN OFF DATE

DRAWN BY: J.Fang
CHECKED BY: L.Cheang

FIELD INVESTIGATION BY:
R.Jie

PREPARED FOR THE STATE OF CALIFORNIA DEPARTMENT OF TRANSPORTATION

L.Cheang
PROJECT ENGINEER

BRIDGE NO. 55-0460
POST MILES 17.1

PLACENTIA AVENUE UC (WIDEN)
LOG OF TEST BORINGS NO. 4

DESIGN GENERAL PLAN SHEET (ENGLISH) (REV. 2/25/05)

ORIGINAL SCALE IN INCHES FOR REDUCED PLANS 0 1 2 3

CU 12
EA 0F0311

DISREGARD PRINTS BEARING EARLIER REVISION DATES

REVISION DATES (PRELIMINARY STAGE ONLY)

SHEET 41 OF 42

FILE => 55-0460-Z-LOTB04.dgn

USERNAME => trmikes1 DATE PLOTTED => 17-DEC-2009 TIME PLOTTED => 08:50

FED. ROAD DIV. NO.	STATE	F.A. PROJECT NO.	SHEET NO.	TOTAL SHEETS
7	CALIF.			

DIST.	COUNTY	ROUTE	SECTION	SHEET No.	TOTAL SHEETS
07	ORA	57	15.6/18.8	173	197

DATE APPROVED August 28, 1967

BENCH MARK

B.M. # 505R-65 Elev. 202.22
Set bolt spk. in E. side of P.P. # 961387 203 ft. E. of ℄ Sta. 379+25 Placentia ℄ 150 ft. S. of ℄ Santa Fe Ave. 1.5 above o/g

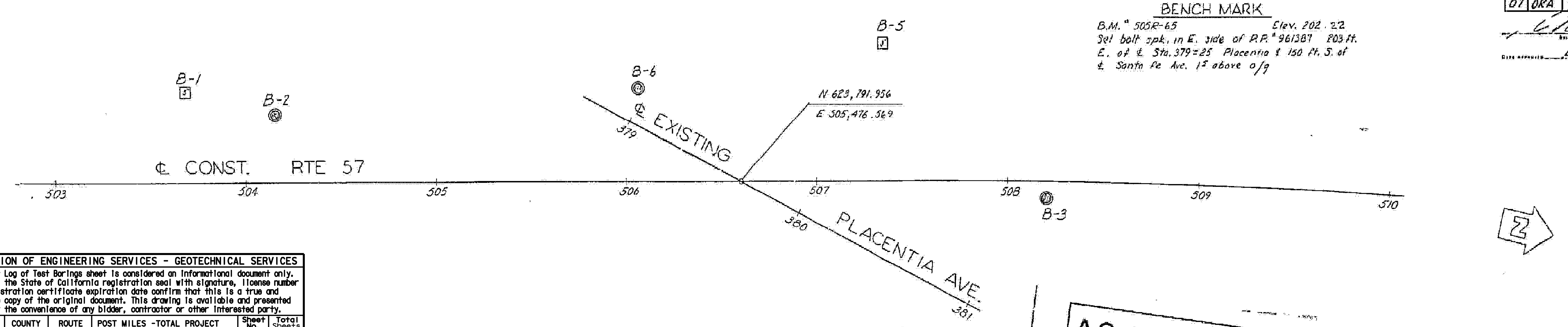

DIVISION OF ENGINEERING SERVICES - GEOTECHNICAL SERVICES					
As-Built Log of Test Borings sheet is considered an informational document only. As such, the State of California registration seal with signature, license number and registration certificate expiration date confirm that this is a true and accurate copy of the original document. This drawing is available and presented only for the convenience of any bidder, contractor or other interested party.					
DIST.	COUNTY	ROUTE	POST MILES - TOTAL PROJECT	Sheet No.	Total Sheets
12	Ora	57	16.2/18.6	919	960

REGISTERED CIVIL ENGINEER Lino Cheang DATE 6-17-09

PLACENTIA AVENUE UC (WIDEN)

AS-BUILT LOG OF TEST BORINGS

NOTE: A COPY OF THIS LOG OF TEST BORINGS IS AVAILABLE AT OFFICE OF STRUCTURE MAINTENANCE AND INVESTIGATIONS, SACRAMENTO, CALIFORNIA

CU: 12 EA: 0F0311 BRIDGE No. 55-0460 Sheet 42 of 42

To accompany plans dated 12-14-09

REGISTERED PROFESSIONAL ENGINEER LINO C. CHEANG NO. GE 2345 EXP. 9/30/09 GEOTECHNICAL STATE OF CALIFORNIA

AS BUILT PLANS
Contract No. 07-032124
Date Completed
Document No. 70000668

PLAN
Scale 1" = 30'

NO GROUND WATER ENCOUNTERED DURING THIS INVESTIGATION BY BRIDGE DEPT. GEOLOGY SECTION DATE April 1966

AS BUILT
CORRECTIONS BY Hixson ned 7-24-69
CONTRACT NO. 07-032124
DATE 5-11-69

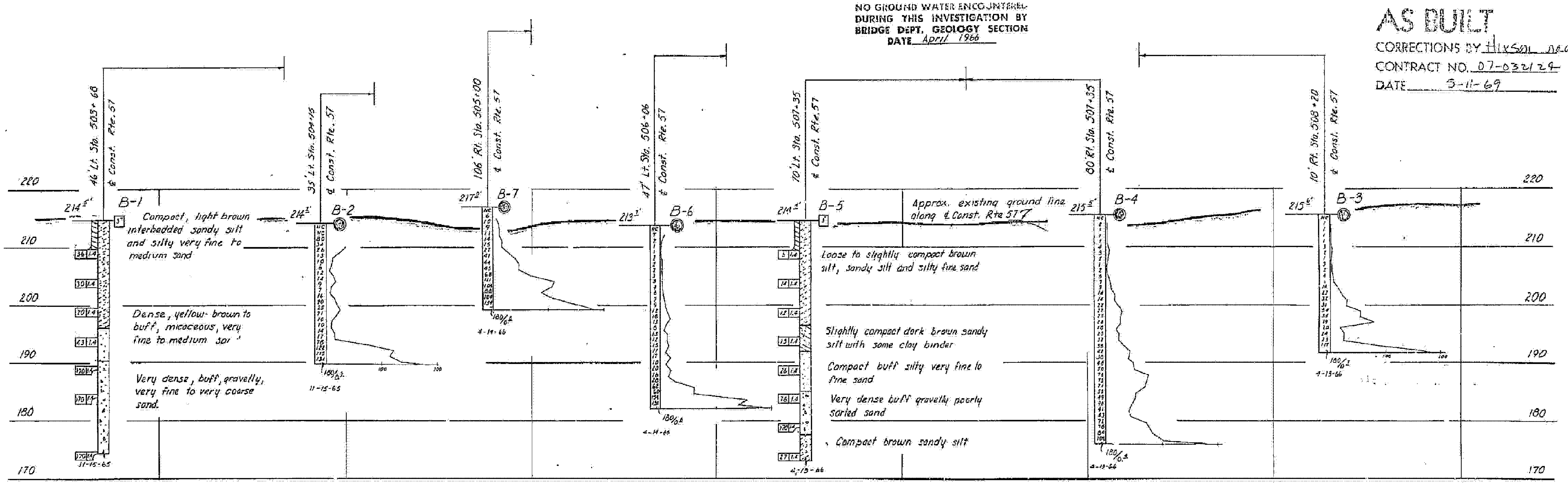

PROFILE
Scale Vert. 1" = 10'
Horiz. 1" = 30'

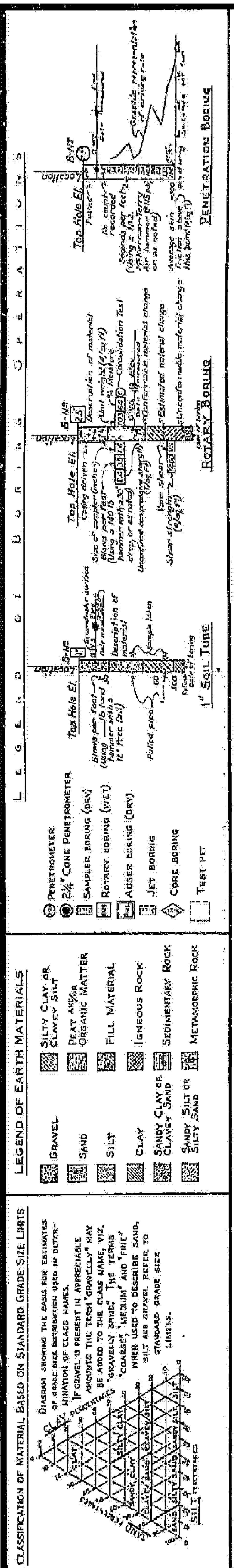

NOTE: Classification of earth material as shown on this sheet is based upon field inspection and is not to be construed to imply mechanical analysis.

FIELD STUDY	By D. CRAWFORD 4-14-66
DRAWN	By M. ALLREAD 4-20-66
CHECKED	By W. CAIN 5-10-66

BRIDGE DEPARTMENT
ENGINEERING GEOLOGY SECTION

SHEET 26 OF 26

STATE OF CALIFORNIA
DEPARTMENT OF PUBLIC WORKS
DIVISION OF HIGHWAYS

PLACENTIA AVENUE UNDERCROSSING

LOG OF TEST BORINGS

SCALE As Noted | BRIDGE 55-460 | FILE | DRAWING 55460-2

FILENAME => 55-0460-Z-LOTB05.tif

Charge 07208
W.A. 032121

Disregard prints bearing earlier numbers — PREL. DRAWING No. PR-

173

DIST	COUNTY	ROUTE	POST MILES TOTAL PROJECT	SHEET No	TOTAL SHEETS
12	Ora	57	16.2/18.6	920	960

REGISTERED CIVIL ENGINEER — DATE 6/15/09

12-14-09
PLANS APPROVAL DATE

REGISTERED PROFESSIONAL ENGINEER — Robert T. Barton — No. C68789 — Exp. 9/30/09 — CIVIL — STATE OF CALIFORNIA

The State of California or its officers or agents shall not be responsible for the accuracy or completeness of electronic copies of this plan sheet.

OCTA
550 S Main Street
Orange, CA 92868

PBS&J
625 The City Drive South, Suite 200
Orange, CA 92868

NOTES

1. For Index to Plans, Standard Plans and General Notes, see "Index To Plans" sheet.
2. For Pile Data Table, see "Foundation Plan" sheet.

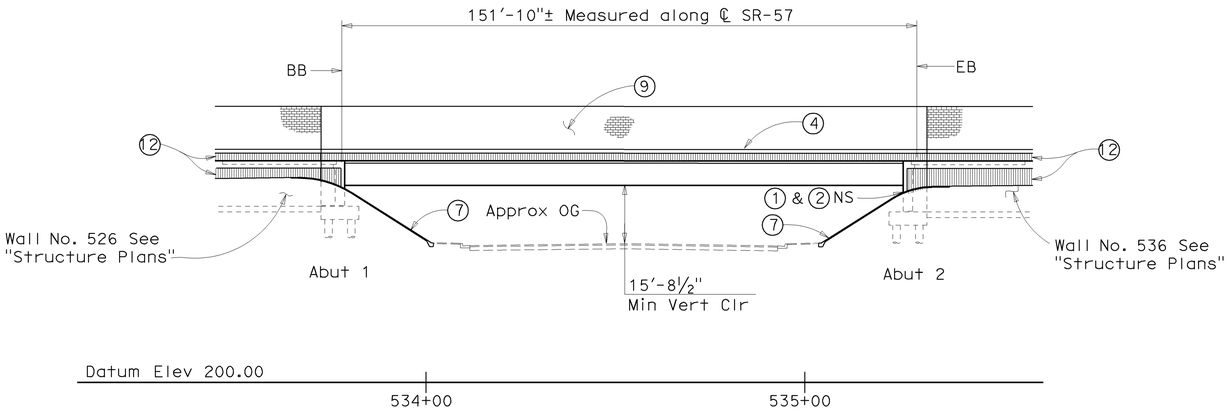

ELEVATION
1" = 20'

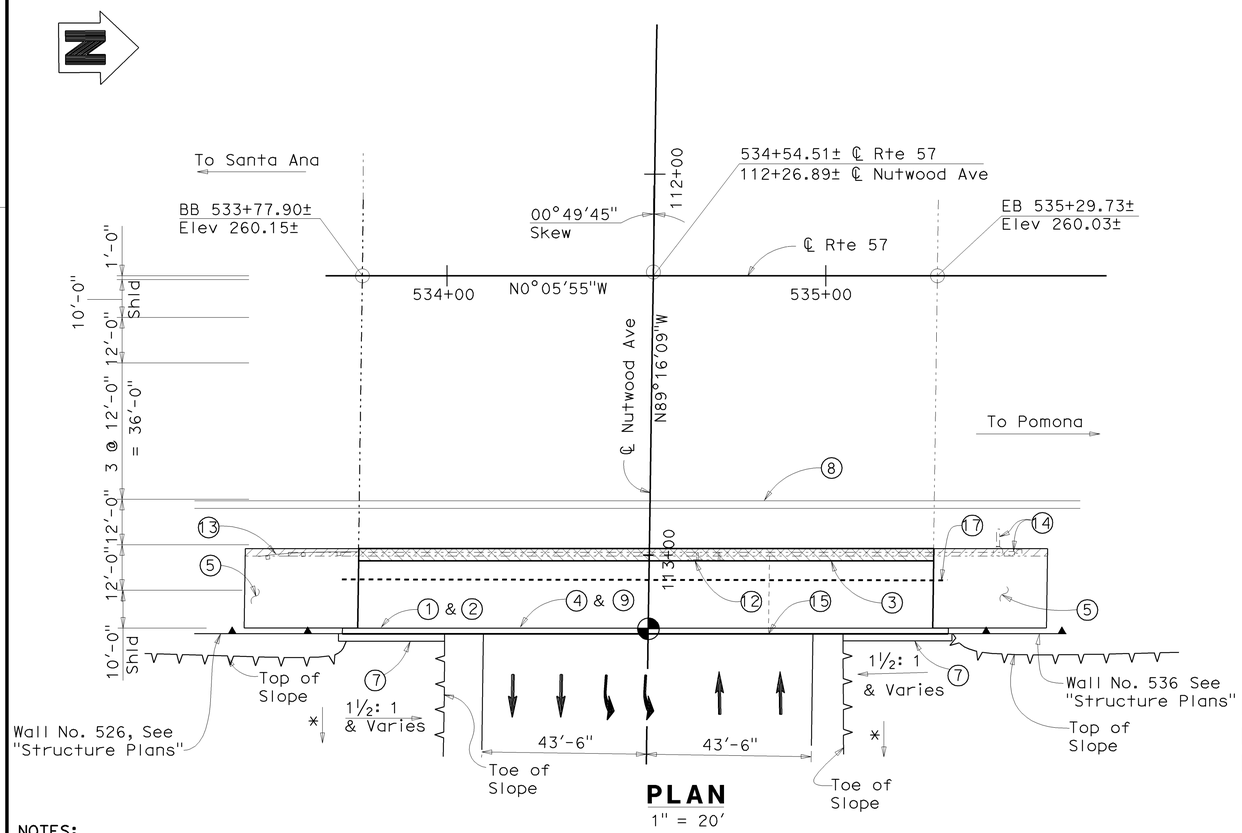

PLAN
1" = 20'

NOTES:
THE CONTRACTOR SHALL VERIFY ALL CONTROLLING FIELD DIMENSIONS BEFORE ORDERING OR FABRICATING ANY MATERIAL.

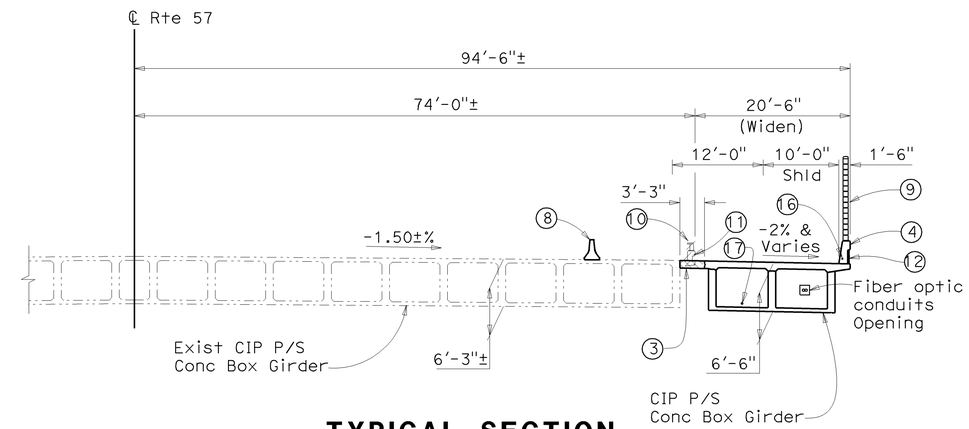

TYPICAL SECTION
1" = 10'

LEGEND

1. Paint "Bridge No. 55-0464" and year constructed/Widened
2. Paint "Nutwood Ave UC"
3. Closure Pour
4. Conc Barrier Type 736 (Mod)
5. Structure Approach, Type N(30D)
7. Slope Paving
8. Temporary Railing (Type K), See "Road Plans"
9. Soundwall (Masonry Block)
10. Existing barrier railling type 9 to be removed
11. Exist Fiber Optic Conduits to be relocated
12. Fractured Rib Texture
13. Exist MBGR to be removed, see "Road Plans".
14. Exist Utilities and sign structure to be removed, see "Road Plans".
15. Pull box barrier, for location and conduit, see "Lighting Plans"
16. 2" Sprinkler control conduit, see "Irrigation Plans"
17. 3" Water Supply Line, see "Irrigation Plans".

Indicates Point of Minimum Vertical Clearance
Indicates Closure Pour
Indicates Bridge Removal (Portion)
Architecture treatment
Indicates Existing Structure
Indicates New Structure
* Match Exist Slope

NUTWOOD AVENUE UC — BRIDGE NO 55-0464

QUANTITIES

BRIDGE REMOVAL (PORTION), LOCATION G	LUMP	SUM
JACKING SUPERSTRUCTURE	LUMP	SUM
STRUCTURE EXCAVATION (BRIDGE)	268	CY
STRUCTURE BACKFILL (BRIDGE)	203	CY
WATER SUPPLY LINE (BRIDGE)	222	LF
24" CAST-IN-DRILLED-HOLE CONCRETE PILING	707	LF
PRESTRESSING CAST-IN-PLACE CONCRETE	LUMP	SUM
STRUCTURAL CONCRETE, BRIDGE FOOTING	60	CY
STRUCTURAL CONCRETE, BRIDGE	378	CY
STRUCTURAL CONCRETE, APPROACH SLAB (TYPE N)	50	CY
FRACTURED RIB TEXTURE	116	SQFT
DRILL AND BOND DOWEL	123	LF
SOUND WALL (MASONRY BLOCK)	1,834	SQFT
JOINT SEAL (MR 1")	45	LF
BAR REINFORCING STEEL (BRIDGE)	114,798	LB
FURNISH SIGN STRUCTURE (BRIDGE MOUNTED WITH WALKWAY)	2,066	LB
INSTALL SIGN STRUCTURE (BRIDGE MOUNTED WITH WALKWAY)	2,066	LB
SLOPE PAVING (CONCRETE)	19	CY
SLOPE PAVING (AESTHETIC TREATMENT)	1,578	SQFT
MISCELLANEOUS METAL (BRIDGE)	400	LB
CONCRETE BARRIER (TYPE 736A MODIFIED)	8	LF
CONCRETE BARRIER (TYPE 736 MODIFIED)	152	LF

DESIGN OVERSIGHT — Jon Hamaguchi
6-24-09
SIGN OFF DATE

	BY	CHECKED			
DESIGN	R. Barton	M. Carbuccia	LRFD DESIGN	LIVE LOADING: HL93 W/'LOW-BOY' AND PERMIT DESIGN VEHICLE	
DETAILS	I. Karkoutli	M. Carbuccia	LAYOUT	I. Karkoutli	Alaedin Moubayed
QUANTITIES	R. Barton	L. Khaleghi	SPECIFICATIONS	S. Sheikh	PLANS AND SPECS COMPARED S. Sheikh

PREPARED FOR THE STATE OF CALIFORNIA DEPARTMENT OF TRANSPORTATION

Alaedin Moubayed
PROJECT ENGINEER

BRIDGE NO. 55-0464
POST MILES 17.6

NUTWOOD AVE UC (WIDEN)
GENERAL PLAN

DESIGN GENERAL PLAN SHEET (ENGLISH) (REV. 2/25/05)

ORIGINAL SCALE IN INCHES FOR REDUCED PLANS 0 1 2 3

CU 12
EA 0F0311

DISREGARD PRINTS BEARING EARLIER REVISION DATES

REVISION DATES (PRELIMINARY STAGE ONLY)

SHEET 1 OF 26

FILE => 55-0464-a-gp01.dgn

USERNAME => trmikest DATE PLOTTED => 17-DEC-2009 TIME PLOTTED => 08:51

DIST	COUNTY	ROUTE	POST MILES TOTAL PROJECT	SHEET No	TOTAL SHEETS
12	Ora	57	16.2/18.6	921	960

Rob Barton 6/15/09
REGISTERED CIVIL ENGINEER DATE

12-14-09
PLANS APPROVAL DATE

REGISTERED PROFESSIONAL ENGINEER Robert T. Barton No. C68789 Exp. 9/30/09 CIVIL STATE OF CALIFORNIA

The State of California or its officers or agents shall not be responsible for the accuracy or completeness of electronic copies of this plan sheet.

OCTA
550 SOUTH MAIN STREET
ORANGE, CA 92863

PBS&J
625 THE CITY DRIVE SOUTH, SUITE 200
ORANGE, CA 92868

GENERAL NOTES
LOAD AND RESISTANCE FACTOR DESIGN

Design:

AASHTO LRFD Bridge Design Specification, 3rd edition with interims through 2006 and the Caltrans Amendments 3.06.01; except that abutment, earth retaining systems, details taken from Standard plans March 2006 and earlier versions, and standard Bridge details XS sheets, are designed using Bridge Design Specifications ('96 AASHTO w/Revisions by Caltrans).

Seismic Design:

Caltrans Seismic Design Criteria (SDC), Version 1.4
June 2006

Dead Load:

Includes 35 psf for future wearing surface

Live Load:

HL-93 and permit design load

Seismic Loading:

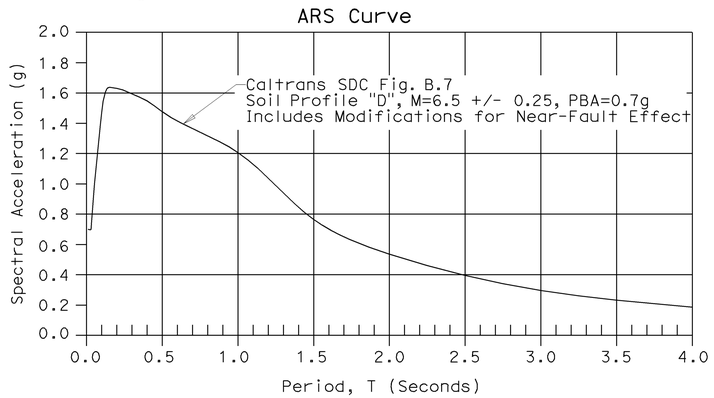

Reinforced Concrete:

REINFORCED CONCRETE (LRFD):
fy = 60 ksi
f'c = See "Concrete Strength and Type Limits"

INDEX TO PLANS

SHEET NO.	TITLE
1	General Plan
2	Index to Plans
3	Construction Sequence No. 1
4	Construction Sequence No. 2
5	Bridge Removal Details
6	Deck Elevations
7	Foundation Plan
8	Abutment Layout
9	Abutment Details No. 1
10	Abutment Details No. 2
11	Typical Section
12	Girder Layout
13	Additional Soffit Reinforcement
14	Structure Approach Type N(30D)
15	Structure Approach Drainage Details
16	Concrete Barrier Type 736 (Mod)
17	Fiber Optic Conduits Details
18	Bridge Mounted Sign Details No. 1
19	Bridge Mounted Sign Details No. 2
20	Soundwall-Masonry Block
21	Slope Paving
22	Slope Paving Aesthetic Treatment
23	Log of Test Borings 1 of 3
24	Log of Test Borings 2 of 3
25	Log of Test Borings 3 of 3
26	As-Built Log of Test Borings

STANDARD PLANS DATED MAY 2006

	A10A	Acronyms and Abbreviations (Sheet 1 of 2)
	A10B	Acronyms and Abbreviations (Sheet 2 of 2)
	A10C	Symbols (Sheet 1 of 2)
	A10D	Symbols (Sheet 2 of 2)
	A62C	Limits of Payment for Excavation and Backfill - Bridge
	B0-1	Bridge Details
	B0-3	Bridge Details
	B0-5	Bridge Details
	B0-13	Bridge Details
	B8-5	Cast-in-Place Prestressed Girder Details
	B2-3	16" and 24" Cast-In-Drilled-Hole Concrete Pile
RSP	B6-21	Joint Seals (Maximum Movement Rating = 2")
	B7-1	Box Girder Details
	B7-10	Utility Opening Box Girder
		Concrete Barrier Type 736
	B11-56	Concrete Barrier Type 736
	B14-3	Communication and Sprinkler Control Conduits (Conduit less Than Size 4")
	B14-4	Water Supply Line (Bridge) (Pipe Size Less Than 4")
	B14-5	Water Supply Line (Details) (Pipe Size Less Than 4")
	T-3	Temporary Railing (Type K)

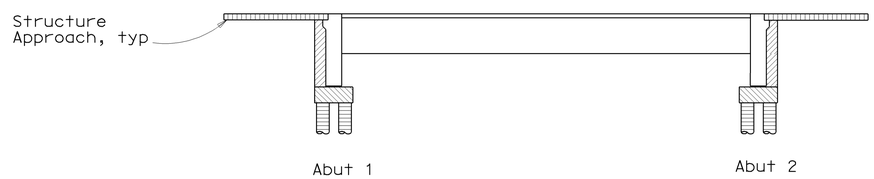

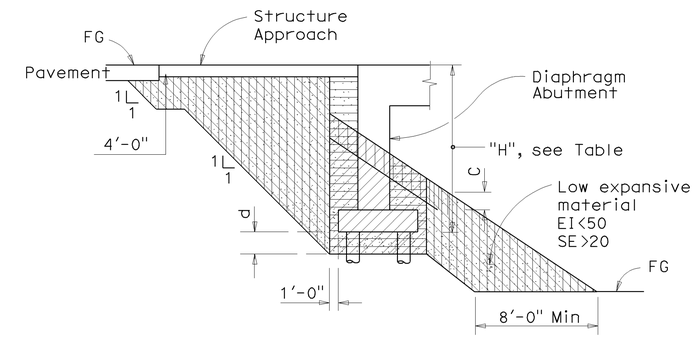

LEGEND

- Structural Concrete, Bridge (f'c =6.0 ksi @ 28 days)
- Structural Concrete, Bridge (f'c =4.0 ksi @ 28 days)
- Structural Concrete, Approach Slab
- CIDH Concrete, Pile (f'c =4.0 ksi @ 28 days)
- Structural Concrete, Bridge Footing

LEGEND

- Low Expansive Material EI<50 and SE>20
- Structure Excavation (Bridge)
- Structure Backfill (Bridge)
- Roadway Excavation (see "Road Plans")
- Roadway Abutment (See "Road Plans")

PLAN SYMBOLS

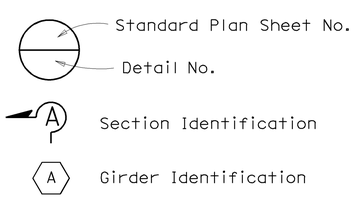

CONCRETE STRENGTH AND TYPE LIMITS

No Scale

H	d
< 16'-0"	4'-0"
> 16'-0"	0'-0"

NOTE:

Transverse limit of Low Expansive Material shall be 1'-0" from edges of Abutment footing to end of exist Abutment stem.

LIMITS OF EXPANSIVE MATERIAL IN BRIDGE EMBANKMENT

No Scale

NOTE:
THE CONTRACTOR SHALL VERIFY ALL CONTROLLING FIELD DIMENSIONS BEFORE ORDERING OR FABRICATING ANY MATERIAL.

Jon Hamaguchi
DESIGN OVERSIGHT Jon Hamaguchi
6-24-09
SIGN OFF DATE

	BY	CHECKED
DESIGN	R. Barton	M. Carbuccia
DETAILS	I. Karkoutli	M. Carbuccia
QUANTITIES	R. Barton	L. Khaleghi

PREPARED FOR THE STATE OF CALIFORNIA DEPARTMENT OF TRANSPORTATION

Alaedin Moubayed
PROJECT ENGINEER

BRIDGE NO. 55-0464
POST MILE 17.6

NUTWOOD AVENUE UC (WIDEN)
INDEX TO PLANS

DESIGN DETAIL SHEET (ENGLISH) (REV. 2/25/05)

ORIGINAL SCALE IN INCHES FOR REDUCED PLANS 0 1 2 3

CU 12
EA 0F0311

DISREGARD PRINTS BEARING EARLIER REVISION DATES

REVISION DATES (PRELIMINARY STAGE ONLY)

SHEET 2 OF 26

FILE => 55-0464-a-itp.dgn

USERNAME => trmirkes DATE PLOTTED => 17-DEC-2009 TIME PLOTTED => 08:51

DIST	COUNTY	ROUTE	POST MILES TOTAL PROJECT	SHEET No	TOTAL SHEETS
12	Ora	57	16.2/18.6	922	960

Rob Barton 6/15/09
REGISTERED CIVIL ENGINEER DATE

12-14-09
PLANS APPROVAL DATE

REGISTERED PROFESSIONAL ENGINEER
Robert T. Barton
No. C68789
Exp. 9/30/09
CIVIL
STATE OF CALIFORNIA

The State of California or its officers or agents shall not be responsible for the accuracy or completeness of electronic copies of this plan sheet.

OCTA
550 SOUTH MAIN STREET
ORANGE, CA 92863

PBS&J
625 THE CITY DRIVE SOUTH, SUITE 200
ORANGE, CA 92868

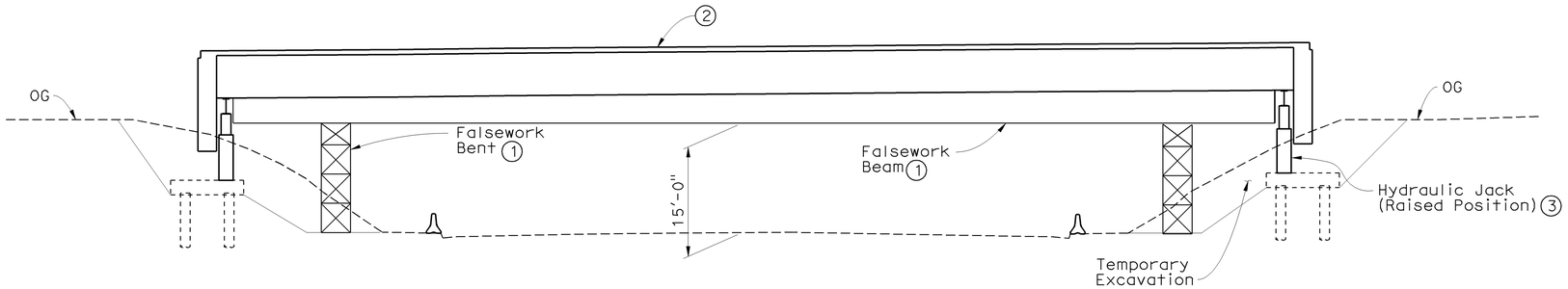

CAST HIGH ELEVATION

No Scale

CONSTRUCTION SEQUENCE:

1. Erect falsework bents and beam. Provide minimum vertical clearance of 15' over roadway.
2. Build superstructure and diaphragm abutment and stress superstructure.
3. Engage hydraulic jack. Remove falsework beam and bents.
4. Lower bridge into final position.
5. Cast internal shear key and return wall.
6. Cast deck and abutment closure pour.

JACKING LOADS*

	Abut 1	Abut 2
Vertical (kips)	533.4	533.4
Horizontal (kips)	53.3	53.3

* Unfactored Dead loads includes: Girder, Top & Bottom slabs and Diaphragms

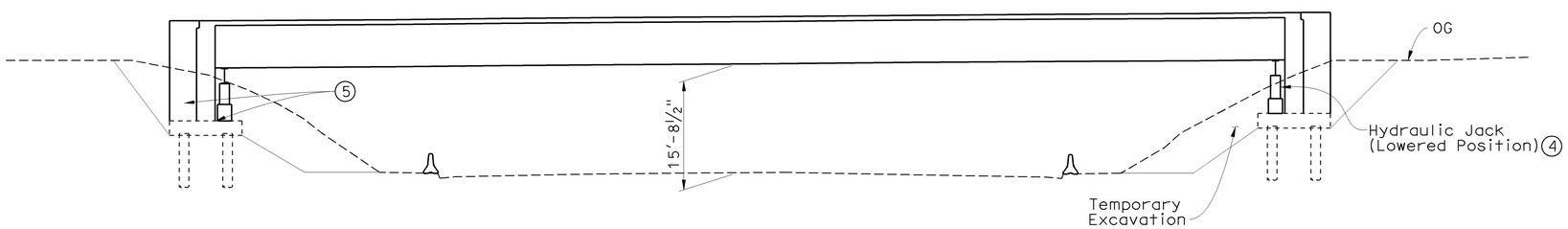

LOWERED INTO FINAL POSITION ELEVATION

No Scale

NOTE:
THE CONTRACTOR SHALL VERIFY ALL CONTROLLING FIELD DIMENSIONS BEFORE ORDERING OR FABRICATING ANY MATERIAL.

Jon Hamaguchi
DESIGN OVERSIGHT Jon Hamaguchi
6-24-09
SIGN OFF DATE

	BY	CHECKED
DESIGN	R. Barton	M. Carbuccia
DETAILS	I. Karkoutli	M. Carbuccia
QUANTITIES	R. Barton	L. Khaleghi

PREPARED FOR THE STATE OF CALIFORNIA DEPARTMENT OF TRANSPORTATION

Alaedin Moubayed
PROJECT ENGINEER

BRIDGE NO. 55-0464
POST MILE 17.6

NUTWOOD AVENUE UC (WIDEN)
CONSTRUCTION SEQUENCE NO. 1

DESIGN DETAIL SHEET (ENGLISH) (REV. 2/25/05)

ORIGINAL SCALE IN INCHES FOR REDUCED PLANS 0 1 2 3

CU 12
EA 0F0311

DISREGARD PRINTS BEARING EARLIER REVISION DATES

REVISION DATES (PRELIMINARY STAGE ONLY)

SHEET 3 OF 26

FILE => 55-0464-c-cs01.dgn

USERNAME => trrlim DATE PLOTTED => 17-DEC-2009 TIME PLOTTED => 10:41

DIST	COUNTY	ROUTE	POST MILES TOTAL PROJECT	SHEET No	TOTAL SHEETS
12	Ora	57	16.2/18.6	923	960

Rob Barton 6/15/09
REGISTERED CIVIL ENGINEER DATE

12-14-09
PLANS APPROVAL DATE

REGISTERED PROFESSIONAL ENGINEER
Robert T. Barton
No. C68789
Exp. 9/30/09
CIVIL
STATE OF CALIFORNIA

The State of California or its officers or agents shall not be responsible for the accuracy or completeness of electronic copies of this plan sheet.

OCTA
550 SOUTH MAIN STREET
ORANGE, CA 92863

PBS&J
625 THE CITY DRIVE SOUTH, SUITE 200
ORANGE, CA 92868

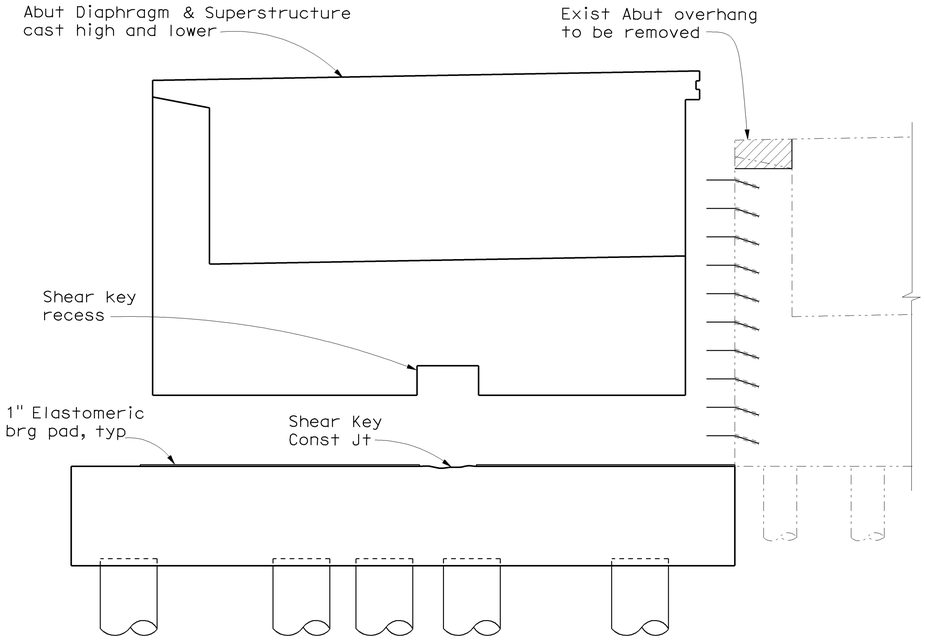

STEP 1 CONSTRUCTION : CAST HIGH

3/8" = 1'-0"

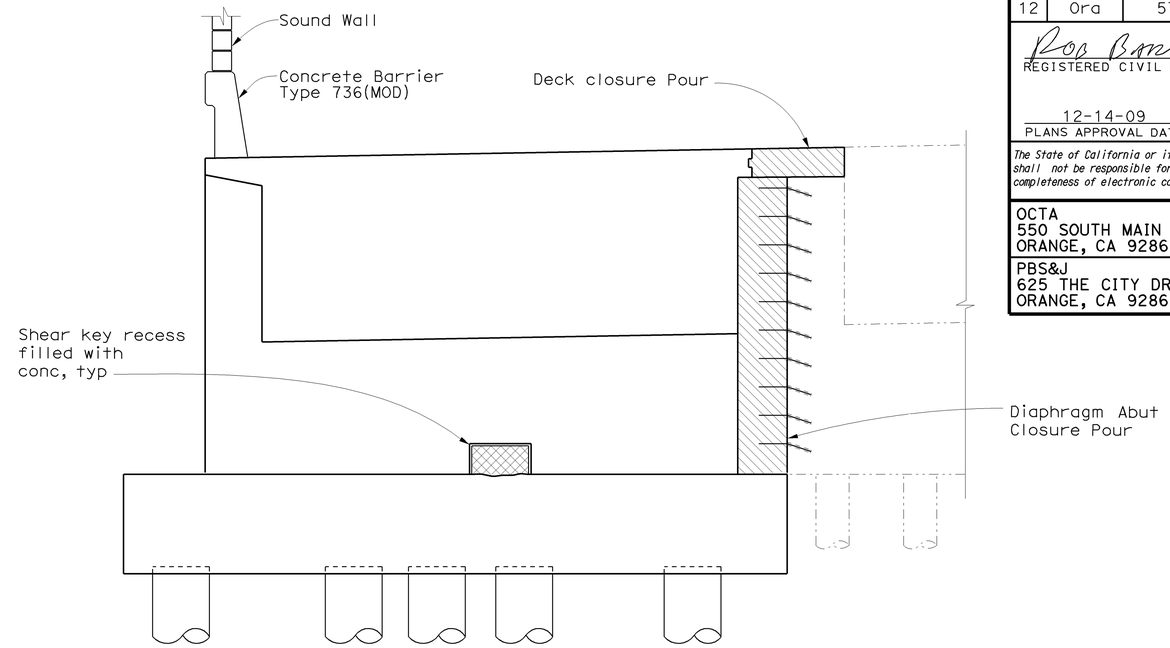

STEP 3 CONSTRUCTION : CLOSURE POUR, BARRIER, SOUND WALL,SHEAR KEY

3/8" = 1'-0"

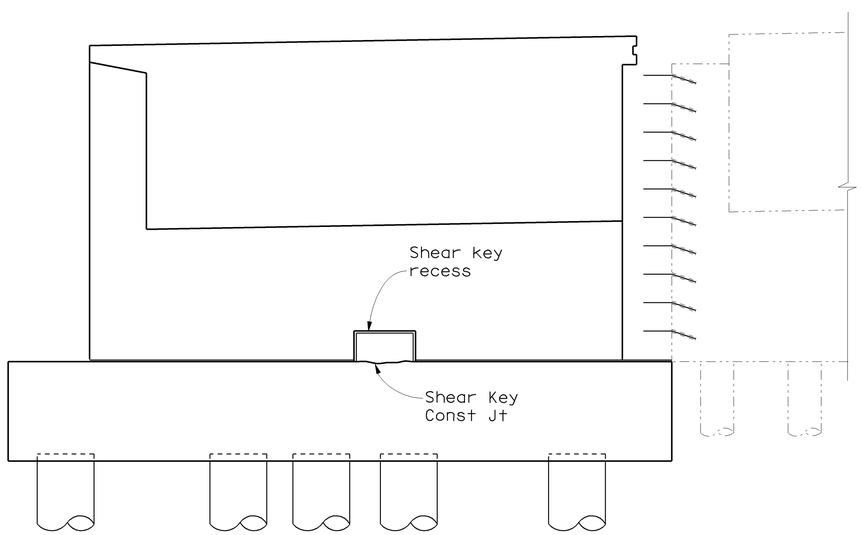

STEP 2 CONSTRUCTION : LOWERING

3/8" = 1'-0"

NOTES

1. Shear key recess to be filled with concrete after lowering operation is complete.
2. Raised position shown for reference, the contractor shall determine the depth of false work and minimum traffic opening clearances required by Caltrans during construction for actual raised position.
3. See "Falsework Release" Notes in "Typical Section" Sheet

LEGEND

- Indicates Closure Pour
- Indicates Bridge Removal (Portion)
- Indicates Recess Conc Filling
- Indicates Exist Structure
- Indicates New Structure

NOTE:
THE CONTRACTOR SHALL VERIFY ALL CONTROLLING FIELD DIMENSIONS BEFORE ORDERING OR FABRICATING ANY MATERIAL.

Jon Hamaguchi
DESIGN OVERSIGHT Jon Hamaguchi
6-24-09
SIGN OFF DATE

	BY	CHECKED
DESIGN	R. Barton	M. Carbuccia
DETAILS	I. Karkoutli	M. Carbuccia
QUANTITIES	R. Barton	L. Khaleghi

PREPARED FOR THE STATE OF CALIFORNIA DEPARTMENT OF TRANSPORTATION

Alaedin Moubayed
PROJECT ENGINEER

BRIDGE NO. 55-0464
POST MILE 17.6

NUTWOOD AVENUE UC (WIDEN)
CONSTRUCTION SEQUENCE NO. 2

DESIGN DETAIL SHEET (ENGLISH) (REV. 2/25/05)

ORIGINAL SCALE IN INCHES FOR REDUCED PLANS 0 1 2 3

CU 12
EA 0F0311

DISREGARD PRINTS BEARING EARLIER REVISION DATES

REVISION DATES (PRELIMINARY STAGE ONLY)

SHEET 4 OF 26

FILE => 55-0464-c-cs02.dgn

USERNAME => trrim DATE PLOTTED => 17-DEC-2009 TIME PLOTTED => 10:41

DIST	COUNTY	ROUTE	POST MILES TOTAL PROJECT	SHEET No	TOTAL SHEETS
12	Ora	57	16.2/18.6	924	960

Rob Barton 6/15/09
REGISTERED CIVIL ENGINEER DATE

12-14-09
PLANS APPROVAL DATE

REGISTERED PROFESSIONAL ENGINEER
Robert T. Barton
No. C68789
Exp. 9/30/09
CIVIL
STATE OF CALIFORNIA

The State of California or its officers or agents shall not be responsible for the accuracy or completeness of electronic copies of this plan sheet.

OCTA
550 SOUTH MAIN STREET
ORANGE, CA 92863

PBS&J
625 THE CITY DRIVE SOUTH, SUITE 200
ORANGE, CA 92868

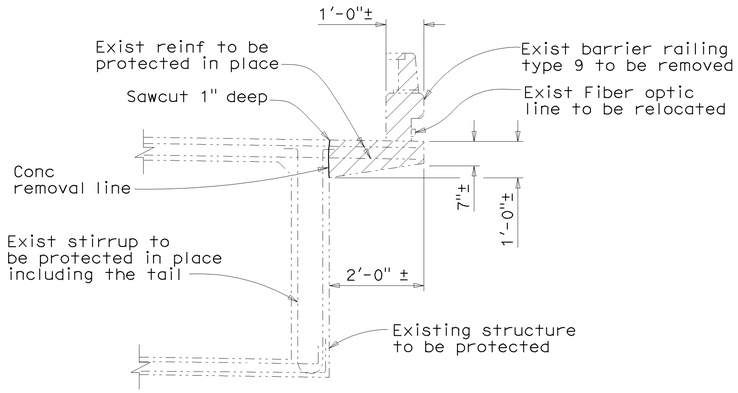

OVERHANG REMOVAL DETAILS

No Scale

LEGEND

Indicates Bridge removal (Portion)

Indicates Existing structure

NOTES:

1. The limit of overhang removal is from BB to EB
2. The limit of barrier removal is between ends of WW.

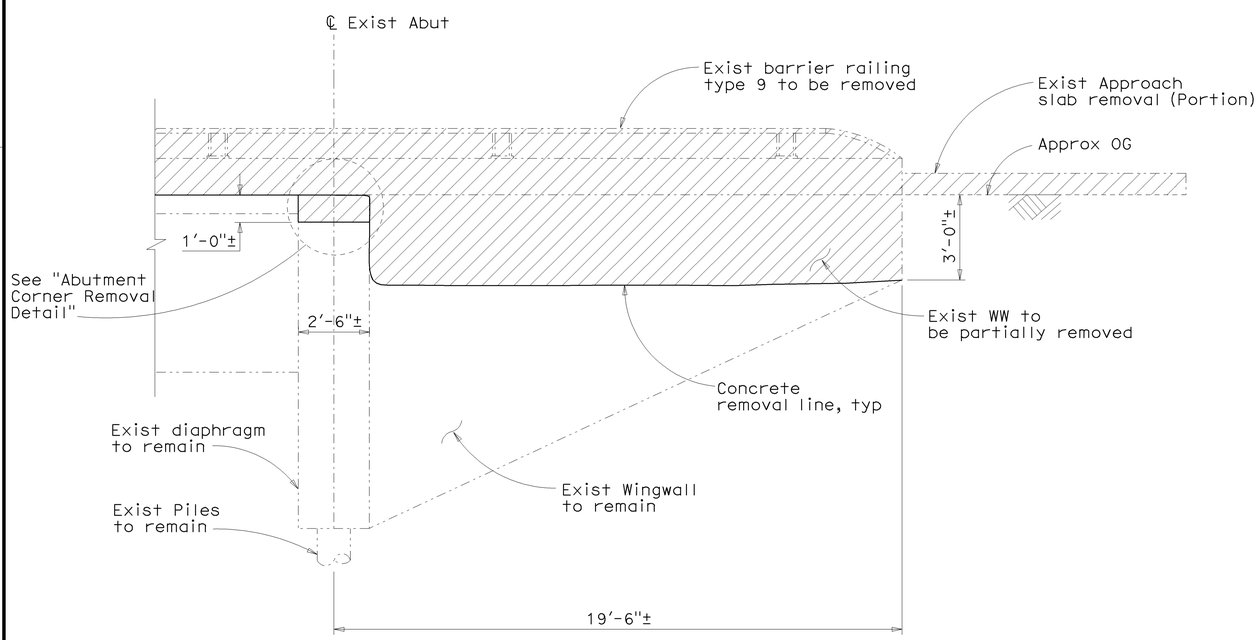

ABUTMENT AND WINGWALL REMOVAL DETAILS

No Scale

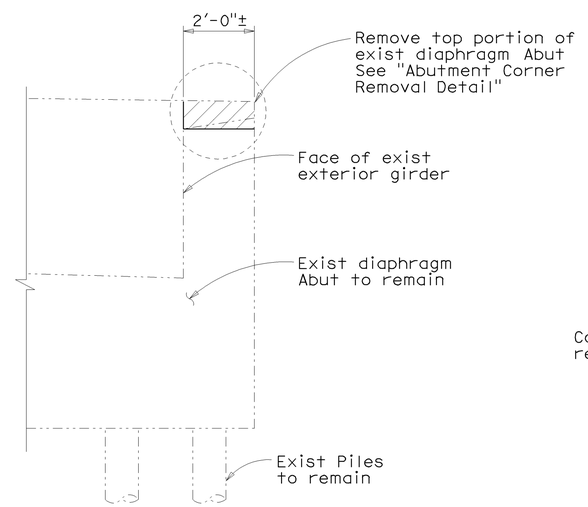

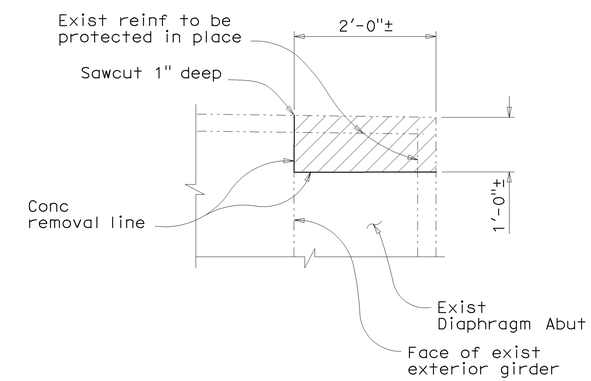

ABUTMENT CORNER REMOVAL DETAIL

No Scale

NOTE:
THE CONTRACTOR SHALL VERIFY ALL CONTROLLING FIELD DIMENSIONS BEFORE ORDERING OR FABRICATING ANY MATERIAL.

Jon Hamaguchi
DESIGN OVERSIGHT Jon Hamaguchi
6-24-09
SIGN OFF DATE

	BY	CHECKED
DESIGN	R. Barton	M. Carbuccia
DETAILS	I. Karkoutli	M. Carbuccia
QUANTITIES	R. Barton	L. Khaleghi

PREPARED FOR THE STATE OF CALIFORNIA DEPARTMENT OF TRANSPORTATION

Alaedin Moubayed
PROJECT ENGINEER

BRIDGE NO. 55-0464
POST MILE 17.6

NUTWOOD AVENUE UC (WIDEN)
BRIDGE REMOVAL DETAILS

DESIGN DETAIL SHEET (ENGLISH) (REV. 2/25/05)

ORIGINAL SCALE IN INCHES FOR REDUCED PLANS 0 1 2 3

CU 12
EA 0F0311

DISREGARD PRINTS BEARING EARLIER REVISION DATES

REVISION DATES (PRELIMINARY STAGE ONLY)

SHEET 5 OF 26

FILE => 55-0464-d-brd.dgn

USERNAME => rtrim DATE PLOTTED => 17-DEC-2009 TIME PLOTTED => 10:41

DIST	COUNTY	ROUTE	POST MILES TOTAL PROJECT	SHEET No	TOTAL SHEETS
12	Ora	57	16.2/18.6	925	960

Rob Barton 6/15/09
REGISTERED CIVIL ENGINEER DATE

12-14-09
PLANS APPROVAL DATE

REGISTERED PROFESSIONAL ENGINEER
Robert T. Barton
No. C68789
Exp. 9/30/09
CIVIL
STATE OF CALIFORNIA

The State of California or its officers or agents shall not be responsible for the accuracy or completeness of electronic copies of this plan sheet.

OCTA
550 SOUTH MAIN STREET
ORANGE, CA 92863

PBS&J
625 THE CITY DRIVE SOUTH, SUITE 200
ORANGE, CA 92868

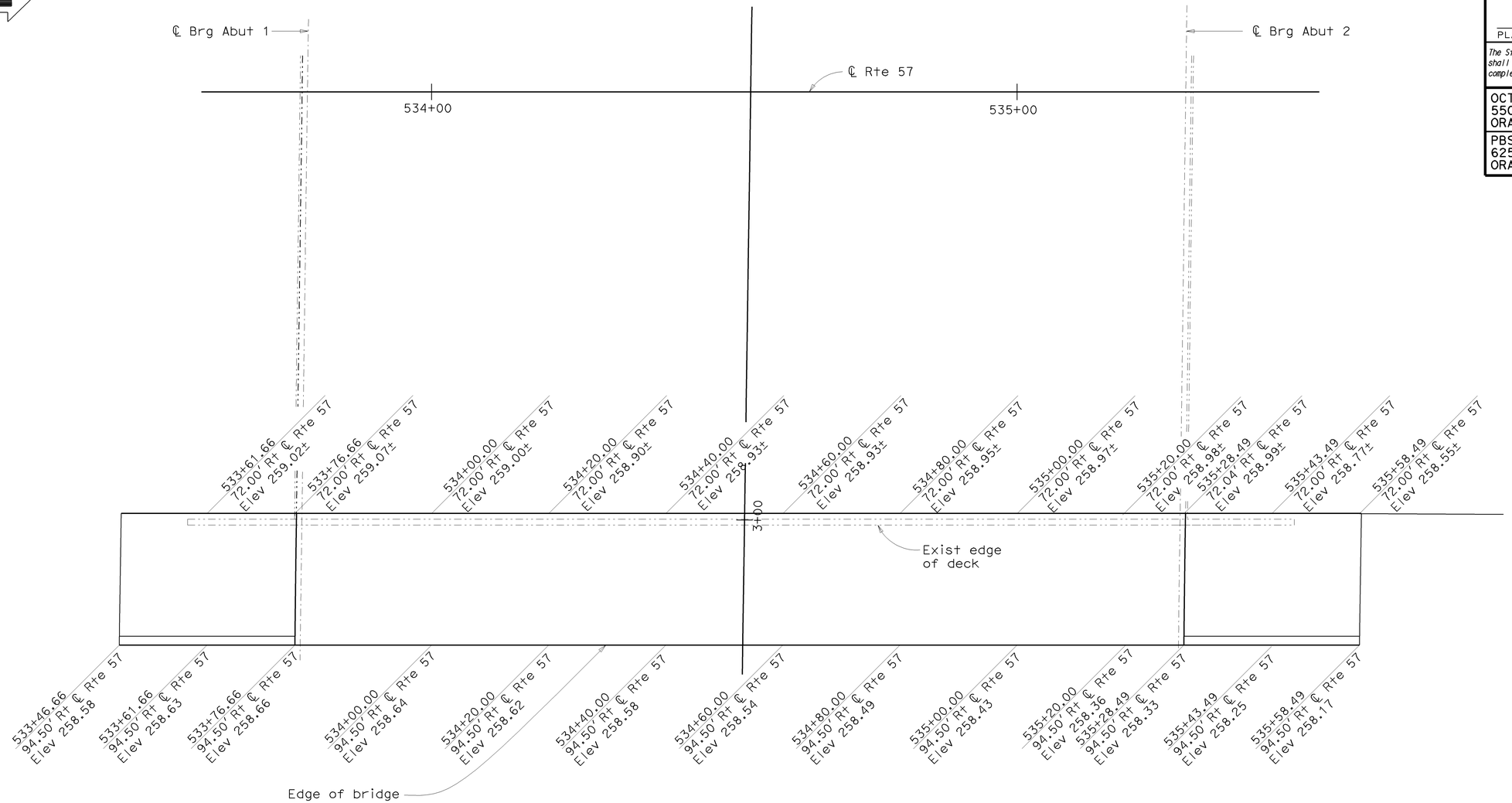

PLAN
1" = 10'

NOTE:
THE CONTRACTOR SHALL VERIFY ALL CONTROLLING FIELD DIMENSIONS BEFORE ORDERING OR FABRICATING ANY MATERIAL.

Jon Hanaguchi
DESIGN OVERSIGHT Jon Hanaguchi
6-24-09
SIGN OFF DATE

	BY	CHECKED
DESIGN	R. Barton	M. Carbuccia
DETAILS	I. Karkoutli	M. Carbuccia
QUANTITIES	R. Barton	L. Khaleghi

PREPARED FOR THE
STATE OF CALIFORNIA
DEPARTMENT OF TRANSPORTATION

Alaedin Moubayed
PROJECT ENGINEER

BRIDGE NO. 55-0464
POST MILE 17.6

NUTWOOD AVENUE UC (WIDEN)
DECK ELEVATIONS

DESIGN DETAIL SHEET (ENGLISH) (REV. 2/25/05)

ORIGINAL SCALE IN INCHES FOR REDUCED PLANS 0 1 2 3

CU 12
EA 0F0311

DISREGARD PRINTS BEARING EARLIER REVISION DATES

REVISION DATES (PRELIMINARY STAGE ONLY)

SHEET 6 OF 26

FILE => 55-0464-d-de01.dgn

USERNAME => rtrim DATE PLOTTED => 17-DEC-2009 TIME PLOTTED => 10:41

DIST	COUNTY	ROUTE	POST MILES TOTAL PROJECT	SHEET No	TOTAL
12	Ora	57	16.2/18.6	926	960

Rob Barton 6/15/09
REGISTERED CIVIL ENGINEER DATE

12-14-09
PLANS APPROVAL DATE

REGISTERED PROFESSIONAL ENGINEER Robert T. Barton No. C68789 Exp. 9/30/09 CIVIL STATE OF CALIFORNIA

The State of California or its officers or agents shall not be responsible for the accuracy or completeness of electronic copies of this plan sheet.

OCTA
550 S Main Street
Orange, CA 92868

PBS&J
625 The City Drive South, Suite 200
Orange, CA 92868

NOTES

1. All piles not shown
2. Location of exist structure foundations is approximate.

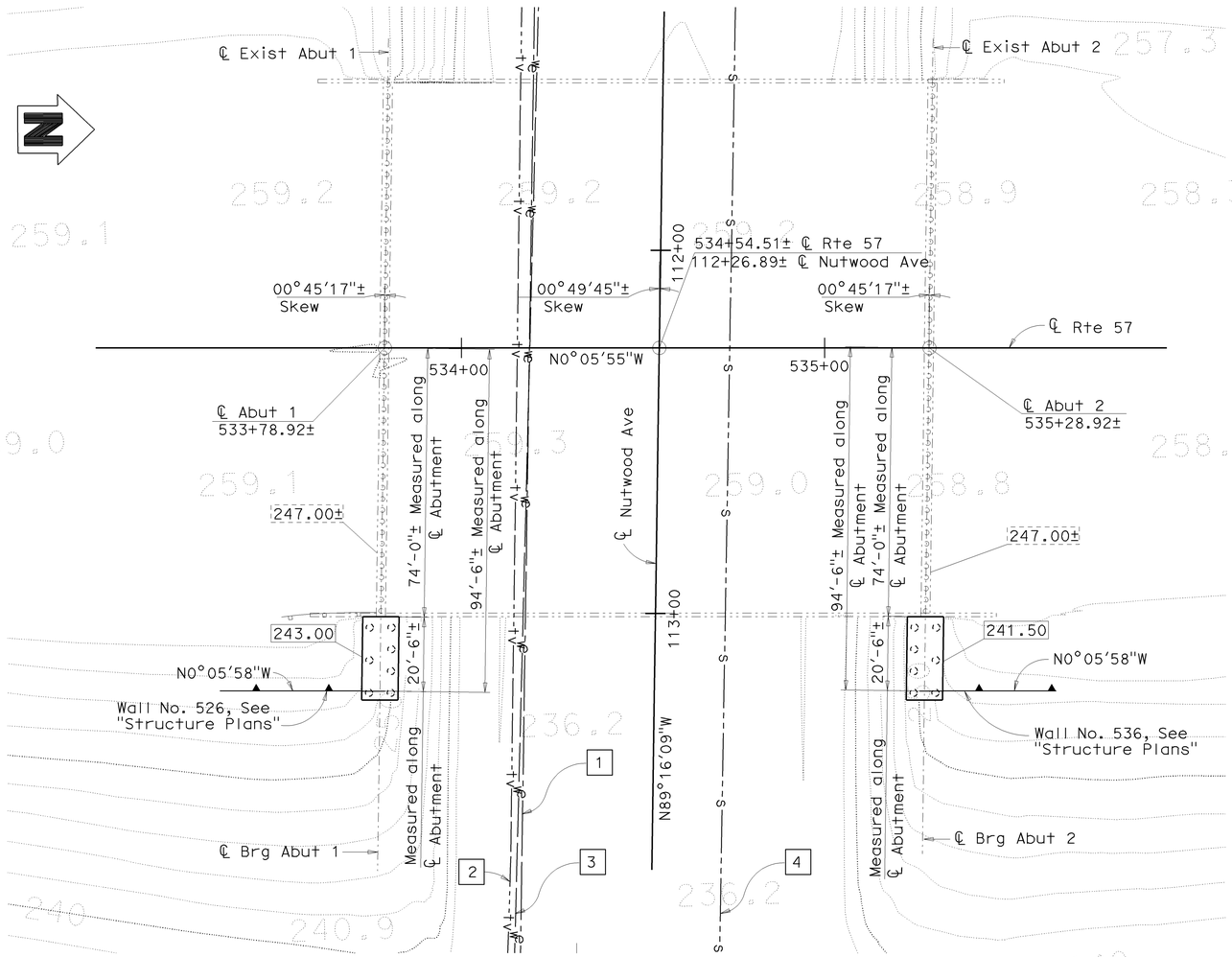

PLAN
1" = 20'

LEGEND

XX.XX	Indicates bottom of footing elevation
XX.XX±	Indicates bottom of exist footing elevation
	Indicates Exist Piling
	Indicates new CIDH Pile
	Indicates Exist Structure
	Indicates New Structure

UTILITY NOTES

1. Exist SCE Electrical U.G., So Cal Edison
2. Exist 0.75 U.G. P3 Cable, Time Warner Cable
3. Exist Water Line
4. Exist Sewer Line

PILE DATA TABLE

Location	Pile Type	Nominal Resistance		Design Tip Elevation (ft)	Specified Tip Elevation (ft)	Nominal Driving Resistance (kips)
		Compression (kips)	Tension (kips)			
Abut 1	24" CIDH	400	0	+193(a) +209(c) +213(d)	+193	N/A
Abut 2	24" CIDH	400	0	+191(a) +207(c) +211(d)	+191	N/A

Note: Design tip elevation are controlled by:
(a) Compression,(b) Tension, (c) Settlement,and (d) Lateral Loads

BASIS OF COORDINATES:

Bearings and Coordinates as shown hereon are in terms of the California Coordinate System of 1983 (CCS83, Epoch 1991.35), Zone 6; based locally upon the following Control Stations as published by the County of Orange:

Name	Northing (ft.)-GRID	Easting (ft.)-GRID
2001 OCS 3282	2247998.84	6069149.29
2017 OCS 0560	2260355.81	6065880.43
2023 OCS 0111	2270990.23	6066809.18

All Coordinates and Distances are in terms of the U.S. Survey Foot, 1 meter = 39.37/12 feet

BENCHMARKS:

Designation: 1L-54-82 Elev = 153.171
Described by OCS 2002 - Found 3¾" OCS Aluminum Benchmark Disk Stamped "1L-54-82", set in the Top of a 6 in. by 6 in. Concrete Post. Monument is located along the Westerly Levee of the Santa Ana River, 0.25 Miles Northerly along Levee from the Centerline of Orangewood Avenue, 200 ft. Northeasterly of the Easterly Leg of the Anaheim Angels 200 ft. tall sign, 69 ft. Westerly of the Centerline of the Bike Trail and 1.5 ft. Westerly of a Steel OCS Witness Post. Monument is set 0.3 below the Ground.

Designation: 2G-25-70 Elev = 275.872
Described by OCS 2003 - Found 3¾" OCS Aluminum Benchmark Disk Stamped "2G-25-70", set in the Southeasterly Corner of a 4 ft. by 6 ft. Concrete Catch Basin. Monument is Located in the Northwesterly Corner of the Intersection of Yorba Linda Boulevard and Deerpark Drive, 75 ft. Westerly of the Centerline of Deerpark and 46 ft. Northerly of the Centerline of Yorba Linda. Monument is set Level with the Sidewalk.

Jim Chang 6/15/09
GEOTECHNICAL PROFESSIONAL APPROVAL DATE

NOTES:
THE CONTRACTOR SHALL VERIFY ALL CONTROLLING FIELD DIMENSIONS BEFORE ORDERING OR FABRICATING ANY MATERIAL.

Jon Hamaguchi
DESIGN OVERSIGHT Jon Hamaguchi
6-24-09
SIGN OFF DATE

SCALE:	VERT.DATUM NAVD 88	HORZ.DATUM CCS83	
PHOTOGRAMMETRY AS OF: 12-02-2007	ALIGNMENT TIES		
SURVEYED BY B. Madigan	DRAFTED BY B. Zeman		
FIELD CHECKED BY B. Cox	CHECKED BY T. Rai		

DESIGN	BY R. Barton	CHECKED M. Carbuccia
DETAILS	BY I. Karkoutli	CHECKED M. Carbuccia
QUANTITIES	BY R. Barton	CHECKED L. Khaleghi

PREPARED FOR THE STATE OF CALIFORNIA DEPARTMENT OF TRANSPORTATION

Alaedin Moubayed
PROJECT ENGINEER

BRIDGE NO. 55-0464
POST MILE 17.6

NUTWOOD AVENUE UC (WIDEN)
FOUNDATION PLAN

FOUNDATION PLAN SHEET (ENGLISH) (REV. 2-25-05)

ORIGINAL SCALE IN INCHES FOR REDUCED PLANS 0 1 2 3

CU 12
EA 0F0311

DISREGARD PRINTS BEARING EARLIER REVISION DATES

REVISION DATES (PRELIMINARY STAGE ONLY)

SHEET 7 OF 26

FILE => 55-0464-e-fdp101.dgn

USERNAME => trlim DATE PLOTTED => 17-DEC-2009 TIME PLOTTED => 11:17

DIST	COUNTY	ROUTE	POST MILES TOTAL PROJECT	SHEET No	TOTAL SHEETS
12	Ora	57	16.2/18.6	927	960

REGISTERED CIVIL ENGINEER 6/15/09 DATE

12-14-09
PLANS APPROVAL DATE

The State of California or its officers or agents shall not be responsible for the accuracy or completeness of electronic copies of this plan sheet.

REGISTERED PROFESSIONAL ENGINEER Robert T. Barton No. C68789 Exp. 9/30/09 CIVIL STATE OF CALIFORNIA

OCTA
550 SOUTH MAIN STREET
ORANGE, CA 92863

PBS&J
625 THE CITY DRIVE SOUTH, SUITE 200
ORANGE, CA 92868

NOTES

1. Abutment 1 is shown, Abutment 2 similar.
2. For sections "B-B", see "Abutment Details No. 1" sheet.
3. For sections "C-C", see "Abutment Details No. 2" sheet.
4. For "Detail 1", see "Abutment Details No. 2" sheet.
5. See "Drainage Details" on "Structure Approach Drainage Details" sheet.
6. For Shear Key detail, see "Abutment Details No. 2" sheet.
7. For Abutment removal details, see "Bridge Removal Details" sheet.
8. For girder prestress grillage and block out see "End Diaphragm Detail" in "Typical Section" sheet
9. For Drill & Bond Dowels Details, see Section "C-C" on "Abutment Details No. 2" Sheet
10. Contractor to use Joint Seal type to match existing.

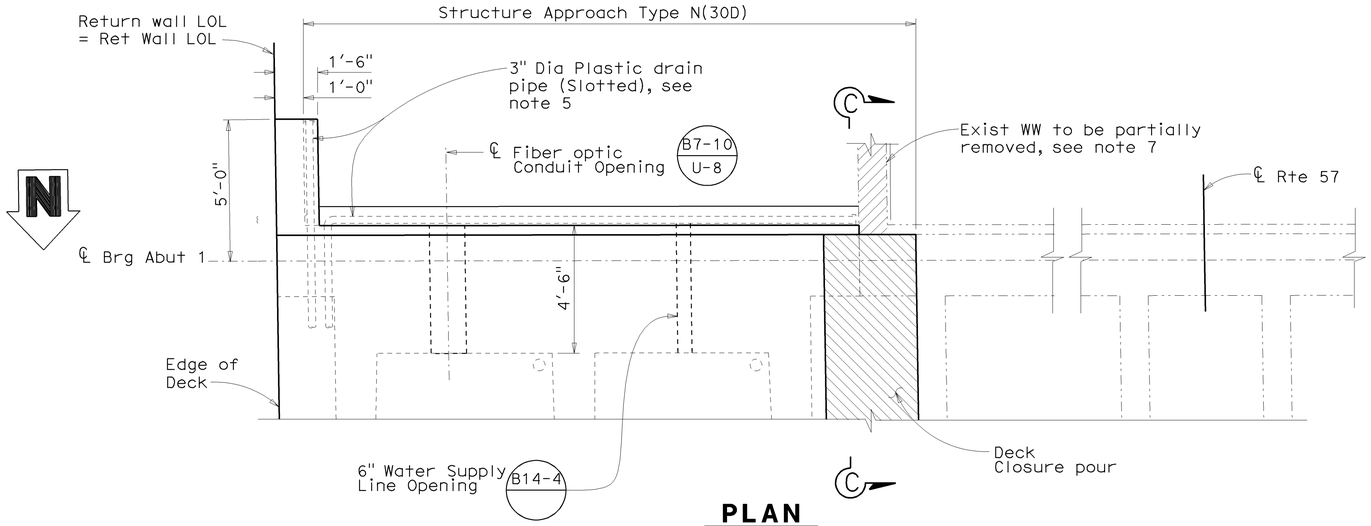

PLAN

3/8" = 1'-0"

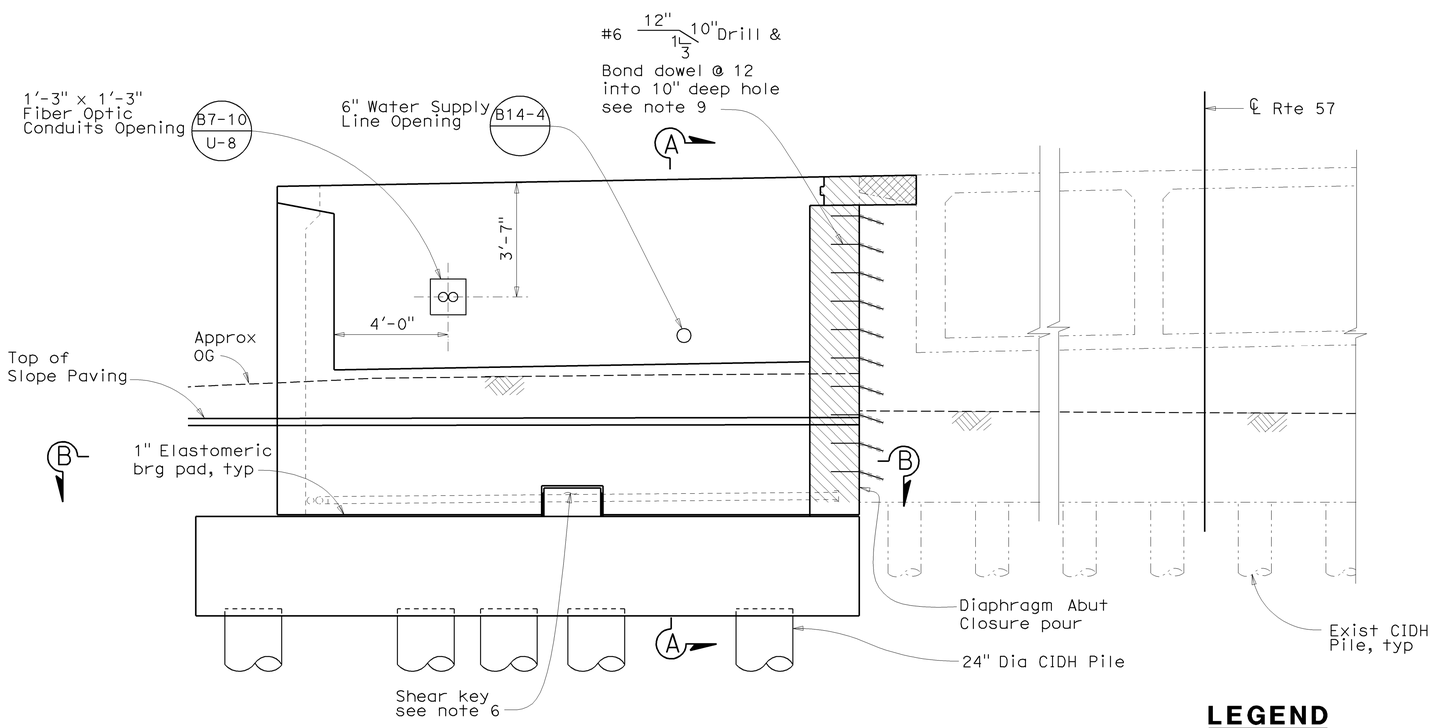

ELEVATION

3/8" = 1'-0"

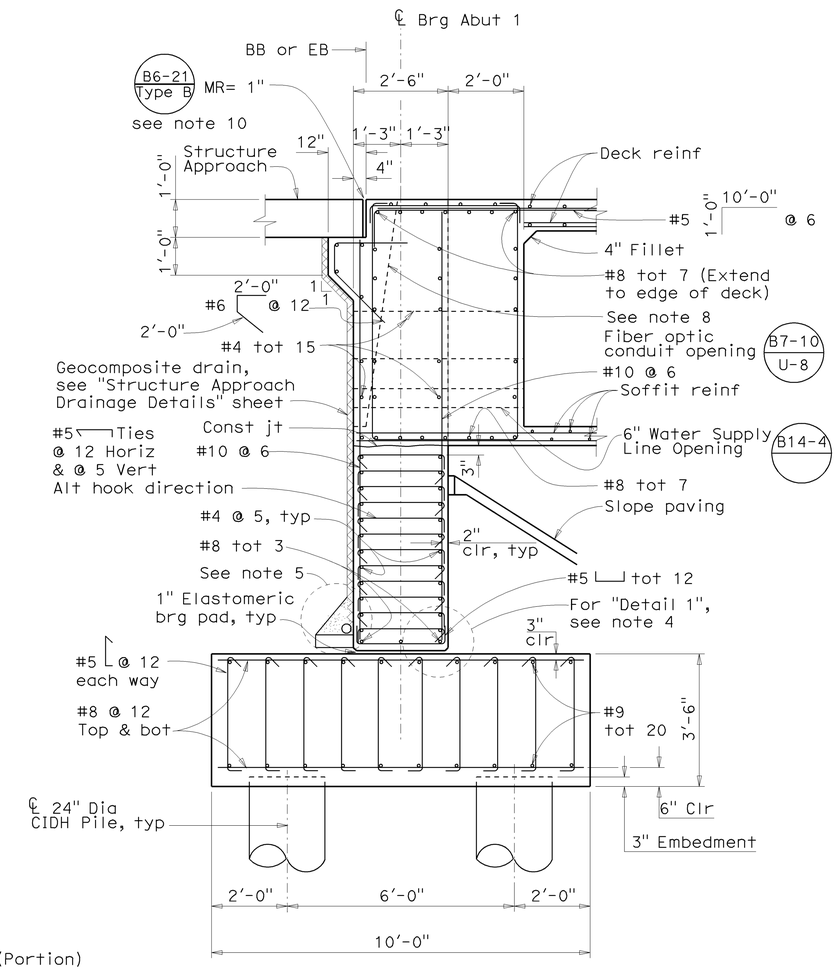

SECTION A-A

1/2" = 1'-0"

LEGEND

- Indicates Closure Pour
- Indicates Bridge Removal (Portion)
- Indicates Existing Structure
- Indicates New Structure

NOTE:
THE CONTRACTOR SHALL VERIFY ALL CONTROLLING FIELD DIMENSIONS BEFORE ORDERING OR FABRICATING ANY MATERIAL.

DESIGN OVERSIGHT Jon Hamaguchi
6-24-09
SIGN OFF DATE

	BY	CHECKED
DESIGN	R. Barton	M. Carbuccia
DETAILS	I. Karkoutli	M. Carbuccia
QUANTITIES	R. Barton	L. Khaleghi

PREPARED FOR THE STATE OF CALIFORNIA DEPARTMENT OF TRANSPORTATION

Alaedin Moubayed
PROJECT ENGINEER

BRIDGE NO. 55-0464
POST MILE 17.6

NUTWOOD AVENUE UC (WIDEN)
ABUTMENT LAYOUT

DESIGN DETAIL SHEET (ENGLISH) (REV. 2/25/05)

ORIGINAL SCALE IN INCHES FOR REDUCED PLANS 0 1 2 3

CU 12
EA 0F0311

DISREGARD PRINTS BEARING EARLIER REVISION DATES

REVISION DATES (PRELIMINARY STAGE ONLY)

SHEET 8 OF 26

FILE => 55-0464-f-a01_lo1.dgn

USERNAME => rtrim DATE PLOTTED => 17-DEC-2009 TIME PLOTTED => 10:41

DIST	COUNTY	ROUTE	POST MILES TOTAL PROJECT	SHEET No	TOTAL SHEETS
12	Ora	57	16.2/18.6	928	960

Rob Barton 6/15/09
REGISTERED CIVIL ENGINEER DATE

12-14-09
PLANS APPROVAL DATE

The State of California or its officers or agents shall not be responsible for the accuracy or completeness of electronic copies of this plan sheet.

REGISTERED PROFESSIONAL ENGINEER
Robert T. Barton
No. C68789
Exp. 9/30/09
CIVIL
STATE OF CALIFORNIA

OCTA
550 SOUTH MAIN STREET
ORANGE, CA 92863

PBS&J
625 THE CITY DRIVE SOUTH, SUITE 200
ORANGE, CA 92868

LEGEND

- Indicates Closure Pour
- Indicates Bridge Removal (Portion)
- Indicates Existing Structure
- Indicates New Structure

NOTES

1. Abutment 1 shown, Abutment 2 similar.
2. For Section "D-D" See "Abutment Details No. 2" sheet.
3. No two adjacent piles can be constructed concurrently.

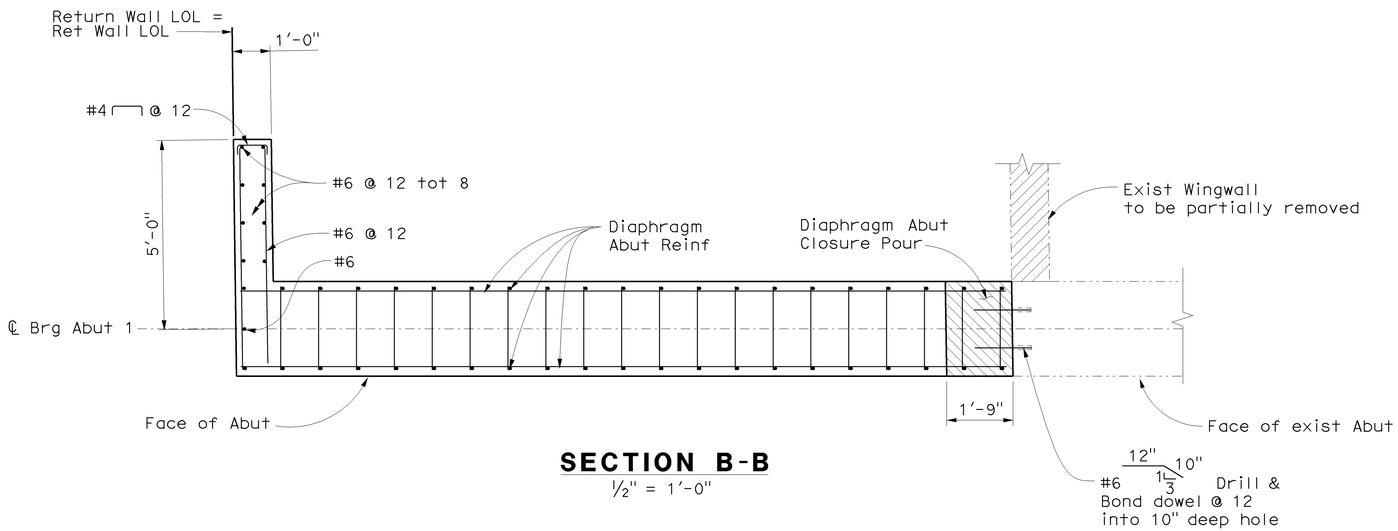

SECTION B-B

½" = 1'-0"

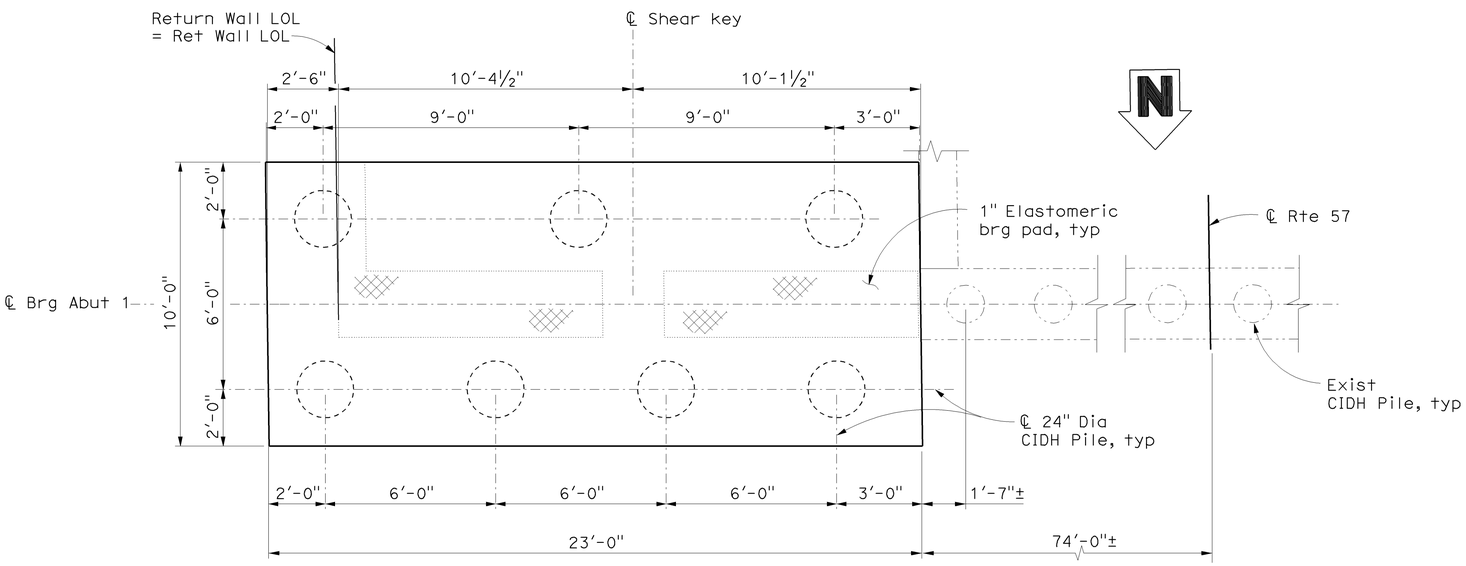

PILES LAYOUT

⅜" = 1'-0"

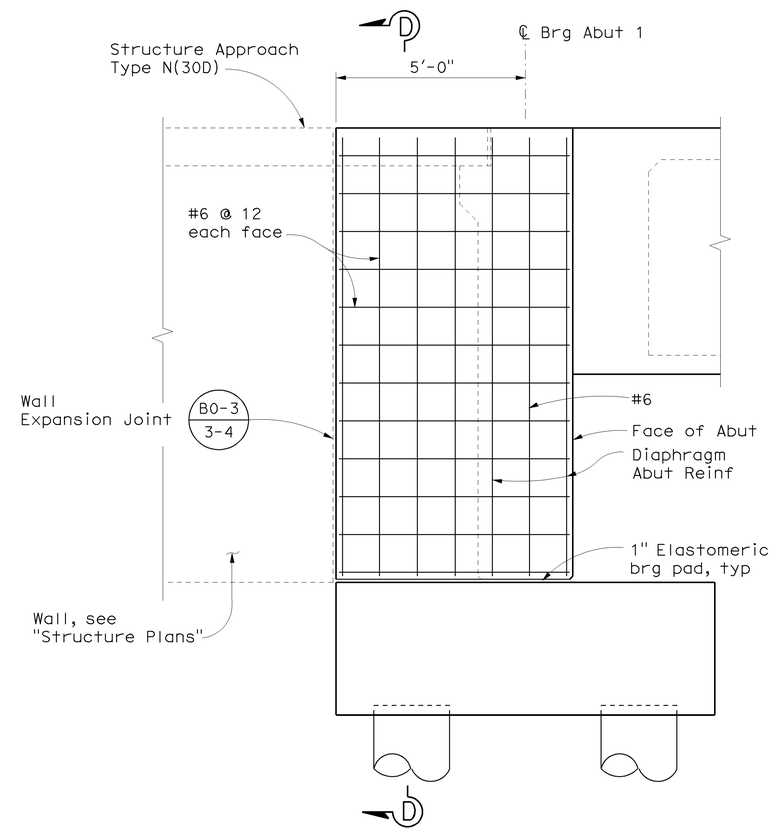

RETURN WALL ELEVATION

½" = 1'-0"

NOTE:
THE CONTRACTOR SHALL VERIFY ALL CONTROLLING FIELD DIMENSIONS BEFORE ORDERING OR FABRICATING ANY MATERIAL.

Jon Hamaguchi
DESIGN OVERSIGHT Jon Hamaguchi
6-24-09
SIGN OFF DATE

	BY	CHECKED
DESIGN	R. Barton	M. Carbuccia
DETAILS	I. Karkoutli	M. Carbuccia
QUANTITIES	R. Barton	L. Khaleghi

PREPARED FOR THE
STATE OF CALIFORNIA
DEPARTMENT OF TRANSPORTATION

Alaedin Moubayed
PROJECT ENGINEER

BRIDGE NO. 55-0464
POST MILE 17.6

NUTWOOD AVENUE UC (WIDEN)
ABUTMENT DETAILS NO. 1

DESIGN DETAIL SHEET (ENGLISH) (REV. 2/25/05)

ORIGINAL SCALE IN INCHES FOR REDUCED PLANS 0 1 2 3

CU 12
EA 0F0311

DISREGARD PRINTS BEARING EARLIER REVISION DATES

REVISION DATES (PRELIMINARY STAGE ONLY)

SHEET 9 OF 26

FILE => 55-0464-f-a01dt01.dgn

USERNAME => trlim DATE PLOTTED => 17-DEC-2008 TIME PLOTTED => 10:41

DIST	COUNTY	ROUTE	POST MILES TOTAL PROJECT	SHEET No	TOTAL SHEETS
12	Ora	57	16.2/18.6	929	960

Rob Barton 6/15/09
REGISTERED CIVIL ENGINEER DATE

12-14-09
PLANS APPROVAL DATE

REGISTERED PROFESSIONAL ENGINEER Robert T. Barton No. C68789 Exp. 9/30/09 CIVIL STATE OF CALIFORNIA

The State of California or its officers or agents shall not be responsible for the accuracy or completeness of electronic copies of this plan sheet.

OCTA
550 SOUTH MAIN STREET
ORANGE, CA 92863

PBS&J
625 THE CITY DRIVE SOUTH, SUITE 200
ORANGE, CA 92868

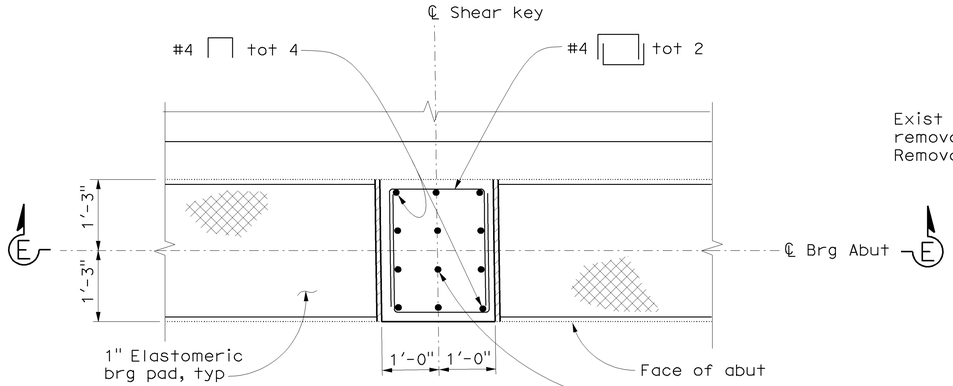

PLAN
¾" = 1'-0"

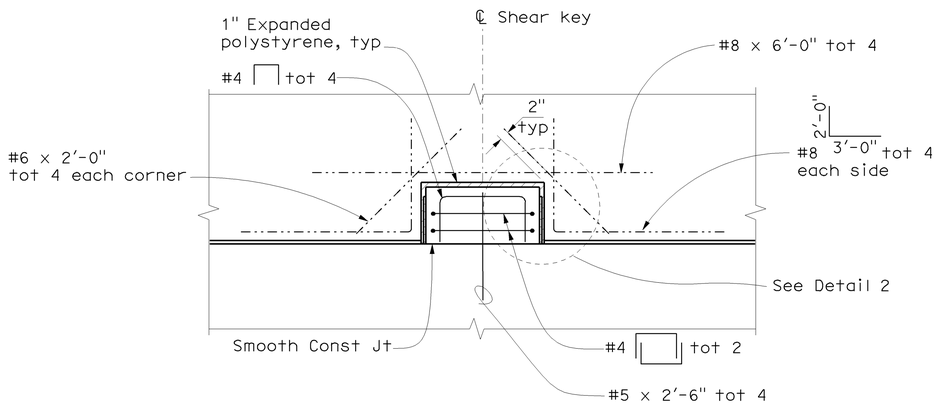

SECTION E-E
SHEAR KEY DETAILS
¾" = 1'-0"

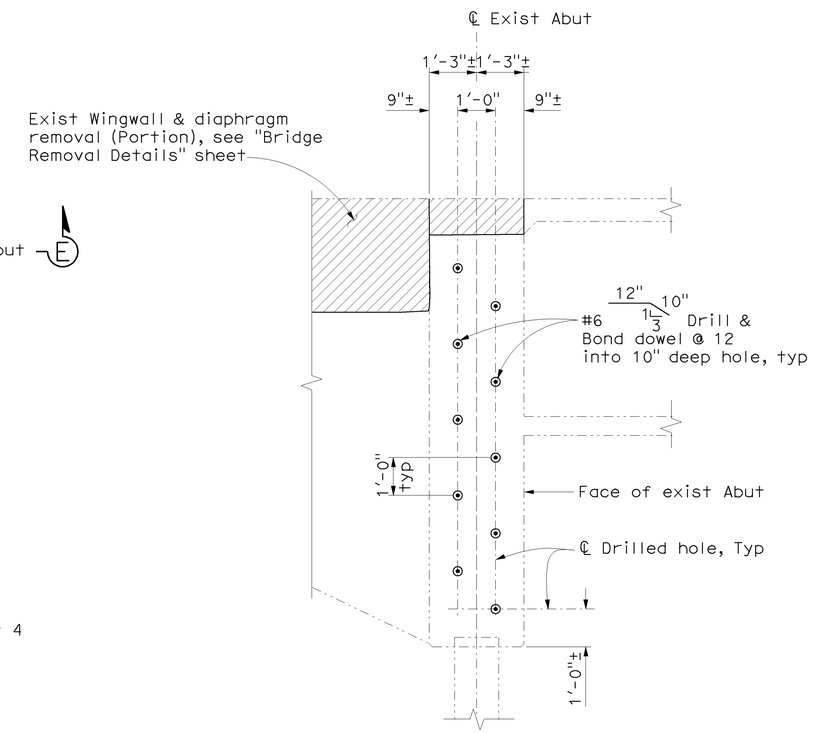

SECTION C-C
½" = 1'-0"

NOTE

1. For Barrier on return wall, see "Concrete Barrier Type 736 (Mod)" sheet.

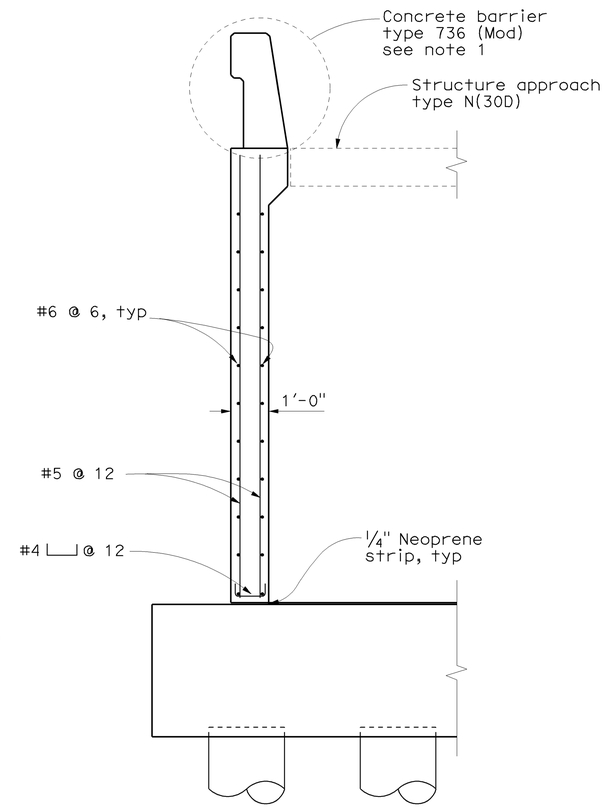

SECTION D-D
No Scale

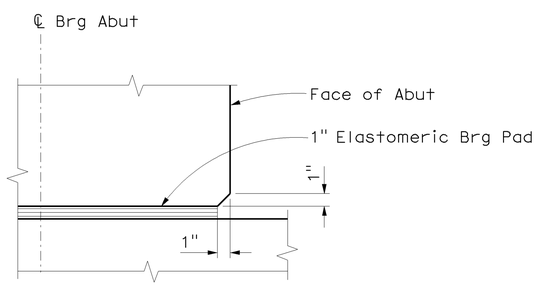

DETAIL 1
No Scale

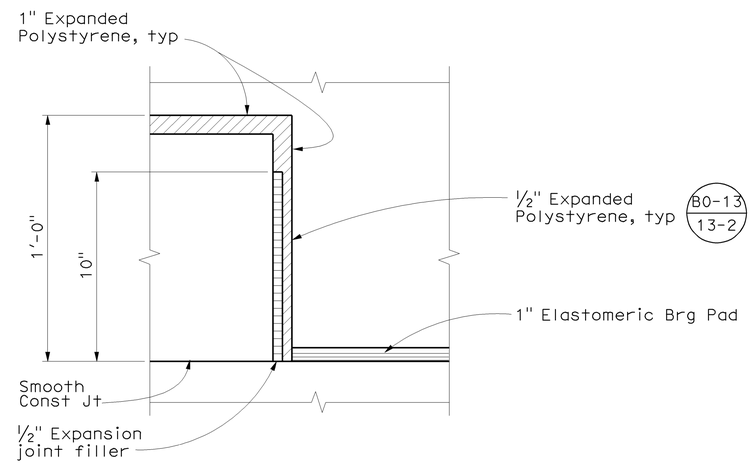

DETAIL 2
No Scale

NOTE:
THE CONTRACTOR SHALL VERIFY ALL CONTROLLING FIELD DIMENSIONS BEFORE ORDERING OR FABRICATING ANY MATERIAL.

DESIGN OVERSIGHT Jon Hamaguchi	DESIGN	BY R. Barton	CHECKED M. Carbuccia
6-24-09 SIGN OFF DATE	DETAILS	BY I. Karkoutli	CHECKED M. Carbuccia
	QUANTITIES	BY R. Barton	CHECKED L. Khaleghi

PREPARED FOR THE STATE OF CALIFORNIA DEPARTMENT OF TRANSPORTATION

Alaedin Moubayed
PROJECT ENGINEER

BRIDGE NO. 55-0464
POST MILE 17.6

NUTWOOD AVENUE UC (WIDEN)
ABUTMENT DETAILS NO. 2

DESIGN DETAIL SHEET (ENGLISH) (REV. 2/25/05)

ORIGINAL SCALE IN INCHES FOR REDUCED PLANS 0 1 2 3

CU 12
EA 0F0311

DISREGARD PRINTS BEARING EARLIER REVISION DATES

REVISION DATES (PRELIMINARY STAGE ONLY)

SHEET 10 OF 26

FILE => 55-0464-f-a01dt02.dgn

USERNAME => rtrim DATE PLOTTED => 17-DEC-2009 TIME PLOTTED => 10:41

DIST	COUNTY	ROUTE	POST MILES TOTAL PROJECT	SHEET No	TOTAL SHEETS
12	Ora	57	16.2/18.6	930	960

Rob Barton 6/15/09
REGISTERED CIVIL ENGINEER DATE

12-14-09
PLANS APPROVAL DATE

The State of California or its officers or agents shall not be responsible for the accuracy or completeness of electronic copies of this plan sheet.

REGISTERED PROFESSIONAL ENGINEER Robert T. Barton No. C68789 Exp. 9/30/09 CIVIL STATE OF CALIFORNIA

OCTA
550 SOUTH MAIN STREET
ORANGE, CA 92863

PBS&J
625 THE CITY DRIVE SOUTH, SUITE 200
ORANGE, CA 92868

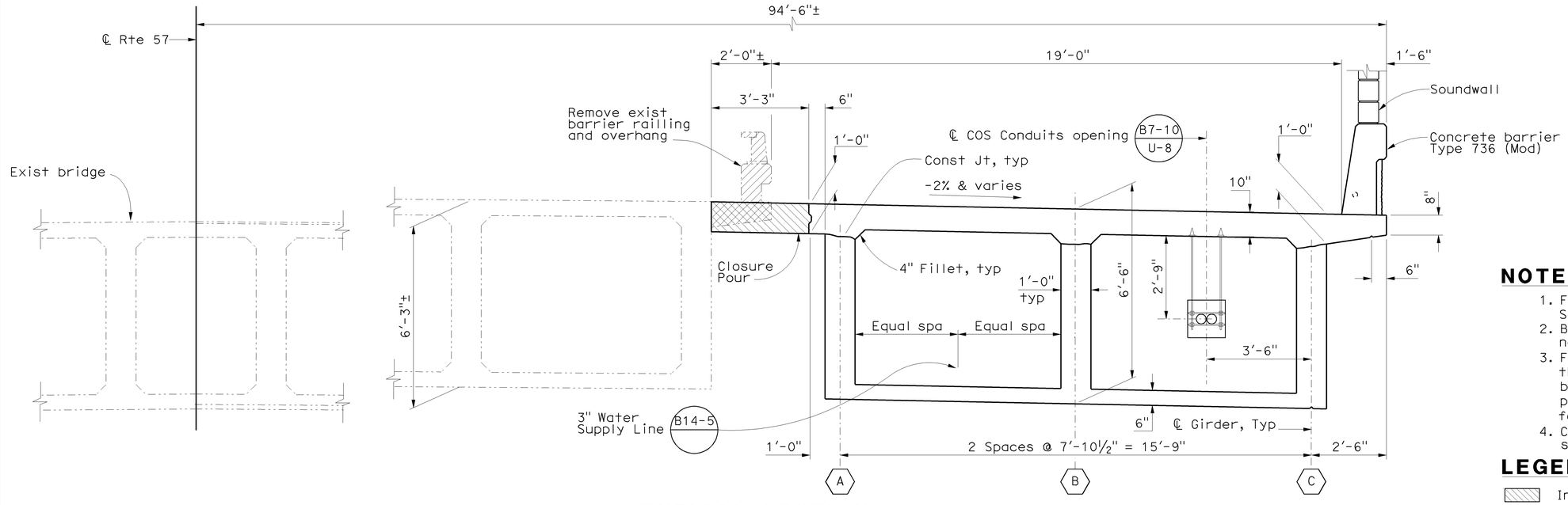

TYPICAL SECTION

½" = 1'-0"

NOTES

1. For Additional Reinforcement, See "Additional Soffit Reinforcement" sheet.
2. Bottom transverse reinf shall be placed normal to and spaced along ℄ Rte 57.
3. Falsework shall not be released less than 28 days after last concrete has been placed, Closure pour shall not be placed sooner than 14 days after the falsework has been released.
4. Camber values can be 0.75 times those shown in Girder Layout sheet.

LEGEND

- Indicates Closure Pour
- Indicates Bridge Removal (Portion)
- Indicates Existing Structure
- Indicates New Structure
- ○ Indicates Additional longitudinal Reinf See "Additional soffit Reinforcement" Sheet.

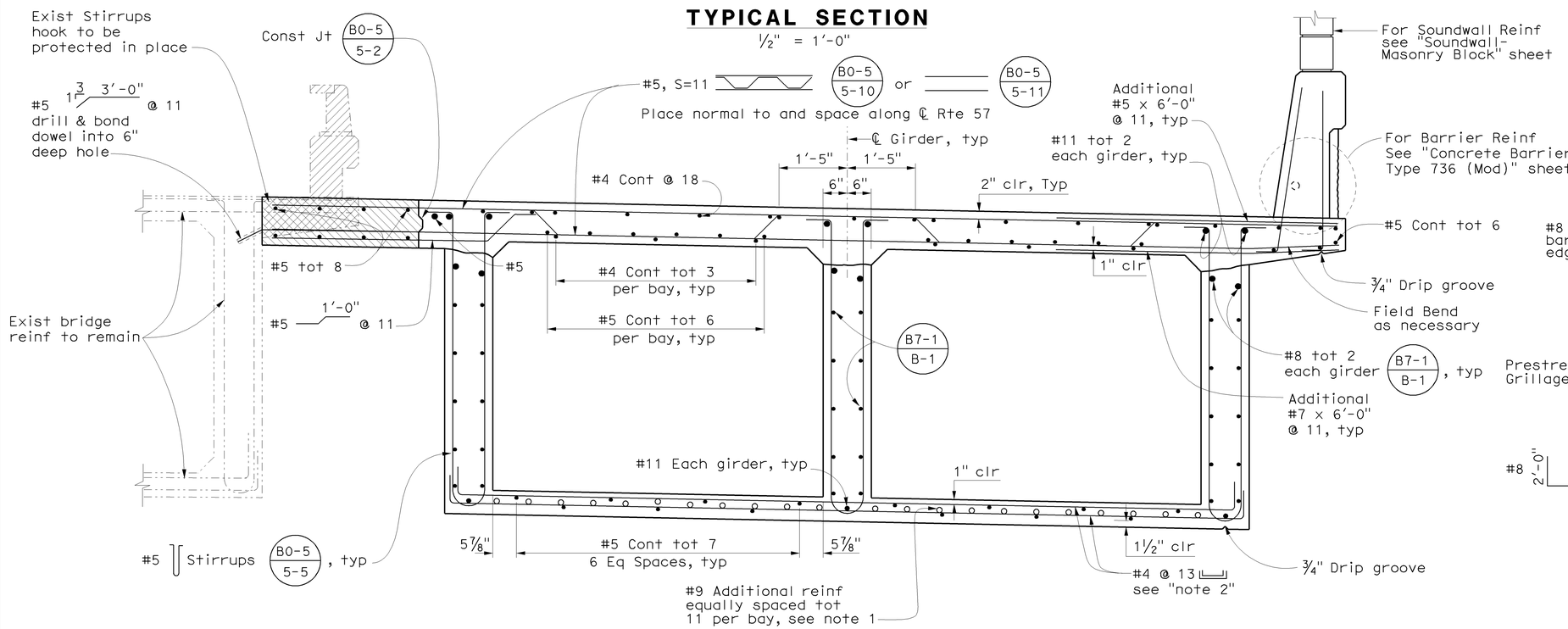

TYPICAL REINFORCEMENT SECTION

¾" = 1'-0"

B0-5 B7-1 B8-5

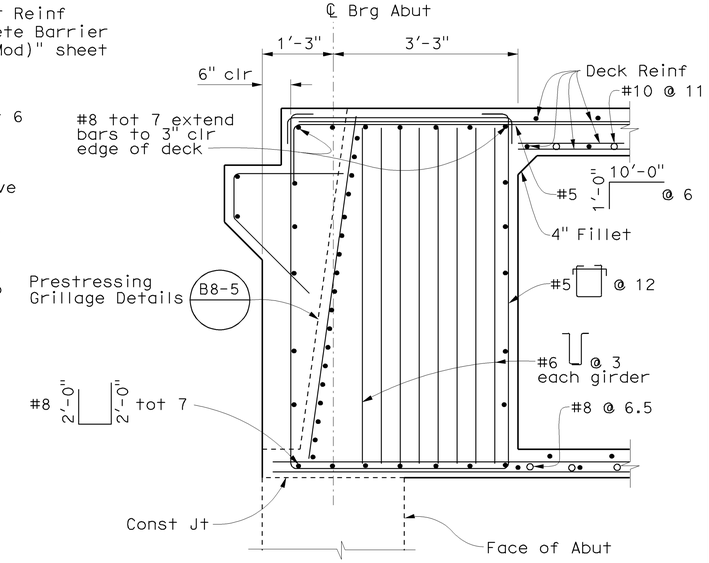

END DIAPHRAGM DETAIL

¾" = 1'-0"

NOTE:
THE CONTRACTOR SHALL VERIFY ALL CONTROLLING FIELD DIMENSIONS BEFORE ORDERING OR FABRICATING ANY MATERIAL.

Jon Hamaguchi
DESIGN OVERSIGHT Jon Hamaguchi
6-24-09
SIGN OFF DATE

	BY	CHECKED
DESIGN	R. Barton	M. Carbuccia
DETAILS	I. Karkoutli	M. Carbuccia
QUANTITIES	R. Barton	L. Khaleghi

PREPARED FOR THE STATE OF CALIFORNIA DEPARTMENT OF TRANSPORTATION

Alaedin Moubayed
PROJECT ENGINEER

BRIDGE NO. 55-0464
POST MILE 17.6

NUTWOOD AVENUE UC (WIDEN)
TYPICAL SECTION

DESIGN DETAIL SHEET (ENGLISH) (REV. 2/25/05)

ORIGINAL SCALE IN INCHES FOR REDUCED PLANS 0 1 2 3

CU 12
EA 0F0311

DISREGARD PRINTS BEARING EARLIER REVISION DATES

REVISION DATES (PRELIMINARY STAGE ONLY)

SHEET 11 OF 26

FILE => 55-0464-k-ts01.dgn

USERNAME => rtrim DATE PLOTTED => 17-DEC-2009 TIME PLOTTED => 11:17

DIST	COUNTY	ROUTE	POST MILES TOTAL PROJECT	SHEET No	TOTAL SHEETS
12	Ora	57	16.2/18.6	931	960

Rob Barton 6/15/09
REGISTERED CIVIL ENGINEER DATE

12-14-09
PLANS APPROVAL DATE

REGISTERED PROFESSIONAL ENGINEER
Robert T. Barton
No. C68789
Exp. 9/30/09
CIVIL
STATE OF CALIFORNIA

The State of California or its officers or agents shall not be responsible for the accuracy or completeness of electronic copies of this plan sheet.

OCTA
550 SOUTH MAIN STREET
ORANGE, CA 92863

PBS&J
625 THE CITY DRIVE SOUTH, SUITE 200
ORANGE, CA 92868

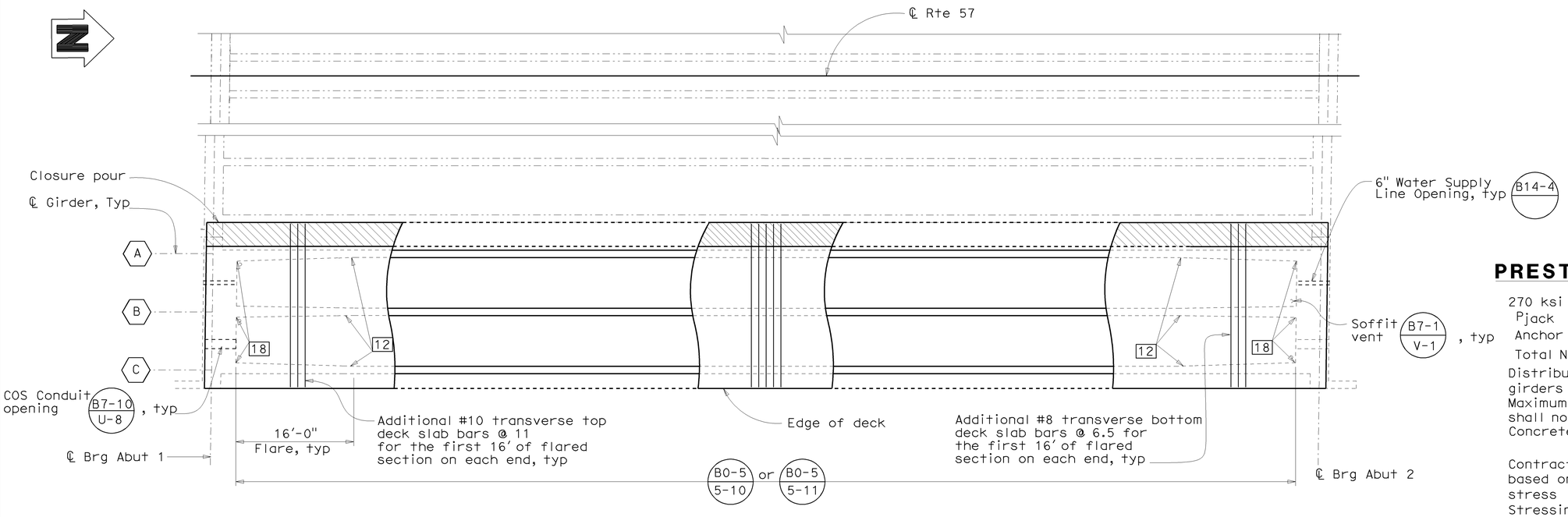

PLAN B7-1
1/8" = 1'-0"

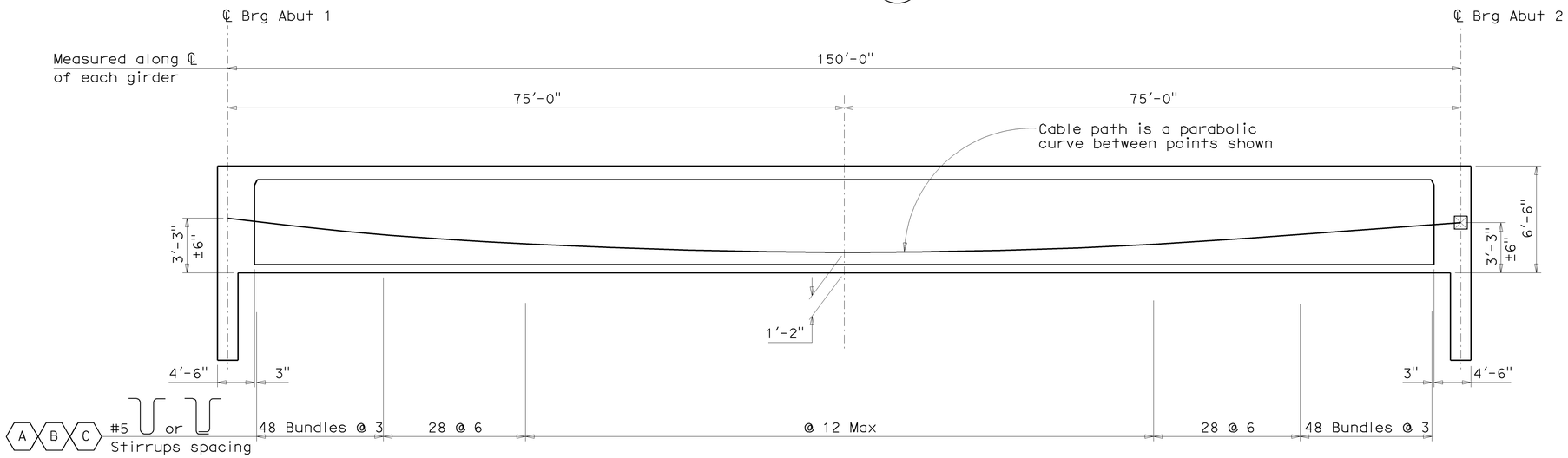

LONGITUDINAL SECTION B8-5
No Scale

PRESTRESSING NOTES

270 ksi Low Relaxation Strand: 0.6" ϕ
Pjack 10500 kips
Anchor Set 3/8 inch
Total Number of Girders = 3
Distribution of prestress force (Pjack) between girders shall not exceed the ratio of 3:2.
Maximum final force variation between girders shall not exceed 725 kips.
Concrete: f'_c= 6.0 ksi @ 28 days
f'_{ci}= 4.8 ksi @ time of stressing
Contractor shall submit elongation calculations based on initial stress at Ø = 0.955 times jacking stress
Stressing shall be performed from Abut 1.
Design is based on friction curvature
Coefficient μ= 0.15 and friction
Wobble coefficient k= 0.0002/Ft

LEGEND

- 12 — Indicates girder stem width in inches
- Indicates Closure Pour
- Indicates Theoretical Point of No Movement
- Indicates Existing Structure
- Indicates New Structure
- A — Indicates Girder identification

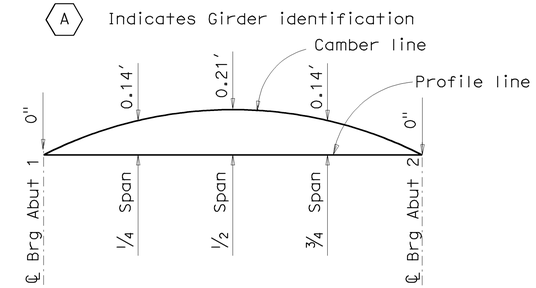

CAMBER DIAGRAM
No Scale

NOTE

1. Camber does not include allowance for falsework settlement

NOTE:
THE CONTRACTOR SHALL VERIFY ALL CONTROLLING FIELD DIMENSIONS BEFORE ORDERING OR FABRICATING ANY MATERIAL.

Jon Hamaguchi
DESIGN OVERSIGHT Jon Hamaguchi
6-24-09
SIGN OFF DATE

	BY	CHECKED
DESIGN	R. Barton	M. Carbuccia
DETAILS	I. Karkoutli	M. Carbuccia
QUANTITIES	R. Barton	L. Khaleghi

PREPARED FOR THE STATE OF CALIFORNIA DEPARTMENT OF TRANSPORTATION

Alaedin Moubayed
PROJECT ENGINEER

BRIDGE NO. 55-0464
POST MILE 17.6

NUTWOOD AVENUE UC (WIDEN)
GIRDER LAYOUT

DESIGN DETAIL SHEET (ENGLISH) (REV. 2/25/05)

ORIGINAL SCALE IN INCHES FOR REDUCED PLANS 0 1 2 3

CU 12
EA 0F0311

DISREGARD PRINTS BEARING EARLIER REVISION DATES

REVISION DATES (PRELIMINARY STAGE ONLY)

SHEET 12 OF 26

FILE => 55-0464-1-g_1o01.dgn

USERNAME => trrlim DATE PLOTTED => 17-DEC-2009 TIME PLOTTED => 10:42

DIST	COUNTY	ROUTE	POST MILES TOTAL PROJECT	SHEET No	TOTAL SHEETS
12	Ora	57	16.2/18.6	932	960

Rob Barton 6/15/09
REGISTERED CIVIL ENGINEER DATE

12-14-09
PLANS APPROVAL DATE

REGISTERED PROFESSIONAL ENGINEER
Robert T. Barton
No. C68789
Exp. 9/30/09
CIVIL
STATE OF CALIFORNIA

The State of California or its officers or agents shall not be responsible for the accuracy or completeness of electronic copies of this plan sheet.

OCTA
550 SOUTH MAIN STREET
ORANGE, CA 92863

PBS&J
625 THE CITY DRIVE SOUTH, SUITE 200
ORANGE, CA 92868

NOTES

1. Numbers at end of bars indicate distances measured from ℄ span.
2. Lap splice is not allowed.
3. See "Typical Section" sheet for placement details.

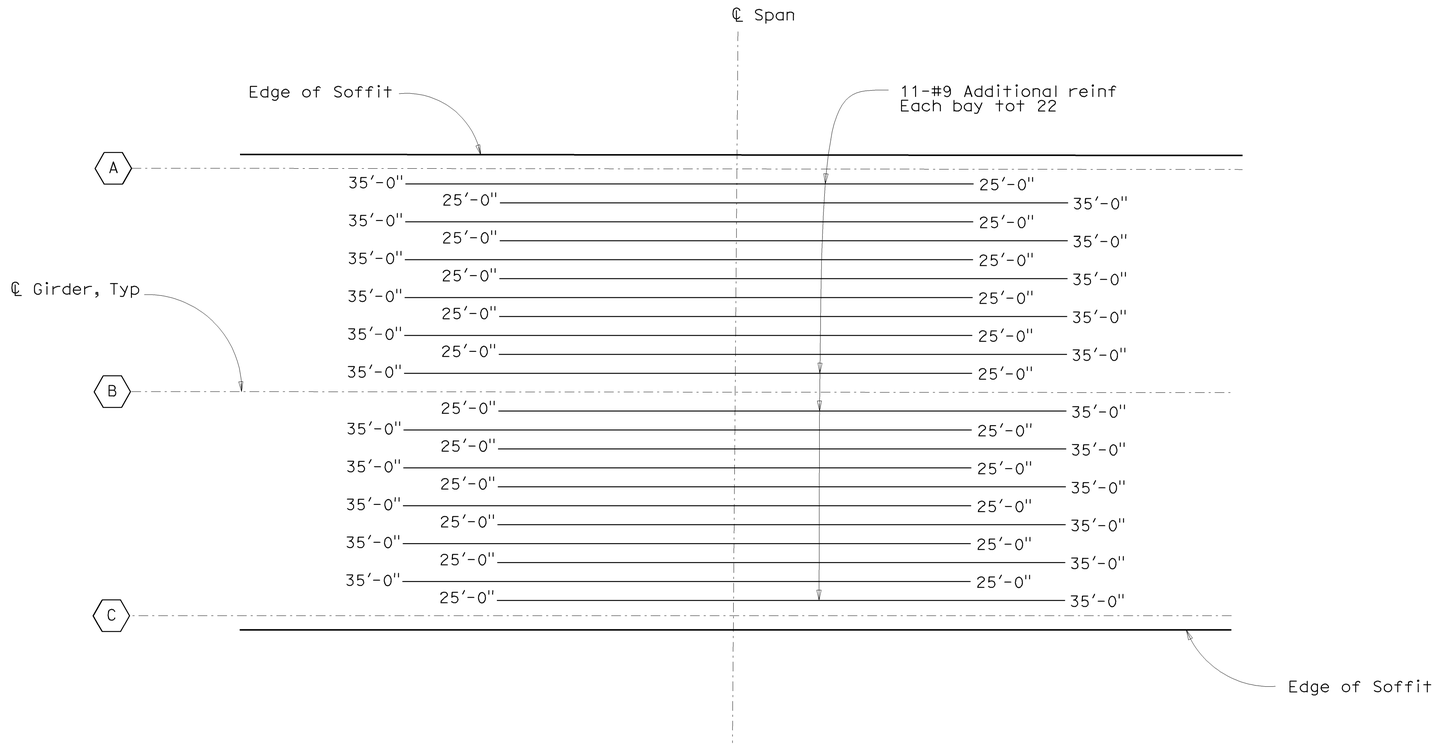

PLAN
No Scale

NOTE:
THE CONTRACTOR SHALL VERIFY ALL CONTROLLING FIELD DIMENSIONS BEFORE ORDERING OR FABRICATING ANY MATERIAL.

Jon Hamaguchi
DESIGN OVERSIGHT Jon Hamaguchi
6-24-09
SIGN OFF DATE

	BY	CHECKED
DESIGN	R. Barton	M. Carbuccia
DETAILS	I. Karkoutli	M. Carbuccia
QUANTITIES	R. Barton	L. Khaleghi

PREPARED FOR THE
STATE OF CALIFORNIA
DEPARTMENT OF TRANSPORTATION

Alaedin Moubayed
PROJECT ENGINEER

BRIDGE NO. 55-0464
POST MILE 17.6

NUTWOOD AVENUE UC (WIDEN)
ADDITIONAL SOFFIT REINFORCEMENT

DESIGN DETAIL SHEET (ENGLISH) (REV. 2/25/05)

ORIGINAL SCALE IN INCHES FOR REDUCED PLANS 0 1 2 3

CU 12
EA 0F0311

DISREGARD PRINTS BEARING EARLIER REVISION DATES

REVISION DATES (PRELIMINARY STAGE ONLY)

SHEET 13 OF 26

FILE => 55-0464-o-gir_rf01.dgn

USERNAME => trrlim DATE PLOTTED => 17-DEC-2008 TIME PLOTTED => 10:42

RELEASED 11-10-97

DIST.	COUNTY	ROUTE	POST MILES TOTAL PROJECT	SHEET NO.	TOTAL SHEETS
12	Ora	57	16.2/18.6	933	960

REGISTERED ENGINEER - CIVIL

12-14-09
PLANS APPROVAL DATE

REGISTERED PROFESSIONAL ENGINEER Robert T. Barton No. C68789 Exp. 9/30/09 CIVIL STATE OF CALIFORNIA

The State of California or its officers or agents shall not be responsible for the accuracy or completeness of electronic copies of this plan sheet.

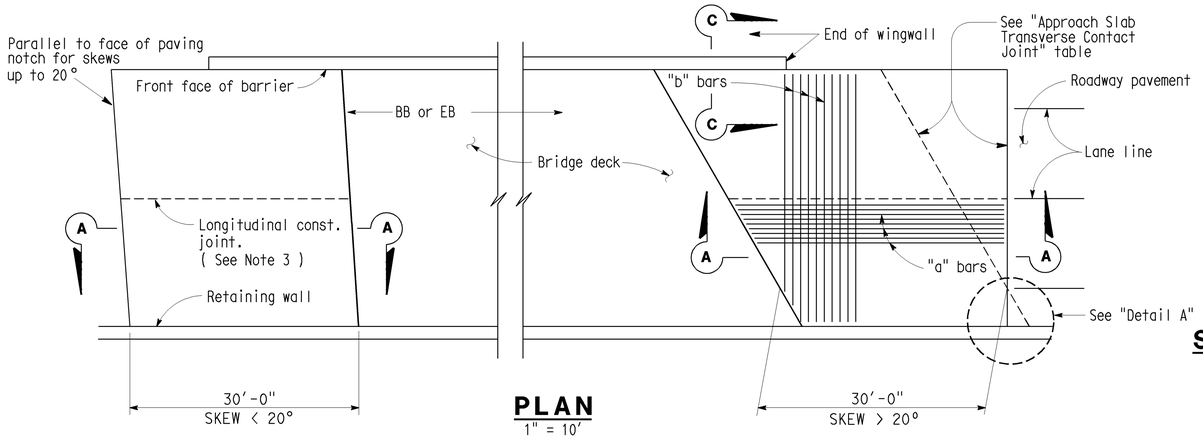

PLAN
1" = 10'

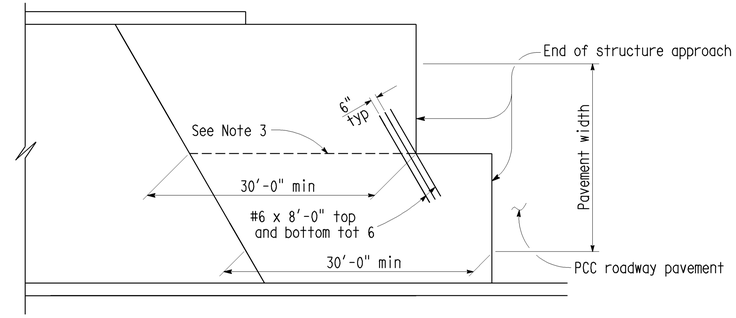

STRUCTURE APPROACH - END STAGGER DETAIL
No Scale

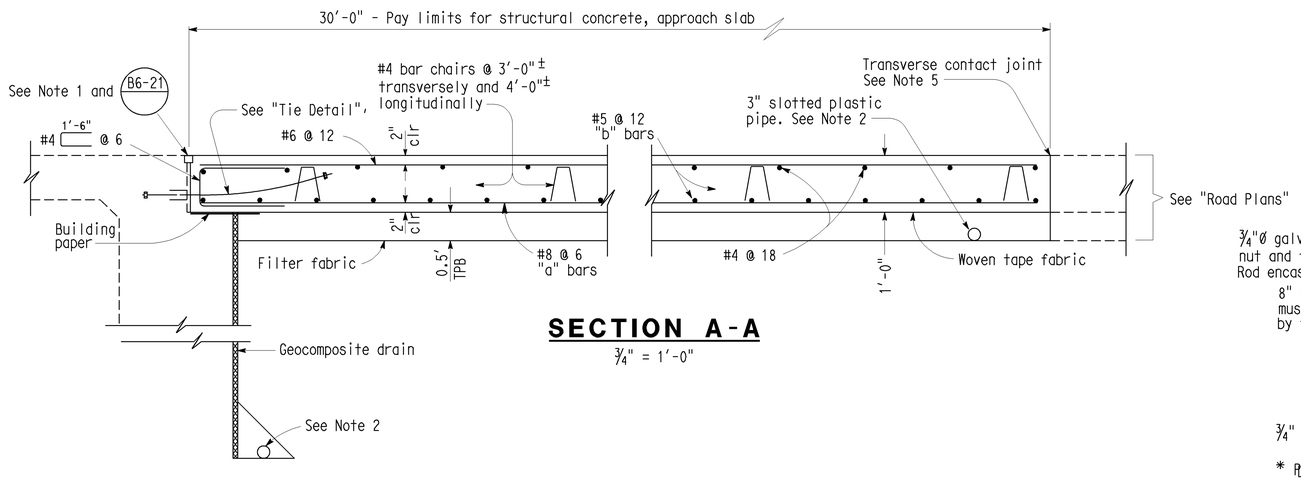

SECTION A-A
¾" = 1'-0"

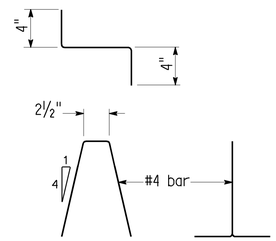

BAR CHAIR DETAIL
1½" = 1'-0"

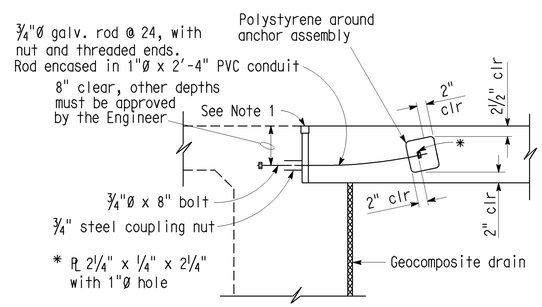

TIE DETAIL
¾" = 1'-0"

APPROACH SLAB TRANSVERSE CONTACT JOINT		
APPROACH SKEW	WITH AC ROADWAY PAVEMENT	WITH PCC ROADWAY PAVEMENT
< 20°	Parallel to face of paving notch	Parallel to face of paving notch
20° - 45°	Parallel to face of P N use (Detail A)	Stagger lines 24' to 36' apart
> 45°	Parallel to face of P N use (Detail A)	Stagger at each lane line

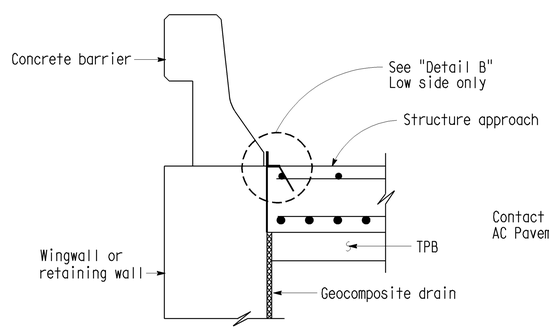

TYPE E-2

SECTION C-C
¾" = 1'-0"
~~(Type E-1 to be used, unless otherwise shown on plans)~~

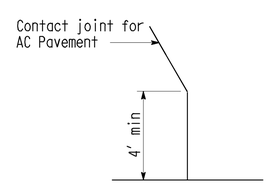

DETAIL A
No Scale

NOTES:

1. For details not noted or shown, see Structure Plans.
2. For drainage details, see "Structure Approach Drainage Details" sheet.
3. Longitudinal construction joints, when permitted by the Engineer, shall be located on lane lines.
4.
5. For transverse contact joint with new PCC paving, refer to Standard Plan A35-A.
6. At the contractor's option, approach slab transverse reinforcement may be placed parallel to paving notch. Spacing of transverse reinforcement is measured along ℄ roadway.

Polystyrene to be removed.

STANDARD DRAWING				
FILE NO. XS 22-24	DESIGN	BY M. TRAFFALIS	CHECKED E. THORKILDSEN	APPROVAL RECOMMENDED BY
DESIGN DATE 8/92	DETAILS	BY R. YEE	CHECKED E. THORKILDSEN	DESIGN SUPERVISOR
	SUBMITTED BY M. HA			

1 Delete Details
2 Delete Note 4

STATE OF CALIFORNIA
DEPARTMENT OF TRANSPORTATION

DIVISION OF STRUCTURES
STRUCTURE DESIGN

BRIDGE NO. 55-0464
POST MILE 17.6

NUTWOOD AVENUE UC (WIDEN)
STRUCTURE APPROACH TYPE N(30D)

DS OSD 2147A (CADD 7/97)

ORIGINAL SCALE IN INCHES FOR REDUCED PLANS 0 1 2 3

CU 12
EA OF 0311

DISREGARD PRINTS BEARING EARLIER REVISION DATES

REVISION DATES (PRELIMINARY STAGE ONLY)

SHEET 14 OF 26

XS2224.DGN V1=1

USERNAME => trlim
DGN FILE => 55-0464-s-sap01.dgn

DATE PLOTTED => 17-DEC-2009
TIME PLOTTED => 10:42

DIST.	COUNTY	ROUTE	KILOMETER POST TOTAL PROJECT	SHEET NO.	TOTAL SHEETS
12	Ora	57	16.2/18.6	934	960

REGISTERED ENGINEER - CIVIL

12-14-09
PLANS APPROVAL DATE

REGISTERED PROFESSIONAL ENGINEER Robert T. Barton No. C68789 Exp. 9/30/09 CIVIL STATE OF CALIFORNIA

The State of California or its officers or agents shall not be responsible for the accuracy or completeness of electronic copies of this plan sheet.

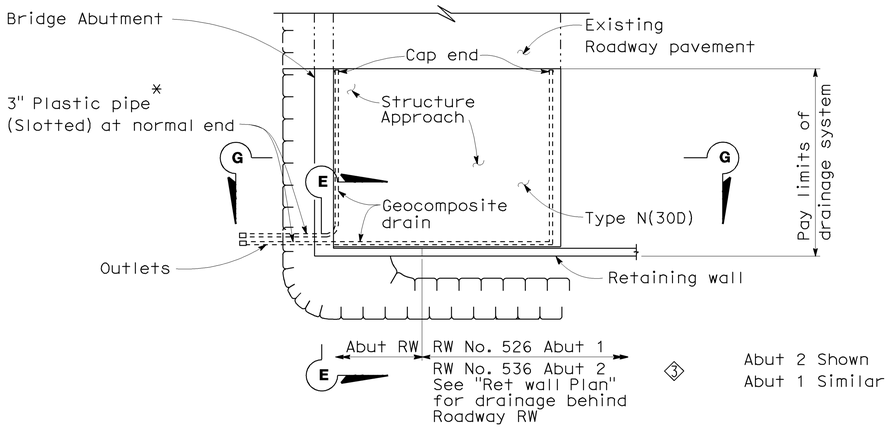

TYPICAL PLAN

* For pipe layout at staggered end,see "Detail B".

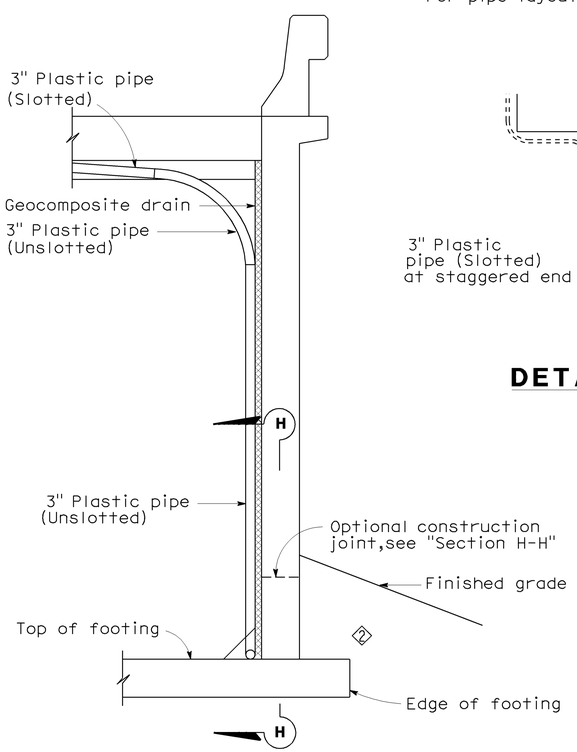

SECTION E-E

NOTE: Bends and junctions in 3" plastic pipe are 2'-6" radius min.

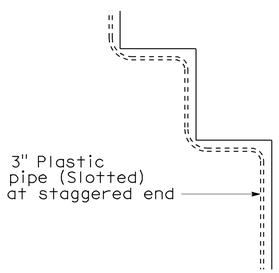

DETAIL B

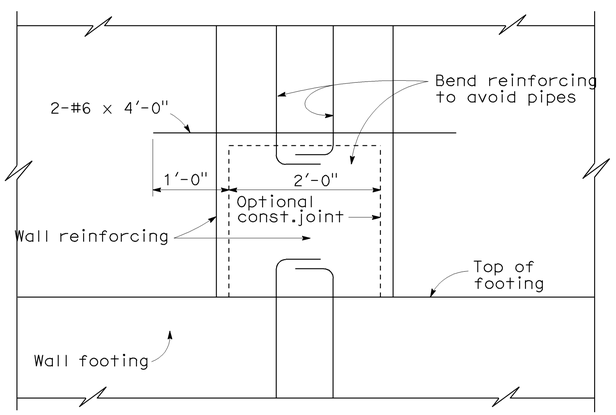

SECTION H-H

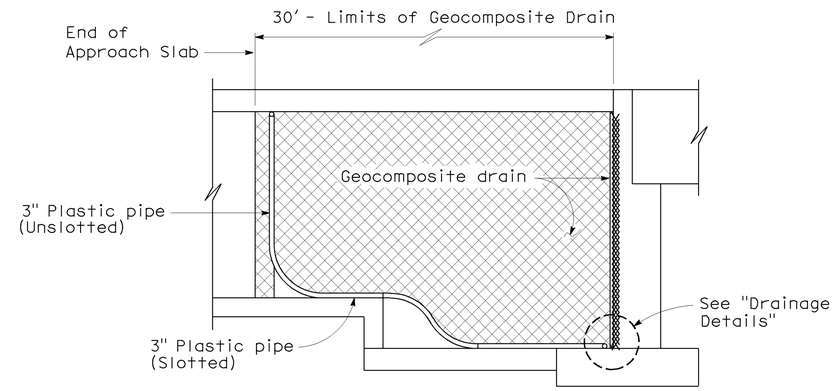

RETAINING WALL WINGWALL
SECTION G-G

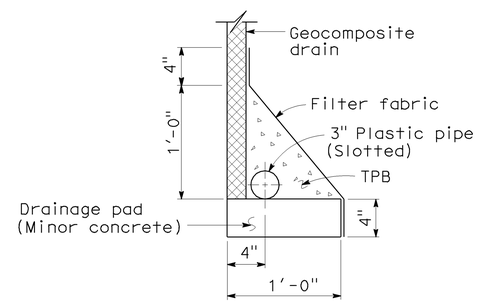

WITHOUT FOOTING

DRAINAGE DETAILS

SPECIAL DETAILS

STANDARD DRAWING

RELEASE DATE	Revised	DESIGN	BY M. TRAFFALIS	CHECKED E. THORKILDSEN	RELEASED BY
FILE NO.	xs3-110	DETAILS	BY R. YEE	CHECKED E. THORKILDSEN	
		SUBMITTED	BY M. HA	DRAWING DATE 4/98	OFFICE CHIEF

1. Deleted Details
2. Revised "Section E-E"

STATE OF CALIFORNIA
DEPARTMENT OF TRANSPORTATION

DIVISION OF ENGINEERING SERVICES

BRIDGE NO. 55-0464
KILOMETER POST 17.6

NUTWOOD AVENUE UC (WIDEN)
STRUCTURE APPROACH DRAINAGE DETAILS

DS OSD 2147A (METRIC) (REV. 2/25/97)

ORIGINAL SCALE IN MILLIMETERS FOR REDUCED PLANS 0 10 20 30 40 50 60 70 80 90 100

CU 12
EA 0F0311

DISREGARD PRINTS BEARING EARLIER REVISION DATES 09/17/08

REVISION DATES (PRELIMINARY STAGE ONLY)

SHEET 15 OF 26

FILE => 55-0464-s-sadd.dgn

DATE PLOTTED => 17-DEC-2009 TIME PLOTTED => 10:42

55-0464-s-sadd.dgn

DIST	COUNTY	ROUTE	POST MILES TOTAL PROJECT	SHEET No	TOTAL SHEETS
12	Ora	57	16.2/18.6	935	960

Rob Barton 6/15/09
REGISTERED CIVIL ENGINEER DATE

12-14-09
PLANS APPROVAL DATE

REGISTERED PROFESSIONAL ENGINEER
Robert T. Barton
No. C68789
Exp. 9/30/09
CIVIL
STATE OF CALIFORNIA

The State of California or its officers or agents shall not be responsible for the accuracy or completeness of electronic copies of this plan sheet.

OCTA
550 SOUTH MAIN STREET
ORANGE, CA 92863

PBS&J
625 THE CITY DRIVE SOUTH, SUITE 200
ORANGE, CA 92868

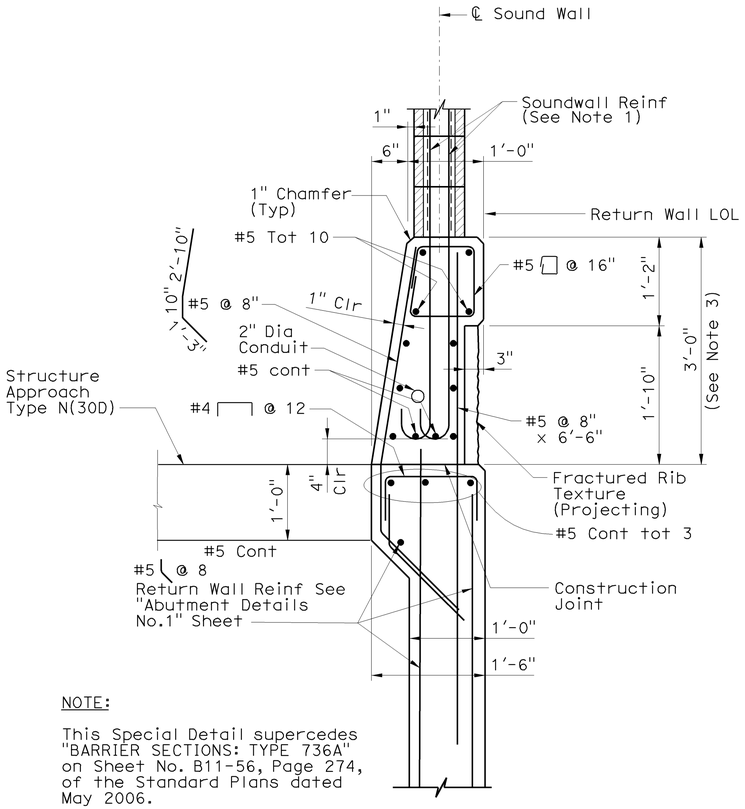

NOTE:

This Special Detail supercedes "BARRIER SECTIONS: TYPE 736A" on Sheet No. B11-56, Page 274, of the Standard Plans dated May 2006.

SOUND WALL ON BARRIER TYPE 736A (MODIFIED) ON RETURN WALL

1" = 1'-0"

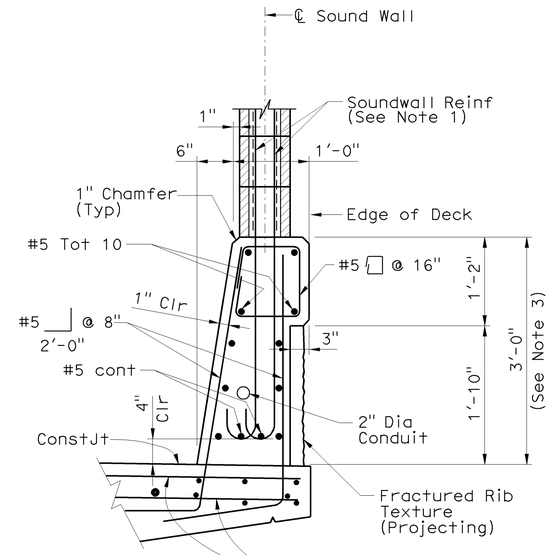

NOTE:

This Special Detail supercedes "BARRIER SECTIONS: TYPE 736" on Sheet No. B11-56, Page 274, of the Standard Plans dated May 2006.

SOUND WALL ON BARRIER TYPE 736 (MODIFIED) ON BRIDGE DECK

NOTES

1. For additional Soundwall Information, See "Soundwall-Masonry Block" Sheet.
2. For deck overhang reinf under Soundwall, See "Typical Section" sheet.
3. Dimension may vary with roadway cross slope, and with certain thickness of surfacing.
4. Longitudinal Reinf to stop at all Exp Joints.

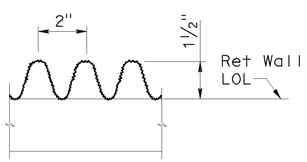

FRACTURED RIB TEXTURE (PROJECTING)

No Scale

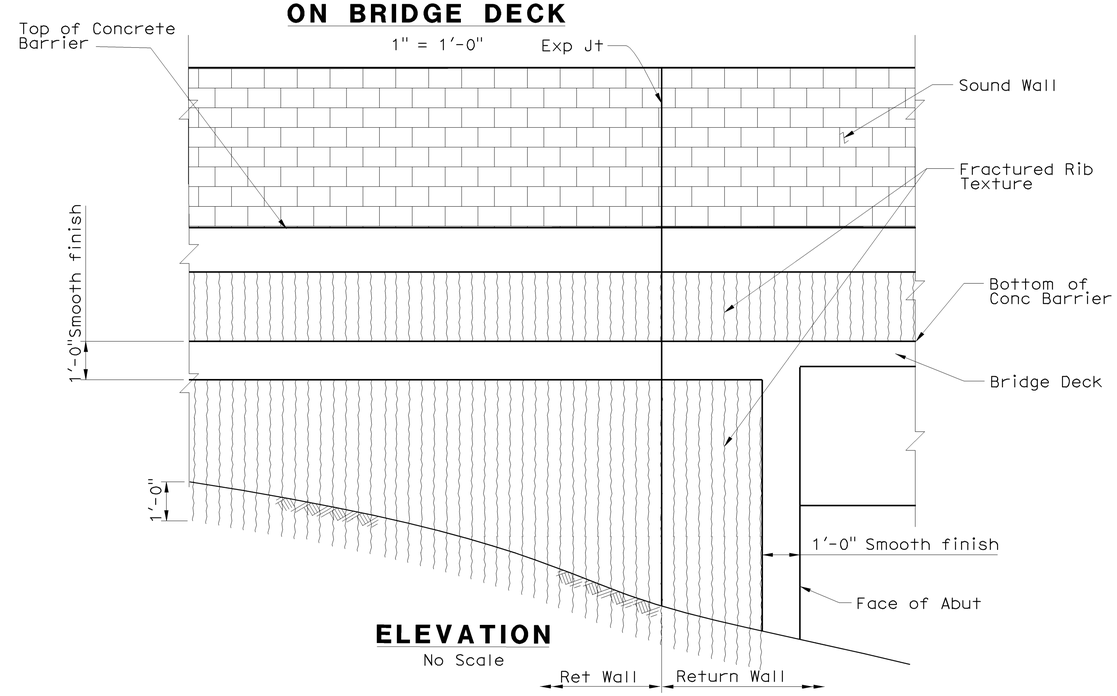

ELEVATION

No Scale

NOTE:
THE CONTRACTOR SHALL VERIFY ALL CONTROLLING FIELD DIMENSIONS BEFORE ORDERING OR FABRICATING ANY MATERIAL.

Jon Hamaguchi
DESIGN OVERSIGHT Jon Hamaguchi
6-24-09
SIGN OFF DATE

DESIGN DETAIL SHEET (ENGLISH) (REV. 2/25/05)

	BY	CHECKED
DESIGN	R. Barton	M. Carbuccia
DETAILS	I. Karkoutli	M. Carbuccia
QUANTITIES	R. Barton	L. Khaleghi

ORIGINAL SCALE IN INCHES FOR REDUCED PLANS 0 1 2 3

PREPARED FOR THE STATE OF CALIFORNIA DEPARTMENT OF TRANSPORTATION

Alaedin Moubayed
PROJECT ENGINEER

CU 12
EA 0F0311

BRIDGE NO. 55-0464
POST MILE 17.6

NUTWOOD AVENUE UC (WIDEN)
CONCRETE BARRIER TYPE 736 (MOD)

DISREGARD PRINTS BEARING EARLIER REVISION DATES

REVISION DATES (PRELIMINARY STAGE ONLY)

SHEET 16 OF 26

FILE => 55-0464-t-brdt.dgn

USERNAME => trlim DATE PLOTTED => 17-DEC-2009 TIME PLOTTED => 10:42

DIST	COUNTY	ROUTE	POST MILES TOTAL PROJECT	SHEET No	TOTAL SHEETS
12	Ora	57	16.2/18.6	936	960

Rob Barton 6/15/09
REGISTERED CIVIL ENGINEER DATE

12-14-09
PLANS APPROVAL DATE

REGISTERED PROFESSIONAL ENGINEER
Robert T. Barton
No. C68789
Exp. 9/30/09
CIVIL
STATE OF CALIFORNIA

The State of California or its officers or agents shall not be responsible for the accuracy or completeness of electronic copies of this plan sheet.

OCTA
550 SOUTH MAIN STREET
ORANGE, CA 92863

PBS&J
625 THE CITY DRIVE SOUTH, SUITE 200
ORANGE, CA 92868

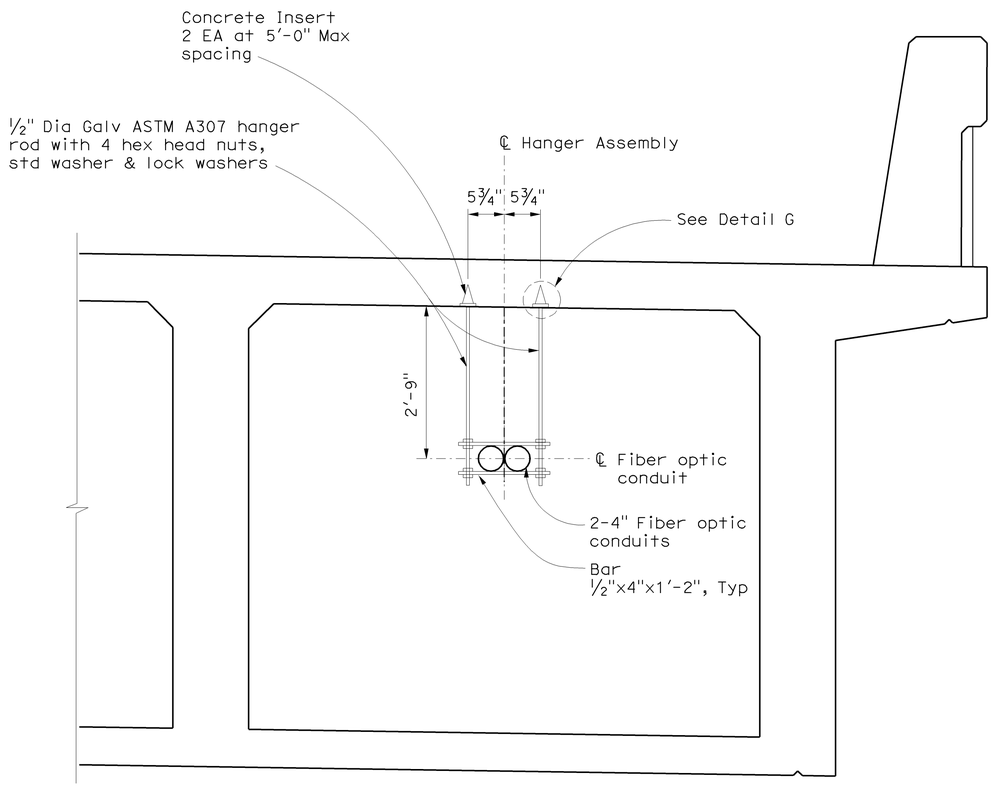

FIBER OPTIC CONDUIT HANGER SUPPORT DETAIL

No Scale

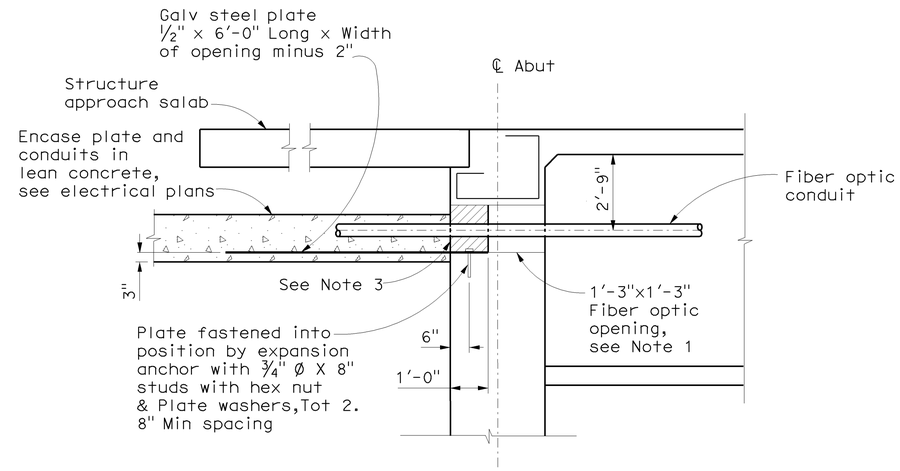

DETAIL AT ABUTMENT OPENING FOR FIBER OPTIC CONDUITS

No Scale

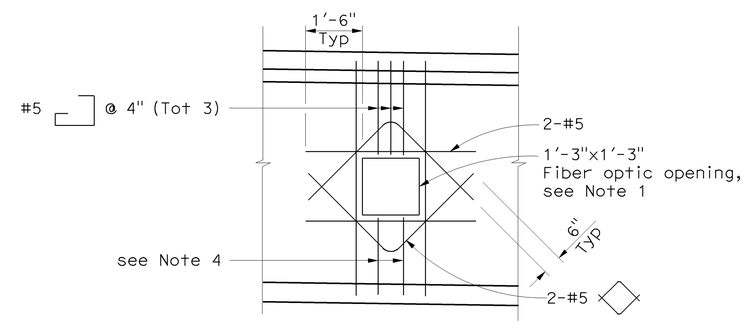

ABUTMENT DIAPHRAGM

FIBER OPTIC CONDUIT OPENING DETAIL

No Scale

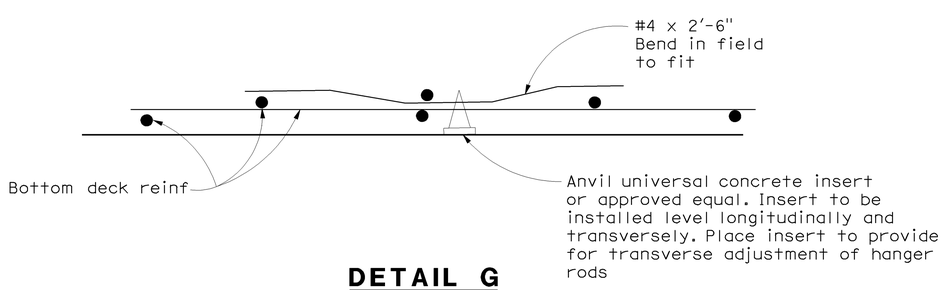

DETAIL G

No Scale

NOTES

1. The exact location, elevation,size and direction of Fiber optic openings, see "Abutment 1 Layout" "Abutment 2 Layout" and "Typical Section sheets.
2. All reinforcement detailed to be placed in addition to reinforcement shwn on project plans.
3. Seal conduits at abutments with concrete or mortar, after tightly wrapping utility with 2 layers of 15 LBS building paper.
4. Reinforcement to be same bar size, and 2/3 the spacing of adjacent reiforcement shown on project plans.
5. Reinforcement to be same bar size and shape as adjacent reiforcement shown on project plans.

NOTE:
THE CONTRACTOR SHALL VERIFY ALL CONTROLLING FIELD DIMENSIONS BEFORE ORDERING OR FABRICATING ANY MATERIAL.

Jon Hamaguchi
DESIGN OVERSIGHT Jon Hamaguchi
6-24-09
SIGN OFF DATE

	BY	CHECKED
DESIGN	R. Barton	M. Carbuccia
DETAILS	I. Karkoutli	M. Carbuccia
QUANTITIES	R. Barton	L. Khaleghi

PREPARED FOR THE
STATE OF CALIFORNIA
DEPARTMENT OF TRANSPORTATION

Alaedin Moubayed
PROJECT ENGINEER

BRIDGE NO. 55-0464
POST MILE 17.6

NUTWOOD AVENUE UC (WIDEN)
FIBER OPTIC CONDUITS DETAILS

DESIGN DETAIL SHEET (ENGLISH) (REV. 2/25/05)

ORIGINAL SCALE IN INCHES FOR REDUCED PLANS 0 1 2 3

CU 12
EA 0F0311

DISREGARD PRINTS BEARING EARLIER REVISION DATES

REVISION DATES (PRELIMINARY STAGE ONLY)

SHEET 17 OF 26

FILE => 55-0464-u-miscdt01.dgn

USERNAME => trrim DATE PLOTTED => 17-DEC-2009 TIME PLOTTED => 10:42

DIST	COUNTY	ROUTE	POST MILES TOTAL PROJECT	SHEET No	TOTAL SHEETS
12	Ora	57	16.2/18.6	937	960

Rob Barton 6/15/09
REGISTERED CIVIL ENGINEER DATE

12-14-09
PLANS APPROVAL DATE

REGISTERED PROFESSIONAL ENGINEER
Robert T. Barton
No. C68789
Exp. 9/30/09
CIVIL
STATE OF CALIFORNIA

The State of California or its officers or agents shall not be responsible for the accuracy or completeness of electronic copies of this plan sheet.

OCTA
550 SOUTH MAIN STREET
ORANGE, CA 92863

PBS&J
625 THE CITY DRIVE SOUTH, SUITE 200
ORANGE, CA 92868

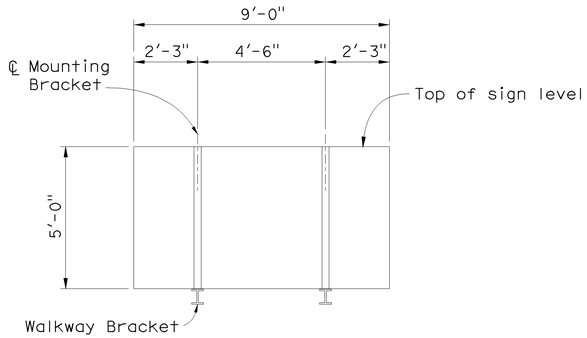

MOUNTING BRACKET ASSEMBLY SPACING

3/8" = 1'-0"

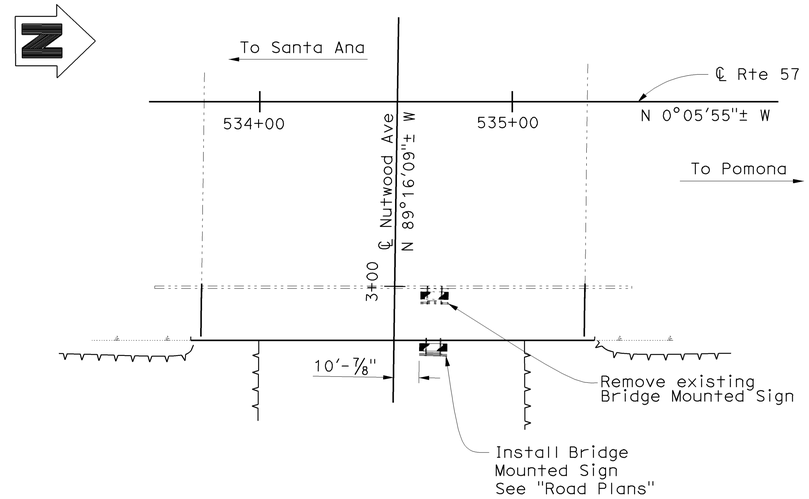

LOCATION PLAN

1" = 30'

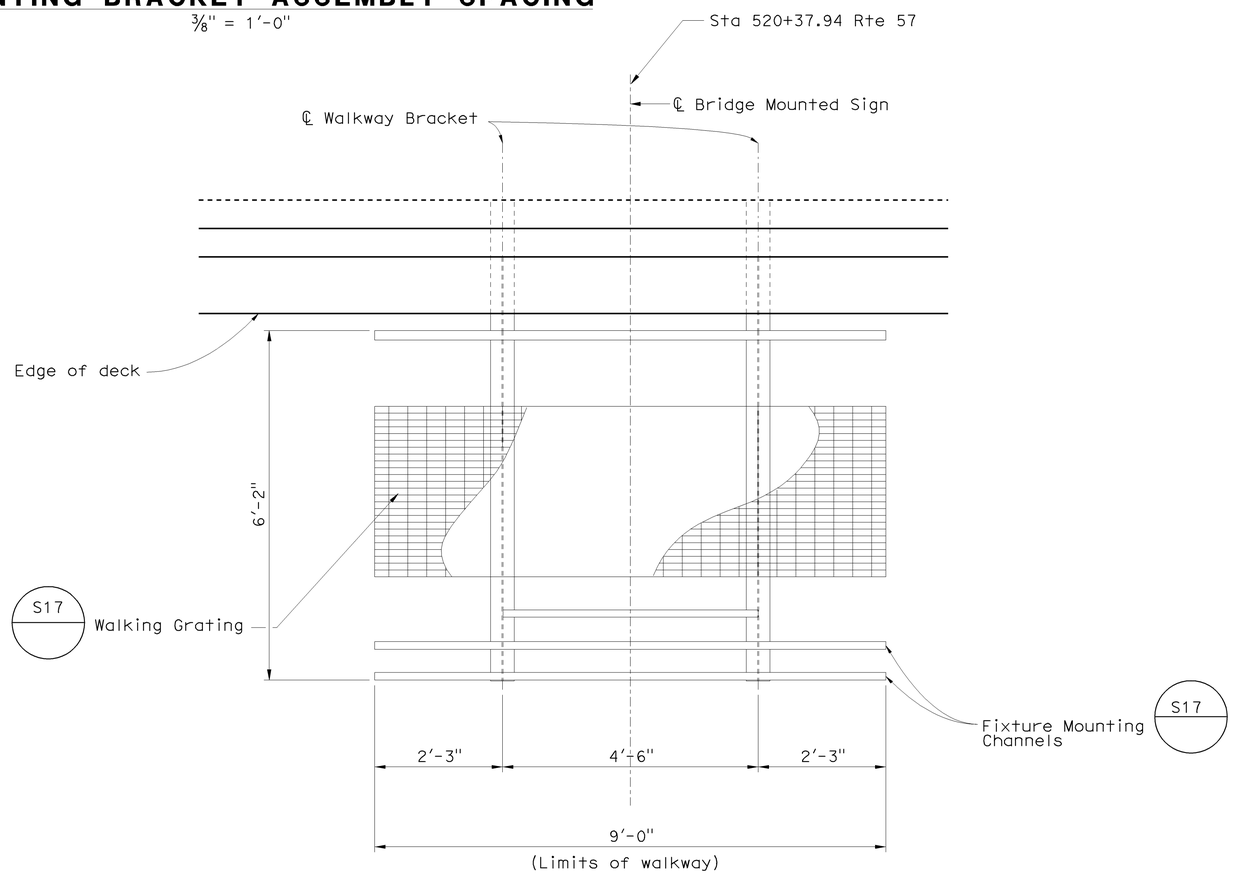

LAYOUT

3/4" = 1'-0"

NOTES:

1. For details not shown see "Standard Plans"
2. Unless otherwise shown all steel shall be galvanized after fabrication.
3. All high strength (H.S.) bolts shall be wrench tightened.
4. Min size fillet weld is 1/4" or smaller piece thickness unless noted otherwise.
5. Contractor to provide Anchor Bolt Layout before Anchor Bolts are placed.
6. Special care shall be taken to insure that the complete hinge and latch assembly will hold the safety railing in a steady manner, free of wobble while in a raised position. Max allowable displacement from vertical at top of railing when latched shall be 1".
7. Safety chain shall be 1/4" galvanized steel coil chain, approximately 12 links per foot. Length shall be min which allows lock-up of safety railing. Min of two safety chains at each end of safety railing. Material shall be Grade A3 high test chain ASTM A413.

NOTE:
THE CONTRACTOR SHALL VERIFY ALL CONTROLLING FIELD DIMENSIONS BEFORE ORDERING OR FABRICATING ANY MATERIAL.

DESIGN OVERSIGHT

SIGN OFF DATE

	BY	CHECKED
DESIGN	R. Barton	M. Carbuccia
DETAILS	I. Karkoutli	M. Carbuccia
QUANTITIES	R. Barton	L. Khaleghi

PREPARED FOR THE STATE OF CALIFORNIA DEPARTMENT OF TRANSPORTATION

Alaedin Moubayed
PROJECT ENGINEER

BRIDGE NO. 55-0464
POST MILE 17.6

NUTWOOD AVENUE UC (WIDEN)
BRIDGE MOUNTED SIGN DETAILS NO. 1

DESIGN DETAIL SHEET (ENGLISH) (REV. 2/25/05)

ORIGINAL SCALE IN INCHES FOR REDUCED PLANS 0 1 2 3

CU 12
EA 0F0311

DISREGARD PRINTS BEARING EARLIER REVISION DATES

REVISION DATES (PRELIMINARY STAGE ONLY)

SHEET 18 OF 26

FILE => 55-0464-u-bmsdt01.dgn

USERNAME => trcarro1 DATE PLOTTED => 17-DEC-2009 TIME PLOTTED => 12:09

DIST	COUNTY	ROUTE	POST MILES TOTAL PROJECT	SHEET No	TOTAL SHEETS
12	Ora	57	16.2/18.6	938	960

Rob Barton 6/15/09
REGISTERED CIVIL ENGINEER DATE

12-14-09
PLANS APPROVAL DATE

REGISTERED PROFESSIONAL ENGINEER Robert T. Barton No. C68789 Exp. 9/30/09 CIVIL STATE OF CALIFORNIA

The State of California or its officers or agents shall not be responsible for the accuracy or completeness of electronic copies of this plan sheet.

OCTA
550 SOUTH MAIN STREET
ORANGE, CA 92863

PBS&J
625 THE CITY DRIVE SOUTH, SUITE 200
ORANGE, CA 92868

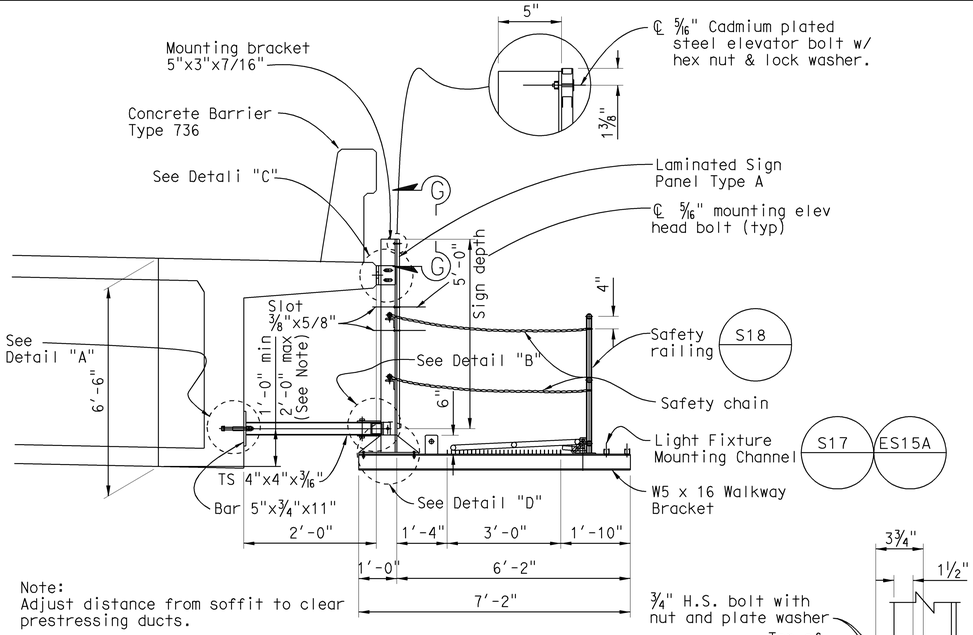

Note:
Adjust distance from soffit to clear prestressing ducts.

TYPICAL SECTION

No Scale

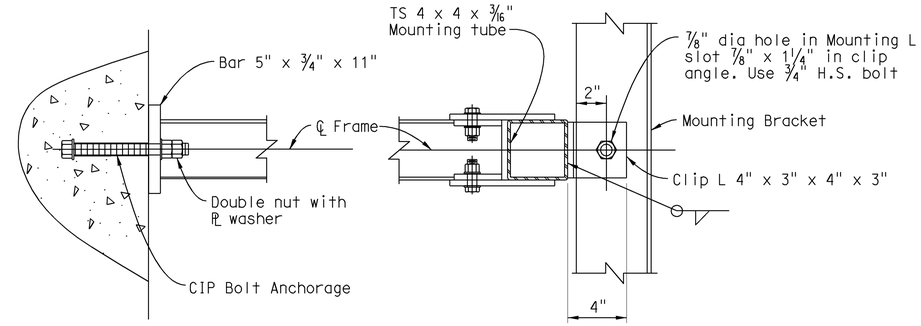

DETAIL "A"

DETAIL "B"

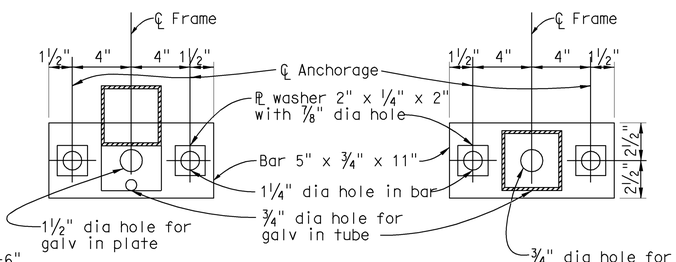

BOTTOM

TOP

ANCHOR PLATE DETAILS

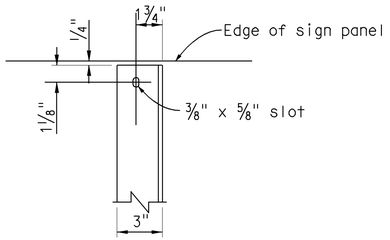

SECTION G-G

NOTE: For notes, See "General Plan" sheet.

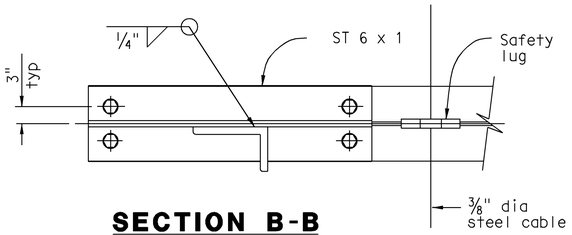

SECTION B-B

No Scale

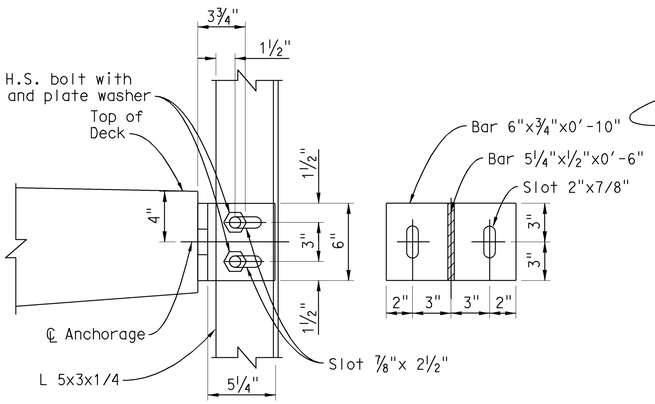

DETAIL C

No Scale

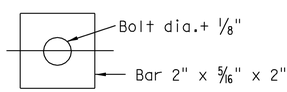

PLATE WASHER

No Scale

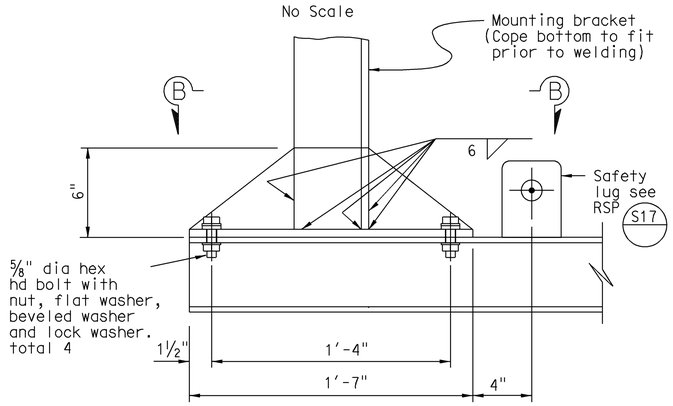

DETAIL D

No Scale

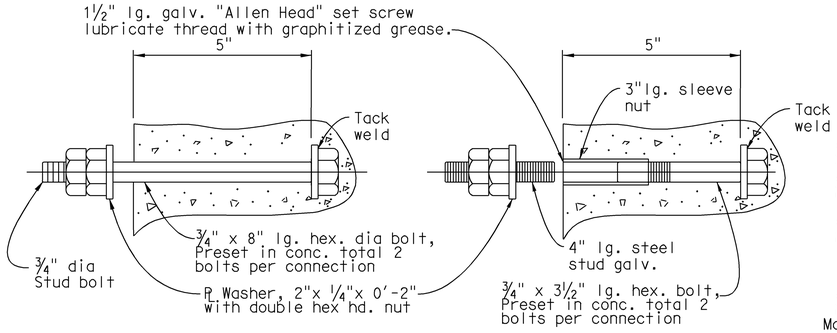

CIP BOLT ANCHORAGE

No Scale

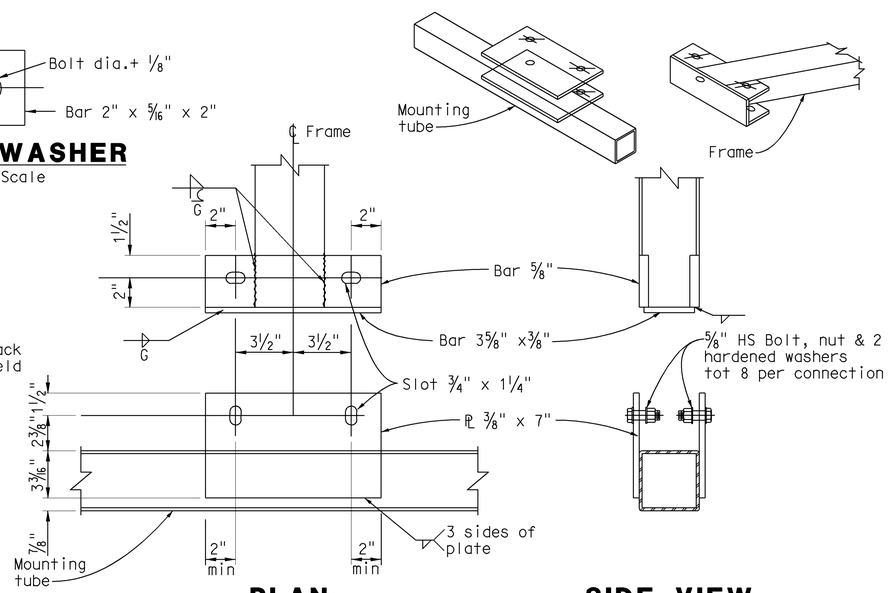

PLAN

SIDE VIEW

FRAME - MOUNTING TUBE CONNECTION

Scale 1:5

NOTE:
THE CONTRACTOR SHALL VERIFY ALL CONTROLLING FIELD DIMENSIONS BEFORE ORDERING OR FABRICATING ANY MATERIAL.

DESIGN	BY R. Barton	CHECKED M. Carbuccia	
DETAILS	BY I. Karkoutli	CHECKED M. Carbuccia	
QUANTITIES	BY R. Barton	CHECKED L. Khaleghi	

DESIGN OVERSIGHT

SIGN OFF DATE

PREPARED FOR THE STATE OF CALIFORNIA DEPARTMENT OF TRANSPORTATION

Alaedin Moubayed
PROJECT ENGINEER

BRIDGE NO. 55-0464
POST MILE 17.6

NUTWOOD AVENUE UC (WIDEN)
BRIDGE MOUNTED SIGN DETAILS NO. 2

DESIGN DETAIL SHEET (ENGLISH) (REV. 2/25/05)

ORIGINAL SCALE IN INCHES FOR REDUCED PLANS 0 1 2 3

CU 12
EA 0F0311

DISREGARD PRINTS BEARING EARLIER REVISION DATES

REVISION DATES (PRELIMINARY STAGE ONLY)

SHEET 19 OF 26

FILE => 55-0464-ubmsdt02.dgn

USERNAME => trcarol DATE PLOTTED => 17-DEC-2009 TIME PLOTTED => 12:33

DIST	COUNTY	ROUTE	POST MILES TOTAL PROJECT	SHEET No	TOTAL SHEETS
12	Ora	57	16.2/18.6	939	960

REGISTERED CIVIL ENGINEER — DATE 6/15/09

12-14-09
PLANS APPROVAL DATE

The State of California or its officers or agents shall not be responsible for the accuracy or completeness of electronic copies of this plan sheet.

REGISTERED PROFESSIONAL ENGINEER — Robert T. Barton — No. C68789 — Exp. 9/30/09 — CIVIL — STATE OF CALIFORNIA

OCTA
550 SOUTH MAIN STREET
ORANGE, CA 92863

PBS&J
625 THE CITY DRIVE SOUTH, SUITE 200
ORANGE, CA 92868

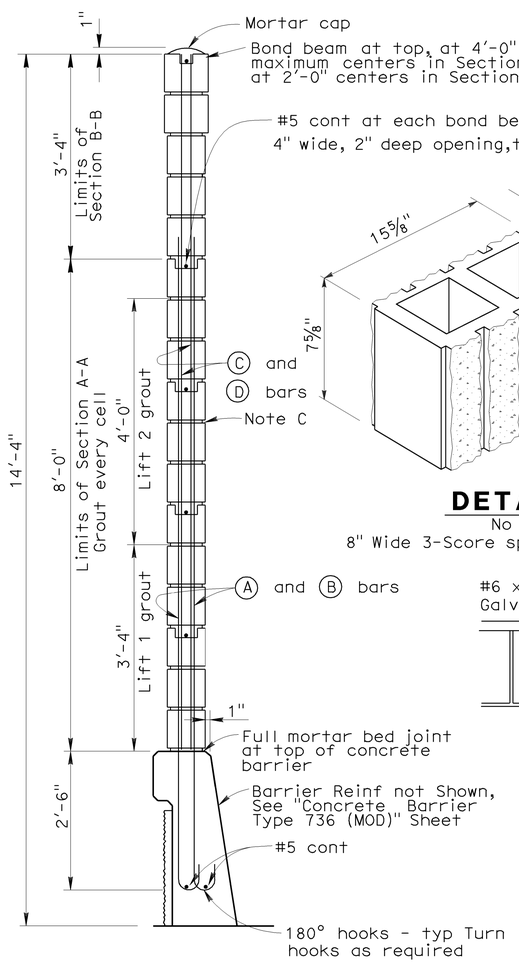

SOUNDWALL SECTION
No Scale

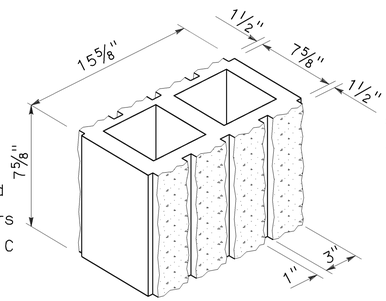

DETAIL B
No Scale
8" Wide 3-Score split face both sides

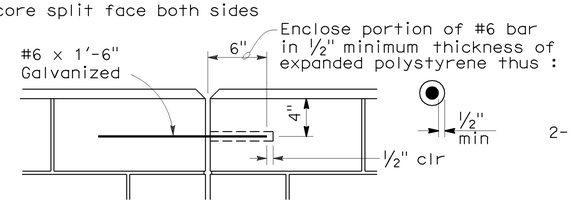

DETAIL A
No Scale

REBAR LEGENDS

A	#6	6'-10"	@ 1'-4"
B	#6	10'-10"	@ 1'-4"
C	#5 x 8'-0"		@ 1'-4"
D	#5 x 7'-7"		@ 1'-4"

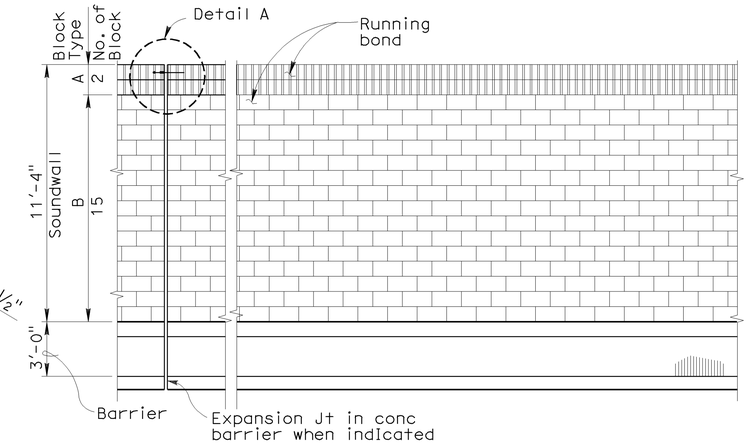

SOUNDWALL - ARCHITECTURAL TREATMENT DETAIL
No Scale

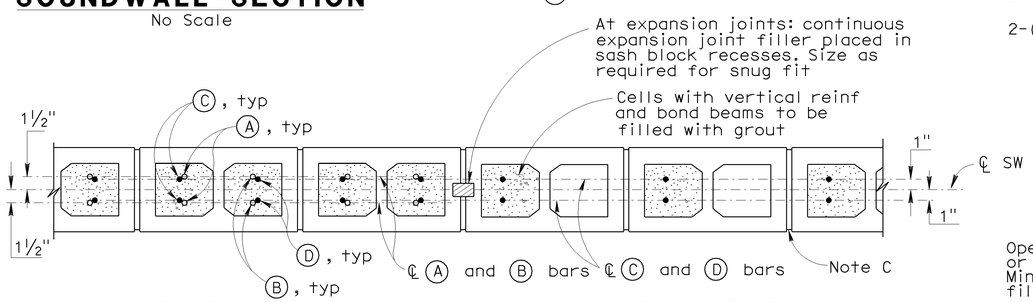

SECTION A-A
No Scale

SECTION B-B
No Scale

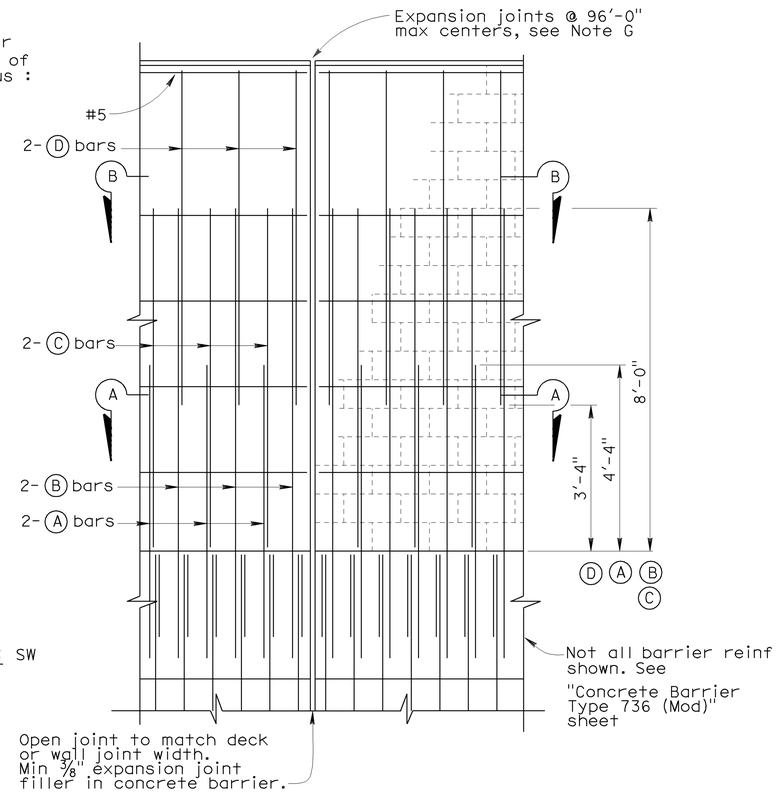

DECK AND WALL JOINT ELEVATION
No Scale

GENERAL NOTES

Note A: Nominal block size shall be 8" x 8" x 16" For type of block, see "Masonry Block Type Table".

Note B: When blocks are laid in stacked bond, ladder type, galvanized joint reinforcement shall be provided. A minimum of 2 - 0.148" wires continuous at 4'-0" maximum to be used. Locate reinforcement in joints that are at the approximate midpoint between bond beams.

Note C: Horizontal joints shall be tooled concave or may be weathered. Vertical joints shall be tooled concave or may be raked.

Note D: All masonry to be high strength unless otherwise noted.

Note E: Class 2 concrete to be used for barrier.

Note F: Expansion joints in concrete barrier and masonry block to match deck joints and at ends of wingwalls.

Note G: Expansion joints in soundwall (Masonry Block) shall be at center line of span, and at ends of each wingwall.

Note H: See "General Plan" sheet for architectural treatment at concrete barrier recess.

MASONRY BLOCK TYPE TABLE

Block Type	Block Description
A	Wall cap rows (Tan scored split face concrete, both sides) 3-scored, see Detail B
B	Main Wall surface (Tan split face concrete, both sides)

DESIGN NOTES

DESIGN

Building Code Requirements for Masonry Structures (ACI 530-05) and the Bridge Design Specifications.

DESIGN WIND LOAD
37 psf

DESIGN SEISMIC LOAD
2.0 Dead load

REINFORCED CONCRETE
f'c = 3,600 psi
fy = 60,000 psi

CONCRETE MASONRY
HIGH STRENGTH
f'm = 2,500 psi
fy = 60,000 psi

LOAD FACTORS AND LOAD COMBINATIONS

Load Factor Design (LFD)

Group A: βD+1.7 E+1.7 SC
Group B: βD+1.7 E+1.3 W
Group C: βD+1.3 E+1.0 EQE
Group D: βD+1.3 E+1.0 EQD
Group E: βD+1.1 E+0.85 (EQE+EQD)
Group XI: 1.0D + 1.0 CT

Where : β = 0.9 or 1.2, whichever controls in design
D = Dead load
E = Lateral earth pressure
SC = Live load surcharge
W = Wind load
EQD = Seismic dead load
EQE = Seismic earth load
CT = Collision Load

STRENGTH REDUCTION FACTORS, Ø

Reinforced Concrete :
For flexure ..... Ø = 0.90
For shear ..... Ø = 0.85

Concrete masonry:
For flexure ..... Ø = 0.80
For shear ..... Ø = 0.60

Note 1:
Barrier, Deck and Concrete Masonry are designed by the Strength Design Method.

NOTE:
THE CONTRACTOR SHALL VERIFY ALL CONTROLLING FIELD DIMENSIONS BEFORE ORDERING OR FABRICATING ANY MATERIAL.

DESIGN OVERSIGHT

SIGN OFF DATE

DESIGN DETAIL SHEET (ENGLISH) (REV. 2/25/05)

	BY	CHECKED
DESIGN	R. Barton	M. Carbuccia
DETAILS	I. Karkoutli	M. Carbuccia
QUANTITIES	R. Barton	L. Khaleghi

ORIGINAL SCALE IN INCHES FOR REDUCED PLANS 0 1 2 3

PREPARED FOR THE STATE OF CALIFORNIA DEPARTMENT OF TRANSPORTATION

Alaedin Moubayed
PROJECT ENGINEER

CU 12
EA 0F0311

BRIDGE NO. 55-0464
POST MILE 17.6

NUTWOOD AVENUE UC (WIDEN)
SOUNDWALL - MASONRY BLOCK

DISREGARD PRINTS BEARING EARLIER REVISION DATES

REVISION DATES (PRELIMINARY STAGE ONLY)

SHEET 20 OF 26

FILE => 55-0464-v-swmb.dgn

USERNAME => rtmitest DATE PLOTTED => 17-DEC-2009 TIME PLOTTED => 12:38

DIST.	COUNTY	ROUTE	KILOMETER POST TOTAL PROJECT	SHEET NO.	TOTAL SHEETS
12	Ora	57	16.2/18.6	940	960

Rob Barton
REGISTERED ENGINEER - CIVIL

12-14-09
PLANS APPROVAL DATE

REGISTERED PROFESSIONAL ENGINEER
Robert T. Barton
No. C68789
Exp. 9/30/09
CIVIL
STATE OF CALIFORNIA

The State of California or its officers or agents shall not be responsible for the accuracy or completeness of electronic copies of this plan sheet.

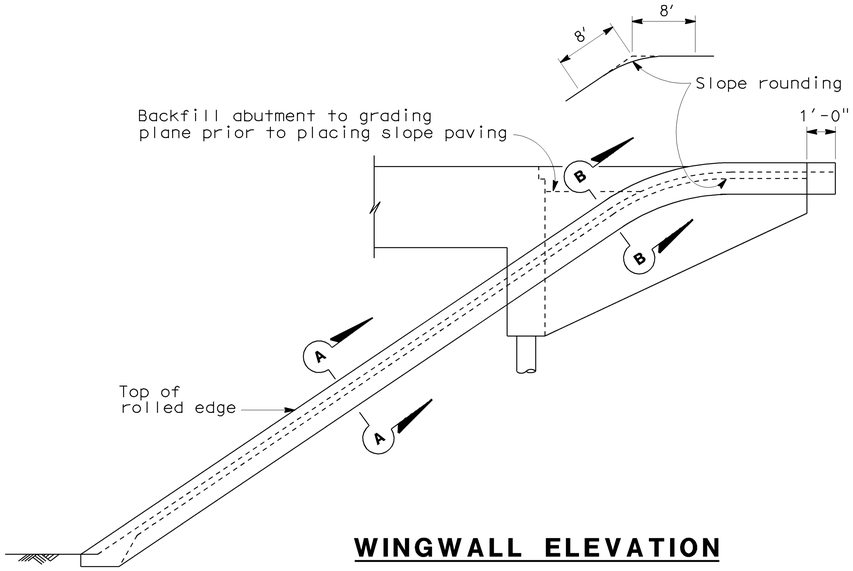

WINGWALL ELEVATION

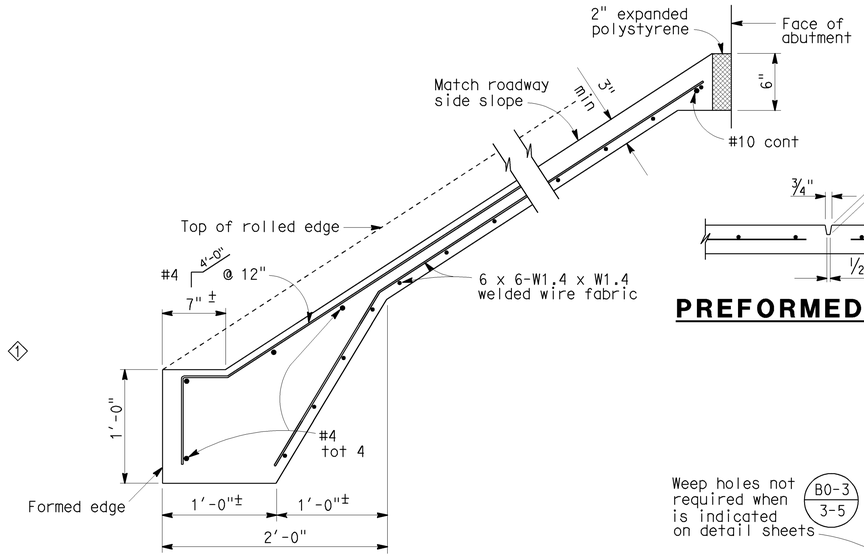

TYPICAL SECTION - CONCRETE PAVING

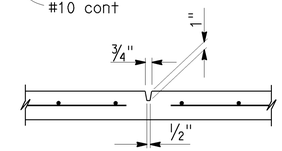

PREFORMED GROOVE

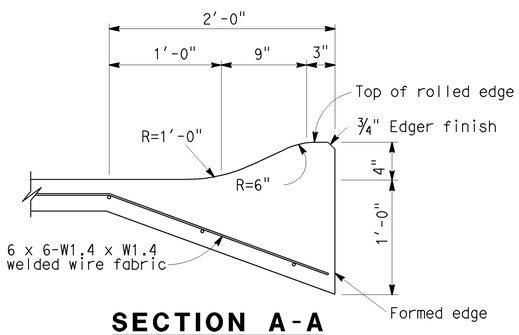

SECTION A-A

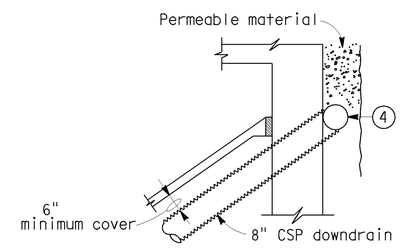

TYPICAL - DRAIN CONNECTION

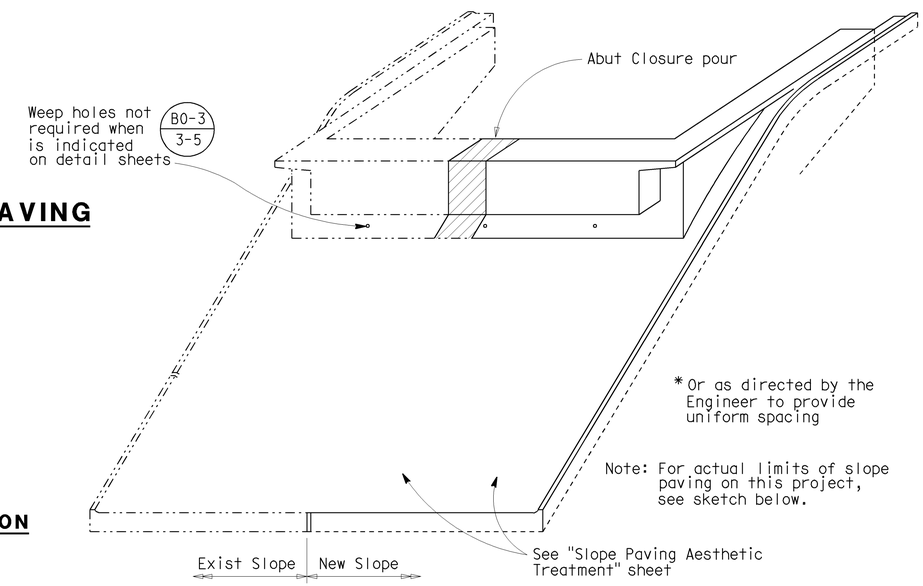

PICTORIAL VIEW OF TYPICAL INSTALLATION

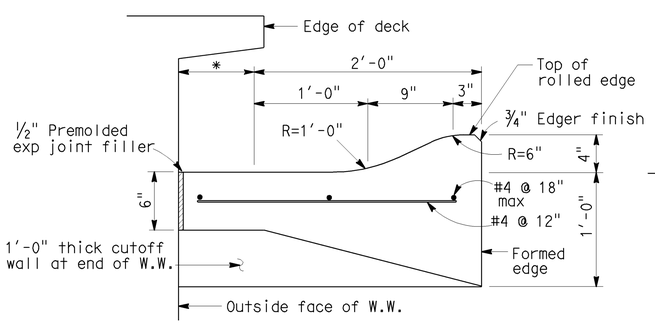

SECTION B-B

*This dimension becomes zero when edge of deck is at outside face of W.W.

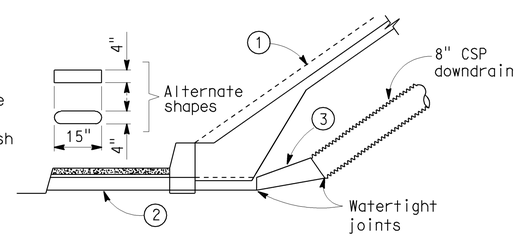

TYPICAL - WITH SIDEWALK

DRAINAGE DETAILS

Note: Drainage details are only applicable when B0-3/3-5 is indicated on detail sheets.

1. Top of rolled edge
2. Conduit: 1/16" galv corrugated steel or 0.109" smooth galv steel
3. Taper: 1/16" / 0.109" smooth galv steel
4. 8" perforated steel pipe (1/16" thick) underdrain behind abutment. Connect to downdrain as shown on limits of Slope Paving & Drainage layout.

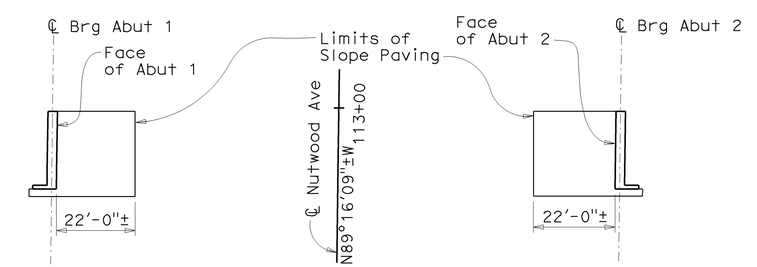

LIMITS OF SLOPE PAVING & DRAINAGE LAYOUT

SPECIAL DETAILS

STANDARD DRAWING					
RELEASE DATE Revised	DESIGN	BY M. TRAFFALIS	CHECKED E. THORKILDSEN	RELEASED BY	
FILE NO. xs3-110	DETAILS	BY R. YEE	CHECKED E. THORKILDSEN	OFFICE CHIEF	
	SUBMITTED	BY M. HA	DRAWING DATE 4/98		

1 Deleted Details

STATE OF CALIFORNIA
DEPARTMENT OF TRANSPORTATION

DIVISION OF ENGINEERING SERVICES

BRIDGE NO. 55-0464
KILOMETER POST 17.6

NUTWOOD AVENUE UC (WIDEN)
SLOPE PAVING

DS OSD 2147A (METRIC) (REV. 2/25/97)

ORIGINAL SCALE IN MILLIMETERS FOR REDUCED PLANS 0 10 20 30 40 50 60 70 80 90 100

CU 12
EA 0F0311

DISREGARD PRINTS BEARING EARLIER REVISION DATES

REVISION DATES (PRELIMINARY STAGE ONLY) 09/17/08

SHEET 21 OF 26

FILE => 55-0464-w-slp.dgn

55-0464-w-slp.dgn

DATE PLOTTED => 17-DEC-2009 TIME PLOTTED => 12:10

DIST	COUNTY	ROUTE	POST MILES TOTAL PROJECT	SHEET No	TOTAL SHEETS
12	Ora	57	16.2/18.6	941	960

Rob Barton 6/15/09
REGISTERED CIVIL ENGINEER DATE

12-14-09
PLANS APPROVAL DATE

REGISTERED PROFESSIONAL ENGINEER
Robert T. Barton
No. C68789
Exp. 9/30/09
CIVIL
STATE OF CALIFORNIA

The State of California or its officers or agents shall not be responsible for the accuracy or completeness of electronic copies of this plan sheet.

OCTA
550 SOUTH MAIN STREET
ORANGE, CA 92863

PBS&J
625 THE CITY DRIVE SOUTH, SUITE 200
ORANGE, CA 92868

NOTES:

1. Separate neighboring paving segments with premolded expansion joint filler.
2. Grid shown is reference for pattern layout only and not to be rendered on finished paving.
3. Flower and Stem segments shall be colored concrete.

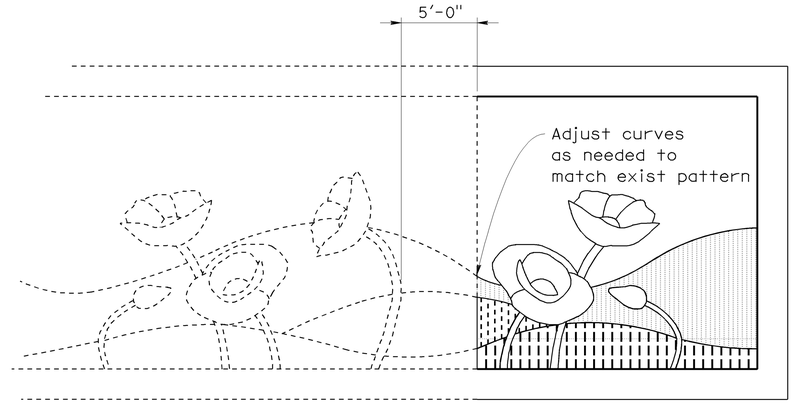

Sawcut and remove exist rolled edge gutter

PATTERN ADJOINING EXIST SLOPE PAVING

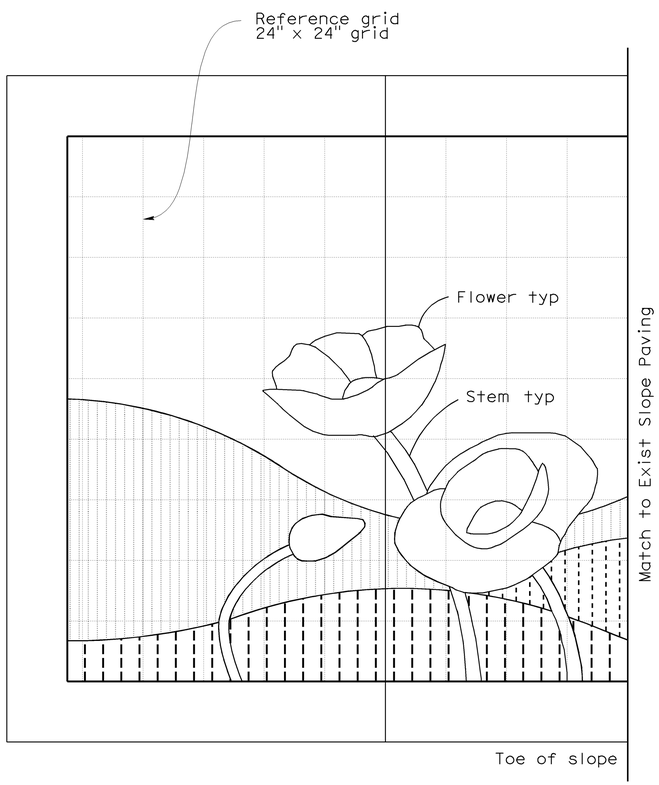

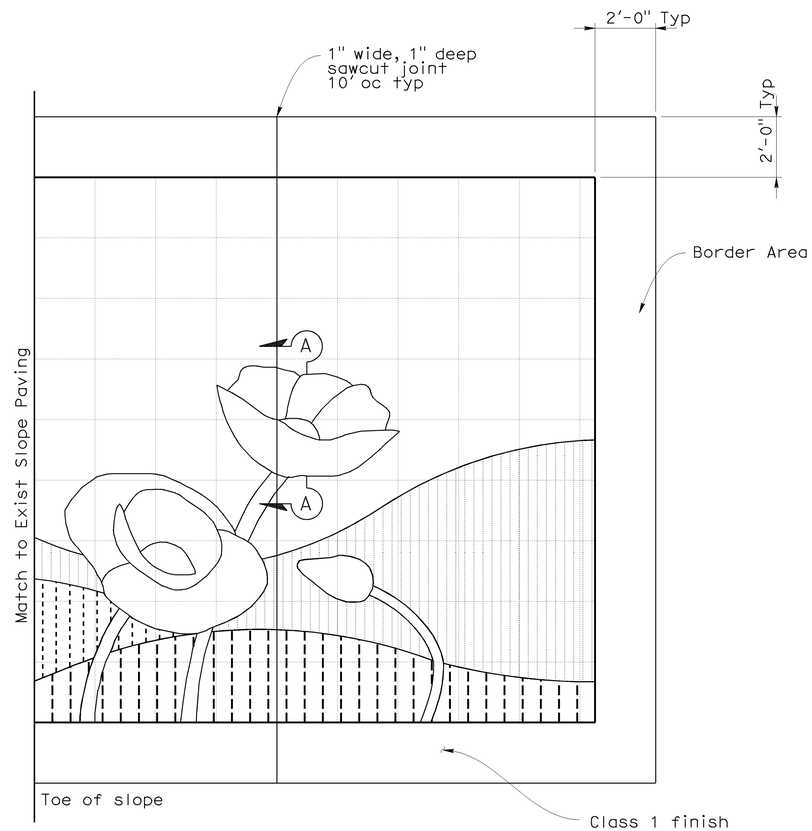

SLOPE PAVING ARCHITECTURAL TREATMENT

No Scale

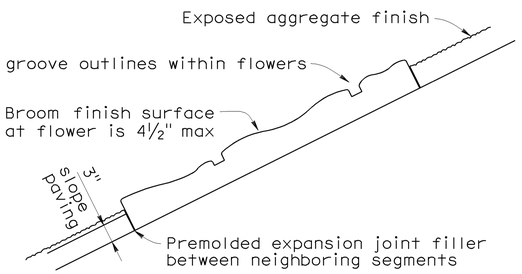

SECTION A-A

No Scale

LEGEND TO TEXTURES

- Exposed aggregate finish (except at flowers, stems and border area)
- Exposed aggregate finish with small grooves ⅜" × ⅜" × 1" oc vertical to slope
- Exposed aggregate finish with medium grooves ½" × ½" × 1½" oc vertical to slope
- Exposed aggregate finish with large grooves 1" × ¾" × 3" oc vertical to slope

NOTE:
THE CONTRACTOR SHALL VERIFY ALL CONTROLLING FIELD DIMENSIONS BEFORE ORDERING OR FABRICATING ANY MATERIAL.

Jon Hamaguchi
DESIGN OVERSIGHT Jon Hamaguchi

6-24-09
SIGN OFF DATE

	BY	CHECKED
DESIGN	R. Barton	M. Carbuccia
DETAILS	I. Karkoutli	M. Carbuccia
QUANTITIES	R. Barton	L. Khaleghi

PREPARED FOR THE STATE OF CALIFORNIA DEPARTMENT OF TRANSPORTATION

Alaedin Moubayed
PROJECT ENGINEER

BRIDGE NO. 55-0464
POST MILE 17.6

NUTWOOD AVENUE UC (WIDEN)
SLOPE PAVING AESTHETIC TREATMENT

DESIGN DETAIL SHEET (ENGLISH) (REV. 2/25/05)

ORIGINAL SCALE IN INCHES FOR REDUCED PLANS 0 1 2 3

CU 12
EA 0F0311

DISREGARD PRINTS BEARING EARLIER REVISION DATES

REVISION DATES (PRELIMINARY STAGE ONLY)

SHEET 22 OF 26

FILE => 55-0464-w-slp02.dgn

USERNAME => trcarol DATE PLOTTED => 17-DEC-2009 TIME PLOTTED => 12:10

DIST	COUNTY	ROUTE	POST MILES TOTAL PROJECT	SHEET No	TOTAL SHEETS
12	Ora	57	16.2/18.6	942	960

REGISTERED ENGINEER Lino Cheang DATE 6/15/09

12-14-09
PLANS APPROVAL DATE

REGISTERED PROFESSIONAL ENGINEER L. CHEANG NO. GE 2345 EXP. 9-30-09 GEOTECHNICAL STATE OF CALIFORNIA

The State of California or its officers or agents shall not be responsible for the accuracy or completeness of electronic copies of this plan sheet.

ORANGE COUNTY TRANSPORTATION AUTHORITY
550 S. MAIN STREET
ORANGE, CA 92863-1584

EARTH MECHANICS, INC.
17660 NEWHOPE STREET, SUITE E
FOUNTAIN VALLEY, CA 92708

REFERENCE: CALTRANS SOIL & ROCK LOGGING, CLASSIFICATION, AND PRESENTATION MANUAL (JUNE 2007)

CEMENTATION

Description	Criteria
Weak	Crumbles or breaks with handling or little finger pressure.
Moderate	Crumbles or breaks with considerable finger pressure.
Strong	Will not crumble or break with finger pressure.

CONSISTENCY OF COHESIVE SOILS

Description	Unconfined Compressive Strength (tsf)	Pocket Penetrometer Measurement (tsf)	Torvane Measurement (tsf)	Field Approximation
Very Soft	< 0.25	< 0.25	< 0.12	Easily penetrated several inches by fist
Soft	0.25 to 0.50	0.25 to 0.50	0.12 to 0.25	Easily penetrated several inches by thumb
Medium Stiff	0.50 to 1.0	0.50 to 1.0	0.25 to 0.50	Penetrated several inches by thumb with moderate effort
Stiff	1 to 2	1 to 2	0.50 to 1.0	Readily indented by thumb but penetrated only with great effort
Very Stiff	2 to 4	2 to 4	1.0 to 2.0	Readily indented by thumbnail
Hard	> 4.0	> 4.0	> 2.0	Indented by thumbnail with difficulty

BOREHOLE IDENTIFICATION

Symbol	Hole Type	Description
Size	A	Auger Boring
Size	R P	Rotary drilled boring Rotary percussion boring (air)
Size	R	Rotary drilled diamond core
Size	HD HA	Hand driven (1-inch soil tube) Hand Auger
●	D	Dynamic Cone Penetration Boring
▲	CPT	Cone Penetration Test (ASTM D 5778-95)
⬚	O	Other

Note: Size in inches.

PLASTICITY OF FINE-GRAINED SOILS

Description	Criteria
Nonplastic	A 1/8-inch thread cannot be rolled at any water content.
Low	The thread can barely be rolled and the lump cannot be formed when drier than the plastic limit.
Medium	The thread is easy to roll and not much time is required to reach the plastic limit. The thread cannot be rerolled after reaching the plastic limit. The lump crumbles when drier than the plastic limit.
High	It takes considerable time rolling and kneading to reach the plastic limit. The thread can be rerolled several times after reaching the plastic limit. The lump can be formed without crumbling when drier than the plastic limit.

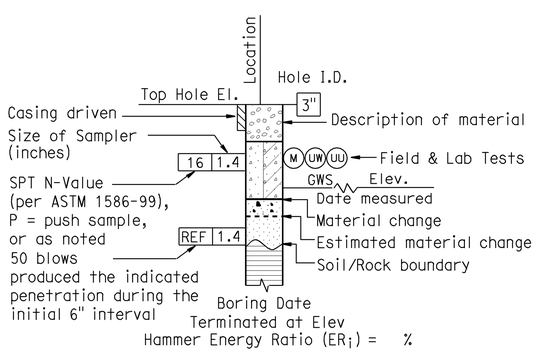

ROTARY BORING

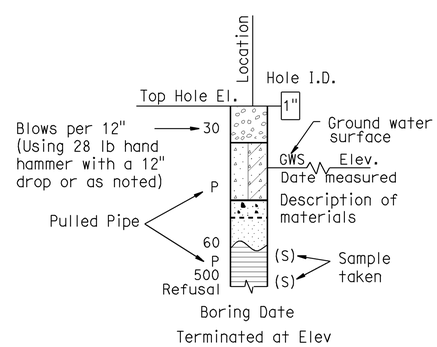

HAND BORING

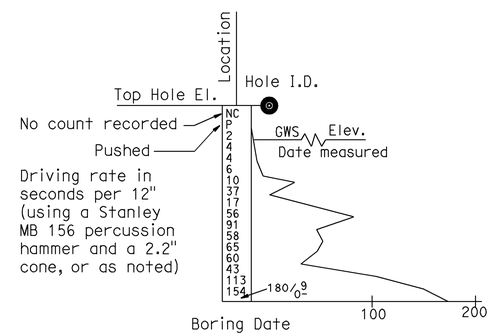

DYNAMIC CONE PENETRATION BORING

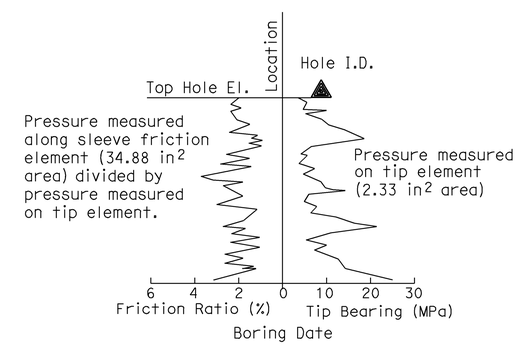

CONE PENETRATION TEST (CPT) SOUNDING

DESIGN OVERSIGHT Jon Hamaguchi
6-24-09
SIGN OFF DATE

DRAWN BY: J.Fang
CHECKED BY: L.Cheang

FIELD INVESTIGATION BY:
R.Jie

PREPARED FOR THE STATE OF CALIFORNIA DEPARTMENT OF TRANSPORTATION

L.Cheang
PROJECT ENGINEER

BRIDGE NO. 55-0464
POST MILES 17.6

NUTWOOD AVENUE UC (WIDEN)
LOG OF TEST BORINGS 1 OF 3

DESIGN GENERAL PLAN SHEET (ENGLISH) (REV. 2/25/05)

ORIGINAL SCALE IN INCHES FOR REDUCED PLANS 0 1 2 3

CU 12
EA 0F0311

DISREGARD PRINTS BEARING EARLIER REVISION DATES

REVISION DATES (PRELIMINARY STAGE ONLY)

SHEET 23 OF 26

FILE => 55-0464-z-1tb01.dgn

USERNAME => ttcarol DATE PLOTTED => 17-DEC-2009 TIME PLOTTED => 12:10

REFERENCE: CALTRANS SOIL & ROCK LOGGING, CLASSIFICATION, AND PRESENTATION MANUAL (JUNE 2007)

GROUP SYMBOLS AND NAMES

Graphic/Symbol	Group Names
GW	Well-graded GRAVEL Well-graded GRAVEL with SAND
GP	Poorly graded GRAVEL Poorly graded GRAVEL with SAND
GW-GM	Well-graded GRAVEL with SILT Well-graded GRAVEL with SILT and SAND
GW-GC	Well-graded GRAVEL with CLAY (or SILTY CLAY) Well-graded GRAVEL with CLAY and SAND (or SILTY CLAY and SAND)
GP-GM	Poorly graded GRAVEL with SILT Poorly graded GRAVEL with SILT and SAND
GP-GC	Poorly graded GRAVEL with CLAY (or SILTY CLAY) Poorly graded GRAVEL with CLAY and SAND (or SILTY CLAY and SAND)
GM	SILTY GRAVEL SILTY GRAVEL with SAND
GC	CLAYEY GRAVEL CLAYEY GRAVEL with SAND
GC-GM	SILTY, CLAYEY GRAVEL SILTY, CLAYEY GRAVEL with SAND
SW	Well-graded SAND Well-graded SAND with GRAVEL
SP	Poorly graded SAND Poorly graded SAND with GRAVEL
SW-SM	Well-graded SAND with SILT Well-graded SAND with SILT and GRAVEL
SW-SC	Well-graded SAND with CLAY (or SILTY CLAY) Well-graded SAND with CLAY and GRAVEL (or SILTY CLAY and GRAVEL)
SP-SM	Poorly graded SAND with SILT Poorly graded SAND with SILT and GRAVEL
SP-SC	Poorly graded SAND with CLAY (or SILTY CLAY) Poorly graded SAND with CLAY and GRAVEL (or SILTY CLAY and GRAVEL)
SM	SILTY SAND SILTY SAND with GRAVEL
SC	CLAYEY SAND CLAYEY SAND with GRAVEL
SC-SM	SILTY, CLAYEY SAND SILTY, CLAYEY SAND with GRAVEL
PT	PEAT
	COBBLES COBBLES and BOULDERS BOULDERS

Graphic/Symbol	Group Names
CL	Lean CLAY Lean CLAY with SAND Lean CLAY with GRAVEL SANDY lean CLAY SANDY lean CLAY with GRAVEL GRAVELLY lean CLAY GRAVELLY lean CLAY with SAND
CL-ML	SILTY CLAY SILTY CLAY with SAND SILTY CLAY with GRAVEL SANDY SILTY CLAY SANDY SILTY CLAY with GRAVEL GRAVELLY SILTY CLAY GRAVELLY SILTY CLAY with SAND
ML	SILT SILT with SAND SILT with GRAVEL SANDY SILT SANDY SILT with GRAVEL GRAVELLY SILT GRAVELLY SILT with SAND
OL	ORGANIC lean CLAY ORGANIC lean CLAY with SAND ORGANIC lean CLAY with GRAVEL SANDY ORGANIC lean CLAY SANDY ORGANIC lean CLAY with GRAVEL GRAVELLY ORGANIC lean CLAY GRAVELLY ORGANIC lean CLAY with SAND
OL	ORGANIC SILT ORGANIC SILT with SAND ORGANIC SILT with GRAVEL SANDY ORGANIC SILT SANDY ORGANIC SILT with GRAVEL GRAVELLY ORGANIC SILT GRAVELLY ORGANIC SILT with SAND
CH	Fat CLAY Fat CLAY with SAND Fat CLAY with GRAVEL SANDY fat CLAY SANDY fat CLAY with GRAVEL GRAVELLY fat CLAY GRAVELLY fat CLAY with SAND
MH	Elastic SILT Elastic SILT with SAND Elastic SILT with GRAVEL SANDY elastic SILT SANDY elastic SILT with GRAVEL GRAVELLY elastic SILT GRAVELLY elastic SILT with SAND
OH	ORGANIC fat CLAY ORGANIC fat CLAY with SAND ORGANIC fat CLAY with GRAVEL SANDY ORGANIC fat CLAY SANDY ORGANIC fat CLAY with GRAVEL GRAVELLY ORGANIC fat CLAY GRAVELLY ORGANIC fat CLAY with SAND
OH	ORGANIC elastic SILT ORGANIC elastic SILT with SAND ORGANIC elastic SILT with GRAVEL SANDY ORGANIC elastic SILT SANDY ORGANIC elastic SILT with GRAVEL GRAVELLY ORGANIC elastic SILT GRAVELLY ORGANIC elastic SILT with SAND
OL/OH	ORGANIC SOIL ORGANIC SOIL with SAND ORGANIC SOIL with GRAVEL SANDY ORGANIC SOIL SANDY ORGANIC SOIL with GRAVEL GRAVELLY ORGANIC SOIL GRAVELLY ORGANIC SOIL with SAND

FIELD AND LABORATORY TESTING

- (C) Consolidation (ASTM D 2435)
- (CL) Collapse Potential (ASTM D 5333)
- (CP) Compaction Curve (CTM 216)
- (CR) Corrosivity Testing (CTM 643, CTM 422, CTM 417)
- (CU) Consolidated Undrained Triaxial (ASTM D 4767)
- (DS) Direct Shear (ASTM D 3080)
- (EI) Expansion Index (ASTM D 4829)
- (M) Moisture Content (ASTM D 2216)
- (OC) Organic Content-% (ASTM D 2974)
- (P) Permeability (CTM 220)
- (PA) Particle Size Analysis (ASTM D 422)
- (PI) Plasticity Index (AASHTO T 90) Liquid Limit (AASHTO T 89)
- (PL) Point Load Index (ASTM D 5731)
- (PM) Pressure Meter
- (PP) Pocket Penetrometer
- (R) R-Value (CTM 301)
- (SE) Sand Equivalent (CTM 217)
- (SG) Specific Gravity (AASHTO T 100)
- (SL) Shrinkage Limit (ASTM D 427)
- (SW) Swell Potential (ASTM D 4546)
- (TV) Pocket Torvane
- (UC) Unconfined Compression-Soil (ASTM D 2166) Unconfined Compression-Rock (ASTM D 2938)
- (UU) Unconsolidated Undrained Triaxial (ASTM D 2850)
- (UW) Unit Weight (ASTM D 4767)
- (VS) Vane Shear (AASHTO T 223)

DIST	COUNTY	ROUTE	POST MILES TOTAL PROJECT	SHEET No	TOTAL SHEETS
12	Ora	57	16.2/18.6	943	960

REGISTERED ENGINEER Lino Cheang DATE 6/15/09

REGISTERED PROFESSIONAL ENGINEER L. CHEANG NO. GE 2345 EXP. 9-30-09 GEOTECHNICAL STATE OF CALIFORNIA

12-14-09
PLANS APPROVAL DATE

The State of California or its officers or agents shall not be responsible for the accuracy or completeness of electronic copies of this plan sheet.

ORANGE COUNTY TRANSPORTATION AUTHORITY
550 S. MAIN STREET
ORANGE, CA 92863-1584

EARTH MECHANICS, INC.
17660 NEWHOPE STREET, SUITE E
FOUNTAIN VALLEY, CA 92708

APPARENT DENSITY OF COHESIONLESS SOILS

Description	SPT N_{60} (Blows / 12 inches)
Very loose	0 - 4
Loose	5 - 10
Medium Dense	11 - 30
Dense	31 - 50
Very Dense	> 50

MOISTURE

Description	Criteria
Dry	Absence of moisture, dusty, dry to the touch
Moist	Damp but no visible water
Wet	Visible free water, usually soil is below water table

PERCENT OR PROPORTION OF SOILS

Description	Criteria
Trace	Particles are present but estimated to be less than 5%
Few	5 to 10%
Little	15 to 25%
Some	30 to 45%
Mostly	50 to 100%

PARTICLE SIZE

Description		Size
Boulder		> 12"
Cobble		3" to 12"
Gravel	Coarse	3/4" to 3"
	Fine	No. 4 to 3/4"
Sand	Coarse	No. 10 to No. 4
	Medium	No. 40 to No. 10
	Fine	No. 200 to No. 40

DESIGN OVERSIGHT Jon Hamaguchi
6-24-09
SIGN OFF DATE

DRAWN BY: J.Fang
CHECKED BY: L.Cheang

FIELD INVESTIGATION BY:
R.Jie

PREPARED FOR THE STATE OF CALIFORNIA DEPARTMENT OF TRANSPORTATION

L.Cheang
PROJECT ENGINEER

BRIDGE NO. 55-0464
POST MILES 17.6

NUTWOOD AVENUE UC (WIDEN)
LOG OF TEST BORINGS 2 OF 3

DESIGN GENERAL PLAN SHEET (ENGLISH) (REV. 2/25/05)

ORIGINAL SCALE IN INCHES FOR REDUCED PLANS 0 1 2 3

CU 12
EA 0F0311

DISREGARD PRINTS BEARING EARLIER REVISION DATES

REVISION DATES (PRELIMINARY STAGE ONLY)

SHEET 24 OF 26

FILE => 55-0464-z-1tb02.dgn

USERNAME => ttrcarol DATE PLOTTED => 17-DEC-2009 TIME PLOTTED => 12:10

DIST	COUNTY	ROUTE	POST MILES TOTAL PROJECT	SHEET No	TOTAL SHEETS
12	Ora	57	16.2/18.6	944	960

REGISTERED ENGINEER Lino Cheang 6/15/09 DATE

12-14-09
PLANS APPROVAL DATE

REGISTERED PROFESSIONAL ENGINEER L. CHEANG NO. GE 2345 EXP. 9-30-09 GEOTECHNICAL STATE OF CALIFORNIA

The State of California or its officers or agents shall not be responsible for the accuracy or completeness of electronic copies of this plan sheet.

ORANGE COUNTY TRANSPORTATION AUTHORITY
550 S. MAIN STREET
ORANGE, CA 92863-1584

EARTH MECHANICS, INC.
17660 NEWHOPE STREET, SUITE E
FOUNTAIN VALLEY, CA 92708

BENCHMARKS:

Designation: 404-14-68 Elev = 210.124
Described by OCS 2003 - Found 3¾" OCS Aluminum Benchmark Disk Stamped "404-14-68", set in the Southwesterly Corner of a 4 ft by 8 ft Concrete Catch Basin. Monument is Located in the Northeasterly Corner of the Intersection of Placentia Avenue and the Atchinson Topeka Santa Fe Railway, 33.5 ft Easterly of the Centerline of Placentia Avenue and 87 ft Northerly of the Northerly Rail along the Railway. Monument is set Level with the Sidewalk.

Designation: 2G-25-70 Elev = 275.872
Described by OCS 2003 - Found 3¾" OCS Aluminum Benchmark Disk Stamped "2G-25-70", set in the Southeasterly Corner of a 4 ft by 6 ft Concrete Catch Basin. Monument is Located in the Northwesterly Corner of the Intersection of Yorba Linda Boulevard and Deerpark Drive, 75 ft Westerly of the Centerline of Deerpark and 46 ft Northerly of the Centerline of Yorba Linda. Monument is set Level with the Sidewalk.

NOTES:

(1) This LOTB sheet (Boring Record) was prepared in accordance with the Caltrans Soil and Rock Logging, Classification and Presentation Manual (June 2007)

(2) 2.4" samples were taken using a California Modified Sampler.

(3) An automatic trip hammer system consisting of a hammer weight of 140 lbs falling a distance of 30" was used to advance the drive sampler.

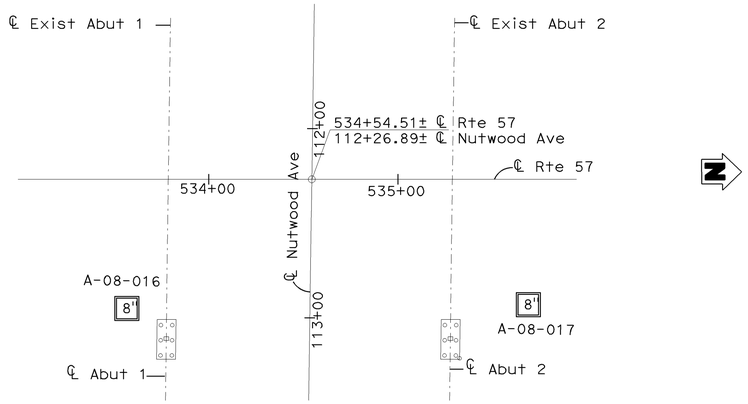

PLAN

1" = 40'

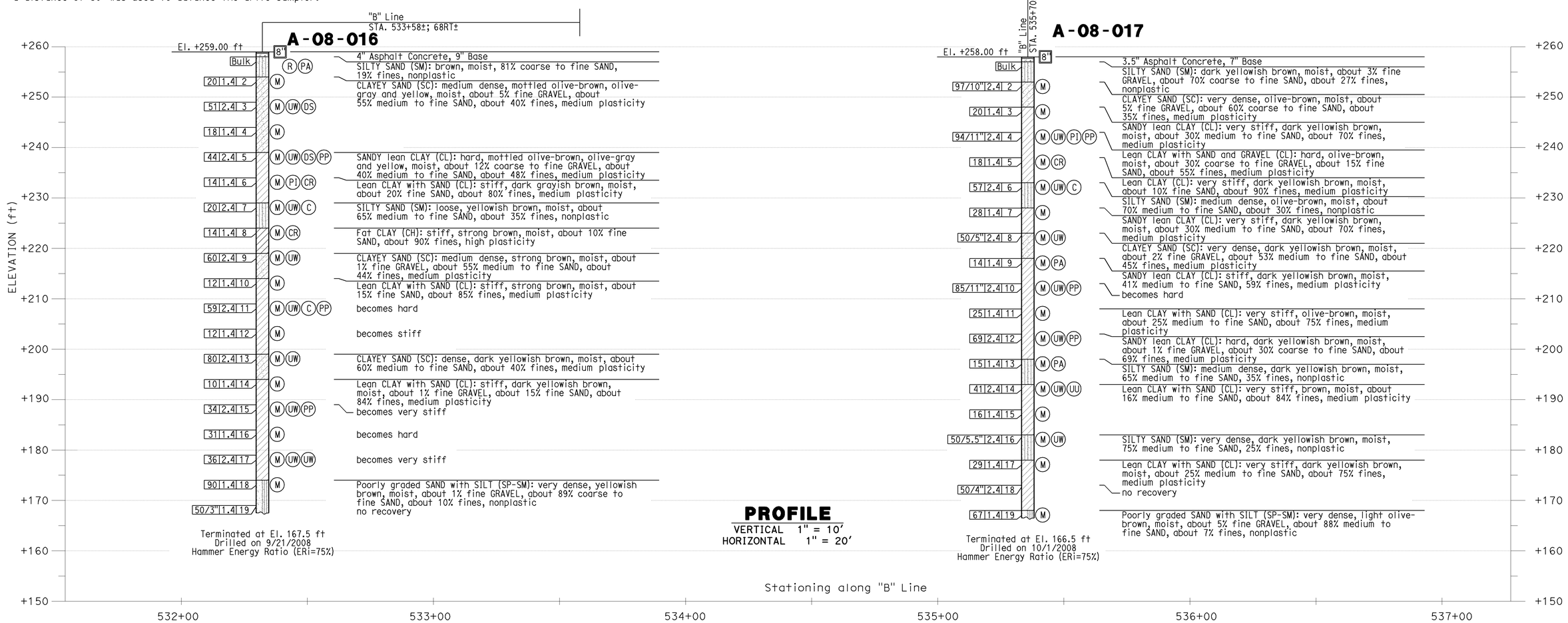

PROFILE

VERTICAL 1" = 10'
HORIZONTAL 1" = 20'

DESIGN OVERSIGHT Jon Hamaguchi 6-24-09 SIGN OFF DATE	DRAWN BY: J.Fang CHECKED BY: L.Cheang	FIELD INVESTIGATION BY: R.Jie	PREPARED FOR THE STATE OF CALIFORNIA DEPARTMENT OF TRANSPORTATION	L.Cheang PROJECT ENGINEER	BRIDGE NO. 55-0464 POST MILES 17.6

NUTWOOD AVENUE UC (WIDEN)

LOG OF TEST BORINGS 3 OF 3

DESIGN GENERAL PLAN SHEET (ENGLISH) (REV. 2/25/05)

ORIGINAL SCALE IN INCHES FOR REDUCED PLANS 0 1 2 3

CU 12
EA 0F0311

DISREGARD PRINTS BEARING EARLIER REVISION DATES

REVISION DATES (PRELIMINARY STAGE ONLY)

SHEET 25 OF 26

FILE => 55-0464-z-litb03.dgn

USERNAME => trcarol DATE PLOTTED => 17-DEC-2009 TIME PLOTTED => 12:10

FED. ROAD SYS. NO.	STATE	F. A. PROJECT NO.	SHEET NO.	TOTAL SHEETS
7	CALIF.			

DIST.	COUNTY	ROUTE	PM	SHEET NO.	TOTAL SHEETS
07	ORA	57	15.6/18	197	197

Bridge Engineer — Chief Engineer, Bridge Design

Date Approved: August 28 1967

BENCH MARK

BM #319R-63 Elev. 2.7 59
Set R/S in N. curb of Chapman Ave.
@ E.C.R. from Placentia Ave 48' W. of
Placentia & 51' N. of ℄ Chapman

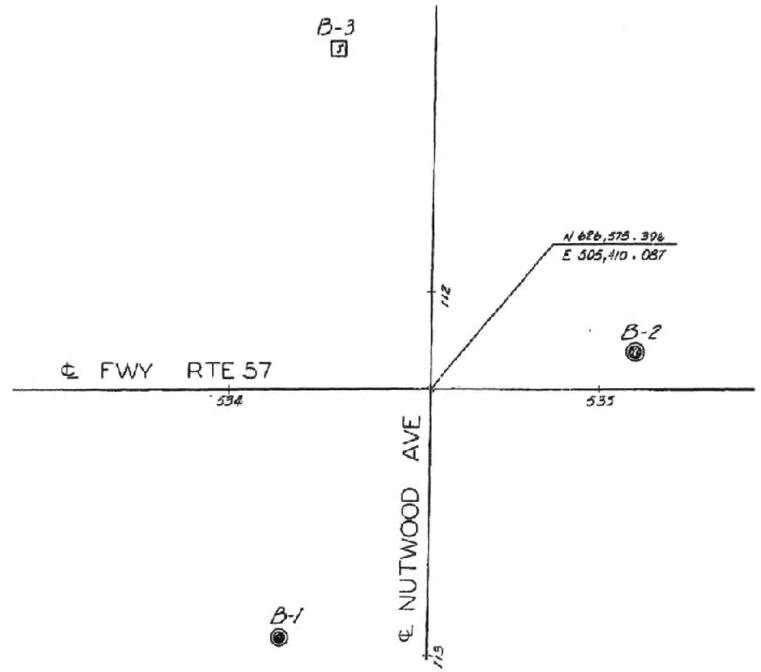

PLAN
Scale 1"=20'

DIVISION OF ENGINEERING SERVICES - GEOTECHNICAL SERVICES					
As-Built Log of Test Borings sheet is considered an informational document only. As such, the State of California registration seal with signature, license number and registration certificate expiration date confirm that this is a true and accurate copy of the original document. This drawing is available and presented only for the convenience of any bidder, contractor or other interested party.					
DIST.	COUNTY	ROUTE	POST MILES -TOTAL PROJECT	Sheet No.	Total Sheets
12	Ora	57	16.2/18.6	945	960
Lino Cheang — REGISTERED CIVIL ENGINEER				6/15/09 — DATE	
NUTWOOD AVENUE UC (WIDEN)					
AS-BUILT LOG OF TEST BORINGS					
NOTE: A COPY OF THIS LOG OF TEST BORINGS IS AVAILABLE AT OFFICE OF STRUCTURE MAINTENANCE ANDINVESTIGATIONS, SACRAMENTO, CALIFORNIA		CU: 12 EA: 0F0311		BRIDGE No. 55-0464	
				Sheet 26	of 26

To accompany plans dated 12-14-09

REGISTERED PROFESSIONAL ENGINEER — LINO C. CHEANG — NO. GE 2345 — EXP. 9/30/09 — GEOTECHNICAL — STATE OF CALIFORNIA

AS BUILT PLANS
Contract No. 07-032124
Date Completed
Document No. 70000668

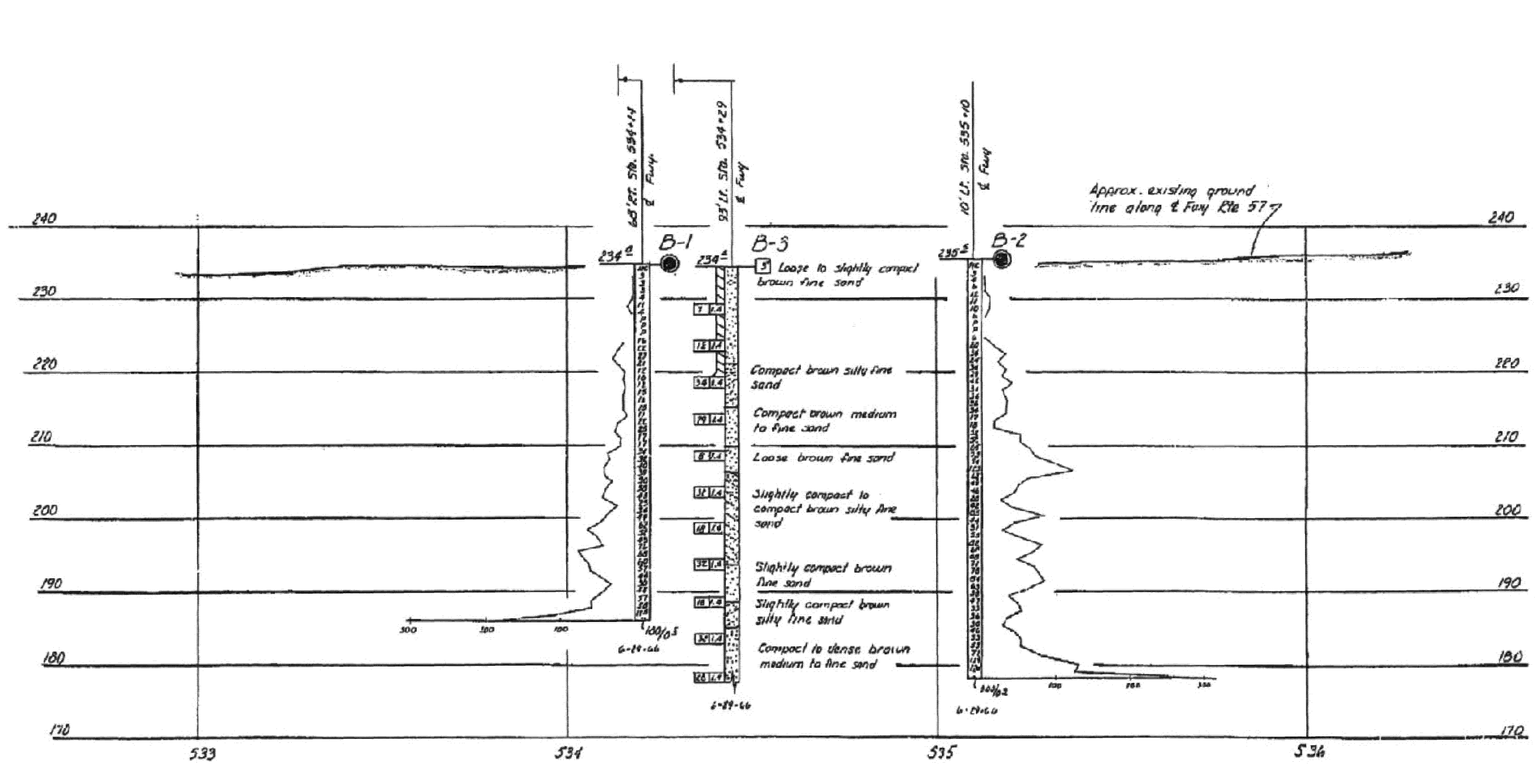

NO GROUND WATER ENCOUNTERED DURING THIS INVESTIGATION BY BRIDGE DEPT. GEOLOGY SECTION
DATE June 1966

AS BUILT
CORRECTIONS BY: H. L. Dixon Sheet 1 7-29-69
CONTRACT NO. 07-032124
DATE 9-30-69

PROFILE
Scale Vert. 1"=10'
Horiz. 1"=20'

SHEET	OF
12	12

STATE OF CALIFORNIA
DEPARTMENT OF PUBLIC WORKS
DIVISION OF HIGHWAYS

NUTWOOD AVENUE UNDERCROSSING

LOG OF TEST BORINGS

SCALE As Noted	BRIDGE 55-464	FILE	DRAWING 55464-12

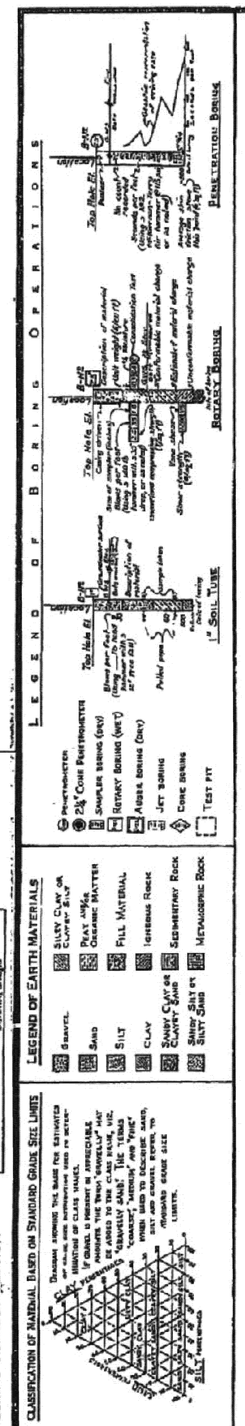

NOTE: Classification of earth material as shown on this sheet is based upon field inspection and is not to be construed to imply mechanical analysis.

FIELD STUDY	by Z. CAMBELLET 2-25-66
DRAWN	by R. MORZAD 7-21-66
CHECKED	by C. Blonk 7-25-66
Approved Recommended	Engineering Geologist

BRIDGE DEPARTMENT
ENGINEERING GEOLOGY SECTION

197

Charge 07208
W. A. 032131

Disregard prints bearing earlier numbers → PREL. DRAWING No. PR- 66/67

FILENAME => 55-0464-z-1tb04.tif

DIST	COUNTY	ROUTE	POST MILES TOTAL PROJECT	SHEET No	TOTAL SHEETS
12	Ora	57	16.2/18.6	946	960

REGISTERED CIVIL ENGINEER 06/17/09 DATE

12-14-09
PLANS APPROVAL DATE

The State of California or its officers or agents shall not be responsible for the accuracy or completeness of electronic copies of this plan sheet.

REGISTERED PROFESSIONAL ENGINEER Chad W Harden No. 67648 Exp. 06/30/11 CIVIL STATE OF CALIFORNIA

OCTA
550 S MAIN STREET
ORANGE, CA 92868

RBF CONSULTING
14725 ALTON PKWY
IRVINE, CA 92618

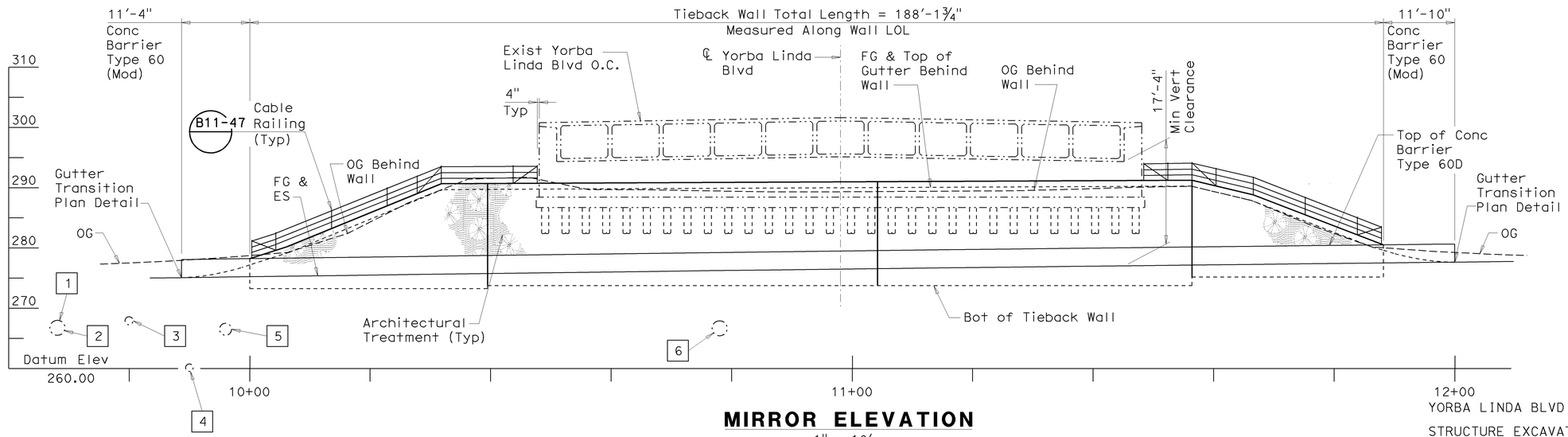

MIRROR ELEVATION

1" = 10'

YORBA LINDA BLVD OC — BRIDGE NO 55-0468

QUANTITIES

STRUCTURE EXCAVATION (TIEBACK WALL)	233	CY
STRUCTURE EXCAVATION (TYPE Y-1) (AERIALLY DEPOSITED LEAD)	9	CY
STRUCTURE BACKFILL (TIEBACK WALL)	17	CY
TIEBACK ANCHOR	39	EA
STRUCTURAL CONCRETE, RETAINING WALL	62	CY
ARCHITECTURAL TEXTURE	1,631	SQFT
BAR REINFORCING STEEL (RETAINING WALL)	38,539	LB
SHOTCRETE	107	CY
GEOCOMPOSITE DRAIN	53	SQYD
MINOR CONCRETE (GUTTER)	219	LF
CABLE RAILING	124	LF
CONCRETE BARRIER (TYPE 60 MODIFIED)	23	LF
CONCRETE BARRIER (TYPE 60D)	188	LF

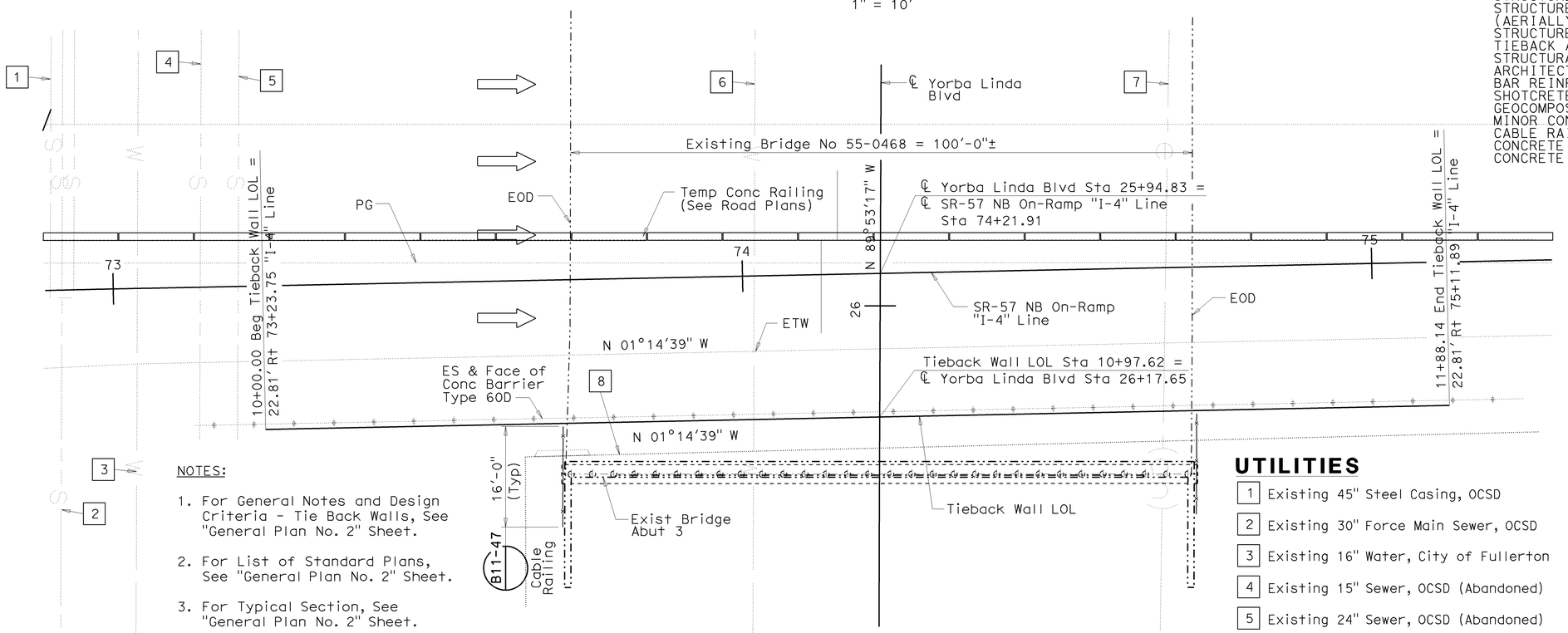

INDEX TO PLANS

SHEET NO.	TITLE
1	General Plan No. 1
2	General Plan No. 2
3	Foundation Plan
4	Tieback Wall Layout
5	Tieback Wall Details No. 1
6	Tieback Wall Details No. 2
7	Tieback Wall Details No. 3
8	Tieback Wall Details No. 4
9	Tieback Wall Reinforcement
10	Architectural Treatment Layout
11	Architectural Details
12	Log of Test Borings No. 1
13	Log of Test Borings No. 2
14	Log of Test Borings No. 3
15	As-Built Log of Test Borings

NOTES:

1. For General Notes and Design Criteria - Tie Back Walls, See "General Plan No. 2" Sheet.
2. For List of Standard Plans, See "General Plan No. 2" Sheet.
3. For Typical Section, See "General Plan No. 2" Sheet.
4. "CHDPE" Indicates Corrugated High Density Polyethylene Pipe.

PLAN

1" = 10'

UTILITIES

1. Existing 45" Steel Casing, OCSD
2. Existing 30" Force Main Sewer, OCSD
3. Existing 16" Water, City of Fullerton
4. Existing 15" Sewer, OCSD (Abandoned)
5. Existing 24" Sewer, OCSD (Abandoned)
6. Existing 30" Water, City of Fullerton (Abandoned)
7. Existing Electric Overhead, So Cal Edison
8. Proposed CHDPE Irrigation, See General Note 5 on "GENERAL PLAN No. 2" Sheet

NOTE:
THE CONTRACTOR SHALL VERIFY ALL CONTROLLING FIELD DIMENSIONS BEFORE ORDERING OR FABRICATING ANY MATERIAL.

DESIGN OVERSIGHT Jon Hamaguchi	DESIGN	BY Chad Harden	CHECKED Kevin Burke	LRFD DESIGN	LIVE LOADING: 2 FOOT SURCHARGE
6-24-09 SIGN OFF DATE	DETAILS	BY Gerald Fetters	CHECKED Chad Harden	LAYOUT	BY Gerald Fetters / CHECKED Chad Harden
	QUANTITIES	BY Chad Harden	CHECKED Scott McCauley	SPECIFICATIONS	BY S. Sheikh / PLANS AND SPECS COMPARED S. Sheikh

PREPARED FOR THE STATE OF CALIFORNIA DEPARTMENT OF TRANSPORTATION

Chad W. Harden
PROJECT ENGINEER

BRIDGE NO. 55-0468
POST MILE 18.4

YORBA LINDA BLVD OC (MODIFY)
GENERAL PLAN No.1

CU 12
EA 0F0311

DISREGARD PRINTS BEARING EARLIER REVISION DATES

REVISION DATES (PRELIMINARY STAGE ONLY): 1/24/08 10/24/08 2/13/09 4/6/09

SHEET 1 OF 15

DESIGN GENERAL PLAN SHEET (ENGLISH) (REV. 2/25/05)

ORIGINAL SCALE IN INCHES FOR REDUCED PLANS 0 1 2 3

FILE => 55-468-a-gp01.dgn

USERNAME => tfcdrol DATE PLOTTED => 17-DEC-2009 TIME PLOTTED => 12:10

DIST	COUNTY	ROUTE	POST MILES TOTAL PROJECT	SHEET No	TOTAL SHEETS
12	Ora	57	16.2/18.6	947	960

REGISTERED CIVIL ENGINEER 06/17/09 DATE

12-14-09
PLANS APPROVAL DATE

REGISTERED PROFESSIONAL ENGINEER Chad W Harden No. 67648 Exp. 06/30/11 CIVIL STATE OF CALIFORNIA

The State of California or its officers or agents shall not be responsible for the accuracy or completeness of electronic copies of this plan sheet.

OCTA
550 S MAIN STREET
ORANGE, CA 92868

RBF CONSULTING
14725 ALTON PKWY
IRVINE, CA 92618

DESIGN CRITERIA - TIEBACK WALLS

Specification: CALTRANS BRIDGE DESIGN SPECIFICATIONS
LFD Version April 2000

Loading: Per Foundation Report

Soil Parameters: (For Wall Design Only)
$\varnothing$ = 26°
γ = 120 pcf
C = 200 psf
Allowable Bearing Pressure = 1500 psf

Reinforced Concrete: fy = 60 000 psi (Yield strength of reinforcement)
f'c = 4000 psi (Compressive strength of concrete @ 28 days)
n = 8

Shotcrete: f'c = 4000 psi

Prestressing Steel: Bars - ASTM A722 Type II (f_{pu} = 150 ksi)
Strands - ASTM A416 (f_{pu} = 270 ksi)

T = Design Force per Tieback (kip)
(See "Tieback Wall Details No. 1" sheet)

As_{min} = Minimum cross sectional area of Prestressing Steel in Tieback Tendon (in^2)

$$As_{min} = \frac{1.5T}{0.75f_{pu}}$$

f_{pu} = Minimum Tensile Strength of Prestressing Steel

Structural Steel: fy = 36 000 psi

GENERAL NOTES

1. For Tieback Wall Layout and Dimensions, See "TIEBACK WALL LAYOUT" Sheet
2. Cast-In-Place Concrete shall be Placed after Tensioning of all Tiebacks.
3. For Tieback Details see "TIEBACK WALL DETAILS No. 1", thru "TIEBACK WALL DETAILS No. 4" Sheets.
4. Tiebacks shall maintain a minimum of 1-ft clear to Existing Abutment Piles. Engineer shall be Notified of any Potential Conflicts requiring Revisions to Tieback Anchor Spacing prior to Tieback Installation.
5. See Irrigation Plans for Location of CHDPE. CHDPE Irrigation Line shall be Installed prior to Tensioning Top Row of Tiebacks.

STANDARD PLANS DATED MAY 2006

A10A	Acronyms and Abbreviations (Sheet 1 of 2)
A10B	Acronyms and Abbreviations (Sheet 2 of 2)
A10C	Symbols (Sheet 1 of 2)
A10D	Symbols (Sheet 2 of 2)
RSP A76A	Concrete Barrier Type 60
B0-3	Bridge Details
B3-8	RW Details No.1
B3-9	RW Details No. 2
B11-47	Cable Railing

Standard Plan Sheet No.
Detail No.

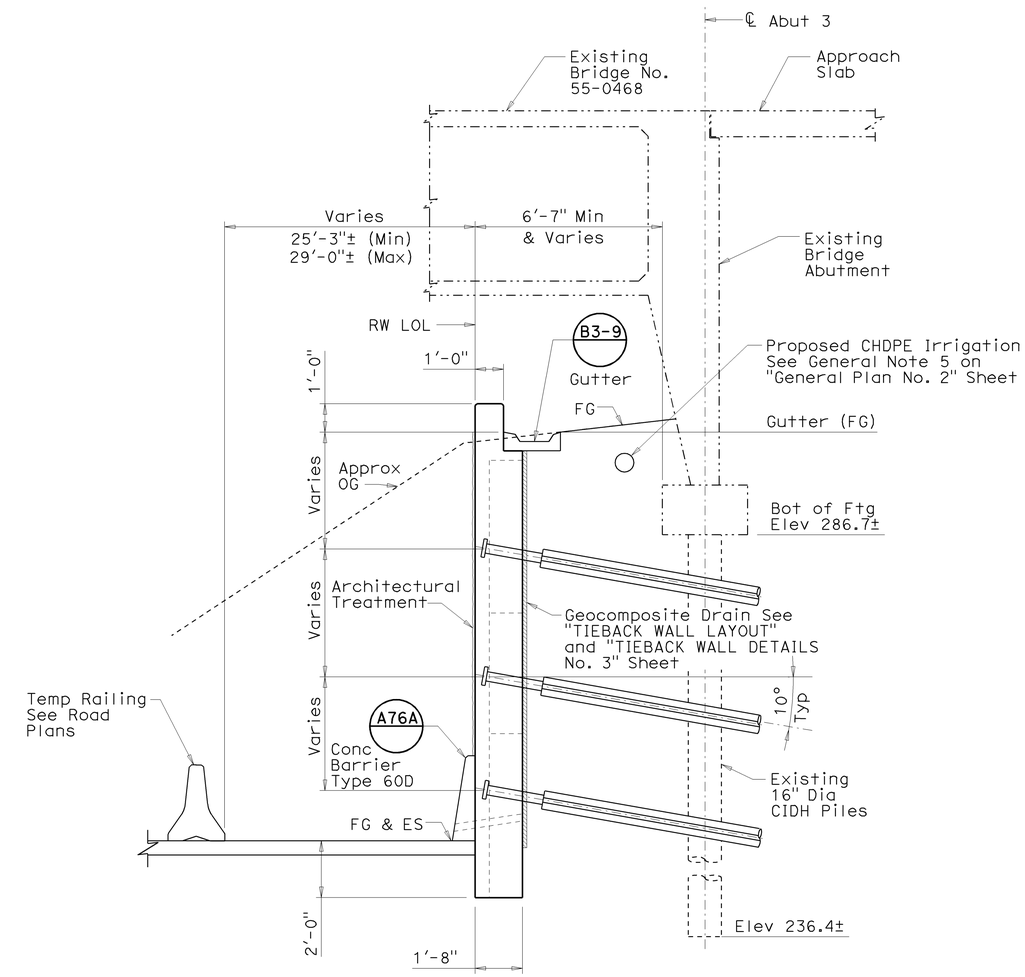

TYPICAL SECTION
NO SCALE

NOTE:
THE CONTRACTOR SHALL VERIFY ALL CONTROLLING FIELD DIMENSIONS BEFORE ORDERING OR FABRICATING ANY MATERIAL.

Jon Hamaguchi DESIGN OVERSIGHT 6-24-09 SIGN OFF DATE	DESIGN	BY Chad Harden	CHECKED Kevin Burke	LRFD DESIGN	LIVE LOADING: 2 FOOT SURCHARGE	
	DETAILS	BY Gerald Fetters	CHECKED Chad Harden	LAYOUT	BY Gerald Fetters	CHECKED Chad Harden
	QUANTITIES	BY Chad Harden	CHECKED Scott McCauley	SPECIFICATIONS	BY S. Sheikh	PLANS AND SPECS COMPARED S. Sheikh

PREPARED FOR THE STATE OF CALIFORNIA DEPARTMENT OF TRANSPORTATION

Chad W. Harden
PROJECT ENGINEER

BRIDGE NO. 55-0468
POST MILE 18.4

YORBA LINDA BLVD OC (MODIFY)
GENERAL PLAN No.2

DESIGN GENERAL PLAN SHEET (ENGLISH) (REV. 2/25/05)

ORIGINAL SCALE IN INCHES FOR REDUCED PLANS 0 1 2 3

CU 12
EA 0F0311

DISREGARD PRINTS BEARING EARLIER REVISION DATES

REVISION DATES (PRELIMINARY STAGE ONLY) 7/31/08 10/24/08 2/13/09 4/6/09

SHEET 2 OF 15

FILE => 55-468-a-gp02.dgn

USERNAME => trcarol DATE PLOTTED => 17-DEC-2009 TIME PLOTTED => 12:10

DIST	COUNTY	ROUTE	POST MILES TOTAL PROJECT	SHEET No	TOTAL
12	Ora	57	16.2/18.6	948	960

REGISTERED CIVIL ENGINEER 06/17/09 DATE

12-14-09
PLANS APPROVAL DATE

REGISTERED PROFESSIONAL ENGINEER Chad W Harden No. 67648 Exp. 06/30/11 CIVIL STATE OF CALIFORNIA

The State of California or its officers or agents shall not be responsible for the accuracy or completeness of electronic copies of this plan sheet.

OCTA
550 S MAIN STREET
ORANGE, CA 92868

RBF CONSULTING
14725 ALTON PKWY
IRVINE, CA 92618

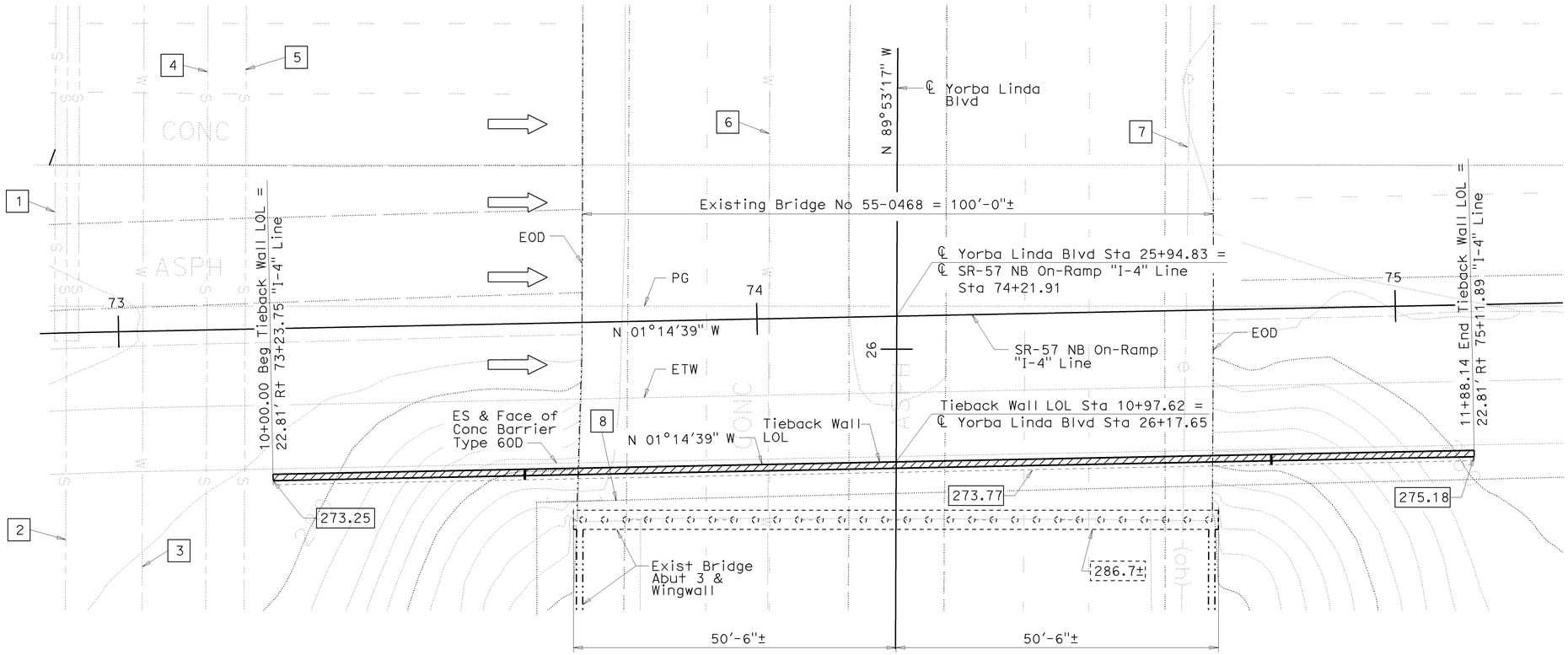

FOUNDATION PLAN

1" = 10'

UTILITIES

1. Existing Jack 45" Steel Casing, OCSD
2. Existing 30" Force Main Sewer, OCSD
3. Existing 16" Water, City of Fullerton
4. Existing 15" Sewer, OCSD (Abandoned)
5. Existing 24" Sewer, OCSD (Abandoned)
6. Existing 30" Water, City of Fullerton (Abandoned)
7. Existing Electric Overhead, So Cal Edison
8. Proposed CHDPE Irrigation, See General Note 5 on "General Plan No. 2" Sheet.

BENCHMARKS:

Designation: 1L-54-82 Elev = 153.171
Described by OCS 2002 - Found 3¾" OCS Aluminum Benchmark Disk Stamped "1L-54-82", set in the Top of a 6 in. by 6 in. Concrete Post. Monument is located along the Westerly Levee of the Santa Ana River, 0.25 Miles Northerly along Levee from the Centerline of Orangewood Avenue, 200 ft. Northeasterly of the Easterly Leg of the Anaheim Angels 200 ft. tall sign, 69 ft. Westerly of the Centerline of the Bike Trail and 1.5 ft. Westerly of a Steel OCS Witness Post. Monument is set 0.3 below the Ground.

Designation: 2G-25-70 Elev = 275.872
Described by OCS 2003 - Found 3¾" OCS Aluminum Benchmark Disk Stamped "2G-25-70", set in the Southeasterly Corner of a 4 ft. by 6 ft. Concrete Catch Basin. Monument is Located in the Northwesterly Corner of the Intersection of Yorba Linda Boulevard and Deerpark Drive, 75 ft. Westerly of the Centerline of Deerpark and 46 ft. Northerly of the Centerline of Yorba Linda. Monument is set Level with the Sidewalk.

BASIS OF COORDINATES:

Bearings and Coordinates as shown hereon are in terms of the California Coordinate System of 1983 (CCS83, Epoch 1991.35), Zone 6; based locally upon the following Control Stations as published by the County of Orange:

Name	Northing (ft.)-GRID	Easting (ft.)-GRID
2001 OCS 3282	2247998.84	6069149.29
2017 OCS 0560	2260355.81	6065880.43
2023 OCS 0111	2270990.23	6066809.18

All Coordinates and Distances are in terms of the U.S. Survey Foot, 1 meter = 39.37/12 feet

LEGEND:

- XXX.XX — Indicates Approx Bottom of Exist Footing Elevation
- XXX.XX — Indicates Bottom of Footing Elevation
- Indicates Existing Structure
- Indicates New Construction
- Indicates Existing CIDH Piling
- Indicates Retaining Wall

NOTE:

Location of Utilities (Including New) are approximate. See Utilities Plan for additional information.

GEOTECHNICAL PROFESSIONAL APPROVAL DATE 6-17-09

NOTE:
THE CONTRACTOR SHALL VERIFY ALL CONTROLLING FIELD DIMENSIONS BEFORE ORDERING OR FABRICATING ANY MATERIAL.

DESIGN OVERSIGHT Jon Hamaguchi
6-24-09
SIGN OFF DATE

SCALE:	VERT.DATUM NAVD 88	HORZ.DATUM CCS83	
PHOTOGRAMMETRY AS OF: 12-02-2007		ALIGNMENT TIES	
SURVEYED	BY B. Madigan	DRAFTED	BY B. Zeman
FIELD CHECKED	BY B. Cox	CHECKED	BY T. Rai

DESIGN	BY Chad Harden	CHECKED Kevin Burke	
DETAILS	BY Gerald Fetters	CHECKED Chad Harden	
QUANTITIES	BY Chad Harden	CHECKED Scott McCauley	

PREPARED FOR THE STATE OF CALIFORNIA DEPARTMENT OF TRANSPORTATION

Chad W. Harden
PROJECT ENGINEER

BRIDGE NO. 55-0468
POST MILE 18.4

YORBA LINDA BLVD OC (MODIFY)

FOUNDATION PLAN

FOUNDATION PLAN SHEET (ENGLISH) (REV. 2-25-05)

ORIGINAL SCALE IN INCHES FOR REDUCED PLANS 0 1 2 3

CU 12
EA 0F0311

DISREGARD PRINTS BEARING EARLIER REVISION DATES

REVISION DATES (PRELIMINARY STAGE ONLY) 7/1/08 10/24/08 2/13/09 4/6/09

SHEET 3 OF 15

FILE => 55-468-e-fp101.dgn

USERNAME => trmikesl DATE PLOTTED => 17-DEC-2009 TIME PLOTTED => 12:36

DIST	COUNTY	ROUTE	POST MILES TOTAL PROJECT	SHEET No	TOTAL SHEETS
12	Ora	57	16.2/18.6	949	960

REGISTERED CIVIL ENGINEER 06/17/09 DATE

12-14-09
PLANS APPROVAL DATE

REGISTERED PROFESSIONAL ENGINEER Chad W Harden No. 67648 Exp. 06/30/11 CIVIL STATE OF CALIFORNIA

The State of California or its officers or agents shall not be responsible for the accuracy or completeness of electronic copies of this plan sheet.

OCTA
550 S MAIN STREET
ORANGE, CA 92868

RBF CONSULTING
14725 ALTON PKWY
IRVINE, CA 92618

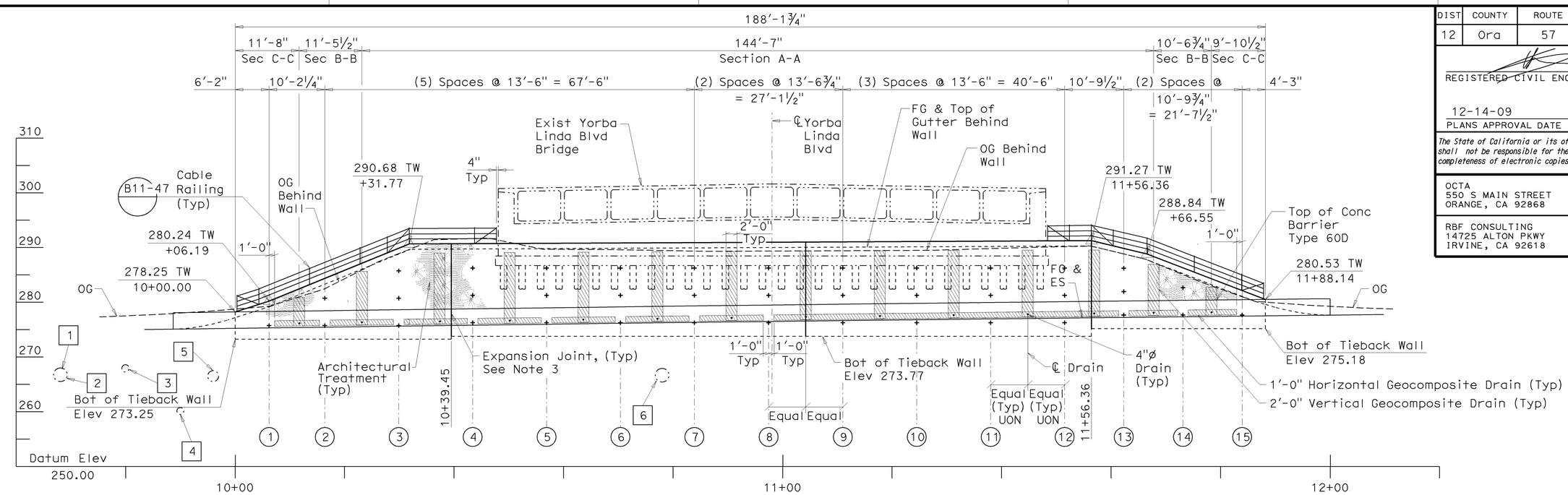

MIRROR ELEVATION

1" = 10'

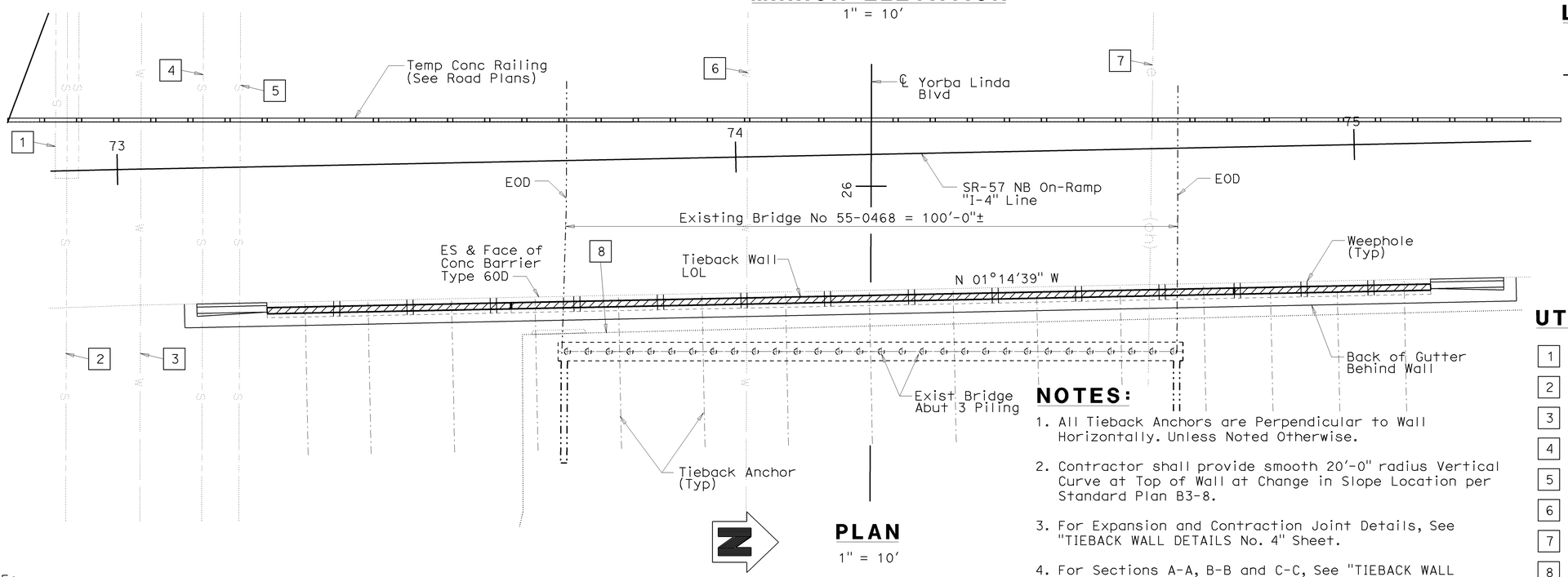

PLAN

1" = 10'

LEGEND

- Indicates New Tieback Anchor
- Indicates New Construction
- Indicates Exist CIDH Piling
- Indicates Tieback Line Number
- Indicates Change in Slope at Top of Wall (See Note 2)
- Indicates Tieback Wall
- Indicates Geocomposite Material

UTILITIES

1. Existing Jack 45" Steel Casing, OCSD
2. Existing 30" Force Main Sewer, OCSD
3. Existing 16" Water, City of Fullerton
4. Existing 15" Sewer, OCSD (Abandoned)
5. Existing 24" Sewer, OCSD (Abandoned)
6. Existing 30" Water, City of Fullerton (Abandoned)
7. Existing Electric Overhead, So Cal Edison
8. Proposed CHDPE Irrigation, See General Note 5 on "General Plan No. 2" Sheet.

NOTES:

1. All Tieback Anchors are Perpendicular to Wall Horizontally. Unless Noted Otherwise.
2. Contractor shall provide smooth 20'-0" radius Vertical Curve at Top of Wall at Change in Slope Location per Standard Plan B3-8.
3. For Expansion and Contraction Joint Details, See "TIEBACK WALL DETAILS No. 4" Sheet.
4. For Sections A-A, B-B and C-C, See "TIEBACK WALL REINFORCMENT" Sheet.

NOTE:
THE CONTRACTOR SHALL VERIFY ALL CONTROLLING FIELD DIMENSIONS BEFORE ORDERING OR FABRICATING ANY MATERIAL.

Jon Hamaguchi
DESIGN OVERSIGHT Jon Hamaguchi
6-24-09
SIGN OFF DATE

	BY	CHECKED
DESIGN	Chad Harden	Kevin Burke
DETAILS	Gerald Fetters	Chad Harden
QUANTITIES	Chad Harden	Scott McCauley

PREPARED FOR THE STATE OF CALIFORNIA DEPARTMENT OF TRANSPORTATION

Chad W. Harden
PROJECT ENGINEER

BRIDGE NO. 55-0468
POST MILE 18.4

YORBA LINDA BLVD OC (MODIFY)
TIEBACK WALL LAYOUT

DESIGN DETAIL SHEET (ENGLISH) (REV. 2/25/05)

ORIGINAL SCALE IN INCHES FOR REDUCED PLANS 0 1 2 3

CU 12
EA 0F0311

DISREGARD PRINTS BEARING EARLIER REVISION DATES
REVISION DATES (PRELIMINARY STAGE ONLY) 2/13/09 4/6/09

SHEET 4 OF 15

FILE => 55-468-g-rw_lo01.dgn

USERNAME => trmikest DATE PLOTTED => 17-DEC-2009 TIME PLOTTED => 12:36

DIST	COUNTY	ROUTE	POST MILES TOTAL PROJECT	SHEET No	TOTAL SHEETS
12	Ora	57	16.2/18.6	950	960

REGISTERED CIVIL ENGINEER 06/17/09 DATE

12-14-09
PLANS APPROVAL DATE

REGISTERED PROFESSIONAL ENGINEER Chad W Harden No. 67648 Exp. 06/30/11 CIVIL STATE OF CALIFORNIA

The State of California or its officers or agents shall not be responsible for the accuracy or completeness of electronic copies of this plan sheet.

OCTA
550 S MAIN STREET
ORANGE, CA 92868

RBF CONSULTING
14725 ALTON PKWY
IRVINE, CA 92618

RETAINING WALL TIEBACK SCHEDULE

TIEBACK LINE NO.	STA (SEE NOTE 2)	GUTTER ELEV (ft)	TOP OF TB-1 ELEV (ft)	TB-1		TB-2		TB-3	
				ELEV (ft)	"T" (kips)	ELEV (ft)	"T" (kips)	ELEV (ft)	"T" (kips)
1	10+06.17	279.18	278.25	275.75	60	--	--	--	--
2	10+16.35	283.31	282.59	280.75	90	275.75	60	--	--
3	10+29.85	288.81	288.25	285.75	110	280.75	90	275.75	70
4	10+43.35	289.74	288.77	286.27	110	281.27	90	276.27	70
5	10+56.85	289.80	288.77	286.27	110	281.27	90	276.27	70
6	10+70.34	289.87	288.77	286.27	110	281.27	90	276.27	70
7	10+83.84	289.93	288.77	286.27	110	281.27	90	276.27	70
8	10+97.40	289.99	288.77	286.27	110	281.27	90	276.27	70
9	11+10.96	290.06	288.77	286.27	110	281.27	90	276.27	70
10	11+24.46	290.12	288.77	286.27	110	281.27	90	276.27	80
11	11+37.96	290.19	288.77	286.27	115	281.27	100	276.27	90
12	11+51.46	290.25	288.77	286.27	115	281.27	100	276.27	90
13	11+62.26	288.84	288.15	286.23	110	281.96	90	277.68	80
14	11+73.07	285.26	284.55	282.68	90	277.68	60	--	--
15	11+83.88	281.10	280.18	277.68	60	--	--	--	--

NOTES:

A. Bonded Lengths to be Determined by Contractor. Minimum Bonded Length Equals 15 ft.

B. Minimum Unbonded Length Equals 15 ft.

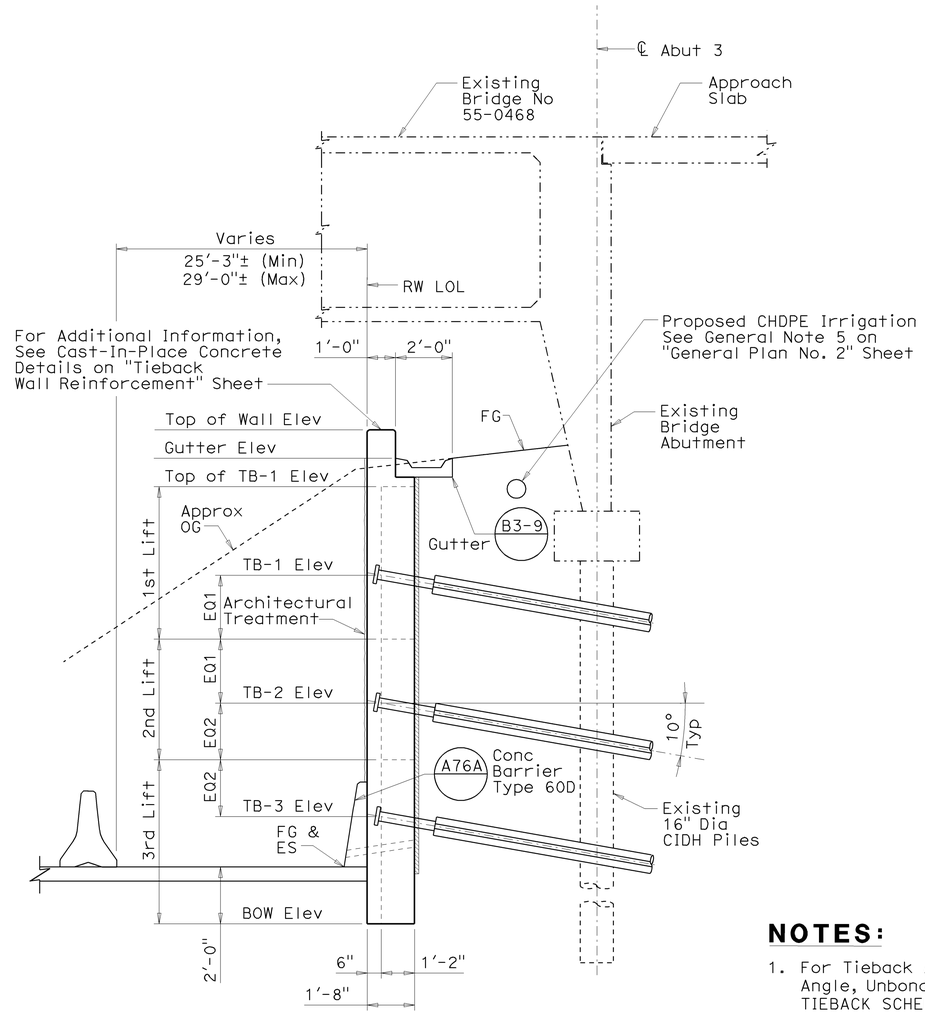

TYPICAL SECTION

NO SCALE

NOTES:

1. For Tieback Anchors General Information (Station, Elevation, Angle, Unbonded Length, and Design Tension), See RETAINING WALL TIEBACK SCHEDULE, This Sheet.
2. Stations at Tieback Line No. are Approximate.
3. Tiebacks Shall Maintain a Minimum of 1-ft Clear to Existing Abutment Piles. Engineer Shall be Notified of any Potential Conflicts Requiring Revisions to Tieback Anchor Spacing Prior to Tieback Installation.

NOTE:
THE CONTRACTOR SHALL VERIFY ALL CONTROLLING FIELD DIMENSIONS BEFORE ORDERING OR FABRICATING ANY MATERIAL.

DESIGN OVERSIGHT Jon Hamaguchi
6-24-09
SIGN OFF DATE

	BY	CHECKED
DESIGN	Chad Harden	Kevin Burke
DETAILS	Gerald Fetters	Chad Harden
QUANTITIES	Chad Harden	Scott McCauley

PREPARED FOR THE STATE OF CALIFORNIA DEPARTMENT OF TRANSPORTATION

Chad W. Harden
PROJECT ENGINEER

BRIDGE NO. 55-0468
POST MILE 18.4

YORBA LINDA BLVD OC (MODIFY)
TIEBACK WALL DETAILS No.1

DESIGN DETAIL SHEET (ENGLISH) (REV. 2/25/05)

ORIGINAL SCALE IN INCHES FOR REDUCED PLANS 0 1 2 3

CU 12
EA 0F0311

DISREGARD PRINTS BEARING EARLIER REVISION DATES

REVISION DATES (PRELIMINARY STAGE ONLY) 2/13/09 4/6/09

SHEET 5 OF 15

FILE => 55-468-u-miscdt01.dgn

USERNAME => trmikes1 DATE PLOTTED => 17-DEC-2009 TIME PLOTTED => 12:37

DIST.	COUNTY	ROUTE	POST MILES TOTAL PROJECT	SHEET NO.	TOTAL SHEETS
12	Ora	57	16.2/18.6	951	960

06/17/09
REGISTERED ENGINEER - CIVIL

12-14-09
PLANS APPROVAL DATE

REGISTERED PROFESSIONAL ENGINEER Chad W Harden No. 67648 Exp. 06/30/11 CIVIL STATE OF CALIFORNIA

The State of California or its officers or agents shall not be responsible for the accuracy or completeness of electronic copies of this plan sheet.

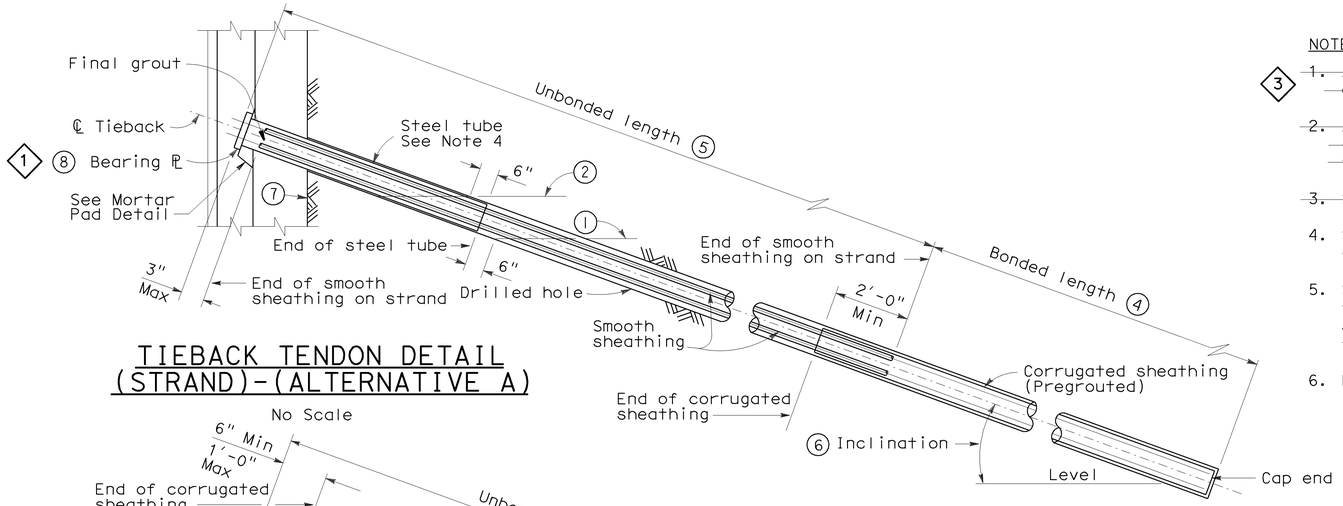

TIEBACK TENDON DETAIL (STRAND)-(ALTERNATIVE A)

No Scale

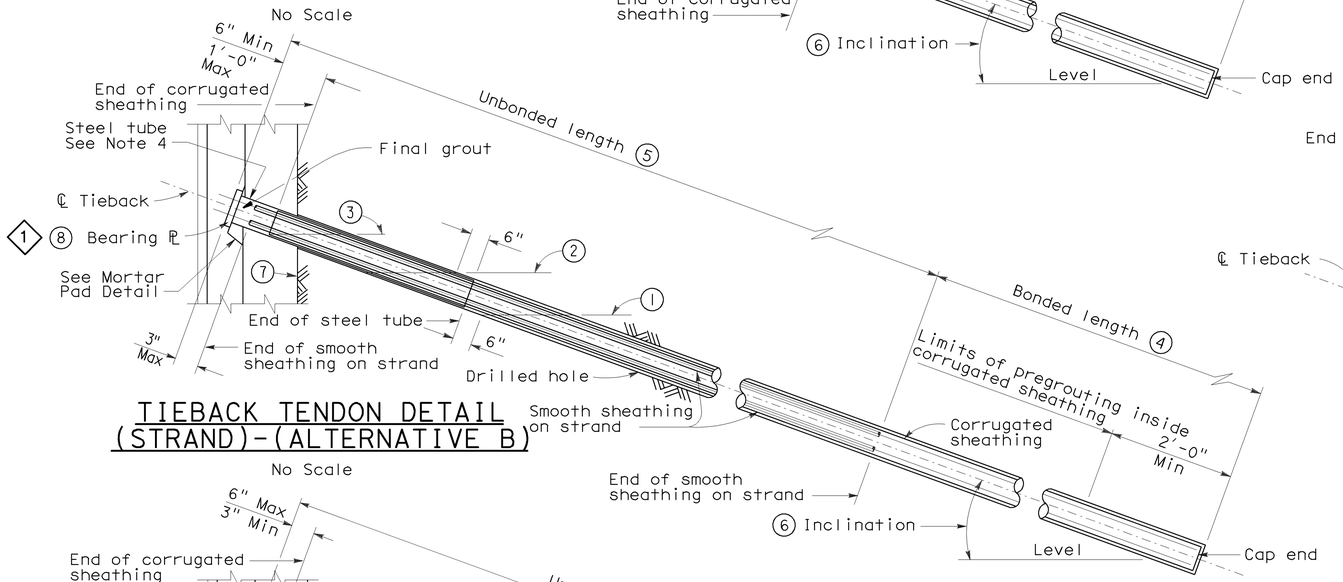

TIEBACK TENDON DETAIL (STRAND)-(ALTERNATIVE B)

No Scale

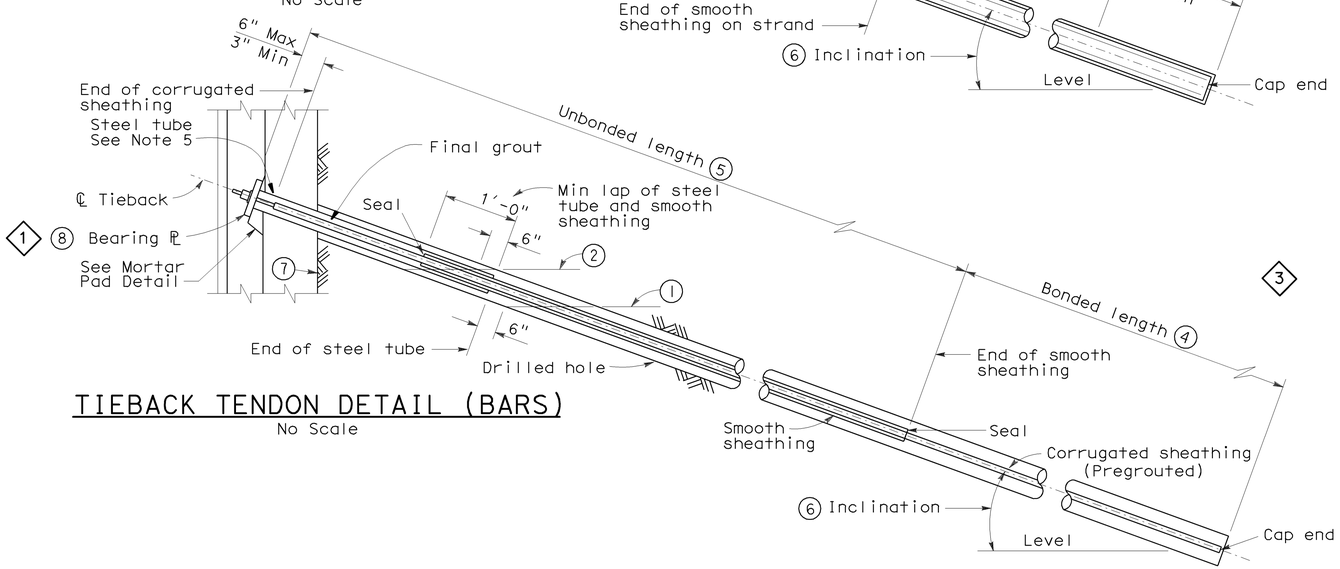

TIEBACK TENDON DETAIL (BARS)

No Scale

NOTES:

3 ~~1. Anchorage enclosure shall only be used when anchor head assembly is not enclosed in concrete.~~

~~2. Anchorage enclosure shall have provisions to allow injecting grout at low end and venting at high end. Galvanize after fabrication.~~

~~3. Silicone sealant to cover full width of flange.~~

4. Steel tube welded to bearing plate (Min thickness = 1/4"). Galvanize assembly after fabrication.

5. Steel tube welded to bearing plate inside diameter of steel tube to be 1" greater than outside diameter of smooth sheathing (Min thickness = 1/4"). Galvanize assembly after fabrication.

6. For other wall details, see Structural Plans.

LEGEND:

1. Level of initial grouting for drill hole 6" in diameter or smaller
2. Level of secondary grouting
3. Level of initial grouting inside corrugated sheathing
4. Bonded length shall be determined by the contractor
5. For minimum Unbonded Length, See "Tieback Wall Details No. 1" Sheet
6. 10° Inclination (Typ) 2
7. Face of Wall Excavation
8. Min Plate Size = 2 1/2"x15"x15" 1

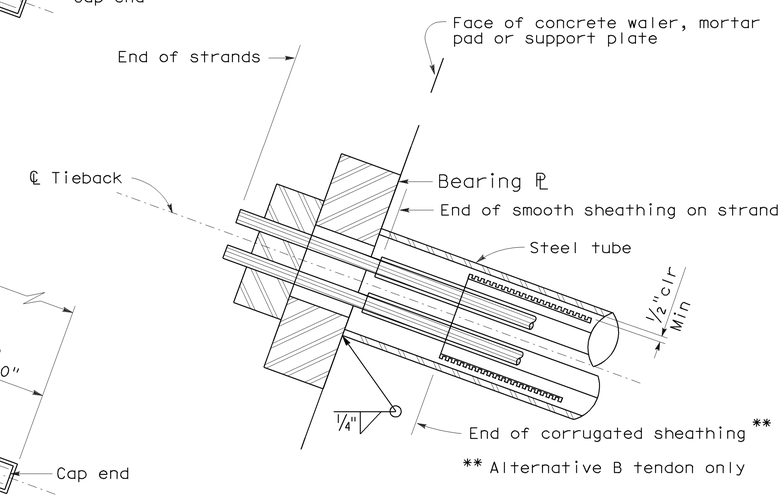

3 ANCHORAGE DETAIL

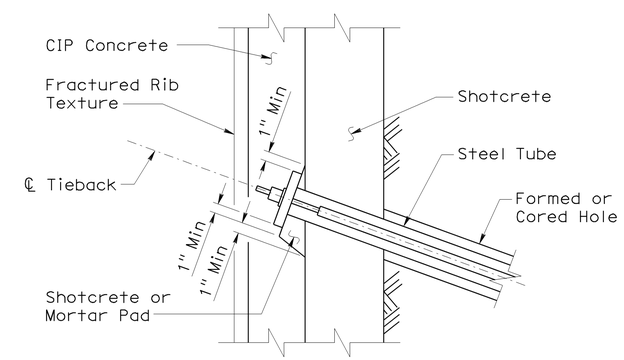

4 MORTAR PAD DETAIL

No Scale

STANDARD DRAWING		
FILE NO. xs12-040e	APPROVED BY G. WANG (RESPONSIBLE TECHNICAL SPECIALIST)	RELEASED BY ROBERTO LACALLE (RESPONSIBLE OFFICE CHIEF)
	APPROVAL DATE 2-27-09	RELEASE DATE 2-27-09

1. Added Legend Item 8 for Min PL Size
2. Inclination Indicated
3. Anchorage Enclosure Detail Removed
4. Added Mortar Pad Detail

STATE OF CALIFORNIA DEPARTMENT OF TRANSPORTATION

DIVISION OF ENGINEERING SERVICES

BRIDGE NO. 55-0468
POST MILE 18.4

YORBA LINDA BLVD OC (MODIFY)

TIEBACK WALL DETAILS No. 2

DS OSD 2147A (ENGLISH STANDARD DRAWING "XS" BORDER REV. 01/11/08)

ORIGINAL SCALE IN INCHES FOR REDUCED PLANS 0 1 2 3

CU
EA

DISREGARD PRINTS BEARING EARLIER REVISION DATES

REVISION DATES (PRELIMINARY STAGE ONLY)

SHEET 6 OF 15

USERNAME => trmikesl

DATE PLOTTED => 17-DEC-2009 TIME PLOTTED => 12:37

55-468-u-misc

DIST	COUNTY	ROUTE	POST MILES TOTAL PROJECT	SHEET No	TOTAL SHEETS
12	Ora	57	16.2/18.6	952	960

REGISTERED CIVIL ENGINEER 06/17/09 DATE

12-14-09
PLANS APPROVAL DATE

REGISTERED PROFESSIONAL ENGINEER
Chad W Harden
No. 67648
Exp. 06/30/11
CIVIL
STATE OF CALIFORNIA

The State of California or its officers or agents shall not be responsible for the accuracy or completeness of electronic copies of this plan sheet.

OCTA
550 S MAIN STREET
ORANGE, CA 92868

RBF CONSULTING
14725 ALTON PKWY
IRVINE, CA 92618

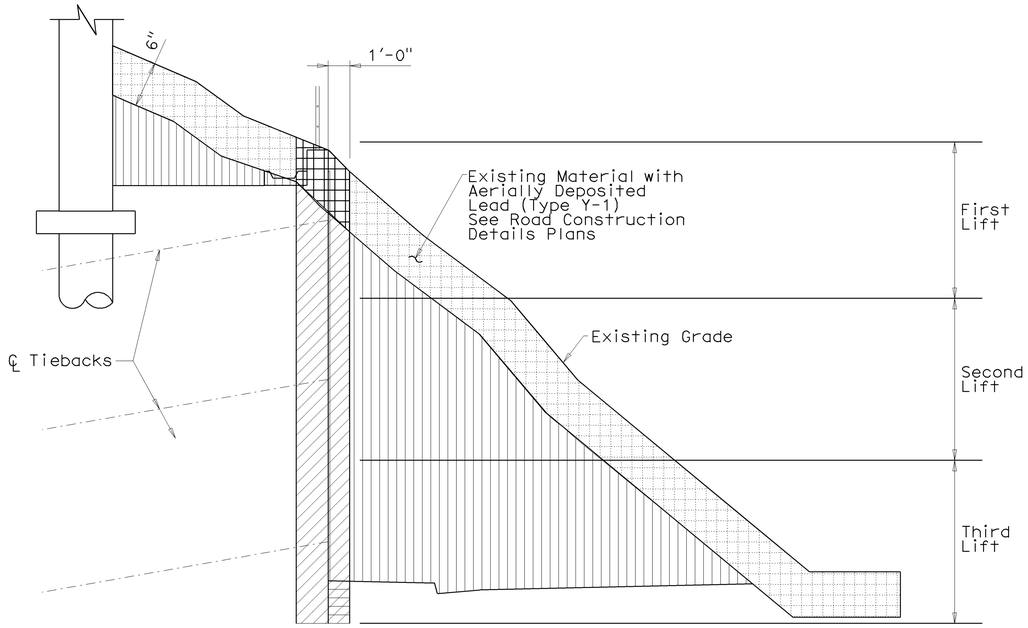

LEGEND:

- Roadway Excavation
- Structure Excavation (Tieback Wall)
- Structure Backfill (Tieback Wall)
- Structure Excavation Type Y-1 (Aerially Deposited Lead)

TIEBACK WALL EXCAVATION AND BACKFILL LIMITS

No Scale

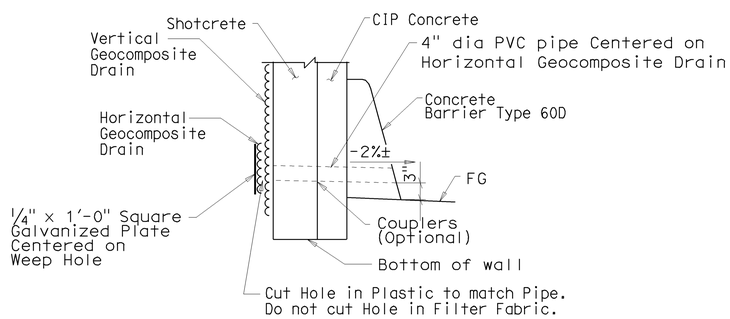

SECTION AT WEEPHOLES

No Scale

NOTE:
THE CONTRACTOR SHALL VERIFY ALL CONTROLLING FIELD DIMENSIONS BEFORE ORDERING OR FABRICATING ANY MATERIAL.

DESIGN OVERSIGHT Jon Hamaguchi
6-24-09
SIGN OFF DATE

	BY	CHECKED
DESIGN	Chad Harden	Kevin Burke
DETAILS	Gerald Fetters	Chad Harden
QUANTITIES	Chad Harden	Scott McCauley

PREPARED FOR THE STATE OF CALIFORNIA DEPARTMENT OF TRANSPORTATION

Chad W. Harden
PROJECT ENGINEER

BRIDGE NO. 55-0468
POST MILE 18.4

YORBA LINDA BLVD OC (MODIFY)
TIEBACK WALL DETAILS No.3

DESIGN DETAIL SHEET (ENGLISH) (REV. 2/25/05)

ORIGINAL SCALE IN INCHES FOR REDUCED PLANS 0 1 2 3

CU 12
EA 0F0311

DISREGARD PRINTS BEARING EARLIER REVISION DATES

REVISION DATES (PRELIMINARY STAGE ONLY) 2/13/09 4/6/09

SHEET 7 OF 15

FILE => 55-468-u-miscdt03.dgn

USERNAME => trmikesl DATE PLOTTED => 17-DEC-2009 TIME PLOTTED => 12:37

DIST	COUNTY	ROUTE	POST MILES TOTAL PROJECT	SHEET No	TOTAL SHEETS
12	Ora	57	16.2/18.6	953	960

REGISTERED CIVIL ENGINEER 06/17/09 DATE

12-14-09
PLANS APPROVAL DATE

The State of California or its officers or agents shall not be responsible for the accuracy or completeness of electronic copies of this plan sheet.

REGISTERED PROFESSIONAL ENGINEER Chad W Harden No. 67648 Exp. 06/30/11 CIVIL STATE OF CALIFORNIA

OCTA
550 S MAIN STREET
ORANGE, CA 92868

RBF CONSULTING
14725 ALTON PKWY
IRVINE, CA 92618

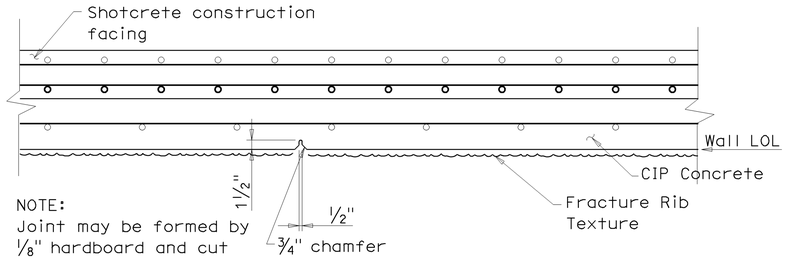

NOTE:
Joint may be formed by 1/8" hardboard and cut back to the root of the chamfer on the exposed face.

TIEBACK WALL TYPICAL CONTRACTION JOINT

(@ 24'-0" Center to Center Max)

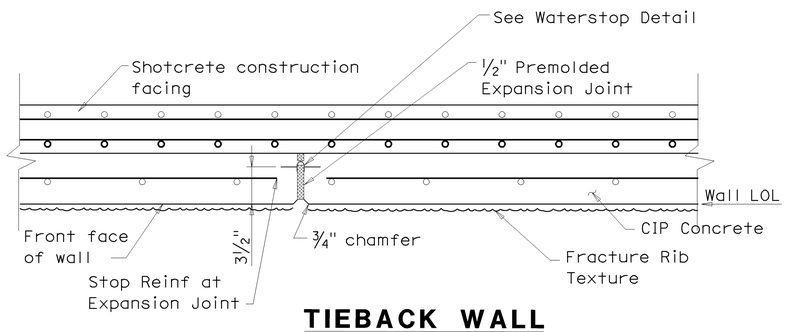

TIEBACK WALL TYPICAL EXPANSION JOINT

(@ 96'-0" Center to Center Max)

NOTE:
Expansion joints in CIP wall as shown on the plans. Centered between Tiebacks, except if the joint is within 18" of a step at the top of the wall. The joint is to be located at the step. Contraction Joints in CIP wall to be located at a maximum spacing of 24" center to center. Expansion and Contraction joints not required through shotcrete construction facing.

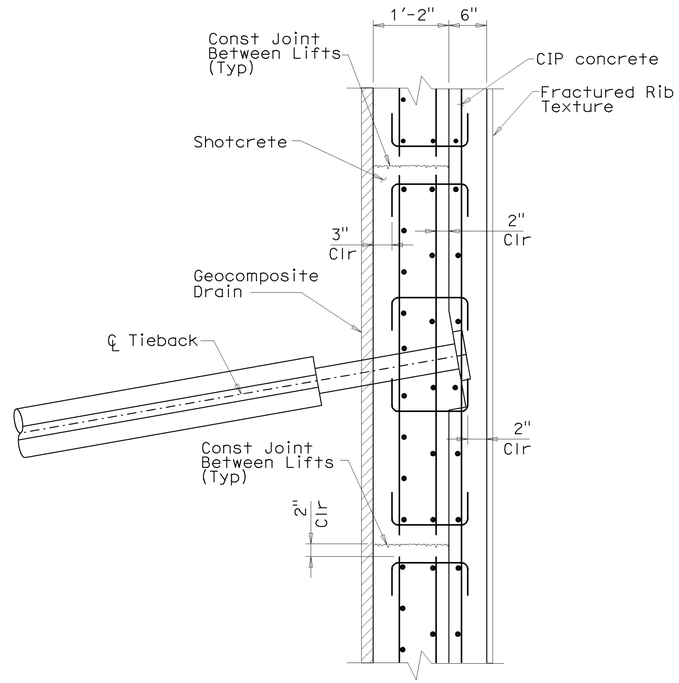

HORIZONTAL CONSTRUCTION JOINTS BETWEEN LIFTS

No Scale

NOTE:

For Information Not Shown, See "GENERAL PLAN No. 2", and "TIEBACK WALL DETAILS No. 1" Thru "TIEBACK WALL DETAILS No. 4" Sheets.

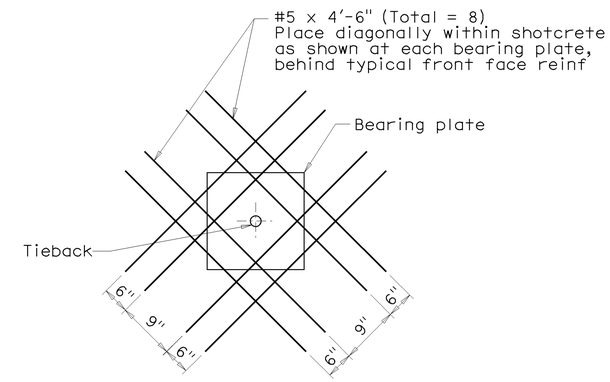

TIEBACK WALER BAR DETAIL (TYP)

No Scale

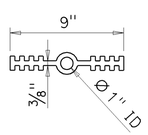

WATERSTOP DETAIL

No Scale

NOTE:
THE CONTRACTOR SHALL VERIFY ALL CONTROLLING FIELD DIMENSIONS BEFORE ORDERING OR FABRICATING ANY MATERIAL.

DESIGN OVERSIGHT Jon Hamaguchi
6-24-09
SIGN OFF DATE

	BY	CHECKED
DESIGN	Chad Harden	Kevin Burke
DETAILS	Gerald Fetters	Chad Harden
QUANTITIES	Chad Harden	Scott McCauley

PREPARED FOR THE STATE OF CALIFORNIA DEPARTMENT OF TRANSPORTATION

Chad W. Harden
PROJECT ENGINEER

BRIDGE NO. 55-0468
POST MILE 18.4

YORBA LINDA BLVD OC (MODIFY)
TIEBACK WALL DETAILS No.4

DESIGN DETAIL SHEET (ENGLISH) (REV. 2/25/05)

ORIGINAL SCALE IN INCHES FOR REDUCED PLANS 0 1 2 3

CU 12
EA 0F0311

DISREGARD PRINTS BEARING EARLIER REVISION DATES → REVISION DATES (PRELIMINARY STAGE ONLY) ~~2/13/09~~ 4/6/09

SHEET 8 OF 15

FILE => 55-468-u-miscdt04.dgn

USERNAME => trmikesl DATE PLOTTED => 17-DEC-2009 TIME PLOTTED => 12:37

DIST	COUNTY	ROUTE	POST MILES TOTAL PROJECT	SHEET No	TOTAL SHEETS
12	Ora	57	16.2/18.6	954	960

REGISTERED CIVIL ENGINEER 06/17/09 DATE

12-14-09
PLANS APPROVAL DATE

REGISTERED PROFESSIONAL ENGINEER
Chad W Harden
No. 67648
Exp. 06/30/11
CIVIL
STATE OF CALIFORNIA

The State of California or its officers or agents shall not be responsible for the accuracy or completeness of electronic copies of this plan sheet.

OCTA
550 S MAIN STREET
ORANGE, CA 92868

RBF CONSULTING
14725 ALTON PKWY
IRVINE, CA 92618

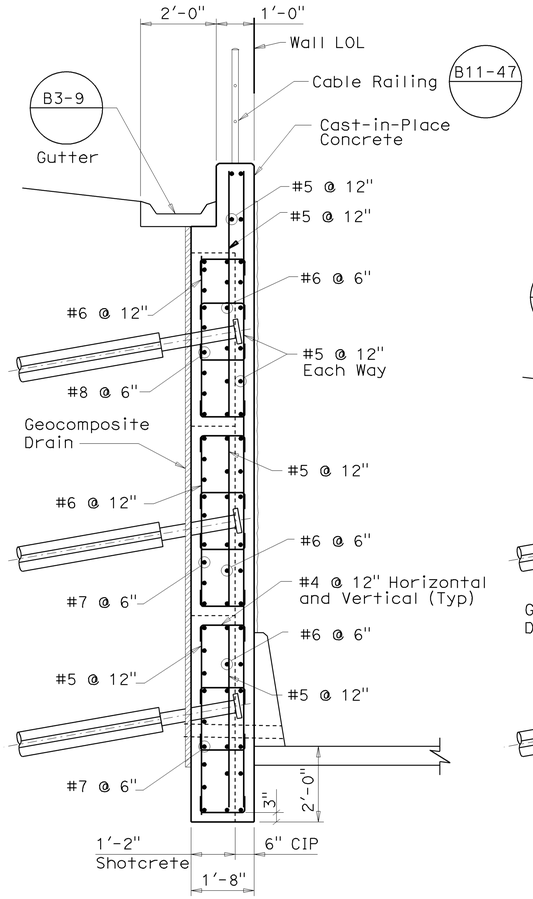

SECTION A-A

No Scale

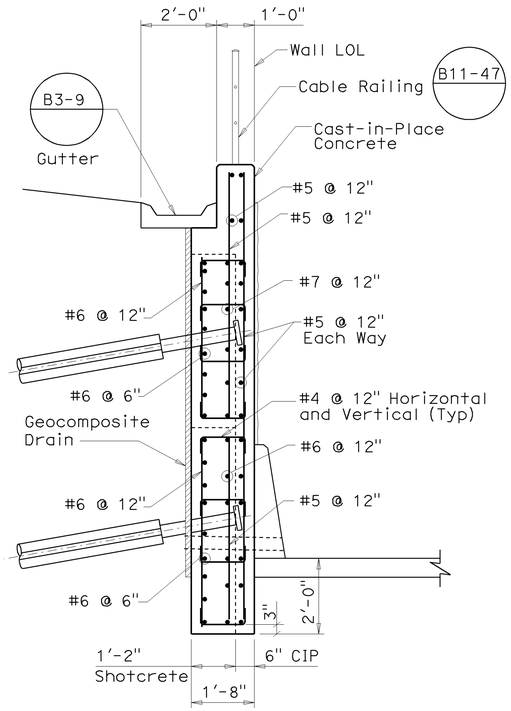

SECTION B-B

No Scale

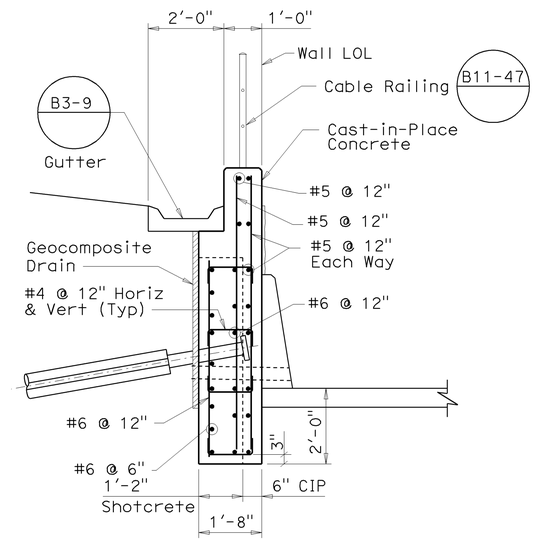

SECTION C-C

No Scale

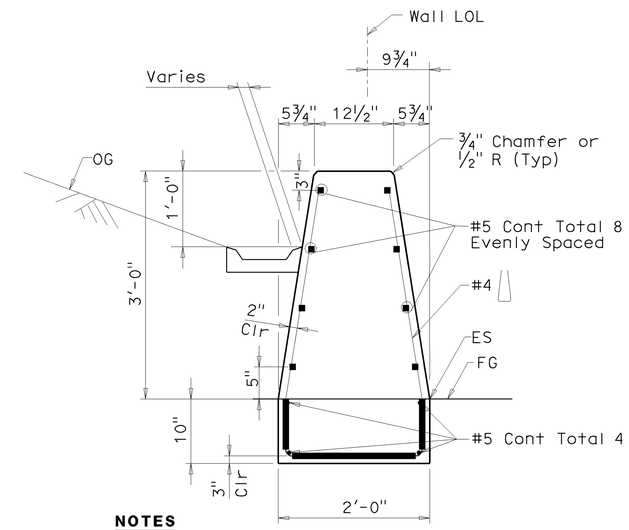

NOTES

1. This special detail supercedes "CONCRETE BARRIER TYPE 60" on Sheet No. A76A, page 29 of the Standard Plans Dated May 2006
2. For additional details and information not shown, see A76A

CONCRETE BARRIER TYPE 60 (MOD)

No Scale

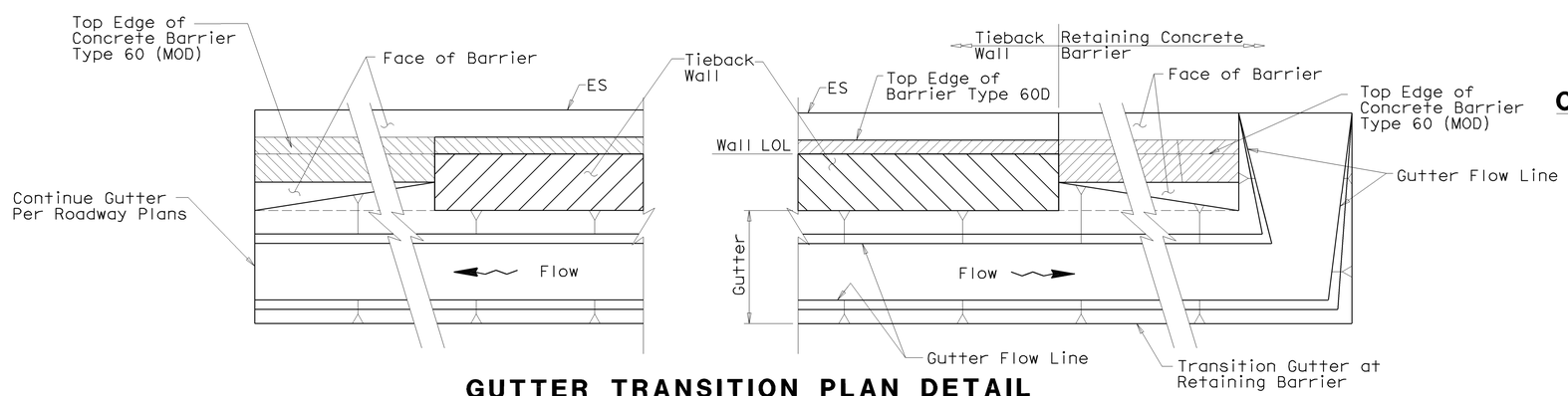

GUTTER TRANSITION PLAN DETAIL

No Scale

NOTE:
THE CONTRACTOR SHALL VERIFY ALL CONTROLLING FIELD DIMENSIONS BEFORE ORDERING OR FABRICATING ANY MATERIAL.

DESIGN OVERSIGHT Jon Hamaguchi
6-24-09
SIGN OFF DATE

	BY	CHECKED
DESIGN	Chad Harden	Kevin Burke
DETAILS	Gerald Fetters	Chad Harden
QUANTITIES	Chad Harden	Scott McCauley

PREPARED FOR THE STATE OF CALIFORNIA DEPARTMENT OF TRANSPORTATION

Chad W. Harden
PROJECT ENGINEER

BRIDGE NO. 55-0468
POST MILE 18.4

YORBA LINDA BLVD OC (MODIFY)
TIEBACK WALL REINFORCEMENT

DESIGN DETAIL SHEET (ENGLISH) (REV. 2/25/05)

ORIGINAL SCALE IN INCHES FOR REDUCED PLANS 0 1 2 3

CU 12
EA 0F0311

DISREGARD PRINTS BEARING EARLIER REVISION DATES

REVISION DATES (PRELIMINARY STAGE ONLY) 2/13/09 4/6/09

SHEET 9 OF 15

FILE => 55-468-u-miscdt05.dgn

USERNAME => trmikest DATE PLOTTED => 17-DEC-2009 TIME PLOTTED => 12:37

DIST	COUNTY	ROUTE	POST MILES TOTAL PROJECT	SHEET No	TOTAL SHEETS
12	Ora	57	16.2/18.6	955	960

LICENSED LANDSCAPE ARCHITECT

12-14-09
PLANS APPROVAL DATE

LICENSED LANDSCAPE ARCHITECT
CATHY L. JOHNSON
No. 4549
01-31-10
Renewal Date
06-17-09
Date
STATE OF CALIFORNIA

The State of California or its officers or agents shall not be responsible for the accuracy or completeness of electronic copies of this plan sheet.

OCTA
550 S MAIN STREET
ORANGE, CA 92868

RBF CONSULTING
14725 ALTON PKWY
IRVINE, CA 92618

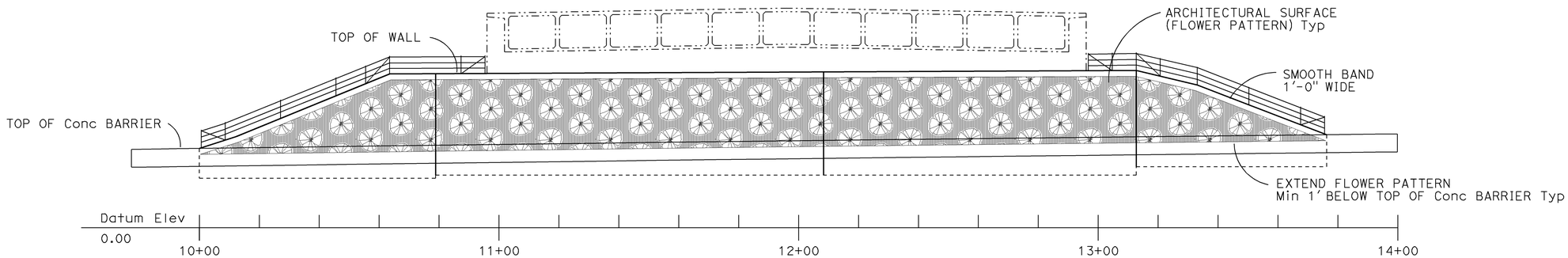

YORBA LINDA BLVD TIEBACK WALL

SCALE: 1" = 10'

NOTE:
THE CONTRACTOR SHALL VERIFY ALL CONTROLLING FIELD DIMENSIONS BEFORE ORDERING OR FABRICATING ANY MATERIAL.

Jon Hamaguchi
DESIGN OVERSIGHT Jon Hamaguchi
6-24-09
SIGN OFF DATE

DESIGN DETAIL SHEET (ENGLISH) (REV. 2/25/05)

	BY	CHECKED
DESIGN	Cathy Johnson	Steve Huff
DETAILS	Cathy Johnson	Steve Huff
QUANTITIES	Chad Harden	Scott McCauley

ORIGINAL SCALE IN INCHES FOR REDUCED PLANS 0 1 2 3

PREPARED FOR THE
STATE OF CALIFORNIA
DEPARTMENT OF TRANSPORTATION

Chad W. Harden
PROJECT ENGINEER

CU 12
EA 0F0311

BRIDGE NO. 55-0468
POST MILE 18.4

YORBA LINDA BLVD OC (MODIFY)
ARCHITECTURAL TREATMENT LAYOUT

DISREGARD PRINTS BEARING EARLIER REVISION DATES
REVISION DATES (PRELIMINARY STAGE ONLY) 2/13/09 4/6/09

SHEET 10 OF 15

FILE => 55-468-u-miscdt06.dgn

USERNAME => trmikesl DATE PLOTTED => 17-DEC-2009 TIME PLOTTED => 12:37

NOTES:

1. IDENTICAL FLOWER IMAGES, SCALE AND SPACING SHALL BE USED FOR FLOWER PATTERN.
2. WITHIN A VERTICAL COLUMN, FLOWER IMAGES SHALL ALTERNATE BETWEEN FLOWERS 'A' AND 'B'.
   VERTICAL COLUMNS SHALL BE OFFSET 30" FROM ADJACENT COLUMNS.
3. WHERE PLACED ON WALLS BOUNDED BY CONCRETE BARRIERS, FINISHED GRADE OR TOP OF WALL, FLOWER PATTERN SHALL BE CONTINUED WITHOUT CONCERN FOR PARTIAL FLOWER IMAGES, EXCEPT AS NOTED.
4. REFER TO STRUCTURAL DETAILS FOR WIDTH OF SMOOTH BAND TO BE APPLIED AT EDGES OF STRUCTURES.
5. WHERE THE FLOWER PATTERN WILL BE USED ADJACENT TO A HORIZONTAL LIMIT SUCH AS A BRIDGE ABUTMENT, ADJOINING MSE WALL OR OVERHEAD SIGN STRUCTURE SUPPORT, FLOWER PATTERN SHALL BE DISCONTINUED FROM A SECTION NOT LESS THAN 30" AND NOT GREATER THAN 60" FROM THE HORIZONTAL LIMIT TO AVOID TRUNCATION OF FLOWER IMAGES.
   FRACTURED RIB TEXTURE SHALL BE INSERTED IN THE RESULTING GAP TO CREATE A CONTINUOUS BUFFER BETWEEN PATTERN AREAS.
6. THE NEAREST COLUMN OF FLOWER IMAGES (FLOWER PATTERN) SHALL BE OFFSET VERTICALLY 30" FROM THE HORIZONTAL LIMIT.
7. EXTEND FLOWER PATTERN OR FRACTURED RIB TEXTURE MIN 1'-0" BELOW FG, OR CONCRETE BARRIER.

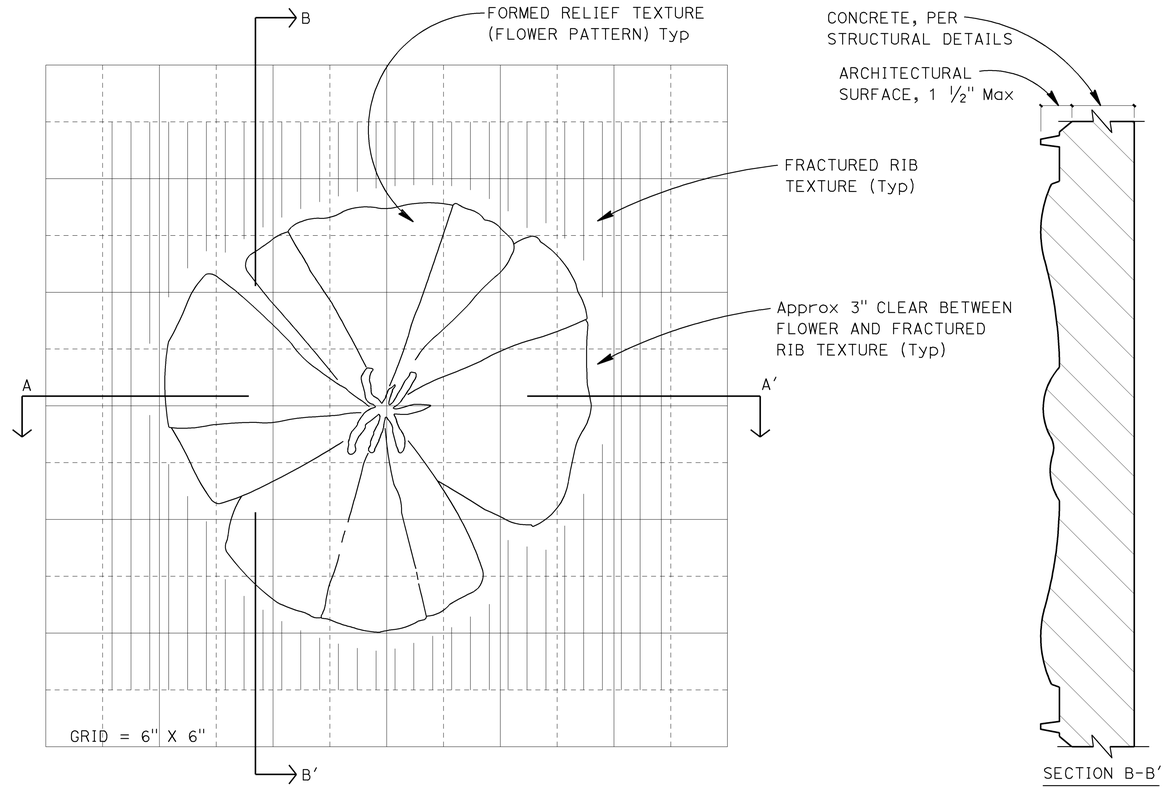

ARCHITECTURAL SURFACE (TEXTURED CONCRETE)

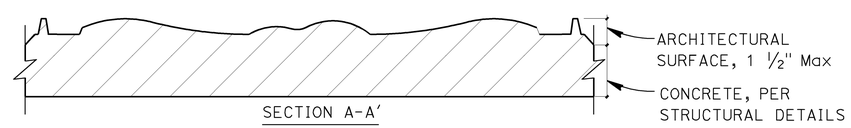

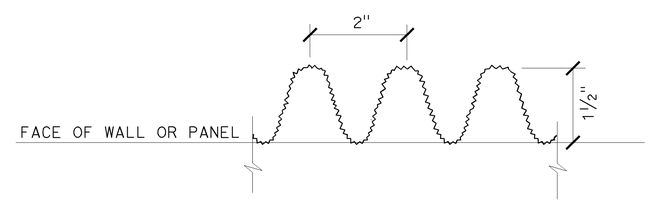

FRACTURED RIB TEXTURE (PROJECTING)

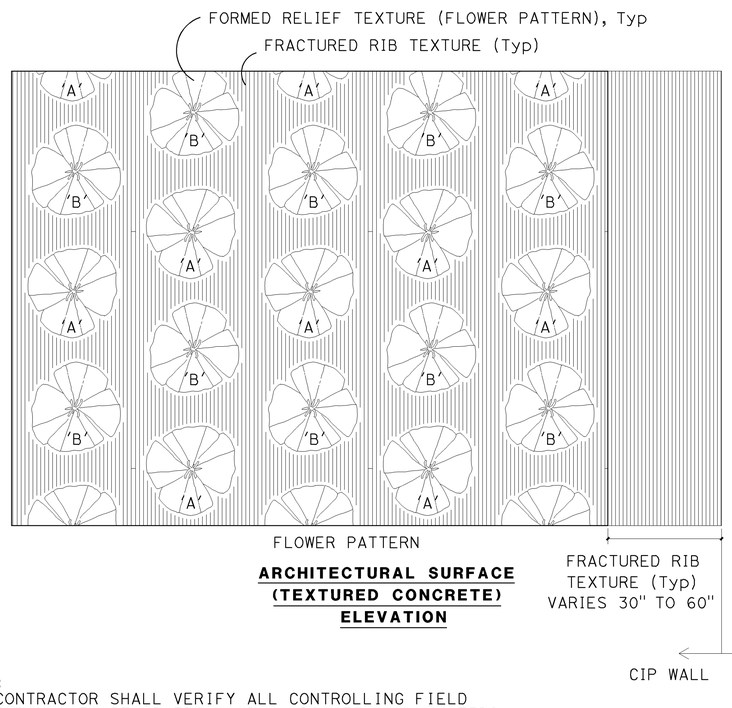

ARCHITECTURAL SURFACE (TEXTURED CONCRETE) ELEVATION

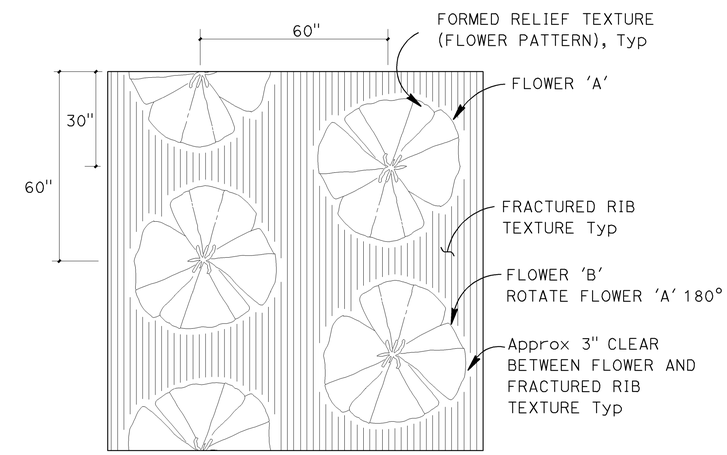

ARCHITECTURAL SURFACE (TEXTURED CONCRETE) PATTERN

NOTE:
THE CONTRACTOR SHALL VERIFY ALL CONTROLLING FIELD DIMENSIONS BEFORE ORDERING OR FABRICATING ANY MATERIAL.

DIST	COUNTY	ROUTE	POST MILES TOTAL PROJECT	SHEET No	TOTAL SHEETS
12	Ora	57	16.2/18.6	956	960

LICENSED LANDSCAPE ARCHITECT
12-14-09
PLANS APPROVAL DATE

LICENSED LANDSCAPE ARCHITECT — CATHY L. JOHNSON No. 4547 — 01-31-10 Renewal Date — 06-17-09 Date — STATE OF CALIFORNIA

The State of California or its officers or agents shall not be responsible for the accuracy or completeness of electronic copies of this plan sheet.

OCTA
550 S MAIN STREET
ORANGE, CA 92868

RBF CONSULTING
14725 ALTON PKWY
IRVINE, CA 92618

DESIGN OVERSIGHT — Jon Hamaguchi
6-24-09
SIGN OFF DATE

	BY	CHECKED
DESIGN	Cathy Johnson	Steve Huff
DETAILS	Cathy Johnson	Steve Huff
QUANTITIES	Chad Harden	Scott McCauley

PREPARED FOR THE STATE OF CALIFORNIA DEPARTMENT OF TRANSPORTATION

Chad W. Harden
PROJECT ENGINEER

BRIDGE NO. 55-0468
POST MILE 18.4

YORBA LINDA BLVD OC (MODIFY)
ARCHITECTURAL DETAILS

DESIGN DETAIL SHEET (ENGLISH) (REV. 2/25/05)

ORIGINAL SCALE IN INCHES FOR REDUCED PLANS 0 1 2 3

CU 12
EA 0F0311

DISREGARD PRINTS BEARING EARLIER REVISION DATES

REVISION DATES (PRELIMINARY STAGE ONLY) 2/13/09 4/6/09

SHEET 11 OF 15

FILE => 55-468-u-miscdt07.dgn

USERNAME => trmikes1 DATE PLOTTED => 17-DEC-2009 TIME PLOTTED => 12:37

DIST	COUNTY	ROUTE	POST MILES TOTAL PROJECT	SHEET No	TOTAL SHEETS
12	Ora	57	16.2/18.6	957	960

Lino Cheang
REGISTERED ENGINEER — DATE 6-17-09

12-14-09
PLANS APPROVAL DATE

REGISTERED PROFESSIONAL ENGINEER — L. CHEANG NO. GE 2345 EXP. 9-30-09 — GEOTECHNICAL — STATE OF CALIFORNIA

The State of California or its officers or agents shall not be responsible for the accuracy or completeness of electronic copies of this plan sheet.

ORANGE COUNTY TRANSPORTATION AUTHORITY
550 S. MAIN STREET
ORANGE, CA 92863-1584

EARTH MECHANICS, INC.
17660 NEWHOPE STREET, SUITE E
FOUNTAIN VALLEY, CA 92708

BENCHMARKS:

Vertical Datum NAVD 88

Designation: 1L-54-82 Elev = 153.171
Described by OCS 2002 - Found 3¾" OCS Aluminum Benchmark Disk Stamped "1L-54-82", set in the Top of a 6 in. by 6 in. Concrete Post. Monument is located along the Westerly Levee of the Santa Ana River, 0.25 Miles Northerly along Levee from the Centerline of Orangewood Avenue, 200 ft. Northeasterly of the Easterly Leg of the Anaheim Angels 200 ft. tall sign, 69 ft. Westerly of the Centerline of the Bike Trail and 1.5 ft. Westerly of a Steel OCS Witness Post. Monument is set 0.3 below the Ground.

Designation: 2G-25-70 Elev = 275.872
Described by OCS 2003 - Found 3¾" OCS Aluminum Benchmark Disk Stamped "2G-25-70", set in the Southeasterly Corner of a 4 ft by 6 ft Concrete Catch Basin. Monument is Located in the Northwesterly Corner of the Intersection of Yorba Linda Boulevard and Deerpark Drive, 75 ft Westerly of the Centerline of Deerpark and 46 ft Northerly of the Centerline of Yorba Linda. Monument is set Level with the Sidewalk.

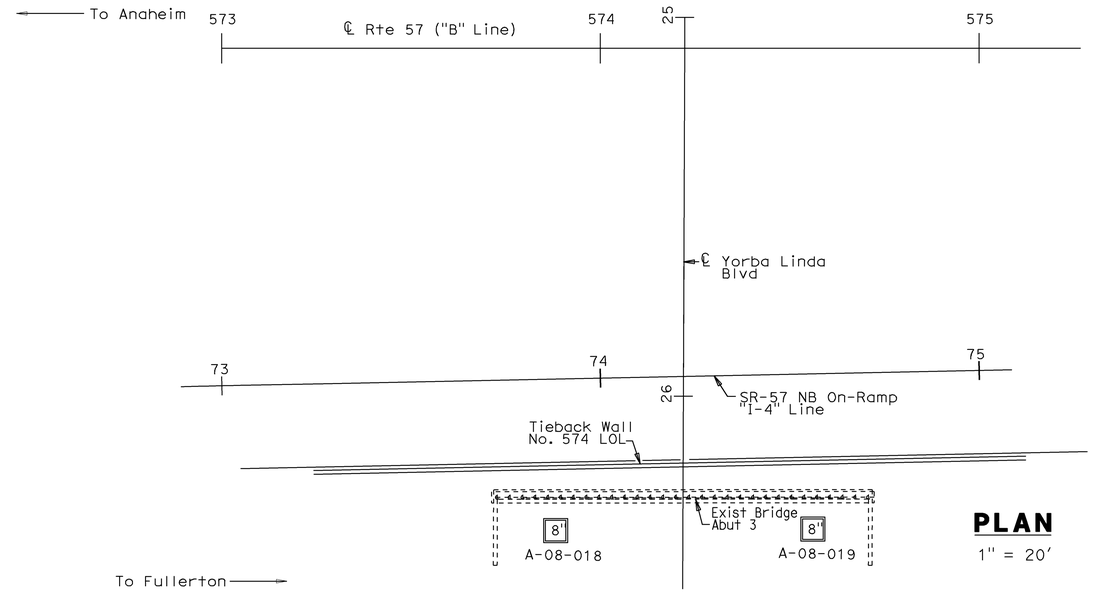

PLAN
1" = 20'

NOTES:

(1) This LOTB sheet was prepared in accordance with the Caltrans Soil and Rock Logging, Classification and Presentation Manual (June 2007)

(2) 2.4" samples were taken using a California Modified Sampler.

(3) An automatic trip hammer system consisting of a hammer weight of 140 lbs falling a distance of 30" was used to advance the drive sampler.

(4) Conversion factor from 2.4" Modified California Ring Sampler blowcounts to Standard Penetration Test (SPT) blowcounts is 0.5.

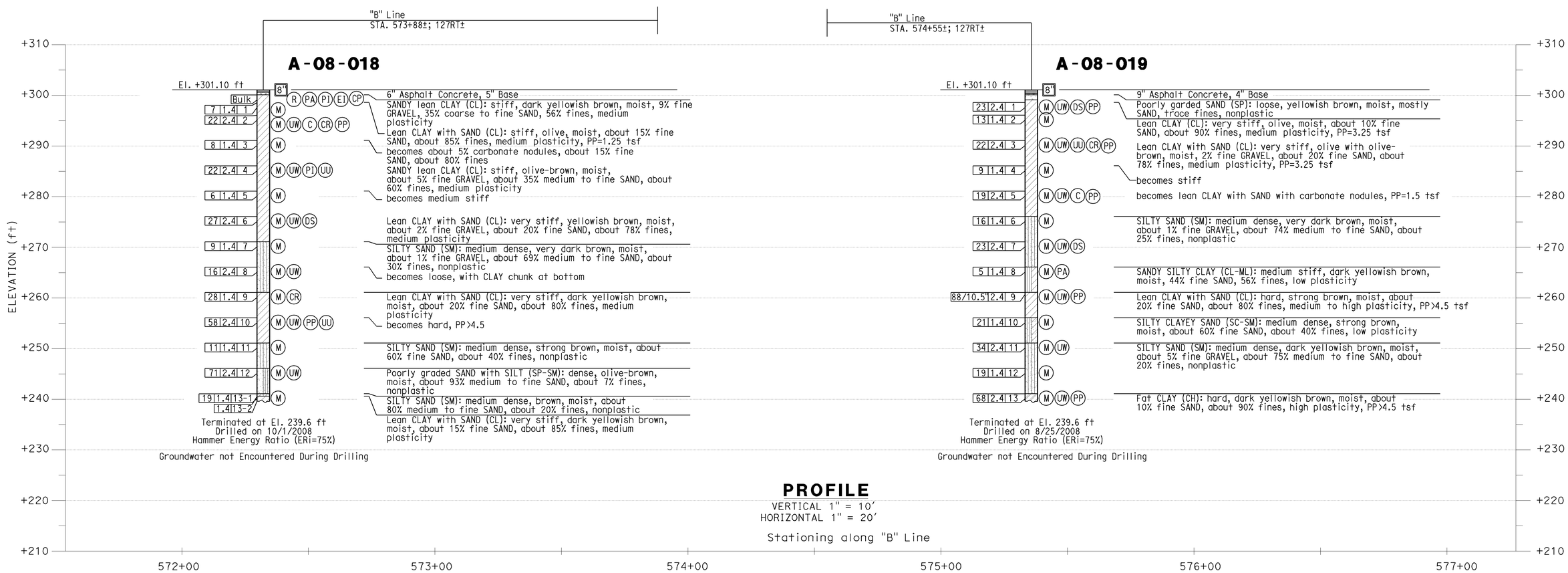

PROFILE
VERTICAL 1" = 10'
HORIZONTAL 1" = 20'

Jon Hamaguchi — DESIGN OVERSIGHT; 6-24-09 SIGN OFF DATE	DRAWN BY: J.Fang CHECKED BY: L.Cheang	FIELD INVESTIGATION BY: R.Jie	PREPARED FOR THE STATE OF CALIFORNIA DEPARTMENT OF TRANSPORTATION	L.Cheang PROJECT ENGINEER	BRIDGE NO. 55-0468 POST MILES 18.4	YORBA LINDA BLVD OC (MODIFY) LOG OF TEST BORINGS NO. 1

DESIGN GENERAL PLAN SHEET (ENGLISH) (REV. 2/25/05)

ORIGINAL SCALE IN INCHES FOR REDUCED PLANS 0 1 2 3

CU 12
EA 0F0311

DISREGARD PRINTS BEARING EARLIER REVISION DATES — REVISION DATES (PRELIMINARY STAGE ONLY) 3/11/09 4/30/09

SHEET 12 OF 15

FILE => 55-468-z-ltb01.dgn

USERNAME => trmikest DATE PLOTTED => 17-DEC-2009 TIME PLOTTED => 12:37

DIST	COUNTY	ROUTE	POST MILES TOTAL PROJECT	SHEET No	TOTAL SHEETS
12	Ora	57	16.2/18.6	958	960

Lino Cheang
REGISTERED ENGINEER — 6-17-09 DATE

12-14-09
PLANS APPROVAL DATE

REGISTERED PROFESSIONAL ENGINEER — L. CHEANG NO. GE 2345 EXP. 9-30-09 — GEOTECHNICAL — STATE OF CALIFORNIA

The State of California or its officers or agents shall not be responsible for the accuracy or completeness of electronic copies of this plan sheet.

ORANGE COUNTY TRANSPORTATION AUTHORITY
550 S. MAIN STREET
ORANGE, CA 92863-1584

EARTH MECHANICS, INC.
17660 NEWHOPE STREET, SUITE E
FOUNTAIN VALLEY, CA 92708

REFERENCE: CALTRANS SOIL & ROCK LOGGING, CLASSIFICATION, AND PRESENTATION MANUAL (JUNE 2007)

CEMENTATION

Description	Criteria
Weak	Crumbles or breaks with handling or little finger pressure.
Moderate	Crumbles or breaks with considerable finger pressure.
Strong	Will not crumble or break with finger pressure.

CONSISTENCY OF COHESIVE SOILS

Description	Unconfined Compressive Strength (tsf)	Pocket Penetrometer Measurement (tsf)	Torvane Measurement (tsf)	Field Approximation
Very Soft	< 0.25	< 0.25	< 0.12	Easily penetrated several inches by fist
Soft	0.25 to 0.50	0.25 to 0.50	0.12 to 0.25	Easily penetrated several inches by thumb
Medium Stiff	0.50 to 1.0	0.50 to 1.0	0.25 to 0.50	Penetrated several inches by thumb with moderate effort
Stiff	1 to 2	1 to 2	0.50 to 1.0	Readily indented by thumb but penetrated only with great effort
Very Stiff	2 to 4	2 to 4	1.0 to 2.0	Readily indented by thumbnail
Hard	> 4.0	> 4.0	> 2.0	Indented by thumbnail with difficulty

BOREHOLE IDENTIFICATION

Symbol	Hole Type	Description
Size	A	Auger Boring
Size	R P	Rotary drilled boring Rotary percussion boring (air)
Size	R	Rotary drilled diamond core
Size	HD HA	Hand driven (1-inch soil tube) Hand Auger
●	D	Dynamic Cone Penetration Boring
▲	CPT	Cone Penetration Test (ASTM D 5778-95)
⬚	O	Other

Note: Size in inches.

PLASTICITY OF FINE-GRAINED SOILS

Description	Criteria
Nonplastic	A 1/8-inch thread cannot be rolled at any water content.
Low	The thread can barely be rolled and the lump cannot be formed when drier than the plastic limit.
Medium	The thread is easy to roll and not much time is required to reach the plastic limit. The thread cannot be rerolled after reaching the plastic limit. The lump crumbles when drier than the plastic limit.
High	It takes considerable time rolling and kneading to reach the plastic limit. The thread can be rerolled several times after reaching the plastic limit. The lump can be formed without crumbling when drier than the plastic limit.

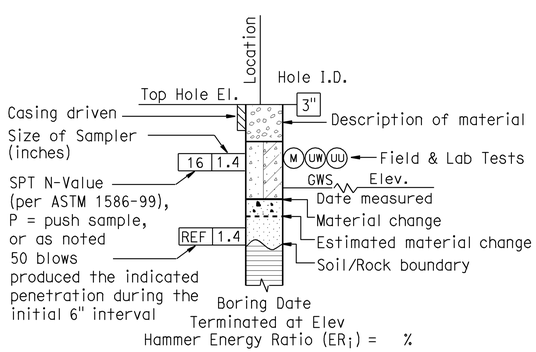

ROTARY BORING

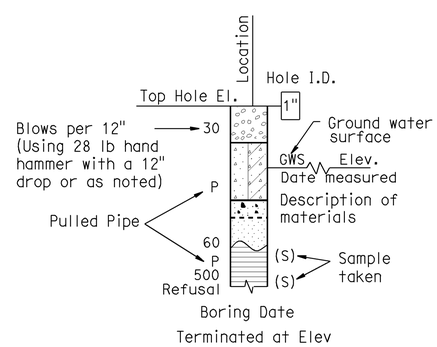

HAND BORING

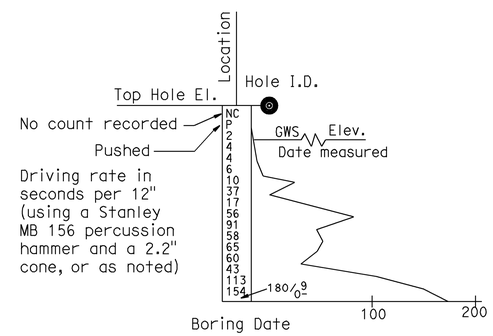

DYNAMIC CONE PENETRATION BORING

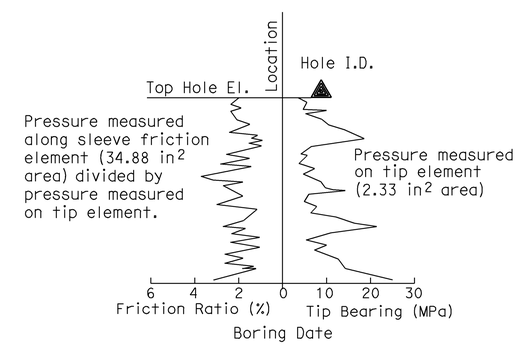

CONE PENETRATION TEST (CPT) SOUNDING

Jon Hamaguchi
DESIGN OVERSIGHT — Jon Hamaguchi
6-24-09
SIGN OFF DATE

DRAWN BY: J.Fang
CHECKED BY: L.Cheang

FIELD INVESTIGATION BY:
R.Jie

PREPARED FOR THE STATE OF CALIFORNIA DEPARTMENT OF TRANSPORTATION

L.Cheang
PROJECT ENGINEER

BRIDGE NO. 55-0468
POST MILES 18.4

YORBA LINDA BLVD OC (MODIFY)
LOG OF TEST BORINGS NO. 2

DESIGN GENERAL PLAN SHEET (ENGLISH) (REV. 2/25/05)

ORIGINAL SCALE IN INCHES FOR REDUCED PLANS 0 1 2 3

CU 12
EA 0F0311

DISREGARD PRINTS BEARING EARLIER REVISION DATES

REVISION DATES (PRELIMINARY STAGE ONLY)

SHEET 13 OF 15

FILE => 55-468-z-ltb02.dgn

USERNAME => ttmirkes1 DATE PLOTTED => 17-DEC-2009 TIME PLOTTED => 12:37

REFERENCE: CALTRANS SOIL & ROCK LOGGING, CLASSIFICATION, AND PRESENTATION MANUAL (JUNE 2007)

GROUP SYMBOLS AND NAMES

Graphic/Symbol	Group Names	Graphic/Symbol	Group Names
GW	Well-graded GRAVEL Well-graded GRAVEL with SAND	CL	Lean CLAY Lean CLAY with SAND Lean CLAY with GRAVEL SANDY lean CLAY SANDY lean CLAY with GRAVEL GRAVELLY lean CLAY GRAVELLY lean CLAY with SAND
GP	Poorly graded GRAVEL Poorly graded GRAVEL with SAND		
GW-GM	Well-graded GRAVEL with SILT Well-graded GRAVEL with SILT and SAND	CL-ML	SILTY CLAY SILTY CLAY with SAND SILTY CLAY with GRAVEL SANDY SILTY CLAY SANDY SILTY CLAY with GRAVEL GRAVELLY SILTY CLAY GRAVELLY SILTY CLAY with SAND
GW-GC	Well-graded GRAVEL with CLAY (or SILTY CLAY) Well-graded GRAVEL with CLAY and SAND (or SILTY CLAY and SAND)		
GP-GM	Poorly graded GRAVEL with SILT Poorly graded GRAVEL with SILT and SAND	ML	SILT SILT with SAND SILT with GRAVEL SANDY SILT SANDY SILT with GRAVEL GRAVELLY SILT GRAVELLY SILT with SAND
GP-GC	Poorly graded GRAVEL with CLAY (or SILTY CLAY) Poorly graded GRAVEL with CLAY and SAND (or SILTY CLAY and SAND)		
GM	SILTY GRAVEL SILTY GRAVEL with SAND	OL	ORGANIC lean CLAY ORGANIC lean CLAY with SAND ORGANIC lean CLAY with GRAVEL SANDY ORGANIC lean CLAY SANDY ORGANIC lean CLAY with GRAVEL GRAVELLY ORGANIC lean CLAY GRAVELLY ORGANIC lean CLAY with SAND
GC	CLAYEY GRAVEL CLAYEY GRAVEL with SAND		
GC-GM	SILTY, CLAYEY GRAVEL SILTY, CLAYEY GRAVEL with SAND	OL	ORGANIC SILT ORGANIC SILT with SAND ORGANIC SILT with GRAVEL SANDY ORGANIC SILT SANDY ORGANIC SILT with GRAVEL GRAVELLY ORGANIC SILT GRAVELLY ORGANIC SILT with SAND
SW	Well-graded SAND Well-graded SAND with GRAVEL		
SP	Poorly graded SAND Poorly graded SAND with GRAVEL	CH	Fat CLAY Fat CLAY with SAND Fat CLAY with GRAVEL SANDY fat CLAY SANDY fat CLAY with GRAVEL GRAVELLY fat CLAY GRAVELLY fat CLAY with SAND
SW-SM	Well-graded SAND with SILT Well-graded SAND with SILT and GRAVEL		
SW-SC	Well-graded SAND with CLAY (or SILTY CLAY) Well-graded SAND with CLAY and GRAVEL (or SILTY CLAY and GRAVEL)	MH	Elastic SILT Elastic SILT with SAND Elastic SILT with GRAVEL SANDY elastic SILT SANDY elastic SILT with GRAVEL GRAVELLY elastic SILT GRAVELLY elastic SILT with SAND
SP-SM	Poorly graded SAND with SILT Poorly graded SAND with SILT and GRAVEL		
SP-SC	Poorly graded SAND with CLAY (or SILTY CLAY) Poorly graded SAND with CLAY and GRAVEL (or SILTY CLAY and GRAVEL)	OH	ORGANIC fat CLAY ORGANIC fat CLAY with SAND ORGANIC fat CLAY with GRAVEL SANDY ORGANIC fat CLAY SANDY ORGANIC fat CLAY with GRAVEL GRAVELLY ORGANIC fat CLAY GRAVELLY ORGANIC fat CLAY with SAND
SM	SILTY SAND SILTY SAND with GRAVEL		
SC	CLAYEY SAND CLAYEY SAND with GRAVEL	OH	ORGANIC elastic SILT ORGANIC elastic SILT with SAND ORGANIC elastic SILT with GRAVEL SANDY ORGANIC elastic SILT SANDY ORGANIC elastic SILT with GRAVEL GRAVELLY ORGANIC elastic SILT GRAVELLY ORGANIC elastic SILT with SAND
SC-SM	SILTY, CLAYEY SAND SILTY, CLAYEY SAND with GRAVEL		
PT	PEAT	OL/OH	ORGANIC SOIL ORGANIC SOIL with SAND ORGANIC SOIL with GRAVEL SANDY ORGANIC SOIL SANDY ORGANIC SOIL with GRAVEL GRAVELLY ORGANIC SOIL GRAVELLY ORGANIC SOIL with SAND
	COBBLES COBBLES and BOULDERS BOULDERS		

FIELD AND LABORATORY TESTING

- (C) Consolidation (ASTM D 2435)
- (CL) Collapse Potential (ASTM D 5333)
- (CP) Compaction Curve (CTM 216)
- (CR) Corrosivity Testing (CTM 643, CTM 422, CTM 417)
- (CU) Consolidated Undrained Triaxial (ASTM D 4767)
- (DS) Direct Shear (ASTM D 3080)
- (EI) Expansion Index (ASTM D 4829)
- (M) Moisture Content (ASTM D 2216)
- (OC) Organic Content-% (ASTM D 2974)
- (P) Permeability (CTM 220)
- (PA) Particle Size Analysis (ASTM D 422)
- (PI) Plasticity Index (AASHTO T 90) Liquid Limit (AASHTO T 89)
- (PL) Point Load Index (ASTM D 5731)
- (PM) Pressure Meter
- (PP) Pocket Penetrometer
- (R) R-Value (CTM 301)
- (SE) Sand Equivalent (CTM 217)
- (SG) Specific Gravity (AASHTO T 100)
- (SL) Shrinkage Limit (ASTM D 427)
- (SW) Swell Potential (ASTM D 4546)
- (TV) Pocket Torvane
- (UC) Unconfined Compression-Soil (ASTM D 2166) Unconfined Compression-Rock (ASTM D 2938)
- (UU) Unconsolidated Undrained Triaxial (ASTM D 2850)
- (UW) Unit Weight (ASTM D 4767)
- (VS) Vane Shear (AASHTO T 223)

DIST	COUNTY	ROUTE	POST MILES TOTAL PROJECT	SHEET No	TOTAL SHEETS
12	Ora	57	16.2/18.6	959	960

Lino Cheang
REGISTERED ENGINEER — DATE 6-17-09

12-14-09
PLANS APPROVAL DATE

REGISTERED PROFESSIONAL ENGINEER — L. CHEANG NO. GE 2345 EXP. 9-30-09 — GEOTECHNICAL — STATE OF CALIFORNIA

The State of California or its officers or agents shall not be responsible for the accuracy or completeness of electronic copies of this plan sheet.

ORANGE COUNTY TRANSPORTATION AUTHORITY
550 S. MAIN STREET
ORANGE, CA 92863-1584

EARTH MECHANICS, INC.
17660 NEWHOPE STREET, SUITE E
FOUNTAIN VALLEY, CA 92708

APPARENT DENSITY OF COHESIONLESS SOILS

Description	SPT N_{60} (Blows / 12 inches)
Very loose	0 - 4
Loose	5 - 10
Medium Dense	11 - 30
Dense	31 - 50
Very Dense	> 50

MOISTURE

Description	Criteria
Dry	Absence of moisture, dusty, dry to the touch
Moist	Damp but no visible water
Wet	Visible free water, usually soil is below water table

PERCENT OR PROPORTION OF SOILS

Description	Criteria
Trace	Particles are present but estimated to be less than 5%
Few	5 to 10%
Little	15 to 25%
Some	30 to 45%
Mostly	50 to 100%

PARTICLE SIZE

Description		Size
Boulder		> 12"
Cobble		3" to 12"
Gravel	Coarse	3/4" to 3"
	Fine	No. 4 to 3/4"
Sand	Coarse	No. 10 to No. 4
	Medium	No. 40 to No. 10
	Fine	No. 200 to No. 40

Jon Hanaguchi
DESIGN OVERSIGHT — Jon Hanaguchi
6-24-09
SIGN OFF DATE

DRAWN BY: J.Fang
CHECKED BY: L.Cheang

FIELD INVESTIGATION BY:
R.Jie

PREPARED FOR THE STATE OF CALIFORNIA DEPARTMENT OF TRANSPORTATION

L.Cheang
PROJECT ENGINEER

BRIDGE NO. 55-0468
POST MILES 18.4

YORBA LINDA BLVD OC (MODIFY)
LOG OF TEST BORINGS NO. 3

DESIGN GENERAL PLAN SHEET (ENGLISH) (REV. 2/25/05)

ORIGINAL SCALE IN INCHES FOR REDUCED PLANS 0 1 2 3

CU 12
EA 0F0311

DISREGARD PRINTS BEARING EARLIER REVISION DATES

REVISION DATES (PRELIMINARY STAGE ONLY)

SHEET 14 OF 15

FILE => 55-468-z-ltb03.dgn

USERNAME => trmikes1 DATE PLOTTED => 17-DEC-2009 TIME PLOTTED => 12:37

DIST.	COUNTY	ROUTE	SECTION	SHEET NO.	TOTAL SHEETS
07	ORA	57	13.4/20.2	139	180

September 30, 1968

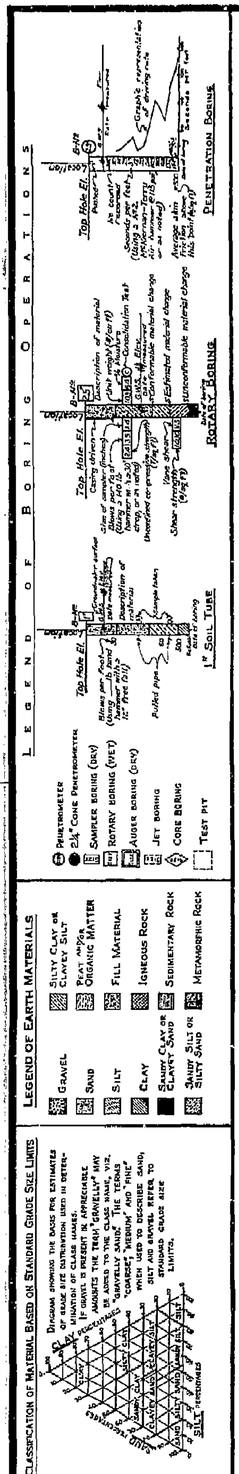

NOTE: Classification of earth material as shown on this sheet is based upon field inspection and is not to be construed to imply mechanical analysis.

BENCH MARK

BM 34-19A-56 ELEV. 272.11
CHC BRASS CAP IN CONC. IN 2" I.P. DN. 1; 363'E. OF STA. 525+11.43 "P" P.I. #35, 1800'± E. OF INTER. OF PIONEER AVE. & ASSOCIATED RD. & 3' S. OF PP #1024090 E.

DIVISION OF ENGINEERING SERVICES - GEOTECHNICAL SERVICES					
As-Built Log of Test Borings sheet is considered an informational document only. As such, the State of California registration seal with signature, license number and registration certificate expiration date confirm that this is a true and accurate copy of the original document. This drawing is available and presented only for the convenience of any bidder, contractor or other interested party.					
DIST.	COUNTY	ROUTE	POST MILES -TOTAL PROJECT	Sheet No.	Total Sheets
12	Ora	57	16.2/18.6	960	960
Lino Cheang REGISTERED GEOTECHNICAL ENGINEER				6-17-09 DATE	
YORBA LINDA BLVD OC (MODIFY)					
AS-BUILT LOG OF TEST BORINGS					
NOTE: A COPY OF THIS LOG OF TEST BORINGS IS AVAILABLE AT OFFICE OF STRUCTURE MAINTENANCE AND INVESTIGATIONS, SACRAMENTO, CALIFORNIA		CU: 12 EA: 0F0311		BRIDGE No. 55-0468	
				Sheet 15	of 15

To accompany plans dated 12-14-09

REGISTERED PROFESSIONAL ENGINEER
LINO C. CHEANG
NO. GE 2345
EXP. 9/30/09
GEOTECHNICAL
STATE OF CALIFORNIA

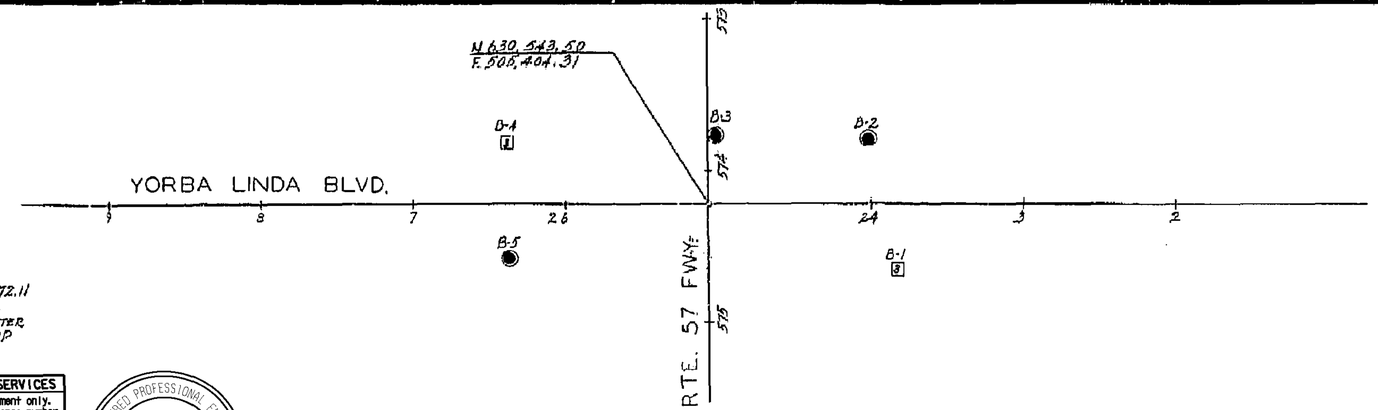

PLAN
SCALE: 1" = 50'

INFORMATION ON ACTUAL FOUNDATION CONDITIONS ENCOUNTERED IS ON FILE IN BRIDGE GEOLOGY SECTION

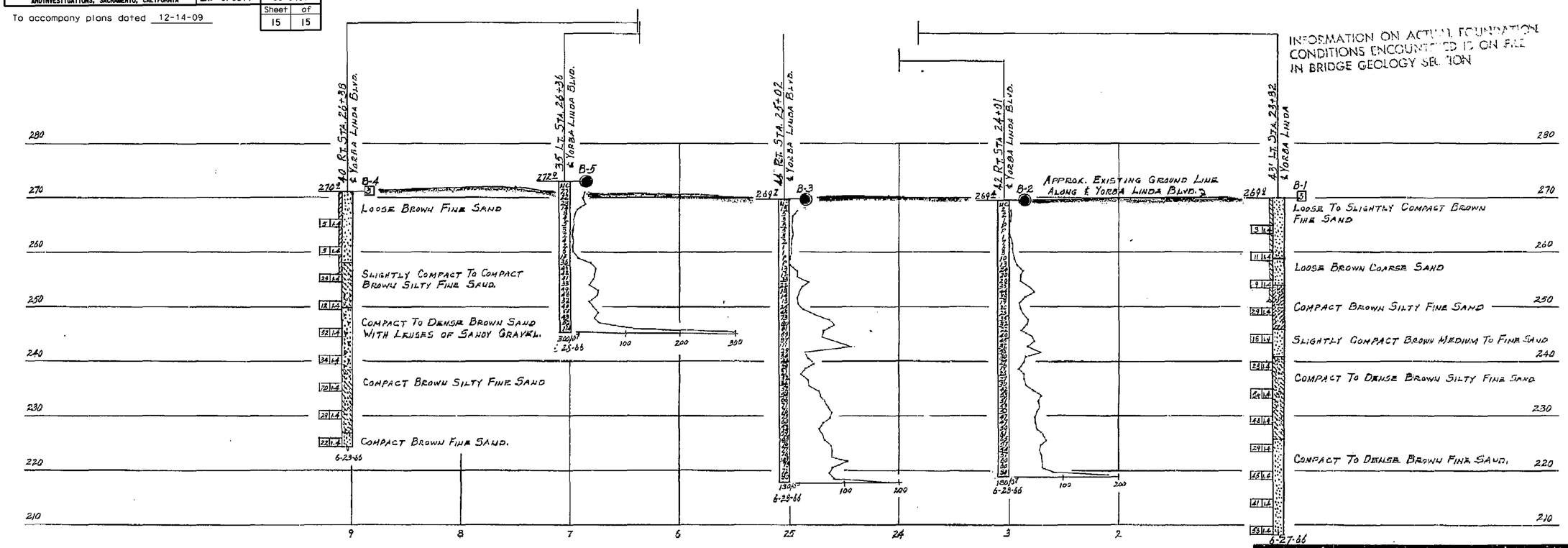

PROFILE
SCALE: VERT. 1" = 10'
HORIZ. 1" = 50'

NO GROUND WATER ENCOUNTERED DURING THIS INVESTIGATION BY BRIDGE DEPT. GEOLOGY SECTION
DATE JUNE 1966

SHEET	OF
10	10

STATE OF CALIFORNIA
DEPARTMENT OF PUBLIC WORKS
DIVISION OF HIGHWAYS

YORBA LINDA BOULEVARD OVERCROSSING

LOG OF TEST BORINGS

SCALE AS NOTED	BRIDGE 55-468	FILE	DRAWING 55468-10

AS BUILT PLANS
Contract No. 07-032134
Date Completed
Document No. 70001578

FILENAME => 55-468-z-ltb04.tif

CHARGE: 07208