DIST	COUNTY	ROUTE	POST MILES TOTAL PROJECT	SHEET No	TOTAL SHEETS
12	Ora	5	8.5/9.4	179	267

REGISTERED CIVIL ENGINEER 6-17-09 DATE

12-14-09
PLANS APPROVAL DATE

REGISTERED PROFESSIONAL ENGINEER PREM P. RIMAL No. C61422 Exp. 6/30/11 CIVIL STATE OF CALIFORNIA

The State of California or its officers or agents shall not be responsible for the accuracy or completeness of electronic copies of this plan sheet.

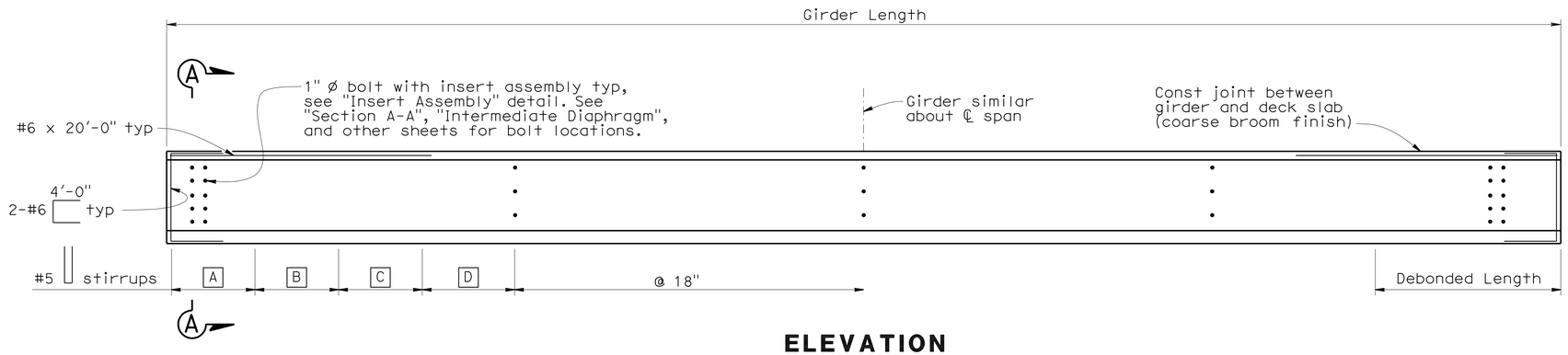

ELEVATION

No Scale

Location	A	B	C	D
Girder A	5 @ 4"	20 @ 6"	40 @ 9"	15 @ 12"
Girder B	5 @ 4"	45 @ 6"	25 @ 9"	10 @ 12"
Girders C-H	5 @ 4"	15 @ 6"	20 @ 9"	20 @ 12"

NOTES

1. See "PRESTRESSED BULB-TEE GIRDER DETAILS NO. 2" sheet for information not shown.
2. Girder ends to be cast such that a level surface is provided at bearing pads.

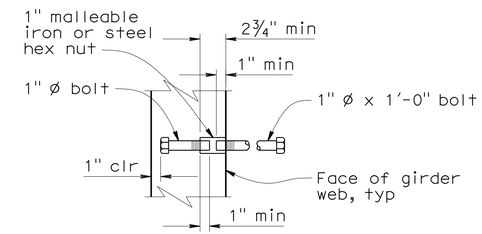

INSERT ASSEMBLY

No Scale

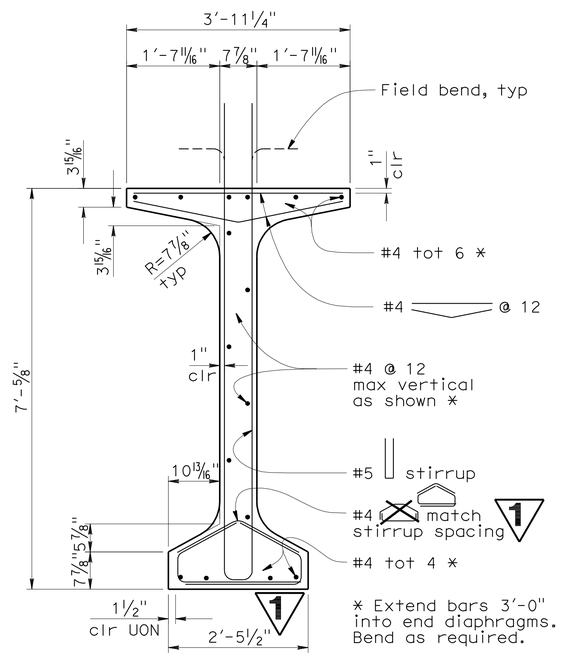

TYPICAL GIRDER SECTION

¾" = 1'-0"

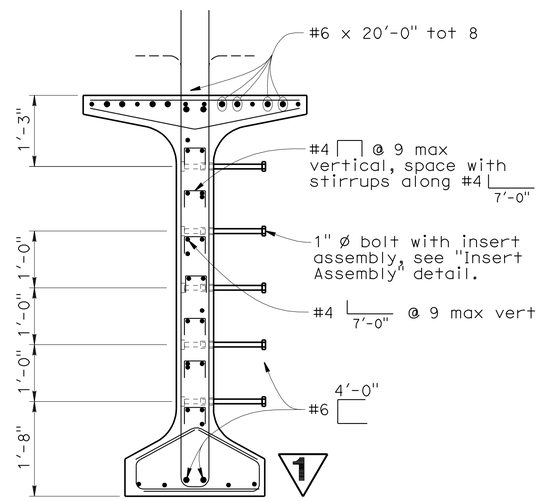

Note: For details not shown, see "Typical Girder Section" detail.

SECTION A-A

¾" = 1'-0"

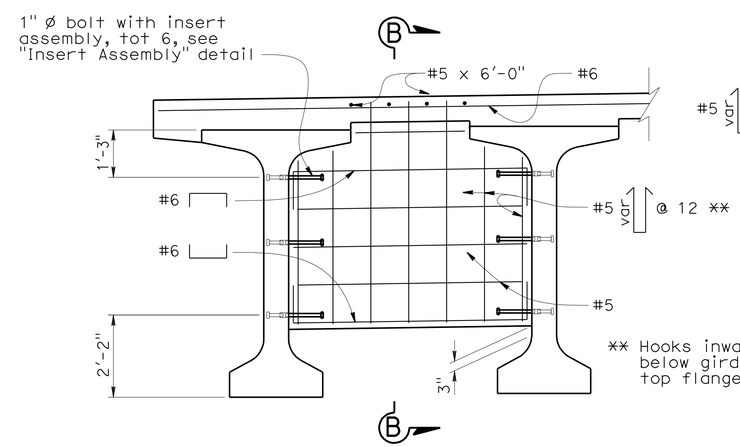

Note: Deck drain pipe opening not shown.

INTERMEDIATE DIAPHRAGM

½" = 1'-0"

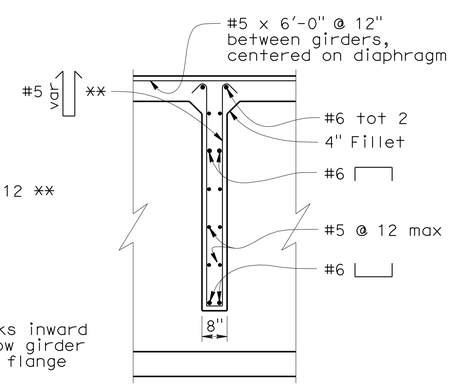

Note: Diaphragm vertical or normal to deck grade

SECTION B-B

½" = 1'-0"

NOTE:
THE CONTRACTOR SHALL VERIFY ALL CONTROLLING FIELD DIMENSIONS BEFORE ORDERING OR FABRICATING ANY MATERIAL.

1 **REVISED PER ADDENDUM No. 1 DATED MAY 6, 2010**

	BY	CHECKED
DESIGN	Richard Schendel	Zihan Yan
DETAILS	Richard Schendel	Zihan Yan
QUANTITIES	Mike Pope	Richard Schendel

STATE OF CALIFORNIA DEPARTMENT OF TRANSPORTATION

DIVISION OF ENGINEERING SERVICES STRUCTURE DESIGN DESIGN BRANCH 18

BRIDGE NO. 55-0228
POST MILE 8.80

SAN JUAN CREEK BRIDGE (WIDEN)
PRESTRESSED BULB-TEE GIRDER DETAILS NO. 1

STRUCTURES DESIGN DETAIL SHEET (ENGLISH) (REV. 10/25/05)

ORIGINAL SCALE IN INCHES FOR REDUCED PLANS 0 1 2 3

CU 12
EA 0E5701

DISREGARD PRINTS BEARING EARLIER REVISION DATES 12/30/08 02/02/09 04/13/09 05/26/09

SHEET 24 OF 47

FILE => 55-0228-1-gdt01.add

USERNAME => trmikest DATE PLOTTED => 03-MAY-2010 TIME PLOTTED => 14:13

DIST	COUNTY	ROUTE	POST MILES TOTAL PROJECT	SHEET No	TOTAL SHEETS
12	Ora	5	8.5/9.4	180	267

REGISTERED CIVIL ENGINEER 6-17-09 DATE

12-14-09
PLANS APPROVAL DATE

REGISTERED PROFESSIONAL ENGINEER PREM P. RIMAL No. C61422 Exp. 6/30/11 CIVIL STATE OF CALIFORNIA

The State of California or its officers or agents shall not be responsible for the accuracy or completeness of electronic copies of this plan sheet.

PRESTRESSING NOTES

1. Concrete strength: f'ci is at time of initial stressing, f'c is at 28 days.
2. Deflection components: Informational - to be used in setting screed line elevations.
3. Screed line elevations for deck concrete will be determined by the Engineer.
4. Prestressing strand shall be 0.6" ø 270 ksi low relaxation.
5. Strand location may be adjusted as approved by the Engineer.
6. Details shown are for pretensioned girders. The Contractor may submit details for post-tensioning, which shall be subject to the approval of the Engineer.

Girder Designation	Girder Location	Girder Length	Number of 0.6" ø Strands	Pjack	Concrete Strength (ksi)			Midspan Dead Load Deflection (ft)	
					f'ci (Girder)	f'c (Girder)	f'c (Deck)	Deck	Rail and Soundwall
A	Span 1, Left	148'-9½" ±	54	41 kips/strand = 2214 kips	5.5	6.5	6.0	0.17	0.06
B	Span 1, Right	142'-1¾" ±	46	41 kips/strand = 1886 kips	5.0	6.0			
C	Span 2, Left	135'-7" ±	46	41 kips/strand = 1886 kips	5.0	6.0	5.0	0.13	0.06
D	Span 2, Right	137'-½" ±	46	41 kips/strand = 1886 kips	5.0	6.0			
E	Span 3, Left	140'-3¼" ±	46	41 kips/strand = 1886 kips	5.0	6.0	5.0	0.13	0.06
F	Span 3, Right	141'-2" ±	46	41 kips/strand = 1886 kips	5.0	6.0			
G	Span 4, Left	138'-4¼" ±	46	41 kips/strand = 1886 kips	5.0	6.0	5.0	0.13	0.06
H	Span 4, Right	139'-2" ±	46	41 kips/strand = 1886 kips	5.0	6.0			

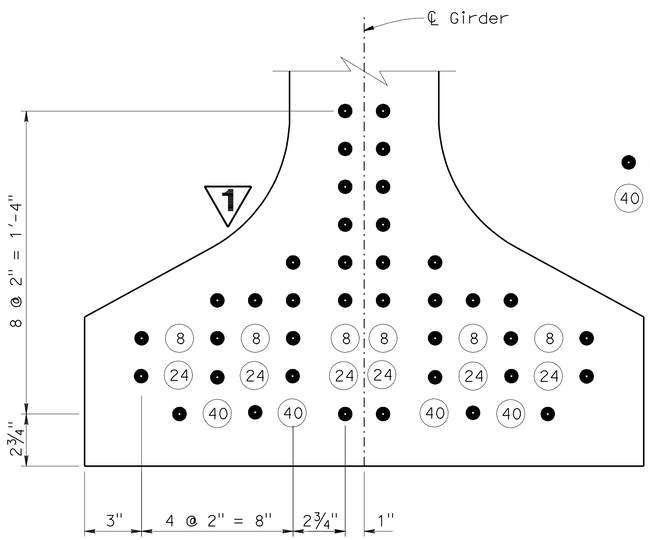

Note: Dimensions symmetrical about ℄ Girder.

STRAND LAYOUT GIRDER A

3" = 1'-0"

● Denotes continuously bonded strand

(40) Denotes debonded strand and debonded length in feet

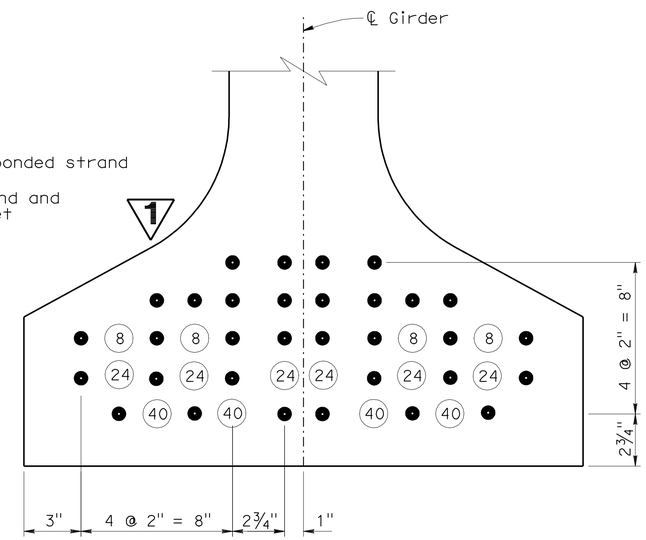

Note: Dimensions symmetrical about ℄ Girder.

STRAND LAYOUT GIRDERS B-H

3" = 1'-0"

NOTE:
THE CONTRACTOR SHALL VERIFY ALL CONTROLLING FIELD DIMENSIONS BEFORE ORDERING OR FABRICATING ANY MATERIAL.

1 REVISED PER ADDENDUM No. 1 DATED MAY 6, 2010

	BY	CHECKED
DESIGN	Richard Schendel	Zihan Yan
DETAILS	Richard Schendel	Zihan Yan
QUANTITIES	Mike Pope	Richard Schendel

STATE OF CALIFORNIA
DEPARTMENT OF TRANSPORTATION

DIVISION OF ENGINEERING SERVICES
STRUCTURE DESIGN
DESIGN BRANCH 18

BRIDGE NO. 55-0228
POST MILE 8.80

SAN JUAN CREEK BRIDGE (WIDEN)
PRESTRESSED BULB-TEE GIRDER DETAILS NO. 2

STRUCTURES DESIGN DETAIL SHEET (ENGLISH) (REV. 10/25/05)

ORIGINAL SCALE IN INCHES FOR REDUCED PLANS 0 1 2 3

CU 12
EA 0E5701

DISREGARD PRINTS BEARING EARLIER REVISION DATES → 12/08/08 02/02/09 05/06/09

REVISION DATES

SHEET 25 OF 47

FILE => 55-0228-1-gdt02.add

USERNAME => trmikes1 DATE PLOTTED => 03-MAY-2010 TIME PLOTTED => 14:13

DIST	COUNTY	ROUTE	POST MILES TOTAL PROJECT	SHEET No	TOTAL SHEETS
12	Ora	5	8.5/9.4	212	267

REGISTERED CIVIL ENGINEER 6-17-09 DATE

12-14-09
PLANS APPROVAL DATE

The State of California or its officers or agents shall not be responsible for the accuracy or completeness of electronic copies of this plan sheet.

REGISTERED PROFESSIONAL ENGINEER PREM P. RIMAL No. C61422 Exp. 6/30/11 CIVIL STATE OF CALIFORNIA

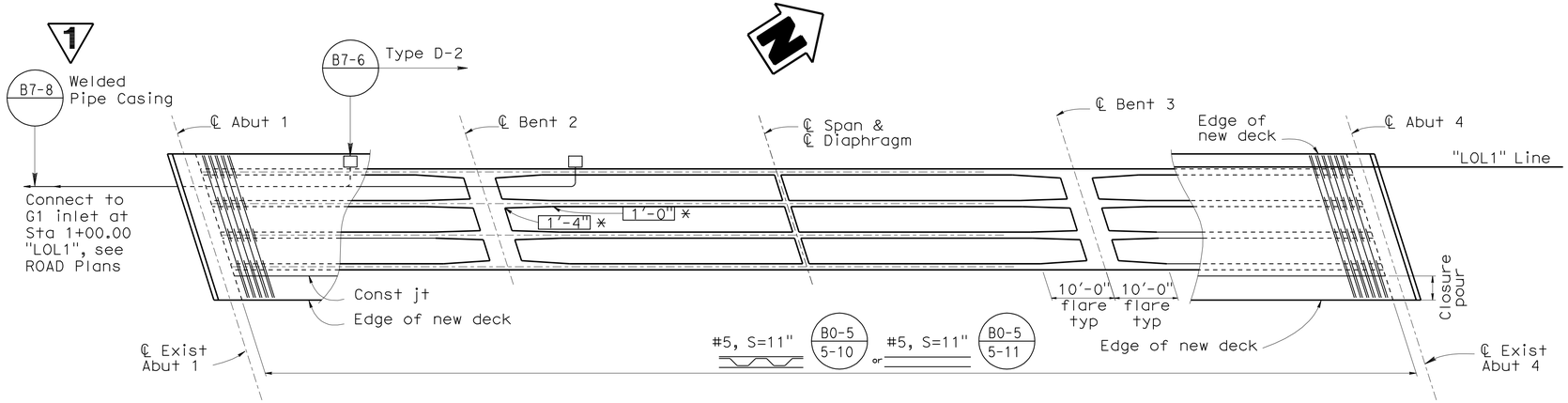

NOTES:

* Typ all flares

Indicates girder width

GIRDER LAYOUT

No Scale

B6-1

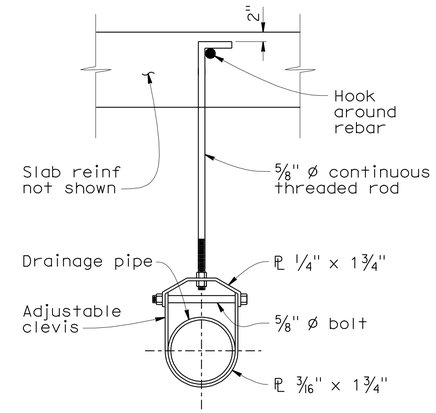

DRAIN PIPE SUPPORT

No Scale

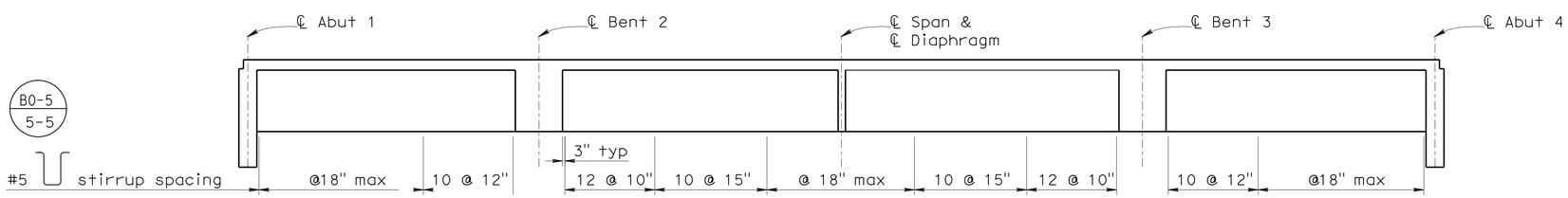

LONGITUDINAL SECTION

No Scale

B6-1 S-3

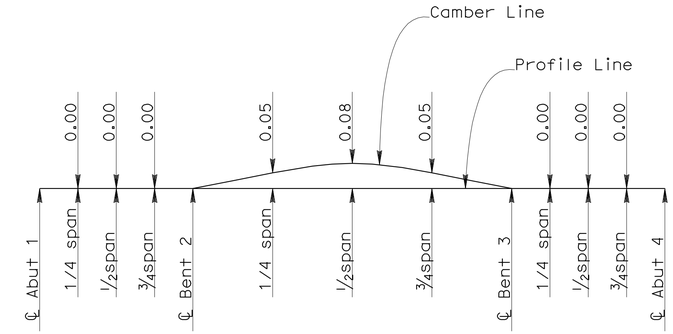

NOTES: Does not include allowance for falsework settlement

CAMBER DIAGRAM

No Scale

NOTE:
THE CONTRACTOR SHALL VERIFY ALL CONTROLLING FIELD DIMENSIONS BEFORE ORDERING OR FABRICATING ANY MATERIAL.

1 REVISED PER ADDENDUM No. 1 DATED MAY 6, 2010

	BY	CHECKED
DESIGN	T. WYCKOFF	PREM RIMAL
DETAILS	M. TRAN	PREM RIMAL
QUANTITIES	PREM RIMAL	DAVID MURRAY

STATE OF CALIFORNIA DEPARTMENT OF TRANSPORTATION

DIVISION OF ENGINEERING SERVICES STRUCTURE DESIGN DESIGN BRANCH 18

BRIDGE NO. 55-0298L
POST MILE 8.8

SAN JUAN CREEK ROAD UC (WIDEN)
GIRDER LAYOUT

STRUCTURES DESIGN DETAIL SHEET (ENGLISH) (REV. 10/25/05)

ORIGINAL SCALE IN INCHES FOR REDUCED PLANS 0 1 2 3

CU 12
EA 0E5701

DISREGARD PRINTS BEARING EARLIER REVISION DATES 12/18/08

REVISION DATES

SHEET 10 OF 28

FILE => 55-0298l-l-g_lo01.add

USERNAME => trmikesl DATE PLOTTED => 03-MAY-2010 TIME PLOTTED => 14:14