DIST	COUNTY	ROUTE	POST MILES TOTAL PROJECT	SHEET NO.	TOTAL SHEETS
12	Ora	5,74	9.3/10.0, 0.0/0.2	401	515

REGISTERED ELECTRICAL ENGINEER

October 5, 2007
PLANS APPROVAL DATE

REGISTERED PROFESSIONAL ENGINEER
Jeffery G. McRae
No. E14512
Exp. 6-30-08
ELECTRICAL
STATE OF CALIFORNIA

The State of California or its officers or agents shall not be responsible for the accuracy or completeness of electronic copies of this plan sheet.

To accompany plans dated 4-9-12

2006 REVISED STANDARD PLAN RSP ES-2C

NOTES-TYPE III SERVICE EQUIPMENT ENCLOSURES:

1. Service equipment enclosure and metering equipment shall meet the requirements of the service utility. The meter area shall have a sealable, lockable, weathertight cover that can be removed without the use of tools.

2. Service equipment enclosures shall be factory wired and conform to NEMA standards.

3. Dimensions of service equipment enclosures shall meet the requirements of the service utility.

4. The dead front panels on Type III service equipment enclosures shall have a continuous stainless steel or aluminum piano hinge. The panel in front of the breakers shall be secured with a latch or captive screws. No live parts shall be mounted on the dead front panel.

5. The exterior door shall have provisions for padlocking. The padlock hole shall be a minimum diameter of 7/16".

6. Enclosures housing transformers of more than one kVA shall have effective screened ventilation louver of not less than 50 square inches. Screen shall be stainless steel No. 304, with a No. 10 size mesh. Framed screen shall be secured with at least four bolts.

7. Fasteners on the exterior of the enclosure shall be vandal-resistant and shall not be removable from the exterior. Exterior screws, nuts, bolts and washers shall be stainless steel.

8. Landing lugs for incoming service conductors shall be compatible with either copper or aluminum conductors sized to suit the conductors shown on the plan. Landing lugs shall be copper or tin-plated aluminum. Neutral bus shall be rated for 125 A and be suitable for copper or aluminum conductors unless otherwise specified. The terminal shall include but not be limited to:

   a) Incoming terminals (landing lugs)
   b) Neutral lugs
   c) Solid neutral terminal strip

9. At least 6 standard single pole circuit breaker spaces, 3/4" nominal, shall be provided for branch circuits. Circuit breaker interiors shall be copper. Interiors of enclosure shall accept plug-in or cable-in/cable-out circuit breakers.

10. Control wiring shall be 600 V, 14 stranded machine tool wire. Where subject to flexing, 19 strand wire shall be used.

11. Main bus shall be rated for 125 A and shall be tin-plated copper.

12. A plastic laminated wiring diagram shall be provided with brass mounting eyelets and attached to the inside of the enclosure and the wiring diagram shall be affixed to the interior with a UL or ETL approved method.

13. An engraved phenolic nameplate on the dead front panel indicating the function of each circuit or device shall be installed with stainless steel rivets or stainless steel screws:

    a) Adjacent to the breaker or device with character size a minimum of 1/8".

    b) At the top of the exterior door panel indicating State system number, voltage level and number of phases with character size a minimum of 3/16".

14. The plan shows the approximate location of devices within the enclosure. Components may be rearranged, however, the "working" clearances within the service equipment enclosure shall be maintained.

15. In unpaved areas a raised portland cement concrete pad 2'-0" x 4" x width of foundation shall be constructed in front of new service equipment enclosure installation. Pad shall be set to elevation of foundation.

16. Foundation shall extend 2" minimum beyond edge of service equipment enclosure.

17. Internal bus, where shown, is typical only. Alternative design of proposed service equipment enclosure shall be submitted to the Engineer for approval.

18. Plug-in circuit breakers may be mounted in the vertical or horizontal position. Cable-in/cable-out circuit breakers shall be mounted in the vertical position.

19. Type III-AF and Type III-BF service equipment enclosures shall have the meter viewing windows located on the front side of the service equipment enclosures.

20. Type III-AR and Type III-BR service equipment enclosures shall be similarly constructed as Type III-AF and Type III-BF respectively, except the meter viewing windows shall be located on the back side of the service equipment enclosures.

21. Minimum clearance shall be required for front and back of service equipment enclosure per National Electrical Code, Article 110.26, "Spaces About Electric Equipment (600 Volts, Nominal, or Less)."

STATE OF CALIFORNIA
DEPARTMENT OF TRANSPORTATION

ELECTRICAL SYSTEMS (SERVICE EQUIPMENT NOTES TYPE III SERIES)

NO SCALE

RSP ES-2C DATED OCTOBER 5, 2007 SUPERCEDES STANDARD PLAN ES-2C DATED MAY 1, 2006 - PAGE 405 OF THE STANDARD PLANS BOOK DATED MAY 2006.

REVISED STANDARD PLAN RSP ES-2C

DIST	COUNTY	ROUTE	POST MILES TOTAL PROJECT	SHEET NO.	TOTAL SHEETS
12	Ora	5,74	9.3/10.0, 0.0/0.2	402	515

REGISTERED ELECTRICAL ENGINEER

October 5, 2007
PLANS APPROVAL DATE

REGISTERED PROFESSIONAL ENGINEER Jeffery G. McRae No. E14512 Exp. 6-30-08 ELECTRICAL STATE OF CALIFORNIA

The State of California or its officers or agents shall not be responsible for the accuracy or completeness of electronic copies of this plan sheet.

To accompany plans dated 4-9-12

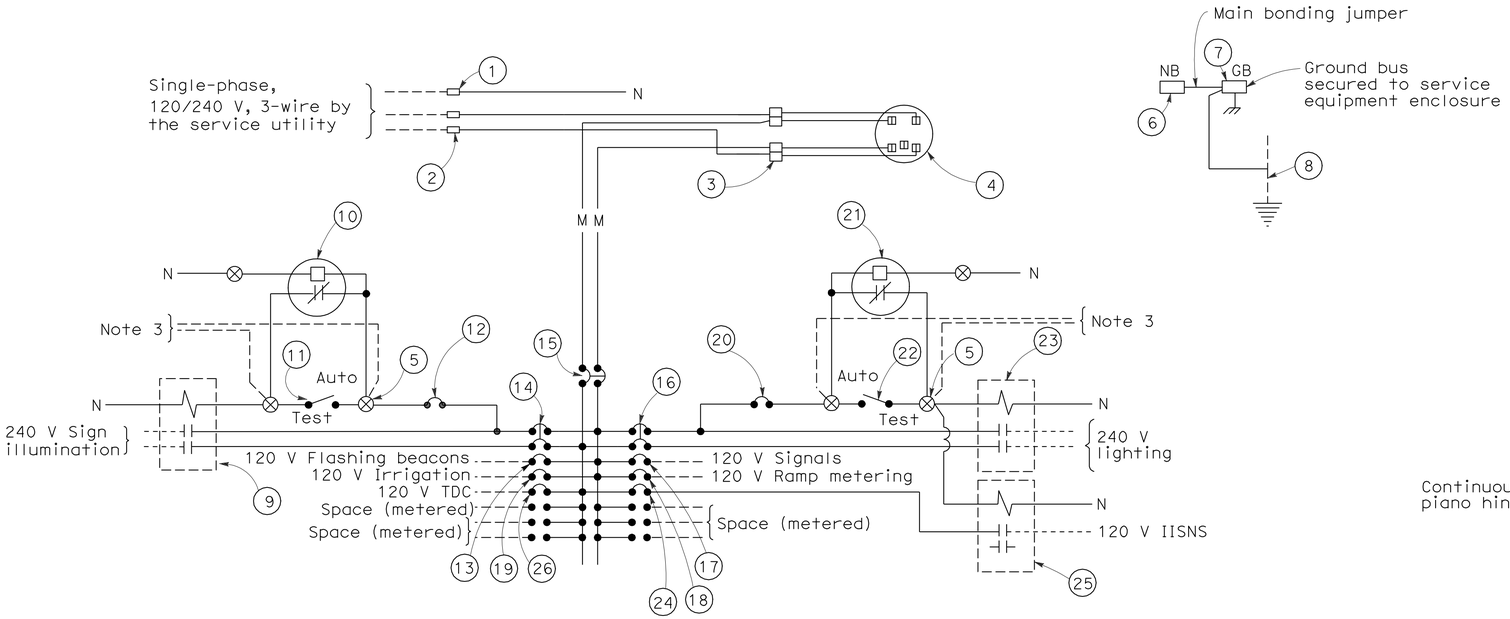

120/240 V SERVICE WIRING DIAGRAM (TYPICAL)

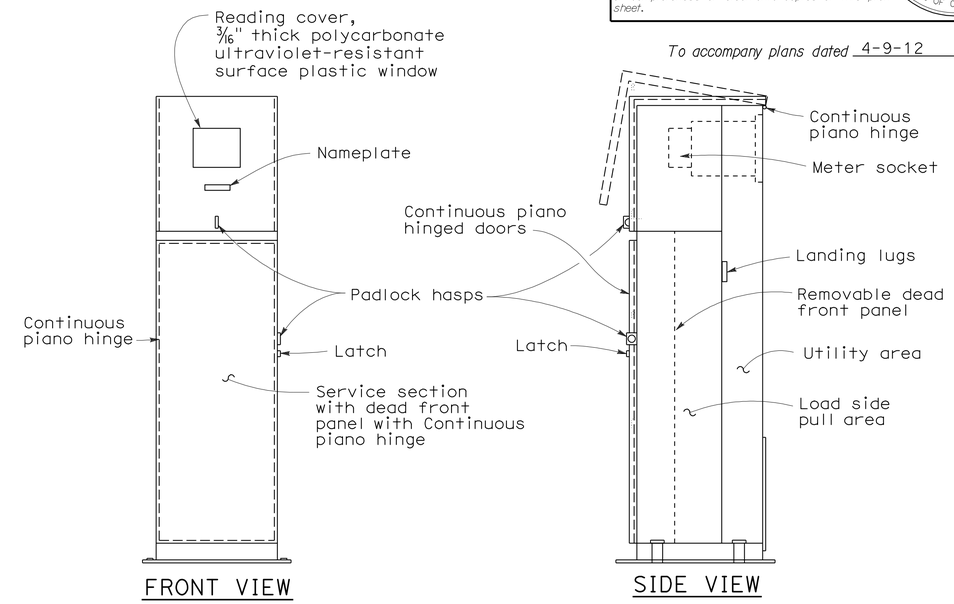

FRONT VIEW

SIDE VIEW

TYPE III-BF SERVICE EQUIPMENT ENCLOSURE WITH PROVISIONS FOR ONE 100 A METER (TYPICAL)

TYPE III-B SERVICE (120/240 V) EQUIPMENT LEGEND		
ITEM No.	COMPONENT	NAME PLATE DESCRIPTION
1	Neutral lug	
2	Landing lug (Note 6)	
3	Test bypass facility	
4	Meter socket and support	
5	Terminal blocks	
6	Neutral bus	
7	Ground bus	
8	Grounding electrode	
9	30 A, 2PNO Contactor	Sign Illumination
10	Photoelectric unit (Note 7)	
11	15 A, 1P, Test switch	Sign Illumination Test Switch
12	15 A, 120 V, 1P, CB	Sign Illumination Control
13	15 A, 120 V, 1P, CB	Flashing Beacon
14	30 A, 240 V, 2P, CB	Sign Illumination
15	100 A, 240 V, 2P, CB	Main Breaker
16	30 A, 240 V, 2P, CB	Lighting
17	50 A, 120 V, 1P, CB	Signals
18	30 A, 120 V, 1P, CB	Ramp Metering
19	20 A, 120 V, 1P, CB	Irrigation
20	15 A, 120 V, 1P, CB	Lighting Control
21	Photoelectric unit (Note 7)	
22	15 A, 1P, Test switch	Lighting Test Switch
23	60 A, 2PNO Contactor	Lighting
24	15 A, 120 V, 1P, CB	IISNS
25	30 A, 2PNO Contactor	IISNS
26	20 A, 120 V, IP, CB	Telephone Demarcation Cabinet

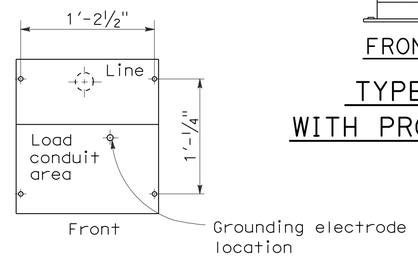

BASE FOR TYPE III-B SERVICE EQUIPMENT ENCLOSURE

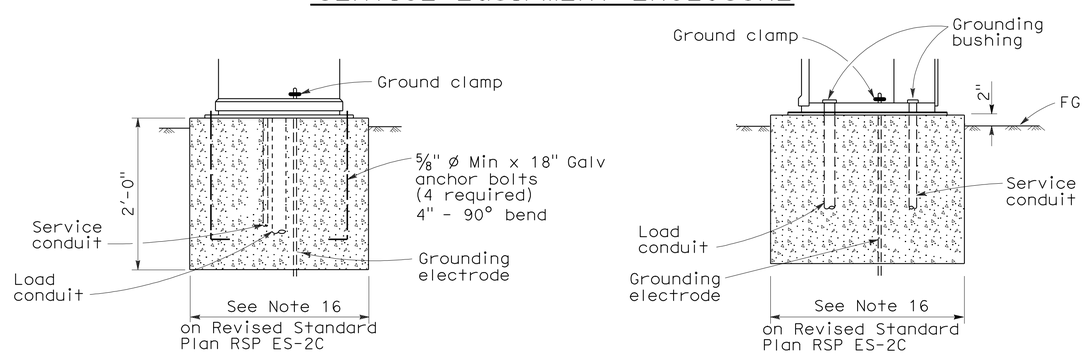

FRONT VIEW

SIDE VIEW

TYPE III-B SERVICE EQUIPMENT ENCLOSURE FOUNDATION DETAILS

NOTES: (FOR SERVICE EQUIPMENT ENCLOSURE)

1. Voltage ratings of service equipment shall conform to the service voltages indicated on the plans.
2. Unless otherwise indicated on the plans, service equipment items shall be provided for each service equipment enclosure as shown.
3. Connect to remote test switch mounted on lighting standards, sign post or structure when required.
4. Items No. 1 and 6 shall be isolated from the service equipment enclosure.
5. Meter sockets shall be 5 clip type.
6. The landing lug shall be suitable for multiple conductors.
7. Type V photoelectric control shall be used unless otherwise indicated on the plans.

STATE OF CALIFORNIA
DEPARTMENT OF TRANSPORTATION

ELECTRICAL SYSTEMS (SERVICE EQUIPMENT AND TYPICAL WIRING DIAGRAM, TYPE III-B SERIES)

NO SCALE

RSP ES-2E DATED OCTOBER 5, 2007 SUPERCEDES STANDARD PLAN ES-2E DATED MAY 1, 2006 - PAGE 407 OF THE STANDARD PLANS BOOK DATED MAY 2006.

REVISED STANDARD PLAN RSP ES-2E

2006 REVISED STANDARD PLAN RSP ES-2E

7-10-07

DIST	COUNTY	ROUTE	POST MILES TOTAL PROJECT	SHEET NO.	TOTAL SHEETS
12	Ora	5,74	9.3/10.0, 0.0/0.2	403	515

REGISTERED ELECTRICAL ENGINEER

October 5, 2007
PLANS APPROVAL DATE

REGISTERED PROFESSIONAL ENGINEER Jeffery G. McRae No. E14512 Exp. 6-30-08 ELECTRICAL STATE OF CALIFORNIA

The State of California or its officers or agents shall not be responsible for the accuracy or completeness of electronic copies of this plan sheet.

To accompany plans dated 4-9-12

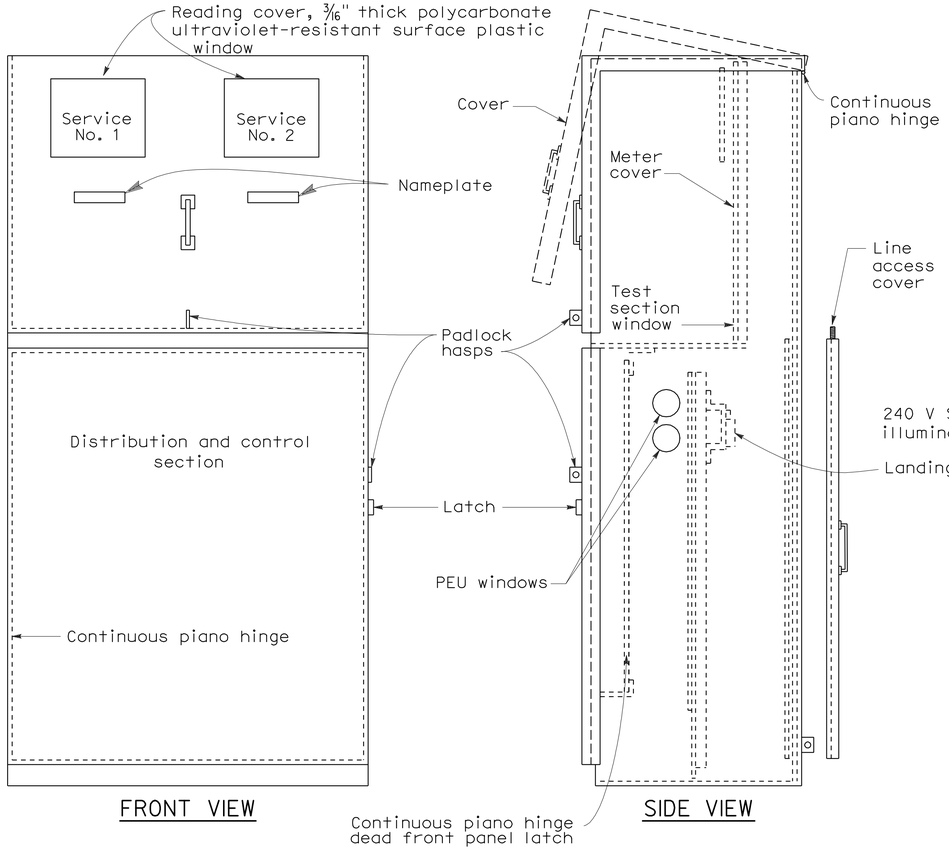

FRONT VIEW

SIDE VIEW

TYPE III-CF SERVICE EQUIPMENT ENCLOSURE WITH PROVISIONS FOR TWO 100 A METERS (TYPICAL)

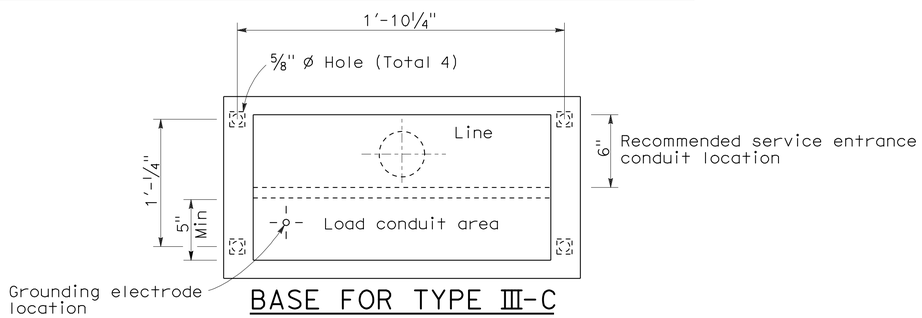

BASE FOR TYPE III-C SERVICE EQUIPMENT ENCLOSURE

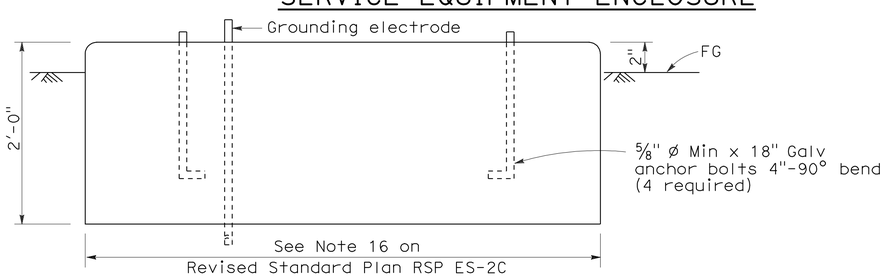

FOUNDATION DETAIL

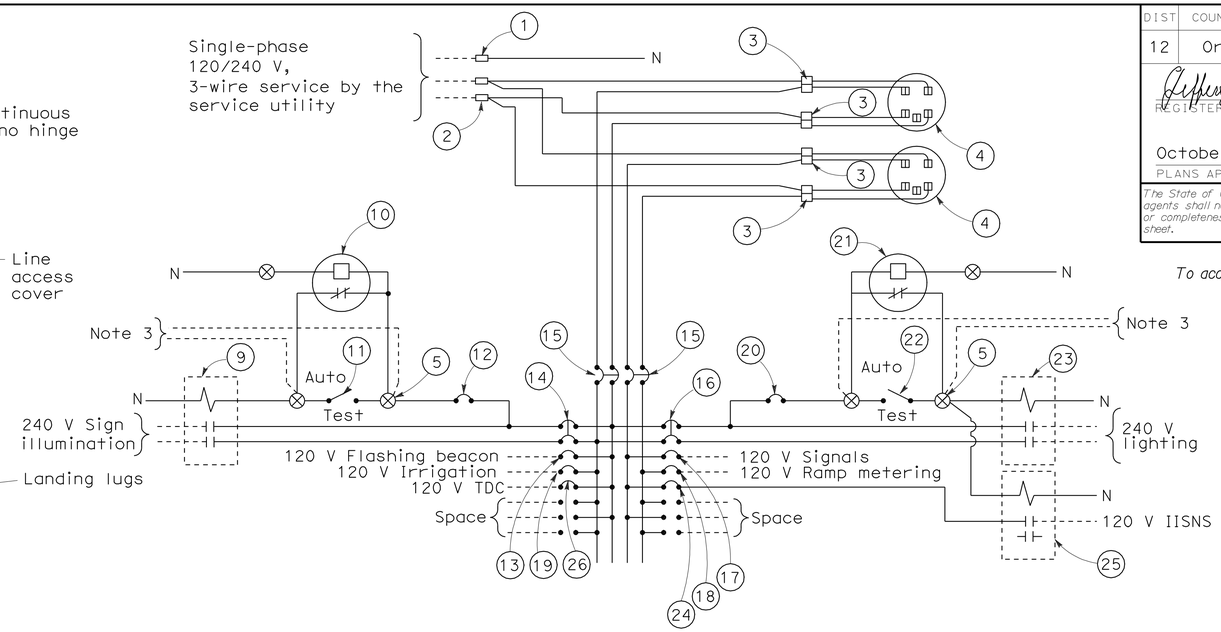

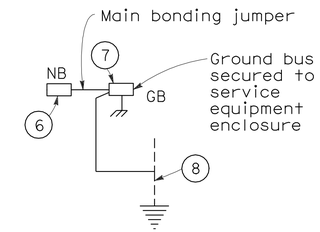

120/240 V SERVICE WIRING DIAGRAM (TYPICAL)

TYPE III-C SERVICE (120/240 V) EQUIPMENT LEGEND

ITEM No.	COMPONENT	NAME PLATE DESCRIPTION	ITEM No.	COMPONENT	NAME PLATE DESCRIPTION
1	Neutral lug		14	30 A, 240 V, 2P, CB	Sign Illumination
2	Landing lug (Note 6)		15	100 A, 240 V, 2P, CB	Main Breaker
3	Test bypass facility		16	30 A, 240 V, 2P, CB	Lighting
4	Meter socket and support		17	50 A, 120 V, 1P, CB	Signals
5	Terminal blocks		18	30 A, 120 V, 1P, CB	Ramp Metering
6	Neutral bus		19	20 A, 120 V, 1P, CB	Irrigation
7	Ground bus		20	15 A, 120 V, 1P, CB	Lighting Control
8	Grounding electrode		21	Photoelectric unit (Note 7)	
9	30 A, 2PNO, Contactor	Sign Illumination	22	15 A, 1P, Test switch	Lighting Control
10	Photoelectric unit (Note 7)		23	60 A, 2PNO Contactor	Lighting
11	15 A, 1P, Test switch	Sign Illumination Test Switch	24	15 A, 120 V, 1P, CB	IISNS
12	15 A, 120 V, 1P, CB	Sign Illumination Control	25	30 A, 2PNO Contactor	IISNS
13	15 A, 120 V, 1P, CB	Flashing Beacon	26	20 A, 120 V, 1P, CB	Telephone Demarcation Cabinet

NOTES: (FOR SERVICE EQUIPMENT ENCLOSURE)

1. Voltage ratings of service equipment shall conform to the service voltages indicated on the plans.
2. Unless otherwise indicated on the plans, service equipment items shall be provided for each service equipment enclosure as shown.
3. Connect to remote test switch mounted on lighting standards, sign post or structure when required.
4. Items No. 1 and 6 shall be isolated from the service equipment enclosure.
5. Meter sockets shall be 5 clip type.
6. The landing lug shall be suitable for multiple conductors.
7. Type V photoelectric control shall be used unless otherwise indicated on the plans.

STATE OF CALIFORNIA
DEPARTMENT OF TRANSPORTATION

ELECTRICAL SYSTEMS (SERVICE EQUIPMENT AND TYPICAL WIRING DIAGRAM TYPE III-C SERIES)

NO SCALE

RSP ES-2F DATED OCTOBER 5, 2007 SUPERCEDES STANDARD PLAN ES-2F DATED MAY 1, 2006 - PAGE 408 OF THE STANDARD PLANS BOOK DATED MAY 2006.

REVISED STANDARD PLAN RSP ES-2F

2006 REVISED STANDARD PLAN RSP ES-2F

8-17-07

DIST	COUNTY	ROUTE	POST MILES TOTAL PROJECT	SHEET NO.	TOTAL SHEETS
12	Ora	5,74	9.3/10.0, 0.0/0.2	404	515

REGISTERED ELECTRICAL ENGINEER

June 6, 2008
PLANS APPROVAL DATE

REGISTERED PROFESSIONAL ENGINEER
Jeffery G. McRae
No. E14512
Exp. 6-30-10
ELECTRICAL
STATE OF CALIFORNIA

The State of California or its officers or agents shall not be responsible for the accuracy or completeness of electronic copies of this plan sheet.

To accompany plans dated 4-9-12

VISORS

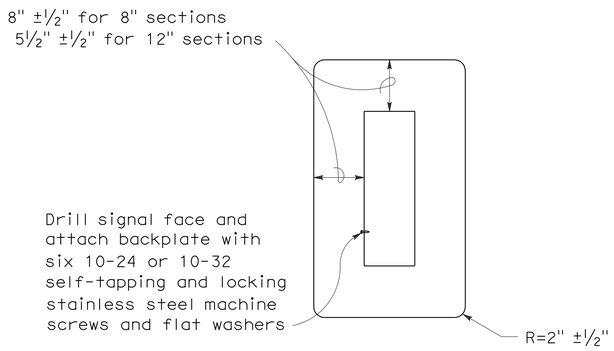

8" AND 12" SECTIONS

BACKPLATE

1/16" minimum thickness
3001-14 aluminum, or plastic when specified

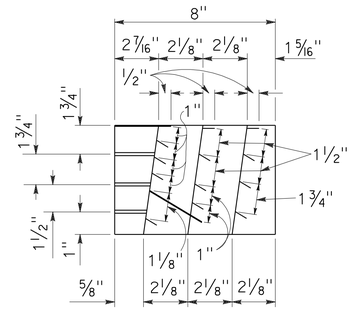

SECTION A-A

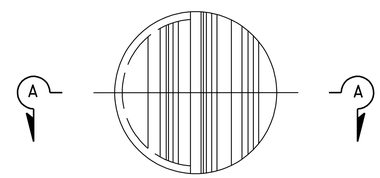

FRONT VIEW

DIRECTIONAL LOUVER

Directional louvers shall be oriented as directed by the Engineer and secured in place with one plated brass machine screw and nut.

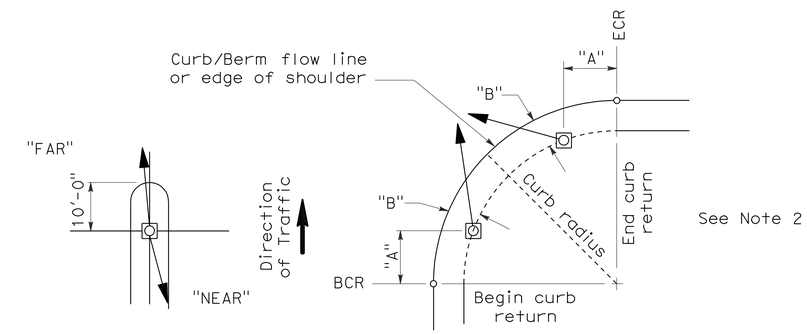

NOTES:

1. Typical signal pole placement unless dimensioned on plans.
2. For "A" and "B" dimensions, see Pole Schedule, or as directed by the Engineer.

SIGNAL STANDARD PLACEMENT DIMENSIONS AND EQUIPMENT LOCATIONS

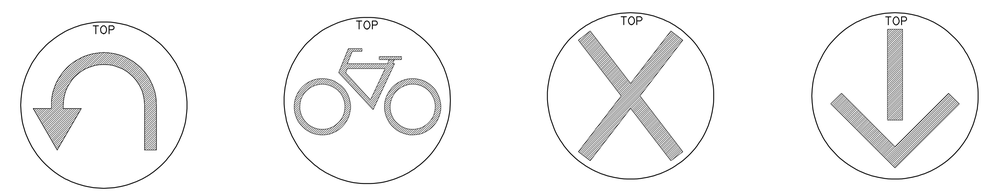

U-TURN SIGNAL FACE | BICYCLE SIGNAL FACE | LANE CONTROL SIGNAL FACE | LANE CONTROL SIGNAL FACE

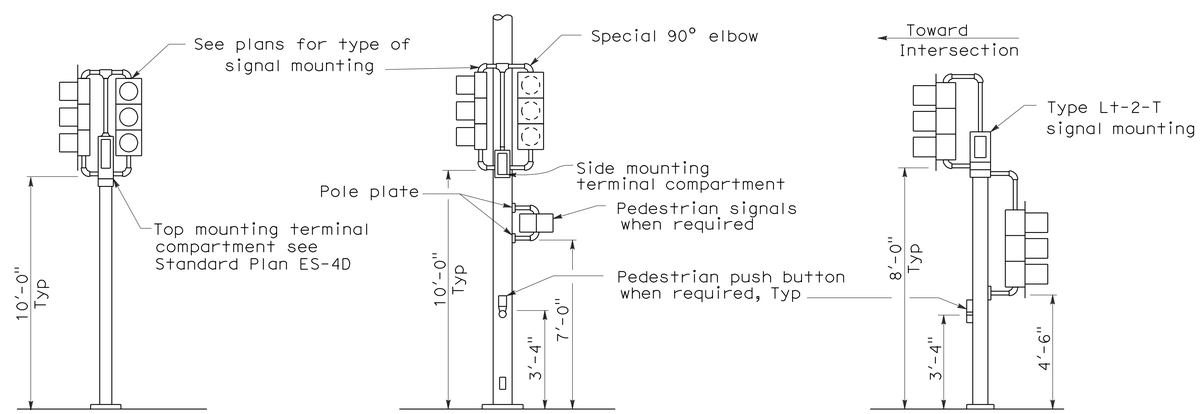

TOP MOUNTED SIGNALS (TV)

Type 1-A, 1-B, 1-C and 1-D standard as indicated on the plans

SIDE MOUNTED SIGNALS (SV AND SP)

Normally used on standards with luminaire or signal mast arm

LEFT TURN LANE SIGNAL

Type 1-A, 1-B, 1-C and 1-D standard as indicated on plans

TYPICAL SIGNAL INSTALLATIONS

STATE OF CALIFORNIA
DEPARTMENT OF TRANSPORTATION

ELECTRICAL SYSTEMS (SIGNAL HEADS AND MOUNTINGS)

NO SCALE

RSP ES-4C DATED JUNE 6, 2008 SUPERSEDES STANDARD PLAN ES-4C DATED MAY 1, 2006 - PAGE 420 OF THE STANDARD PLANS BOOK DATED MAY 2006.

REVISED STANDARD PLAN RSP ES-4C

2006 REVISED STANDARD PLAN RSP ES-4C

5-19-08

DIST	COUNTY	ROUTE	POST MILES TOTAL PROJECT	SHEET NO.	TOTAL SHEETS
12	Ora	5,74	9.3/10.0, 0.0/0.2	405	515

REGISTERED ELECTRICAL ENGINEER

June 6, 2008
PLANS APPROVAL DATE

REGISTERED PROFESSIONAL ENGINEER Jeffery G. McRae No. E14512 Exp. 6-30-10 ELECTRICAL STATE OF CALIFORNIA

The State of California or its officers or agents shall not be responsible for the accuracy or completeness of electronic copies of this plan sheet.

To accompany plans dated 4-9-12

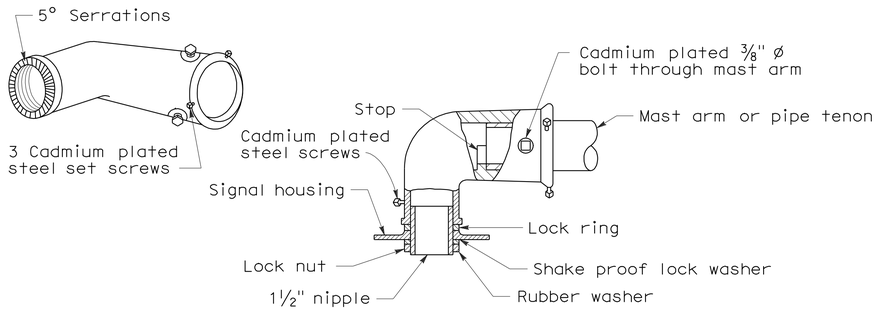

MAST ARM MOUNTING - TYPE "MAT"

For 2 NPS pipe, see Note 1.

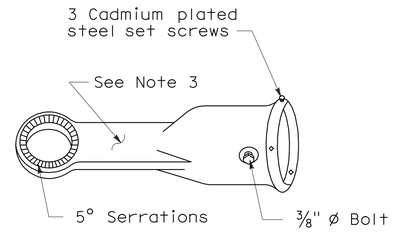

MAST ARM MOUNTING - TYPE "MAS"

For 2 NPS pipe. See Note 1.

SIGNAL SLIP FITTERS

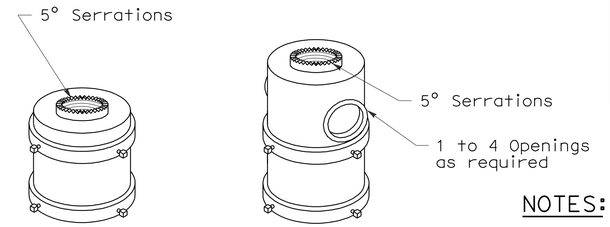

For one mounting For mulitiple mountings

TOP MOUNTINGS

For 4 NPS pipe, see Note 2.

NOTES:

1. After mast arm signal has been plumbed and secured, drill 7/16" hole through mast arm tenon in line with slip fitter hole. Place a cadmium plated 3/8" ø galvanized bolt with washer under bolt head through hole and secure with washer, nut, and locknut. Seal openings between mast arm mountings and mast arm with mastic.
2. (a) Threaded top mounted slip fitter openings shall be 1½ NPS.
   (b) Serrations in fittings shall match those on bottom of signal heads or in lock ring.
   (c) Top opening shall be offset when backplate is used.
3. Wireway shall have a cross section area of 0.95 square inch minimum. Minimum width of ½".

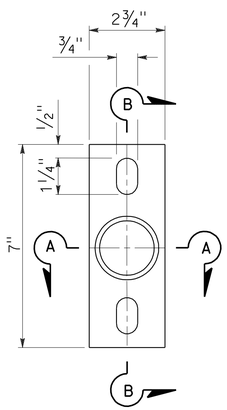

POLE PLATE

For side mountings

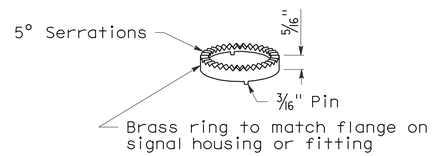

LOCK RING

Use where locking ring is not integral with signal housing or fitting.

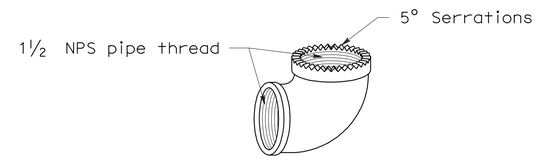

SPECIAL 90° ELBOW

One for each signal head, except those with special slip fitter mounting

MISCELLANEOUS MOUNTING HARDWARE

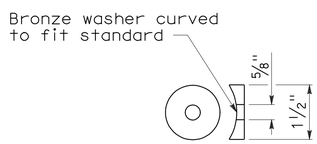

DETAIL "C"

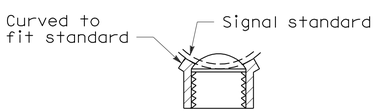

SECTION A-A

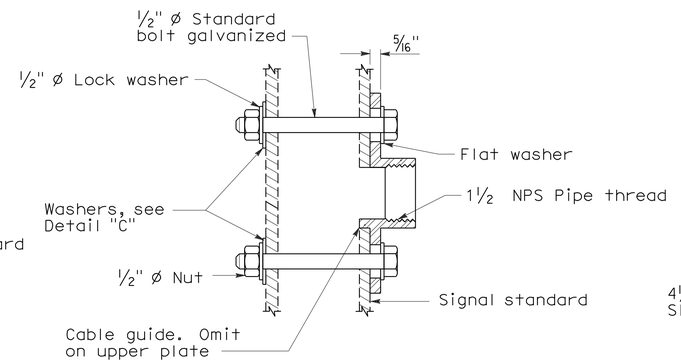

SECTION B-B

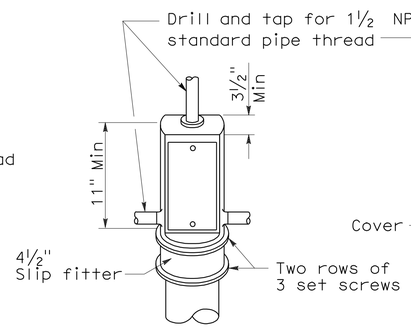

TOP MOUNTING

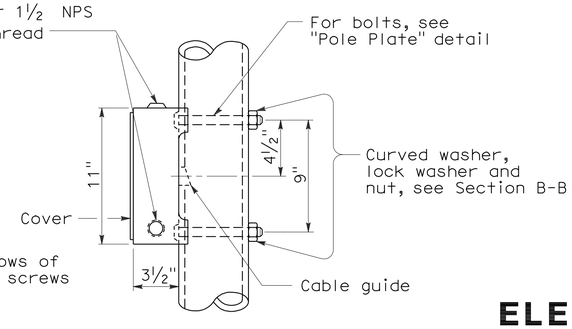

SIDE MOUNTING

TERMINAL COMPARTMENTS

STATE OF CALIFORNIA
DEPARTMENT OF TRANSPORTATION

ELECTRICAL SYSTEMS (SIGNAL HEADS AND MOUNTINGS)

NO SCALE

RSP ES-4D DATED June 6, 2008 SUPERSEDES STANDARD PLAN ES-4D
DATED MAY 1, 2006 - PAGE 421 OF THE STANDARD PLANS BOOK DATED MAY 2006.

REVISED STANDARD PLAN RSP ES-4D

2006 REVISED STANDARD PLAN RSP ES-4D

5-19-08

DIST	COUNTY	ROUTE	POST MILES TOTAL PROJECT	SHEET NO.	TOTAL SHEETS
12	Ora	5,74	9.3/10.0, 0.0/0.2	406	515

REGISTERED ELECTRICAL ENGINEER

October 5, 2007
PLANS APPROVAL DATE

REGISTERED PROFESSIONAL ENGINEER Jeffery G. McRae No. E14512 Exp. 6-30-08 ELECTRICAL STATE OF CALIFORNIA

The State of California or its officers or agents shall not be responsible for the accuracy or completeness of electronic copies of this plan sheet.

To accompany plans dated 4-9-12

LOOP INSTALLATION PROCEDURE

1. Loops shall be centered in lanes.
2. Saw slots in pavement for loop conductors as shown in details.
3. Distance between side of loop and a lead-in saw cut from adjacent detectors shall be 2'-0" minimum. Distance between lead-in saw cuts shall be 6" minimum.
4. Bottom of saw slot shall be smooth with no sharp edges.
5. Slots shall be washed until clean, blown out and thoroughly dried before installing loop conductors.
6. Adjacent loops on the same sensor unit channel shall be wound in opposite directions.
7. Identify and tag loop circuit pairs in the pull box with loop number, start (S) and finish (F) of conductor. Identify and tag lead-in-cable with sensor number and phase.
8. Install loop conductor in slot using a 3/16" to 1/4" thick wood paddle. Hold loop conductors with wood paddles (at the bottom of the sawed slot) during sealant placement.
9. No more than 2 twisted pairs shall be installed in one sawed slot.
10. Allow additional 5'-0" of slack length of conductor for the lead-in run to pull box.
11. The additional length of each conductor for each loop shall be twisted together into a pair (6 turns per 3'-4" minimum) before being placed in the slot and conduit leading to pull box.
12. Test each loop circuit for continuity, circuit resistance and insulation resistance at the pull box before filling slots.
13. Fill slots as shown in details.
14. Splice loop conductors to lead-in-cable. Splices shall be soldered.
15. End of lead-in-cable and Type 2 loop conductor shall be waterproofed prior to installing in conduit to prevent moisture from entering the cable.
16. Lead-in-cable shall not be spliced between the pull box and the controller cabinet terminals.
17. Test each loop circuit for continuity, circuit resistance and insulation resistance at the controller cabinet location.
18. Where loop conductors are not to be spliced to a lead-in-cable, the ends of the conductors shall be taped and waterproofed with electrical insulating coating.

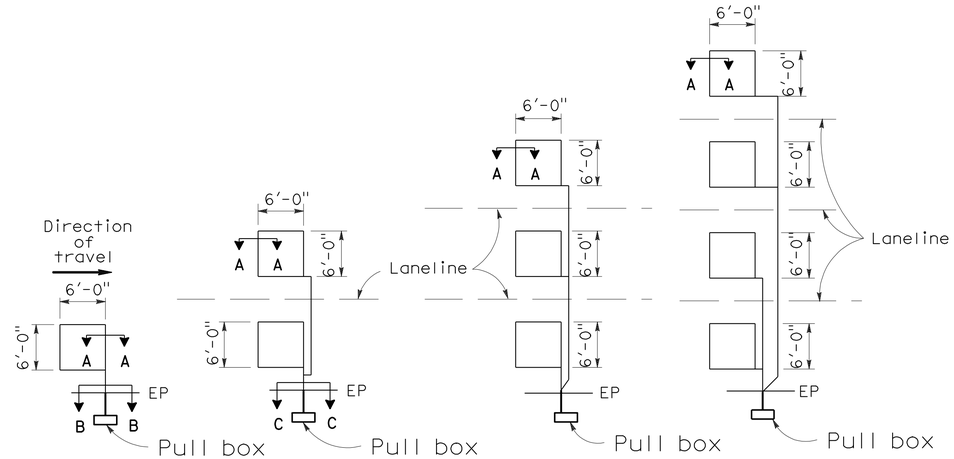

TYPE 1A INSTALLATION | TYPE 2A INSTALLATION | TYPE 3A INSTALLATION | TYPE 4A INSTALLATION

SAWCUT DETAILS

(Type A loop detector configurations illustrated)

1. 1A thru 4A = 1 Type A loop configuration in each lane.
2. 1B thru 4B = 1 Type B loop configuration in each lane.
3. 1C = 1 Type C loop configuration entering lanes as required.
4. 1D thru 4D = 1 Type D loop configuration in each lane.
5. 1E thru 4E = 1 Type E loop configuration in each lane.
6. 1Q thru 4Q = 1 Type Q loop configuration in each lane. (Use Type A, B, C, D, E or Q loop detector configurations only when specified or shown on plans)

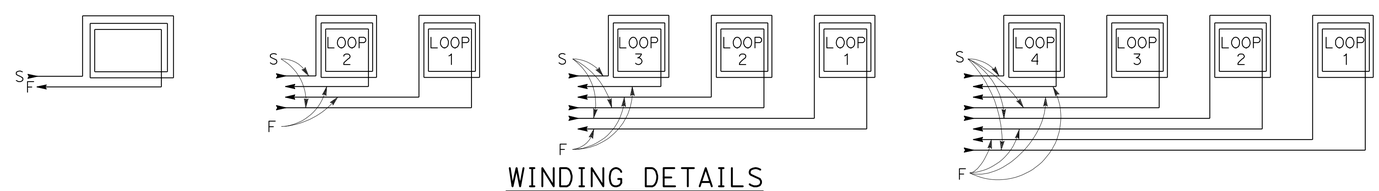

WINDING DETAILS

See Notes 6 and 7

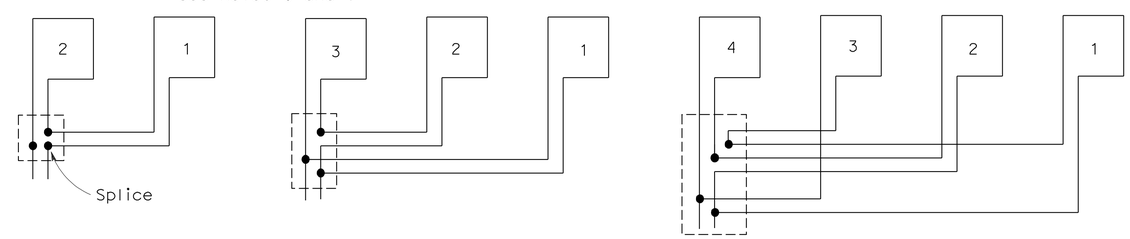

TYPICAL LOOP CONNECTIONS

(Dashed lines represent the pull box)

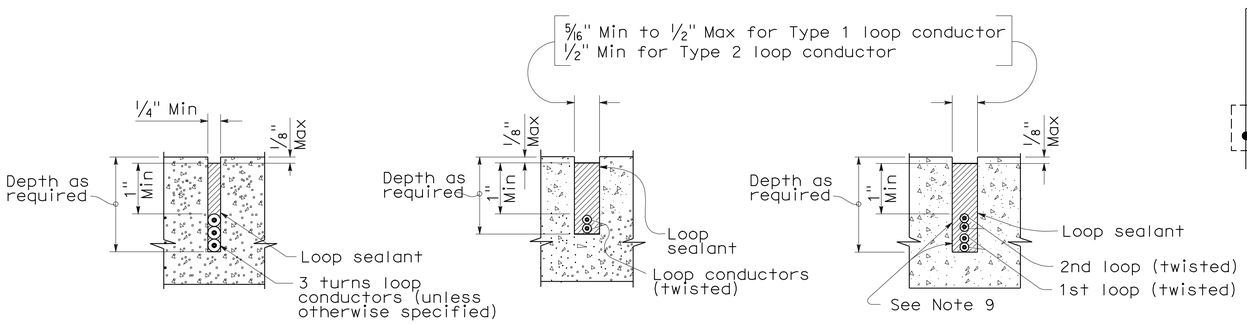

SECTION A-A | SECTION B-B | SECTION C-C

SLOT DETAILS - TYPE 1 AND TYPE 2 LOOP CONDUCTOR

STATE OF CALIFORNIA
DEPARTMENT OF TRANSPORTATION

ELECTRICAL SYSTEMS (DETECTORS)

NO SCALE

RSP ES-5A DATED OCTOBER 5, 2007 SUPERCEDES STANDARD PLAN ES-5A DATED MAY 1, 2006 - PAGE 423 OF THE STANDARD PLANS BOOK DATED MAY 2006.

REVISED STANDARD PLAN RSP ES-5A

2006 REVISED STANDARD PLAN RSP ES-5A

DIST	COUNTY	ROUTE	POST MILES TOTAL PROJECT	SHEET NO.	TOTAL SHEETS
12	Ora	5,74	9.3/10.0, 0.0/0.2	407	515

REGISTERED CIVIL ENGINEER

October 5, 2007
PLANS APPROVAL DATE

REGISTERED PROFESSIONAL ENGINEER
Stanley P. Johnson
No. C57793
Exp. 3-31-08
CIVIL
STATE OF CALIFORNIA

The State of California or its officers or agents shall not be responsible for the accuracy or completeness of electronic copies of this plan sheet.

To accompany plans dated 4-9-12

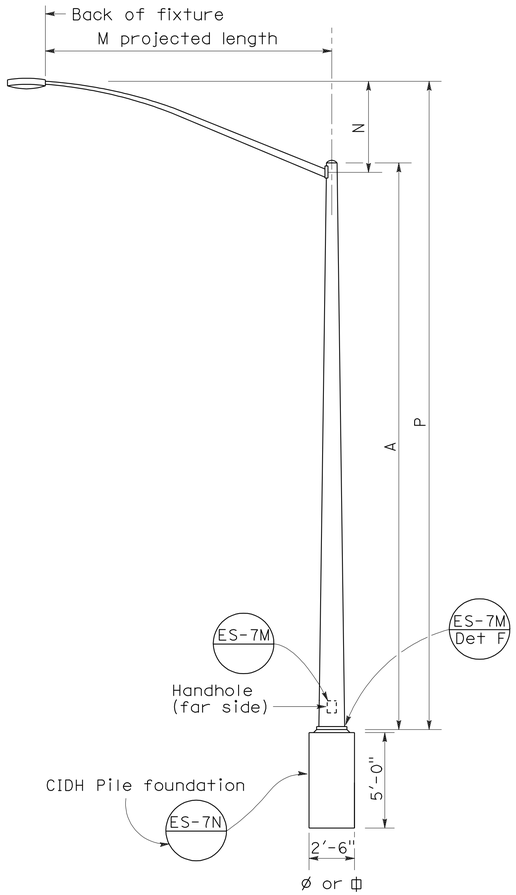

ELEVATION
TYPE 15 AND TYPE 21

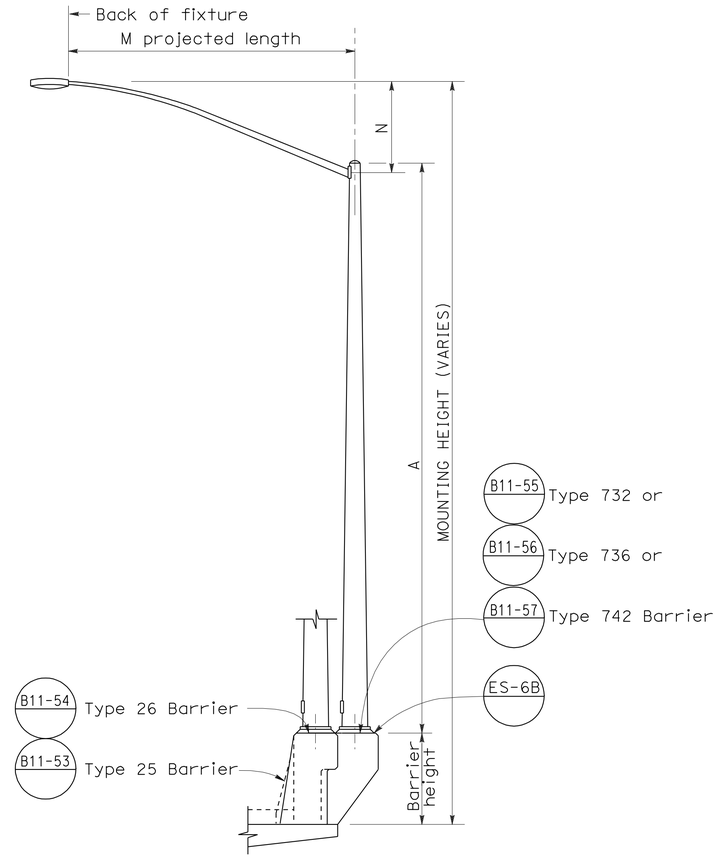

ELEVATION
TYPE 15 AND TYPE 21 BARRIER RAIL MOUNTED

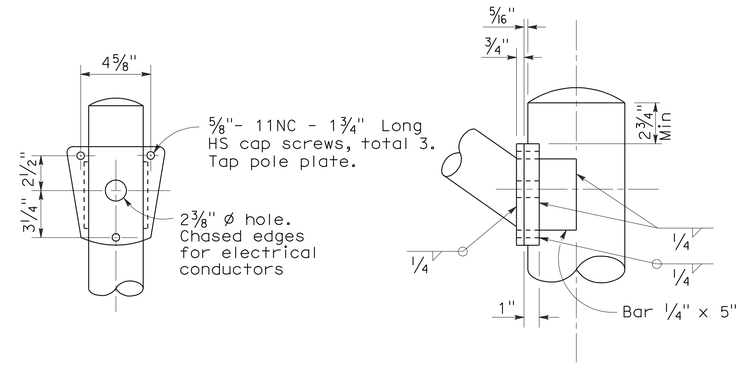

DETAIL R
LUMINAIRE ARM CONNECTION

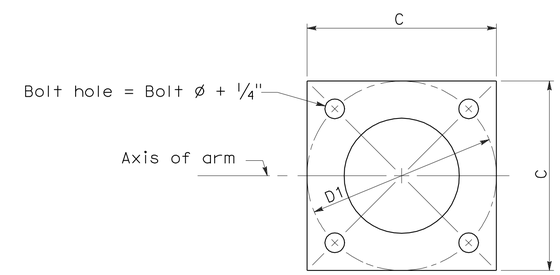

BASE PLATE

POLE TYPE	POLE DATA				BASE PLATE DATA				LUMINAIRE ARM
	A Height	Min OD Base	Min OD Top	Wall Thickness	C	D1 Bolt Circle	Thick-ness	Anchor Bolts Size	
15	30'	8"	3 7/8"	0.1196"	1'-0"	1'-0"	1"	1" ø x 3'-0" x 4"*	6' - 15' [12']
21	35'	8 5/8"	3 7/8"	0.1196"	1'-0"	1'-0"	1"	1 1/4"ø x 3'-0" x 4"*	6' - 15' [12']

* For barrier rail bolts, see Standard Plan ES-6B.

LUMINAIRE ARM DATA					
M Projected Length	N Rise	Min OD At Pole	Nominal Thickness	P Type 15	P Type 21
6'-0"	2'-0"±	3 1/4"	0.1196"	31'-6"±	36'-6"±
8'-0"	2'-6"±	3 1/2"	0.1196"	32'-0"±	37'-0"±
10'-0"	3'-3"±	3 7/8"	0.1196"	32'-9"±	37'-9"±
12'-0"	4'-3"±	3 7/8"	0.1196"	33'-9"±	38'-9"±
15'-0"	4'-9"±	4 1/4"	0.1196"	34'-3"±	39'-3"±

NOTES:

1. ☐ Indicates arm length to be used unless otherwise noted on the plans.
2. For Type 15-SB, use Type 15 standard with Type 30 slip base plate details, see Standard Plan ES-6F.
3. For additional notes, see Standard Plan ES-7M and ES-7N.

STATE OF CALIFORNIA
DEPARTMENT OF TRANSPORTATION

ELECTRICAL SYSTEMS (LIGHTING STANDARD TYPES 15 AND 21)

NO SCALE

RSP ES-6A DATED OCTOBER 5, 2007 SUPERCEDES STANDARD PLAN ES-6A DATED MAY 1, 2006 - PAGE 427 OF THE STANDARD PLANS BOOK DATED MAY 2006.

REVISED STANDARD PLAN RSP ES-6A

2006 REVISED STANDARD PLAN RSP ES-6A

7-10-07

DIST	COUNTY	ROUTE	POST MILES TOTAL PROJECT	SHEET NO.	TOTAL SHEETS
12	Ora	5,74	9.3/10.0, 0.0/0.2	408	515

REGISTERED CIVIL ENGINEER

January 18, 2008
PLANS APPROVAL DATE

REGISTERED PROFESSIONAL ENGINEER
Stanley P. Johnson
No. C57793
Exp. 03-31-08
CIVIL
STATE OF CALIFORNIA

The State of California or its officers or agents shall not be responsible for the accuracy or completeness of electronic copies of this plan sheet.

To accompany plans dated 4-9-12

LUMINAIRE ARM DATA

PROJECTED LENGTH	THICKNESS	MINIMUM OD @ POLE	MOUNTING HEIGHT
* 6′-0″	0.1196″	3¼″	36′-9″±
8′-0″		3½″	37′-3″±
10′-0″		3¾″	38′-0″±
12′-0″		3¾″	39′-0″±
15′-0″		4¼″	39′-6″±
** 20′-0″	0.1793″	5″	37′-0″±

* Type 30 - arm length 6′-0″ - 15′-0″ maximum
** Type 31 - arm lengths 20′-0″

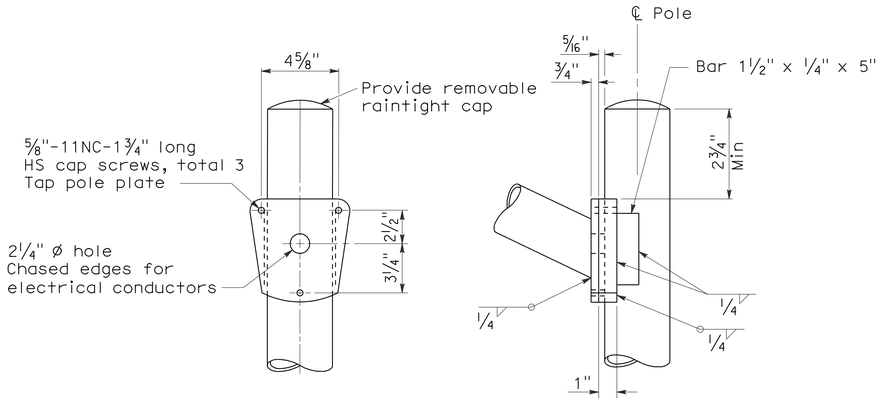

DETAIL A - TYPE 30

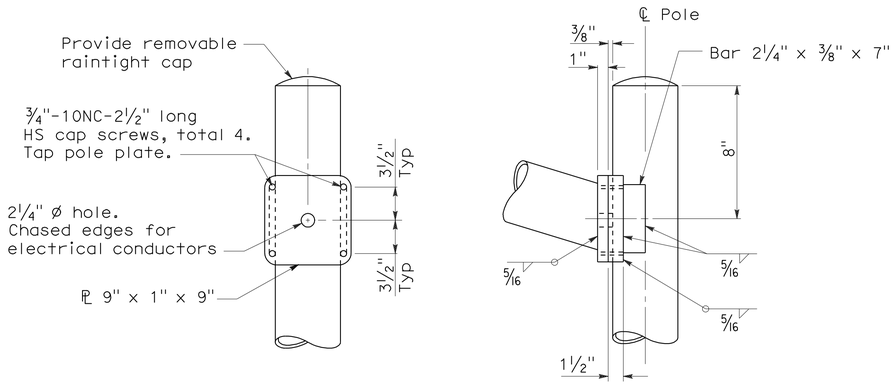

DETAIL A - TYPE 31

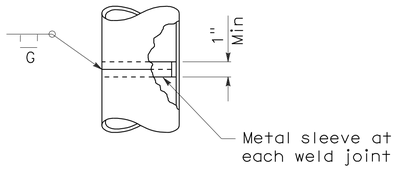

POLE SPLICE

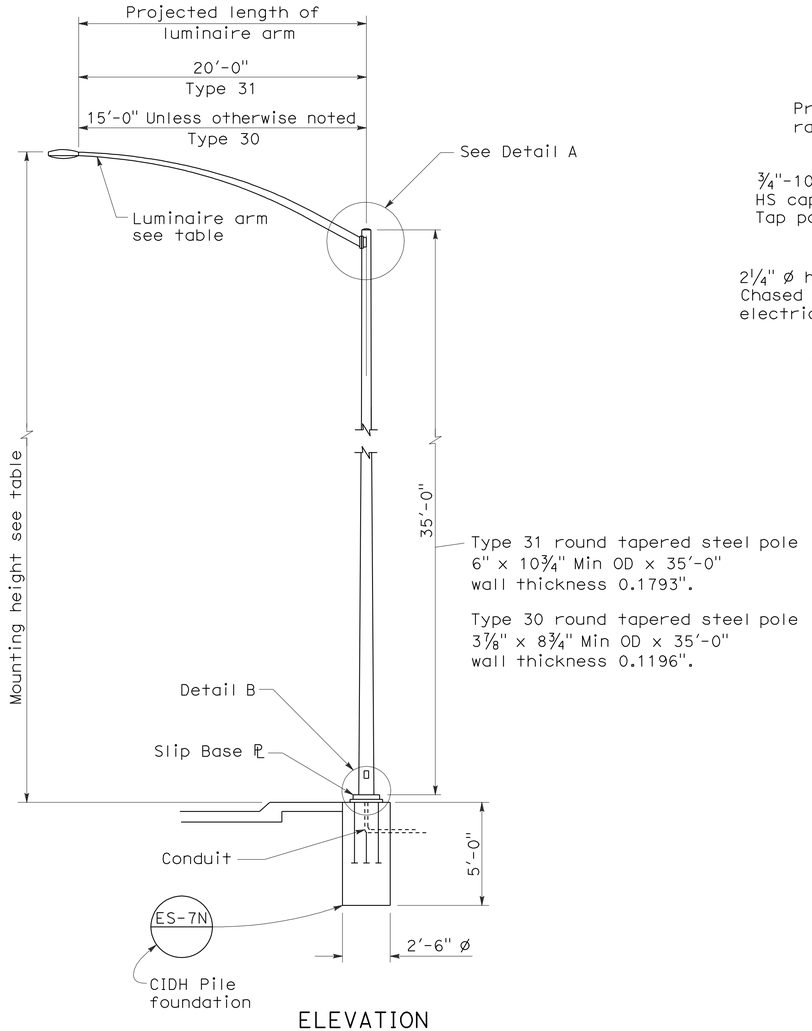

ELEVATION

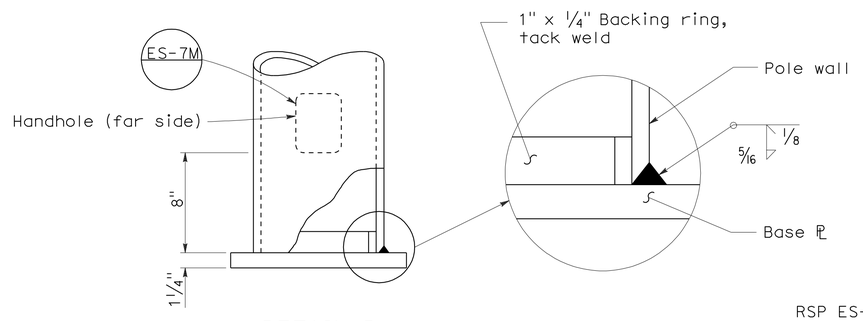

DETAIL B

NOTES:

1. Sheet steel shall have a minimum yield of 48,000 psi.
2. For slip base details see Standard Plan ES-6F.
3. For Type 30 fixed base use Type 15 base plate, and foundation shown on Revised Standard Plan RSP ES-6A. Use 1¼″ Dia x 3′-6″ x 4″ anchor bolts.
4. For Type 31 fixed base use Type 32 base plate, anchor bolts and foundation on Standard Plan ES-6G.
5. Handhole shall be located on downstream side of traffic unless noted otherwise on plans.
6. For additional general notes refer to Standard Plan ES-7M.

STATE OF CALIFORNIA
DEPARTMENT OF TRANSPORTATION

ELECTRICAL SYSTEMS (LIGHTING STANDARD TYPES 30 AND 31)

NO SCALE

RSP ES-6E DATED JANUARY 18, 2008 SUPERCEDES STANDARD PLAN ES-6E DATED MAY 1, 2006 - PAGE 430 OF THE STANDARD PLANS BOOK DATED MAY 2006.

REVISED STANDARD PLAN RSP ES-6E

2006 REVISED STANDARD PLAN RSP ES-6E

11-19-07

DIST	COUNTY	ROUTE	POST MILES TOTAL PROJECT	SHEET NO.	TOTAL SHEETS
12	Ora	5,74	9.3/10.0, 0.0/0.2	409	515

REGISTERED CIVIL ENGINEER

October 5, 2007
PLANS APPROVAL DATE

REGISTERED PROFESSIONAL ENGINEER
Stanley P. Johnson
No. C57793
Exp. 3-31-08
CIVIL
STATE OF CALIFORNIA

The State of California or its officers or agents shall not be responsible for the accuracy or completeness of electronic copies of this plan sheet.

To accompany plans dated 4-9-12

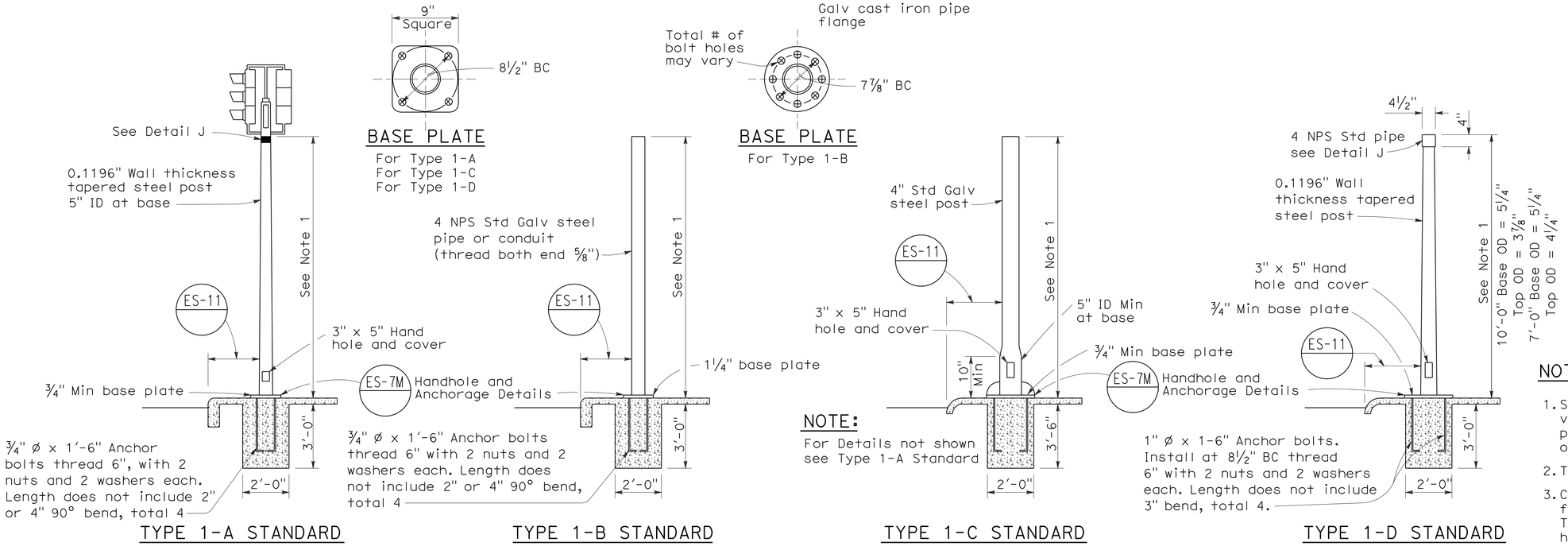

TYPE 1 SIGNAL STANDARDS

NOTES:

1. Standards shall be 10'-0" ± 2" for vehicle signals and 7'-0" ± 2" for pedestrian signals unless otherwise noted on plans.
2. Top of standards shall be 4½" OD.
3. Conduits shall extend 2" maximum above finished surface of foundation and for Types 1-A, 1-C and 1-D shall be sloped toward handhole.
4. Anchor bolts shall be bonded to conduit or grounding conductor.
5. Conduit between standard and adjacent pull box shall be 2" minimum.
6. Paint numbers on roadway side facing traffic when electrolier or post is left of direction of traffic.

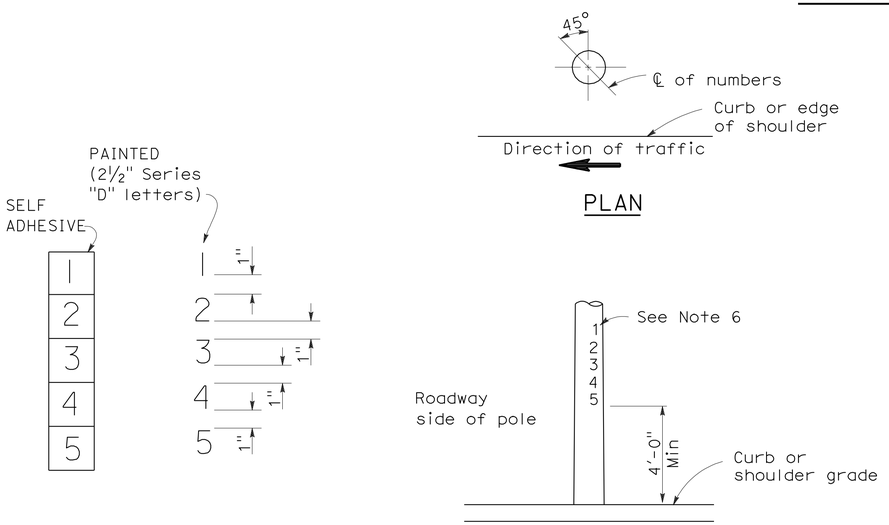

NUMBER DETAIL

TYPICAL NUMBER FORMAT

LOCATION OF EQUIPMENT NUMBERS ON STANDARDS AND POSTS

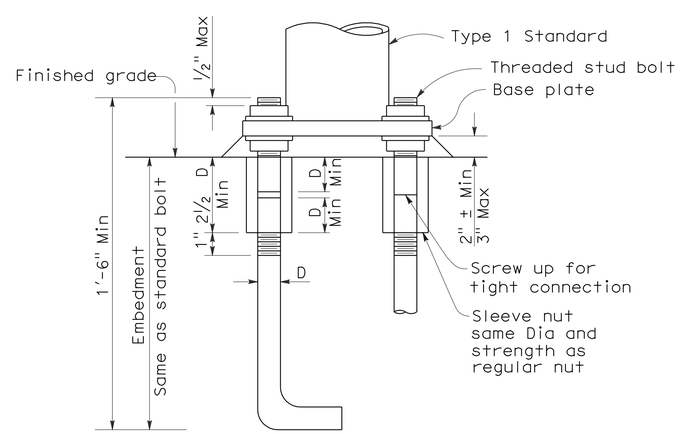

ANCHOR BOLTS WITH SLEEVE NUTS

Sleeve nuts to be used only when shown or specified on Project Plans

D = Diameter of anchor bolt

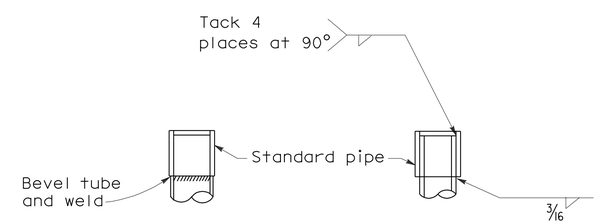

DETAIL J

Tube may be inserted into pipe or butted as required

STATE OF CALIFORNIA
DEPARTMENT OF TRANSPORTATION

ELECTRICAL SYSTEMS (SIGNAL AND LIGHTING STANDARD TYPE 1 STANDARD AND EQUIPMENT NUMBERING)

NO SCALE

RSP ES-7B DATED OCTOBER 5, 2007 SUPERCEDES STANDARD PLAN ES-7B DATED MAY 1, 2006 - PAGE 438 OF THE STANDARD PLANS BOOK DATED MAY 2006.

REVISED STANDARD PLAN RSP ES-7B

2006 REVISED STANDARD PLAN RSP ES-7B

7-10-07

DIST	COUNTY	ROUTE	POST MILES TOTAL PROJECT	SHEET NO.	TOTAL SHEETS
12	Ora	5,74	9.3/10.0, 0.0/0.2	410	515

REGISTERED CIVIL ENGINEER

October 5, 2007
PLANS APPROVAL DATE

REGISTERED PROFESSIONAL ENGINEER Stanley P. Johnson No. C57793 Exp. 3-31-08 CIVIL STATE OF CALIFORNIA

The State of California or its officers or agents shall not be responsible for the accuracy or completeness of electronic copies of this plan sheet.

To accompany plans dated 4-9-12

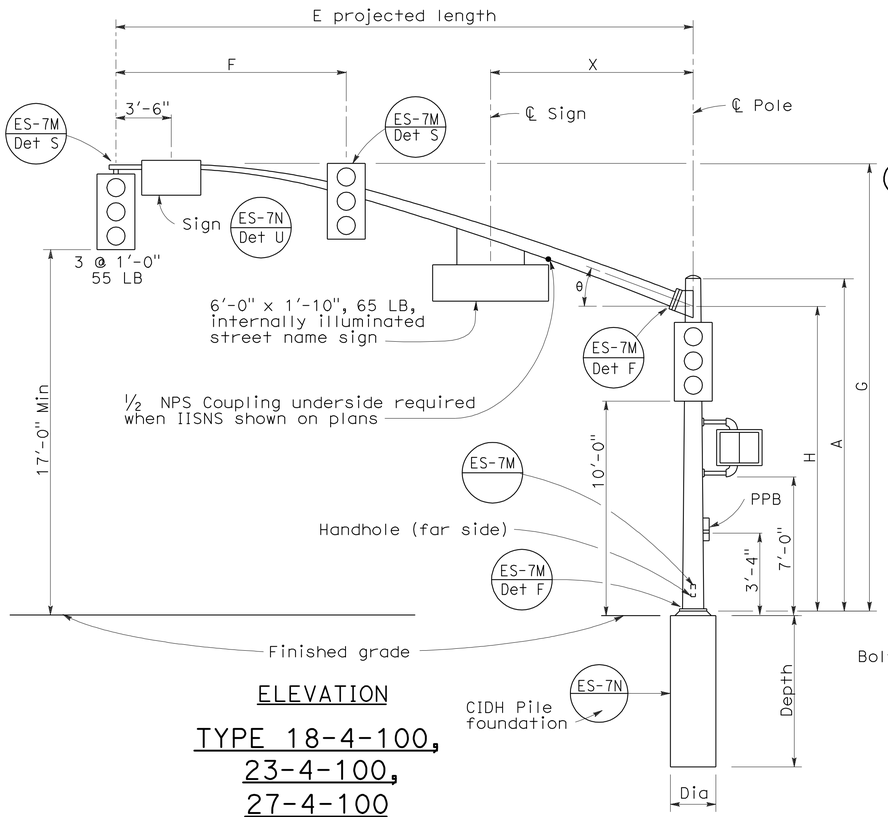

ELEVATION

TYPE 18-4-100, 23-4-100, 27-4-100

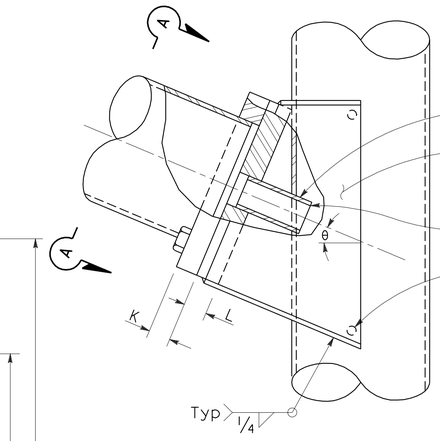

ELEVATION

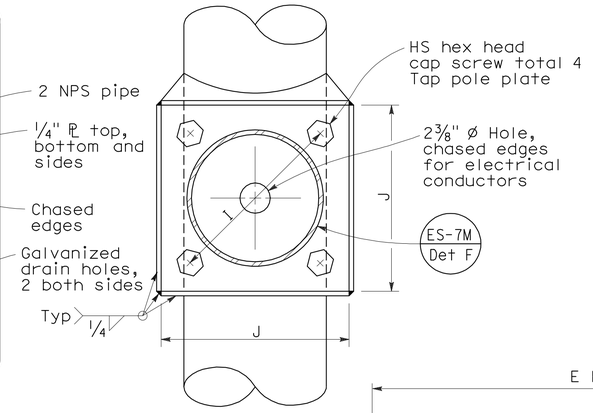

VIEW A-A

SIGNAL ARM CONNECTION DETAILS

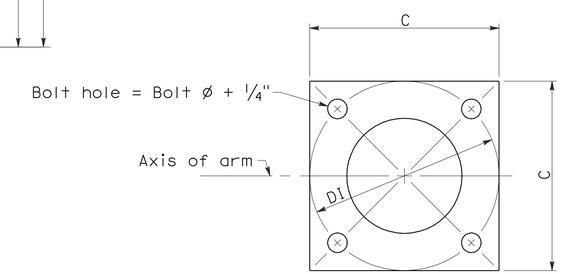

BASE PLATE

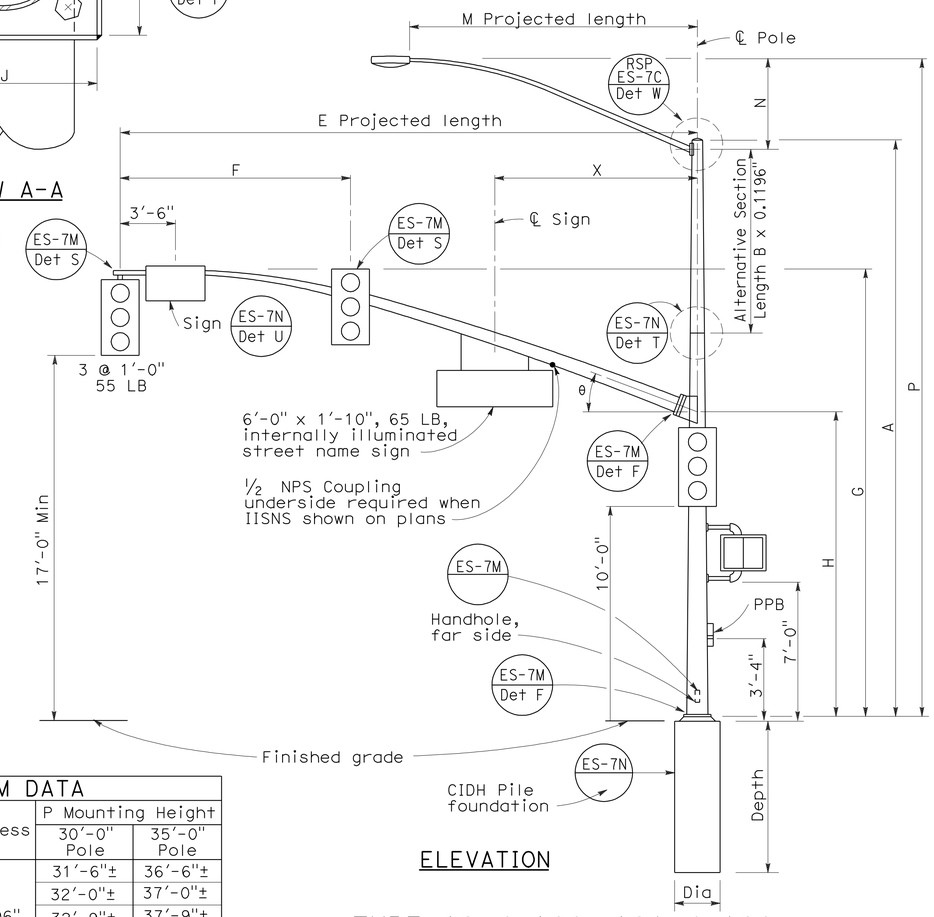

ELEVATION

TYPE 19-4-100, 19A-4-100, 24-4-100, 24A-4-100, 26-4-100, 26A-4-100

SIGNAL ARM DATA												
E Projected Length	F Min Spacing	G Mounting Height	H	Min OD at Pole	Thickness	I Bolt Circle	HS Cap Screws	J Plate Size	K Arm PL Thickness	L Pole PL Thickness	θ	X Max
25'-0"	10'-0"	22'-8"±	16'-0"	7 5/16"	0.2391"	12"	1¼"-7NC-3"	1'-0"	1¼"	1½"	23°	10'-6"
30'-0"	12'-0"	23'-0"±		8"								
35'-0"	14'-0"			8 11/16"		13½"		1'-1½"	1½"	1¾"	21°	13'-0"
40'-0"	15'-0"			9⅜"							15°	
45'-0"		23'-8"±		10¼"								

LUMINAIRE ARM DATA					
M Projected Length	N Rise	Min OD at Pole	Thickness	P Mounting Height 30'-0" Pole	P Mounting Height 35'-0" Pole
6'-0"	2'-0"±	3¼"	0.1196"	31'-6"±	36'-6"±
8'-0"	2'-6"±	3½"		32'-0"±	37'-0"±
10'-0"	3'-3"±	3⅞"		32'-9"±	37'-9"±
12'-0"	4'-3"±			33'-9"±	38'-9"±
15'-0"	4'-9"±	4¼"		34'-3"±	39'-3"±

POLE DATA									BASE PLATE DATA						CIDH PILE FOUNDATION		
Pole Type	Load Case	Wind Velocity mph	A Height	Min OD Base	Min OD Top	Thickness	Alternative Section B Length	Alternative Section Bottom	Alternative Section Top	C	DI Bolt Circle	Thickness	Anchor Bolts Size	Luminaire Arm	Signal Arm	Dia	Depth	Reinforced
18-4-100	4	100	17'-0"	12"	9"	0.2391"	None	9⅜"		1'-6"	1'-6"	1½"	2" Ø x 42" x 6"	None	25'-0", 30'-0"	3'-0"	9'-0"	Yes
19-4-100			30'-0"		8"		10'-0"		8"					6'-15' 12'-0"				
19A-4-100			35'-0"		7 5/16"		15'-0'		7 5/16"					6'-15' 15'-0"				
23-4-100			17'-0"		9"		None							None	35'-0"			
24-4-100			30'-0"		8"		10'-0"	9⅜"	8"					6'-15' 12'-0"				
24A-4-100			35'-0"		7 5/16"		15'-0"		7 5/16"					6'-15' 15'-0"				
26-4-100			30'-0"	12½"	8"	0.3125"	10'-0"	9¾"	8⅜"					6'-15' 12'-0"	40'-0", 45'-0"			
26A-4-100			35'-0"		7 5/16"		15'-0"		7 11/16"					6'-15' 15'-0"				
27-4-100			17'-0"		9¾"		None							None				

☐ Indicates arm length to be used unless otherwise noted on plans.

STATE OF CALIFORNIA
DEPARTMENT OF TRANSPORTATION

ELECTRICAL SYSTEMS (SIGNAL AND LIGHTING STANDARD CASE 4 ARM LOADING WIND VELOCITY=100 MPH ARM LENGTHS 25' TO 45')

NO SCALE

RSP ES-7F DATED OCTOBER 5, 2007 SUPERCEDES RSP ES-7F DATED NOVEMBER 17, 2006 AND STANDARD PLAN ES-7F DATED MAY 1, 2006 - PAGE 442 OF THE STANDARD PLANS BOOK DATED MAY 2006.

REVISED STANDARD PLAN RSP ES-7F

2006 REVISED STANDARD PLAN RSP ES-7F

DIST	COUNTY	ROUTE	POST MILES TOTAL PROJECT	SHEET NO.	TOTAL SHEETS
12	Ora	5,74	9.3/10.0, 0.0/0.2	411	515

REGISTERED CIVIL ENGINEER

November 17, 2006
PLANS APPROVAL DATE

REGISTERED PROFESSIONAL ENGINEER
Stanley P. Johnson
No. C57793
Exp. 03-31-08
CIVIL
STATE OF CALIFORNIA

The State of California or its officers or agents shall not be responsible for the accuracy or completeness of electronic copies of this plan sheet.

To accompany plans dated 4-9-12

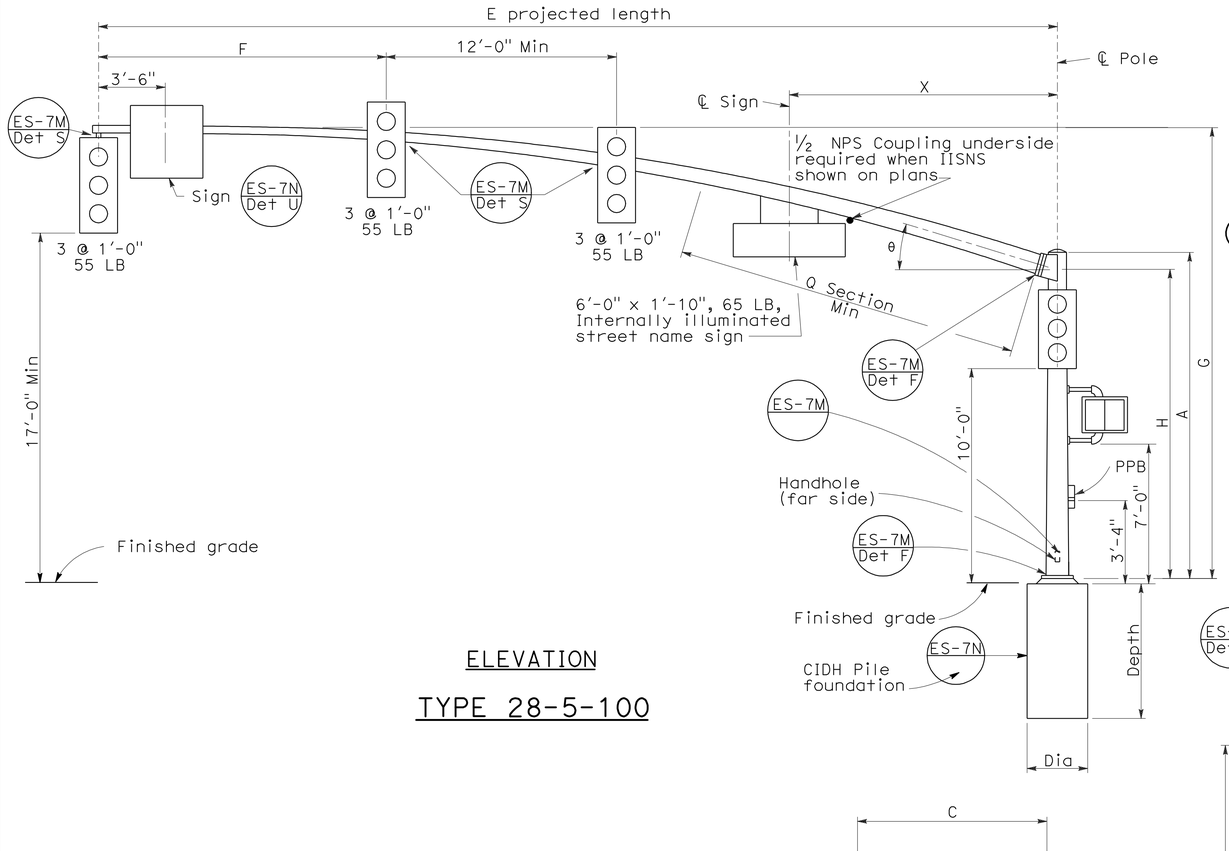

ELEVATION

TYPE 28-5-100

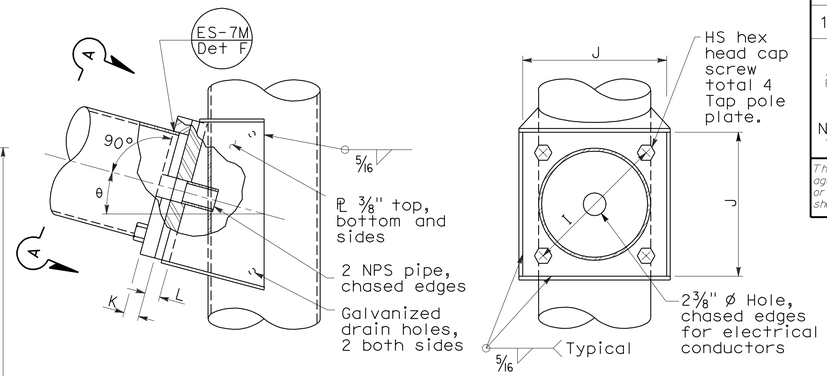

ELEVATION VIEW A-A

SIGNAL ARM CONNECTION DETAILS

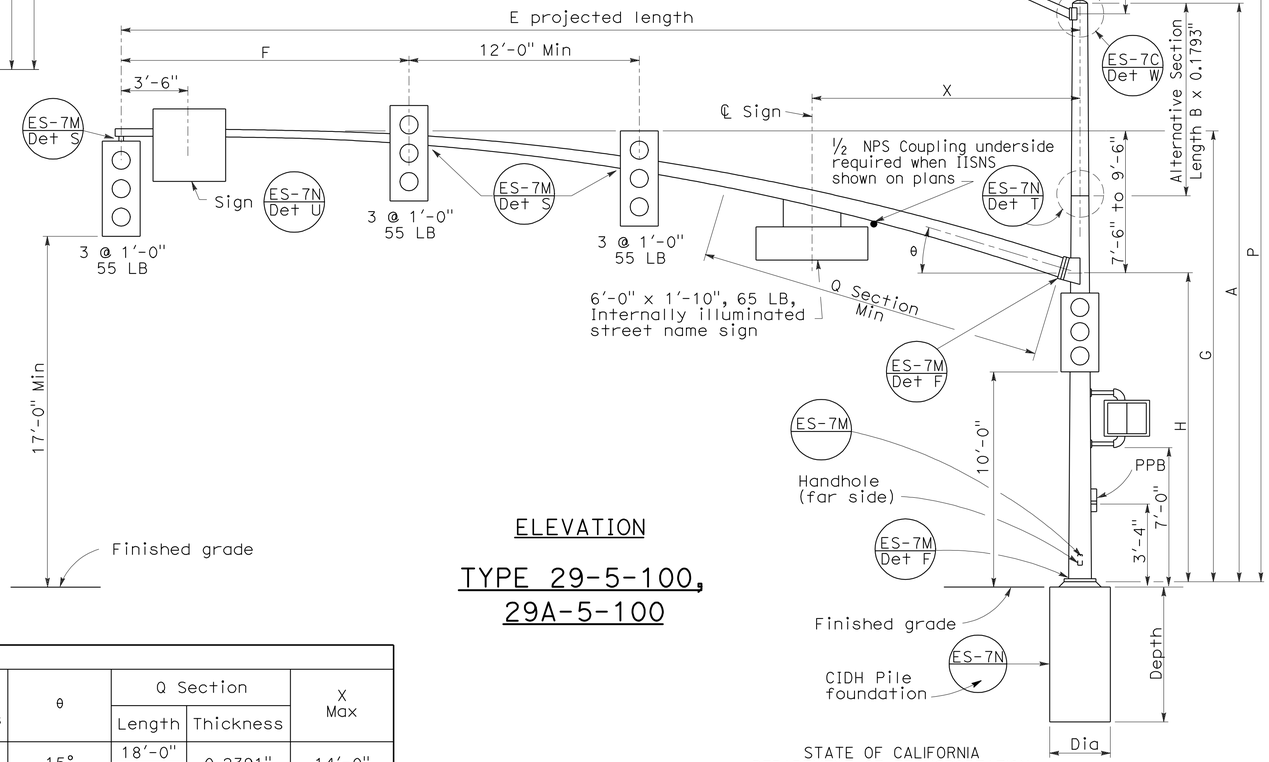

ELEVATION

TYPE 29-5-100, 29A-5-100

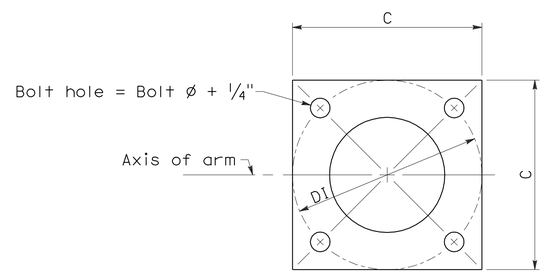

BASE PLATE

LUMINAIRE ARM DATA					
M Projected Length	N Rise	Min OD at Pole	Thickness	P Mounting Height 30'-0" Pole	P Mounting Height 35'-0" Pole
6'-0"	2'-0"±	3 1/4"	0.1196"	31'-6"±	36'-6"±
8'-0"	2'-6"±	3 1/2"		32'-0"±	37'-0"±
10'-0"	3'-3"±	3 7/8"		32'-9"±	37'-9"±
12'-0"	4'-3"±			33'-9"±	38'-9"±
15'-0"	4'-9"±	4 1/4"		34'-3"±	39'-3"±

SIGNAL ARM DATA														
E Projected Length	F Min Spacing	G Mounting Height	H	Min OD at Pole	Thickness	I Bolt Circle	HS Cap Screws	J Plate Size	K Arm ℄ Thickness	L Pole ℄ Thickness	θ	Q Section Length	Q Section Thickness	X Max
50'-0"	15'-0"	23'-7"± to 25'-7"±	16'-0"	11 7/16"	0.1793"	16"	1 1/2"-6NC-3 1/4"	1'-4"	1 3/4"	1 3/4"	15°	18'-0"	0.2391"	14'-0"
55'-0"				1'-1/4"								23'-0"		

POLE DATA									BASE PLATE DATA							CIDH PILE FOUNDATION		
Pole Type	Load Case	Wind Velocity mph	A Height	Min OD Base	Min OD Top	Thickness	Alternative Section B Length	Alternative Section Bottom	Alternative Section Top	C	DI Bolt Circle	Thickness	Anchor Bolts Size	Luminaire Arm	Signal Arm	Dia	Depth	Reinforced
28-5-100	5	100	17'-0"	14"	11 11/16"	0.3125"	None	11 1/4"	9 7/8"	21"	21"	1 3/4"	2" ø x 42" x 6"	None	50'-0", 55'-0"	3'-0"	9'-2"	Yes
29-5-100			30'-0"		9 7/8"		10'-0"							6'-15' [15'-0"]				
29A-5-100			35'-0"		9 3/16"		15'-0"		9 3/16"	23"	23"							

☐ Indicates arm length to be used unless otherwise noted on plans.

STATE OF CALIFORNIA
DEPARTMENT OF TRANSPORTATION

ELECTRICAL SYSTEMS (SIGNAL AND LIGHTING STANDARD CASE 5 ARM LOADING WIND VELOCITY=100 MPH ARM LENGTHS 50' TO 55')

NO SCALE

RSP ES-7G DATED NOVEMBER 17, 2006 SUPERSEDES STANDARD PLAN ES-7G DATED MAY 1, 2006 - PAGE 443 OF THE STANDARD PLANS BOOK DATED MAY 2006.

REVISED STANDARD PLAN RSP ES-7G

2006 REVISED STANDARD PLAN RSP ES-7G

5-15-06

DIST	COUNTY	ROUTE	POST MILES TOTAL PROJECT	SHEET NO.	TOTAL SHEETS
12	Ora	5,74	9.3/10.0, 0.0/0.2	412	515

REGISTERED ELECTRICAL ENGINEER

January 20, 2012
PLANS APPROVAL DATE

REGISTERED PROFESSIONAL ENGINEER Jeffery G. McRae No. E14512 Exp. 6-30-12 ELECTRICAL STATE OF CALIFORNIA

The State of California or its officers or agents shall not be responsible for the accuracy or completeness of electronic copies of this plan sheet.

To accompany plans dated 4-9-12

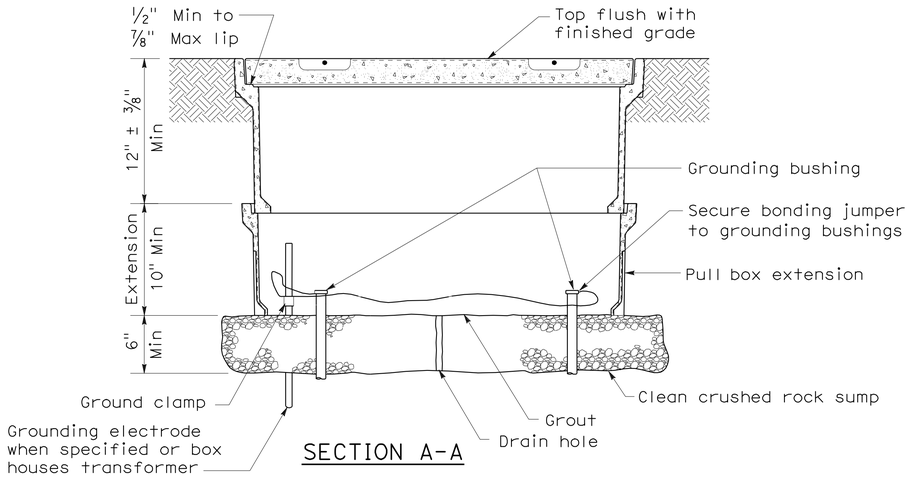

SECTION A-A

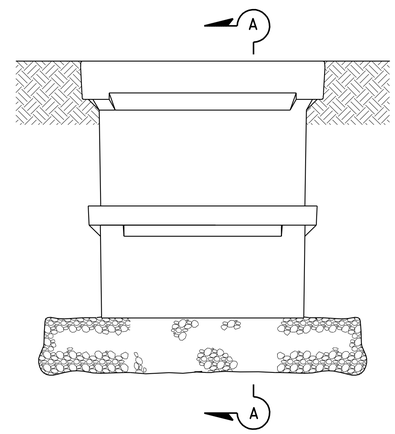

SIDE VIEW

INSTALLATION DETAILS

DETAIL A

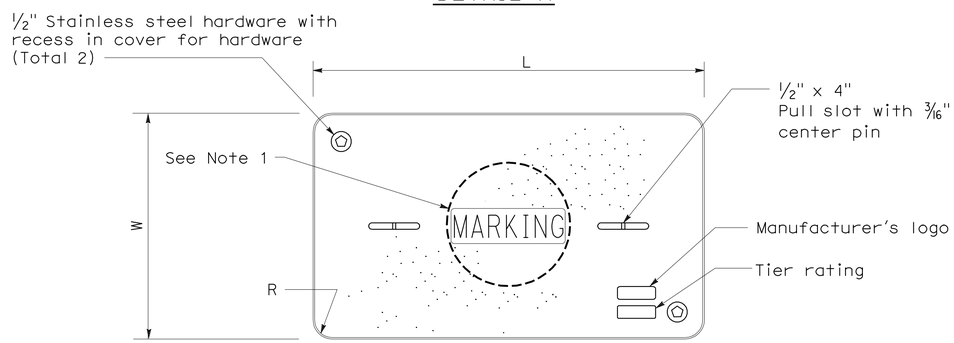

COVER TOP VIEW

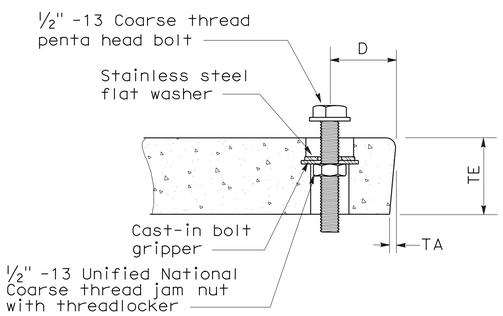

TYPICAL COVER CAPTIVE BOLT

(Or similar)

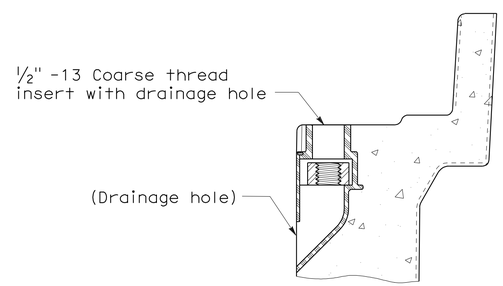

TYPICAL THREADED INSERT

(Or similar)

DIMENSION TABLE										
PULL BOX	PULL BOX			COVER						
	Minimum Depth Box	Minimum Depth Extension	Maximum Weight	L	W	R	TE	TA	D	Maximum Weight
No. 3 1/2	12"	N/A	40 lb	1' - 3 3/8"	10 1/8"	1 3/8"	2"	1/8"	1 3/4"	30 lb
No. 5	12"	10"	55 lb	1' - 11 1/4"	1' - 1 3/4"	1 3/8"	2"	1/8"	1 3/4"	60 lb
No. 6	12"	10"	70 lb	2' - 6 1/2"	1' - 5 1/2"	1 3/8"	2"	1/8"	2"	85 lb

NOTES ON PULL BOXES:

1. Pull box covers must be marked as follows: "SERVICE" Service circuits between service point and service disconnect; "SPRINKLER-CONTROL" sprinkler control circuits, 50 V or less; "CALTRANS" on all pull boxes, except pull boxes marked "SPRINKLER-CONTROL"; and "TELEPHONE" Telephone service;

   A) No. 3 1/2 pull box.
      1) "SIGNAL" - Traffic signal circuits with or without street or sign lighting circuits.
      2) "ST LIGHTING" - Street or sign lighting circuits where voltage is under 600 V.

   B) No. 5, 6, 9 or 9A pull box.
      1) "TRAFFIC SIGNAL" - Traffic signal circuits with or without street or sign lighting circuits.
      2) "STREET LIGHTING" - Street or sign lighting circuits where voltage is under 600 V.
      3) "STREET LIGHTING-HIGH VOLTAGE" - Street or sign lighting circuits where voltage is above 600 V.
      4) "IRRIGATION" - Circuits to irrigation controller 120 V or more.
      5) "RAMP METER" - Ramp meter circuits.
      6) "COUNT STATION" - Count or speed monitor circuits.
      7) "COMMUNICATIONS" - Communication circuits.
      8) "TOS COMMUNICATIONS" - TOS communication line.
      9) "TOS POWER" -TOS power.
      10) "TDC POWER" - Telephone demarcation cabinet power.
      11) "CCTV" - Closed circuit television circuits.
      12) "TMS" - Traffic monitoring station circuits.
      13) "CMS" - Changeable message sign circuits.
      14) "HAR" - Highway advisory radio circuits.

2. The nominal dimensions of the opening in which the cover sets must be the same as the cover dimensions (L and W) plus 1/8" or greater.

3. Covers and boxes must be interchangeable with California Standard. When interchanged with a standard, the top surfaces must be flush within 1/8". Top outside radius of covers and pull boxes must have a 1/8" radius.

4. Pull box extension may be another pull box as long as the bottom edge of the pull box can fit into the cover opening.

STATE OF CALIFORNIA
DEPARTMENT OF TRANSPORTATION

ELECTRICAL SYSTEMS (PULL BOX)

NO SCALE

NSP ES-8A DATED JANUARY 20, 2012 SUPPLEMENTS THE STANDARD PLANS BOOK DATED MAY 2006.

NEW STANDARD PLAN NSP ES-8A

2006 NEW STANDARD PLAN NSP ES-8A

9-28-11

DIST	COUNTY	ROUTE	POST MILES TOTAL PROJECT	SHEET NO.	TOTAL SHEETS
12	Ora	5,74	9.3/10.0, 0.0/0.2	413	515

REGISTERED ELECTRICAL ENGINEER

January 20, 2012
PLANS APPROVAL DATE

REGISTERED PROFESSIONAL ENGINEER
Jeffery G. McRae
No. E14512
Exp. 6-30-12
ELECTRICAL
STATE OF CALIFORNIA

The State of California or its officers or agents shall not be responsible for the accuracy or completeness of electronic copies of this plan sheet.

To accompany plans dated 4-9-12

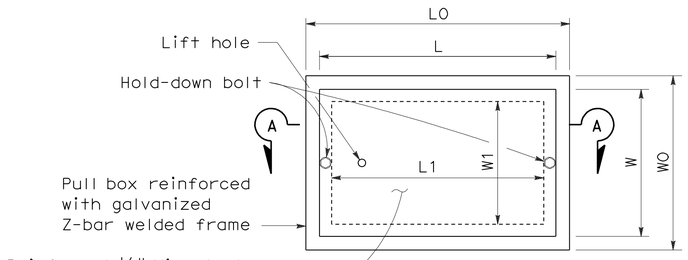

TOP VIEW

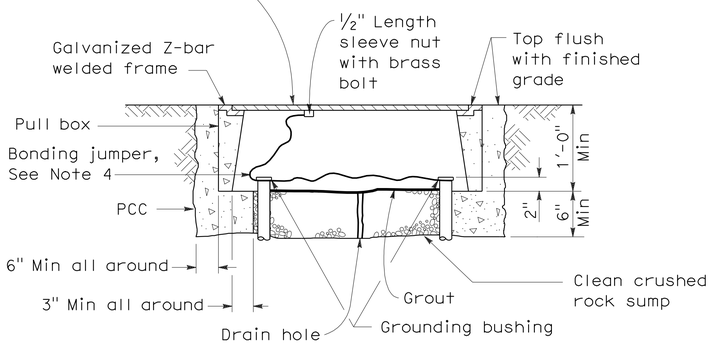

SECTION A-A

No. 3½(T), No. 5(T) AND No. 6(T) TRAFFIC PULL BOX

NOTES ON PULL BOXES:

1. Traffic pull box shall be provided with steel cover and special concrete footing. Steel cover shall have embossed non-skid pattern.
2. Steel reinforcing shall be as regularly used in the standard products of the respective manufacturer.
3. Pull box covers must be marked as follows: "SERVICE" Service circuits between service point and service disconnect; "SPRINKLER-CONTROL" Sprinkler control circuits, 50 V or less; "CALTRANS" On all pull boxes, except pull boxes marked "SPRINKLER-CONTROL"; and "TELEPHONE" Telephone service.
   A) No. 3½(T) pull box.
      1) "SIGNAL" - Traffic signal circuits with or without street or sign lighting circuits.
      2) "ST LIGHTING" - Street or sign lighting circuits where voltage is under 600 V.
   B) No. 5(T) or 6(T) pull box.
      1) "TRAFFIC SIGNAL" - Traffic signal circuits with or without street or sign lighting circuits.
      2) "STREET LIGHTING" - Street or sign lighting circuits where voltage is under 600 V.
      3) "STREET LIGHTING-HIGH VOLTAGE" - Street or sign lighting circuits where voltage is above 600 V.
      4) "IRRIGATION" - Circuits to irrigation controller 120 V or more.
      5) "RAMP METER" - Ramp meter circuits.
      6) "COUNT STATION" - Count or speed monitor circuits.
      7) "COMMUNICATION" - Communication circuits.
      8) "TOS COMMUNICATIONS" - TOS communications line.
      9) "TOS POWER" - TOS power.
      10) "TDC POWER" - Telephone demarcation cabinet power.
      11) "CCTV" - Closed circuit television circuits.
      12) "TMS" - Traffic monitoring station circuits.
      13) "CMS" - Changeable message sign circuits.
      14) "HAR" - Highway advisory radio circuits.
4. Bonding jumper for metal covers shall be 3' long, minimum.
5. The nominal dimensions of the opening in which the cover sets must be the same as the cover dimensions except the length and width dimensions shall be ⅛" greater.
6. Covers and boxes must be interchangeable with California standard male and female gages. When interchanged with a standard male or female gage, the top surfaces must be flush within ⅛".

DIMENSION TABLE

PULL BOX	BOX						COVER				
	Minimum * Thickness	Minimum Depth Box and Extension	WO	LO	L1	W1	L **	W **	R	Edge Thickness	Edge Taper
No. 3½(T)	1½"	1'-0"	1'-5"± 1"	1'-8⅞"±	1'-2½"±	10⅝"± 1"	1'-8"±	1'-1¾"±	0"	½"	None
No. 5(T)	1¾"	1'-0"	1'-11½"± 1"	2'-5½"±	1'-7"±	1'-1"± 1"	2'-3"±	1'-4"±	0"	½"	None
No. 6(T)	2"	1'-0"	2'-6"± 1"	2'-11½"±	1'-11½"±	1'-5"± 1"	2'-9"±	1'-8"±	0"	½"	None

* Excluding conduit web ** Top dimension

STATE OF CALIFORNIA
DEPARTMENT OF TRANSPORTATION

ELECTRICAL SYSTEMS (TRAFFIC RATED PULL BOX)

NO SCALE

NSP ES-8B DATED JANUARY 20, 2012 SUPPLEMENTS THE STANDARD PLANS BOOK DATED MAY 2006.

NEW STANDARD PLAN NSP ES-8B

2006 NEW STANDARD PLAN NSP ES-8B

9-28-11

DIST	COUNTY	ROUTE	POST MILES TOTAL PROJECT	SHEET NO.	TOTAL SHEETS
12	Ora	5,74	9.3/10.0, 0.0/0.2	414	515

REGISTERED ELECTRICAL ENGINEER

October 5, 2007
PLANS APPROVAL DATE

REGISTERED PROFESSIONAL ENGINEER
Jeffery G. McRae
No. E14512
Exp. 6-30-08
ELECTRICAL
STATE OF CALIFORNIA

The State of California or its officers or agents shall not be responsible for the accuracy or completeness of electronic copies of this plan sheet.

To accompany plans dated 4-9-12

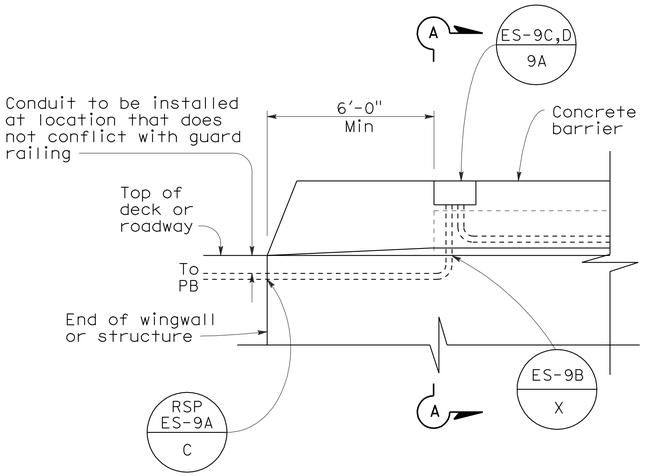

SIDEVIEW

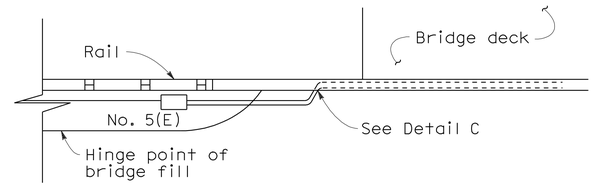

TOP VIEW

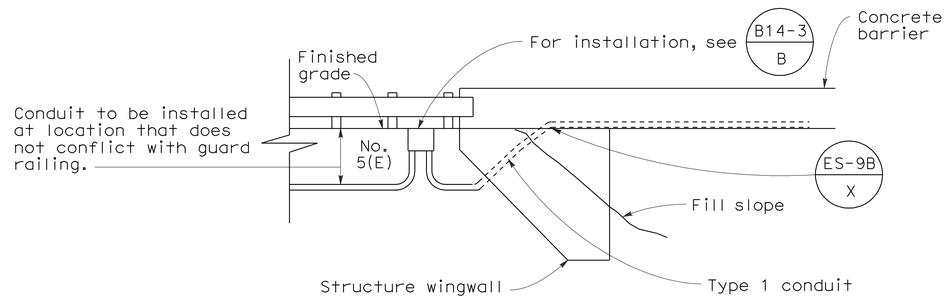

SIDE VIEW
DETAIL I
CONDUIT TERMINATION

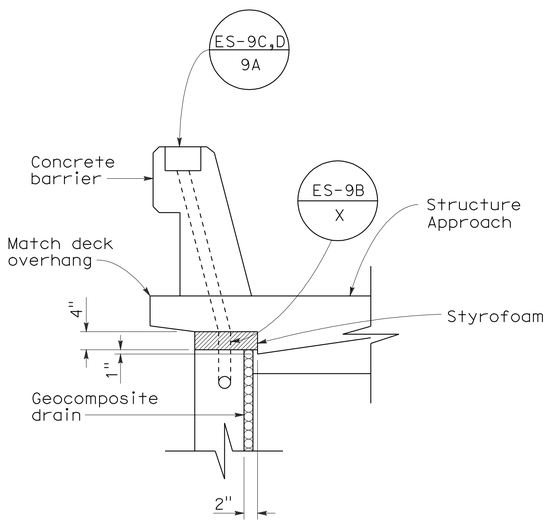

SECTION A-A

DETAIL A
CONDUIT TERMINATION

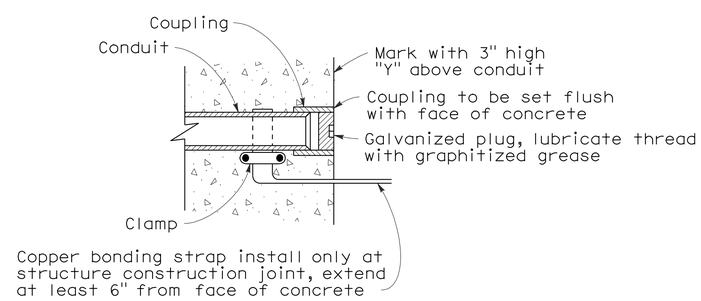

DETAIL C
CONDUIT TERMINATION

STATE OF CALIFORNIA
DEPARTMENT OF TRANSPORTATION

ELECTRICAL SYSTEMS (ELECTRICAL DETAILS STRUCTURE INSTALLATIONS)

NO SCALE

RSP ES-9A DATED OCTOBER 5, 2007 SUPERCEDES STANDARD PLAN ES-9A DATED MAY 1, 2006 - PAGE 454 OF THE STANDARD PLANS BOOK DATED MAY 2006.

REVISED STANDARD PLAN RSP ES-9A

2006 REVISED STANDARD PLAN RSP ES-9A

DIST	COUNTY	ROUTE	POST MILES TOTAL PROJECT	SHEET NO.	TOTAL SHEETS
12	Ora	5,74	9.3/10.0, 0.0/0.2	415	515

REGISTERED ELECTRICAL ENGINEER

October 5, 2007
PLANS APPROVAL DATE

REGISTERED PROFESSIONAL ENGINEER Jeffery G. McRae No. E14512 Exp. 6-30-08 ELECTRICAL STATE OF CALIFORNIA

The State of California or its officers or agents shall not be responsible for the accuracy or completeness of electronic copies of this plan sheet.

To accompany plans dated 4-9-12

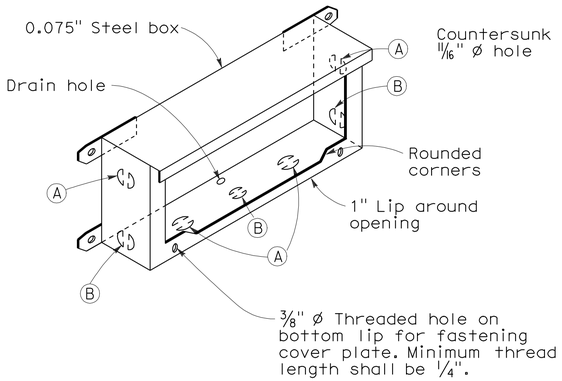

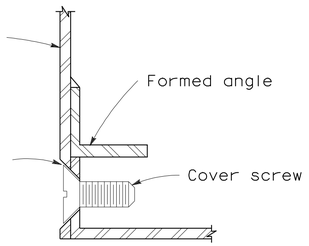

DETAIL J

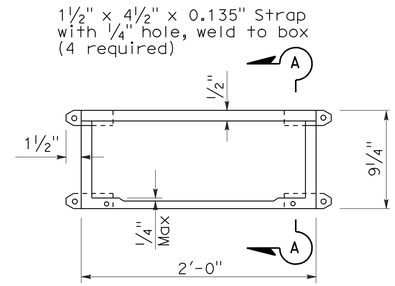

PLAN

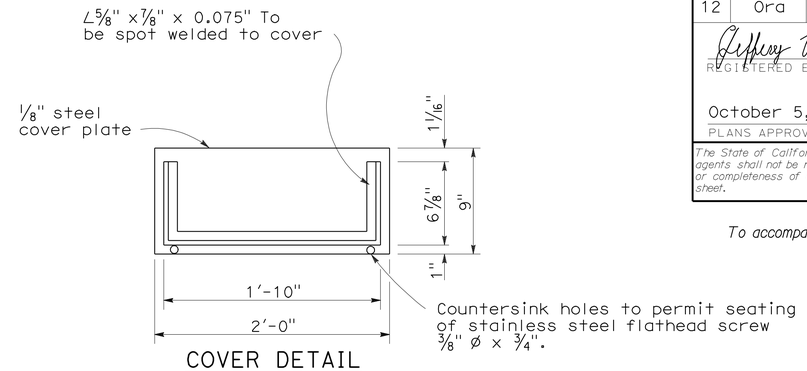

COVER DETAIL

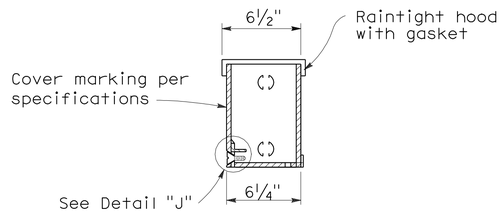

SECTION A-A

INSTALLATION NOTE:

Box shall be parallel to top of railing. Close cover box during pouring with 1/4" plywood of sufficient size to provide 1:1 chamfer on 3 sides of cover. Upper edge of plywood shall fit against lower edge of raintight hood.

No. 9 STRUCTURE PULL BOX

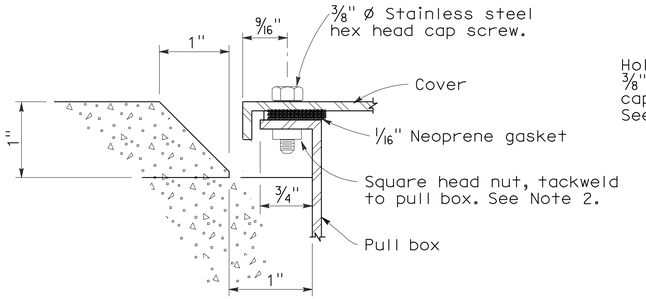

SECTION C-C

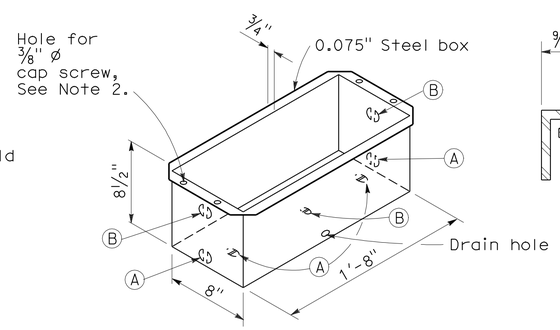

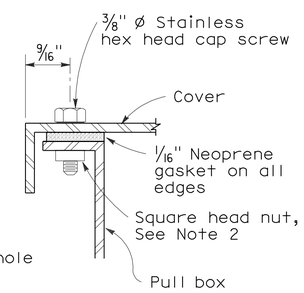

DETAIL A

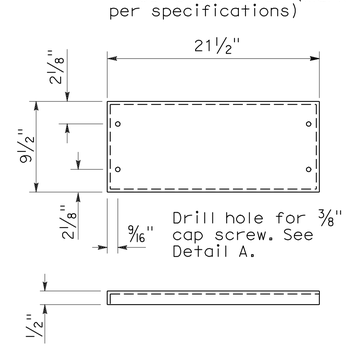

COVER DETAIL

NOTES: No. 9 and 9A Pull Box

1. Corner joints shall be lapped and secured by spot welding or riveting.
2. Where cap screws are used to attach cover to box, either of the following methods of providing adequate threading may be used:
   a. Tack weld square nut to bottom of flange (Total 4), or
   b. Tack weld a 1/4" x 5/8" x 8" bar beneath flange (Total 2).
3. Pound knockouts flat after punching.
4. Multiple size knockouts shall not be permitted.
5. Pull box covers shall be marked as shown on Standard Plan ES-8.

No. 9A STRUCTURE PULL BOX

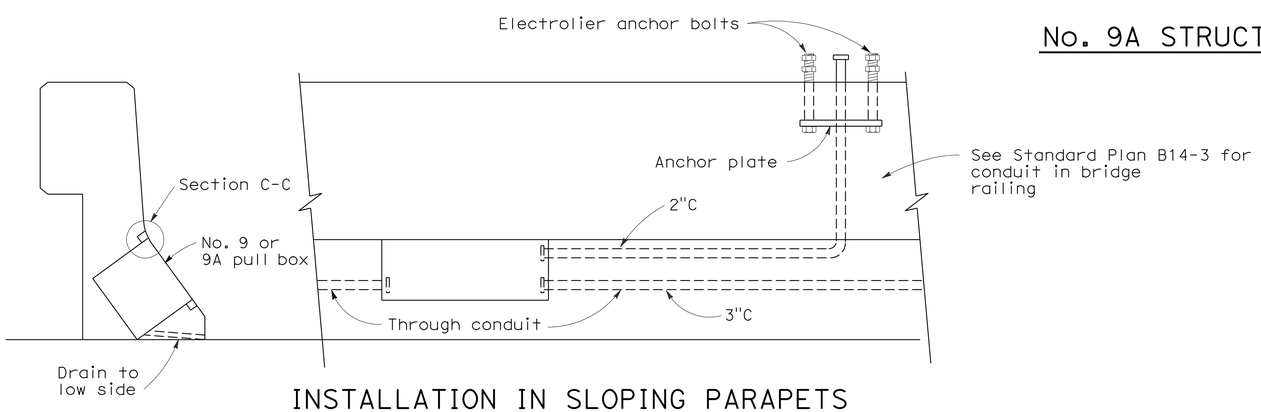

INSTALLATION IN SLOPING PARAPETS

For reinforcement in area of electrolier, see railing sheets. For electrolier anchor bolts, see Standard Plan ES-6B.

KNOCKOUT SCHEDULE
No. 9 AND 9A PULL BOX

(A) 2"C, 1 each end, 2 on bottom.

(B) 3"C, 1 each end, 1 on bottom.

STATE OF CALIFORNIA
DEPARTMENT OF TRANSPORTATION

ELECTRICAL SYSTEMS (ELECTRICAL DETAILS STRUCTURE INSTALLATIONS)

NO SCALE

RSP ES-9C DATED OCTOBER 5, 2007 SUPERCEDES STANDARD PLAN ES-9C DATED MAY 1, 2006 - PAGE 456 OF THE STANDARD PLANS BOOK DATED MAY 2006.

REVISED STANDARD PLAN RSP ES-9C

2006 REVISED STANDARD PLAN RSP ES-9C

7-26-07

DIST	COUNTY	ROUTE	POST MILES TOTAL PROJECT	SHEET NO.	TOTAL SHEETS
12	Ora	5,74	9.3/10.0, 0.0/0.2	416	515

REGISTERED ELECTRICAL ENGINEER

October 5, 2007
PLANS APPROVAL DATE

REGISTERED PROFESSIONAL ENGINEER Jeffery G. McRae No. E14512 Exp. 6-30-08 ELECTRICAL STATE OF CALIFORNIA

The State of California or its officers or agents shall not be responsible for the accuracy or completeness of electronic copies of this plan sheet.

To accompany plans dated 4-9-12

NOTES: (FOR LIGHTING AND SIGN ILLUMINATION CONTROL)

1. The ballast voltages of lighting fixtures and luminaires shall match line service voltages.
2. Voltage rating of photoelectric controls shall conform to the service voltage indicated on the plans.
3. Terminal strip shall be provided for wiring to fixtures.
4. Type SC1A, SC2A, SC3A controls are similar to Types SC1, SC2 and SC3 controls respectively except test switch and wiring are not required.

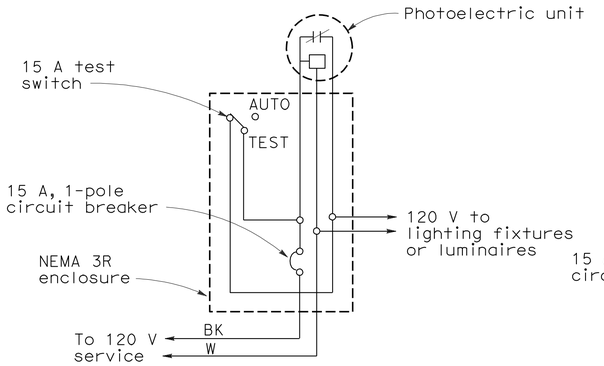

TYPE LC1 CONTROL

For 120 V unswitched circuit with no more than 800 W load.

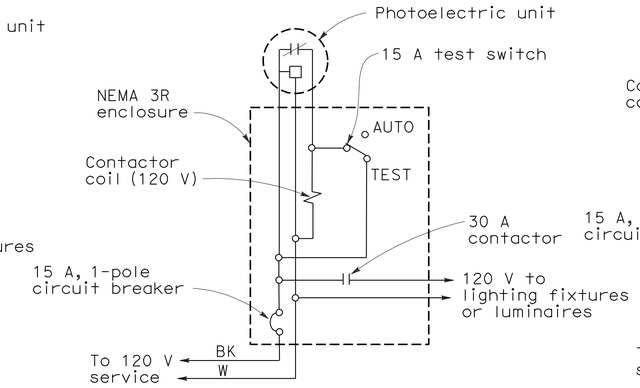

TYPE LC2 CONTROL

For 120 V unswitched circuit

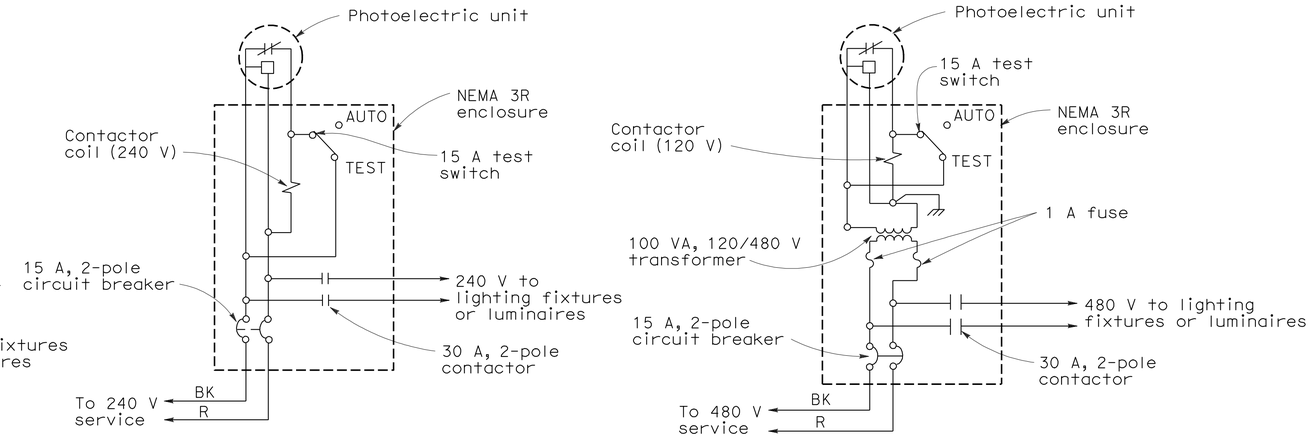

TYPE LC3 CONTROL

For 240 V and 480 V unswitched circuits

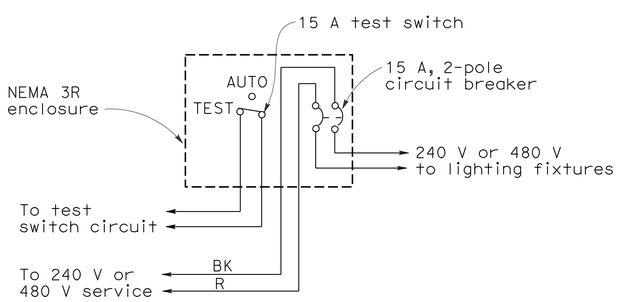

TYPE SC1 CONTROL

For 240 V or 480 V switched circuit, see Note 4 for Type SC1A

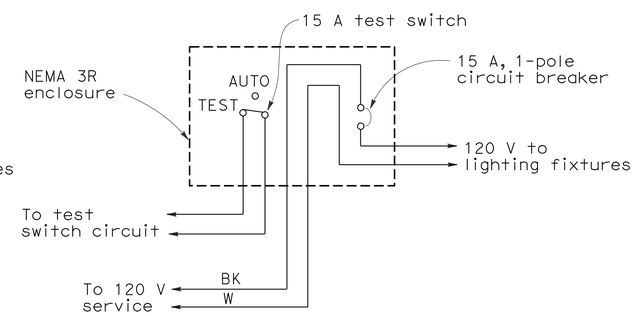

TYPE SC2 CONTROL

For 120 V switched circuit, see Note 4 for Type SC2A

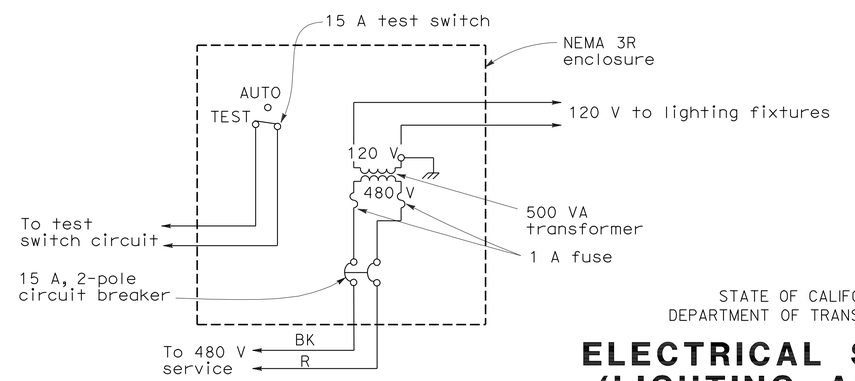

TYPE SC3 CONTROL

For 480 V switched sign circuit, see Note 4 for Type SC3A

STATE OF CALIFORNIA
DEPARTMENT OF TRANSPORTATION

ELECTRICAL SYSTEMS (LIGHTING AND SIGN ILLUMINATION CONTROL)

NO SCALE

RSP ES-15D DATED OCTOBER 5, 2007 SUPERCEDES STANDARD PLAN ES-15D DATED MAY 1, 2006 - PAGE 472 OF THE STANDARD PLANS BOOK DATED MAY 2006.

REVISED STANDARD PLAN RSP ES-15D

2006 REVISED STANDARD PLAN RSP ES-15D

9-10-07

DIST	COUNTY	ROUTE	POST MILES TOTAL PROJECT	SHEET No.	TOTAL SHEETS
12	Ora	5,74	9.3/10.0, 0.0/0.2	417	515

Charles Lomicka 03-14-12
REGISTERED CIVIL ENGINEER DATE

4-9-12
PLANS APPROVAL DATE

REGISTERED PROFESSIONAL ENGINEER CHARLES LOMICKA No. C 71172 Exp. 6/30/13 CIVIL STATE OF CALIFORNIA

The State of California or its officers or agents shall not be responsible for the accuracy or completeness of electronic copies of this plan sheet.

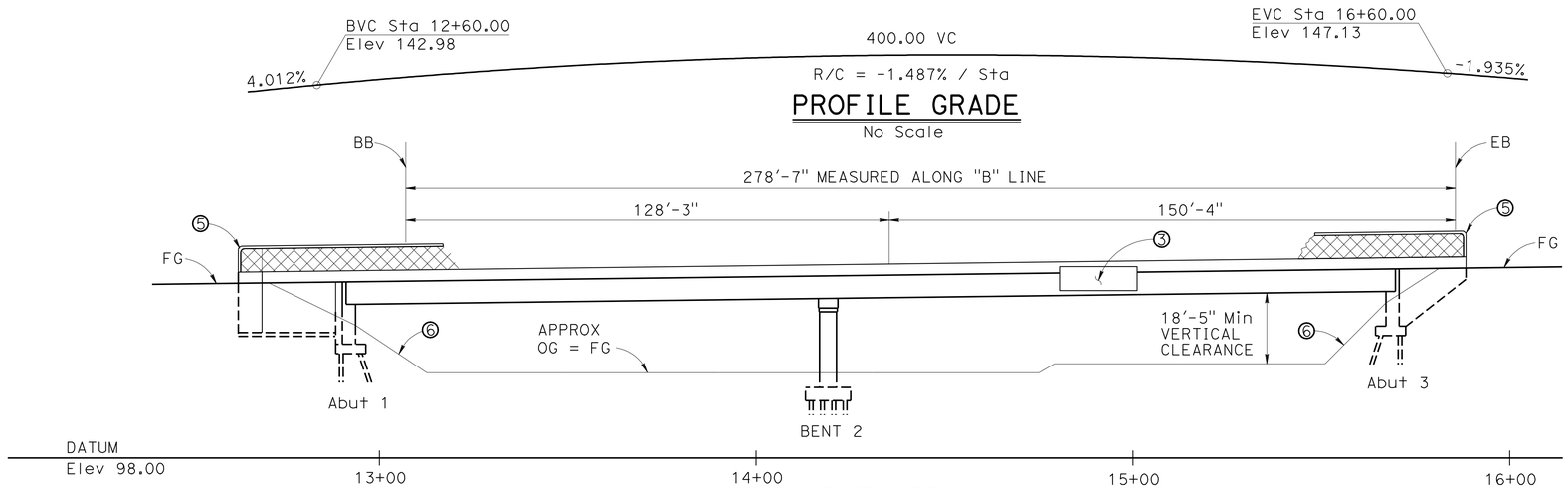

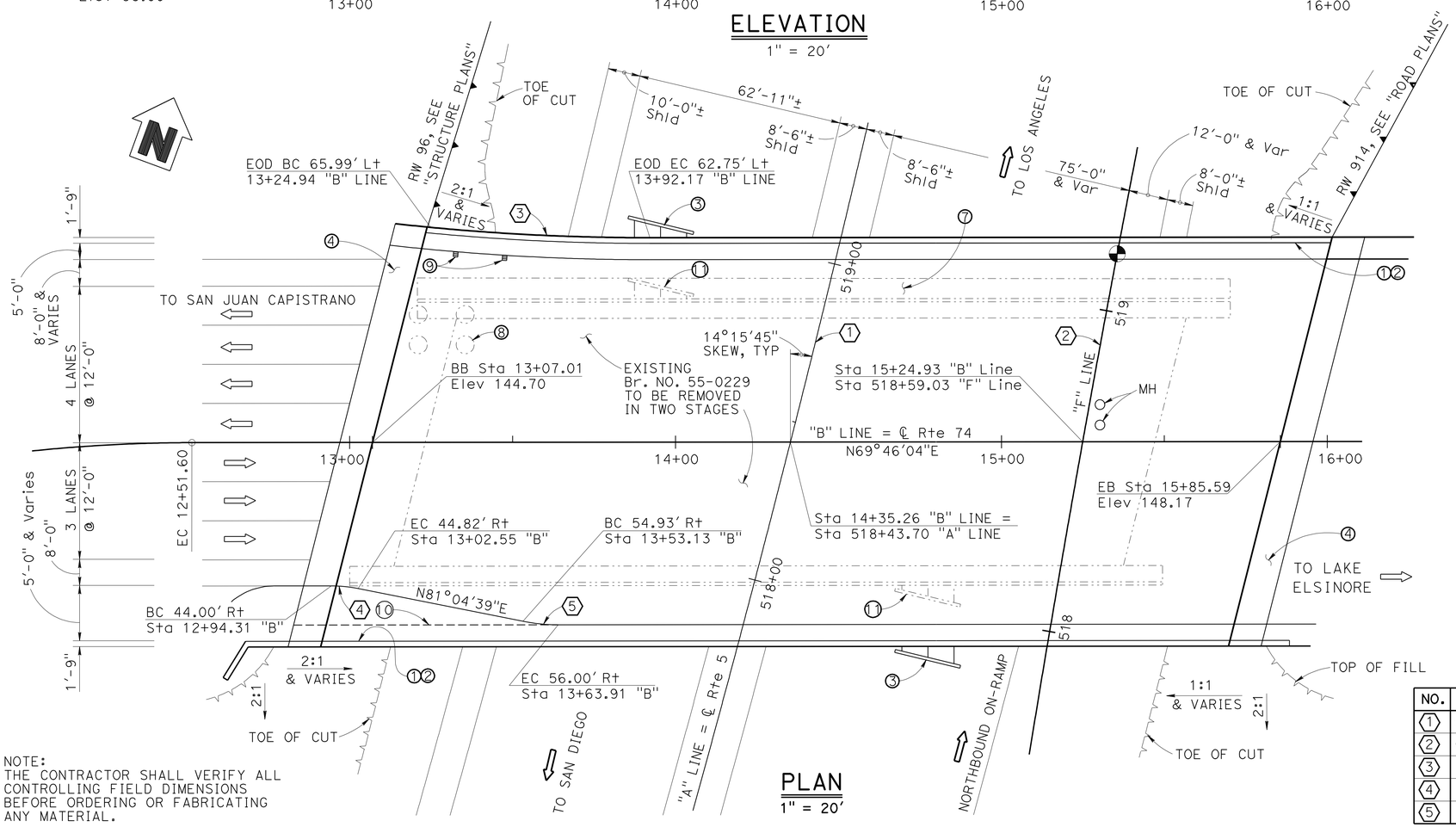

NOTE:
THE CONTRACTOR SHALL VERIFY ALL CONTROLLING FIELD DIMENSIONS BEFORE ORDERING OR FABRICATING ANY MATERIAL.

NOTES:

1. Paint "Br. No. 55-1104"
2. Paint "Route 74/5 Separation"
3. Bridge Mounted Sign, see Road Plans
4. Structure Approach Type EQ(10)
5. Chain Link Railing Type 7 (Mod)
6. Slope Paving (Split Face Pavers)
7. See "TEMPORARY PEDESTRIAN SIDEWALK LAYOUT PLAN" sheet.
8. Preformed Loop Detectors, see Road Plans
9. Deck Drain Type D-1. For layout see "GIRDER LAYOUT NO. 2" sheet
10. Build partial width sidewalk during Stage 1 Construction. For additional details, see "CONCRETE BARRIER TYPE 26 (MOD) NO. 2" sheet.
11. Existing Bridge Mounted Sign to be removed, see Road Plans

QUANTITIES

TEMPORARY SUPPORT	LUMP	SUM
TEMPORARY PEDESTRIAN SIDEWALK	LUMP	SUM
BRIDGE REMOVAL	LUMP	SUM
STRUCTURE EXCAVATION (BRIDGE)	1,525	CY
STRUCTURE BACKFILL (BRIDGE)	785	CY
FURNISH STEEL PILING (HP 10 X 57)	5,798	LF
DRIVE STEEL PILE (HP 10 X 57)	100	EA
FURNISH STEEL PILING (HP 14 X 89)	4,800	LF
DRIVE STEEL PILE (HP 14 X 89)	80	EA
PRESTRESSING CAST-IN-PLACE CONCRETE	LUMP	SUM
STRUCTURAL CONCRETE, BRIDGE FOOTING	325	CY
STRUCTURAL CONCRETE, BRIDGE	3,070	CY
STRUCTURAL CONCRETE, APPROACH SLAB (TYPE EQ)	70	CY
REFINISH BRIDGE DECK	900	SQFT
JOINT SEAL (MR 1½")	129	LF
JOINT SEAL (MR 2")	126	LF
BAR REINFORCING STEEL (BRIDGE)	704,000	LB
WELDED STEEL PIPE CASING (BRIDGE)	49	LF
SLOPE PAVING (SPLIT FACE PAVERS)	8,100	SQFT
MISCELLANEOUS METAL (BRIDGE)	1,190	LB
BRIDGE DECK DRAINAGE SYSTEM	1,130	LB
CHAIN LINK RAILING (TYPE 7 MODIFIED)	610	LF
CONCRETE BARRIER (TYPE 26 MODIFIED)	610	LF

CURVE DATA

NO.	R	Δ	L	T
1	5480.00	51°48'13"	4954.71	2661.16
2	6455.21	2°21'34"	265.82	132.93
3	700.00	5°30'40"	67.33	33.69
4	42.00	11°18'36"	8.29	4.16
5	55.00	11°18'36"	10.86	5.45

LEGEND:

- Indicates Point of Minimum Vertical Clearance
- Indicates Direction of Traffic
- Indicates Existing Structure
- Indicates Deck Drain

MINA PEZESHPOUR
DESIGN ENGINEER

	BY	CHECKED
DESIGN	CHARLES LOMICKA	MAMUNUR RAHMAN
DETAILS	HENGAMEH MAHBOOBI / H.I.	MAMUNUR RAHMAN
QUANTITIES	CHARLES LOMICKA	SHAN-PIN YEH

LOAD & RESISTANCE FACTOR DESIGN — LIVE LOADING: HL93 W/"LOW-BOY"; PERMIT DESIGN VEHICLE (EXCEPT AS NOTED)

	BY	CHECKED
LAYOUT	CHARLES LOMICKA	MAMUNUR RAHMAN
SPECIFICATIONS	VAIKUNTHAN RENGANATHAN	PLANS AND SPECS COMPARED VAIKUNTHAN RENGANATHAN

ORIGINAL SCALE IN INCHES FOR REDUCED PLANS 0 1 2 3

STATE OF CALIFORNIA
DEPARTMENT OF TRANSPORTATION

DIVISION OF ENGINEERING SERVICES
STRUCTURE DESIGN
DESIGN BRANCH 19

BRIDGE NO. 55-1104
POST MILE 0.01

ROUTE 74/5 SEPARATION (REPLACE)
GENERAL PLAN NO. 1

UNIT: 3621
PROJECT NUMBER & PHASE: 1200000102 1 CONTRACT NO.: 12-0E3101

DISREGARD PRINTS BEARING EARLIER REVISION DATES — REVISION DATES: 4-20-10, 03-14-12, 11-18-11

SHEET 1 OF 38

USERNAME => s121614 DATE PLOTTED => 15-APR-2012 TIME PLOTTED => 09:43

STRUCTURES DESIGN GENERAL PLAN SHEET (ENGLISH) (REV.09-01-10)

FILE => 55-1104-a-gp01.dgn

DIST	COUNTY	ROUTE	POST MILES TOTAL PROJECT	SHEET No.	TOTAL SHEETS
12	Ora	5,74	9.3/10.0, 0.0/0.2	418	515

Charles Lomicka 03-14-12
REGISTERED CIVIL ENGINEER DATE

4-9-12
PLANS APPROVAL DATE

REGISTERED PROFESSIONAL ENGINEER
CHARLES LOMICKA
No. C 71172
Exp. 6/30/13
CIVIL
STATE OF CALIFORNIA

The State of California or its officers or agents shall not be responsible for the accuracy or completeness of electronic copies of this plan sheet.

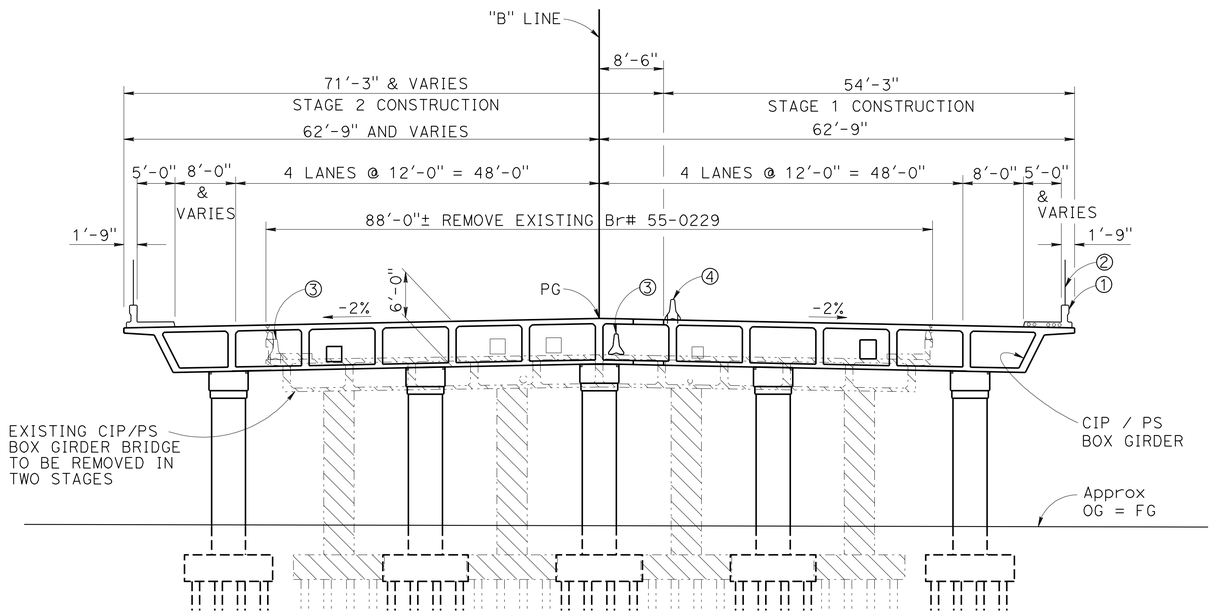

TYPICAL SECTION

1" = 10'

PILE DATA TABLE						
LOCATION	PILE TYPE	NOMINAL RESISTANCE (kips)		DESIGN TIP ELEVATION (ft)	SPECIFIED TIP ELEVATION (ft)	NOMINAL DRIVING RESISTANCE (kips)
		COMPRESSION	TENSION			
Abut 1	HP 10X57	240	0	66.0(a)	66.0(a)	240
BENT 2	HP 14X89	330	0	52.0(a) 80.0(c)	52.0(a)	330
Abut 3	HP 10X57	250	0	78.0(a)	78.0(a)	250

NOTES:

Design tip elevation for Abutments is controlled by: (a) Compression.

Design tip elevation for Bents is controlled by: (a) Compression (Strength Limit), (c) Settlement.

LEGEND:

Indicates existing structure

Bridge Removal

NOTES:

① Concrete Barrier, Type 26 (Mod), Typ
② Chain Link Railing Type 7 (Mod), Typ
③ Temp Railing, Type K, Stage 1, attach to structure
④ Temp Railing, Type K, Stage 2, attach to structure

NOTE:
THE CONTRACTOR SHALL VERIFY ALL CONTROLLING FIELD DIMENSIONS BEFORE ORDERING OR FABRICATING ANY MATERIAL.

	BY	CHECKED
DESIGN	CHARLES LOMICKA	MAMUNUR RAHMAN
DETAILS	H. I. / H. M. /H.B.	MAMUNUR RAHMAN
QUANTITIES	CHARLES LOMICKA	SHAN-PIN YEH

STATE OF CALIFORNIA
DEPARTMENT OF TRANSPORTATION

DIVISION OF ENGINEERING SERVICES
STRUCTURE DESIGN
DESIGN BRANCH 19

BRIDGE NO. 55-1104
POST MILE 0.01

ROUTE 74/5 SEPARATION (REPLACE)
GENERAL PLAN NO. 2

STRUCTURES DESIGN DETAIL SHEET (ENGLISH) (REV. 09-01-10)

ORIGINAL SCALE IN INCHES FOR REDUCED PLANS 0 1 2 3

UNIT: 3621
PROJECT NUMBER & PHASE: 1200000102 1 CONTRACT NO.: 0E3101

DISREGARD PRINTS BEARING EARLIER REVISION DATES

REVISION DATES: 4-22-10 03-14-12 11-16-11

SHEET 2 OF 38

FILE => 55-1104-a-gp02.dgn

USERNAME => s121614 DATE PLOTTED => 15-APR-2012 TIME PLOTTED => 09:43

DIST	COUNTY	ROUTE	POST MILES TOTAL PROJECT	SHEET No.	TOTAL SHEETS
12	Ora	5,74	9.3/10.0, 0.0/0.2	419	515

Charles Lomicka 03-14-12
REGISTERED CIVIL ENGINEER DATE

4-9-12
PLANS APPROVAL DATE

REGISTERED PROFESSIONAL ENGINEER
CHARLES LOMICKA
No. C 71172
Exp. 6/30/13
CIVIL
STATE OF CALIFORNIA

The State of California or its officers or agents shall not be responsible for the accuracy or completeness of electronic copies of this plan sheet.

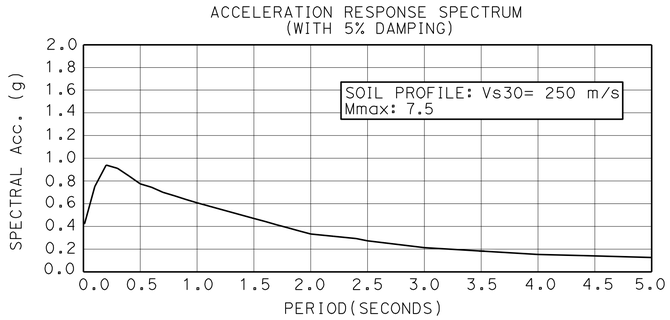

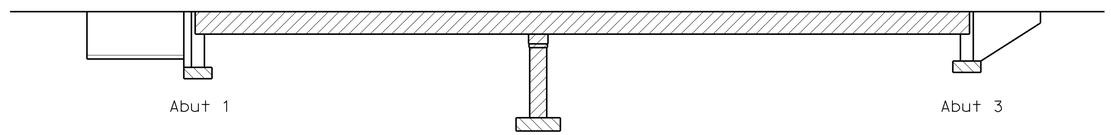

TYPICAL BENT

GENERAL NOTES
LOAD AND RESISTANCE FACTOR DESIGN

DESIGN:	AASHTO LRFD BRIDGE DESIGN SPECIFICATIONS - 4th edition and the Caltrans Amendments, Preface dated September 2010 .
SESMIC DESIGN:	CALTRANS SEISMIC DESIGN CRITERIA (SDC) Version 1.5, August 2009
DEAD LOAD:	Includes 35 psf for future wearing surface
LIVE LOAD:	HL93 and Permit Design Load
SEISMIC LOAD:	Soil Profile: Vs30 = 250 m/s Moment Magnitude: 7.5 Peak Ground Acceleration = 0.4 g
REINFORCED CONCRETE:	f_y = 60 ksi f'_c= 3.6 ksi (except as shown on Concrete Strength & Type Limits Diagram)
PRESTRESSED CONCRETE:	See "Prestressing Notes" on Girder Layout sheets

STANDARD PLANS DATED MAY 2006

A10A	ACRONYMS AND ABBREVIATIONS (A-L)
A10B	ACRONYMS AND ABBREVIATIONS (M-Z)
A10C	SYMBOLS (SHEETS 1 OF 2))
A10D	SYMBOLS (SHEETS 2 OF 2))
A62C	LIMITS OF PAYMENT FOR EXCAVATION AND BACKFILL - BRIDGE
B0-1	BRIDGE DETAILS
B0-3	BRIDGE DETAILS
B0-5	BRIDGE DETAILS
B0-13	BRIDGE DETAILS
B3-1	RETAINING WALL TYPE 1 H = 4' THROUGH 30'
RSP B6-21	JOINT SEALS (MAXIMUM MOVEMENT RATING = 2")
B7-1	BOX GIRDER DETAILS
B7-6	DECK DRAIN TYPES D-1 AND D-2
B7-8	DECK DRAINAGE DETAILS
B7-10	UTILITY OPENING BOX GIRDER
B7-11	UTILITY DETAILS
B8-5	CAST-IN-PLACE PRESTRESSED GIRDER DETAILS
B11-54	CONCRETE BARRIER TYPE 26
B14-5	WATER SUPPLY LINE (DETAILS) (PIPE SIZES LESS THAN 4")
T-3	TEMPORARY RAILING (TYPE K)

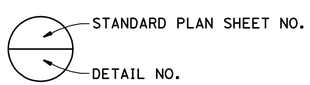

NOTE:
THE CONTRACTOR SHALL VERIFY ALL CONTROLLING FIELD DIMENSIONS BEFORE ORDERING OR FABRICATING ANY MATERIAL.

Structural Concrete, Bridge (f'c = 4000 psi @ 28 days)

Structural Concrete, Bridge Footing

Structural Concrete, Bridge

CONCRETE STRENGTH AND TYPE LIMITS

No Scale

INDEX TO PLANS

NO.	SHEET NAME
1.	GENERAL PLAN NO. 1
2.	GENERAL PLAN NO. 2
3.	INDEX TO PLANS
4.	CONSTRUCTION STAGING PLAN
5.	DECK CONTOURS
6.	FOUNDATION PLAN
7.	ABUTMENT 1 LAYOUT
8.	ABUTMENT 3 LAYOUT
9.	ABUTMENT DETAILS NO. 1
10.	ABUTMENT DETAILS NO. 2
11.	ABUTMENT DETAILS NO. 3
12.	ABUTMENT DETAILS NO. 4
13.	BENT LAYOUT
14.	BENT DETAILS NO. 1
15.	BENT DETAILS NO. 2
16.	TYPICAL SECTION
17.	GIRDER LAYOUT NO.1
18.	GIRDER LAYOUT NO.2
19.	GIRDER REINFORCEMENT
20.	SOFFIT OPENING & DRAINAGE GRATE
21.	SLOPE PAVING-FULL SLOPE
22.	STRUCTURE APPROACH TYPE EQ(10)
23.	STRUCTURE APPROACH DRAINAGE DETAILS
24.	CONCRETE BARRIER TYPE 26 (Mod) NO. 1
25.	CONCRETE BARRIER TYPE 26 (Mod) NO. 2
26.	CHAIN LINK FENCING TYPE 7 (Mod)
27.	TEMPORARY PEDESTRIAN SIDEWALK LAYOUT PLAN
28.	TEMPORARY PEDESTRIAN SIDEWALK TYPICAL SECTION
29.	TEMPORARY PEDESTRIAN SIDEWALK DETAILS NO. 1
30.	TEMPORARY PEDESTRIAN SIDEWALK DETAILS NO. 2
31.	LOG OF TEST BORINGS 1 of 8
32.	LOG OF TEST BORINGS 2 of 8
33.	LOG OF TEST BORINGS 3 of 8
34.	LOG OF TEST BORINGS 4 of 8
35.	LOG OF TEST BORINGS 5 of 8
36.	LOG OF TEST BORINGS 6 of 8
37.	LOG OF TEST BORINGS 7 of 8
38.	LOG OF TEST BORINGS 8 of 8

	BY	CHECKED
DESIGN	CHARLES LOMICKA	MAMUNUR RAHMAN
DETAILS	HENGAMEH MAHBOOBI	MAMUNUR RAHMAN
QUANTITIES	CHARLES LOMICKA	SHAN-PIN YEH

STATE OF CALIFORNIA
DEPARTMENT OF TRANSPORTATION

DIVISION OF ENGINEERING SERVICES
STRUCTURE DESIGN
DESIGN BRANCH 19

BRIDGE NO. 55-1104
POST MILE 0.01

ROUTE 74/5 SEPARATION (REPLACE)
INDEX TO PLANS

STRUCTURES DESIGN DETAIL SHEET (ENGLISH) (REV. 09-01-10)

ORIGINAL SCALE IN INCHES FOR REDUCED PLANS 0 1 2 3

UNIT: 3621
PROJECT NUMBER & PHASE: 1200000102 1 CONTRACT NO.: 12-0E3101

DISREGARD PRINTS BEARING EARLIER REVISION DATES

REVISION DATES: ~~02-15-11~~ 03-14-12 ~~02-27-12~~

SHEET 3 OF 38

FILE => 55-1104-a-ltp.dgn

USERNAME => s121614 DATE PLOTTED => 15-APR-2012 TIME PLOTTED => 09:43

DIST	COUNTY	ROUTE	POST MILES TOTAL PROJECT	SHEET No.	TOTAL SHEETS
12	Ora	5,74	9.3/10.0, 0.0/0.2	420	515

Charles Lomicka 03-14-12
REGISTERED CIVIL ENGINEER DATE

4-9-12
PLANS APPROVAL DATE

REGISTERED PROFESSIONAL ENGINEER CHARLES LOMICKA No. C 71172 Exp. 6/30/13 CIVIL STATE OF CALIFORNIA

The State of California or its officers or agents shall not be responsible for the accuracy or completeness of electronic copies of this plan sheet.

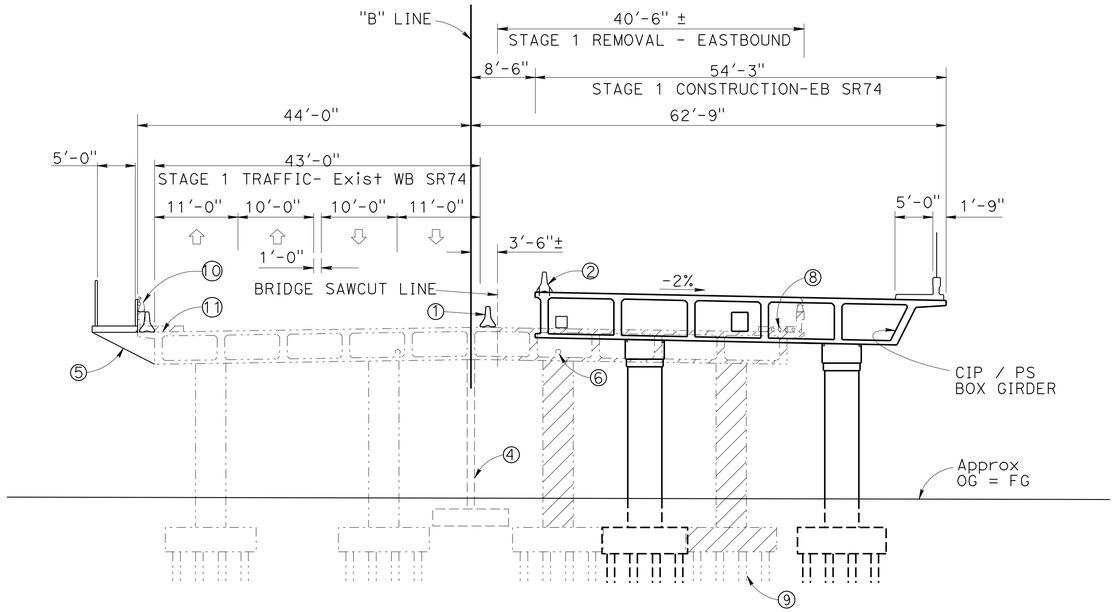

STAGE 1 CONSTRUCTION

1" = 10'

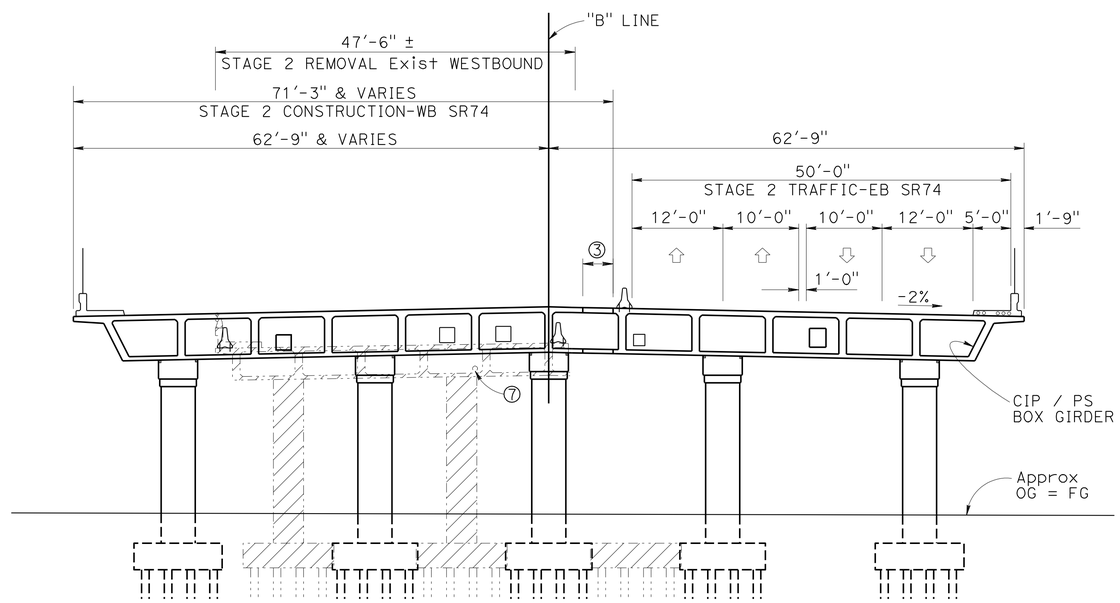

STAGE 2 CONSTRUCTION

1" = 10'

NOTE:
THE CONTRACTOR SHALL VERIFY ALL CONTROLLING FIELD DIMENSIONS BEFORE ORDERING OR FABRICATING ANY MATERIAL.

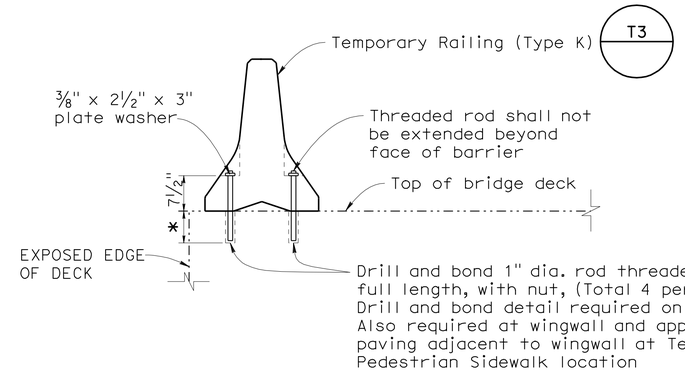

TEMPORARY RAILING (TYPE K) ATTACHMENT DETAIL

NO SCALE

NOTE:
See "ROAD PLANS" for Temporary Railing (Type K) information not shown here

* 5" at existing structure deck
6" at new structure or existing structure overhang

TEMPORARY SUPPORT TABLE			
LOCATION	DL+LL+I (k)	DL (k)	LATERAL LOAD (k)
BENT 2	322	222	22

LIVE LOADING: HS20-44 ONLY. NO PERMIT VEHICLES SHALL BE ALLOWED ON THE STRUCTURE DURING STAGE 1 Const.

LEGEND:

Indicates existing structure

Bridge Removal

Direction of traffic

NOTES:

1. Temp Railing (Type K), Stage 1, attach to structure, see detail this sheet.
2. Temp Railing (Type K), Stage 2, attach to structure, see detail this sheet.
3. Closure pour, 4'-0"
4. Indicates location of temporary support under cantilever bent cap of existing bridge. Schematic only. Place before removal of any portion of existing structure. See Temporary Support Table on this sheet.
5. See "TEMPORARY PEDESTRIAN SIDEWALK LAYOUT PLAN" sheet. To be removed after Stage 1 bridge construction is open to traffic.
6. Existing SCG 6" ø gas line in 10" casing. To be relocated prior to demolition, see Road Plans
7. Existing CSJC 8" ø water line in 12" casing. To be relocated prior to demolition, see Road Plans
8. Existing ducts for signals and lighting to be relocated prior to barrier removal, see Road Plans
9. Top of existing piles to be removed to bottom of new footing elevations.
10. Existing sidewalk and barrier to be removed
11. Refinish Bridge Deck

	BY	CHECKED
DESIGN	CHARLES LOMICKA	MAMUNUR RAHMAN
DETAILS	HENGAMEH MAHBOOBI / H.B.	MAMUNUR RAHMAN
QUANTITIES	CHARLES LOMICKA	SHAN-PIN YEH

STATE OF CALIFORNIA
DEPARTMENT OF TRANSPORTATION

DIVISION OF ENGINEERING SERVICES
STRUCTURE DESIGN
DESIGN BRANCH 19

BRIDGE NO. 55-1104
POST MILE 0.01

ROUTE 74/5 SEPARATION (REPLACE)
CONSTRUCTION STAGING PLAN

STRUCTURES DESIGN DETAIL SHEET (ENGLISH) (REV. 09-01-10)

ORIGINAL SCALE IN INCHES FOR REDUCED PLANS 0 1 2 3

UNIT: 3621
PROJECT NUMBER & PHASE: 1200000102 1 CONTRACT NO.: 12-0E3101

DISREGARD PRINTS BEARING EARLIER REVISION DATES

REVISION DATES 6-28-10 03-14-12 03-07-12

SHEET 4 OF 38

FILE => 55-1104-b-stagging.dgn

USERNAME => s127614 DATE PLOTTED => 15-APR-2012 TIME PLOTTED => 09:43

DIST	COUNTY	ROUTE	POST MILES TOTAL PROJECT	SHEET No.	TOTAL SHEETS
12	Ora	5,74	9.3/10.0, 0.0/0.2	421	515

Charles Lomicka 03-14-12
REGISTERED CIVIL ENGINEER DATE

4-9-12
PLANS APPROVAL DATE

REGISTERED PROFESSIONAL ENGINEER
CHARLES LOMICKA
No. C 71172
Exp. 6/30/13
CIVIL
STATE OF CALIFORNIA

The State of California or its officers or agents shall not be responsible for the accuracy or completeness of electronic copies of this plan sheet.

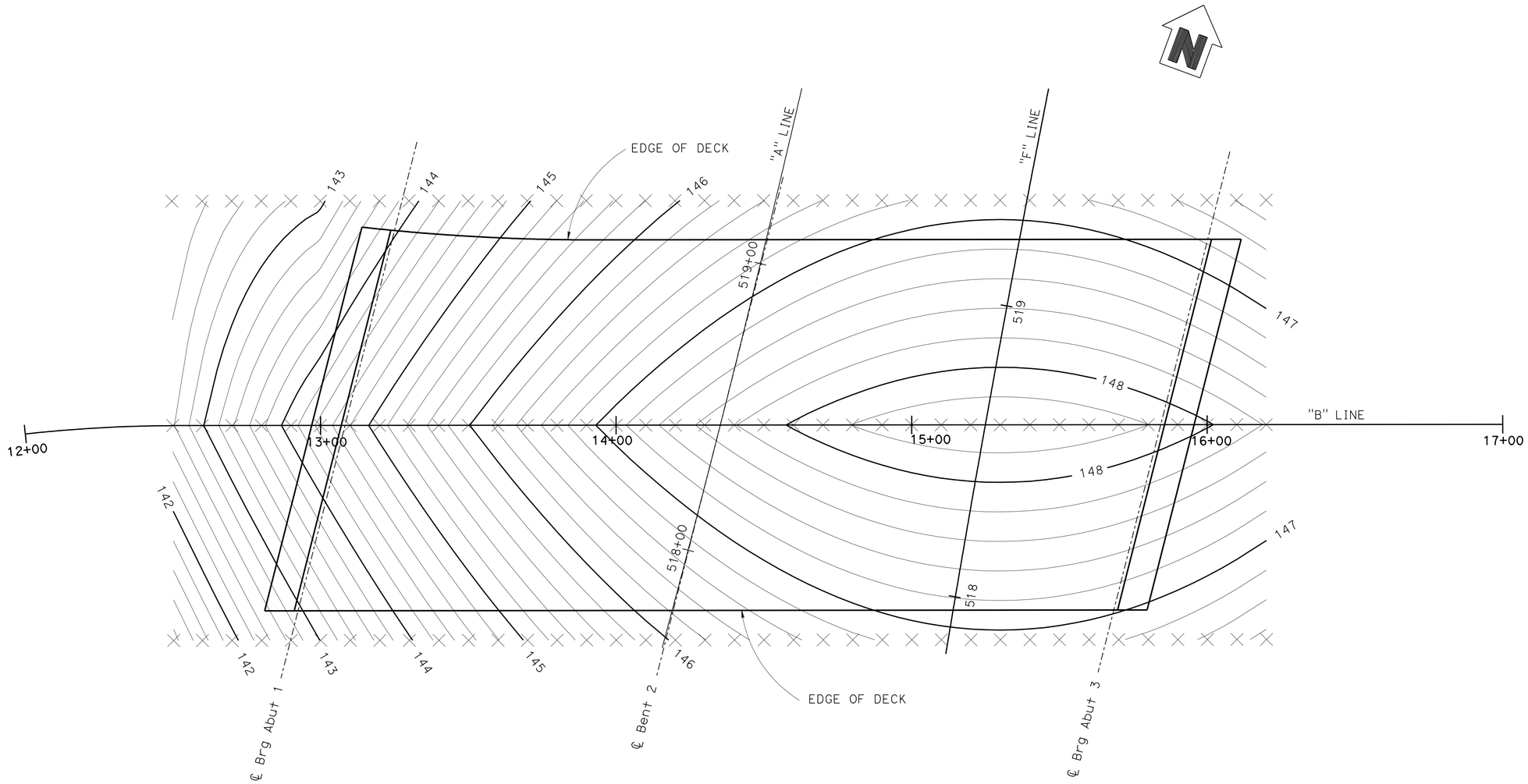

PLAN
1" = 20'

NOTE:
THE CONTRACTOR SHALL VERIFY ALL CONTROLLING FIELD DIMENSIONS BEFORE ORDERING OR FABRICATING ANY MATERIAL.

NOTES:
1. X - Denotes 10'-0" intervals along station line.
2. Contour interval = 0.20
3. Contours do not include camber.

	BY	CHECKED
DESIGN	CHARLES LOMICKA	MAMUNUR RAHMAN
DETAILS	HENGAMEH MAHBOOBI	MAMUNUR RAHMAN
QUANTITIES	CHARLES LOMICKA	SHAN-PIN YEH

STATE OF CALIFORNIA
DEPARTMENT OF TRANSPORTATION

DIVISION OF ENGINEERING SERVICES
STRUCTURE DESIGN
DESIGN BRANCH 19

BRIDGE NO. 55-1104
POST MILE 0.01

ROUTE 74/5 SEPARATION (REPLACE)
DECK CONTOURS

STRUCTURES DESIGN DETAIL SHEET (ENGLISH) (REV. 09-01-10)

ORIGINAL SCALE IN INCHES FOR REDUCED PLANS 0 1 2 3

UNIT: 3621
PROJECT NUMBER & PHASE: 1200000102 1 CONTRACT NO.: 0E3101

DISREGARD PRINTS BEARING EARLIER REVISION DATES

REVISION DATES: 02-25-11 03-14-12 10-25-11

SHEET 5 OF 38

FILE => 55-1104-d-dc01.dgn

USERNAME => s121614 DATE PLOTTED => 15-APR-2012 TIME PLOTTED => 09:43

DIST	COUNTY	ROUTE	POST MILES TOTAL PROJECT	SHEET No.	TOTAL SHEETS
12	Ora	5,74	9.3/10.0, 0.0/0.2	422	515

Charles Lomicka 03-14-12
REGISTERED CIVIL ENGINEER DATE

4-9-12
PLANS APPROVAL DATE

REGISTERED PROFESSIONAL ENGINEER CHARLES LOMICKA No. C 71172 Exp. 06/30/13 CIVIL STATE OF CALIFORNIA

The State of California or its officers or agents shall not be responsible for the accuracy or completeness of electronic copies of this plan sheet.

① Sta 12+35.07, "B" LINE, ℄ ROUTE 74 =
Sta 517+68.22, "C" LINE, SB ON-RAMP
② Sta 12+80.00, "B" LINE, ℄ ROUTE 74 =
Sta 518+20.90, "D" LINE, SB OFF-RAMP
③ Sta 14+35.26, "B" LINE, ℄ ROUTE 74 =
Sta 518+43.70, "A" LINE, ℄ ROUTE 5
④ Sta 15+24.93, "B" LINE, ℄ ROUTE 74 =
Sta 518+59.03, "F" LINE, NB LOOP ON-RAMP
⑤ Sta 16+27.38, "B" LINE, ℄ ROUTE 74 =
Sta 518+56.88, "E" LINE, NB ON-RAMP

CURVE DATA				
No.	R	Δ	T	L
(E)	480.00	76°10'36"	376.21	638.17
(F)	5480.00	51°48'13"	2661.16	4954.71
(G)	145.00	174°05'19"	2808.27	440.57
(H)	6455.21	02°21'34"	132.93	265.82

EXISTING BRIDGE LOCATION (55-0229)

(A) 108.05 Ft Lt ℄ Rte.5, "A" Line, Sta 518+55.28, Elev= 139.68±
(B) 108.71 Ft Rt ℄ Rte.5, "A" Line, Sta 519+09.07, Elev= 143.53±
(C) 107.81 Ft Lt ℄ Rte.5, "A" Line, Sta 517+75.69, Elev= 139.06±
(D) 108.67 Ft Rt ℄ Rte.5, "A" Line, Sta 518+32.48, Elev= 143.48±

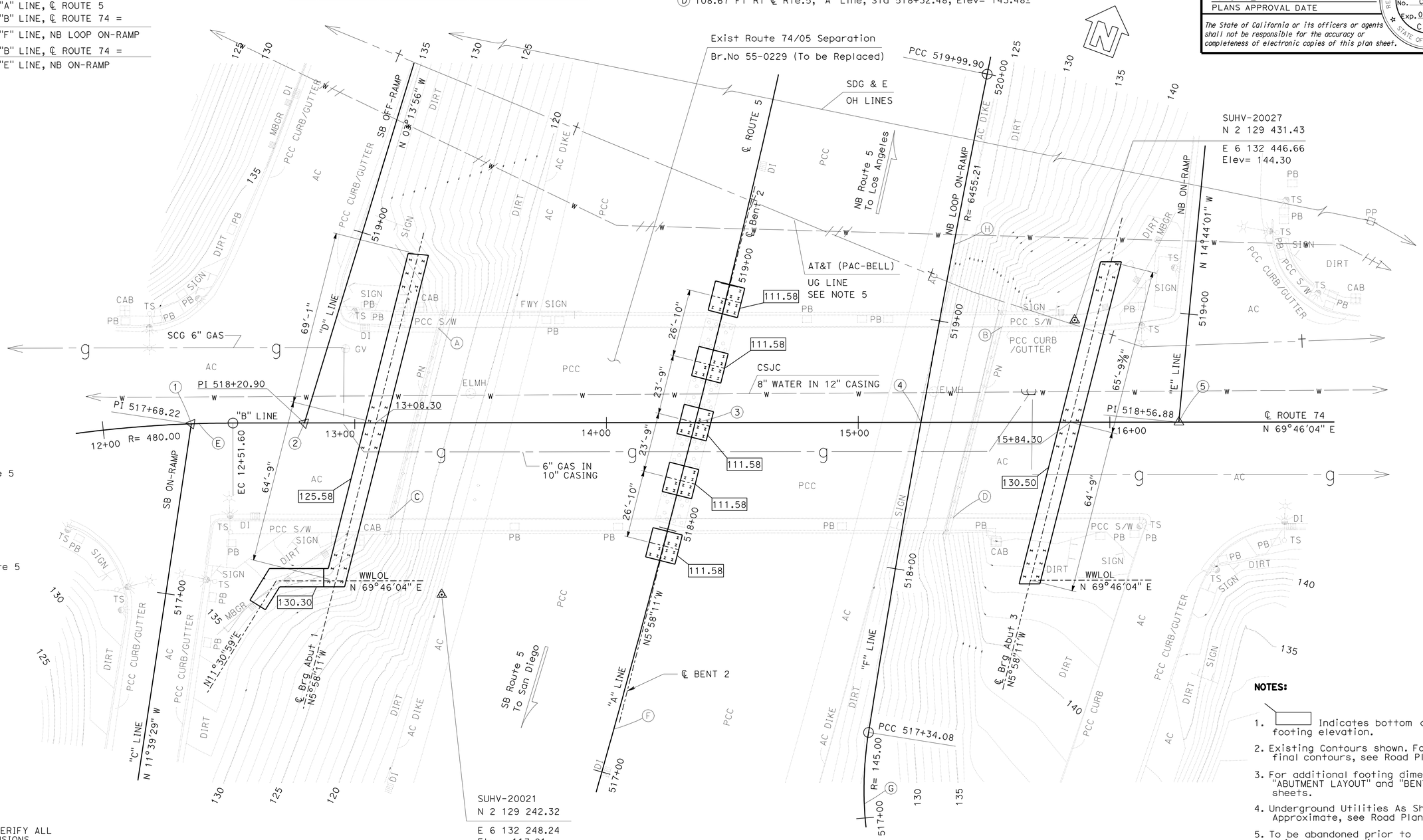

SURVEY CONTROL

SUHV-20021

FND PK/TIN
80.10 Ft Lt ℄ Route 5
Sta 517+51.39
N 2 129 242.32
E 6 132 248.24
Elev= 117.01

SUHV-20027

FND PK/NAIL
136.66 Ft Rt ℄ Route 5
Sta 519+18.34
N 2 129 431.43
E 6 132 446.66
Elev= 144.30

NOTE:
THE CONTRACTOR SHALL VERIFY ALL CONTROLLING FIELD DIMENSIONS BEFORE ORDERING OR FABRICATING ANY MATERIAL.

NOTES:

1. ▭ Indicates bottom of footing elevation.
2. Existing Contours shown. For final contours, see Road Plans
3. For additional footing dimensions, see "ABUTMENT LAYOUT" and "BENT LAYOUT" sheets.
4. Underground Utilities As Shown Are Approximate, see Road Plans
5. To be abandoned prior to bridge construction

PRELIMINARY INVESTIGATION SECTION

SCALE 1"=20'	VERT.DATUM NAVD88	PHOTOGRAMMETRY AS OF: X		
	HORZ.DATUM NAD83 (1991.35)	SURVEYED	BY DISTRICT 12	CHECKED BY T.PHUNG 4/2010
ALIGNMENT TIES DIST.TRAVERSE SHEETS		DRAFTED	BY V.PHAM 5/2010	CHECKED BY S.ALIVIO 5/2010

DESIGN	BY CHARLES LOMICKA	CHECKED MAMUNUR RAHMAN
DETAILS	BY HENGAMEH MAHBOOBI	CHECKED MAMUNUR RAHMAN
QUANTITIES	BY CHARLES LOMICKA	CHECKED SHAN-PIN YEH

STATE OF CALIFORNIA
DEPARTMENT OF TRANSPORTATION

DIVISION OF ENGINEERING SERVICES
STRUCTURE DESIGN
DESIGN BRANCH 19

BRIDGE NO. 55-1104
POST MILE 0.01

ROUTE 74/5 SEPARATION (REPLACE)
FOUNDATION PLAN

STRUCTURES FOUNDATION PLAN SHEET (ENGLISH) (REV. 09-01-10)

ORIGINAL SCALE IN INCHES FOR REDUCED PLANS 0 1 2 3

UNIT: 3621
PROJECT NUMBER & PHASE: 1200000102 1 CONTRACT NO.: 0E3101

DISREGARD PRINTS BEARING EARLIER REVISION DATES →

REVISION DATES				SHEET	OF
5/08/10		03-14-12	12-07-11	6	38

FILE => 55-1104-e-fdp101.dgn

DIST	COUNTY	ROUTE	POST MILES TOTAL PROJECT	SHEET No.	TOTAL SHEETS
12	Ora	5,74	9.3/10.0, 0.0/0.2	423	515

Charles Lomicka 03-14-12
REGISTERED CIVIL ENGINEER DATE

4-9-12
PLANS APPROVAL DATE

REGISTERED PROFESSIONAL ENGINEER CHARLES LOMICKA No. C 71172 Exp. 6/30/13 CIVIL STATE OF CALIFORNIA

The State of California or its officers or agents shall not be responsible for the accuracy or completeness of electronic copies of this plan sheet.

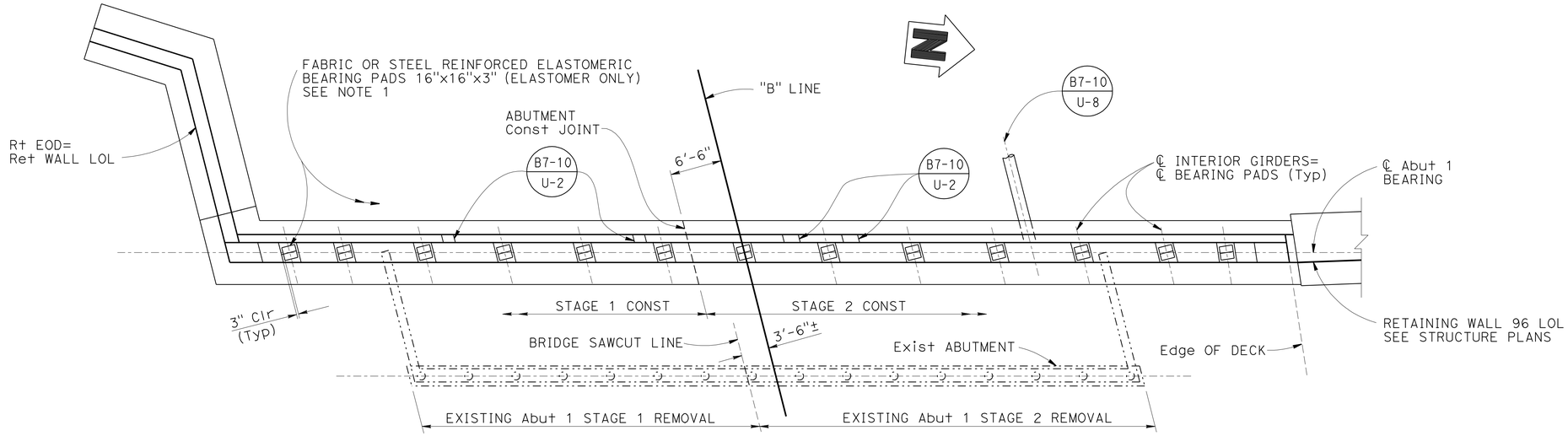

PLAN
1/8" = 1'-0"

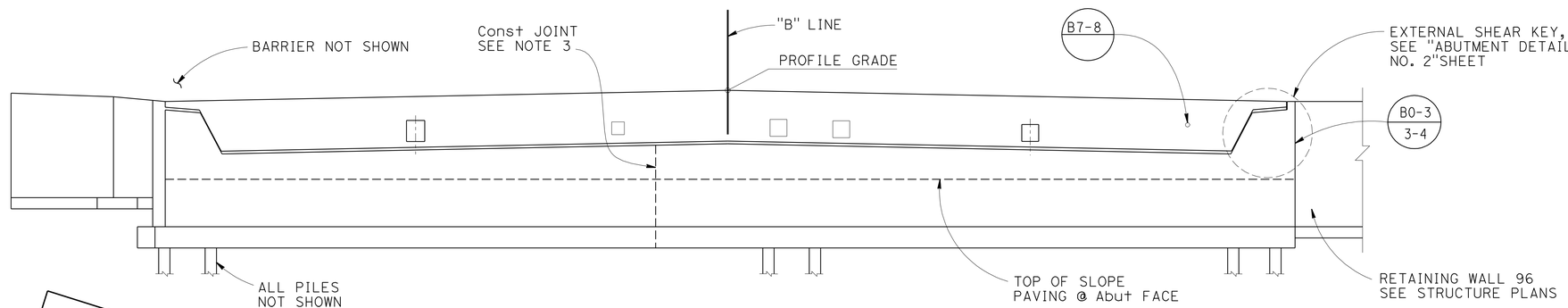

ELEVATION
1/8" = 1'-0"

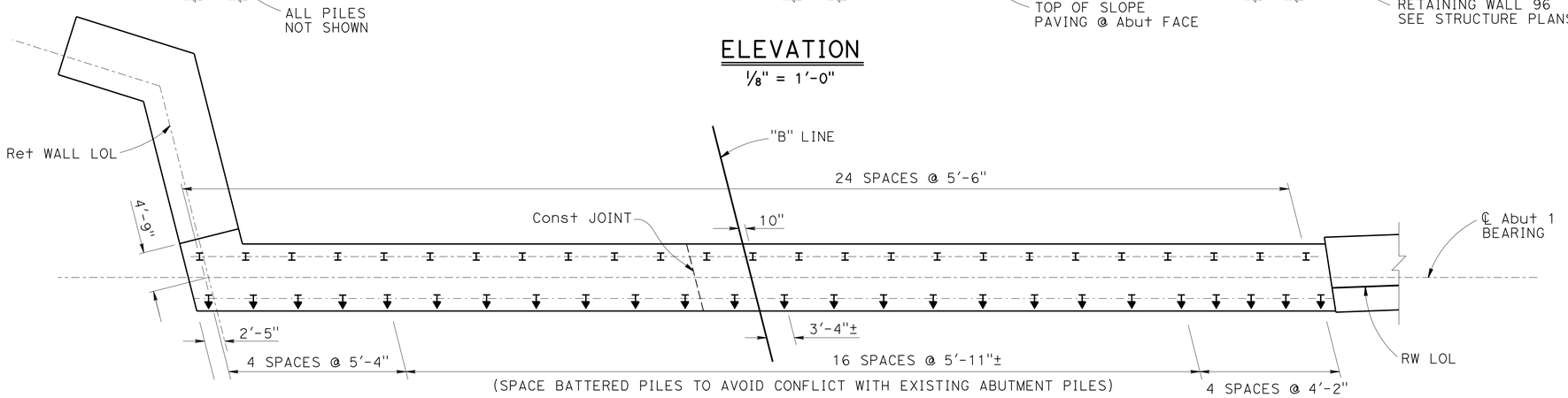

FOOTING PLAN
1/8" = 1'-0"

NOTE:
THE CONTRACTOR SHALL VERIFY ALL CONTROLLING FIELD DIMENSIONS BEFORE ORDERING OR FABRICATING ANY MATERIAL.

NOTES:

1. For additional bearing pad details see "ABUTMENT DETAILS NO. 1" sheet.
2. For additional abutment details and dimensions, see "ABUTMENT DETAILS NO. 1, NO. 2, NO. 3 AND NO. 4" sheets
3. Splice abutment and footing longitudinal reinforcement.

LEGEND:

- I — INDICATES VERTICAL STEEL HP PILE
- ↧ — INDICATES 1:3 BATTERED STEEL HP PILE
- ···-··-··- — INDICATES EXISTING STRUCTURE

	BY	CHECKED
DESIGN	CHARLES LOMICKA	MAMUNUR RAHMAN
DETAILS	HENGAMEH MAHBOOBI	MAMUNUR RAHMAN
QUANTITIES	CHARLES LOMICKA	SHAN-PIN YEH

STATE OF CALIFORNIA
DEPARTMENT OF TRANSPORTATION

DIVISION OF ENGINEERING SERVICES
STRUCTURE DESIGN
DESIGN BRANCH 19

BRIDGE NO. 55-1104
POST MILE 0.01

ROUTE 74/5 SEPARATION (REPLACE)
ABUTMENT 1 LAYOUT

STRUCTURES DESIGN DETAIL SHEET (ENGLISH) (REV. 09-01-10)

ORIGINAL SCALE IN INCHES FOR REDUCED PLANS 0 1 2 3

UNIT: 3621
PROJECT NUMBER & PHASE: 1200000102 1 CONTRACT NO.: 12-0E3101

DISREGARD PRINTS BEARING EARLIER REVISION DATES

REVISION DATES 01-19-11 03-14-12 11-10-11

SHEET 7 OF 38

FILE => 55-1104-f-a01_lo01.dgn

USERNAME => s121614 DATE PLOTTED => 09:44

DIST	COUNTY	ROUTE	POST MILES TOTAL PROJECT	SHEET No.	TOTAL SHEETS
12	Ora	5,74	9.3/10.0, 0.0/0.2	424	515

Charles Lomicka 03-14-12
REGISTERED CIVIL ENGINEER DATE

4-9-12
PLANS APPROVAL DATE

REGISTERED PROFESSIONAL ENGINEER
CHARLES LOMICKA
No. C 71172
Exp. 6/30/13
CIVIL
STATE OF CALIFORNIA

The State of California or its officers or agents shall not be responsible for the accuracy or completeness of electronic copies of this plan sheet.

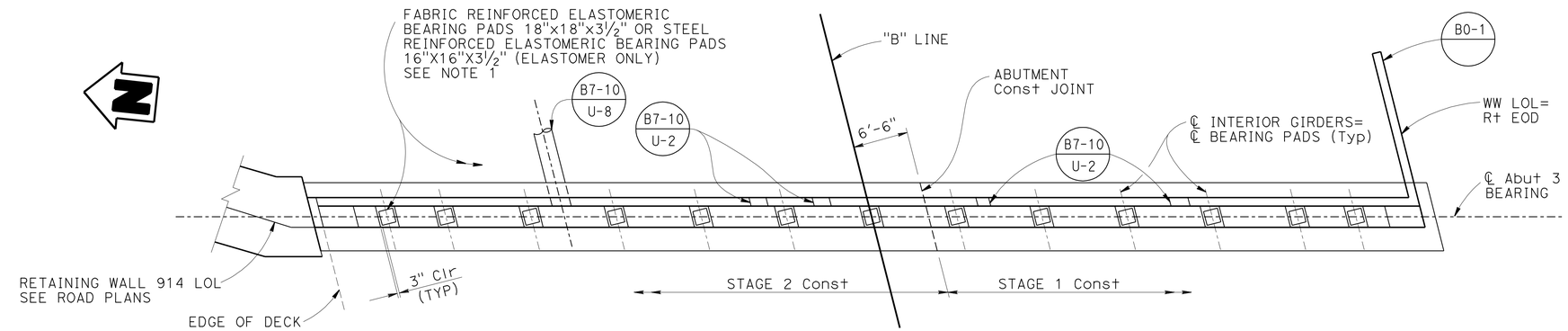

PLAN

⅛" = 1'-0"

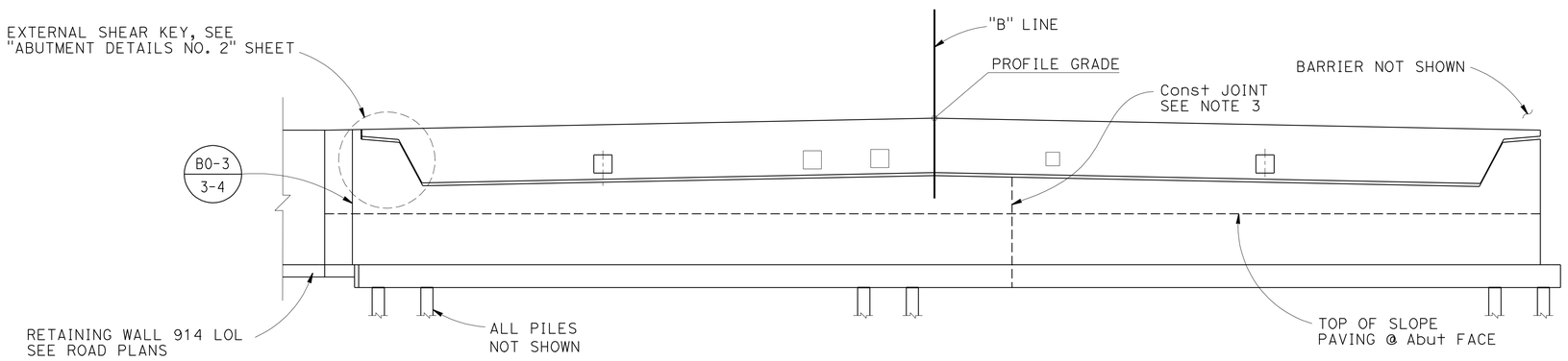

ELEVATION

⅛" = 1'-0"

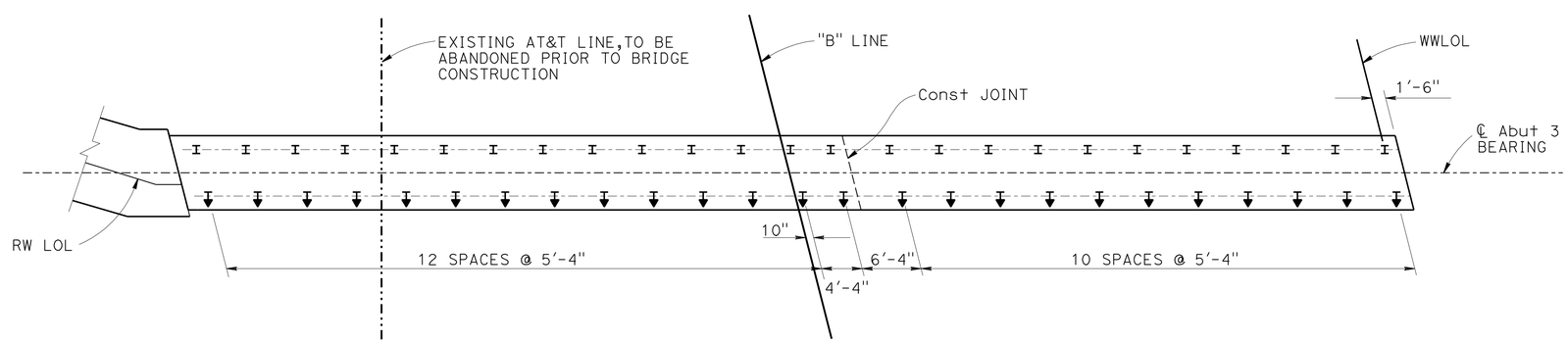

FOOTING PLAN

⅛" = 1'-0"

NOTE:
THE CONTRACTOR SHALL VERIFY ALL CONTROLLING FIELD DIMENSIONS BEFORE ORDERING OR FABRICATING ANY MATERIAL.

LEGEND:

I INDICATES VERTICAL STEEL HP PILE

I INDICATES 1:3 BATTERED STEEL HP PILE

NOTES:

1. For additional bearing pad details see "ABUTMENT DETAILS NO. 1" sheet.
2. For additional abutment details and dimensions, see "ABUTMENT DETAILS NO. 1, NO.2, NO. 3 AND NO. 4" sheets
3. Splice abutment and footing longitudinal reinforcement.
4. Underground utilities as shown are approximate. Contractor to verify location prior to pile driving. Adjustment of pile locations shall be approved by the Engineer.

	BY	CHECKED
DESIGN	CHARLES LOMICKA	MAMUNUR RAHMAN
DETAILS	HENGAMEH MAHBOOBI	MAMUNUR RAHMAN
QUANTITIES	CHARLES LOMICKA	SHAN-PIN YEH

STATE OF CALIFORNIA
DEPARTMENT OF TRANSPORTATION

DIVISION OF ENGINEERING SERVICES
STRUCTURE DESIGN
DESIGN BRANCH 19

BRIDGE NO. 55-1104
POST MILE 0.01

ROUTE 74/5 SEPARATION (REPLACE)
ABUTMENT 3 LAYOUT

STRUCTURES DESIGN DETAIL SHEET (ENGLISH) (REV. 09-01-10)

ORIGINAL SCALE IN INCHES FOR REDUCED PLANS 0 1 2 3

UNIT: 3621
PROJECT NUMBER & PHASE: 1200000102 1 CONTRACT NO.: 12-0E3101

DISREGARD PRINTS BEARING EARLIER REVISION DATES

REVISION DATES: 01-26-11 03-14-12 11-18-11

SHEET 8 OF 38

FILE => 55-1104-f-a03_1o02.dgn

USERNAME => s12764 DATE PLOTTED => 15-APR-2012 TIME PLOTTED => 09:44

DIST	COUNTY	ROUTE	POST MILES TOTAL PROJECT	SHEET No.	TOTAL SHEETS
12	Ora	5,74	9.3/10.0, 0.0/0.2	425	515

Charles Lomicka 03-14-12
REGISTERED CIVIL ENGINEER DATE

4-9-12
PLANS APPROVAL DATE

REGISTERED PROFESSIONAL ENGINEER
CHARLES LOMICKA
No. C 71172
Exp. 6/30/13
CIVIL
STATE OF CALIFORNIA

The State of California or its officers or agents shall not be responsible for the accuracy or completeness of electronic copies of this plan sheet.

NOTE:

1. For dimensions L & W, see "ABUTMENT 1 LAYOUT" and "ABUTMENT 3 LAYOUT" sheets.

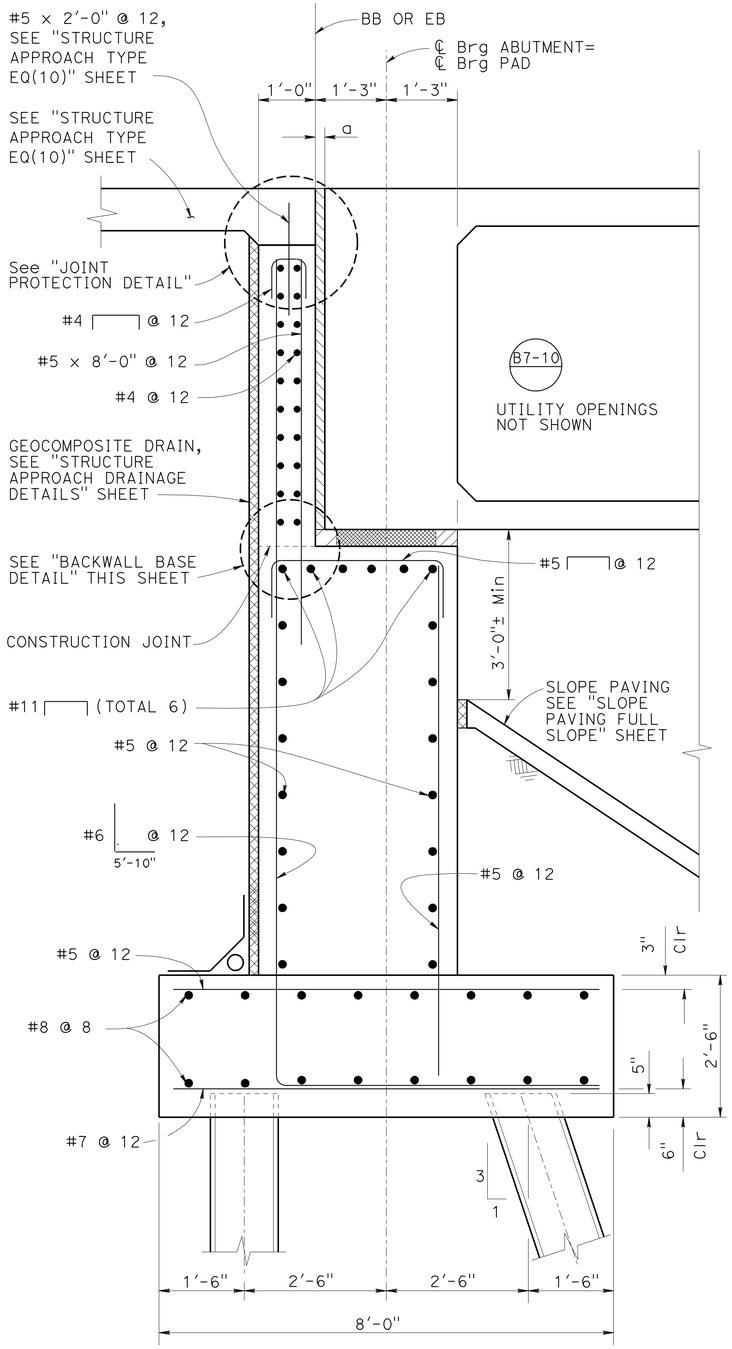

ABUTMENT SECTION

3/4" = 1'-0"

NOTE:
THE CONTRACTOR SHALL VERIFY ALL CONTROLLING FIELD DIMENSIONS BEFORE ORDERING OR FABRICATING ANY MATERIAL.

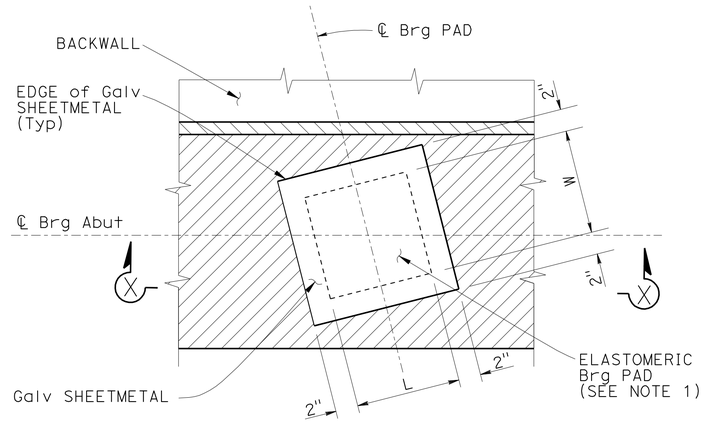

PLAN

NO SCALE

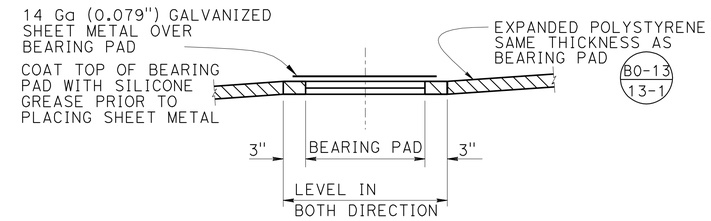

SECTION X-X

NO SCALE
(DETAILS TYPICAL AT ALL BEARING PADS)

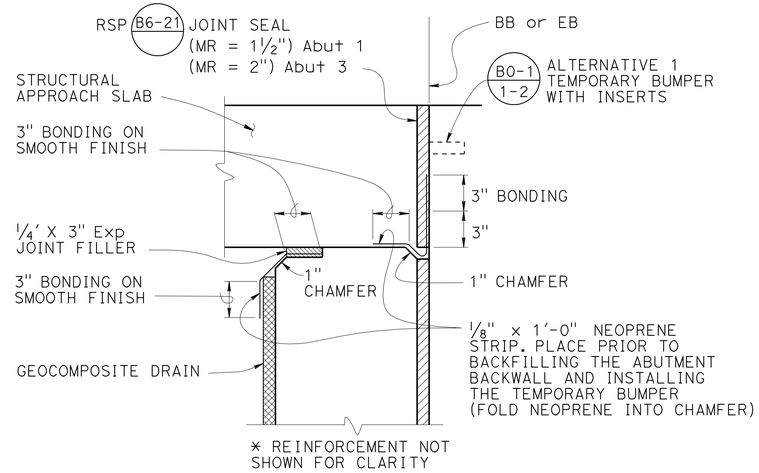

JOINT PROTECTION DETAIL

NO SCALE

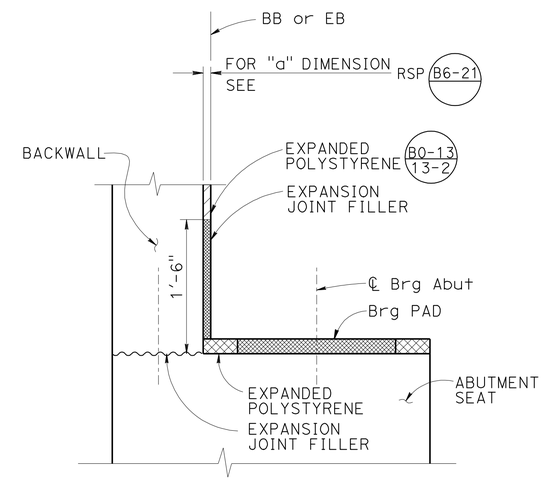

BACKWALL BASE DETAIL

NO SCALE

DESIGN	BY CHARLES LOMICKA	CHECKED MAMUNUR RAHMAN	
DETAILS	BY HENGAMEH MAHBOOBI	CHECKED MAMUNUR RAHMAN	
QUANTITIES	BY CHARLES LOMICKA	CHECKED SHAN-PIN YEH	

STATE OF CALIFORNIA
DEPARTMENT OF TRANSPORTATION

DIVISION OF ENGINEERING SERVICES
STRUCTURE DESIGN
DESIGN BRANCH 19

BRIDGE NO. 55-1104
POST MILE 0.01

ROUTE 74/5 SEPARATION (REPLACE)
ABUTMENT DETAILS NO. 1

STRUCTURES DESIGN DETAIL SHEET (ENGLISH) (REV. 09-01-10)

ORIGINAL SCALE IN INCHES FOR REDUCED PLANS 0 1 2 3

UNIT: 3621
PROJECT NUMBER & PHASE: 1200000102 1 CONTRACT NO.: 12-0E3101

DISREGARD PRINTS BEARING EARLIER REVISION DATES

REVISION DATES: 01-26-11 03-14-12 11-08-11

SHEET 9 OF 38

FILE => 55-1104-f-adet_01.dgn

USERNAME => s121614 DATE PLOTTED => 15-APR-2012 TIME PLOTTED => 09:44

DIST	COUNTY	ROUTE	POST MILES TOTAL PROJECT	SHEET No.	TOTAL SHEETS
12	Ora	5,74	9.3/10.0, 0.0/0.2	426	515

Charles Lomicka 03-14-12
REGISTERED CIVIL ENGINEER DATE

4-9-12
PLANS APPROVAL DATE

REGISTERED PROFESSIONAL ENGINEER CHARLES LOMICKA No. C 71172 Exp. 6/30/13 CIVIL STATE OF CALIFORNIA

The State of California or its officers or agents shall not be responsible for the accuracy or completeness of electronic copies of this plan sheet.

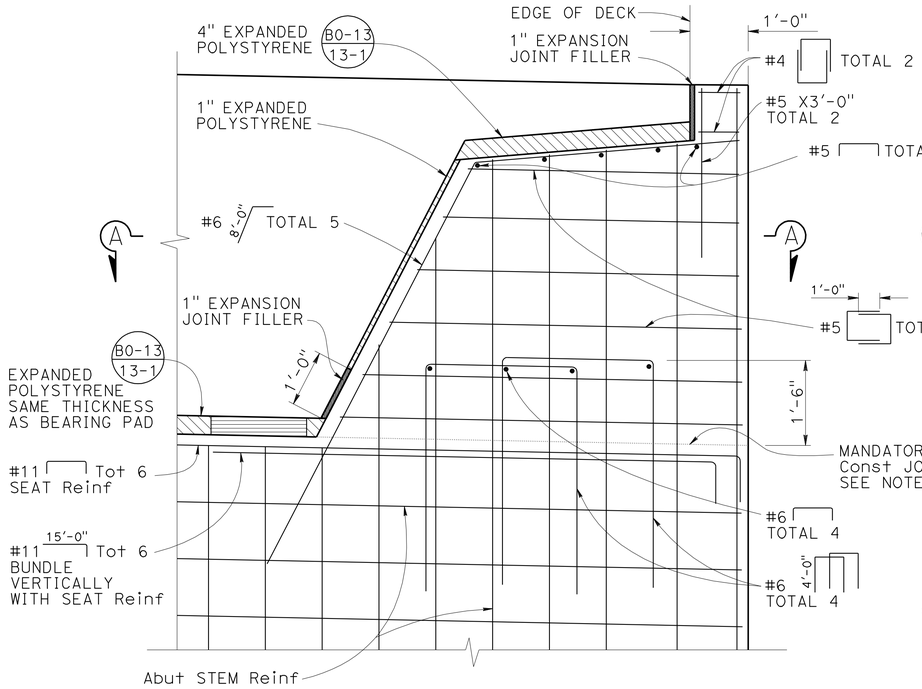

TYPICAL EXTERNAL SHEAR KEY @ ABUT 1 & 3 LEFT

3/4" = 1'-0" Abut 1 SHOWN, Abut 3 SIMILAR

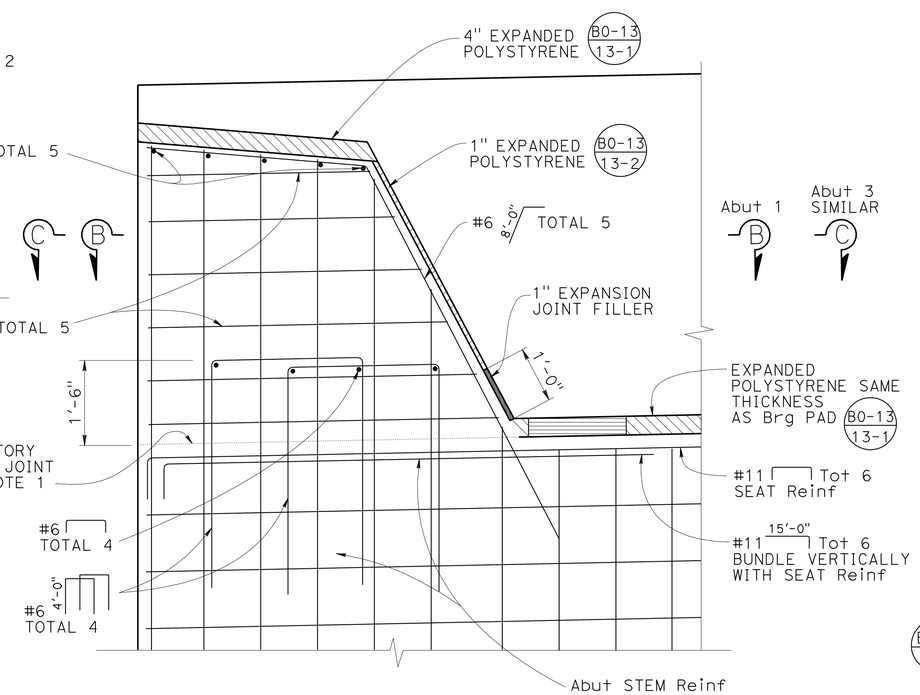

TYPICAL EXTERNAL SHEAR KEY @ ABUT 1 & 3 RIGHT

3/4" = 1'-0" Abut 1 SHOWN, Abut 3 SIMILAR

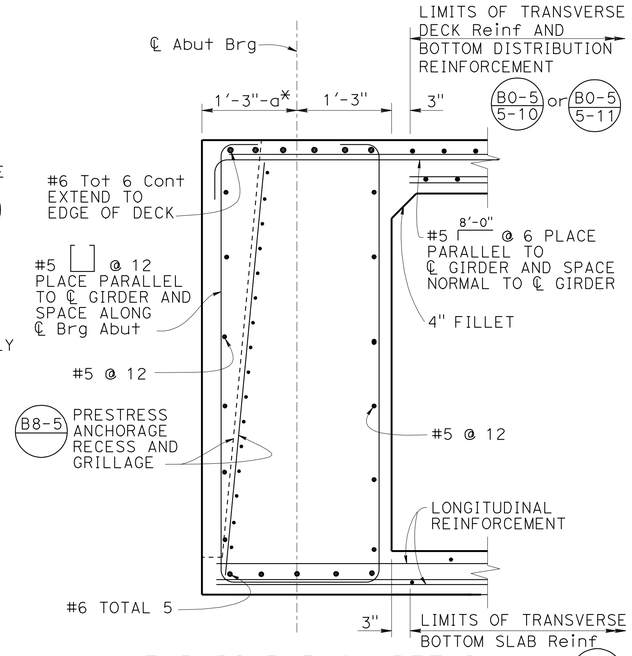

END DIAPHRAGM DETAIL

B7-1 S-2

1" = 1'-0"

* SEE "ABUTMENT DETAILS NO. 1" SHEET

NOTE:

1. Mandatory joint surface to be free of laitance with surface roughened to an amplitude of 1/4".

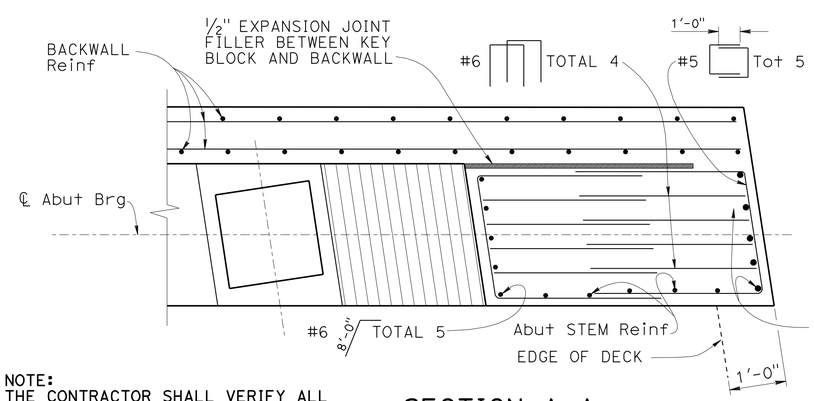

SECTION A-A

3/4" = 1'-0"

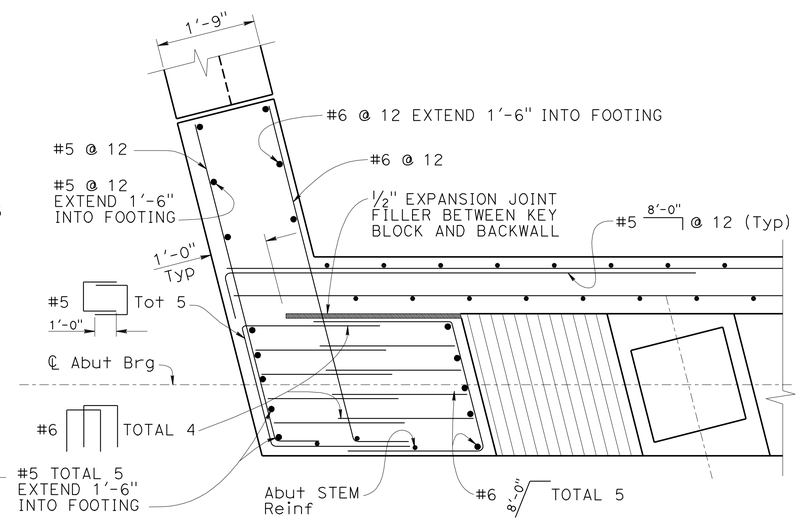

SECTION B-B - ABUT 1 RIGHT

3/4" = 1'-0"

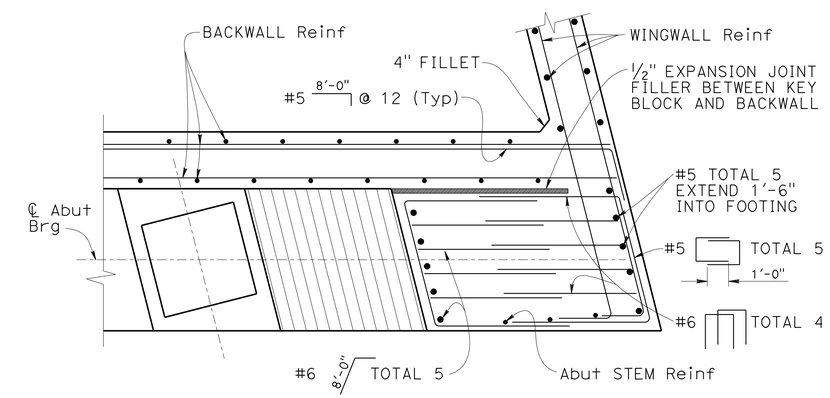

SECTION C-C - ABUT 3 RIGHT

3/4" = 1'-0"

NOTE:
THE CONTRACTOR SHALL VERIFY ALL CONTROLLING FIELD DIMENSIONS BEFORE ORDERING OR FABRICATING ANY MATERIAL.

DESIGN	BY CHARLES LOMICKA	CHECKED MAMUNUR RAHMAN	
DETAILS	BY HENGAMEH MAHBOOBI	CHECKED MAMUNUR RAHMAN	
QUANTITIES	BY CHARLES LOMICKA	CHECKED SHAN-PIN YEH	

STATE OF CALIFORNIA
DEPARTMENT OF TRANSPORTATION

DIVISION OF ENGINEERING SERVICES
STRUCTURE DESIGN
DESIGN BRANCH 19

BRIDGE NO. 55-1104
POST MILE 0.01

ROUTE 74/5 SEPARATION (REPLACE)
ABUTMENT DETAILS NO. 2

STRUCTURES DESIGN DETAIL SHEET (ENGLISH) (REV. 09-01-10)

ORIGINAL SCALE IN INCHES FOR REDUCED PLANS 0 1 2 3

UNIT: 3621
PROJECT NUMBER & PHASE: 1200000102 1 CONTRACT NO.: 12-0E3101

DISREGARD PRINTS BEARING EARLIER REVISION DATES

REVISION DATES 01-27-11 03-14-12 10-25-12

SHEET 10 OF 38

FILE => 55-1104-f-adet_02.dgn

USERNAME => s121614 DATE PLOTTED => 15-APR-2012 TIME PLOTTED => 08:44

DIST	COUNTY	ROUTE	POST MILES TOTAL PROJECT	SHEET No.	TOTAL SHEETS
12	Ora	5,74	9.3/10.0, 0.0/0.2	427	515

Charles Lomicka 03-14-12
REGISTERED CIVIL ENGINEER DATE

4-9-12
PLANS APPROVAL DATE

REGISTERED PROFESSIONAL ENGINEER
CHARLES LOMICKA
No. C 71172
Exp. 06/30/13
CIVIL
STATE OF CALIFORNIA

The State of California or its officers or agents shall not be responsible for the accuracy or completeness of electronic copies of this plan sheet.

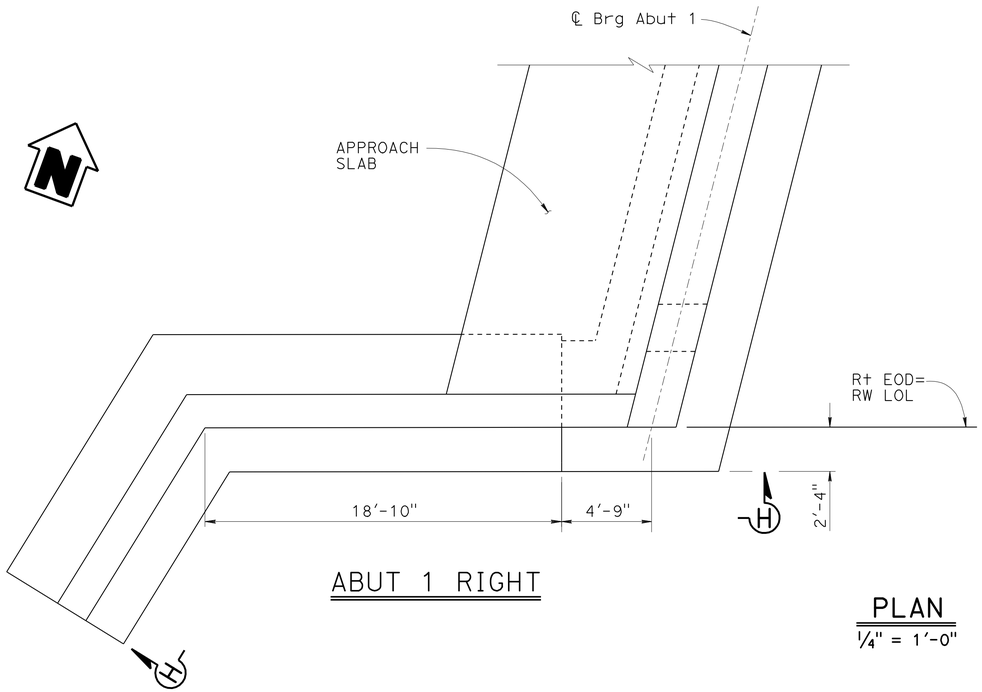

ABUT 1 RIGHT

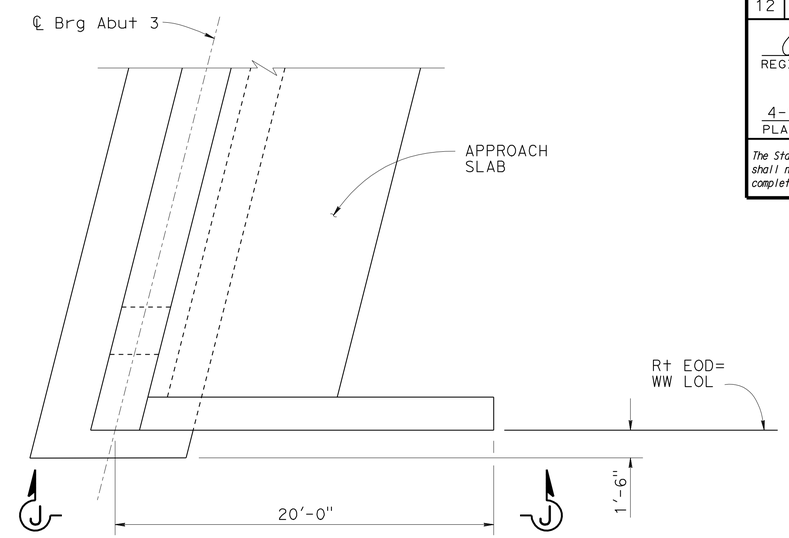

ABUT 3 RIGHT

PLAN
1/4" = 1'-0"

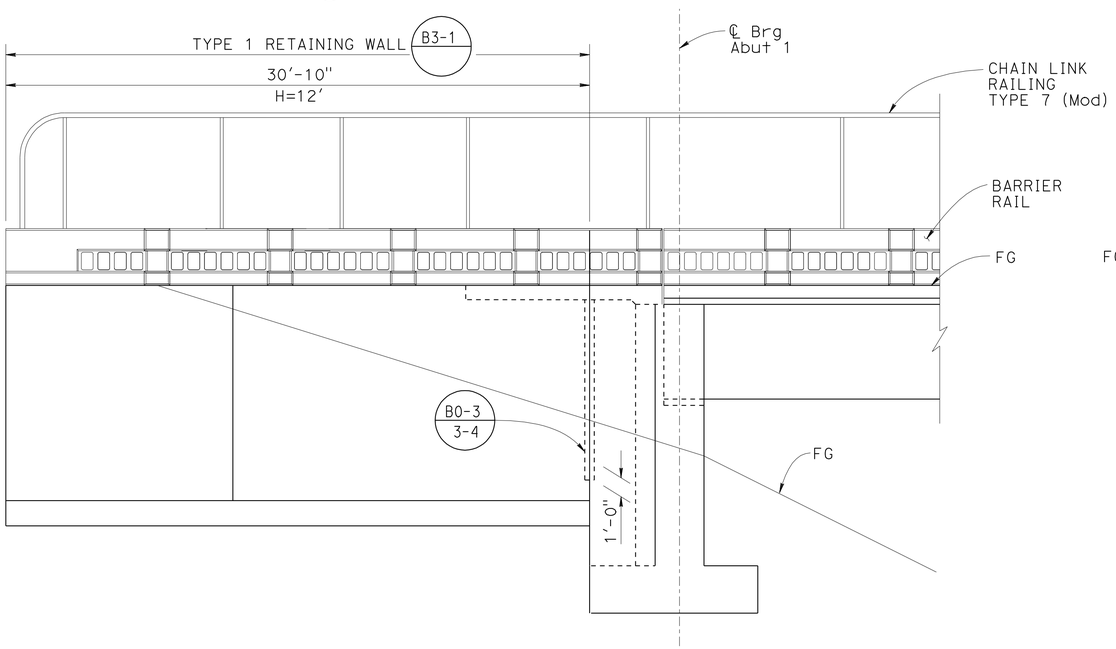

DEVELOPED ELEVATION H-H
1/4" = 1'-0"
B3-1 B0-3

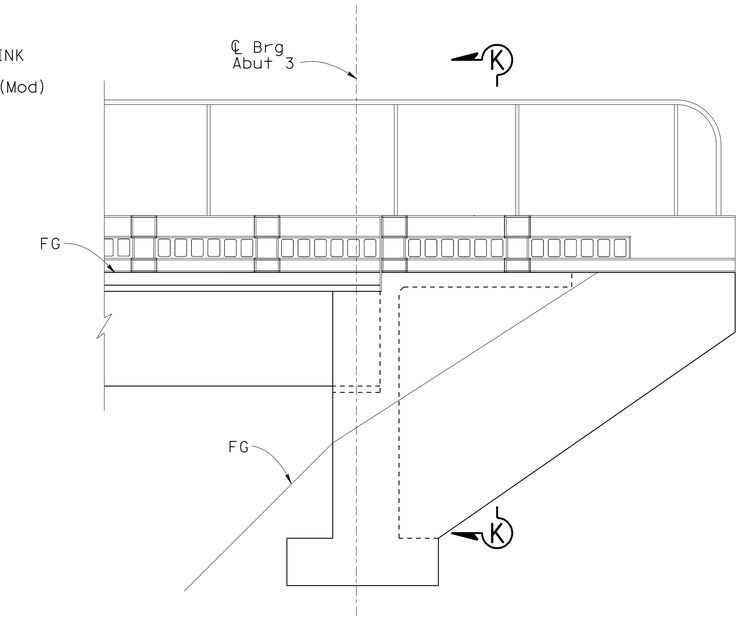

WINGWALL ELEVATION J-J
1/4" = 1'-0"

NOTE:
For Section K-K, see "ABUTMENT DETAILS NO. 4" sheet.

NOTE:
THE CONTRACTOR SHALL VERIFY ALL CONTROLLING FIELD DIMENSIONS BEFORE ORDERING OR FABRICATING ANY MATERIAL.

	BY	CHECKED
DESIGN	CHARLES LOMICKA	MAMUNUR RAHMAN
DETAILS	HEMANT BARBHAIYA	MAMUNUR RAHMAN
QUANTITIES	CHARLES LOMICKA	SHAN-PIN YEH

STATE OF CALIFORNIA
DEPARTMENT OF TRANSPORTATION

DIVISION OF ENGINEERING SERVICES
STRUCTURE DESIGN
DESIGN BRANCH 19

BRIDGE NO. 55-1104
POST MILE 0.01

ROUTE 74/5 SEPARATION (REPLACE)
ABUTMENT DETAILS NO. 3

STRUCTURES DESIGN DETAIL SHEET (ENGLISH) (REV. 09-01-10)

ORIGINAL SCALE IN INCHES FOR REDUCED PLANS 0 1 2 3

UNIT: 3621
PROJECT NUMBER & PHASE: 1200000102 1 CONTRACT NO.: 12-0E3101

DISREGARD PRINTS BEARING EARLIER REVISION DATES

REVISION DATES: 02-14-11 03-14-12 11-06-11

SHEET 11 OF 38

FILE => 55-1104-f-adet_03.dgn

USERNAME => s121614 DATE PLOTTED => 15-APR-2012 TIME PLOTTED => 09:44

DIST	COUNTY	ROUTE	POST MILES TOTAL PROJECT	SHEET No.	TOTAL SHEETS
12	Ora	5,74	9.3/10.0, 0.0/0.2	428	515

Charles Lomicka 03-14-12
REGISTERED CIVIL ENGINEER DATE

4-9-12
PLANS APPROVAL DATE

REGISTERED PROFESSIONAL ENGINEER
CHARLES LOMICKA
No. C 71172
Exp. 06/30/13
CIVIL
STATE OF CALIFORNIA

The State of California or its officers or agents shall not be responsible for the accuracy or completeness of electronic copies of this plan sheet.

ALL BARRIER REINFORCEMENT NOT SHOWN, SEE NOTE 1

1. For additional Barrier Details and Reinforcement, see B11-54 and "CONCRETE BARRIER TYPE 26 (Mod) NO. 1 AND NO. 2" sheets.

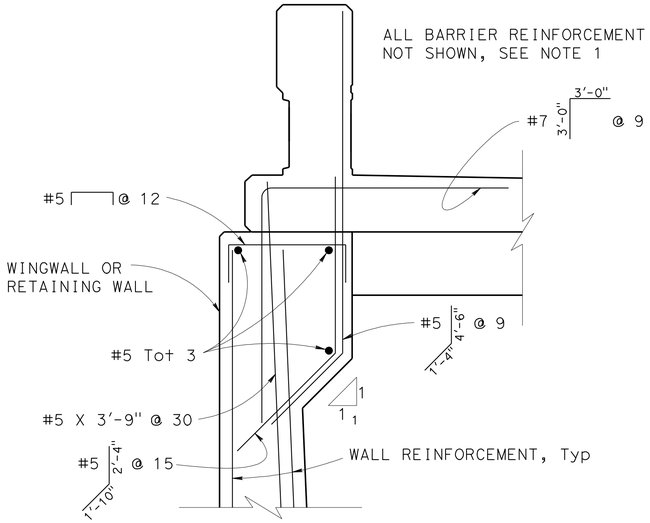

HAUNCH DETAIL (ABUT 1 AND 3 RIGHT, Typ)

NO SCALE

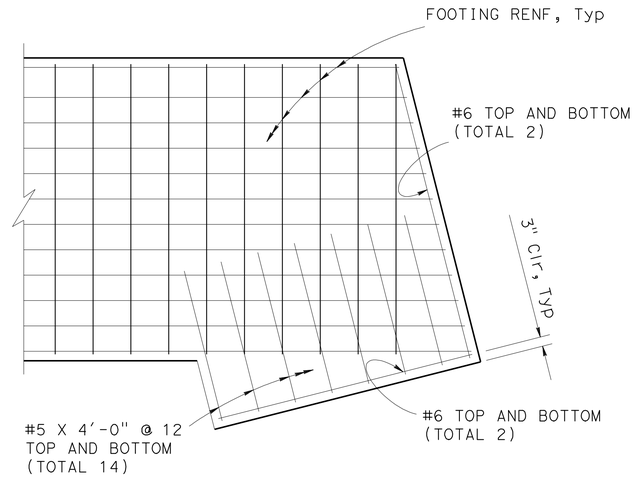

ABTUMENT 1 RIGHT FOOTING DETAIL

NO SCALE

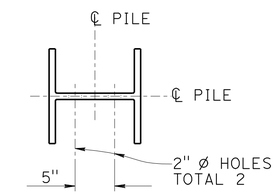

PLAN

(HP 10X57 PILE)

STEEL PILE ANCHOR

NO SCALE

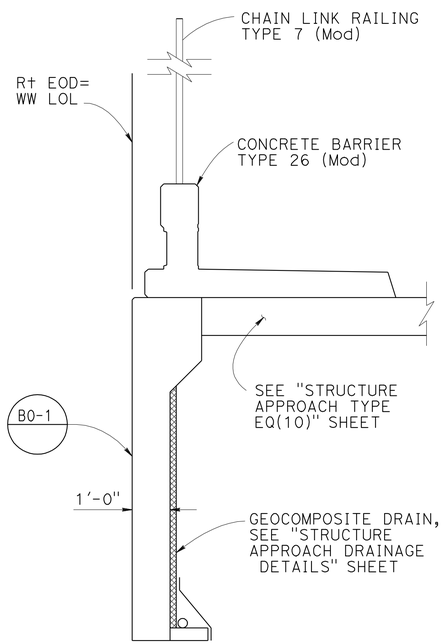

SECTION K-K

½" = 1'-0"

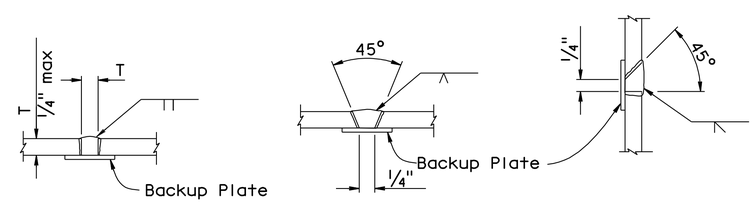

SQUARE GROOVE SINGLE VEE-GROOVE SINGLE BEVEL-GROOVE

PILE WELDING DETAIL-BUTT JOINTS

NO SCALE

Notes:
1. Single Vee-Groove And Square Groove Permitted for all positions.
2. Single Bevel-Groove permitted for horizontal joints only

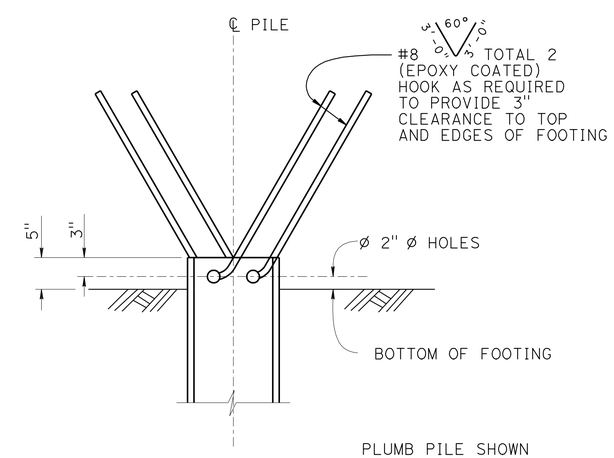

ELEVATION

NO SCALE

PLUMB PILE SHOWN
BATTERED PILE SIMILAR

NOTE:
THE CONTRACTOR SHALL VERIFY ALL CONTROLLING FIELD DIMENSIONS BEFORE ORDERING OR FABRICATING ANY MATERIAL.

	BY	CHECKED
DESIGN	CHARLES LOMICKA	MAMUNUR RAHMAN
DETAILS	HENGAMEH MAHBOOBI	MAMUNUR RAHMAN
QUANTITIES	CHARLES LOMICKA	SHAN-PIN YEH

STATE OF CALIFORNIA
DEPARTMENT OF TRANSPORTATION

DIVISION OF ENGINEERING SERVICES
STRUCTURE DESIGN
DESIGN BRANCH 19

BRIDGE NO. 55-1104
POST MILE 0.01

ROUTE 74/5 SEPARATION (REPLACE)
ABUTMENT DETAILS NO. 4

STRUCTURES DESIGN DETAIL SHEET (ENGLISH) (REV. 09-01-10)

ORIGINAL SCALE IN INCHES FOR REDUCED PLANS 0 1 2 3

UNIT: 3621
PROJECT NUMBER & PHASE: 1200000102 1 CONTRACT NO.: 12-0E3101

DISREGARD PRINTS BEARING EARLIER REVISION DATES

REVISION DATES 06-24-11 03-14-12 11-09-11 SHEET 12 OF 38

FILE => 55-1104-f-adet_04.dgn

USERNAME => s121614 DATE PLOTTED => 15-APR-2012 TIME PLOTTED => 09:44

DIST	COUNTY	ROUTE	POST MILES TOTAL PROJECT	SHEET No.	TOTAL SHEETS
12	Ora	5,74	9.3/10.0, 0.0/0.2	429	515

Charles Lomicka 03-14-12
REGISTERED CIVIL ENGINEER DATE

4-9-12
PLANS APPROVAL DATE

REGISTERED PROFESSIONAL ENGINEER CHARLES LOMICKA No. C 71172 Exp. 6/30/13 CIVIL STATE OF CALIFORNIA

The State of California or its officers or agents shall not be responsible for the accuracy or completeness of electronic copies of this plan sheet.

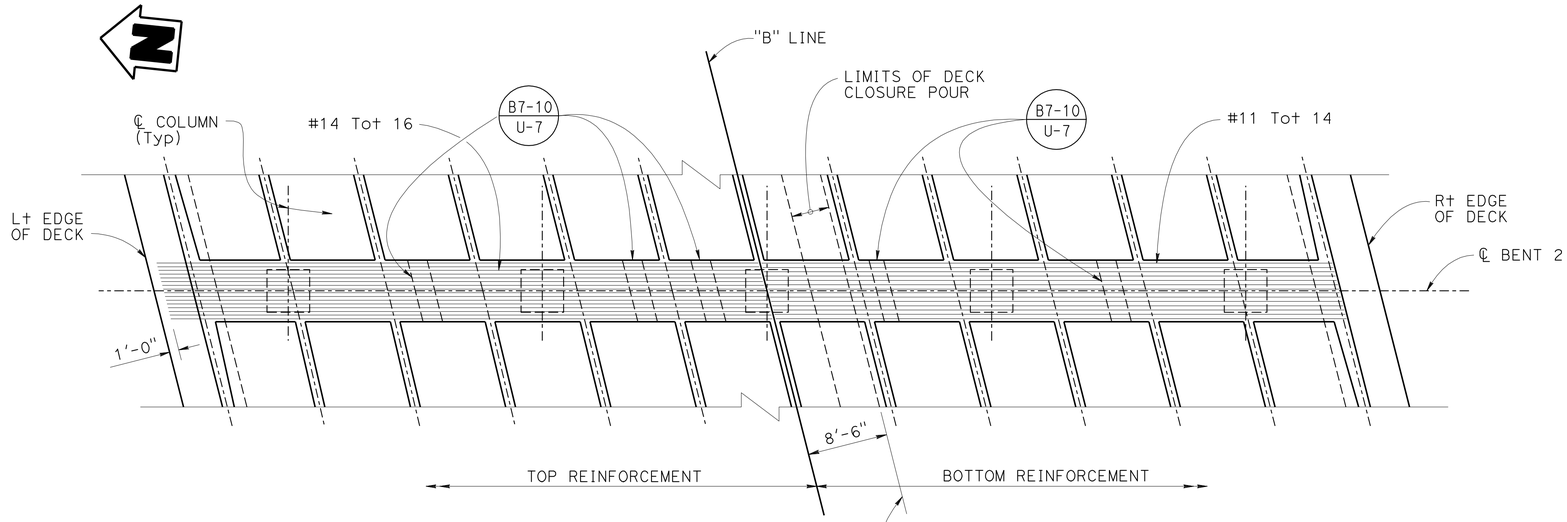

PLAN

1/8" = 1'-0"

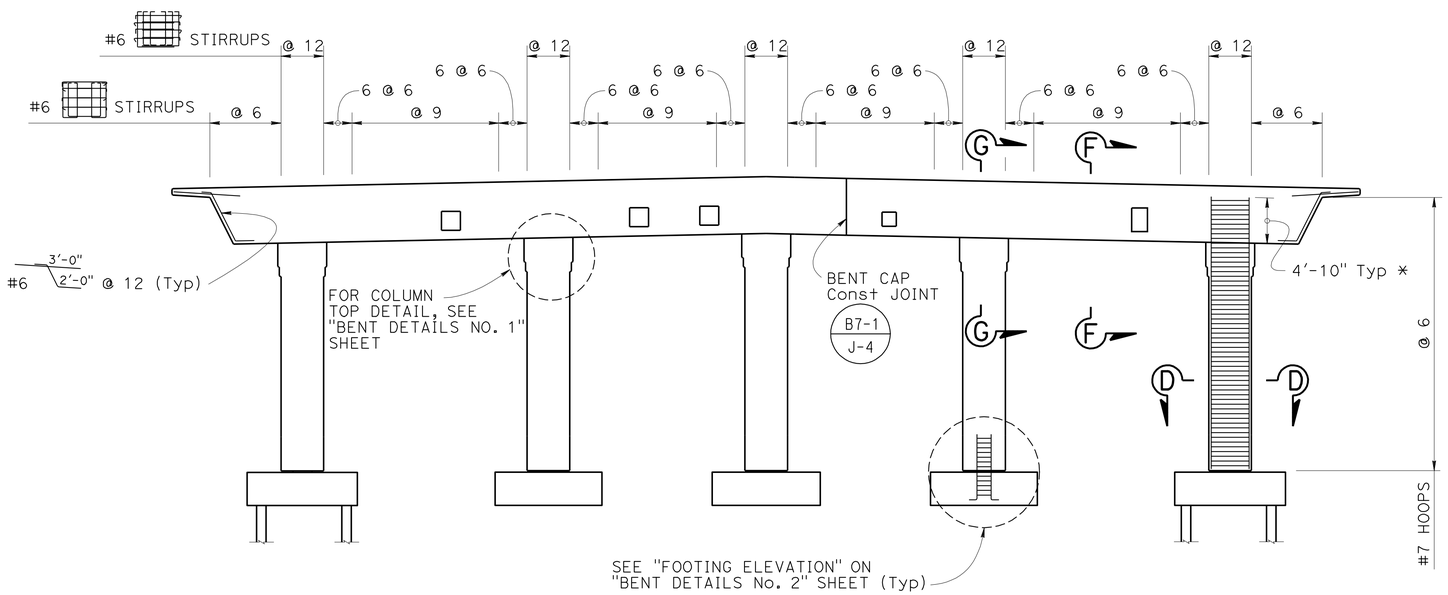

ELEVATION

1/8" = 1'-0"

NOTE:
THE CONTRACTOR SHALL VERIFY ALL CONTROLLING FIELD DIMENSIONS BEFORE ORDERING OR FABRICATING ANY MATERIAL.

* May be reduced to 4'-0" when in conflict with prestress ducts; however, the number of bars with reduced embedment shall not exceed 4 per column.

FALSEWORK RELEASE

Alternative 1:

Falsework shall be released as soon as permitted by the specifications. Closure pour shall not be placed sooner than 60 days after the falsework had been released.

Alternative 2:

Falsework shall not be released less than 28 days after the last concrete has been placed. Closure pour shall not be placed sooner than 14 days after the falsework has been released.

When Falsework Release Alternative 2 is used, camber values are 0.75 times those shown.

NOTES:

1. All piles not shown.
2. For Sections D-D, F-F & G-G, see "BENT DETAILS NO. 1" sheet.
3. All hoops are "Ultimate" butt spliced continuous.
4. For utility openings, see "TYPICAL SECTION" sheet for location and size.
5. No splices allowed in main column reinforcement.
6. No lap splices in main bent cap reinforcement. Splices not allowed in top cap reinforcement within 10'-0" of ℄ Column or in bottom cap reinforcement within 6'-0" of midpoint between columns, except at bent construction joint.

	BY	CHECKED
DESIGN	CHARLES LOMICKA	MAMUNUR RAHMAN
DETAILS	HENGAMEH MAHBOOBI / H.B.	MAMUNUR RAHMAN
QUANTITIES	CHARLES LOMICKA	SHAN-PIN YEH

STATE OF CALIFORNIA
DEPARTMENT OF TRANSPORTATION

DIVISION OF ENGINEERING SERVICES
STRUCTURE DESIGN
DESIGN BRANCH 19

BRIDGE NO. 55-1104
POST MILE 0.01

ROUTE 74/5 SEPARATION (REPLACE)
BENT LAYOUT

STRUCTURES DESIGN DETAIL SHEET (ENGLISH) (REV. 09-01-10)

ORIGINAL SCALE IN INCHES FOR REDUCED PLANS 0 1 2 3

UNIT: 3621
PROJECT NUMBER & PHASE: 1200000102 1 CONTRACT NO.: 0E3101

DISREGARD PRINTS BEARING EARLIER REVISION DATES

REVISION DATES: 02-01-11 03-14-12 11-16-11

SHEET 13 OF 38

FILE => 55-1104-h-b_lo_01.dgn

USERNAME => s121614 DATE PLOTTED => 15-APR-2012 TIME PLOTTED => 09:44

DIST	COUNTY	ROUTE	POST MILES TOTAL PROJECT	SHEET No.	TOTAL SHEETS
12	Ora	5,74	9.3/10.0, 0.0/0.2	430	515

Charles Lomicka 03-14-12
REGISTERED CIVIL ENGINEER DATE

4-9-12
PLANS APPROVAL DATE

REGISTERED PROFESSIONAL ENGINEER CHARLES LOMICKA No. C 71172 Exp. 06/30/13 CIVIL STATE OF CALIFORNIA

The State of California or its officers or agents shall not be responsible for the accuracy or completeness of electronic copies of this plan sheet.

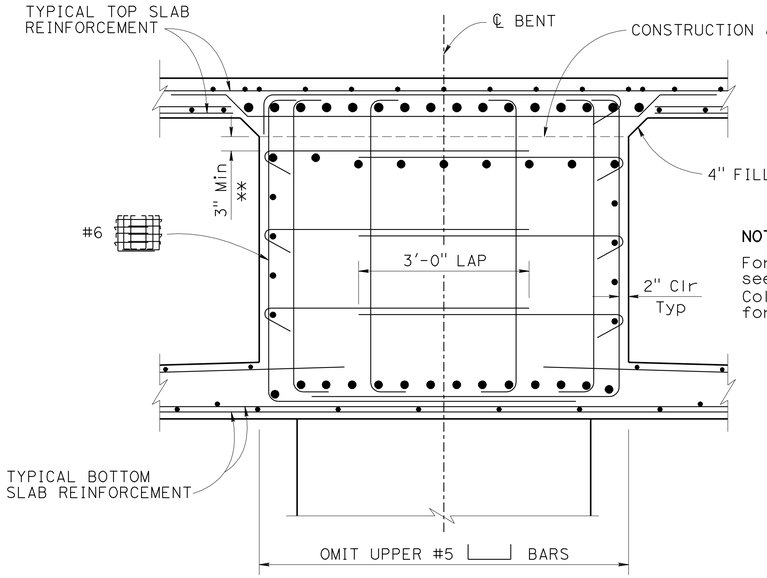

SECTION G-G

¾" = 1'-0"

NOTE:
For information not shown, see "SECTION F-F". Column Reinf not shown for clarity.

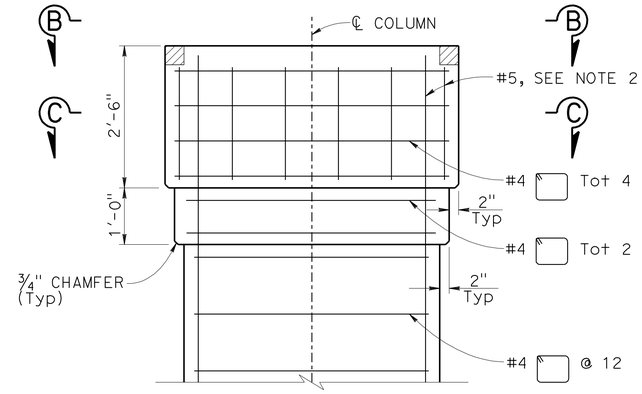

COLUMN TOP DETAIL

¾" = 1'-0"
COLUMN HOOPS AND MAIN REINFORCEMENT NOT SHOWN FOR CLARITY

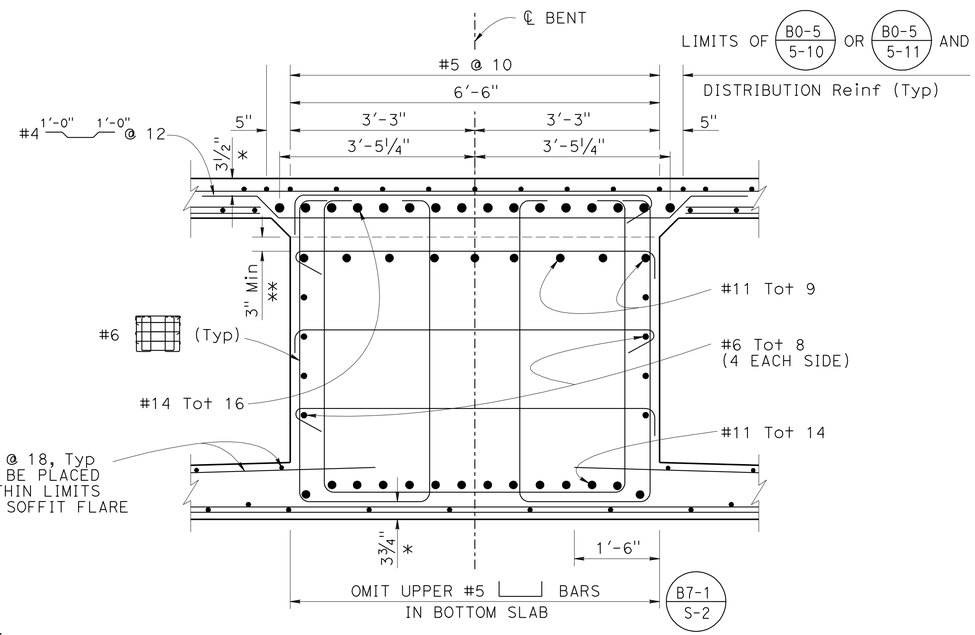

SECTION F-F

¾" = 1'-0"

NOTE:
THE CONTRACTOR SHALL VERIFY ALL CONTROLLING FIELD DIMENSIONS BEFORE ORDERING OR FABRICATING ANY MATERIAL.

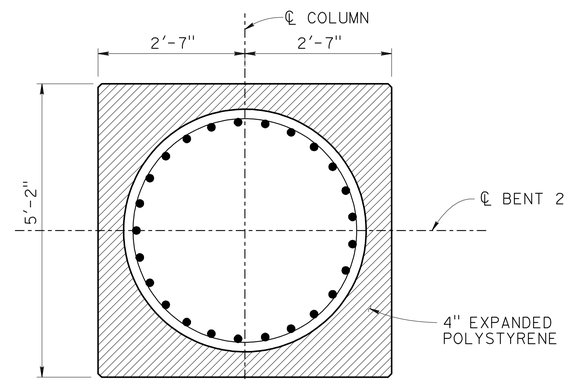

SECTION B-B

¾" = 1'-0"

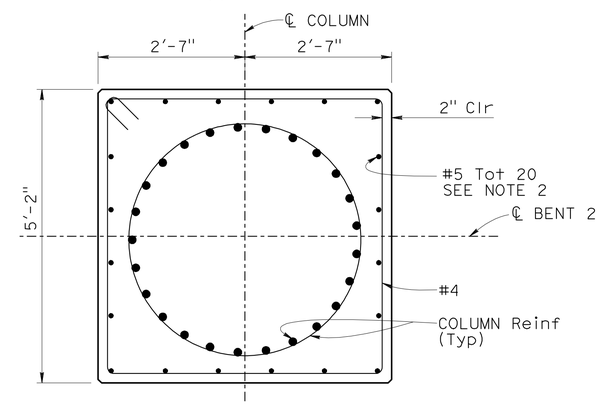

SECTION C-C

¾" = 1'-0"

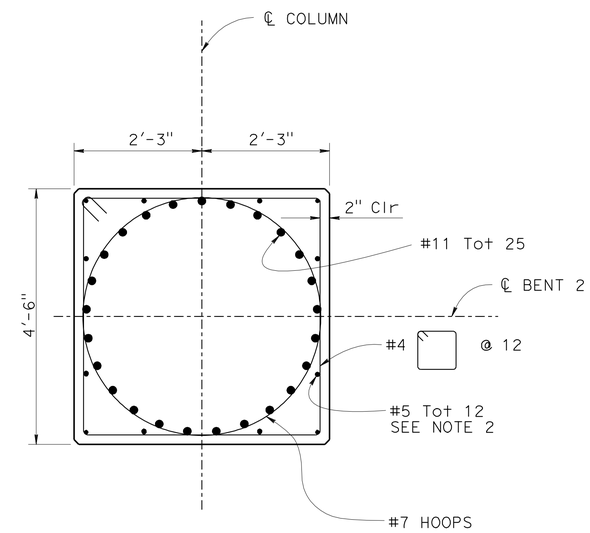

SECTION D-D

¾" = 1'-0"

NOTES:

1. Stage 1 shown, Stage 2 similar
2. Terminate #5 Reinf at column Const Jt

* Indicates clearance to main cap Reinf

** Indicates clearance to #11 Tot 9 Reinforcement may be adjusted to clear prestress ducts.

DESIGN	BY CHARLES LOMICKA	CHECKED MAMUNUR RAHMAN	
DETAILS	BY HEMANT BARBHAIYA	CHECKED MAMUNUR RAHMAN	
QUANTITIES	BY CHARLES LOMICKA	CHECKED SHAN-PIN YEH	

STATE OF CALIFORNIA
DEPARTMENT OF TRANSPORTATION

DIVISION OF ENGINEERING SERVICES
STRUCTURE DESIGN
DESIGN BRANCH 19

BRIDGE NO. 55-1104
POST MILE 0.01

ROUTE 74/5 SEPARATION (REPLACE)
BENT DETAILS No. 1

STRUCTURES DESIGN DETAIL SHEET (ENGLISH) (REV. 09-01-10)

ORIGINAL SCALE IN INCHES FOR REDUCED PLANS 0 1 2 3

UNIT: 3621
PROJECT NUMBER & PHASE: 1200000102 1 CONTRACT NO.: 12-0E3101

DISREGARD PRINTS BEARING EARLIER REVISION DATES

REVISION DATES: 02-15-11 | 03-14-12 | 11-18-11

SHEET 14 OF 38

FILE => 55-1104-h-bdet_01.dgn

USERNAME => 8121614 DATE PLOTTED => 15-APR-2012 TIME PLOTTED => 09:45

DIST	COUNTY	ROUTE	POST MILES TOTAL PROJECT	SHEET No.	TOTAL SHEETS
12	Ora	5,74	9.3/10.0, 0.0/0.2	431	515

Charles Lomicka 03-14-12
REGISTERED CIVIL ENGINEER DATE

4-9-12
PLANS APPROVAL DATE

REGISTERED PROFESSIONAL ENGINEER CHARLES LOMICKA No. C 71172 Exp. 06/30/13 CIVIL STATE OF CALIFORNIA

The State of California or its officers or agents shall not be responsible for the accuracy or completeness of electronic copies of this plan sheet.

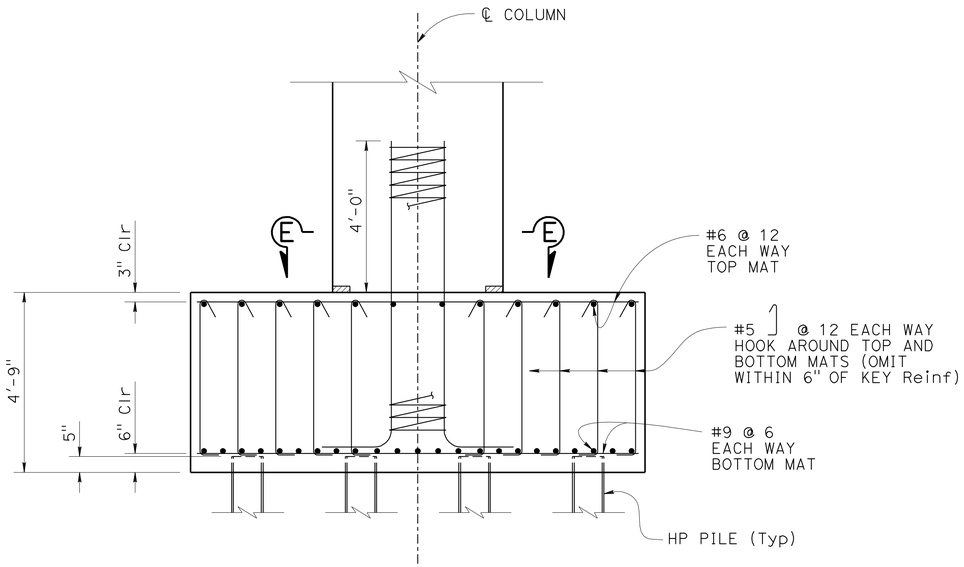

FOOTING ELEVATION
½" = 1'-0"

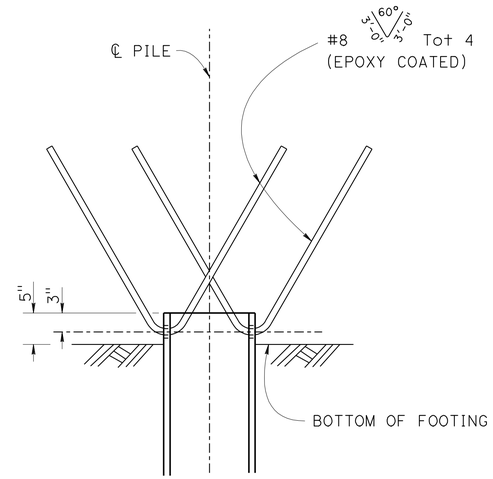

ELEVATION
No Scale

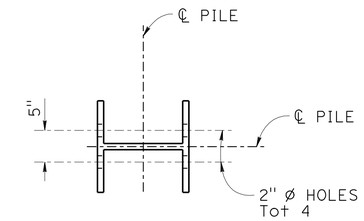

PLAN
(HP 14X89)

STEEL PILE ANCHOR
No Scale

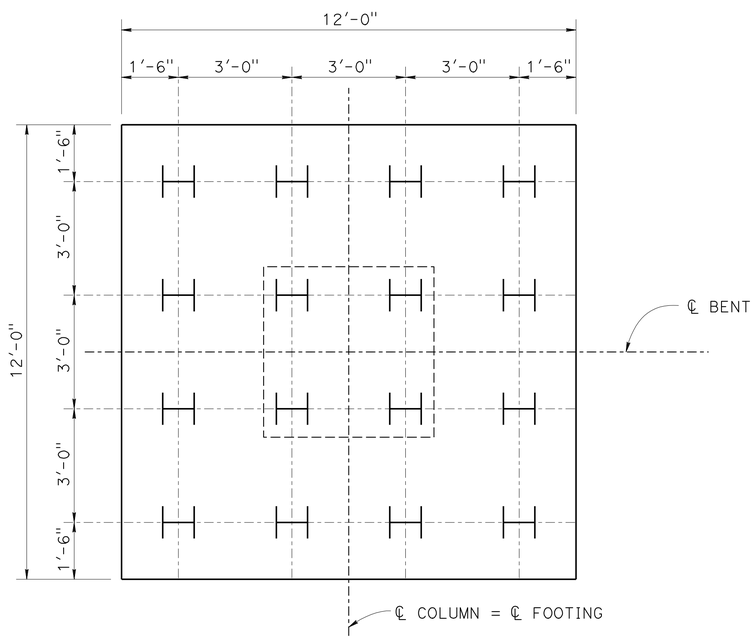

FOOTING PLAN
½" = 1'-0"

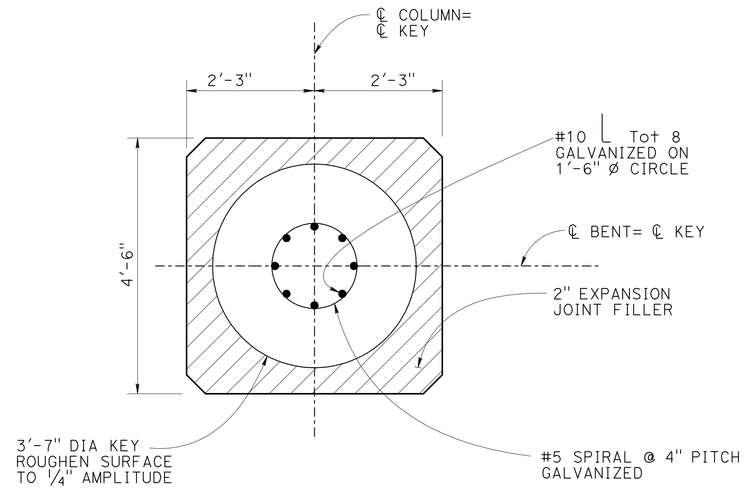

SECTION E-E
¾" = 1'-0"

NOTE:
THE CONTRACTOR SHALL VERIFY ALL CONTROLLING FIELD DIMENSIONS BEFORE ORDERING OR FABRICATING ANY MATERIAL.

	BY	CHECKED
DESIGN	CHARLES LOMICKA	MAMUNUR RAHMAN
DETAILS	HEMANT BARBHAIYA	MAMUNUR RAHMAN
QUANTITIES	CHARLES LOMICKA	SHAN-PIN YEH

STATE OF CALIFORNIA
DEPARTMENT OF TRANSPORTATION

DIVISION OF ENGINEERING SERVICES
STRUCTURE DESIGN
DESIGN BRANCH 19

BRIDGE NO. 55-1104
POST MILE 0.01

ROUTE 74/5 SEPARATION (REPLACE)
BENT DETAILS No. 2

STRUCTURES DESIGN DETAIL SHEET (ENGLISH) (REV. 09-01-10)

ORIGINAL SCALE IN INCHES FOR REDUCED PLANS 0 1 2 3

UNIT: 3621
PROJECT NUMBER & PHASE: 1200000102 1 CONTRACT NO.: 12-0E3101

DISREGARD PRINTS BEARING EARLIER REVISION DATES

REVISION DATES: 02-22-11 03-14-12 11-18-11

SHEET 15 OF 38

FILE => 55-1104-h-bdet_02.dgn

USERNAME => s121614 DATE PLOTTED => 15-APR-2012 TIME PLOTTED => 09:45

SPACING MEASURED PERPENDICULAR TO "B" LINE						
LOCATION	A	B	C	D	E	F
℄ Abut 1	8'-4⅜"	10'-3"	10'-3"	10'-3"	10'-3"	10'-3"
℄ Bent 2	7'-6"	9'-9"	9'-9"	9'-9"	9'-9"	9'-9"
℄ Abut 3	7'-6"	9'-9"	9'-9"	9'-9"	9'-9"	9'-9"

NOTES:

1. Concrete Barrier, Type 26 (MOD)
2. Chain Link Railing Type 7 (Mod)
3. 2'-0" W X 2'-0" H utility openings for CSJC for 2- 12" ø Water Lines in 20" ø Casings, see Road Plans
4. 1'-6"x1'-6" utility opening for SO. Cal. Gas Co. for 8" ø Gas Main in 12" Casing, see Road Plans
5. Electrical conduits, see Road Plans.
6. 2- 3" conduits, see Road Plans
7. Future Utility Opening, 2'-0" W X 2'-0" H (Bent 2).
8. Utlity opening (SDG&E): Abut 1 & 3: 2'-2" W X 2''-6" H Bent 2: 1'-8"W X 2'-6" H, see Road Plans
9. For additional longitudinal reinforcement, see "GIRDER REINFORCEMENT" sheet.
10. Loop detectors to be placed in the deck prior to concrete pour. For layout, see Road Plans.

DIST	COUNTY	ROUTE	POST MILES TOTAL PROJECT	SHEET No.	TOTAL SHEETS
12	Ora	5,74	9.3/10.0, 0.0/0.2	432	515

Charles Lomicka 03-14-12
REGISTERED CIVIL ENGINEER DATE

4-9-12
PLANS APPROVAL DATE

REGISTERED PROFESSIONAL ENGINEER CHARLES LOMICKA No. C 71172 Exp. 6/30/13 CIVIL STATE OF CALIFORNIA

The State of California or its officers or agents shall not be responsible for the accuracy or completeness of electronic copies of this plan sheet.

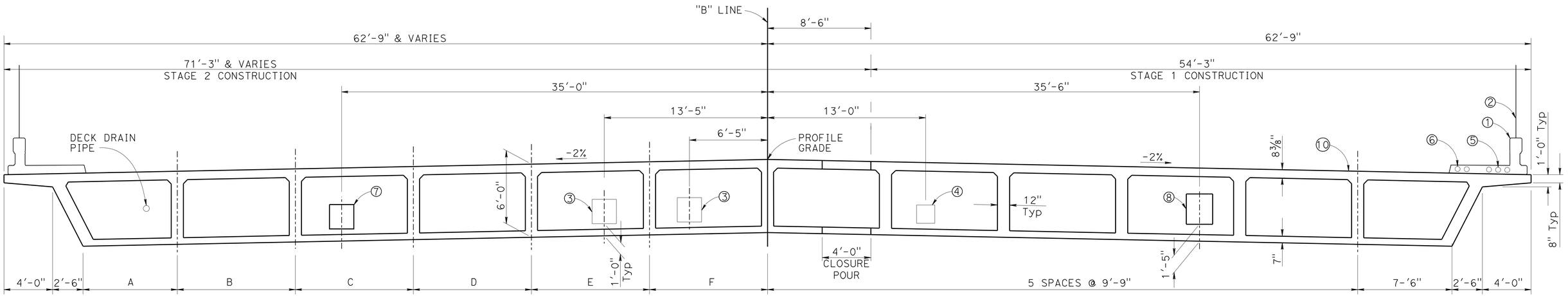

TYPICAL SECTION

¼" = 1'-0"

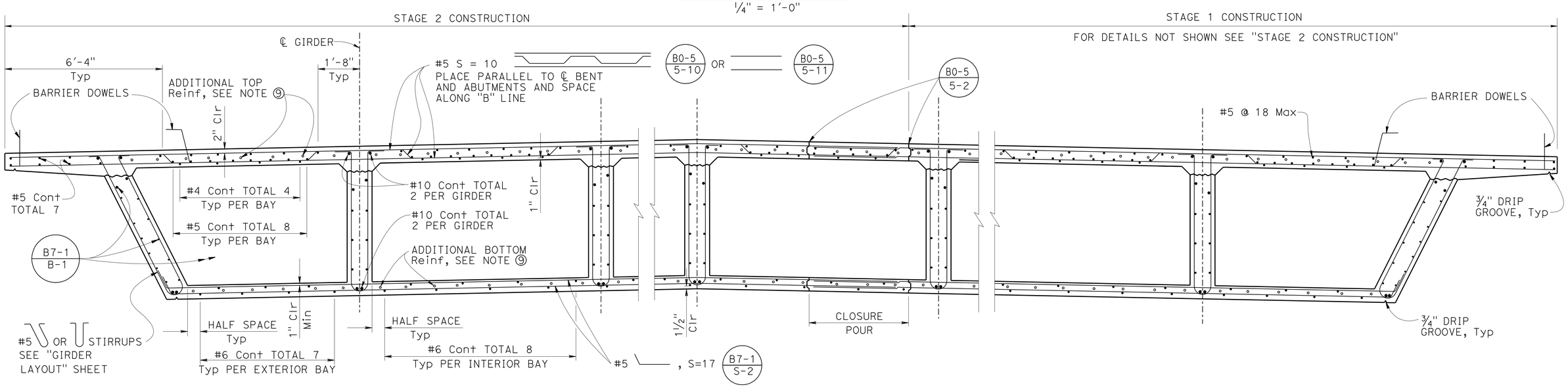

PART TYPICAL SECTION

½" = 1'-0"

B0-5 B7-1 B8-5

NOTE:
THE CONTRACTOR SHALL VERIFY ALL CONTROLLING FIELD DIMENSIONS BEFORE ORDERING OR FABRICATING ANY MATERIAL.

	BY	CHECKED
DESIGN	CHARLES LOMICKA	MAMUNUR RAHMAN
DETAILS	HENGAMEH MAHBOOBI / H.B.	MAMUNUR RAHMAN
QUANTITIES	CHARLES LOMICKA	SHAN-PIN YEH

STATE OF CALIFORNIA DEPARTMENT OF TRANSPORTATION

DIVISION OF ENGINEERING SERVICES STRUCTURE DESIGN DESIGN BRANCH 19

BRIDGE NO. 55-1104
POST MILE 0.01

ROUTE 74/5 SEPARATION (REPLACE)
TYPICAL SECTION

STRUCTURES DESIGN DETAIL SHEET (ENGLISH) (REV. 09-01-10)

ORIGINAL SCALE IN INCHES FOR REDUCED PLANS 0 1 2 3

UNIT: X
PROJECT NUMBER & PHASE: 1200000102 1 CONTRACT NO.: 0E3101

DISREGARD PRINTS BEARING EARLIER REVISION DATES

REVISION DATES: 10-06-10 03-14-12 11-10-11

SHEET 16 OF 38

FILE => 55-1104-k-tsp01.dgn

USERNAME => s121614 DATE PLOTTED => 15-APR-2012 TIME PLOTTED => 09:45

DIST	COUNTY	ROUTE	POST MILES TOTAL PROJECT	SHEET No.	TOTAL SHEETS
12	Ora	5,74	9.3/10.0, 0.0/0.2	433	515

Charles Lomicka 03-12-14
REGISTERED CIVIL ENGINEER DATE

4-9-12
PLANS APPROVAL DATE

REGISTERED PROFESSIONAL ENGINEER CHARLES LOMICKA No. C 71172 Exp. 6/30/13 CIVIL STATE OF CALIFORNIA

The State of California or its officers or agents shall not be responsible for the accuracy or completeness of electronic copies of this plan sheet.

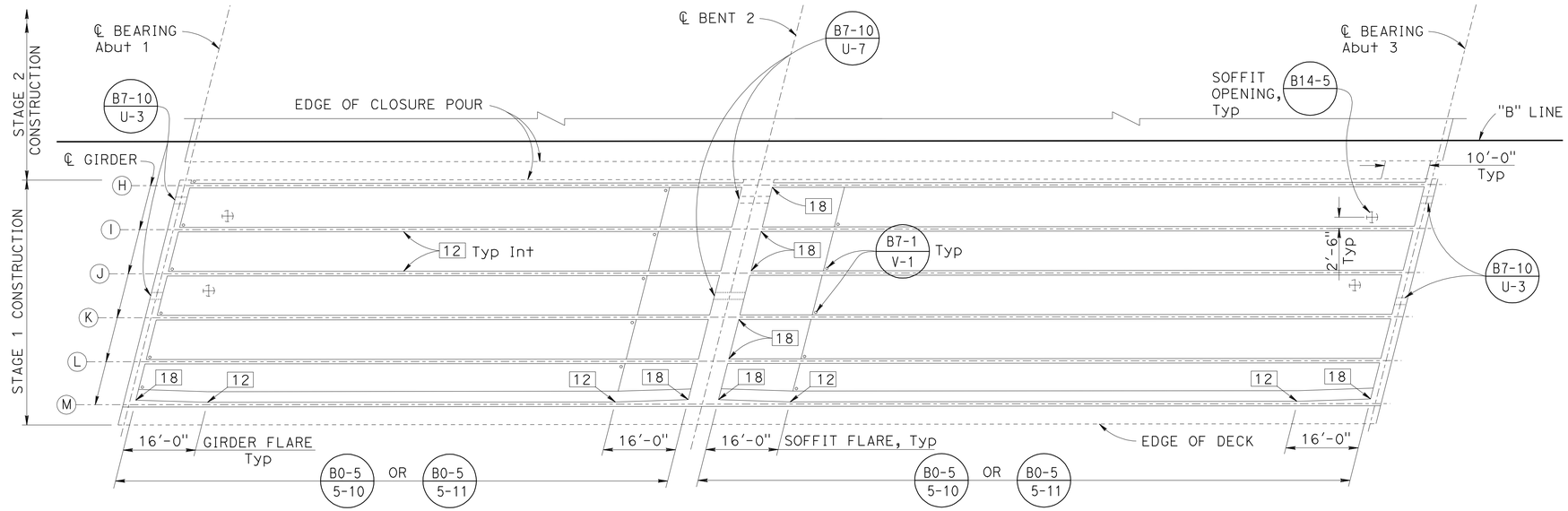

PLAN

1" = 15′ B7-1 B8-5

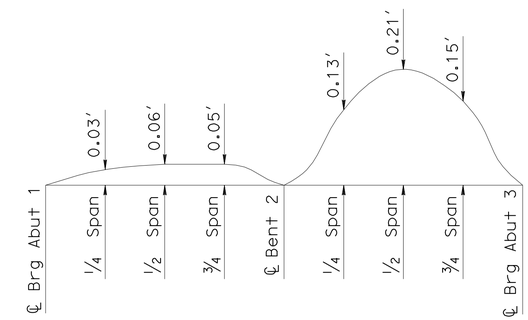

CAMBER DIAGRAM

NO SCALE
DOES NOT INCLUDE ALLOWANCE FOR FALSWORK SETTLEMENT

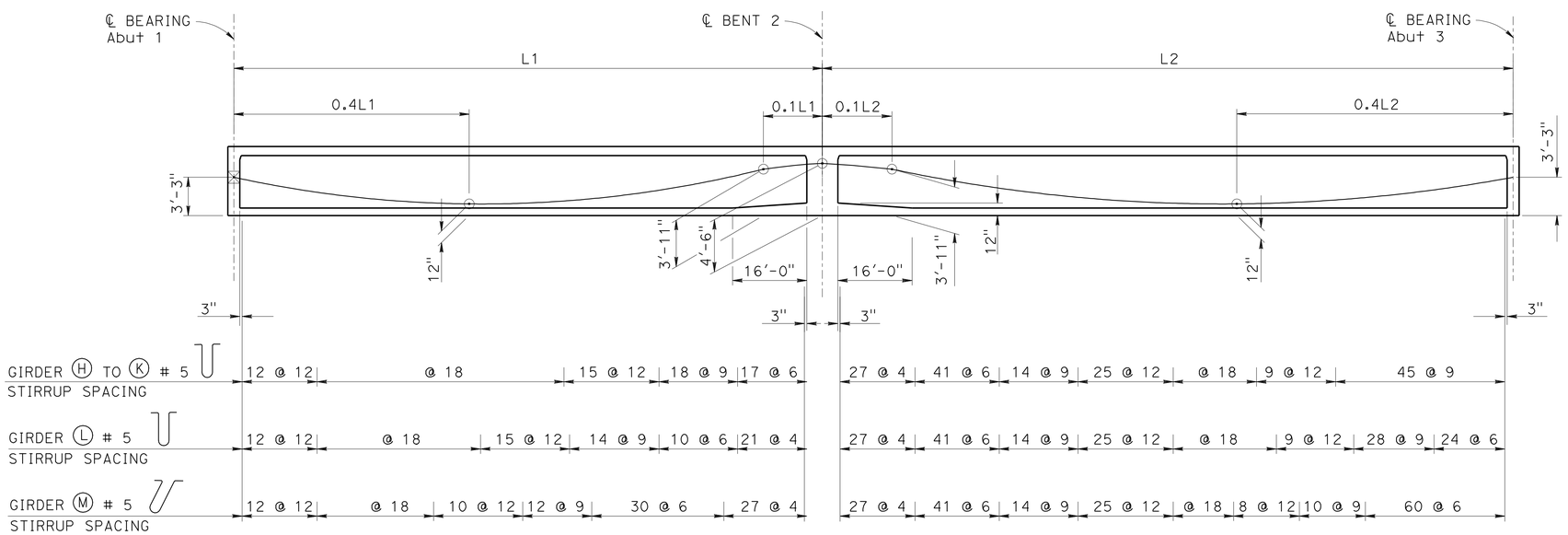

LONGITUDINAL SECTION

NO SCALE

PRESTRESSING NOTES-GIRDERS H TO M

(STAGE 1 CONSTRUCTION)

270 ksi Low Relaxation Strand:

P_{jack} = 11,580 kips

Anchor Set = 3/8 in.

Total Number of Girders = 6

Distribution of prestress force (Pjack) between girders shall not exceed the ratio of 3:2. Maximum final force variation between girders shall not exceed 725 kips

Concrete: f'_c = 4000 psi @ 28 days

f'_{ci} = 3500 psi @ time of stressing

Contractor shall submit elongation calculations based on initial stress at

⊠ = 0.878 times jacking stress.

One end stressing shall be performed from Abut 3.

LEGEND

Indicates girder stem width in inches.

⊠ Indicates point of no movement

NOTE:
THE CONTRACTOR SHALL VERIFY ALL CONTROLLING FIELD DIMENSIONS BEFORE ORDERING OR FABRICATING ANY MATERIAL.

	BY	CHECKED
DESIGN	CHARLES LOMICKA	MAMUNUR RAHMAN
DETAILS	HENGAMEH MAHBOOBI	MAMUNUR RAHMAN
QUANTITIES	CHARLES LOMICKA	SHAN-PIN YEH

STATE OF CALIFORNIA
DEPARTMENT OF TRANSPORTATION

DIVISION OF ENGINEERING SERVICES
STRUCTURE DESIGN
DESIGN BRANCH 19

BRIDGE NO. 55-1104
POST MILE 0.01

ROUTE 74/5 SEPARATION (REPLACE)
GIRDER LAYOUT NO. 1

STRUCTURES DESIGN DETAIL SHEET (ENGLISH) (REV. 09-01-10)

ORIGINAL SCALE IN INCHES FOR REDUCED PLANS 0 1 2 3

UNIT: 3621
PROJECT NUMBER & PHASE: 1200000102 1 CONTRACT NO.: 12-0E3101

DISREGARD PRINTS BEARING EARLIER REVISION DATES

REVISION DATES 01-13-11 03-14-12 02-27-12

SHEET 17 OF 38

FILE => 55-1104-1-gio_01.dgn

USERNAME => s121614 DATE PLOTTED => 15-APR-2012 TIME PLOTTED => 09:45

DIST	COUNTY	ROUTE	POST MILES TOTAL PROJECT	SHEET No.	TOTAL SHEETS
12	Ora	5,74	9.3/10.0, 0.0/0.2	434	515

Charles Lomicka 03-14-12
REGISTERED CIVIL ENGINEER DATE

4-9-12
PLANS APPROVAL DATE

REGISTERED PROFESSIONAL ENGINEER CHARLES LOMICKA No. C 71172 Exp. 6/30/13 CIVIL STATE OF CALIFORNIA

The State of California or its officers or agents shall not be responsible for the accuracy or completeness of electronic copies of this plan sheet.

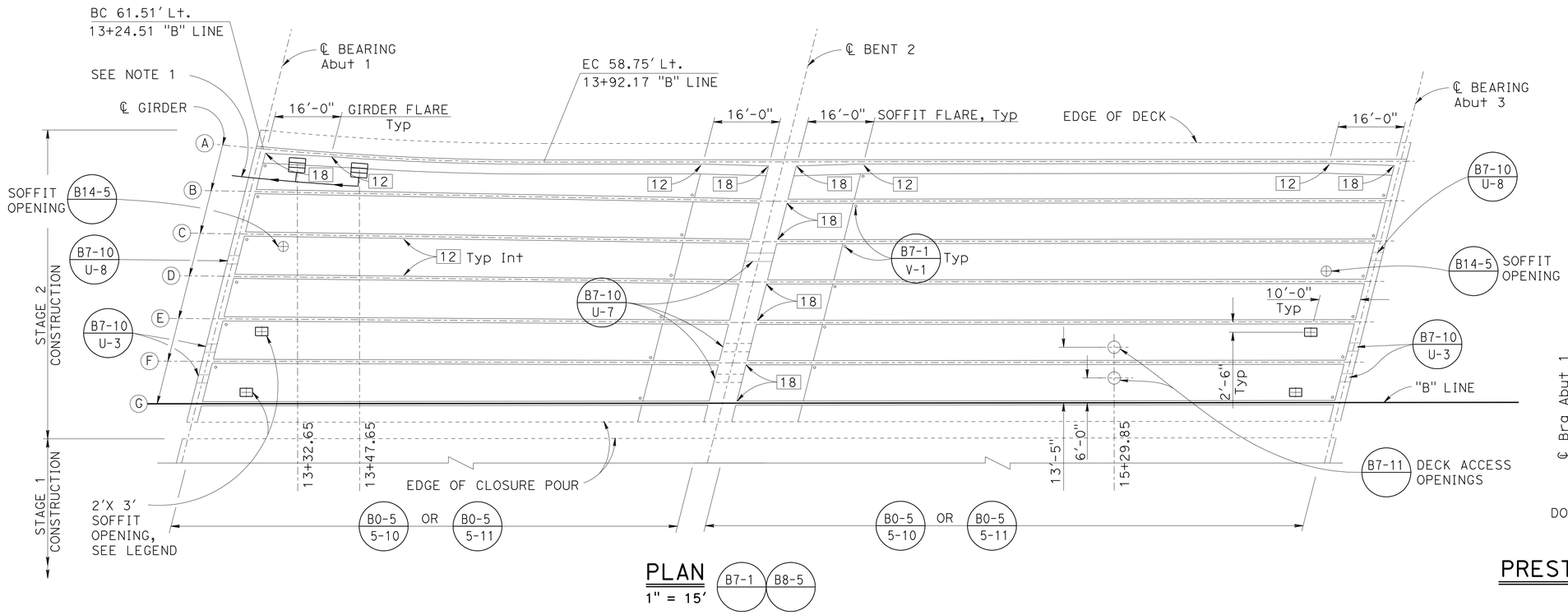

PLAN

1" = 15'

B7-1 B8-5

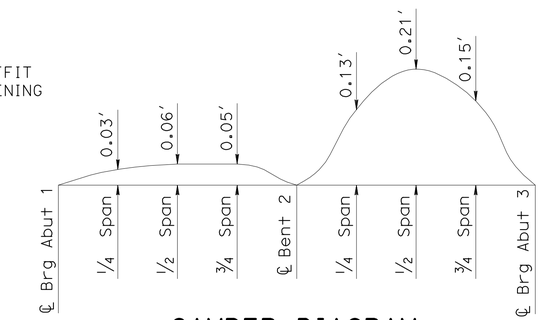

CAMBER DIAGRAM

NO SCALE

DOES NOT INCLUDE ALLOWANCE FOR FALSWORK SETTLEMENT

PRESTRESSING NOTES-GIRDERS A TO G

(STAGE 2 CONSTRUCTION)

270 ksi Low Relaxation Strand:

P_{jack} = 13,800 kips

Anchor Set = 3/8 in.

Total Number of Girders = 7

Distribution of prestress force (Pjack) between girders shall not exceed the ratio of 3:2. Maximum final force variation between girders shall not exceed 725 kips

Concrete: f'_c = 4000 psi @ 28 days

f'_{ci} = 3500 psi @ time of stressing

Contractor shall submit elongation calculations based on initial stress at

⊠ = 0.878 times jacking stress.

One end stressing shall be performed from Abut 3.

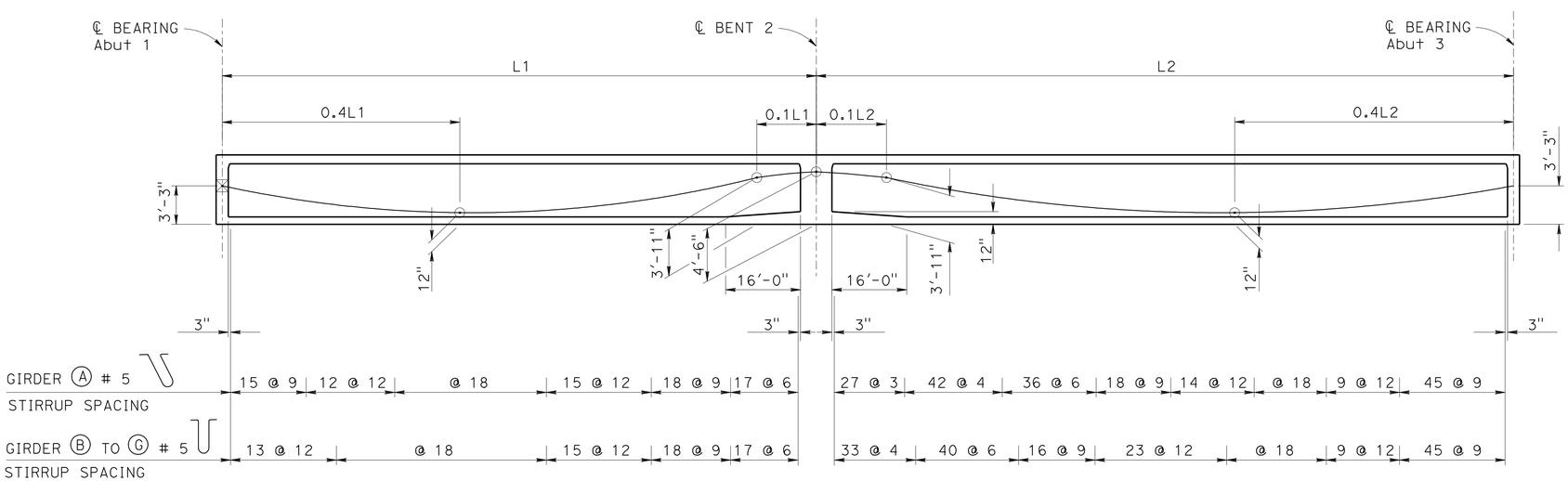

LONGITUDINAL SECTION

NO SCALE

LEGEND:

- Indicates girder stem width in inches.
- ⊠ Indicates point of no movement.
- Indicates Deck Drain Type D-1 (B7-6)
- Indicates NPS 6 galvanized steel deck drain pipe and direction of flow.
- 2' X 3' Soffit Opening & Drainage Grate, see "SOFFIT OPENING & DRAINAGE GRATE" sheet.

NOTE:
THE CONTRACTOR SHALL VERIFY ALL CONTROLLING FIELD DIMENSIONS BEFORE ORDERING OR FABRICATING ANY MATERIAL.

NOTES:

1. For abutment diaphragm and backwall opening, see (B7-8) For drain outlet details, see "SLOPE PAVING - FULL SLOPE" and "STRUCTURE APPROACH DRAINAGE DETAILS" sheet.

	BY	CHECKED
DESIGN	CHARLES LOMICKA	MAMUNUR RAHMAN
DETAILS	HENGAMEH MAHBOOBI	MAMUNUR RAHMAN
QUANTITIES	CHARLES LOMICKA	SHAN-PIN YEH

STATE OF CALIFORNIA DEPARTMENT OF TRANSPORTATION

DIVISION OF ENGINEERING SERVICES STRUCTURE DESIGN DESIGN BRANCH 19

BRIDGE NO. 55-1104 POST MILE 0.01

ROUTE 74/5 SEPARATION (REPLACE)

GIRDER LAYOUT NO. 2

STRUCTURES DESIGN DETAIL SHEET (ENGLISH) (REV. 09-01-10)

ORIGINAL SCALE IN INCHES FOR REDUCED PLANS 0 1 2 3

UNIT: 3621
PROJECT NUMBER & PHASE: 1200000102 1 CONTRACT NO.: 12-0E3101

DISREGARD PRINTS BEARING EARLIER REVISION DATES

REVISION DATES 01-13-11 03-14-12 02-23-12

SHEET 18 OF 38

DIST	COUNTY	ROUTE	POST MILES TOTAL PROJECT	SHEET No.	TOTAL SHEETS
12	Ora	5,74	9.3/10.0, 0.0/0.2	435	515

Charles Lomicka 03-14-12
REGISTERED CIVIL ENGINEER DATE

4-9-12
PLANS APPROVAL DATE

REGISTERED PROFESSIONAL ENGINEER
CHARLES LOMICKA
No. C 71172
Exp. 6/30/13
CIVIL
STATE OF CALIFORNIA

The State of California or its officers or agents shall not be responsible for the accuracy or completeness of electronic copies of this plan sheet.

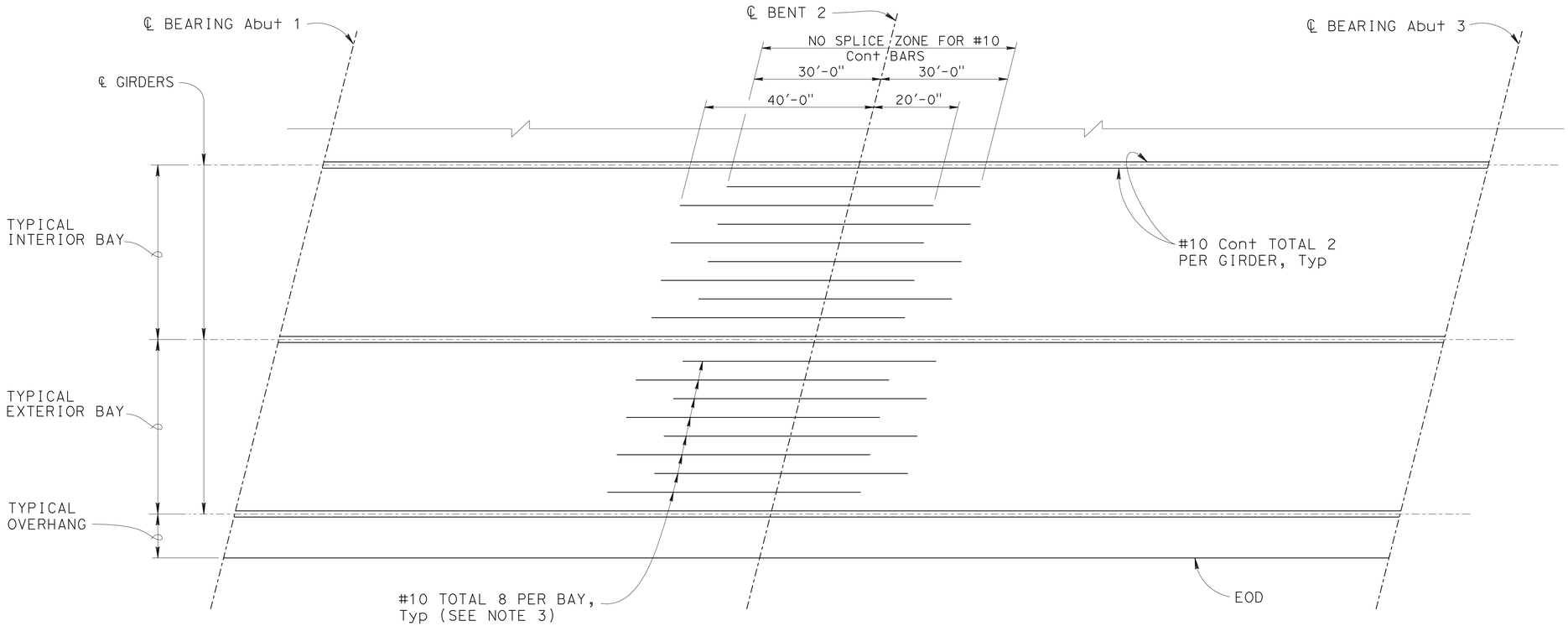

TOP LONGITUDINAL REINFORCEMENT

NO SCALE

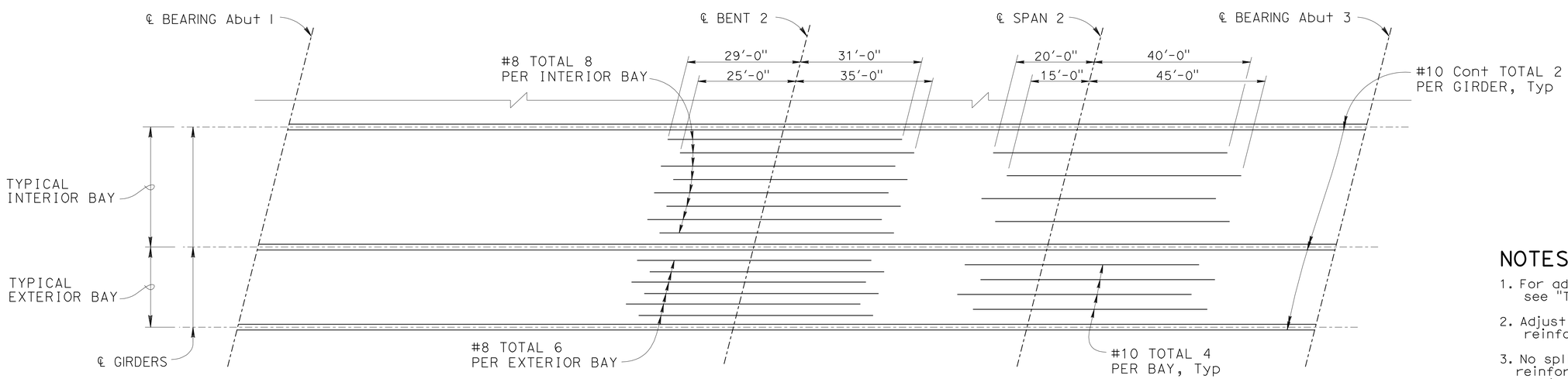

BOTTOM LONGITUDINAL REINFORCEMENT

NO SCALE

NOTE:
THE CONTRACTOR SHALL VERIFY ALL CONTROLLING FIELD DIMENSIONS BEFORE ORDERING OR FABRICATING ANY MATERIAL.

NOTES:

1. For additional details and reinforcement see "TYPICAL SECTION" sheet.
2. Adjust location of bottom longitudinal reinforcement to clear soffit openings.
3. No splices allowed in additional top or bottom reinforcement. No lap splices allowed in #10 continous girder reinforcement.
4. Stage 1 structure shown, Stage 2 structure similar.

	BY	CHECKED
DESIGN	CHARLES LOMICKA	MAMUNUR RAHMAN
DETAILS	HENGAMEH MAHBOOBI	MAMUNUR RAHMAN
QUANTITIES	CHARLES LOMICKA	SHAN-PIN YEH

STATE OF CALIFORNIA
DEPARTMENT OF TRANSPORTATION

DIVISION OF ENGINEERING SERVICES
STRUCTURE DESIGN
DESIGN BRANCH 19

BRIDGE NO. 55-1104
POST MILE 0.01

ROUTE 74/5 SEPARATION (REPLACE)
GIRDER REINFORCEMENT

STRUCTURES DESIGN DETAIL SHEET (ENGLISH) (REV. 09-01-10)

ORIGINAL SCALE IN INCHES FOR REDUCED PLANS 0 1 2 3

UNIT: 3621
PROJECT NUMBER & PHASE: 1200000102 1 CONTRACT NO.: 12-0E3101

DISREGARD PRINTS BEARING EARLIER REVISION DATES

REVISION DATES: 01-14-11 03-14-12 11-09-11

SHEET 19 OF 38

FILE => 55-1104-1-gref_01.dgn

USERNAME => s121614 DATE PLOTTED => 15-APR-2012 TIME PLOTTED => 09:45

DIST	COUNTY	ROUTE	POST MILES TOTAL PROJECT	SHEET No.	TOTAL SHEETS
12	Ora	5,74	9.3/10.0, 0.0/0.2	436	515

Charles Lomicka 03-14-12
REGISTERED CIVIL ENGINEER DATE

4-9-12
PLANS APPROVAL DATE

REGISTERED PROFESSIONAL ENGINEER
CHARLES LOMICKA
No. C 71172
Exp. 06-30-13
CIVIL
STATE OF CALIFORNIA

The State of California or its officers or agents shall not be responsible for the accuracy or completeness of electronic copies of this plan sheet.

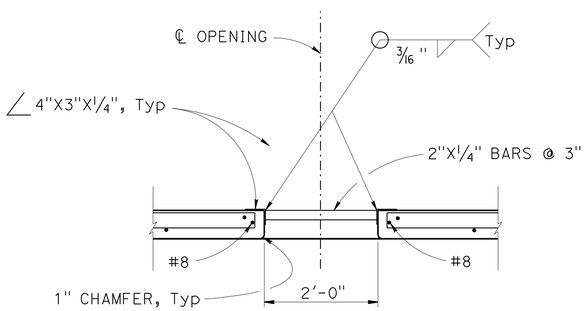

SECTION A-A

NO SCALE

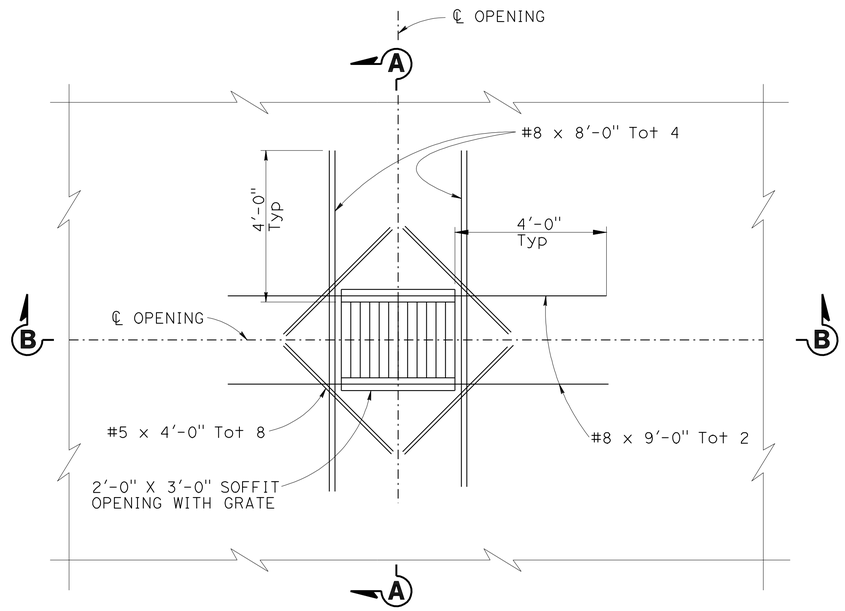

SOFFIT OPENING & DRAINAGE GRATE DETAIL

NO SCALE

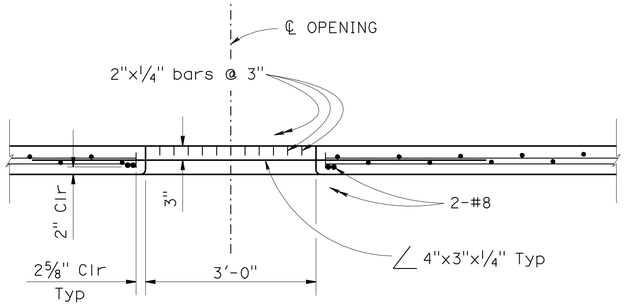

SECTION B-B

NO SCALE

NOTE:
The Contractor shall verify all controlling field dimensions before ordering or fabricating any material.

Note:

1. For soffit opening and drainage grate locations, see "GIRDER LAYOUT NO. 2" sheet.
2. Galvanize grate assembly after fabrication.

	BY	CHECKED
DESIGN	CHARLES LOMICKA	MAMUNUR RAHMAN
DETAILS	HENGAMEH MAHBOOBI	MAMUNUR RAHMAN
QUANTITIES	CHARLES LOMICKA	SHAN-PIN YEH

STATE OF CALIFORNIA
DEPARTMENT OF TRANSPORTATION

DIVISION OF ENGINEERING SERVICES
STRUCTURE DESIGN
DESIGN BRANCH 19

BRIDGE NO. 55-1104
POST MILE 0.01

ROUTE 74/5 SEPARATION (REPLACE)
SOFFIT OPENING & DRAINAGE GRATE

STRUCTURES DESIGN DETAIL SHEET (ENGLISH) (REV. 09-01-10)

ORIGINAL SCALE IN INCHES FOR REDUCED PLANS 0 1 2 3

UNIT: 3621
PROJECT NUMBER & PHASE: 1200000102 1 CONTRACT NO.: 12-0E3101

DISREGARD PRINTS BEARING EARLIER REVISION DATES

REVISION DATES: 10-26-11 11-08-11 03-14-12

SHEET 20 OF 38

FILE => 55-1104-r-sodet.dgn

USERNAME => s121614 DATE PLOTTED => 15-APR-2012 TIME PLOTTED => 09:45

DIST	COUNTY	ROUTE	POST MILES TOTAL PROJECT	SHEET No.	TOTAL SHEETS
12	Ora	5,74	9.3/10.0, 0.0/0.2	437	515

Charles Lomicka 03-14-12
REGISTERED CIVIL ENGINEER DATE

4-9-12
PLANS APPROVAL DATE

REGISTERED PROFESSIONAL ENGINEER CHARLES LOMICKA No. C 71172 Exp. 6/30/13 CIVIL STATE OF CALIFORNIA

The State of California or its officers or agents shall not be responsible for the accuracy or completeness of electronic copies of this plan sheet.

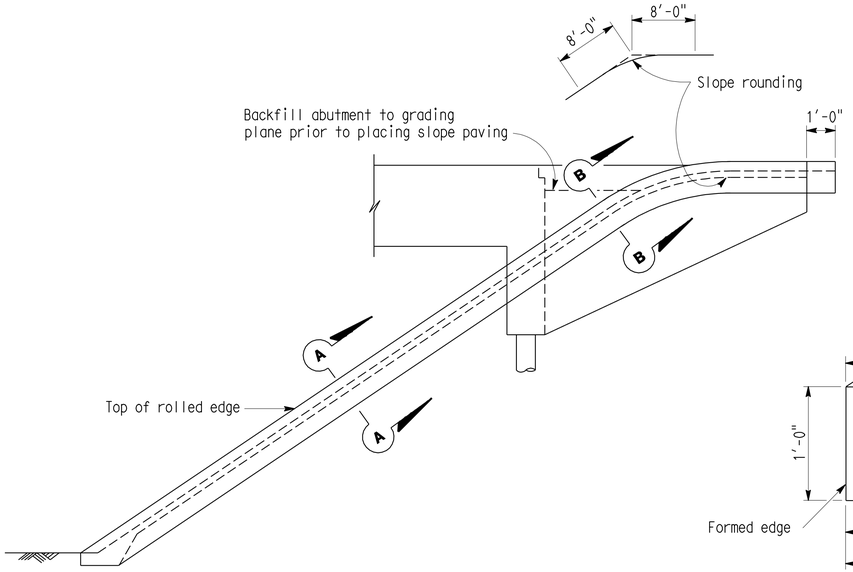

WINGWALL ELEVATION
NO SCALE

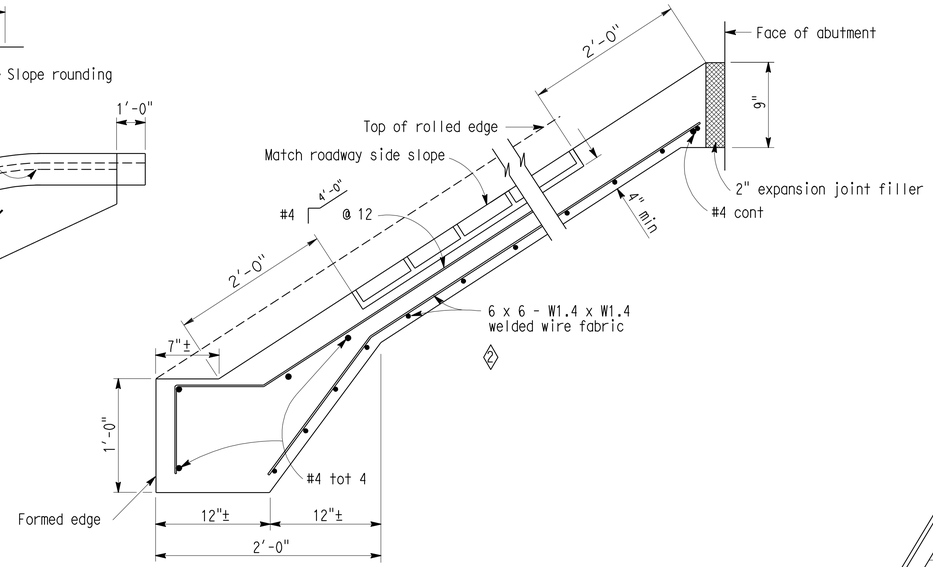

TYPICAL SECTION - CONCRETE PAVING
NO SCALE

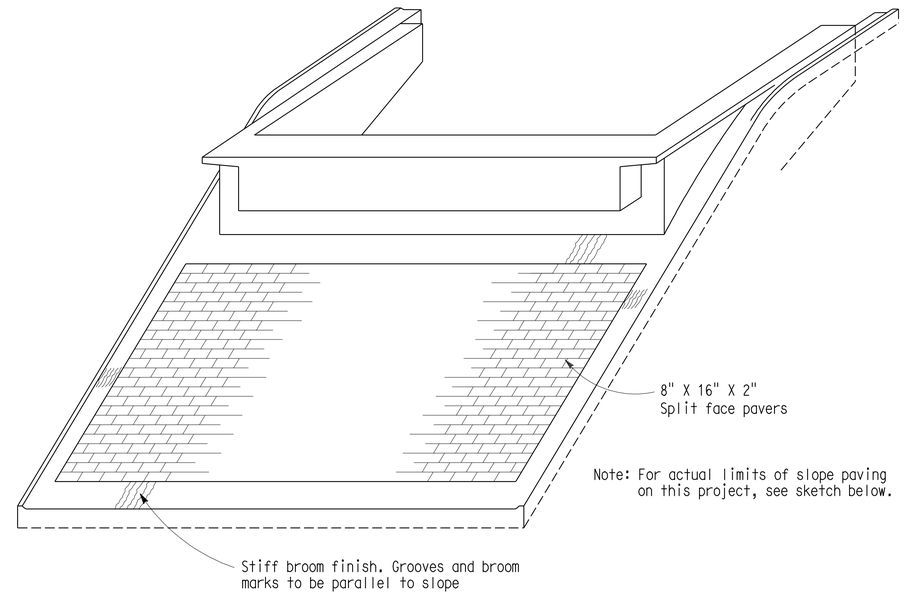

PICTORIAL VIEW OF TYPICAL INSTALLATION 1
NO SCALE

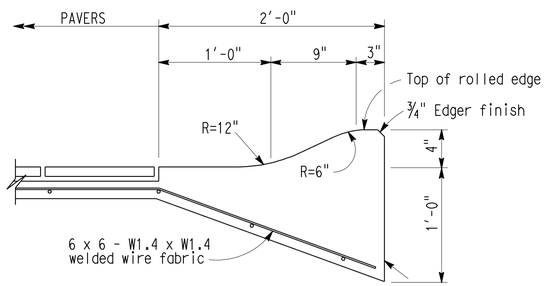

SECTION A-A 4
NO SCALE

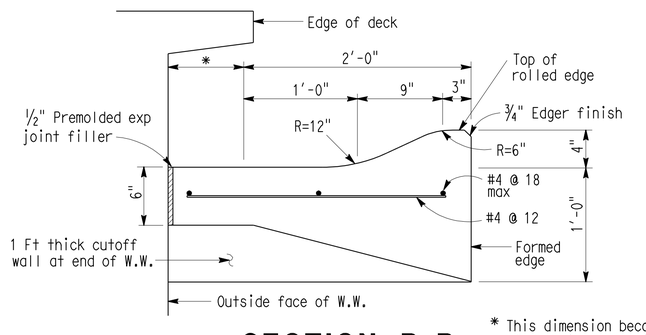

SECTION B-B
NO SCALE

* This dimension becomes zero when edge of deck is at outside face of W.W.

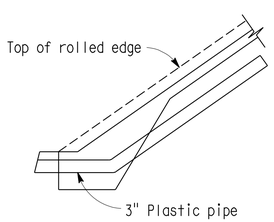

TYPICAL - WITH CURB
NO SCALE

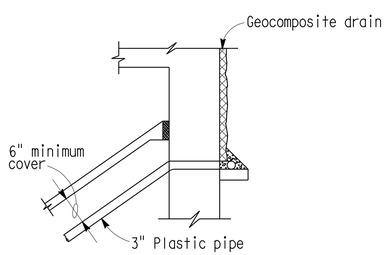

TYPICAL - DRAIN CONNECTION
NO SCALE

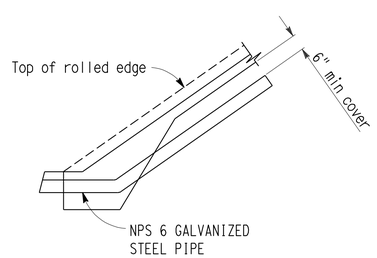

DEECK DRAIN OUTLET 5
NO SCALE

DRAINAGE DETAILS 3

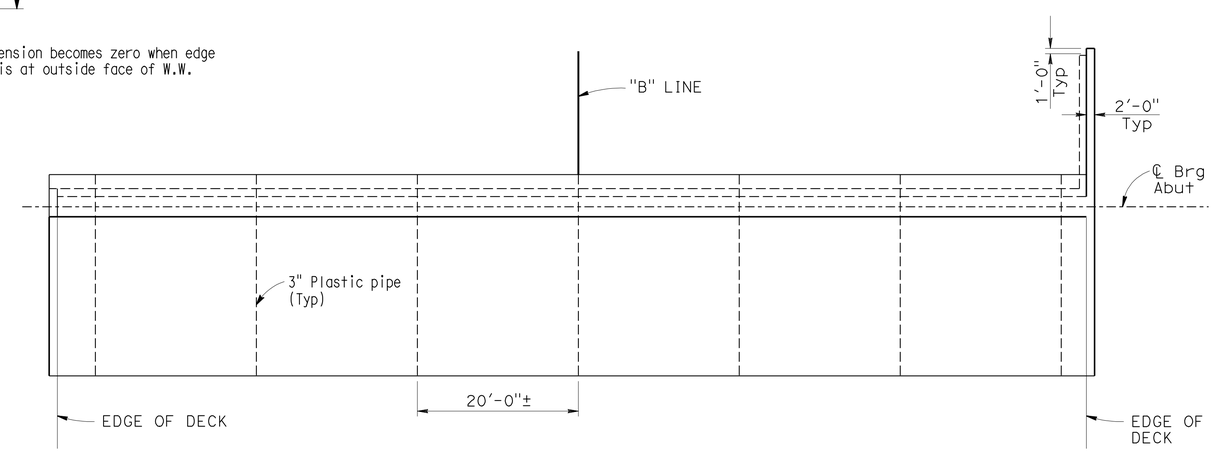

LIMITS OF SLOPE PAVING & DRAINAGE LAYOUT
Abut 3 shown, Abut 1 similar
NO SCALE

REVISED STANDARD DRAWING

FILE NO. xs4-210

APPROVAL DATE X-X-X

1 MODIFIED VIEW
2 ADDED PAVER DETAILS
3 REVISED DRAINAGE DETAILS
4 REVISED SECTION A-A
5 ADDED DETAIL

STATE OF CALIFORNIA
DEPARTMENT OF TRANSPORTATION

DIVISION OF ENGINEERING SERVICES

BRIDGE NO. 55-1104
POST MILE 0.01

ROUTE 74/5 SEPARATION (REPLACE)
SLOPE PAVING - FULL SLOPE

DS OSD 2147A (ENGLISH STANDARD DRAWING "XS" BORDER REV. (02-02-11)

ORIGINAL SCALE IN INCHES FOR REDUCED PLANS 0 1 2 3

UNIT: 3621
PROJECT NUMBER & PHASE: 1200000102 1 CONTRACT NO.: 12-0E3101

DISREGARD PRINTS BEARING EARLIER REVISION DATES → 03-03-11 03-14-12 10-25-11

SHEET 21 OF 38

FILE => 55-1104-r-spdet.dgn

USERNAME => s12161d DATE PLOTTED => 15-APR-2012 TIME PLOTTED => 09:46

DIST	COUNTY	ROUTE	POST MILES TOTAL PROJECT	SHEET No.	TOTAL SHEETS
12	Ora	5,74	9.3/10.0, 0.0/0.2	438	515

Charles Lomicka 03-14-12
REGISTERED CIVIL ENGINEER DATE

4-9-12
PLANS APPROVAL DATE

REGISTERED PROFESSIONAL ENGINEER CHARLES LOMICKA No. C 71172 Exp. 6/30/13 CIVIL STATE OF CALIFORNIA

The State of California or its officers or agents shall not be responsible for the accuracy or completeness of electronic copies of this plan sheet.

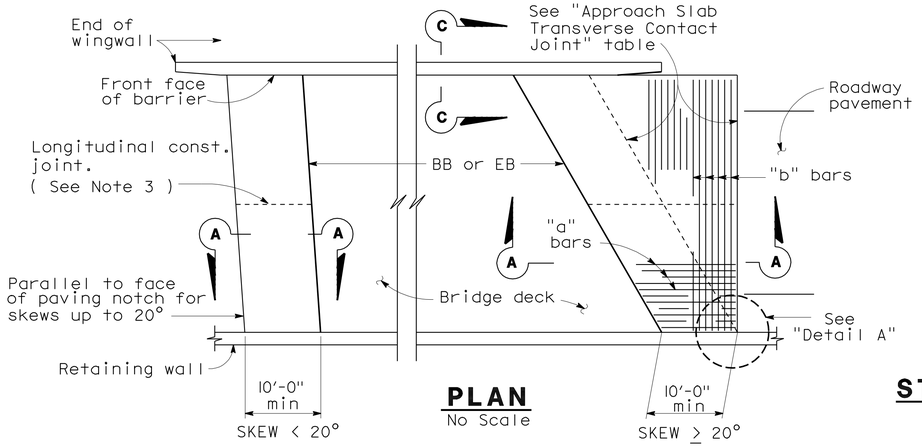

PLAN
No Scale

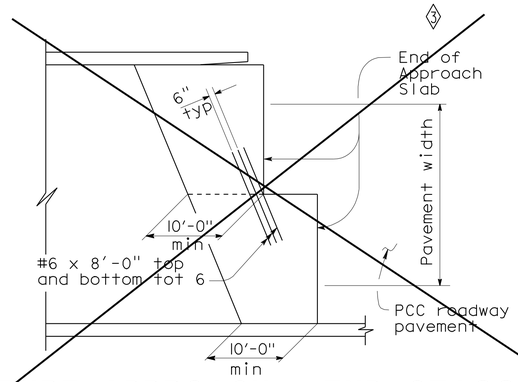

STRUCTURE APPROACH - END STAGGER DETAIL
No Scale

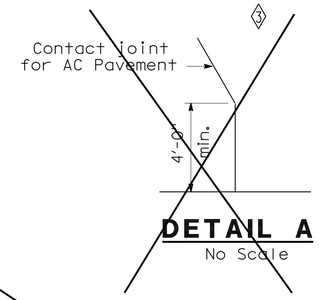

DETAIL A
No Scale

APPROACH SLAB TRANSVERSE CONTACT JOINT		
STRUCTURE SKEW	AC APPROACH PAVEMENT	PCC APPROACH PAVEMENT
< 20°	Parallel to face of paving notch	Parallel to face of paving notch
20°- 45°	Parallel to face of P N use (Detail A)	Stagger lines 24' to 36' apart
> 45°	Parallel to face of P N use (Detail A)	Stagger at each lane line

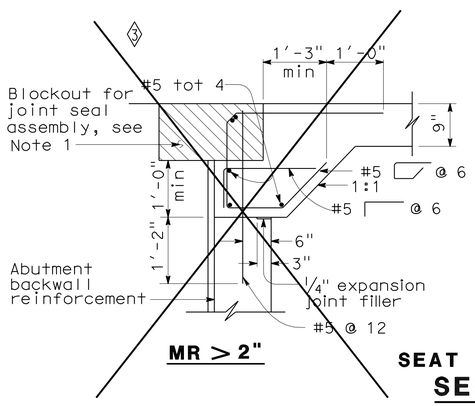

MR > 2"

SEAT TYPE ABUTMENT
SECTION A-A
No Scale

Note: Seat Type Abutment shown,for Diaphragm Type Abutment,see "Abutment Tie Details".

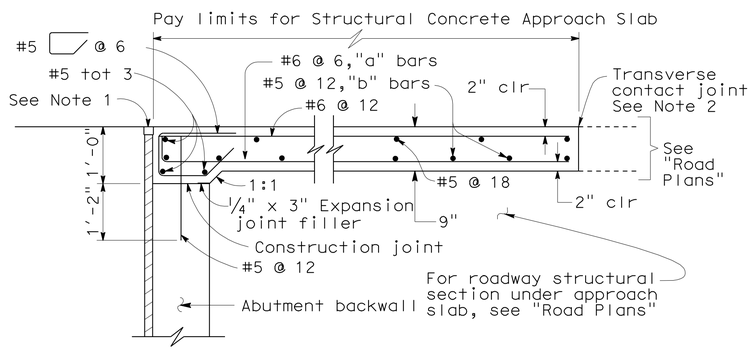

MR ≤ 2"

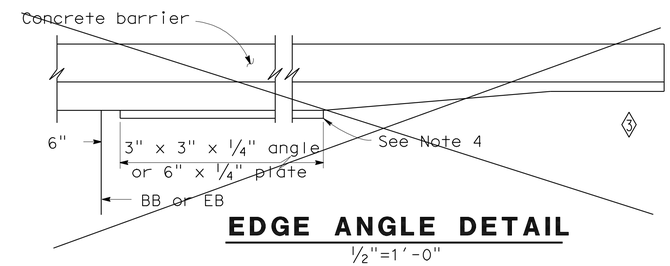

EDGE ANGLE DETAIL
1/2"=1'-0"

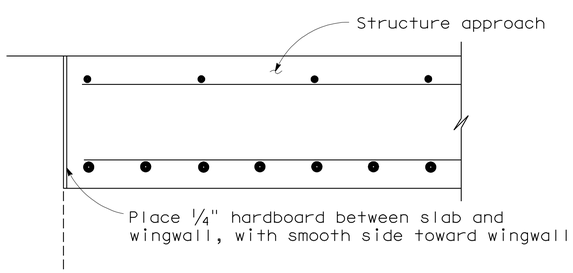

DETAIL B
No Scale

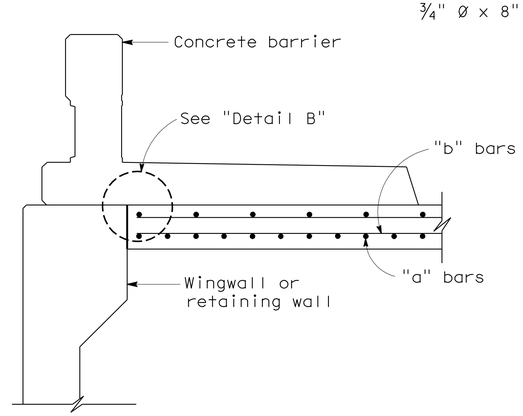

SECTION C-C
No Scale

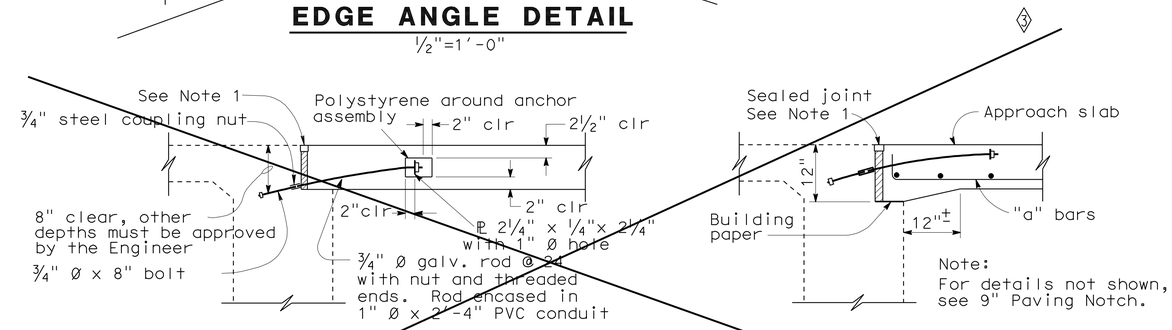

9" PAVING NOTCH

12" PAVING NOTCH

DIAPHRAGM TYPE ABUTMENT
ABUTMENT TIE DETAILS
No Scale

NOTES: 4

1. For details not noted or shown, see Structure Plans. Adjust bar reinforcement to clear a sawcut for sealed joint,when required.
2. For transverse contact joint with new PCC paving, refer to Standard Plan P10.
3. Longitudinal construction joints,when permitted by the Engineer,shall be located on lane lines.
4. At the contractor's option,approach slab transverse reinforcement may be placed parallel to paving notch. Spacing of transverse reinforcement is measured along ℄ roadway.
5. For drainage details,see "STRUCTURE APPROACH DRAINAGE DETAILS" sheet.

REVISED STANDARD DRAWING

FILE NO. xs3-150e

APPROVAL DATE X-X-X

1 REVISED SECTION C-C
2 REVISED DETAIL B
3 DELETED DETAILS
4 REVISED NOTES

STATE OF CALIFORNIA
DEPARTMENT OF TRANSPORTATION

DIVISION OF ENGINEERING SERVICES

BRIDGE NO. 55-1104
POST MILE 0.01

ROUTE 74/5 SEPARATION (REPLACE)
STRUCTURE APPROACH TYPE EQ(10)

DS OSD 2147A (ENGLISH STANDARD DRAWING "XS" BORDER REV. (02-02-11)

ORIGINAL SCALE IN INCHES FOR REDUCED PLANS 0 1 2 3

UNIT: 3621
PROJECT NUMBER & PHASE: 1200000102 1 CONTRACT NO.: 12-0E3101

DISREGARD PRINTS BEARING EARLIER REVISION DATES

REVISION DATES: 03-11-11 03-14-12 11-08-11

SHEET 22 OF 38

FILE => 55-1104-s-sa.dgn

USERNAME => s121614 DATE PLOTTED => 15-APR-2012 TIME PLOTTED => 09:46

DIST	COUNTY	ROUTE	POST MILES TOTAL PROJECT	SHEET No.	TOTAL SHEETS
12	Ora	5,74	9.3/10.0, 0.0/0.2	439	515

Charles Lomicka 03-14-12
REGISTERED CIVIL ENGINEER DATE

4-9-12
PLANS APPROVAL DATE

REGISTERED PROFESSIONAL ENGINEER
CHARLES LOMICKA
No. C 71172
Exp. 6/30/13
CIVIL
STATE OF CALIFORNIA

The State of California or its officers or agents shall not be responsible for the accuracy or completeness of electronic copies of this plan sheet.

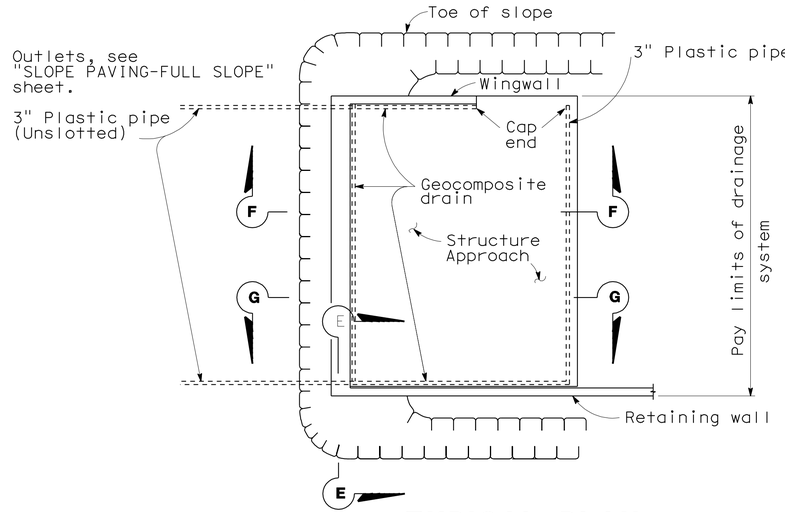

TYPICAL PLAN
No Scale
*For pipe layout at staggered end,see "Detail B".

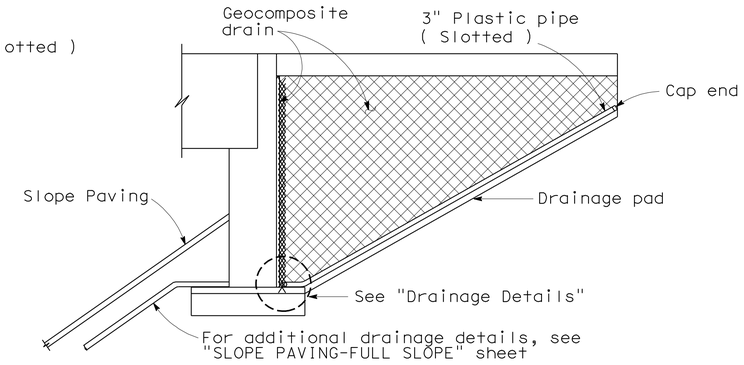

CANTILEVER WINGWALL
SECTION F-F
No Scale

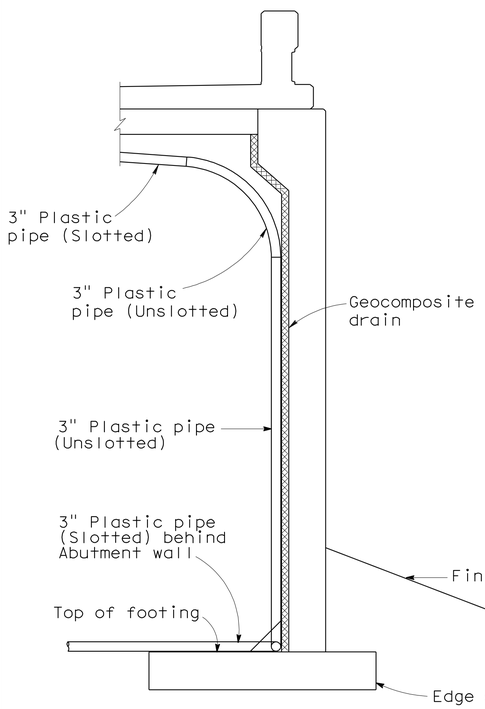

SECTION E-E
No Scale

NOTE: Bends and junctions in 3" plastic pipe are 30" radius min.

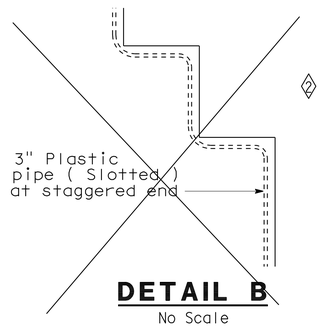

DETAIL B
No Scale

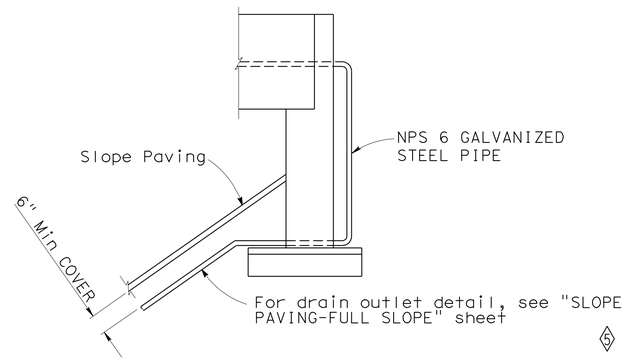

ABUTMENT 1 DECK DRAIN OUTLET
No Scale

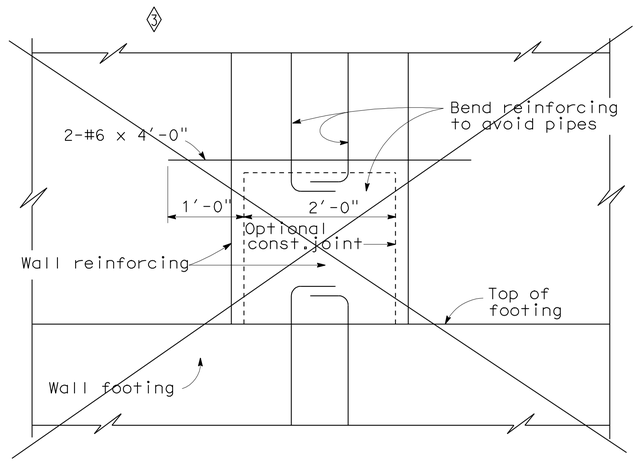

SECTION H-H
No Scale

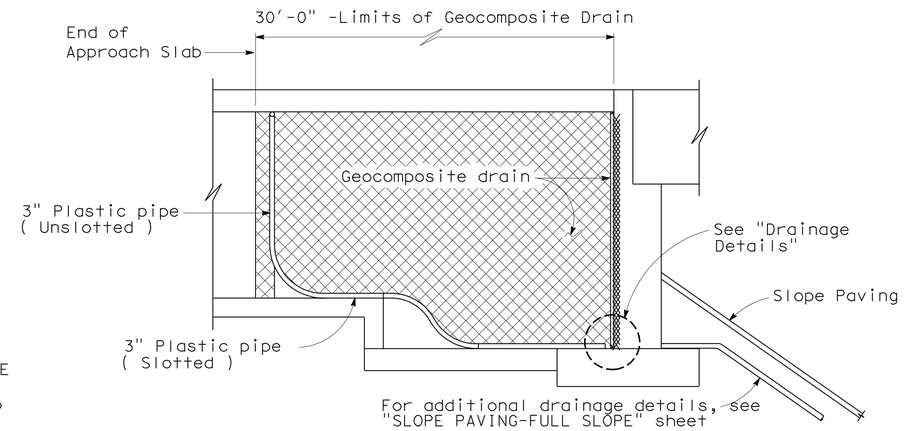

RETAINING WALL WINGWALL
SECTION G-G
No Scale

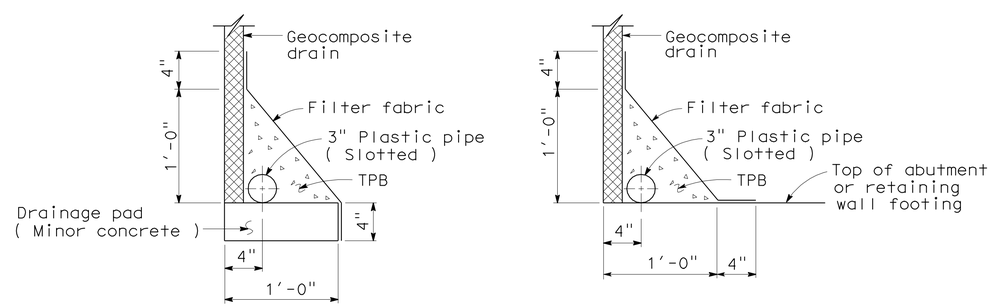

WITHOUT FOOTING **WITH FOOTING**

DRAINAGE DETAILS
No Scale

REVISED STANDARD DRAWING			
FILE NO. xs3-110e	APPROVAL DATE X-X-X	1 REVISED TYPICAL PLAN 2 DELETED "DETAIL B" 3 DELETED SECTION H-H	4 REVISED SECTION E-E 5 ADDED DETAIL

STATE OF CALIFORNIA
DEPARTMENT OF TRANSPORTATION

DIVISION OF ENGINEERING SERVICES

BRIDGE NO. 55-1104
POST MILE 0.01

ROUTE 74/5 SEPARATION (REPLACE)
STRUCTURE APPROACH DRAINAGE DETAILS

DS OSD 2147A (ENGLISH STANDARD DRAWING "XS" BORDER REV. (02-02-11)

ORIGINAL SCALE IN INCHES FOR REDUCED PLANS 0 1 2 3

UNIT: 3621
PROJECT NUMBER & PHASE: 1200000102 1 CONTRACT NO.: 12-0E3101

DISREGARD PRINTS BEARING EARLIER REVISION DATES

REVISION DATES: 03-03-11 03-14-12 10-28-11

SHEET 23 OF 38

FILE => 55-1104-s-sadd.dgn

USERNAME => s121614 DATE PLOTTED => 15-APR-2012 TIME PLOTTED => 09:46

DIST	COUNTY	ROUTE	POST MILES TOTAL PROJECT	SHEET No.	TOTAL SHEETS
12	Ora	5,74	9.3/10.0, 0.0/0.2	440	515

Charles Lomicka 03-14-12
REGISTERED CIVIL ENGINEER DATE

4-9-12
PLANS APPROVAL DATE

REGISTERED PROFESSIONAL ENGINEER CHARLES LOMICKA No. C 71172 Exp. 06-30-13 CIVIL STATE OF CALIFORNIA

The State of California or its officers or agents shall not be responsible for the accuracy or completeness of electronic copies of this plan sheet.

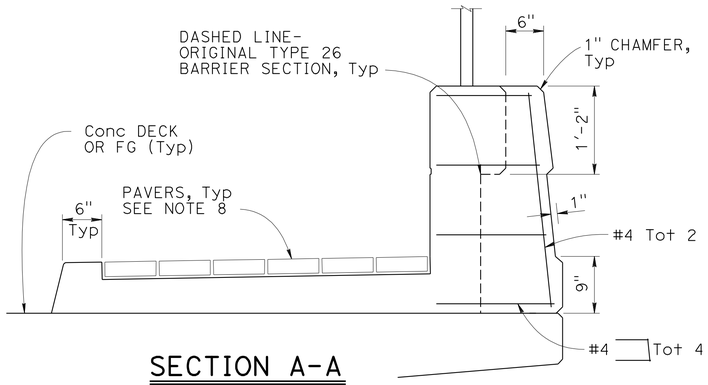

SECTION A-A

1" = 1'-0"

SIDEWALK SHOWN FOR ROUTE 74 WB - EB SIMILAR
SEE SECTION B-B, C-C, AND
" CONCRETE BARRIER TYPE 26 (Mod) NO. 2"
FOR ADDITIONAL DETAILS

NOTE:
THE CONTRACTOR SHALL VERIFY ALL CONTROLLING FIELD DIMENSIONS BEFORE ORDERING OR FABRICATING ANY MATERIAL.

NOTES:

1. For other barrier rail details not shown or noted, see B11-54
2. For fence details see, "CHAIN LINK RAILING TYPE 7 (Mod)" sheet
3. Dimension may vary to accommodate barrier aesthetic layout.
4. Number of recesses at end may vary.
5. Dimension may vary ±1" near bridge joint.
6. Dimension may vary +3" near bridge joint.
7. Reinforcement shown is in addition to that shown on B11-54
8. For additional paver details, see "CONCRETE BARRIER TYPE 26 (MOD) NO. 2" sheet.

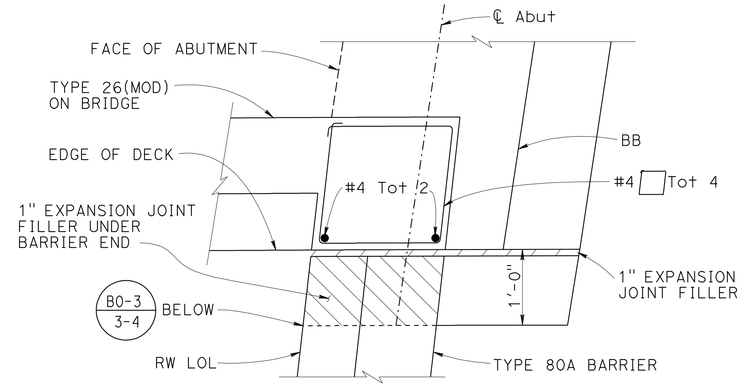

VIEW D-D

1" = 1'-0"

Abut 1 LEFT SHOWN, Abut 3 LEFT SIMILAR

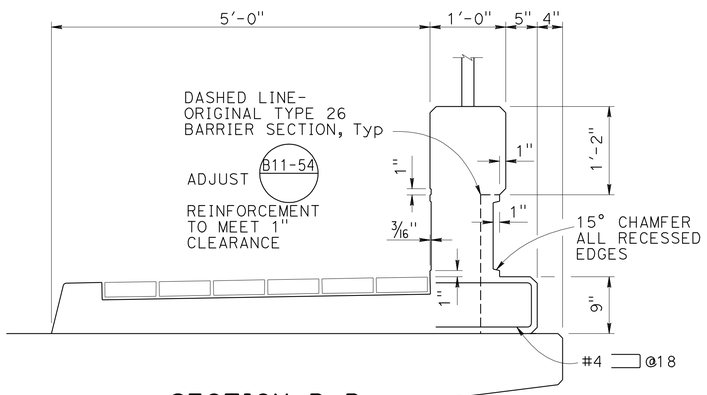

SECTION B-B

1" = 1'-0"

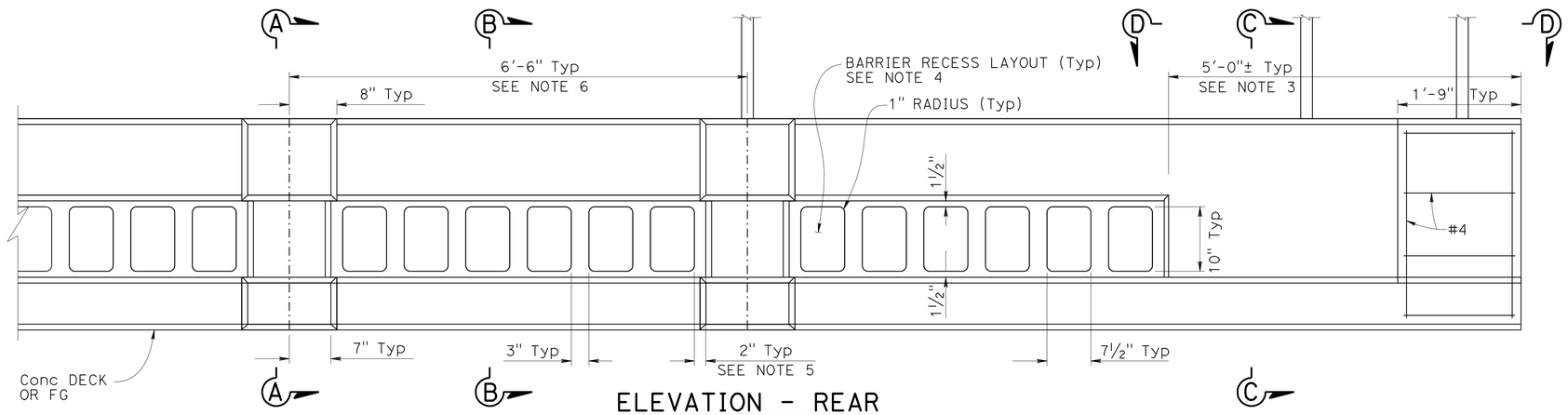

ELEVATION - REAR

1" = 1'-0"

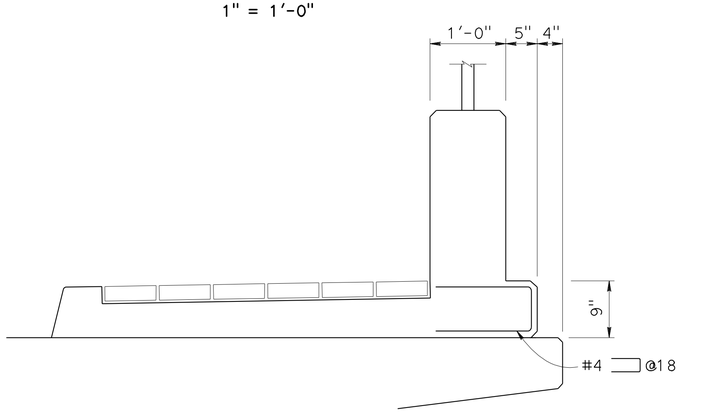

SECTION C-C

1" = 1'-0"

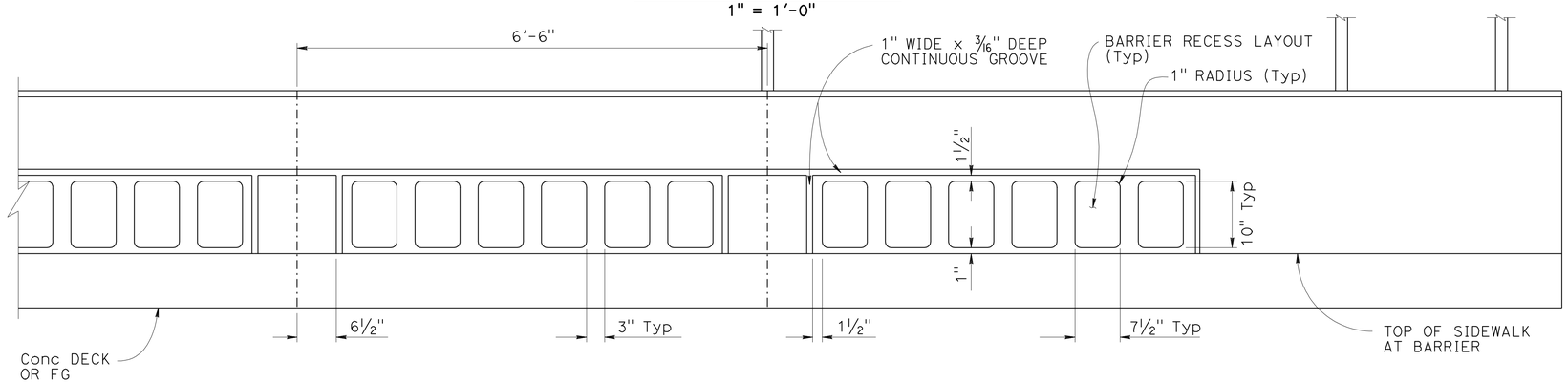

ELEVATION - FRONT

1" = 1'-0"

	BY	CHECKED
DESIGN	CHARLES LOMICKA	MAMUNUR RAHMAN
DETAILS	HENGAMEH MAHBOOBI/H.B.	MAMUNUR RAHMAN
QUANTITIES	CHARLES LOMICKA	SHAN-PIN YEH

STATE OF CALIFORNIA
DEPARTMENT OF TRANSPORTATION

DIVISION OF ENGINEERING SERVICES
STRUCTURE DESIGN
DESIGN BRANCH 19

BRIDGE NO. 55-1104
POST MILE 0.01

ROUTE 74/5 SEPARATION (REPLACE)
CONCRETE BARRIER TYPE 26(MOD) NO. 1

STRUCTURES DESIGN DETAIL SHEET (ENGLISH) (REV. 09-01-10)

ORIGINAL SCALE IN INCHES FOR REDUCED PLANS 0 1 2 3

UNIT: 3621
PROJECT NUMBER & PHASE: 1200000102 1 CONTRACT NO.: 12-0E3101

DISREGARD PRINTS BEARING EARLIER REVISION DATES

REVISION DATES: 03-16-11 03-14-12 10-26-11

SHEET 24 OF 38

FILE => 55-1104-t-brdet_01.dgn

USERNAME => s121614 DATE PLOTTED => 16-APR-2012 TIME PLOTTED => 12:04

DIST	COUNTY	ROUTE	POST MILES TOTAL PROJECT	SHEET No.	TOTAL SHEETS
12	Ora	5,74	9.3/10.0, 0.0/0.2	441	515

Charles Lomicka 03-14-12
REGISTERED CIVIL ENGINEER DATE

4-9-12
PLANS APPROVAL DATE

REGISTERED PROFESSIONAL ENGINEER
CHARLES LOMICKA
No. C 71172
Exp. 06/30/13
CIVIL
STATE OF CALIFORNIA

The State of California or its officers or agents shall not be responsible for the accuracy or completeness of electronic copies of this plan sheet.

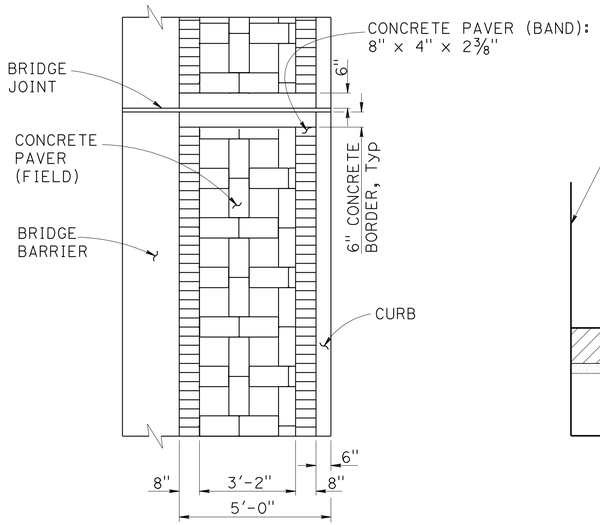

BRIDGE SIDEWALK PAVER LAYOUT

NO SCALE

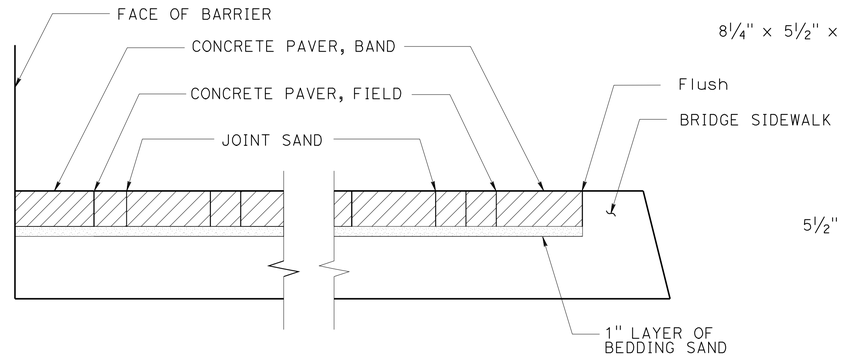

INTERLOCKING CONCRETE PAVER DETAIL

NO SCALE

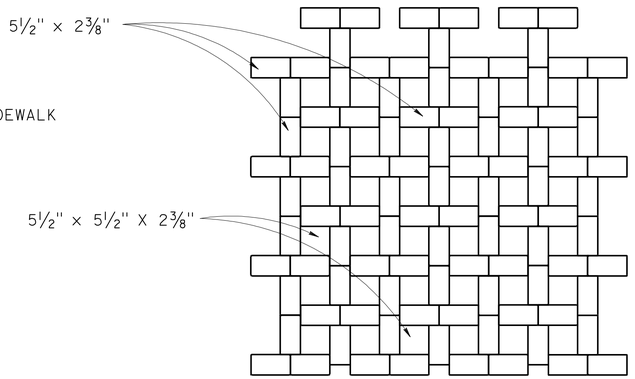

CONCRETE PAVER PATTERN (FIELD)

NO SCALE

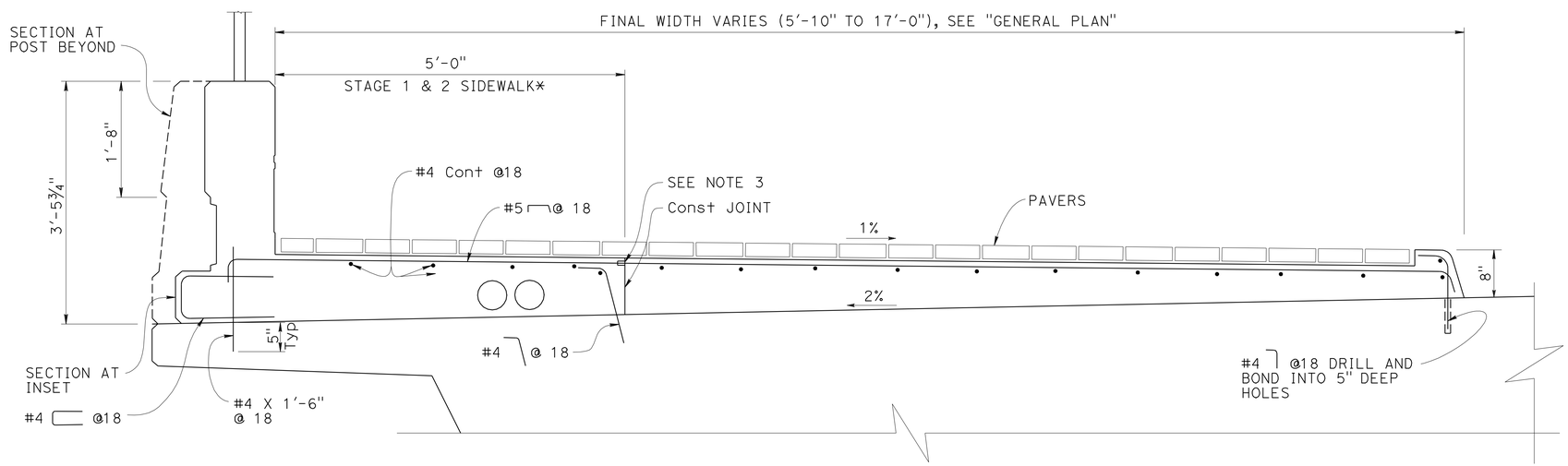

SIDEWALK DETAILS - ROUTE 74 EB

1" = 1'-0"

* BUILD PARTIAL WIDTH SIDEWALK DURING STAGE 1 CONSTRUCTION
FOR SIDEWALK LAYOUT, SEE GENERAL PLAN

NOTE:
THE CONTRACTOR SHALL VERIFY ALL CONTROLLING FIELD DIMENSIONS BEFORE ORDERING OR FABRICATING ANY MATERIAL.

NOTES:

1. For other barrier rail details not shown or noted, see B11-54
2. For fence details, see "CHAIN LINK RAILING TYPE 7 (Mod)" sheet.
3. Threaded rebar coupler at each transverse #5.

DESIGN	BY CHARLES LOMICKA	CHECKED MAMUNUR RAHMAN	
DETAILS	BY HEMANT BARBHAIYA	CHECKED MAMUNUR RAHMAN	
QUANTITIES	BY CHARLES LOMICKA	CHECKED SHAN-PIN YEH	

STATE OF CALIFORNIA
DEPARTMENT OF TRANSPORTATION

DIVISION OF ENGINEERING SERVICES
STRUCTURE DESIGN
DESIGN BRANCH 19

BRIDGE NO. 55-1104
POST MILE 0.01

ROUTE 74/5 SEPARATION (REPLACE)
CONCRETE BARRIER TYPE 26(MOD) NO. 2

STRUCTURES DESIGN DETAIL SHEET (ENGLISH) (REV. 09-01-10)

ORIGINAL SCALE IN INCHES FOR REDUCED PLANS 0 1 2 3

UNIT: 3621
PROJECT NUMBER & PHASE: 1200000102 1 CONTRACT NO.: 12-0E3101

DISREGARD PRINTS BEARING EARLIER REVISION DATES

REVISION DATES: 04-18-11 03-14-12 11-09-11

SHEET 25 OF 38

FILE => 55-1104-t-brdet_02.dgn

USERNAME => s121614 DATE PLOTTED => 15-APR-2012 TIME PLOTTED => 09:46

NOTE:
THE CONTRACTOR SHALL VERIFY ALL CONTROLLING FIELD DIMENSIONS BEFORE ORDERING OR FABRICATING ANY MATERIAL.

DIST	COUNTY	ROUTE	POST MILES TOTAL PROJECT	SHEET No.	TOTAL SHEETS
12	Ora	5,74	9.3/10.0, 0.0/0.2	442	515

Charles Lomicka 03-14-12
REGISTERED CIVIL ENGINEER DATE

4-9-12
PLANS APPROVAL DATE

REGISTERED PROFESSIONAL ENGINEER CHARLES LOMICKA No. C 71172 Exp. 06/30/13 CIVIL STATE OF CALIFORNIA

The State of California or its officers or agents shall not be responsible for the accuracy or completeness of electronic copies of this plan sheet.

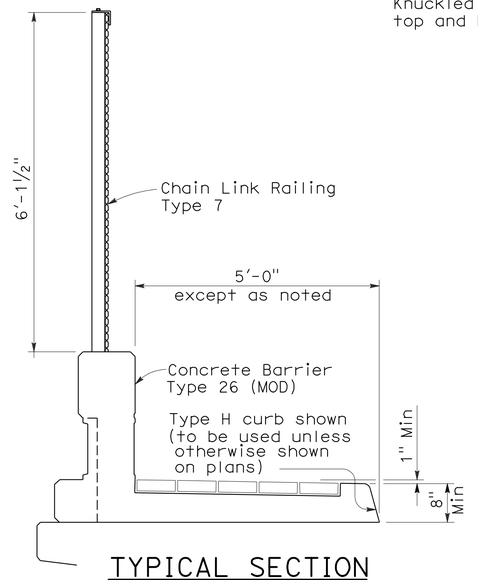

TYPICAL SECTION
NO SCALE

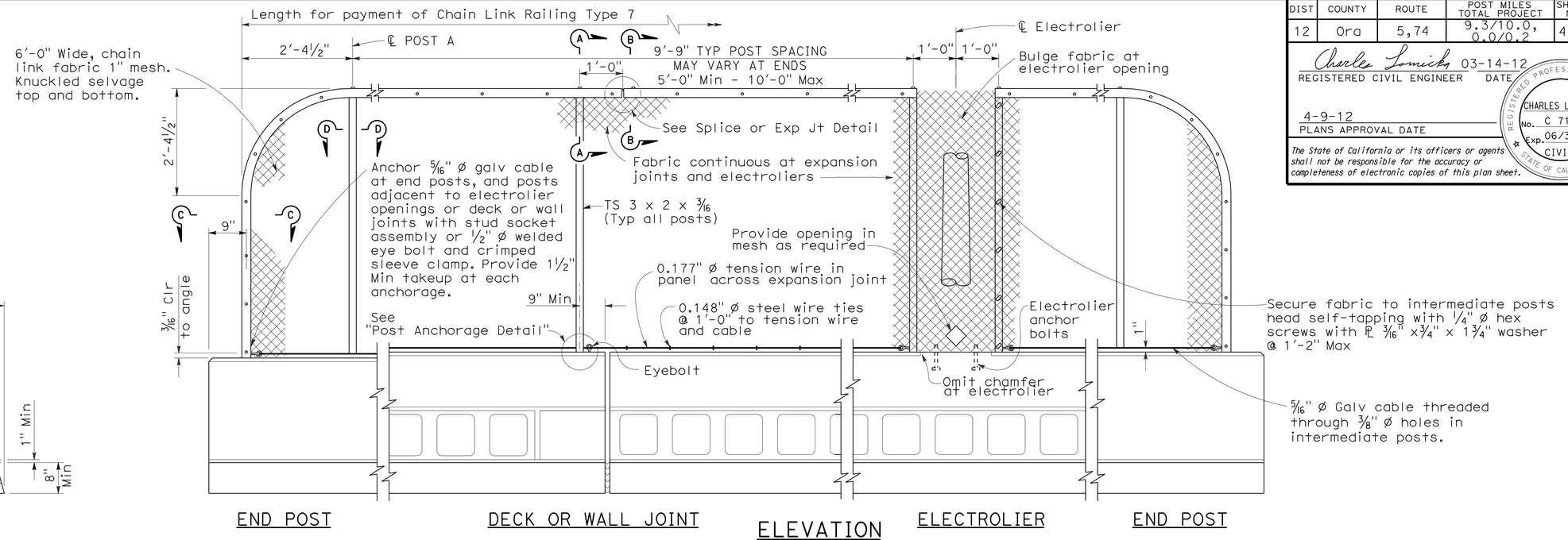

ELEVATION
NO SCALE

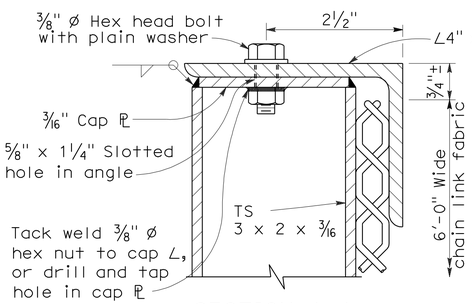

SECTION A-A
NO SCALE

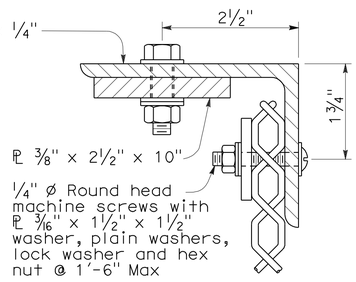

SECTION B-B
NO SCALE

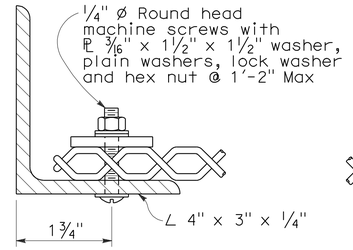

SECTION C-C
NO SCALE
TYPICAL FROM BASE TO POST A

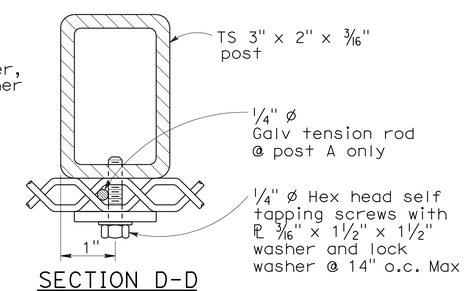

SECTION D-D
NO SCALE

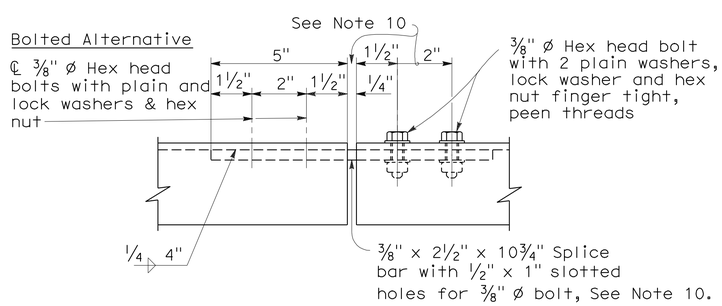

SPLICE OR EXPANSION JOINT DETAIL
NO SCALE

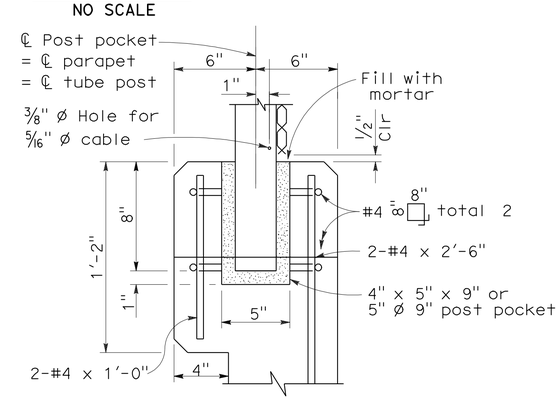

POST ANCHORAGE DETAIL
NO SCALE

NOTES:

1. Railing assembly except chain link fabric to be galvanized after fabrication.
2. Posts shall be vertical.
3. Railing shall conform to horizontal and vertical alignment. When railing is placed on a curved horizontal alignment with radius of 148'-0" or less, thread the 5/16" ø cable through ⅜" ø welded eye rods embedded 4" into the top of the concrete parapet and equally spaced to limit the midordinate distance between the 5/16" ø cable and the curve to 1" maximum. Horizontal angle shall be bent to conform to horizontal alignment if radius is 148'-0" or less and may be on 10'-0" chords if radius is over 148'-0"
4. Horizontal angle shall be continuous over not less than two intermediate posts, except that a shorter length is permitted at expansion joints, electroliers and other rail discontinuities.
5. When rail is on slope, place fabric parallel to slope.
6. Alternative details may be submitted by Contractor for Engineer's approval.
7. For details and reinforcement not shown see Standard Plan B11-54.
8. See Project Plans for limits of Chain Link Railing Type 7.
9. Provide thimbles at all cable loops.
10. Expansion joint same dimension as expansion joint in deck or wall. Increase slotted hole length and splice bar length correspondingly.

	BY	CHECKED
DESIGN	CHARLES LOMICKA	MAMUNUR RAHMAN
DETAILS	HENGAMEH MAHOOBI	MAMUNUR RAHMAN
QUANTITIES	CHARLES LOMICKA	SHAN-PIN YEH

STATE OF CALIFORNIA
DEPARTMENT OF TRANSPORTATION

DIVISION OF ENGINEERING SERVICES
STRUCTURE DESIGN
DESIGN BRANCH 19

BRIDGE NO. 55-1104
POST MILE 0.01

ROUTE 74/5 SEPARATION (REPLACE)
CHAIN LINK RAILING TYPE 7 (MOD)

STRUCTURES DESIGN DETAIL SHEET (ENGLISH) (REV. 09-01-10)

ORIGINAL SCALE IN INCHES FOR REDUCED PLANS 0 1 2 3

UNIT: 3621
PROJECT NUMBER & PHASE: 1200000102 1 CONTRACT NO.: 12-0E3101

DISREGARD PRINTS BEARING EARLIER REVISION DATES

REVISION DATES 05-05-11 03-14-12 11-08-11

SHEET 26 OF 38

FILE => 55-1104-t-brdet_03.dgn

USERNAME => s121614 DATE PLOTTED => 15-APR-2012 TIME PLOTTED => 09:46

DIST	COUNTY	ROUTE	POST MILES TOTAL PROJECT	SHEET No.	TOTAL SHEETS
12	Ora	5,74	9.3/10.0, 0.0/0.2	443	515

Charles Lomicka 03-14-12
REGISTERED CIVIL ENGINEER DATE

4-9-12
PLANS APPROVAL DATE

REGISTERED PROFESSIONAL ENGINEER
CHARLES LOMICKA
No. C 71172
Exp. 6/30/13
CIVIL
STATE OF CALIFORNIA

The State of California or its officers or agents shall not be responsible for the accuracy or completeness of electronic copies of this plan sheet.

LEGEND:

-·-·- Indicates Existing Structure

Bridge Removal

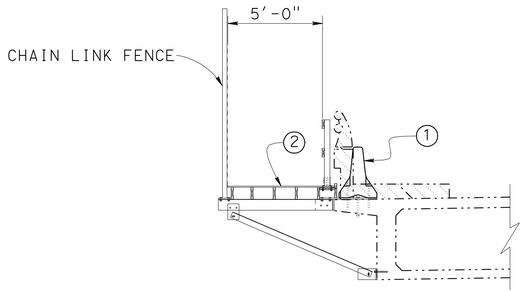

TYPICAL SECTION

1/4" = 1'-0"

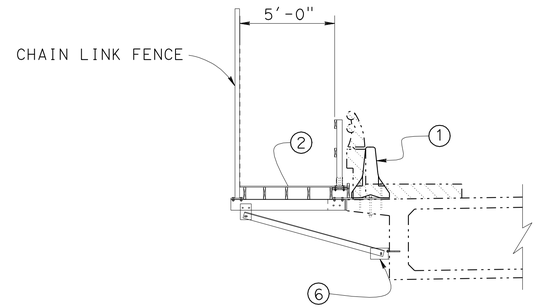

SECTION AT MIDSPAN

1/4" = 1'-0"

NOTES:

1. Temporary Railing Type K, for limits see "ROAD PLANS". K-rail shall be placed such that K-rail anchors do not interfere with anchor plates for temporary sidewalk.
2. Temporary Pedestrian Sidewalk to be in place before stage 1 removal (eastbound portion of existing bridge). Temporary Sidewalk to be removed after stage 1 construction is open to traffic.
3. Edge of existing deck.
4. Bottom edge of existing bridge soffit.
5. Centerline of sidewalk support brackets.
6. See "TYPICAL SECTION" sheet for alternate lower brace dimension near midspan.
7. HMA transition, see Road Plans.

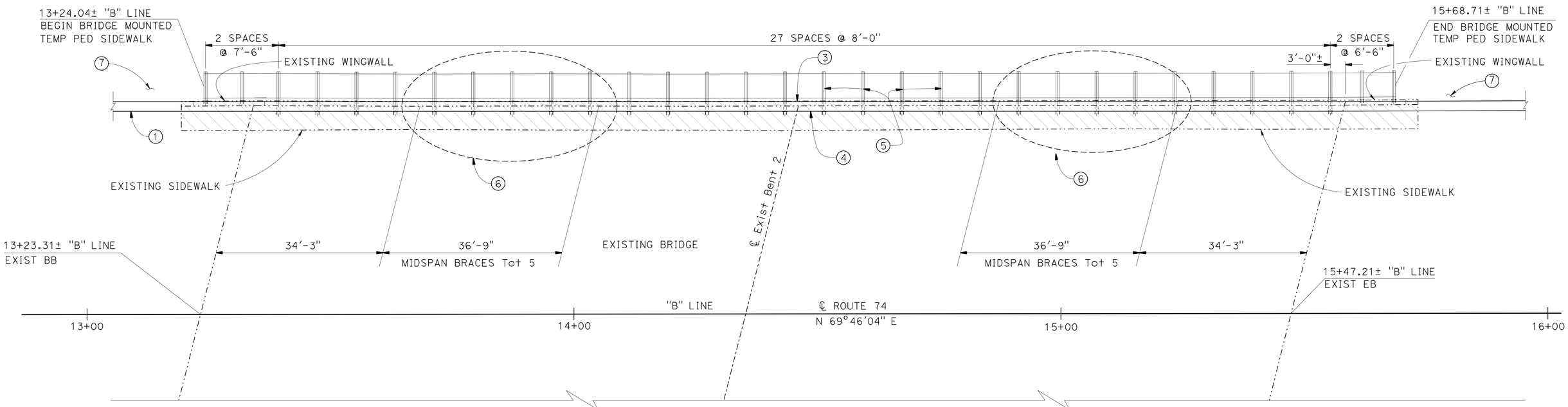

PLAN

1" = 10'-0"

NOTE:
THE CONTRACTOR SHALL VERIFY ALL CONTROLLING FIELD DIMENSIONS BEFORE ORDERING OR FABRICATING ANY MATERIAL.

	BY	CHECKED
DESIGN	CHARLES LOMICKA	MAMUNUR RAHMAN
DETAILS	M KINGRA, H.INIGUEZ	MAMUNUR RAHMAN
QUANTITIES	CHARLES LOMICKA	EDWARD MERCADO

STATE OF CALIFORNIA
DEPARTMENT OF TRANSPORTATION

DIVISION OF ENGINEERING SERVICES
STRUCTURE DESIGN
DESIGN BRANCH 19

BRIDGE NO. 55-1104
POST MILE 0.01

ROUTE 74/5 SEPARATION (REPLACE)
TEMPORARY PEDESTRIAN SIDEWALK
LAYOUT PLAN

STRUCTURES DESIGN DETAIL SHEET (ENGLISH) (REV. 09-01-10)

ORIGINAL SCALE IN INCHES FOR REDUCED PLANS 0 1 2 3

UNIT: X
PROJECT NUMBER & PHASE: 1200000102 1 CONTRACT NO.: 0E3101

DISREGARD PRINTS BEARING EARLIER REVISION DATES

REVISION DATES: 2-24-12 03-14-12 03-06-12

SHEET 27 OF 38

FILE => 55-1104-u-swalk- lo_pln.dgn

USERNAME => s121614 DATE PLOTTED => 15-APR-2012 TIME PLOTTED => 09:47

DIST	COUNTY	ROUTE	POST MILES TOTAL PROJECT	SHEET No.	TOTAL SHEETS
12	Ora	5,74	9.3/10.0, 0.0/0.2	444	515

Charles Lomicka 03-14-12
REGISTERED CIVIL ENGINEER DATE

4-9-12
PLANS APPROVAL DATE

REGISTERED PROFESSIONAL ENGINEER
CHARLES LOMICKA
No. C 71172
Exp. 6/30/13
STATE OF CALIFORNIA

The State of California or its officers or agents shall not be responsible for the accuracy or completeness of electronic copies of this plan sheet.

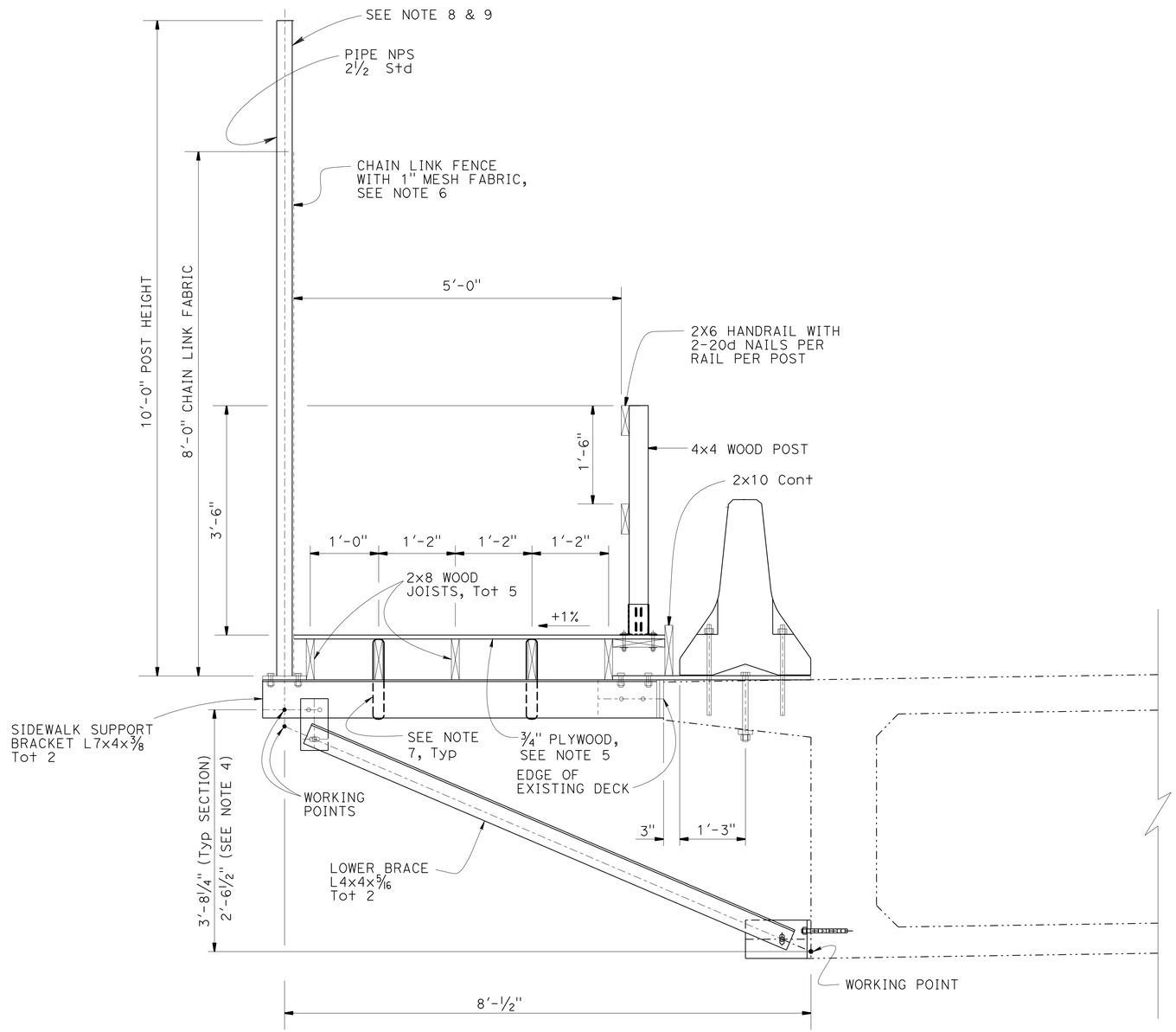

TYPICAL SECTION

1" = 1'-0"

NOTE:
THE CONTRACTOR SHALL VERIFY ALL CONTROLLING FIELD DIMENSIONS BEFORE ORDERING OR FABRICATING ANY MATERIAL.

NOTES:

1. Secure plywood to stringers with 8d galvanized ring shank common nails or 2½" x9 exterior deck screws. Spacing shall be 6" at edges and 12" in the field. Block all edges of plywood. Top surface of plywood to be painted with Non-skid Paint, or equal. Shim plywood to drain towards bridge.
2. See "DETAILS NO. 1" and "DETAILS NO. 2" sheets for additional dimensions and sections.
3. Utilities shall not be placed on walkway or walkway supports.
4. Dimension for midspan braces. For location of lower braces with higher attachment point near midspan, see PLAN VIEW on "LAYOUT PLAN" sheet.
5. If longitudinal plywood joints are used, place additional 2X8 joist as necessary for plywood edge nailing. Longitudnal plywood joints shall not be located less than 2'-6" from face of handrail.
6. For additional fence details not shown, see Standard Plan A85.
7. Place ¾" lumber banding tiedown around 2X8 joist and double L 7X4X⅜, total 2 at every other support bracket (16' spacing).
8. Attach temporary lighting on fence poles 16' apart. Refer to Section 86-6.11 of the Standard Specifications for type of light.
9. For temporary lighting service, see Road Plans, sheet E30.

GENERAL NOTES

DESIGN: CALTRANS BRIDGE DESIGN SPECIFICATIONS (1996 AASHTO WITH INTERIMS AND REVISIONS BY CALTRANS)

AISC STEEL CONSTRUCTION MANUAL, 13TH EDITION, ASD

AMERICAN WOOD COUNCIL NATIONAL DESIGN SPECIFICATION FOR WOOD CONSTRUCTION

LIVE LOADING: PEDESTRIAN LOAD: 85 psf

STRUCTURAL STEEL:
PLATES AND ROLLED SECTIONS: ASTM A709, GRADE 36
BOLTS, NUTS, WASHERS: ASTM A325, TYPE 1; ASTM A307, GRADE B; ASTM F436; ASTM F844; ASTM A563

BOLT HOLES SHALL BE 1/16" LARGER THAN THE NOMINAL DIAMETER OF THE BOLT, UNLESS OTHERWISE NOTED. ALL HIGH STRENGTH BOLT ASSEMBLIES SHALL UTILIZE LOCK WASHERS AND BE SNUG TIGHTENED.

ALL STEEL AND FASTENERS SHALL BE GALVANIZED AFTER FABRICATION.

WELDING: WELDING SHALL CONFORM TO THE REQUIREMENTS OF AWS D1.1.

TIMBER: DOUGLAS FIR LARCH SELECT STRUCTURAL.

PLYWOOD: APA RATED STRUCTURAL 1, EXTERIOR, FIVE-PLY, FIVE-LAYER

	BY	CHECKED
DESIGN	CHARLES LOMICKA	MAMUNUR RAHMAN
DETAILS	M. KINGRA, H. INIGUEZ	MAMUNUR RAHMAN
QUANTITIES	CHARLES LOMICKA	EDWARD MERCADO

STATE OF CALIFORNIA
DEPARTMENT OF TRANSPORTATION

DIVISION OF ENGINEERING SERVICES
STRUCTURE DESIGN
DESIGN BRANCH 19

BRIDGE NO. 55-1104
POST MILE 0.01

ROUTE 74/5 SEPARATION (REPLACE)
TEMPORARY PEDESTRIAN SIDEWALK
TYPICAL SECTION

STRUCTURES DESIGN DETAIL SHEET (ENGLISH) (REV. 09-01-10)

ORIGINAL SCALE IN INCHES FOR REDUCED PLANS 0 1 2 3

UNIT: 3621
PROJECT NUMBER & PHASE: 1200000102 1 CONTRACT NO.: 12-0E3101

DISREGARD PRINTS BEARING EARLIER REVISION DATES

REVISION DATES: 01-31-13 03-14-12 03-06-12 SHEET 28 OF 38

FILE => 55-1104-u-swalk- ts.dgn

USERNAME => s121614 DATE PLOTTED => 15-APR-2012 TIME PLOTTED => 09:47

DIST	COUNTY	ROUTE	POST MILES TOTAL PROJECT	SHEET No.	TOTAL SHEETS
12	Ora	5,74	9.3/10.0, 0.0/0.2	445	515

Charles Lomicka 03-14-12
REGISTERED CIVIL ENGINEER DATE

4-9-12
PLANS APPROVAL DATE

REGISTERED PROFESSIONAL ENGINEER CHARLES LOMICKA No. C 71172 Exp. 6/30/13 CIVIL STATE OF CALIFORNIA

The State of California or its officers or agents shall not be responsible for the accuracy or completeness of electronic copies of this plan sheet.

SUPPORT DIMENSIONS

SECTION	A	B	C	D
TYPICAL	3"	6"	5¾"	1¼"
WINGWALL	3"	6"	5¾"	1¼"
MIDSPAN	3⅞"	5⅝"	5½"	2"

NOTES:

1. For anchorage details, see "TYPE K RAILING ATTACHMENT DETAIL" on "CONSTRUCTION STAGING PLAN" sheet. K-rail shall be placed such that K-rail anchors do not interfere with anchor plates for temporary sidewalk.
2. Resin capsule anchorage is subject to approval of Engineer. Installation procedure shall comply with manufacturer's instructions.
3. Shim anchor plate as necessary at edge of deck to achieve level condition.
4. For nailing detail, see "DETAILS NO. 2" sheet.
5. WT 12X52 shall have full bearing against edge of deck.

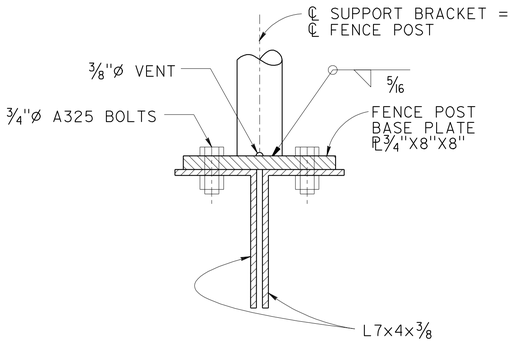

SECTION D-D
3" = 1'-0"

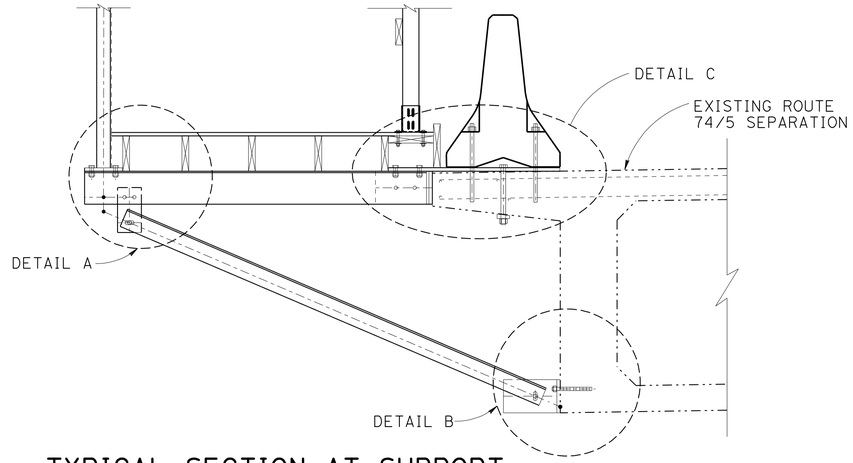

TYPICAL SECTION AT SUPPORT
¾" = 1'-0"

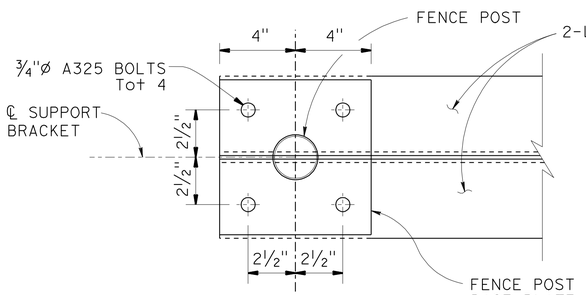

SECTION A-A
3" = 1'-0"

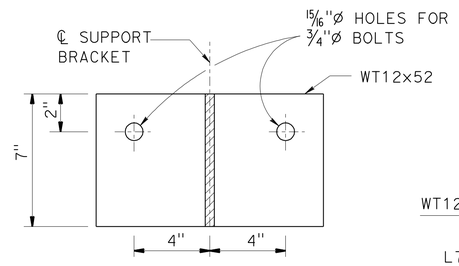

SECTION B-B
3" = 1'-0"

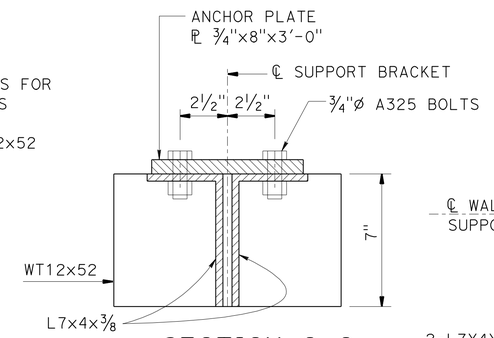

SECTION C-C
3" = 1'-0"

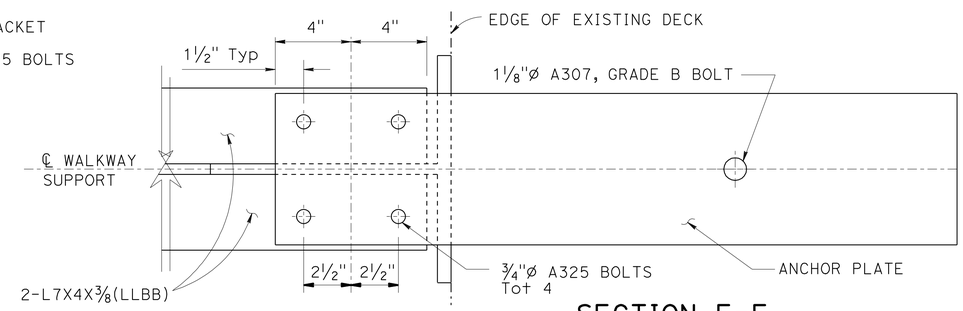

SECTION F-F
3" = 1'-0"

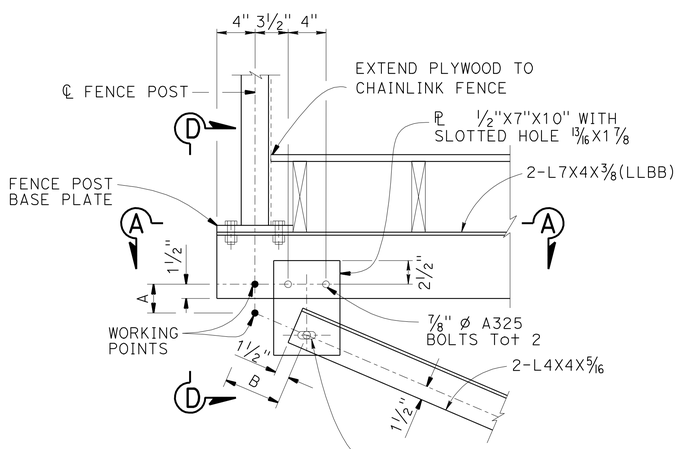

DETAIL A
1½" = 1'-0"

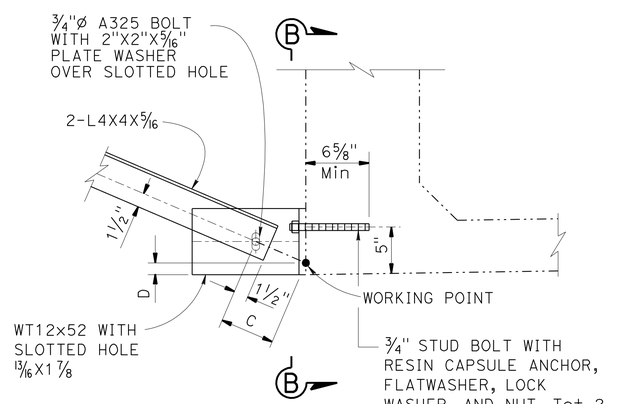

DETAIL B
1½" = 1'-0"

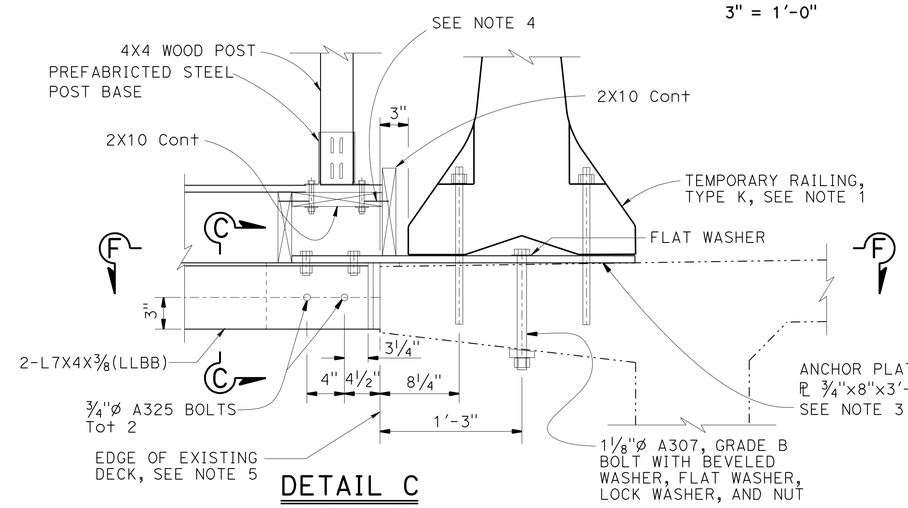

DETAIL C
1½" = 1'-0"

NOTE:
THE CONTRACTOR SHALL VERIFY ALL CONTROLLING FIELD DIMENSIONS BEFORE ORDERING OR FABRICATING ANY MATERIAL.

	BY	CHECKED
DESIGN	CHARLES LOMICKA	MAMUNUR RAHMAN
DETAILS	M. KINGRA	MAMUNUR RAHMAN
QUANTITIES	CHARLES LOMICKA	EDWARD MERCADO

STATE OF CALIFORNIA
DEPARTMENT OF TRANSPORTATION

DIVISION OF ENGINEERING SERVICES
STRUCTURE DESIGN
DESIGN BRANCH 19

BRIDGE NO. 55-1104
POST MILE 0.01

ROUTE 74/5 SEPARATION (REPLACE)
TEMPORARY PEDESTRIAN SIDEWALK
DETAILS NO. 1

STRUCTURES DESIGN DETAIL SHEET (ENGLISH) (REV. 09-01-10)

ORIGINAL SCALE IN INCHES FOR REDUCED PLANS 0 1 2 3

UNIT: 3621
PROJECT NUMBER & PHASE: 1200000102 1 CONTRACT NO.: 12-0E3101

DISREGARD PRINTS BEARING EARLIER REVISION DATES
REVISION DATES 01-31-11 03-14-12 05-09-12
SHEET 29 OF 38

FILE => 55-1104-u-swalk_det-01.dgn

USERNAME => s121614 DATE PLOTTED => 15-APR-2012 TIME PLOTTED => 09:47

DIST	COUNTY	ROUTE	POST MILES TOTAL PROJECT	SHEET No.	TOTAL SHEETS
12	Ora	5,74	9.3/10.0, 0.0/0.2	446	515

Charles Lomicka 03-14-12
REGISTERED CIVIL ENGINEER DATE

4-9-12
PLANS APPROVAL DATE

REGISTERED PROFESSIONAL ENGINEER
CHARLES LOMICKA
No. C 71172
Exp. 6/30/13
CIVIL
STATE OF CALIFORNIA

The State of California or its officers or agents shall not be responsible for the accuracy or completeness of electronic copies of this plan sheet.

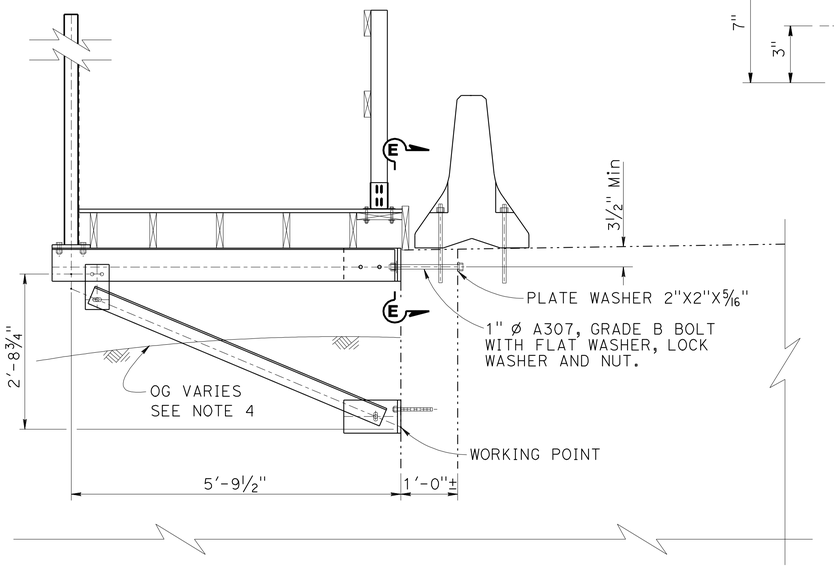

TYPICAL SECTION AT WINGWALL

¾" = 1'-0"
(SEE NOTE 1)

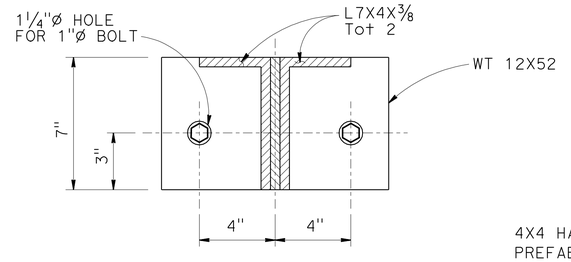

SECTION E-E

3" = 1'-0"

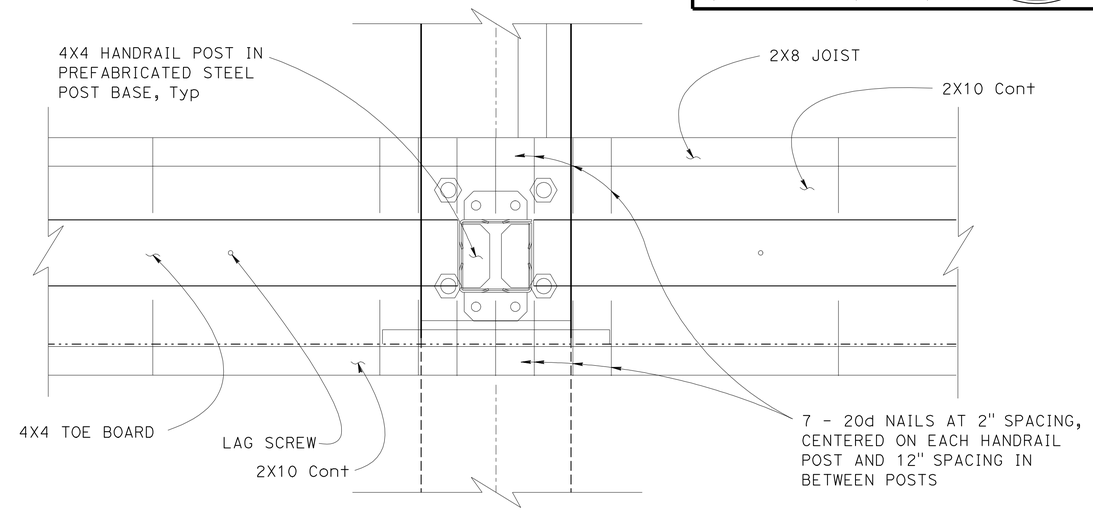

DETAIL D

3" = 1'-0"

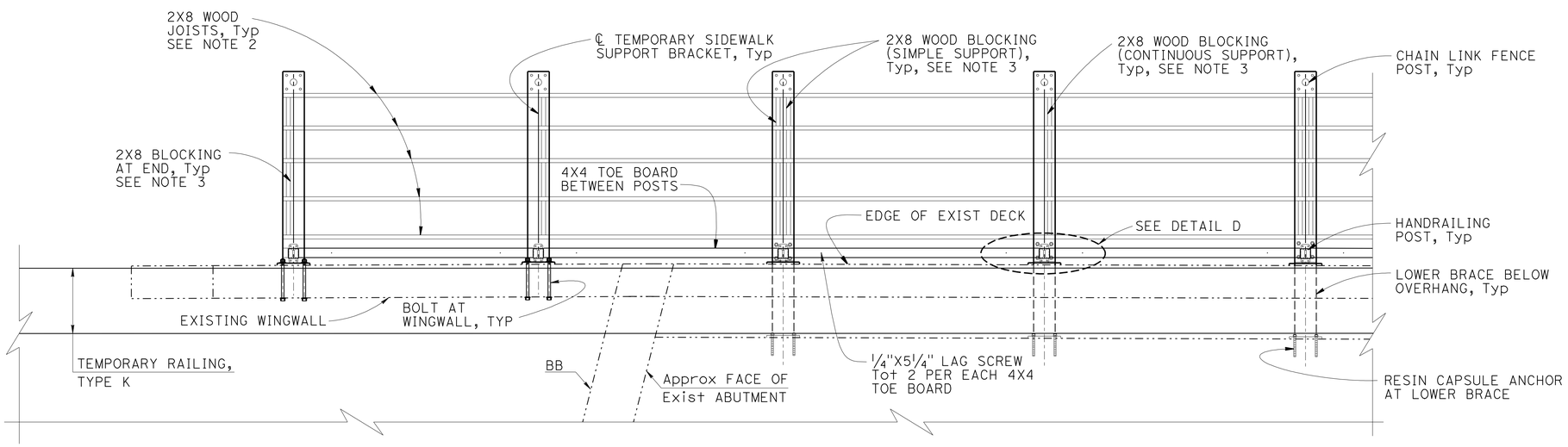

PARTIAL FRAMING PLAN

(ABUTMENT 1 SHOWN, ABUTMENT 3 SIMILAR)

½" = 1'-0"

NOTE:
THE CONTRACTOR SHALL VERIFY ALL CONTROLLING FIELD DIMENSIONS BEFORE ORDERING OR FABRICATING ANY MATERIAL.

NOTES:

1. For details not shown, see "TYPICAL SECTION" and "DETAILS NO. 1" sheet.
2. Joists shall be continuous over a minimum of one support.
3. Use 2-8d Galvanized Ring Shank common nails at each end of blocking. Blocking may be staggered between joists.
4. Excavate as necessary to install lower brace at wingwalls.

	BY	CHECKED
DESIGN	CHARLES LOMICKA	MAMUNUR RAHMAN
DETAILS	M. KINGRA, H. INIGUEZ	MAMUNUR RAHMAN
QUANTITIES	CHARLES LOMICKA	X

STATE OF CALIFORNIA
DEPARTMENT OF TRANSPORTATION

DIVISION OF ENGINEERING SERVICES
STRUCTURE DESIGN
DESIGN BRANCH 19

BRIDGE NO. 55-1104
POST MILE 0.01

ROUTE 74/5 SEPARATION (REPLACE)
TEMPORARY PEDESTRIAN SIDEWALK
DETAILS NO. 2

STRUCTURES DESIGN DETAIL SHEET (ENGLISH) (REV. 09-01-10)

ORIGINAL SCALE IN INCHES FOR REDUCED PLANS 0 1 2 3

UNIT: 3621
PROJECT NUMBER & PHASE: 1200000102 1 CONTRACT NO.: 12-0E3101

DISREGARD PRINTS BEARING EARLIER REVISION DATES → 01-31-11 03-14-12 03-06-12

SHEET 30 OF 38

FILE => 55-1104-u-swalk_det-02.dgn

USERNAME => s121614 DATE PLOTTED => 15-APR-2012 TIME PLOTTED => 08:47

DIST	COUNTY	ROUTE	POST MILES TOTAL PROJECT	SHEET No.	TOTAL SHEETS
12	Ora	5,74	9.3/10.0, 0.0/0.2	447	515

GEOTECHNICAL PROFESSIONAL — DATE 07/2011

4-9-12
PLANS APPROVAL DATE

REGISTERED PROFESSIONAL ENGINEER — MICHAEL G. SMITH — No. 2229 — Exp. 3-31-2012 — GEOTECHNICAL — STATE OF CALIFORNIA

The State of California or its officers or agents shall not be responsible for the accuracy or completeness of electronic copies of this plan sheet.

This LOTB sheet was prepared in accordance with the Caltrans Soil & Rock Logging, Classification, & Presentation Manual (2010 Edition).

BENCH MARK

SUHV-20021
FND PK/TIN
80.10 Ft Lt ℄ Route 5
Sta 517+51.39
Elev= 117.01′
NAVD88

SUHV-20027
FND PK/NAIL
136.66 Ft Rt ℄ Route 5
Sta 519+18.34
Elev= 144.30′
NAVD88

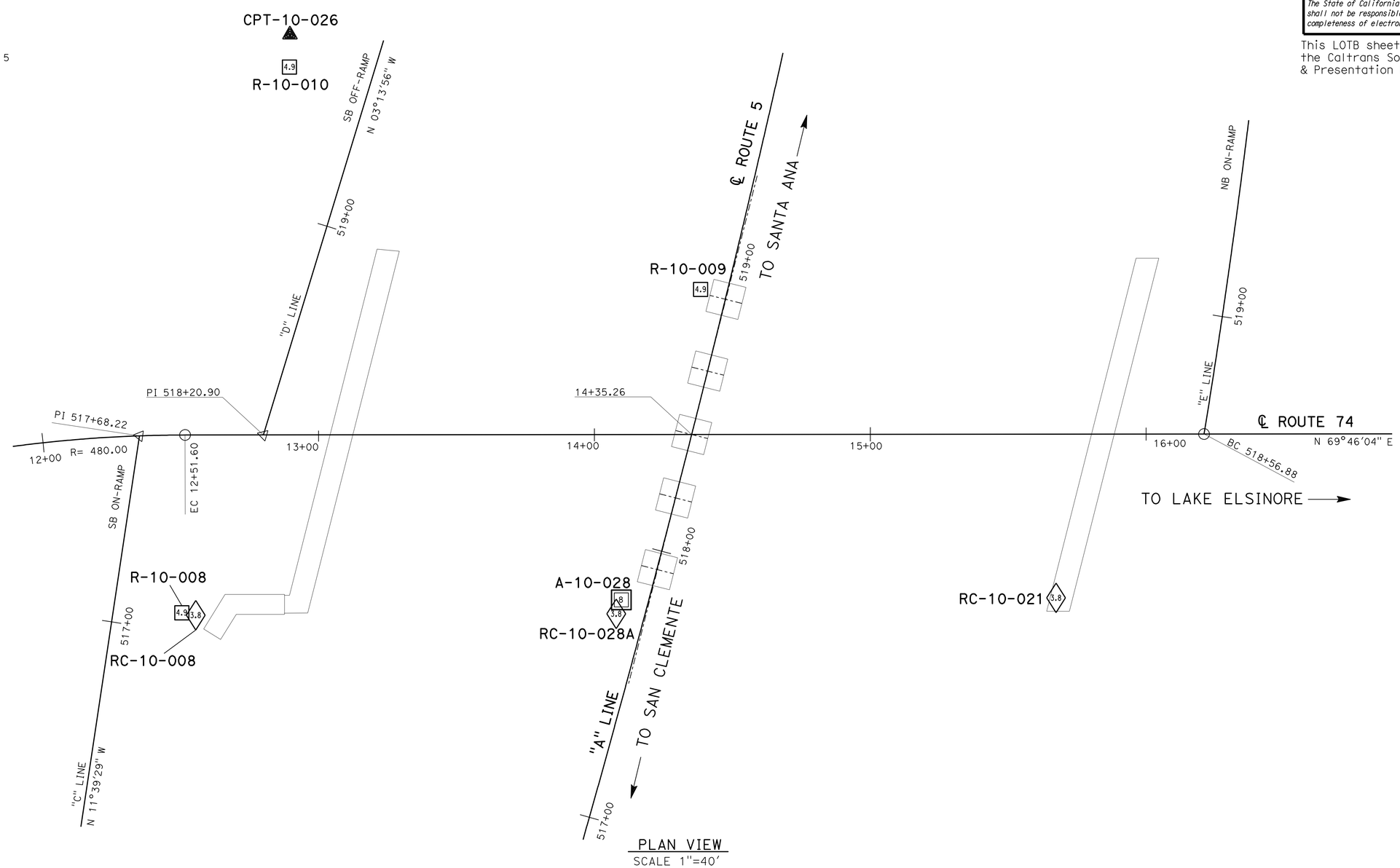

PLAN VIEW
SCALE 1"=40′

ENGINEERING SERVICES	MATERIALS AND GEOTECHNICAL SERVICES	STATE OF CALIFORNIA DEPARTMENT OF TRANSPORTATION	DIVISION OF ENGINEERING SERVICES STRUCTURE DESIGN DESIGN BRANCH 19	BRIDGE NO. 55-1104 POST MILE 0.01	ROUTE 74/5 SEPARATION (REPLACE) LOG OF TEST BORINGS 1 OF 8
FUNCTIONAL SUPERVISOR NAME: M. SMITH	DRAWN BY: P.QUACH CHECKED BY: P.YERRA	FIELD INVESTIGATION BY: EJ.JEON/P.MACDONALD/L.ROEBUCK			

OGS CIVIL LOG OF TEST BORINGS SHEET — ORIGINAL SCALE IN INCHES FOR REDUCED PLANS 0 1 2 3

UNIT: 3658
PROJECT NUMBER & PHASE: 1200000102 & 1 CONTRACT NO.: 12-0E3104

DISREGARD PRINTS BEARING EARLIER REVISION DATES → REVISION DATES 06-27-11 03-14-12 — SHEET 31 OF 38

FILE => 55-1104-z-lotb_01.dgn

USERNAME => s121614 DATE PLOTTED => 15-APR-2012 TIME PLOTTED => 09:47

DIST	COUNTY	ROUTE	POST MILES TOTAL PROJECT	SHEET No.	TOTAL SHEETS
12	Ora	5,74	9.3/10.0, 0.0/0.2	448	515

GEOTECHNICAL PROFESSIONAL — DATE 07/2011

4-9-12
PLANS APPROVAL DATE

REGISTERED PROFESSIONAL ENGINEER — MICHAEL G. SMITH No. 2229 Exp. 3-31-2012 GEOTECHNICAL — STATE OF CALIFORNIA

The State of California or its officers or agents shall not be responsible for the accuracy or completeness of electronic copies of this plan sheet.

This LOTB sheet was prepared in accordance with the Caltrans Soil & Rock Logging, Classification, & Presentation Manual (2010 Edition).

FOR PLAN VIEW, SEE
"LOG OF TEST BORINGS" 1 OF 8

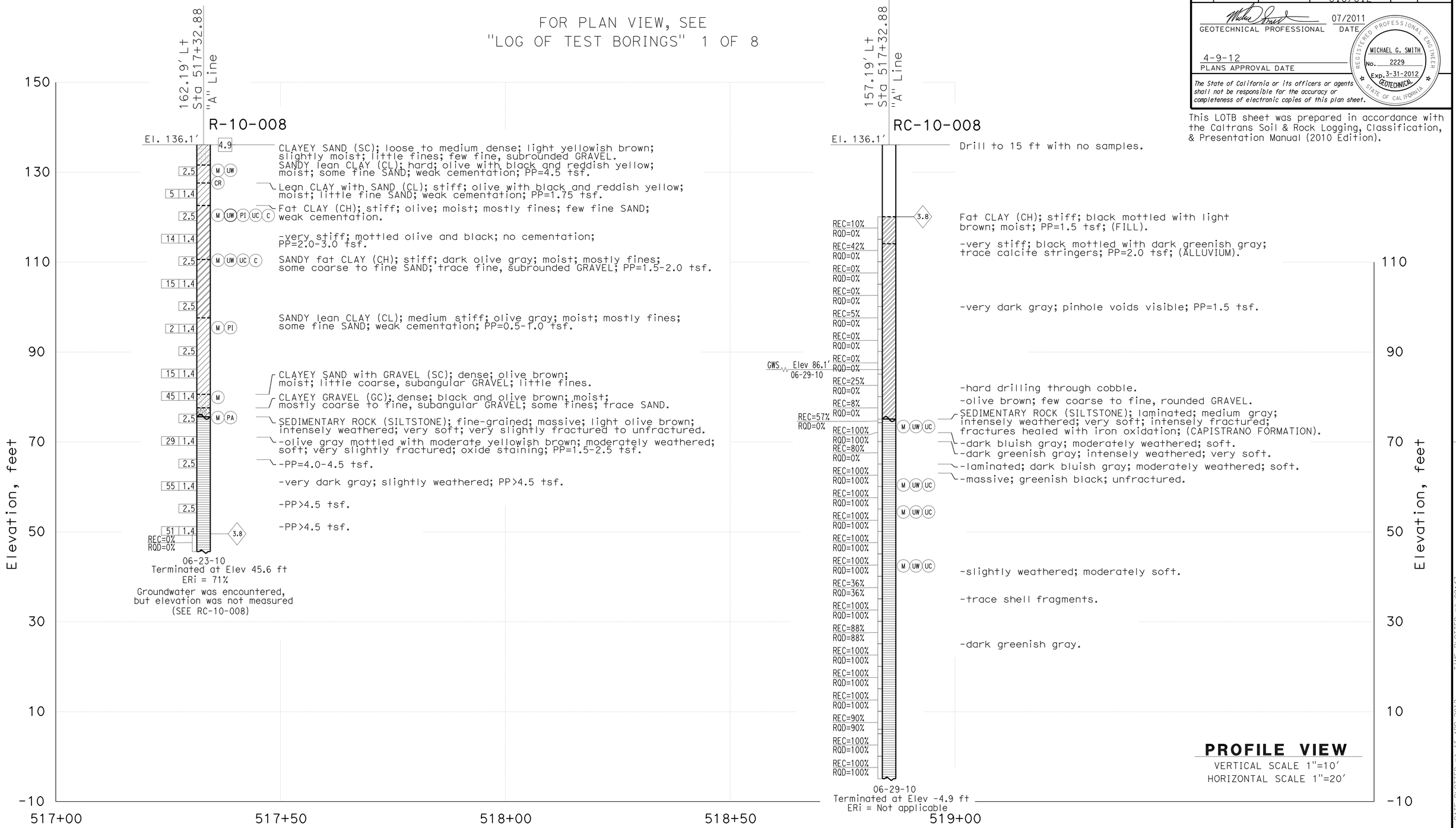

ENGINEERING SERVICES	MATERIALS AND GEOTECHNICAL SERVICES	STATE OF CALIFORNIA DEPARTMENT OF TRANSPORTATION	DIVISION OF ENGINEERING SERVICES STRUCTURE DESIGN DESIGN BRANCH 19	BRIDGE NO. 55-1104 / POST MILE 0.01	ROUTE 74/5 SEPARATION (REPLACE) LOG OF TEST BORINGS 2 OF 8
FUNCTIONAL SUPERVISOR NAME: M. SMITH	DRAWN BY: P.QUACH / CHECKED BY: P.YERRA	FIELD INVESTIGATION BY: EJ.JEON/P.MACDONALD/L.ROEBUCK			

OGS CIVIL LOG OF TEST BORINGS SHEET — ORIGINAL SCALE IN INCHES FOR REDUCED PLANS 0 1 2 3

UNIT: 3658
PROJECT NUMBER & PHASE: 1200000102 & 1 CONTRACT NO.: 12-0E3104

DISREGARD PRINTS BEARING EARLIER REVISION DATES → REVISION DATES 06/27/11 03-14-12 — SHEET 32 OF 38

FILE => 55-1104-z-lotb_02.dgn

USERNAME => s121614 DATE PLOTTED => 15-APR-2012 TIME PLOTTED => 09:47

DIST	COUNTY	ROUTE	POST MILES TOTAL PROJECT	SHEET No.	TOTAL SHEETS
12	Ora	5,74	9.3/10.0, 0.0/0.2	449	515

GEOTECHNICAL PROFESSIONAL — DATE 07/2011

4-9-12
PLANS APPROVAL DATE

REGISTERED PROFESSIONAL ENGINEER — MICHAEL G. SMITH No. 2229 Exp. 3-31-2012 GEOTECHNICAL — STATE OF CALIFORNIA

The State of California or its officers or agents shall not be responsible for the accuracy or completeness of electronic copies of this plan sheet.

This LOTB sheet was prepared in accordance with the Caltrans Soil & Rock Logging, Classification, & Presentation Manual (2010 Edition).

FOR PLAN VIEW, SEE "LOG OF TEST BORINGS" 1 OF 8

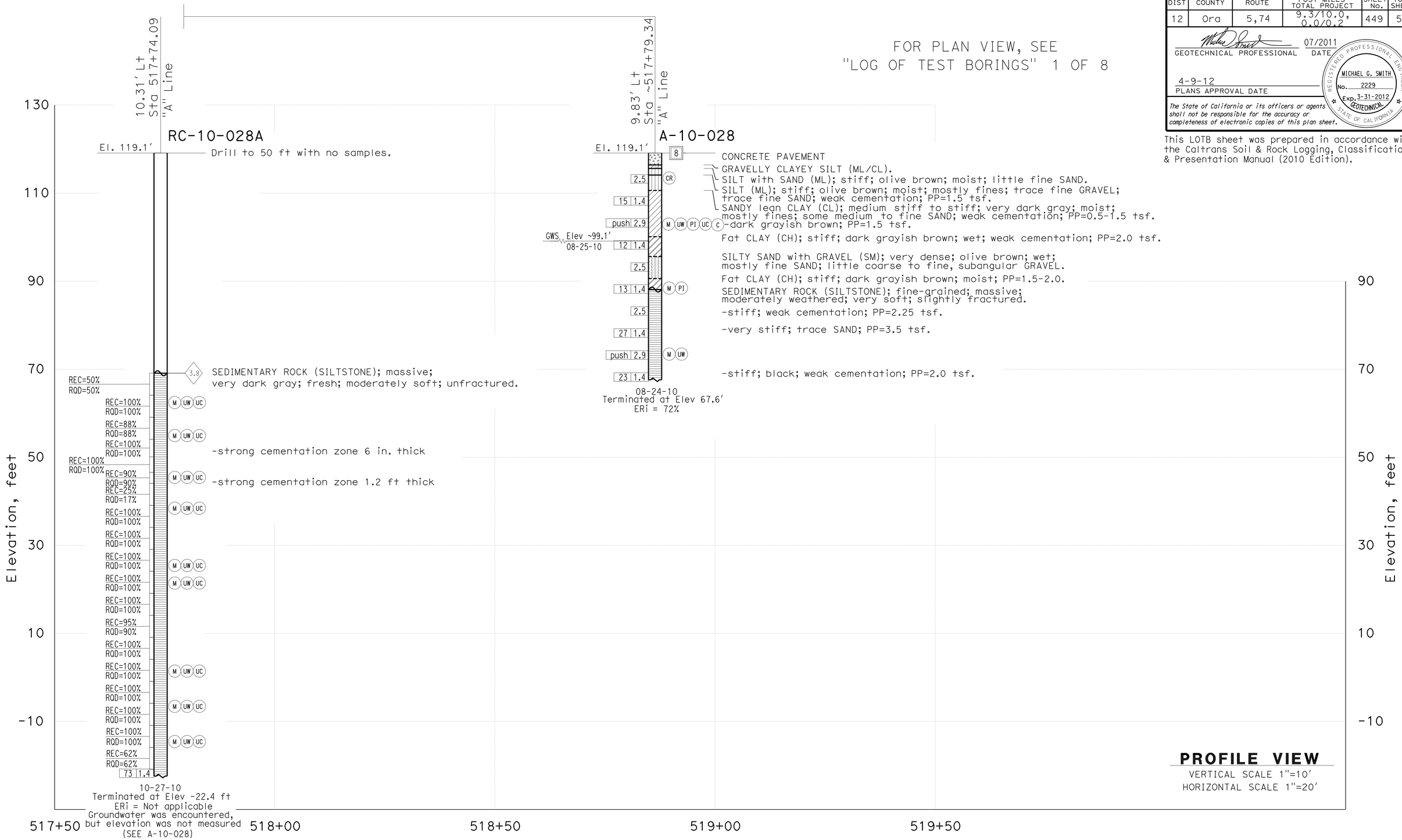

ENGINEERING SERVICES	MATERIALS AND GEOTECHNICAL SERVICES	STATE OF CALIFORNIA DEPARTMENT OF TRANSPORTATION	DIVISION OF ENGINEERING SERVICES STRUCTURE DESIGN DESIGN BRANCH 19	BRIDGE NO. 55-1104 / POST MILE 0.01	ROUTE 74/5 SEPARATION (REPLACE)
FUNCTIONAL SUPERVISOR	DRAWN BY: P.QUACH	FIELD INVESTIGATION BY:			LOG OF TEST BORINGS 3 OF 8
NAME: M. SMITH	CHECKED BY: P.YERRA	EJ.JEON/P.MACDONALD/L.ROEBUCK			

OGS CIVIL LOG OF TEST BORINGS SHEET — ORIGINAL SCALE IN INCHES FOR REDUCED PLANS 0 1 2 3

UNIT: 3658
PROJECT NUMBER & PHASE: 1200000102 & 1 CONTRACT NO.: 12-0E3104

DISREGARD PRINTS BEARING EARLIER REVISION DATES → REVISION DATES 06/27/11 03-14-12 — SHEET 33 OF 38

FILE => 55-1104-z-lotb_03.dgn

USERNAME => s121614 DATE PLOTTED => 15-APR-2012 TIME PLOTTED => 09:47

DIST	COUNTY	ROUTE	POST MILES TOTAL PROJECT	SHEET No.	TOTAL SHEETS
12	Ora	5,74	9.3/10.0, 0.0/0.2	450	515

GEOTECHNICAL PROFESSIONAL — DATE 07/2011

4-9-12
PLANS APPROVAL DATE

REGISTERED PROFESSIONAL ENGINEER — MICHAEL G. SMITH No. 2229 Exp. 3-31-2012 GEOTECHNICAL — STATE OF CALIFORNIA

The State of California or its officers or agents shall not be responsible for the accuracy or completeness of electronic copies of this plan sheet.

This LOTB sheet was prepared in accordance with the Caltrans Soil & Rock Logging, Classification, & Presentation Manual (2010 Edition).

FOR PLAN VIEW, SEE
"LOG OF TEST BORINGS" 1 OF 8

PROFILE VIEW
VERTICAL SCALE 1"=10'
HORIZONTAL SCALE 1"=20'

ENGINEERING SERVICES	MATERIALS AND GEOTECHNICAL SERVICES	STATE OF CALIFORNIA DEPARTMENT OF TRANSPORTATION	DIVISION OF ENGINEERING SERVICES STRUCTURE DESIGN DESIGN BRANCH 19	BRIDGE NO. 55-1104 POST MILE 0.01	ROUTE 74/5 SEPARATION (REPLACE) LOG OF TEST BORINGS 4 OF 8
FUNCTIONAL SUPERVISOR NAME: M. SMITH	DRAWN BY: P.QUACH CHECKED BY: P.YERRA	FIELD INVESTIGATION BY: EJ.JEON/P.MACDONALD/L.ROEBUCK			

OGS CIVIL LOG OF TEST BORINGS SHEET — ORIGINAL SCALE IN INCHES FOR REDUCED PLANS 0 1 2 3

UNIT: 3658
PROJECT NUMBER & PHASE: 1200000102 & 1 CONTRACT NO.: 12-0E3104

DISREGARD PRINTS BEARING EARLIER REVISION DATES → REVISION DATES 06-17-11 03-14-12 — SHEET 34 OF 38

FILE => 55-1104-z-lotb_04.dgn

USERNAME => s121614 DATE PLOTTED => 15-APR-2012 TIME PLOTTED => 09:48

DIST	COUNTY	ROUTE	POST MILES TOTAL PROJECT	SHEET No.	TOTAL SHEETS
12	Ora	5,74	9.3/10.0, 0.0/0.2	451	515

GEOTECHNICAL PROFESSIONAL — DATE 07/2011

4-9-12
PLANS APPROVAL DATE

REGISTERED PROFESSIONAL ENGINEER — MICHAEL G. SMITH — No. 2229 — Exp. 3-31-2012 — GEOTECHNICAL — STATE OF CALIFORNIA

The State of California or its officers or agents shall not be responsible for the accuracy or completeness of electronic copies of this plan sheet.

This LOTB sheet was prepared in accordance with the Caltrans Soil & Rock Logging, Classification, & Presentation Manual (2010 Edition).

FOR PLAN VIEW, SEE
"LOG OF TEST BORINGS" 1 OF 8

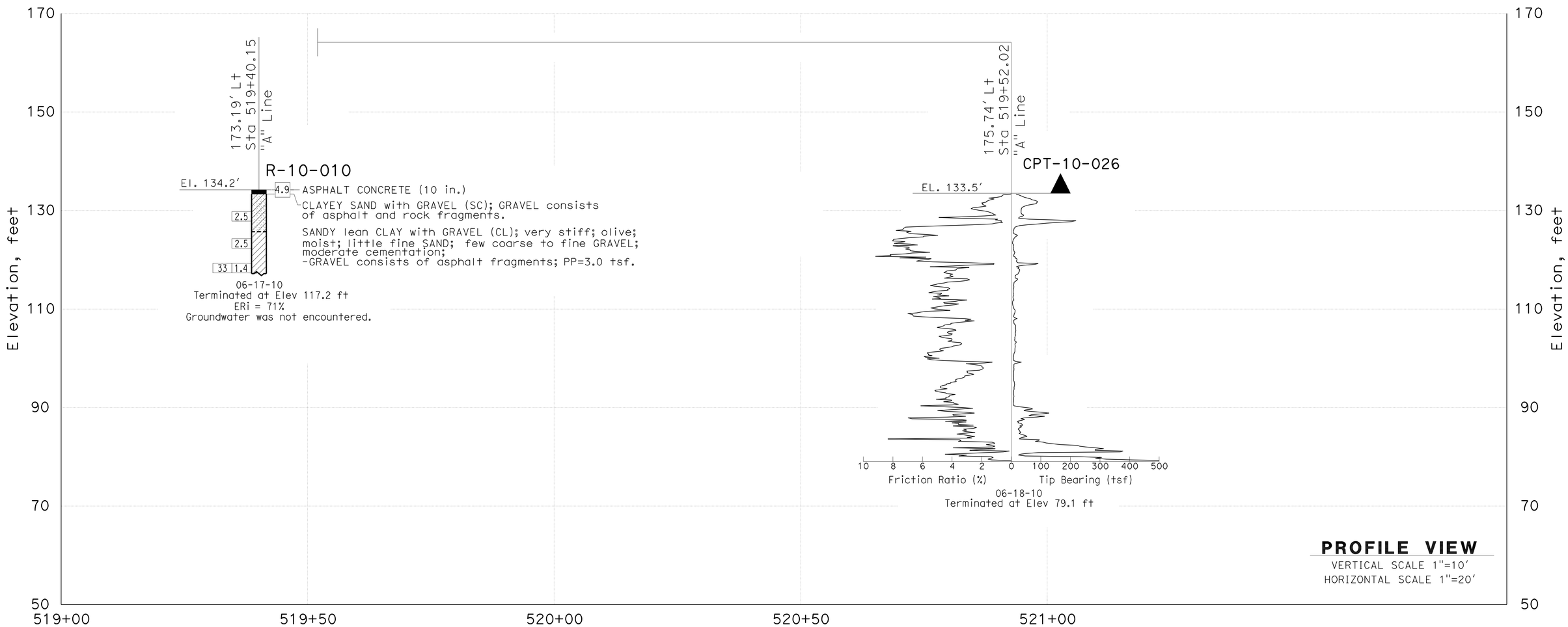

ENGINEERING SERVICES	MATERIALS AND GEOTECHNICAL SERVICES	STATE OF CALIFORNIA DEPARTMENT OF TRANSPORTATION	DIVISION OF ENGINEERING SERVICES STRUCTURE DESIGN DESIGN BRANCH 19	BRIDGE NO. 55-1104 POST MILE 0.01	ROUTE 74/5 SEPARATION (REPLACE)
FUNCTIONAL SUPERVISOR NAME: M. SMITH	DRAWN BY: P.QUACH CHECKED BY: P.YERRA	FIELD INVESTIGATION BY: EJ.JEON/P.MACDONALD/L.ROEBUCK			LOG OF TEST BORINGS 5 OF 8

OGS CIVIL LOG OF TEST BORINGS SHEET

ORIGINAL SCALE IN INCHES FOR REDUCED PLANS 0 1 2 3

UNIT: 3658
PROJECT NUMBER & PHASE: 1200000102 & 1 CONTRACT NO.: 12-0E3104

DISREGARD PRINTS BEARING EARLIER REVISION DATES → REVISION DATES 06/07/11 03-14-12

SHEET 35 OF 38

FILE => 55-1104-z-lotb_05.dgn

USERNAME => s12614 DATE PLOTTED => 15-APR-2012 TIME PLOTTED => 09:48

DIST	COUNTY	ROUTE	POST MILES TOTAL PROJECT	SHEET No.	TOTAL SHEETS
12	Ora	5,74	9.3/10.0, 0.0/0.2	452	515

GEOTECHNICAL PROFESSIONAL — DATE 07/2011

4-9-12
PLANS APPROVAL DATE

REGISTERED PROFESSIONAL ENGINEER — MICHAEL G. SMITH No. 2229 Exp. 3-31-2012 GEOTECHNICAL — STATE OF CALIFORNIA

The State of California or its officers or agents shall not be responsible for the accuracy or completeness of electronic copies of this plan sheet.

This LOTB sheet was prepared in accordance with the Caltrans Soil & Rock Logging, Classification, & Presentation Manual (2010 Edition).

CEMENTATION

Description	Criteria
Weak	Crumbles or breaks with handling or little finger pressure.
Moderate	Crumbles or breaks with considerable finger pressure.
Strong	Will not crumble or break with finger pressure.

BOREHOLE IDENTIFICATION

Symbol	Hole Type	Description
Size	A	Auger Boring (hollow or solid stem bucket)
Size	R RW RC P	Rotary drilled boring (conventional) Rotary drilled with self-casing wire-line Rotary core with continuously-sampled, self-casing wire-line Rotary percussion boring (air)
Size	R	Rotary drilled diamond core
Size	HD HA	Hand driven (1-inch soil tube) Hand Auger
●	D	Dynamic Cone Penetration Boring
▲	CPT	Cone Penetration Test (ASTM D 5778)
⬚	O	Other (note on LOTB)

Note: Size in inches.

CONSISTENCY OF COHESIVE SOILS

Description	Shear Strength (tsf)	Pocket Penetrometer Measurement, PP, (tsf)	Torvane Measurement, TV, (tsf)	Vane Shear Measurement, VS, (tsf)
Very Soft	Less than 0.12	Less than 0.25	Less than 0.12	Less than 0.12
Soft	0.12 - 0.25	0.25 - 0.5	0.12 - 0.25	0.12 - 0.25
Medium Stiff	0.25 - 0.5	0.5 - 1	0.25 - 0.5	0.25 - 0.5
Stiff	0.5 - 1	1 - 2	0.5 - 1	0.5 - 1
Very Stiff	1 - 2	2 - 4	1 - 2	1 - 2
Hard	Greater than 2	Greater than 4	Greater than 2	Greater than 2

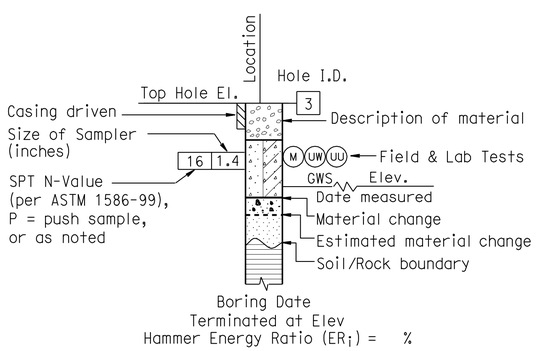

ROTARY BORING

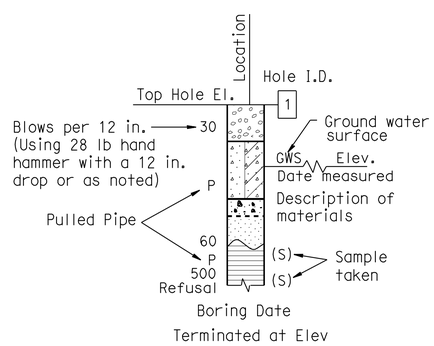

HAND BORING

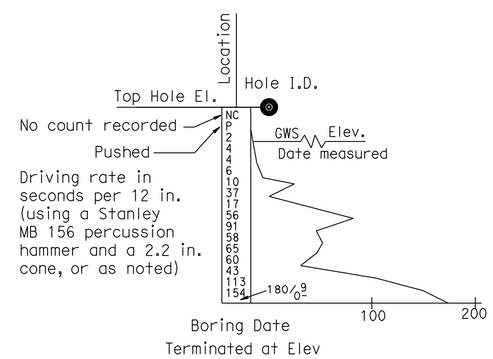

DYNAMIC CONE PENETRATION BORING

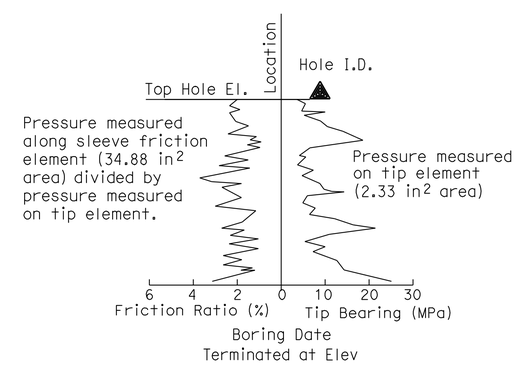

CONE PENETRATION TEST (CPT) BORING

ENGINEERING SERVICES	MATERIALS AND GEOTECHNICAL SERVICES	STATE OF CALIFORNIA DEPARTMENT OF TRANSPORTATION	DIVISION OF ENGINEERING SERVICES STRUCTURE DESIGN DESIGN BRANCH 19	BRIDGE NO. 55-1104 POST MILE 0.01	ROUTE 74/5 SEPARATION (REPLACE)
FUNCTIONAL SUPERVISOR	DRAWN BY: P.QUACH	FIELD INVESTIGATION BY:			LOG OF TEST BORINGS 6 OF 8
NAME: M. SMITH	CHECKED BY: P.YERRA	EJ.JEON/P.MACDONALD/L.ROEBUCK			

OGS CIVIL LOG OF TEST BORINGS SHEET

ORIGINAL SCALE IN INCHES FOR REDUCED PLANS 0 1 2 3

UNIT: 3658
PROJECT NUMBER & PHASE: 1200000102 & 1 CONTRACT NO.: 12-0E3104

DISREGARD PRINTS BEARING EARLIER REVISION DATES → REVISION DATES 06/27/11 03-14-12 SHEET 36 OF 38

FILE => 55-1104-z-lotb_06.dgn

USERNAME => s121614 DATE PLOTTED => 15-APR-2012 TIME PLOTTED => 09:48

DIST	COUNTY	ROUTE	POST MILES TOTAL PROJECT	SHEET No.	TOTAL SHEETS
12	Ora	5,74	9.3/10.0, 0.0/0.2	453	515

GEOTECHNICAL PROFESSIONAL — DATE 07/2011

4-9-12
PLANS APPROVAL DATE

REGISTERED PROFESSIONAL ENGINEER — MICHAEL G. SMITH No. 2229 Exp. 3-31-2012 GEOTECHNICAL — STATE OF CALIFORNIA

The State of California or its officers or agents shall not be responsible for the accuracy or completeness of electronic copies of this plan sheet.

This LOTB sheet was prepared in accordance with the Caltrans Soil & Rock Logging, Classification, & Presentation Manual (2010 Edition).

GROUP SYMBOLS AND NAMES

Graphic/Symbol	Group Names	Graphic/Symbol	Group Names
GW	Well-graded GRAVEL Well-graded GRAVEL with SAND	CL	Lean CLAY Lean CLAY with SAND Lean CLAY with GRAVEL SANDY lean CLAY SANDY lean CLAY with GRAVEL GRAVELLY lean CLAY GRAVELLY lean CLAY with SAND
GP	Poorly-graded GRAVEL Poorly-graded GRAVEL with SAND		
GW-GM	Well-graded GRAVEL with SILT Well-graded GRAVEL with SILT and SAND	CL-ML	SILTY CLAY SILTY CLAY with SAND SILTY CLAY with GRAVEL SANDY SILTY CLAY SANDY SILTY CLAY with GRAVEL GRAVELLY SILTY CLAY GRAVELLY SILTY CLAY with SAND
GW-GC	Well-graded GRAVEL with CLAY (or SILTY CLAY) Well-graded GRAVEL with CLAY and SAND (or SILTY CLAY and SAND)		
GP-GM	Poorly-graded GRAVEL with SILT Poorly-graded GRAVEL with SILT and SAND	ML	SILT SILT with SAND SILT with GRAVEL SANDY SILT SANDY SILT with GRAVEL GRAVELLY SILT GRAVELLY SILT with SAND
GP-GC	Poorly-graded GRAVEL with CLAY (or SILTY CLAY) Poorly-graded GRAVEL with CLAY and SAND (or SILTY CLAY and SAND)		
GM	SILTY GRAVEL SILTY GRAVEL with SAND	OL	ORGANIC lean CLAY ORGANIC lean CLAY with SAND ORGANIC lean CLAY with GRAVEL SANDY ORGANIC lean CLAY SANDY ORGANIC lean CLAY with GRAVEL GRAVELLY ORGANIC lean CLAY GRAVELLY ORGANIC lean CLAY with SAND
GC	CLAYEY GRAVEL CLAYEY GRAVEL with SAND		
GC-GM	SILTY, CLAYEY GRAVEL SILTY, CLAYEY GRAVEL with SAND	OL	ORGANIC SILT ORGANIC SILT with SAND ORGANIC SILT with GRAVEL SANDY ORGANIC SILT SANDY ORGANIC SILT with GRAVEL GRAVELLY ORGANIC SILT GRAVELLY ORGANIC SILT with SAND
SW	Well-graded SAND Well-graded SAND with GRAVEL		
SP	Poorly-graded SAND Poorly-graded SAND with GRAVEL	CH	Fat CLAY Fat CLAY with SAND Fat CLAY with GRAVEL SANDY fat CLAY SANDY fat CLAY with GRAVEL GRAVELLY fat CLAY GRAVELLY fat CLAY with SAND
SW-SM	Well-graded SAND with SILT Well-graded SAND with SILT and GRAVEL		
SW-SC	Well-graded SAND with CLAY (or SILTY CLAY) Well-graded SAND with CLAY and GRAVEL (or SILTY CLAY and GRAVEL)	MH	Elastic SILT Elastic SILT with SAND Elastic SILT with GRAVEL SANDY elastic SILT SANDY elastic SILT with GRAVEL GRAVELLY elastic SILT GRAVELLY elastic SILT with SAND
SP-SM	Poorly-graded SAND with SILT Poorly-graded SAND with SILT and GRAVEL		
SP-SC	Poorly-graded SAND with CLAY (or SILTY CLAY) Poorly-graded SAND with CLAY and GRAVEL (or SILTY CLAY and GRAVEL)	OH	ORGANIC fat CLAY ORGANIC fat CLAY with SAND ORGANIC fat CLAY with GRAVEL SANDY ORGANIC fat CLAY SANDY ORGANIC fat CLAY with GRAVEL GRAVELLY ORGANIC fat CLAY GRAVELLY ORGANIC fat CLAY with SAND
SM	SILTY SAND SILTY SAND with GRAVEL		
SC	CLAYEY SAND CLAYEY SAND with GRAVEL	OH	ORGANIC elastic SILT ORGANIC elastic SILT with SAND ORGANIC elastic SILT with GRAVEL SANDY ORGANIC elastic SILT SANDY ORGANIC elastic SILT with GRAVEL GRAVELLY ORGANIC elastic SILT GRAVELLY ORGANIC elastic SILT with SAND
SC-SM	SILTY, CLAYEY SAND SILTY, CLAYEY SAND with GRAVEL		
PT	PEAT	OL/OH	ORGANIC SOIL ORGANIC SOIL with SAND ORGANIC SOIL with GRAVEL SANDY ORGANIC SOIL SANDY ORGANIC SOIL with GRAVEL GRAVELLY ORGANIC SOIL GRAVELLY ORGANIC SOIL with SAND
	COBBLES COBBLES and BOULDERS BOULDERS		

FIELD AND LABORATORY TESTING

- (C) Consolidation (ASTM D 2435)
- (CL) Collapse Potential (ASTM D 5333)
- (CP) Compaction Curve (CTM 216)
- (CR) Corrosivity Testing (CTM 643, CTM 422, CTM 417)
- (CU) Consolidated Undrained Triaxial (ASTM D 4767)
- (DS) Direct Shear (ASTM D 3080)
- (EI) Expansion Index (ASTM D 4829)
- (M) Moisture Content (ASTM D 2216)
- (OC) Organic Content-% (ASTM D 2974)
- (P) Permeability (CTM 220)
- (PA) Particle Size Analysis (ASTM D 422)
- (PI) Plasticity Index (AASHTO T 90) Liquid Limit (AASHTO T 89)
- (PL) Point Load Index (ASTM D 5731)
- (PM) Pressure Meter
- (R) R-Value (CTM 301)
- (SE) Sand Equivalent (CTM 217)
- (SG) Specific Gravity (AASHTO T 100)
- (SL) Shrinkage Limit (ASTM D 427)
- (SW) Swell Potential (ASTM D 4546)
- (UC) Unconfined Compression-Soil (ASTM D 2166) Unconfined Compression-Rock (ASTM D 2938)
- (UU) Unconsolidated Undrained Triaxial (ASTM D 2850)
- (UW) Unit Weight (ASTM D 4767)

APPARENT DENSITY OF COHESIONLESS SOILS

Description	SPT N_{60} (Blows / 12 in.)
Very Loose	0 - 5
Loose	5 - 10
Medium Dense	10 - 30
Dense	30 - 50
Very Dense	Greater than 50

MOISTURE

Description	Criteria
Dry	No discernable moisture
Moist	Moisture present, but no free water
Wet	Visible free water

PERCENT OR PROPORTION OF SOILS

Description	Criteria
Trace	Particles are present but estimated to be less than 5%
Few	5% - 10%
Little	15% - 25%
Some	30% - 45%
Mostly	50% - 100%

PARTICLE SIZE

Description		Size (in.)
Boulder		Greater than 12
Cobble		3 - 12
Gravel	Coarse	3/4 - 3
	Fine	1/5 - 3/4
Sand	Coarse	1/16 - 1/5
	Medium	1/64 - 1/16
	Fine	1/300 - 1/64
Silt and Clay		Less than 1/300

ENGINEERING SERVICES — MATERIALS AND GEOTECHNICAL SERVICES

FUNCTIONAL SUPERVISOR — NAME: M. SMITH
DRAWN BY: P.QUACH — CHECKED BY: P.YERRA
FIELD INVESTIGATION BY: EJ.JEON/P.MACDONALD/L.ROEBUCK

STATE OF CALIFORNIA — DEPARTMENT OF TRANSPORTATION

DIVISION OF ENGINEERING SERVICES — STRUCTURE DESIGN — DESIGN BRANCH 19

BRIDGE NO. 55-1104 — POST MILE 0.01

ROUTE 74/5 SEPARATION (REPLACE)
LOG OF TEST BORINGS 7 OF 8

OGS CIVIL LOG OF TEST BORINGS SHEET

ORIGINAL SCALE IN INCHES FOR REDUCED PLANS 0 1 2 3

UNIT: 3658
PROJECT NUMBER & PHASE: 1200000102 & 1 CONTRACT NO.: 12-0E3104

DISREGARD PRINTS BEARING EARLIER REVISION DATES — REVISION DATES 06/27/11 03-14-12

SHEET 37 OF 38

FILE => 55-1104-z-lotb_07.dgn

USERNAME => s121614 DATE PLOTTED => 15-APR-2012 TIME PLOTTED => 09:48

DIST	COUNTY	ROUTE	POST MILES TOTAL PROJECT	SHEET No.	TOTAL SHEETS
12	Ora	5,74	9.3/10.0, 0.0/0.2	454	515

GEOTECHNICAL PROFESSIONAL — DATE 07/2011

4-9-12
PLANS APPROVAL DATE

REGISTERED PROFESSIONAL ENGINEER — MICHAEL G. SMITH — No. 2229 — Exp. 3-31-2012 — GEOTECHNICAL — STATE OF CALIFORNIA

The State of California or its officers or agents shall not be responsible for the accuracy or completeness of electronic copies of this plan sheet.

This LOTB sheet was prepared in accordance with the Caltrans Soil & Rock Logging, Classification, & Presentation Manual (2010 Edition).

PERCENT CORE RECOVERY (REC) & ROCK QUALITY DESIGNATION (RQD)

$$REC = \frac{\sum \text{Length of the recovered core pieces (in.)}}{\text{Total length of core run (in.)}} \times 100\%$$

$$RQD = \frac{\sum \text{Length of intact core pieces} \geq 4 \text{ in.}}{\text{Total length of core run (in.)}} \times 100\%$$

RQD* Indicates soundness criteria not met.

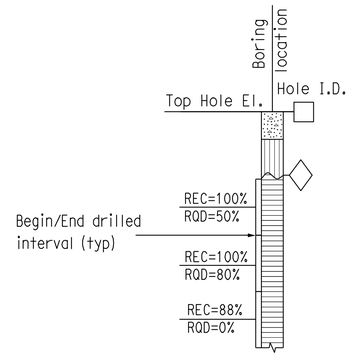

BEDDING SPACING

Description	Thickness / Spacing
Massive	Greater than 10 ft
Very Thickly Bedded	3 ft - 10 ft
Thickly Bedded	1 ft - 3 ft
Moderately Bedded	4 in. - 1 ft
Thinly Bedded	1 in. - 4 in.
Very Thinly Bedded	1/4 in. - 1 in.
Laminated	Less than 1/4 in.

LEGEND OF ROCK MATERIALS

- IGNEOUS ROCK
- SEDIMENTARY ROCK
- METAMORPHIC ROCK

ROCK HARDNESS

Description	Criteria
Extremely Hard	Cannot be scratched with a pocketknife or sharp pick. Can only be chipped with repeated heavy hammer blows.
Very Hard	Cannot be scratched with a pocketknife or sharp pick. Breaks with repeated heavy hammer blows.
Hard	Can be scratched with a pocketknife or sharp pick with difficulty (heavy pressure). Breaks with heavy hammer blows.
Moderately Hard	Can be scratched with pocketknife or sharp pick with light or moderate pressure. Breaks with moderate hammer blows.
Moderately Soft	Can be grooved 1/16 in. deep with a pocketknife or sharp pick with moderate or heavy pressure. Breaks with light hammer blow or heavy manual pressure.
Soft	Can be grooved or gouged easily by a pocketknife or sharp pick with light pressure, can be scratched with fingernail. Breaks with light to moderate manual pressure.
Very Soft	Can be readily indented, grooved or gouged with fingernail, or carved with a pocketknife. Breaks with light manual pressure.

FRACTURE DENSITY

Description	Observed Fracture Density
Unfractured	No fractures.
Very Slightly Fractured	Core lengths greater than 3 ft.
Slightly Fractured	Core lengths mostly from 1 to 3 ft.
Moderately Fractured	Core lengths mostly from 4 in. to 1 ft.
Intensely Fractured	Core lengths mostly from 1 to 4 in.
Very Intensely Fractured	Mostly chips and fragments.

WEATHERING DESCRIPTORS FOR INTACT ROCK

Description	Diagnostic Features					General Characteristics
	Chemical Weathering-Discoloration and/or Oxidation		Mechanical Weathering-Grain Boundary Conditions (Disaggregation) Primarily for Granitics and Some Coarse-Grained Sediments	Texture and Leaching		
	Body of Rock	Fracture Surfaces		Texture	Leaching	
Fresh	No discoloration, not oxidized.	No discoloration or oxidation.	No separation, intact (tight).	No change	No leaching	Hammer rings when crystalline rocks are struck.
Slightly Weathered	Discoloration or oxidation is limited to surface of, or short distance from, fractures; some feldspar crystals are dull.	Minor to complete discoloration or oxidation of most surfaces.	No visible separation, intact (tight).	Preserved	Minor leaching of some soluble minerals.	Hammer rings when crystalline rocks are struck. Body of rock not weakened.
Moderately Weathered	Discoloration or oxidation extends from fractures usually throughout; Fe-Mg minerals are "rusty," feldspar crystals are "cloudy."	All fracture surfaces are discolored or oxidized.	Partial separation of boundaries visible.	Generally preserved	Soluble minerals may be mostly leached.	Hammer does not ring when rock is struck. Body of rock is slightly weakened.
Intensely Weathered	Discoloration or oxidation throughout; all feldspars and Fe-Mg minerals are altered to clay to some extent; or chemical alteration produces in-situ disaggregation, see grain boundary conditions.	All fracture surfaces are discolored or oxidized, surfaces friable.	Partial separation, rock is friable; in semiarid conditions granitics are disaggregated.	Texture altered by chemical disintegration (hydration, argillation).	Leaching of soluble minerals may be complete.	Dull sound when struck with hammer, usually can be broken with moderate to heavy manual pressure or by light hammer blow without reference to planes of weakness such as incipient or hairline fractures, or veinlets. Rock is significantly weakened.
Decomposed	Discolored or oxidized throughout, but resistant minerals such as quartz may be unaltered; all feldspars and Fe-Mg minerals are completely altered to clay.		Complete separation of grain boundaries (disaggregated).	Resembles a soil, partial or complete remnant rock structure may be preserved; leaching of soluble minerals usually complete.		Can be granulated by hand. Resistant minerals such as quartz may be present as "stringers" or "dikes."

ENGINEERING SERVICES — MATERIALS AND GEOTECHNICAL SERVICES

FUNCTIONAL SUPERVISOR
NAME: M. SMITH
DRAWN BY: P.QUACH
CHECKED BY: P.YERRA
FIELD INVESTIGATION BY: EJ.JEON/P.MACDONALD/L.ROEBUCK

STATE OF CALIFORNIA DEPARTMENT OF TRANSPORTATION

DIVISION OF ENGINEERING SERVICES STRUCTURE DESIGN — DESIGN BRANCH 19

BRIDGE NO. 55-1104
POST MILE 0.01

ROUTE 74/5 SEPARATION (REPLACE)
LOG OF TEST BORINGS 8 OF 8

OGS CIVIL LOG OF TEST BORINGS SHEET

ORIGINAL SCALE IN INCHES FOR REDUCED PLANS 0 1 2 3

UNIT: 3658
PROJECT NUMBER & PHASE: 1200000102 & 1 CONTRACT NO.: 12-0E3104

DISREGARD PRINTS BEARING EARLIER REVISION DATES

REVISION DATES: 06/27/11 03-14-12

SHEET 38 OF 38

FILE => 55-1104-z-lotb_08.dgn

USERNAME => s121614 DATE PLOTTED => 15-APR-2012 TIME PLOTTED => 09:49

DIST	COUNTY	ROUTE	POST MILES TOTAL PROJECT	SHEET No.	TOTAL SHEETS
12	Ora	5,74	9.3/10.0, 0.0/0.2	455	515

Charles Lomicka 11-15-11
REGISTERED CIVIL ENGINEER DATE

4-9-12
PLANS APPROVAL DATE

REGISTERED PROFESSIONAL ENGINEER CHARLES LOMICKA No. C 71172 Exp. 6/30/13 CIVIL STATE OF CALIFORNIA

The State of California or its officers or agents shall not be responsible for the accuracy or completeness of electronic copies of this plan sheet.

STANDARD PLANS DATED MAY 2006

	A10A	ACRONYMS AND ABBREVIATIONS (A-L)
	A10B	ACRONYMS AND ABBREVIATIONS (M-Z)
	A10C	SYMBOLS (SHEETS 1 OF 2))
	A10D	SYMBOLS (SHEETS 2 OF 2))
	B0-3	BRIDGE DETAILS
	B2-5	PILE DETAILS CLASS 90 AND CLASS 140
	B3-8	RETAINING WALL DETAILS NO. 1
RSP	B11-60	CONCRETE BARRIER TYPE 80
RSP	B11-62	CONCRETE BARRIER TYPE 80SW (SHEET 1 OF 3)
	B11-63	CONCRETE BARRIER TYPE 80SW (SHEET 2 OF 3)
RSP	B11-64	CONCRETE BARRIER TYPE 80SW (SHEET 3 OF 3)

STANDARD PLAN SHEET NO.
DETAIL NO.

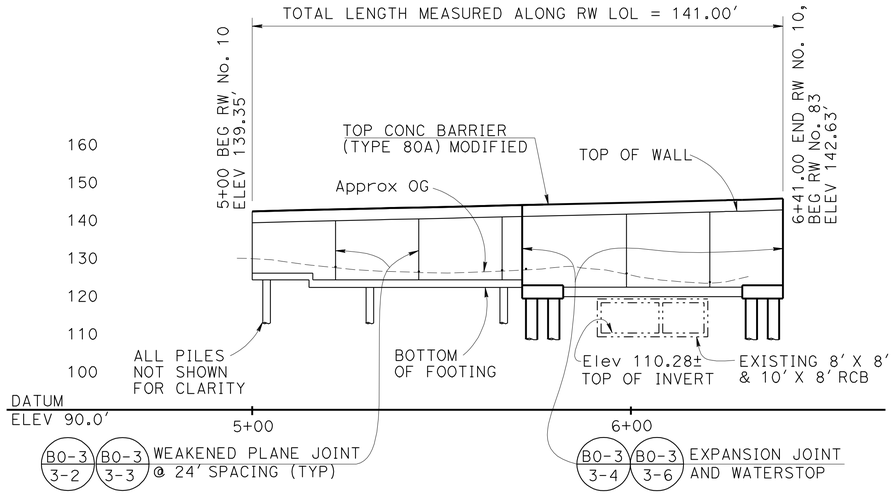

MIRRORED ELEVATION

1" = 20'

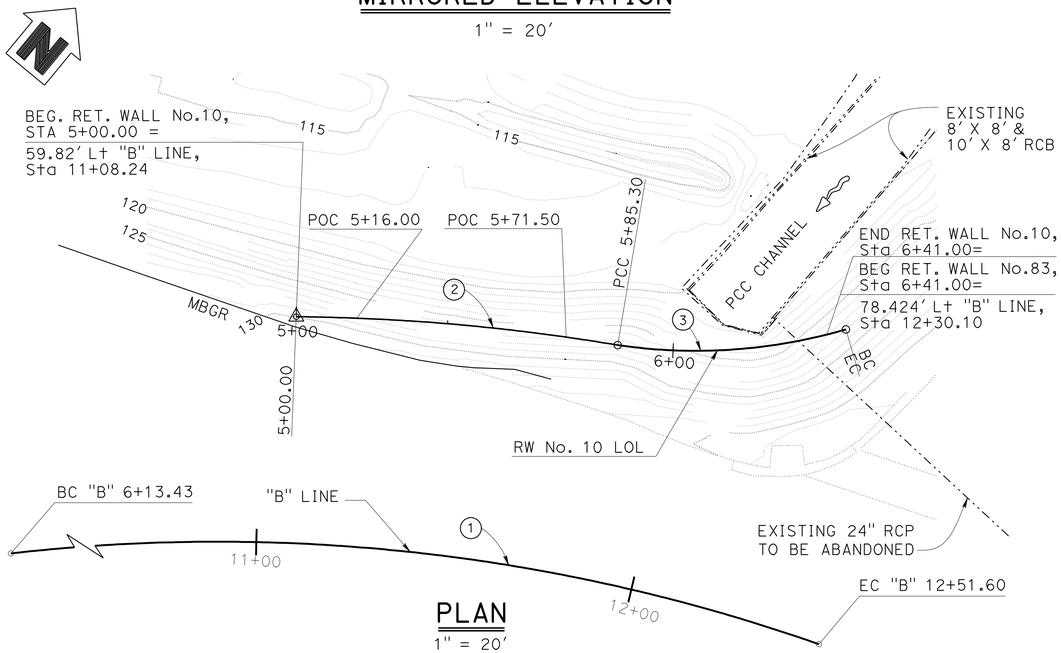

PLAN

1" = 20'

NOTE:
THE CONTRACTOR SHALL VERIFY ALL CONTROLLING FIELD DIMENSIONS BEFORE ORDERING OR FABRICATING ANY MATERIAL.

CURVE DATA

No.	R	Δ	T	L
1	480.00'	76°10'36"	376.21'	638.17'
2	540.76'	09°02'16"	42.74'	85.30'
3	142.23'	24°31'05"	30.91'	60.87'

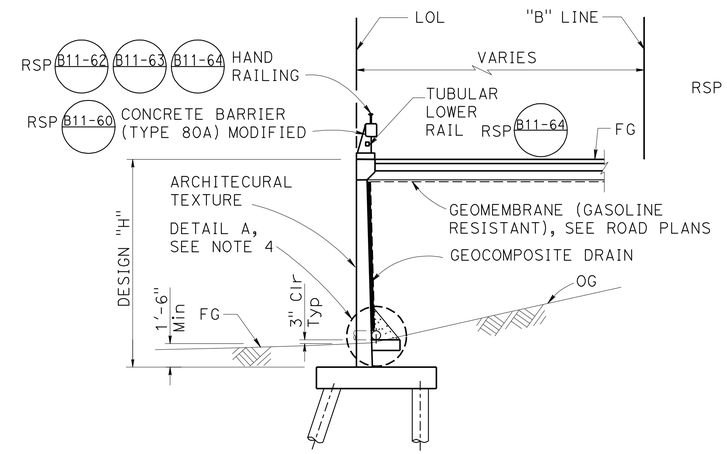

Sta 5+00.00 TO Sta 5+71.50

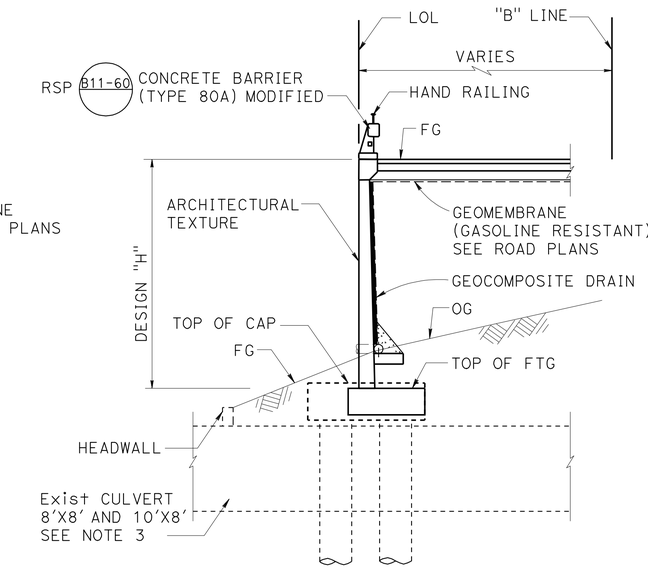

TYPICAL SECTION

NO SCALE

Sta 5+71.50 TO Sta 6+41.00

QUANTITIES

STRUCTURE EXCAVATION (RETAINING WALL)	400 CY
STRUCTURE BACKFILL (RETAINING WALL)	42 CY
LEAN CONCRETE BACKFILL	33 CY
FURNISH 36" STEEL PIPE PILING	440 LF
DRIVE 36" STEEL PIPE PILE	8 EA
48" PERMANENT STEEL CASING	160 LF
FURNISH PILING (CLASS 90) (ALTERNATIVE W)	1,500 LF
DRIVE PILE (CLASS 90) (ALTERNATIVE W)	29 EA
STRUCTURAL CONCRETE, RETAINING WALL	240 CY
ARCHITECTURAL TEXTURE (ROCK STRATA)	2,170 SQFT
BAR REINFORCING STEEL (RETAINING WALL)	50,000 LB
PREPARE AND STAIN CONCRETE	2,340 SQFT
GEOCOMPOSITE DRAIN	2,000 SQFT
CONCRETE BARRIER (TYPE 80A MODIFIED)	141 LF

NOTES:

1. Top of wall elevations measured along retaining wall LOL.
2. All dimensions measured radial along retaining wall LOL.
3. Culvert to be extended, see Road Plans.
4. For Detail A, see "RETAINING WALL DETAILS NO. 1" sheet.
5. Architectural texture shall be prepared and stained.

INDEX TO PLANS

NO. SHEET NAME
1. GENERAL PLAN
2. FOUNDATION PLAN
3. STRUCTURE PLAN
4. RETAINING WALL DETAILS NO. 1
5. RETAINING WALL DETAILS NO. 2
6. RETAINING WALL DETAILS NO. 3
7. ARCHITECTURAL TEXTURE DETAILS
8. LOG OF TEST BORINGS 1 OF 4
9. LOG OF TEST BORINGS 2 OF 4
10. LOG OF TEST BORINGS 3 OF 4
11. LOG OF TEST BORINGS 4 OF 4

MINA PEZESHPOUR
DESIGN ENGINEER

	BY	CHECKED		BY	CHECKED
DESIGN	EDWARD MERCADO	CHARLES LOMICKA	LOAD & RESISTANCE FACTOR DESIGN		
DETAILS	HENGAMEH MAHBOOBI / H.B.	CHARLES LOMICKA	LAYOUT	EDWARD MERCADO	CHARLES LOMICKA
QUANTITIES	EDWARD MERCADO	HTOON WIN	SPECIFICATIONS	VAIKUNTHAN RENGANATHAN	PLANS AND SPECS COMPARED VAIKUNTHAN RENGANATHAN

ORIGINAL SCALE IN INCHES FOR REDUCED PLANS 0 1 2 3

STATE OF CALIFORNIA
DEPARTMENT OF TRANSPORTATION

DIVISION OF ENGINEERING SERVICES
STRUCTURE DESIGN
DESIGN BRANCH 19

BRIDGE NO. 55E0117
POST MILE 0.01

RETAINING WALL NO. 10
GENERAL PLAN

UNIT: 3621
PROJECT NUMBER & PHASE: 1200000102 1
CONTRACT NO.: 0E3101

DISREGARD PRINTS BEARING EARLIER REVISION DATES
REVISION DATES 01-25-11 10-07-11 11-15-11
SHEET 1 OF 11

USERNAME => s12614 DATE PLOTTED => 15-APR-2012 TIME PLOTTED => 03:49

STRUCTURES DESIGN GENERAL PLAN SHEET (ENGLISH) (REV.09-01-10)

FILE => RW10-a-gp01.dgn

DIST	COUNTY	ROUTE	POST MILES TOTAL PROJECT	SHEET No.	TOTAL SHEETS
12	Ora	5,74	9.3/10.0, 0.0/0.2	456	515

Charles Lomicka 11-15-11
REGISTERED CIVIL ENGINEER DATE

4-9-12
PLANS APPROVAL DATE

REGISTERED PROFESSIONAL ENGINEER
CHARLES LOMICKA
No. C 71172
Exp. 6/30/13
CIVIL
STATE OF CALIFORNIA

The State of California or its officers or agents shall not be responsible for the accuracy or completeness of electronic copies of this plan sheet.

CURVE DATA				
No.	R	Δ	T	L
(A)	540.76	09°02′16"	42.74	85.30
(B)	142.23	24°31′05"	30.91	60.87
(C)	172.65	31°09′53"	48.15	93.91
(D)	480.00	76°10′36"	376.21	638.17

(E) STA.12+35.07 "B" LINE = STA.517+68.22 "C" LINE

(F) STA.12+80.00 "B" LINE = STA.518+20.90 "D" LINE

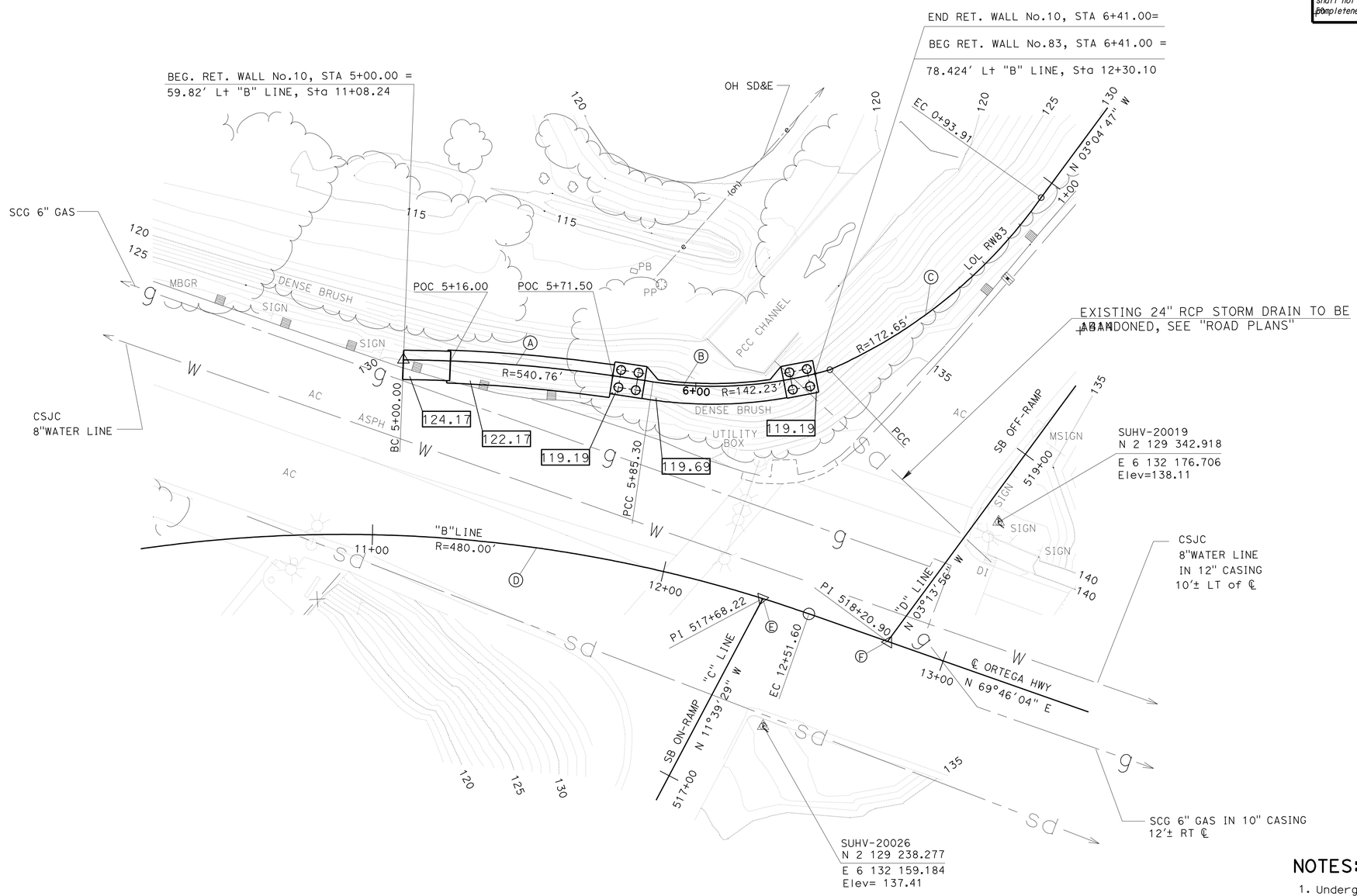

SURVEY CONTROL

SUHV-20019

60D NAIL & CH. "X"
6.30 Ft Rt "D" LINE
Sta 518+76.06
N 2 129 342.918
E 6 132 176.706
Elev= 138.11

SUHV-20026

60D NAIL
41.26 Ft Rt "B" LINE
Sta 12+49.30
N 2 129 238.277
E 6 132 159.184
Elev= 137.41

NOTES:

1. Underground Utilities as shown are approximate
2. XX.XX Indicates Bottom of Ftg Elev

NOTE:
THE CONTRACTOR SHALL VERIFY ALL CONTROLLING FIELD DIMENSIONS BEFORE ORDERING OR FABRICATING ANY MATERIAL.

PRELIMINARY INVESTIGATION SECTION

SCALE	VERT.DATUM NAVD88	PHOTOGRAMMETRY AS OF: X		
1"=20′	HORZ.DATUM NAD83 (1991.35)	SURVEYED	BY DISTRICT 12	CHECKED BY T.PHUNG 3/2010
ALIGNMENT TIES DIST.TRAVERSE SHEETS		DRAFTED	BY S. ABASSY 02/2011	CHECKED BY S. ALIVIO 02/2011

	BY	CHECKED
DESIGN	EDWARD MERCADO	CHARLES LOMICKA
DETAILS	HENGAMEH MAHBOOBI	CHARLES MERCADO
QUANTITIES	EDWARD MERCADO	HTOON WIN

STATE OF CALIFORNIA
DEPARTMENT OF TRANSPORTATION

DIVISION OF ENGINEERING SERVICES
STRUCTURE DESIGN
DESIGN BRANCH 19

BRIDGE NO. 55E0117
POST MILE 0.01

RETAINING WALL NO.10
FOUNDATION PLAN

STRUCTURES FOUNDATION PLAN SHEET (ENGLISH) (REV. 09-01-10)

ORIGINAL SCALE IN INCHES FOR REDUCED PLANS 0 1 2 3

UNIT: 3621
PROJECT NUMBER & PHASE: 1200000102 1 CONTRACT NO.: 0E3101

DISREGARD PRINTS BEARING EARLIER REVISION DATES

REVISION DATES 02/17/11 11-10-11 11-15-11

SHEET 2 OF 11

FILE => RW10-e-fdp101.dgn

DIST	COUNTY	ROUTE	POST MILES TOTAL PROJECT	SHEET No.	TOTAL SHEETS
12	Ora	5,74	9.3/10.0, 0.0/0.2	457	515

Charles Lomicka 11-15-11
REGISTERED CIVIL ENGINEER DATE

4-9-12
PLANS APPROVAL DATE

REGISTERED PROFESSIONAL ENGINEER CHARLES LOMICKA No. C 71172 Exp. 6/30/13 CIVIL STATE OF CALIFORNIA

The State of California or its officers or agents shall not be responsible for the accuracy or completeness of electronic copies of this plan sheet.

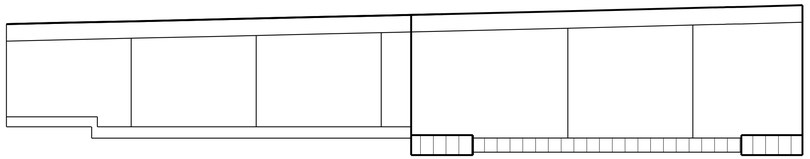

CONCRETE STRENGTH AND TYPE LIMITS

NO SCALE

LEGEND:

- Structural Concrete (Retaining Wall)
- Structural Concrete (Retaining Wall f'c = 4000 psi)
- 36"ø PIPE PILE with permanent steel casing
- Indicates 1:3 Battered Pipe Pile
- Indicates Vertical Pipe Pile
- 5"± Expanded Polystyrene between footing and top of existing RCB

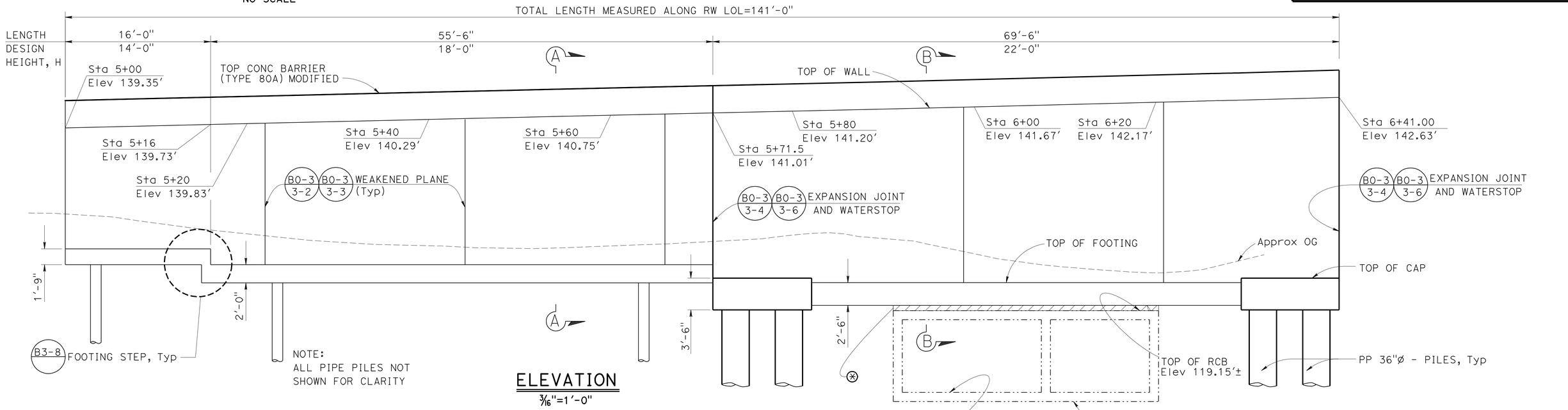

ELEVATION

3/16"=1'-0"

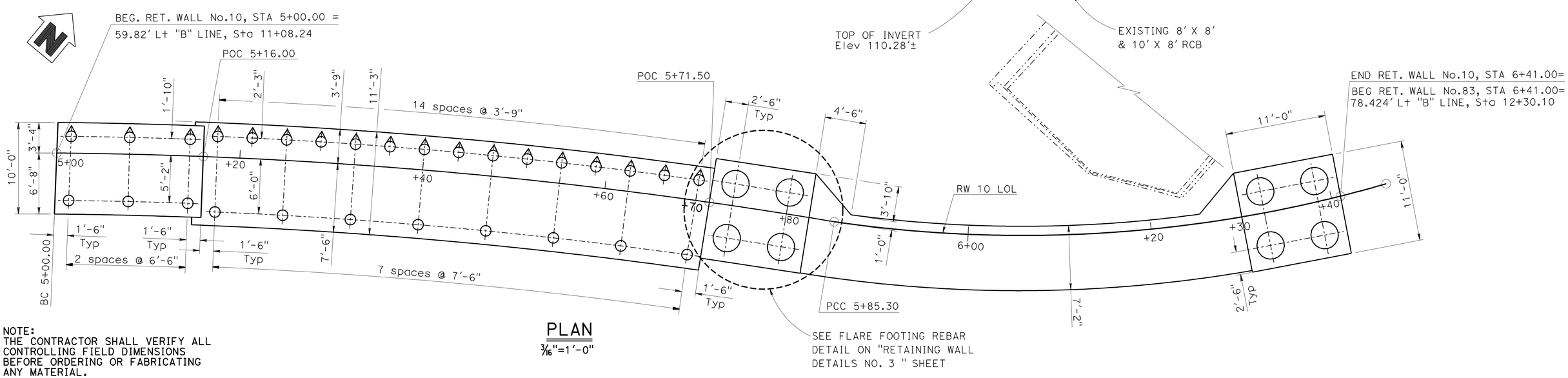

PLAN

3/16"=1'-0"

NOTE:
THE CONTRACTOR SHALL VERIFY ALL CONTROLLING FIELD DIMENSIONS BEFORE ORDERING OR FABRICATING ANY MATERIAL.

	BY	CHECKED
DESIGN	EDWARD MERCADO	CHARLES LOMICKA
DETAILS	HENGAMEH MAHBOOBI	CHARLES LOMICKA
QUANTITIES	EDWARD MERCADO	HTOON WIN

STATE OF CALIFORNIA
DEPARTMENT OF TRANSPORTATION

DIVISION OF ENGINEERING SERVICES
STRUCTURE DESIGN
DESIGN BRANCH 19

BRIDGE NO. 55E0117
POST MILE 0.01

RETAINING WALL NO. 10
STRUCTURE PLAN

STRUCTURES DESIGN DETAIL SHEET (ENGLISH) (REV. 09-01-10)

ORIGINAL SCALE IN INCHES FOR REDUCED PLANS 0 1 2 3

UNIT: 3621
PROJECT NUMBER & PHASE: 1200000102 1 CONTRACT NO.: 0E3101

DISREGARD PRINTS BEARING EARLIER REVISION DATES

REVISION DATES: 04-01-11 11-15-11 11-01-11

SHEET 3 OF 11

FILE => RW10-c-sp01.dgn

USERNAME => s121614 DATE PLOTTED => 15-APR-2012 TIME PLOTTED => 09:49

DIST	COUNTY	ROUTE	POST MILES TOTAL PROJECT	SHEET No.	TOTAL SHEETS
12	Ora	5,74	9.3/10.0, 0.0/0.2	458	515

Charles Lomicka 11-15-11
REGISTERED CIVIL ENGINEER DATE

4-9-12
PLANS APPROVAL DATE

REGISTERED PROFESSIONAL ENGINEER CHARLES LOMICKA No. C 71172 Exp. 6/30/13 CIVIL STATE OF CALIFORNIA

The State of California or its officers or agents shall not be responsible for the accuracy or completeness of electronic copies of this plan sheet.

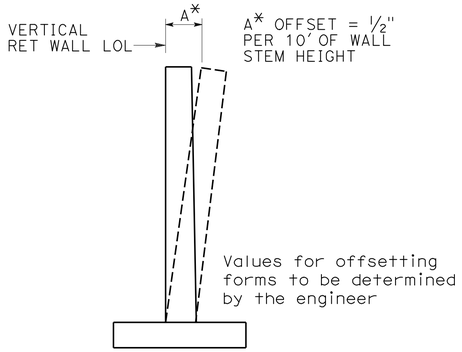

WALL OFFSET

NO SCALE

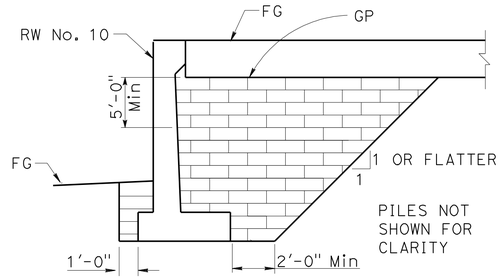

STRUCTURE BACKFILL

(RETAINING WALL)

FROM Sta 5+00 TO 5+71.50

NO SCALE

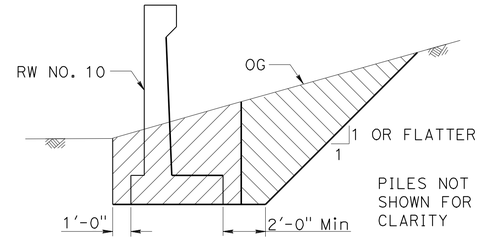

STRUCTURE EXCAVATION

(RETAINING WALL)

FROM Sta 5+00 TO 5+71.50

NO SCALE

LEGEND:

- STRUCTURE EXCAVATION (RETAINING WALL)
- STRUCTURE BACKFILL (RETAINING WALL)
- LIGHTWEIGHT BACKFILL (EPS), SEE ROADWAY PLANS
- ROADWAY EXCAVATION, SEE ROADWAY PLANS

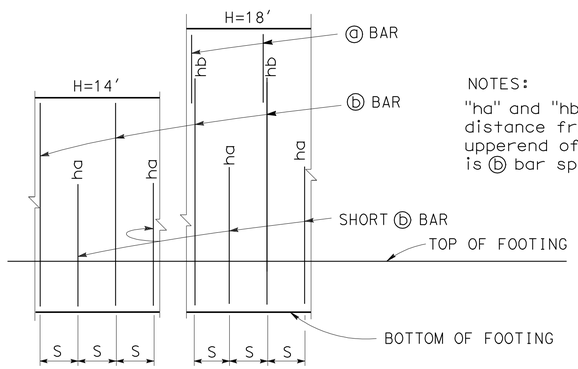

NOTES:

"ha" and "hb" above ⓑ bars indicate distance from top of footing to upperend of ⓑ bars, see table. "S" is ⓑ bar spacing, see table.

ELEVATION

No scale

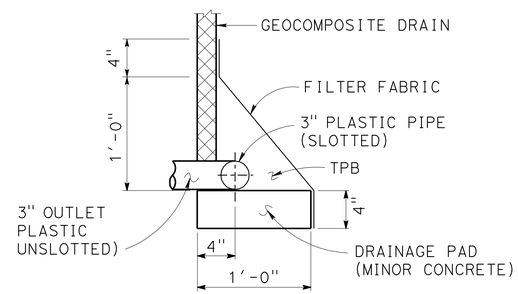

DETAIL A

NO SCALE

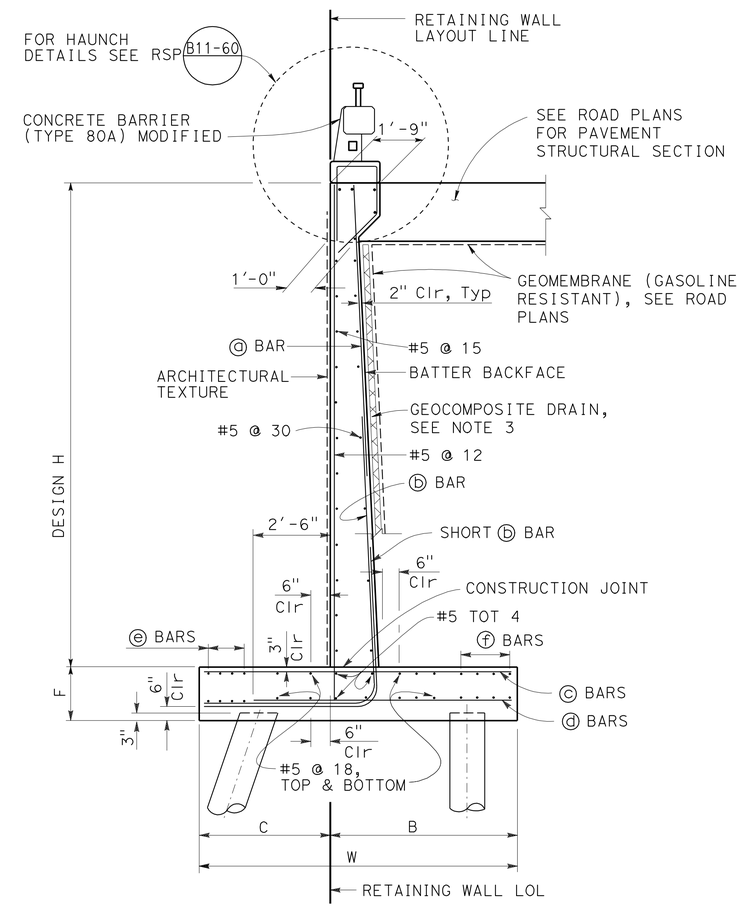

SECTION A-A

FROM Sta 5+00 TO 5+71.50

⅜"=1'-0"

TABLE 1: TABLE OF REINFORCING STEEL DIMENSIONS AND DATA		
DESIGN H	14'	18'
W	10'- 0"	11'- 3"
C	3'- 4"	3'- 9"
B	6'- 8"	7'- 6"
F PILE FOOTING	1'- 9"	2'- 0"
M	1'- 10"	2'- 3"
N	5'- 2"	6'- 0"
STEM WITH HAUNCH, BATTER	½:12	½:12
STEM WITHOUT HAUNCH, BATTER	0	0
ⓐ BARS		#7 @ 12
ⓑ BARS	#7 @ 6	#9 @ 6
ha	7'- 0"	6'- 0"
hb		12'- 0"
ⓒ BARS	#6 @ 6	#8 @ 6
ⓓ BARS	#5 @ 12	#5 @ 12
ⓔ BARS	6-#6 @ 12	6-#5 @ 12
ⓕ BARS	8-#7 @ 11	8-#6 @ 12

NOTE:
The Contractor shall verify all controlling field dimensions before ordering or fabricating any material.

NOTES:

1. Lateral resistance of each pile:
   30 kip for strength limit states.
   40 kip for extreme limit states.
2. For retaining wall architectural texture, see "ARCHITECTURAL TEXTURE DETAILS" sheet.
3. All drainage details not shown.
   For additional drainage details, see "GENERAL PLAN" and DETAIL A this sheet.

	BY	CHECKED
DESIGN	EDWARD MERCADO	CHARLES LOMICKA
DETAILS	HENGAMEH MAHBOOBI	CHARLES LOMICKA
QUANTITIES	EDWARD MERCADO	HTOON WIN

STATE OF CALIFORNIA
DEPARTMENT OF TRANSPORTATION

DIVISION OF ENGINEERING SERVICES
STRUCTURE DESIGN
DESIGN BRANCH 19

BRIDGE NO. 55E0117
POST MILE 0.01

RETAINING WALL NO. 10
RETAINING WALL DETAILS NO. 1

STRUCTURES DESIGN DETAIL SHEET (ENGLISH) (REV. 09-01-10)

ORIGINAL SCALE IN INCHES FOR REDUCED PLANS 0 1 2 3

UNIT: 3621
PROJECT NUMBER & PHASE: 1200000102 1 CONTRACT NO.: 0E3101

DISREGARD PRINTS BEARING EARLIER REVISION DATES

REVISION DATES: 04-11-11 11-15-11 11-01-11

SHEET 4 OF 11

USERNAME => s132614 DATE PLOTTED => 15-APR-2012 TIME PLOTTED => 09:49

FILE => RW10-g-dt01.dgn

DIST	COUNTY	ROUTE	POST MILES TOTAL PROJECT	SHEET No.	TOTAL SHEETS
12	Ora	5,74	9.3/10.0, 0.0/0.2	459	515

Charles Lomicka 11-15-11
REGISTERED CIVIL ENGINEER DATE

4-9-12
PLANS APPROVAL DATE

REGISTERED PROFESSIONAL ENGINEER CHARLES LOMICKA No. C 71172 Exp. 6/30/13 CIVIL STATE OF CALIFORNIA

The State of California or its officers or agents shall not be responsible for the accuracy or completeness of electronic copies of this plan sheet.

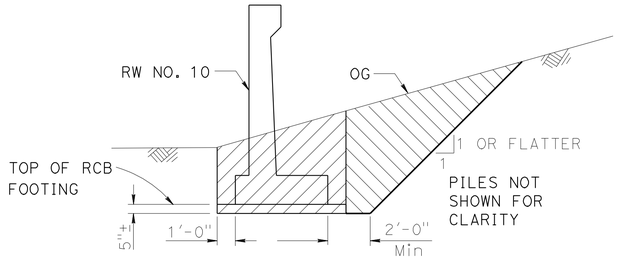

STRUCTURE EXCAVATION
(RETAINING WALL)
FROM Sta 5+71.5 TO 6+41.00

NO SCALE

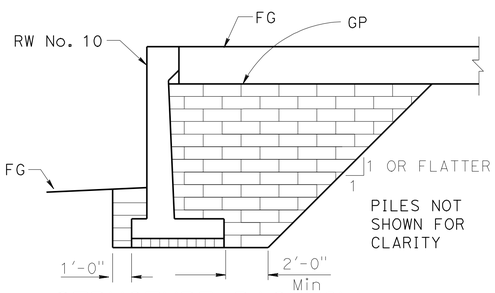

STRUCTURE BACKFILL
(RETAINING WALL)
FROM Sta 5+71.50 TO 6+41.00

NO SCALE

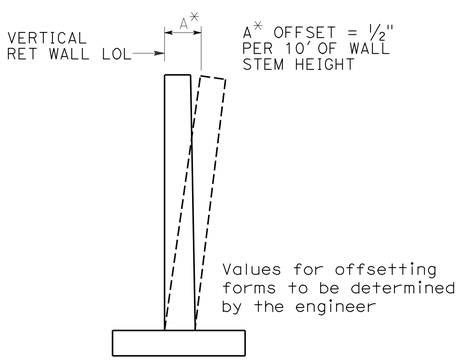

WALL OFFSET
NO SCALE

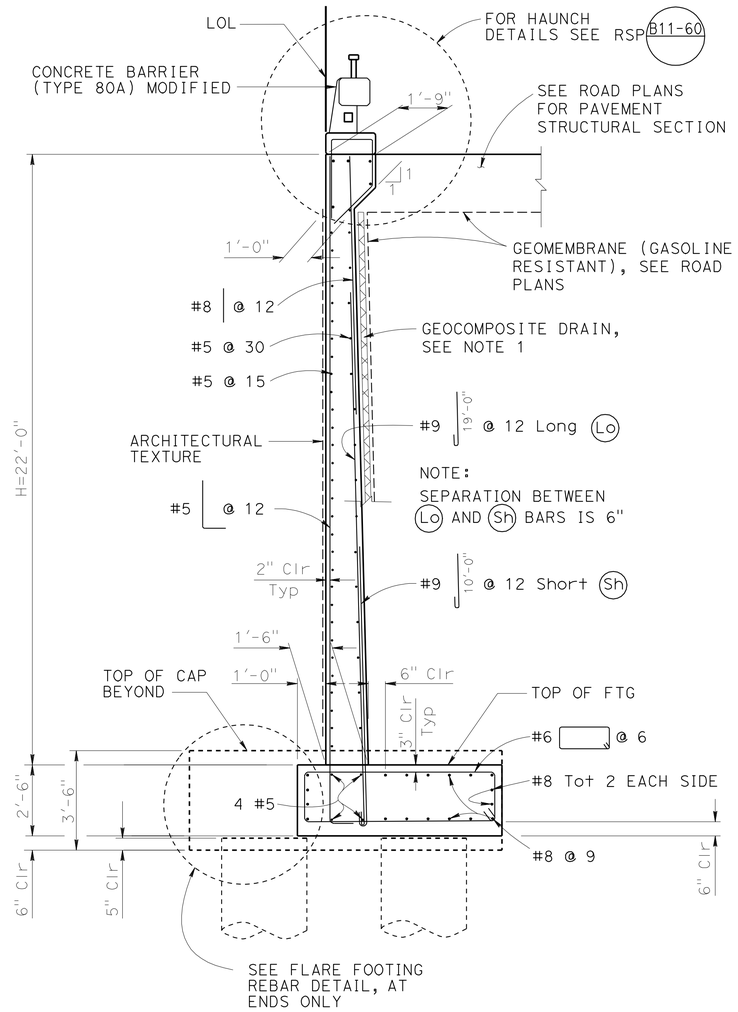

SECTION B-B
FROM Sta 5+71.5 TO 6+41.00

3/8"=1'-0"

LEGEND:

- STRUCTURE EXCAVATION (RETAINING WALL)
- STRUCTURE BACKFILL (RETAINING WALL)
- LIGHTWEIGHT BACKFILL (EPS), SEE ROADWAY PLANS
- ROADWAY EXCAVATION, SEE ROADWAY PLANS
- EXPANDED 5"± POLYSTYRENE

NOTES:

1. All drainage details not shown. For additional drainage details, see "GENERAL PLAN" and "RETAINING WALL DETAILS NO. 1" sheet.

DESIGN DATA

Design: AASHTO LRFD Bridge Design Specifications 4th edition with California Amendments

WS: 30 psf on barrier

LS: Varied surcharge on level ground surface

CT: 54 kip maximum traffic impact loading evenly distributed over 10 feet at top of the barrier and 1:1 distribution down and outward

EQE: Mononabe-Okabe Method
K_h = 0.2
K_v = 0.0

Normal Fill:	EPS Fill:
ϕ = 34°	Ka = 0.15
γ = 120 pcf	γ = 2.5 pcf

Reinforced Concrete: f'c = 3600 psi (except as shown on "CONCRETE STRENGTH AND TYPE LIMITS")
fy = 60,000 psi

Load Combinations and Limit States

Service I Q=1.00DC+1.00EV+1.00EH+1.00LS+0.30WS

Service II Q=1.00DC+1.00EV+1.00EH+1.00WS

Strength I Q=αDC+βEV+1.50EH+1.75LS
Q=1.25DC+1.35EV+0.90EH+1.75LS (for piles at heel)

Strength III Q=αDC+βEV+1.50EH+1.40WS

Strength V Q=αDC+βEV+1.50EH+1.35LS+0.40WS

Extreme I Q=1.00DC+1.00EV+1.00EH+1.00EQD+1.00EQE

Extreme II Q=1.00DC+1.00EV+1.00EH+1.00CT

Where:

- Q: Force Effects
- α: 1.25 or 0.90, Which ever Controls Design
- β: 1.35 or 1.00, which ever Controls Design
- DC: Dead Load of Structure Components
- EH: Horizontal Earth Fill Pressure
- EV: Vertical Earth Fill Pressure
- LS: Live Load Surcharge
- EQE: Seismic Earth Pressure
- EQD: Soil and Structure Components Inertia. Soil inertia ignored for stem design
- WS: Wind Load on Sound Wall and Barrier
- CT: Vehicular Collision Force

NOTE:
The Contractor shall verify all controlling field dimensions before ordering or fabricating any material.

	BY	CHECKED
DESIGN	EDWARD MERCADO	CHARLES LOMICKA
DETAILS	HENGAMEH MAHBOOBI	CHARLES LOMICKA
QUANTITIES	EDWARD MERCADO	HTOON WIN

STATE OF CALIFORNIA
DEPARTMENT OF TRANSPORTATION

DIVISION OF ENGINEERING SERVICES
STRUCTURE DESIGN
DESIGN BRANCH 19

BRIDGE NO. 55E0117
POST MILE 0.01

RETAINING WALL NO. 10
RETAINING WALL DETAILS NO. 2

STRUCTURES DESIGN DETAIL SHEET (ENGLISH) (REV. 09-01-10)

ORIGINAL SCALE IN INCHES FOR REDUCED PLANS 0 1 2 3

UNIT: 3621
PROJECT NUMBER & PHASE: 1200000102 1 CONTRACT NO.: 0E3101

DISREGARD PRINTS BEARING EARLIER REVISION DATES

REVISION DATES 06-17-11 11-15-11 11-07-11 SHEET 5 OF 11

FILE => RW10-g-dt02.dgn

USERNAME => s121614 DATE PLOTTED => 15-APR-2012 TIME PLOTTED => 08:49

DIST	COUNTY	ROUTE	POST MILES TOTAL PROJECT	SHEET No.	TOTAL SHEETS
12	Ora	5,74	9.3/10.0, 0.0/0.2	460	515

REGISTERED CIVIL ENGINEER 11-15-11 DATE

4-9-12
PLANS APPROVAL DATE

REGISTERED PROFESSIONAL ENGINEER CHARLES LOMICKA No. C 71172 Exp. 6/30/13 CIVIL STATE OF CALIFORNIA

The State of California or its officers or agents shall not be responsible for the accuracy or completeness of electronic copies of this plan sheet.

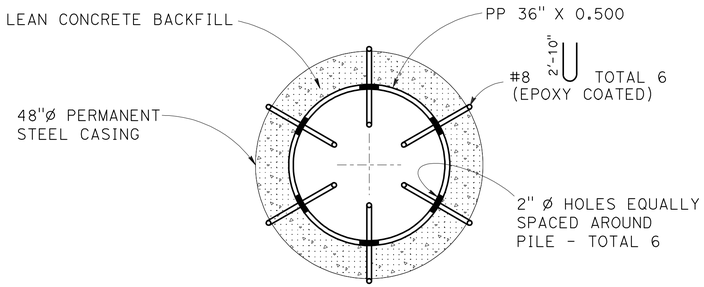

SECTION W-W

PP = STEEL PIPE PILE

NO SCALE

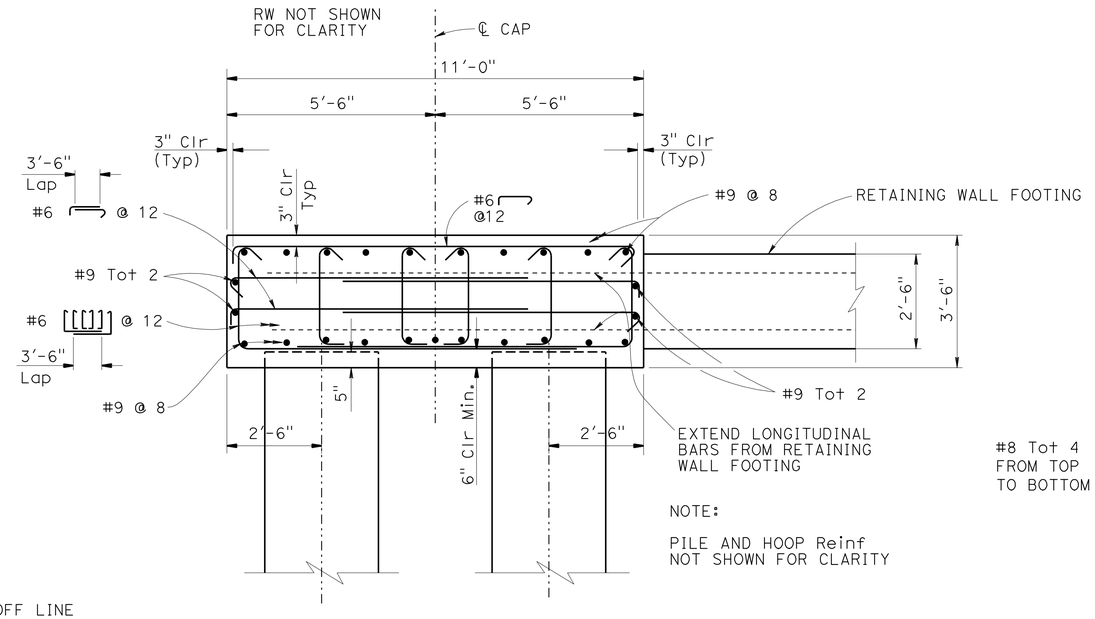

NOTE:

PILE AND HOOP Reinf NOT SHOWN FOR CLARITY

PILE CAP SECTION DETAIL

½" = 1'-0"

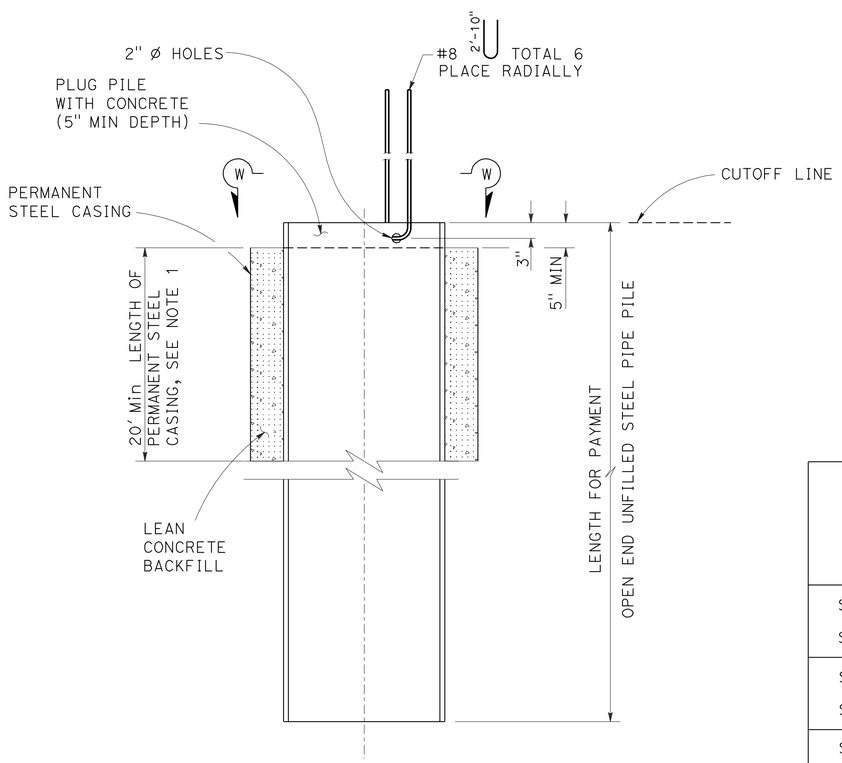

PIPE PILE DETAIL

NO SCALE

NOTE:
The Contractor shall verify all controlling field dimensions before ordering or fabricating any material.

PILE DATA TABLE

LOCATION	PILE TYPE	NOMINAL RESISTANCE (kips)		DESIGN TIP ELEVATION (ft)	SPECIFIED TIP ELEVATION (ft)	NOMINAL DRIVING RESISTANCE REQUIRED (kips)
		COMPRESSION	TENSION			
Sta 5+00.00 TO Sta 5+16.00	CLASS 90 ALT W	140	0	74.59 (a-I) 78.59 (a-II) 105.59 (d)	74.59	140
Sta 5+16.00 TO Sta 5+71.50	CLASS 90 ALT W	120	0	72.59 (a-I) 82.59 (a-II) 104.59 (d)	72.59	120
Sta 5+71.50 TO Sta 6+41.00	PP 36 X 0.5	420	0	64.61 (a-I) 80.61 (a-II) 87.61 (d)	64.61	420

Design Tip Elevation is controlled by:
a-I : COMPRESSION (STRENGTH LIMIT)
a-II : COMPRESSION (EXTREME EVENT)
d : LATERAL LOAD

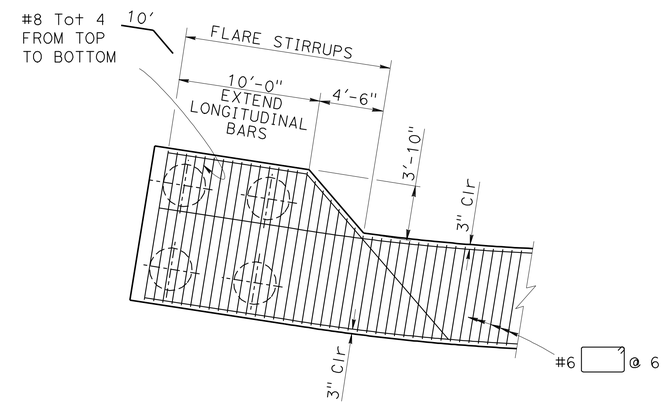

FLARE FOOTING REBAR DETAIL

NO SCALE

NOTES:

1. The space between the permanent casing and the pipe pile shall be filled with lean concrete backfill after completion of pile driving.

	BY	CHECKED
DESIGN	EDWARD MERCADO	CHARLES LOMICKA
DETAILS	HENGAMEH MAHBOOBI	CHARLES LOMICKA
QUANTITIES	EDWARD MERCADO	HTOON WIN

STATE OF CALIFORNIA
DEPARTMENT OF TRANSPORTATION

DIVISION OF ENGINEERING SERVICES
STRUCTURE DESIGN
DESIGN BRANCH 19

BRIDGE NO. 55E0117
POST MILE 0.01

RETAINING WALL NO. 10
RETAINING WALL DETAILS NO. 3

STRUCTURES DESIGN DETAIL SHEET (ENGLISH) (REV. 09-01-10)

ORIGINAL SCALE IN INCHES FOR REDUCED PLANS 0 1 2 3

UNIT: 3621
PROJECT NUMBER & PHASE: 1200000102 1 CONTRACT NO.: 0E3101

DISREGARD PRINTS BEARING EARLIER REVISION DATES

REVISION DATES: 04-11-11 11-15-11 11-01-11

SHEET 6 OF 11

FILE => RW10-g-dt03.dgn

USERNAME => s121614 DATE PLOTTED => 15-APR-2012 TIME PLOTTED => 09:50

DIST	COUNTY	ROUTE	POST MILES TOTAL PROJECT	SHEET No.	TOTAL SHEETS
12	Ora	5,74	9.3/10.0, 0.0/0.2	461	515

Charles Lomicka 11-15-11
REGISTERED CIVIL ENGINEER DATE

4-9-12
PLANS APPROVAL DATE

REGISTERED PROFESSIONAL ENGINEER CHARLES LOMICKA No. C 71172 Exp. 6/30/13 CIVIL STATE OF CALIFORNIA

The State of California or its officers or agents shall not be responsible for the accuracy or completeness of electronic copies of this plan sheet.

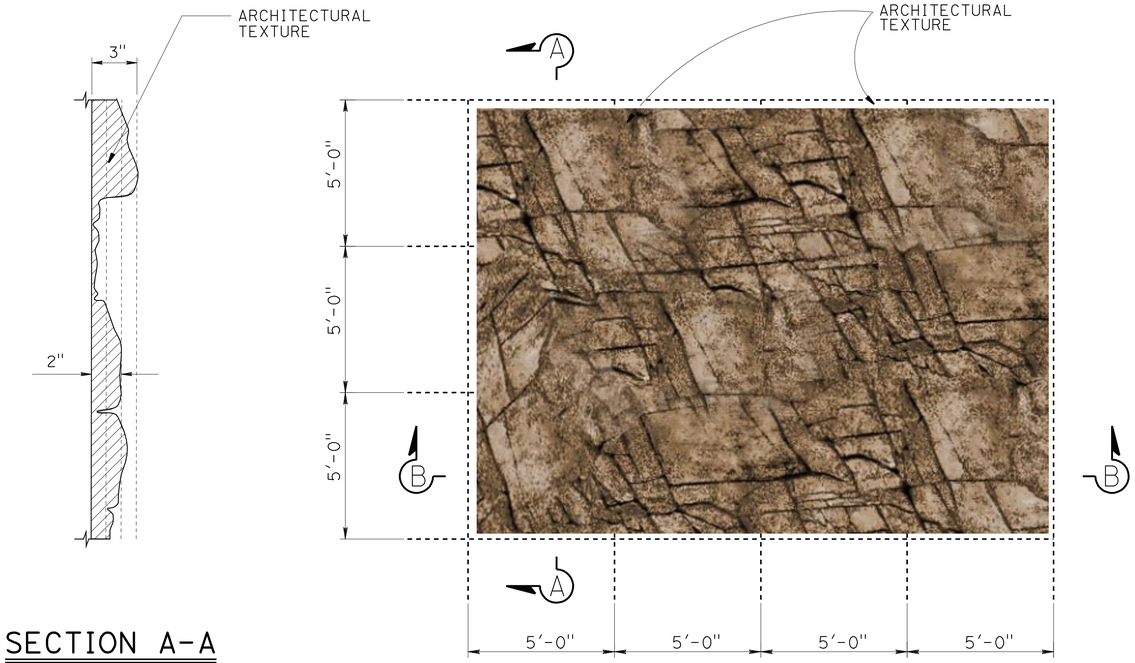

SECTION A-A
NO SCALE

ROCK STRATA PATTERN TYPES (TYPICAL)
NO SCALE

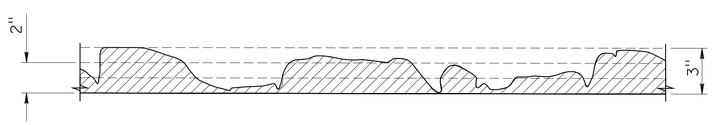

SECTION B-B
NO SCALE

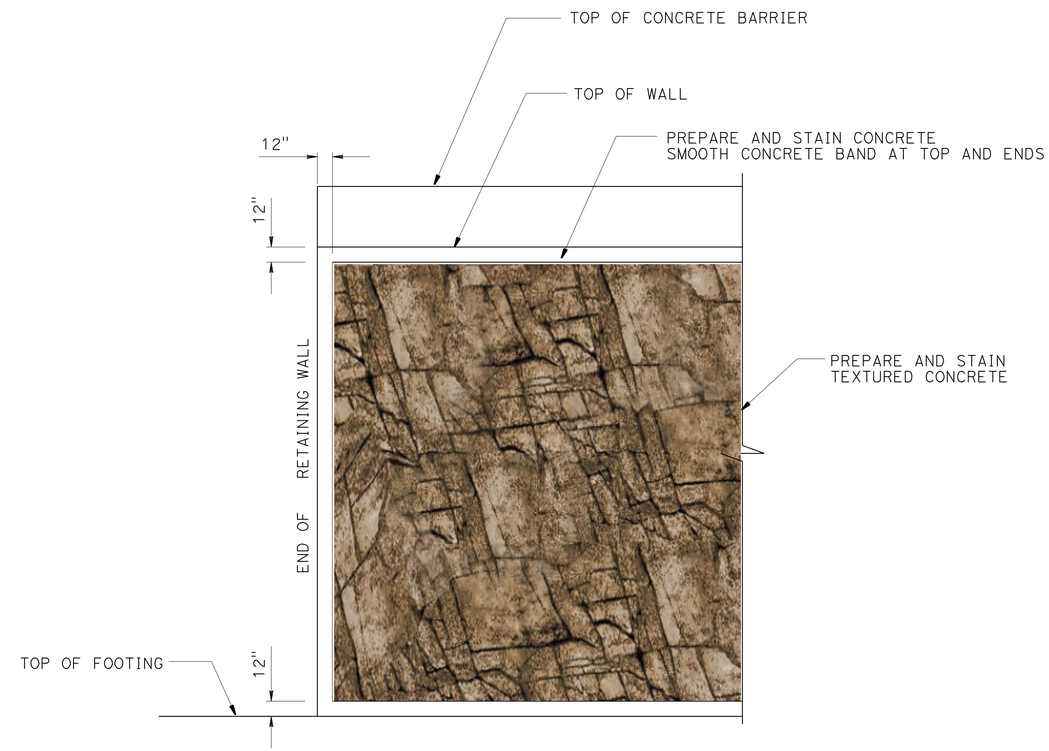

WALL TEXTURE AT TOP AND ENDS OF RETAINING WALL
NO SCALE

NOTES:

1. ARCHITECTURAL TEXTURE VARIES FROM 0" TO 3" MAXIMUM THICKNESS.

DESIGN	BY VATHANA CHY	CHECKED CHARLES LOMICKA	
DETAILS	BY VATHANA CHY	CHECKED CHARLES LOMICKA	
QUANTITIES	BY EDWARD MERCADO	CHECKED HTOON WIN	

STATE OF CALIFORNIA
DEPARTMENT OF TRANSPORTATION

DIVISION OF ENGINEERING SERVICES
STRUCTURE DESIGN
DESIGN BRANCH 19

BRIDGE NO. 55E0117
POST MILE 0.01

RETAINING WALL NO. 10
ARCHITECTURAL TEXTURE DETAILS

STRUCTURES DESIGN DETAIL SHEET (ENGLISH) (REV. 09-01-10)

ORIGINAL SCALE IN INCHES FOR REDUCED PLANS 0 1 2 3

UNIT: 3621
PROJECT NUMBER & PHASE: 1200000102 1 CONTRACT NO.: 0E3101

DISREGARD PRINTS BEARING EARLIER REVISION DATES

REVISION DATES 05-10-11 11-15-11 11-21-11

SHEET 7 OF 11

FILE => RW10-u-mlscdt01.dgn

USERNAME => s121614 DATE PLOTTED => 15-APR-2012 TIME PLOTTED => 09:50

DIST	COUNTY	ROUTE	POST MILES TOTAL PROJECT	SHEET No.	TOTAL SHEETS
12	Ora	5,74	9.3/10.0, 0.0/0.2	462	515

GEOTECHNICAL PROFESSIONAL — DATE 07/2011

4-9-12
PLANS APPROVAL DATE

REGISTERED PROFESSIONAL ENGINEER — MICHAEL G. SMITH — No. 2229 — Exp. 3-31-2012 — GEOTECHNICAL — STATE OF CALIFORNIA

The State of California or its officers or agents shall not be responsible for the accuracy or completeness of electronic copies of this plan sheet.

This LOTB sheet was prepared in accordance with the Caltrans Soil & Rock Logging, Classification, & Presentation Manual (2010 Edition).

BENCH MARK

SUHV-20021
FND PK/TIN
80.10 Ft Lt ℄ Route 5
Sta 517+51.39
Elev= 117.01'
NAVD88

SUHV-20027
FND PK/NAIL
136.66 Ft Rt ℄ Route 5
Sta 519+18.34
Elev= 144.30'
NAVD88

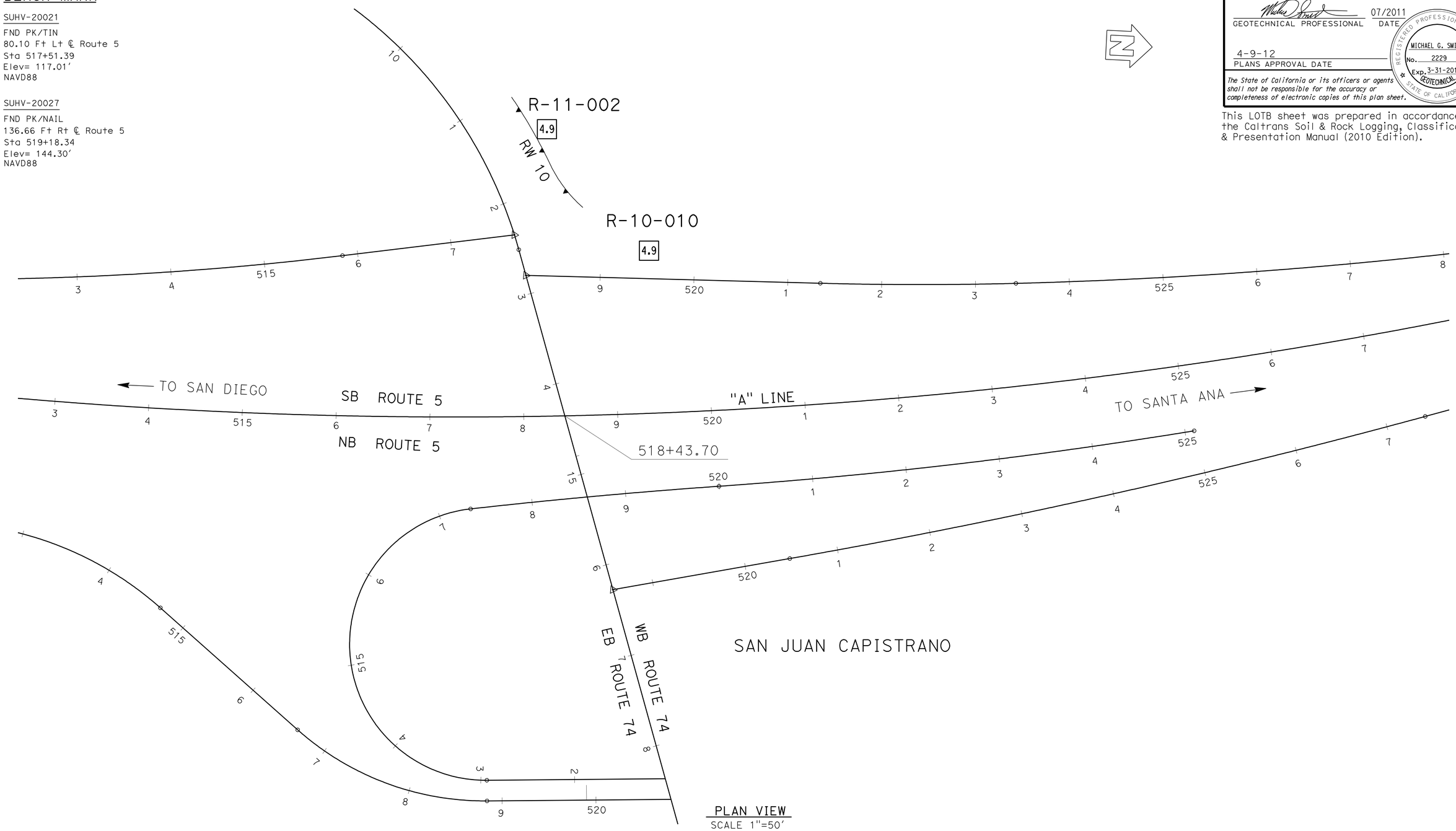

PLAN VIEW
SCALE 1"=50'

ENGINEERING SERVICES	MATERIALS AND GEOTECHNICAL SERVICES	STATE OF CALIFORNIA DEPARTMENT OF TRANSPORTATION	DIVISION OF ENGINEERING SERVICES STRUCTURE DESIGN DESIGN BRANCH 19	BRIDGE NO. 55E0117 POST MILE 0.01	RETAINING WALL NO. 10 LOG OF TEST BORINGS 1 OF 4
FUNCTIONAL SUPERVISOR NAME: M. SMITH	DRAWN BY: P.QUACH CHECKED BY: P.YERRA	FIELD INVESTIGATION BY: EJ.JEON/D.ORRIS			

OGS CIVIL LOG OF TEST BORINGS SHEET

ORIGINAL SCALE IN INCHES FOR REDUCED PLANS 0 1 2 3

UNIT: 3658
PROJECT NUMBER & PHASE: 1200000102 & 4 CONTRACT NO.: 12-0E3104

DISREGARD PRINTS BEARING EARLIER REVISION DATES → REVISION DATES 06/17/11

SHEET 8 OF 11

FILE => RW10-z-lotb_01.dgn

USERNAME => s126614 DATE PLOTTED => 15-APR-2012 TIME PLOTTED => 03:50

DIST	COUNTY	ROUTE	POST MILES TOTAL PROJECT	SHEET No.	TOTAL SHEETS
12	Ora	5,74	9.3/10.0, 0.0/0.2	463	515

GEOTECHNICAL PROFESSIONAL — DATE 07/2011

4-9-12
PLANS APPROVAL DATE

REGISTERED PROFESSIONAL ENGINEER — MICHAEL G. SMITH No. 2229 Exp. 3-31-2012 GEOTECHNICAL — STATE OF CALIFORNIA

The State of California or its officers or agents shall not be responsible for the accuracy or completeness of electronic copies of this plan sheet.

This LOTB sheet was prepared in accordance with the Caltrans Soil & Rock Logging, Classification, & Presentation Manual (2010 Edition).

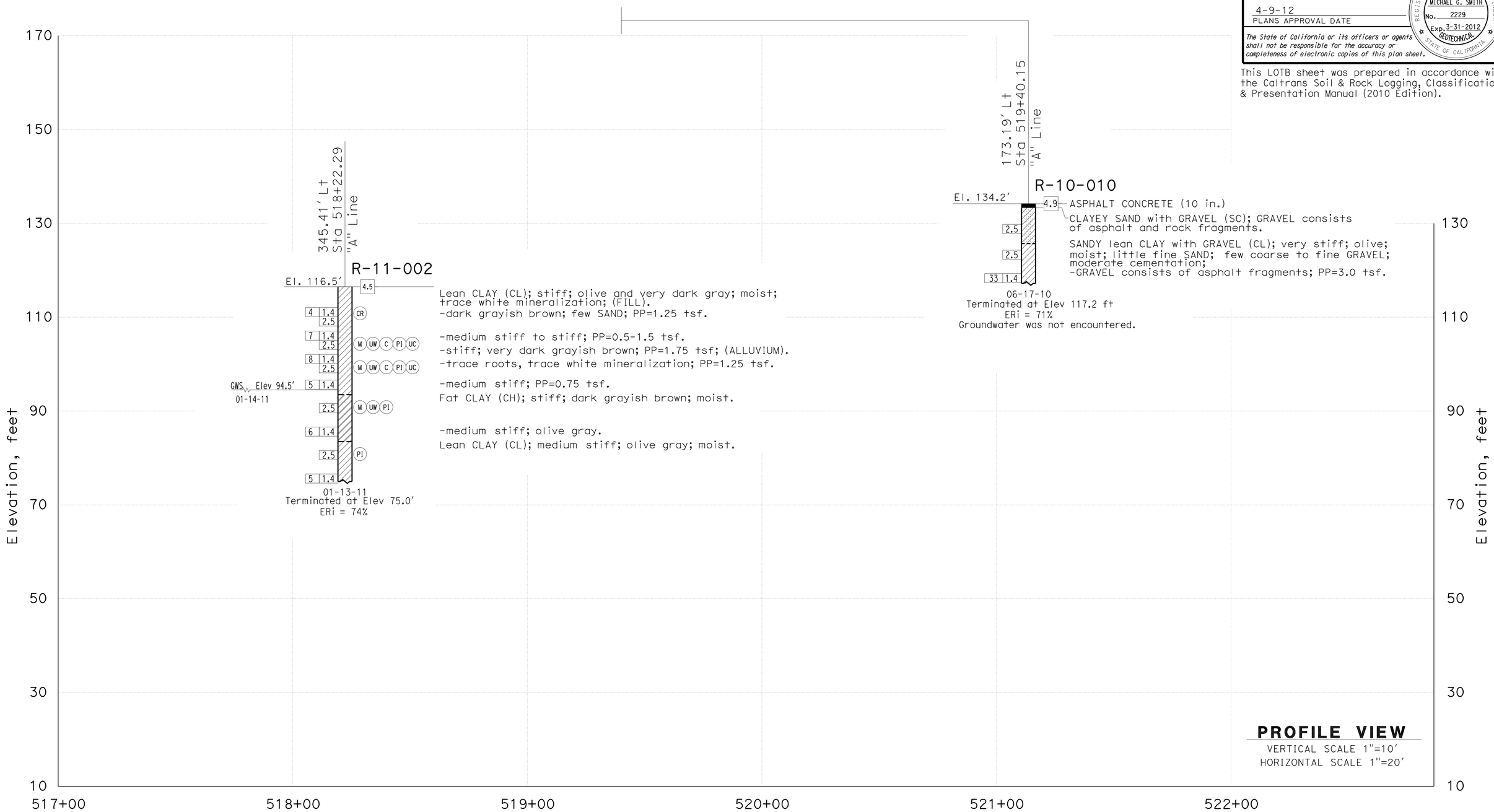

ENGINEERING SERVICES	MATERIALS AND GEOTECHNICAL SERVICES	STATE OF CALIFORNIA DEPARTMENT OF TRANSPORTATION	DIVISION OF ENGINEERING SERVICES STRUCTURE DESIGN DESIGN BRANCH 19	BRIDGE NO. 55E0117 POST MILE 0.01	RETAINING WALL NO. 10 LOG OF TEST BORINGS 2 OF 4
FUNCTIONAL SUPERVISOR NAME: M. SMITH	DRAWN BY: P.QUACH CHECKED BY: P.YERRA	FIELD INVESTIGATION BY: EJ.JEON/D.ORRIS			

OGS CIVIL LOG OF TEST BORINGS SHEET — ORIGINAL SCALE IN INCHES FOR REDUCED PLANS 0 1 2 3

UNIT: 3658
PROJECT NUMBER & PHASE: 1200000102 & 4 CONTRACT NO.: 12-0E3104

DISREGARD PRINTS BEARING EARLIER REVISION DATES — REVISION DATES 06/17/11 — SHEET 9 OF 11

FILE => RW10-z-lotb_02.dgn

USERNAME => s121614 DATE PLOTTED => 15-APR-2012 TIME PLOTTED => 09:50

DIST	COUNTY	ROUTE	POST MILES TOTAL PROJECT	SHEET No.	TOTAL SHEETS
12	Ora	5,74	9.3/10.0, 0.0/0.2	464	515

GEOTECHNICAL PROFESSIONAL — DATE 07/2011

4-9-12
PLANS APPROVAL DATE

REGISTERED PROFESSIONAL ENGINEER — MICHAEL G. SMITH No. 2229 Exp. 3-31-2012 GEOTECHNICAL — STATE OF CALIFORNIA

The State of California or its officers or agents shall not be responsible for the accuracy or completeness of electronic copies of this plan sheet.

This LOTB sheet was prepared in accordance with the Caltrans Soil & Rock Logging, Classification, & Presentation Manual (2010 Edition).

CEMENTATION

Description	Criteria
Weak	Crumbles or breaks with handling or little finger pressure.
Moderate	Crumbles or breaks with considerable finger pressure.
Strong	Will not crumble or break with finger pressure.

BOREHOLE IDENTIFICATION

Symbol	Hole Type	Description
Size	A	Auger Boring (hollow or solid stem bucket)
Size	R RW RC P	Rotary drilled boring (conventional) Rotary drilled with self-casing wire-line Rotary core with continuously-sampled, self-casing wire-line Rotary percussion boring (air)
Size	R	Rotary drilled diamond core
Size	HD HA	Hand driven (1-inch soil tube) Hand Auger
●	D	Dynamic Cone Penetration Boring
▲	CPT	Cone Penetration Test (ASTM D 5778)
⬚	O	Other (note on LOTB)

Note: Size in inches.

CONSISTENCY OF COHESIVE SOILS

Description	Shear Strength (tsf)	Pocket Penetrometer Measurement, PP, (tsf)	Torvane Measurement, TV, (tsf)	Vane Shear Measurement, VS, (tsf)
Very Soft	Less than 0.12	Less than 0.25	Less than 0.12	Less than 0.12
Soft	0.12 - 0.25	0.25 - 0.5	0.12 - 0.25	0.12 - 0.25
Medium Stiff	0.25 - 0.5	0.5 - 1	0.25 - 0.5	0.25 - 0.5
Stiff	0.5 - 1	1 - 2	0.5 - 1	0.5 - 1
Very Stiff	1 - 2	2 - 4	1 - 2	1 - 2
Hard	Greater than 2	Greater than 4	Greater than 2	Greater than 2

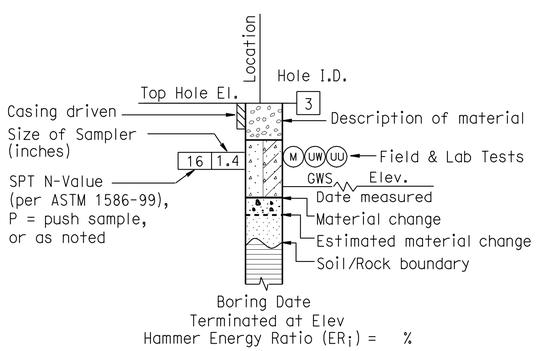

ROTARY BORING

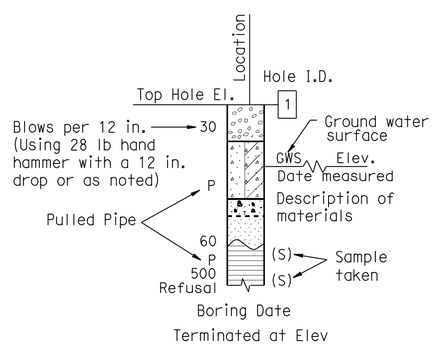

HAND BORING

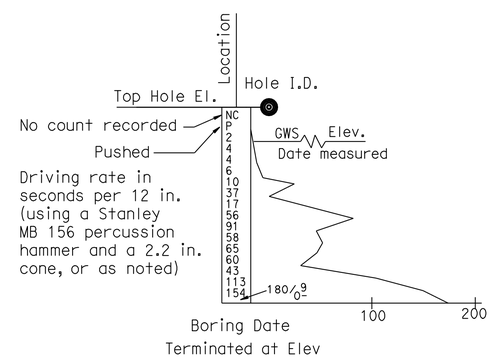

DYNAMIC CONE PENETRATION BORING

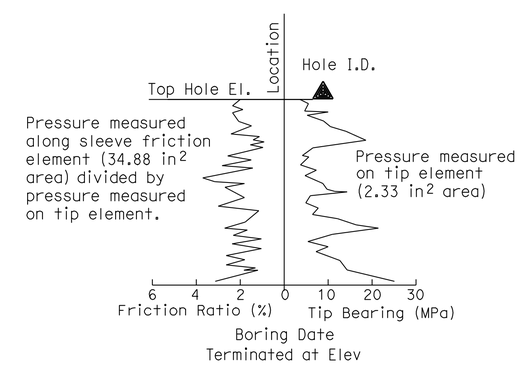

CONE PENETRATION TEST (CPT) BORING

ENGINEERING SERVICES	MATERIALS AND GEOTECHNICAL SERVICES	STATE OF CALIFORNIA DEPARTMENT OF TRANSPORTATION	DIVISION OF ENGINEERING SERVICES STRUCTURE DESIGN DESIGN BRANCH 19	BRIDGE NO. 55E0117 / POST MILE 0.01	RETAINING WALL NO. 10
FUNCTIONAL SUPERVISOR	DRAWN BY: P.QUACH	FIELD INVESTIGATION BY:			LOG OF TEST BORINGS 3 OF 4
NAME: M. SMITH	CHECKED BY: P.YERRA	EJ.JEON/D.ORRIS			

OGS CIVIL LOG OF TEST BORINGS SHEET — ORIGINAL SCALE IN INCHES FOR REDUCED PLANS 0 1 2 3

UNIT: 3658
PROJECT NUMBER & PHASE: 1200000102 & 4 CONTRACT NO.: 12-0E3104

DISREGARD PRINTS BEARING EARLIER REVISION DATES → REVISION DATES 06/17/11 — SHEET 10 OF 11

FILE => RW10-z-lotb_03.dgn

USERNAME => s121614 DATE PLOTTED => 15-APR-2012 TIME PLOTTED => 09:51

DIST	COUNTY	ROUTE	POST MILES TOTAL PROJECT	SHEET No.	TOTAL SHEETS
12	Ora	5,74	9.3/10.0, 0.0/0.2	465	515

GEOTECHNICAL PROFESSIONAL — DATE 07/2011

4-9-12
PLANS APPROVAL DATE

REGISTERED PROFESSIONAL ENGINEER — MICHAEL G. SMITH No. 2229 Exp. 3-31-2012 GEOTECHNICAL — STATE OF CALIFORNIA

The State of California or its officers or agents shall not be responsible for the accuracy or completeness of electronic copies of this plan sheet.

This LOTB sheet was prepared in accordance with the Caltrans Soil & Rock Logging, Classification, & Presentation Manual (2010 Edition).

GROUP SYMBOLS AND NAMES

Graphic/Symbol	Group Names	Graphic/Symbol	Group Names
GW	Well-graded GRAVEL Well-graded GRAVEL with SAND	CL	Lean CLAY Lean CLAY with SAND Lean CLAY with GRAVEL SANDY lean CLAY SANDY lean CLAY with GRAVEL GRAVELLY lean CLAY GRAVELLY lean CLAY with SAND
GP	Poorly-graded GRAVEL Poorly-graded GRAVEL with SAND		
GW-GM	Well-graded GRAVEL with SILT Well-graded GRAVEL with SILT and SAND	CL-ML	SILTY CLAY SILTY CLAY with SAND SILTY CLAY with GRAVEL SANDY SILTY CLAY SANDY SILTY CLAY with GRAVEL GRAVELLY SILTY CLAY GRAVELLY SILTY CLAY with SAND
GW-GC	Well-graded GRAVEL with CLAY (or SILTY CLAY) Well-graded GRAVEL with CLAY and SAND (or SILTY CLAY and SAND)		
GP-GM	Poorly-graded GRAVEL with SILT Poorly-graded GRAVEL with SILT and SAND	ML	SILT SILT with SAND SILT with GRAVEL SANDY SILT SANDY SILT with GRAVEL GRAVELLY SILT GRAVELLY SILT with SAND
GP-GC	Poorly-graded GRAVEL with CLAY (or SILTY CLAY) Poorly-graded GRAVEL with CLAY and SAND (or SILTY CLAY and SAND)		
GM	SILTY GRAVEL SILTY GRAVEL with SAND	OL	ORGANIC lean CLAY ORGANIC lean CLAY with SAND ORGANIC lean CLAY with GRAVEL SANDY ORGANIC lean CLAY SANDY ORGANIC lean CLAY with GRAVEL GRAVELLY ORGANIC lean CLAY GRAVELLY ORGANIC lean CLAY with SAND
GC	CLAYEY GRAVEL CLAYEY GRAVEL with SAND		
GC-GM	SILTY, CLAYEY GRAVEL SILTY, CLAYEY GRAVEL with SAND	OL	ORGANIC SILT ORGANIC SILT with SAND ORGANIC SILT with GRAVEL SANDY ORGANIC SILT SANDY ORGANIC SILT with GRAVEL GRAVELLY ORGANIC SILT GRAVELLY ORGANIC SILT with SAND
SW	Well-graded SAND Well-graded SAND with GRAVEL		
SP	Poorly-graded SAND Poorly-graded SAND with GRAVEL	CH	Fat CLAY Fat CLAY with SAND Fat CLAY with GRAVEL SANDY fat CLAY SANDY fat CLAY with GRAVEL GRAVELLY fat CLAY GRAVELLY fat CLAY with SAND
SW-SM	Well-graded SAND with SILT Well-graded SAND with SILT and GRAVEL		
SW-SC	Well-graded SAND with CLAY (or SILTY CLAY) Well-graded SAND with CLAY and GRAVEL (or SILTY CLAY and GRAVEL)	MH	Elastic SILT Elastic SILT with SAND Elastic SILT with GRAVEL SANDY elastic SILT SANDY elastic SILT with GRAVEL GRAVELLY elastic SILT GRAVELLY elastic SILT with SAND
SP-SM	Poorly-graded SAND with SILT Poorly-graded SAND with SILT and GRAVEL		
SP-SC	Poorly-graded SAND with CLAY (or SILTY CLAY) Poorly-graded SAND with CLAY and GRAVEL (or SILTY CLAY and GRAVEL)	OH	ORGANIC fat CLAY ORGANIC fat CLAY with SAND ORGANIC fat CLAY with GRAVEL SANDY ORGANIC fat CLAY SANDY ORGANIC fat CLAY with GRAVEL GRAVELLY ORGANIC fat CLAY GRAVELLY ORGANIC fat CLAY with SAND
SM	SILTY SAND SILTY SAND with GRAVEL		
SC	CLAYEY SAND CLAYEY SAND with GRAVEL	OH	ORGANIC elastic SILT ORGANIC elastic SILT with SAND ORGANIC elastic SILT with GRAVEL SANDY ORGANIC elastic SILT SANDY ORGANIC elastic SILT with GRAVEL GRAVELLY ORGANIC elastic SILT GRAVELLY ORGANIC elastic SILT with SAND
SC-SM	SILTY, CLAYEY SAND SILTY, CLAYEY SAND with GRAVEL		
PT	PEAT	OL/OH	ORGANIC SOIL ORGANIC SOIL with SAND ORGANIC SOIL with GRAVEL SANDY ORGANIC SOIL SANDY ORGANIC SOIL with GRAVEL GRAVELLY ORGANIC SOIL GRAVELLY ORGANIC SOIL with SAND
	COBBLES COBBLES and BOULDERS BOULDERS		

FIELD AND LABORATORY TESTING

- (C) Consolidation (ASTM D 2435)
- (CL) Collapse Potential (ASTM D 5333)
- (CP) Compaction Curve (CTM 216)
- (CR) Corrosivity Testing (CTM 643, CTM 422, CTM 417)
- (CU) Consolidated Undrained Triaxial (ASTM D 4767)
- (DS) Direct Shear (ASTM D 3080)
- (EI) Expansion Index (ASTM D 4829)
- (M) Moisture Content (ASTM D 2216)
- (OC) Organic Content-% (ASTM D 2974)
- (P) Permeability (CTM 220)
- (PA) Particle Size Analysis (ASTM D 422)
- (PI) Plasticity Index (AASHTO T 90) Liquid Limit (AASHTO T 89)
- (PL) Point Load Index (ASTM D 5731)
- (PM) Pressure Meter
- (R) R-Value (CTM 301)
- (SE) Sand Equivalent (CTM 217)
- (SG) Specific Gravity (AASHTO T 100)
- (SL) Shrinkage Limit (ASTM D 427)
- (SW) Swell Potential (ASTM D 4546)
- (UC) Unconfined Compression-Soil (ASTM D 2166) Unconfined Compression-Rock (ASTM D 2938)
- (UU) Unconsolidated Undrained Triaxial (ASTM D 2850)
- (UW) Unit Weight (ASTM D 4767)

APPARENT DENSITY OF COHESIONLESS SOILS

Description	SPT N_{60} (Blows / 12 in.)
Very Loose	0 - 5
Loose	5 - 10
Medium Dense	10 - 30
Dense	30 - 50
Very Dense	Greater than 50

MOISTURE

Description	Criteria
Dry	No discernable moisture
Moist	Moisture present, but no free water
Wet	Visible free water

PERCENT OR PROPORTION OF SOILS

Description	Criteria
Trace	Particles are present but estimated to be less than 5%
Few	5% - 10%
Little	15% - 25%
Some	30% - 45%
Mostly	50% - 100%

PARTICLE SIZE

Description		Size (in.)
Boulder		Greater than 12
Cobble		3 - 12
Gravel	Coarse	3/4 - 3
	Fine	1/5 - 3/4
Sand	Coarse	1/16 - 1/5
	Medium	1/64 - 1/16
	Fine	1/300 - 1/64
Silt and Clay		Less than 1/300

ENGINEERING SERVICES — MATERIALS AND GEOTECHNICAL SERVICES

FUNCTIONAL SUPERVISOR
NAME: M. SMITH
DRAWN BY: P.QUACH
CHECKED BY: P.YERRA
FIELD INVESTIGATION BY: EJ.JEON/D.ORRIS

STATE OF CALIFORNIA DEPARTMENT OF TRANSPORTATION

DIVISION OF ENGINEERING SERVICES STRUCTURE DESIGN — DESIGN BRANCH 19

BRIDGE NO. 55E0117
POST MILE 0.01

RETAINING WALL NO. 10
LOG OF TEST BORINGS 4 OF 4

OGS CIVIL LOG OF TEST BORINGS SHEET

ORIGINAL SCALE IN INCHES FOR REDUCED PLANS 0 1 2 3

UNIT: 3658
PROJECT NUMBER & PHASE: 1200000102 & 4 CONTRACT NO.: 12-0E3104

DISREGARD PRINTS BEARING EARLIER REVISION DATES — REVISION DATES 06/17/11

SHEET 11 OF 11

FILE => RW10-z-lotb_04.dgn

USERNAME => s121614 DATE PLOTTED => 15-APR-2012 TIME PLOTTED => 09:51

DIST	COUNTY	ROUTE	POST MILES TOTAL PROJECT	SHEET No.	TOTAL SHEETS
12	Ora	5,74	9.3/10.0, 0.0/0.2	466	515

Charles Lomicka 11-15-11
REGISTERED CIVIL ENGINEER DATE

4-9-12
PLANS APPROVAL DATE

REGISTERED PROFESSIONAL ENGINEER CHARLES LOMICKA No. C 71172 Exp. 06-30-2013 CIVIL STATE OF CALIFORNIA

The State of California or its officers or agents shall not be responsible for the accuracy or completeness of electronic copies of this plan sheet.

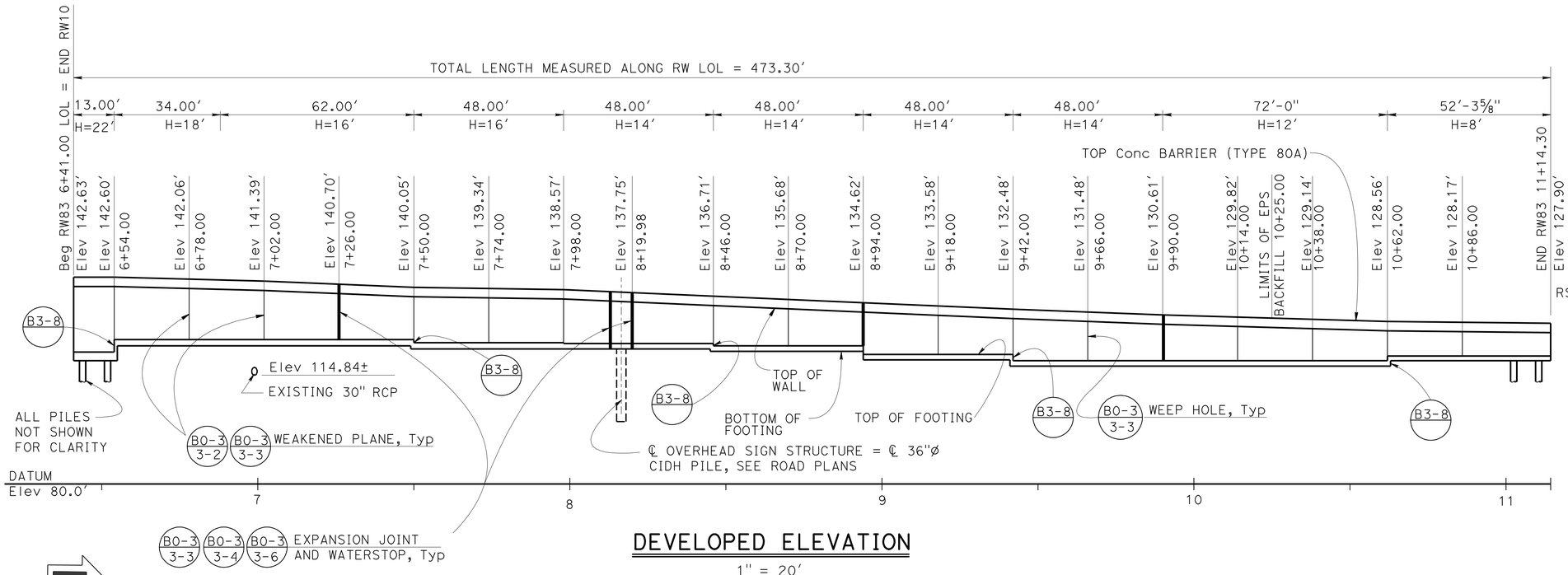

DEVELOPED ELEVATION

1" = 20'

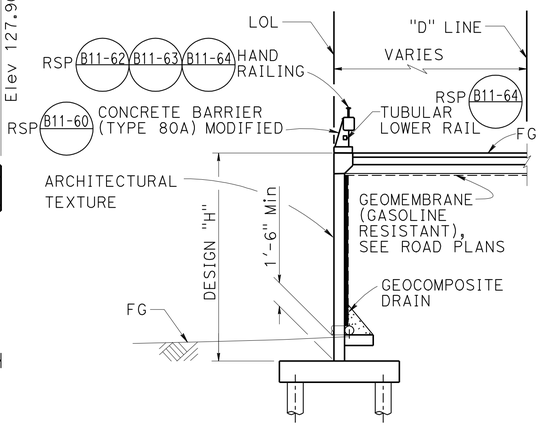

TYPICAL SECTION

Sta 6+41.00 TO Sta 8+94.00

NO SCALE

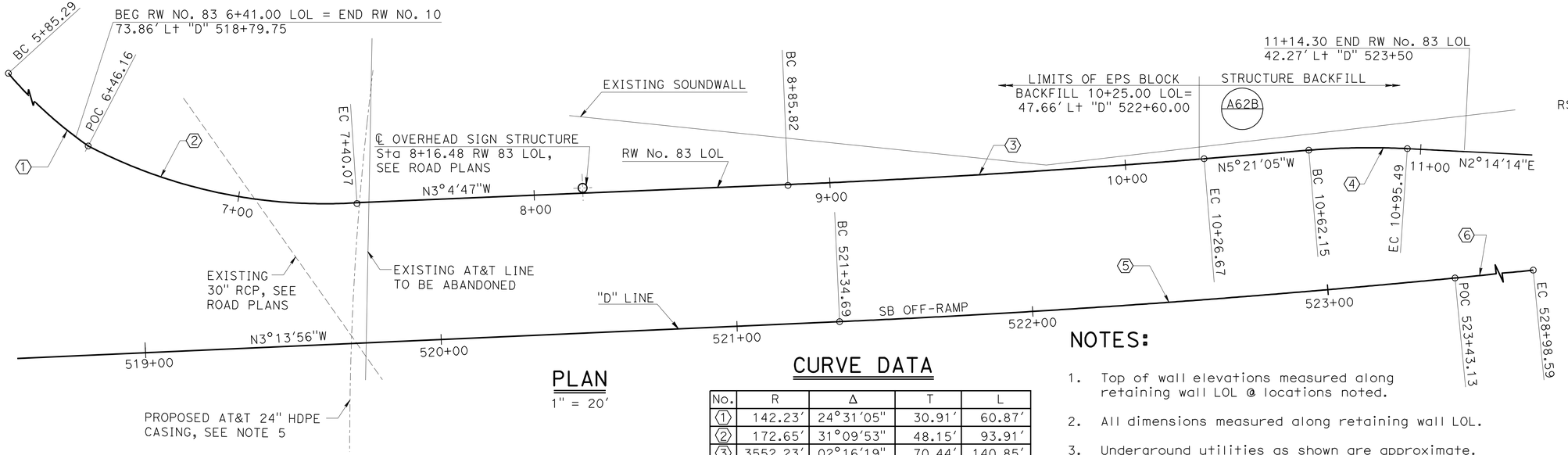

PLAN

1" = 20'

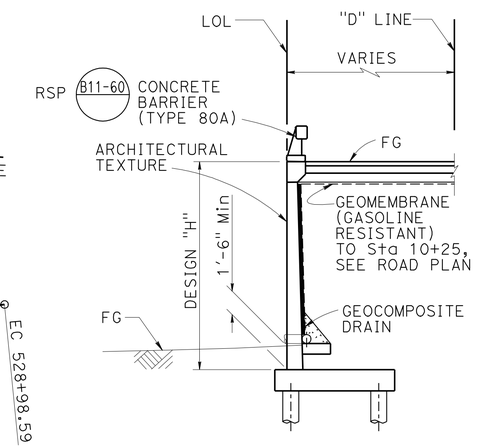

TYPICAL SECTION

Sta 8+94.00 TO Sta 11+14.30

NO SCALE

CURVE DATA

No.	R	Δ	T	L
1	142.23'	24°31'05"	30.91'	60.87'
2	172.65'	31°09'53"	48.15'	93.91'
3	3552.23'	02°16'19"	70.44'	140.85'
4	251.76'	07°35'20"	16.70'	33.35'
5	3999.99'	02°59'08"	104.24'	208.44'
6	5399.98'	05°53'37"	277.97'	555.46'

NOTES:

1. Top of wall elevations measured along retaining wall LOL @ locations noted.
2. All dimensions measured along retaining wall LOL.
3. Underground utilities as shown are approximate.
4. Architectural texture shall be prepared and stained.
5. Proposed AT&T directional bore to be in place prior to retaining wall construction.

NOTE:
THE CONTRACTOR SHALL VERIFY ALL CONTROLLING FIELD DIMENSIONS BEFORE ORDERING OR FABRICATING ANY MATERIAL.

MINA PEZESHPOUR
DESIGN ENGINEER

	BY	CHECKED
DESIGN	MAMUNUR RAHMAN	EDWARD MERCADO
DETAILS	H. M. - H. B.	EDWARD MERCADO
QUANTITIES	EDWARD MERCADO	DARYOUSH BALBAS

LOAD & RESISTANCE FACTOR DESIGN		
LAYOUT	MAMUNUR RAHMAN	EDWARD MERCADO
SPECIFICATIONS	VAIKUNTHAN RENGANATHAN	PLANS AND SPECS COMPARED VAIKUNTHAN RENGANATHAN

ORIGINAL SCALE IN INCHES FOR REDUCED PLANS 0 1 2 3

STATE OF CALIFORNIA
DEPARTMENT OF TRANSPORTATION

DIVISION OF ENGINEERING SERVICES
STRUCTURE DESIGN
DESIGN BRANCH 19

BRIDGE NO. 55E0119
POST MILE 9.6

RETAINING WALL NO. 83
GENERAL PLAN

UNIT: 3621
PROJECT NUMBER & PHASE: 1200000102 1
CONTRACT NO.: 0E3101

DISREGARD PRINTS BEARING EARLIER REVISION DATES

REVISION DATES: 01-17-11 11-07-11 10-19-11

SHEET 1 OF 11

USERNAME => s121614 DATE PLOTTED => 15-APR-2012 TIME PLOTTED => 09:51

DIST	COUNTY	ROUTE	POST MILES TOTAL PROJECT	SHEET No.	TOTAL SHEETS
12	Ora	5,74	9.3/10.0, 0.0/0.2	467	515

Charles Lomicka 11-15-11
REGISTERED CIVIL ENGINEER DATE

4-9-12
PLANS APPROVAL DATE

REGISTERED PROFESSIONAL ENGINEER CHARLES LOMICKA No. C 71172 Exp. 06/30/13 CIVIL STATE OF CALIFORNIA

The State of California or its officers or agents shall not be responsible for the accuracy or completeness of electronic copies of this plan sheet.

DESIGN DATA

Design: AASHTO LRFD Bridge Design Specifications 4th edition with California Amendments

WS: 30 psf on barrier

LS: Varied surcharge on level ground surface

CT: 54 kip maximum traffic impact loading evenly distributed over 10 feet at top of the barrier and 1:1 distribution down and outward

EQE: Mononabe-Okabe Method
$K_h = 0.2$
$K_v = 0.0$

Soil: $\emptyset = 34°$
$\gamma = 120$ pcf

EPS Block: Ka = 0.15
$\gamma = 2.5$ pcf

Reinforced Concrete: f'c = 3600 psi
fy = 60,000 psi

Load Combinations and Limit States

Service I Q=1.00DC+1.00EV+1.00EH+1.00LS+0.30WS

Service II Q=1.00DC+1.00EV+1.00EH+1.00WS

Strength I Q=αDC+βEV+1.50EH+1.75LS
Q=1.25DC+1.35EV+0.90EH+1.75LS
(for piles at heel)

Strength III Q=αDC+βEV+1.50EH+1.40WS

Strength V Q=αDC+βEV+1.50EH+1.35LS+0.40WS

Extreme I Q=1.00DC+1.00EV+1.00EH+1.00EQD+1.00EQE

Extreme II Q=1.00DC+1.00EV+1.00EH+1.00CT

Where:

Q: Force Effects
α: 1.25 or 0.90, Which ever Controls Design
β: 1.35 or 1.00, which ever Controls Design
DC: Dead Load of Structure Components
EH: Horizontal Earth Fill Pressure
EV: Vertical Earth Fill Pressure
LS: Live Load Surcharge
EQE: Seismic Earth Pressure
EQD: Soil and Structure Components Inertia. Soil inertia ignored for stem design
WS: Wind Load on Sound Wall and Barrier
CT: Vehicular Collision Force

NOTE:
THE CONTRACTOR SHALL VERIFY ALL CONTROLLING FIELD DIMENSIONS BEFORE ORDERING OR FABRICATING ANY MATERIAL.

PILE DATA TABLE

LOCATION	WALL HEIGHT (ft)	PILE TYPE	NOMINAL RESISTANCE (kips) COMPRESSION	NOMINAL RESISTANCE (kips) TENSION	DESIGN TIP ELEVATION (ft)	SPECIFIED TIP ELEVATION (ft)	NOMINAL DRIVING RESISTANCE REQUIRED (kips)
Sta 6+41.00 TO Sta 6+54.00	22	CLASS 90 ALT W	180	50	69.92(a-I) 80.92(a-II) 99.92(b-I) 102.92(b-II) 104.92(d)	69.92	180
Sta 6+54.00 TO Sta 6+88.00	18		140	30	74.67(a-I) 90.67(a-II) 110.67(b-I) 108.67(b-II) 110.67(d)	74.67	140
Sta 6+88.00 TO Sta 7+50.00	16		160	60	79.67(a-1) 82.67(a-II) 111.67(b-I) 101.67(b-II) 109.67(d)	79.67	160
Sta 7+50.00 TO Sta 7+98.00	16		160	60	78.67(a-I) 81.67(a-II) 110.67(b-I) 100.67(b-II) 108.67(d)	78.67	160
Sta 7+98.00 TO Sta 8+46.00	14		130	60	86.67(a-I) 88.67(a-II) 109.67(b-I) 101.67(b-II) 108.67(d)	86.67	130
Sta 8+46.00 TO Sta 8+94.00	14		130	60	85.92(a-I) 87.92(a-II) 108.92(b-I) 100.92(b-II) 107.92(d)	85.92	130
Sta 8+94.00 TO Sta 9+42.00	14		160	50	83.17(a-I) 86.17(a-II) 101.17(b-I) 101.17(b-II) 120.17((d)	83.17	160
Sta 9+42.00 TO Sta 9+90.00	14		160	50	81.17(a-I) 84.17(a-II) 99.17(b-I) 99.17(b-II) 118.17(d)	81.17	160
Sta 9+90.00 TO Sta 10+25.00	12		130	40	83.17(a-I) 87.17(a-II) 101.17(b-I) 98.67(b-II) 118.17(d)	83.17	130
Sta 10+25.00 TO Sta 10+62.00	12		160	0	83.17(a-I) 87.17(a-II) 118.17(d)	83.17	160
Sta 10+62.00 TO Sta 11+14.30	8		140	0	84.92(a-I) 88.92(a-II) 119.92(d)	84.92	140

INDEX TO PLANS

NO. SHEET NAME
1. GENERAL PLAN
2. INDEX TO PLANS
3. FOUNDATION PLAN
4. PILE LAYOUT
5. RETAINING WALL DETAILS NO. 1
6. RETAINING WALL DETAILS NO. 2
7. ARCHITECTURAL TEXTURE DETAILS
8. LOG OF TEST BORINGS 1 OF 4
9. LOG OF TEST BORINGS 2 OF 4
10. LOG OF TEST BORINGS 3 OF 4
11. LOG OF TEST BORINGS 4 OF 4

STANDARD PLANS DATED MAY 2006

A10A ACRONYMS AND ABBREVIATIONS (A-L)
A10B ACRONYMS AND ABBREVIATIONS (M-Z)
A10C SYMBOLS (SHEETS 1 OF 2))
A10D SYMBOLS (SHEETS 2 OF 2))
A62B LIMITS OF PAYMENT FOR EXCAVATION AND BACKFILL - BRIDGE SURCHARGE AND WALL
B0-3 BRIDGE DETAILS
B2-5 PILE DETAILS CLASS 90 AND CLASS140
B3-8 RETAINING WALL DETAILS NO. 1
RSP B11-60 CONCRETE BARRIER TYPE 80 (SHEET 1 OF 2)
RSP B11-62 CONCRETE BARRIER TYPE 80SW (SHEET 1 OF 3)
B11-63 CONCRETE BARRIER TYPE 80SW (SHEET 2 OF 3)
RSP B11-64 CONCRETE BARRIER TYPE 80SW (SHEET 3 OF 3)

STANDARD PLAN SHEET NO.
DETAIL NO.

DESIGN TIP ELEVATION IS CONTROLLED BY:

a-I: COMPRESSION FOR STRENGTH LIMIT
a-II: COMPRESSION FOR EXTREME EVENT LIMIT
b-I: TENSION FOR STRENGTH LIMIT
b-II: TENSION FOR EXTREME EVENT LIMIT
d: LATERAL LOAD FOR SERVICE LIMIT

QUANTITIES

STRUCTURE EXCAVATION (RETAINING WALL)	1,225	CY
STRUCTURE BACKFILL (RETAINING WALL)	113	CY
FURNISH PILING (CLASS 90) (ALTERNATIVE W)	4,415	LF
DRIVE PILE (CLASS 90) (ALTERNATIVE W)	111	EA
STRUCTURAL CONCRETE, RETAINING WALL	530	CY
ARCHITECTURAL TEXTURE (ROCK STRATA)	4,900	SQFT
BAR REINFORCING STEEL (RETAINING WALL)	96,000	LB
PREPARE AND STAIN CONCRETE	5,400	SQFT
GEOCOMPOSITE DRAIN	4,200	SQFT
CONCRETE BARRIER (TYPE 80A)	404	LF
CONCRETE BARRIER (TYPE 80A MODIFIED)	69	LF

	BY	CHECKED
DESIGN	MAMUNUR RAHMAN	EDWARD MERCADO
DETAILS	HENGAMEH MAHBOOBI	EDWARD MERCADO
QUANTITIES	EDWARD MERCADO	DARYOUSH BALBAS

STATE OF CALIFORNIA
DEPARTMENT OF TRANSPORTATION

DIVISION OF ENGINEERING SERVICES
STRUCTURE DESIGN
DESIGN BRANCH 19

BRIDGE NO. 55E0119
POST MILE 9.6

RETAINING WALL NO. 83
INDEX TO PLANS

STRUCTURES DESIGN DETAIL SHEET (ENGLISH) (REV. 09-01-10)

ORIGINAL SCALE IN INCHES FOR REDUCED PLANS 0 1 2 3

UNIT: 3621
PROJECT NUMBER & PHASE: 1200000102 1 CONTRACT NO.: 0E3101

DISREGARD PRINTS BEARING EARLIER REVISION DATES
REVISION DATES 06-18-11 11-15-11 11-01-11
SHEET 2 OF 11

FILE => RW83-a-itp.dgn

USERNAME => s121614 DATE PLOTTED => 15-APR-2012 TIME PLOTTED => 09:51

DIST	COUNTY	ROUTE	POST MILES TOTAL PROJECT	SHEET No.	TOTAL SHEETS
12	Ora	5,74	9.3/10.0, 0.0/0.2	468	515

Charles Lomicka 11-15-11
REGISTERED CIVIL ENGINEER DATE

4-9-12
PLANS APPROVAL DATE

REGISTERED PROFESSIONAL ENGINEER CHARLES LOMICKA No. C 71172 Exp. 6/30/13 CIVIL STATE OF CALIFORNIA

The State of California or its officers or agents shall not be responsible for the accuracy or completeness of electronic copies of this plan sheet.

CURVE DATA

No.	R	Δ	T	L
1	142.23′	24°31′05″	30.91′	60.87′
2	172.65′	31°09′53″	48.15′	93.91′
3	3552.23′	02°16′19″	70.44′	140.85′
4	251.76′	07°35′20″	16.70′	33.35′
5	3999.99′	02°59′08″	104.24′	208.44′
6	5399.98′	05°53′37″	277.97′	555.46′

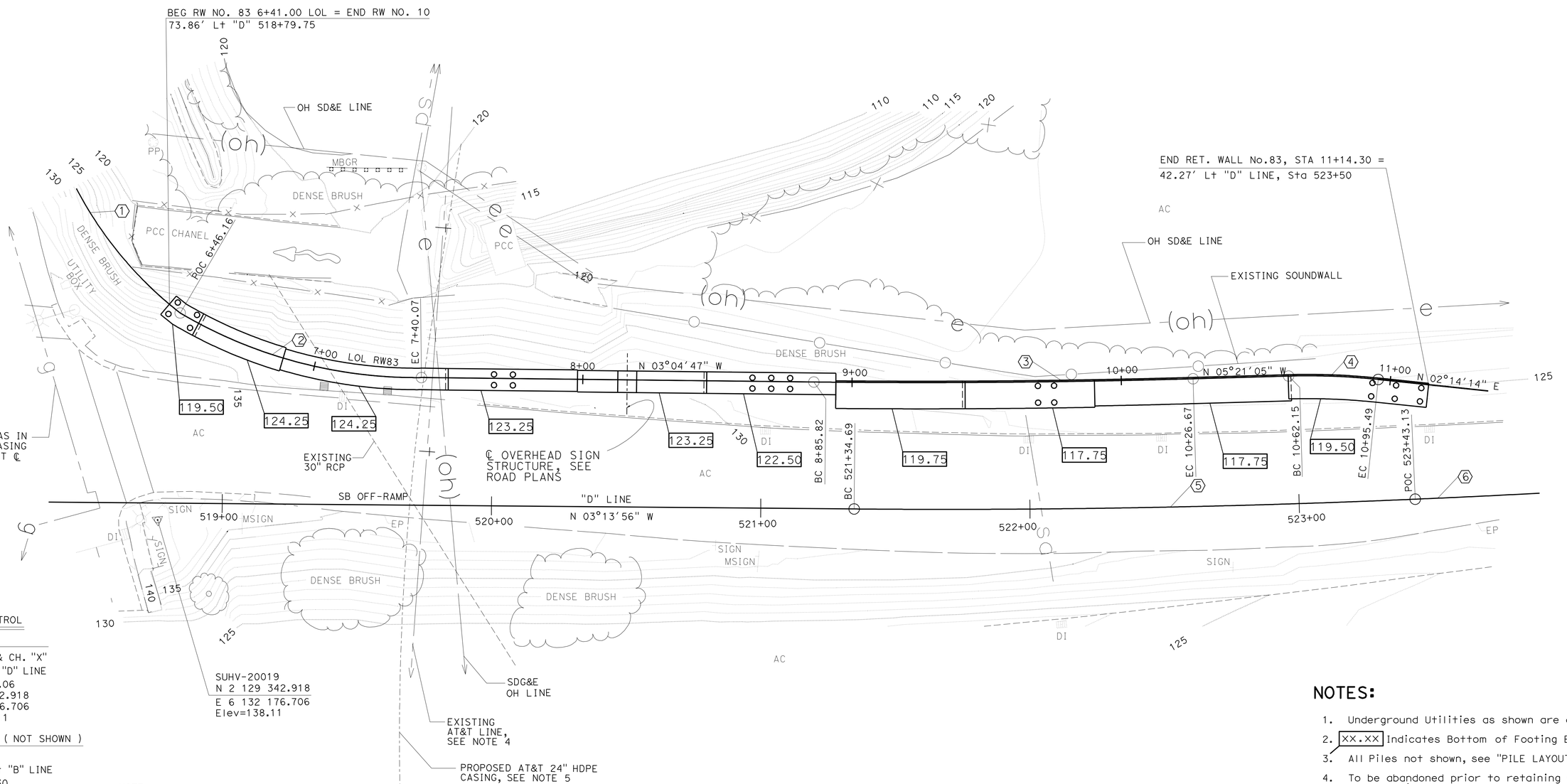

SURVEY CONTROL

SUHV-20019

60 D NAIL & CH. "X"
6.30 Ft Rt "D" LINE
Sta 518+76.06
N 2 129 342.918
E 6 132 176.706
Elev= 138.11

SUHV-20026 (NOT SHOWN)

60 D NAIL
41.26 Ft Rt "B" LINE
Sta 12+49.30
N 2 129 238.277
E 6 132 159.184
Elev= 137.41

NOTE:
THE CONTRACTOR SHALL VERIFY ALL CONTROLLING FIELD DIMENSIONS BEFORE ORDERING OR FABRICATING ANY MATERIAL.

NOTES:

1. Underground Utilities as shown are approximate
2. XX.XX Indicates Bottom of Footing Elevation
3. All Piles not shown, see "PILE LAYOUT" sheet
4. To be abandoned prior to retaining wall construction
5. Proposed AT&T directional bore to be in place prior to retaining wall construction

PRELIMINARY INVESTIGATION SECTION

SCALE	VERT.DATUM NAVD88	PHOTOGRAMMETRY AS OF: X			
1"=20′	HORZ.DATUM NAD83 (1991.35)	SURVEYED	BY DISTRICT 12	CHECKED	BY T.PHUNG 3/2010
ALIGNMENT TIES DIST.TRAVERSE SHEETS		DRAFTED	BY S. ABASSY 02/2011	CHECKED	BY S. ALIVIO 02/2011

DESIGN	BY MAMUNUR RAHMAN	CHECKED EDWARD MERCADO
DETAILS	BY HENGAMEH MAHBOOBI/H.B.	CHECKED EDWARD MERCADO
QUANTITIES	BY EDWARD MERCADO	CHECKED DARYOUSH BALBAS

STATE OF CALIFORNIA
DEPARTMENT OF TRANSPORTATION

DIVISION OF ENGINEERING SERVICES
STRUCTURE DESIGN
DESIGN BRANCH 19

BRIDGE NO. 55E0119
POST MILE 9.6

RETAINING WALL No.83
FOUNDATION PLAN

STRUCTURES FOUNDATION PLAN SHEET (ENGLISH) (REV. 09-01-10)

ORIGINAL SCALE IN INCHES FOR REDUCED PLANS 0 1 2 3

UNIT: 3621
PROJECT NUMBER & PHASE: 1200000102 1 CONTRACT NO.: 0E3101

DISREGARD PRINTS BEARING EARLIER REVISION DATES

REVISION DATES 03/28/11 11-07-11 10-18-11

SHEET 3 OF 11

FILE => RW83-e-fdp01.dgn

DIST	COUNTY	ROUTE	POST MILES TOTAL PROJECT	SHEET No.	TOTAL SHEETS
12	Ora	5,74	9.3/10.0, 0.0/0.2	469	515

Charles Lomicka 11-15-11
REGISTERED CIVIL ENGINEER DATE

4-9-12
PLANS APPROVAL DATE

REGISTERED PROFESSIONAL ENGINEER
CHARLES LOMICKA
No. C 71172
Exp. 6/30/13
CIVIL
STATE OF CALIFORNIA

The State of California or its officers or agents shall not be responsible for the accuracy or completeness of electronic copies of this plan sheet.

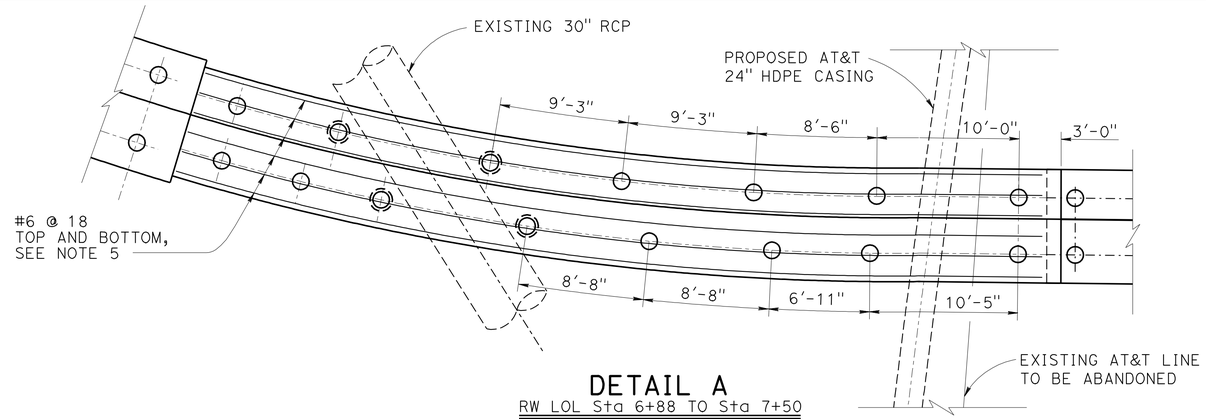

DETAIL A

RW LOL Sta 6+88 TO Sta 7+50

NO SCALE

BEG RET WALL No.83, STA 6+41.00
= END RET WALL No.10
73.86' Lt "D" LINE, Sta 518+79.75

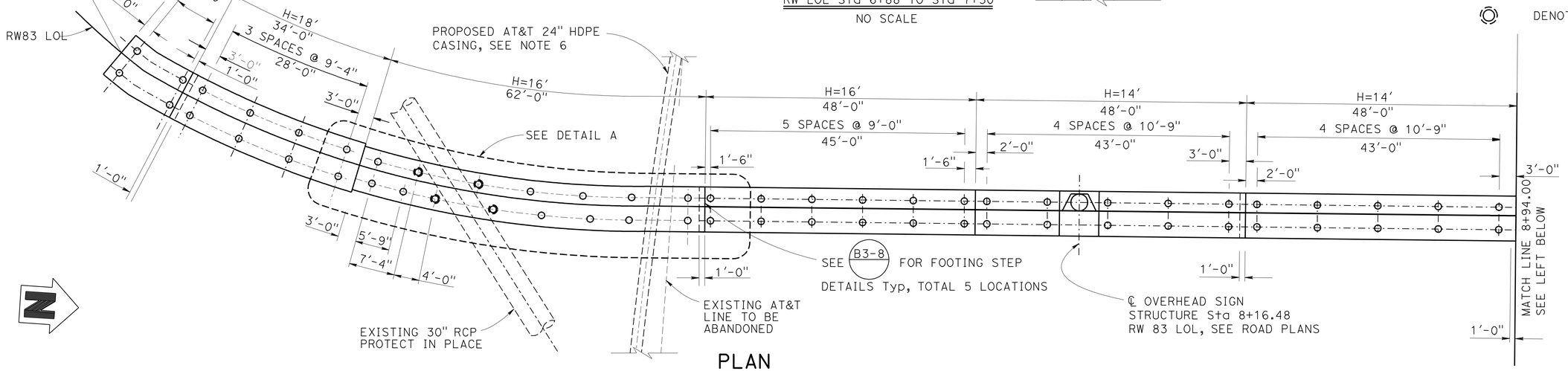

PLAN

1" = 10'

LEGEND:

- ○ DENOTES 14"ø PIPE PILE
- STD PLAN SHEET NO. / DETAIL NO.
- DENOTES PREDRILLED PILE

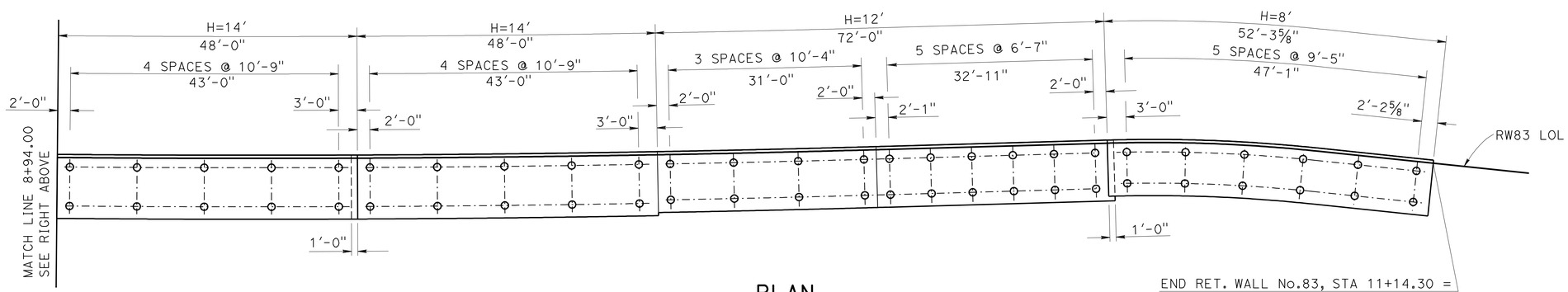

PLAN

1" = 10'

END RET. WALL No.83, STA 11+14.30 =
42.27' Lt "D" LINE, Sta 523+50

NOTES:

1. For additional details and dimensions, see "RETAINING WALL DETAILS NO.1" and "RETAINING WALL NO. 2" sheets
2. All dimensions measured along retaining wall LOL.
3. All piles are Class 90. For pile data table see "INDEX TO PLANS" sheet.
4. Underground utilities as shown are approximate. Contractor to verify location prior to pile driving. Adjustment of pile locations shall be approved by the Engineer.
5. Reinforcement shown is in addition to that shown on "RETAINING WALL DETAILS NO. 1" sheet.
6. Maintain 4'-0" minimum clearance from ℄ of pile to ℄ of 24" HDPE casing. Adjustment of piles to clear the casing shall maintain pile spacing < 11'-6" and > 3'-0" as directed by the Engineer.

NOTE:
THE CONTRACTOR SHALL VERIFY ALL CONTROLLING FIELD DIMENSIONS BEFORE ORDERING OR FABRICATING ANY MATERIAL.

	BY	CHECKED
DESIGN	MAMUNUR RAHMAN	EDWARD MERCADO
DETAILS	HENGAMEH MAHBOOBI / H.B.	EDWARD MERCADO
QUANTITIES	EDWARD MERCADO	DARYOUSH BALBAS

STATE OF CALIFORNIA
DEPARTMENT OF TRANSPORTATION

DIVISION OF ENGINEERING SERVICES
STRUCTURE DESIGN
DESIGN BRANCH 19

BRIDGE NO. 55E0119
POST MILE 9.6

RETAINING WALL NO. 83
PILE LAYOUT

STRUCTURES DESIGN DETAIL SHEET (ENGLISH) (REV. 09-01-10)

ORIGINAL SCALE IN INCHES FOR REDUCED PLANS 0 1 2 3

UNIT: 3621
PROJECT NUMBER & PHASE: 1200000102 1 CONTRACT NO.: 0E3101

DISREGARD PRINTS BEARING EARLIER REVISION DATES

REVISION DATES: 05-02-11 11-07-11 10-19-11

SHEET 4 OF 11

FILE => RW83-g-io01.dgn

USERNAME => s121614 DATE PLOTTED => 15-APR-2012 TIME PLOTTED => 09:52

DIST	COUNTY	ROUTE	POST MILES TOTAL PROJECT	SHEET No.	TOTAL SHEETS
12	Ora	5,74	9.3/10.0, 0.0/0.2	470	515

Charles Lomicka 11-15-11
REGISTERED CIVIL ENGINEER DATE

4-9-12
PLANS APPROVAL DATE

REGISTERED PROFESSIONAL ENGINEER
CHARLES LOMICKA
No. C 71172
Exp. 6/30/13
CIVIL
STATE OF CALIFORNIA

The State of California or its officers or agents shall not be responsible for the accuracy or completeness of electronic copies of this plan sheet.

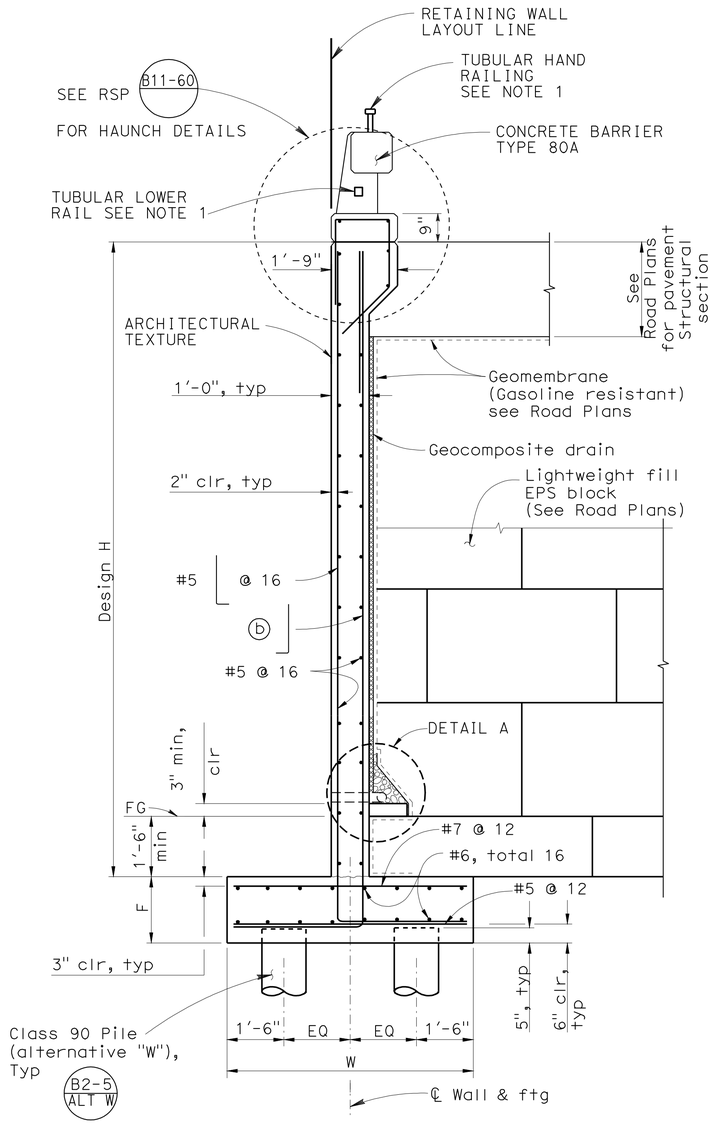

PILE FOOTING SECTION

Sta 6+41 TO 8+94

NO SCALE

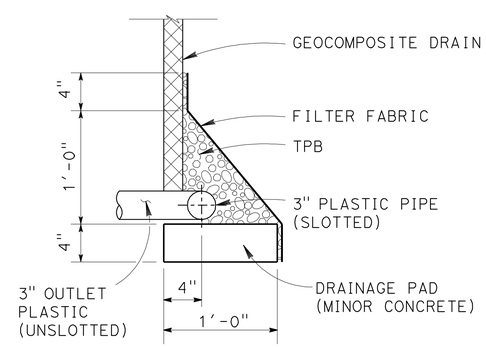

DETAIL A

NO SCALE

NOTES:

1. Tubular Railing from station 6+41.00 to station 7+10.00 only. See RSP B11-62 B11-63 RSP B11-64 for railing details.

2. For "WALL OFFSET" detail, Structure Excavation, Backfill detail and additional notes, see "RETAINING WALL DETAILS NO. 2" sheet.

TABLE OF REINFORCING STEEL AND DIMENSION DATA				
DESIGN H	14'	16'	18'	22'
W	8'-0"	8'-0"	9'-0"	9'-0"
F PILE FOOTING	1'-9"	1'-9"	2'-0"	2'-0"
ⓑ BARS	#6 @ 6	#6 @ 6	#7 @ 6	#7 @ 6

NOTE:

THE CONTRACTOR SHALL VERIFY ALL CONTROLLING FIELD DIMENSIONS BEFORE ORDERING OR FABRICATING ANY MATERIAL.

	BY	CHECKED
DESIGN	MAMUNUR RAHMAN	EDWARD MERCADO
DETAILS	HENGAMEH MAHBOOBI	EDWARD MERCADO
QUANTITIES	EDWARD MERCADO	DARYOUSH BALBAS

STATE OF CALIFORNIA
DEPARTMENT OF TRANSPORTATION

DIVISION OF ENGINEERING SERVICES
STRUCTURE DESIGN
DESIGN BRANCH 19

BRIDGE NO. 55E0119
POST MILE 9.6

RETAINING WALL NO. 83
RETAINING WALL DETAILS NO. 1

STRUCTURES DESIGN DETAIL SHEET (ENGLISH) (REV. 09-01-10)

ORIGINAL SCALE IN INCHES FOR REDUCED PLANS 0 1 2 3

UNIT: 3621
PROJECT NUMBER & PHASE: 1200000102 1 CONTRACT NO.: 0E3101

DISREGARD PRINTS BEARING EARLIER REVISION DATES

REVISION DATES: 03-30-11 11-07-11 10-18-11

SHEET 5 OF 11

FILE => RW83-c-sp01.dgn

USERNAME => s121614 DATE PLOTTED => 15-APR-2012 TIME PLOTTED => 09:52

DIST	COUNTY	ROUTE	POST MILES TOTAL PROJECT	SHEET No.	TOTAL SHEETS
12	Ora	5,74	9.3/10.0, 0.0/0.2	471	515

Charles Lomicka 11-15-11
REGISTERED CIVIL ENGINEER DATE

4-9-12
PLANS APPROVAL DATE

REGISTERED PROFESSIONAL ENGINEER CHARLES LOMICKA No. C 71172 Exp. 6/30/13 CIVIL STATE OF CALIFORNIA

The State of California or its officers or agents shall not be responsible for the accuracy or completeness of electronic copies of this plan sheet.

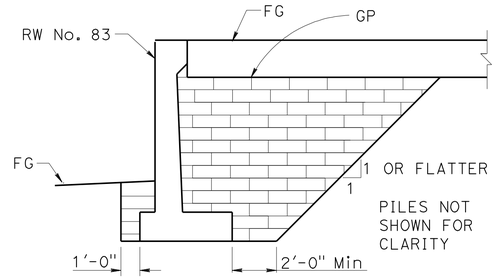

STRUCTURE BACKFILL
(RETAINING WALL)
FROM Sta 6+41.00 TO Sta 10+25.00
NO SCALE

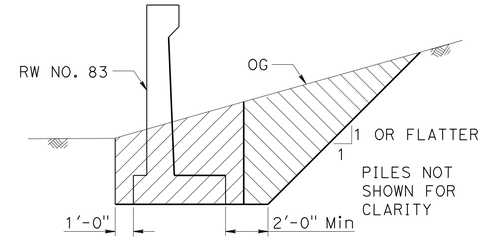

STRUCTURE EXCAVATION
(RETAINING WALL)
FROM Sta 6+41.00 TO Sta 10+25.00
NO SCALE

For Structure Excavation and Backfill from Sta 10+25.00 to Sta 11+14.30, see A62B

TABLE OF REINFORCING STEEL AND DIMENSION DATA			
DESIGN H	8'	12'	14'
W	9'-0"	9'-9"	10'-3"
F PILE FOOTING	1'-6"	1'-6"	1'-9"
M	1'-0"	1'-0"	1'-0"
N	7'-0"	7'-9"	8'-3"
STEM BATTER	½:12	½:12	½:12
ⓑ BARS	#8 @ 12	#7 @ 6	#7 @ 6
ha		6'-0"	7'-0"
ⓒ BARS	#6 @ 6	#8 @ 6	#9 @ 6
hz	3'-6"	4'-0"	4'-3"
ⓓ BARS	#5 @ 12	#5 @ 12	#5 @ 12
ⓔ BARS	8-#7 @ 11	8-#7 @ 13	8-#7 @ 16

NOTE:
Total ⓔ bars are top and bottom combined.

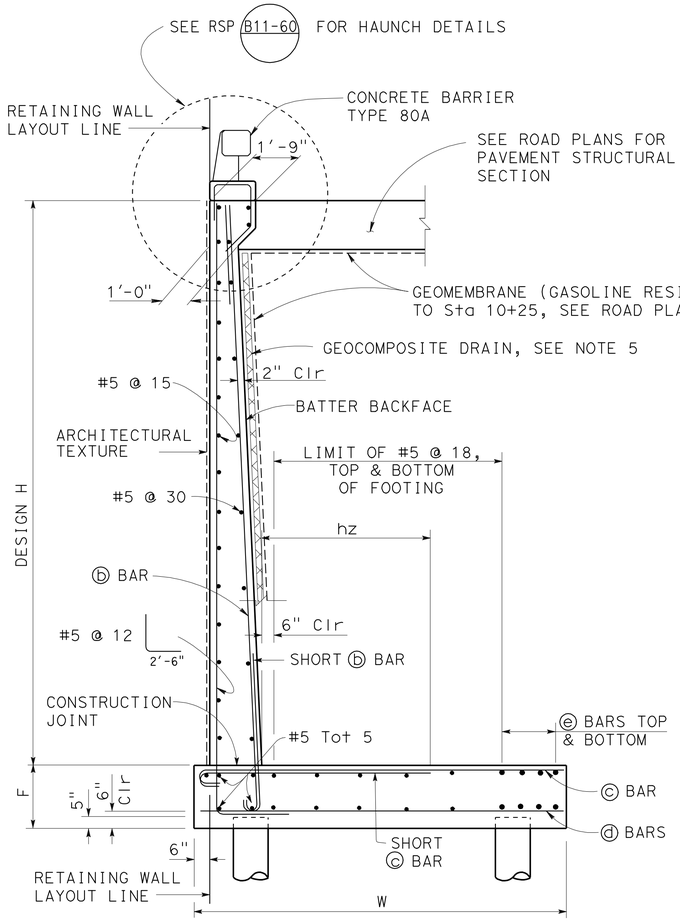

PILE FOOTING SECTION
Sta 8+94.00 to 11+14.30
No scale

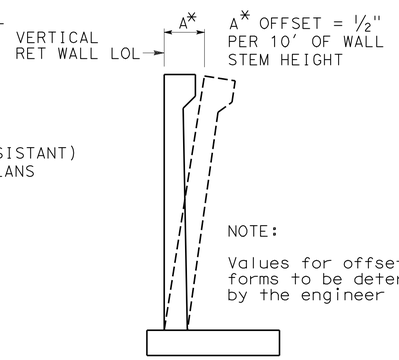

NOTE:
Values for offsetting forms to be determined by the engineer

WALL OFFSET
No scale

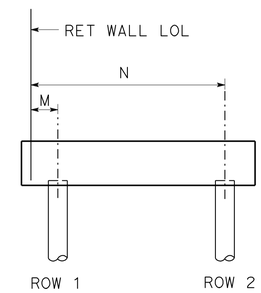

H = 8' THROUGH 14'

PILE PATTERN
No scale

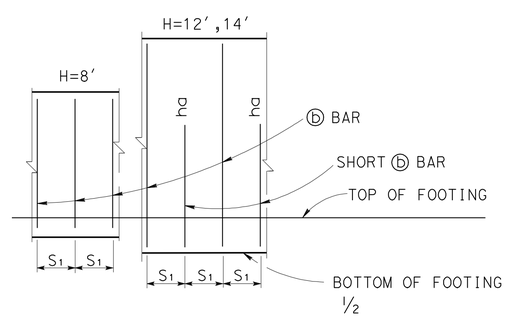

ELEVATION
No scale

NOTE:
"ha" above ⓑ bars indicates distance from top of footing to upper end of short ⓑ bars, see table. "S_1" is ⓑ bar spacing, see table.

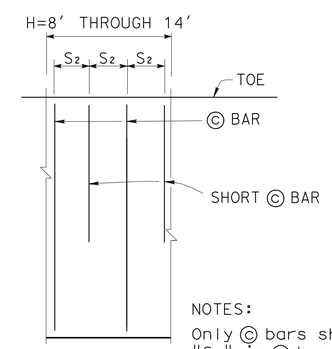

NOTES:
Only ⓒ bars shown
"S_2" is ⓒ bar spacing, see Table

PLAN
NO SCALE

NOTE:
THE CONTRACTOR SHALL VERIFY ALL CONTROLLING FIELD DIMENSIONS BEFORE ORDERING OR FABRICATING ANY MATERIAL.

NOTES:
1. All piles are 14"ø pipe piles.
2. Minimum distance between center pile and edge of footing is 1'-6".
3. Footing cover, 1'-6" minimum.
4. For Barrier reinforcement, see RSP B11-60
5. All drainage details not shown. For additional drainage details, see "RETAINING WALL DETAILS NO. 1" sheet.

LEGEND
- STRUCTURE EXCAVATION (RETAINING WALL)
- STRUCTURE BACKFILL (RETAINING WALL)
- LIGHTWEIGHT BACKFILL (EPS), SEE ROADWAY PLANS
- ROADWAY EXCAVATION, SEE ROADWAY PLANS

	BY	CHECKED
DESIGN	MAMUNUR RAHMAN	EDWARD MERCADO
DETAILS	HENGAMEH MAHBOOBI	EDWARD MERCADO
QUANTITIES	EDWARD MERCADO	DARYOUSH BALBAS

STATE OF CALIFORNIA
DEPARTMENT OF TRANSPORTATION

DIVISION OF ENGINEERING SERVICES
STRUCTURE DESIGN
DESIGN BRANCH 19

BRIDGE NO. 55E0119
POST MILE 9.6

RETAINING WALL NO. 83
RETAINING WALL DETAILS NO. 2

STRUCTURES DESIGN DETAIL SHEET (ENGLISH) (REV. 09-01-10)

ORIGINAL SCALE IN INCHES FOR REDUCED PLANS 0 1 2 3

UNIT: 3621
PROJECT NUMBER & PHASE: 1200000102 1 CONTRACT NO.: 0E3101

DISREGARD PRINTS BEARING EARLIER REVISION DATES

REVISION DATES: 03-30-11 11-07-11 10-13-11

SHEET 6 OF 11

FILE => RW83-c-sp02.dgn

USERNAME => s121614 DATE PLOTTED => 15-APR-2012 TIME PLOTTED => 09:52

DIST	COUNTY	ROUTE	POST MILES TOTAL PROJECT	SHEET No.	TOTAL SHEETS
12	Ora	5,74	9.3/10.0, 0.0/0.2	472	515

Charles Lomicka 11-15-11
REGISTERED CIVIL ENGINEER DATE

4-9-12
PLANS APPROVAL DATE

REGISTERED PROFESSIONAL ENGINEER
CHARLES LOMICKA
No. C 71172
Exp. 6/30/13
CIVIL
STATE OF CALIFORNIA

The State of California or its officers or agents shall not be responsible for the accuracy or completeness of electronic copies of this plan sheet.

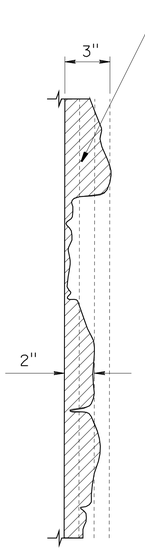

SECTION A-A
NO SCALE

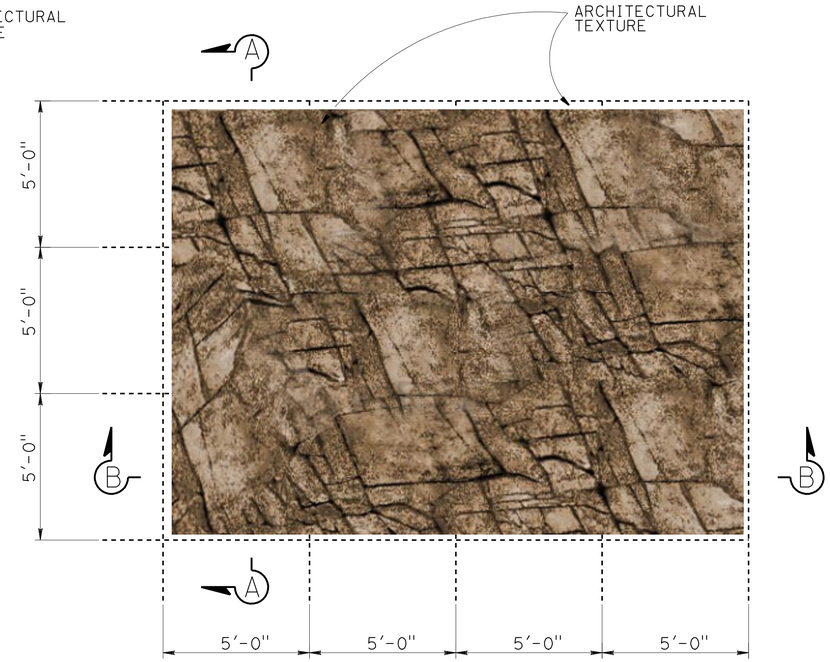

ROCK STRATA PATTERN TYPES (TYPICAL)
NO SCALE

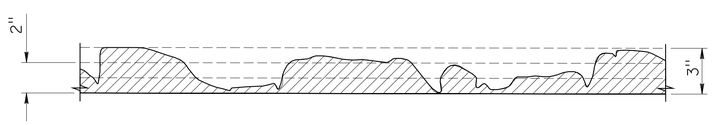

SECTION B-B
NO SCALE

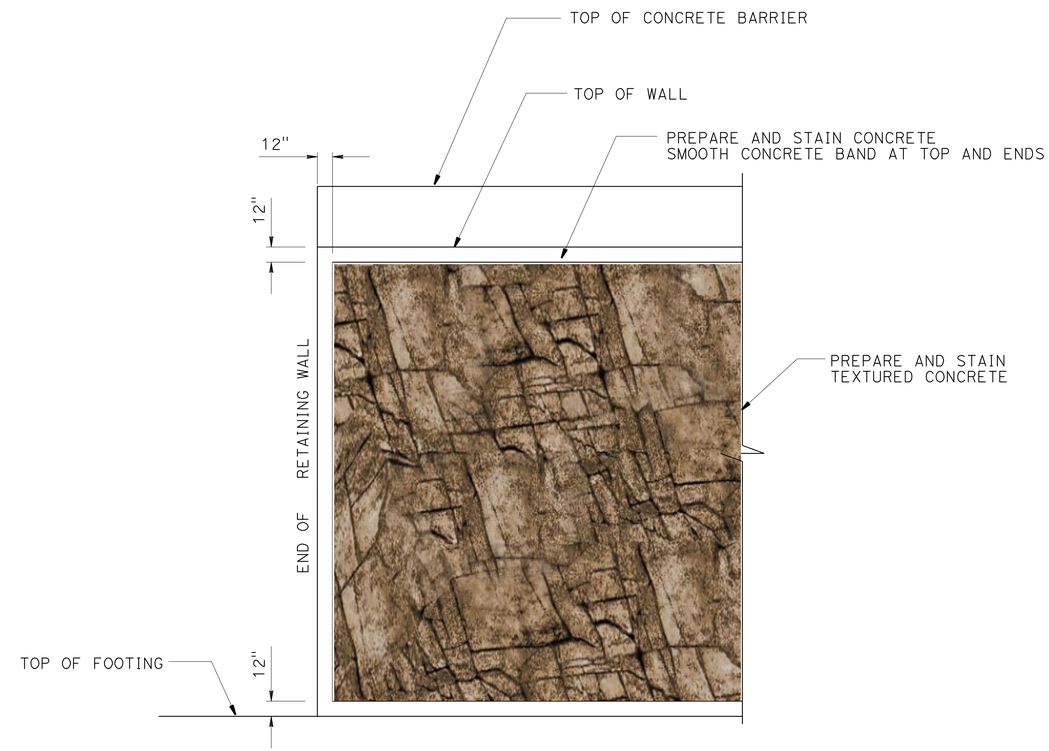

WALL TEXTURE AT TOP AND ENDS OF RETAINING WALL
NO SCALE

NOTE:
THE CONTRACTOR SHALL VERIFY ALL CONTROLLING FIELD DIMENSIONS BEFORE ORDERING OR FABRICATING ANY MATERIAL.

NOTES:

1. ARCHITECTURAL TEXTURE VARIES FROM 0" TO 3" MAXIMUM THICKNESS.

	BY	CHECKED
DESIGN	VATHANA CHY	RONALD WONG
DETAILS	VATHANA CHY	RONALD WONG
QUANTITIES	EDWARD MERCADO	DARYOUSH BALBAS

STATE OF CALIFORNIA
DEPARTMENT OF TRANSPORTATION

DIVISION OF ENGINEERING SERVICES
STRUCTURE DESIGN
DESIGN BRANCH 19

BRIDGE NO. 55E0119
POST MILE 9.60

RETAINING WALL NO. 83
ARCHITECTURAL TEXTURE DETAILS

STRUCTURES DESIGN DETAIL SHEET (ENGLISH) (REV. 09-01-10)

ORIGINAL SCALE IN INCHES FOR REDUCED PLANS 0 1 2 3

UNIT: 3621
PROJECT NUMBER & PHASE: 1200000102 1 CONTRACT NO.: 0E3101

DISREGARD PRINTS BEARING EARLIER REVISION DATES

REVISION DATES: 05-10-11 11-08-11 11-01-11

SHEET 7 OF 11

FILE => RW83-u-mlscdt01.dgn

USERNAME => 812614 DATE PLOTTED => 15-APR-2012 TIME PLOTTED => 09:52

DIST	COUNTY	ROUTE	POST MILES TOTAL PROJECT	SHEET No.	TOTAL SHEETS
12	Ora	5,74	9.3/10.0, 0.0/0.2	473	515

GEOTECHNICAL PROFESSIONAL — DATE 07/2011

4-9-12
PLANS APPROVAL DATE

REGISTERED PROFESSIONAL ENGINEER — MICHAEL G. SMITH No. 2229 Exp. 3-31-2012 GEOTECHNICAL — STATE OF CALIFORNIA

The State of California or its officers or agents shall not be responsible for the accuracy or completeness of electronic copies of this plan sheet.

This LOTB sheet was prepared in accordance with the Caltrans Soil & Rock Logging, Classification, & Presentation Manual (2010 Edition).

BENCH MARK

SUHV-20021
FND PK/TIN
80.10 Ft Lt ℄ Route 5
Sta 517+51.39
Elev= 117.01'
NAVD88

SUHV-20027
FND PK/NAIL
136.66 Ft Rt ℄ Route 5
Sta 519+18.34
Elev= 144.30'
NAVD88

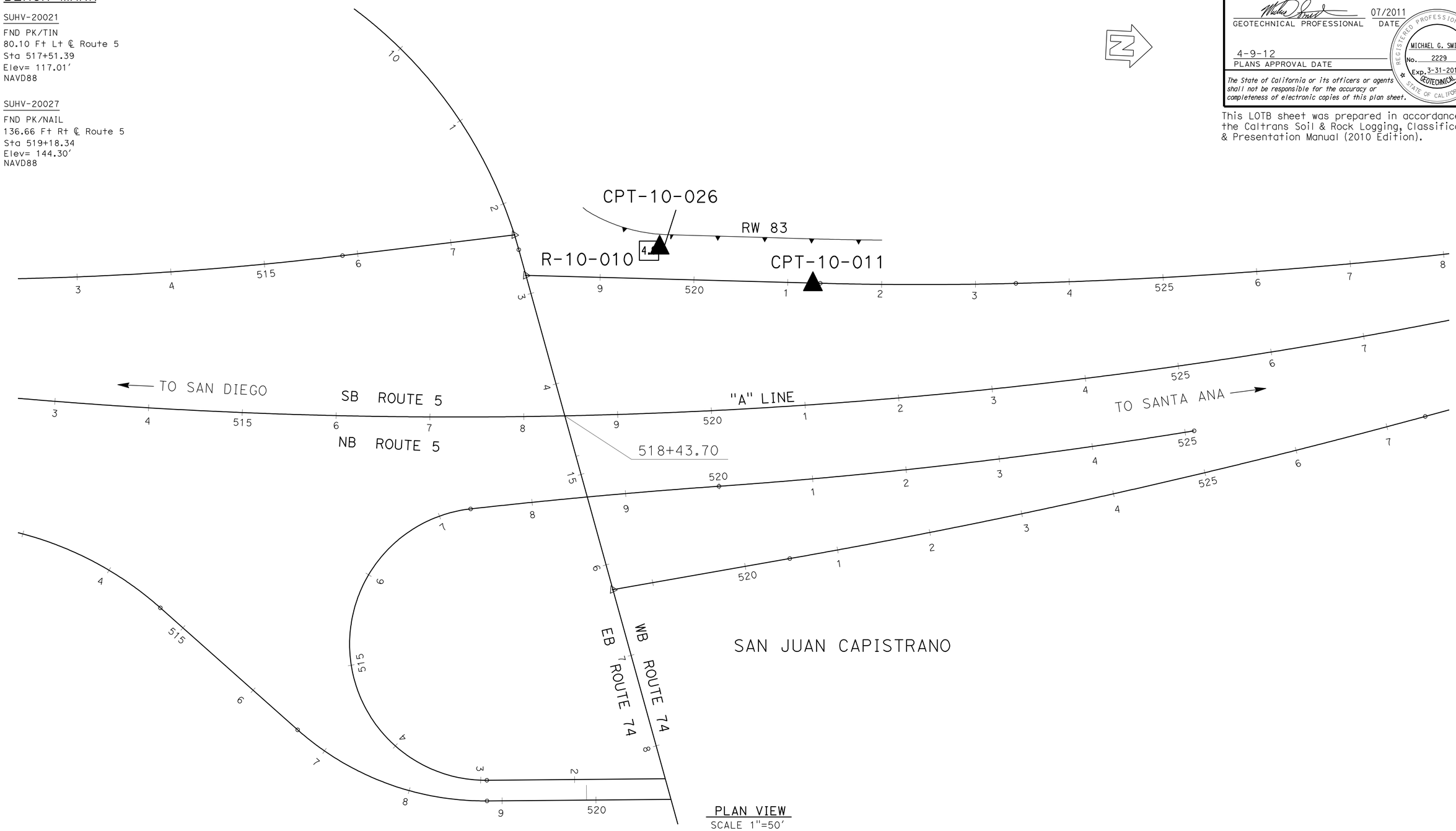

PLAN VIEW
SCALE 1"=50'

ENGINEERING SERVICES	MATERIALS AND GEOTECHNICAL SERVICES	STATE OF CALIFORNIA DEPARTMENT OF TRANSPORTATION	DIVISION OF ENGINEERING SERVICES STRUCTURE DESIGN DESIGN BRANCH 19	BRIDGE NO. 55E0119 POST MILE 9.6	RETAINING WALL NO. 83 LOG OF TEST BORINGS 1 OF 4
FUNCTIONAL SUPERVISOR NAME: M. SMITH	DRAWN BY: P.QUACH CHECKED BY: P.YERRA	FIELD INVESTIGATION BY: EJ.JEON/D.ORRIS			
OGS CIVIL LOG OF TEST BORINGS SHEET	ORIGINAL SCALE IN INCHES FOR REDUCED PLANS 0 1 2 3	UNIT: 3658 PROJECT NUMBER & PHASE: 1200000102 & 4 CONTRACT NO.: 12-0E3104	DISREGARD PRINTS BEARING EARLIER REVISION DATES	REVISION DATES 06/17/11	SHEET 8 OF 11

FILE => RW83-z-lotb_01.dgn

USERNAME => s126614 DATE PLOTTED => 15-APR-2012 TIME PLOTTED => 09:53

DIST	COUNTY	ROUTE	POST MILES TOTAL PROJECT	SHEET No.	TOTAL SHEETS
12	Ora	5,74	9.3/10.0, 0.0/0.2	474	515

GEOTECHNICAL PROFESSIONAL — DATE 07/2011

4-9-12
PLANS APPROVAL DATE

REGISTERED PROFESSIONAL ENGINEER — MICHAEL G. SMITH No. 2229 Exp. 3-31-2012 GEOTECHNICAL — STATE OF CALIFORNIA

The State of California or its officers or agents shall not be responsible for the accuracy or completeness of electronic copies of this plan sheet.

This LOTB sheet was prepared in accordance with the Caltrans Soil & Rock Logging, Classification, & Presentation Manual (2010 Edition).

FOR PLAN VIEW, SEE
"LOG OF TEST BORINGS" 1 OF 4

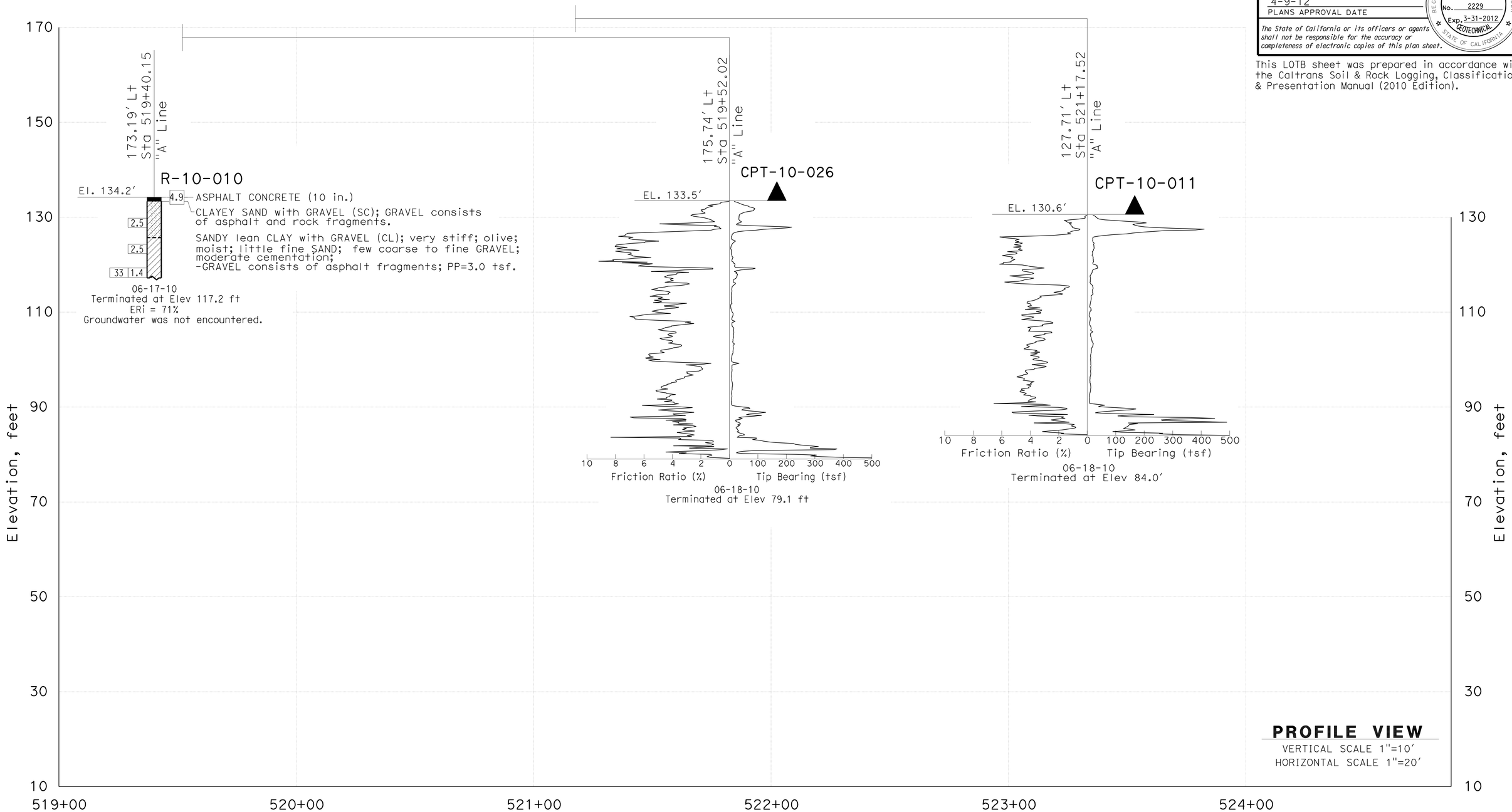

ENGINEERING SERVICES	MATERIALS AND GEOTECHNICAL SERVICES	STATE OF CALIFORNIA DEPARTMENT OF TRANSPORTATION	DIVISION OF ENGINEERING SERVICES STRUCTURE DESIGN DESIGN BRANCH 19	BRIDGE NO. 55E0119 POST MILE 9.6	RETAINING WALL NO. 83
FUNCTIONAL SUPERVISOR NAME: M. SMITH	DRAWN BY: P.QUACH CHECKED BY: P.YERRA	FIELD INVESTIGATION BY: EJ.JEON			LOG OF TEST BORINGS 2 OF 4

OGS CIVIL LOG OF TEST BORINGS SHEET

ORIGINAL SCALE IN INCHES FOR REDUCED PLANS 0 1 2 3

UNIT: 3658
PROJECT NUMBER & PHASE: 1200000102 & 4 CONTRACT NO.: 12-0E3104

DISREGARD PRINTS BEARING EARLIER REVISION DATES → 06/17/11

REVISION DATES | SHEET 9 | OF 11

FILE => RW83-z-lotb_02.dgn

USERNAME => s121614 DATE PLOTTED => 15-APR-2012 TIME PLOTTED => 09:53

DIST	COUNTY	ROUTE	POST MILES TOTAL PROJECT	SHEET No.	TOTAL SHEETS
12	Ora	5,74	9.3/10.0, 0.0/0.2	475	515

GEOTECHNICAL PROFESSIONAL — DATE 07/2011

4-9-12
PLANS APPROVAL DATE

REGISTERED PROFESSIONAL ENGINEER — MICHAEL G. SMITH No. 2229 Exp. 3-31-2012 GEOTECHNICAL — STATE OF CALIFORNIA

The State of California or its officers or agents shall not be responsible for the accuracy or completeness of electronic copies of this plan sheet.

This LOTB sheet was prepared in accordance with the Caltrans Soil & Rock Logging, Classification, & Presentation Manual (2010 Edition).

CEMENTATION

Description	Criteria
Weak	Crumbles or breaks with handling or little finger pressure.
Moderate	Crumbles or breaks with considerable finger pressure.
Strong	Will not crumble or break with finger pressure.

BOREHOLE IDENTIFICATION

Symbol	Hole Type	Description
Size	A	Auger Boring (hollow or solid stem bucket)
Size	R RW RC P	Rotary drilled boring (conventional) Rotary drilled with self-casing wire-line Rotary core with continuously-sampled, self-casing wire-line Rotary percussion boring (air)
Size	R	Rotary drilled diamond core
Size	HD HA	Hand driven (1-inch soil tube) Hand Auger
●	D	Dynamic Cone Penetration Boring
▲	CPT	Cone Penetration Test (ASTM D 5778)
⬚	O	Other (note on LOTB)

Note: Size in inches.

CONSISTENCY OF COHESIVE SOILS

Description	Shear Strength (tsf)	Pocket Penetrometer Measurement, PP, (tsf)	Torvane Measurement, TV, (tsf)	Vane Shear Measurement, VS, (tsf)
Very Soft	Less than 0.12	Less than 0.25	Less than 0.12	Less than 0.12
Soft	0.12 - 0.25	0.25 - 0.5	0.12 - 0.25	0.12 - 0.25
Medium Stiff	0.25 - 0.5	0.5 - 1	0.25 - 0.5	0.25 - 0.5
Stiff	0.5 - 1	1 - 2	0.5 - 1	0.5 - 1
Very Stiff	1 - 2	2 - 4	1 - 2	1 - 2
Hard	Greater than 2	Greater than 4	Greater than 2	Greater than 2

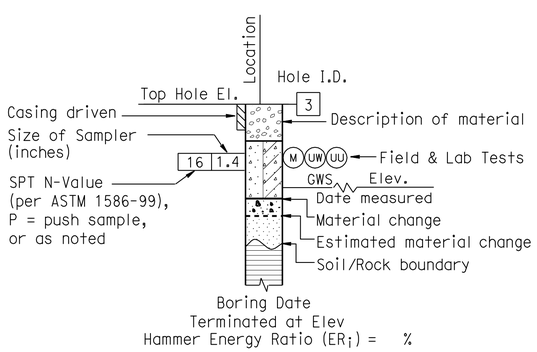

ROTARY BORING

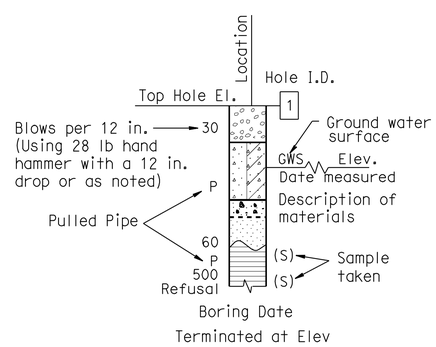

HAND BORING

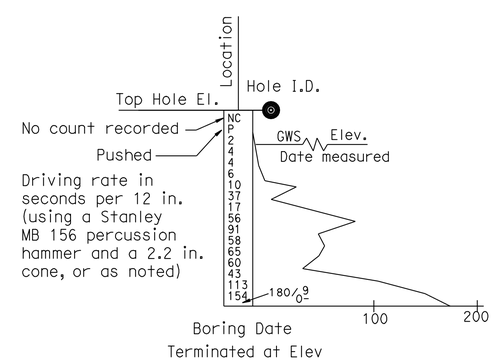

DYNAMIC CONE PENETRATION BORING

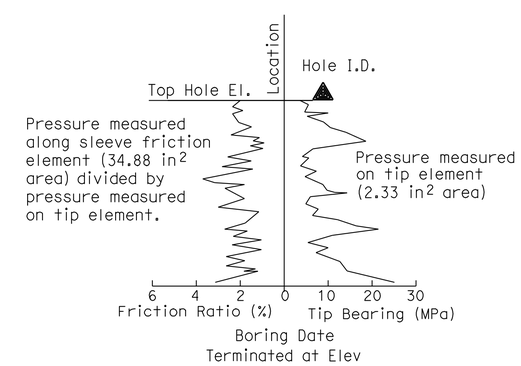

CONE PENETRATION TEST (CPT) BORING

ENGINEERING SERVICES	MATERIALS AND GEOTECHNICAL SERVICES	STATE OF CALIFORNIA DEPARTMENT OF TRANSPORTATION	DIVISION OF ENGINEERING SERVICES STRUCTURE DESIGN DESIGN BRANCH 19	BRIDGE NO. 55E0119 POST MILE 9.6	RETAINING WALL NO. 83
FUNCTIONAL SUPERVISOR NAME: M. SMITH	DRAWN BY: P.QUACH CHECKED BY: P.YERRA	FIELD INVESTIGATION BY: EJ.JEON			LOG OF TEST BORINGS 3 OF 4

OGS CIVIL LOG OF TEST BORINGS SHEET — ORIGINAL SCALE IN INCHES FOR REDUCED PLANS 0 1 2 3

UNIT: 3658
PROJECT NUMBER & PHASE: 1200000102 & 4 CONTRACT NO.: 12-0E3104

DISREGARD PRINTS BEARING EARLIER REVISION DATES → REVISION DATES 06/17/11 — SHEET 10 OF 11

FILE => RW83-z-lotb_03.dgn

USERNAME => s121614 DATE PLOTTED => 15-APR-2012 TIME PLOTTED => 09:53

DIST	COUNTY	ROUTE	POST MILES TOTAL PROJECT	SHEET No.	TOTAL SHEETS
12	Ora	5,74	9.3/10.0, 0.0/0.2	476	515

GEOTECHNICAL PROFESSIONAL — DATE 07/2011

4-9-12
PLANS APPROVAL DATE

REGISTERED PROFESSIONAL ENGINEER — MICHAEL G. SMITH No. 2229 Exp. 3-31-2012 GEOTECHNICAL — STATE OF CALIFORNIA

The State of California or its officers or agents shall not be responsible for the accuracy or completeness of electronic copies of this plan sheet.

This LOTB sheet was prepared in accordance with the Caltrans Soil & Rock Logging, Classification, & Presentation Manual (2010 Edition).

GROUP SYMBOLS AND NAMES

Graphic/Symbol	Group Names	Graphic/Symbol	Group Names
GW	Well-graded GRAVEL Well-graded GRAVEL with SAND	CL	Lean CLAY Lean CLAY with SAND Lean CLAY with GRAVEL SANDY lean CLAY SANDY lean CLAY with GRAVEL GRAVELLY lean CLAY GRAVELLY lean CLAY with SAND
GP	Poorly-graded GRAVEL Poorly-graded GRAVEL with SAND		
GW-GM	Well-graded GRAVEL with SILT Well-graded GRAVEL with SILT and SAND	CL-ML	SILTY CLAY SILTY CLAY with SAND SILTY CLAY with GRAVEL SANDY SILTY CLAY SANDY SILTY CLAY with GRAVEL GRAVELLY SILTY CLAY GRAVELLY SILTY CLAY with SAND
GW-GC	Well-graded GRAVEL with CLAY (or SILTY CLAY) Well-graded GRAVEL with CLAY and SAND (or SILTY CLAY and SAND)		
GP-GM	Poorly-graded GRAVEL with SILT Poorly-graded GRAVEL with SILT and SAND	ML	SILT SILT with SAND SILT with GRAVEL SANDY SILT SANDY SILT with GRAVEL GRAVELLY SILT GRAVELLY SILT with SAND
GP-GC	Poorly-graded GRAVEL with CLAY (or SILTY CLAY) Poorly-graded GRAVEL with CLAY and SAND (or SILTY CLAY and SAND)		
GM	SILTY GRAVEL SILTY GRAVEL with SAND	OL	ORGANIC lean CLAY ORGANIC lean CLAY with SAND ORGANIC lean CLAY with GRAVEL SANDY ORGANIC lean CLAY SANDY ORGANIC lean CLAY with GRAVEL GRAVELLY ORGANIC lean CLAY GRAVELLY ORGANIC lean CLAY with SAND
GC	CLAYEY GRAVEL CLAYEY GRAVEL with SAND		
GC-GM	SILTY, CLAYEY GRAVEL SILTY, CLAYEY GRAVEL with SAND	OL	ORGANIC SILT ORGANIC SILT with SAND ORGANIC SILT with GRAVEL SANDY ORGANIC SILT SANDY ORGANIC SILT with GRAVEL GRAVELLY ORGANIC SILT GRAVELLY ORGANIC SILT with SAND
SW	Well-graded SAND Well-graded SAND with GRAVEL		
SP	Poorly-graded SAND Poorly-graded SAND with GRAVEL	CH	Fat CLAY Fat CLAY with SAND Fat CLAY with GRAVEL SANDY fat CLAY SANDY fat CLAY with GRAVEL GRAVELLY fat CLAY GRAVELLY fat CLAY with SAND
SW-SM	Well-graded SAND with SILT Well-graded SAND with SILT and GRAVEL		
SW-SC	Well-graded SAND with CLAY (or SILTY CLAY) Well-graded SAND with CLAY and GRAVEL (or SILTY CLAY and GRAVEL)	MH	Elastic SILT Elastic SILT with SAND Elastic SILT with GRAVEL SANDY elastic SILT SANDY elastic SILT with GRAVEL GRAVELLY elastic SILT GRAVELLY elastic SILT with SAND
SP-SM	Poorly-graded SAND with SILT Poorly-graded SAND with SILT and GRAVEL		
SP-SC	Poorly-graded SAND with CLAY (or SILTY CLAY) Poorly-graded SAND with CLAY and GRAVEL (or SILTY CLAY and GRAVEL)	OH	ORGANIC fat CLAY ORGANIC fat CLAY with SAND ORGANIC fat CLAY with GRAVEL SANDY ORGANIC fat CLAY SANDY ORGANIC fat CLAY with GRAVEL GRAVELLY ORGANIC fat CLAY GRAVELLY ORGANIC fat CLAY with SAND
SM	SILTY SAND SILTY SAND with GRAVEL		
SC	CLAYEY SAND CLAYEY SAND with GRAVEL	OH	ORGANIC elastic SILT ORGANIC elastic SILT with SAND ORGANIC elastic SILT with GRAVEL SANDY ORGANIC elastic SILT SANDY ORGANIC elastic SILT with GRAVEL GRAVELLY ORGANIC elastic SILT GRAVELLY ORGANIC elastic SILT with SAND
SC-SM	SILTY, CLAYEY SAND SILTY, CLAYEY SAND with GRAVEL		
PT	PEAT	OL/OH	ORGANIC SOIL ORGANIC SOIL with SAND ORGANIC SOIL with GRAVEL SANDY ORGANIC SOIL SANDY ORGANIC SOIL with GRAVEL GRAVELLY ORGANIC SOIL GRAVELLY ORGANIC SOIL with SAND
	COBBLES COBBLES and BOULDERS BOULDERS		

FIELD AND LABORATORY TESTING

- (C) Consolidation (ASTM D 2435)
- (CL) Collapse Potential (ASTM D 5333)
- (CP) Compaction Curve (CTM 216)
- (CR) Corrosivity Testing (CTM 643, CTM 422, CTM 417)
- (CU) Consolidated Undrained Triaxial (ASTM D 4767)
- (DS) Direct Shear (ASTM D 3080)
- (EI) Expansion Index (ASTM D 4829)
- (M) Moisture Content (ASTM D 2216)
- (OC) Organic Content-% (ASTM D 2974)
- (P) Permeability (CTM 220)
- (PA) Particle Size Analysis (ASTM D 422)
- (PI) Plasticity Index (AASHTO T 90) Liquid Limit (AASHTO T 89)
- (PL) Point Load Index (ASTM D 5731)
- (PM) Pressure Meter
- (R) R-Value (CTM 301)
- (SE) Sand Equivalent (CTM 217)
- (SG) Specific Gravity (AASHTO T 100)
- (SL) Shrinkage Limit (ASTM D 427)
- (SW) Swell Potential (ASTM D 4546)
- (UC) Unconfined Compression-Soil (ASTM D 2166) Unconfined Compression-Rock (ASTM D 2938)
- (UU) Unconsolidated Undrained Triaxial (ASTM D 2850)
- (UW) Unit Weight (ASTM D 4767)

APPARENT DENSITY OF COHESIONLESS SOILS

Description	SPT N_{60} (Blows / 12 in.)
Very Loose	0 - 5
Loose	5 - 10
Medium Dense	10 - 30
Dense	30 - 50
Very Dense	Greater than 50

MOISTURE

Description	Criteria
Dry	No discernable moisture
Moist	Moisture present, but no free water
Wet	Visible free water

PERCENT OR PROPORTION OF SOILS

Description	Criteria
Trace	Particles are present but estimated to be less than 5%
Few	5% - 10%
Little	15% - 25%
Some	30% - 45%
Mostly	50% - 100%

PARTICLE SIZE

Description		Size (in.)
Boulder		Greater than 12
Cobble		3 - 12
Gravel	Coarse	3/4 - 3
	Fine	1/5 - 3/4
Sand	Coarse	1/16 - 1/5
	Medium	1/64 - 1/16
	Fine	1/300 - 1/64
Silt and Clay		Less than 1/300

ENGINEERING SERVICES — MATERIALS AND GEOTECHNICAL SERVICES

FUNCTIONAL SUPERVISOR
NAME: M. SMITH
DRAWN BY: P.QUACH
CHECKED BY: P.YERRA
FIELD INVESTIGATION BY: EJ.JEON

STATE OF CALIFORNIA DEPARTMENT OF TRANSPORTATION

DIVISION OF ENGINEERING SERVICES STRUCTURE DESIGN — DESIGN BRANCH 19

BRIDGE NO. 55E0119
POST MILE 9.6

RETAINING WALL NO. 83
LOG OF TEST BORINGS 4 OF 4

OGS CIVIL LOG OF TEST BORINGS SHEET

ORIGINAL SCALE IN INCHES FOR REDUCED PLANS 0 1 2 3

UNIT: 3658
PROJECT NUMBER & PHASE: 1200000102 & 4 CONTRACT NO.: 12-0E3104

DISREGARD PRINTS BEARING EARLIER REVISION DATES — REVISION DATES 06/17/11

SHEET 11 OF 11

FILE => RW83-z-lotb_04.dgn

USERNAME => s121614 DATE PLOTTED => 15-APR-2012 TIME PLOTTED => 09:53

DIST	COUNTY	ROUTE	POST MILES TOTAL PROJECT	SHEET No.	TOTAL SHEETS
12	Ora	5,74	9.3/10.0, 0.0/0.2	477	515

Charles Lomicka 11-15-11
REGISTERED CIVIL ENGINEER DATE

4-9-12
PLANS APPROVAL DATE

REGISTERED PROFESSIONAL ENGINEER CHARLES LOMICKA No. C 71172 Exp. 06/30/13 CIVIL STATE OF CALIFORNIA

The State of California or its officers or agents shall not be responsible for the accuracy or completeness of electronic copies of this plan sheet.

STANDARD PLANS DATED MAY 2006

A10A ACRONYMS AND ABBREVIATIONS (SHEET 1 OF 2)
A10B ACRONYMS AND ABBREVIATIONS (SHEET 2 OF 2)
A10C SYMBOLS (SHEETS 1 OF 2))
A10D SYMBOLS (SHEETS 2 OF 2))
A76A CONCRETE BARRIER TYPE 60
B0-3 BRIDGE DETAILS
B3-8 RETAINING WALL DETAILS NO. 1
RSP B11-60 CONCRETE BARRIER TYPE 80 (SHEET 1 OF 2)
B11-61 CONCRETE BARRIER TYPE 80 (SHEET 2 OF 2)

STANDARD PLAN SHEET NO.
DETAIL NO.

NOTES:

1. See "RETAINING WALL DETAILS" sheet for dimensions and Reinforcement details.
2. Architectural texture shall be prepared and stained.
3. Limits of Concrete Barrier Type 60D (MOD 1) RWLOL Sta 8+36.34 to Sta 8+94.34. Type 60D (MOD 1) barrier shall be prepared and stained.
4. Top of wall elevations measured along retaining wall LOL @ locations noted.
5. All dimensions measured along retaining wall LOL.

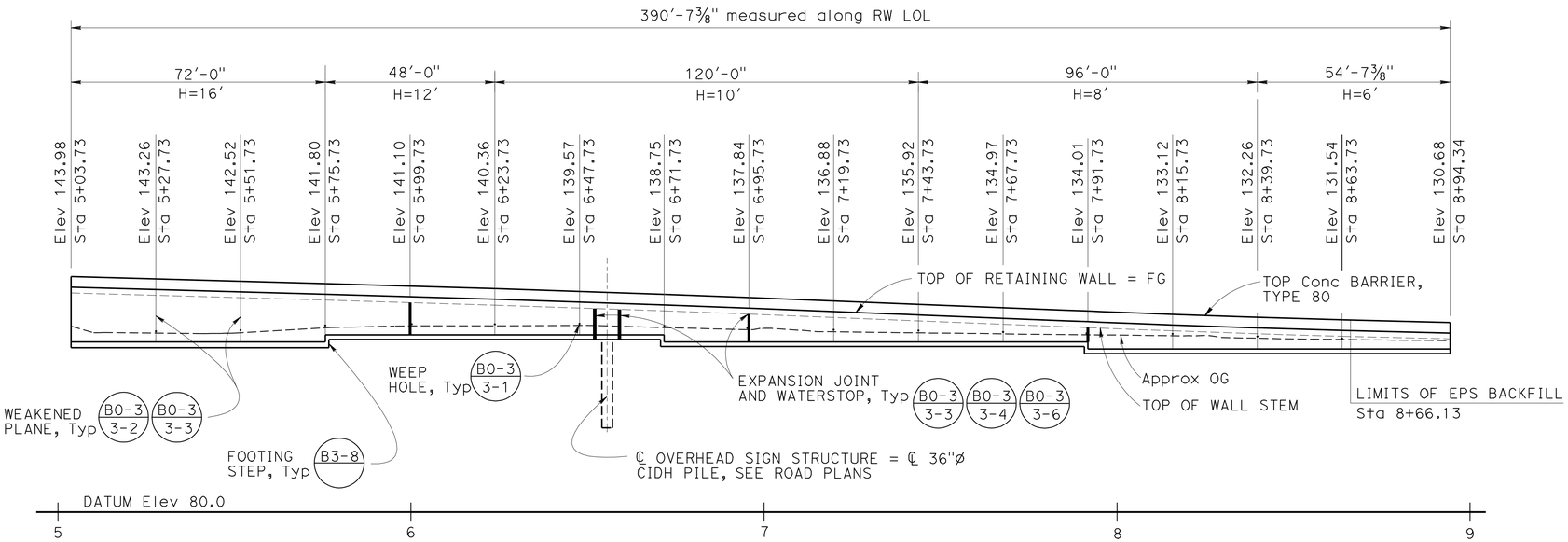

ELEVATION

1" = 20'

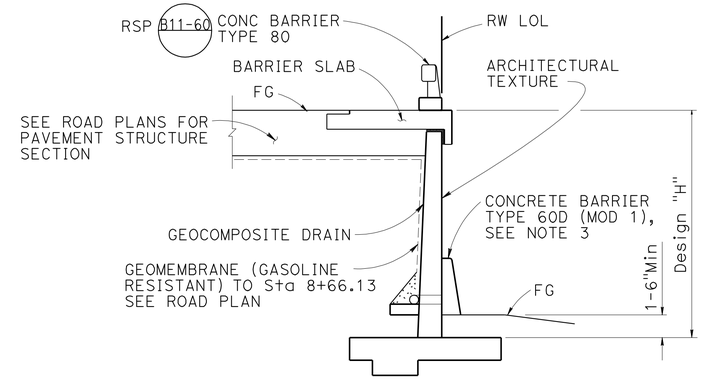

TYPICAL SECTION

NO SCALE

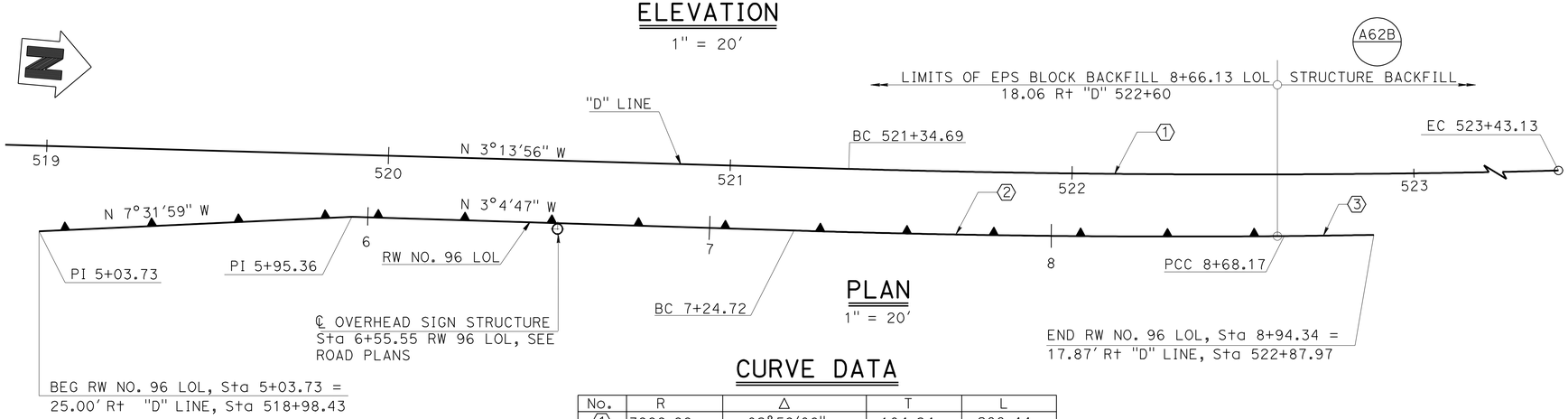

PLAN

1" = 20'

CURVE DATA

No.	R	Δ	T	L
1	3999.99	02°59'08"	104.24	208.44
2	3617.75	02°16'19"	71.73	143.45
3	5361.87	00°18'56"	14.77	29.54

NOTE:
THE CONTRACTOR SHALL VERIFY ALL CONTROLLING FIELD DIMENSIONS BEFORE ORDERING OR FABRICATING ANY MATERIAL.

INDEX TO PLANS

NO. SHEET NAME
1. GENERAL PLAN
2. FOUNDATION PLAN
3. RETAINING WALL DETAILS NO. 1
4. RETAINING WALL DETAILS NO. 2
5. ARCHITECTURAL TEXTURE DETAILS
6. LOG OF TEST BORINGS 1 OF 5
7. LOG OF TEST BORINGS 2 OF 5
8. LOG OF TEST BORINGS 3 OF 5
9. LOG OF TEST BORINGS 4 OF 5
10. LOG OF TEST BORINGS 5 OF 5

QUANTITIES

STRUCTURE EXCAVATION (RETAINING WALL)	1,650 CY
STRUCTURE BACKFILL (RETAINING WALL)	870 CY
STRUCTURAL CONCRETE, RETAINING WALL	350 CY
STRUCTURAL CONCRETE, BARRIER SLAB	198 CY
ARCHITECTURAL TEXTURE (ROCK STRATA)	2,300 SQFT
BAR REINFORCING STEEL (RETAINING WALL)	27,700 LB
PREPARE AND STAIN CONCRETE	3,250 SQFT
GEOCOMPOSITE DRAIN	2,360 SQFT
CONCRETE BARRIER (TYPE 60D MODIFIED 1)	58 LF
CONCRETE BARRIER (TYPE 80)	391 LF

MINA PEZESHPOUR
DESIGN ENGINEER

	BY	CHECKED
DESIGN	RUI WANG	MAMUNUR RAHMAN
DETAILS	HENGAMEH MAHBOOBI	MAMUNUR RAHMAN
QUANTITIES	EDWARD MERCADO	HTOON WIN

LOAD & RESISTANCE FACTOR DESIGN
LAYOUT — BY RUI WANG — CHECKED MAMUNUR RAHMAN
SPECIFICATIONS — BY VAIKUNTHAN RENGANATHAN — PLANS AND SPECS COMPARED VAIKUNTHAN RENGANATHAN

STATE OF CALIFORNIA
DEPARTMENT OF TRANSPORTATION

DIVISION OF ENGINEERING SERVICES
STRUCTURE DESIGN
DESIGN BRANCH 19

BRIDGE NO. 55E0121
POST MILE 9.6

RETAINING WALL NO. 96
GENERAL PLAN

ORIGINAL SCALE IN INCHES FOR REDUCED PLANS 0 1 2 3

UNIT: 3621
PROJECT NUMBER & PHASE: 1200000102 1
CONTRACT NO.: 0E3101

DISREGARD PRINTS BEARING EARLIER REVISION DATES
REVISION DATES: ~~07-01-11~~ 11-07-11 11-15-11
SHEET 1 OF 10

USERNAME => s121614 DATE PLOTTED => 15-APR-2012 TIME PLOTTED => 09:53

STRUCTURES DESIGN GENERAL PLAN SHEET (ENGLISH) (REV.09-01-10)

FILE => RW96-a-gp_01.dgn

DIST	COUNTY	ROUTE	POST MILES TOTAL PROJECT	SHEET No.	TOTAL SHEETS
12	Ora	5,74	9.3/10.0, 0.0/0.2	478	515

Charles Lomicka 11-15-11
REGISTERED CIVIL ENGINEER DATE

4-9-12
PLANS APPROVAL DATE

REGISTERED PROFESSIONAL ENGINEER CHARLES LOMICKA No. C 71172 Exp. 06/30/13 CIVIL STATE OF CALIFORNIA

The State of California or its officers or agents shall not be responsible for the accuracy or completeness of electronic copies of this plan sheet.

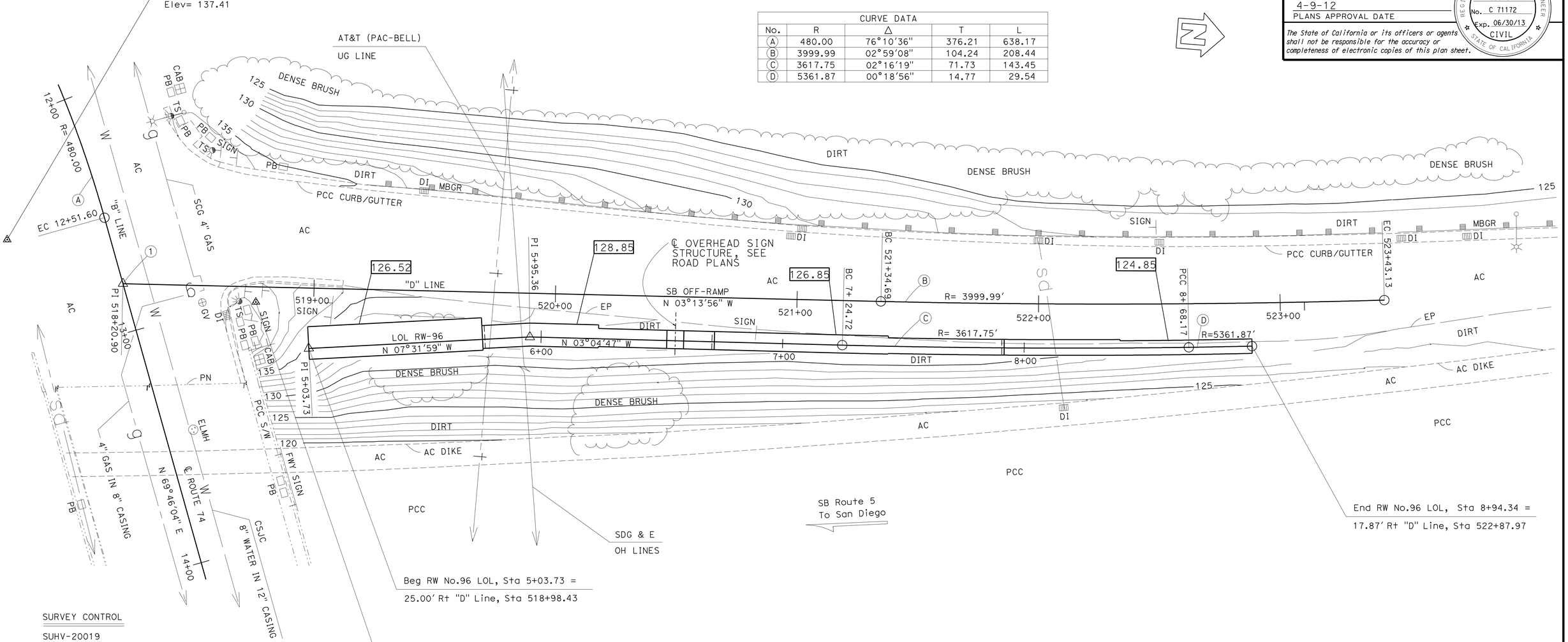

CURVE DATA				
No.	R	Δ	T	L
A	480.00	76°10'36"	376.21	638.17
B	3999.99	02°59'08"	104.24	208.44
C	3617.75	02°16'19"	71.73	143.45
D	5361.87	00°18'56"	14.77	29.54

SURVEY CONTROL

SUHV-20019

60 D NAIL & CH. "X"
6.30 Ft Rt "D" LINE
Sta 518+76.06
N 2 129 342.918
E 6 132 176.706
Elev= 138.11

SUHV-20026

60 D NAIL
41.26 Ft Rt "B" LINE
Sta 12+49.30
N 2 129 238.277
E 6 132 159.184
Elev= 137.41

NOTES:

1. Underground Utilities as shown are approximate
2. XX.XX Indicates Bottom of Footing Elevation

PRELIMINARY INVESTIGATION SECTION

SCALE	VERT.DATUM NAVD88	PHOTOGRAMMETRY AS OF: X			
1"=20'	HORZ.DATUM NAD83 (1991.35)	SURVEYED	BY DISTRICT 12	CHECKED	BY T.PHUNG 06/2011
ALIGNMENT TIES Dist. Traverse Sheet		DRAFTED	BY V.PHAM 06/2011	CHECKED	BY S.ALIVIO 06/2011

DESIGN	BY RUI WANG	CHECKED MAMUNUR RAHMAN
DETAILS	BY HENGAMEH MAHBOOBI	CHECKED MAMUNUR RAHMAN
QUANTITIES	BY EDWARD MERCADO	CHECKED HTOON WIN

STATE OF CALIFORNIA
DEPARTMENT OF TRANSPORTATION

DIVISION OF ENGINEERING SERVICES
STRUCTURE DESIGN
DESIGN BRANCH 19

BRIDGE NO. 55E0121
POST MILE 9.6

RETAINING WALL No.96
FOUNDATION PLAN

STRUCTURES FOUNDATION PLAN SHEET (ENGLISH) (REV. 09-01-10)

ORIGINAL SCALE IN INCHES FOR REDUCED PLANS 0 1 2 3

UNIT: 3647
PROJECT NUMBER & PHASE: 1200000102 1 CONTRACT NO.: 0E3101

DISREGARD PRINTS BEARING EARLIER REVISION DATES

REVISION DATES 07-05-11 11-15-11 11-04-11

SHEET 2 OF 10

FILE => RW96-e-fdpl_01.dgn

DIST	COUNTY	ROUTE	POST MILES TOTAL PROJECT	SHEET No.	TOTAL SHEETS
12	Ora	5,74	9.3/10.0, 0.0/0.2	479	515

Charles Lomicka 11-15-11
REGISTERED CIVIL ENGINEER DATE

4-9-12
PLANS APPROVAL DATE

REGISTERED PROFESSIONAL ENGINEER CHARLES LOMICKA No. C 71172 Exp. 06/30/13 CIVIL STATE OF CALIFORNIA

The State of California or its officers or agents shall not be responsible for the accuracy or completeness of electronic copies of this plan sheet.

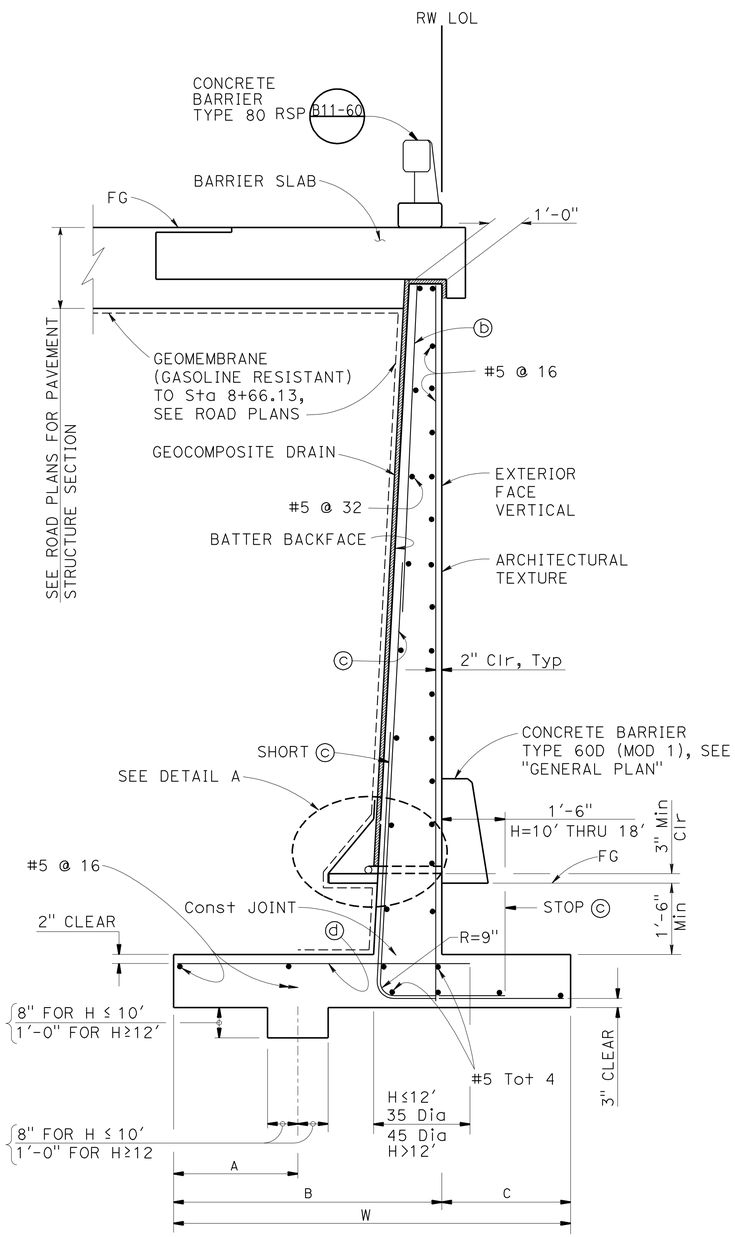

SPREAD FOOTING SECTION

NO SCALE

NOTE:
THE CONTRACTOR SHALL VERIFY ALL CONTROLLING FIELD DIMENSIONS BEFORE ORDERING OR FABRICATINGANY MATERIAL.

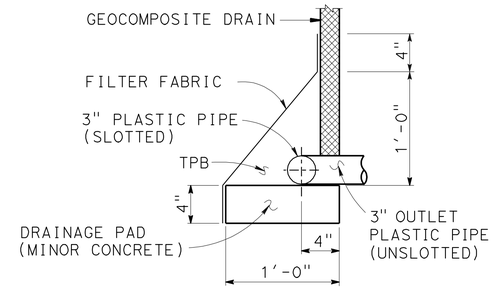

DETAIL A

NO SCALE

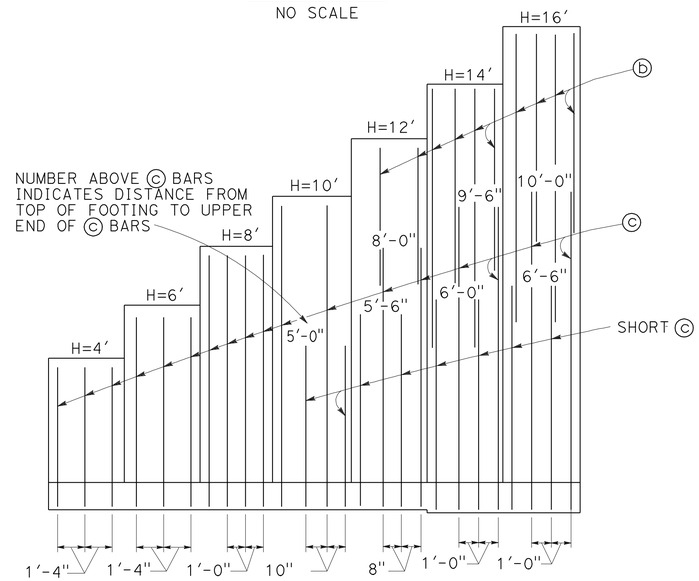

ELEVATION

NO SCALE

TABLE OF REINFORCING STEEL DIMENSIONS AND DATA

DESIGN H		6'	8'	10'	12'	16'
W		7'-0"	7'-6"	8'-6"	10'-6"	14'-6"
C		3'-0"	3'-0"	3'-3"	3'-9"	4'-6"
B		4'-0"	4'-6"	5'-3"	6'-9"	10'-0"
F		1'-4"	1'-4'	1'-4"	1'-4"	1'-8"
A		1'-9"	1'-11"	2'-1"	3'-6"	4'-10"
BATTER		1/2:12	1/2:12	1/2:12	1/2:12	1/2:12
ⓑ BARS		——	——	——	#5 @ 16	#5 @ 12
ⓒ BARS		#5 @ 16	#5 @ 12	#6 @ 10	#6 @ 8	#9 @ 12
ⓓ BARS		#5 @ 16	#5 @ 12	#6 @ 10	#6 @ 8	#9 @ 12
LOADING	Ser: B', q'_o	6.23, 0.92	3.70, 1.11	3.69, 1.29	5.04, 1.17	8.47, 1.02
CASE I	Str: B', q_o	5.73, 1.30	2.56, 2.03	2.26, 2.67	3.50, 2.13	7.09, 1.54

SYMBOLS:

Ser - SERVICE LIMIT STATE 1
Str - STRENGTH LIMIT STATE 1
B' - EFFECTIVE FOOTING WIDTH (ft)
q'o - NET BEARING STRESS (ksf)
qo - GROSS UNIFORM BEARING STRESS (ksf)

NOTES:

1. For additional details, see "RETAINING WALL DETAILS NO. 2" sheet.
2. At ⓒ and short ⓒ bars:
   H≤ 6', no splices are allowed within 1'-8" above the top of footing.
   H> 6', no splices are allowed within H/4 above the top of footing.

DESIGN DATA

Design: AASHTO LRFD Bridge Design Specifications 4th edition with California Amendments

WS: 30 psf on barrier

LS: Varied surcharge on level ground surface

CT: 54 kip maximum traffic impact loading evenly distributed over 10 feet at top of the barrier and 1:1 distribution down and outward

EQE: Mononabe-Okabe Method
K_h = 0.2
K_v = 0.0

Soil: $\emptyset$ = 34°
γ = 120 pcf

EPS Block: Ka = 0.15
γ = 2.5 pcf

Reinforced Concrete: f'c = 3600 psi
fy = 60,000 psi

Load Combinations and Limit States

Service I Q=1.00DC+1.00EV+1.00EH+1.00LS+0.30WS

Service II Q=1.00DC+1.00EV+1.00EH+1.00WS

Strength I Q=αDC+βEV+1.50EH+1.75LS
Q=1.25DC+1.35EV+0.90EH+1.75LS
(for piles at heel)

Strength III Q=αDC+βEV+1.50EH+1.40WS

Strength V Q=αDC+βEV+1.50EH+1.35LS+0.40WS

Extreme I Q=1.00DC+1.00EV+1.00EH+1.00EQD+1.00EQE

Extreme II Q=1.00DC+1.00EV+1.00EH+1.00CT

Where:

Q: Force Effects
α: 1.25 or 0.90, Which ever Controls Design
β: 1.35 or 1.00, which ever Controls Design
DC: Dead Load of Structure Components
EH: Horizontal Earth Fill Pressure
EV: Vertical Earth Fill Pressure
LS: Live Load Surcharge
EQE: Seismic Earth Pressure
EQD: Soil and Structure Components Inertia. Soil inertia ignored for stem design
WS: Wind Load on Sound Wall and Barrier
CT: Vehicular Collision Force

	BY	CHECKED
DESIGN	RUI WANG	MAMUNUR RAHMAN
DETAILS	HENGAMEH MAHBOOBI	MAMUNUR RAHMAN
QUANTITIES	EDWARD MERCADO	HTOON WIN

STATE OF CALIFORNIA
DEPARTMENT OF TRANSPORTATION

DIVISION OF ENGINEERING SERVICES
STRUCTURE DESIGN
DESIGN BRANCH 19

BRIDGE NO. 55E0121
POST MILE 9.6

RETAINING WALL NO. 96
RETAINING WALL DETAILS NO. 1

STRUCTURES DESIGN DETAIL SHEET (ENGLISH) (REV. 09-01-10)

ORIGINAL SCALE IN INCHES FOR REDUCED PLANS 0 1 2 3

UNIT: 3621
PROJECT NUMBER & PHASE: 1200000102 1 CONTRACT NO.: 0E3101

DISREGARD PRINTS BEARING EARLIER REVISION DATES

REVISION DATES: 06-26-11 11-15-11 11-01-11

SHEET 3 OF 10

FILE => RW96-g-rwdt_01.dgn

USERNAME => s121614 DATE PLOTTED => 15-APR-2012 TIME PLOTTED => 09:54

DIST	COUNTY	ROUTE	POST MILES TOTAL PROJECT	SHEET No.	TOTAL SHEETS
12	Ora	5,74	9.3/10.0, 0.0/0.2	480	515

Charles Lomicka 11-15-11
REGISTERED CIVIL ENGINEER DATE

4-9-12
PLANS APPROVAL DATE

REGISTERED PROFESSIONAL ENGINEER CHARLES LOMICKA No. C 71172 Exp. 6/30/13 CIVIL STATE OF CALIFORNIA

The State of California or its officers or agents shall not be responsible for the accuracy or completeness of electronic copies of this plan sheet.

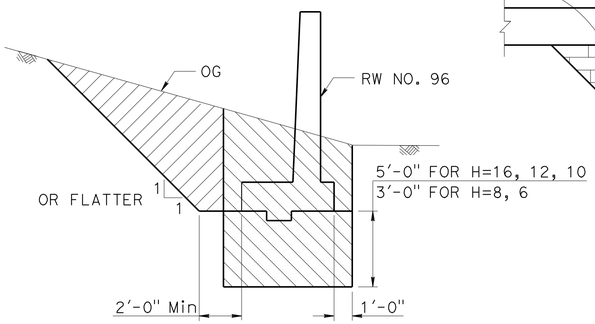

STRUCTURE EXCAVATION (RETAINING WALL)

FROM Sta 5+03.73 TO Sta 8+66.13

NO SCALE

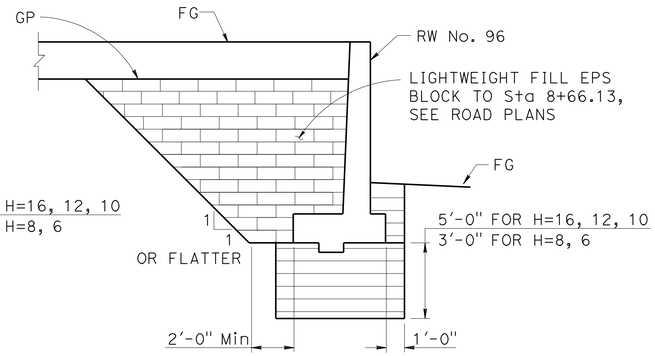

STRUCTURE BACKFILL (RETAINING WALL)

FROM Sta 5+03.73 TO Sta 8+66.13

NO SCALE

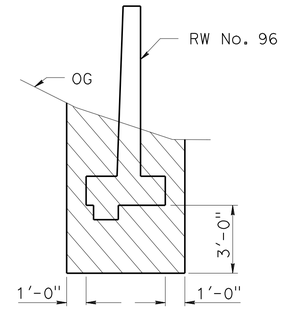

STRUCTURE EXCAVATION (RETAINING WALL)

FROM Sta 8+66.13 TO Sta 8+94.34

NO SCALE

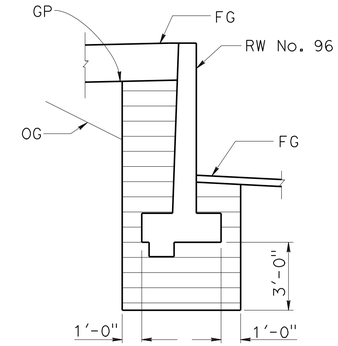

STRUCTURE BACKFILL (RETAINING WALL)

FROM Sta 8+66.13 TO Sta 8+94.34

NO SCALE

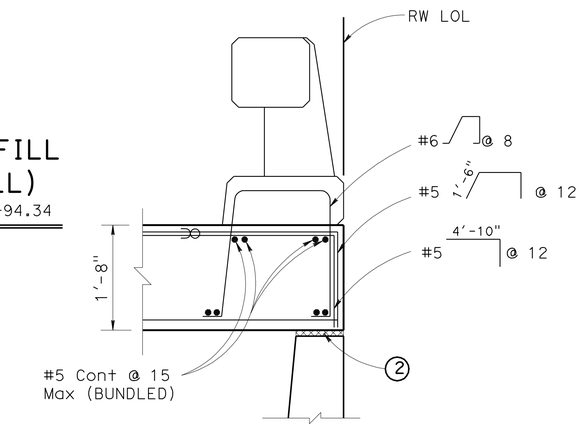

CONCRETE BARRIER SLAB END DETAIL

Sta 6+52.05 TO Sta 6+59.05
Sta 8+36.34 TO Sta 8+94.34

NO SCALE

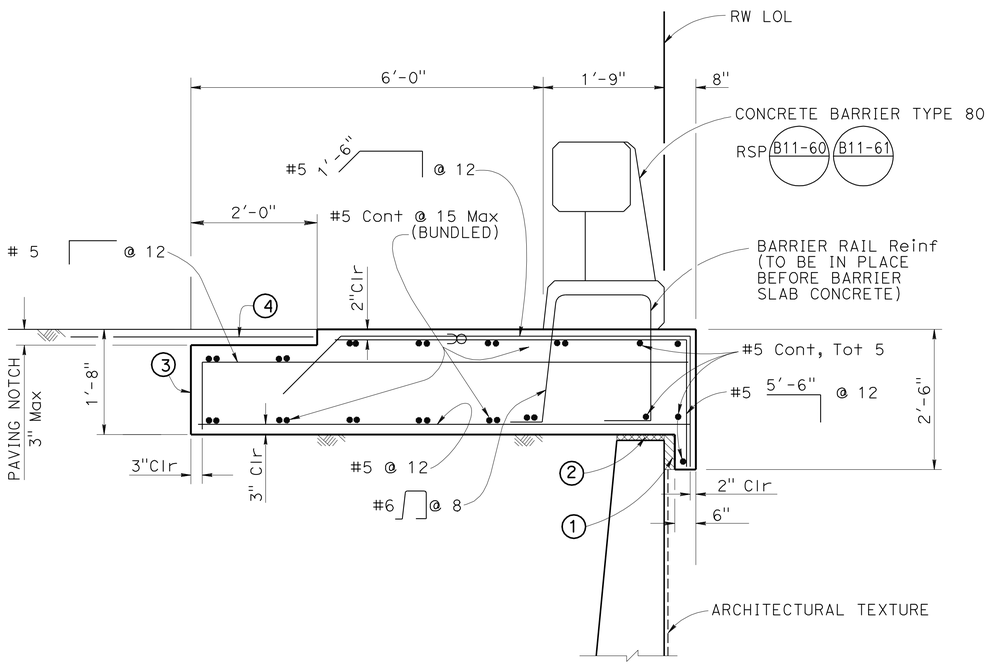

CONCRETE BARRIER SLAB WITH PAVING NOTCH

Sta 5+03.73 TO Sta 6+52.05
Sta 6+59.05 TO Sta 8+36.34

NO SCALE

SPREAD FOOTING DATA TABLE

STATIONING	WALL HEIGHT (ft)	LOAD AND RESISTANCE FACTOR DESIGN (LRFD)		
		SERVICE PERMISSIBLE NET CONTACT STRESS (SETTLEMENT) (ksf)	STRENGTH FACTORED GROSS NOMINAL BEARING RESISTANCE (Øb= 0.50) (ksf)	EXTREME EVENT FACTORED GROSS NOMINAL BEARING RESISTANCE (Øb = 1.00) (ksf)
5+03.73 TO 5+75.73	16	2.2	2.6	5.0
5+75.73 TO 6+23.73	12	3.6	5.6	11.0
6+23.73 TO 7+43.73	10	3.6	5.6	11.0
7+43.73 TO 8+39.73	8	3.3	2.6	5.0
8+39.73 TO 8+66.13	6	3.2	2.6	5.0
8+66.13 TO 8+94.34	6	3.6	2.6	5.0

LEGEND:

- STRUCTURE EXCAVATION (RETAINING WALL)
- STRUCTURE BACKFILL (RETAINING WALL)
- LIGHTWEIGHT BACKFILL (EPS), SEE ROADWAY PLANS
- ROADWAY EXCAVATION, SEE ROADWAY PLANS
- INDICATES BUNDLED BARS.

NOTES:

1. Clearance to reinforcing steel in concrete barrier to be 1".
2. Not all barrier reinforcement shown.
3. No expansion joints in concrete barrier or barrier slab within wall limits.

(1) 2" Expanded polystyrene.
(2) 1" Expanded Polystyrene.
(3) Contact joint.
(4) 4'-0" wide pavement reinforcing fabric.

NOTE:
THE CONTRACTOR SHALL VERIFY ALL CONTROLLING FIELD DIMENSIONS BEFORE ORDERING OR FABRICATING ANY MATERIAL.

	BY	CHECKED
DESIGN	CHARLES LOMICKA	MINA PEZESHPOUR
DETAILS	HENGAMEH MAHBOOBI	MINA PEZESHPOUR
QUANTITIES	CHARLES LOMICKA	HTOON WIN

STATE OF CALIFORNIA
DEPARTMENT OF TRANSPORTATION

DIVISION OF ENGINEERING SERVICES
STRUCTURE DESIGN
DESIGN BRANCH 19

BRIDGE NO. 55E0121
POST MILE 9.6

RETAINING WALL NO. 96
RETAINING WALL DETAILS NO. 2

STRUCTURES DESIGN DETAIL SHEET (ENGLISH) (REV. 09-01-10)

ORIGINAL SCALE IN INCHES FOR REDUCED PLANS 0 1 2 3

UNIT: 3621
PROJECT NUMBER & PHASE: 1200000102 1 CONTRACT NO.: 0E3101

DISREGARD PRINTS BEARING EARLIER REVISION DATES

REVISION DATES: 09-25-11 11-10-11 11-15-11

SHEET 4 OF 10

FILE => RW96-g-rwd1_02.dgn

USERNAME => b12161.4 DATE PLOTTED => 15-APR-2012 TIME PLOTTED => 09:54

DIST	COUNTY	ROUTE	POST MILES TOTAL PROJECT	SHEET No.	TOTAL SHEETS
12	Ora	5,74	9.3/10.0, 0.0/0.2	481	515

Charles Lomicka 11-15-11
REGISTERED CIVIL ENGINEER DATE

4-9-12
PLANS APPROVAL DATE

REGISTERED PROFESSIONAL ENGINEER
CHARLES LOMICKA
No. C 71172
Exp. 09/30/13
CIVIL
STATE OF CALIFORNIA

The State of California or its officers or agents shall not be responsible for the accuracy or completeness of electronic copies of this plan sheet.

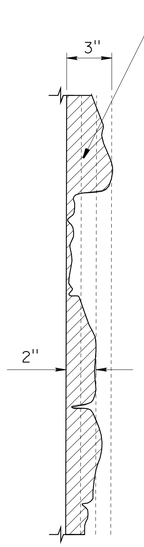

SECTION A-A

NO SCALE

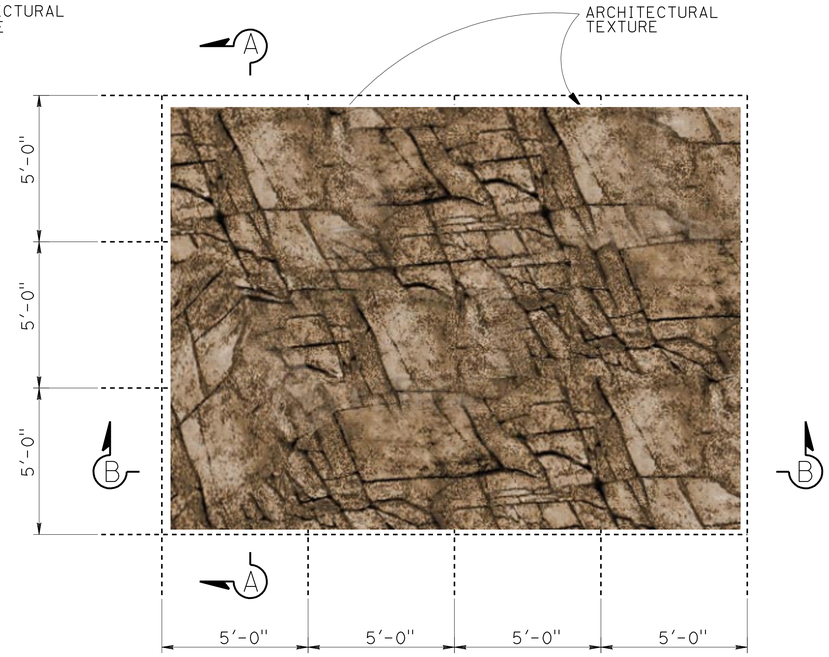

ROCK STRATA PATTERN TYPES (TYPICAL)

NO SCALE

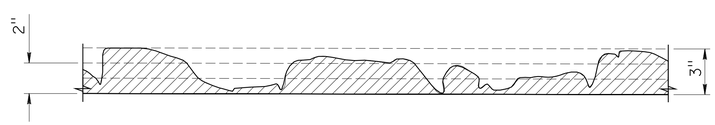

SECTION B-B

NO SCALE

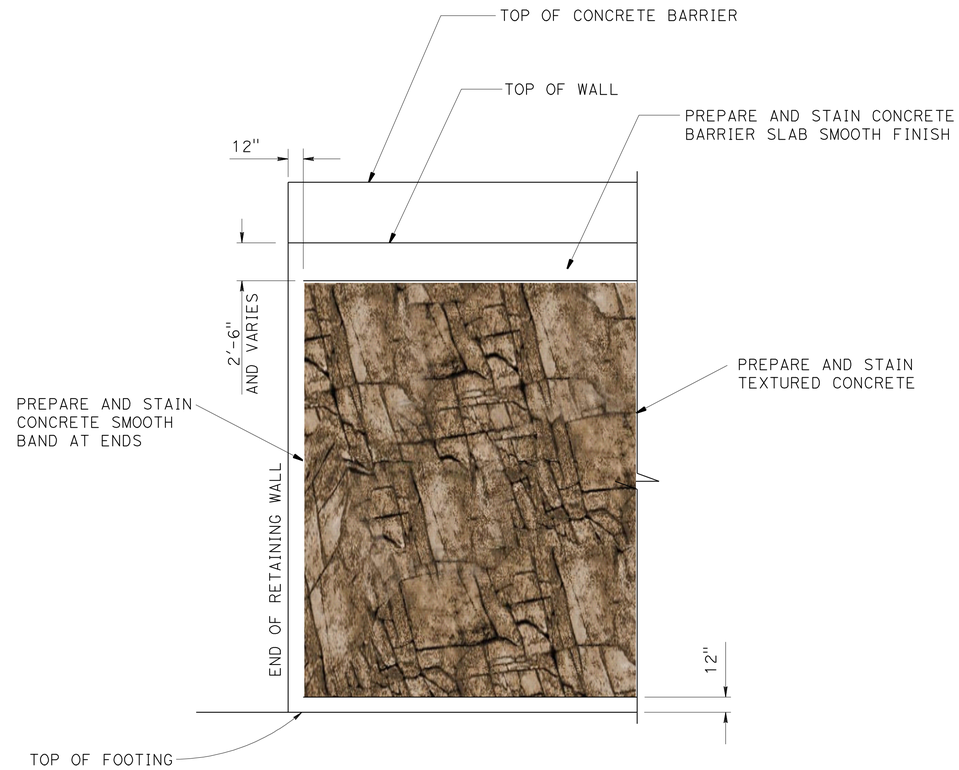

WALL TEXTURE AT TOP AND ENDS OF RETAINING WALL

NO SCALE

NOTE:
THE CONTRACTOR SHALL VERIFY ALL CONTROLLING FIELD DIMENSIONS BEFORE ORDERING OR FABRICATING ANY MATERIAL.

NOTES:

1. ARCHITECTURAL TEXTURE VARIES FROM 0" TO 3" MAXIMUM THICKNESS.

	BY	CHECKED
DESIGN	VATHANA CHY	RONALD WONG
DETAILS	VATHANA CHY	RONALD WONG
QUANTITIES	EDWARD MERCADO	HTOON WIN

STATE OF CALIFORNIA
DEPARTMENT OF TRANSPORTATION

DIVISION OF ENGINEERING SERVICES
STRUCTURE DESIGN
DESIGN BRANCH 19

BRIDGE NO. 55E0121
POST MILE 9.6

RETAINING WALL NO. 96
ARCHITECTURAL TEXTURE DETAILS

STRUCTURES DESIGN DETAIL SHEET (ENGLISH) (REV. 09-01-10)

ORIGINAL SCALE IN INCHES FOR REDUCED PLANS 0 1 2 3

UNIT: 3621
PROJECT NUMBER & PHASE: 1200000102 1 CONTRACT NO.: 0E3101

DISREGARD PRINTS BEARING EARLIER REVISION DATES → 01-05-11 11-10-11 11-15-11

SHEET 5 OF 10

FILE => RW96-u-miscdt_01.dgn

USERNAME => s121614 DATE PLOTTED => 15-APR-2012 TIME PLOTTED => 09:54

DIST	COUNTY	ROUTE	POST MILES TOTAL PROJECT	SHEET No.	TOTAL SHEETS
12	Ora	5,74	9.3/10.0, 0.0/0.2	482	515

GEOTECHNICAL PROFESSIONAL — DATE 07/2011

4-9-12
PLANS APPROVAL DATE

REGISTERED PROFESSIONAL ENGINEER — MICHAEL G. SMITH — No. 2229 — Exp. 3-31-2012 — GEOTECHNICAL — STATE OF CALIFORNIA

The State of California or its officers or agents shall not be responsible for the accuracy or completeness of electronic copies of this plan sheet.

This LOTB sheet was prepared in accordance with the Caltrans Soil & Rock Logging, Classification, & Presentation Manual (2010 Edition).

BENCH MARK

SUHV-20021

FND PK/TIN
80.10 Ft Lt ℄ Route 5
Sta 517+51.39
Elev= 117.01'
NAVD88

SUHV-20027

FND PK/NAIL
136.66 Ft Rt ℄ Route 5
Sta 519+18.34
Elev= 144.30'
NAVD88

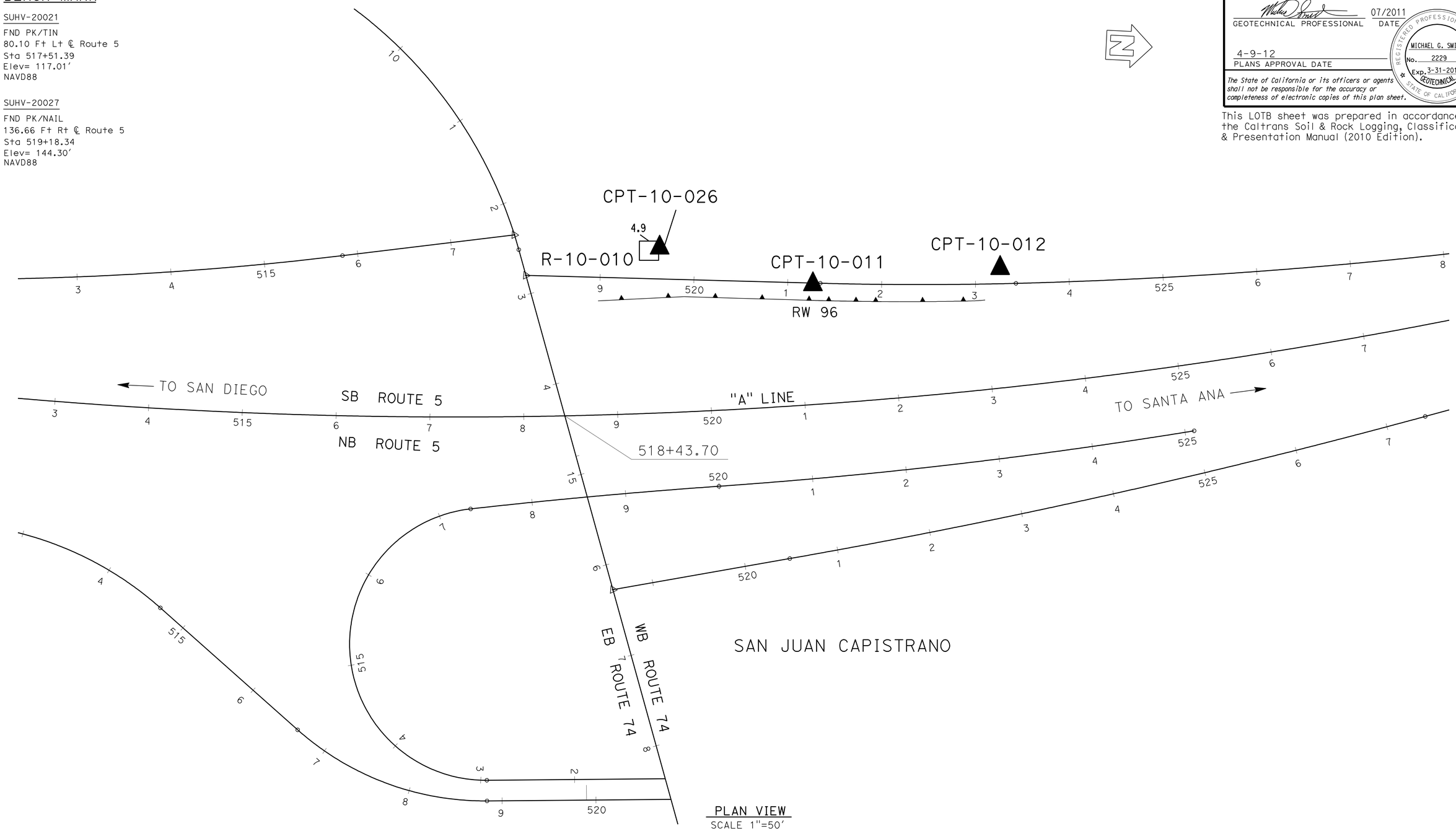

PLAN VIEW
SCALE 1"=50'

ENGINEERING SERVICES	MATERIALS AND GEOTECHNICAL SERVICES	STATE OF CALIFORNIA DEPARTMENT OF TRANSPORTATION	DIVISION OF ENGINEERING SERVICES STRUCTURE DESIGN DESIGN BRANCH 19	BRIDGE NO. 55E0121 POST MILE 9.6	RETAINING WALL NO. 96 LOG OF TEST BORINGS 1 OF 5
FUNCTIONAL SUPERVISOR NAME: M. SMITH	DRAWN BY: P.QUACH CHECKED BY: P.YERRA	FIELD INVESTIGATION BY: EJ.JEON			

OGS CIVIL LOG OF TEST BORINGS SHEET

ORIGINAL SCALE IN INCHES FOR REDUCED PLANS 0 1 2 3

UNIT: 3658
PROJECT NUMBER & PHASE: 1200000102 & 4 CONTRACT NO.: 12-0E3104

DISREGARD PRINTS BEARING EARLIER REVISION DATES → REVISION DATES 06/17/11

SHEET 6 OF 10

FILE => RW96-z-lotb_01.dgn

USERNAME => s126614 DATE PLOTTED => 15-APR-2012 TIME PLOTTED => 03:55

DIST	COUNTY	ROUTE	POST MILES TOTAL PROJECT	SHEET No.	TOTAL SHEETS
12	Ora	5,74	9.3/10.0, 0.0/0.2	483	515

GEOTECHNICAL PROFESSIONAL — DATE 07/2011

4-9-12
PLANS APPROVAL DATE

REGISTERED PROFESSIONAL ENGINEER — MICHAEL G. SMITH No. 2229 Exp. 3-31-2012 GEOTECHNICAL — STATE OF CALIFORNIA

The State of California or its officers or agents shall not be responsible for the accuracy or completeness of electronic copies of this plan sheet.

This LOTB sheet was prepared in accordance with the Caltrans Soil & Rock Logging, Classification, & Presentation Manual (2010 Edition).

FOR PLAN VIEW, SEE
"LOG OF TEST BORINGS" 1 OF 5

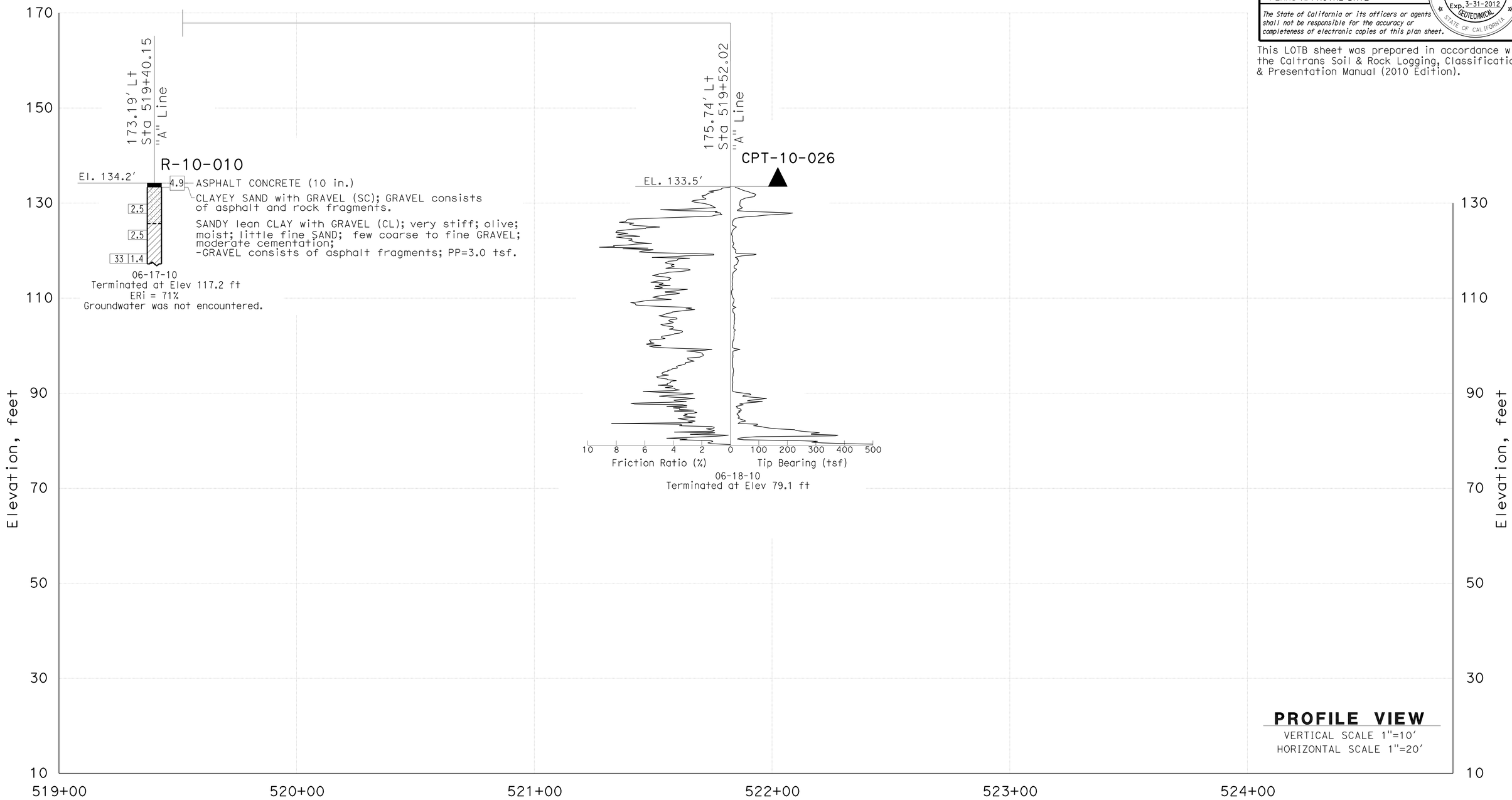

ENGINEERING SERVICES	MATERIALS AND GEOTECHNICAL SERVICES	STATE OF CALIFORNIA DEPARTMENT OF TRANSPORTATION	DIVISION OF ENGINEERING SERVICES STRUCTURE DESIGN DESIGN BRANCH 19	BRIDGE NO. 55E0121 POST MILE 9.6	RETAINING WALL NO. 96
FUNCTIONAL SUPERVISOR NAME: M. SMITH	DRAWN BY: P.QUACH CHECKED BY: P.YERRA	FIELD INVESTIGATION BY: EJ.JEON			LOG OF TEST BORINGS 2 OF 5

OGS CIVIL LOG OF TEST BORINGS SHEET

ORIGINAL SCALE IN INCHES FOR REDUCED PLANS 0 1 2 3

UNIT: 3658
PROJECT NUMBER & PHASE: 1200000102 & 4 CONTRACT NO.: 12-0E3104

DISREGARD PRINTS BEARING EARLIER REVISION DATES

REVISION DATES 06/17/11 — SHEET 7 OF 10

FILE => RW96-z-lotb_02.dgn

USERNAME => s121614 DATE PLOTTED => 15-APR-2012 TIME PLOTTED => 09:55

DIST	COUNTY	ROUTE	POST MILES TOTAL PROJECT	SHEET No.	TOTAL SHEETS
12	Ora	5,74	9.3/10.0, 0.0/0.2	484	515

GEOTECHNICAL PROFESSIONAL — DATE 07/2011

4-9-12
PLANS APPROVAL DATE

REGISTERED PROFESSIONAL ENGINEER — MICHAEL G. SMITH — No. 2229 — Exp. 3-31-2012 — GEOTECHNICAL — STATE OF CALIFORNIA

The State of California or its officers or agents shall not be responsible for the accuracy or completeness of electronic copies of this plan sheet.

This LOTB sheet was prepared in accordance with the Caltrans Soil & Rock Logging, Classification, & Presentation Manual (2010 Edition).

FOR PLAN VIEW, SEE
"LOG OF TEST BORINGS" 1 OF 5

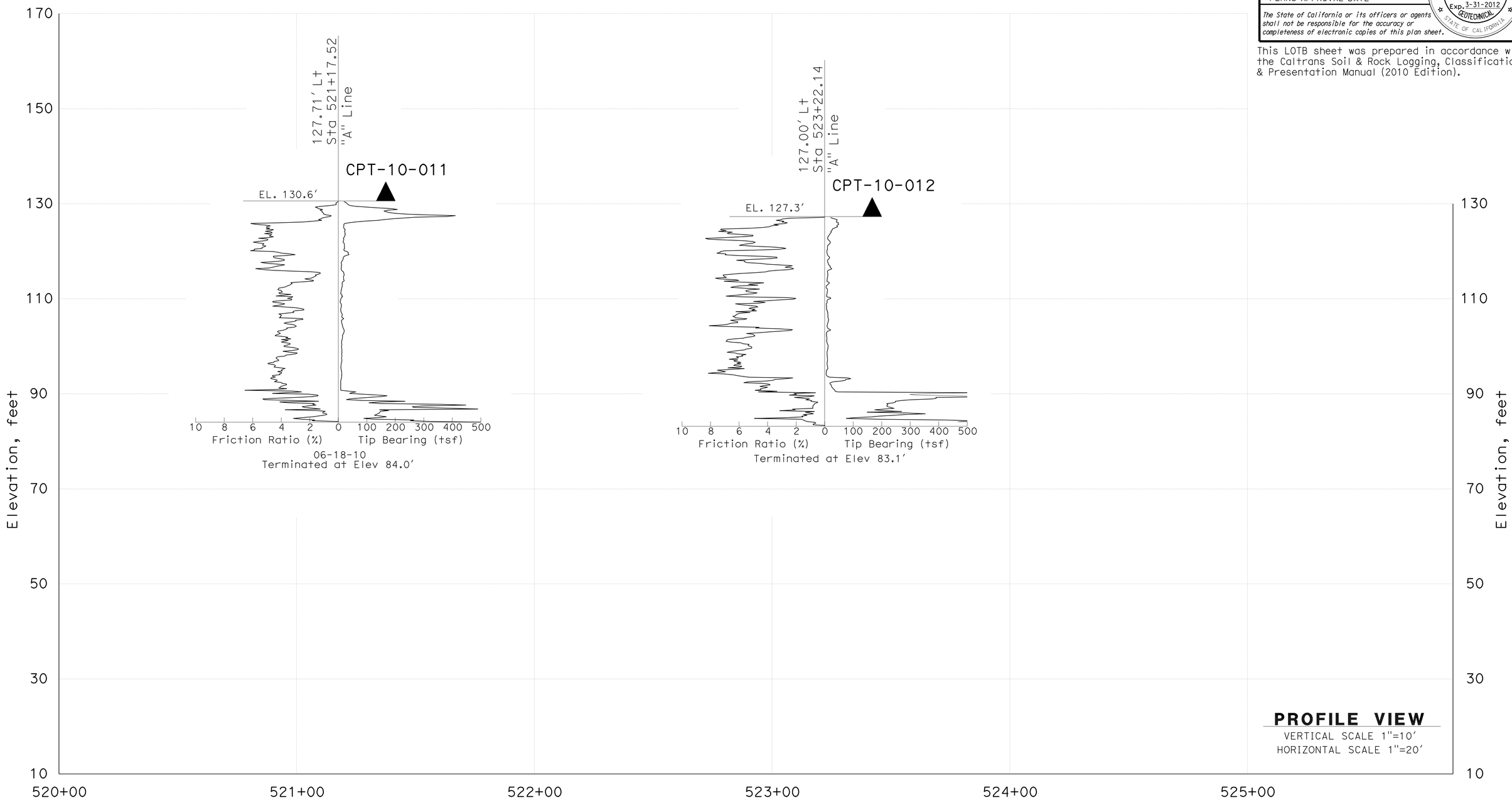

PROFILE VIEW
VERTICAL SCALE 1"=10'
HORIZONTAL SCALE 1"=20'

ENGINEERING SERVICES		MATERIALS AND GEOTECHNICAL SERVICES	STATE OF CALIFORNIA DEPARTMENT OF TRANSPORTATION	DIVISION OF ENGINEERING SERVICES STRUCTURE DESIGN DESIGN BRANCH 19	BRIDGE NO. 55E0121 POST MILE 9.6	RETAINING WALL NO. 96
FUNCTIONAL SUPERVISOR	DRAWN BY: P.QUACH	FIELD INVESTIGATION BY:				LOG OF TEST BORINGS 3 OF 5
NAME: M. SMITH	CHECKED BY: P.YERRA	EJ.JEON				

OGS CIVIL LOG OF TEST BORINGS SHEET — ORIGINAL SCALE IN INCHES FOR REDUCED PLANS 0 1 2 3 — UNIT: 3658 — PROJECT NUMBER & PHASE: 1200000102 & 4 — CONTRACT NO.: 12-0E3104 — DISREGARD PRINTS BEARING EARLIER REVISION DATES → REVISION DATES 06/17/11 — SHEET 8 OF 10

FILE => RW96-z-lotb_03.dgn

USERNAME => s121614 DATE PLOTTED => 15-APR-2012 TIME PLOTTED => 09:55

DIST	COUNTY	ROUTE	POST MILES TOTAL PROJECT	SHEET No.	TOTAL SHEETS
12	Ora	5,74	9.3/10.0, 0.0/0.2	485	515

GEOTECHNICAL PROFESSIONAL — DATE 07/2011

4-9-12
PLANS APPROVAL DATE

REGISTERED PROFESSIONAL ENGINEER — MICHAEL G. SMITH No. 2229 Exp. 3-31-2012 GEOTECHNICAL — STATE OF CALIFORNIA

The State of California or its officers or agents shall not be responsible for the accuracy or completeness of electronic copies of this plan sheet.

This LOTB sheet was prepared in accordance with the Caltrans Soil & Rock Logging, Classification, & Presentation Manual (2010 Edition).

CEMENTATION

Description	Criteria
Weak	Crumbles or breaks with handling or little finger pressure.
Moderate	Crumbles or breaks with considerable finger pressure.
Strong	Will not crumble or break with finger pressure.

BOREHOLE IDENTIFICATION

Symbol	Hole Type	Description
Size	A	Auger Boring (hollow or solid stem bucket)
Size	R RW RC P	Rotary drilled boring (conventional) Rotary drilled with self-casing wire-line Rotary core with continuously-sampled, self-casing wire-line Rotary percussion boring (air)
Size	R	Rotary drilled diamond core
Size	HD HA	Hand driven (1-inch soil tube) Hand Auger
●	D	Dynamic Cone Penetration Boring
▲	CPT	Cone Penetration Test (ASTM D 5778)
⬚	O	Other (note on LOTB)

Note: Size in inches.

CONSISTENCY OF COHESIVE SOILS

Description	Shear Strength (tsf)	Pocket Penetrometer Measurement, PP, (tsf)	Torvane Measurement, TV, (tsf)	Vane Shear Measurement, VS, (tsf)
Very Soft	Less than 0.12	Less than 0.25	Less than 0.12	Less than 0.12
Soft	0.12 - 0.25	0.25 - 0.5	0.12 - 0.25	0.12 - 0.25
Medium Stiff	0.25 - 0.5	0.5 - 1	0.25 - 0.5	0.25 - 0.5
Stiff	0.5 - 1	1 - 2	0.5 - 1	0.5 - 1
Very Stiff	1 - 2	2 - 4	1 - 2	1 - 2
Hard	Greater than 2	Greater than 4	Greater than 2	Greater than 2

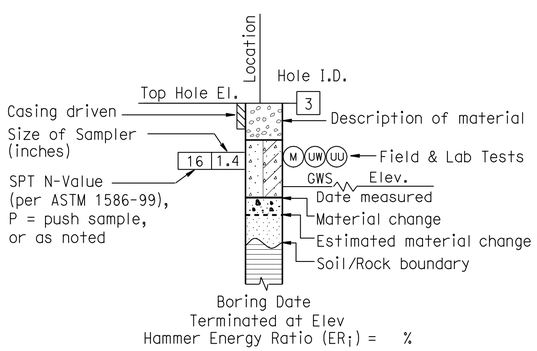

ROTARY BORING

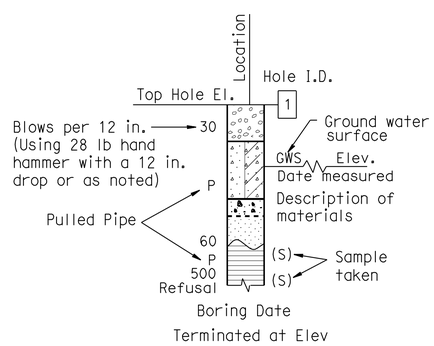

HAND BORING

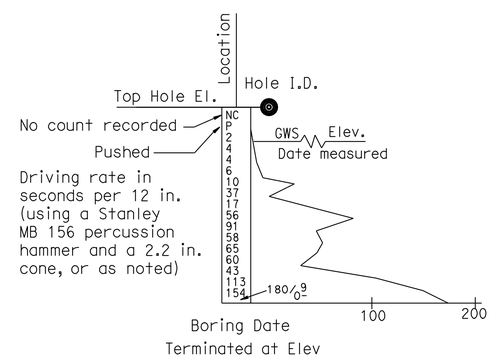

DYNAMIC CONE PENETRATION BORING

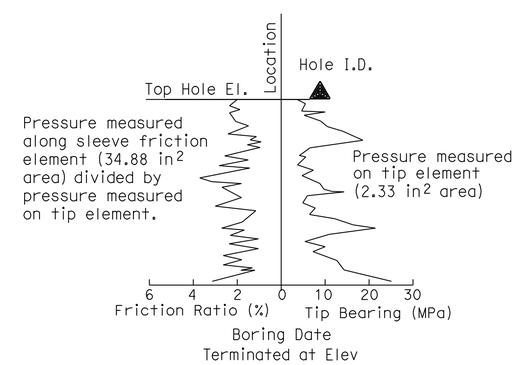

CONE PENETRATION TEST (CPT) BORING

ENGINEERING SERVICES	MATERIALS AND GEOTECHNICAL SERVICES	STATE OF CALIFORNIA DEPARTMENT OF TRANSPORTATION	DIVISION OF ENGINEERING SERVICES STRUCTURE DESIGN DESIGN BRANCH 19	BRIDGE NO. 55E0121 POST MILE 9.6	RETAINING WALL NO. 96
FUNCTIONAL SUPERVISOR	DRAWN BY: P.QUACH	FIELD INVESTIGATION BY:			LOG OF TEST BORINGS 4 OF 5
NAME: M. SMITH	CHECKED BY: P.YERRA	EJ.JEON			

OGS CIVIL LOG OF TEST BORINGS SHEET — ORIGINAL SCALE IN INCHES FOR REDUCED PLANS 0 1 2 3

UNIT: 3658
PROJECT NUMBER & PHASE: 1200000102 & 4 CONTRACT NO.: 12-0E3104

DISREGARD PRINTS BEARING EARLIER REVISION DATES → REVISION DATES 06/17/11 — SHEET 9 OF 10

FILE => RW96-z-lotb_04.dgn

USERNAME => s121614 DATE PLOTTED => 15-APR-2012 TIME PLOTTED => 09:55

DIST	COUNTY	ROUTE	POST MILES TOTAL PROJECT	SHEET No.	TOTAL SHEETS
12	Ora	5,74	9.3/10.0, 0.0/0.2	486	515

GEOTECHNICAL PROFESSIONAL — DATE 07/2011

4-9-12
PLANS APPROVAL DATE

REGISTERED PROFESSIONAL ENGINEER — MICHAEL G. SMITH No. 2229 Exp. 3-31-2012 GEOTECHNICAL — STATE OF CALIFORNIA

The State of California or its officers or agents shall not be responsible for the accuracy or completeness of electronic copies of this plan sheet.

This LOTB sheet was prepared in accordance with the Caltrans Soil & Rock Logging, Classification, & Presentation Manual (2010 Edition).

GROUP SYMBOLS AND NAMES

Graphic/Symbol	Group Names	Graphic/Symbol	Group Names
GW	Well-graded GRAVEL Well-graded GRAVEL with SAND	CL	Lean CLAY Lean CLAY with SAND Lean CLAY with GRAVEL SANDY lean CLAY SANDY lean CLAY with GRAVEL GRAVELLY lean CLAY GRAVELLY lean CLAY with SAND
GP	Poorly-graded GRAVEL Poorly-graded GRAVEL with SAND		
GW-GM	Well-graded GRAVEL with SILT Well-graded GRAVEL with SILT and SAND	CL-ML	SILTY CLAY SILTY CLAY with SAND SILTY CLAY with GRAVEL SANDY SILTY CLAY SANDY SILTY CLAY with GRAVEL GRAVELLY SILTY CLAY GRAVELLY SILTY CLAY with SAND
GW-GC	Well-graded GRAVEL with CLAY (or SILTY CLAY) Well-graded GRAVEL with CLAY and SAND (or SILTY CLAY and SAND)		
GP-GM	Poorly-graded GRAVEL with SILT Poorly-graded GRAVEL with SILT and SAND	ML	SILT SILT with SAND SILT with GRAVEL SANDY SILT SANDY SILT with GRAVEL GRAVELLY SILT GRAVELLY SILT with SAND
GP-GC	Poorly-graded GRAVEL with CLAY (or SILTY CLAY) Poorly-graded GRAVEL with CLAY and SAND (or SILTY CLAY and SAND)		
GM	SILTY GRAVEL SILTY GRAVEL with SAND	OL	ORGANIC lean CLAY ORGANIC lean CLAY with SAND ORGANIC lean CLAY with GRAVEL SANDY ORGANIC lean CLAY SANDY ORGANIC lean CLAY with GRAVEL GRAVELLY ORGANIC lean CLAY GRAVELLY ORGANIC lean CLAY with SAND
GC	CLAYEY GRAVEL CLAYEY GRAVEL with SAND		
GC-GM	SILTY, CLAYEY GRAVEL SILTY, CLAYEY GRAVEL with SAND	OL	ORGANIC SILT ORGANIC SILT with SAND ORGANIC SILT with GRAVEL SANDY ORGANIC SILT SANDY ORGANIC SILT with GRAVEL GRAVELLY ORGANIC SILT GRAVELLY ORGANIC SILT with SAND
SW	Well-graded SAND Well-graded SAND with GRAVEL		
SP	Poorly-graded SAND Poorly-graded SAND with GRAVEL	CH	Fat CLAY Fat CLAY with SAND Fat CLAY with GRAVEL SANDY fat CLAY SANDY fat CLAY with GRAVEL GRAVELLY fat CLAY GRAVELLY fat CLAY with SAND
SW-SM	Well-graded SAND with SILT Well-graded SAND with SILT and GRAVEL		
SW-SC	Well-graded SAND with CLAY (or SILTY CLAY) Well-graded SAND with CLAY and GRAVEL (or SILTY CLAY and GRAVEL)	MH	Elastic SILT Elastic SILT with SAND Elastic SILT with GRAVEL SANDY elastic SILT SANDY elastic SILT with GRAVEL GRAVELLY elastic SILT GRAVELLY elastic SILT with SAND
SP-SM	Poorly-graded SAND with SILT Poorly-graded SAND with SILT and GRAVEL		
SP-SC	Poorly-graded SAND with CLAY (or SILTY CLAY) Poorly-graded SAND with CLAY and GRAVEL (or SILTY CLAY and GRAVEL)	OH	ORGANIC fat CLAY ORGANIC fat CLAY with SAND ORGANIC fat CLAY with GRAVEL SANDY ORGANIC fat CLAY SANDY ORGANIC fat CLAY with GRAVEL GRAVELLY ORGANIC fat CLAY GRAVELLY ORGANIC fat CLAY with SAND
SM	SILTY SAND SILTY SAND with GRAVEL		
SC	CLAYEY SAND CLAYEY SAND with GRAVEL	OH	ORGANIC elastic SILT ORGANIC elastic SILT with SAND ORGANIC elastic SILT with GRAVEL SANDY ORGANIC elastic SILT SANDY ORGANIC elastic SILT with GRAVEL GRAVELLY ORGANIC elastic SILT GRAVELLY ORGANIC elastic SILT with SAND
SC-SM	SILTY, CLAYEY SAND SILTY, CLAYEY SAND with GRAVEL		
PT	PEAT	OL/OH	ORGANIC SOIL ORGANIC SOIL with SAND ORGANIC SOIL with GRAVEL SANDY ORGANIC SOIL SANDY ORGANIC SOIL with GRAVEL GRAVELLY ORGANIC SOIL GRAVELLY ORGANIC SOIL with SAND
	COBBLES COBBLES and BOULDERS BOULDERS		

FIELD AND LABORATORY TESTING

- (C) Consolidation (ASTM D 2435)
- (CL) Collapse Potential (ASTM D 5333)
- (CP) Compaction Curve (CTM 216)
- (CR) Corrosivity Testing (CTM 643, CTM 422, CTM 417)
- (CU) Consolidated Undrained Triaxial (ASTM D 4767)
- (DS) Direct Shear (ASTM D 3080)
- (EI) Expansion Index (ASTM D 4829)
- (M) Moisture Content (ASTM D 2216)
- (OC) Organic Content-% (ASTM D 2974)
- (P) Permeability (CTM 220)
- (PA) Particle Size Analysis (ASTM D 422)
- (PI) Plasticity Index (AASHTO T 90) Liquid Limit (AASHTO T 89)
- (PL) Point Load Index (ASTM D 5731)
- (PM) Pressure Meter
- (R) R-Value (CTM 301)
- (SE) Sand Equivalent (CTM 217)
- (SG) Specific Gravity (AASHTO T 100)
- (SL) Shrinkage Limit (ASTM D 427)
- (SW) Swell Potential (ASTM D 4546)
- (UC) Unconfined Compression-Soil (ASTM D 2166) Unconfined Compression-Rock (ASTM D 2938)
- (UU) Unconsolidated Undrained Triaxial (ASTM D 2850)
- (UW) Unit Weight (ASTM D 4767)

APPARENT DENSITY OF COHESIONLESS SOILS

Description	SPT N_{60} (Blows / 12 in.)
Very Loose	0 - 5
Loose	5 - 10
Medium Dense	10 - 30
Dense	30 - 50
Very Dense	Greater than 50

MOISTURE

Description	Criteria
Dry	No discernable moisture
Moist	Moisture present, but no free water
Wet	Visible free water

PERCENT OR PROPORTION OF SOILS

Description	Criteria
Trace	Particles are present but estimated to be less than 5%
Few	5% - 10%
Little	15% - 25%
Some	30% - 45%
Mostly	50% - 100%

PARTICLE SIZE

Description		Size (in.)
Boulder		Greater than 12
Cobble		3 - 12
Gravel	Coarse	3/4 - 3
	Fine	1/5 - 3/4
Sand	Coarse	1/16 - 1/5
	Medium	1/64 - 1/16
	Fine	1/300 - 1/64
Silt and Clay		Less than 1/300

ENGINEERING SERVICES — MATERIALS AND GEOTECHNICAL SERVICES

FUNCTIONAL SUPERVISOR
NAME: M. SMITH
DRAWN BY: P.QUACH
CHECKED BY: P.YERRA
FIELD INVESTIGATION BY: EJ.JEON

STATE OF CALIFORNIA DEPARTMENT OF TRANSPORTATION

DIVISION OF ENGINEERING SERVICES STRUCTURE DESIGN — DESIGN BRANCH 19

BRIDGE NO. 55E0121
POST MILE 9.6

RETAINING WALL NO. 96
LOG OF TEST BORINGS 5 OF 5

OGS CIVIL LOG OF TEST BORINGS SHEET

ORIGINAL SCALE IN INCHES FOR REDUCED PLANS 0 1 2 3

UNIT: 3658
PROJECT NUMBER & PHASE: 1200000102 & 4 CONTRACT NO.: 12-0E3104

DISREGARD PRINTS BEARING EARLIER REVISION DATES — REVISION DATES 06/17/11

SHEET 10 OF 10

FILE => RW96-z-lotb_05.dgn

USERNAME => s121614 DATE PLOTTED => 15-APR-2012 TIME PLOTTED => 09:55

DIST	COUNTY	ROUTE	POST MILES TOTAL PROJECT	SHEET No.	TOTAL SHEETS
12	Ora	5,74	9.3/10.0, 0.0/0.2	487	515

Charles Lomicka 11-15-11
REGISTERED CIVIL ENGINEER DATE

4-9-12
PLANS APPROVAL DATE

REGISTERED PROFESSIONAL ENGINEER CHARLES LOMICKA No. C 71172 Exp. 6/30/13 CIVIL STATE OF CALIFORNIA

The State of California or its officers or agents shall not be responsible for the accuracy or completeness of electronic copies of this plan sheet.

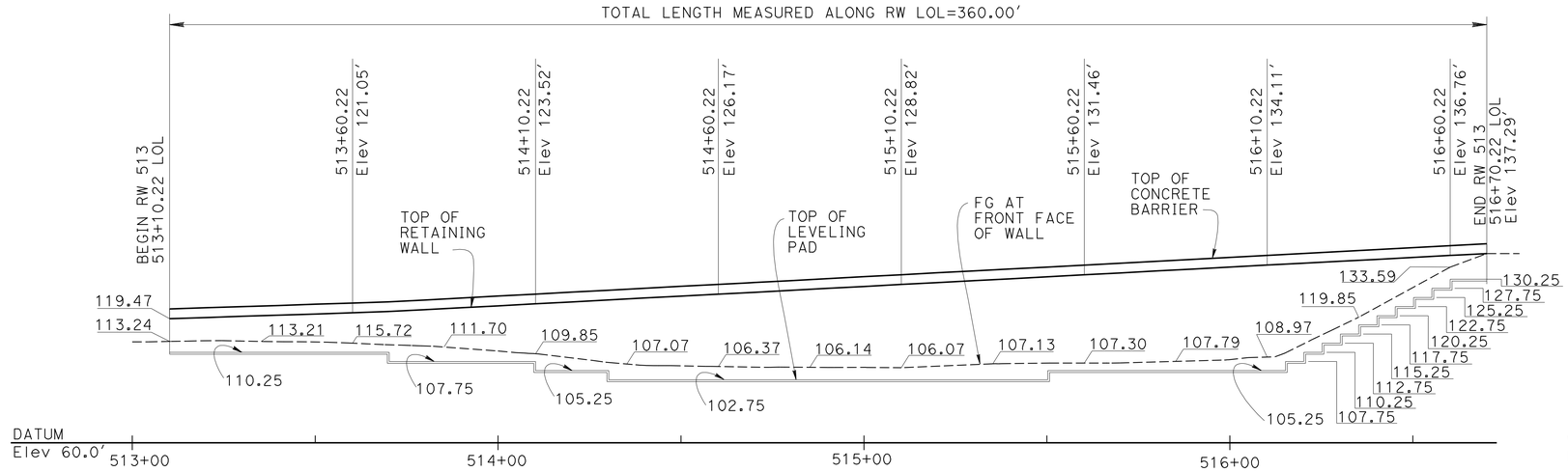

DEVELOPED ELEVATION

1" = 20'

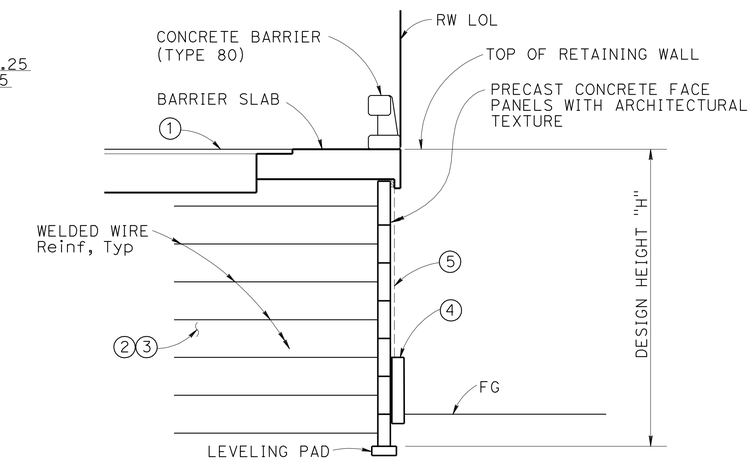

TYPICAL SECTION

NO SCALE

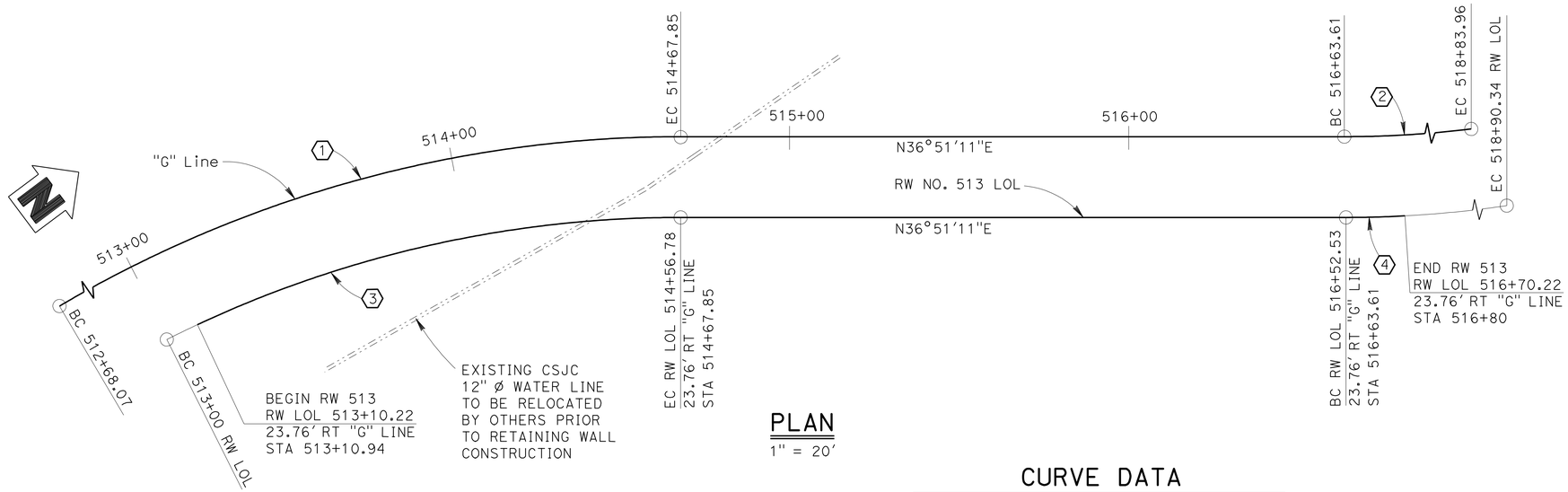

PLAN

1" = 20'

CURVE DATA

NO.	R	Δ	L	T
1	360.00	31°47'50"	199.79	102.54
2	300.00	42°05'07"	220.36	115.42
3	336.24	26°42'53"	156.78	79.84
4	323.76	42°05'07"	237.81	124.56

QUANTITIES

RETAINING STRUCTURE	6,625 SQFT
STRUCTURAL CONCRETE, BARRIER SLAB	177 CY
ARCHITECTURAL TEXTURE (ROCK STRATA)	6,315 SQFT
PREPARE AND STAIN CONCRETE	7,225 SQFT
CLASS 1 PERMEABLE MATERIAL (BLANKET)	770 CY
PREFABRICATED VERTICAL DRAIN	15,925 LF
CONCRETE BARRIER (TYPE 60D MODIFIED)	188 LF
CONCRETE BARRIER (TYPE 80)	360 LF

NOTES:

1. Roadway Section, see Road Plans
2. Lightweight Fill (Cellular Concrete)
   RW LOL Sta 513+70.22 to Sta 516+50.22
3. MSE Structure Backfill
   RW LOL Sta 513+10.22 to Sta 513+70.22
   RW LOL Sta 516+50.22 to Sta 516+70.22
4. Concrete Barrier Type 60D (MOD)
   RW LOL Sta 514+26.00 to Sta 516+14.00
5. Architectural texture shall be prepared and stained.

NOTE:
THE CONTRACTOR SHALL VERIFY ALL CONTROLLING FIELD DIMENSIONS BEFORE ORDERING OR FABRICATING ANY MATERIAL.

MINA PEZESHPOUR
DESIGN ENGINEER

	BY	CHECKED		BY	CHECKED
DESIGN	CHARLES LOMICKA	MINA PEZESHPOUR	LOAD & RESISTANCE FACTOR DESIGN		
DETAILS	HECTOR INIGUEZ - H.M.	MINA PEZESHPOUR	LAYOUT	MAMUNUR RAHMAN	CHARLES LOMICKA
QUANTITIES	CHARLES LOMICKA	HTOON WIN	SPECIFICATIONS	VAIKUNTHAN RENGANATHAN	PLANS AND SPECS COMPARED VAIKUNTHAN RENGANATHAN

ORIGINAL SCALE IN INCHES FOR REDUCED PLANS 0 1 2 3

STATE OF CALIFORNIA
DEPARTMENT OF TRANSPORTATION

DIVISION OF ENGINEERING SERVICES
STRUCTURE DESIGN
DESIGN BRANCH 19

BRIDGE NO. 55E0118
POST MILE 9.5

RETAINING WALL NO. 513
GENERAL PLAN

UNIT: 3621
PROJECT NUMBER & PHASE: 1200000102 1
CONTRACT NO.: 0E3101

DISREGARD PRINTS BEARING EARLIER REVISION DATES
REVISION DATES 01-26-11 11-15-11 11-09-11
SHEET 1 OF 19

FILE => RW513-a-gp01.dgn

USERNAME => s124496 DATE PLOTTED => 18-APR-2012 TIME PLOTTED => 05:49

STRUCTURES DESIGN GENERAL PLAN SHEET (ENGLISH) (REV.09-01-10)

DIST	COUNTY	ROUTE	POST MILES TOTAL PROJECT	SHEET No.	TOTAL SHEETS
12	Ora	5,74	9.3/10.0, 0.0/0.2	488	515

Charles Lomicka 11-15-11
REGISTERED CIVIL ENGINEER DATE

4-9-12
PLANS APPROVAL DATE

REGISTERED PROFESSIONAL ENGINEER CHARLES LOMICKA No. C 71172 Exp. 6/30/13 CIVIL STATE OF CALIFORNIA

The State of California or its officers or agents shall not be responsible for the accuracy or completeness of electronic copies of this plan sheet.

LIGHTWEIGHT FILL (Cellular Concrete) Notes:

1. Lightweight Cellular Concrete lifts shall not exceed 2 feet 6 inches in depth. The last lift of the top cellular concrete layer shall not be less than 2 feet.
2. Intermediate lifts of cellular concrete layers shall not be placed less than 24 hours after the placement of the previous lift
3. Cold joints between lifts of lightweight Cellular Concrete shall be located at the mid point between welded wire mats.
4. Longitudinal construction joints are not allowed along the top cellular concrete layer.

STANDARD PLANS DATED MAY 2006

RSP B11-60 CONCRETE BARRIER TYPE 80 (1 OF 2)
B11-61 CONCRETE BARRIER TYPE 80 (2 OF 2)
D102 UNDERDRAINS

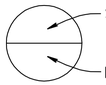

GENERAL NOTES
LOAD & RESISTANCE FACTOR DESIGN

DESIGN: AASHTO LFRD Bridge Design Specifications, 4th Edition with California Amendments

Surcharge = 240 lb/ft^2

RAIL LOAD: 54 kip maximum traffic impact loading evenly distributed over 10 feet at the top of the barrier and 45 degree distribution down and outward.

SOIL PARAMETERS:

Internal design ϕ = 34°, γ = 120 lb/ft^3

External design ϕ(Retained Backfill) = 30°, γ = 120 lb/ft^3

ϕ(Foundation) = 30°

Seismic Coefficient: kh = 0.20g

LIGHTWEIGHT FILL (CELLULAR CONCRETE):

CLASS II Parameters:

γ = 30 lb/ft^3

f'c = 60 psi (Minimum compressive Strength @ 28 days)

CLASS IV Parameters:

γ = 42 lb/ft^3

f'c = 120 psi (Minimum compressive Strength @ 28 days)

f'ci = 10 psi (Minimum initial compressive strength prior to next lift)

PRECAST CONCRETE PANELS:

f'c = 4,000 psi (Minimum compressive strength at 28 days)

fy = 60,000 psi (Yield strength of reinforcement)

WELDED WIRE REINFORCEMENT:

Welded wire mats: fy = 65,000 psi (Yield strength)

Coupler: fy = 36,000 psi (Yield strength)

Corrosion rate = 1.1 mils/year

REINFORCED CONCRETE:

f'c = 3,600 psi, except as noted
(Minimum compressive strength at 28 days)

fy = 60,000 psi (Yield strength of reinforcement)

INDEX TO PLANS

NO.	SHEET NAME
1.	GENERAL PLAN
2.	INDEX TO PLANS
3.	FOUNDATION PLAN
4.	WALL LAYOUT NO. 1
5.	WALL LAYOUT NO. 2
6.	TYPICAL SECTION
7.	RETAINING WALL DETAILS NO. 1
8.	RETAINING WALL DETAILS NO. 2
9.	RETAINING WALL DETAILS NO. 3
10.	RETAINING WALL DETAILS NO. 4
11.	RETAINING WALL DETAILS NO. 5
12.	ARCHITECTURAL TEXTURE DETAILS NO. 1
13.	ARCHITECTURAL TEXTURE DETAILS NO. 2
14.	ARCHITECTURAL TEXTURE DETAILS NO. 3
15.	LOG OF TEST BORINGS 1 OF 5
16.	LOG OF TEST BORINGS 2 OF 5
17.	LOG OF TEST BORINGS 3 OF 5
18.	LOG OF TEST BORINGS 4 OF 5
19.	LOG OF TEST BORINGS 5 OF 5

DIST	COUNTY	ROUTE	POST MILES TOTAL PROJECT	SHEET No.	TOTAL SHEETS
12	Ora	5,74	9.3/10.0, 0.0/0.2	489	515

Charles Lomicka 11-15-11
REGISTERED CIVIL ENGINEER DATE

4-9-12
PLANS APPROVAL DATE

REGISTERED PROFESSIONAL ENGINEER
CHARLES LOMICKA
No. C 71172
Exp. 6/30/13
CIVIL
STATE OF CALIFORNIA

The State of California or its officers or agents shall not be responsible for the accuracy or completeness of electronic copies of this plan sheet.

CURVE DATA				
No.	R	Δ	T	L
A	360.00	31°47′47"	102.54	199.79
B	300.00	42°05′07"	115.42	220.36
C	336.24	26°42′53"	79.84	156.78
D	323.76	42°05′07"	124.56	237.81

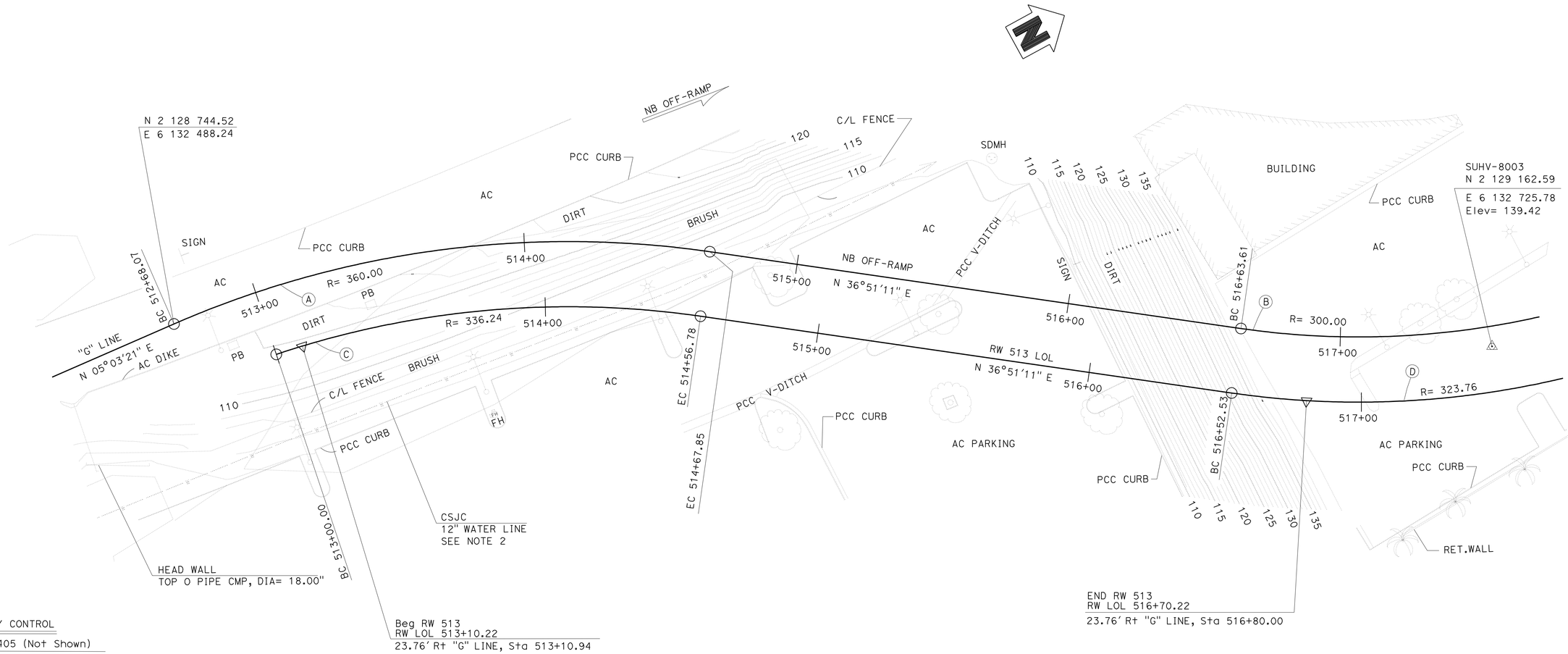

SURVEY CONTROL

SUHV-405 (Not Shown)

FND PK/TIN
83.46 Ft Rt ℄ Route 5
Sta 510+67.02
N 2 128 562.45
E 6 132 428.46
Elev= 110.11

SUHV-8003

FND PK/TIN
389.92 Ft Rt ℄ Route 5
Sta 516+38.35
N 2 129 162.59
E 6 132 725.78
Elev= 139.42

NOTES:

1. Underground utilities as shown are approximate
2. Water line to be relocated by others prior to Retaining Wall construction.

PRELIMINARY INVESTIGATION SECTION					
SCALE 1"=20′	VERT.DATUM NAVD88	PHOTOGRAMMETRY AS OF: X			
	HORZ.DATUM NAD83 (1991.35)	SURVEYED	BY DISTRICT 12	CHECKED	BY T.PHUNG 3/2010
ALIGNMENT TIES DIST.TRAVERSE SHEETS		DRAFTED	BY S. ABASSY 02/2011	CHECKED	BY S. ALIVIO 02/2011

DESIGN	BY CHARLES LOMICKA	CHECKED MINA PEZESHPOUR
DETAILS	BY HENGAMEH MAHBOOBI	CHECKED MINA PEZESHPOUR
QUANTITIES	BY CHARLES LOMICKA	CHECKED HTOON WIN

STATE OF CALIFORNIA
DEPARTMENT OF TRANSPORTATION

DIVISION OF ENGINEERING SERVICES
STRUCTURE DESIGN
DESIGN BRANCH 19

BRIDGE NO. 55E0118
POST MILE 9.5

RETAINING WALL NO. 513
FOUNDATION PLAN

STRUCTURES FOUNDATION PLAN SHEET (ENGLISH) (REV. 09-01-10)

ORIGINAL SCALE IN INCHES FOR REDUCED PLANS 0 1 2 3

UNIT: 3621
PROJECT NUMBER & PHASE: 1200000102 1 CONTRACT NO.: 0E3101

DISREGARD PRINTS BEARING EARLIER REVISION DATES

REVISION DATES: 02-17-11 11-10-11 11-15-11

SHEET 3 OF 19

FILE => RW513-e-fdp101.dgn

DIST	COUNTY	ROUTE	POST MILES TOTAL PROJECT	SHEET No.	TOTAL SHEETS
12	Ora	5,74	9.3/10.0, 0.0/0.2	490	515

Charles Lomicka 11-15-11
REGISTERED CIVIL ENGINEER DATE

4-9-12
PLANS APPROVAL DATE

REGISTERED PROFESSIONAL ENGINEER CHARLES LOMICKA No. C 71172 Exp. 6/30/13 CIVIL STATE OF CALIFORNIA

The State of California or its officers or agents shall not be responsible for the accuracy or completeness of electronic copies of this plan sheet.

NOTES:

1. FOR TOP OF WALL ELEVATIONS, SEE "WALL LAYOUT NO. 2" SHEET.
2. WATER LINE TO BE RELOCATED BY OTHERS PRIOR TO RETAINING WALL CONSTRUCTION.
3. FOR SECTION A-A, SEE "RETAINING WALL DETAILS NO.3" SHEET.
4. POST-CONSTRUCTION WALL MOVEMENT MONITORING WILL BE REQUIRED AT THE FOLLOWING RW LOL STATIONS: Sta 514+75, Sta 515+25 and Sta 515+75.

LEGEND:

- INDICATES LOCATION OF INSPECTION WIRE PLACEMENT. SEE "RETAINING WALL DETAILS NO. 3" SHEET.
- ◯ INDICATES INTERVAL IN YEARS FROM TIME OF CONSTRUCTION TO TIME OF REMOVAL OF INSPECTION WIRE.

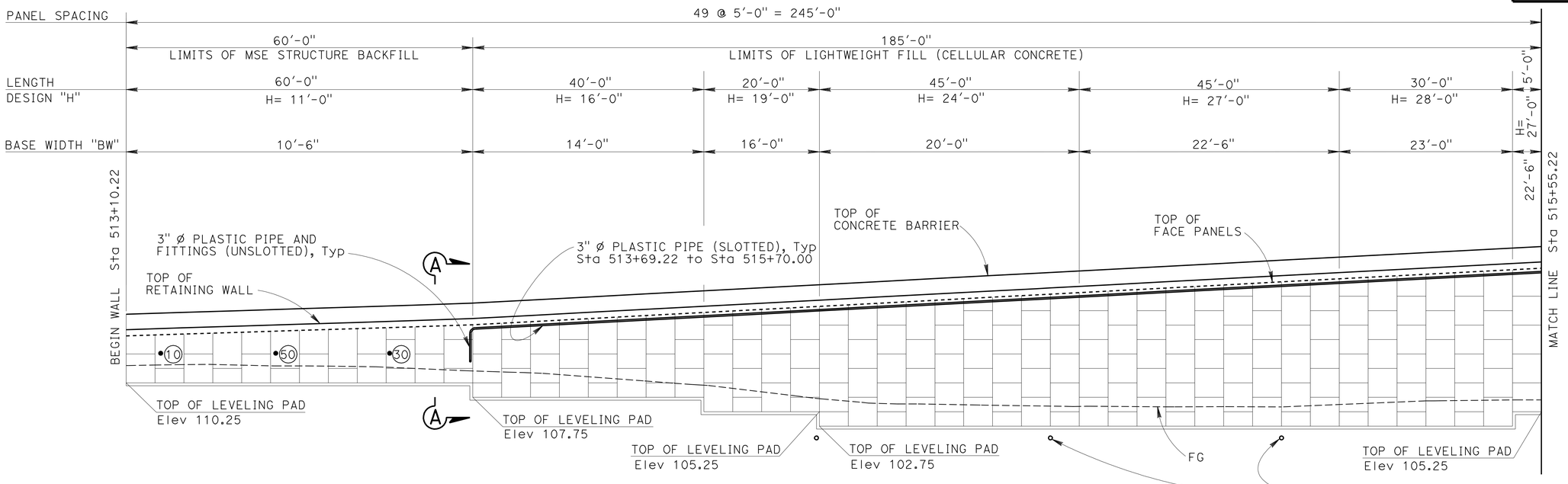

DEVELOPED ELEVATION

1" = 10'

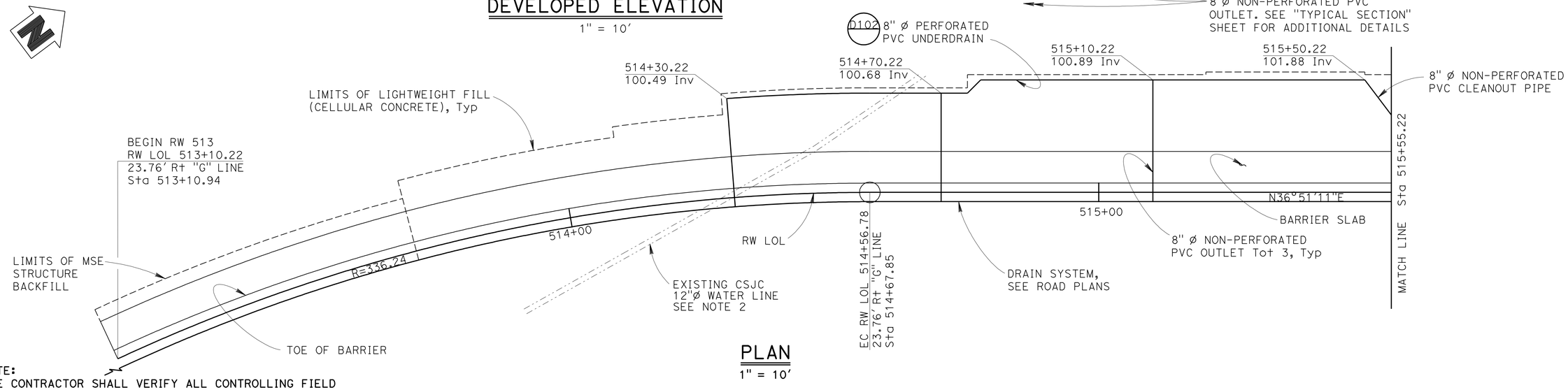

PLAN

1" = 10'

NOTE:
THE CONTRACTOR SHALL VERIFY ALL CONTROLLING FIELD DIMENSIONS BEFORE ORDERING OR FABRICATING ANY MATERIAL.

	BY	CHECKED
DESIGN	CHARLES LOMICKA	MINA PEZESHPOUR
DETAILS	HENGAMEH MAHBOOBI	MINA PEZESHPOUR
QUANTITIES	CHARLES LOMICKA	HTOON WIN

STATE OF CALIFORNIA
DEPARTMENT OF TRANSPORTATION

DIVISION OF ENGINEERING SERVICES
STRUCTURE DESIGN
DESIGN BRANCH 19

BRIDGE NO. 55E0118
POST MILE 9.5

RETAINING WALL NO. 513
WALL LAYOUT NO. 1

STRUCTURES DESIGN DETAIL SHEET (ENGLISH) (REV. 09-01-10)

ORIGINAL SCALE IN INCHES FOR REDUCED PLANS 0 1 2 3

UNIT: 3621
PROJECT NUMBER & PHASE: 1200000102 1 CONTRACT NO.: 0E3101

DISREGARD PRINTS BEARING EARLIER REVISION DATES

REVISION DATES: 04-13-11 11-08-11 11-15-11

SHEET 4 OF 19

FILE => RW513-g-lo01.dgn

USERNAME => s121614 DATE PLOTTED => 15-APR-2012 TIME PLOTTED => 09:56

DIST	COUNTY	ROUTE	POST MILES TOTAL PROJECT	SHEET No.	TOTAL SHEETS
12	Ora	5,74	9.3/10.0, 0.0/0.2	491	515

Charles Lomicka 11-15-11
REGISTERED CIVIL ENGINEER DATE

4-9-12
PLANS APPROVAL DATE

REGISTERED PROFESSIONAL ENGINEER CHARLES LOMICKA No. C 71172 Exp. 6/30/13 CIVIL STATE OF CALIFORNIA

The State of California or its officers or agents shall not be responsible for the accuracy or completeness of electronic copies of this plan sheet.

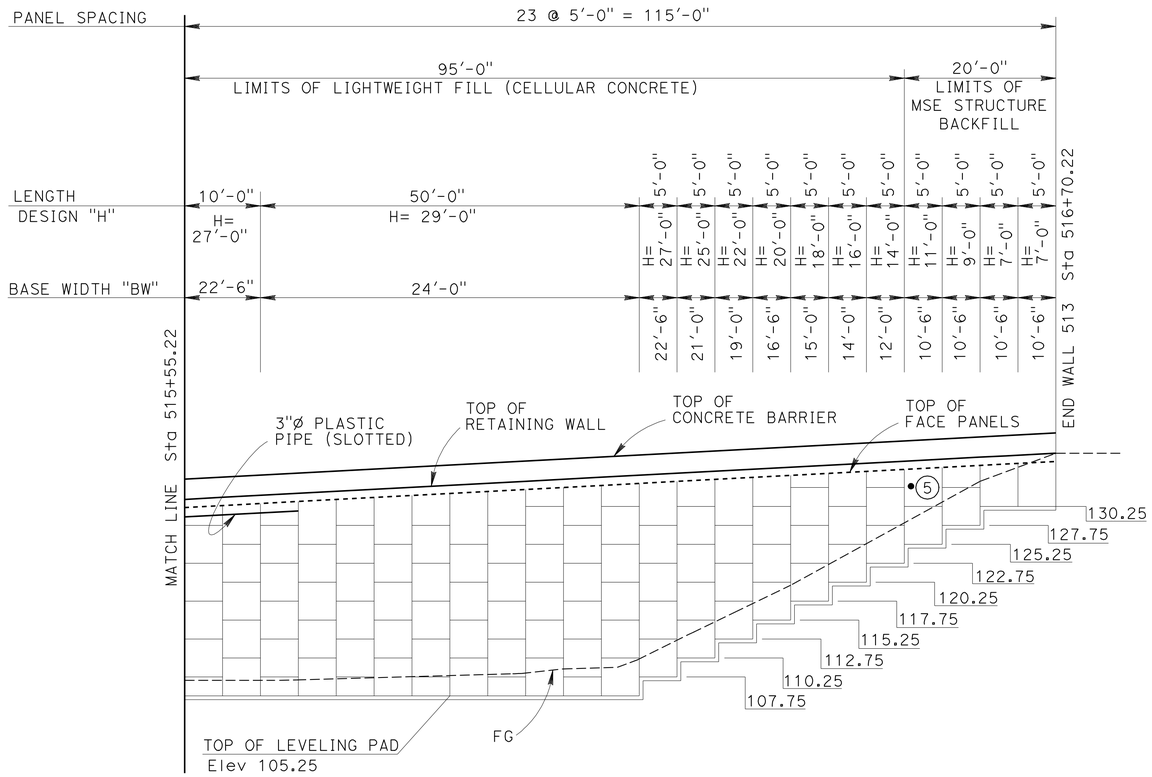

DEVELOPED ELEVATION

1" = 10'

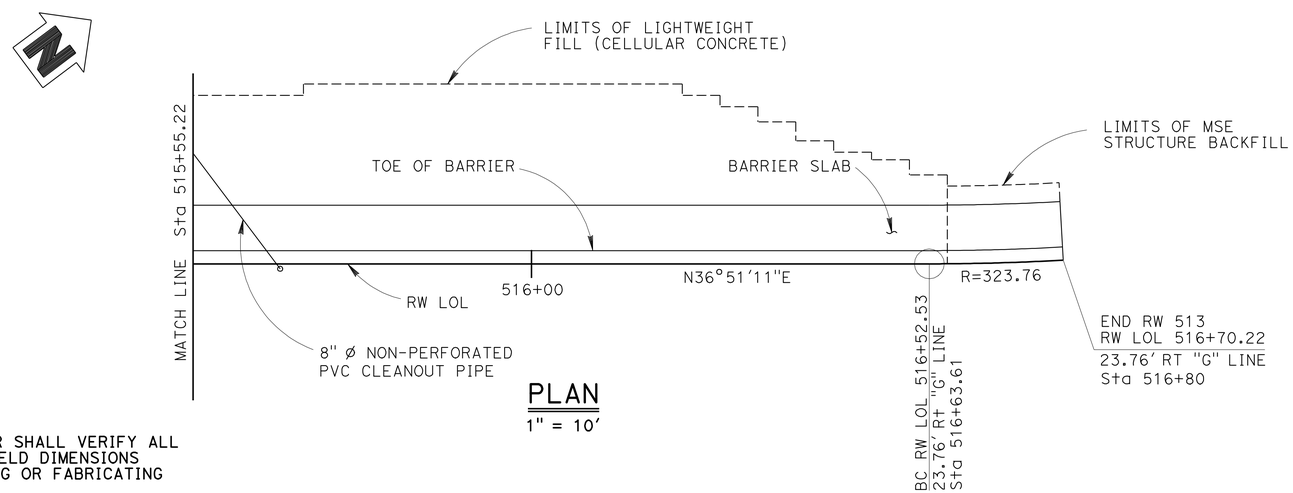

PLAN

1" = 10'

NOTE:
THE CONTRACTOR SHALL VERIFY ALL CONTROLLING FIELD DIMENSIONS BEFORE ORDERING OR FABRICATING ANY MATERIAL.

TOP OF WALL ELEVATIONS

LOL Stations	Top of Wall Elevation (ft)
513+10.22	119.47
513+22.72	119.86
513+35.22	120.26
513+47.72	120.65
513+60.22	121.05
513+72.72	121.53
513+85.22	122.20
513+97.72	122.86
514+10.22	123.52
514+22.72	124.18
514+35.22	124.85
514+47.72	125.51
514+60.22	126.17
514+72.72	126.83
514+85.22	127.50
514+97.72	128.16
515+10.22	128.82
515+22.72	129.48
515+35.22	130.14
515+47.72	130.80
515+60.22	131.46
515+72.72	132.13
515+85.22	132.79
515+97.72	133.45
516+10.22	134.11
516+22.72	134.78
516+35.22	135.44
516+47.72	136.10
516+60.22	136.76
516+70.22	137.29

	BY	CHECKED
DESIGN	CHARLES LOMICKA	MINA PEZESHPOUR
DETAILS	HENGAMEH MAHBOOBI	MINA PEZESHPOUR
QUANTITIES	CHARLES LOMICKA	HTOON WIN

STATE OF CALIFORNIA
DEPARTMENT OF TRANSPORTATION

DIVISION OF ENGINEERING SERVICES
STRUCTURE DESIGN
DESIGN BRANCH 19

BRIDGE NO. 55E0118
POST MILE 9.5

RETAINING WALL NO. 513
WALL LAYOUT NO. 2

STRUCTURES DESIGN DETAIL SHEET (ENGLISH) (REV. 09-01-10)

ORIGINAL SCALE IN INCHES FOR REDUCED PLANS 0 1 2 3

UNIT: 3621
PROJECT NUMBER & PHASE: 1200000102 1 CONTRACT NO.: 0E3101

DISREGARD PRINTS BEARING EARLIER REVISION DATES

REVISION DATES: 04-19-11 11-08-11 11-15-11

SHEET 5 OF 19

FILE => RW513-g-lo02.dgn

USERNAME => s121614 DATE PLOTTED => 15-APR-2012 TIME PLOTTED => 09:56

DIST	COUNTY	ROUTE	POST MILES TOTAL PROJECT	SHEET No.	TOTAL SHEETS
12	Ora	5,74	9.3/10.0, 0.0/0.2	492	515

Charles Lomicka 11-15-11
REGISTERED CIVIL ENGINEER DATE

4-9-12
PLANS APPROVAL DATE

REGISTERED PROFESSIONAL ENGINEER CHARLES LOMICKA No. C 71172 Exp. 6/30/13 CIVIL STATE OF CALIFORNIA

The State of California or its officers or agents shall not be responsible for the accuracy or completeness of electronic copies of this plan sheet.

LEGEND:

- LIGHTWEIGHT FILL (CELLULAR CONCRETE) CLASS II
- LIGHTWEIGHT FILL (CELLULAR CONCRETE) CLASS IV
- PERMEABLE MATERIAL

NOTES:

1. For details not shown see "RETAINING WALL DETAILS NO.1 to NO.5" sheets.
2. Top mat may be sloped -5% to -15% to provide 4" minimum cover to Roadway Section as required.
3. Second mat may be sloped to provide 6" min clear between mats as required per Note 2.
4. Concrete Barrier Type 60D (MOD) limits: LOL Sta 514+26 to Sta 516+14. For Barrier details, see "RETAINING WALL DETAILS NO. 4" sheet.
5. Welded wire reinforcement shall be supported horizontally and secured in place to prevent movement during placement of Lightweight Fill (Cellular Concrete).
6. Precast wall panels shall be braced as necessary for the panels to remain plumb during placement of lightweight fill.
7. Geomembrane (Gasoline Resistant), see Road Plans. Bond 6" minimum to precast panel with approved adhesive.
8. For excavation and backfill details, and Foundation Treatment Details, see "RETAINING WALL DETAILS NO. 5" sheet.
9. Place additional geocomposite drain between lightweight fill and MSE structure backfill at Sta 513+70.22 and 516+50.22. Fabric side facing MSE structure backfill material.
10. CTPB thickness varies to accomodate cross-slope.

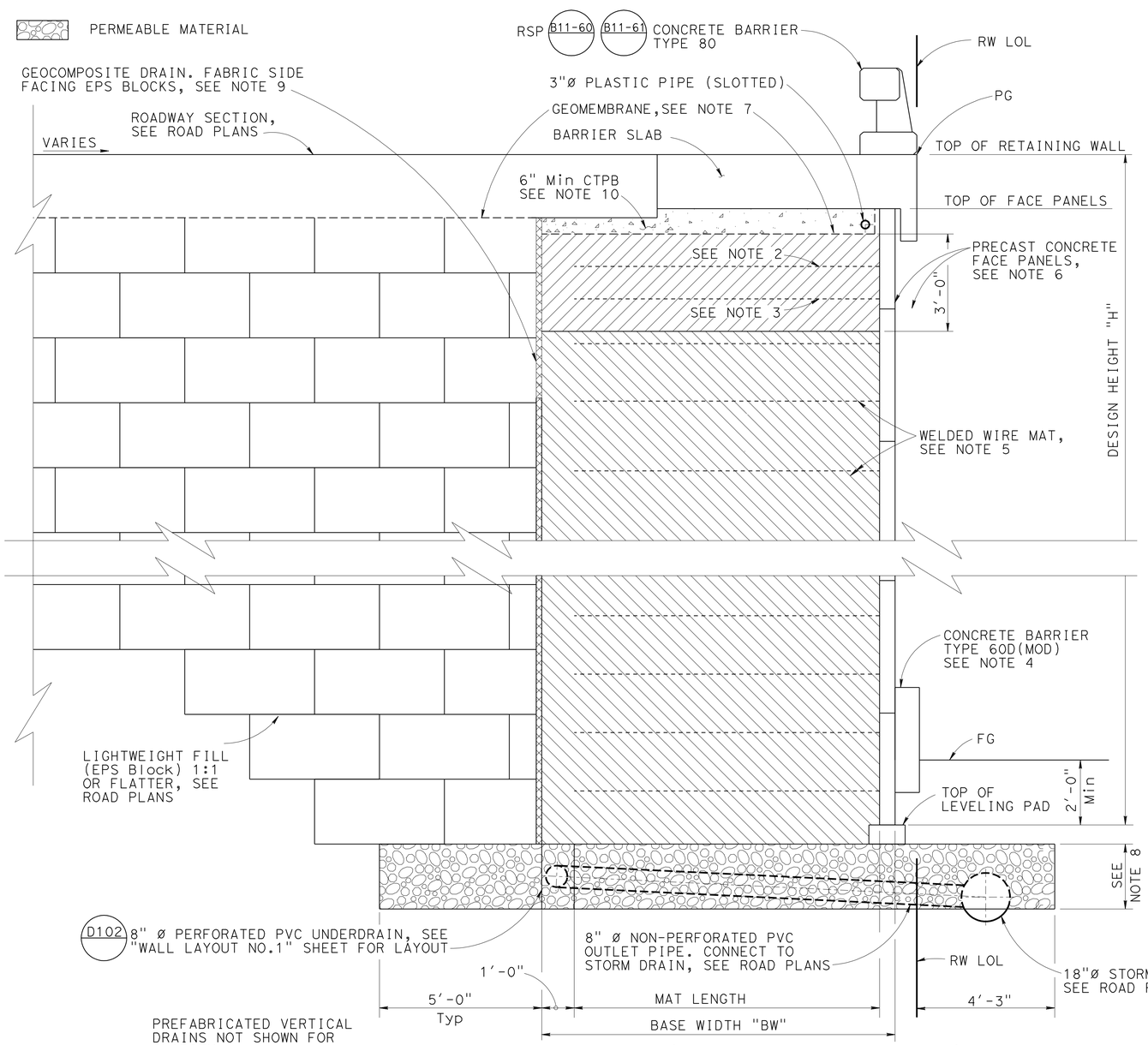

LIGHTWEIGHT FILL (CELLULAR CONCRETE)
LOL Sta 513+70.22 TO Sta 516+50.22

½" = 1'-0"

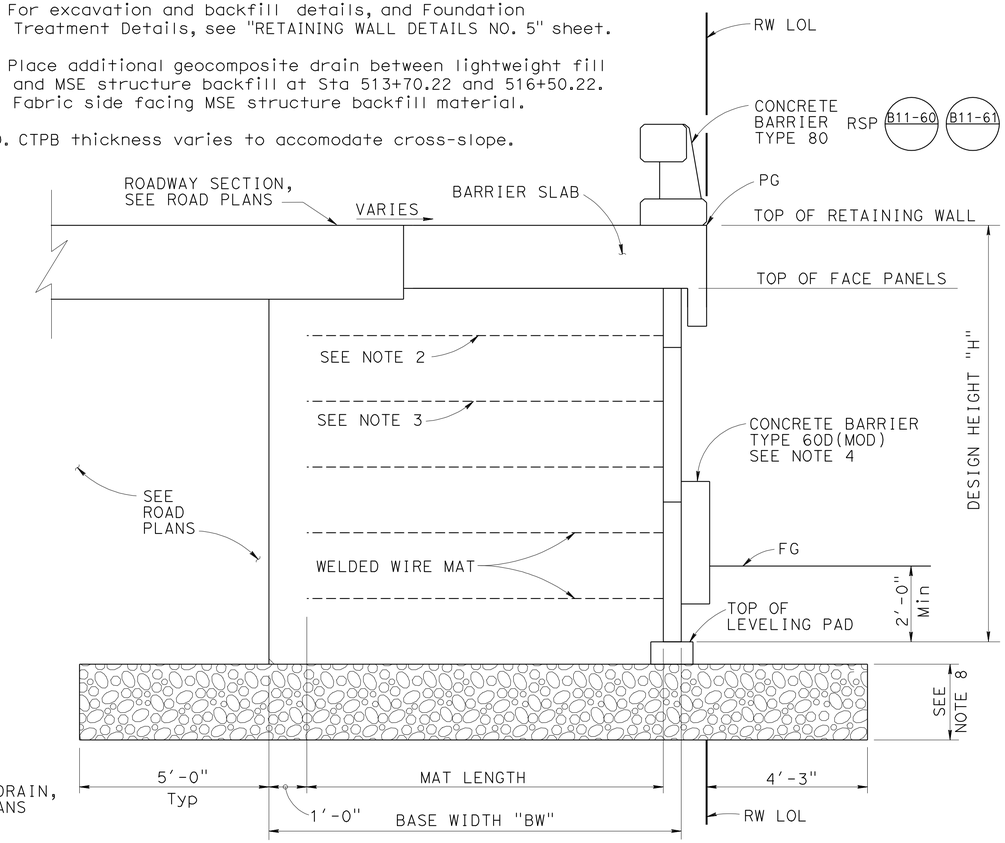

MSE STRUCTURE BACKFILL
LOL Sta 513+10.22 TO Sta 513+70.22
LOL Sta 516+50.22 TO Sta 516+70.22

NO SCALE

NOTE:
THE CONTRACTOR SHALL VERIFY ALL CONTROLLING FIELD DIMENSIONSBEFORE ORDERING OR FABRICATING ANY MATERIAL.

	BY	CHECKED
DESIGN	CHARLES LOMICKA	MINA PEZESHPOUR
DETAILS	HENGAMEH MAHBOOBI	MINA PEZESHPOUR
QUANTITIES	CHARLES LOMICKA	HTOON WIN

STATE OF CALIFORNIA
DEPARTMENT OF TRANSPORTATION

DIVISION OF ENGINEERING SERVICES
STRUCTURE DESIGN
DESIGN BRANCH 19

BRIDGE NO. 55E0118
POST MILE 9.5

RETAINING WALL NO. 513
TYPICAL SECTION

STRUCTURES DESIGN DETAIL SHEET (ENGLISH) (REV. 09-01-10)

ORIGINAL SCALE IN INCHES FOR REDUCED PLANS 0 1 2 3

UNIT: 3621
PROJECT NUMBER & PHASE: 1200000102 1 CONTRACT NO.: 0E3101

DISREGARD PRINTS BEARING EARLIER REVISION DATES

REVISION DATES: 04-19-11 12-07-11 11-15-11

SHEET 6 OF 19

FILE => RW513-k-ts01.dgn

USERNAME => s121614 DATE PLOTTED => 15-APR-2012 TIME PLOTTED => 09:56

DIST	COUNTY	ROUTE	POST MILES TOTAL PROJECT	SHEET No.	TOTAL SHEETS
12	Ora	5,74	9.3/10.0, 0.0/0.2	493	515

Charles Lomicka 11-15-11
REGISTERED CIVIL ENGINEER DATE

4-9-12
PLANS APPROVAL DATE

REGISTERED PROFESSIONAL ENGINEER CHARLES LOMICKA No. C 71172 Exp. 6/30/13 CIVIL STATE OF CALIFORNIA

The State of California or its officers or agents shall not be responsible for the accuracy or completeness of electronic copies of this plan sheet.

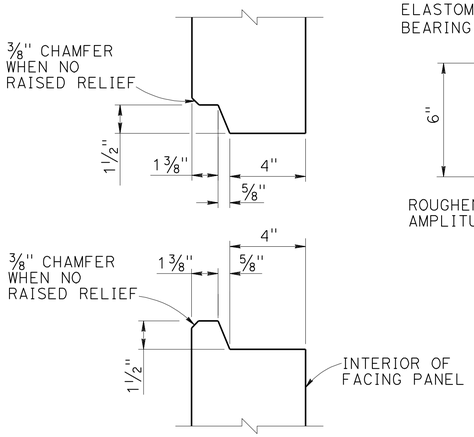

HORIZONTAL JOINT DETAIL
3" = 1'-0"

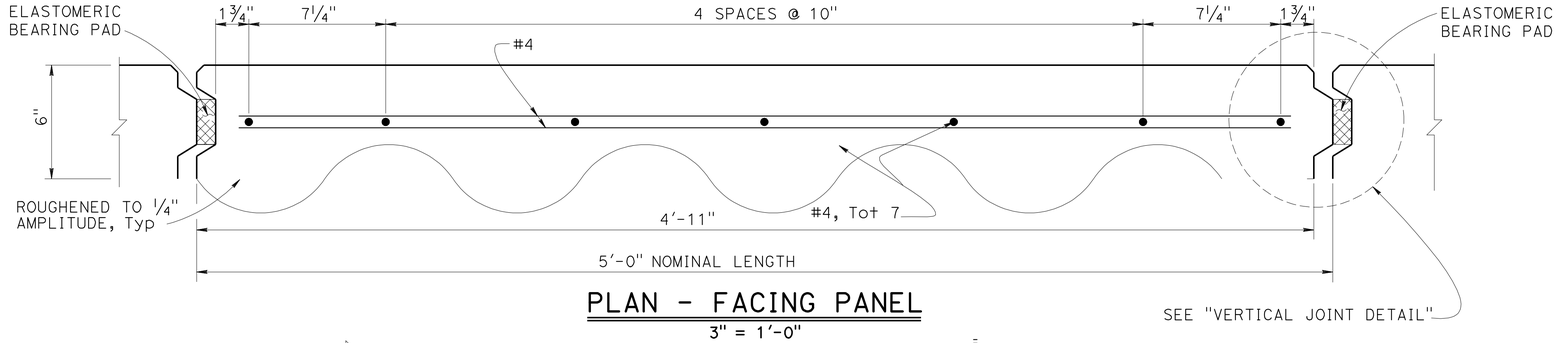

PLAN - FACING PANEL
3" = 1'-0"

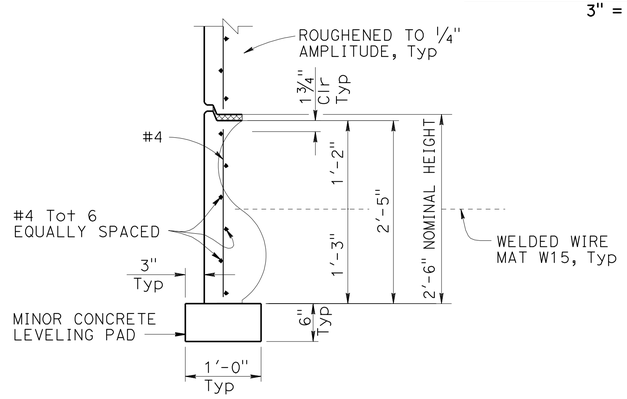

BOTTOM HALF PANEL
1" = 1'-0"

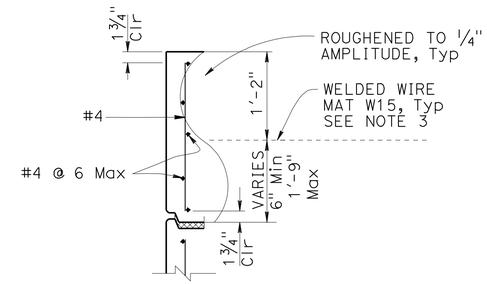

TOP PANEL
1" = 1'-0"

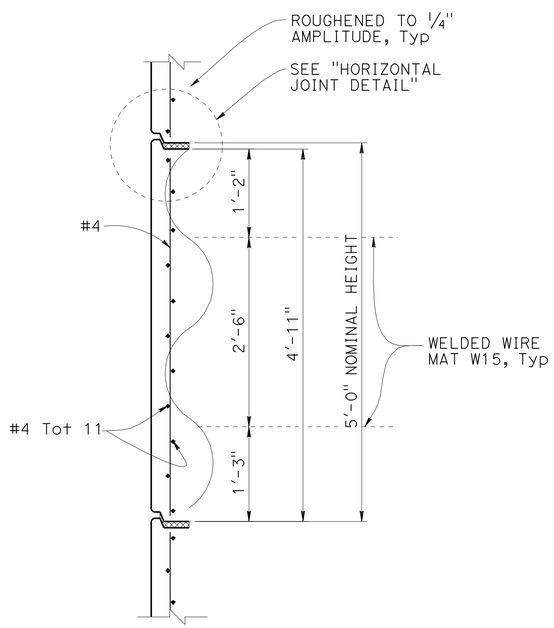

INTERMEDIATE PANEL
1" = 1'-0"

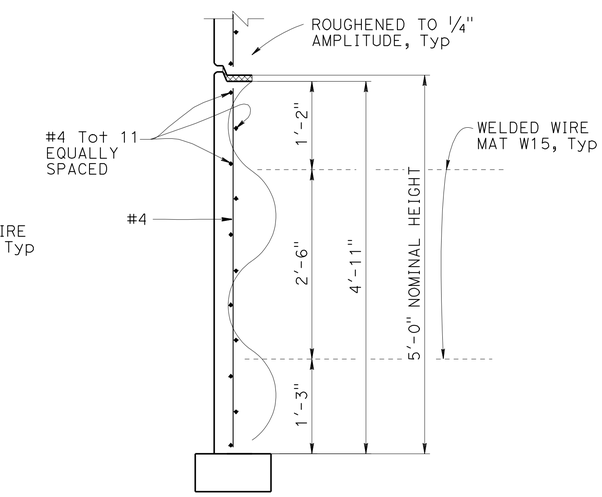

BOTTOM PANEL
1" = 1'-0"

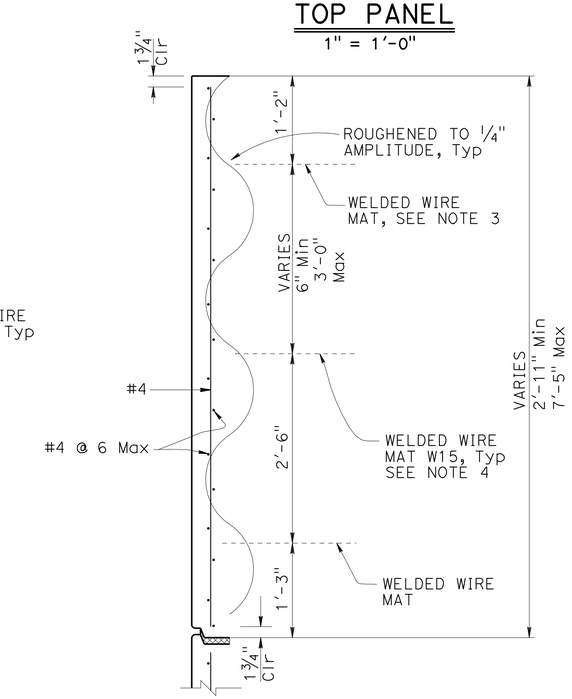

TOP PANEL WITH MULTIPLE MATS
1" = 1'-0"

NOTES:

1. Architectural texture not shown.
2. Place reinforced elastomeric bearing pads in all of the panel joints between the panels. Place one in each vertical joint where the horizontal joints intersect. Place two per panel in each horizontal joint.

   3/4" x 2 3/8" x 6" for vertical joints

   3/4" x 4" x 6" for horizontal joints.
3. Top layer of welded wire mats attached parallel to top of panel when top of wall is angled or curved.
4. Eliminate mid level mat when closer than 6" to top mat. Continue variable dimension between remaining mats.

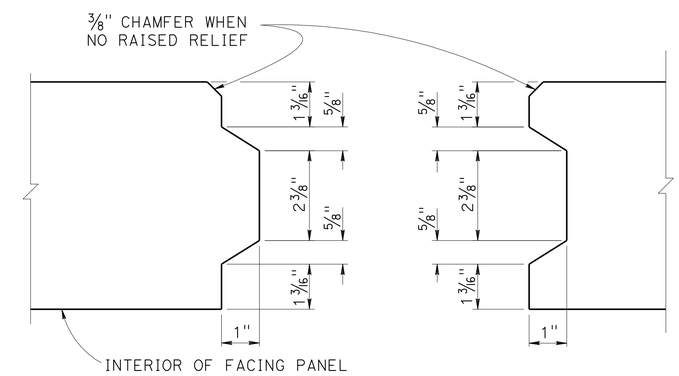

VERTICAL JOINT DETAIL
6" = 1'-0"

NOTE:
THE CONTRACTOR SHALL VERIFY ALL CONTROLLING FIELD DIMENSIONS BEFORE ORDERING OR FABRICATING ANY MATERIAL.

	BY	CHECKED
DESIGN	CHARLES LOMICKA	MINA PEZESHPOUR
DETAILS	HENGAMEH MAHBOOBI	MINA PEZESHPOUR
QUANTITIES	CHARLES LOMICKA	HTOON WIN

STATE OF CALIFORNIA
DEPARTMENT OF TRANSPORTATION

DIVISION OF ENGINEERING SERVICES
STRUCTURE DESIGN
DESIGN BRANCH 19

BRIDGE NO. 55E0118
POST MILE 9.5

RETAINING WALL NO. 513
RETAINING WALL DETAILS NO. 1

STRUCTURES DESIGN DETAIL SHEET (ENGLISH) (REV. 09-01-10)

ORIGINAL SCALE IN INCHES FOR REDUCED PLANS 0 1 2 3

UNIT: 3621
PROJECT NUMBER & PHASE: 1200000102 1 CONTRACT NO.: 0E3101

DISREGARD PRINTS BEARING EARLIER REVISION DATES

REVISION DATES: 04-19-11 11-08-11 11-15-11

SHEET 7 OF 19

FILE => RW513-g-dt01.dgn

USERNAME => 812614 DATE PLOTTED => 15-APR-2012 TIME PLOTTED => 09:56

DIST	COUNTY	ROUTE	POST MILES TOTAL PROJECT	SHEET No.	TOTAL SHEETS
12	Ora	5,74	9.3/10.0, 0.0/0.2	494	515

Charles Lomicka 11-15-11
REGISTERED CIVIL ENGINEER DATE

4-9-12
PLANS APPROVAL DATE

REGISTERED PROFESSIONAL ENGINEER
CHARLES LOMICKA
No. C 71172
Exp. 6/30/13
CIVIL
STATE OF CALIFORNIA

The State of California or its officers or agents shall not be responsible for the accuracy or completeness of electronic copies of this plan sheet.

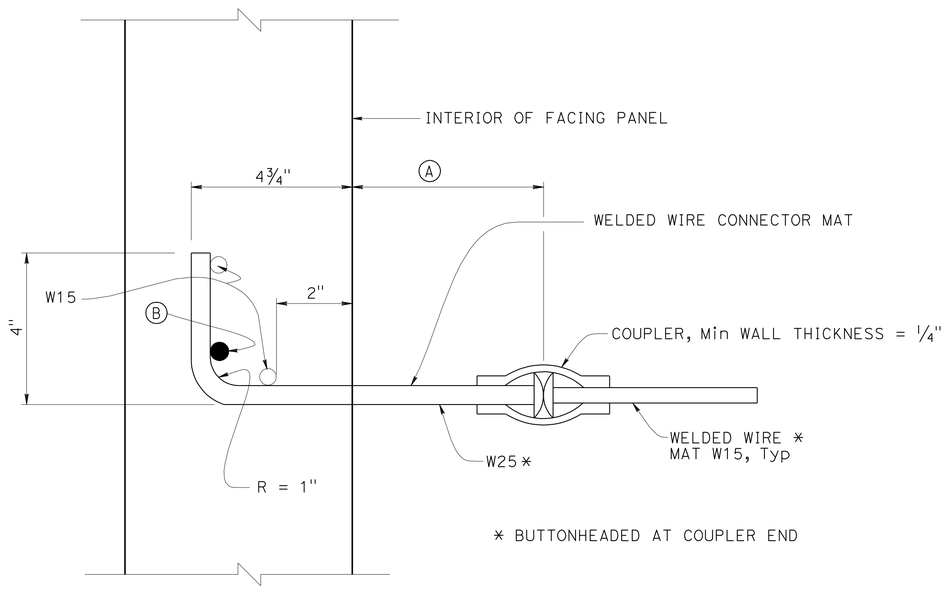

NOTE: PANEL REINFORCEMENT NOT SHOWN

SECTION B-B

6" = 1'-0"

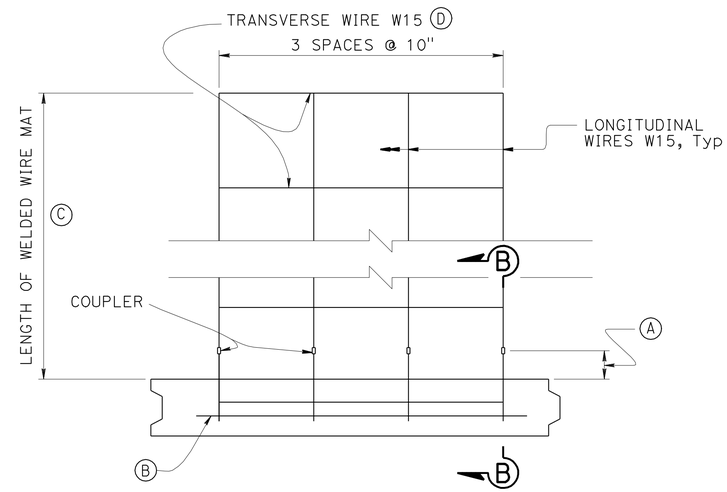

PLAN OF PANEL WITH FOUR WIRE MAT

1½" = 1'-0"

NOTES:

(A) Distance as required to permit coupler to be swaged

(B) Place #4 bar, 3'-2" long, centered on connector mat, but not welded to it

(C) See Wall Layout sheets and "TYPICAL SECTION" sheet.

(D) All transverse wires are size W15 at 6" spacing in MSE structure backfill regions. For Lightweight Fill (Cellular Concrete) region, use spacing of 6" for top 2 mats and 24" for all other mats.

	BY	CHECKED
DESIGN	CHARLES LOMICKA	MINA PEZESHPOUR
DETAILS	HENGAMEH MAHBOOBI	MINA PEZESHPOUR
QUANTITIES	CHARLES LOMICKA	HTOON WIN

STATE OF CALIFORNIA
DEPARTMENT OF TRANSPORTATION

DIVISION OF ENGINEERING SERVICES
STRUCTURE DESIGN
DESIGN BRANCH 19

BRIDGE NO. 55E0118
POST MILE 9.5

RETAINING WALL NO. 513
RETAINING WALL DETAILS NO. 2

STRUCTURES DESIGN DETAIL SHEET (ENGLISH) (REV. 09-01-10)

ORIGINAL SCALE IN INCHES FOR REDUCED PLANS 0 1 2 3

UNIT: 3621
PROJECT NUMBER & PHASE: 1200000102 1 CONTRACT NO.: 0E3101

DISREGARD PRINTS BEARING EARLIER REVISION DATES

REVISION DATES: ~~04-15-11~~ ~~11-08-11~~ 11-15-11

SHEET 8 OF 19

FILE => RW513-g-dt02.dgn

USERNAME => s121614 DATE PLOTTED => 15-APR-2012 TIME PLOTTED => 09:57

DIST	COUNTY	ROUTE	POST MILES TOTAL PROJECT	SHEET No.	TOTAL SHEETS
12	Ora	5,74	9.3/10.0, 0.0/0.2	495	515

Charles Lomicka 11-15-11
REGISTERED CIVIL ENGINEER DATE

4-9-12
PLANS APPROVAL DATE

REGISTERED PROFESSIONAL ENGINEER
CHARLES LOMICKA
No. C 71172
Exp. 6/30/13
CIVIL
STATE OF CALIFORNIA

The State of California or its officers or agents shall not be responsible for the accuracy or completeness of electronic copies of this plan sheet.

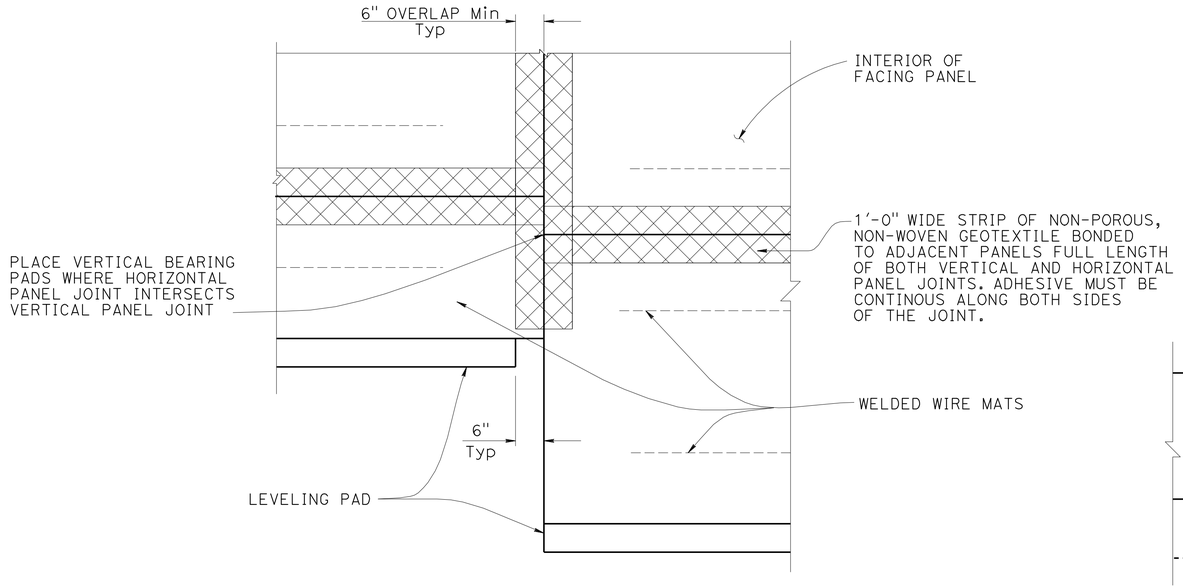

REAR ELEVATION

3/4" = 1'-0"

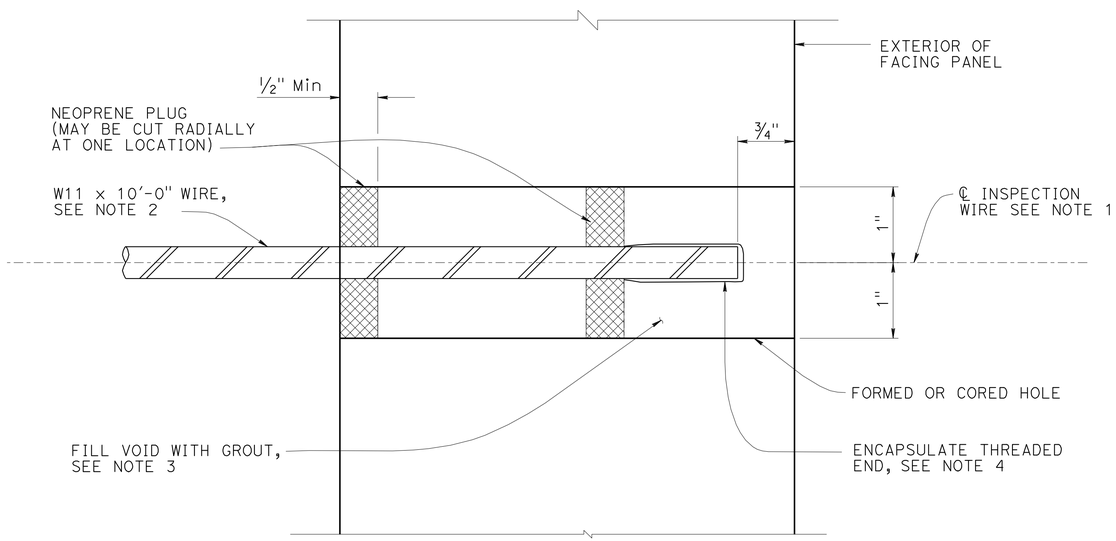

SECTION THRU INSPECTION WIRE

NO SCALE

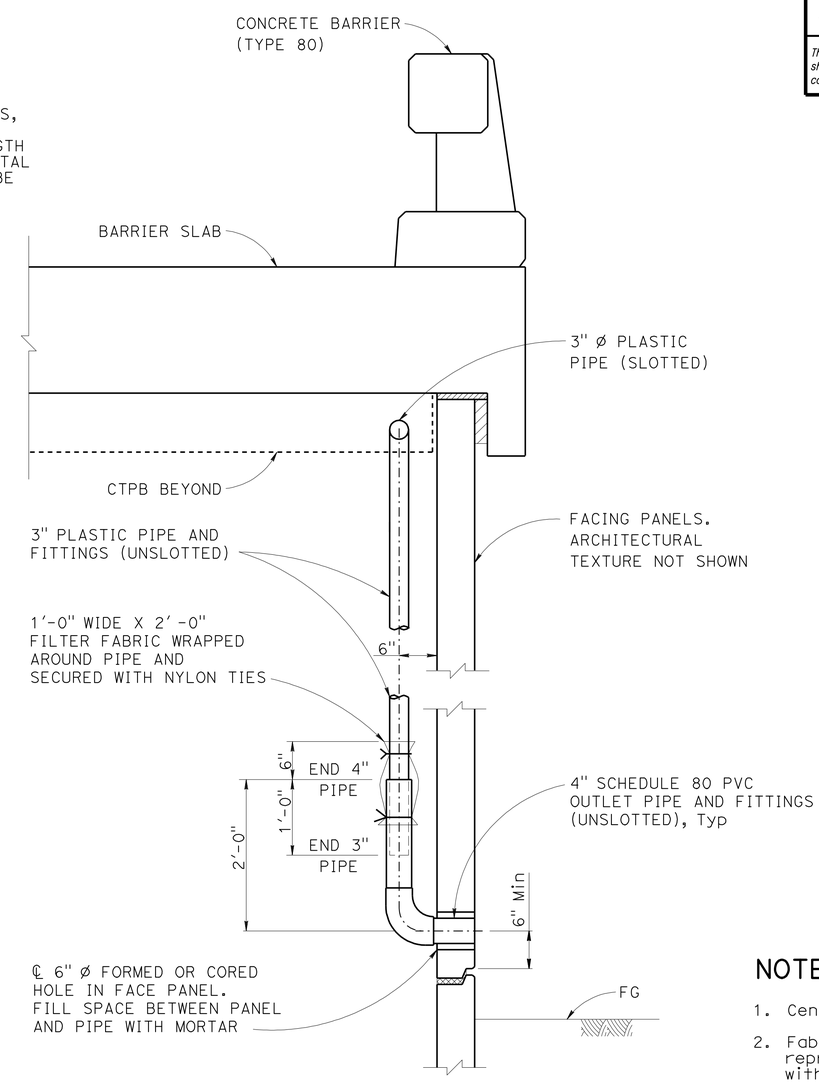

SECTION A-A
Sta 513+69.22

NO SCALE

LEGEND:

UNC = Unified Coarse Threads

NOTES:

1. Center inspection wire in facing panel.
2. Fabricated inspection wire from W11 wire representative of the welded wire mats, with 3/8" diameter 16 UNC threads for at least 1 1/2" of one end.
3. Place inspection wire horizontal and perpendicular to the wall panel prior to backfilling. After backfill placement to a level at least 2'-0" above the inspection wire, dry pack opening with 1000 to 1500 psi mortar. Trowel mortar smooth and flush with facing panel.
4. Encapsulate threaded end with corrosion inhibiting mastic, vinyl covering, and secure with plastic tie.

NOTE:
THE CONTRACTOR SHALL VERIFY ALL CONTROLLING FIELD DIMENSIONS BEFORE ORDERING OR FABRICATING ANY MATERIAL.

	BY	CHECKED
DESIGN	CHARLES LOMICKA	MINA PEZESHPOUR
DETAILS	HENGAMEH MAHBOOBI	MINA PEZESHPOUR
QUANTITIES	CHARLES LOMICKA	HTOON WIN

STATE OF CALIFORNIA
DEPARTMENT OF TRANSPORTATION

DIVISION OF ENGINEERING SERVICES
STRUCTURE DESIGN
DESIGN BRANCH 19

BRIDGE NO. 55E0118
POST MILE 9.5

RETAINING WALL NO. 513
RETAINING WALL DETAILS NO. 3

STRUCTURES DESIGN DETAIL SHEET (ENGLISH) (REV. 09-01-10)

ORIGINAL SCALE IN INCHES FOR REDUCED PLANS 0 1 2 3

UNIT: 3621
PROJECT NUMBER & PHASE: 1200000102 1 CONTRACT NO.: 0E3101

DISREGARD PRINTS BEARING EARLIER REVISION DATES

REVISION DATES: ~~04-19-11~~ ~~11-09-11~~ 11-15-11

SHEET 9 OF 19

FILE => RW513-g-dt03.dgn

USERNAME => s121614 DATE PLOTTED => 15-APR-2012 TIME PLOTTED => 09:57

DIST	COUNTY	ROUTE	POST MILES TOTAL PROJECT	SHEET No.	TOTAL SHEETS
12	Ora	5,74	9.3/10.0, 0.0/0.2	496	515

Charles Lomicka 11-15-11
REGISTERED CIVIL ENGINEER DATE

4-9-12
PLANS APPROVAL DATE

REGISTERED PROFESSIONAL ENGINEER
CHARLES LOMICKA
No. C 71172
Exp. 6/30/13
CIVIL
STATE OF CALIFORNIA

The State of California or its officers or agents shall not be responsible for the accuracy or completeness of electronic copies of this plan sheet.

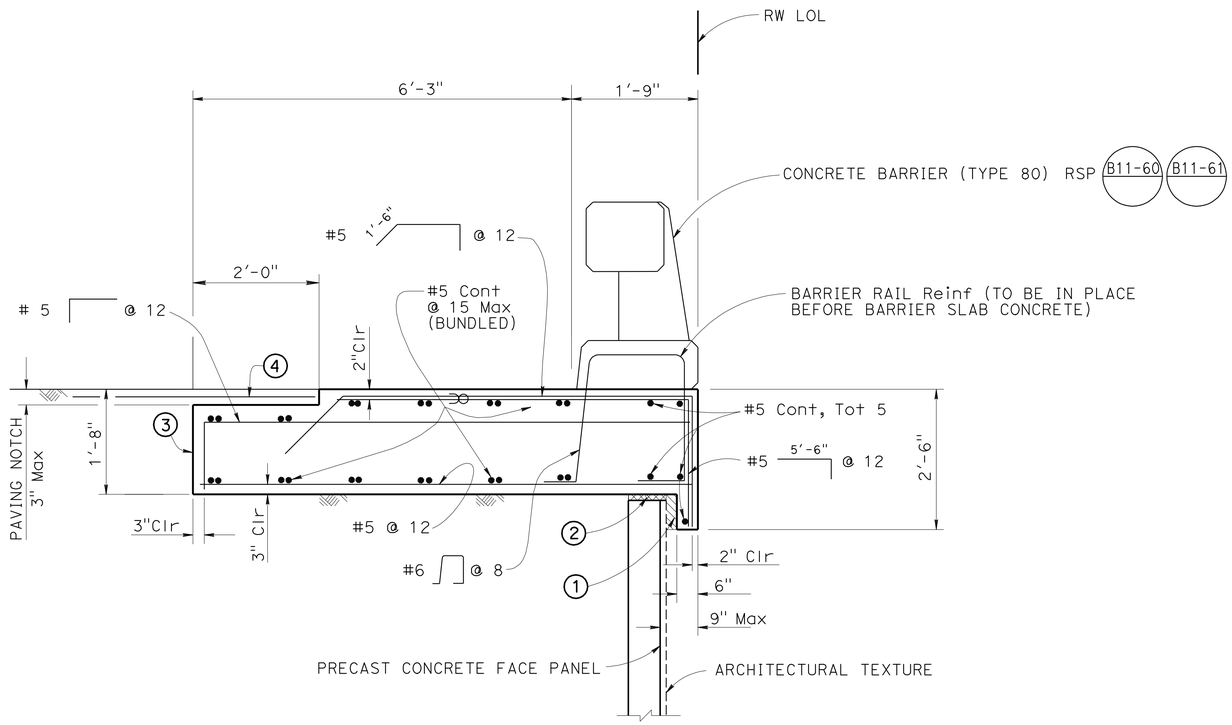

CONCRETE BARRIER SLAB WITH PAVING NOTCH

NO SCALE

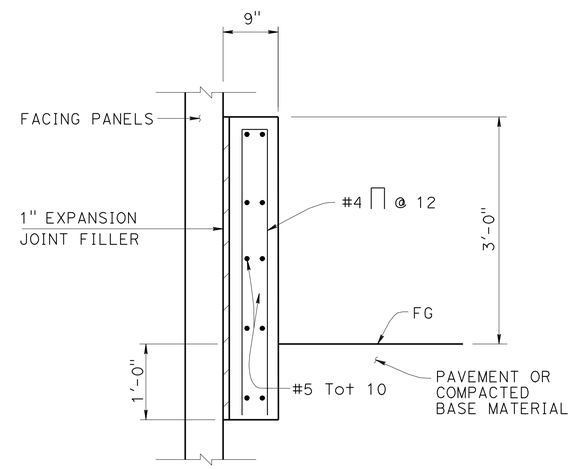

CONCRETE BARRIER TYPE 60D (MOD) AT FACE OF RETAINING WALL RWLOL STA 514+26 TO STA 516+14

NO SCALE

LEGEND:

1. 2" Expanded polystyrene.
2. 1" Expanded Polystyrene.
3. Contact joint.
4. 4'-0" wide pavement reinforcing fabric.

∝ Indicates bundled bars.

NOTE:
THE CONTRACTOR SHALL VERIFY ALL CONTROLLING FIELD DIMENSIONS BEFORE ORDERING OR FABRICATING ANY MATERIAL.

NOTES:

1. Clearance to reinforcing steel in concrete barrier to be 1".
2. Not all barrier reinforcement shown.
3. No expansion joints in concrete barrier or barrier slab within wall limits.

	BY	CHECKED
DESIGN	CHARLES LOMICKA	MINA PEZESHPOUR
DETAILS	HENGAMEH MAHBOOBI	MINA PEZESHPOUR
QUANTITIES	CHARLES LOMICKA	HTOON WIN

STATE OF CALIFORNIA
DEPARTMENT OF TRANSPORTATION

DIVISION OF ENGINEERING SERVICES
STRUCTURE DESIGN
DESIGN BRANCH 19

BRIDGE NO. 55E0118
POST MILE 9.5

RETAINING WALL NO. 513
RETAINING WALL DETAILS NO. 4

STRUCTURES DESIGN DETAIL SHEET (ENGLISH) (REV. 09-01-10)

ORIGINAL SCALE IN INCHES FOR REDUCED PLANS 0 1 2 3

UNIT: 3621
PROJECT NUMBER & PHASE: 1200000102 1 CONTRACT NO.: 0E3101

DISREGARD PRINTS BEARING EARLIER REVISION DATES

REVISION DATES: ~~04-19-11~~ ~~11-08-11~~ 11-15-11

SHEET 10 OF 19

FILE => RW513-g-dt04.dgn

USERNAME => s121614 DATE PLOTTED => 15-APR-2012 TIME PLOTTED => 08:57

DIST	COUNTY	ROUTE	POST MILES TOTAL PROJECT	SHEET No.	TOTAL SHEETS
12	Ora	5,74	9.3/10.0, 0.0/0.2	497	515

Charles Lomicka 11-15-11
REGISTERED CIVIL ENGINEER DATE

4-9-12
PLANS APPROVAL DATE

REGISTERED PROFESSIONAL ENGINEER CHARLES LOMICKA No. C 71172 Exp. 6/30/13 CIVIL STATE OF CALIFORNIA

The State of California or its officers or agents shall not be responsible for the accuracy or completeness of electronic copies of this plan sheet.

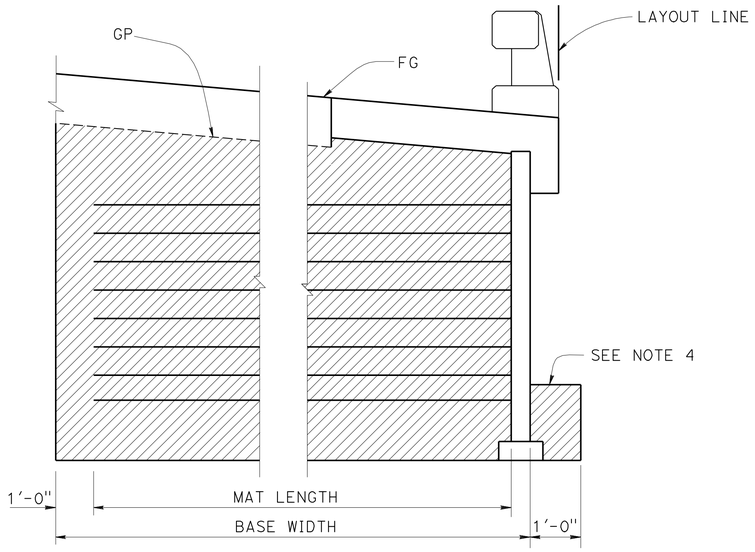

LIMITS OF BACKFILL
LOL Sta 513+10.22 TO Sta 513+70.22
LOL Sta 516+50.22 TO Sta 516+70.22

NO SCALE

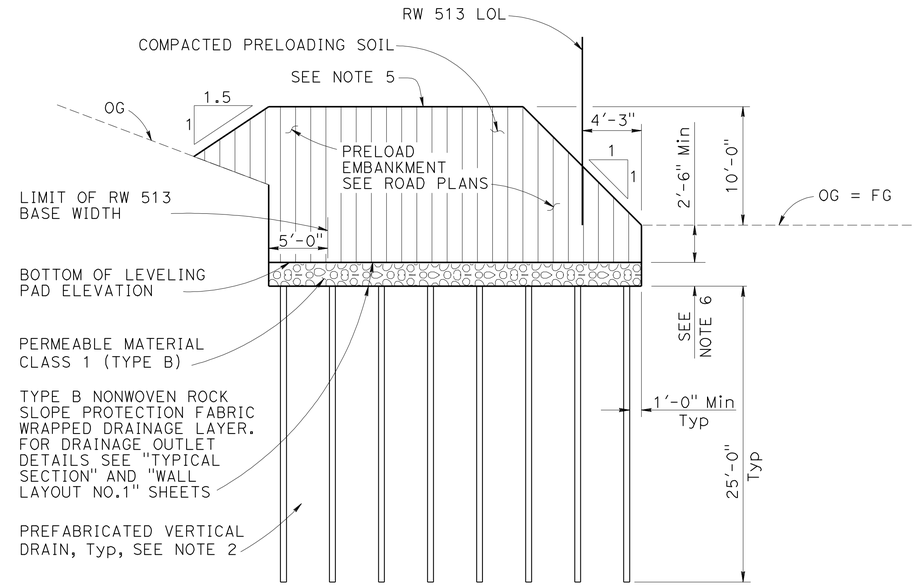

FOUNDATION TREATMENT DETAIL
Sta 513+10.22 TO Sta 516+70.22

NO SCALE

LEGEND:

- Limits of Structure Excavation
- Limits of Structure Backfill
- Limits of Permeable Material
- Limits of Roadway Embankment and Excavation

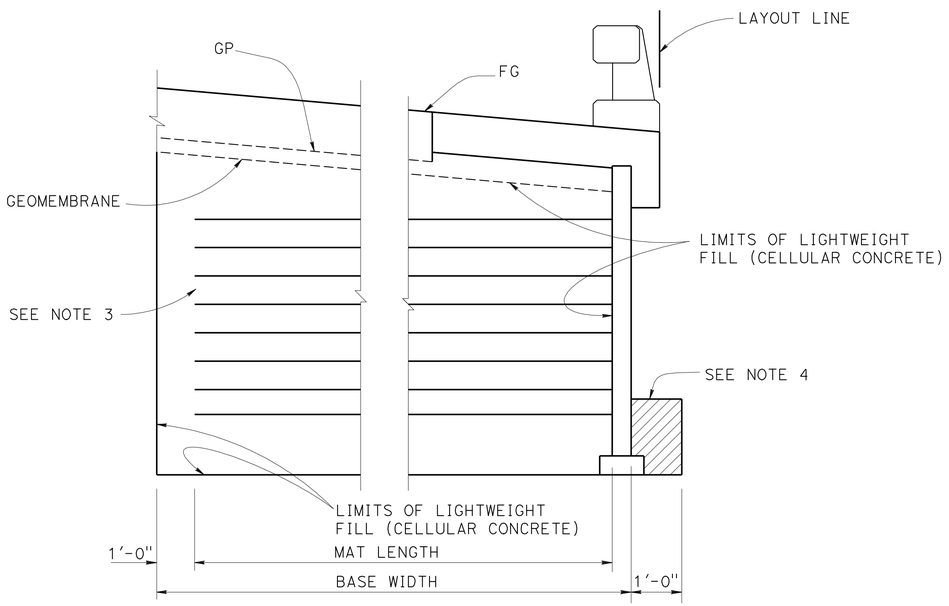

LIMITS OF BACKFILL
(Lightweight Fill Cellular Concrete)
LOL Sta 513+70.22 TO Sta 516+50.22

NO SCALE

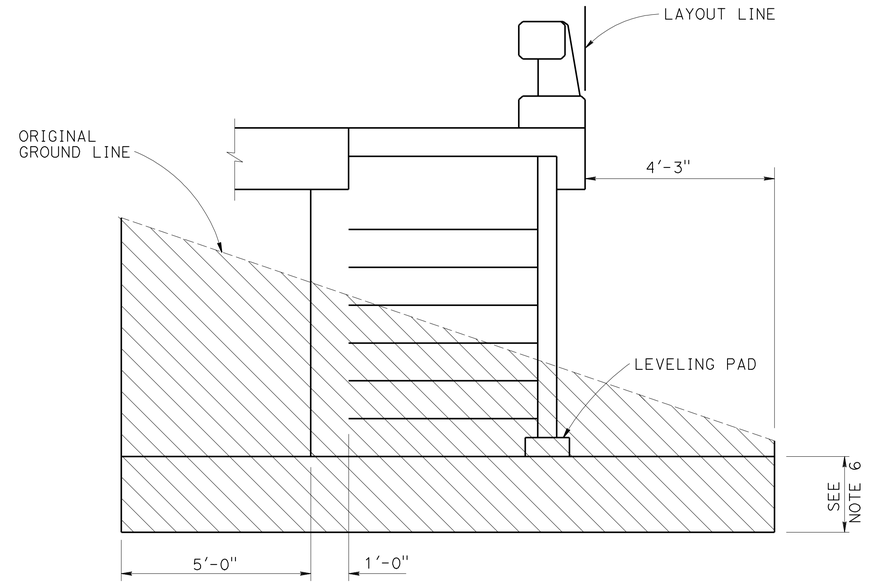

LIMITS OF EXCAVATION BEFORE FOUNDATION TREATMENT

NO SCALE

NOTES:

1. OG cross section is approximate.
2. Space vertical drains at 4'-0" horizontally and longitudinally. Drains and permeable material to remain in place after completion of settlement period.
3. For additional details of Lightweight Fill (Cellular Concrete) and drainage details, see "TYPICAL SECTION" sheet.
4. Limits to FG except to GP when in roadway section.
5. Install settlement platforms along the centerline of the preloading embankment at the following RW LOL stations: 514+75.00, 515+25.00 and 515+75.00.
6. Bottom of excavation to be 2'-0" below bottom of leveling pad or 5'-0" below OG, at face of wall, whichever is lower.

	BY	CHECKED
DESIGN	CHARLES LOMICKA	MINA PEZESHPOUR
DETAILS	HENGAMEH MAHBOOBI	MINA PEZESHPOUR
QUANTITIES	CHARLES LOMICKA	HTOON WIN

STATE OF CALIFORNIA
DEPARTMENT OF TRANSPORTATION

DIVISION OF ENGINEERING SERVICES
STRUCTURE DESIGN
DESIGN BRANCH 19

BRIDGE NO. 55E0118
POST MILE 9.5

RETAINING WALL NO. 513
RETAINING WALL DETAILS NO. 5

STRUCTURES DESIGN DETAIL SHEET (ENGLISH) (REV. 09-01-10)

ORIGINAL SCALE IN INCHES FOR REDUCED PLANS 0 1 2 3

UNIT: 3621
PROJECT NUMBER & PHASE: 1200000102 1 CONTRACT NO.: 0E3101

DISREGARD PRINTS BEARING EARLIER REVISION DATES

REVISION DATES: 04-19-11 11-09-11 11-15-11

SHEET 11 OF 19

FILE => RW513-g-dt05.dgn

USERNAME => s121614 DATE PLOTTED => 15-APR-2012 TIME PLOTTED => 09:57

DIST	COUNTY	ROUTE	POST MILES TOTAL PROJECT	SHEET No.	TOTAL SHEETS
12	Ora	5,74	9.3/10.0, 0.0/0.2	498	515

Charles Lomicka 11-15-11
REGISTERED CIVIL ENGINEER DATE

4-9-12
PLANS APPROVAL DATE

REGISTERED PROFESSIONAL ENGINEER
CHARLES LOMICKA
No. C 71172
Exp. 6/30/13
CIVIL
STATE OF CALIFORNIA

The State of California or its officers or agents shall not be responsible for the accuracy or completeness of electronic copies of this plan sheet.

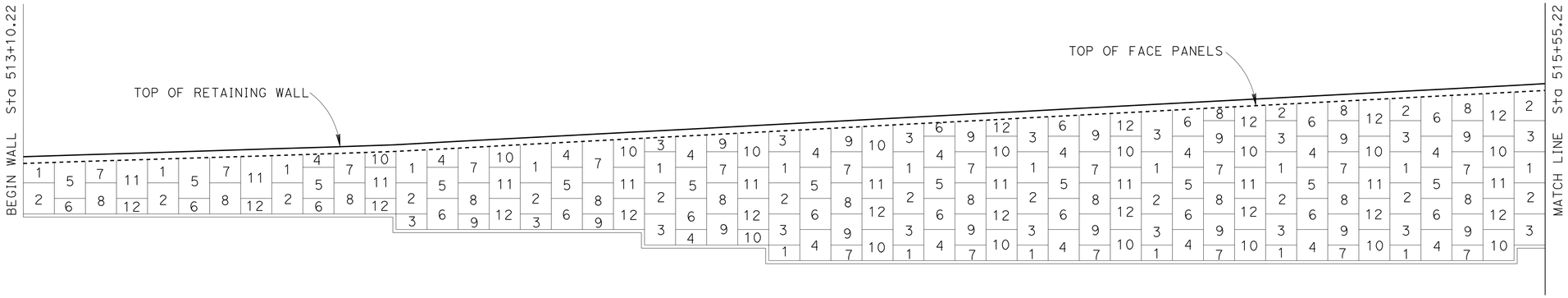

PANEL NUMBERING ELEVATION

1" = 10'

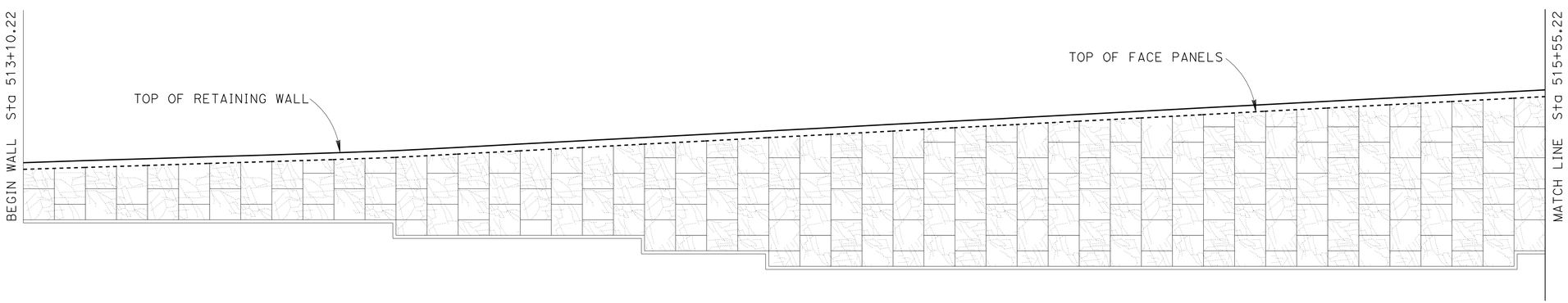

PATTERN ELEVATION

1" = 10'

NOTE:
THE CONTRACTOR SHALL VERIFY ALL CONTROLLING FIELD DIMENSIONS BEFORE ORDERING OR FABRICATING ANY MATERIAL.

NOTES:

1. BARRIER AND BARRIER SLAB NOT SHOWN.
2. FOR LAYOUT INFORMATION SEE "WALL LAYOUT" SHEETS.

	BY	CHECKED
DESIGN	CHARLES LOMICKA	EDWARD MERCADO
DETAILS	HENGAMEH MAHBOOBI	MINA PEZESHPOUR
QUANTITIES	CHARLES LOMICKA	HTOON WIN

STATE OF CALIFORNIA
DEPARTMENT OF TRANSPORTATION

DIVISION OF ENGINEERING SERVICES
STRUCTURE DESIGN
DESIGN BRANCH 19

BRIDGE NO. 55E0118
POST MILE 9.5

RETAINING WALL NO. 513
ARCHITECTURAL TEXTURE DETAILS NO. 1

STRUCTURES DESIGN DETAIL SHEET (ENGLISH) (REV. 09-01-10)

ORIGINAL SCALE IN INCHES FOR REDUCED PLANS 0 1 2 3

UNIT: 3621
PROJECT NUMBER & PHASE: 1200000102 1 CONTRACT NO.: 0E3101

DISREGARD PRINTS BEARING EARLIER REVISION DATES

REVISION DATES: 04-28-11 11-08-11 11-15-11

SHEET 12 OF 19

FILE => RW513-u-miscdt01.dgn

USERNAME => s121614 DATE PLOTTED => 15-APR-2012 TIME PLOTTED => 09:57

DIST	COUNTY	ROUTE	POST MILES TOTAL PROJECT	SHEET No.	TOTAL SHEETS
12	Ora	5,74	9.3/10.0, 0.0/0.2	499	515

Charles Lomicka 11-15-11
REGISTERED CIVIL ENGINEER DATE

4-9-12
PLANS APPROVAL DATE

REGISTERED PROFESSIONAL ENGINEER
CHARLES LOMICKA
No. C 71172
Exp. 6/30/13
CIVIL
STATE OF CALIFORNIA

The State of California or its officers or agents shall not be responsible for the accuracy or completeness of electronic copies of this plan sheet.

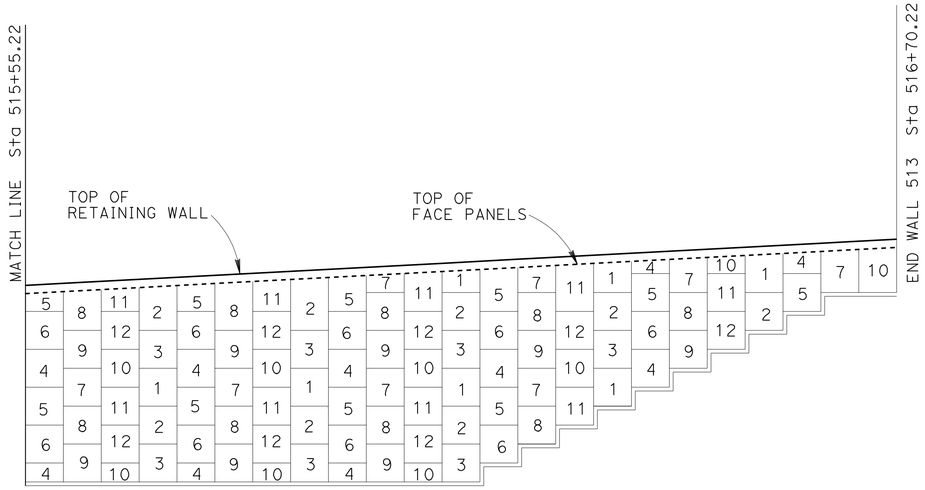

PANEL NUMBERING ELEVATION

1" = 10'

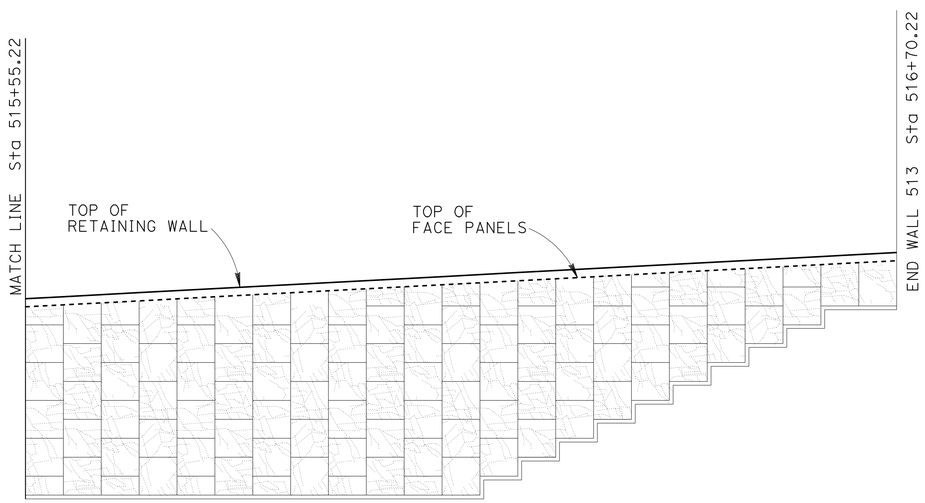

PATTERN ELEVATION

1" = 10'

NOTE:
THE CONTRACTOR SHALL VERIFY ALL CONTROLLING FIELD DIMENSIONS BEFORE ORDERING OR FABRICATING ANY MATERIAL.

NOTES:

1. BARRIER AND BARRIER SLAB NOT SHOWN.
2. FOR LAYOUT INFORMATION SEE "WALL LAYOUT" SHEETS.

	BY	CHECKED
DESIGN	CHARLES LOMICKA	EDWARD MERCADO
DETAILS	HENGAMEH MAHBOOBI	MINA PEZESHPOUR
QUANTITIES	CHARLES LOMICKA	HTOON WIN

STATE OF CALIFORNIA
DEPARTMENT OF TRANSPORTATION

DIVISION OF ENGINEERING SERVICES
STRUCTURE DESIGN
DESIGN BRANCH 19

BRIDGE NO. 55E0118
POST MILE 9.5

RETAINING WALL NO. 513
ARCHITECTURAL TEXTURE DETAILS NO. 2

STRUCTURES DESIGN DETAIL SHEET (ENGLISH) (REV. 09-01-10)

ORIGINAL SCALE IN INCHES FOR REDUCED PLANS 0 1 2 3

UNIT: 3621
PROJECT NUMBER & PHASE: 1200000102 1 CONTRACT NO.: OE3101

DISREGARD PRINTS BEARING EARLIER REVISION DATES

REVISION DATES: 04-28-11 11-15-11 11-04-11

SHEET 13 OF 19

FILE => RW513-u-miscdt02.dgn

USERNAME => s121614 DATE PLOTTED => 15-APR-2012 TIME PLOTTED => 09:57

DIST	COUNTY	ROUTE	POST MILES TOTAL PROJECT	SHEET No.	TOTAL SHEETS
12	Ora	5,74	9.3/10.0, 0.0/0.2	500	515

Charles Lomicka 11-15-11
REGISTERED CIVIL ENGINEER DATE

4-9-12
PLANS APPROVAL DATE

REGISTERED PROFESSIONAL ENGINEER
CHARLES LOMICKA
No. C 71172
Exp. 6/30/13
CIVIL
STATE OF CALIFORNIA

The State of California or its officers or agents shall not be responsible for the accuracy or completeness of electronic copies of this plan sheet.

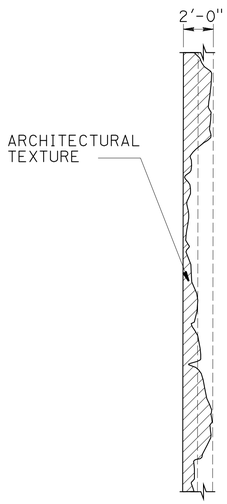

SECTION A-A
NO SCALE

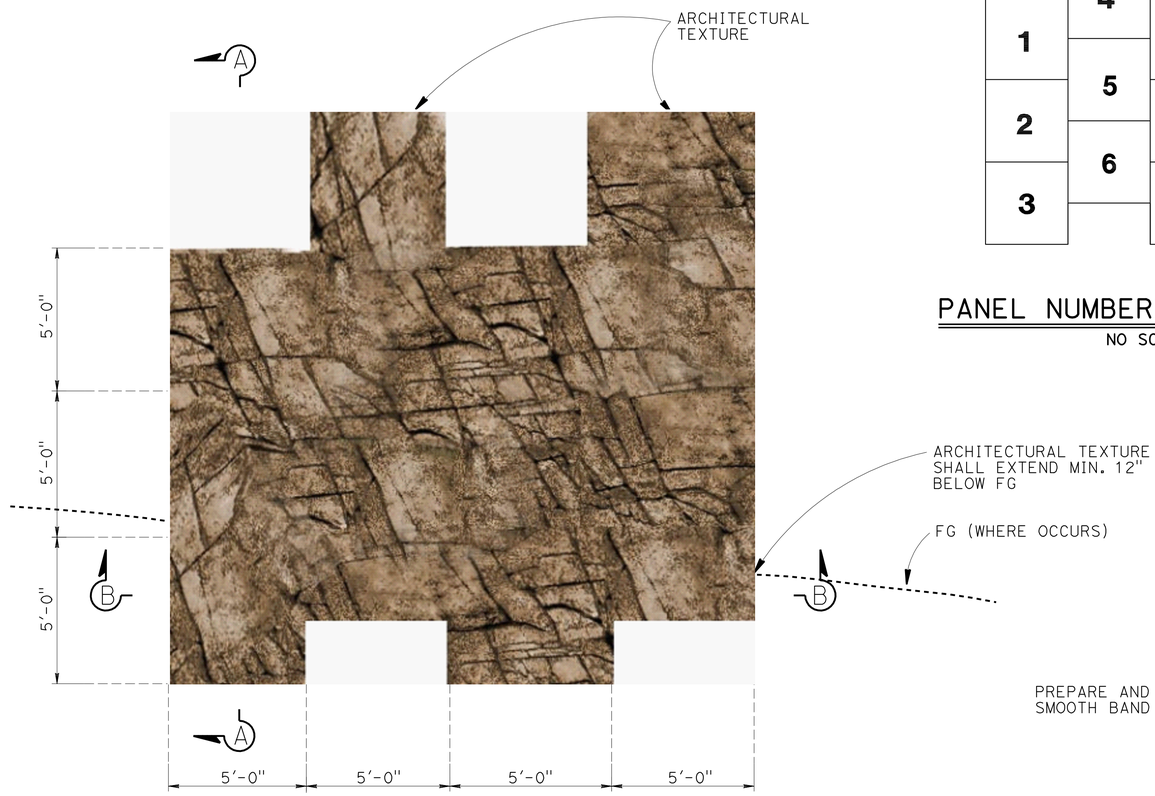

ROCK STRATA PATTERN TYPES (TYPICAL)
NO SCALE

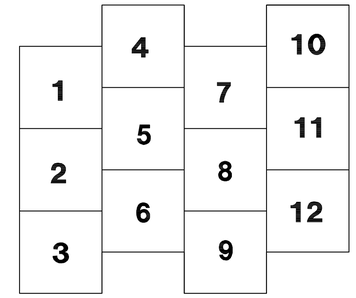

PANEL NUMBERING SEQUENCE
NO SCALE

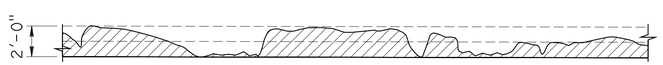

SECTION B-B
NO SCALE

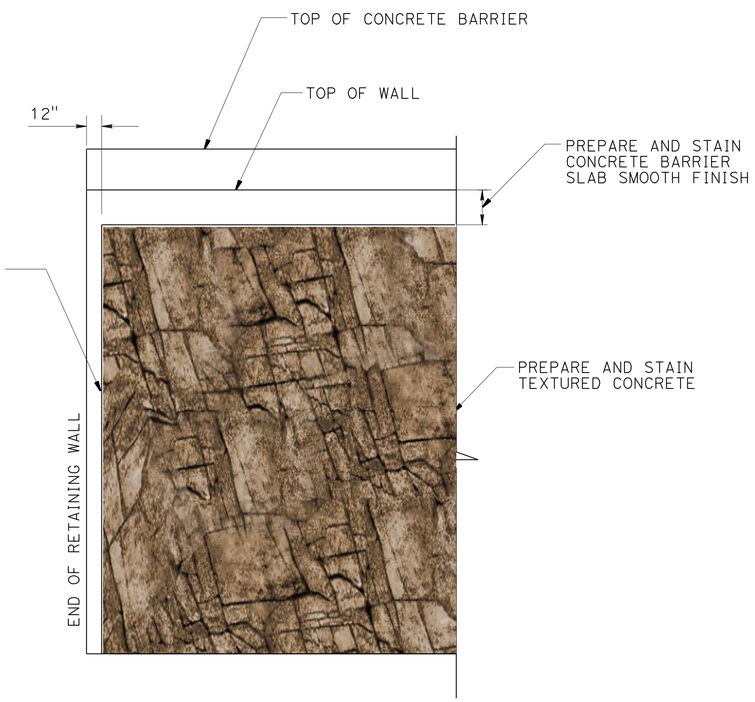

WALL TOP AND END DETAIL
NO SCALE

NOTES:

1. ARCHITECTURAL TEXTURE THICKNESS VARIES FROM 0" TO 2" MAXIMUM THICKNESS.

DESIGN	BY VATHANA CHY	CHECKED RONALD WONG	
DETAILS	BY VATHANA CHY	CHECKED RONALD WONG	
QUANTITIES	BY CHARLES LOMICKA	CHECKED HTOON WIN	

STATE OF CALIFORNIA
DEPARTMENT OF TRANSPORTATION

DIVISION OF ENGINEERING SERVICES
STRUCTURE DESIGN
DESIGN BRANCH 19

BRIDGE NO. 55E0118
POST MILE 9.5

RETAINING WALL NO. 513
ARCHITECTURAL TEXTURE DETAILS NO. 3

STRUCTURES DESIGN DETAIL SHEET (ENGLISH) (REV. 09-01-10)

ORIGINAL SCALE IN INCHES FOR REDUCED PLANS 0 1 2 3

UNIT: 3621
PROJECT NUMBER & PHASE: 1200000102 1 CONTRACT NO.: OE3101

DISREGARD PRINTS BEARING EARLIER REVISION DATES

REVISION DATES: 05-06-11 11-08-11 11-15-11

SHEET 14 OF 19

FILE => RW513-u-miscdt03.dgn

USERNAME => s121614 DATE PLOTTED => 15-APR-2012 TIME PLOTTED => 09:57

DIST	COUNTY	ROUTE	POST MILES TOTAL PROJECT	SHEET No.	TOTAL SHEETS
12	Ora	5,74	9.3/10.0, 0.0/0.2	501	515

GEOTECHNICAL PROFESSIONAL — DATE 07/2011

4-9-12
PLANS APPROVAL DATE

REGISTERED PROFESSIONAL ENGINEER — MICHAEL G. SMITH No. 2229 Exp. 3-31-2012 GEOTECHNICAL — STATE OF CALIFORNIA

The State of California or its officers or agents shall not be responsible for the accuracy or completeness of electronic copies of this plan sheet.

This LOTB sheet was prepared in accordance with the Caltrans Soil & Rock Logging, Classification, & Presentation Manual (2010 Edition).

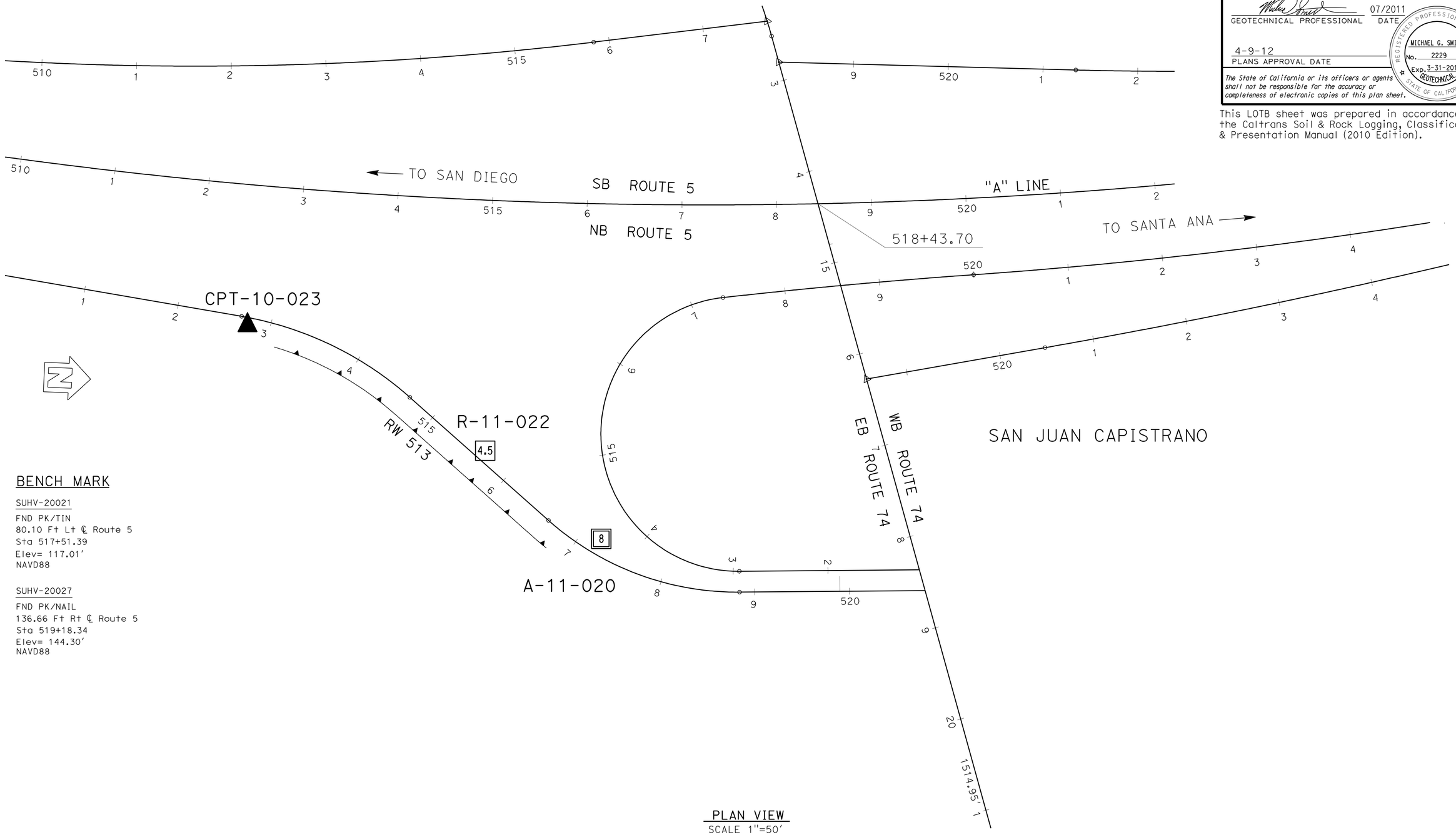

PLAN VIEW
SCALE 1"=50'

BENCH MARK

SUHV-20021
FND PK/TIN
80.10 Ft Lt ℄ Route 5
Sta 517+51.39
Elev= 117.01'
NAVD88

SUHV-20027
FND PK/NAIL
136.66 Ft Rt ℄ Route 5
Sta 519+18.34
Elev= 144.30'
NAVD88

ENGINEERING SERVICES	MATERIALS AND GEOTECHNICAL SERVICES	STATE OF CALIFORNIA DEPARTMENT OF TRANSPORTATION	DIVISION OF ENGINEERING SERVICES STRUCTURE DESIGN DESIGN BRANCH 19	BRIDGE NO. 55E0118 POST MILE 9.5	RETAINING WALL 513 LOG OF TEST BORINGS SHEET 1 OF 5
FUNCTIONAL SUPERVISOR NAME: M. SMITH	DRAWN BY: P.QUACH CHECKED BY: P.YERRA	FIELD INVESTIGATION BY: EJ.JEON/D.ORRIS			

OGS CIVIL LOG OF TEST BORINGS SHEET

ORIGINAL SCALE IN INCHES FOR REDUCED PLANS 0 1 2 3

UNIT: 3658
PROJECT NUMBER & PHASE: 1200000102 & 4 CONTRACT NO.: 12-0E3104

DISREGARD PRINTS BEARING EARLIER REVISION DATES → REVISION DATES 06/17/11 SHEET 15 OF 19

FILE => RW513-z-lotb_01.dgn

USERNAME => s12161d DATE PLOTTED => 15-APR-2012 TIME PLOTTED => 09:58

DIST	COUNTY	ROUTE	POST MILES TOTAL PROJECT	SHEET No.	TOTAL SHEETS
12	Ora	5,74	9.3/10.0, 0.0/0.2	502	515

GEOTECHNICAL PROFESSIONAL — DATE 07/2011

4-9-12
PLANS APPROVAL DATE

REGISTERED PROFESSIONAL ENGINEER — MICHAEL G. SMITH — No. 2229 — Exp. 3-31-2012 — GEOTECHNICAL — STATE OF CALIFORNIA

The State of California or its officers or agents shall not be responsible for the accuracy or completeness of electronic copies of this plan sheet.

This LOTB sheet was prepared in accordance with the Caltrans Soil & Rock Logging, Classification, & Presentation Manual (2010 Edition).

FOR PLAN VIEW, SEE
"LOG OF TEST BORINGS" 1 OF 5

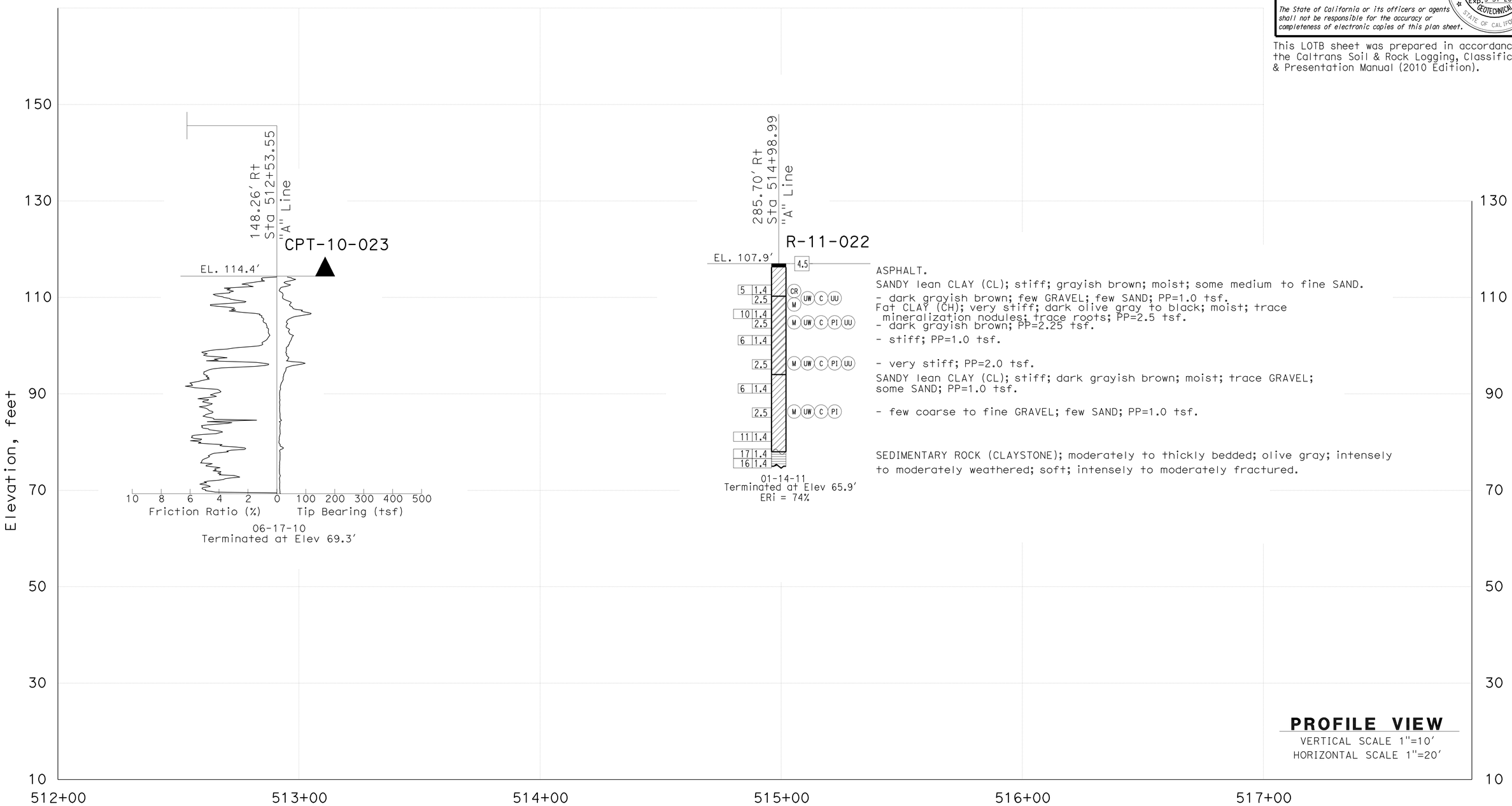

ENGINEERING SERVICES	MATERIALS AND GEOTECHNICAL SERVICES	STATE OF CALIFORNIA DEPARTMENT OF TRANSPORTATION	DIVISION OF ENGINEERING SERVICES STRUCTURE DESIGN DESIGN BRANCH 19	BRIDGE NO. 55E0118 POST MILE 9.5	RETAINING WALL 513
FUNCTIONAL SUPERVISOR NAME: M. SMITH	DRAWN BY: P.QUACH CHECKED BY: P.YERRA	FIELD INVESTIGATION BY: EJ.JEON			LOG OF TEST BORINGS SHEET 2 OF 5

OGS CIVIL LOG OF TEST BORINGS SHEET

ORIGINAL SCALE IN INCHES FOR REDUCED PLANS 0 1 2 3

UNIT: 3658
PROJECT NUMBER & PHASE: 1200000102 & 4 CONTRACT NO.: 12-0E3104

DISREGARD PRINTS BEARING EARLIER REVISION DATES → REVISION DATES 06/17/11

SHEET 16 OF 19

FILE => RW513-z-lotb_02.dgn

USERNAME => s121614 DATE PLOTTED => 15-APR-2012 TIME PLOTTED => 09:58

DIST	COUNTY	ROUTE	POST MILES TOTAL PROJECT	SHEET No.	TOTAL SHEETS
12	Ora	5,74	9.3/10.0, 0.0/0.2	503	515

GEOTECHNICAL PROFESSIONAL — DATE 07/2011

4-9-12
PLANS APPROVAL DATE

REGISTERED PROFESSIONAL ENGINEER — MICHAEL G. SMITH No. 2229 Exp. 3-31-2012 GEOTECHNICAL — STATE OF CALIFORNIA

The State of California or its officers or agents shall not be responsible for the accuracy or completeness of electronic copies of this plan sheet.

This LOTB sheet was prepared in accordance with the Caltrans Soil & Rock Logging, Classification, & Presentation Manual (2010 Edition).

FOR PLAN VIEW, SEE
"LOG OF TEST BORINGS" 1 OF 5

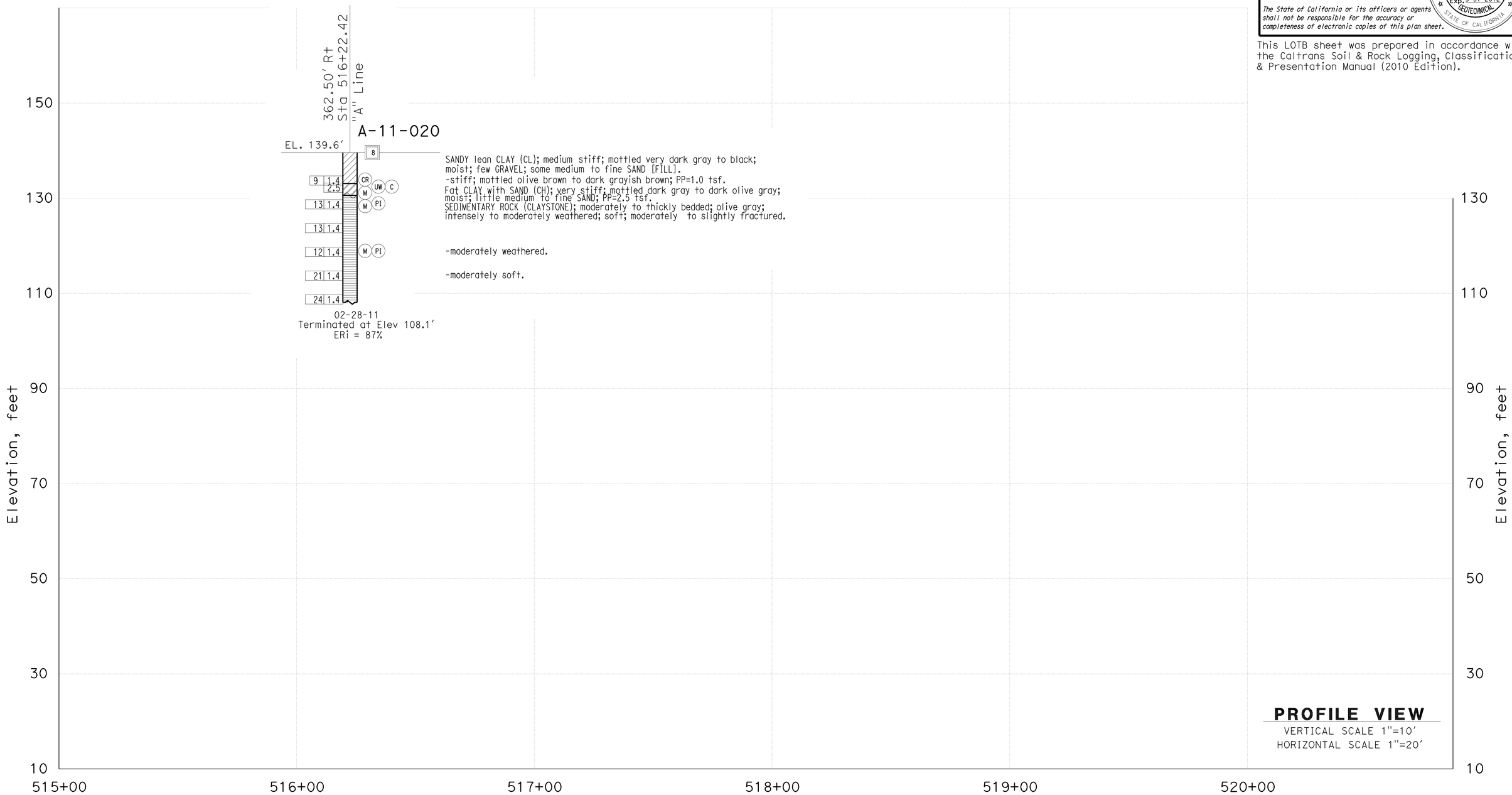

ENGINEERING SERVICES	MATERIALS AND GEOTECHNICAL SERVICES	STATE OF CALIFORNIA DEPARTMENT OF TRANSPORTATION	DIVISION OF ENGINEERING SERVICES STRUCTURE DESIGN DESIGN BRANCH 19	BRIDGE NO. 55E0118 POST MILE 9.5	RETAINING WALL 513
FUNCTIONAL SUPERVISOR NAME: M. SMITH	DRAWN BY: P.QUACH CHECKED BY: P.YERRA	FIELD INVESTIGATION BY: EJ.JEON			LOG OF TEST BORINGS SHEET 3 OF 5

OGS CIVIL LOG OF TEST BORINGS SHEET

ORIGINAL SCALE IN INCHES FOR REDUCED PLANS 0 1 2 3

UNIT: 3658
PROJECT NUMBER & PHASE: 1200000102 & 4 CONTRACT NO.: 12-0E3104

DISREGARD PRINTS BEARING EARLIER REVISION DATES

REVISION DATES 06/17/11 — SHEET 17 OF 19

FILE => RW513-z-lotb_03.dgn

USERNAME => s121614 DATE PLOTTED => 15-APR-2012 TIME PLOTTED => 09:58

DIST	COUNTY	ROUTE	POST MILES TOTAL PROJECT	SHEET No.	TOTAL SHEETS
12	Ora	5,74	9.3/10.0, 0.0/0.2	504	515

GEOTECHNICAL PROFESSIONAL — DATE 07/2011

4-9-12
PLANS APPROVAL DATE

REGISTERED PROFESSIONAL ENGINEER — MICHAEL G. SMITH No. 2229 Exp. 3-31-2012 GEOTECHNICAL — STATE OF CALIFORNIA

The State of California or its officers or agents shall not be responsible for the accuracy or completeness of electronic copies of this plan sheet.

This LOTB sheet was prepared in accordance with the Caltrans Soil & Rock Logging, Classification, & Presentation Manual (2010 Edition).

CEMENTATION

Description	Criteria
Weak	Crumbles or breaks with handling or little finger pressure.
Moderate	Crumbles or breaks with considerable finger pressure.
Strong	Will not crumble or break with finger pressure.

BOREHOLE IDENTIFICATION

Symbol	Hole Type	Description
Size	A	Auger Boring (hollow or solid stem bucket)
Size	R RW RC P	Rotary drilled boring (conventional) Rotary drilled with self-casing wire-line Rotary core with continuously-sampled, self-casing wire-line Rotary percussion boring (air)
Size	R	Rotary drilled diamond core
Size	HD HA	Hand driven (1-inch soil tube) Hand Auger
●	D	Dynamic Cone Penetration Boring
▲	CPT	Cone Penetration Test (ASTM D 5778)
⬚	O	Other (note on LOTB)

Note: Size in inches.

CONSISTENCY OF COHESIVE SOILS

Description	Shear Strength (tsf)	Pocket Penetrometer Measurement, PP, (tsf)	Torvane Measurement, TV, (tsf)	Vane Shear Measurement, VS, (tsf)
Very Soft	Less than 0.12	Less than 0.25	Less than 0.12	Less than 0.12
Soft	0.12 - 0.25	0.25 - 0.5	0.12 - 0.25	0.12 - 0.25
Medium Stiff	0.25 - 0.5	0.5 - 1	0.25 - 0.5	0.25 - 0.5
Stiff	0.5 - 1	1 - 2	0.5 - 1	0.5 - 1
Very Stiff	1 - 2	2 - 4	1 - 2	1 - 2
Hard	Greater than 2	Greater than 4	Greater than 2	Greater than 2

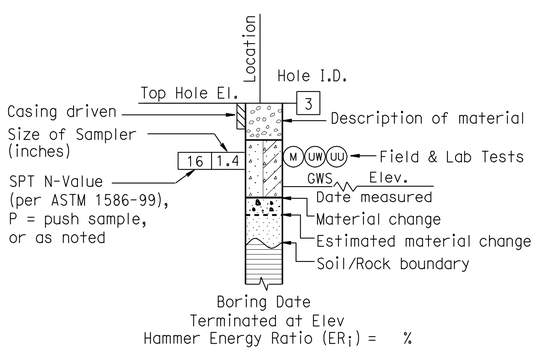

ROTARY BORING

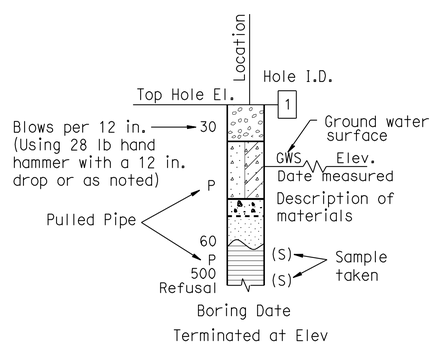

HAND BORING

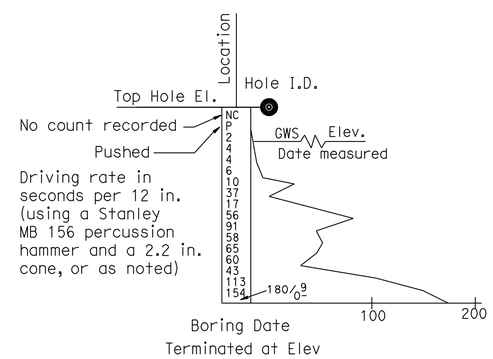

DYNAMIC CONE PENETRATION BORING

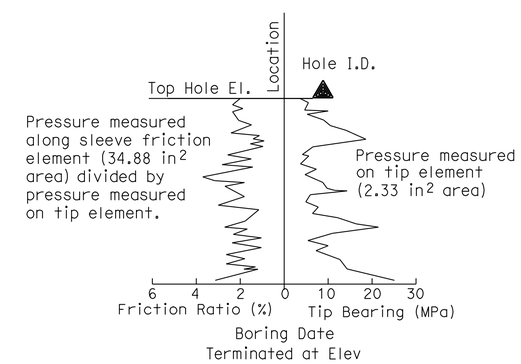

CONE PENETRATION TEST (CPT) BORING

ENGINEERING SERVICES	MATERIALS AND GEOTECHNICAL SERVICES	STATE OF CALIFORNIA DEPARTMENT OF TRANSPORTATION	DIVISION OF ENGINEERING SERVICES STRUCTURE DESIGN DESIGN BRANCH 19	BRIDGE NO. 55E0118	RETAINING WALL 513
FUNCTIONAL SUPERVISOR	DRAWN BY: P.QUACH	FIELD INVESTIGATION BY:		POST MILE 9.5	LOG OF TEST BORINGS SHEET 4 OF 5
NAME: M. SMITH	CHECKED BY: P.YERRA	EJ.JEON			

OGS CIVIL LOG OF TEST BORINGS SHEET

ORIGINAL SCALE IN INCHES FOR REDUCED PLANS 0 1 2 3

UNIT: 3658
PROJECT NUMBER & PHASE: 1200000102 & 4 CONTRACT NO.: 12-0E3104

DISREGARD PRINTS BEARING EARLIER REVISION DATES → 06/17/11

REVISION DATES | SHEET 18 OF 19

FILE => RW513-z-lotb_04.dgn

USERNAME => s121614 DATE PLOTTED => 15-APR-2012 TIME PLOTTED => 09:59

DIST	COUNTY	ROUTE	POST MILES TOTAL PROJECT	SHEET No.	TOTAL SHEETS
12	Ora	5,74	9.3/10.0, 0.0/0.2	505	515

GEOTECHNICAL PROFESSIONAL — DATE 07/2011

4-9-12
PLANS APPROVAL DATE

REGISTERED PROFESSIONAL ENGINEER — MICHAEL G. SMITH No. 2229 Exp. 3-31-2012 GEOTECHNICAL — STATE OF CALIFORNIA

The State of California or its officers or agents shall not be responsible for the accuracy or completeness of electronic copies of this plan sheet.

This LOTB sheet was prepared in accordance with the Caltrans Soil & Rock Logging, Classification, & Presentation Manual (2010 Edition).

GROUP SYMBOLS AND NAMES

Graphic/Symbol	Group Names	Graphic/Symbol	Group Names
GW	Well-graded GRAVEL Well-graded GRAVEL with SAND	CL	Lean CLAY Lean CLAY with SAND Lean CLAY with GRAVEL SANDY lean CLAY SANDY lean CLAY with GRAVEL GRAVELLY lean CLAY GRAVELLY lean CLAY with SAND
GP	Poorly-graded GRAVEL Poorly-graded GRAVEL with SAND		
GW-GM	Well-graded GRAVEL with SILT Well-graded GRAVEL with SILT and SAND	CL-ML	SILTY CLAY SILTY CLAY with SAND SILTY CLAY with GRAVEL SANDY SILTY CLAY SANDY SILTY CLAY with GRAVEL GRAVELLY SILTY CLAY GRAVELLY SILTY CLAY with SAND
GW-GC	Well-graded GRAVEL with CLAY (or SILTY CLAY) Well-graded GRAVEL with CLAY and SAND (or SILTY CLAY and SAND)		
GP-GM	Poorly-graded GRAVEL with SILT Poorly-graded GRAVEL with SILT and SAND	ML	SILT SILT with SAND SILT with GRAVEL SANDY SILT SANDY SILT with GRAVEL GRAVELLY SILT GRAVELLY SILT with SAND
GP-GC	Poorly-graded GRAVEL with CLAY (or SILTY CLAY) Poorly-graded GRAVEL with CLAY and SAND (or SILTY CLAY and SAND)		
GM	SILTY GRAVEL SILTY GRAVEL with SAND	OL	ORGANIC lean CLAY ORGANIC lean CLAY with SAND ORGANIC lean CLAY with GRAVEL SANDY ORGANIC lean CLAY SANDY ORGANIC lean CLAY with GRAVEL GRAVELLY ORGANIC lean CLAY GRAVELLY ORGANIC lean CLAY with SAND
GC	CLAYEY GRAVEL CLAYEY GRAVEL with SAND		
GC-GM	SILTY, CLAYEY GRAVEL SILTY, CLAYEY GRAVEL with SAND	OL	ORGANIC SILT ORGANIC SILT with SAND ORGANIC SILT with GRAVEL SANDY ORGANIC SILT SANDY ORGANIC SILT with GRAVEL GRAVELLY ORGANIC SILT GRAVELLY ORGANIC SILT with SAND
SW	Well-graded SAND Well-graded SAND with GRAVEL		
SP	Poorly-graded SAND Poorly-graded SAND with GRAVEL	CH	Fat CLAY Fat CLAY with SAND Fat CLAY with GRAVEL SANDY fat CLAY SANDY fat CLAY with GRAVEL GRAVELLY fat CLAY GRAVELLY fat CLAY with SAND
SW-SM	Well-graded SAND with SILT Well-graded SAND with SILT and GRAVEL		
SW-SC	Well-graded SAND with CLAY (or SILTY CLAY) Well-graded SAND with CLAY and GRAVEL (or SILTY CLAY and GRAVEL)	MH	Elastic SILT Elastic SILT with SAND Elastic SILT with GRAVEL SANDY elastic SILT SANDY elastic SILT with GRAVEL GRAVELLY elastic SILT GRAVELLY elastic SILT with SAND
SP-SM	Poorly-graded SAND with SILT Poorly-graded SAND with SILT and GRAVEL		
SP-SC	Poorly-graded SAND with CLAY (or SILTY CLAY) Poorly-graded SAND with CLAY and GRAVEL (or SILTY CLAY and GRAVEL)	OH	ORGANIC fat CLAY ORGANIC fat CLAY with SAND ORGANIC fat CLAY with GRAVEL SANDY ORGANIC fat CLAY SANDY ORGANIC fat CLAY with GRAVEL GRAVELLY ORGANIC fat CLAY GRAVELLY ORGANIC fat CLAY with SAND
SM	SILTY SAND SILTY SAND with GRAVEL		
SC	CLAYEY SAND CLAYEY SAND with GRAVEL	OH	ORGANIC elastic SILT ORGANIC elastic SILT with SAND ORGANIC elastic SILT with GRAVEL SANDY ORGANIC elastic SILT SANDY ORGANIC elastic SILT with GRAVEL GRAVELLY ORGANIC elastic SILT GRAVELLY ORGANIC elastic SILT with SAND
SC-SM	SILTY, CLAYEY SAND SILTY, CLAYEY SAND with GRAVEL		
PT	PEAT	OL/OH	ORGANIC SOIL ORGANIC SOIL with SAND ORGANIC SOIL with GRAVEL SANDY ORGANIC SOIL SANDY ORGANIC SOIL with GRAVEL GRAVELLY ORGANIC SOIL GRAVELLY ORGANIC SOIL with SAND
	COBBLES COBBLES and BOULDERS BOULDERS		

FIELD AND LABORATORY TESTING

- (C) Consolidation (ASTM D 2435)
- (CL) Collapse Potential (ASTM D 5333)
- (CP) Compaction Curve (CTM 216)
- (CR) Corrosivity Testing (CTM 643, CTM 422, CTM 417)
- (CU) Consolidated Undrained Triaxial (ASTM D 4767)
- (DS) Direct Shear (ASTM D 3080)
- (EI) Expansion Index (ASTM D 4829)
- (M) Moisture Content (ASTM D 2216)
- (OC) Organic Content-% (ASTM D 2974)
- (P) Permeability (CTM 220)
- (PA) Particle Size Analysis (ASTM D 422)
- (PI) Plasticity Index (AASHTO T 90) Liquid Limit (AASHTO T 89)
- (PL) Point Load Index (ASTM D 5731)
- (PM) Pressure Meter
- (R) R-Value (CTM 301)
- (SE) Sand Equivalent (CTM 217)
- (SG) Specific Gravity (AASHTO T 100)
- (SL) Shrinkage Limit (ASTM D 427)
- (SW) Swell Potential (ASTM D 4546)
- (UC) Unconfined Compression-Soil (ASTM D 2166) Unconfined Compression-Rock (ASTM D 2938)
- (UU) Unconsolidated Undrained Triaxial (ASTM D 2850)
- (UW) Unit Weight (ASTM D 4767)

APPARENT DENSITY OF COHESIONLESS SOILS

Description	SPT N_{60} (Blows / 12 in.)
Very Loose	0 - 5
Loose	5 - 10
Medium Dense	10 - 30
Dense	30 - 50
Very Dense	Greater than 50

MOISTURE

Description	Criteria
Dry	No discernable moisture
Moist	Moisture present, but no free water
Wet	Visible free water

PERCENT OR PROPORTION OF SOILS

Description	Criteria
Trace	Particles are present but estimated to be less than 5%
Few	5% - 10%
Little	15% - 25%
Some	30% - 45%
Mostly	50% - 100%

PARTICLE SIZE

Description		Size (in.)
Boulder		Greater than 12
Cobble		3 - 12
Gravel	Coarse	3/4 - 3
	Fine	1/5 - 3/4
Sand	Coarse	1/16 - 1/5
	Medium	1/64 - 1/16
	Fine	1/300 - 1/64
Silt and Clay		Less than 1/300

ENGINEERING SERVICES — MATERIALS AND GEOTECHNICAL SERVICES

FUNCTIONAL SUPERVISOR
NAME: M. SMITH
DRAWN BY: P.QUACH
CHECKED BY: P.YERRA
FIELD INVESTIGATION BY: EJ.JEON

STATE OF CALIFORNIA DEPARTMENT OF TRANSPORTATION

DIVISION OF ENGINEERING SERVICES STRUCTURE DESIGN — DESIGN BRANCH 19

BRIDGE NO. 55E0118
POST MILE 9.5

RETAINING WALL 513

LOG OF TEST BORINGS SHEET 5 OF 5

OGS CIVIL LOG OF TEST BORINGS SHEET

ORIGINAL SCALE IN INCHES FOR REDUCED PLANS 0 1 2 3

UNIT: 3658
PROJECT NUMBER & PHASE: 1200000102 & 4 CONTRACT NO.: 12-0E3104

DISREGARD PRINTS BEARING EARLIER REVISION DATES → 06/17/11

SHEET 19 OF 19

FILE => RW513-z-lotb_05.dgn

USERNAME => s121614 DATE PLOTTED => 15-APR-2012 TIME PLOTTED => 09:59

DIST	COUNTY	ROUTE	POST MILES TOTAL PROJECT	SHEET No.	TOTAL SHEETS
12	Ora	5,74	9.3/10.0, 0.0/0.2	506	515

Charles Lomicka 11-15-11
REGISTERED CIVIL ENGINEER DATE

4-9-12
PLANS APPROVAL DATE

REGISTERED PROFESSIONAL ENGINEER CHARLES LOMICKA No. C 71172 Exp. 06-30-2013 CIVIL STATE OF CALIFORNIA

The State of California or its officers or agents shall not be responsible for the accuracy or completeness of electronic copies of this plan sheet.

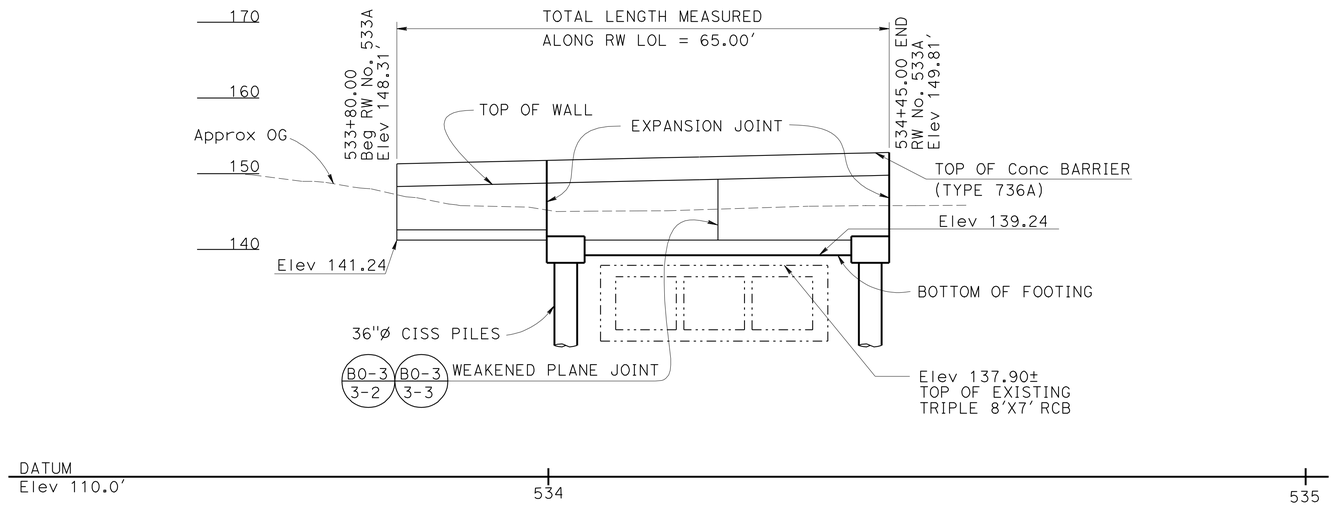

MIRRORED ELEVATION

1"=10'

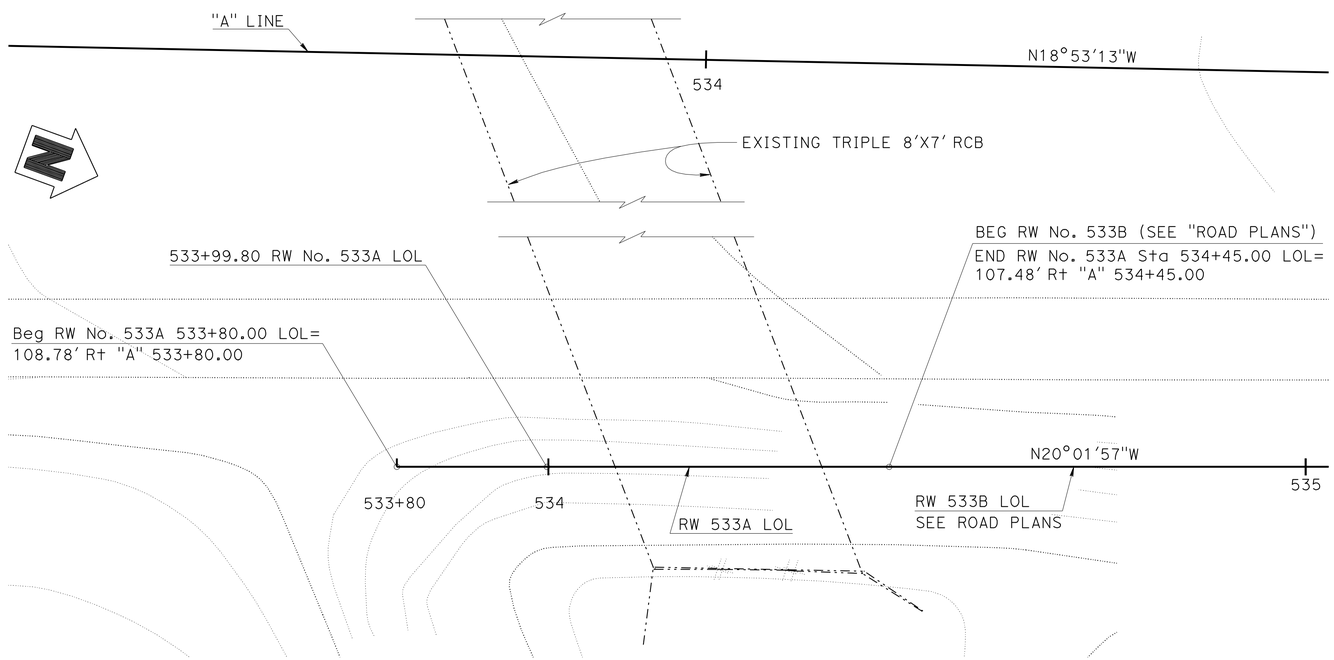

NOTE:
THE CONTRACTOR SHALL VERIFY ALL CONTROLLING FIELD DIMENSIONS BEFORE ORDERING OR FABRICATING ANY MATERIAL.

PLAN

1" = 10'

STANDARD PLANS DATED MAY 2006

A10A	ACRONYMS AND ABBREVIATIONS (A-L)
A10B	ACRONYMS AND ABBREVIATIONS (M-Z)
A10C	SYMBOLS (SHEETS 1 OF 2))
A10D	SYMBOLS (SHEETS 2 OF 2))
A62B	LIMITS OF PAYMENT FOR EXCAVATION AND BACKFILL - BRIDGE SURCHARGE AND WALL
B0-3	BRIDGE DETAILS
B11-56	CONCRETE BARRIER TYPE 736

STANDARD PLAN SHEET NO.
DETAIL NO.

INDEX TO PLANS

NO. SHEET NAME
1. GENERAL PLAN
2. FOUNDATION PLAN
3. STRUCTURE PLAN
4. RETAINING WALL DETAILS NO. 1
5. RETAINING WALL DETAILS NO. 2
6. ARCHITECTURAL TEXTURE DETAILS
7. LOG OF TEST BORINGS 1 OF 4
8. LOG OF TEST BORINGS 2 OF 4
9. LOG OF TEST BORINGS 3 OF 4
10. LOG OF TEST BORINGS 4 OF 4

QUANTITIES

STRUCTURE EXCAVATION (RETAINING WALL)	130 CY
STRUCTURE BACKFILL (RETAINING WALL)	63 CY
PERVIOUS BACKFILL MATERIAL (RETAINING WALL)	6 CY
LEAN CONCRETE BACKFILL	8 CY
48" PERMANENT STEEL CASING	40 LF
FURNISH 36" CAST-IN STEEL SHELL CONCRETE PILING	82 LF
DRIVE 36" CAST-IN STEEL SHELL CONCRETE PILE	2 EA
STRUCTURAL CONCRETE, RETAINING WALL	50 CY
ARCHITECTURAL TEXTURE (FRACTURED RIB)	341 SQFT
BAR REINFORCING STEEL (RETAINING WALL)	12,800 LB
CONCRETE BARRIER (TYPE 736A)	65 LF

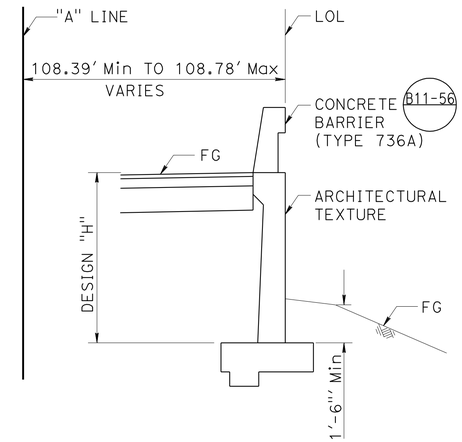

TYPICAL SECTION

NO SCALE
FROM Sta 533+80
TO 533+99.80

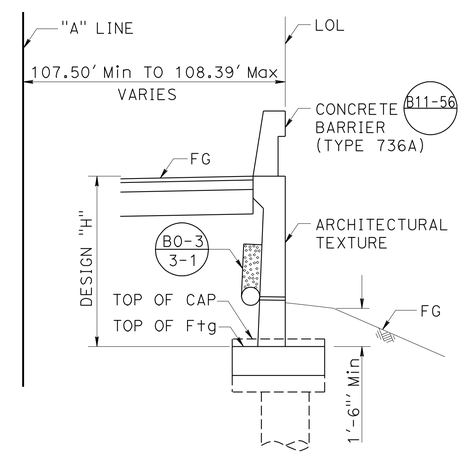

TYPICAL SECTION

NO SCALE
FROM Sta 533+99.80
TO 534+45.00

MINA PEZESHPOUR
DESIGN ENGINEER

	BY	CHECKED		BY	CHECKED
DESIGN	EDWARD MERCADO	CHARLES LOMICKA	LOAD & RESISTANCE FACTOR DESIGN		
DETAILS	HENGAMEH MAHBOOBI / H.B.	CHARLES LOMICKA	LAYOUT	EDWARD MERCADO	CHARLES LOMICKA
QUANTITIES	EDWARD MERCADO	HTOON WIN	SPECIFICATIONS	VAIKUNTHAN RENGANATHAN	PLANS AND SPECS COMPARED VAIKUNTHAN RENGANATHAN

ORIGINAL SCALE IN INCHES FOR REDUCED PLANS 0 1 2 3

STATE OF CALIFORNIA
DEPARTMENT OF TRANSPORTATION

DIVISION OF ENGINEERING SERVICES
STRUCTURE DESIGN
DESIGN BRANCH 19

BRIDGE NO. 55E0120
POST MILE 9.90

RETAINING WALL NO. 533A
GENERAL PLAN

UNIT: 3621
PROJECT NUMBER & PHASE: 1200000102 1 CONTRACT NO.: 0E3101

DISREGARD PRINTS BEARING EARLIER REVISION DATES
REVISION DATES 01-25-11 11-08-11 11-15-11
SHEET 1 OF 10

USERNAME => s12614 DATE PLOTTED => 15-APR-2012 TIME PLOTTED => 09:59

STRUCTURES DESIGN GENERAL PLAN SHEET (ENGLISH) (REV.09-01-10)

FILE => RW533A-a-gp01.dgn

DIST	COUNTY	ROUTE	POST MILES TOTAL PROJECT	SHEET No.	TOTAL SHEETS
12	Ora	5,74	9.3/10.0, 0.0/0.2	507	515

Charles Lomicka 11-15-11
REGISTERED CIVIL ENGINEER DATE

4-9-12
PLANS APPROVAL DATE

REGISTERED PROFESSIONAL ENGINEER
CHARLES LOMICKA
No. C 71172
Exp. 6/30/13
CIVIL
STATE OF CALIFORNIA

The State of California or its officers or agents shall not be responsible for the accuracy or completeness of electronic copies of this plan sheet.

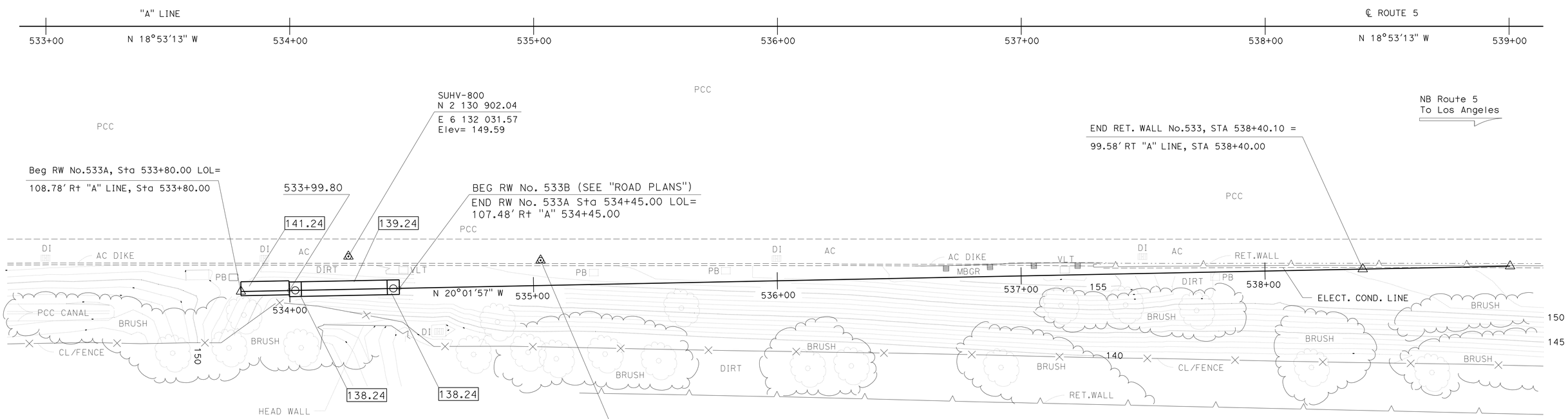

SURVEY CONTROL

SUHV-800

FND PK/Tin/ AC Shdr
94.41 Ft Rt ℄ Route 5
Sta 534+24.06
N 2 130 902.04
E 6 132 031.57
Elev= 149.59

SUHV-413

FND PK/Tin/ AC Shdr
95.97 Ft Rt ℄ Route 5
Sta 535+02.87
N 2 130 977.11
E 6 132 007.54
Elev= 151.28

LEGEND:

XX.XX BOTTOM FOOTING ELEVATION

PRELIMINARY INVESTIGATION SECTION

SCALE 1"=20'	VERT.DATUM NAVD88	PHOTOGRAMMETRY AS OF: X			
	HORZ.DATUM NAD83 (1991.35)	SURVEYED	BY T.PHUNG 02/2011	CHECKED	BY C.STEWART 02/2011
ALIGNMENT TIES DIST.TRAVERSE SHEETS		DRAFTED	BY V.PHAM 02/2011	CHECKED	BY S.ALIVIO 02/2011

DESIGN	BY EDWARD MERCADO	CHECKED CHARLES LOMICKA
DETAILS	BY H. MAHBOOBI / H. B.	CHECKED CHARLES LOMICKA
QUANTITIES	BY EDWARD MERCADO	CHECKED HTOON WIN

STATE OF CALIFORNIA
DEPARTMENT OF TRANSPORTATION

DIVISION OF ENGINEERING SERVICES
STRUCTURE DESIGN
DESIGN BRANCH 19

BRIDGE NO. 55E0120
POST MILE 9.90

RETAINING WALL NO. 533A
FOUNDATION PLAN

STRUCTURES FOUNDATION PLAN SHEET (ENGLISH) (REV. 09-01-10)

ORIGINAL SCALE IN INCHES FOR REDUCED PLANS 0 1 2 3

UNIT: 3621
PROJECT NUMBER & PHASE: 1200000102 1 CONTRACT NO.: 0E3101

DISREGARD PRINTS BEARING EARLIER REVISION DATES

REVISION DATES 02/17/11 11-07-11 11-15-11

SHEET 2 OF 10

FILE => RW533A-e-fdpl01.dgn

DIST	COUNTY	ROUTE	POST MILES TOTAL PROJECT	SHEET No.	TOTAL SHEETS
12	Ora	5,74	9.3/10.0, 0.0/0.2	508	515

Charles Lomicka 11-15-11
REGISTERED CIVIL ENGINEER DATE

4-9-12
PLANS APPROVAL DATE

REGISTERED PROFESSIONAL ENGINEER
CHARLES LOMICKA
No. C 71172
Exp. 6/30/13
CIVIL
STATE OF CALIFORNIA

The State of California or its officers or agents shall not be responsible for the accuracy or completeness of electronic copies of this plan sheet.

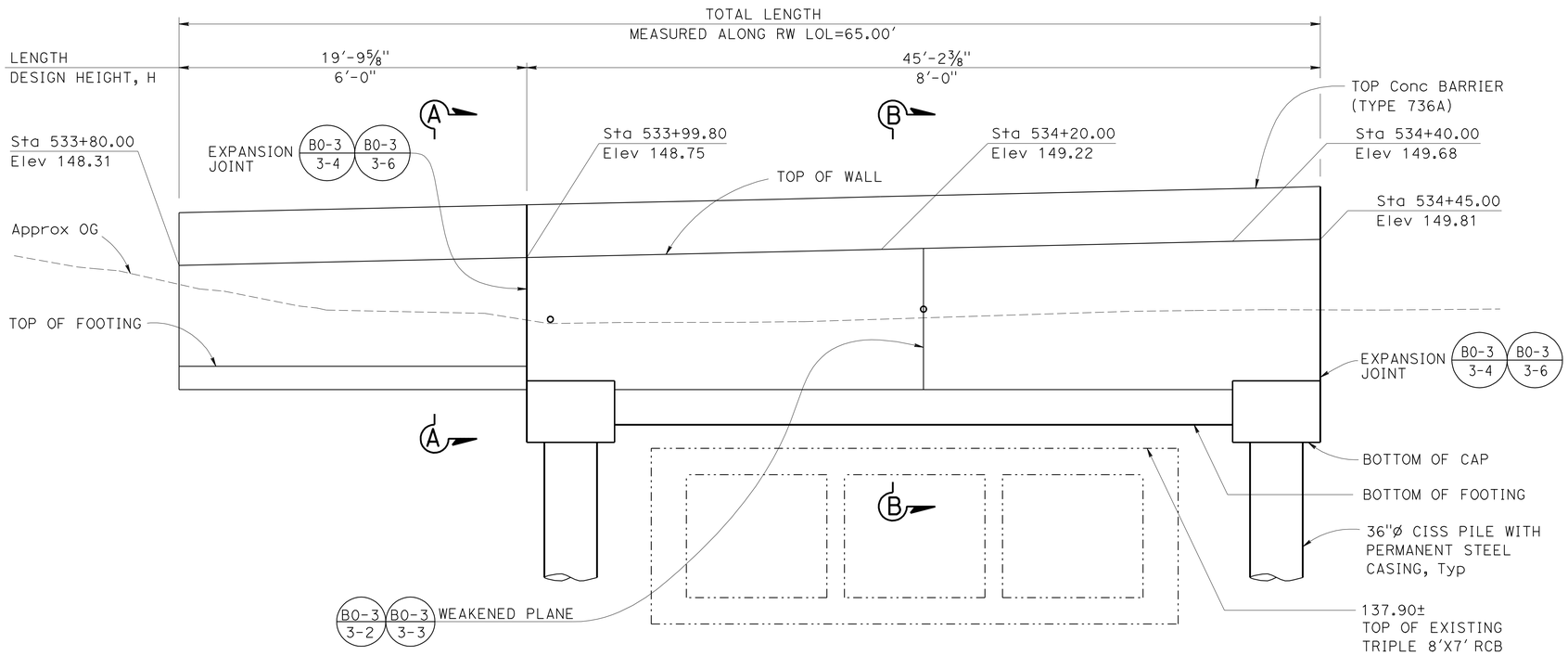

ELEVATION

¼" = 1'-0"

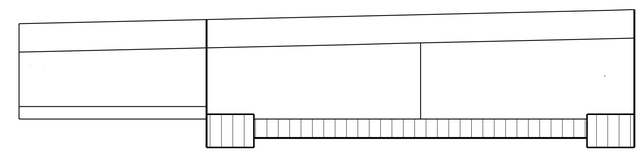

CONCRETE STRENGTH AND TYPE LIMITS

NO SCALE

LEGEND:

Structural Concrete (Retaining Wall)

Structural Concrete (Retaining Wall f'c = 4000 psi)

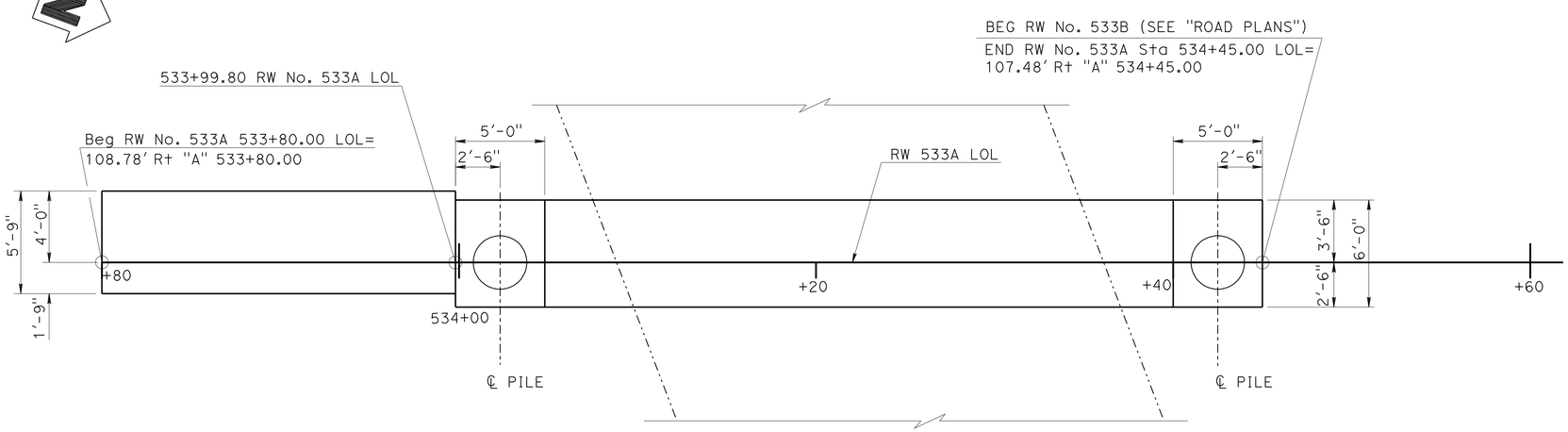

PLAN

¼" = 1'-0"

NOTE:
THE CONTRACTOR SHALL VERIFY ALL CONTROLLING FIELD DIMENSIONS BEFORE ORDERING OR FABRICATING ANY MATERIAL.

DESIGN	BY EDWARD MERCADO	CHECKED CHARLES LOMICKA	
DETAILS	BY HENGAMEH MAHBOOBI / H.B.	CHECKED CHARLES LOMICKA	
QUANTITIES	BY EDWARD MERCADO	CHECKED HTOON WIN	

STATE OF CALIFORNIA
DEPARTMENT OF TRANSPORTATION

DIVISION OF ENGINEERING SERVICES
STRUCTURE DESIGN
DESIGN BRANCH 19

BRIDGE NO. 55E0120
POST MILE 9.90

RETAINING WALL NO. 533A
STRUCTURE PLAN

STRUCTURES DESIGN DETAIL SHEET (ENGLISH) (REV. 09-01-10)

ORIGINAL SCALE IN INCHES FOR REDUCED PLANS 0 1 2 3

UNIT: 3621
PROJECT NUMBER & PHASE: 1200000102 1 CONTRACT NO.: 0E3101

DISREGARD PRINTS BEARING EARLIER REVISION DATES

REVISION DATES: 04-04-11 11-15-11 11-09-11

SHEET 3 OF 10

FILE => RW533A-c-sp01.dgn

USERNAME => s121614 DATE PLOTTED => 15-APR-2012 TIME PLOTTED => 09:59

DIST	COUNTY	ROUTE	POST MILES TOTAL PROJECT	SHEET No.	TOTAL SHEETS
12	Ora	5,74	9.3/10.0, 0.0/0.2	509	515

Charles Lomicka 11-15-11
REGISTERED CIVIL ENGINEER DATE

4-9-12
PLANS APPROVAL DATE

REGISTERED PROFESSIONAL ENGINEER
CHARLES LOMICKA
No. C 71172
Exp. 06/30/13
CIVIL
STATE OF CALIFORNIA

The State of California or its officers or agents shall not be responsible for the accuracy or completeness of electronic copies of this plan sheet.

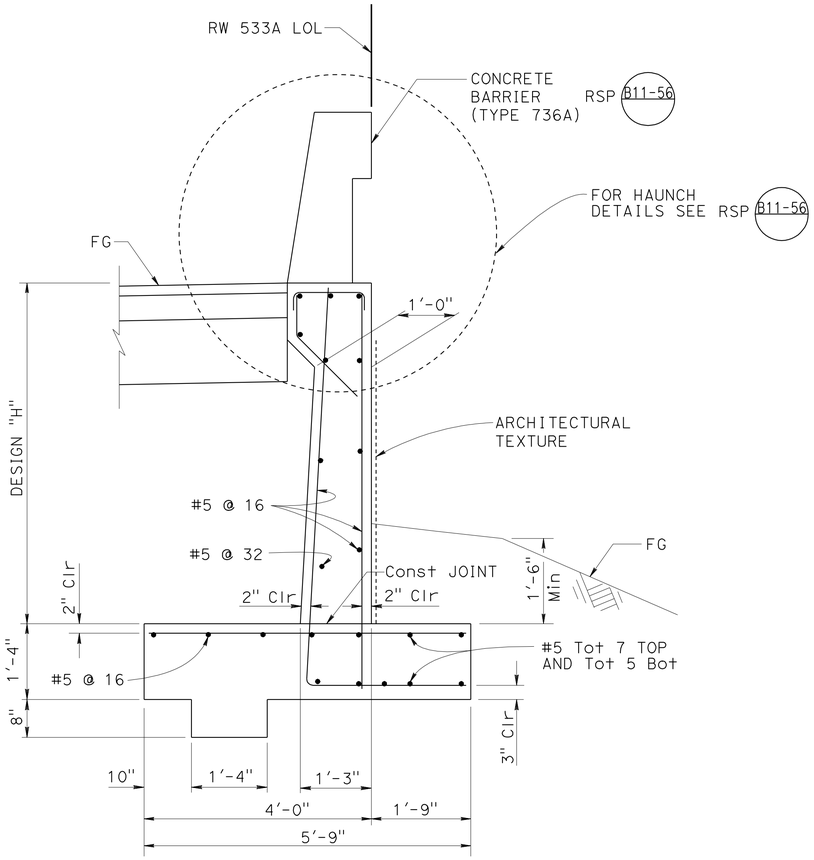

SECTION A-A

3/4" = 1'-0"

(FROM Sta 533+80 TO 533+99.80)

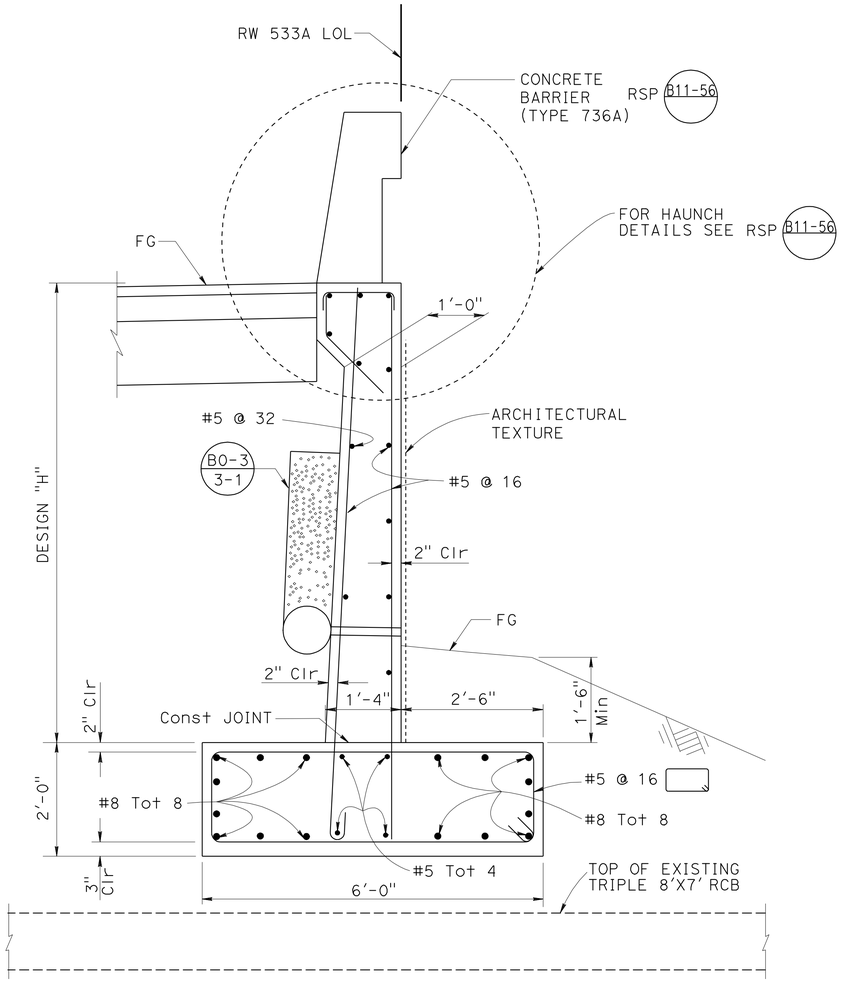

SECTION B-B

3/4" = 1'-0"

(FROM Sta 533+99.80 TO 534+45.00)

DESIGN DATA

Design: AASHTO LRFD Bridge Design Specifications 4th edition with California Amendments

LS: Varied surcharge on level ground surface

CT: 54 kip maximum traffic impact loading evenly distributed over 10 feet at top of the barrier and 1:1 distribution down and outward

EQE: Mononabe-Okabe Method
K_h = 0.2
K_v = 0.0

Soil: ϕ = 34°
γ = 120 pcf

Reinforced Concrete: f'c = 3600 psi (except as shown on "CONCRETE STRENGTH AND TYPE LIMITS")
fy = 60,000 psi

Load Combinations and Limit States

Service I Q=1.00DC+1.00EV+1.00EH+1.00LS+0.30WS

Service II Q=1.00DC+1.00EV+1.00EH+1.00WS

Strength I Q=aDC+bEV+1.50EH+1.75LS
Q=1.25DC+1.35EV+0.90EH+1.75LS
(for piles at heel)

Strength III Q=aDC+bEV+1.50EH+1.40WS

Strength V Q=aDC+bEV+1.50EH+1.35LS+0.40WS

Extreme I Q=1.00DC+1.00EV+1.00EH+1.00EQD+1.00EQE

Extreme II Q=1.00DC+1.00EV+1.00EH+1.00CT

Where:

Q: Force Effects
a: 1.25 or 0.90, Which ever Controls Design
b: 1.35 or 1.00, which ever Controls Design
DC: Dead Load of Structure Components
EH: Horizontal Earth Fill Pressure
EV: Vertical Earth Fill Pressure
LS: Live Load Surcharge
EQE: Seismic Earth Pressure
EQD: Soil and Structure Components Inertia. Soil inertia ignored for stem design
WS: Wind Load on Sound Wall and Barrier
CT: Vehicular Collision Force

NOTE:
THE CONTRACTOR SHALL VERIFY ALL CONTROLLING FIELD DIMENSIONS BEFORE ORDERING OR FABRICATING ANY MATERIAL.

	BY	CHECKED
DESIGN	EDWARD MERCADO	CHARLES LOMICKA
DETAILS	HENGAMEH MAHBOOBI / H.B.	CHARLES LOMICKA
QUANTITIES	EDWARD MERCADO	HTOON WIN

STATE OF CALIFORNIA
DEPARTMENT OF TRANSPORTATION

DIVISION OF ENGINEERING SERVICES
STRUCTURE DESIGN
DESIGN BRANCH 19

BRIDGE NO. 55E0120
POST MILE 9.90

RETAINING WALL NO. 533A
RETAINING WALL DETAILS NO. 1

STRUCTURES DESIGN DETAIL SHEET (ENGLISH) (REV. 09-01-10)

ORIGINAL SCALE IN INCHES FOR REDUCED PLANS 0 1 2 3

UNIT: 3621
PROJECT NUMBER & PHASE: 1200000102 1 CONTRACT NO.: 0E3101

DISREGARD PRINTS BEARING EARLIER REVISION DATES

REVISION DATES: 04-05-11 11-07-11 11-15-11

SHEET 4 OF 10

FILE => RW533A-g-dt01.dgn

USERNAME => s121614 DATE PLOTTED => 15-APR-2012 TIME PLOTTED => 09:59

DIST	COUNTY	ROUTE	POST MILES TOTAL PROJECT	SHEET No.	TOTAL SHEETS
12	Ora	5,74	9.3/10.0, 0.0/0.2	510	515

Charles Lomicka 11-15-11
REGISTERED CIVIL ENGINEER DATE

4-9-12
PLANS APPROVAL DATE

REGISTERED PROFESSIONAL ENGINEER CHARLES LOMICKA No. C 71172 Exp. 06/30/13 CIVIL STATE OF CALIFORNIA

The State of California or its officers or agents shall not be responsible for the accuracy or completeness of electronic copies of this plan sheet.

NOTE:
CAP REINFORCEMENT
AND RW REINFORCEMENT
NOT SHOWN CLARITY

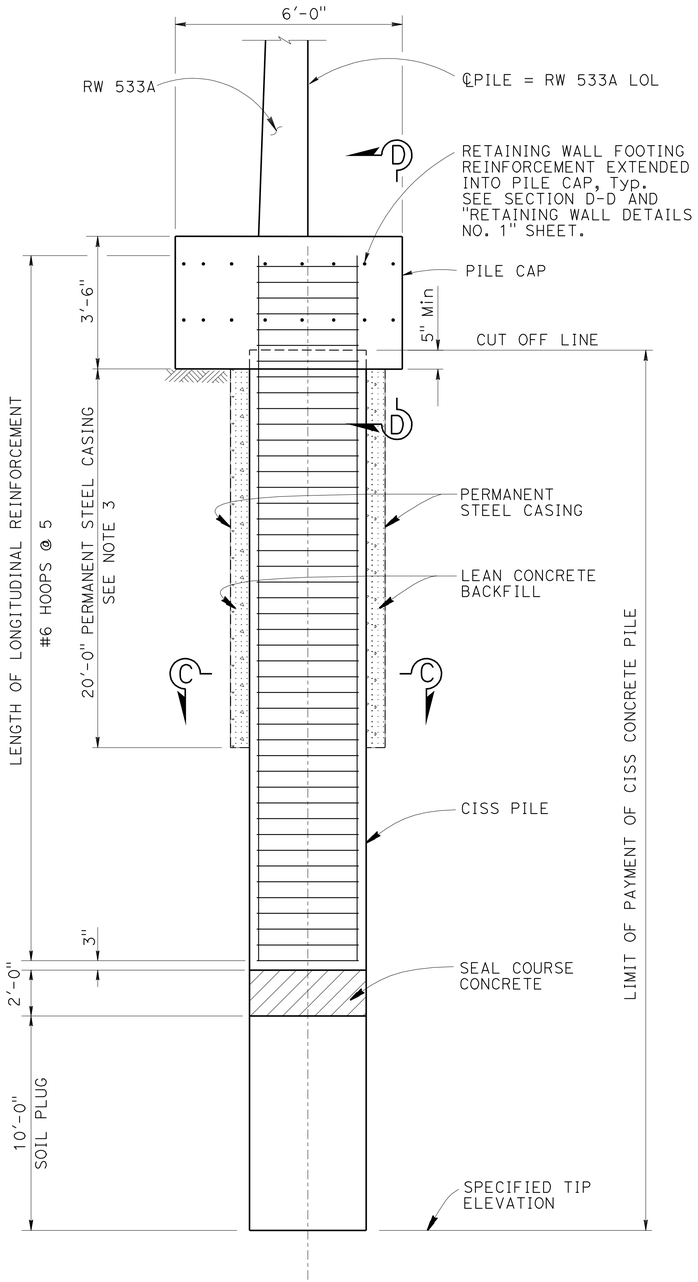

TYPICAL PILE ELEVATION

No Scale

NOTE:
The Contractor shall verify all controlling field dimensions before ordering or fabricating any material.

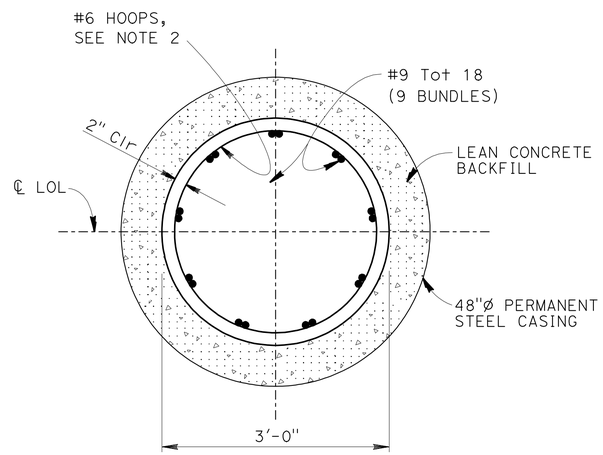

SECTION C-C

1" = 1'-0"

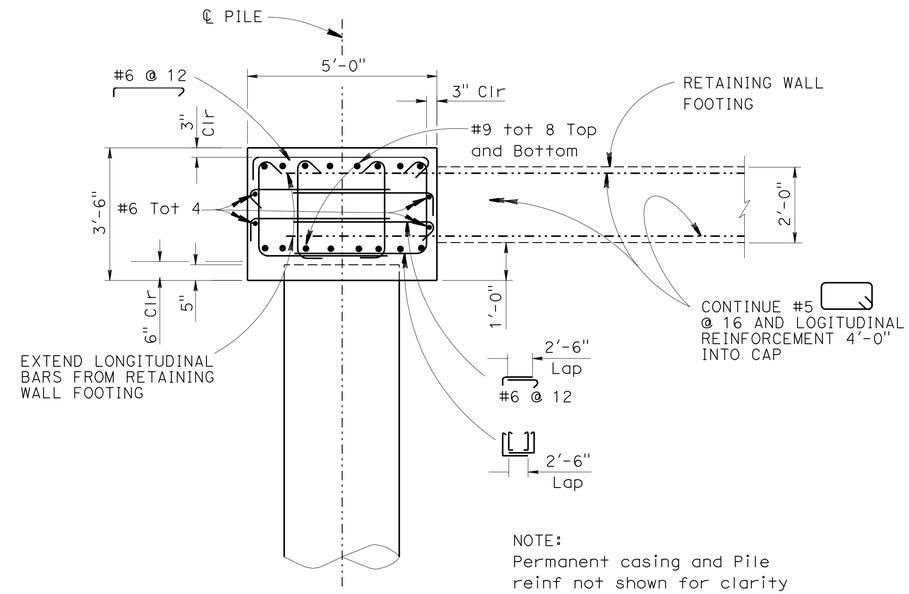

NOTE:
Permanent casing and Pile reinf not shown for clarity

SECTION D-D

½" = 1'-0"

PILE DATA TABLE

LOCATION	PILE TYPE	NOMINAL RESISTANCE (kips)		DESIGN TIP ELEVATION (ft)	SPECIFIED TIP ELEVATION (ft)	NOMINAL DRIVING RESISTANCE REQUIRED (kips)
		COMPRESSION	TENSION			
Sta 533+99.80 TO Sta 534+45.00	CISS 36"x0.5	260	NA	97.66 (a-1) 102.66 (a-11) 111.66 (d)	97.66	260

Note:
Design tip elevations are controlled by: (a-I) Compression (Strength Limit), (a-II) Compression (Extreme Event), (d) Lateral Load.

NOTES:

1. No splices allowed in main pile reinforcement.
2. All hoops are "ultimate" butt spliced continuous.
3. The space between the permanent casing and the pipe pile shall be filled with Lean Concrete Backfill after completion of pile driving.

	BY	CHECKED
DESIGN	EDWARD MERCADO	CHARLES LOMICKA
DETAILS	HEMANT BARBHAIYA	CHARLES LOMICKA
QUANTITIES	EDWARD MERCADO	HTOON WIN

STATE OF CALIFORNIA
DEPARTMENT OF TRANSPORTATION

DIVISION OF ENGINEERING SERVICES
STRUCTURE DESIGN
DESIGN BRANCH 19

BRIDGE NO. 55E0120
POST MILE 9.90

RETAINING WALL NO. 533A
RETAINING WALL DETAILS NO. 2

STRUCTURES DESIGN DETAIL SHEET (ENGLISH) (REV. 09-01-10)

ORIGINAL SCALE IN INCHES FOR REDUCED PLANS 0 1 2 3

UNIT: 3621
PROJECT NUMBER & PHASE: 1200000102 1 CONTRACT NO.: 0E3101

DISREGARD PRINTS BEARING EARLIER REVISION DATES

REVISION DATES: 04-20-11 11-07-11 11-15-11 SHEET 5 OF 10

FILE => RW533A-g-dt02.dgn

USERNAME => s121614 DATE PLOTTED => 15-APR-2012 TIME PLOTTED => 10:00

DIST	COUNTY	ROUTE	POST MILES TOTAL PROJECT	SHEET No.	TOTAL SHEETS
12	Ora	5,74	9.3/10.0, 0.0/0.2	511	515

Charles Lomicka 11-15-11
REGISTERED CIVIL ENGINEER DATE

4-9-12
PLANS APPROVAL DATE

REGISTERED PROFESSIONAL ENGINEER
CHARLES LOMICKA
No. C 71172
Exp. 6/30/13
CIVIL
STATE OF CALIFORNIA

The State of California or its officers or agents shall not be responsible for the accuracy or completeness of electronic copies of this plan sheet.

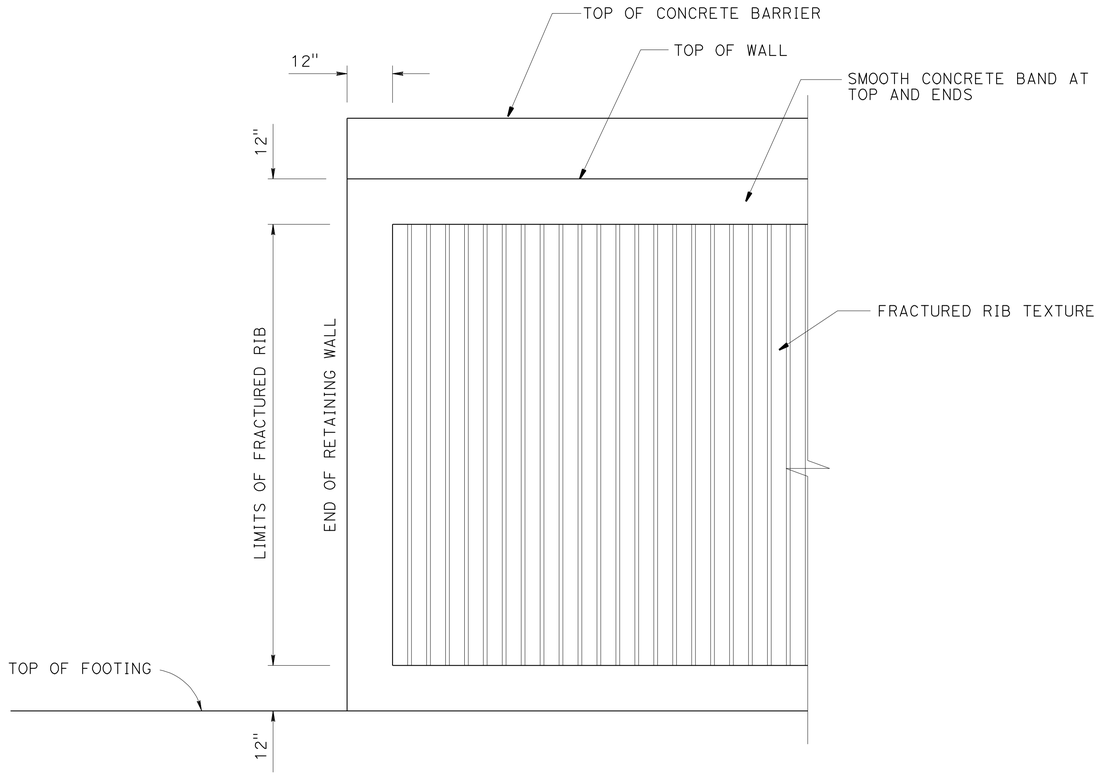

WALL TEXTURE AT TOP AND ENDS OF RETAINING WALL

NO SCALE

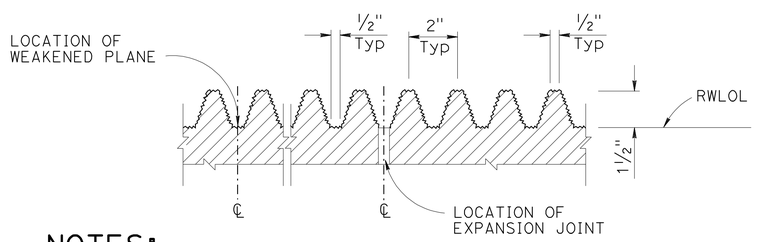

NOTES:

WEAKENED PLANES AND EXPANSION JOINTS TO BE CENTERED IN VALLEYS.

FRACTURED RIB DETAIL

NO SCALE

	BY	CHECKED
DESIGN	VATHANA CHY	RONALD WONG
DETAILS	VATHANA CHY	RONALD WONG
QUANTITIES	EDWARD MERCADO	HTOON WIN

STATE OF CALIFORNIA
DEPARTMENT OF TRANSPORTATION

DIVISION OF ENGINEERING SERVICES
STRUCTURE DESIGN
DESIGN BRANCH 19

BRIDGE NO. 55E0120
POST MILE 9.90

RETAINING WALL NO. 533A
ARCHITECTURAL TEXTURE DETAILS

STRUCTURES DESIGN DETAIL SHEET (ENGLISH) (REV. 09-01-10)

ORIGINAL SCALE IN INCHES FOR REDUCED PLANS 0 1 2 3

UNIT: 3621
PROJECT NUMBER & PHASE: 1200000102 1 CONTRACT NO.: 0E3101

DISREGARD PRINTS BEARING EARLIER REVISION DATES

REVISION DATES: 05-10-11 11-10-11 11-15-11

SHEET 6 OF 10

FILE => RW533A-u-mlscdt01.dgn

USERNAME => 6121614 DATE PLOTTED => 15-APR-2012 TIME PLOTTED => 10:00

DIST	COUNTY	ROUTE	POST MILES TOTAL PROJECT	SHEET No.	TOTAL SHEETS
12	Ora	5,74	9.3/10.0, 0.0/0.2	512	515

GEOTECHNICAL PROFESSIONAL — DATE 07/2011

4-9-12
PLANS APPROVAL DATE

REGISTERED PROFESSIONAL ENGINEER — MICHAEL G. SMITH — No. 2229 — Exp. 3-31-2012 — GEOTECHNICAL — STATE OF CALIFORNIA

The State of California or its officers or agents shall not be responsible for the accuracy or completeness of electronic copies of this plan sheet.

This LOTB sheet was prepared in accordance with the Caltrans Soil & Rock Logging, Classification, & Presentation Manual (2010 Edition).

BENCH MARK

SUHV-20021

FND PK/TIN
80.10 Ft Lt ℄ Route 5
Sta 517+51.39
Elev= 117.01'
NAVD88

SUHV-20027

FND PK/NAIL
136.66 Ft Rt ℄ Route 5
Sta 519+18.34
Elev= 144.30'
NAVD88

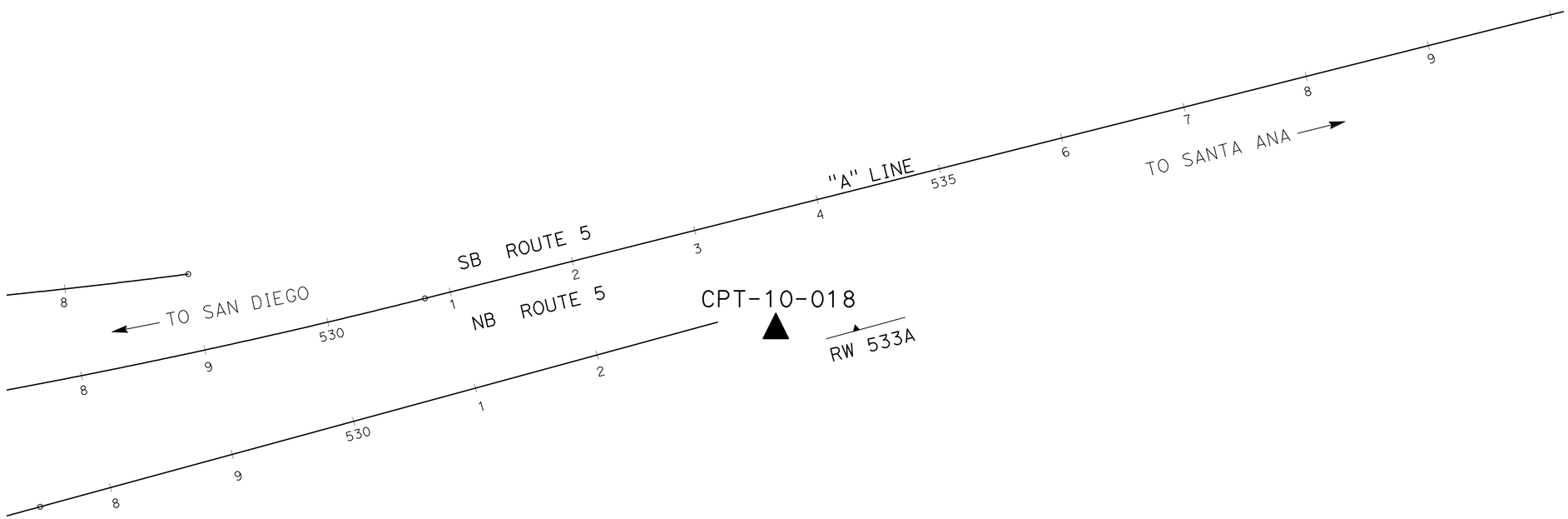

PLAN VIEW
SCALE 1"=50'

ENGINEERING SERVICES	MATERIALS AND GEOTECHNICAL SERVICES	STATE OF CALIFORNIA DEPARTMENT OF TRANSPORTATION	DIVISION OF ENGINEERING SERVICES STRUCTURE DESIGN DESIGN BRANCH 19	BRIDGE NO. 55E0120 POST MILE 9.90	RETAINING WALL 533A LOG OF TEST BORINGS SHEET 1 OF 4
FUNCTIONAL SUPERVISOR NAME: M. SMITH	DRAWN BY: P.QUACH CHECKED BY: P.YERRA	FIELD INVESTIGATION BY: EJ.JEON			

OGS CIVIL LOG OF TEST BORINGS SHEET

ORIGINAL SCALE IN INCHES FOR REDUCED PLANS 0 1 2 3

UNIT: 3658
PROJECT NUMBER & PHASE: 1200000102 & 4 CONTRACT NO.: 12-0E3104

DISREGARD PRINTS BEARING EARLIER REVISION DATES → REVISION DATES 06/17/11 — SHEET 7 OF 10

FILE => RW533A-z-lotb_01.dgn

USERNAME => s121614 DATE PLOTTED => 15-APR-2012 TIME PLOTTED => 10:00

DIST	COUNTY	ROUTE	POST MILES TOTAL PROJECT	SHEET No.	TOTAL SHEETS
12	Ora	5,74	9.3/10.0, 0.0/0.2	513	515

GEOTECHNICAL PROFESSIONAL — DATE 07/2011

4-9-12
PLANS APPROVAL DATE

REGISTERED PROFESSIONAL ENGINEER — MICHAEL G. SMITH No. 2229 Exp. 3-31-2012 GEOTECHNICAL — STATE OF CALIFORNIA

The State of California or its officers or agents shall not be responsible for the accuracy or completeness of electronic copies of this plan sheet.

This LOTB sheet was prepared in accordance with the Caltrans Soil & Rock Logging, Classification, & Presentation Manual (2010 Edition).

FOR PLAN VIEW, SEE
"LOG OF TEST BORINGS" 1 OF 4

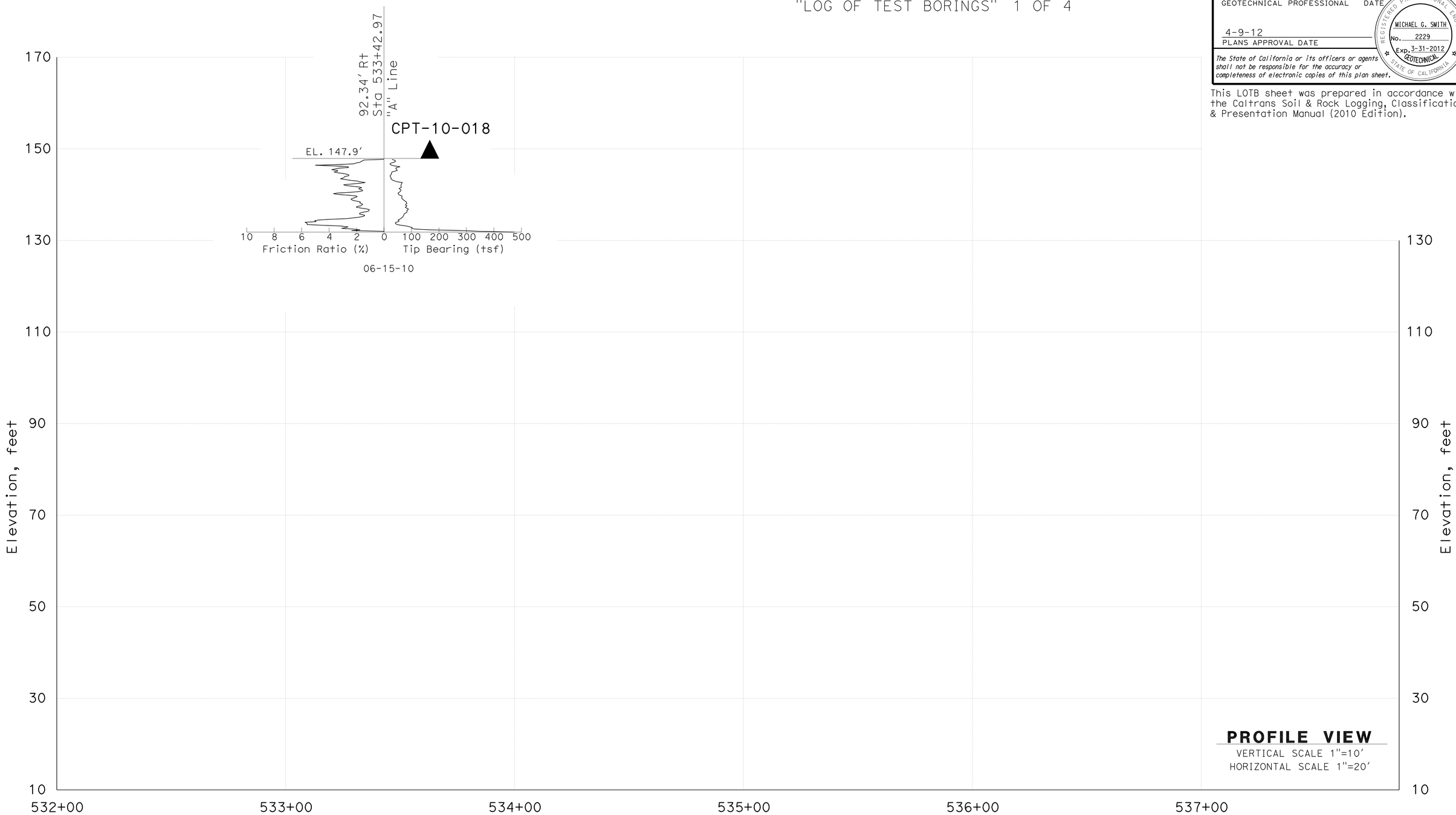

ENGINEERING SERVICES	MATERIALS AND GEOTECHNICAL SERVICES	STATE OF CALIFORNIA DEPARTMENT OF TRANSPORTATION	DIVISION OF ENGINEERING SERVICES STRUCTURE DESIGN DESIGN BRANCH 19	BRIDGE NO. 55E0120 POST MILE 9.90	RETAINING WALL 533A
FUNCTIONAL SUPERVISOR NAME: M. SMITH	DRAWN BY: P.QUACH CHECKED BY: P.YERRA	FIELD INVESTIGATION BY: EJ.JEON			LOG OF TEST BORINGS SHEET 2 OF 4

OGS CIVIL LOG OF TEST BORINGS SHEET

ORIGINAL SCALE IN INCHES FOR REDUCED PLANS 0 1 2 3

UNIT: 3658
PROJECT NUMBER & PHASE: 1200000102 & 4 CONTRACT NO.: 12-0E3104

DISREGARD PRINTS BEARING EARLIER REVISION DATES

REVISION DATES 06/17/11 — SHEET 8 OF 10

FILE => RW533A-z-lotb_02.dgn

USERNAME => s121614 DATE PLOTTED => 15-APR-2012 TIME PLOTTED => 10:00

DIST	COUNTY	ROUTE	POST MILES TOTAL PROJECT	SHEET No.	TOTAL SHEETS
12	Ora	5,74	9.3/10.0, 0.0/0.2	514	515

GEOTECHNICAL PROFESSIONAL — DATE 07/2011

4-9-12
PLANS APPROVAL DATE

REGISTERED PROFESSIONAL ENGINEER — MICHAEL G. SMITH No. 2229 Exp. 3-31-2012 GEOTECHNICAL — STATE OF CALIFORNIA

The State of California or its officers or agents shall not be responsible for the accuracy or completeness of electronic copies of this plan sheet.

This LOTB sheet was prepared in accordance with the Caltrans Soil & Rock Logging, Classification, & Presentation Manual (2010 Edition).

CEMENTATION

Description	Criteria
Weak	Crumbles or breaks with handling or little finger pressure.
Moderate	Crumbles or breaks with considerable finger pressure.
Strong	Will not crumble or break with finger pressure.

BOREHOLE IDENTIFICATION

Symbol	Hole Type	Description
Size	A	Auger Boring (hollow or solid stem bucket)
Size	R RW RC P	Rotary drilled boring (conventional) Rotary drilled with self-casing wire-line Rotary core with continuously-sampled, self-casing wire-line Rotary percussion boring (air)
Size	R	Rotary drilled diamond core
Size	HD HA	Hand driven (1-inch soil tube) Hand Auger
●	D	Dynamic Cone Penetration Boring
▲	CPT	Cone Penetration Test (ASTM D 5778)
⬚	O	Other (note on LOTB)

Note: Size in inches.

CONSISTENCY OF COHESIVE SOILS

Description	Shear Strength (tsf)	Pocket Penetrometer Measurement, PP, (tsf)	Torvane Measurement, TV, (tsf)	Vane Shear Measurement, VS, (tsf)
Very Soft	Less than 0.12	Less than 0.25	Less than 0.12	Less than 0.12
Soft	0.12 - 0.25	0.25 - 0.5	0.12 - 0.25	0.12 - 0.25
Medium Stiff	0.25 - 0.5	0.5 - 1	0.25 - 0.5	0.25 - 0.5
Stiff	0.5 - 1	1 - 2	0.5 - 1	0.5 - 1
Very Stiff	1 - 2	2 - 4	1 - 2	1 - 2
Hard	Greater than 2	Greater than 4	Greater than 2	Greater than 2

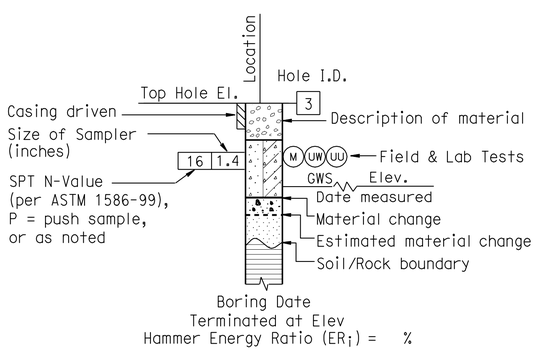

ROTARY BORING

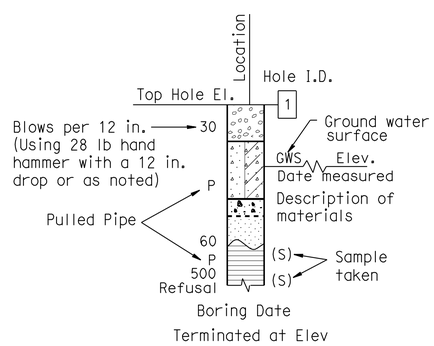

HAND BORING

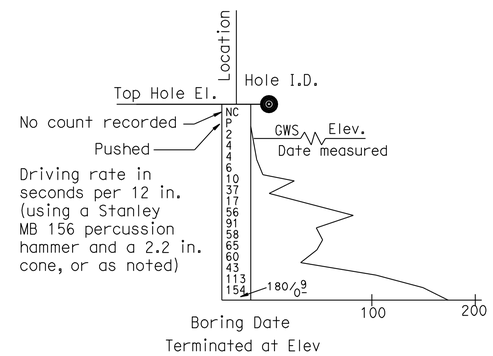

DYNAMIC CONE PENETRATION BORING

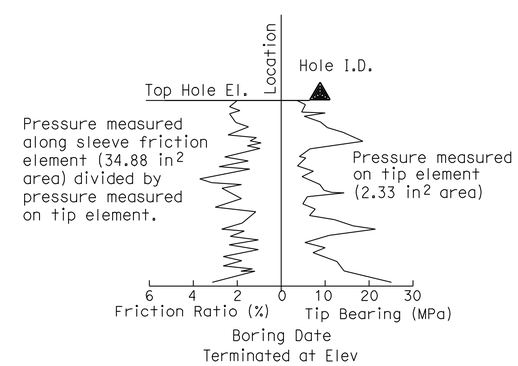

CONE PENETRATION TEST (CPT) BORING

ENGINEERING SERVICES	MATERIALS AND GEOTECHNICAL SERVICES	STATE OF CALIFORNIA DEPARTMENT OF TRANSPORTATION	DIVISION OF ENGINEERING SERVICES STRUCTURE DESIGN DESIGN BRANCH 19	BRIDGE NO. 55E0120 POST MILE 9.90	RETAINING WALL 533A
FUNCTIONAL SUPERVISOR	DRAWN BY: P.QUACH	FIELD INVESTIGATION BY:			LOG OF TEST BORINGS SHEET 3 OF 4
NAME: M. SMITH	CHECKED BY: P.YERRA	EJ.JEON			

OGS CIVIL LOG OF TEST BORINGS SHEET

ORIGINAL SCALE IN INCHES FOR REDUCED PLANS 0 1 2 3

UNIT: 3658
PROJECT NUMBER & PHASE: 1200000102 & 4 CONTRACT NO.: 12-0E3104

DISREGARD PRINTS BEARING EARLIER REVISION DATES → REVISION DATES 06/17/11 — SHEET 9 OF 10

FILE => RW533A-z-lotb_03.dgn

USERNAME => s121614 DATE PLOTTED => 15-APR-2012 TIME PLOTTED => 10:00

DIST	COUNTY	ROUTE	POST MILES TOTAL PROJECT	SHEET No.	TOTAL SHEETS
12	Ora	5,74	9.3/10.0, 0.0/0.2	515	515

GEOTECHNICAL PROFESSIONAL — DATE 07/2011

4-9-12
PLANS APPROVAL DATE

REGISTERED PROFESSIONAL ENGINEER — MICHAEL G. SMITH No. 2229 Exp. 3-31-2012 GEOTECHNICAL — STATE OF CALIFORNIA

The State of California or its officers or agents shall not be responsible for the accuracy or completeness of electronic copies of this plan sheet.

This LOTB sheet was prepared in accordance with the Caltrans Soil & Rock Logging, Classification, & Presentation Manual (2010 Edition).

GROUP SYMBOLS AND NAMES

Graphic/Symbol	Group Names	Graphic/Symbol	Group Names
GW	Well-graded GRAVEL Well-graded GRAVEL with SAND	CL	Lean CLAY Lean CLAY with SAND Lean CLAY with GRAVEL SANDY lean CLAY SANDY lean CLAY with GRAVEL GRAVELLY lean CLAY GRAVELLY lean CLAY with SAND
GP	Poorly-graded GRAVEL Poorly-graded GRAVEL with SAND		
GW-GM	Well-graded GRAVEL with SILT Well-graded GRAVEL with SILT and SAND	CL-ML	SILTY CLAY SILTY CLAY with SAND SILTY CLAY with GRAVEL SANDY SILTY CLAY SANDY SILTY CLAY with GRAVEL GRAVELLY SILTY CLAY GRAVELLY SILTY CLAY with SAND
GW-GC	Well-graded GRAVEL with CLAY (or SILTY CLAY) Well-graded GRAVEL with CLAY and SAND (or SILTY CLAY and SAND)		
GP-GM	Poorly-graded GRAVEL with SILT Poorly-graded GRAVEL with SILT and SAND	ML	SILT SILT with SAND SILT with GRAVEL SANDY SILT SANDY SILT with GRAVEL GRAVELLY SILT GRAVELLY SILT with SAND
GP-GC	Poorly-graded GRAVEL with CLAY (or SILTY CLAY) Poorly-graded GRAVEL with CLAY and SAND (or SILTY CLAY and SAND)		
GM	SILTY GRAVEL SILTY GRAVEL with SAND	OL	ORGANIC lean CLAY ORGANIC lean CLAY with SAND ORGANIC lean CLAY with GRAVEL SANDY ORGANIC lean CLAY SANDY ORGANIC lean CLAY with GRAVEL GRAVELLY ORGANIC lean CLAY GRAVELLY ORGANIC lean CLAY with SAND
GC	CLAYEY GRAVEL CLAYEY GRAVEL with SAND		
GC-GM	SILTY, CLAYEY GRAVEL SILTY, CLAYEY GRAVEL with SAND	OL	ORGANIC SILT ORGANIC SILT with SAND ORGANIC SILT with GRAVEL SANDY ORGANIC SILT SANDY ORGANIC SILT with GRAVEL GRAVELLY ORGANIC SILT GRAVELLY ORGANIC SILT with SAND
SW	Well-graded SAND Well-graded SAND with GRAVEL		
SP	Poorly-graded SAND Poorly-graded SAND with GRAVEL	CH	Fat CLAY Fat CLAY with SAND Fat CLAY with GRAVEL SANDY fat CLAY SANDY fat CLAY with GRAVEL GRAVELLY fat CLAY GRAVELLY fat CLAY with SAND
SW-SM	Well-graded SAND with SILT Well-graded SAND with SILT and GRAVEL		
SW-SC	Well-graded SAND with CLAY (or SILTY CLAY) Well-graded SAND with CLAY and GRAVEL (or SILTY CLAY and GRAVEL)	MH	Elastic SILT Elastic SILT with SAND Elastic SILT with GRAVEL SANDY elastic SILT SANDY elastic SILT with GRAVEL GRAVELLY elastic SILT GRAVELLY elastic SILT with SAND
SP-SM	Poorly-graded SAND with SILT Poorly-graded SAND with SILT and GRAVEL		
SP-SC	Poorly-graded SAND with CLAY (or SILTY CLAY) Poorly-graded SAND with CLAY and GRAVEL (or SILTY CLAY and GRAVEL)	OH	ORGANIC fat CLAY ORGANIC fat CLAY with SAND ORGANIC fat CLAY with GRAVEL SANDY ORGANIC fat CLAY SANDY ORGANIC fat CLAY with GRAVEL GRAVELLY ORGANIC fat CLAY GRAVELLY ORGANIC fat CLAY with SAND
SM	SILTY SAND SILTY SAND with GRAVEL		
SC	CLAYEY SAND CLAYEY SAND with GRAVEL	OH	ORGANIC elastic SILT ORGANIC elastic SILT with SAND ORGANIC elastic SILT with GRAVEL SANDY ORGANIC elastic SILT SANDY ORGANIC elastic SILT with GRAVEL GRAVELLY ORGANIC elastic SILT GRAVELLY ORGANIC elastic SILT with SAND
SC-SM	SILTY, CLAYEY SAND SILTY, CLAYEY SAND with GRAVEL		
PT	PEAT	OL/OH	ORGANIC SOIL ORGANIC SOIL with SAND ORGANIC SOIL with GRAVEL SANDY ORGANIC SOIL SANDY ORGANIC SOIL with GRAVEL GRAVELLY ORGANIC SOIL GRAVELLY ORGANIC SOIL with SAND
	COBBLES COBBLES and BOULDERS BOULDERS		

FIELD AND LABORATORY TESTING

- (C) Consolidation (ASTM D 2435)
- (CL) Collapse Potential (ASTM D 5333)
- (CP) Compaction Curve (CTM 216)
- (CR) Corrosivity Testing (CTM 643, CTM 422, CTM 417)
- (CU) Consolidated Undrained Triaxial (ASTM D 4767)
- (DS) Direct Shear (ASTM D 3080)
- (EI) Expansion Index (ASTM D 4829)
- (M) Moisture Content (ASTM D 2216)
- (OC) Organic Content-% (ASTM D 2974)
- (P) Permeability (CTM 220)
- (PA) Particle Size Analysis (ASTM D 422)
- (PI) Plasticity Index (AASHTO T 90) Liquid Limit (AASHTO T 89)
- (PL) Point Load Index (ASTM D 5731)
- (PM) Pressure Meter
- (R) R-Value (CTM 301)
- (SE) Sand Equivalent (CTM 217)
- (SG) Specific Gravity (AASHTO T 100)
- (SL) Shrinkage Limit (ASTM D 427)
- (SW) Swell Potential (ASTM D 4546)
- (UC) Unconfined Compression-Soil (ASTM D 2166) Unconfined Compression-Rock (ASTM D 2938)
- (UU) Unconsolidated Undrained Triaxial (ASTM D 2850)
- (UW) Unit Weight (ASTM D 4767)

APPARENT DENSITY OF COHESIONLESS SOILS

Description	SPT N_{60} (Blows / 12 in.)
Very Loose	0 - 5
Loose	5 - 10
Medium Dense	10 - 30
Dense	30 - 50
Very Dense	Greater than 50

MOISTURE

Description	Criteria
Dry	No discernable moisture
Moist	Moisture present, but no free water
Wet	Visible free water

PERCENT OR PROPORTION OF SOILS

Description	Criteria
Trace	Particles are present but estimated to be less than 5%
Few	5% - 10%
Little	15% - 25%
Some	30% - 45%
Mostly	50% - 100%

PARTICLE SIZE

Description		Size (in.)
Boulder		Greater than 12
Cobble		3 - 12
Gravel	Coarse	3/4 - 3
	Fine	1/5 - 3/4
Sand	Coarse	1/16 - 1/5
	Medium	1/64 - 1/16
	Fine	1/300 - 1/64
Silt and Clay		Less than 1/300

ENGINEERING SERVICES — MATERIALS AND GEOTECHNICAL SERVICES

FUNCTIONAL SUPERVISOR
NAME: M. SMITH
DRAWN BY: P.QUACH
CHECKED BY: P.YERRA
FIELD INVESTIGATION BY: EJ.JEON

STATE OF CALIFORNIA DEPARTMENT OF TRANSPORTATION

DIVISION OF ENGINEERING SERVICES STRUCTURE DESIGN
DESIGN BRANCH 19

BRIDGE NO. 55E0120
POST MILE 9.90

RETAINING WALL 533A
LOG OF TEST BORINGS SHEET 4 OF 4

OGS CIVIL LOG OF TEST BORINGS SHEET

ORIGINAL SCALE IN INCHES FOR REDUCED PLANS 0 1 2 3

UNIT: 3658
PROJECT NUMBER & PHASE: 1200000102 & 4 CONTRACT NO.: 12-0E3104

DISREGARD PRINTS BEARING EARLIER REVISION DATES → 06/17/11

SHEET 10 OF 10

FILE => RW533A-z-lotb_04.dgn

USERNAME => s121614 DATE PLOTTED => 15-APR-2012 TIME PLOTTED => 10:00