Dist	COUNTY	ROUTE	POST MILES TOTAL PROJECT	SHEET No.	TOTAL SHEETS
12	Ora	55	7.0/7.9	1	76

INDEX OF PLANS

SHEET No.	DESCRIPTION
1	TITLE AND LOCATION MAP
2-3	TYPICAL CROSS SECTIONS
4-6	LAYOUTS
7-8	PROFILES AND SUPERELEVATION DIAGRAMS
9-11	CONSTRUCTION DETAILS
12-14	TEMPORARY WATER POLLUTION CONTROL PLAN, DETAILS AND QUANTITIES
15-19	DRAINAGE PLANS, PROFILES, DETAILS AND QUANTITIES
20	CONSTRUCTION AREA SIGNS
21-27	STAGE CONSTRUCTION PLANS, QUANTITIES
28	AND TRAFFIC HANDLING PLANS
29-33	PAVEMENT DELINEATION PLAN, DETAILS AND QUANTITIES
34-42	SIGN PLAN, DETAILS AND QUANTITIES
43-44	SUMMARY OF QUANTITIES
45-48	HIGHWAY PLANTING PLANS
49-55	ELECTRICAL PLANS
56-76	REVISED AND NEW STANDARD PLANS

THE STANDARD PLANS LIST APPLICABLE TO THIS CONTRACT IS INCLUDED IN THE NOTICE TO BIDDERS AND SPECIAL PROVISIONS BOOK.

STATE OF CALIFORNIA

DEPARTMENT OF TRANSPORTATION

PROJECT PLANS FOR CONSTRUCTION ON

STATE HIGHWAY

IN ORANGE COUNTY IN SANTA ANA FROM 0.1 MILE NORTH OF MACARTHUR BOULEVARD UNDERCROSSING TO 0.2 MILE SOUTH OF DYER ROAD UNDERCROSSING

TO BE SUPPLEMENTED BY STANDARD PLANS DATED MAY 2006

LOCATION MAP

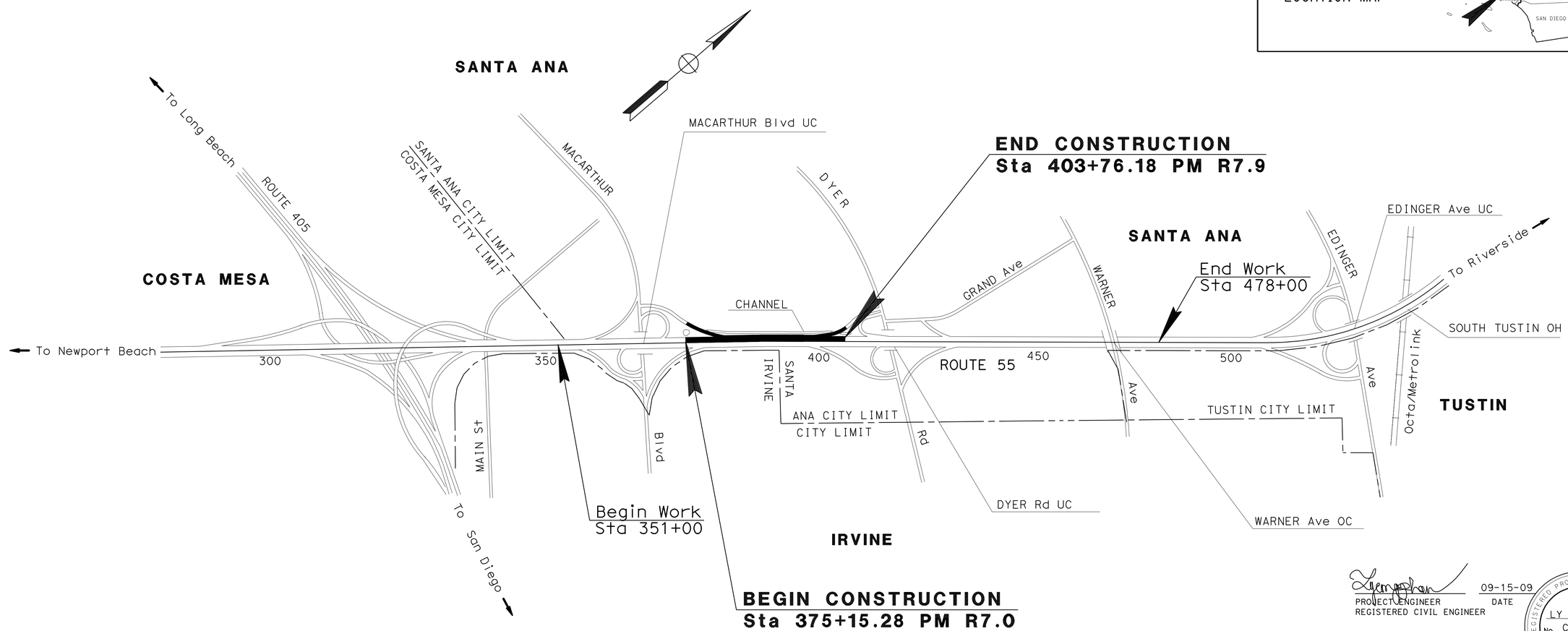

NO SCALE

PROJECT MANAGER BOB BAZARGAN

DESIGN ENGINEER LY PHAN

THE CONTRACTOR SHALL POSSESS THE CLASS (OR CLASSES) OF LICENSE AS SPECIFIED IN THE "NOTICE TO BIDDERS."

09-15-09
PROJECT ENGINEER DATE
REGISTERED CIVIL ENGINEER

December 28, 2009
PLANS APPROVAL DATE

REGISTERED PROFESSIONAL ENGINEER
LY C. PHAN
No. C63381
Exp. 9-30-10
CIVIL
STATE OF CALIFORNIA

THE STATE OF CALIFORNIA OR ITS OFFICERS OR AGENTS SHALL NOT BE RESPONSIBLE FOR THE ACCURACY OR COMPLETENESS OF SCANNED COPIES OF THIS PLAN SHEET.

LAST REVISION 08-20-09 DATE PLOTTED => 04-JAN-2010 TIME PLOTTED => 11:14

CONTRACT No. 12-0E2504

Dist	COUNTY	ROUTE	POST MILES TOTAL PROJECT	SHEET No.	TOTAL SHEETS
12	Ora	55	7.0/7.9	2	76

REGISTERED CIVIL ENGINEER 09-15-09 DATE

12-28-09
PLANS APPROVAL DATE

REGISTERED PROFESSIONAL ENGINEER LY C. PHAN No. C63381 Exp. 9-30-10 CIVIL STATE OF CALIFORNIA

THE STATE OF CALIFORNIA OR ITS OFFICERS OR AGENTS SHALL NOT BE RESPONSIBLE FOR THE ACCURACY OR COMPLETENESS OF SCANNED COPIES OF THIS PLAN SHEET.

NOTES:

1. DIMENSIONS OF THE STRUCTURAL SECTIONS ARE SUBJECT TO TOLERANCES SPECIFIED IN THE STANDARD SPECIFICATIONS.
2. SUPERELEVATION AS SHOWN OR AS DIRECTED BY THE ENGINEER.

ABBREVIATION:

RHMA-G: RUBERIZED HOT MIX ASPHALT (TYPE G)
HOV: HIGH OCCUPANCY VEHICLE

STRUCTURAL SECTION

1 — 0.20′ RHMA-G
1.2′ HMA (TYPE A)
2.60′ AS (CLASS 2)

2 — 0.55′ HMA (TYPE A)
0.5′ AS (CLASS 2)

3 — 0.20′ RHMA-G
1.20′ HMA (TYPE A)
0.50′ AS (CLASS 2)

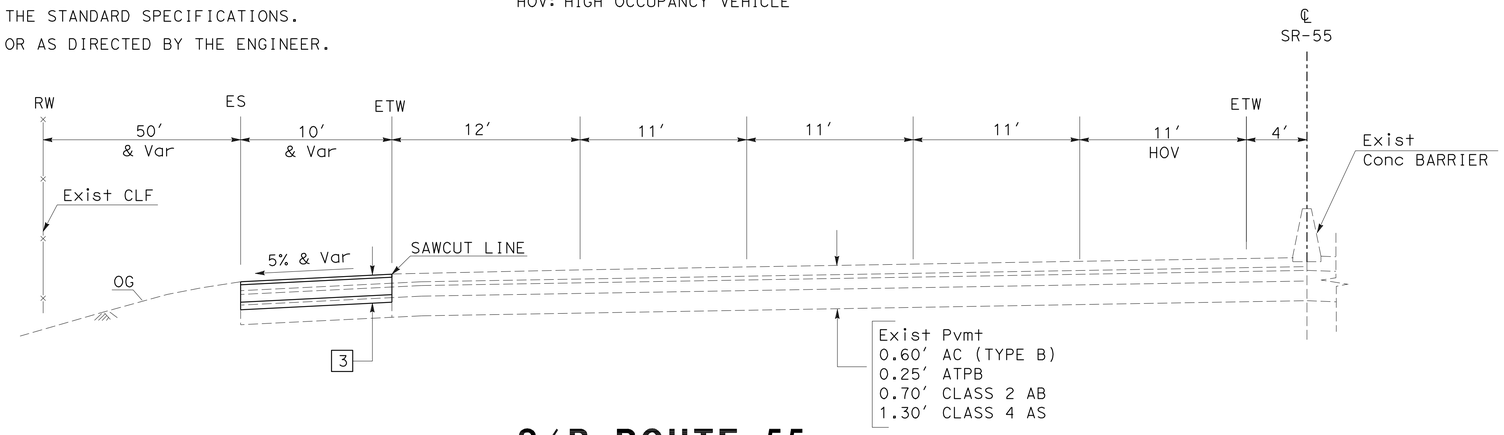

S/B ROUTE 55

"A" 397+60.40 TO "A" 403+76.18

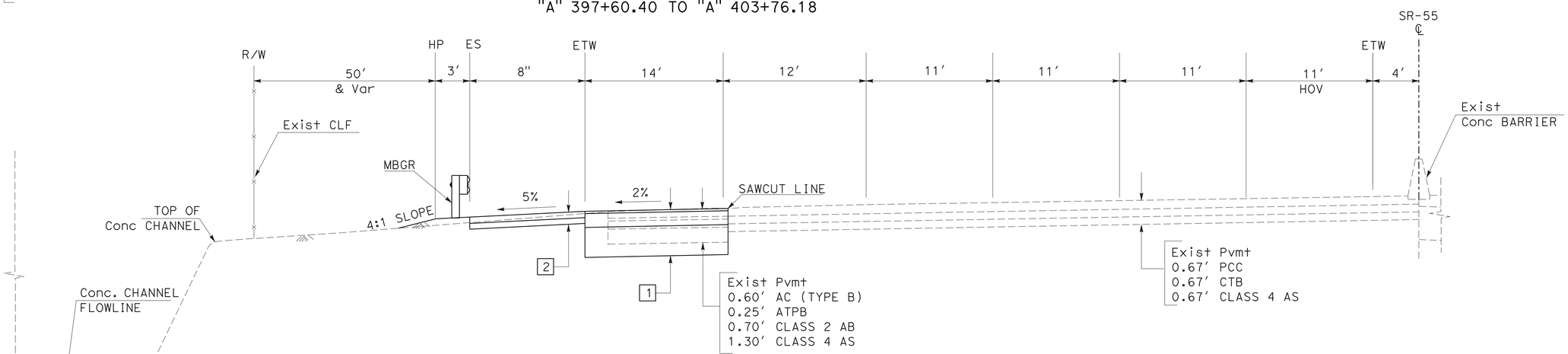

S/B ROUTE 55

"A" 384+00 TO "A" 397+60.40

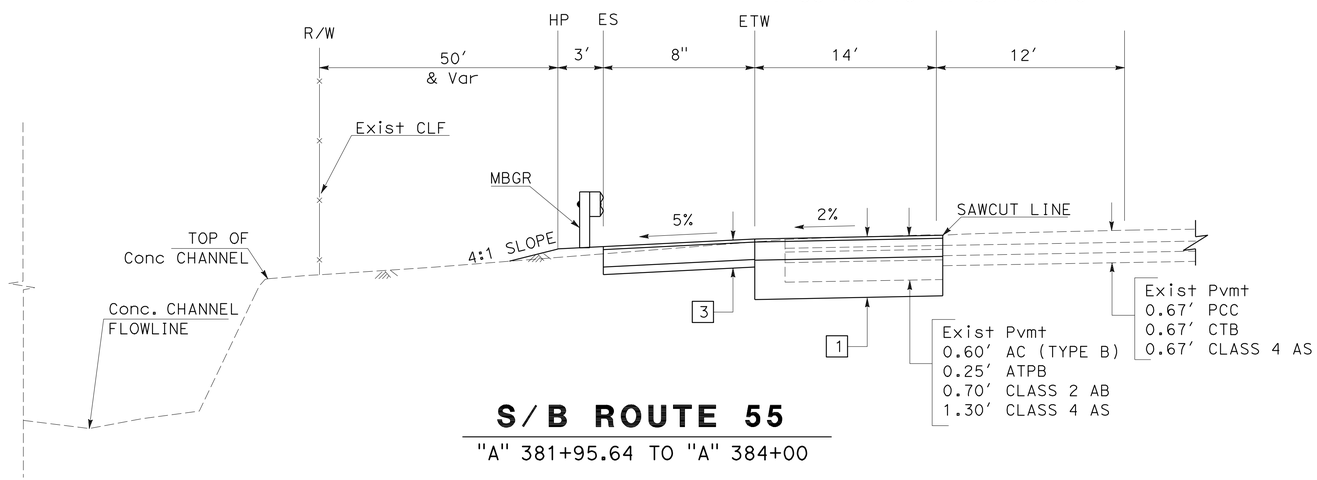

S/B ROUTE 55

"A" 381+95.64 TO "A" 384+00

TYPICAL CROSS-SECTIONS

NO SCALE

X-1

STATE OF CALIFORNIA - DEPARTMENT OF TRANSPORTATION
DESIGN
Caltrans
FUNCTIONAL SUPERVISOR: SON NGUYEN
CALCULATED-DESIGNED BY: L. PHAN
CHECKED BY: R. CARAIG JR.
REVISED BY
DATE REVISED

LAST REVISION 00-00-00
DATE PLOTTED => 04-JAN-2010
TIME PLOTTED => 11:15

Dist	COUNTY	ROUTE	POST MILES TOTAL PROJECT	SHEET No.	TOTAL SHEETS
12	Ora	55	7.0/7.9	3	76

REGISTERED CIVIL ENGINEER 09-15-09 DATE

12-28-09
PLANS APPROVAL DATE

REGISTERED PROFESSIONAL ENGINEER
LY C. PHAN
No. C63381
Exp. 9-30-10
CIVIL
STATE OF CALIFORNIA

THE STATE OF CALIFORNIA OR ITS OFFICERS OR AGENTS SHALL NOT BE RESPONSIBLE FOR THE ACCURACY OR COMPLETENESS OF SCANNED COPIES OF THIS PLAN SHEET.

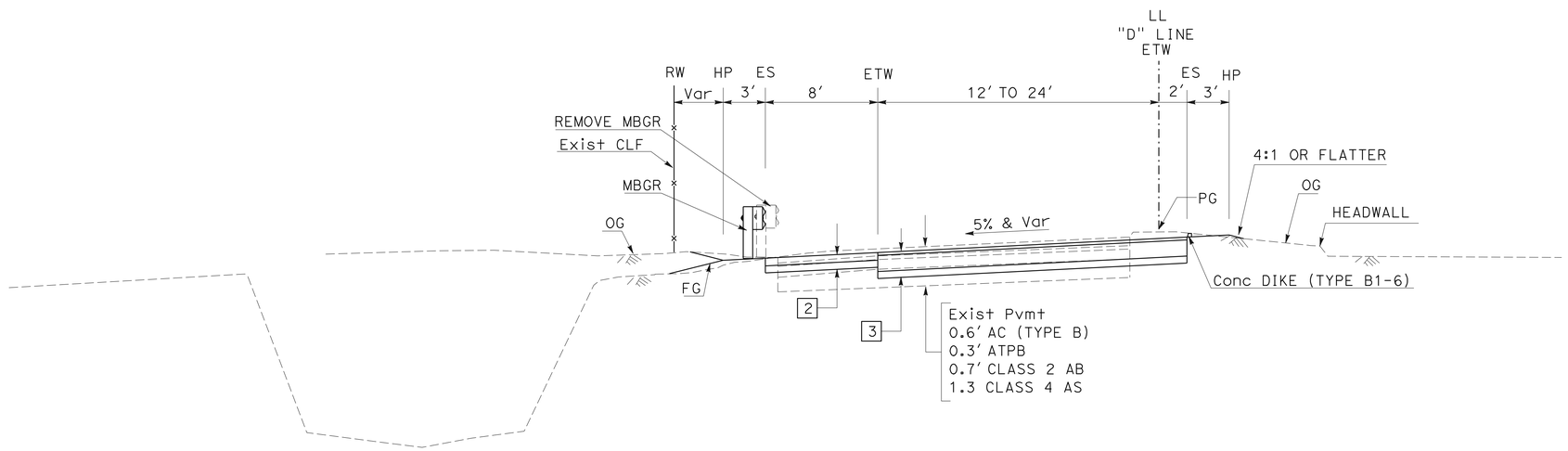

RAMP "D"
Sta 397+60.40 TO Sta 405+18.37

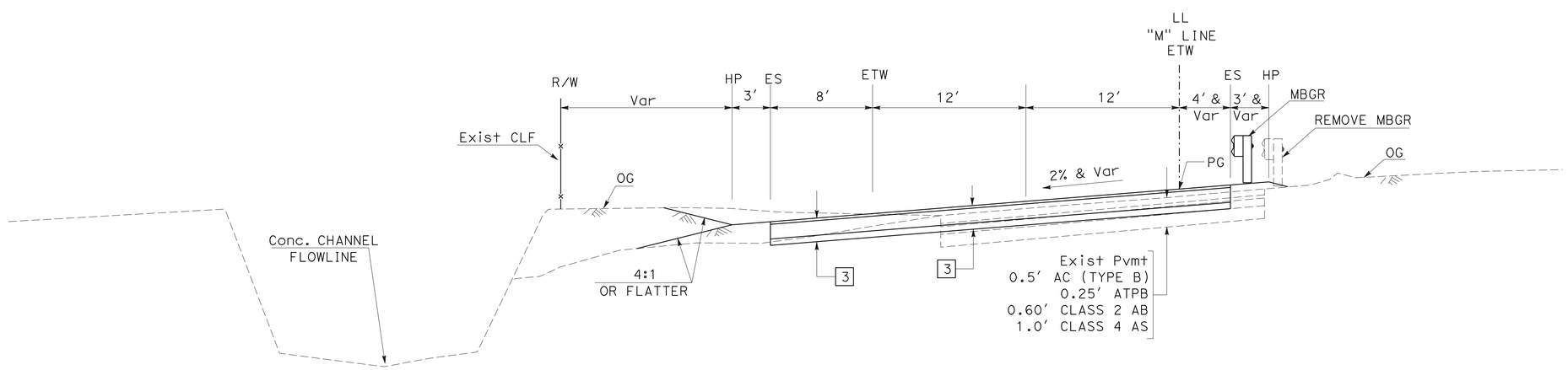

RAMP "M"
Sta 372+36.98 TO Sta 381+95.64

TYPICAL CROSS-SECTIONS
NO SCALE

X-2

REVISED BY	DATE REVISED

CALCULATED-DESIGNED BY: L. PHAN
CHECKED BY: R. CARAIG JR.
FUNCTIONAL SUPERVISOR: SON NGUYEN

STATE OF CALIFORNIA - DEPARTMENT OF TRANSPORTATION
Caltrans
DESIGN

LAST REVISION 00-00-00
DATE PLOTTED => 04-JAN-2010
TIME PLOTTED => 11:15

Dist	COUNTY	ROUTE	POST MILES TOTAL PROJECT	SHEET No.	TOTAL SHEETS
12	Ora	55	7.0/7.9	4	76

REGISTERED CIVIL ENGINEER 09-15-09 DATE

12-28-09
PLANS APPROVAL DATE

REGISTERED PROFESSIONAL ENGINEER LY C. PHAN No. C63381 Exp 9-30-10 CIVIL STATE OF CALIFORNIA

THE STATE OF CALIFORNIA OR ITS OFFICERS OR AGENTS SHALL NOT BE RESPONSIBLE FOR THE ACCURACY OR COMPLETENESS OF SCANNED COPIES OF THIS PLAN SHEET.

NOTES:

1. FOR COMPLETE RIGHT OF WAY AND ACCURATE ACCESS DATA, SEE RIGHT OF WAY RECORD MAPS AT DISTRICT OFFICE.
2. SEE STANDARD PLAN DETAIL A77G5 FOR STRENGTHENED RAILING SECTIONS FOR FIXED OBJECT.

LEGEND:

[X] STRUCTURAL SECTION TYPE, SEE SHEET X-1

(X) CURVE NUMBER

---T--- UNDERGROUND TELEPHONE LINE

MINOR Conc (TEXTURE PAVING)

ABBREVIATION:

AT&T - AMERICAN TELEPHONE & TELEGRAGH COMPANY

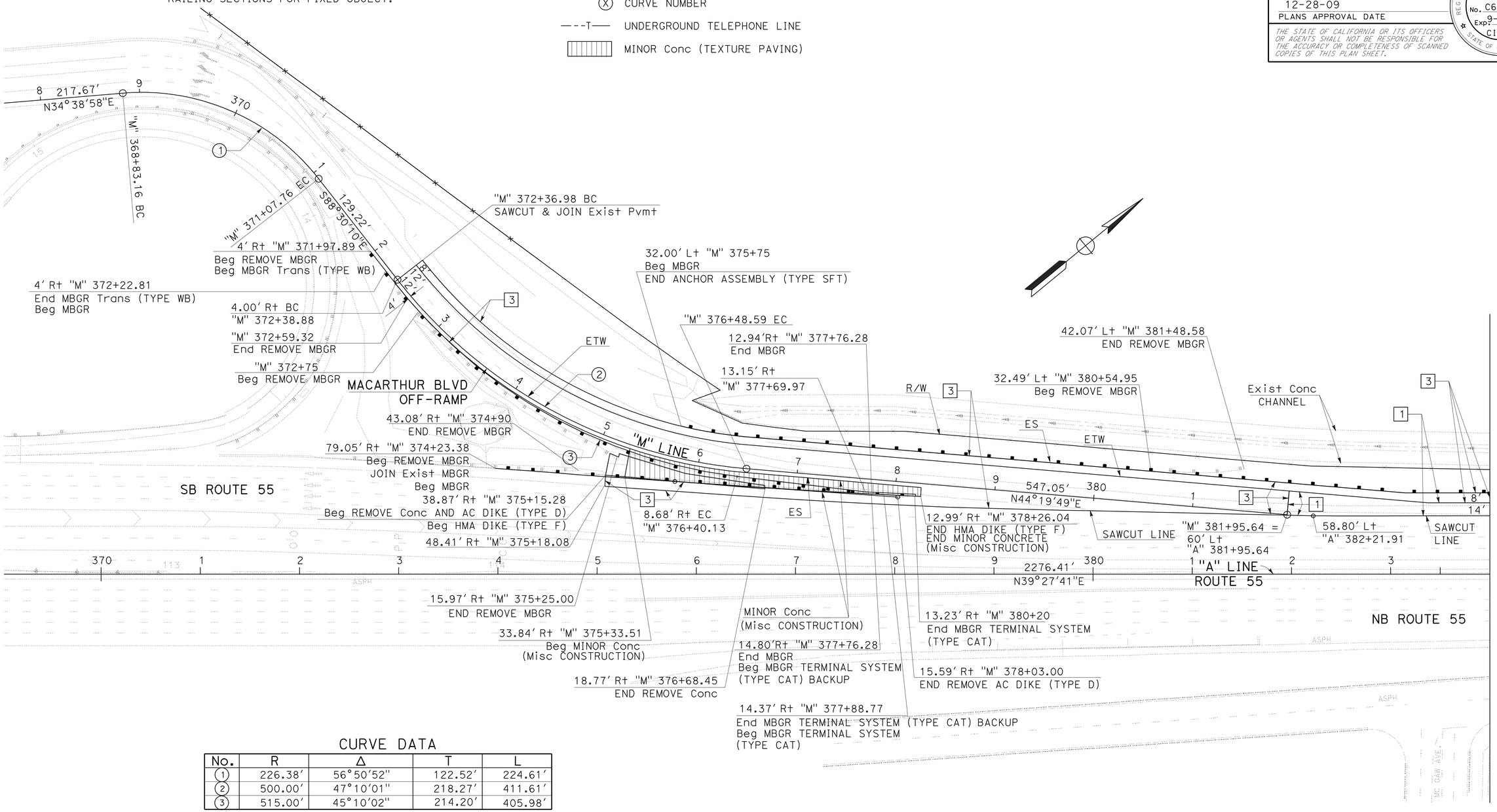

CURVE DATA

No.	R	Δ	T	L
1	226.38'	56°50'52"	122.52'	224.61'
2	500.00'	47°10'01"	218.27'	411.61'
3	515.00'	45°10'02"	214.20'	405.98'

LAYOUT

SCALE: 1"=50'

L-1

STATE OF CALIFORNIA - DEPARTMENT OF TRANSPORTATION

Caltrans

DESIGN

FUNCTIONAL SUPERVISOR: SON NGUYEN

CALCULATED-DESIGNED BY: L. PHAN

CHECKED BY: R. CARAIG JR.

REVISED BY

DATE REVISED

LAST REVISION 00-00-00 | DATE PLOTTED => 04-JAN-2010 | TIME PLOTTED => 11:15

Dist	COUNTY	ROUTE	POST MILES TOTAL PROJECT	SHEET No.	TOTAL SHEETS
12	Ora	55	7.0/7.9	5	76

REGISTERED CIVIL ENGINEER 09-15-09 DATE

12-28-09
PLANS APPROVAL DATE

REGISTERED PROFESSIONAL ENGINEER LY C. PHAN No. C63381 Exp 9-30-10 CIVIL STATE OF CALIFORNIA

THE STATE OF CALIFORNIA OR ITS OFFICERS OR AGENTS SHALL NOT BE RESPONSIBLE FOR THE ACCURACY OR COMPLETENESS OF SCANNED COPIES OF THIS PLAN SHEET.

NOTE:

1. FOR COMPLETE RIGHT OF WAY AND ACCURATE ACCESS DATA, SEE RIGHT OF WAY RECORD MAPS AT DISTRICT OFFICE.

CURVE DATA

No.	R	Δ	T	L
4	25034.03′	1°11′17″	259.55′	519.09′

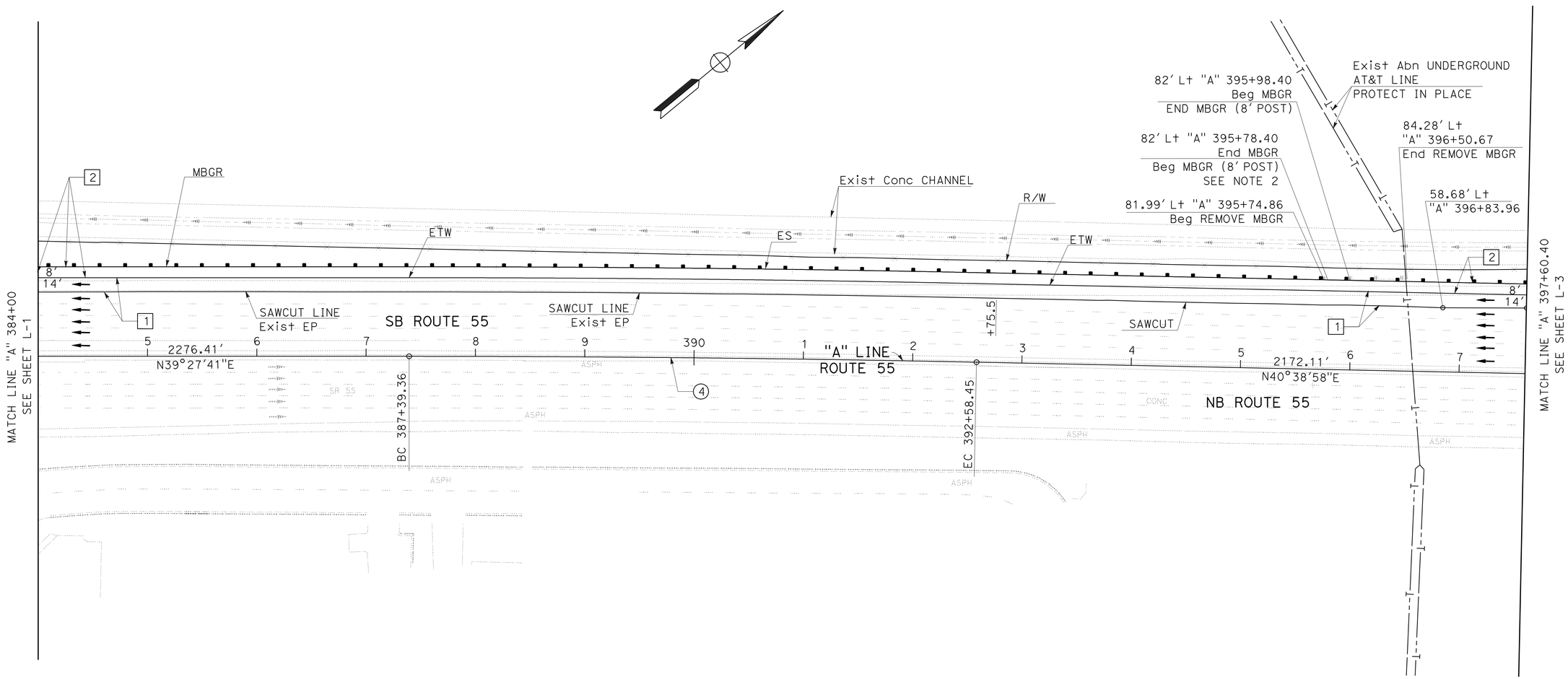

LAYOUT
SCALE: 1″=50′

L-2

STATE OF CALIFORNIA - DEPARTMENT OF TRANSPORTATION
DESIGN
FUNCTIONAL SUPERVISOR: SON NGUYEN
CALCULATED-DESIGNED BY: L. PHAN
CHECKED BY: R. CARAIG JR.
REVISED BY
DATE REVISED

LAST REVISION 00-00-00
DATE PLOTTED => 04-JAN-2010
TIME PLOTTED => 11:15

Dist	COUNTY	ROUTE	POST MILES TOTAL PROJECT	SHEET No.	TOTAL SHEETS
12	Ora	55	7.0/7.9	6	76

REGISTERED CIVIL ENGINEER 09-15-09 DATE

12-28-09
PLANS APPROVAL DATE

REGISTERED PROFESSIONAL ENGINEER
LY C. PHAN
No. C63381
Exp. 9-30-10
CIVIL
STATE OF CALIFORNIA

THE STATE OF CALIFORNIA OR ITS OFFICERS OR AGENTS SHALL NOT BE RESPONSIBLE FOR THE ACCURACY OR COMPLETENESS OF SCANNED COPIES OF THIS PLAN SHEET.

NOTE:

1. FOR COMPLETE RIGHT OF WAY AND ACCURATE ACCESS DATA, SEE RIGHT OF WAY RECORD MAPS AT DISTRICT OFFICE.

CURVE DATA

No.	R	Δ	T	L
5	3000.00′	3°11′29"	83.57′	167.10′
6	382.70′	34°34′19"	119.10′	230.92′

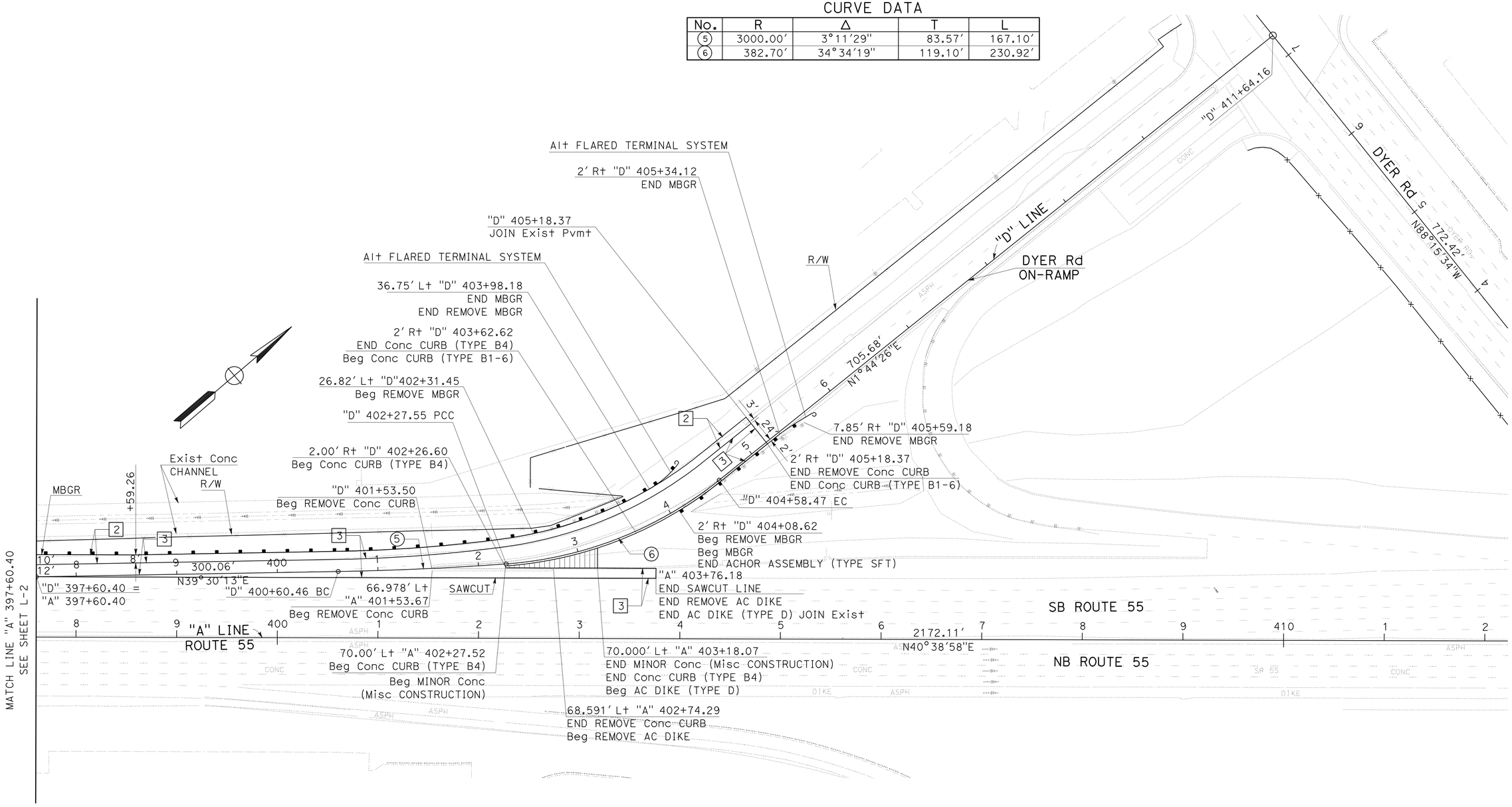

LAYOUT
SCALE: 1"=50′

L-3

STATE OF CALIFORNIA - DEPARTMENT OF TRANSPORTATION
Caltrans
DESIGN
FUNCTIONAL SUPERVISOR: SON NGUYEN
CALCULATED-DESIGNED BY: L. PHAN
CHECKED BY: R. CARAIG JR.
REVISED BY
DATE REVISED

LAST REVISION 00-00-00
DATE PLOTTED => 04-JAN-2010
TIME PLOTTED => 11:15

Dist	COUNTY	ROUTE	POST MILES TOTAL PROJECT	SHEET No.	TOTAL SHEETS
12	Ora	55	7.0/7.9	7	76

REGISTERED CIVIL ENGINEER 09-15-09 DATE

12-28-09
PLANS APPROVAL DATE

REGISTERED PROFESSIONAL ENGINEER
LY C. PHAN
No. C63381
Exp 9-30-10
CIVIL
STATE OF CALIFORNIA

THE STATE OF CALIFORNIA OR ITS OFFICERS OR AGENTS SHALL NOT BE RESPONSIBLE FOR THE ACCURACY OR COMPLETENESS OF SCANNED COPIES OF THIS PLAN SHEET.

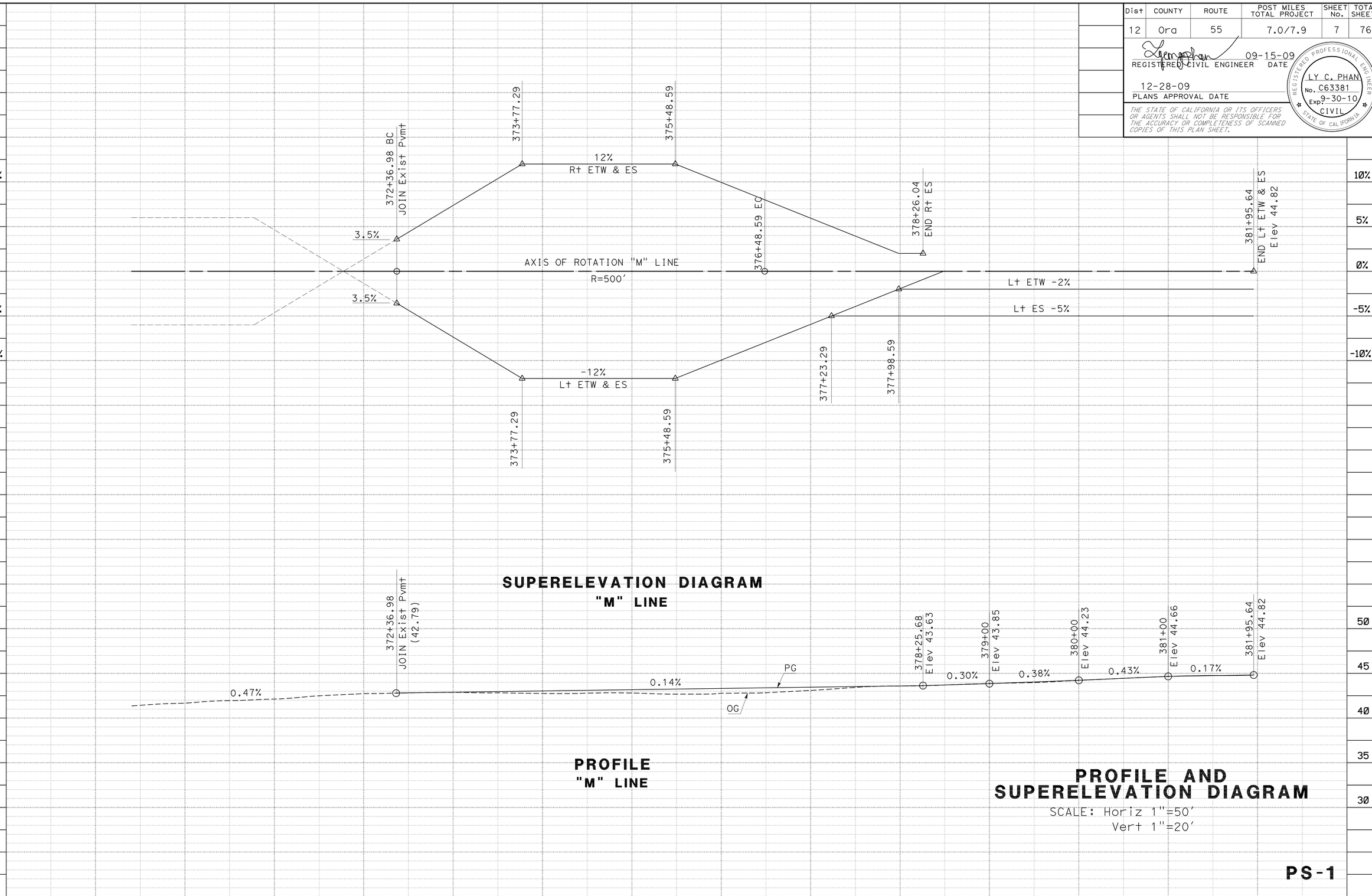

STATE OF CALIFORNIA - DEPARTMENT OF TRANSPORTATION

Caltrans

REVISED BY	DATE REVISED
L. PHAN	R. CARAIG JR.
CALCULATED-DESIGNED BY	CHECKED BY
FUNCTIONAL SUPERVISOR	SON NGUYEN
DESIGN	

LAST REVISION 00-00-00
DATE PLOTTED => 04-JAN-2010
TIME PLOTTED => 11:16

Dist	COUNTY	ROUTE	POST MILES TOTAL PROJECT	SHEET No.	TOTAL SHEETS
12	Ora	55	7.0/7.9	8	76

REGISTERED CIVIL ENGINEER 09-15-09 DATE

12-28-09
PLANS APPROVAL DATE

REGISTERED PROFESSIONAL ENGINEER
LY C. PHAN
No. C63381
Exp 9-30-10
CIVIL
STATE OF CALIFORNIA

THE STATE OF CALIFORNIA OR ITS OFFICERS OR AGENTS SHALL NOT BE RESPONSIBLE FOR THE ACCURACY OR COMPLETENESS OF SCANNED COPIES OF THIS PLAN SHEET.

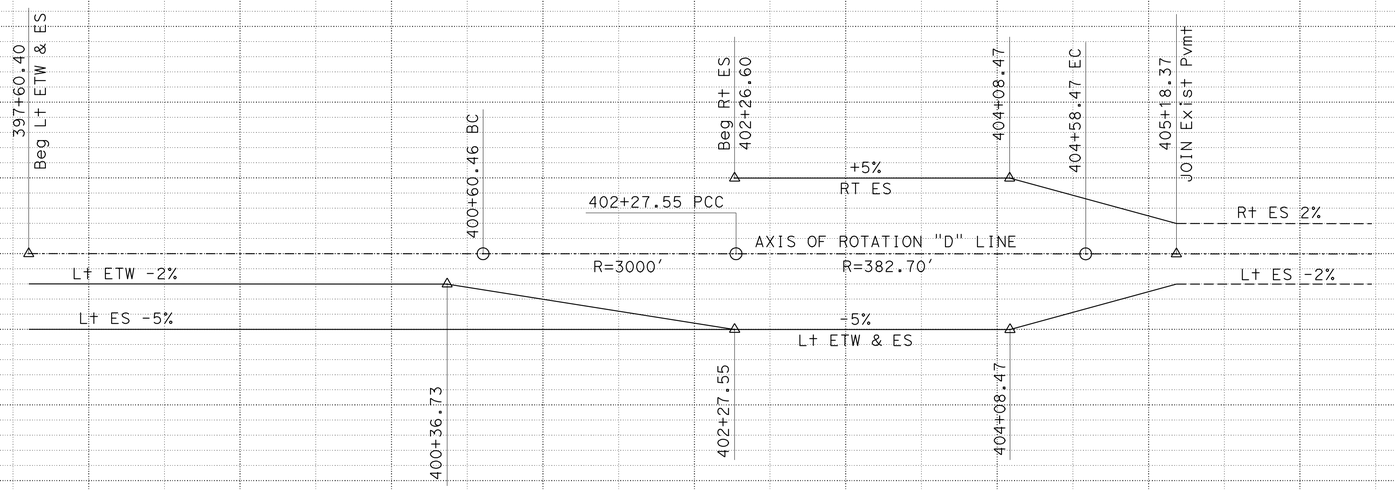

SUPERELEVATION DIAGRAM
"D" LINE

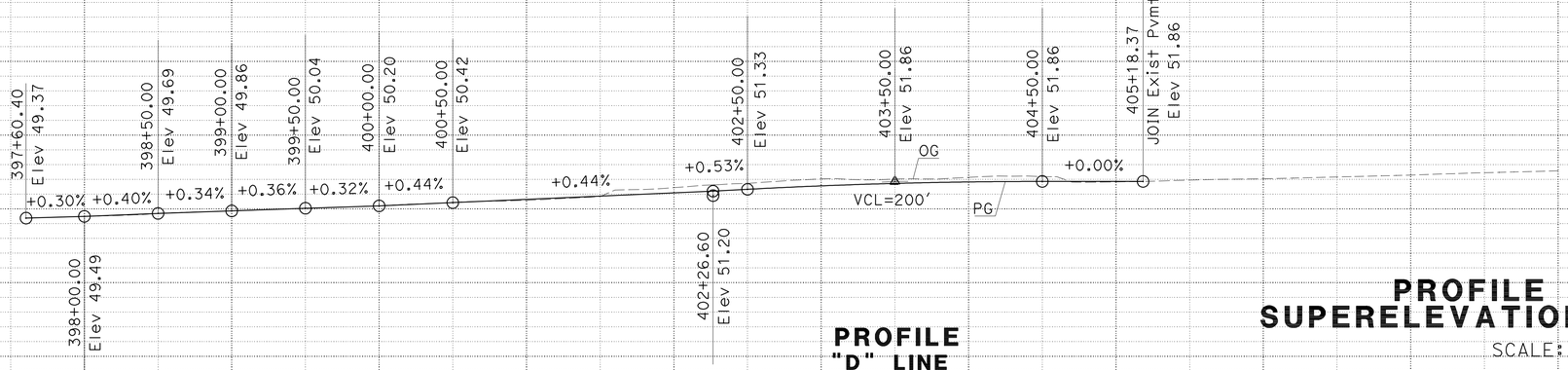

PROFILE
"D" LINE

PROFILE AND SUPERELEVATION DIAGRAM

SCALE: Horiz 1"=50'
Vert 1"=20'

PS-2

STATION	6	7	8	9	400	1	2	3	4	5	6	7	8	TOTAL
CY Exc														
CY Emb														

STATE OF CALIFORNIA - DEPARTMENT OF TRANSPORTATION
Caltrans

DESIGN | FUNCTIONAL SUPERVISOR: SON NGUYEN
CALCULATED-DESIGNED BY: L. PHAN | CHECKED BY: R. CARAIG JR.
REVISED BY | DATE REVISED

LAST REVISION 00-00-00 | DATE PLOTTED => 04-JAN-2010 | TIME PLOTTED => 11:16

Dist	COUNTY	ROUTE	POST MILES TOTAL PROJECT	SHEET No.	TOTAL SHEETS
12	Ora	55	7.0/7.9	9	76

REGISTERED CIVIL ENGINEER 09-15-09 DATE

12-28-09
PLANS APPROVAL DATE

REGISTERED PROFESSIONAL ENGINEER
LY C. PHAN
No. C63381
Exp. 9-30-10
CIVIL
STATE OF CALIFORNIA

THE STATE OF CALIFORNIA OR ITS OFFICERS OR AGENTS SHALL NOT BE RESPONSIBLE FOR THE ACCURACY OR COMPLETENESS OF SCANNED COPIES OF THIS PLAN SHEET.

NOTES:

1. FG Elev ARE GIVEN AT 50′ INTERVALS AT EDGE OF SHOULDER UNLESS OTHERWISE NOTED.
2. FOR AC DIKE TRANSITIONS, SEE LAYOUTS AND CONSTRUCTION DETAIL SHEETS.

LEGEND

###.##′	ES ELEVATION
(###.##′)	EXISTING OG ELEVATION

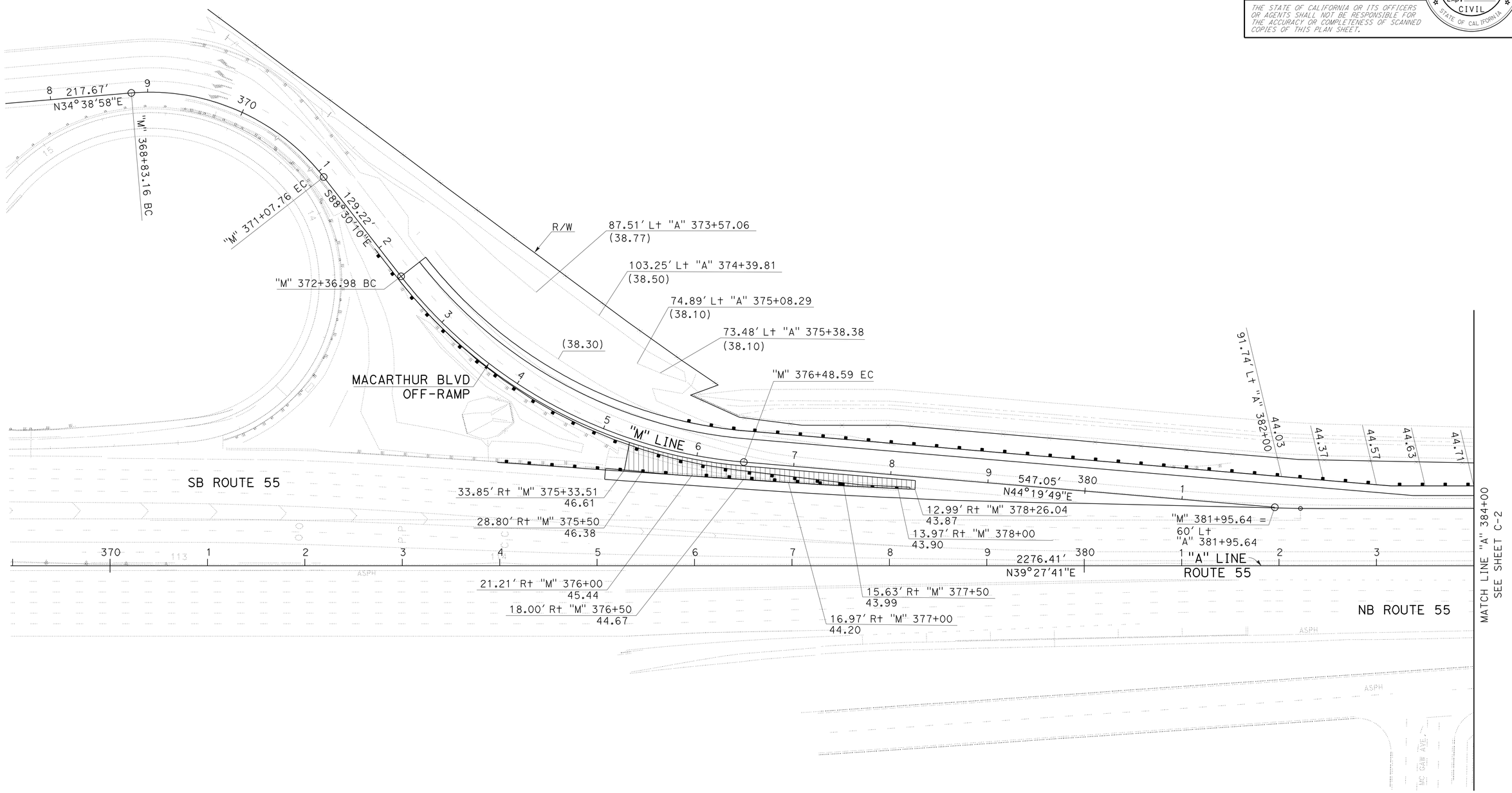

CONSTRUCTION DETAILS
(FINISHED GRADE ELEVATIONS)

SCALE: 1" = 50′

C-1

STATE OF CALIFORNIA - DEPARTMENT OF TRANSPORTATION
Caltrans®
DESIGN

FUNCTIONAL SUPERVISOR: SON NGUYEN

CALCULATED-DESIGNED BY: L. PHAN
CHECKED BY: R. CARAIG JR.

REVISED BY | DATE REVISED

LAST REVISION 00-00-00 | DATE PLOTTED => 04-JAN-2010 | TIME PLOTTED => 11:16

Dist	COUNTY	ROUTE	POST MILES TOTAL PROJECT	SHEET No.	TOTAL SHEETS
12	Ora	55	7.0/7.9	10	76

REGISTERED CIVIL ENGINEER 09-15-09 DATE

12-28-09
PLANS APPROVAL DATE

REGISTERED PROFESSIONAL ENGINEER
LY C. PHAN
No. C63381
Exp 9-30-10
CIVIL
STATE OF CALIFORNIA

THE STATE OF CALIFORNIA OR ITS OFFICERS OR AGENTS SHALL NOT BE RESPONSIBLE FOR THE ACCURACY OR COMPLETENESS OF SCANNED COPIES OF THIS PLAN SHEET.

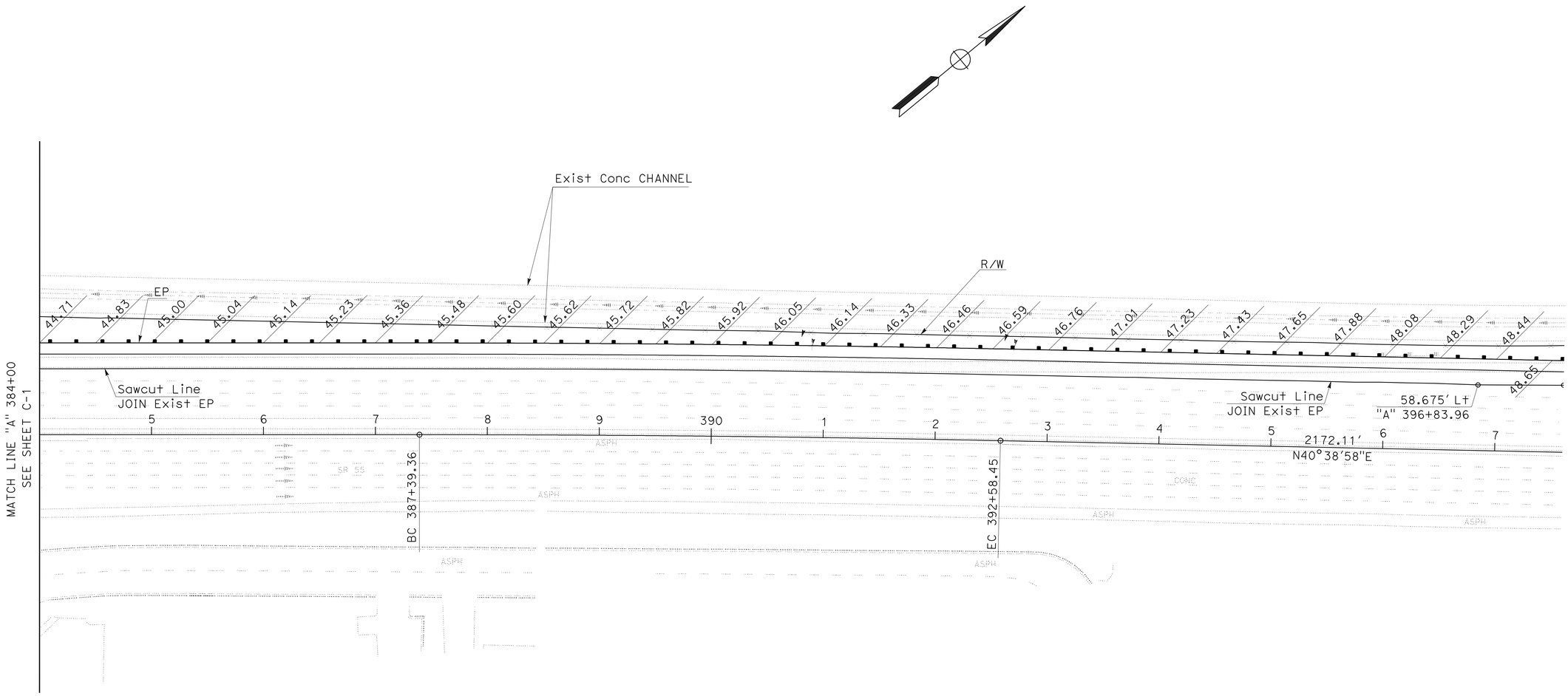

CONSTRUCTION DETAILS
(FINISHED GRADE ELEVATIONS)

SCALE: 1" = 50'

C-2

STATE OF CALIFORNIA - DEPARTMENT OF TRANSPORTATION
Caltrans®
DESIGN

FUNCTIONAL SUPERVISOR: SON NGUYEN

CALCULATED-DESIGNED BY: L. PHAN
CHECKED BY: R. CARAIG JR.

REVISED BY
DATE REVISED

LAST REVISION 00-00-00
DATE PLOTTED => 04-JAN-2010
TIME PLOTTED => 11:16

BORDER LAST REVISED 4/11/2008

RELATIVE BORDER SCALE IS IN INCHES 0 1 2 3

USERNAME => trmikesl
DGN FILE => c0e250ga002.dgn

CU 12233

EA 0E2501

Dist	COUNTY	ROUTE	POST MILES TOTAL PROJECT	SHEET No.	TOTAL SHEETS
12	Ora	55	7.0/7.9	11	76

REGISTERED CIVIL ENGINEER 09-15-09 DATE

12-28-09
PLANS APPROVAL DATE

REGISTERED PROFESSIONAL ENGINEER
LY C. PHAN
No. C63381
Exp. 9-30-10
CIVIL
STATE OF CALIFORNIA

THE STATE OF CALIFORNIA OR ITS OFFICERS OR AGENTS SHALL NOT BE RESPONSIBLE FOR THE ACCURACY OR COMPLETENESS OF SCANNED COPIES OF THIS PLAN SHEET.

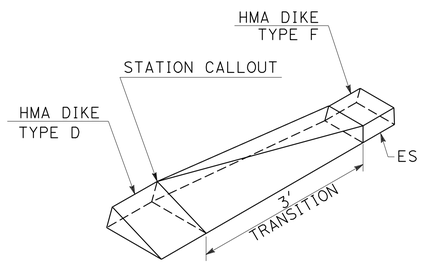

HMA DIKE TRANSITION
TYPE D TO TYPE F

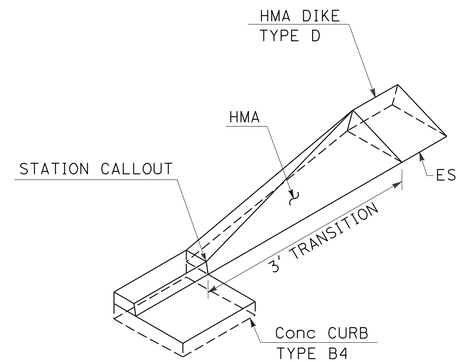

Conc CURB TO HMA DIKE TRANSITION
TYPE B4 TO TYPE D

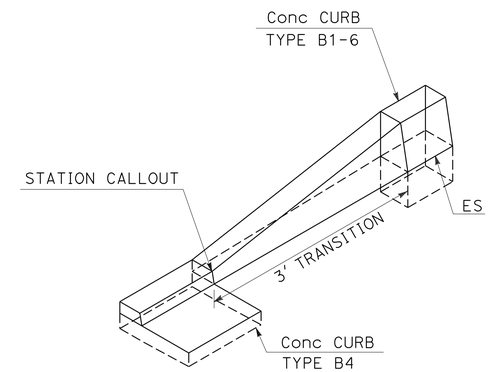

Conc CURB TRANSITION
TYPE B4 TO TYPE B1-6

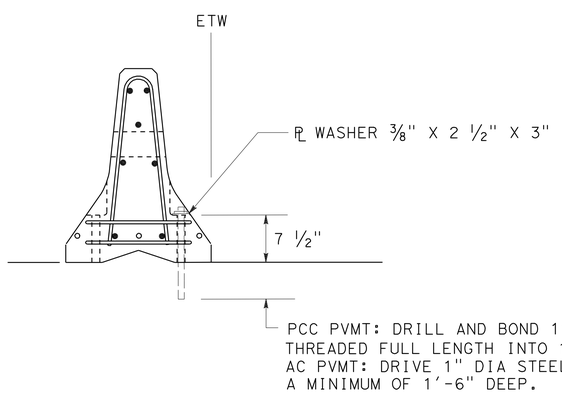

TEMPORARY RAILING (TYPE K) ANCHOR DETAIL

CONSTRUCTION DETAILS

NO SCALE

C-3

STATE OF CALIFORNIA - DEPARTMENT OF TRANSPORTATION
Caltrans
DESIGN
FUNCTIONAL SUPERVISOR: SON NGUYEN
CALCULATED-DESIGNED BY: L. PHAN
CHECKED BY: R. CARAIG JR.
REVISED BY
DATE REVISED

LAST REVISION 00-00-00
DATE PLOTTED => 04-JAN-2010
TIME PLOTTED => 11:16

Dist	COUNTY	ROUTE	POST MILES TOTAL PROJECT	SHEET No.	TOTAL SHEETS
12	Ora	55	7.0/7.9	12	76

REGISTERED CIVIL ENGINEER 09-15-09 DATE

12-28-09
PLANS APPROVAL DATE

REGISTERED PROFESSIONAL ENGINEER LY C. PHAN No. C63381 Exp 9-30-10 CIVIL STATE OF CALIFORNIA

THE STATE OF CALIFORNIA OR ITS OFFICERS OR AGENTS SHALL NOT BE RESPONSIBLE FOR THE ACCURACY OR COMPLETENESS OF SCANNED COPIES OF THIS PLAN SHEET.

NOTE:

FOR COMPLETE RIGHT OF WAY AND ACCURATE ACCESS DATA, SEE RIGHT OF WAY RECORD MAPS AT DISTRICT OFFICE.

LEGEND:

- TEMPORARY SILT FENCE
- PCC WASH — TEMPORARY CONCRETE WASHOUT (PORTABLE)
- TEMPORARY CONSTRUCTION ENTRANCE
- TEMPORARY DRAINAGE INLET PROTECTION

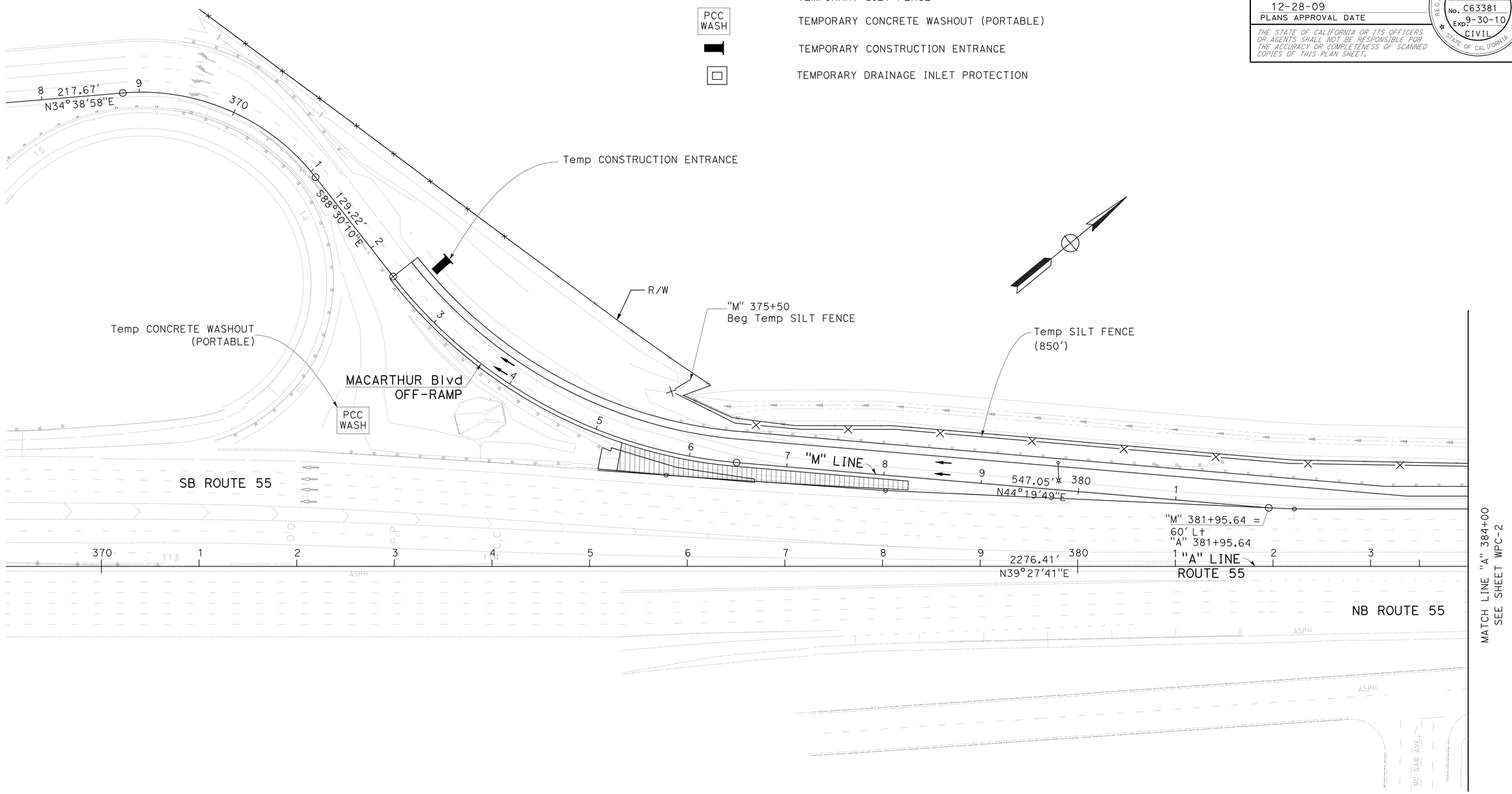

THIS PLAN ACCURATE FOR TEMPORARY WATER POLLUTION CONTROL WORK ONLY.

TEMPORARY WATER POLLUTION CONTROL PLAN

SCALE: 1" = 50'

WPC-1

STATE OF CALIFORNIA - DEPARTMENT OF TRANSPORTATION

Caltrans

DESIGN

FUNCTIONAL SUPERVISOR: SON NGUYEN

CALCULATED-DESIGNED BY: L. PHAN

CHECKED BY: R. CARAIG JR.

REVISED BY

DATE REVISED

LAST REVISION 00-00-00

DATE PLOTTED => 04-JAN-2010
TIME PLOTTED => 11:16

Dist	COUNTY	ROUTE	POST MILES TOTAL PROJECT	SHEET No.	TOTAL SHEETS
12	Ora	55	7.0/7.9	13	76

REGISTERED CIVIL ENGINEER 09-15-09 DATE

12-28-09
PLANS APPROVAL DATE

REGISTERED PROFESSIONAL ENGINEER
LY C. PHAN
No. C63381
Exp 9-30-10
CIVIL
STATE OF CALIFORNIA

THE STATE OF CALIFORNIA OR ITS OFFICERS OR AGENTS SHALL NOT BE RESPONSIBLE FOR THE ACCURACY OR COMPLETENESS OF SCANNED COPIES OF THIS PLAN SHEET.

NOTE:

FOR COMPLETE RIGHT OF WAY AND ACCURATE ACCESS DATA, SEE RIGHT OF WAY RECORD MAPS AT DISTRICT OFFICE.

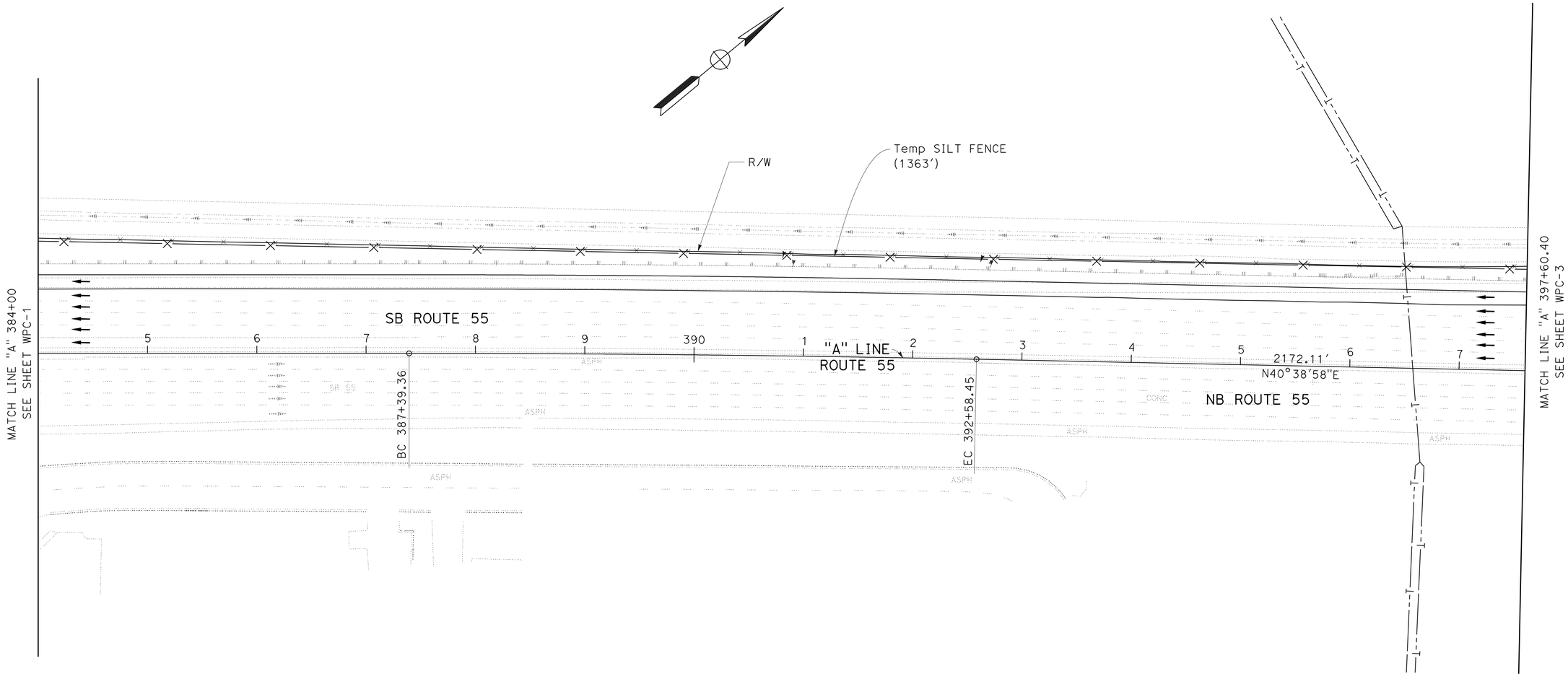

THIS PLAN ACCURATE FOR TEMPORARY WATER POLLUTION CONTROL WORK ONLY.

TEMPORARY WATER POLLUTION CONTROL PLAN

SCALE: 1" = 50'

WPC-2

REVISED BY	DATE REVISED

CALCULATED-DESIGNED BY	L. PHAN
CHECKED BY	R. CARAIG JR.
FUNCTIONAL SUPERVISOR	SON NGUYEN
DESIGN	

STATE OF CALIFORNIA - DEPARTMENT OF TRANSPORTATION

Caltrans

LAST REVISION 00-00-00 | DATE PLOTTED => 04-JAN-2010 | TIME PLOTTED => 11:16

Dist	COUNTY	ROUTE	POST MILES TOTAL PROJECT	SHEET No.	TOTAL SHEETS
12	Ora	55	7.0/7.9	14	76

REGISTERED CIVIL ENGINEER 09-15-09 DATE

12-28-09
PLANS APPROVAL DATE

REGISTERED PROFESSIONAL ENGINEER
LY C. PHAN
No. C63381
Exp 9-30-10
CIVIL
STATE OF CALIFORNIA

THE STATE OF CALIFORNIA OR ITS OFFICERS OR AGENTS SHALL NOT BE RESPONSIBLE FOR THE ACCURACY OR COMPLETENESS OF SCANNED COPIES OF THIS PLAN SHEET.

NOTE:

FOR COMPLETE RIGHT OF WAY AND ACCURATE ACCESS DATA, SEE RIGHT OF WAY RECORD MAPS AT DISTRICT OFFICE.

TEMPORARY WATER POLLUTION CONTROL

SHEET No.	TEMPORARY SILT FENCE	TEMPORARY CONSTRUCTION ENTRANCE	TEMPORARY DRAINAGE INLET PROTECTION
	LF	EA	EA
WPC-1	850	1	
WPC-2	1363		
WPC-3	657	1	1
TOTAL	2870	2	1

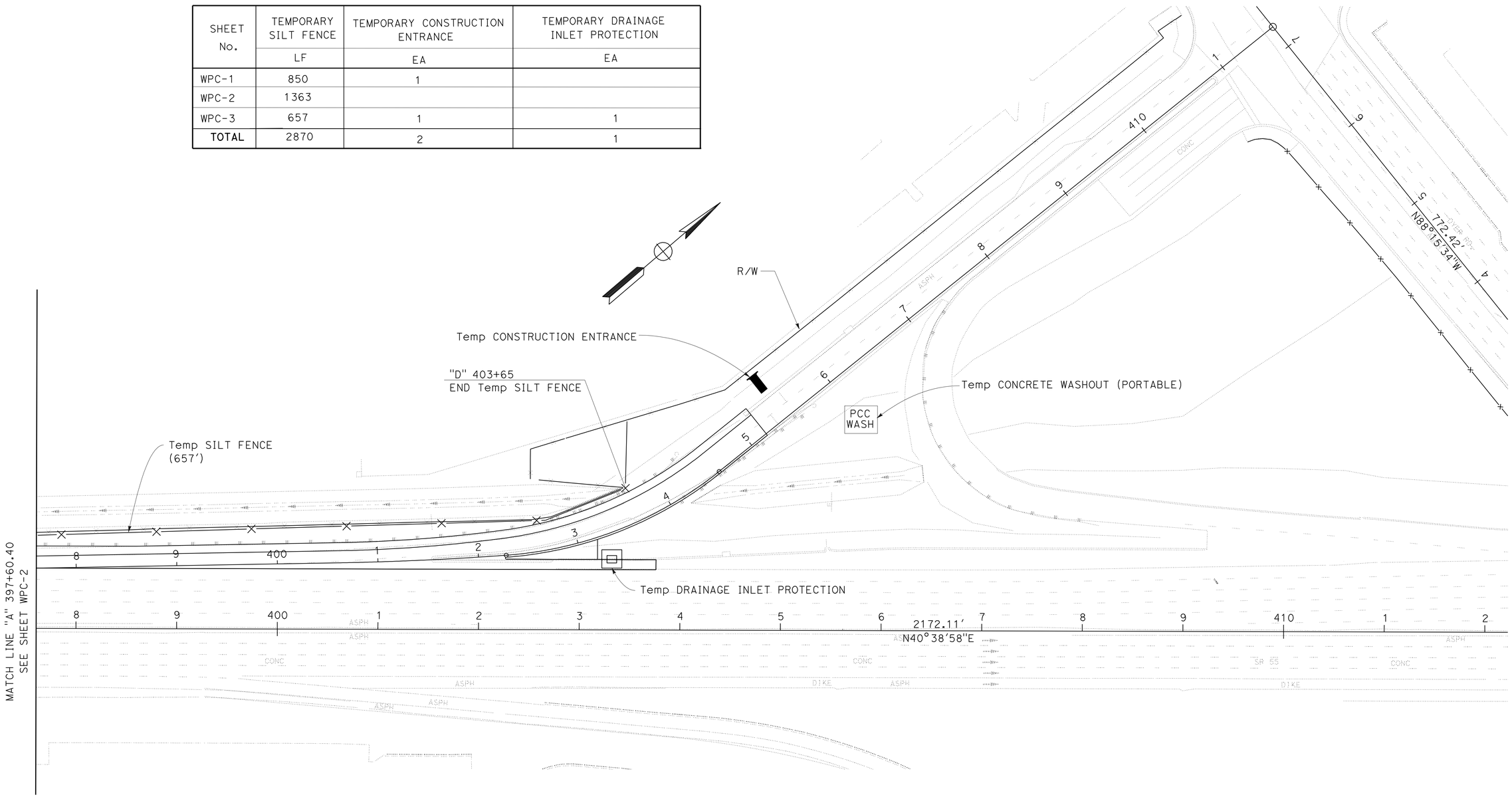

TEMPORARY WATER POLLUTION CONTROL PLAN

SCALE: 1" = 50'

THIS PLAN ACCURATE FOR TEMPORARY WATER POLLUTION CONTROL WORK ONLY.

WPC-3

STATE OF CALIFORNIA - DEPARTMENT OF TRANSPORTATION
Caltrans

CALCULATED-DESIGNED BY	L. PHAN
CHECKED BY	R. CARAIG JR.
FUNCTIONAL SUPERVISOR	SON NGUYEN
DESIGN	
REVISED BY	
DATE REVISED	

LAST REVISION 00-00-00 | DATE PLOTTED => 04-JAN-2010 | TIME PLOTTED => 11:17

Dist	COUNTY	ROUTE	POST MILES TOTAL PROJECT	SHEET No.	TOTAL SHEETS
12	Ora	55	7.0/7.9	15	76

REGISTERED CIVIL ENGINEER Sunil Gupta DATE 09-15-09

PLANS APPROVAL DATE 12-28-09

REGISTERED PROFESSIONAL ENGINEER SUNIL GUPTA No. C42195 Exp. 03-31-10 CIVIL STATE OF CALIFORNIA

THE STATE OF CALIFORNIA OR ITS OFFICERS OR AGENTS SHALL NOT BE RESPONSIBLE FOR THE ACCURACY OR COMPLETENESS OF SCANNED COPIES OF THIS PLAN SHEET.

LEGEND

DRAINAGE SYSTEM NO.

DRAINAGE UNIT NO.

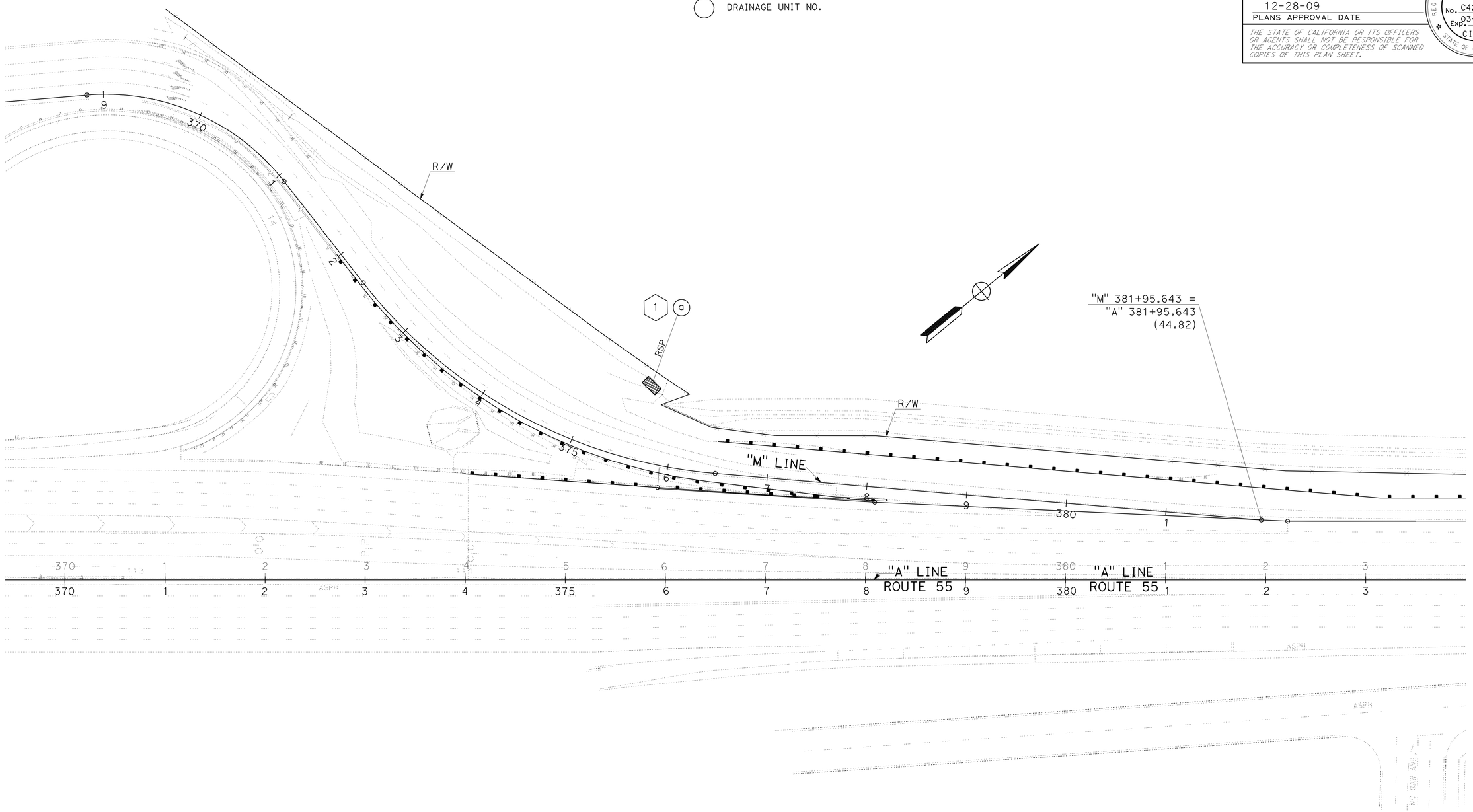

THIS PLAN ACCURATE FOR DRAINAGE WORK ONLY

DRAINAGE PLAN

SCALE: 1" = 50'

D-1

STATE OF CALIFORNIA - DEPARTMENT OF TRANSPORTATION

Caltrans

HYDRAULICS

FUNCTIONAL SUPERVISOR ROGER KAO

CALCULATED-DESIGNED BY SG

CHECKED BY KB

REVISED BY SG

DATE REVISED 08/18/09

LAST REVISION 08-18-09

DATE PLOTTED => 04-JAN-2010

TIME PLOTTED => 11:17

Dist	COUNTY	ROUTE	POST MILES TOTAL PROJECT	SHEET No.	TOTAL SHEETS
12	Ora	55	7.0/7.9	16	76

Sunil Gupta 09-15-09
REGISTERED CIVIL ENGINEER DATE

12-28-09
PLANS APPROVAL DATE

REGISTERED PROFESSIONAL ENGINEER
SUNIL GUPTA
No. C42195
Exp. 3/31/10
CIVIL
STATE OF CALIFORNIA

THE STATE OF CALIFORNIA OR ITS OFFICERS OR AGENTS SHALL NOT BE RESPONSIBLE FOR THE ACCURACY OR COMPLETENESS OF SCANNED COPIES OF THIS PLAN SHEET.

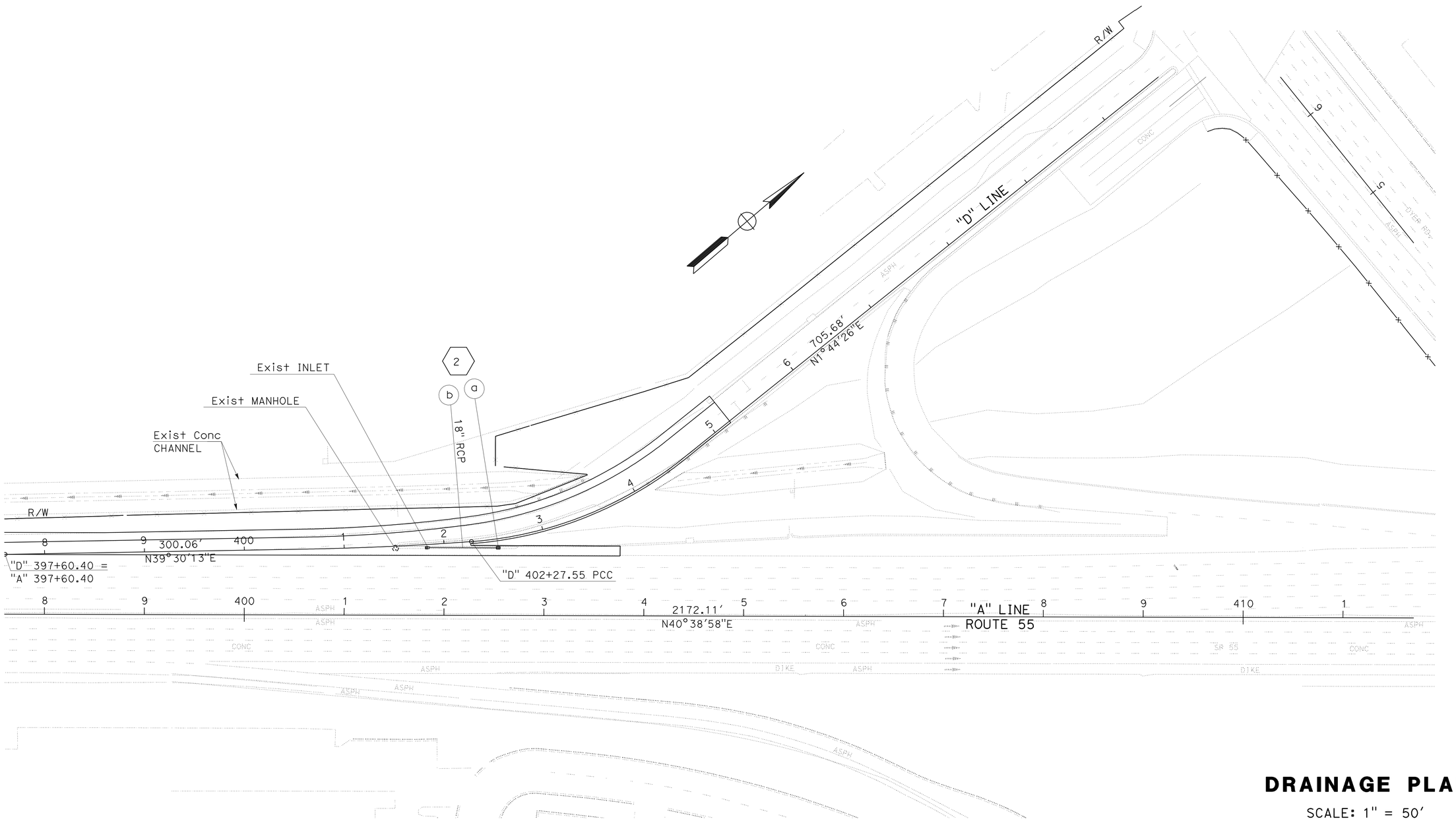

DRAINAGE PLAN

SCALE: 1" = 50'

THIS PLAN ACCURATE FOR DRAINAGE WORK ONLY

D-2

STATE OF CALIFORNIA - DEPARTMENT OF TRANSPORTATION
Caltrans
HYDRAULICS

FUNCTIONAL SUPERVISOR: ROGER KAO

CALCULATED-DESIGNED BY: SG
CHECKED BY: KB

REVISED BY: SG
DATE REVISED: 08/18/09

LAST REVISION 08-18-09 DATE PLOTTED => 04-JAN-2010 TIME PLOTTED => 11:17

BORDER LAST REVISED 4/11/2008

RELATIVE BORDER SCALE IS IN INCHES 0 1 2 3

USERNAME => trmikesl
DGN FILE => c0e250ia003.dgn

CU 12310

EA 0E2501

Dist	COUNTY	ROUTE	POST MILES TOTAL PROJECT	SHEET No.	TOTAL SHEETS
12	Ora	55	7.0/7.9	17	76

REGISTERED CIVIL ENGINEER DATE 09-15-09

12-28-09
PLANS APPROVAL DATE

REGISTERED PROFESSIONAL ENGINEER SUNIL GUPTA No. C42195 Exp. 3/31/10 CIVIL STATE OF CALIFORNIA

THE STATE OF CALIFORNIA OR ITS OFFICERS OR AGENTS SHALL NOT BE RESPONSIBLE FOR THE ACCURACY OR COMPLETENESS OF ELECTRONIC COPIES OF THIS PLAN SHEET.

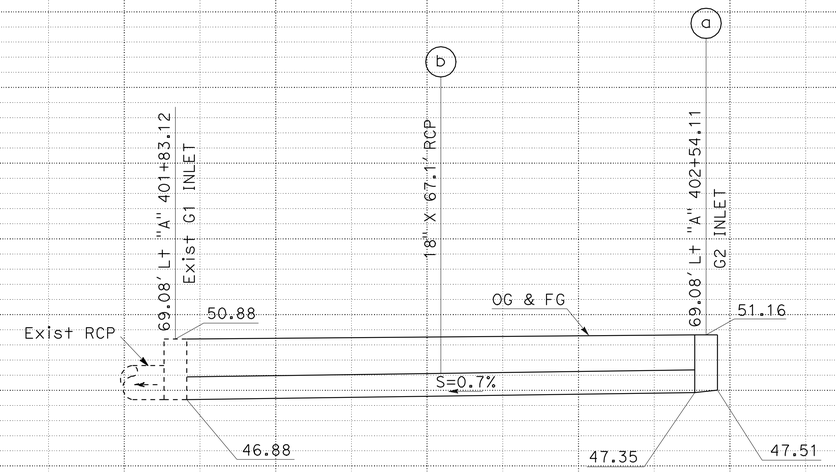

DRAINAGE SYSTEM No. 2

DRAINAGE PROFILES

SCALE: Horiz 1" = 20'
Vert 1" = 5'

DP-1

STATION		TOTAL
CY	Exc	
	Emb	

STATE OF CALIFORNIA - DEPARTMENT OF TRANSPORTATION
Caltrans
HYDRAULICS

FUNCTIONAL SUPERVISOR: ROGER KAO
CALCULATED-DESIGNED BY: KB
CHECKED BY: SG
REVISED BY: SG
DATE REVISED: 08/18/09

LAST REVISION 08-18-09
DATE PLOTTED => 04-JAN-2010
TIME PLOTTED => 11:17

Dist	COUNTY	ROUTE	POST MILES TOTAL PROJECT	SHEET No.	TOTAL SHEETS
12	Ora	55	7.0/7.9	18	76

Sunil Gupta 09-15-09
REGISTERED CIVIL ENGINEER DATE

12-28-09
PLANS APPROVAL DATE

REGISTERED PROFESSIONAL ENGINEER
SUNIL GUPTA
No. C42195
Exp. 3/31/10
CIVIL
STATE OF CALIFORNIA

THE STATE OF CALIFORNIA OR ITS OFFICERS OR AGENTS SHALL NOT BE RESPONSIBLE FOR THE ACCURACY OR COMPLETENESS OF ELECTRONIC COPIES OF THIS PLAN SHEET.

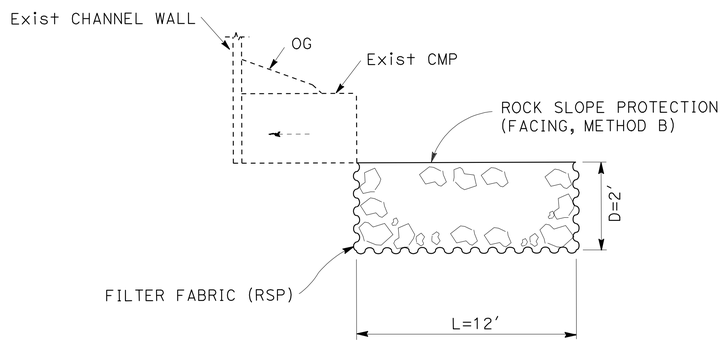

PROFILE

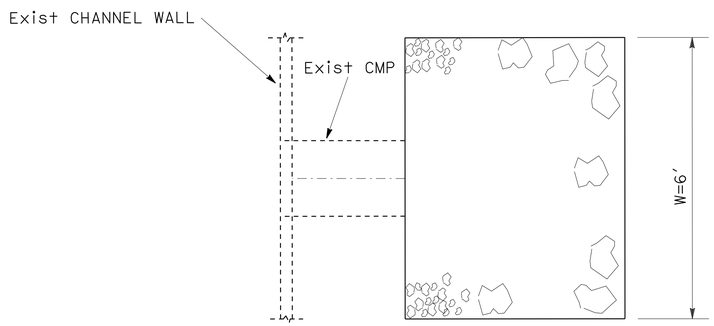

PLAN

ROCK SLOPE PROTECTION DETAIL

DRAINAGE SYSTEM No. 1 a

DRAINAGE DETAIL

NO SCALE

DD-1

STATE OF CALIFORNIA - DEPARTMENT OF TRANSPORTATION
Caltrans
HYDRAULICS

FUNCTIONAL SUPERVISOR: ROGER KAO

CALCULATED-DESIGNED BY: SG
CHECKED BY: KB

REVISED BY: SG
DATE REVISED: 08/18/09

LAST REVISION 08-18-09
DATE PLOTTED => 04-JAN-2010
TIME PLOTTED => 11:17

Dist	COUNTY	ROUTE	POST MILES TOTAL PROJECT	SHEET No.	TOTAL SHEETS
12	Ora	55	7.0/7.9	19	76

REGISTERED CIVIL ENGINEER DATE 09-15-09

PLANS APPROVAL DATE 12-28-09

REGISTERED PROFESSIONAL ENGINEER SUNIL GUPTA No. C42195 Exp. 3/31/10 CIVIL STATE OF CALIFORNIA

THE STATE OF CALIFORNIA OR ITS OFFICERS OR AGENTS SHALL NOT BE RESPONSIBLE FOR THE ACCURACY OR COMPLETENESS OF ELECTRONIC COPIES OF THIS PLAN SHEET.

NOTE:

1. (N) NOT A SEPARATE PAY ITEM, FOR INFORMATION ONLY

ABBREVIATIONS:

S = STANDARD JOINT TYPE
Bet = BETWEEN
RSP = ROCK SLOPE PROTECTION

DRAINAGE SYSTEM NUMBER	DRAINAGE UNIT	"H" OR "V"	MINOR CONCRETE (MINOR STRUCTURE)	MISCELLANEOUS IRON AND STEEL	FRAME & GRATE (24-12) (N)	18" REINFORCED CONCRETE PIPE	ROCK SLOPE PROTECTION (FACING, METHOD B)	ROCK SLOPE PROTECTION FABRIC	PIPE JOINT CLASSIFICATION (N)	MAXIMUM COVER	DESCRIPTION	STATION	DRAINAGE PLAN SHEET No	DRAINAGE SYSTEM NUMBER	DRAINAGE UNIT
		FT	CY	LB	EA	LF	TON	SQFT		FT					
1	a						11.6	160			RSP	194.43' Lt "A" 375+86.35	D-1	1	a
2	a	3.81	1.57	326	1						G2 INLET	69.08' Lt "A" 402+54.11	D-2	2	a
	b					67.1			S	2.5	18" RCP	Bet 67.78' "A" 401+85.09 TO 67.78' Lt "A" 402+52.14	D-2		b
TOTAL			1.57	326	1	67.1	11.6	160							

DRAINAGE QUANTITIES

DQ-1

STATE OF CALIFORNIA - DEPARTMENT OF TRANSPORTATION
Caltrans
HYDRAULICS

FUNCTIONAL SUPERVISOR: ROGER KAO
CALCULATED-DESIGNED BY: SG
CHECKED BY: KB
REVISED BY: SG
DATE REVISED: 08/18/09

LAST REVISION 08-18-09 | DATE PLOTTED => 04-JAN-2010 | TIME PLOTTED => 11:17

Dist	COUNTY	ROUTE	POST MILES TOTAL PROJECT	SHEET No.	TOTAL SHEETS
12	Ora	55	7.0/7.9	20	76

REGISTERED CIVIL ENGINEER 09-15-09 DATE

12-28-09
PLANS APPROVAL DATE

REGISTERED PROFESSIONAL ENGINEER LY C. PHAN No. C63381 Exp 9-30-10 CIVIL STATE OF CALIFORNIA

THE STATE OF CALIFORNIA OR ITS OFFICERS OR AGENTS SHALL NOT BE RESPONSIBLE FOR THE ACCURACY OR COMPLETENESS OF SCANNED COPIES OF THIS PLAN SHEET.

NOTE:

1. LOCATIONS OF CONSTRUCTION AREA SIGNS SHOWN ARE APPROXIMATE. EXACT LOCATIONS TO BE DETERMINED BY THE ENGINEER.

LEGEND:

- CONSTRUCTION AREA SIGN - ONE POST
- CONSTRUCTION AREA SIGN - TWO POST
- WORK ZONE TO BE CLOSED TO TRAFFIC
- [X] CONSTRUCTION AREA SIGN NUMBER

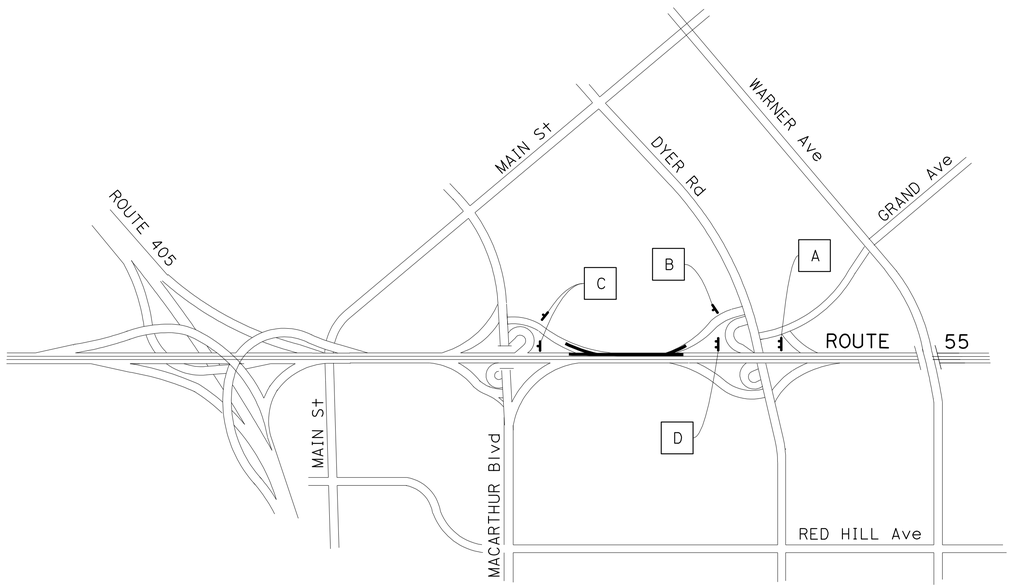

CONSTRUCTION AREA SIGNS STATIONARY MOUNTED

SIGN No.	SIGN CODE	PANEL SIZE	SIGN MESSAGE	No. OF POST AND SIZE	QUANTITY (EA)
A	W20-1	60" x 60"	ROAD WORK AHEAD	2-6" x 6"	1
B	W20-1	36" x 36"	ROAD WORK AHEAD	1-6" x 6"	1
C	G20-2	36" x 18"	END ROAD WORK	1-6" x 6"	2
D	C40(CA)	144" x 60"	TRAFFIC FINES DOUBLED IN CONSTRUCTION ZONES	2-8" x 8"	1

* FOR ADDITIONAL QUANTITIES OF CONSTRUCTION AREA SIGNS, SEE SCQ-1.

THIS PLAN ACCURATE FOR CONSTRUCTION AREA SIGN WORK ONLY

CONSTRUCTION AREA SIGNS

NO SCALE

CS-1

STATE OF CALIFORNIA - DEPARTMENT OF TRANSPORTATION
Caltrans
DESIGN
FUNCTIONAL SUPERVISOR: SON NGUYEN
CALCULATED-DESIGNED BY: L. PHAN
CHECKED BY: R. CARAIG JR.
REVISED BY
DATE REVISED

LAST REVISION 00-00-00
DATE PLOTTED => 04-JAN-2010
TIME PLOTTED => 11:17

Dist	COUNTY	ROUTE	POST MILES TOTAL PROJECT	SHEET No.	TOTAL SHEETS
12	Ora	55	7.0/7.9	21	76

REGISTERED CIVIL ENGINEER 09-15-09 DATE

12-28-09
PLANS APPROVAL DATE

REGISTERED PROFESSIONAL ENGINEER LY C. PHAN No. C63381 Exp. 9-30-10 CIVIL STATE OF CALIFORNIA

THE STATE OF CALIFORNIA OR ITS OFFICERS OR AGENTS SHALL NOT BE RESPONSIBLE FOR THE ACCURACY OR COMPLETENESS OF SCANNED COPIES OF THIS PLAN SHEET.

GENERAL NOTES - ALL STAGES:

1. FOR COMPLETE RIGHT OF WAY AND ACCURATE ACCESS DATA, SEE RIGHT OF WAY RECORD MAPS AT DISTRICT OFFICE.
2. 20:1 TAPER SHALL BE USED AT THE END OF ALL TEMPORARY RAILING UNLESS OTHERWISE NOTED.
3. TEMPORARY TRAFFIC SCREEN LOCATIONS ARE APPROXIMATE. EXACT LOCATION SHALL BE DETERMINED BY THE ENGINEER.
4. Temp RAILING (TYPE K) SHALL BE ANCHORED IF THE EXCAVATION DEPTH IS GREATER THAN 2.5 FEET.

ABBREVIATION:

HOV - HIGH OCCUPANCY VEHICLE

LEGEND - ALL STAGES:

- CHANNELIZER (SURFACE MOUNTED)
- CONSTRUCTION AREA SIGN (1 POST)
- CONSTRUCTION AREA SIGN (2 POST)
- TYPE III BARRICADE
- CONSTRUCT THIS STAGE
- TEMPORARY CRASH CUSHION MODULE, ARRAY PER PLAN
- CHANGE OF PAVEMENT DELINEATION DETAIL
- DIRECTION OF TRAFFIC
- CURVE DATA No.
- PAINT TRAFFIC STRIPE (2-COAT) DETAIL No.

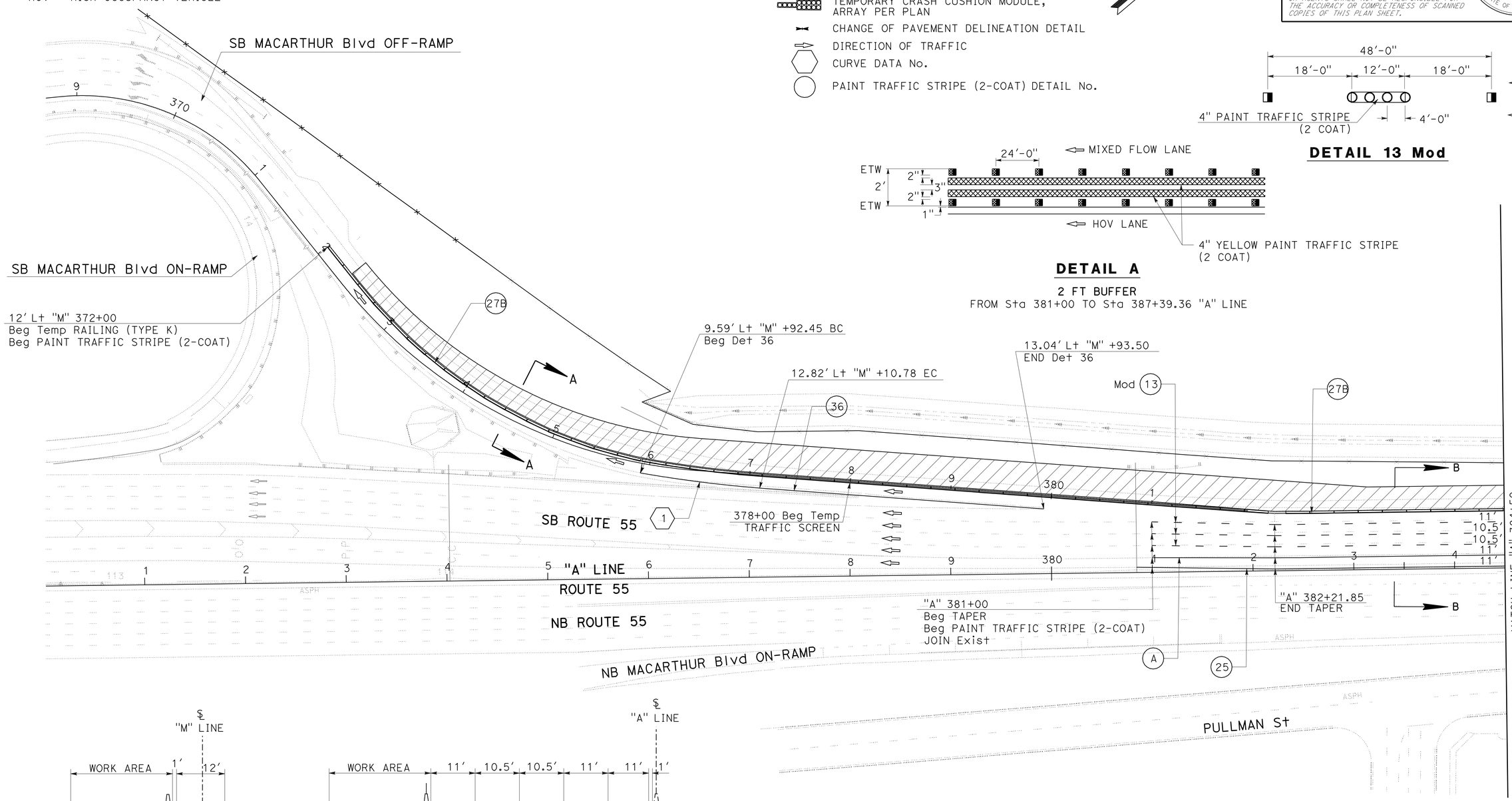

DETAIL 13 Mod

DETAIL A

2 FT BUFFER
FROM Sta 381+00 TO Sta 387+39.36 "A" LINE

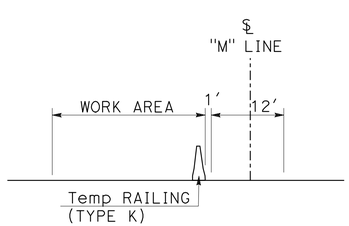

SECTION A-A

NO SCALE

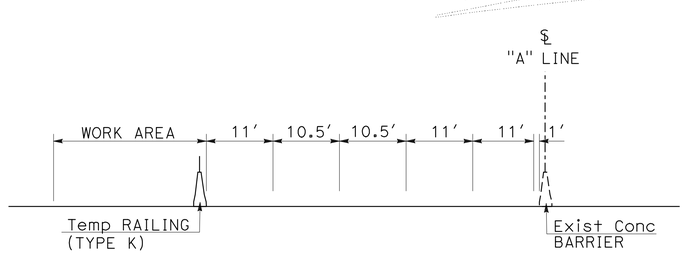

SECTION B-B

NO SCALE

CURVE DATA

No.	R	Δ	T	L
1	1281.23′	5°20′27"	59.76′	119.43′

THIS PLAN ACCURATE FOR STAGE CONSTRUCTION WORK ONLY

STAGE 1

STAGE CONSTRUCTION AND TRAFFIC HANDLING PLAN

SCALE: 1"=50′

SC-1

STATE OF CALIFORNIA - DEPARTMENT OF TRANSPORTATION

DESIGN

FUNCTIONAL SUPERVISOR: SON NGUYEN

CALCULATED-DESIGNED BY | CHECKED BY

REVISED BY | DATE REVISED

LAST REVISION 00-00-00 | DATE PLOTTED => 04-JAN-2010 | TIME PLOTTED => 11:17

Dist	COUNTY	ROUTE	POST MILES TOTAL PROJECT	SHEET No.	TOTAL SHEETS
12	Ora	55	7.0/7.9	22	76

REGISTERED CIVIL ENGINEER 09-15-09 DATE

12-28-09
PLANS APPROVAL DATE

REGISTERED PROFESSIONAL ENGINEER
LY C. PHAN
No. C63381
Exp. 9-30-10
CIVIL
STATE OF CALIFORNIA

THE STATE OF CALIFORNIA OR ITS OFFICERS OR AGENTS SHALL NOT BE RESPONSIBLE FOR THE ACCURACY OR COMPLETENESS OF SCANNED COPIES OF THIS PLAN SHEET.

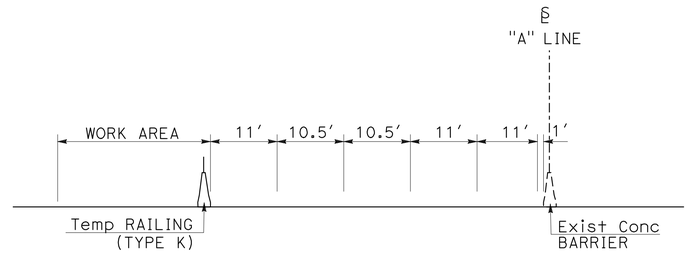

SECTION A-A
NO SCALE

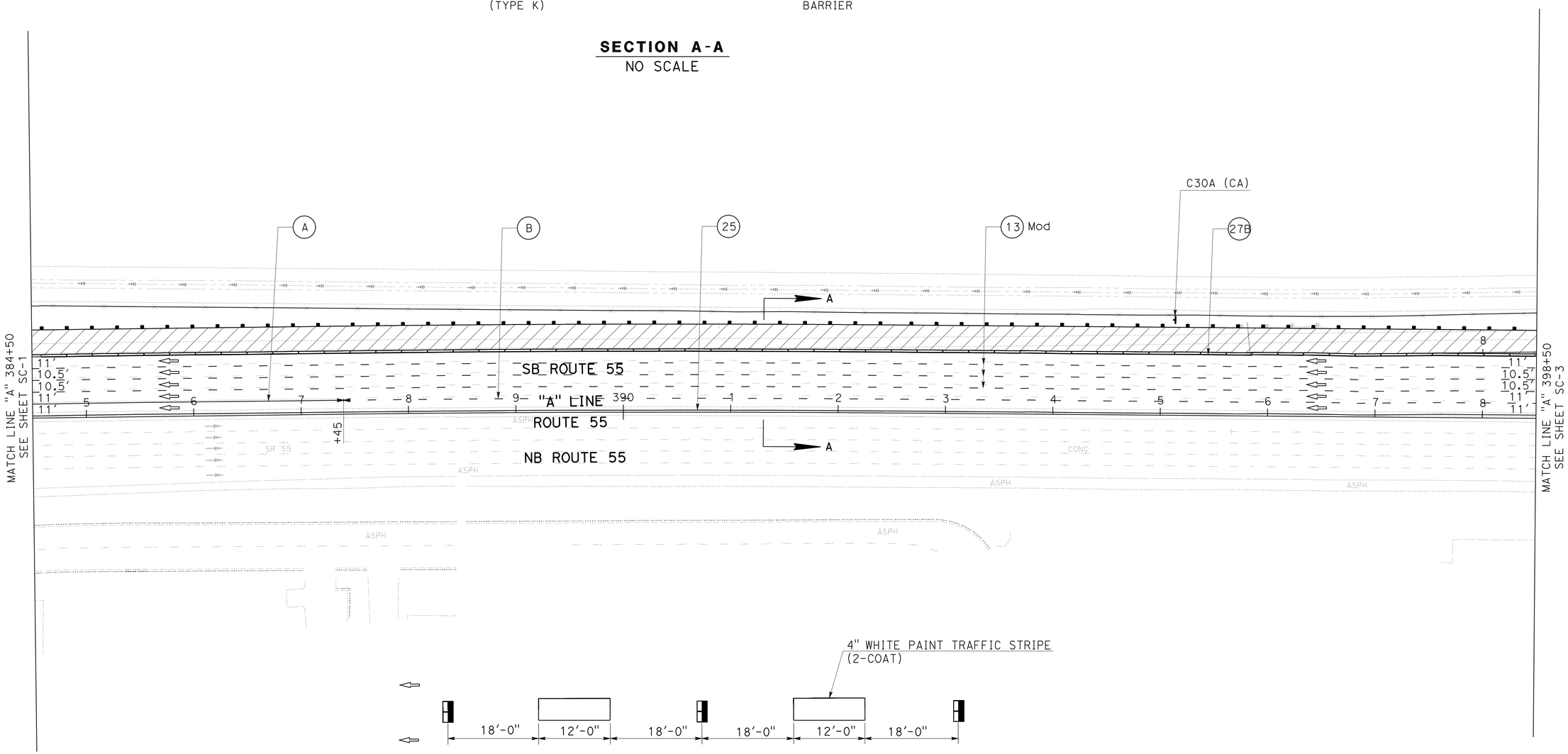

DETAIL B
INGRESS/EGRESS STRIPING

THIS PLAN ACCURATE FOR STAGE CONSTRUCTION WORK ONLY

STAGE 1

STAGE CONSTRUCTION AND TRAFFIC HANDLING PLAN

SCALE: 1" = 50′ **SC-2**

STATE OF CALIFORNIA - DEPARTMENT OF TRANSPORTATION
Caltrans®
DESIGN
FUNCTIONAL SUPERVISOR: SON NGUYEN
CALCULATED-DESIGNED BY
CHECKED BY
REVISED BY
DATE REVISED

LAST REVISION 00-00-00
DATE PLOTTED => 04-JAN-2010
TIME PLOTTED => 11:18

Dist	COUNTY	ROUTE	POST MILES TOTAL PROJECT	SHEET No.	TOTAL SHEETS
12	Ora	55	7.0/7.9	23	76

REGISTERED CIVIL ENGINEER 09-15-09 DATE

12-28-09
PLANS APPROVAL DATE

REGISTERED PROFESSIONAL ENGINEER
LY C. PHAN
No. C63381
Exp. 9-30-10
CIVIL
STATE OF CALIFORNIA

THE STATE OF CALIFORNIA OR ITS OFFICERS OR AGENTS SHALL NOT BE RESPONSIBLE FOR THE ACCURACY OR COMPLETENESS OF SCANNED COPIES OF THIS PLAN SHEET.

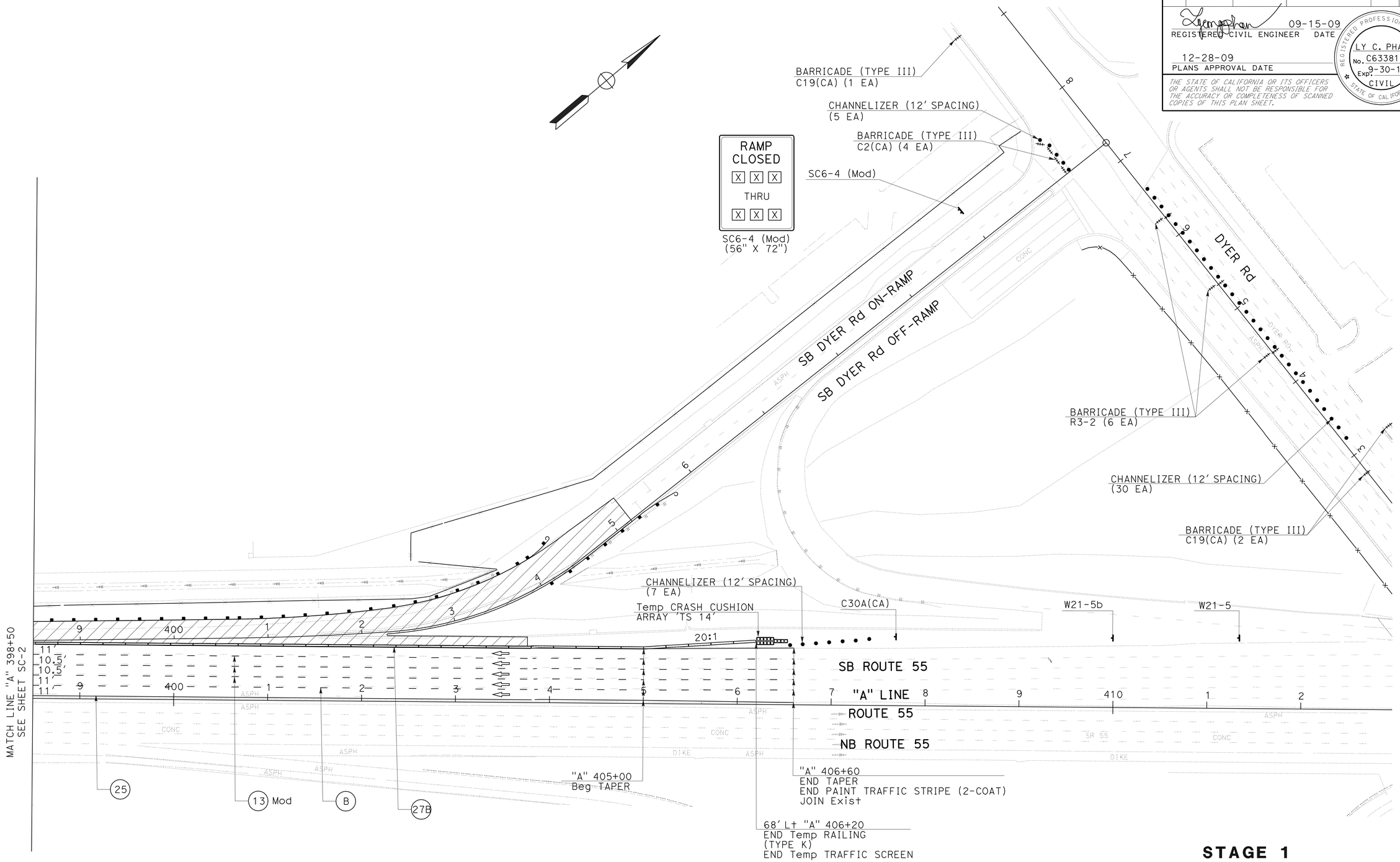

THIS PLAN ACCURATE FOR STAGE CONSTRUCTION WORK ONLY

STAGE 1

STAGE CONSTRUCTION AND TRAFFIC HANDLING PLAN

SCALE: 1" = 50'

SC-3

STATE OF CALIFORNIA - DEPARTMENT OF TRANSPORTATION

Caltrans

FUNCTIONAL SUPERVISOR: SON NGUYEN

DESIGN

CALCULATED-DESIGNED BY

CHECKED BY

REVISED BY

DATE REVISED

LAST REVISION 00-00-00

DATE PLOTTED => 04-JAN-2010
TIME PLOTTED => 11:18

Dist	COUNTY	ROUTE	POST MILES TOTAL PROJECT	SHEET No.	TOTAL SHEETS
12	Ora	55	7.0/7.9	24	76

REGISTERED CIVIL ENGINEER 09-15-09 DATE

12-28-09
PLANS APPROVAL DATE

REGISTERED PROFESSIONAL ENGINEER
LY C. PHAN
No. C63381
Exp. 9-30-10
CIVIL
STATE OF CALIFORNIA

THE STATE OF CALIFORNIA OR ITS OFFICERS OR AGENTS SHALL NOT BE RESPONSIBLE FOR THE ACCURACY OR COMPLETENESS OF SCANNED COPIES OF THIS PLAN SHEET.

CURVE DATA

No.	R	Δ	T	L
2	476.38′	47°22′35"	209.00′	393.91′
3	8282.74′	4°22′28"	316.34′	632.38′
4	8337.74′	1°43′18"	125.27′	250.53′

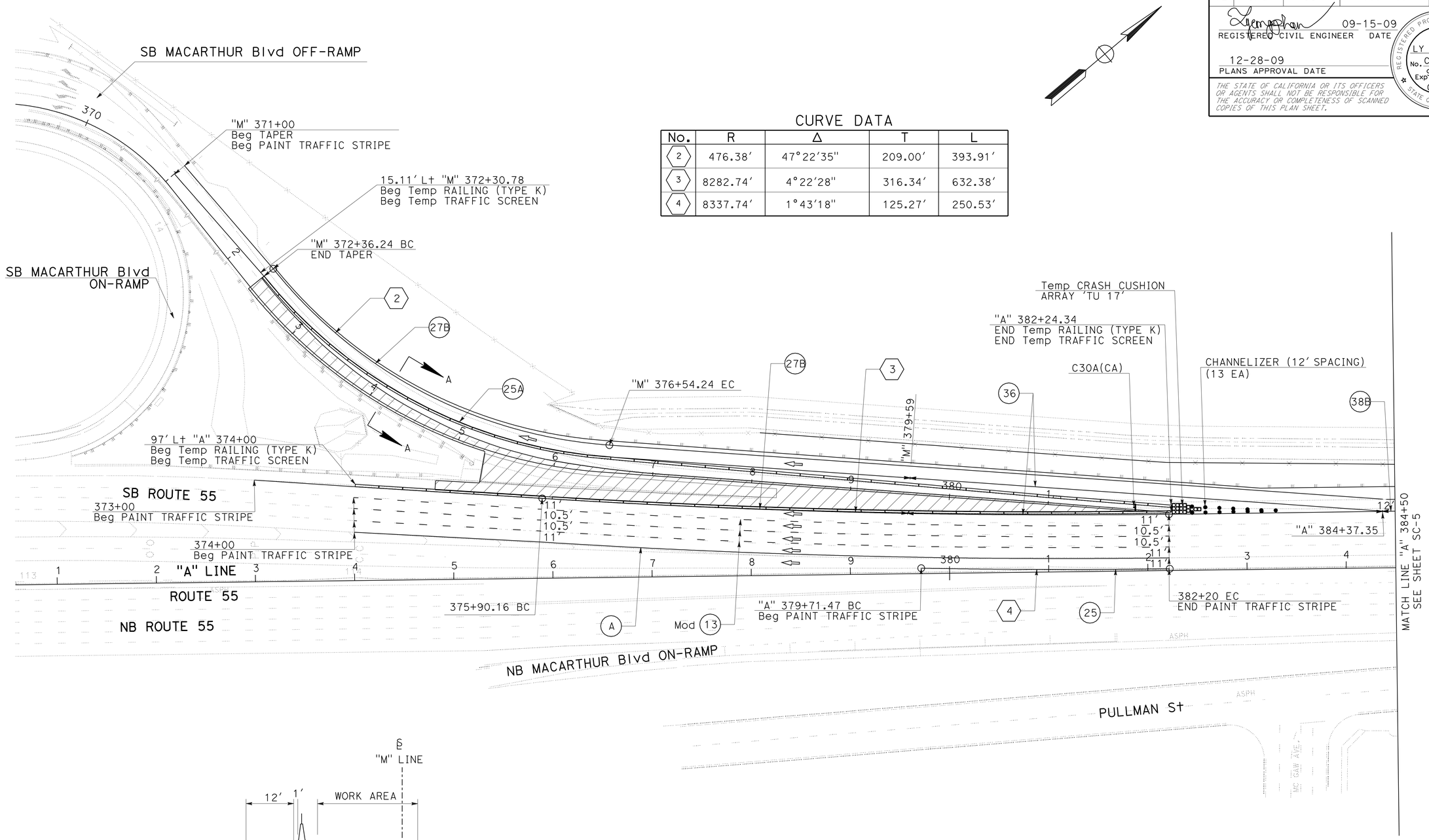

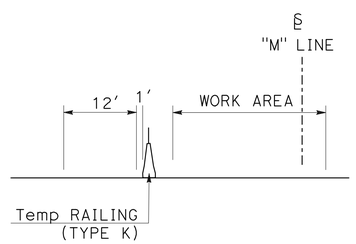

SECTION A-A
NO SCALE

THIS PLAN ACCURATE FOR STAGE CONSTRUCTION WORK ONLY

STAGE 2

STAGE CONSTRUCTION AND TRAFFIC HANDLING PLAN

SCALE: 1" = 50′ **SC-4**

STATE OF CALIFORNIA - DEPARTMENT OF TRANSPORTATION
Caltrans
DESIGN
FUNCTIONAL SUPERVISOR SON NGUYEN
CALCULATED-DESIGNED BY
CHECKED BY
REVISED BY
DATE REVISED

LAST REVISION 00-00-00
DATE PLOTTED => 04-JAN-2010
TIME PLOTTED => 11:18

Dist	COUNTY	ROUTE	POST MILES TOTAL PROJECT	SHEET No.	TOTAL SHEETS
12	Ora	55	7.0/7.9	25	76

REGISTERED CIVIL ENGINEER 09-15-09 DATE

12-28-09
PLANS APPROVAL DATE

REGISTERED PROFESSIONAL ENGINEER
LY C. PHAN
No. C63381
Exp. 9-30-10
CIVIL
STATE OF CALIFORNIA

THE STATE OF CALIFORNIA OR ITS OFFICERS OR AGENTS SHALL NOT BE RESPONSIBLE FOR THE ACCURACY OR COMPLETENESS OF SCANNED COPIES OF THIS PLAN SHEET.

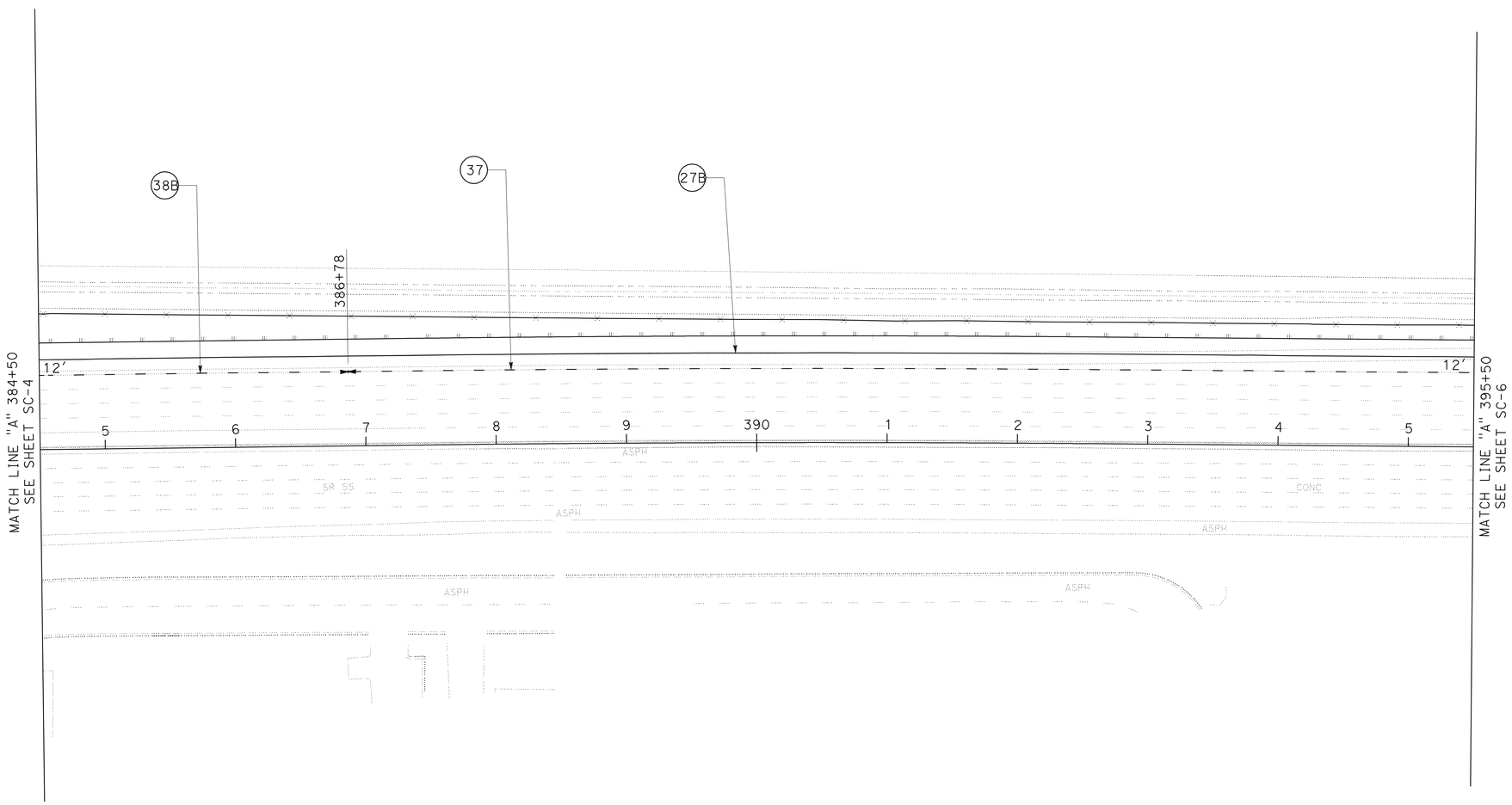

THIS PLAN ACCURATE FOR STAGE CONSTRUCTION WORK ONLY

STAGE 2

STAGE CONSTRUCTION AND TRAFFIC HANDLING PLAN

SCALE: 1" = 50'

SC-5

STATE OF CALIFORNIA - DEPARTMENT OF TRANSPORTATION

Caltrans

DESIGN

FUNCTIONAL SUPERVISOR: SON NGUYEN

CALCULATED-DESIGNED BY

CHECKED BY

REVISED BY

DATE REVISED

LAST REVISION 00-00-00

DATE PLOTTED => 04-JAN-2010
TIME PLOTTED => 11:18

Dist	COUNTY	ROUTE	POST MILES TOTAL PROJECT	SHEET No.	TOTAL SHEETS
12	Ora	55	7.0/7.9	26	76

REGISTERED CIVIL ENGINEER 09-15-09 DATE

12-28-09
PLANS APPROVAL DATE

REGISTERED PROFESSIONAL ENGINEER
LY C. PHAN
No. C63381
Exp. 9-30-10
CIVIL
STATE OF CALIFORNIA

THE STATE OF CALIFORNIA OR ITS OFFICERS OR AGENTS SHALL NOT BE RESPONSIBLE FOR THE ACCURACY OR COMPLETENESS OF SCANNED COPIES OF THIS PLAN SHEET.

CURVE DATA

No.	R	Δ	T	L
5	529.75′	41°37′22"	201.35′	384.84′
6	564.79′	40°24′20"	207.83′	398.30′

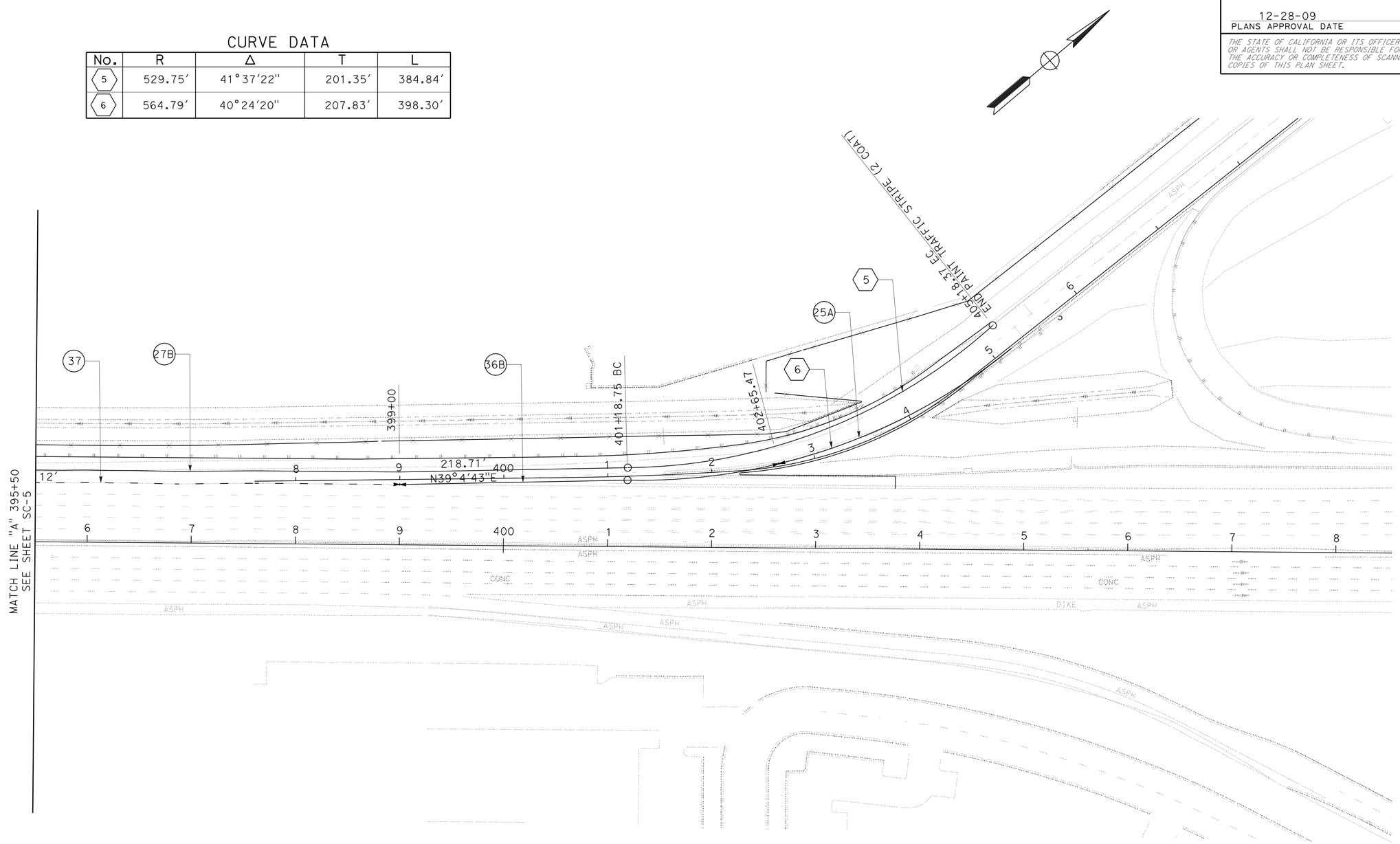

THIS PLAN ACCURATE FOR STAGE CONSTRUCTION WORK ONLY

STAGE 2

STAGE CONSTRUCTION AND TRAFFIC HANDLING PLAN

SCALE: 1" = 50′

SC-6

STATE OF CALIFORNIA - DEPARTMENT OF TRANSPORTATION

Caltrans

DESIGN

FUNCTIONAL SUPERVISOR: SON NGUYEN

CALCULATED-DESIGNED BY

CHECKED BY

REVISED BY

DATE REVISED

LAST REVISION 00-00-00

DATE PLOTTED => 04-JAN-2010
TIME PLOTTED => 11:18

Dist	COUNTY	ROUTE	POST MILES TOTAL PROJECT	SHEET No.	TOTAL SHEETS
12	Ora	55	7.0/7.9	27	76

REGISTERED CIVIL ENGINEER 09-15-09 DATE

12-28-09
PLANS APPROVAL DATE

REGISTERED PROFESSIONAL ENGINEER LY C. PHAN No. C63381 Exp. 9-30-10 CIVIL STATE OF CALIFORNIA

THE STATE OF CALIFORNIA OR ITS OFFICERS OR AGENTS SHALL NOT BE RESPONSIBLE FOR THE ACCURACY OR COMPLETENESS OF SCANNED COPIES OF THIS PLAN SHEET.

STAGE CONSTRUCTION QUANTITIES

SHEET NUMBER	STATION LIMIT	DETAIL	PAINT TRAFFIC STRIPE (2-COAT) 4" BROKEN WHITE	4" SOLID WHITE	4" SOLID YELLOW	8" BROKEN WHITE	8" SOLID WHITE	PAVEMENT MARKER NON-REFLECTIVE TYPE A	RETRO-REFLECTIVE TYPE G	TYPE H	TYPE C	TEMPORARY RAILING (TYPE K)	TEMPORARY TRAFFIC SCREEN	CHANNELIZER (SURFACE MOUNTED)	TEMPORARY CRASH CUSHION MODULE	REMOVE PAINTED TRAFFIC STRIPE	REMOVE PAVEMENT MARKER	TYPE III BARRICADE
			LF	LF	LF	LF	LF	EA	EA	EA	EA	LF	LF	EA	EA	LF	EA	EA
SC-1	"M" 372+00 TO "A" 384+50											1251	651					
	"A" 371+00 TO "A" 384+50	27B		1251												1251		
	"M" 375+92.45 TO "M" 379+93.50	36					402		18							804	18	
	"A" 371+00 TO "A" 384+50	25			350					9						350	9	
	"A" 381+00 TO "A" 384+50	A			700					32						700	32	
	"A" 381+00 TO "A" 384+50	13 Mod	1050					88	25							263	113	
SC-2	"A" 384+50 TO "A" 398+50											1400	1400					
	"A" 384+50 TO "A" 398+50	27B		1400												1400		
	"A" 384+50 TO "A" 398+50	25			1400					31						1400	31	
	"A" 384+50 TO "A" 387+30	A			580					27						580	27	
	"A" 387+50 TO "A" 398+50	B				1111			49							556	49	
	"A" 384+50 TO "A" 398+50	13 Mod	4200					350	91							1050	441	
SC-3	"A" 398+50 TO "A" 406+20											771	771	41	14			13
	"A" 398+50 TO "A" 406+60	27B		810												810		
	"A" 398+50 TO "A" 406+60	25			810					18						810	18	
	"A" 398+50 TO "A" 406+60	B				810			36							406	36	
	"A" 398+50 TO "A" 406+60	13 Mod	2430					203	54							607	257	
SC-4	"A" 371+00 TO "A" 384+50											1819	1819	13	17			
	"M" 379+59 TO "A" 382+20	36					825		36							1650	36	
	"A" 384+37.35 TO "A" 384+50	38B					13		4							26	4	
	"M" 371+00 TO "M" 379+59	25A			859					37						859	37	
	"A" 371+00 TO "A" 384+50	27B		1779												1779		
	"A" 374+00 TO "A" 382+20	13 Mod	2460					205	55							615	260	
	"A" 379+71.47 TO "A" 382+20	25			249					7						249	7	
	"A" 374+00 TO "A" 382+20	A			1640					75						1640	75	
SC-5	"A" 384+50 TO "A" 386+78	38B					237		22							474	22	
	"A" 386+78 TO "A" 395+50	37				863			60		8					346	68	
	"A" 384+50 TO "A" 395+50	27B		1100												1100		
SC-6	"A" 395+50 TO "A" 405+18.37	27B		969												969		
	"A" 402+65.47 TO "A" 405+18.37	25A			253					12						253	12	
	"A" 399+00 TO "A" 402+65.47	36B					366		16							732	16	
	"A" 395+50 TO "A" 399+00	37				350			34							140	34	
SUBTOTAL			10140	7309	6841	3134	1843	846	500	248	8	5241	4641	54	31	21819	1602	13
TOTAL FROM TH-1																		10
TOTAL			29267 *					846	756			5241	4641	54	31	21819	1602	23

* FOR GRAND TOTAL OF PAINT TRAFFIC STRIPE (2-COAT) PAVEMENT MARKER (NON-REFLECTIVE), PAVEMENT MARKER (RETROREFLECTIVE), AND REMOVE PAVEMENT MARKER SEE SHEET PDQ-1

CONSTRUCTION AREA SIGN (STAGE CONSTRUCTION)

SHEET No.	MUTCD SIGN CODE	PANEL SIZE in x in	No. OF POSTS AND SIZE in x in	REMARKS	No. OF SIGNS
SC-3	C30A(CA)	48 x 48	1-4 x 6		1
	W21-5b	36 x 36	1-4 x 6	3200 FT	1
	W21-5	30 x 30	1-4 x 6		1
	C19(CA)	36 x 36		MOUNTED ON BARRICADE	3
	C2(CA)	36 x 24		MOUNTED ON BARRICADE	4
	R3-2	24 x 24		MOUNTED ON BARRICADE	6
SC-4	C30A(CA)	48 x 48	1-4 x 6		1
			TOTAL		

* For Additional Quantities of Construction Area Signs, See CS-1

STAGE CONSTRUCTION QUANTITIES

SCQ-1

REVISED BY | DATE REVISED
CALCULATED-DESIGNED BY | CHECKED BY
FUNCTIONAL SUPERVISOR: SON NGUYEN
STATE OF CALIFORNIA - DEPARTMENT OF TRANSPORTATION
DESIGN
Caltrans

LAST REVISION 11-20-08 | DATE PLOTTED => 04-JAN-2010 | TIME PLOTTED => 11:19

Dist	COUNTY	ROUTE	POST MILES TOTAL PROJECT	SHEET No.	TOTAL SHEETS
12	Ora	55	7.0/7.9	28	76

REGISTERED CIVIL ENGINEER 09-15-09 DATE

12-28-09
PLANS APPROVAL DATE

REGISTERED PROFESSIONAL ENGINEER
LY C. PHAN
No. C63381
Exp. 9-30-10
CIVIL
STATE OF CALIFORNIA

THE STATE OF CALIFORNIA OR ITS OFFICERS OR AGENTS SHALL NOT BE RESPONSIBLE FOR THE ACCURACY OR COMPLETENESS OF SCANNED COPIES OF THIS PLAN SHEET.

NOTE:

1. Locations Of Construction Area Signs (Detour) Shown Are Approximate. Exact Locations To Be Determined By The Engineer
2. Construction Area Signs (Detour) Shall Be Located Approximately 50 Feets Away From The Intersection

LEGEND:

- Direction of Traffic
- Work Zone To Be Closed To Traffic
- Construction Area Sign (Detour), 1-Post
- PCMS-1 Portable Changeable Message Sign
- Construct Area Sign (Detour) No.

Type III Barricade

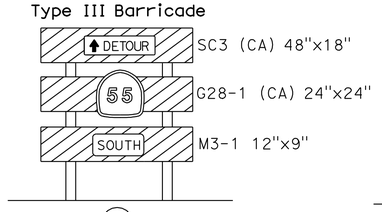

SC3 (CA) 48"x18"
G28-1 (CA) 24"x24"
M3-1 12"x9"

(A) Detour Sign (Mounted on Barricade)

Type III Barricade

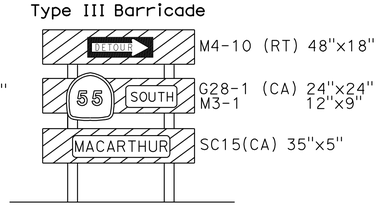

M4-10 (RT) 48"x18"
G28-1 (CA) 24"x24"
M3-1 12"x9"
SC15(CA) 35"x5"

(B) Detour Sign (Mounted on Barricade)

Type III Barricade

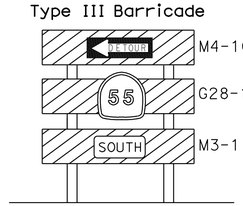

M4-10 (LT) 48"x18"
G28-1 (CA) 24"x24"
M3-1 12"x9"

(C) Detour Sign (Mounted on Barricade)

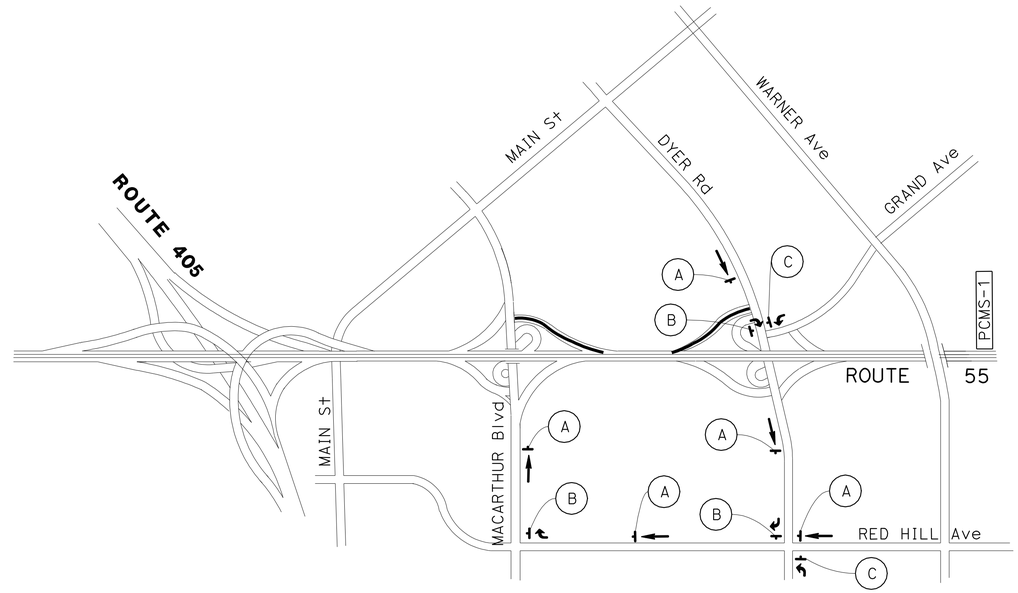

CLOSURE:

SB ROUTE 55 DYER Rd ON-RAMP
SB ROUTE 55 MACARTHUR Blvd OFF-RAMP

DETOUR:

EXIT DYER Rd.
USE EB DYER Rd TO RED HILL Ave
USE SB RED HILL Ave TO MACARTHUR Blvd
USE WB MACARTHUR Blvd TO SB ROUTE 55 MACARTHUR ON-RAMP

PORTABLE CHANGEABLE MESSAGE SIGN

PCMS No.	MESSAGE		QUANTITY
	1ST FRAME	2ND FRAME	
PCMS-1	MACARTHUR OFF RAMP CLOSED	EXIT DYER FOR DETOUR	1

TYPE III BARRICADE

SIGN	SIGN CODE	PANEL SIZE	* No. of SIGNS	** TYPE III BARRICADE (EA)
A	SC3 (CA)	48"x18"	5	5
	G28-1 (CA)	24"x24"	5	
	M3-1	12"x9"	5	
B	M4-10 (RT)	48"x18"	3	3
	G28-1 (CA)	24"x24"	3	
	M3-1	12"x9"	3	
	SC15(CA)	35"x5"	3	
C	M4-10 (LT)	48"x18"	2	2
	G28-1 (CA)	24"x24"	2	
	M3-1	12"x9"	2	
			TOTAL	13

* For Additional Quantities of Construction Area Signs, See SCQ-1 & CS-1
** For Additional Quantities of Type III Barricades, See SCQ-1

THIS PLAN ACCURATE FOR TRAFFIC HANDLING (DETOUR) WORK ONLY

TRAFFIC HANDLING PLAN (DETOUR)

NO SCALE

TH-1

STATE OF CALIFORNIA - DEPARTMENT OF TRANSPORTATION
Caltrans
DESIGN
FUNCTIONAL SUPERVISOR: SON NGUYEN
CALCULATED-DESIGNED BY
CHECKED BY
REVISED BY
DATE REVISED

LAST REVISION 00-00-00
DATE PLOTTED => 06-JAN-2010
TIME PLOTTED => 10:16

Dist	COUNTY	ROUTE	POST MILES TOTAL PROJECT	SHEET No.	TOTAL SHEETS
12	Ora	55	7.0/7.9	29	76

Mostafa Aliakbarzadeh 09-15-09
REGISTERED CIVIL ENGINEER DATE

12-28-09
PLANS APPROVAL DATE

REGISTERED PROFESSIONAL ENGINEER
MOSTAFA ALIAKBARZADEH
No. 53003
Exp. 03-31-11
CIVIL
STATE OF CALIFORNIA

THE STATE OF CALIFORNIA OR ITS OFFICERS OR AGENTS SHALL NOT BE RESPONSIBLE FOR THE ACCURACY OR COMPLETENESS OF SCANNED COPIES OF THIS PLAN SHEET.

LEGEND:

- (X) PAVEMENT DELINEATION DETAIL
- CHANGE IN PAVEMENT DELINEATION
- [X] SIGN IDENTIFICATION NUMBER

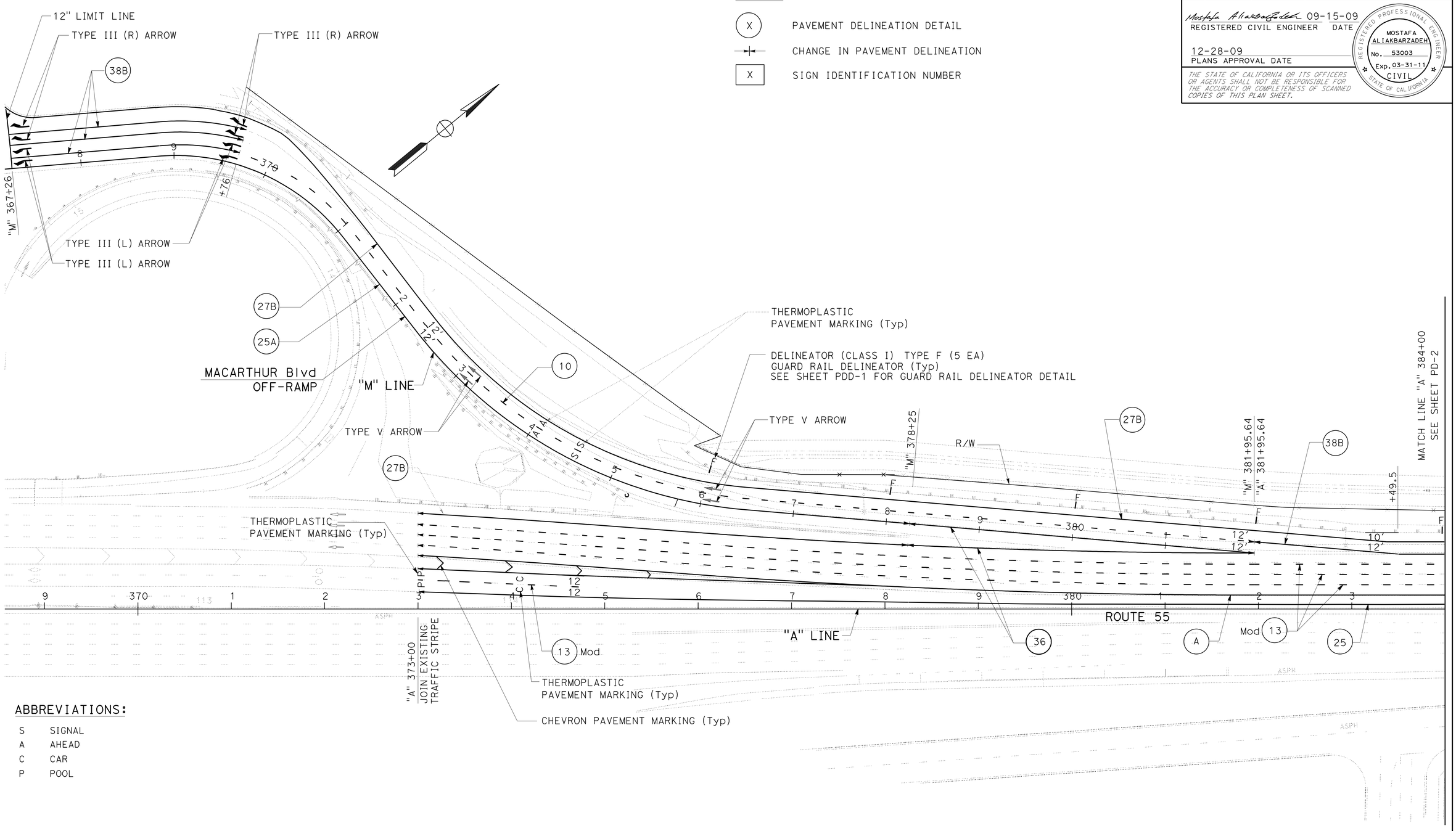

ABBREVIATIONS:

S	SIGNAL
A	AHEAD
C	CAR
P	POOL

PAVEMENT DELINEATION PLAN

SCALE: 1" = 50'

THIS PLAN ACCURATE FOR PAVEMENT DELINEATION ONLY

PD-1

STATE OF CALIFORNIA - DEPARTMENT OF TRANSPORTATION
Caltrans
DESIGN DIVISION

FUNCTIONAL SUPERVISOR: ADEL MALEK
CALCULATED-DESIGNED BY: MOSTAFA ALIAKBARZADEH
CHECKED BY
REVISED BY
DATE REVISED

LAST REVISION 09-23-09
DATE PLOTTED => 04-JAN-2010
TIME PLOTTED => 11:19

Dist	COUNTY	ROUTE	POST MILES TOTAL PROJECT	SHEET No.	TOTAL SHEETS
12	Ora	55	7.0/7.9	30	76

Mostafa Aliakbarzadeh 09-15-09
REGISTERED CIVIL ENGINEER DATE

12-28-09
PLANS APPROVAL DATE

REGISTERED PROFESSIONAL ENGINEER
MOSTAFA ALIAKBARZADEH
No. 53003
Exp. 03-31-11
CIVIL
STATE OF CALIFORNIA

THE STATE OF CALIFORNIA OR ITS OFFICERS OR AGENTS SHALL NOT BE RESPONSIBLE FOR THE ACCURACY OR COMPLETENESS OF SCANNED COPIES OF THIS PLAN SHEET.

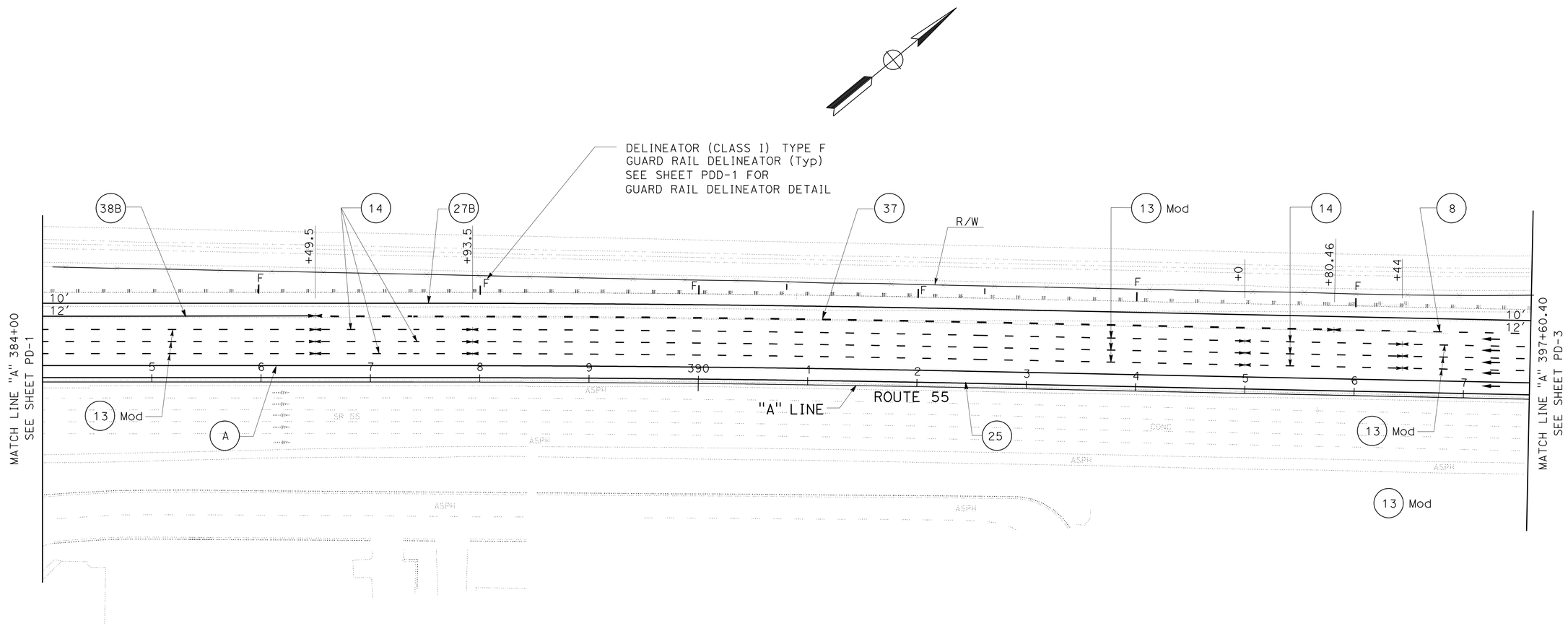

PAVEMENT DELINEATION PLAN

SCALE: 1" = 50'

THIS PLAN ACCURATE FOR PAVEMENT DELINEATION ONLY

PD-2

REVISED BY | DATE REVISED
CALCULATED-DESIGNED BY: MOSTAFA ALIAKBARZADEH
CHECKED BY
FUNCTIONAL SUPERVISOR: ADEL MALEK

STATE OF CALIFORNIA - DEPARTMENT OF TRANSPORTATION
DESIGN DIVISION
Caltrans®

LAST REVISION 09-23-09 | DATE PLOTTED => 04-JAN-2010 | TIME PLOTTED => 11:19

Dist	COUNTY	ROUTE	POST MILES TOTAL PROJECT	SHEET No.	TOTAL SHEETS
12	Ora	55	7.0/7.9	31	76

Mostafa Aliakbarzadeh 09-15-09
REGISTERED CIVIL ENGINEER DATE

12-28-09
PLANS APPROVAL DATE

REGISTERED PROFESSIONAL ENGINEER
MOSTAFA ALIAKBARZADEH
No. 53003
Exp. 03-31-11
CIVIL
STATE OF CALIFORNIA

THE STATE OF CALIFORNIA OR ITS OFFICERS OR AGENTS SHALL NOT BE RESPONSIBLE FOR THE ACCURACY OR COMPLETENESS OF SCANNED COPIES OF THIS PLAN SHEET.

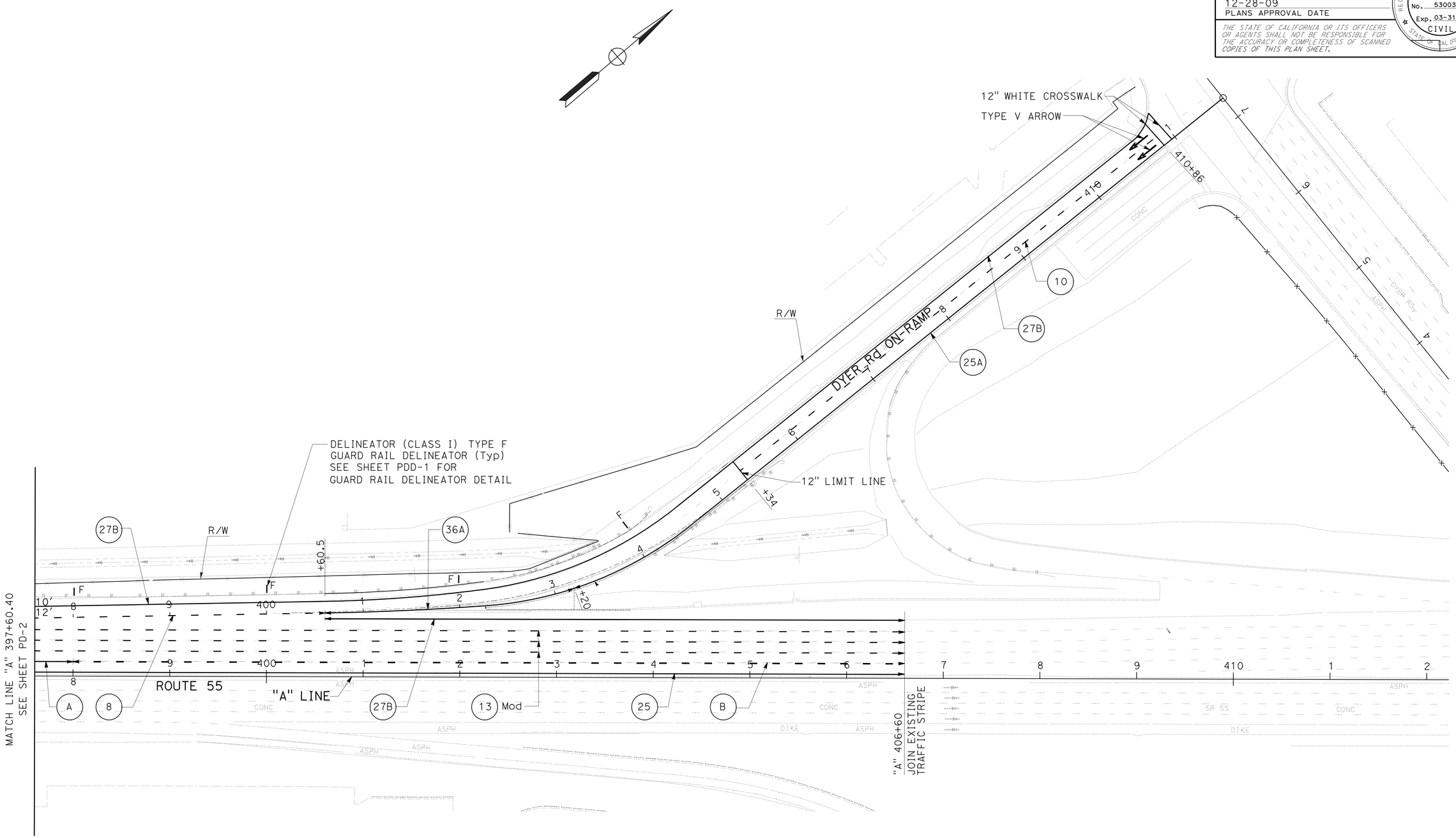

PAVEMENT DELINEATION PLAN

SCALE: 1" = 50'

THIS PLAN ACCURATE FOR PAVEMENT DELINEATION ONLY

PD-3

REVISED BY	DATE REVISED

CALCULATED-DESIGNED BY: MOSTAFA ALIAKBARZADEH
CHECKED BY

FUNCTIONAL SUPERVISOR: ADEL MALEK

STATE OF CALIFORNIA - DEPARTMENT OF TRANSPORTATION
DESIGN DIVISION

LAST REVISION 09-20-09
DATE PLOTTED => 04-JAN-2010
TIME PLOTTED => 11:19

Dist	COUNTY	ROUTE	POST MILES TOTAL PROJECT	SHEET No.	TOTAL SHEETS
12	Ora	55	7.0/7.9	32	76

Mostafa Aliakbarzadeh 09-15-09
REGISTERED CIVIL ENGINEER DATE

12-28-09
PLANS APPROVAL DATE

REGISTERED PROFESSIONAL ENGINEER
MOSTAFA ALIAKBARZADEH
No. 53003
Exp. 03-31-11
CIVIL
STATE OF CALIFORNIA

THE STATE OF CALIFORNIA OR ITS OFFICERS OR AGENTS SHALL NOT BE RESPONSIBLE FOR THE ACCURACY OR COMPLETENESS OF SCANNED COPIES OF THIS PLAN SHEET.

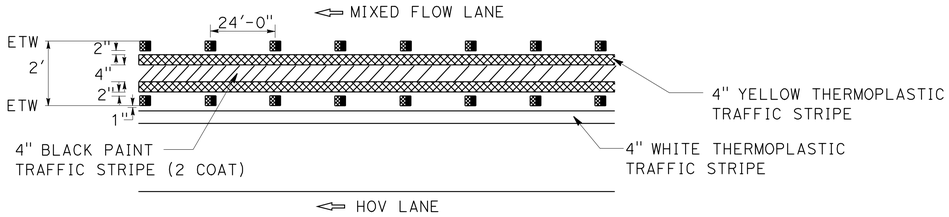

DETAIL A

2 FT BUFFER

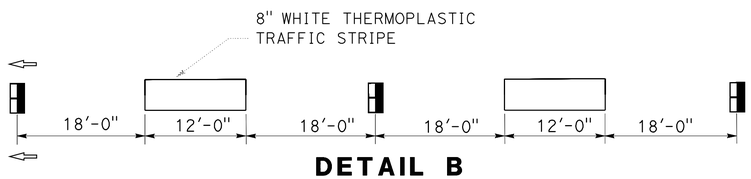

DETAIL B

INGRESS/EGRESS STRIPING

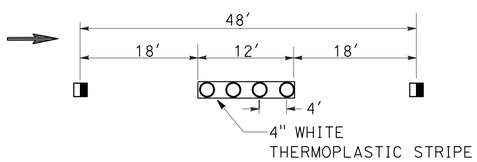

DETAIL 13 Mod

LEGEND:

- TYPE G ONE-WAY CLEAR RETROREFLECTIVE MARKER
- TYPE A WHITE NON-REFLECTIVE MARKER
- TYPE H ON-WAY YELLOW RETROREFLECTIVE MARKER
- 4" WHITE THERMOPLASTIC TRAFFIC STRIPE
- 4" BLACK PAINT TRAFFIC STRIPE (2 COAT)
- DIRECTION OF TRAFFIC

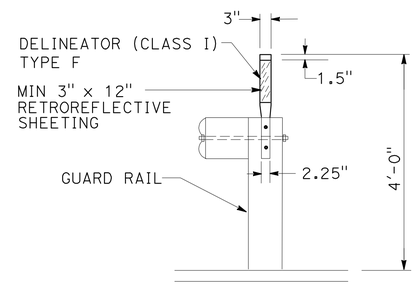

GUARDRAIL DELINEATOR

(FLEXIBLE POST)

THIS PLAN ACCURATE FOR PAVEMENT DELINEATION ONLY

PAVEMENT DELINEATION DETAILS

SCALE: 1" = 50'

PDD-1

REVISED BY | DATE REVISED

CALCULATED-DESIGNED BY: MOSTAFA ALIAKBARZADEH
CHECKED BY

FUNCTIONAL SUPERVISOR: ADEL MALEK

STATE OF CALIFORNIA - DEPARTMENT OF TRANSPORTATION
Caltrans
DESIGN DIVISION

LAST REVISION 09-17-09 | DATE PLOTTED => 04-JAN-2010 | TIME PLOTTED => 11:20

Dist	COUNTY	ROUTE	POST MILES TOTAL PROJECT	SHEET No.	TOTAL SHEETS
12	Ora	55	7.0/7.9	33	76

Mostafa Aliakbarzadeh 09-15-09
REGISTERED CIVIL ENGINEER DATE

12-28-09
PLANS APPROVAL DATE

REGISTERED PROFESSIONAL ENGINEER
MOSTAFA ALIAKBARZADEH
No. 53003
Exp. 03-31-11
CIVIL
STATE OF CALIFORNIA

THE STATE OF CALIFORNIA OR ITS OFFICERS OR AGENTS SHALL NOT BE RESPONSIBLE FOR THE ACCURACY OR COMPLETENESS OF SCANNED COPIES OF THIS PLAN SHEET.

PAVEMENT DELINEATION QUANTITIES

SHEET No.		THERMOPLASTIC TRAFFIC STRIPE													THERMOPLASTIC PAVEMENT MARKING				PAINT TRAFFIC STRIPE (2 COAT)	PAVEMENT MARKER				GUARD RAILING DELINEATOR	REMOVE				
		DETAIL 10 (N)	DETAIL 14 (N)	DETAIL 8 4" BROKEN WHITE (17-7)	DETAIL 13 MOD 4" BROKEN WHITE (36-12)	DETAIL 27B 4" SOLID WHITE	DETAIL 25 4" SOLID YELLOW	DETAIL 25A 4" SOLID YELLOW	DETAIL A 4" SOLID YELLOW	DETAIL A 4" SOLID WHITE	DETAIL 38B 8" SOLID WHITE	DETAIL 36 8" SOLID WHITE	DETAIL B 8" BROKEN WHITE (36-12)	DETAIL 37 8" BROKEN WHITE (12-3)	ARROWS	WORDS	CHEVRON	CROSSWALK & LIMIT LINE	DETAIL A 4" SOLID BLACK	NON-REFLECTIVE TYPE A	RETRO-REFLECTIVE TYPE G	RETRO-REFLECTIVE TYPE H	RETRO-REFLECTIVE TYPE C	CLASS I TYPE F	THERMOPLASTIC TRAFFIC STRIPE (WHITE)	YELLOW THERMOPLASTIC TRAFFIC STRIPE (HAZARDOUS WASTE)	PAINTED TRAFFIC STRIPE	THERMOPLASTIC PAVEMENT MARKING	PAVEMENT MARKER
		LF	LF	LF	LF	LF	LF	LF	LF	LF	LF	LF	LF	LF	SQFT	SQFT	SQFT	SQFT	LF	EA	EA	EA	EA	EA	LF	LF	LF	SQFT	EA
PD-1	MACARTHUR Blvd OFF-RAMP "M" LINE	1219.64				1469.64		1099			750	741.28			468	126		70		104	125	47		4	2960.92	1099		664	276
	RTE 55 "A" LINE				3475	525	1100		3250	1625	204.36					80	70		1625	296	94	162		1	4204.36	4350	1625	150	552
PD-2	RTE 55 "A" LINE		288	179.94	4081.2	1360.4	1360.4		2720.8	1360.4	249.5			930.96					1360.4	340	135	146	104	6	5871.04	4081.2	1360.4		725
PD-3	DYER RD ON-RAMP	552				1025.5		766				259.5			66			65		48	12	33		2	1285	766		131	93
	RTE 55 "A" LINE			300.1	2698.8	899.6	899.6		79.2	39.6			860						39.6	228	98	30		2	4758.5	978.8	39.6		356
SUB-TOTAL		1771.64	288	480	10255.0	5280.1	3360.0	1865	6050.0	3025	1203.86	1000.78	860	930.96	534	206	70	135	3025	1016	464	418	104		19079.82	11275	3025	945	2002
TOTAL FROM SCQ-1																				846	756						21819		1602
GRAND TOTAL		1771.64	288	480	10255.0	19580.10					2204.64		860	930.96	945				32292	1862	1742			15	19079.82	11275	24844	945	3604

(N) - NOT A SEPARATE PAY ITEM, FOR INFORMATION ONLY

PAVEMENT DELINEATION QUANTITIES

PDQ-1

REVISED BY | DATE REVISED
MOSTAFA ALIAKBARZADEH
CALCULATED-DESIGNED BY | CHECKED BY
FUNCTIONAL SUPERVISOR
ADEL MALEK
STATE OF CALIFORNIA - DEPARTMENT OF TRANSPORTATION
Caltrans
DESIGN DIVISION

LAST REVISION 09-23-09 | DATE PLOTTED => 04-JAN-2010 | TIME PLOTTED => 11:20

Dist	COUNTY	ROUTE	POST MILES TOTAL PROJECT	SHEET No.	TOTAL SHEETS
12	Ora	55	7.0/7.9	34	76

Mostafa Aliakbarzadeh 09-15-09
REGISTERED CIVIL ENGINEER DATE

12-28-09
PLANS APPROVAL DATE

REGISTERED PROFESSIONAL ENGINEER
MOSTAFA ALIAKBARZADEH
No. 53003
Exp. 03-31-11
CIVIL
STATE OF CALIFORNIA

THE STATE OF CALIFORNIA OR ITS OFFICERS OR AGENTS SHALL NOT BE RESPONSIBLE FOR THE ACCURACY OR COMPLETENESS OF SCANNED COPIES OF THIS PLAN SHEET.

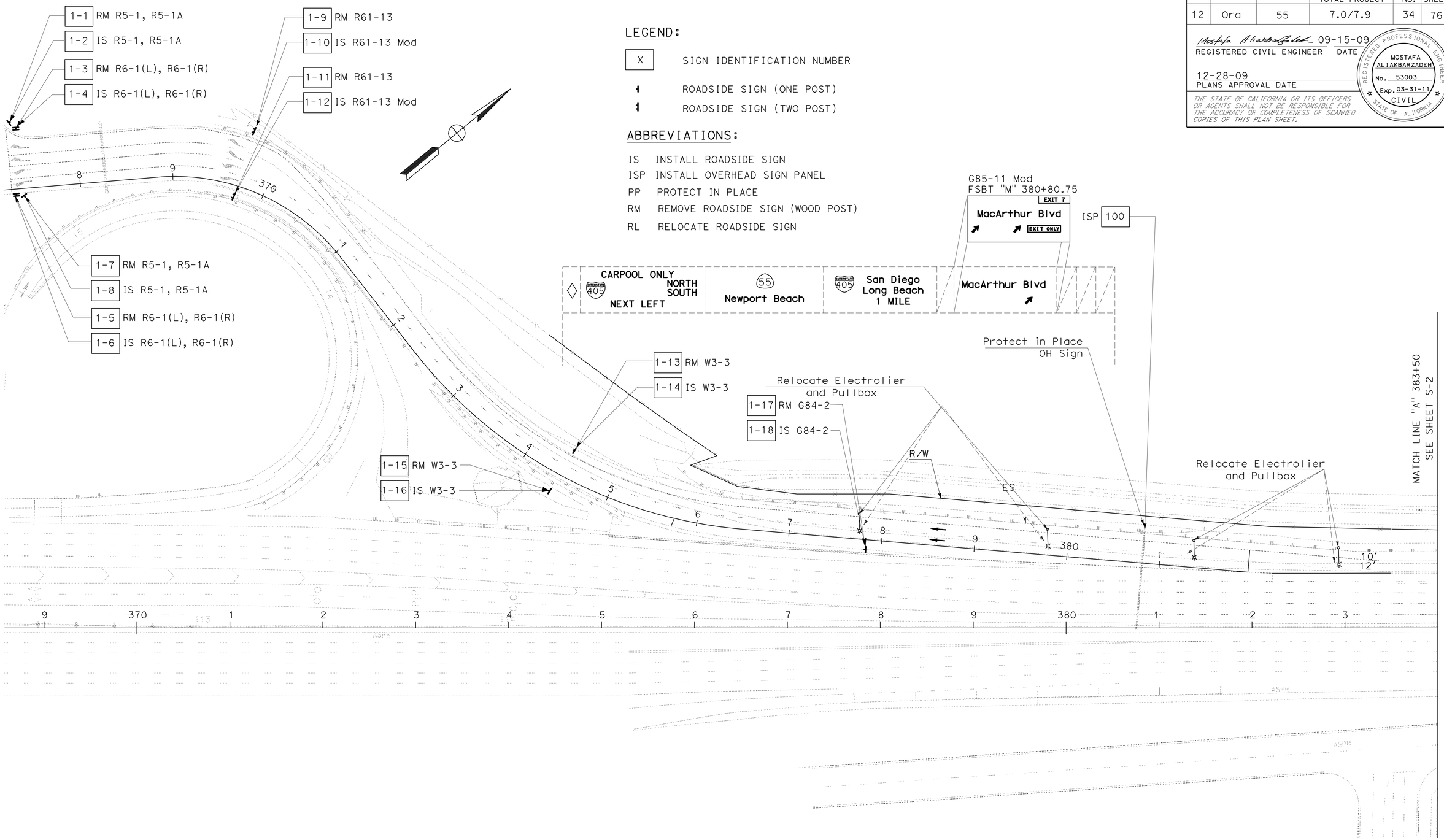

LEGEND:

X	SIGN IDENTIFICATION NUMBER
	ROADSIDE SIGN (ONE POST)
	ROADSIDE SIGN (TWO POST)

ABBREVIATIONS:

IS	INSTALL ROADSIDE SIGN
ISP	INSTALL OVERHEAD SIGN PANEL
PP	PROTECT IN PLACE
RM	REMOVE ROADSIDE SIGN (WOOD POST)
RL	RELOCATE ROADSIDE SIGN

SIGN PLAN

SCALE: 1" = 50'

THIS PLAN ACCURATE FOR SIGN WORK ONLY

S-1

STATE OF CALIFORNIA - DEPARTMENT OF TRANSPORTATION
Caltrans
DESIGN DIVISION

FUNCTIONAL SUPERVISOR: ADEL MALEK

CALCULATED-DESIGNED BY: MOSTAFA ALIAKBARZADEH
CHECKED BY:

REVISED BY
DATE REVISED

LAST REVISION 08-01-09
DATE PLOTTED => 04-JAN-2010
TIME PLOTTED => 11:20

Dist	COUNTY	ROUTE	POST MILES TOTAL PROJECT	SHEET No.	TOTAL SHEETS
12	Ora	55	7.0/7.9	35	76

Mostafa Aliakbarzadeh 09-15-09
REGISTERED CIVIL ENGINEER DATE

12-28-09
PLANS APPROVAL DATE

REGISTERED PROFESSIONAL ENGINEER
MOSTAFA ALIAKBARZADEH
No. 53003
Exp. 03-31-11
CIVIL
STATE OF CALIFORNIA

THE STATE OF CALIFORNIA OR ITS OFFICERS OR AGENTS SHALL NOT BE RESPONSIBLE FOR THE ACCURACY OR COMPLETENESS OF SCANNED COPIES OF THIS PLAN SHEET.

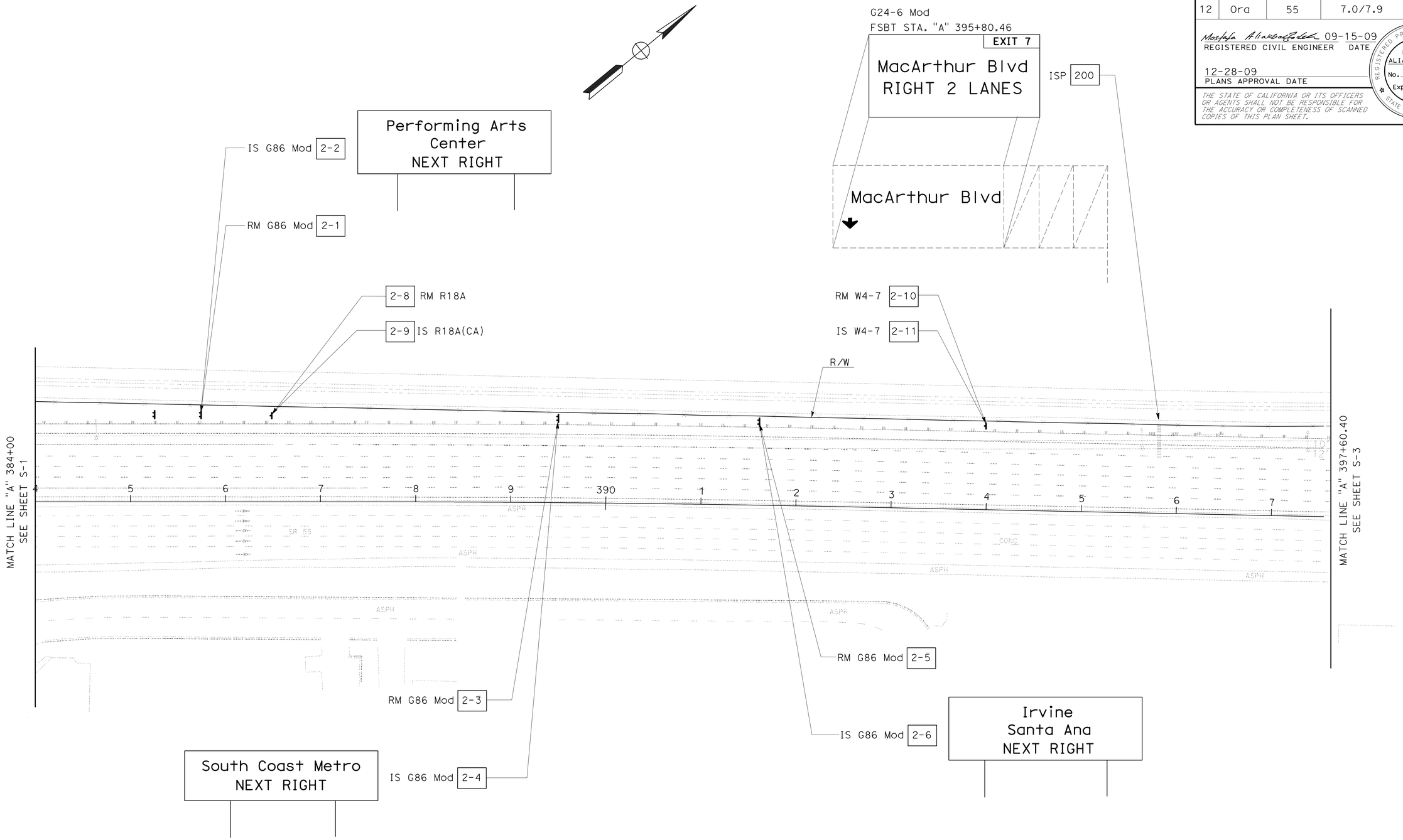

SIGN PLAN

SCALE: 1" = 50'

S-2

THIS PLAN ACCURATE FOR SIGN WORK ONLY

STATE OF CALIFORNIA - DEPARTMENT OF TRANSPORTATION
Caltrans
DESIGN DIVISION

FUNCTIONAL SUPERVISOR: ADEL MALEK

CALCULATED-DESIGNED BY / CHECKED BY: MOSTAFA ALIAKBARZADEH

REVISED BY / DATE REVISED

LAST REVISION 09-23-09 | DATE PLOTTED => 04-JAN-2010 | TIME PLOTTED => 11:20

BORDER LAST REVISED 4/11/2008 | RELATIVE BORDER SCALE IS IN INCHES 0 1 2 3 | USERNAME => trmikesl | DGN FILE => c0e250oa002.dgn | CU 12241 | EA 0E2501

Dist	COUNTY	ROUTE	POST MILES TOTAL PROJECT	SHEET No.	TOTAL SHEETS
12	Ora	55	7.0/7.9	36	76

Mostafa Aliakbarzadeh 09-15-09
REGISTERED CIVIL ENGINEER DATE

12-28-09
PLANS APPROVAL DATE

REGISTERED PROFESSIONAL ENGINEER
MOSTAFA ALIAKBARZADEH
No. 53003
Exp. 03-31-11
CIVIL
STATE OF CALIFORNIA

THE STATE OF CALIFORNIA OR ITS OFFICERS OR AGENTS SHALL NOT BE RESPONSIBLE FOR THE ACCURACY OR COMPLETENESS OF SCANNED COPIES OF THIS PLAN SHEET.

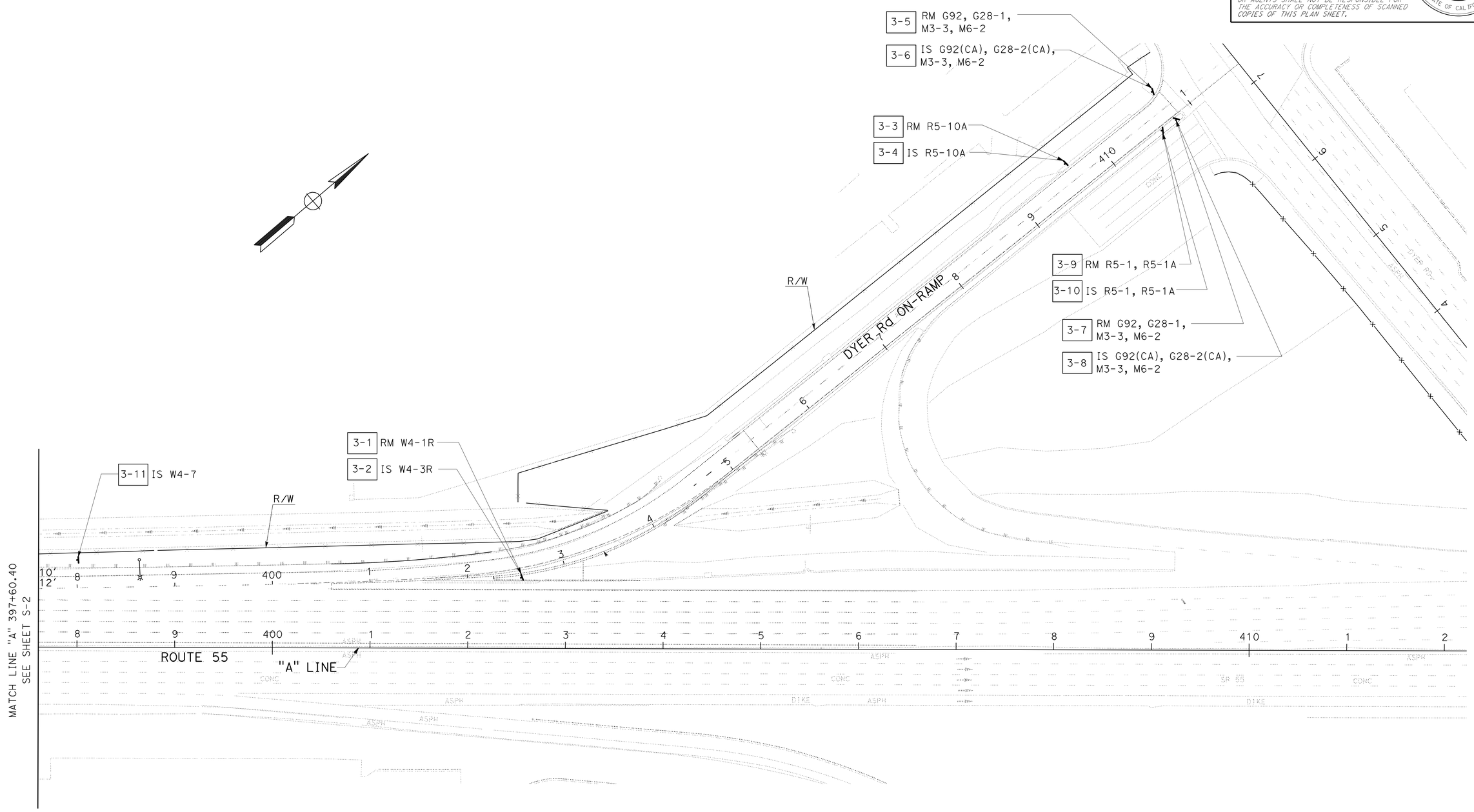

SIGN PLAN

SCALE: 1"=50'

THIS PLAN ACCURATE FOR SIGN WORK ONLY

S-3

STATE OF CALIFORNIA - DEPARTMENT OF TRANSPORTATION
Caltrans
DESIGN DIVISION

FUNCTIONAL SUPERVISOR: ADEL MALEK

CALCULATED-DESIGNED BY: MOSTAFA ALIAKBARZADEH
CHECKED BY

REVISED BY
DATE REVISED

LAST REVISION 09-23-09
DATE PLOTTED => 04-JAN-2010
TIME PLOTTED => 11:20

Dist	COUNTY	ROUTE	POST MILES TOTAL PROJECT	SHEET No.	TOTAL SHEETS
12	Ora	55	7.0/7.9	37	76

Mostafa Aliakbarzadeh 09-15-09
REGISTERED CIVIL ENGINEER DATE

12-28-09
PLANS APPROVAL DATE

REGISTERED PROFESSIONAL ENGINEER
MOSTAFA ALIAKBARZADEH
No. 53003
Exp. 03-31-11
CIVIL
STATE OF CALIFORNIA

THE STATE OF CALIFORNIA OR ITS OFFICERS OR AGENTS SHALL NOT BE RESPONSIBLE FOR THE ACCURACY OR COMPLETENESS OF SCANNED COPIES OF THIS PLAN SHEET.

G85-11 MOD
FSBT "M" 380+80.75

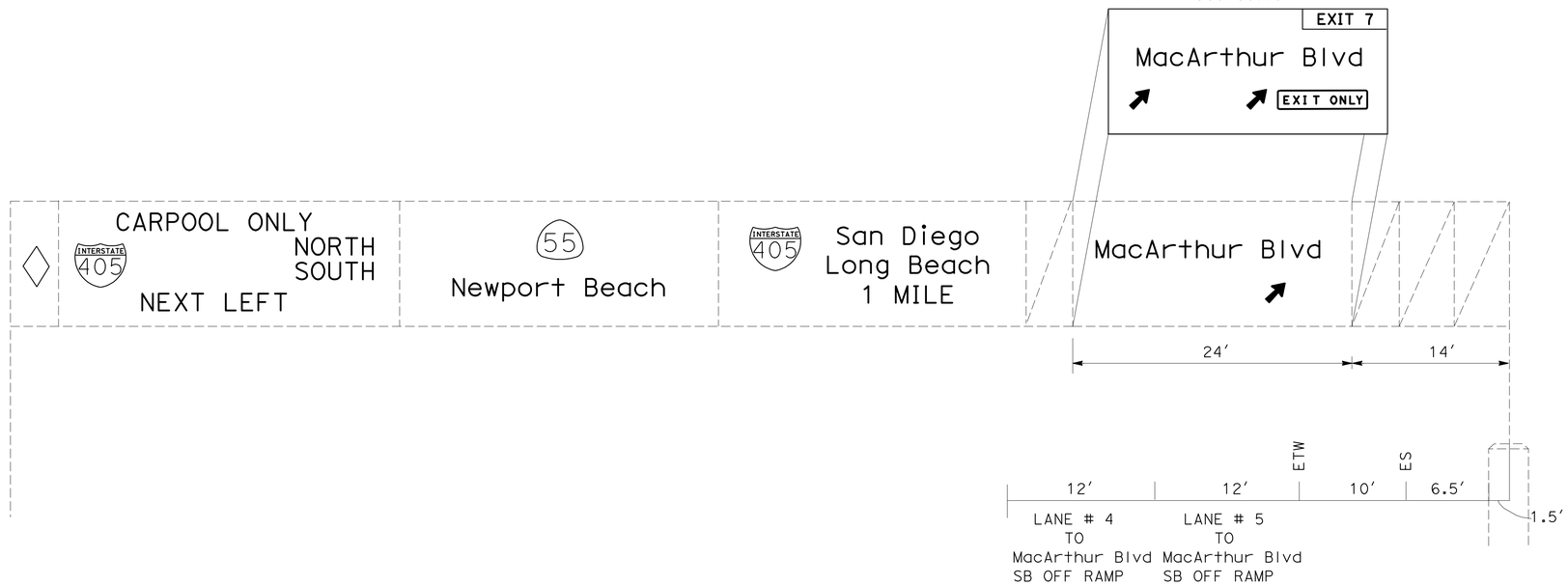

SIGN No. 100
FSBT "M" 380+80.75

G24-6 MOD
FSBT STA. "A" 395+80.46

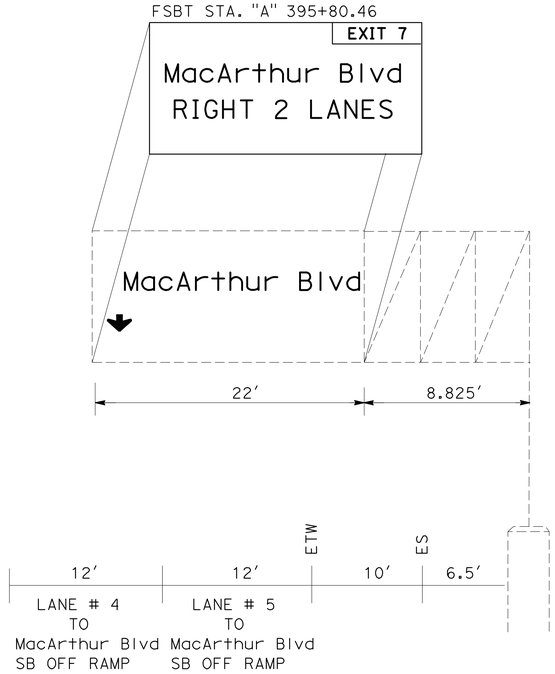

SIGN No. 200
FSBT STA. "A" 395+80.46

SIGN DETAILS

NO SCALE

SD-1

STATE OF CALIFORNIA - DEPARTMENT OF TRANSPORTATION
Caltrans
DESIGN DIVISION

FUNCTIONAL SUPERVISOR: ADEL MALEK

CALCULATED-DESIGNED BY: MOSTAFA ALIAKBARZADEH
CHECKED BY:

REVISED BY
DATE REVISED

LAST REVISION 09-17-09
DATE PLOTTED => 04-JAN-2010
TIME PLOTTED => 11:20

Dist	COUNTY	ROUTE	POST MILES TOTAL PROJECT	SHEET No.	TOTAL SHEETS
12	Ora	55	7.0/7.9	38	76

Mostafa Aliakbarzadeh 09-15-09
REGISTERED CIVIL ENGINEER DATE

12-28-09
PLANS APPROVAL DATE

REGISTERED PROFESSIONAL ENGINEER
MOSTAFA ALIAKBARZADEH
No. 53003
Exp. 03-31-11
CIVIL
STATE OF CALIFORNIA

THE STATE OF CALIFORNIA OR ITS OFFICERS OR AGENTS SHALL NOT BE RESPONSIBLE FOR THE ACCURACY OR COMPLETENESS OF SCANNED COPIES OF THIS PLAN SHEET.

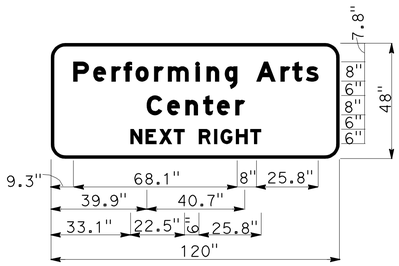

6.0" Radius, 1.3" Border, White on Green;
[Performing Arts] E Mod; [Center] E Mod; [NEXT RIGHT] E Mod;

SIGN G86 MOD 2-2

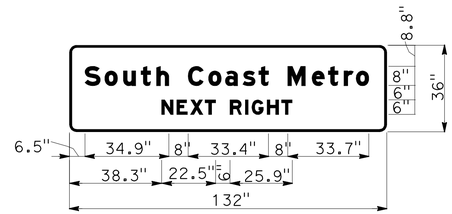

3.0" Radius, 1.0" Border, White on Green;
[South Coast Metro] E Mod; [NEXT RIGHT] E Mod;

SIGN G86 MOD 2-4

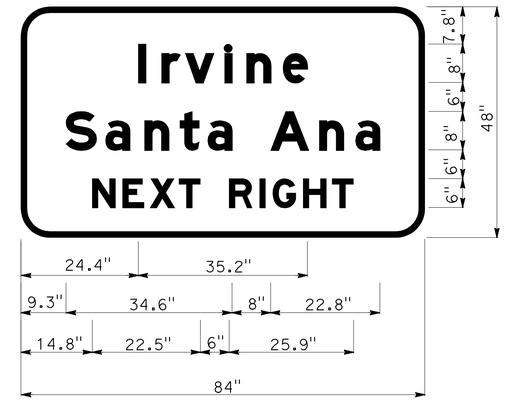

6.0" Radius, 1.3" Border, White on Green;
[Irvine] E Mod; [Santa Ana] E Mod; [NEXT RIGHT] E Mod;

SIGN G86 MOD 2-6

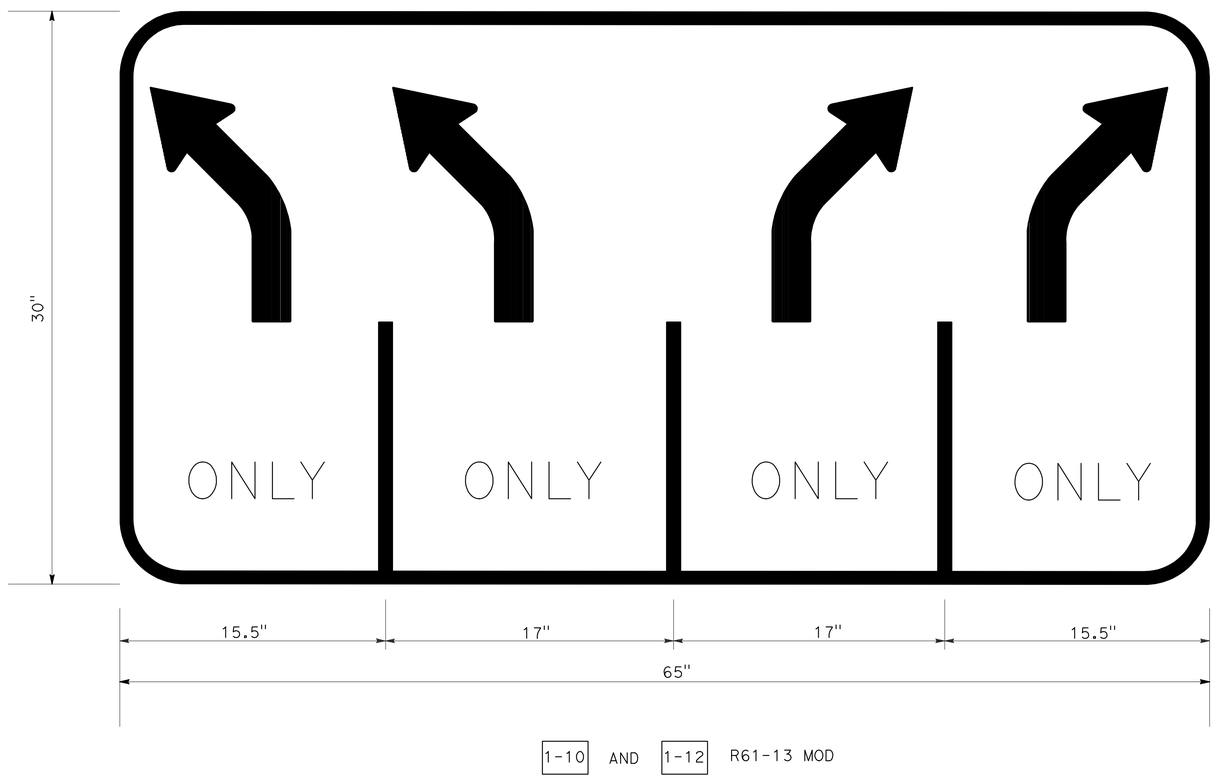

1-10 AND 1-12 R61-13 MOD

SIGN DETAILS

NO SCALE

SD-2

STATE OF CALIFORNIA - DEPARTMENT OF TRANSPORTATION
Caltrans
DESIGN DIVISION

FUNCTIONAL SUPERVISOR: ADEL MALEK

CALCULATED-DESIGNED BY: MOSTAFA ALIAKBARZADEH
CHECKED BY

REVISED BY
DATE REVISED

LAST REVISION 08-20-09
DATE PLOTTED => 04-JAN-2010
TIME PLOTTED => 11:21

Dist	COUNTY	ROUTE	POST MILES TOTAL PROJECT	SHEET No.	TOTAL SHEETS
12	Ora	55	7.0/7.9	39	76

REGISTERED CIVIL ENGINEER 09-15-09 DATE

12-28-09
PLANS APPROVAL DATE

REGISTERED PROFESSIONAL ENGINEER MOSTAFA ALIAKBARZADEH No. 53003 Exp. 03-31-11 CIVIL STATE OF CALIFORNIA

THE STATE OF CALIFORNIA OR ITS OFFICERS OR AGENTS SHALL NOT BE RESPONSIBLE FOR THE ACCURACY OR COMPLETENESS OF SCANNED COPIES OF THIS PLAN SHEET.

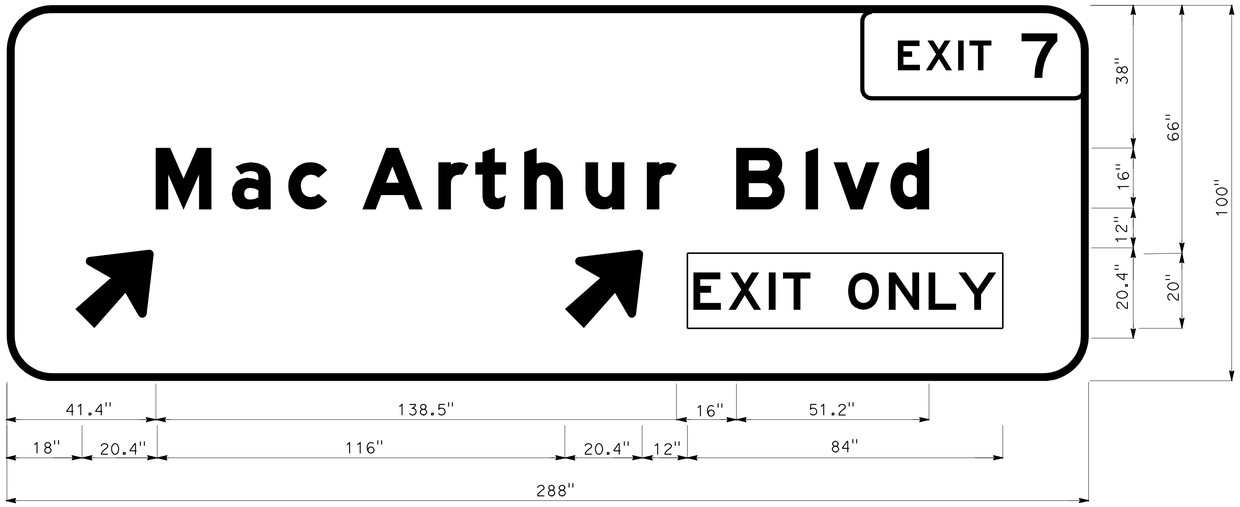

12.0" Radius, 2.0" Border, White on Green;
[MacArthur Blvd] E Mod; Arrow 13.33UC-1L - 20.3" 45°; Arrow 13.33UC-1L - 20.3" 45°

SIGN PANEL 100

FSBT "M" 380+80.75

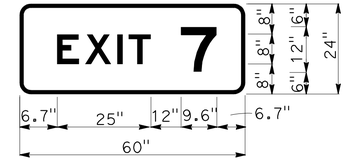

3.0" Radius, 1.0" Border, White on Green;
[EXIT 7] E;

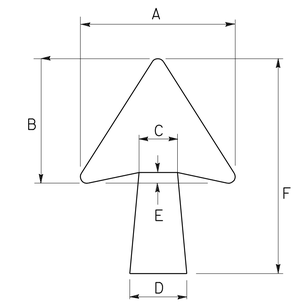

DIMENSION IN INCHES

A	B	C	D	E	F
22¼	17	5⅜	6 3/16	1¾	25

DIAGONAL ARROW DETAIL

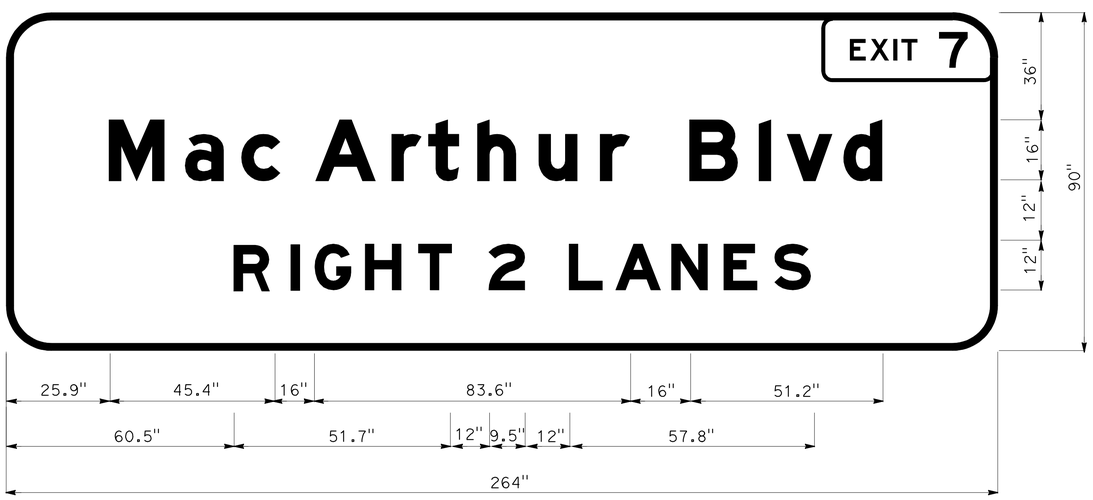

12.0" Radius, 2.0" Border, White on Green;
[MacArthur Blvd] E Mod; [RIGHT 2 LANES] E Mod;

SIGN PANEL 200

FSBT STA. "A" 395+80.46

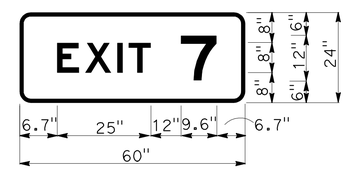

3.0" Radius, 1.0" Border, White on Green;
[EXIT 7] E;

SIGN DETAILS

NO SCALE

SD-3

STATE OF CALIFORNIA - DEPARTMENT OF TRANSPORTATION
Caltrans
DESIGN DIVISION

FUNCTIONAL SUPERVISOR: ADEL MALEK

CALCULATED-DESIGNED BY: MOSTAFA ALIAKBARZADEH
CHECKED BY

REVISED BY
DATE REVISED

LAST REVISION 09-17-09
DATE PLOTTED => 04-JAN-2010
TIME PLOTTED => 11:21

Dist	COUNTY	ROUTE	POST MILES TOTAL PROJECT	SHEET No.	TOTAL SHEETS
12	Ora	55	7.0/7.9	40	76

Mostafa Aliakbarzadeh 09-15-09
REGISTERED CIVIL ENGINEER DATE

12-28-09
PLANS APPROVAL DATE

REGISTERED PROFESSIONAL ENGINEER
MOSTAFA ALIAKBARZADEH
No. 53003
Exp. 03-31-11
CIVIL
STATE OF CALIFORNIA

THE STATE OF CALIFORNIA OR ITS OFFICERS OR AGENTS SHALL NOT BE RESPONSIBLE FOR THE ACCURACY OR COMPLETENESS OF SCANNED COPIES OF THIS PLAN SHEET.

ROADSIDE SIGNS QUANTITIES

SHEET No.	SIGN No.	CODE	PANEL SIZE	POST SIZE & LENGTH 4" x 6"	REMOVE ROADSIDE SIGN	ROADSIDE SIGN (ONE POST)	ROADSIDE SIGN (TWO POST)	REMARK
			IN	Ft	EA	EA	EA	
S-1	1-1	R5-1, R5-1A			1			
	1-2	R5-1	48" x 48"	16		1		
		R5-1A	42" x 30"					
	1-3	R6-1(L), R6-1(R)			1			
	1-4	R6-1(L)	36" x 12"	7		1		
		R6-1(R)	36" x 12"					
	1-5	R6-1(L), R6-1(R)			1			
	1-6	R6-1(L)	36" x 12"	7		1		
		R6-1(R)	36" x 12"					
	1-7	R5-1, R5-1A			1			
	1-8	R5-1	48" x 48"	16		1		
		R5-1A	42" x 30"					
	1-9	R61-13			1			
	1-10	R61-13 MOD	65" x 30"				1	
	1-11	R61-13			1			
	1-12	R61-13 MOD	65" x 30"				1	
	1-13	W3-3			1			
	1-14	W3-3	48" x 48"	15		1		
	1-15	W3-3			1			
	1-16	W3-3	48" x 48"	15		1		
	1-17	G84-2			1			
	1-18	G84-2	54" x 48"	15		1		
S-2	2-1	G86 MOD			1			
	2-2	G86 MOD	120" x 48"	17			1	
	2-3	G86 MOD			1			
	2-4	G86 MOD	132" x 36"	17			1	
	2-5	G86 MOD			1			
	2-6	G86 MOD	84" x 48"	17			1	
	2-8	R18A (CA)			1			
	2-9	R18A (CA)	48" x 66"	17			1	
	2-10	W4-7			1			
	2-11	W4-7	48" x 48"	17			1	
TOTAL THIS SHEET					14	7	7	

SIGN QUANTITIES

SQ-1

REVISED BY | DATE REVISED

MOSTAFA ALIAKBARZADEH

CALCULATED-DESIGNED BY | CHECKED BY

FUNCTIONAL SUPERVISOR

ADEL MALEK

STATE OF CALIFORNIA - DEPARTMENT OF TRANSPORTATION

Caltrans

DESIGN DIVISION

LAST REVISION 09-20-09 | DATE PLOTTED => 04-JAN-2010 | TIME PLOTTED => 11:21

Dist	COUNTY	ROUTE	POST MILES TOTAL PROJECT	SHEET No.	TOTAL SHEETS
12	Ora	55	7.0/7.9	41	76

Mostafa Aliakbarzadeh 09-15-09
REGISTERED CIVIL ENGINEER DATE

12-28-09
PLANS APPROVAL DATE

REGISTERED PROFESSIONAL ENGINEER
MOSTAFA ALIAKBARZADEH
No. 53003
Exp. 03-31-11
CIVIL
STATE OF CALIFORNIA

THE STATE OF CALIFORNIA OR ITS OFFICERS OR AGENTS SHALL NOT BE RESPONSIBLE FOR THE ACCURACY OR COMPLETENESS OF SCANNED COPIES OF THIS PLAN SHEET.

ROADSIDE SIGNS QUANTITIES

SHEET No.	SIGN No.	CODE	PANEL SIZE	POST SIZE & LENGTH 4" x 6"	REMOVE ROADSIDE SIGN	ROADSIDE SIGN (ONE POST)	ROADSIDE SIGN (TWO POST)	REMARK
			IN	Ft	EA	EA	EA	
S-3	3-1	W4-1R			1			
	3-2	W4-3R	48" x 48"	14		1		
	3-3	R5-10C			1			
	3-4	R5-10C	36" x 30"	14		1		
	3-5	G92,G28-1,M3-3,M6-2			1			
	3-6	G92(CA)	48" x 36"	16		1		
		G28-2(CA)	31¼" x 35"					
		M3-3	15" x 30"					
		M6-2	15" x 21"					
	3-7	G92,G28-1,M3-3,M6-2			1			
	3-8	G92(CA)	48" x 36"	16		1		
		G28-2(CA)	31¼" x 35"					
		M3-3	15" x 30"					
		M6-2	15" x 21"					
	3-9	R5-1, R5-1A			1			
	3-10	R5-1	48" x 48"	15		1		
		R5-1A	42" x 30"					
SUBTOTAL					5	5		
TOTAL FROM SQ-1					14	7	7	
TOTAL					19	12	7	

OVERHEAD SIGN QUANTITIES

SHEET No.	SIGN No.	CODE	PANEL SIZE	INSTALL SIGN PANEL ON EXISTING FRAME	REMARK
			IN	SQFT	
S-1	100	G85-11 MOD	288" x 100"	200	
S-2	200	G24-6 MOD	264" x 90"	165	
TOTAL				365	

SIGN QUANTITIES

SQ-2

STATE OF CALIFORNIA - DEPARTMENT OF TRANSPORTATION
Caltrans
DESIGN DIVISION

FUNCTIONAL SUPERVISOR: ADEL MALEK
CALCULATED-DESIGNED BY / CHECKED BY: MOSTAFA ALIAKBARZADEH
REVISED BY / DATE REVISED

LAST REVISION 08-20-09
DATE PLOTTED => 04-JAN-2010
TIME PLOTTED => 11:21

Dist	COUNTY	ROUTE	POST MILES TOTAL PROJECT	SHEET No.	TOTAL SHEETS
12	Ora	55	7.0/7.9	42	76

REGISTERED CIVIL ENGINEER 09-15-09 DATE

12-28-09
PLANS APPROVAL DATE

REGISTERED PROFESSIONAL ENGINEER MOSTAFA ALIAKBARZADEH No. 53003 Exp. 03-31-11 CIVIL STATE OF CALIFORNIA

THE STATE OF CALIFORNIA OR ITS OFFICERS OR AGENTS SHALL NOT BE RESPONSIBLE FOR THE ACCURACY OR COMPLETENESS OF SCANNED COPIES OF THIS PLAN SHEET.

MATERIAL SUMMARY (CONTRACTOR FURNISHED SIGNS)

SHEET No.	SIGN No.	SIGN CODE	PANEL SIZE (inch x inch)	SIGN AREA (SQFT)	SINGLE FACED	PROTECTIVE OVERLAY	BACKGROUND SHEETING COLOR	BACKGROUND RETROREFLECTIVE ASTM TYPE	LEGEND SHEETING COLOR	LEGEND RETROREFLECTIVE ASTM TYPE	ROADSIDE SIGN FURNISH SINGLE-SHEET UNFRAMED ALUMINUM 0.063 inch SQFT	ROADSIDE SIGN FURNISH SINGLE-SHEET FRAMED ALUMINUM 0.08 inch SQFT
S-1	1-2	R5-1	48" x 48"	16	x	N/A	Y	VII	B	VII	16	
		R5-1A	42" x 30"	8.75	x	N/A	Y	VII	B	VII	8.75	
	1-4	R6-1(L)	36" x 12"	3	x	N/A	Y	VII	B	VII	3	
		R6-1(R)	36" x 12"	3	x	N/A	Y	VII	B	VII	3	
	1-6	R6-1(L)	36" x 12"	3	x	N/A	G	VII	W	VII	3	
		R6-1(R)	36" x 12"	3	x	N/A	G	VII	W	VII	3	
	1-8	R5-1	48" x 48"	16	x	N/A	Y	VII	B	VII	16	
		R5-1A	42" x 30"	8.75	x	N/A	Y	VII	B	VII	8.75	
	1-10	R61-13 MOD	65" x 30"	13.54	x	N/A	Y	VII	B	VII	13.54	
	1-12	R61-13 MOD	65" x 30"	13.54	x	N/A	G	VII	W	VII	13.54	
	1-14	W3-3	48" x 48"	16	x	N/A	Y	VII	B	VII	16	
	1-16	W3-3	48" x 48"	16	x	N/A	Y	VII	B	VII	16	
	1-18	G84-2	54" x 48"	18	x	N/A	G	VII	W	VII	18	
S-2	2-2	G86 MOD	120" x 48"	40	x	N/A	G	VII	W	VII		40
	2-4	G86 MOD	132" x 36"	33	x	N/A	G	VII	W	VII		33
	2-6	G86 MOD	84" x 48"	24	x	N/A	G	VII	W	VII		
	2-9	R18A(CA)	48" x 66"	18	x	N/A	W	VII	B	VII	18	
	2-11	W4-7	48" x 48"	16	x	N/A	Y	VII	B	VII	16	
S-3	3-2	W4-3R	48" x 48"	16	x	N/A	Y	VII	B	VII	16	
	3-4	R5-10A	36" x 30"	7.5	x	N/A	W	VII	B	VII	7.5	
	3-6	G92(CA)	48" x 36"	12	x	N/A	G	VII	W	VII	12	
		G28-2(CA)	31¼" x 35"	7.58	x	N/A	G	VII	W	VII	7.58	
		M3-3	15" x 30"	3.125	x	N/A	G	VII	W	VII	3.125	
		M6-2	15" x 21"	13.125	x	N/A	G	VII	W	VII	13.125	
	3-8	G92(CA)	48" x 36"	12	x	N/A	G	VII	W	VII	12	
		G28-2(CA)	31¼" x 35"	7.58	x	N/A	G	VII	W	VII	7.58	
		M3-3	15" x 30"	3.125	x	N/A	G	VII	W	VII	3.125	
		M6-2	15" x 21"	13.125	x	N/A	G	VII	W	VII	13.125	
	3-10	R5-1	48" x 48"	16	x	N/A	R	VII	W	VII	16	
		R5-1A	42" x 30"	8.75	x	N/A	R	VII	W	VII	8.75	
										TOTAL	268.49	97

ABBREVIATION:

R = RED
Y = YELLOW
B = BLACK
G = GREEN
W = WHITE
Non = NON-REFLECTIVE
Non = NOT APPLICAPLE

MATERIAL SUMMARY (CONTRACTOR FURNISHED OVERHEAD SIGNS)

SHEET No.	SIGN No.	SIGN CODE	PANEL SIZE (inch x inch)	SIGN AREA (SQFT)	SINGLE FACED	PROTECTIVE OVERLAY	BACKGROUND SHEETING COLOR	BACKGROUND RETROREFLECTIVE ASTM TYPE	LEGEND SHEETING COLOR	LEGEND RETROREFLECTIVE ASTM TYPE	OVERHEAD SIGN FURNISH LAMINATED PANEL SIGN (1" - TYPE A) SQFT
S-1	100	R5-1	288" x 100"	200	x	N/A	G	VII	W/B	VII	200
S-2	200	R5-1A	264" x 90"	165	x	N/A	G	VII	W	VII	165
										TOTAL	365

SIGN QUANTITIES

SQ-3

STATE OF CALIFORNIA - DEPARTMENT OF TRANSPORTATION
Caltrans
DESIGN DIVISION

FUNCTIONAL SUPERVISOR: ADEL MALEK
CALCULATED-DESIGNED BY: MOSTAFA ALIAKBARZADEH
CHECKED BY
REVISED BY
DATE REVISED

LAST REVISION 09-21-09
DATE PLOTTED => 04-JAN-2010
TIME PLOTTED => 11:21

Dist	COUNTY	ROUTE	POST MILES TOTAL PROJECT	SHEET No.	TOTAL SHEETS
12	Ora	55	7.0/7.9	43	76

REGISTERED CIVIL ENGINEER 09-15-09 DATE

12-28-09
PLANS APPROVAL DATE

REGISTERED PROFESSIONAL ENGINEER LY C. PHAN No. C63381 Exp 9-30-10 CIVIL STATE OF CALIFORNIA

THE STATE OF CALIFORNIA OR ITS OFFICERS OR AGENTS SHALL NOT BE RESPONSIBLE FOR THE ACCURACY OR COMPLETENESS OF SCANNED COPIES OF THIS PLAN SHEET.

ABBREVIATION:

RHMA-G: RUBERIZED HOT MIXED ASPHALT (GAP GRADED)

ROADWAY QUANTITIES

SHEET No.	LOCATION	STATION LIMITS FROM	STATION LIMITS TO	PAVEMENT STRUCTURAL SECTION TYPE	RHMA-G (GAP GRADED) TON	HOT MIX ASPHALT (TYPE A) TON	TACK COAT TON	CLASS 2 AGGREGATE SUBBASE CY	MINOR CONCRETE (MISC CONSTRUCTION) CY
L-1	RAMP M	372+36.98	381+95.64	3	607	3,491	0.35	749	
	RAMP M	375+33.51	378+26.04						82
	MAIN LINE A	381+95.64	384+00.00	1	55	332		355	
	MAIN LINE A	381+95.64	384+00.00	3	20	114		24	
L-2	MAIN LINE A	384+00.00	397+60.40	2		449	0.35	202	
	MAIN LINE A	384+00.00	397+60.40	1	306	1839		1966	
L-3	RAMP D	397+60.40	405+18.37	2		249	0.30	112	
	RAMP D	397+60.40	405+18.37	3	228	1,311		281	
	MAIN LINE A	402+27.52	403+18.07						16
	MAIN LINE A	402+27.52	403+76.18	3	23	129		28	
				SUBTOTAL	1279	7913	1	3717	98
				TOTAL FROM ASPHALT CONCRETE DIKE		8.2	1		
				GRAND TOTAL	1232	7922	1	3717	98

ASPHALT CONCRETE DIKE

SHEET No.	LOCATION	SIDE	STATION LIMITS FROM	STATION LIMITS TO	REMOVE AC DIKE LF	PLACE HOT MIX ASPHALT DIKE (TYPE F) LF	PLACE HOT MIX ASPHALT DIKE (TYPE D) LF	HOT MIX ASPHALT (TYPE A) TON
L-1	RAMP M	R†	375+15.28	378+03.00	288			
	RAMP M	R†	375+15.28	378+26.04		311		4.2
L-3	MAINLINE A	L†	402+74.29	403+76.18	102			
	MAINLINE A	L†	403+18.07	403+76.18			58	4
				TOTAL	390	311	58	8.2*

* - SEE ROADWAY QUANTITIES FOR GRAND TOTAL OF HOT MIX ASPHALT (TYPE A)

CONCRETE CURB

SHEET No.	LOCATION	SIDE	STATION LIMITS FROM	STATION LIMITS TO	REMOVE CONCRETE CURB LF	MINOR CONCRETE (CURB) CONCRETE CURB (TYPE B4) CY	MINOR CONCRETE (CURB) CONCRETE CURB (TYPE B1-6) CY
L-3	RAMP D	R†	401+53.50	405+18.37	381		
	MAINLINE A	L†	401+53.67	402+74.29	121		
	RAMP D	R†	402+26.60	403+62.62		8	
	RAMP D	R†	403+62.62	405+18.37			5
	MAINLINE A	L†	402+27.52	403+18.07		5	
				SUBTOTAL	502	13	5
				TOTAL	502	18	

REMOVE CONCRETE

SHEET No.	LOCATION	SIDE	STATION LIMITS From	STATION LIMITS To	REMOVE CONCRETE (MISCELLANEOUS) CY
L-1	Ramp M	R†	375+15.28	376+68.45	23
				TOTAL	23

(N): NOT A SEPARATE PAY ITEM, FOR INFORMATION ONLY

SUMMARY OF QUANTITIES
Q-1

STATE OF CALIFORNIA - DEPARTMENT OF TRANSPORTATION

Caltrans

DESIGN | FUNCTIONAL SUPERVISOR: SON NGUYEN | CALCULATED-DESIGNED BY: L. PHAN | CHECKED BY: R. CARAIG JR. | REVISED BY | DATE REVISED

LAST REVISION 00-00-00 | DATE PLOTTED => 04-JAN-2010 | TIME PLOTTED => 11:21

Dist	COUNTY	ROUTE	POST MILES TOTAL PROJECT	SHEET No.	TOTAL SHEETS
12	Ora	55	7.0/7.9	44	76

REGISTERED CIVIL ENGINEER 09-15-09 DATE

12-28-09
PLANS APPROVAL DATE

REGISTERED PROFESSIONAL ENGINEER LY C. PHAN No. C63381 Exp. 9-30-10 CIVIL STATE OF CALIFORNIA

THE STATE OF CALIFORNIA OR ITS OFFICERS OR AGENTS SHALL NOT BE RESPONSIBLE FOR THE ACCURACY OR COMPLETENESS OF SCANNED COPIES OF THIS PLAN SHEET.

METAL BEAM GUARD RAILING (WOOD POST)

SHEET No.	LOCATION	SIDE	STATION LIMITS		REMOVE MBGR	MBGR		ALTERNATIVE FLARED TERMINAL SYSTEM	END ANCHOR ASSEMBLY (TYPE SFT)	TERMINALSYSTEM (TYPE CAT) BACKUP	TERMINALSYSTEM (TYPE CAT)	TRANSITION RAILING (TYPE WB)	REMOVE TREATED WOOD WASTE (N)
						MBGR (WOOD POST)	MBGR (WOOD POST) (8' POST)						
			FROM	TO	LF	LF	LF	EA	EA	EA	EA	EA	LF
	RAMP M	R†	371+97.89	372+22.81								1	1
	RAMP M	R†	371+97.89	372+59.32	62								62
L-1	RAMP M	R†	374+23.38	374+90.00	67								87
	RAMP M	R†	372+75.00	375+25.00	250								250
	RAMP M	L†	380+54.95	381+48.58	94								100
	RAMP M	R†	372+22.81	377+76.28		554				1	1		
	RAMP M	R†	374+23.38	377+76.28		353							
	RAMP M	L†	375+75.00	381+95.64		620			1				
	MAIN LINE A	L†	381+95.64	384+00.00		205							
L-2	MAIN LINE A	L†	395+74.86	396+50.67	76								76
	MAIN LINE A	L†	384+00.00	395+78.40		1,179							
	MAIN LINE A	L†	395+78.40	395+98.40			20						
	MAIN LINE A	L†	395+98.40	397+60.40		162							
L-3	RAMP D	L†	397+60.40	403+98.18		638		1					
	RAMP D	L†	402+31.45	403+98.18	167								167
	RAMP D	R†	404+08.62	405+34.12		126		1	1				
	RAMP D	R†	404+08.62	405+59.18	151								151
				TOTAL	867	3,837	20	2	2	1	1	1	893

EARTHWORK

SHEET No.	LOCATION	STATION LIMITS		ROADWAY Exc	EMBANKMENT (N)
		FROM	TO	(CY)	(CY)
L-1	RAMP M	372+36.98	381+95.64	2,480	125
	MAIN LINE A	381+95.64	384+00.00	625	50
L-2	MAIN LINE A	384+00.00	397+60.40	3,041	246
L-3	RAMP D	397+60.40	405+34.12	1,411	31
	MAIN LINE A	402+27.52	403+76.18	105	
			TOTAL	7,662	

(N): NOT A SEPARATE PAY ITEM, FOR INFORMATION ONLY.

SUMMARY OF QUANTITIES
Q-2

REVISED BY	DATE REVISED
L. PHAN	R. CARAIG JR.
CALCULATED-DESIGNED BY	CHECKED BY
FUNCTIONAL SUPERVISOR	SON NGUYEN
STATE OF CALIFORNIA - DEPARTMENT OF TRANSPORTATION	DESIGN

LAST REVISION 00-00-00 | DATE PLOTTED => 04-JAN-2010 | TIME PLOTTED => 11:22

Dist	COUNTY	ROUTE	POST MILES TOTAL PROJECT	SHEET No.	TOTAL SHEETS
12	Ora	55	7.0/7.9	45	76

LICENSED LANDSCAPE ARCHITECT 09-15-09

12-28-09
PLANS APPROVAL DATE

LICENSED LANDSCAPE ARCHITECT — JOHN NOWAK — Signature — Renewal Date 06-31-11 — Date 09-15-09 — STATE OF CALIFORNIA

THE STATE OF CALIFORNIA OR ITS OFFICERS OR AGENTS SHALL NOT BE RESPONSIBLE FOR THE ACCURACY OR COMPLETENESS OF SCANNED COPIES OF THIS PLAN SHEET.

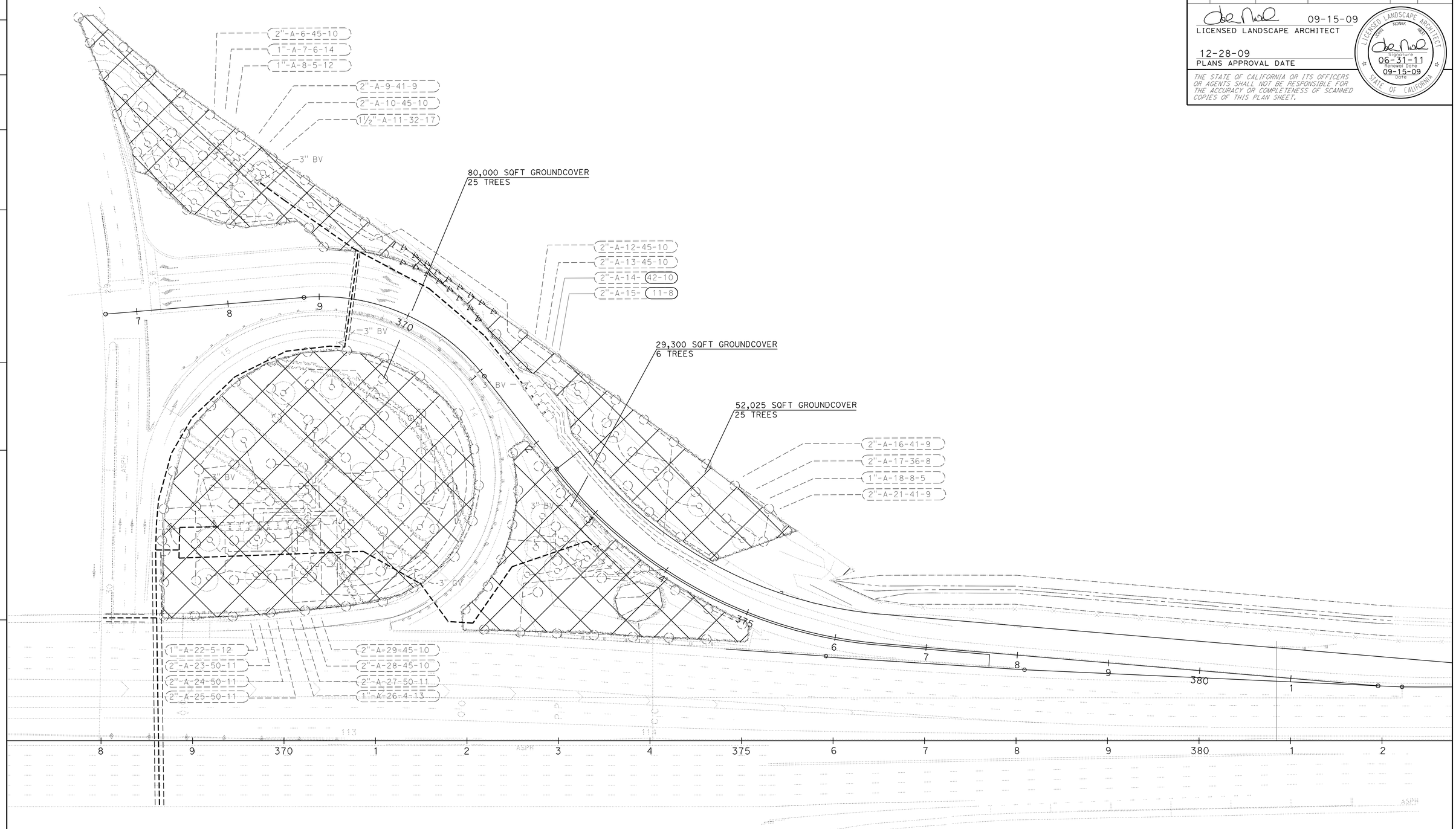

MAINTAIN EXISTING PLANTS AND IRRIGATION PLAN

SCALE: 1"=50'

MA-1

STATE OF CALIFORNIA - DEPARTMENT OF TRANSPORTATION

Caltrans

SENIOR LANDSCAPE ARCHITECT: ERIC DICKSON

CALCULATED-DESIGNED BY: MATTHEW CASLAVKA

CHECKED BY: JOHN NOWAK

REVISED BY

DATE REVISED

LAST REVISION 00-00-00

DATE PLOTTED => 04-JAN-2010

TIME PLOTTED => 11:22

Dist	COUNTY	ROUTE	POST MILES TOTAL PROJECT	SHEET No.	TOTAL SHEETS
12	Ora	55	7.0/7.9	46	76

LICENSED LANDSCAPE ARCHITECT 09-15-09

12-28-09
PLANS APPROVAL DATE

LICENSED LANDSCAPE ARCHITECT
JOHN NOWAK
Signature
06-31-11
Renewal Date
09-15-09
Date
STATE OF CALIFORNIA

THE STATE OF CALIFORNIA OR ITS OFFICERS OR AGENTS SHALL NOT BE RESPONSIBLE FOR THE ACCURACY OR COMPLETENESS OF SCANNED COPIES OF THIS PLAN SHEET.

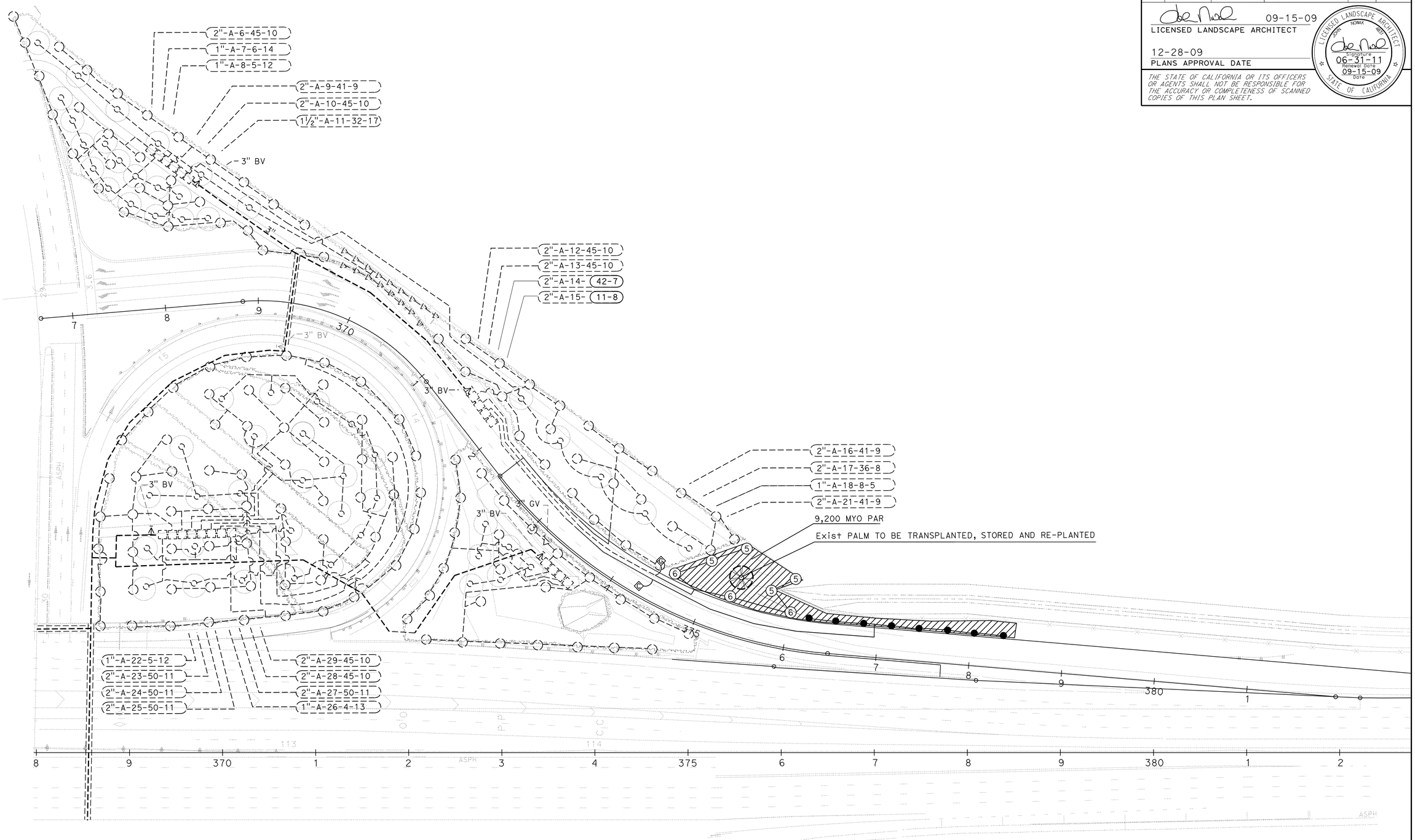

PLANTING AND IRRIGATION PLAN

SCALE: 1"=50'

PI-1

REVISED BY	DATE REVISED

CALCULATED-DESIGNED BY	MATTHEW CASLAVKA
CHECKED BY	JOHN NOWAK
SENIOR LANDSCAPE ARCHITECT	ERIC DICKSON

STATE OF CALIFORNIA - DEPARTMENT OF TRANSPORTATION

Caltrans

LAST REVISION 00-00-00 | DATE PLOTTED => 04-JAN-2010 | TIME PLOTTED => 11:22

Dist	COUNTY	ROUTE	POST MILES TOTAL PROJECT	SHEET No.	TOTAL SHEETS
12	Ora	55	7.0/7.9	47	76

LICENSED LANDSCAPE ARCHITECT 09-15-09

12-28-09
PLANS APPROVAL DATE

LICENSED LANDSCAPE ARCHITECT — JOHN NOWAK — Registered Owner — 06-31-11 Renewal Date — 09-15-09 Date — STATE OF CALIFORNIA

THE STATE OF CALIFORNIA OR ITS OFFICERS OR AGENTS SHALL NOT BE RESPONSIBLE FOR THE ACCURACY OR COMPLETENESS OF SCANNED COPIES OF THIS PLAN SHEET.

SPRINKLER SCHEDULE

SYMBOL	TYPE	DESCRIPTION	SPRAY PATTERN	OPERATING PRESSURE (PSI)	PRESSURE COMPENSATING	PLUS/MINUS 5% DISCHARGE: GALLONS PER MINUTE (GPM)	GALLONS PER HOUR (GPH)	RADIUS (Ft)	WIDTH x LENGTH (Ft)	MATERIAL	NOZZLE SIZE (INCH)	INLET CONNECTION (NPT INCH)	POSITIVE-LOCKING ADJ ARC STOP	BACKSPLASH PREVENTER	DIFFUSER PIN	DISTANCE CONTROL FLAP	ADJ DISCHARGE	RISER: TYPE	MATERIAL: PLASTIC	MATERIAL: GALVANIZED	SIZE (IPS INCH)	HEIGHT (INCH)	FLOW SHUTOFF DEVICE	⑤ SWING JOINT (TYPE)	RISER SUPPORT	SPRINKLER PROTECTOR (TYPE)	REMARKS
⑤	A-5	GEAR DRIVEN	P	35	—	2.6	—	31	—	PL	—	¾"	—	—	—	—	X	IV	X	—	¾"	12"	—	III	X	—	GEAR DRIVEN ROTOR
⑥	A-6	GEAR DRIVEN	P	35	—	2.6	—	31	—	PL	—	¾"	—	—	—	—	X	—	—	—	—	—	—	I	—	I	GEAR DRIVEN ROTOR POP-UP W/ PROTECTOR
●	C-3	SPRAY	H	30	—	1.85	—	15	—	PL	—	½"	—	—	—	—	X	—	—	—	—	—	—	I	—	—	SPRAY HEAD POP-UP

X IN BOX DENOTES REQUIREMENT

APPLICABLE WHEN CIRCLED BELOW:

1 - See Detail
2 - If a pressure compensating device is specified, the discharge and radii shown reflect its use.
3 - Arc Stop shall be fitted with a nut and bolt.
4 - Vinyl-coated cast iron housing.
⑤ - Swing Joints required adjacent to shoulders, curbs, sidewalks, and dikes.

ABBREVIATIONS

Adj — adjustable
B/B — brass/bronze
B/B/PL — brass/bronze/plastic
B/PL — brass/plastic
CST — center strip
DN — diameter nominal
EST — end strip
F — full circle
F/P — full/part circle
H — half circle
IPS — iron pipe size
GPH — gallons per hour
GPM — gallons per minute
Ft — feet
NPT — national pipe thread
P — part circle
PL — plastic
Q — quarter circle
SST — side strip
T — third circle
TQ — three quarter circle
TT — two thirds circle

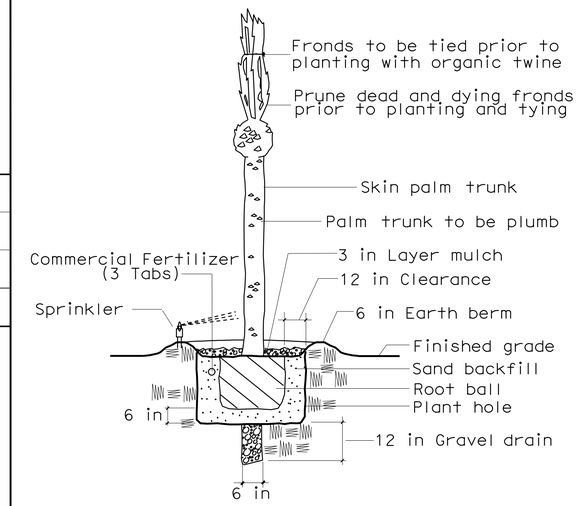

TRANSPLANT PALM DETAIL
NO SCALE

	¾"	1"	1¼"	1½"	2 "	RCV
⑤ ⑥ ●	0 GPM-10 GPM	11 GPM-16 GPM	17 GPM-26 GPM	27 GPM-35 GPM	36 GPM-55 GPM	□

LATERAL PIPE SIZING CHART

PLANT LIST

PLANT GROUP	PLANT No.	SYMBOL	BOTANICAL NAME	COMMON NAME	SIZE	QUANTITY EACH	HOLE SIZE (INCH): Dia	DEPTH	BASIN TYPE	IRON SULFATE	SOIL AMEND	COMMERCIAL FERTILIZER ①: PLANTING	PLT ESTB	BASIN MULCH	STAKING	PLANTING LIMITS MINIMUM DISTANCE (Ft) FROM: TRVD WAY	PVMT	FENCE	WALL	PAVED DITCH	EARTH DITCH	ON CENTER (Ft)	REMARKS
F	1		MYOPORUM PARVIFOLIUM	PROSTRATE MYOPORUM	FLATS	9200	②	②	II	--	--	--	--	--	--	--	6	6	6	6	8	1.0	GROUNDCOVER
Z	2		TRANSPLANTED PALM	TRANSPLANTED PALM								3 Tabs											TREE

NOTE:
Underlined portions of botanical name indicate abbreviations used on Planting Plans.

APPLICABLE WHEN CIRCLED:

① - Quantities shown are "per plant" unless shown as SQFT or SQYD application rates.
② - Sufficient to receive root ball.
3 - Does not apply to mulch areas.
4 - As shown on plans.
5 - Unless otherwise shown on plans.
6 - See detail.
7 - See Special Provisions.

ABBREVIATIONS

AMEND — amendment
B & B — balled and burlapped
BTH — brown trunk heigth
Dia — diameter
EA — each
lb — pound
oz. — ounce
Ft — foot/feet
SQFT — square feet
CF — cubic feet
Max — maximum
Min — minimum
NCN — no common name
No. — number
Pkt — packet
PLT ESTB — plant establishment
Pvmt — pavement
R/W — right of way
SF — state furnished
TRVD — traveled

LEGEND

EXISTING GROUNDCOVER TO BE MAINTAINED

EXISTING TREES TO BE MAINTAINED

PLANT LIST AND LANDSCAPE DETAILS

LD-1

LAST REVISION 07-07-09 | DATE PLOTTED => 04-JAN-2010 | TIME PLOTTED => 11:22

REVISED BY | DATE REVISED
LANDON MARES | JOHN NOWAK
CALCULATED-DESIGNED BY | CHECKED BY
SENIOR LANDSCAPE ARCHITECT | ERIC DICKSON
STATE OF CALIFORNIA - DEPARTMENT OF TRANSPORTATION
Caltrans

Dist	COUNTY	ROUTE	POST MILES TOTAL PROJECT	SHEET No.	TOTAL SHEETS
12	Ora	55	7.0/7.9	48	76

09-15-09
LICENSED LANDSCAPE ARCHITECT

12-28-09
PLANS APPROVAL DATE

LICENSED LANDSCAPE ARCHITECT — JOHN NOWAK — Signature — Renewal Date 06-31-11 — Date 09-15-09 — STATE OF CALIFORNIA

THE STATE OF CALIFORNIA OR ITS OFFICERS OR AGENTS SHALL NOT BE RESPONSIBLE FOR THE ACCURACY OR COMPLETENESS OF SCANNED COPIES OF THIS PLAN SHEET.

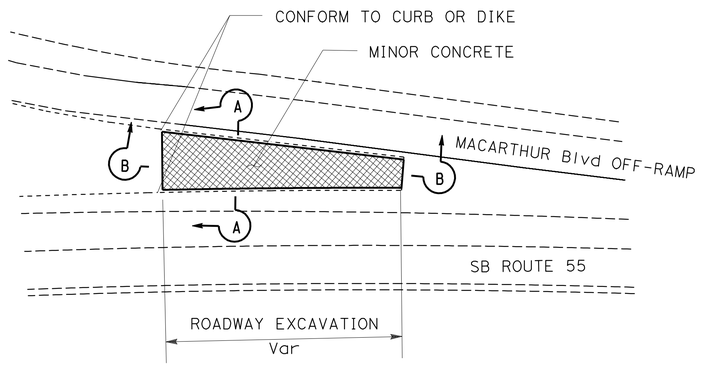

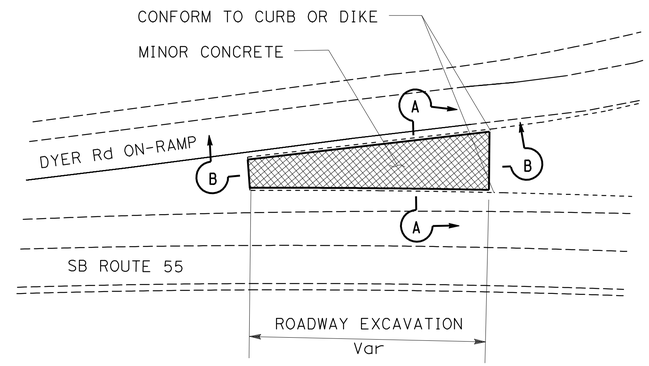

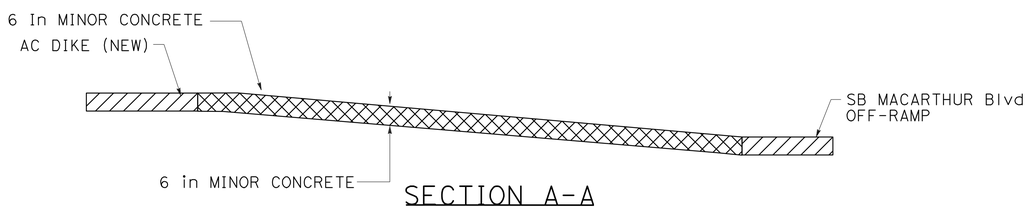

SECTION A-A

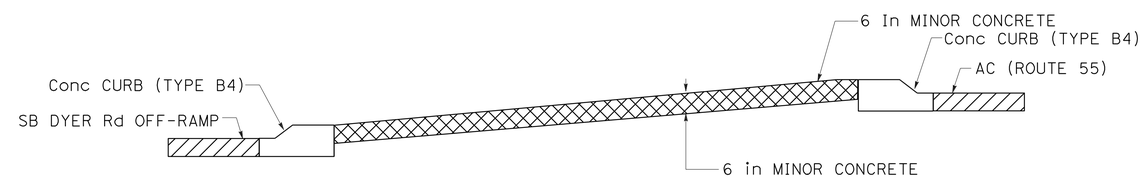

SECTION A-A

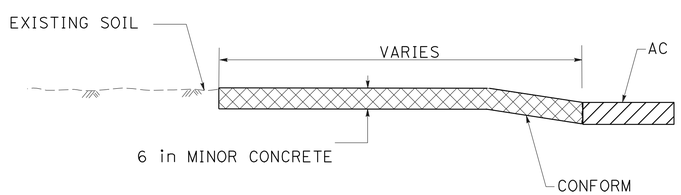

SECTION B-B

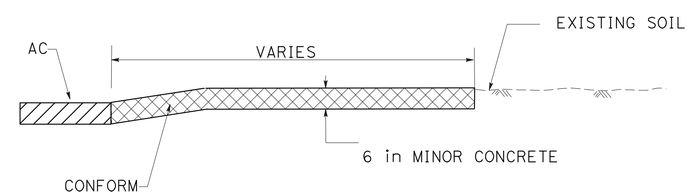

SECTION B-B

MINOR CONCRETE
Sta 375+33.51-378+26.04

MINOR CONCRETE
Sta 402+27.52-403+18.07

LANDSCAPE DETAILS

LD-2

REVISED BY	DATE REVISED

LANDON MARES — JOHN NOWAK
CALCULATED-DESIGNED BY — CHECKED BY
SENIOR LANDSCAPE ARCHITECT — ERIC DICKSON

STATE OF CALIFORNIA - DEPARTMENT OF TRANSPORTATION
Caltrans

LAST REVISION 00-00-00 | DATE PLOTTED => 04-JAN-2010 | TIME PLOTTED => 11:23

Dist	COUNTY	ROUTE	POST MILES TOTAL PROJECT	SHEET No.	TOTAL SHEETS
12	Ora	55	7.0/7.9	49	76

Mansour Feiz 09-15-09
REGISTERED ELECTRICAL ENGINEER DATE

12-28-09
PLANS APPROVAL DATE

REGISTERED PROFESSIONAL ENGINEER
M.FEIZ
No. E015688
Exp. 6/30/10
ELECT
STATE OF CALIFORNIA

THE STATE OF CALIFORNIA OR ITS OFFICERS OR AGENTS SHALL NOT BE RESPONSIBLE FOR THE ACCURACY OR COMPLETENESS OF SCANNED COPIES OF THIS PLAN SHEET.

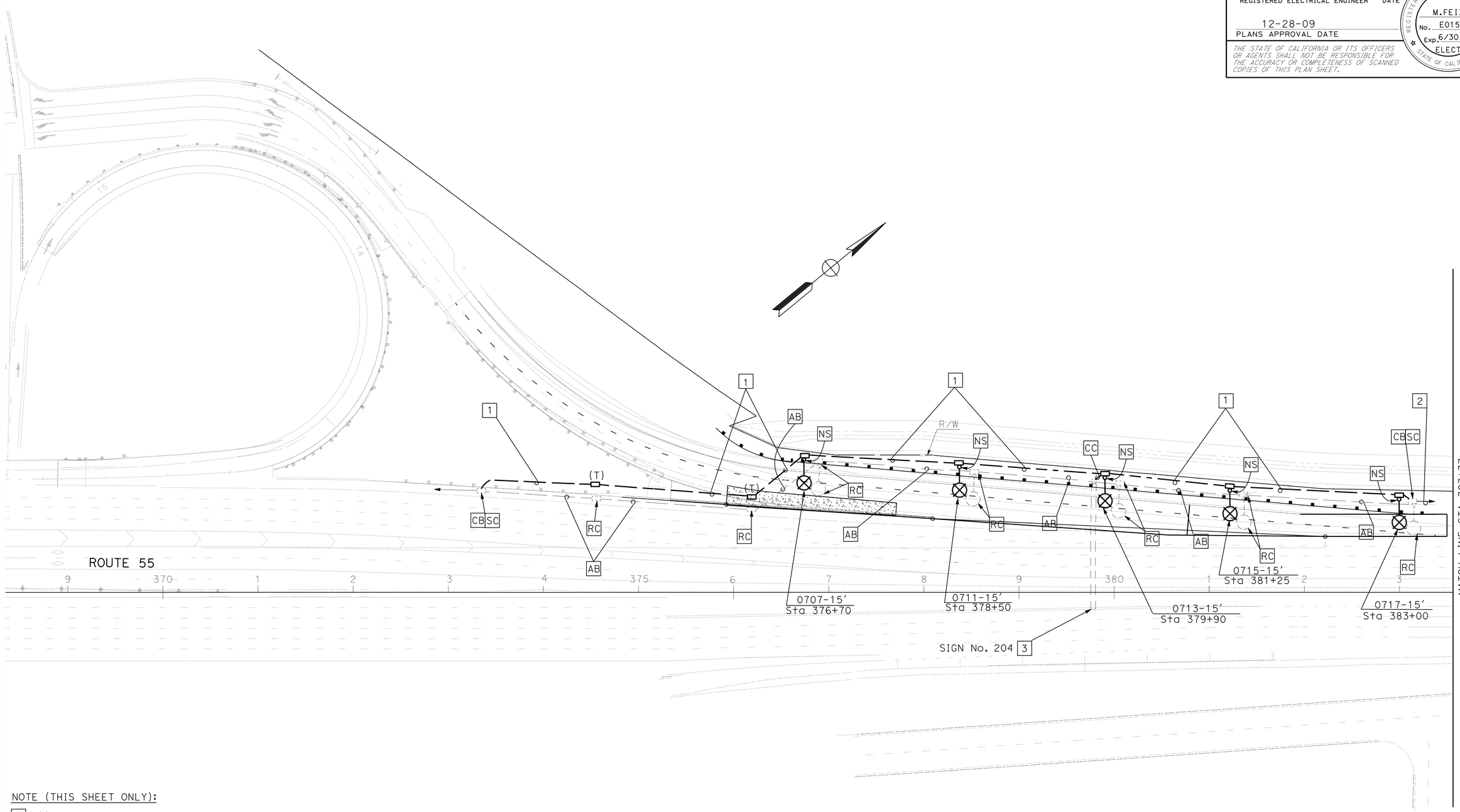

NOTE (THIS SHEET ONLY):

1. 1½"C, 4#6.
2. EXISTING 1½"C, 4#6 TO EXISTING SERVICE EQUIPMENT ENCLOSURE ID No. 07550550008211 LOCATED 262′ SOUTH OF MCGAW/PULLMAN.
3. RC 7 mv. INSTALL 7 ISL.
4. FOR COMPLETE RIGHT OF WAY AND ACCURATE ACCESS DATA, SEE RIGHT OF WAY RECORD AT DISTRICT OFFICE.
5. SEE SHEET E-4 FOR WIRING DIAGRAM.

MODIFY LIGHTING AND SIGN ILLUMINATION

SCALE: 1" = 50′

THIS PLAN IS ACCURATE FOR ELECTRICAL WORK ONLY.

E-1

STATE OF CALIFORNIA - DEPARTMENT OF TRANSPORTATION
Caltrans
ELECTRICAL DESIGN

FUNCTIONAL SUPERVISOR: SHAHRAM SHAHRIARI

CALCULATED-DESIGNED BY: MANSOUR FEIZ
CHECKED BY: SHAHRAM SHAHRIARI

REVISED BY
DATE REVISED

LAST REVISION 00-00-00
DATE PLOTTED => 04-JAN-2010
TIME PLOTTED => 11:23

Dist	COUNTY	ROUTE	POST MILES TOTAL PROJECT	SHEET No.	TOTAL SHEETS
12	Ora	55	7.0/7.9	50	76

Mansour Feiz 09-15-09
REGISTERED ELECTRICAL ENGINEER DATE

12-28-09
PLANS APPROVAL DATE

REGISTERED PROFESSIONAL ENGINEER
M.FEIZ
No. E015688
Exp. 6/30/10
ELECT
STATE OF CALIFORNIA

THE STATE OF CALIFORNIA OR ITS OFFICERS OR AGENTS SHALL NOT BE RESPONSIBLE FOR THE ACCURACY OR COMPLETENESS OF SCANNED COPIES OF THIS PLAN SHEET.

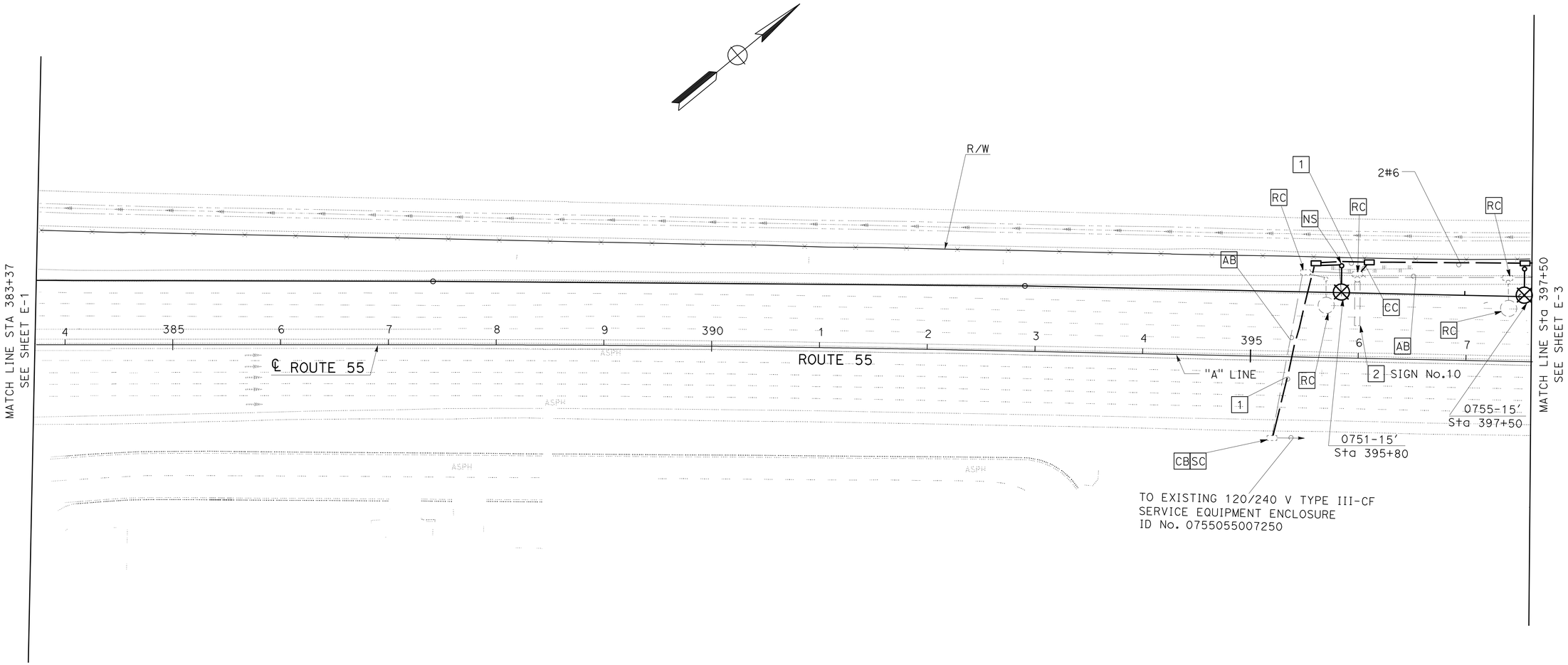

NOTES (THIS SHEET ONLY):

1 1½"C, 4#6.

2 RC 2 mv. INSTALL 2 ISL.

3. FOR COMPLETE RIGHT OF WAY AND ACCURATE ACCESS DATA, SEE RIGHT OF WAY RECORD AT DISTRICT OFFICE.

4. SEE SHEET E-5 FOR WIRING DIAGRAM.

MODIFY LIGHTING AND SIGN ILLUMINATION

SCALE: 1" = 50'

THIS PLAN IS ACCURATE FOR ELECTRICAL WORK ONLY.

E-2

STATE OF CALIFORNIA - DEPARTMENT OF TRANSPORTATION
Caltrans
ELECTRICAL DESIGN

FUNCTIONAL SUPERVISOR: SHAHRAM SHAHRIARI
CALCULATED-DESIGNED BY: MANSOUR FEIZ
CHECKED BY: SHAHRAM SHAHRIARI
REVISED BY
DATE REVISED

LAST REVISION 00-00-00
DATE PLOTTED => 04-JAN-2010
TIME PLOTTED => 11:23

Dist	COUNTY	ROUTE	POST MILES TOTAL PROJECT	SHEET No.	TOTAL SHEETS
12	Ora	55	7.0/7.9	51	76

Mansour Feiz 09-15-09
REGISTERED ELECTRICAL ENGINEER DATE

12-28-09
PLANS APPROVAL DATE

REGISTERED PROFESSIONAL ENGINEER
M.FEIZ
No. E015688
Exp. 6/30/10
ELECT
STATE OF CALIFORNIA

THE STATE OF CALIFORNIA OR ITS OFFICERS OR AGENTS SHALL NOT BE RESPONSIBLE FOR THE ACCURACY OR COMPLETENESS OF SCANNED COPIES OF THIS PLAN SHEET.

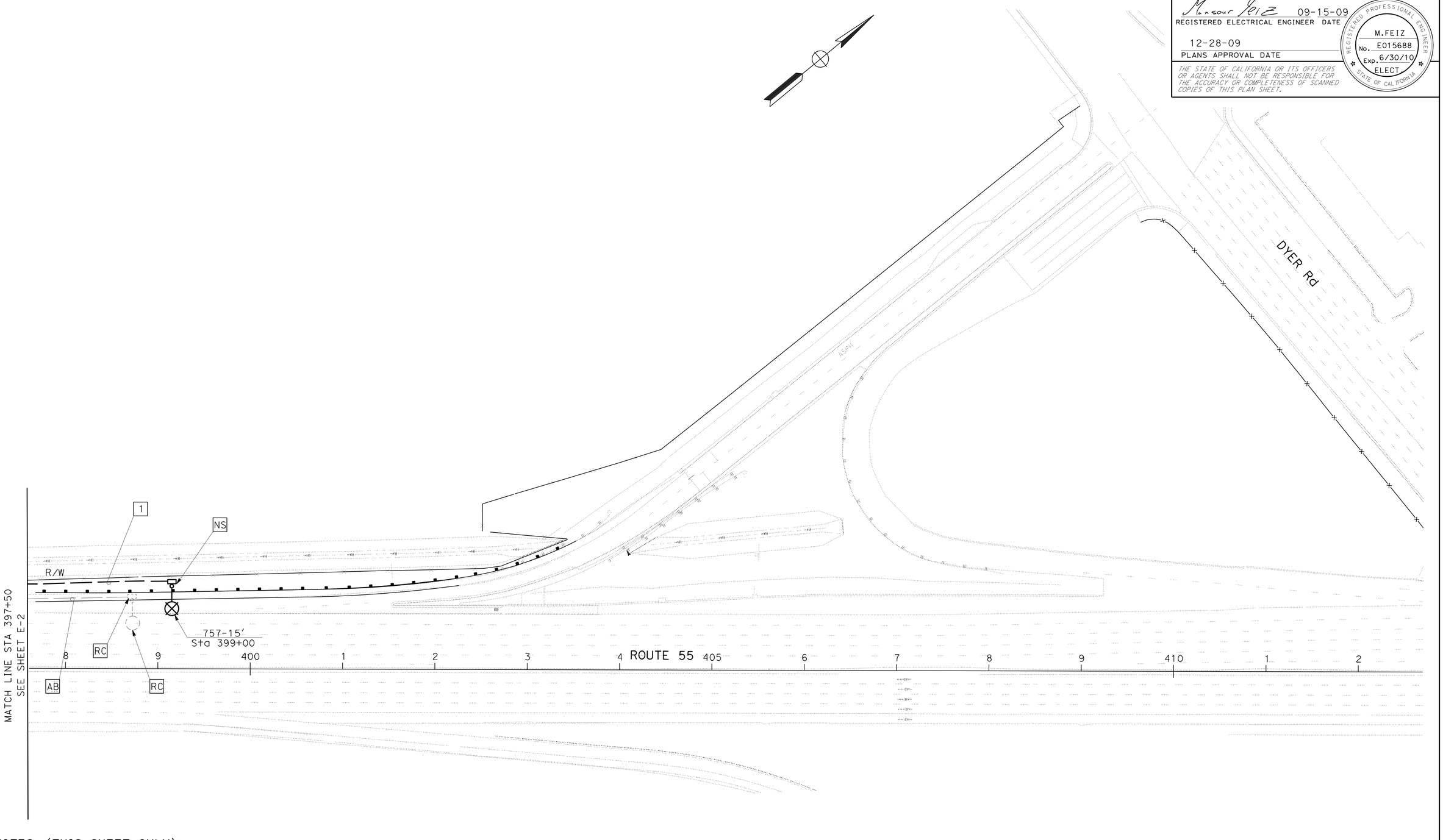

NOTES: (THIS SHEET ONLY):

1 1½"C, 2#6

2. FOR COMPLETE RIGHT OF WAY AND ACCURATE ACCESS DATA, SEE RIGHT OF WAY RECORD MAPS AT DISTRICT OFFICE.

MODIFY LIGHTING AND SIGN ILLUMINATION

SCALE: 1" = 50'

E-3

THIS PLAN IS ACCURATE FOR ELECTRICAL WORK ONLY.

STATE OF CALIFORNIA - DEPARTMENT OF TRANSPORTATION
Caltrans
ELECTRICAL DESIGN
FUNCTIONAL SUPERVISOR: SHAHRAM SHAHRIARI
CALCULATED-DESIGNED BY: MANSOUR FEIZ
CHECKED BY: SHAHRAM SHAHRIARI
REVISED BY
DATE REVISED

LAST REVISION 00-00-00
DATE PLOTTED => 04-JAN-2010
TIME PLOTTED => 11:23

Dist	COUNTY	ROUTE	POST MILES TOTAL PROJECT	SHEET No.	TOTAL SHEETS
12	Ora	55	R7.0/7.9	52	76

Mansour Feiz 09-15-09
REGISTERED ELECTRICAL ENGINEER DATE

12-28-09
PLANS APPROVAL DATE

REGISTERED PROFESSIONAL ENGINEER M.FEIZ No. E015688 Exp. 6/30/10 ELECT. STATE OF CALIFORNIA

THE STATE OF CALIFORNIA OR ITS OFFICERS OR AGENTS SHALL NOT BE RESPONSIBLE FOR THE ACCURACY OR COMPLETENESS OF SCANNED COPIES OF THIS PLAN SHEET.

WIRING DIAGRAM LEGEND:

- EXISTING No. 6 AWG TO REMAIN
- EXISTING No. 6 AWG TO BE REMOVED
- No. 6 AWG, 600 V TO BE INSTALLED
- SPLICE
- Exist 200 W HPS LUMINAIRE TO REMAIN
- 310 W HPS LUMINAIRE
- Exist SIGN ILLUMINATION EQUIPMENT TO REMAIN

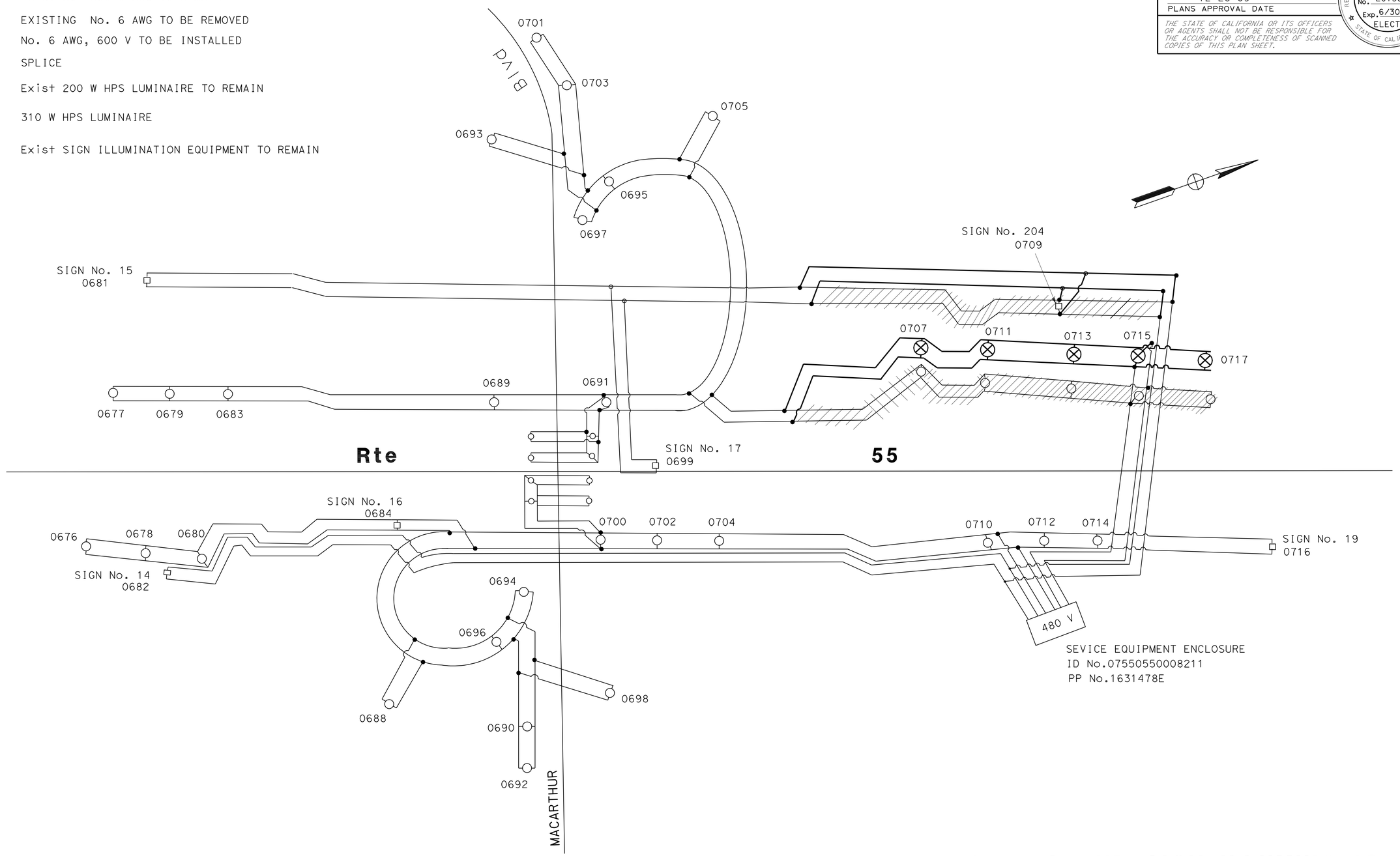

CIRCUITS "A" & "B"

MODIFY LIGHTING AND SIGN ILLUMINATION
(WIRING DIAGRAM)
NO SCALE

THIS PLAN IS ACCURATE FOR ELECTRICAL WORK ONLY.

E-4

STATE OF CALIFORNIA - DEPARTMENT OF TRANSPORTATION
Caltrans
ELECTRICAL DESIGN

FUNCTIONAL SUPERVISOR: SHAHRAM SHAHRIARI
CALCULATED-DESIGNED BY: MANSOUR FEIZ
CHECKED BY: SHAHRAM SHAHRIARI
REVISED BY
DATE REVISED

LAST REVISION 00-00-00
DATE PLOTTED => 04-JAN-2010
TIME PLOTTED => 11:23

Dist	COUNTY	ROUTE	POST MILES TOTAL PROJECT	SHEET No.	TOTAL SHEETS
12	Ora	55	R7.0/7.9	53	76

Mansour Feiz 09-15-09
REGISTERED CIVIL ENGINEER DATE

12-28-09
PLANS APPROVAL DATE

REGISTERED PROFESSIONAL ENGINEER
M.FEIZ
No. E015688
Exp. 6/30/10
ELECT.
STATE OF CALIFORNIA

THE STATE OF CALIFORNIA OR ITS OFFICERS OR AGENTS SHALL NOT BE RESPONSIBLE FOR THE ACCURACY OR COMPLETENESS OF SCANNED COPIES OF THIS PLAN SHEET.

WIRING DIAGRAM LEGEND:

- EXISTING No. 6 AWG TO REMAIN
- EXISTING No. 6 AWG TO BE REMOVED
- No. 6 AWG, 600 V TO BE INSTALLED
- SPLICE
- Exist 200 W HPS LUMINAIRE TO REMAIN
- 310 W HPS LUMINAIRE
- Exist SIGN ILLUMINATION EQUIPMENT TO REMAIN

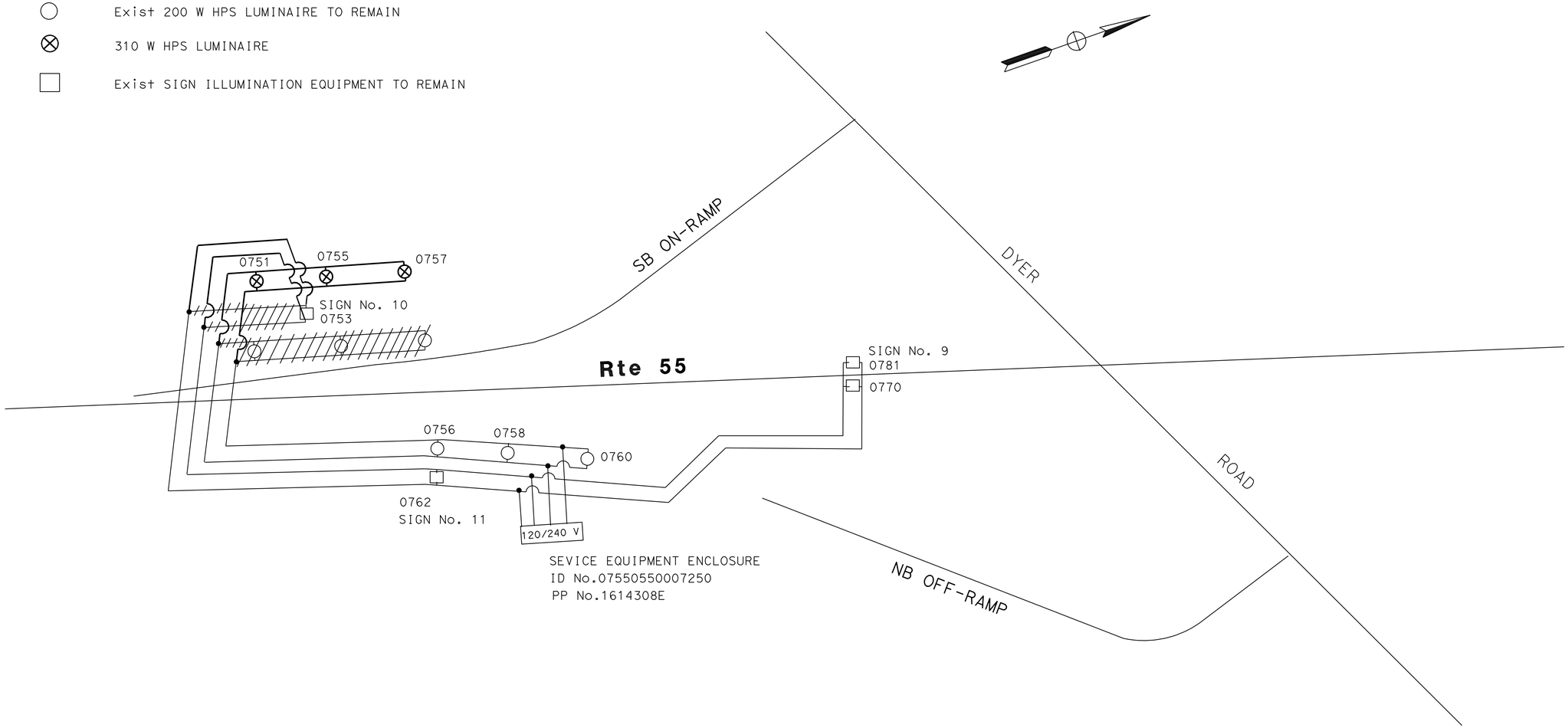

CIRCUIT "C"

MODIFY LIGHTING AND SIGN ILLUMINATION
(WIRING DIAGRAM)
NO SCALE

THIS PLAN IS ACCURATE FOR ELECTRICAL WORK ONLY.

E-5

REVISED BY | DATE REVISED
MANSOUR FEIZ | SHAHRAM SHAHRIARI
CALCULATED-DESIGNED BY | CHECKED BY
FUNCTIONAL SUPERVISOR | SHAHRAM SHAHRIARI
STATE OF CALIFORNIA - DEPARTMENT OF TRANSPORTATION
Caltrans
ELECTRICAL DESIGN

LAST REVISION 10-08-09 | DATE PLOTTED => 04-JAN-2010 | TIME PLOTTED => 11:23

Dist	COUNTY	ROUTE	POST MILES TOTAL PROJECT	SHEET No.	TOTAL SHEETS
12	Ora	55	7.0/7.9	54	76

Mansour Feiz 09-15-09
REGISTERED ELECTRICAL ENGINEER DATE

12-28-09
PLANS APPROVAL DATE

REGISTERED PROFESSIONAL ENGINEER
M.FEIZ
No. E015688
Exp. 6/30/10
ELECT
STATE OF CALIFORNIA

THE STATE OF CALIFORNIA OR ITS OFFICERS OR AGENTS SHALL NOT BE RESPONSIBLE FOR THE ACCURACY OR COMPLETENESS OF SCANNED COPIES OF THIS PLAN SHEET.

NOTE (THIS SHEET ONLY):
1. FOR COMPLETE RIGHT OF WAY AND ACCURATE ACCESS DATA, SEE RIGHT OF WAY RECORD MAPS AT DISTRICT OFFICE.

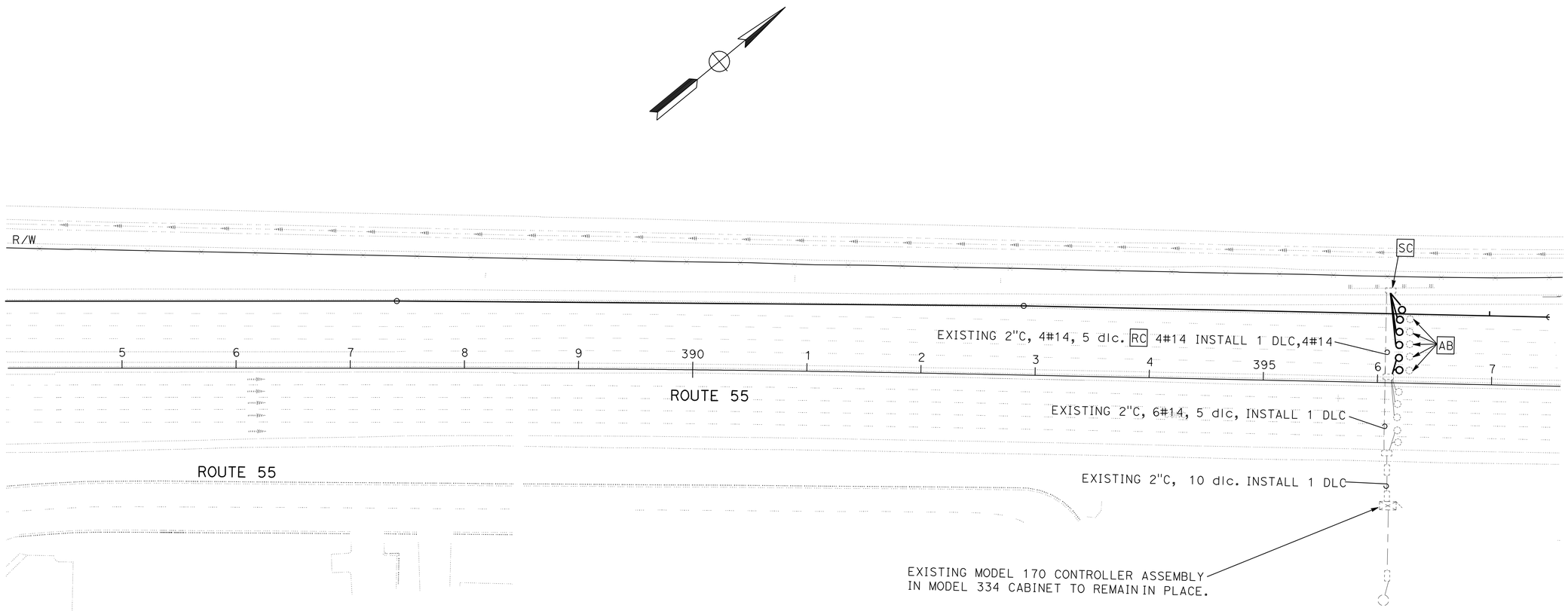

MODIFY TRAFFIC MONITORING STATION

SCALE: 1" = 50'

THIS PLAN IS ACCURATE FOR ELECTRICAL WORK ONLY.

E-6

STATE OF CALIFORNIA - DEPARTMENT OF TRANSPORTATION
ELECTRICAL DESIGN
Caltrans

FUNCTIONAL SUPERVISOR: SHAHRAM SHAHRIARI
CALCULATED-DESIGNED BY: MANSOUR FEIZ
CHECKED BY: SHAHRAM SHAHRIARI
REVISED BY
DATE REVISED

LAST REVISION 00-00-00
DATE PLOTTED => 04-JAN-2010
TIME PLOTTED => 11:24

Dist	COUNTY	ROUTE	POST MILES TOTAL PROJECT	SHEET No.	TOTAL SHEETS
12	Ora	55	7.0/7.9	55	76

Mansour Feiz 09-15-09
REGISTERED ELECTRICAL ENGINEER DATE

12-28-09
PLANS APPROVAL DATE

REGISTERED PROFESSIONAL ENGINEER M.FEIZ No. E015688 Exp. 6/30/10 ELECT STATE OF CALIFORNIA

THE STATE OF CALIFORNIA OR ITS OFFICERS OR AGENTS SHALL NOT BE RESPONSIBLE FOR THE ACCURACY OR COMPLETENESS OF SCANNED COPIES OF THIS PLAN SHEET.

NOTE (THIS SHEET ONLY):

1. RELOCATE EXISTING MODEL 170 CONTROLLER ASSEMBLY (948) IN MODEL 334 CABINET.

2. FOR COMPLETE RIGHT OF WAY AND ACCURATE ACCESS DATA, SEE RIGHT OF WAY RECORD MAPS AT DISTRICT OFFICE.

EXISTING CONDUCTOR AND CONDUIT SCHEDULE

AWG OR CABLE	CONDUCTOR RUN	1	2	3	4	5	6	7
#14	RAMP SIGNAL		3(N)	6(N)				6(N)
	"METER ON" SIGN				2(N)	2(N)	2(N)	2(N)
	SPARES		3(N)	3(N)				3(N)
DLC	QUEUE DETECTOR						2(N)	2(N)
	DEMAND DETECTOR		1(N)	2(N)				2(N)
	PASSAGE DETECTOR		1(N)	2(N)				2(N)
	COUNT DETECTOR	1(N)	1(N)	1(N)				1(N)
	SURVAILANCE DETECTOR	5(N)	5(N)	5(N)				5(N)
#10	SIGNAL COMMON		1(N)	1(N)				1(N)
#6	SERVICE	2(N)	2(N)	2(N)				2(N)
	CONDUIT SIZE	1½"	2"	2"	1½"	1½"	1½"	2-3"

(N)=NEW

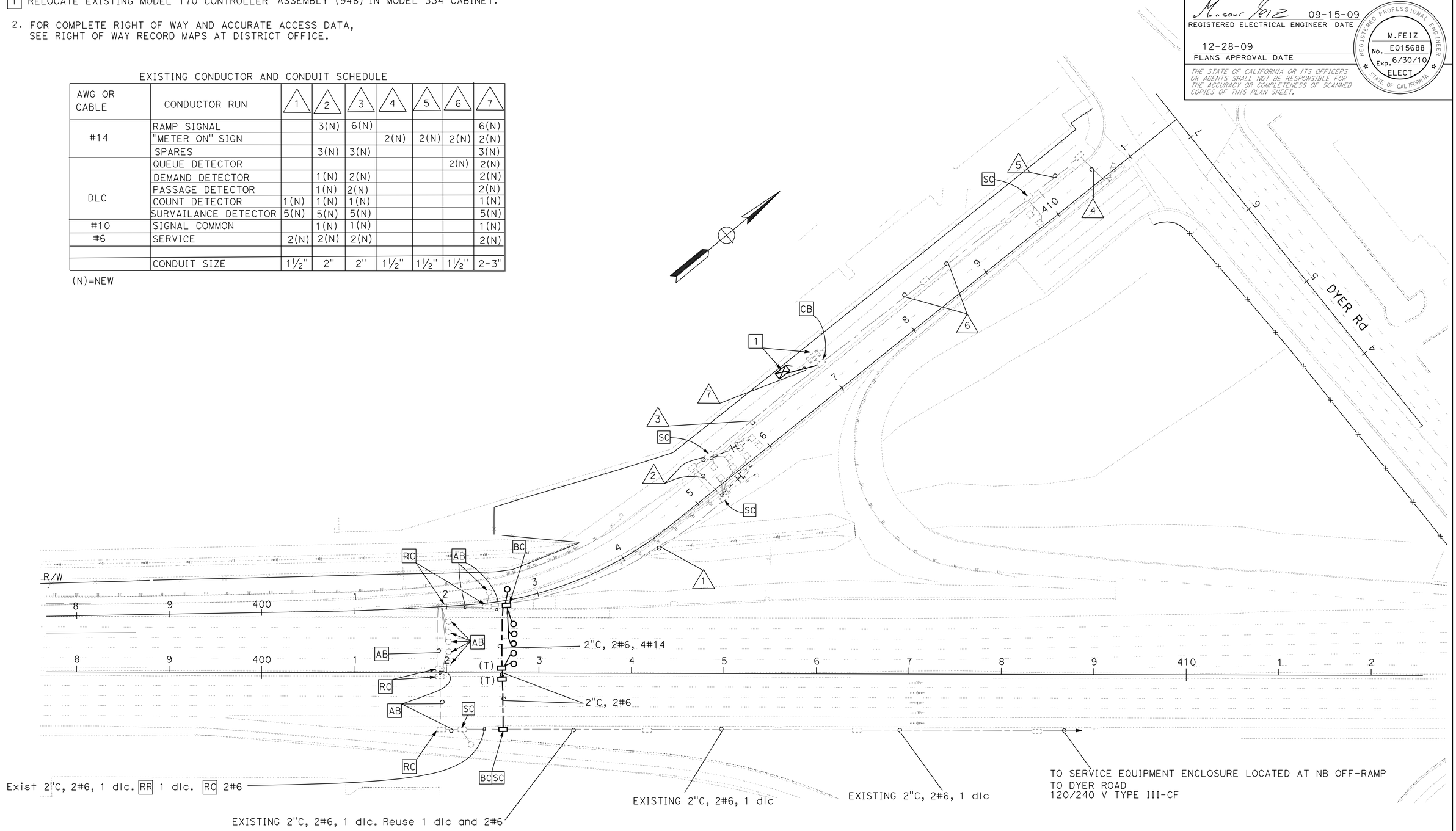

MODIFY RAMP METERING SYSTEM

SCALE: 1" = 50'

THIS PLAN IS ACCURATE FOR ELECTRICAL WORK ONLY.

E-7

STATE OF CALIFORNIA - DEPARTMENT OF TRANSPORTATION
ELECTRICAL DESIGN

FUNCTIONAL SUPERVISOR: SHAHRAM SHAHRIARI
CALCULATED-DESIGNED BY: MANSOUR FEIZ
CHECKED BY: SHAHRAM SHAHRIARI
REVISED BY
DATE REVISED

LAST REVISION 00-00-00
DATE PLOTTED => 04-JAN-2010
TIME PLOTTED => 11:24

DIST	COUNTY	ROUTE	POST MILES TOTAL PROJECT	SHEET NO.	TOTAL SHEETS
12	Ora	55	7.0/7.9	56	76

REGISTERED CIVIL ENGINEER

November 17, 2006
PLANS APPROVAL DATE

REGISTERED PROFESSIONAL ENGINEER Dallas Forester No. C37765 Exp. 12-31-06 CIVIL STATE OF CALIFORNIA

The State of California or its officers or agents shall not be responsible for the accuracy or completeness of electronic copies of this plan sheet.

To accompany plans dated 12-28-09

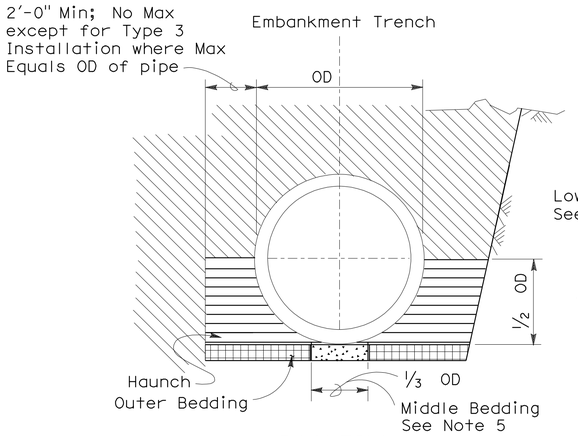

BACKFILL

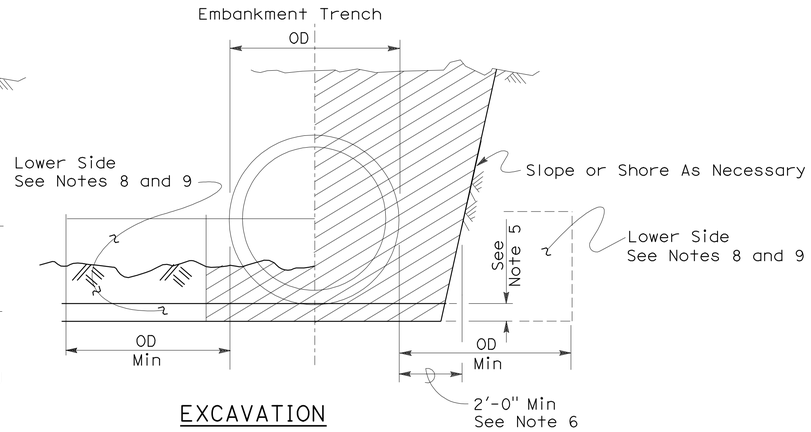

EXCAVATION

Roadway Embankment

Structure Backfill (Culvert) See Note 6

Structure Backfill (Culvert) See Note 6

Loose Backfill

Excavation Structure (Culvert)

TYPE 1 INSTALLATION:

The haunch and outer bedding shall be compacted to a minimum 90 percent relative compaction. In addition, the minimum sand equivalent in these areas shall be 30 and the maximum percentage passing the 75 μm sieve size shall be 12.

TYPE 2 INSTALLATION:

The haunch and outer bedding shall be compacted to a minimum 90 percent relative compaction. In addition, the minimum sand equivalent in these areas shall be 25.

TYPE 3 INSTALLATION:

The haunch and outer bedding shall be compacted to a minimum 85 percent relative compaction. 90 percent relative compaction will be required where the fill over the pipe is less than 4'-0" or 1/2 OD.

NOTES:

1. Unless otherwise shown on the plans or specified in the special provision, the Contractor shall have the option of selecting the class of RCP and the type of installation to be used, provided the height of cover does not exceed the value shown for the RCP selected.
   Example: 24" RCP culvert with maximum cover of 19'-0" the options are:
   a) Class III or stronger with Installation Type 1.
   b) Class III Special or stronger with Installation Type 2.
   c) Class IV Special or stronger with Installation Type 3.
   Cover is defined as the maximum vertical distance from top of the pipe to finished grade within the length of any given culvert.
2. The class of RCP and Installation Type selected shall be the same throughout the length of any given culvert.
3. The "length of any culvert" is defined as the culvert between:
   a) Successive drainage structure (inlets, junction boxes, headwalls, etc.).
   b) A drainage structure and the inlet or outlet end of the culvert.
   c) The inlet and outlet end of the culvert when there are no intervening drainage structures.
4. Oval and arch shaped RCP shall not be used.
5. 1/25 OD Min, not less than 3".
6. Slurry cement backfill may be substituted for backfill in the outer bedding and haunch areas. If slurry is used the outer and middle beddings shall be omitted. Prior to installation the soil under the middle 1/3 of the outside diameter of the pipe shall be softened by scarifying or other means to a minimum depth of 1/25 OD, but not less than 3". Where slurry cement backfill is used clear distance to trench wall may be reduced as set forth in Section 19-3.062 of the Standard Specifications.
7. Backfill shall be placed full width of excavation except where dimensions are shown for backfill width or thickness. Dimensions shown are minimums.
8. Lower side shall be suitable material as determined by the Engineer. Otherwise it shall be considered unsuitable as set forth in Section 19-2.02 of the Standard Specifications. See Note 9.
9. Where the pipe is placed in a trench, if the trench walls are sloped at 5 vertical to 1 horizontal or steeper for at least 90 percent of the trench height or up to not less than 12" from the grading plane, the firmness of the soil in the lower side need not be considered.
10. Non-reinforced precast concrete pipe sizes 3'-0" or smaller may be placed under installation Types 1, 2 or 3.

INSTALLATION TYPE 1

MINIMUM CLASS AND D-LOAD	COVER	
	108" Dia AND SMALLER	OVER 108" Dia
Class II 1000D	14.9'	12.9'
Class III 1350D	15.0' - 20.9'	13.0' - 18.9'
Class III Special 1700D	21.0' - 26.9'	19.0' - 24.9'
Class IV 2000D	27.0' - 31.9'	25.0' - 29.9'
Class IV Special 2500D	32.0' - 40.9'	30.0' - 38.9'
Class V 3000D	41.0' - 49.9'	39.0' - 46.9'
Class V Special 3600D	50.0' - 59.0'	47.0' - 58.0'

INSTALLATION TYPE 2

MINIMUM CLASS AND D-LOAD	COVER
Class II 1000D	9.9'
Class III 1350D	10.0'- 14.9'
Class III Special 1700D	15.0' - 19.9'
Class IV 2000D	20.0' - 24.9'
Class IV Special 2500D	25.0' - 31.9'
Class V 3000D	32.0' - 38.9'
Class V Special 3600D	39.0' - 47.0'

INSTALLATION TYPE 3

MINIMUM CLASS AND D-LOAD	COVER	
	48" Dia AND SMALLER	OVER 48" Dia
Class II 1000D	7.9'	5.9'
Class III 1350D	8.0' - 10.9'	6.0' - 8.9'
Class III Special 1700D	11.0' - 14.9'	9.0' - 12.9'
Class IV 2000D	15.0' - 17.9'	13.0' - 15.9'
Class IV Special 2500D	18.0' - 21.9'	16.0' - 19.9'
Class V 3000D	22.0' - 26.9'	20.0' - 24.9'
Class V Special 3600D	30.0' - 33.0'	25.0' - 31.0'

STATE OF CALIFORNIA
DEPARTMENT OF TRANSPORTATION

EXCAVATION AND BACKFILL CONCRETE PIPE CULVERTS

NO SCALE

RSP A62DA DATED NOVEMBER 17, 2006 SUPERSEDES STANDARD PLAN A62DA DATED MAY 1, 2006 - PAGE 20 OF THE STANDARD PLANS BOOK DATED MAY 2006.

REVISED STANDARD PLAN RSP A62DA

2006 REVISED STANDARD PLAN RSP A62DA

10-26-06

DIST	COUNTY	ROUTE	POST MILES TOTAL PROJECT	SHEET NO.	TOTAL SHEETS
12	Ora	55	7.0/7.9	57	76

Randell D. Hiatt
REGISTERED CIVIL ENGINEER

June 6, 2008
PLANS APPROVAL DATE

REGISTERED PROFESSIONAL ENGINEER
Randell D. Hiatt
No. C50200
Exp. 6-30-09
CIVIL
STATE OF CALIFORNIA

The State of California or its officers or agents shall not be responsible for the accuracy or completeness of electronic copies of this plan sheet.

To accompany plans dated 12-28-09

NOTES:

1. When necessary to place dike in front of face of guard railing, only Type C dike may be used. For dike details, see Standard Plan A87B.
2. For standard railing post embedment, see Standard Plans A77C3.
3. Guard railing delineation to be used where shown on the Project Plans.
4. When dike or curb is placed under guard railing, the maximum height of the dike or curb shall be 4". Mountable dike should not be used. For dike and curb details, see Revised Standard Plans RSP A87A and Standard Plan A87B.
5. For details of typical distance between the face of rail and hinge point, see Standard Plan A77C3.

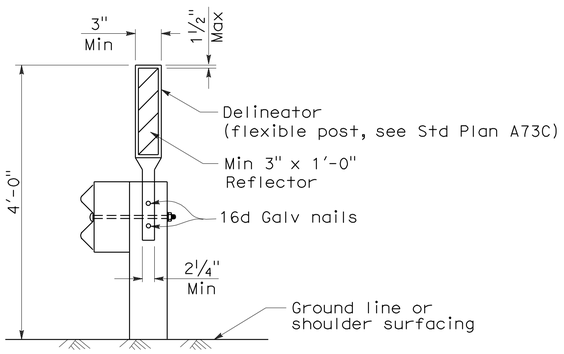

GUARD RAILING DELINEATION

See Note 3

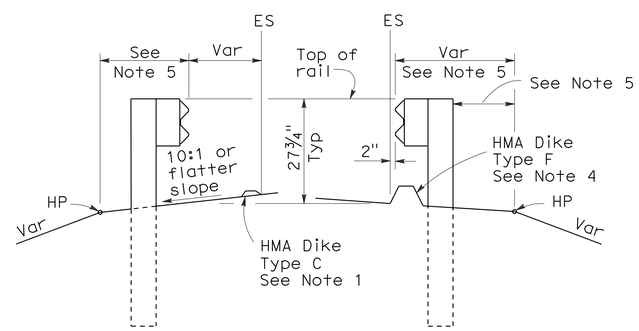

DIKE POSITIONING

See Note 1

STATE OF CALIFORNIA
DEPARTMENT OF TRANSPORTATION

METAL BEAM GUARD RAILING TYPICAL RAILING DELINEATION AND DIKE POSITIONING DETAILS

NO SCALE

RSP A77C4 DATED JUNE 6, 2008 SUPERSEDES STANDARD PLAN A77C4
DATED MAY 1, 2006 - PAGE 47 OF THE STANDARD PLANS BOOK DATED MAY 2006.

REVISED STANDARD PLAN RSP A77C4

2006 REVISED STANDARD PLAN RSP A77C4

12-10-07

DIST	COUNTY	ROUTE	POST MILES TOTAL PROJECT	SHEET NO.	TOTAL SHEETS
12	Ora	55	7.0/7.9	58	76

Randell D. Hiatt
REGISTERED CIVIL ENGINEER

June 6, 2008
PLANS APPROVAL DATE

REGISTERED PROFESSIONAL ENGINEER Randell D. Hiatt No. C50200 Exp. 6-30-09 CIVIL STATE OF CALIFORNIA

The State of California or its officers or agents shall not be responsible for the accuracy or completeness of electronic copies of this plan sheet.

To accompany plans dated 12-28-09

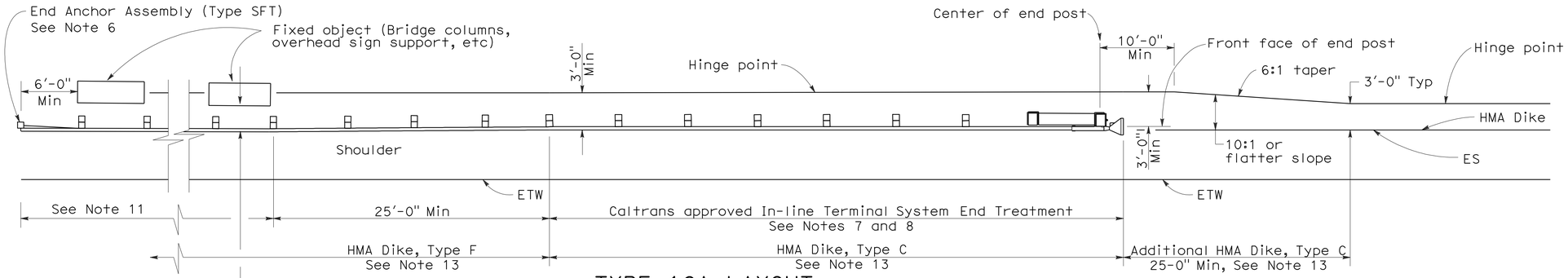

TYPE 16A LAYOUT

(GUARD RAILING INSTALLATION AT ROADSIDE FIXED OBJECT OR OBJECTS WITH AN IN-LINE END TREATMENT AT TRAFFIC APPROACH END OF RAILING)
See Notes 12 and 13

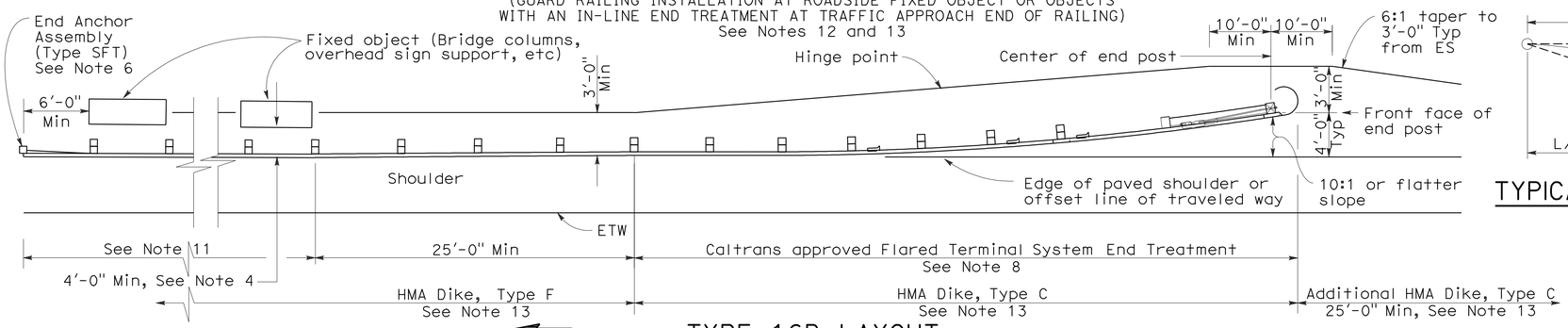

TYPE 16B LAYOUT

(GUARD RAILING INSTALLATION AT ROADSIDE FIXED OBJECT OR OBJECTS WITH A FLARED END TREATMENT AT TRAFFIC APPROACH END OF RAILING)
See Notes 12 and 13

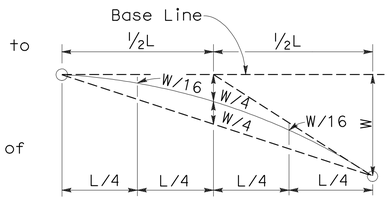

TYPICAL PARABOLIC LAYOUT

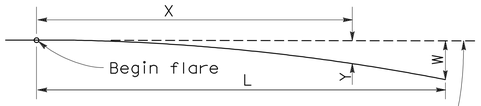

Base Line (Edge of paved shoulder or offset line of edge of traveled way)

$$Y = \frac{WX^2}{L^2}$$

Y = Offset from base line
W = Maximum offset
X = Distance along base line
L = Length of flare

PARABOLIC FLARE OFFSETS

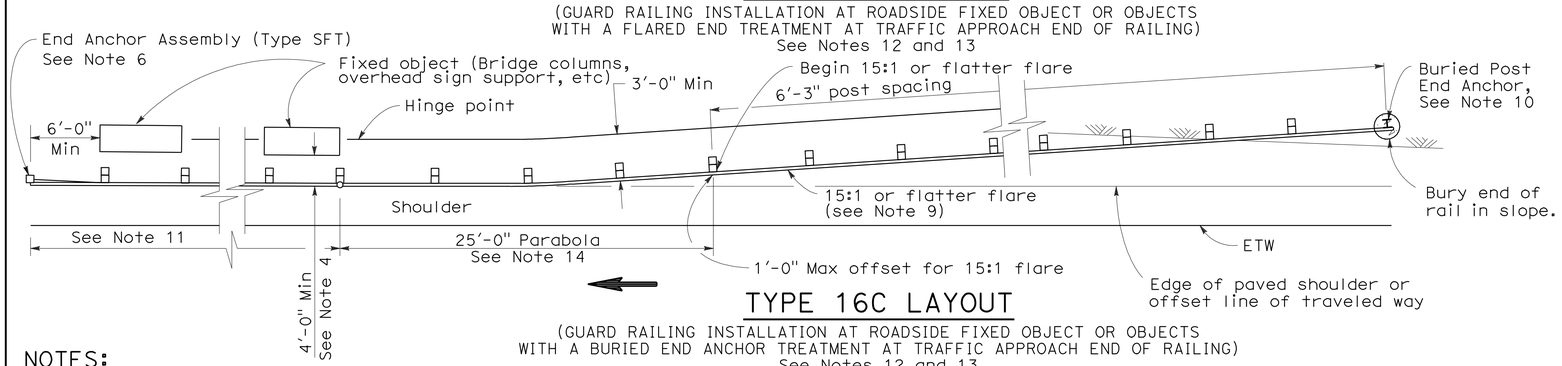

TYPE 16C LAYOUT

(GUARD RAILING INSTALLATION AT ROADSIDE FIXED OBJECT OR OBJECTS WITH A BURIED END ANCHOR TREATMENT AT TRAFFIC APPROACH END OF RAILING)
See Notes 12 and 13

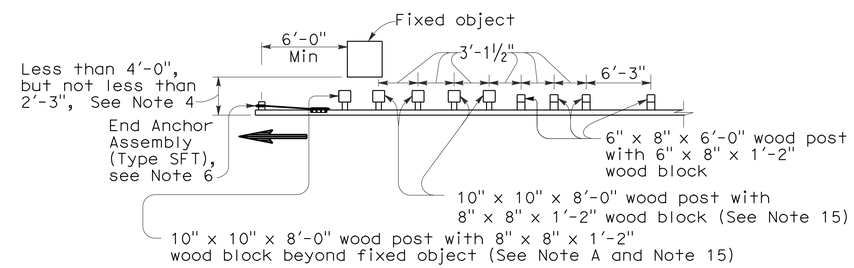

NOTE A: For a series of fixed objects (bridge columns, overhead sign supports, etc.) additional 10" x 10" x 8'-0" wood post with 8" x 8" x 1'-2" wood blocks at 3'-1½" center to center spacing are to be used between fixed objects.

STRENGTHENED RAILING SECTIONS FOR FIXED OBJECT

Use strengthened railing sections with Types 16A, 16B or 16C Layouts where minimum clearance between the face of the guard railing and fixed object(s) is less than 4'-0", but not less than 2'-3". See Note 4

NOTES:

1. Line post, blocks and hardware to be used are shown on Revised Standard Plans A77A1, A77A2, A77B1, A77C1 and A77C2.
2. Guard railing post spacing to be 6'-3" center to center, except as otherwise noted.
3. Except as noted, line posts are 6" x 8" x 6'-0" wood with 6" x 8" x 1'-2" wood blocks. W6 x 9 steel posts, 6'-0" in length, with 6" x 8" x 1'-2" notched wood blocks or notched recycled plastic blocks may be used for 6" x 8" x 6'-0" wood line posts with 6" x 8" x 1'-2" wood blocks where applicable and when specified.
4. A 4'-0" minimum clearance is required between the face of the railing and the face of a fixed object located directly behind standard guard railing sections with post spacing of 6'-3". Construct guard railing as shown in the detail "Strengthened Railing Sections for Fixed Objects" on this plan, where the clearance between the face of the railing and the face of a fixed object is less than 4'-0", but not less than 2'-3". Where the clearance is less than 2'-3", a concrete wall or barrier should be constructed to shield the fixed object(s).
5. Direction of adjacent traffic indicated by ⟶.
6. For End Anchor Assembly (Type SFT) details, see Standard Plan A77H1.
7. In-line Terminal System End Treatments are used where site conditions will not accommodate a flared end treatment.
8. The type of terminal system to be used will be shown on the Project Plans.
9. The 15:1 or flatter flare used with Type 16C Layout is based on the edge of the paved shoulder or offset line of edge of the traveled way. The length of guard railing within the 15:1 or flatter flare is based on site conditions and should be a length equal to multiples of 12'-6".
10. For details of the Buried Post End Anchor used with Type 16C Layout, see Standard Plan A77I2.
11. As site conditions dictate, construct additional guard railing to shield fixed object(s). Additional guard railing length equal to multiples of 12'-6". Post spacing at 6'-3" except as specified in Note 4.
12. Layout Types 16A, 16B or 16C are typically used where guard railing is recommended to shield roadside fixed object(s) and a crashworthy end treatment is required for only one direction of traffic.
13. Where placement of dike is required with guard railing, see Revised Standard Plan RSP A77C4 for dike positioning details.
14. For typical flare offsets for 25'-0" length parabola with maximum offset of 1'-0", see Revised Standard Plan RSP A77E1.
15. W6 x 15 steel post, 8'-0" in length, with 8" x 8" x 1'-2" notched wood block or notched recycled plastic blocks may be used in place of the 10" x 10" x 8'-0" wood post with 8" x 8" x 1'-2" wood block shown in the "Strengthened Railing Sections Detail".

STATE OF CALIFORNIA
DEPARTMENT OF TRANSPORTATION

METAL BEAM GUARD RAILING TYPICAL LAYOUTS FOR ROADSIDE FIXED OBJECTS

NO SCALE

RSP A77G3 DATED JUNE 6, 2008 SUPERSEDES STANDARD PLAN A77G3 DATED MAY 1, 2006 - PAGE 61 OF THE STANDARD PLANS BOOK DATED MAY 2006.

REVISED STANDARD PLAN RSP A77G3

2006 REVISED STANDARD PLAN RSP A77G3

12-10-07

DIST	COUNTY	ROUTE	POST MILES TOTAL PROJECT	SHEET NO.	TOTAL SHEETS
12	Ora	55	7.0/7.9	59	76

Randell D. Hiatt
REGISTERED CIVIL ENGINEER

June 6, 2008
PLANS APPROVAL DATE

REGISTERED PROFESSIONAL ENGINEER
Randell D. Hiatt
No. C50200
Exp. 6-30-09
CIVIL
STATE OF CALIFORNIA

The State of California or its officers or agents shall not be responsible for the accuracy or completeness of electronic copies of this plan sheet.

To accompany plans dated 12-28-09

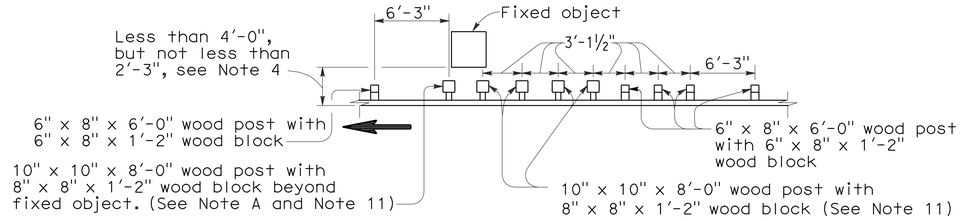

NOTE A: For a series of fixed objects (bridge columns, overhead sign supports, etc.) additional 10" x 10" x 8'-0" wood post with 8" x 8" x 1'-2" wood blocks at 3'-1½" center to center spacing are to be used between fixed object(s).

STRENGTHENED RAILING SECTIONS FOR FIXED OBJECT

Use strengthened railing sections with Layout Types 16D or 16E where minimum clearance between the guard railing and fixed object(s) is less than 4'-0", but not less than 2'-3". See Note 4.

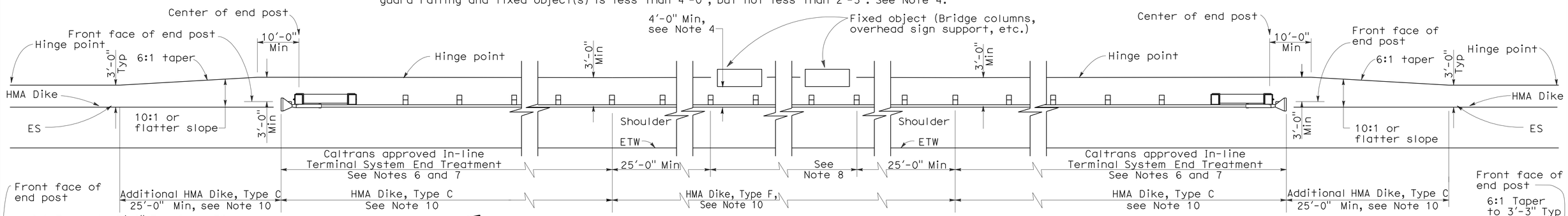

TYPE 16D LAYOUT

(GUARD RAILING INSTALLATION AT ROADSIDE FIXED OBJECT OR OBJECTS WITH AN IN-LINE END TREATMENT AT EACH END OF RAILING)
See Note 9

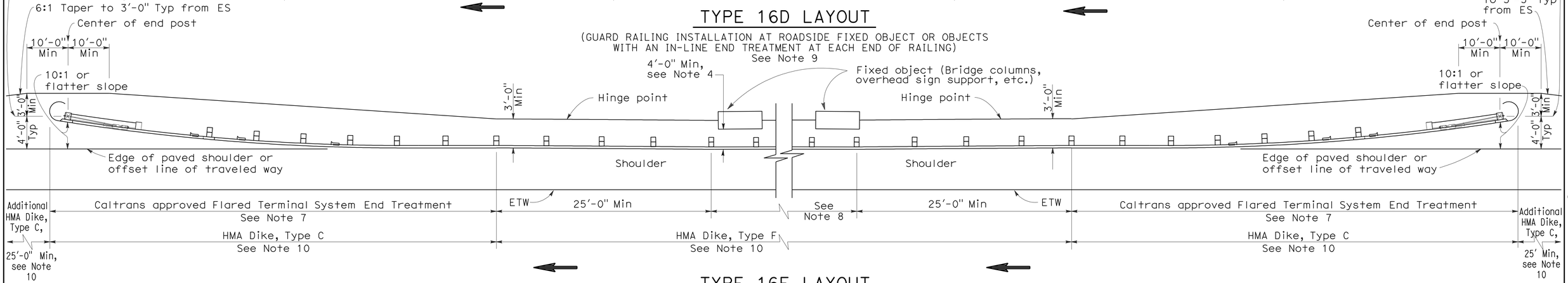

TYPE 16E LAYOUT

(GUARD RAILING INSTALLATION AT ROADSIDE FIXED OBJECT OR OBJECTS WITH A FLARED END TREATMENT AT EACH END OF RAILING)
See Note 9

NOTES:

1. Line post, blocks and hardware to be used are shown on Standard Plans A77A1, A77A2, A77B1, A77C1 and A77C2.
2. Guard railing post spacing to be 6'-3" center to center, except as otherwise noted.
3. Except as noted, line posts are 6" x 8" x 6'-0" wood with 6" x 8" x 1'-2" wood blocks. W6 x 9 steel posts, 6'-0" in length, with 6" x 8" x 1'-2" notched wood blocks or notched recycled plastic blocks may be used for 6" x 8" x 6'-0" wood line posts with 6" x 8" x 1'-2" wood blocks where applicable and when specified.
4. A 4'-0" minimum clearance is required between the face of the railing and the face of a fixed object located directly behind standard guard railing sections with post spacing at 6'-3". Construct guard railing as shown in the detail "Strengthened Railing Sections for Fixed Objects" on this plan, where the clearance between the face of the railing and the face of a fixed object is less than 4'-0", but not less than 2'-3". Where the clearance is less than 2'-3", a concrete wall or barrier should be constructed to shield the fixed object(s).
5. Direction of adjacent traffic indicated by ⟶ .
6. In-line Terminal System End Treatments are used where site conditions will not accommodate a flared end treatment.
7. The type of terminal system to be used will be shown on the Project Plans.
8. As site conditions dictate, construct additional guard railing to shield fixed object(s). Additional guard railing length equal to multiples of 12'-6". Post spacing at 6'-3", except as specified in Note 4.
9. Layout Types 16D through 16L, shown on the A77G Series of Revised Standard Plans, are typically used where guard railing is recommended to shield roadside fixed object(s) and a crashworthy end treatment is required for both directions of traffic.
10. Where placement of dike is required with guard railing, see Revised Standard Plan RSP A77C4 for dike positioning details.
11. W6 x 15 steel post, 8'-0" in length, with 8" x 8" x 1'-2" notched wood block or notched recycled plastic block may be used in place of the 10" x 10" x 8'-0" wood post with 8" x 8" x 1'-2" wood block shown in the "Strengthened Railing Sections Detail."

STATE OF CALIFORNIA
DEPARTMENT OF TRANSPORTATION

METAL BEAM GUARD RAILING TYPICAL LAYOUTS FOR ROADSIDE FIXED OBJECTS

NO SCALE

RSP A77G4 DATED JUNE 6, 2008 SUPERSEDES STANDARD PLAN A77G4
DATED MAY 1, 2006 - PAGE 62 OF THE STANDARD PLANS BOOK DATED MAY 2006.

REVISED STANDARD PLAN RSP A77G4

2006 REVISED STANDARD PLAN RSP A77G4

12-10-07

DIST	COUNTY	ROUTE	POST MILES TOTAL PROJECT	SHEET NO.	TOTAL SHEETS
12	Ora	55	7.0/7.9	60	76

Randell D. Hiatt
REGISTERED CIVIL ENGINEER

June 6, 2008
PLANS APPROVAL DATE

REGISTERED PROFESSIONAL ENGINEER
Randell D. Hiatt
No. C50200
Exp. 6-30-09
CIVIL
STATE OF CALIFORNIA

The State of California or its officers or agents shall not be responsible for the accuracy or completeness of electronic copies of this plan sheet.

To accompany plans dated 12-28-09

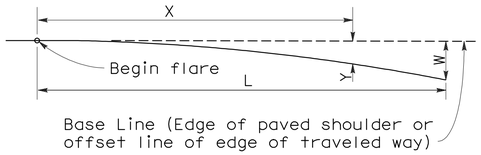

$$Y = \frac{WX^2}{L^2}$$

Y = Offset from base line
W = Maximum offset
X = Distance along base line
L = Length of flare

PARABOLIC FLARE OFFSETS

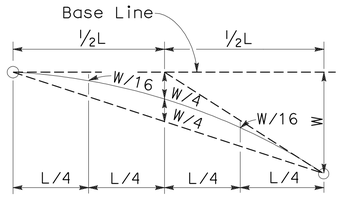

TYPICAL PARABOLIC LAYOUT

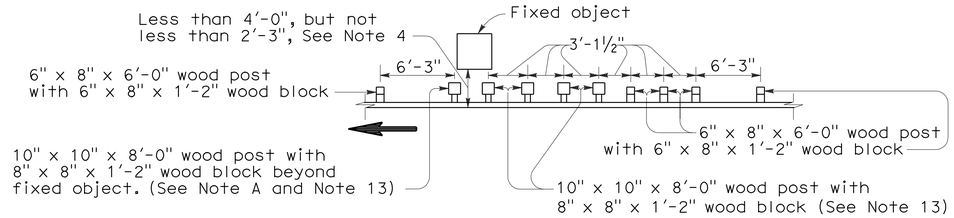

NOTE A: For a series of fixed objects (bridge columns, overhead sign supports, etc.) additional 10" x 10" x 8'-0" wood post with 8" x 8" x 1'-2" wood blocks at 3'-1½" center to center spacing are to be used between fixed object(s).

STRENGTHENED RAILING SECTIONS FOR FIXED OBJECT

Use strengthened railing sections with Layout Types 16F or 16G where minimum clearance between the face of the guard railing and fixed object(s) is less than 4'-0", but not less than 2'-3". See Note 4.

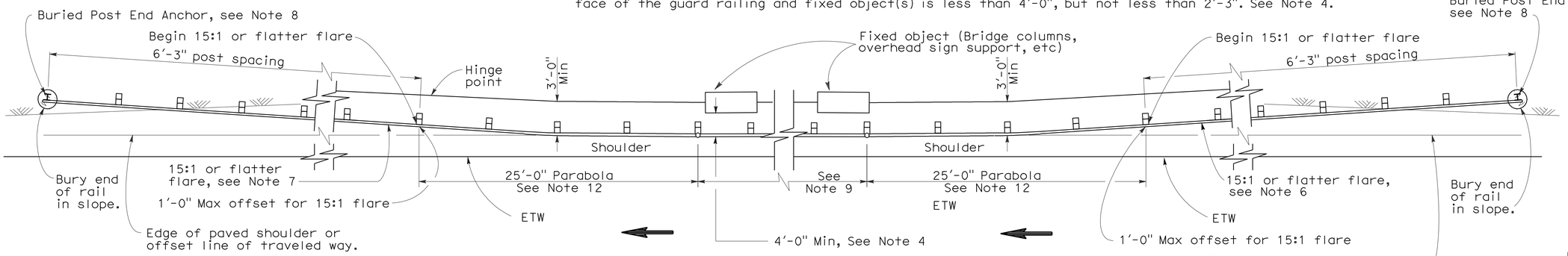

TYPE 16F LAYOUT

(GUARD RAILING INSTALLATION AT ROADSIDE FIXED OBJECT OR OBJECTS WITH A BURIED END ANCHOR TREATMENT AT EACH END OF RAILING)
See Notes 10 and 11

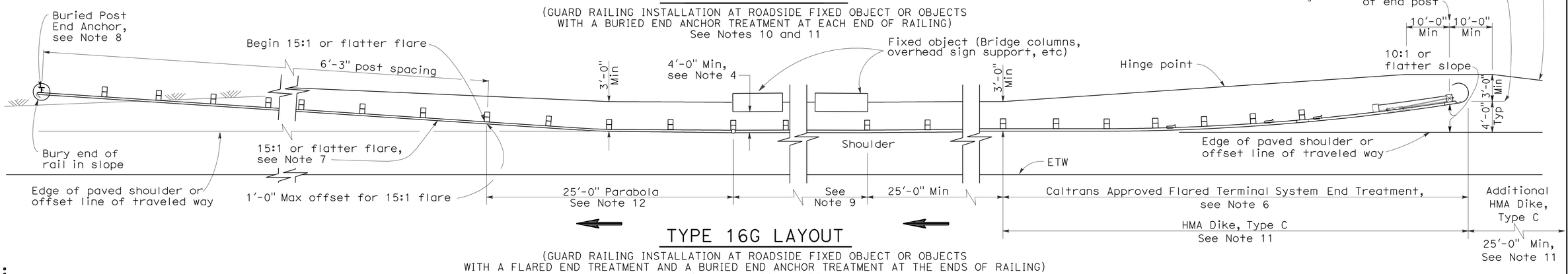

TYPE 16G LAYOUT

(GUARD RAILING INSTALLATION AT ROADSIDE FIXED OBJECT OR OBJECTS WITH A FLARED END TREATMENT AND A BURIED END ANCHOR TREATMENT AT THE ENDS OF RAILING)
See Notes 10 and 11

NOTES:

1. Line post, blocks and hardware to be used are shown on Standard Plans A77A1, A77A2, A77B1, A77C1 and A77C2.
2. Guard railing post spacing to be 6'-3" center to center, except as otherwise noted.
3. Except as noted, line posts are 6" x 8" x 6'-0" wood with 6" x 8" x 1'-2" wood blocks. W6 x 9 steel posts, 6'-0" in length, with 8" x 8" x 1'-2" notched wood blocks or notched recycled plastic blocks may be used for 6" x 8" x 6'-0" wood posts with 6" x 8" x 1'-2" wood blocks where applicable and when specified.
4. A 4'-0" minimum clearance is required between the face of the railing and the face of a fixed object located directly behind standard guard railing sections with post spacing at 6'-3". Construct guard railing as shown in the detail "Strengthened Railing Sections for Fixed Objects" on this plan, where the clearance between the face of the railing and the face of a fixed object is less than 4'-0", but not less than 2'-3". Where the clearance is less than 2'-3", a concrete wall or barrier should be constructed to shield the fixed object(s).
5. Direction of adjacent traffic indicated by ➡.
6. The type of terminal system to be used will be shown on the Project Plans.
7. The 15:1 or flatter flare for the buried post anchor is based on the edge of the paved shoulder or offset line of edge of the traveled way. The length of guard railing within the 15:1 or flatter flare is based on site conditions and should be a length equal to multiples of 12'-6".
8. For details of the Buried Post End Anchor details, see Standard Plan A77I2.
9. As site conditions dictate, construct additional guard railing to shield fixed object(s). Additional guard railing length equal to multiples of 12'-6". Post spacing at 6'-3", except as specified in Note 4.
10. Layout Types 16D through 16L, shown on the A77G Series of Revised Standard Plans, are typically used on highways where guard railing is recommended to shield roadside fixed object(s) and a crashworthy end treatment is required for both directions of traffic.
11. Where placement of dike is required with guard railing, see Revised Standard Plan RSP A77C4 for dike positioning details.
12. For typical flare offsets for 25'-0" length parabola with maximum offset of 1'-0", see Revised Standard Plan RSP A77E1.
13. W6 x 15 steel post, 8'-0" in length, with 8" x 8" x 1'-2" notched wood block or notched recycled plastic blocks may be used in place of the 10" x 10" x 8'-0" wood post with 8" x 8" x 1'-2" wood block shown in the "Strengthened Railing Sections Detail".

STATE OF CALIFORNIA
DEPARTMENT OF TRANSPORTATION

METAL BEAM GUARD RAILING TYPICAL LAYOUTS FOR ROADSIDE FIXED OBJECTS

NO SCALE

RSP A77G5 DATED JUNE 6, 2008 SUPERSEDES STANDARD PLAN A77G5
DATED MAY 1, 2006 - PAGE 63 OF THE STANDARD PLANS BOOK DATED MAY 2006.

REVISED STANDARD PLAN RSP A77G5

2006 REVISED STANDARD PLAN RSP A77G5

12-10-07

DIST	COUNTY	ROUTE	POST MILES TOTAL PROJECT	SHEET NO.	TOTAL SHEETS
12	Ora	55	7.0/7.9	61	76

Randell D. Hiatt
REGISTERED CIVIL ENGINEER

June 5, 2009
PLANS APPROVAL DATE

REGISTERED PROFESSIONAL ENGINEER Randell D. Hiatt No. C50200 Exp. 6-30-09 CIVIL STATE OF CALIFORNIA

The State of California or its officers or agents shall not be responsible for the accuracy or completeness of electronic copies of this plan sheet.

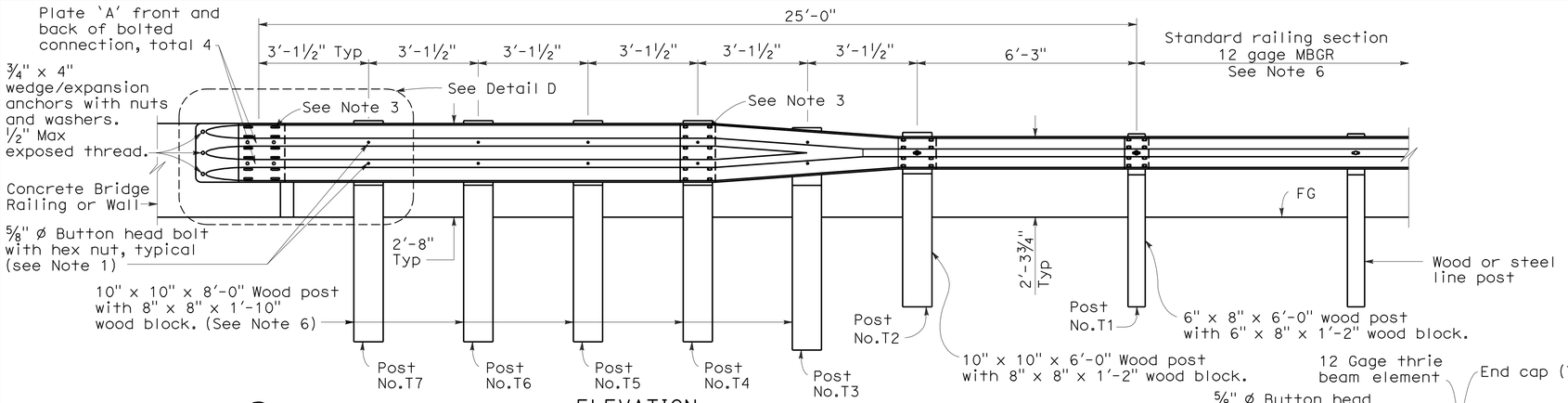

ELEVATION

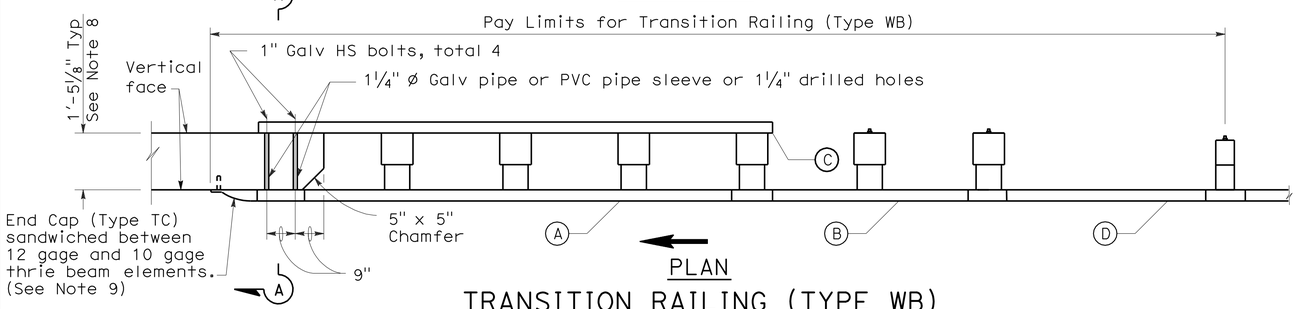

PLAN

TRANSITION RAILING (TYPE WB)

(No Blockout Attachment)

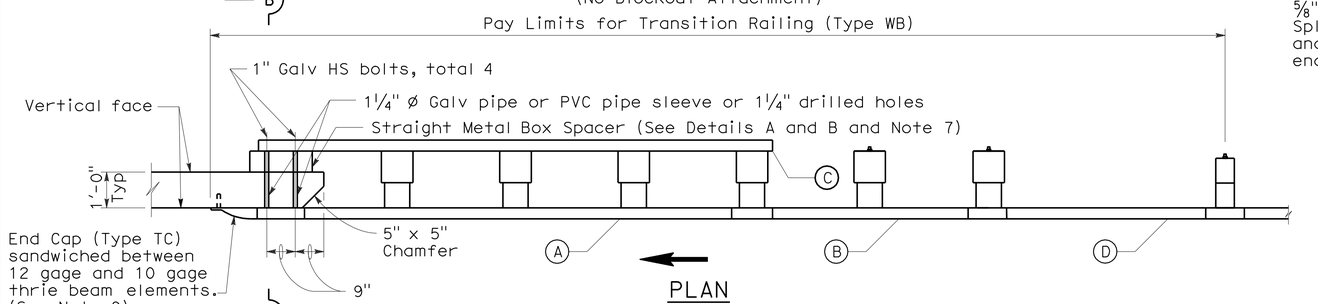

PLAN

TRANSITION RAILING (TYPE WB)

(Blockout Attachment)

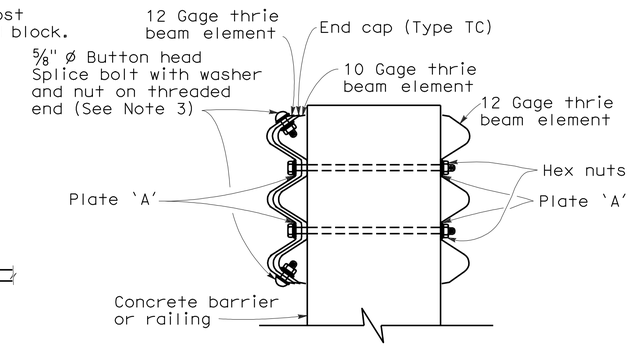

SECTION A-A

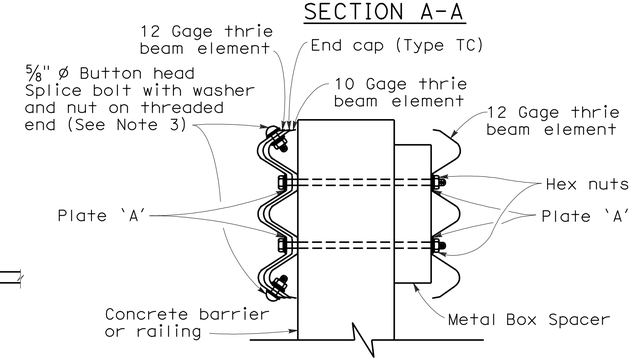

SECTION B-B

LEGEND

(A) Nested thrie beam elements (one 12 gage element nested over one 10 gage element).

(B) One 10 gage "W" beam to thrie beam element.

(C) One 12 gage thrie beam element.

(D) One 10 gage "W" beam rail element (7'-3½" length)

10 gage = 0.135" thick

12 gage = 0.108" thick

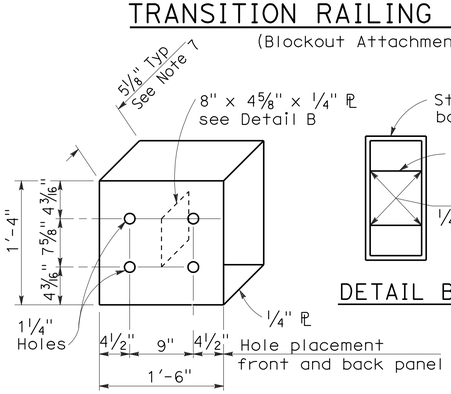

DETAIL A

STRAIGHT METAL BOX SPACER

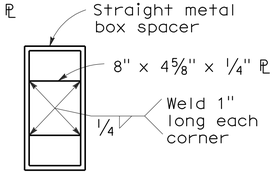

DETAIL B

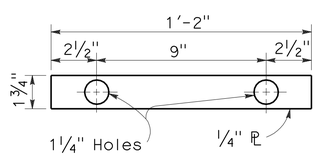

DETAIL C

PLATE 'A'

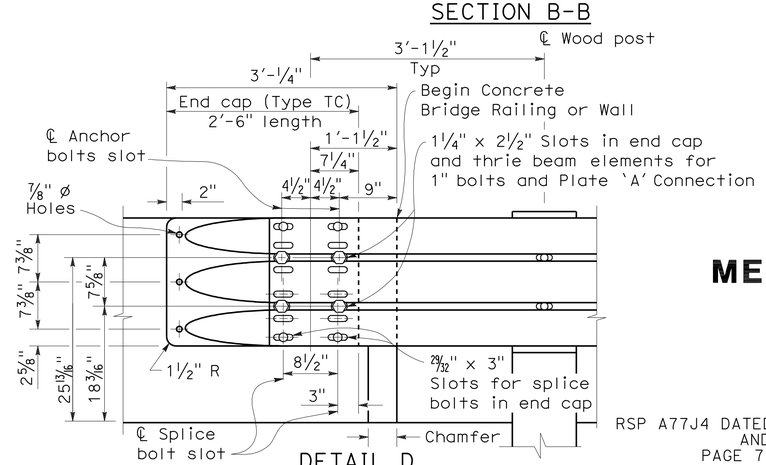

DETAIL D

NOTES:

To accompany plans dated 12-28-09

1. Use 5/8 " Ø Button head bolts and hex nuts for connections to posts. No washer on rail face for bolted connections to post.
2. The nested rail elements, end cap, and 'W' beam to thrie beam element may be spliced together prior to bolting the elements to the wood post and concrete barrier or railing.
3. Exterior splice bolt holes for rail element splices at Post No.T4 and the connection to the concrete barrier or railing shall be the standard 29/32 " x 1 1/8 " slot size. Interior splice bolt holes at these locations may be increased up to 1 1/4 " Ø. Only the top 2 and the bottom 2 splice bolts with washers and nuts are required for rail splices at Post No.T4 and the connection to the concrete barrier or railing.
4. Direction of adjacent traffic indicated by →.
5. The top elevation of Post Nos.T2 through T7 shall not project more than 1" above the top elevation of the rail element.
6. Typically, the railing connected to Transition Railing (Type WB) will be either standard railing section of metal beam guard railing or an approved Caltrans end treatment attached to Post No.T1.
7. The depth of the metal box spacer varies from the 5 1/8 " to 1 1/2 " and is dependent on the width of the concrete railing or wall. The combined dimension for the depth of the metal box spacer plus the width of railing or wall is typically 17 1/8 ". Where the space between the backside of the concrete railing or wall and the rear thrie beam element is less than 1 1/2 ", metal plates similar to Plate 'A' are to be used as spacers.
8. Where the width of the concrete railing or wall is greater than 17 1/8 ", wood blocks are to be used to fill the space created between the backside of Posts No.4 through No.7 and the rear thrie beam element. These wood blocks shall be 8" in width and 1'-2" in length. The dimension between the front thrie beam element and the rear thrie beam element is to match the width of the concrete railing or wall.
9. End cap may be installed over 12 gage and 10 gage thrie beam elements where transition railing is installed on the departure end of bridge railing.

STATE OF CALIFORNIA
DEPARTMENT OF TRANSPORTATION

METAL BEAM GUARD RAILING TRANSITION RAILING (TYPE WB)

NO SCALE

RSP A77J4 DATED JUNE 5, 2009 SUPERSEDES RSP A77J4 DATED JUNE 6, 2008 AND STANDARD PLAN A77J4 DATED MAY 1, 2006 - PAGE 75 OF THE STANDARD PLANS BOOK DATED MAY 2006.

REVISED STANDARD PLAN RSP A77J4

2006 REVISED STANDARD PLAN RSP A77J4

5-14-09

DIST	COUNTY	ROUTE	POST MILES TOTAL PROJECT	SHEET NO.	TOTAL SHEETS
12	Ora	55	7.0/7.9	62	76

REGISTERED CIVIL ENGINEER

November 17, 2006
PLANS APPROVAL DATE

REGISTERED PROFESSIONAL ENGINEER Michael Janzen No. 44788 Exp. 03-31-08 CIVIL STATE OF CALIFORNIA

The State of California or its officers or agents shall not be responsible for the accuracy or completeness of electronic copies of this plan sheet.

To accompany plans dated 12-28-09

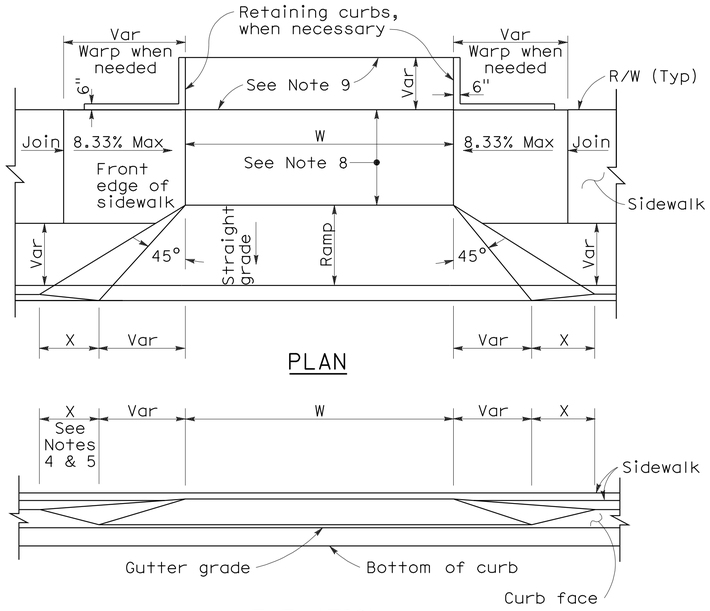

PLAN

ELEVATION

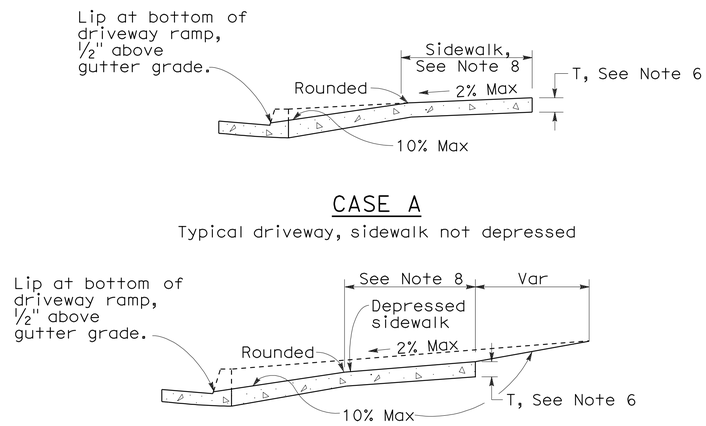

CASE A

Typical driveway, sidewalk not depressed

CASE B

Driveway with depressed sidewalk

SECTIONS

DRIVEWAYS

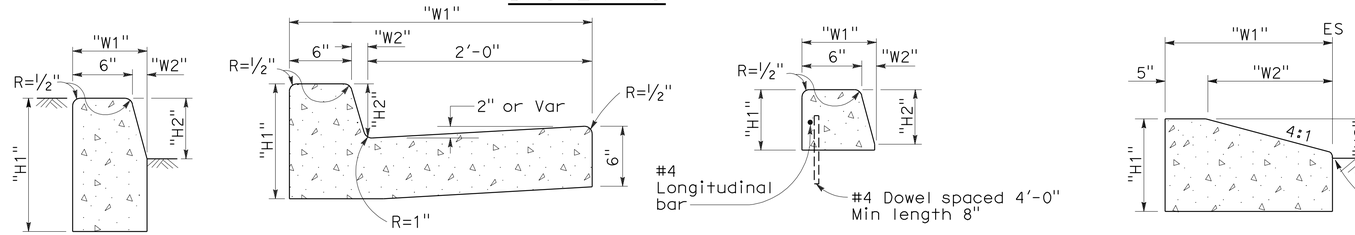

TYPE A1 CURBS
See Table A

TYPE A2 CURBS
See Table A

TYPE A3 CURBS
Superimposed on existing pavement
See Table A

TYPE D CURBS
See Table A

TYPE E CURB

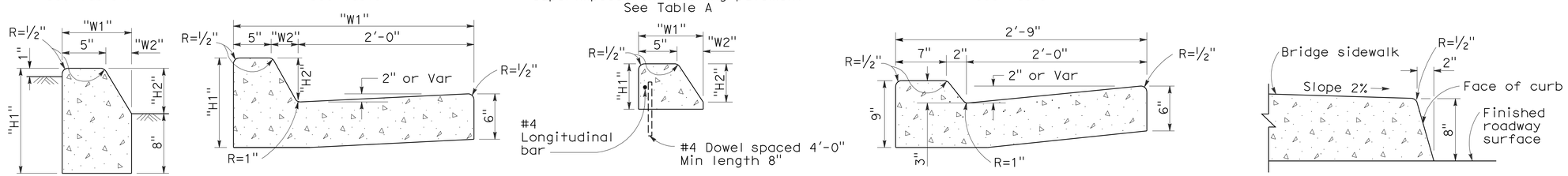

TYPE B1 CURBS
See Table A

TYPE B2 CURBS
See Table A

TYPE B3 CURBS
Superimposed on existing pavement
See Table A

TYPE B4 CURBS

TYPE H CURB
On Bridges

CURB QUANTITIES

TYPE	CUBIC YARDS PER LINEAR FOOT
A1-6	0.02585
A1-8	0.03084
A2-6	0.05903
A2-8	0.06379
A3-6	0.01036
A3-8	0.01435
B1-4	0.02185
B1-6	0.02930
B2-4	0.05515
B2-6	0.06171
B3-4	0.00641
B3-6	0.01074
B4	0.05709
D-4	0.04083
D-6	0.06804
E	0.06661

TABLE A

CURB TYPE	DIMENSIONS "H1"	"H2"	"W1"	"W2"
A1-6	1'-2"	6"	7½"	1½"
A1-8	1'-4"	8"	8"	2"
A2-6	1'-0"	6"	2'-7½"	1½"
A2-8	1'-2"	8"	2'-8"	2"
A3-6	6"	5"	7¼"	1¼"
A3-8	8"	7"	7¾"	1¾"
B1-4	1'-0"	4"	7½"	2½"
B1-6	1'-2"	6"	9"	4"
B2-4	10"	4"	2'-7½"	2½"
B2-6	1'-0"	6"	2'-9"	4"
B3-4	4"	3"	7"	2"
B3-6	6"	5"	8½"	3½"
D-4	10"	4"	1'-6"	1'-1"
D-6	1'-0"	6"	2'-2"	1'-8"

NOTES:

1. Case A driveway section typically applies.
2. Use Case B driveway section when ramp slopes would exceed 10% in Case A.
3. Use Case B driveway section when sidewalk cross slope would exceed 2% in Case A.
4. X=3'-0" except for curb heights over 10" where 4:1 slopes shall be used on curb slope.
5. X is a variable when sidewalk is located where wheelchairs may traverse the surface. Slopes shall not exceed 8.33%.
6. Sidewalk and ramp thickness "T" at driveway shall be 4" for residental and 6" for commercial.
7. Difference in slope of the driveway ramp and the slope of a line between the gutter and a point on the roadway 5'-0" from gutter line shall not exceed 15%. Reduce driveway ramp slope, not gutter slope, where required.
8. Minimum width of clear passageway for sidewalk shall be 4'-0".
9. Retaining curbs and acquisition of construction easement may be necessary for narrow sidewalks or curb heights in excess of 6".
10. Across the pedestrian route at curb ramp locations, the gutter pan slope shall not exceed 1" of depth for each 2'-0" of width.

CURBS

STATE OF CALIFORNIA
DEPARTMENT OF TRANSPORTATION

CURBS AND DRIVEWAYS

NO SCALE

RSP A87A DATED NOVEMBER 17, 2006 SUPERSEDES STANDARD PLAN A87A DATED MAY 1, 2006 - PAGE 113 OF THE STANDARD PLANS BOOK DATED MAY 2006.

REVISED STANDARD PLAN RSP A87A

2006 REVISED STANDARD PLAN RSP A87A

10-25-06

DIST	COUNTY	ROUTE	POST MILES TOTAL PROJECT	SHEET NO.	TOTAL SHEETS
12	Ora	55	7.0/7.9	63	76

Raymond Don Tsztoo
REGISTERED CIVIL ENGINEER

January 18, 2008
PLANS APPROVAL DATE

REGISTERED PROFESSIONAL ENGINEER
Raymond Don Tsztoo
No. C37332
Exp. 6-30-08
CIVIL
STATE OF CALIFORNIA

The State of California or its officers or agents shall not be responsible for the accuracy or completeness of electronic copies of this plan sheet.

To accompany plans dated 12-28-09

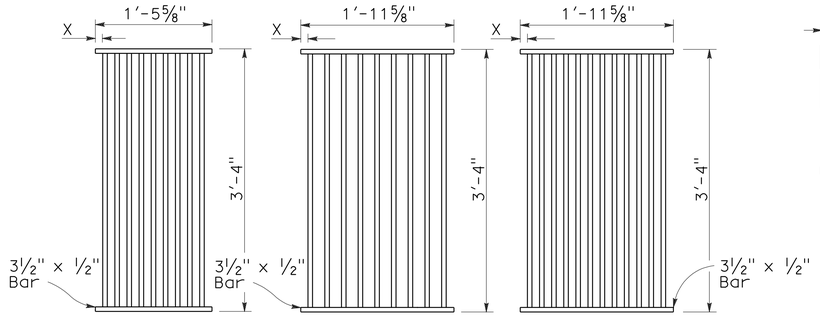

TYPE 18-9

1⅜" Clear spacing. Use within the roadbed on highways where bicycles and pedestrians are excluded.

TYPE 24-9

2" Clear spacing. Use in locations off the roadbed on all types of highways.

TYPE 24-12

1⅜" Clear spacing. Use within the roadbed on highways where bicycles and pedestrians are excluded.

RECTANGULAR GRATE DETAILS

(See table below)

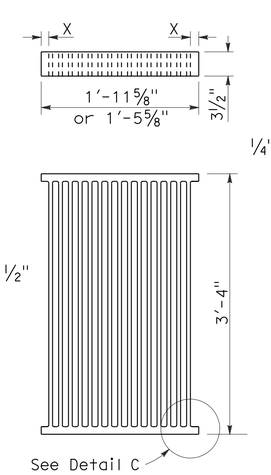

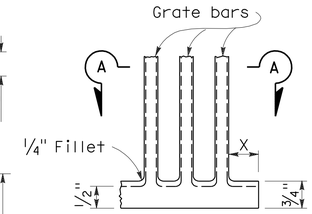

DETAIL C

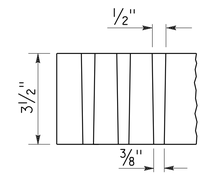

SECTION A-A

ALTERNATIVE CAST NODULAR IRON GRATE OR CAST STEEL GRATE

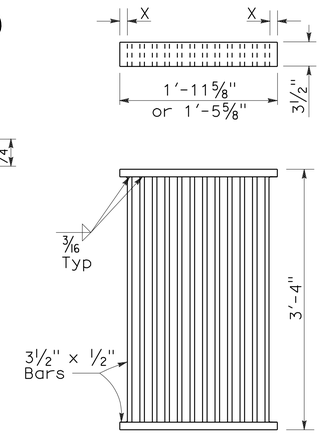

ALTERNATIVE WELDED GRATE

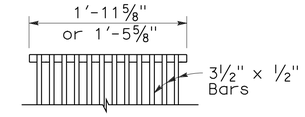

CAST END BLOCK

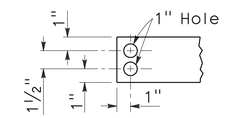

END OF BAR

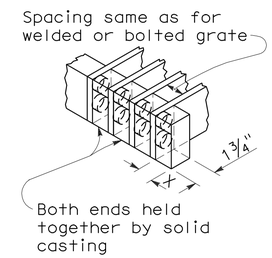

ALTERNATIVE CAST NODULAR IRON OR CAST STEEL END BLOCK GRATE

NOTES:

1. Grate type numbers refer to approximate width of grate in inches and number of bars, respectively.
2. Contractor has the option of using cast nodular iron, cast steel, welded, bolted, or cast end block grate.
3. See Special Provisions for requirements pertaining to galvanizing or asphalt dipping of grates and frames.
4. Rounded top of bars optional on all grates.
5. Pipe inlets with a grate shall be placed so that bars parallel direction of principle surface flow.
6. Full penetration butt welds may be substituted for the fillet welds on all anchors.
7. Standard square, hexagon, round or equivalent headed anchors may be substituted for the right angle hooks on the anchors shown on this plan.
8. Grate and frame weights are based on welded grates (weights of face angles, steps, protection bars, etc. are not included).

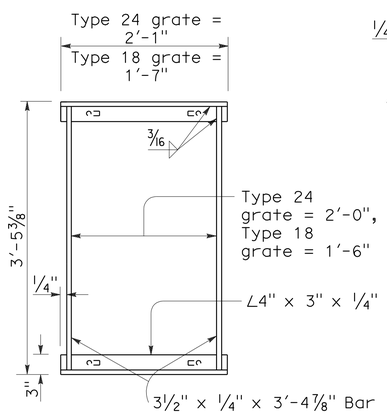

TYPICAL FRAME

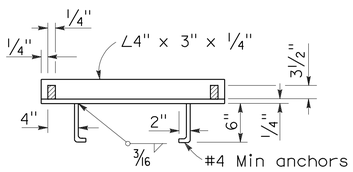

CROSS SECTION

(Thru frame)

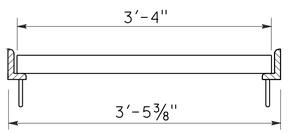

LONGITUDINAL SECTION

(Thru frame and grate)

RECTANGULAR FRAME DETAILS

(For all rectangular grates)

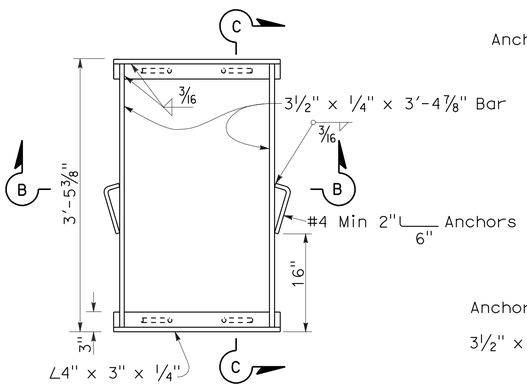

TYPICAL FRAME

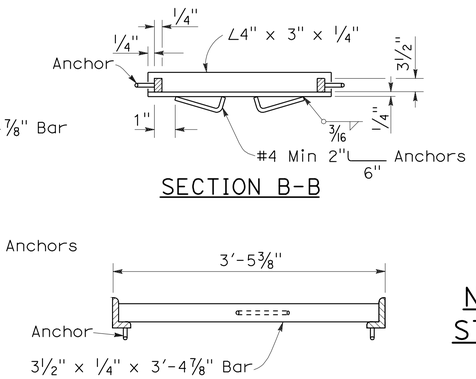

SECTION B-B

SECTION C-C

ALTERNATIVE ANCHOR FOR RECTANGULAR FRAME

(For details not shown, See Rectangular Frame Details)

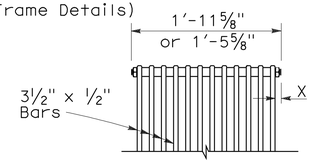

BOLTED END BLOCK

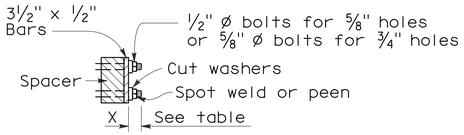

BOLTING DETAIL

ALTERNATIVE BOLTED GRATE

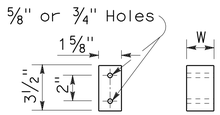

BAR SPACER

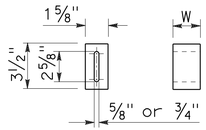

ALTERNATIVE SPACER

W = 1⅜" or 2"

GRATE BAR SPACING TABLE

TYPE	No. OF BARS	CLEAR BAR SPACING	X
18-9	9	1⅜"	1 1/16"
24-9	9	2"	1 9/16"
24-12	12	1⅜"	1¼"

INLET TYPE	COVER TYPE	WEIGHT LB
OS	PLATE	174
OL-7	PLATE	170
OL-10	PLATE	170
OL-14	PLATE	170
OL-21	PLATE	170
OCP	PLATE	112
OCPI	PLATE	112
OCPI	REDWOOD	42
OMP	PLATE	177
OMPI	PLATE	177

INLET TYPE	GRATE TYPE	No. OF GRATES	WEIGHT LB
GDO	24-12	2	634
GOL-7	24-12	1	326
GOL-10	24-12	1	326
GO,G1,G2,G3,G4 (TYPE 24)	24-9	1	263
	24-12	1	326
G4 (TYPE 18),G5,G6	18-9	1	249
GT1	18-9	2	498
GT2	18-9	2	498
GT3	24-12	2	652
GT4	24-12	2	652
TRASH RACK			22

BASIS FOR MISC IRON & STEEL FINAL PAY WEIGHTS FOR DRAINAGE INLETS

(See General Notes, No 8)

STATE OF CALIFORNIA
DEPARTMENT OF TRANSPORTATION

GRATE DETAILS

NO SCALE

RSP D77A DATED JANUARY 18, 2008 SUPERSEDES STANDARD PLAN D77A DATED MAY 1, 2006 - PAGE 155 OF THE STANDARD PLANS BOOK DATED MAY 2006.

REVISED STANDARD PLAN RSP D77A

2006 REVISED STANDARD PLAN RSP D77A

12-14-07

DIST	COUNTY	ROUTE	POST MILES TOTAL PROJECT	SHEET NO.	TOTAL SHEETS
12	Ora	55	7.0/7.9	64	76

LICENSED LANDSCAPE ARCHITECT

June 5, 2009
PLANS APPROVAL DATE

The State of California or its officers or agents shall not be responsible for the accuracy or completeness of electronic copies of this plan sheet.

LICENSED LANDSCAPE ARCHITECT — Gregory A. Balzer 2576 — 10 expiration date 2-28-11 (renewal) date 5-14-09 date — STATE OF CALIFORNIA

To accompany plans dated 12-28-09

A

AB	aggregate base
ABS	acrylonitrile-butadiene-styrene
AC	asphalt concrete
Adj	adjacent/adjustable
AIC	auxiliary irrigation controller
Alt	alternative
AMEND	amendment
ARV	air release valve
AUTO	automatic
AUX	auxiliary
AVB	atmospheric vacuum breaker

B

B&B	balled and burlapped
B/B	brass/bronze
B/B/PL	brass/bronze/plastic
B/PL	brass/plastic
BFM	bonded fiber matrix
Bit Ctd	bituminous coated
BP	booster pump
BPA	backflow preventer assembly
BPAE	backflow preventer assembly in enclosure
BPE	backflow preventer enclosure
BV	ball valve

C

CAP	corrugated aluminum pipe
CARV	combination air release valve
CCA	cam coupler assembly
CEC	controller enclosure cabinet
CHDPE	corrugated high density polyethylene
CL	chain link
CNC	control and neutral conductors
Conc	concrete
Cond	conduit
CSP	corrugated steel pipe
CST	center strip
CV	check valve

D

Dia	diameter
DIP	ductile iron pipe
DN	diameter nominal

E

EA	each
Elect	electric/electrical
Elev	elevation
ENCL	enclosure
EP	edge of pavement
ES	edge of shoulder
EST	end strip
ESTB	establishment
ETW	edge of traveled way

F

F	full circle
F/P	full/part circle
FAU	filter assembly unit
FCV	flow control valve
FERT	fertilizer
FG	finished grade
FIPT	female iron pipe thread
FIS	fertilizer injector system
FL	flow line
FM	flow monitor
FS	flow sensor
Ft	foot/feet
FV	flush valve

G

GAL	Gallon(s)
Galv	galvanized
GARV	garden valve
GPH	gallons per hour
GPM	gallons per minute
GSP	galvanized steel pipe
GV	gate valve

H

H	half circle
HB	hose bib
HDPE	high density polyethylene
HP	horsepower/hinge point
HPL	high pressure line
Hwy	highway

I

IC	irrigation controller
ICC	irrigation controller(s) in controller enclosure cabinet
ID	inside diameter
In	inches
IFS	irrigation filtration system
IPS	iron pipe size
IPT	iron pipe thread
Irr	irrigation

L

L	length
LF	linear foot

M

Max	maximum
MBGR	metal beam guard railing
MCV	manual control valve
MIC	master irrigation controller
Min	minimum
MIPT	male iron pipe thread
Misc	miscellaneous
Mtl	material
MVP	maintenance vehicle pullout

N

NCN	no common name
NL	nozzle line
No.	number
NPT	national pipe thread

O

O/C	on center
OD	outside diameter
Oz	ounce

P

P	part circle
PB	pull box
PCC	portland cement concrete
PE	polyethylene
Pkt	packet
PL	plastic
PLT	plant/planting
PLT ESTB	plant establishment
PM	post mile
PR	pressure rated
PRLV	pressure relief valve
PSFM	polymer stabilized fiber matrix
PSI	pounds per square inch
PRV	pressure reducing valve
PVC	polyvinyl chloride
Pvmt	pavement

Q

Q	quarter circle
QCV	quick coupling valve

R

R	radius
RCP	reinforced concrete pipe
RCV	remote control valve
RCVM	remote control valve (master)
RCVMF	remote control valve (master) w/ flow meter
RCW	recycled/reclaimed water
RECP	rolled erosion control product
REQ	required
R/W	right of way

S

S	slip
SCC	sprinkler control conduit
SCH	schedule
SF	state-furnished
Shld	shoulder
SQFT	square foot/feet
SQYD	square yard(s)
SST	side strip
Sta	station
Std	standard
SW	sidewalk/sound wall

T

T	third circle/thread
TLS	truck loading standpipe
TQ	three quarter circle
TRM	turf reinforcement mat
TRVD	traveled
TT	two third circle
Typ	typical

U

UG	underground

V

VAU	valve assembly unit

W

W	width
W/	with
WM	water meter
WS	wye strainer
WSP	welded steel pipe
WWM	welded wire mesh

NOTE:

FOR ADDITIONAL ABBREVIATIONS, SEE STANDARD PLANS A10A AND A10B.

STATE OF CALIFORNIA
DEPARTMENT OF TRANSPORTATION

PLANTING AND IRRIGATION ABBREVIATIONS

NO SCALE

RSP H1 DATED JUNE 5, 2009 SUPERSEDES STANDARD PLAN H1
DATED MAY 1, 2006 - PAGE 201 OF THE STANDARD PLANS BOOK DATED MAY 2006.

REVISED STANDARD PLAN RSP H1

2006 REVISED STANDARD PLAN RSP H1

5-28-09

DIST	COUNTY	ROUTE	POST MILES TOTAL PROJECT	SHEET NO.	TOTAL SHEETS
12	Ora	55	7.0/7.9	65	76

LICENSED LANDSCAPE ARCHITECT

June 5, 2009
PLANS APPROVAL DATE

The State of California or its officers or agents shall not be responsible for the accuracy or completeness of electronic copies of this plan sheet.

LICENSED LANDSCAPE ARCHITECT — Gregory A. Balzer — 2576 — 10 (expiration) — 2-28-11 (renewal date) — 5-14-09 (date) — STATE OF CALIFORNIA

To accompany plans dated 12-28-09

2006 REVISED STANDARD PLAN RSP H2

EXISTING	PROPOSED	ITEM DESCRIPTION
		WATER METER (WM)
		BACKFLOW PREVENTER ASSEMBLY (BPA)
		BACKFLOW PREVENTER ASSEMBLY IN ENCLOSURE (BPAE)
		BACKFLOW PREVENTER ENCLOSURE (BPE)
		BOOSTER PUMP (BP)
		TRUCK LOADING STANDPIPE (TLS)
FS	FS	FLOW SENSOR (FS)
X	X	MASTER IRRIGATION CONTROLLER (MIC)
		AUXILIARY IRRIGATION CONTROLLER (AIC)
		IRRIGATION CONTROLLER (IC)/ IRRIGATION CONTROLLER (IC) (BATTERY) IRRIGATION CONTROLLER (IC) (SOLAR)
		IRRIGATION CONTROLLER(S) IN CONTROLLER ENCLOSURE CABINET (ICC)
		CONTROL AND NEUTRAL CONDUCTORS (CNC)
SCC	SCC	SPRINKLER CONTROL CONDUIT (SCC)
		IRRIGATION CROSSOVER
		EXTEND IRRIGATION CROSSOVER
		IRRIGATION SLEEVE
dip	DIP	DUCTILE IRON PIPE (SUPPLY LINE) (MAIN) (DIP)
		GALVANIZED STEEL PIPE (SUPPLY LINE) (MAIN) (GSP)
		GALVANIZED STEEL PIPE (SUPPLY LINE) (LATERAL) (GSP)
		PLASTIC PIPE (PR 200) (SUPPLY LINE) (MAIN)
		PLASTIC PIPE (PR 200) (SUPPLY LINE) (LATERAL)
		PLASTIC PIPE (IRRIGATION LINE)
		REMOTE CONTROL VALVE (RCV) REMOTE CONTROL VALVE (MASTER) (RCVM) REMOTE CONTROL VALVE (MASTER) W/FLOW METER (RCVMF)
		MANUAL CONTROL VALVE (MCV)
		VALVE ASSEMBLY UNIT (VAU)
		WYE STRAINER (WS)
		FILTER ASSEMBLY UNIT (FAU)
		GATE VALVE (GV)
		BALL VALVE (BV)

EXISTING	PROPOSED	ITEM DESCRIPTION
		QUICK COUPLING VALVE (QCV)
		CAM COUPLER ASSEMBLY (CCA)
		PRESSURE REDUCING VALVE (PRV)
		PRESSURE RELIEF VALVE (PRLV)
		FLOW CONTROL VALVE (FCV)
		COMBINATION AIR RELEASE VALVE (CARV)
		CHECK VALVE (CV)
		FLUSH VALVE (FV)
		NOZZLE LINE W/TURNING UNION
		IRRIGATION SYSTEM
		IRRIGATION SYSTEM TO BE REMOVED
		CHAIN LINK GATE
		QUICK COUPLING VALVE W/SPRINKLER PROTECTOR
3	3	SPRINKLER W/SPRINKLER PROTECTOR
	C	CONNECT TO EXISTING SYSTEM
		CAP
		CAP EXISTING

VALVE CODE

RCV SIZE
IRRIGATION CONTROLLER
CONTROLLER STATION
VALVE IN PARALLEL (IF APPLICABLE)
GPM
QUANTITY OF SPRINKLERS (WHEN SHOWN)

* 2½"-A-2b-40 -60

MCV SIZE
VALVE NUMBER
GPM
QUANTITY OF TYPE SPRINKLERS (WHEN SHOWN)

* 2"-3-30 -50

* VALVE CODES FOR EXISTING VALVES ARE SHOWN IN A DASHED ENCLOSURE.

STATE OF CALIFORNIA
DEPARTMENT OF TRANSPORTATION

PLANTING AND IRRIGATION SYMBOLS

NO SCALE

RSP H2 DATED JUNE 5, 2009 SUPERSEDES RSP H2 DATED MARCH 7, 2008 AND STANDARD PLAN H2 DATED MAY 1, 2006 - PAGE 202 OF THE STANDARD PLANS BOOK DATED MAY 2006.

REVISED STANDARD PLAN RSP H2

5-11-09

DIST	COUNTY	ROUTE	POST MILES TOTAL PROJECT	SHEET NO.	TOTAL SHEETS
12	Ora	55	7.0/7.9	66	76

LICENSED LANDSCAPE ARCHITECT

June 5, 2009
PLANS APPROVAL DATE

The State of California or its officers or agents shall not be responsible for the accuracy or completeness of electronic copies of this plan sheet.

LICENSED LANDSCAPE ARCHITECT
Gregory A. Balzer 2576
10 January
2-28-11
Renewal Date
5-14-09
Date
STATE OF CALIFORNIA

To accompany plans dated 12-28-09

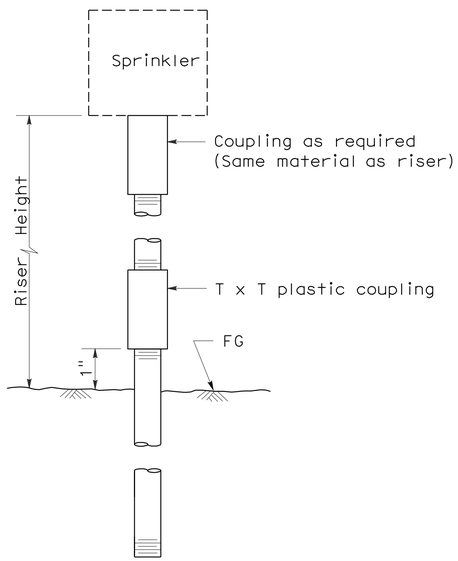

ELEVATION
RISER TYPE I

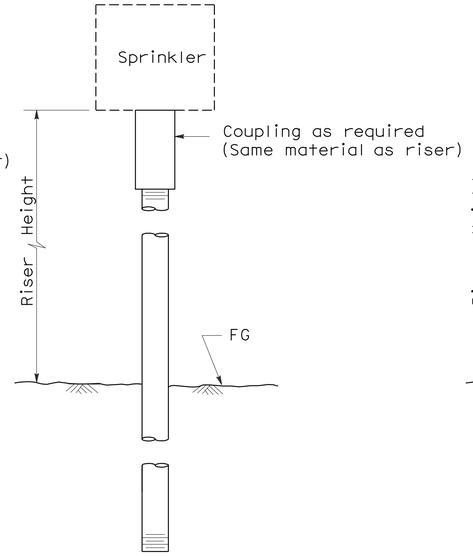

ELEVATION
RISER TYPE II

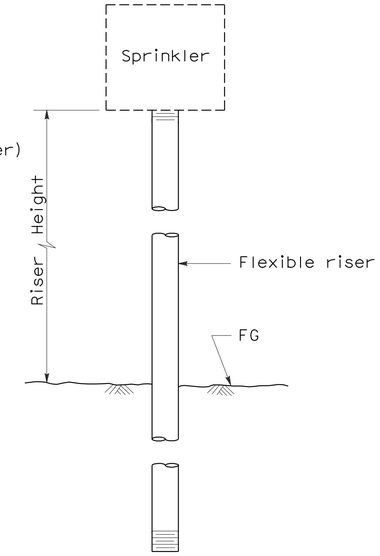

ELEVATION
RISER TYPE III

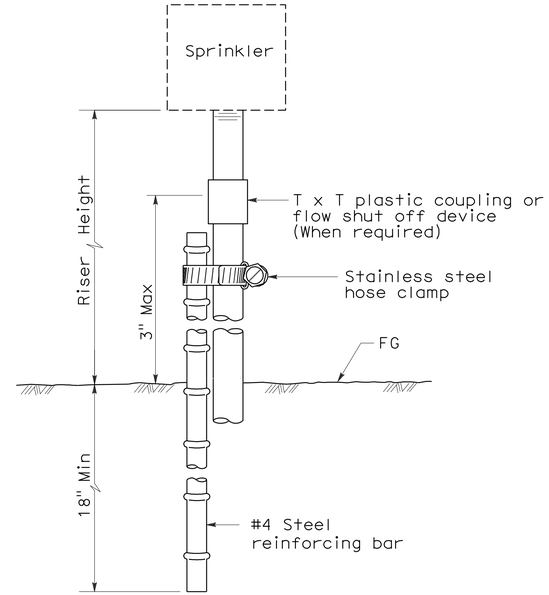

ELEVATION
RISER TYPE IV

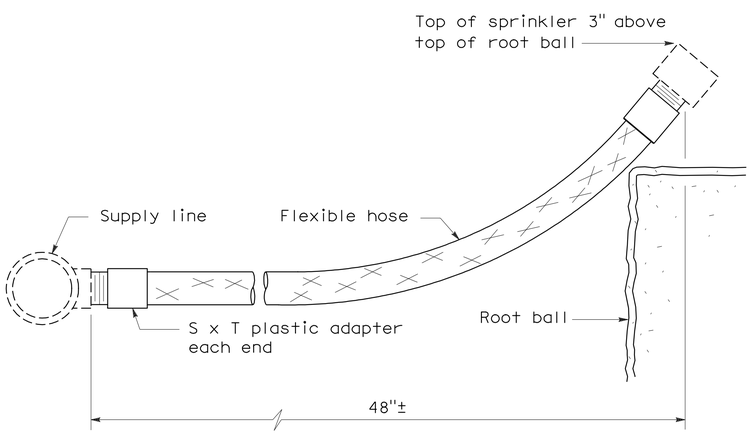

ELEVATION
RISER TYPE V

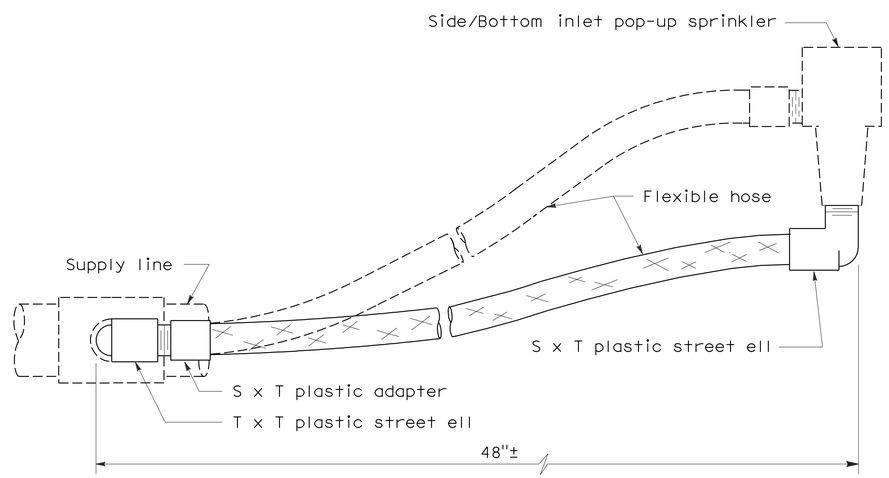

ELEVATION
RISER TYPE VI

STATE OF CALIFORNIA
DEPARTMENT OF TRANSPORTATION

PLANTING AND IRRIGATION DETAILS

NO SCALE

RSP H5 DATED JUNE 5, 2009 SUPERSEDES STANDARD PLAN H5
DATED MAY 1, 2006 - PAGE 205 OF THE STANDARD PLANS BOOK DATED MAY 2006.

REVISED STANDARD PLAN RSP H5

2006 REVISED STANDARD PLAN RSP H5

5-28-09

DIST	COUNTY	ROUTE	POST MILES TOTAL PROJECT	SHEET NO.	TOTAL SHEETS
12	Ora	55	7.0/7.9	67	76

Randell D. Hiatt
REGISTERED CIVIL ENGINEER

June 6, 2008
PLANS APPROVAL DATE

REGISTERED PROFESSIONAL ENGINEER
Randell D. Hiatt
No. C50200
Exp. 6-30-09
CIVIL
STATE OF CALIFORNIA

The State of California or its officers or agents shall not be responsible for the accuracy or completeness of electronic copies of this plan sheet.

To accompany plans dated 12-28-09

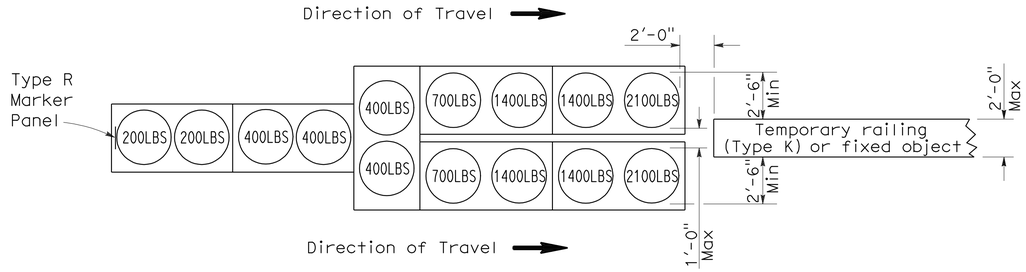

ARRAY 'TU14'

Approach speed 45 mph or more

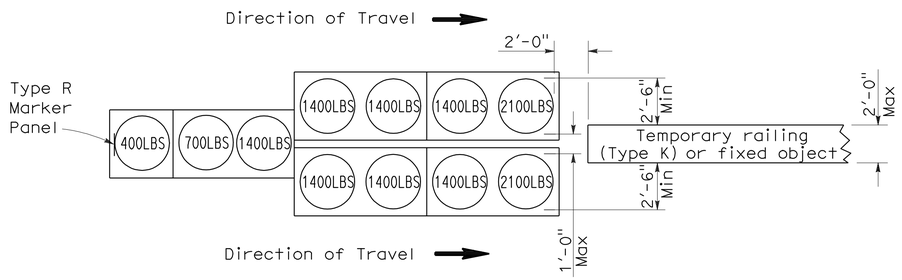

ARRAY 'TU11'

Approach speed less than 45 mph

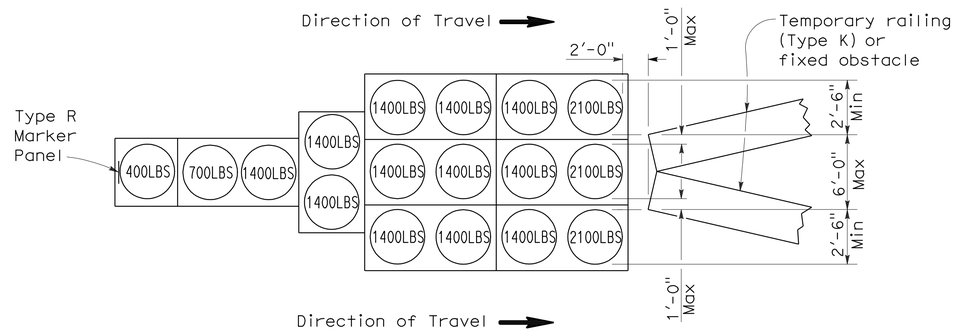

ARRAY 'TU17'

Approach speed less than 45 mph

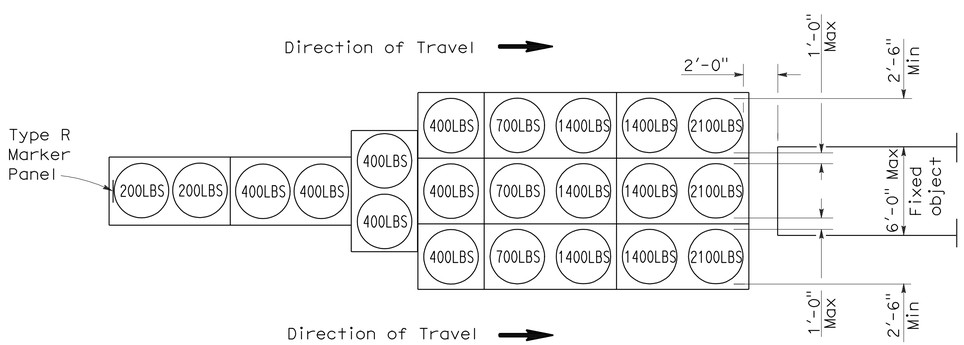

ARRAY 'TU21'

Approach speed 45 mph or more

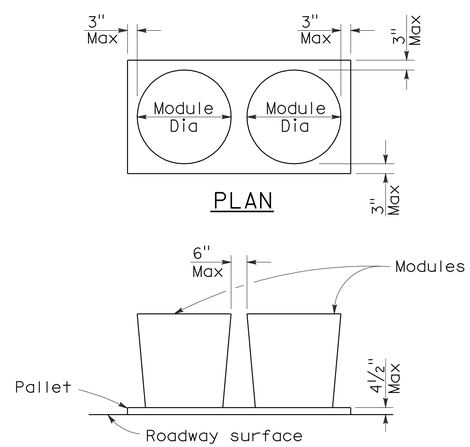

CRASH CUSHION PALLET DETAIL

See Note 7

NOTES:

1. (XXX) Indicates sand filled module location and weight of sand in pounds for each module. Module spacing is based on the greater diameter of the module.
2. All sand weights are nominal.
3. Temporary crash cushion arrays shall not encroach on the traveled way.
4. Place the top of Type R marker panel 1" below the module lid.
5. Refer to Standard Plan A73B for marker details.
6. Approach speeds indicated conform to NCHRP 350 Report criteria.
7. Use of pallets is optional.

STATE OF CALIFORNIA
DEPARTMENT OF TRANSPORTATION

TEMPORARY CRASH CUSHION, SAND FILLED (UNIDIRECTIONAL)

NO SCALE

RSP T1A DATED JUNE 6, 2008 SUPERSEDES STANDARD PLAN T1A
DATED MAY 1, 2006 - PAGE 211 OF THE STANDARD PLANS BOOK DATED MAY 2006.

REVISED STANDARD PLAN RSP T1A

2006 REVISED STANDARD PLAN RSP T1A

5-15-08

DIST	COUNTY	ROUTE	POST MILES TOTAL PROJECT	SHEET NO.	TOTAL SHEETS
12	Ora	55	7.0/7.9	68	76

Randell D. Hiatt
REGISTERED CIVIL ENGINEER

June 6, 2008
PLANS APPROVAL DATE

REGISTERED PROFESSIONAL ENGINEER
Randell D. Hiatt
No. C50200
Exp. 6-30-09
CIVIL
STATE OF CALIFORNIA

The State of California or its officers or agents shall not be responsible for the accuracy or completeness of electronic copies of this plan sheet.

To accompany plans dated 12-28-09

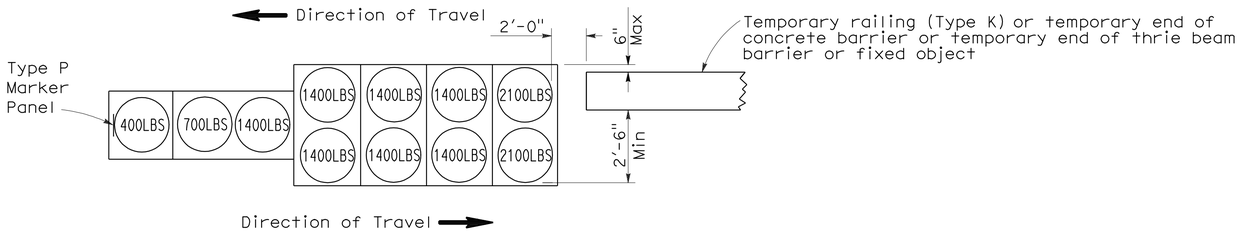

ARRAY 'TB11'

Approach speed less than 45 mph

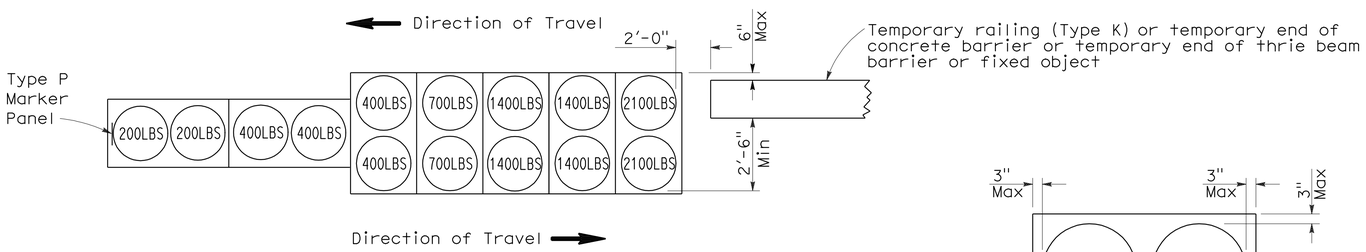

ARRAY 'TB14'

Approach speed 45 mph or more

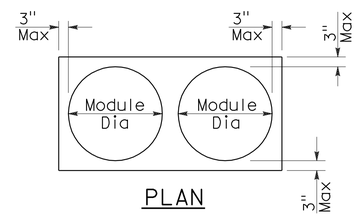

PLAN

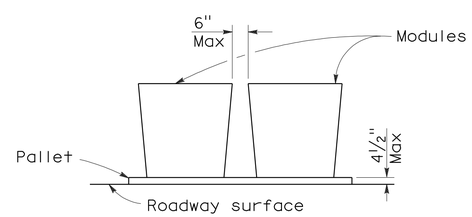

ELEVATION

CRASH CUSHION PALLET DETAIL

See Note 7

NOTES:

1. (XXX) Indicates sand filled module location and weight of sand in pounds for each module. Module spacing is based on the greater diameter of the module.
2. All sand weights are nominal.
3. Temporary crash cushion arrays shall not encroach on the traveled way.
4. Place the Type P marker panel so that the bottom of the panel rests upon the pallet.
5. Refer to Standard Plan A73B for marker details.
6. Approach speeds indicated conform to NCHRP 350 Report criteria.
7. Use of pallets is optional.

STATE OF CALIFORNIA
DEPARTMENT OF TRANSPORTATION

TEMPORARY CRASH CUSHION, SAND FILLED (BIDIRECTIONAL)

NO SCALE

RSP T1B DATED JUNE 6, 2008 SUPERSEDES STANDARD PLAN T1B
DATED MAY 1, 2006 - PAGE 212 OF THE STANDARD PLANS BOOK DATED MAY 2006.

REVISED STANDARD PLAN RSP T1B

2006 REVISED STANDARD PLAN RSP T1B

5-15-08

DIST	COUNTY	ROUTE	POST MILES TOTAL PROJECT	SHEET NO.	TOTAL SHEETS
12	Ora	55	7.0/7.9	69	76

Randell D. Hiatt
REGISTERED CIVIL ENGINEER

June 6, 2008
PLANS APPROVAL DATE

REGISTERED PROFESSIONAL ENGINEER
Randell D. Hiatt
No. C50200
Exp. 6-30-09
CIVIL
STATE OF CALIFORNIA

The State of California or its officers or agents shall not be responsible for the accuracy or completeness of electronic copies of this plan sheet.

To accompany plans dated 12-28-09

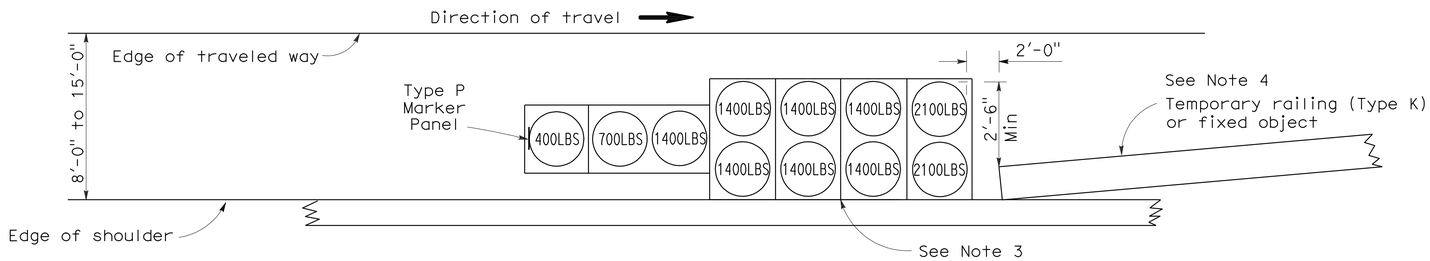

ARRAY 'TS11'

Approach speed less than 45 mph
See Note 9

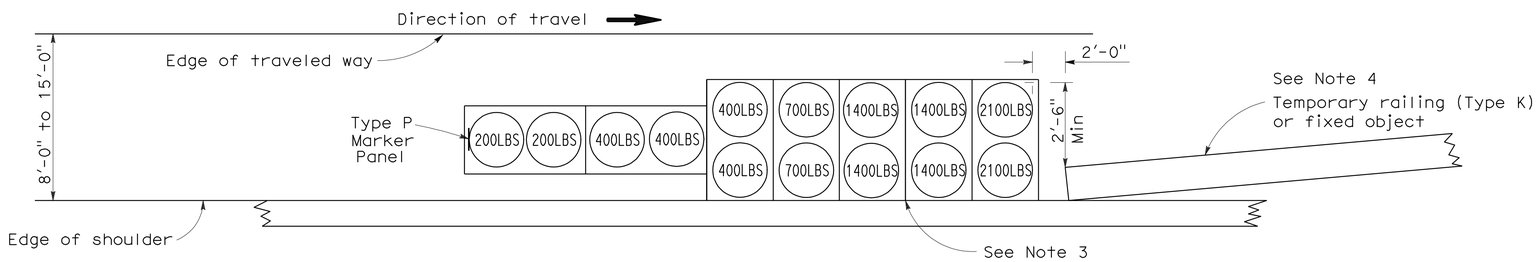

ARRAY 'TS14'

Approach speed 45 mph or more
See Note 9

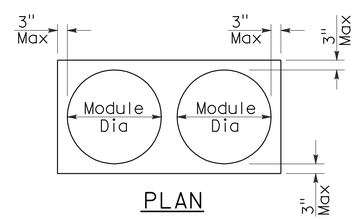

PLAN

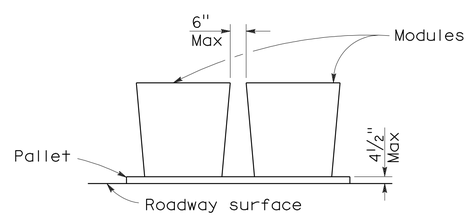

ELEVATION

CRASH CUSHION PALLET DETAIL

See Note 11

NOTES:

1. (XXX) Indicates sand filled module location and weight of sand in pounds for each module. Module spacing is based on the greater diameter of the module.
2. All sand weights are nominal.
3. The temporary crash cushion arrays shown on this plan shall be used only in locations where there will be traffic on one side of the temporary crash cushion array.
4. If the fixed object or approach end of the temporary railing is less than 15'-0" from the edge of traveled way, a temporary crash cushion is required in a construction or work zone.
5. Temporary crash cushion arrays shall not encroach on the traveled way.
6. Arrays for median shoulders shall conform to details shown on this plan for outside shoulders.
7. Place the Type P marker panel so that the bottom of the panel rests upon the pallet and faces traffic.
8. Refer to Standard Plan A73B for marker details.
9. For shoulder widths less than 8'-0", appropriate approved crash cushion protection, other than sand filled modules, shall be provided at fixed objects and at approach ends of temporary railing. The specific type of crash cushion shall be as shown on the project plans or as specified in the Special Provisions, or if not shown on the project plans or specified in the Special Provisions, shall be as approved by the Engineer.
10. Approach speeds indicated conform to NCHRP 350 Report criteria.
11. Use of pallets is optional.

STATE OF CALIFORNIA
DEPARTMENT OF TRANSPORTATION

TEMPORARY CRASH CUSHION, SAND FILLED (SHOULDER INSTALLATIONS)

NO SCALE

RSP T2 DATED JUNE 6, 2008 SUPERSEDES STANDARD PLAN T2
DATED MAY 1, 2006 - PAGE 213 OF THE STANDARD PLANS BOOK DATED MAY 2006.

REVISED STANDARD PLAN RSP T2

2006 REVISED STANDARD PLAN RSP T2

5-15-08

DIST	COUNTY	ROUTE	POST MILES TOTAL PROJECT	SHEET NO.	TOTAL SHEETS
12	Ora	55	7.0/7.9	70	76

REGISTERED CIVIL ENGINEER

November 17, 2006
PLANS APPROVAL DATE

REGISTERED PROFESSIONAL ENGINEER
Greg W. Edwards
No. C36386
Exp. 6-30-08
CIVIL
STATE OF CALIFORNIA

The State of California or its officers or agents shall not be responsible for the accuracy or completeness of electronic copies of this plan sheet.

To accompany plans dated 12-28-09

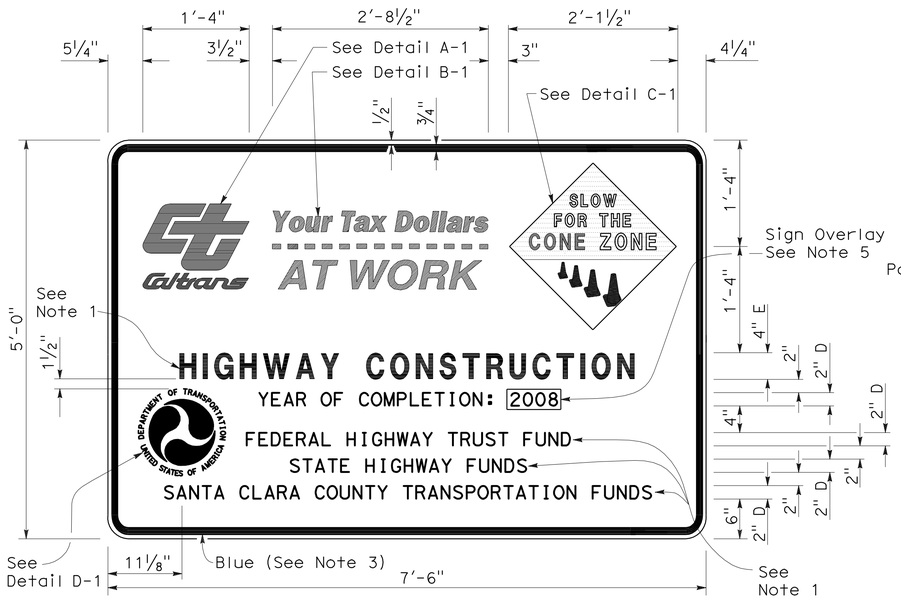

TYPE 1

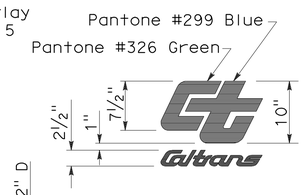

DETAIL A-1

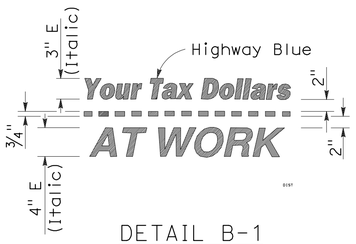

DETAIL B-1
(See Note 3)

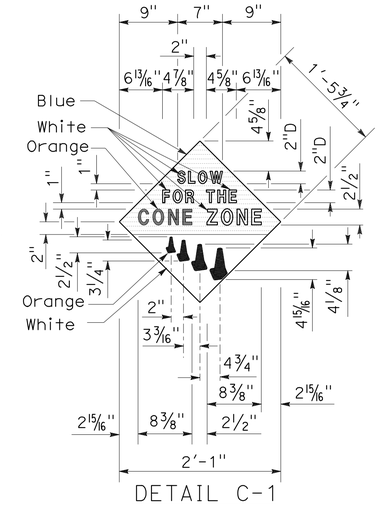

DETAIL C-1
(See Note 4)

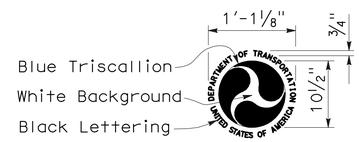

DETAIL D-1
(See Note 6)

NOTES:

1. The sign messages shown for type of project and fund types are examples only. See the Special Provisions for the applicable type of project and fund type messages to be used.
2. Except as otherwise shown, the legend of sign shall be black on a white background (non-reflective).
3. The border of the signs and details "B-1" and "B-2" shall be blue (non-reflective).
4. The diamond in details "C-1" and "C-2" shall be blue for the background of message, " SLOW FOR THE CONE ZONE", and white background for the orange cones. The color and type of font for the "SLOW FOR THE CONE ZONE" message shall be: "SLOW" white D; "FOR THE" white D; "CONE" orange Arial font; "ZONE" white Arial font.
5. Year of completion of project construction shown on the overlay is an example only. See the Special Provisions.
6. Use when the Project involves Federal Highway Trust Fund.

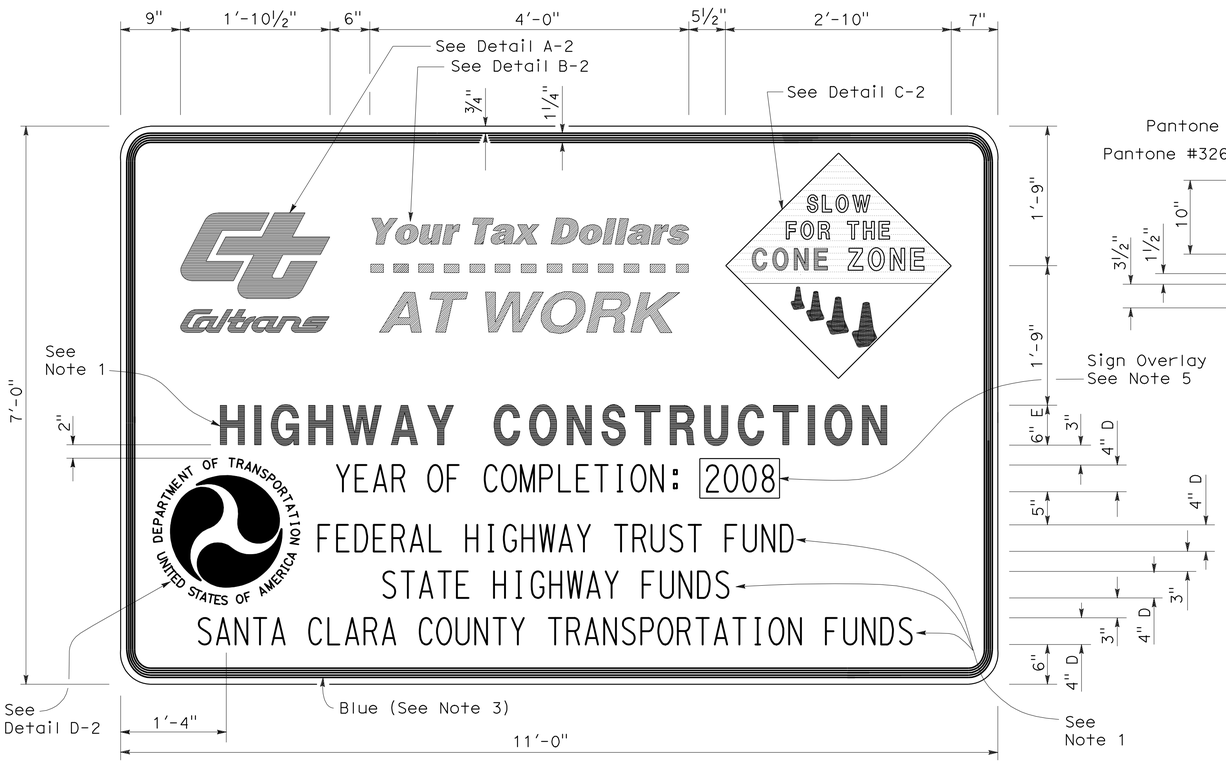

TYPE 2

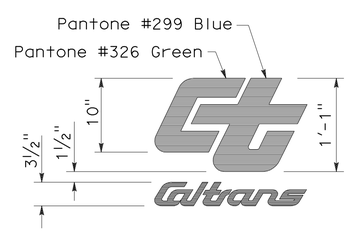

DETAIL A-2

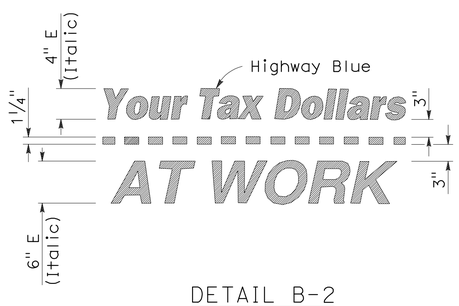

DETAIL B-2
(See Note 3)

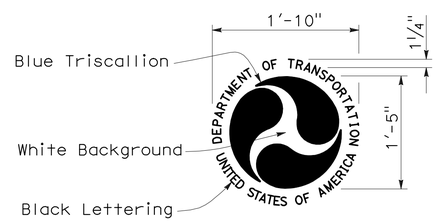

DETAIL D-2
(See Note 6)

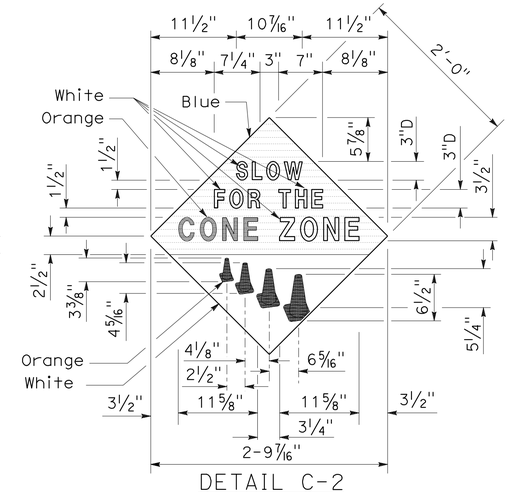

DETAIL C-2
(See Note 4)

STATE OF CALIFORNIA
DEPARTMENT OF TRANSPORTATION

CONSTRUCTION PROJECT FUNDING IDENTIFICATION SIGNS

NO SCALE

RSP T7 DATED NOVEMBER 17, 2006 SUPERSEDES STANDARD PLAN T7
DATED MAY 1, 2006 - PAGE 217 OF THE STANDARD PLANS BOOK DATED MAY 2006.

REVISED STANDARD PLAN RSP T7

2006 REVISED STANDARD PLAN RSP T7

9-7-06

DIST	COUNTY	ROUTE	POST MILES TOTAL PROJECT	SHEET NO.	TOTAL SHEETS
12	Ora	55	7.0/7.9	71	76

Robert B Schott
LICENSED LANDSCAPE ARCHITECT

August 15, 2008
PLANS Approval DATE

LICENSED LANDSCAPE ARCHITECT
Robert B. Schott 3625
Robert B Schott
Signature
11-04-08
Renewal Date
08-11-08
Date
STATE OF CALIFORNIA

The State of California or its officers or agents shall not be responsible for the accuracy or completeness of electronic copies of this plan sheet.

To accompany plans dated 12-28-09

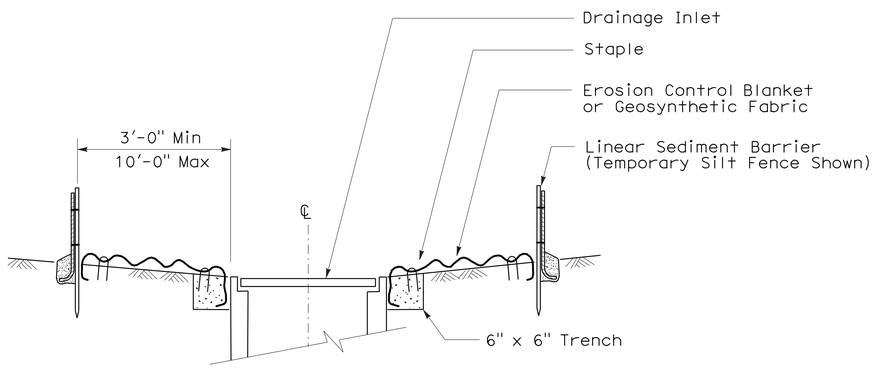

SECTION A-A

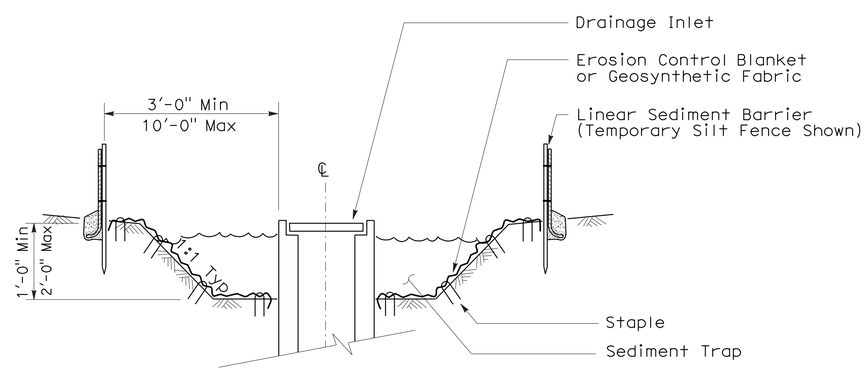

SECTION B-B

NOTES:

1. See Standard Plan T51 for Temporary Silt Fence.
2. Dimensions may vary to fit field conditions.

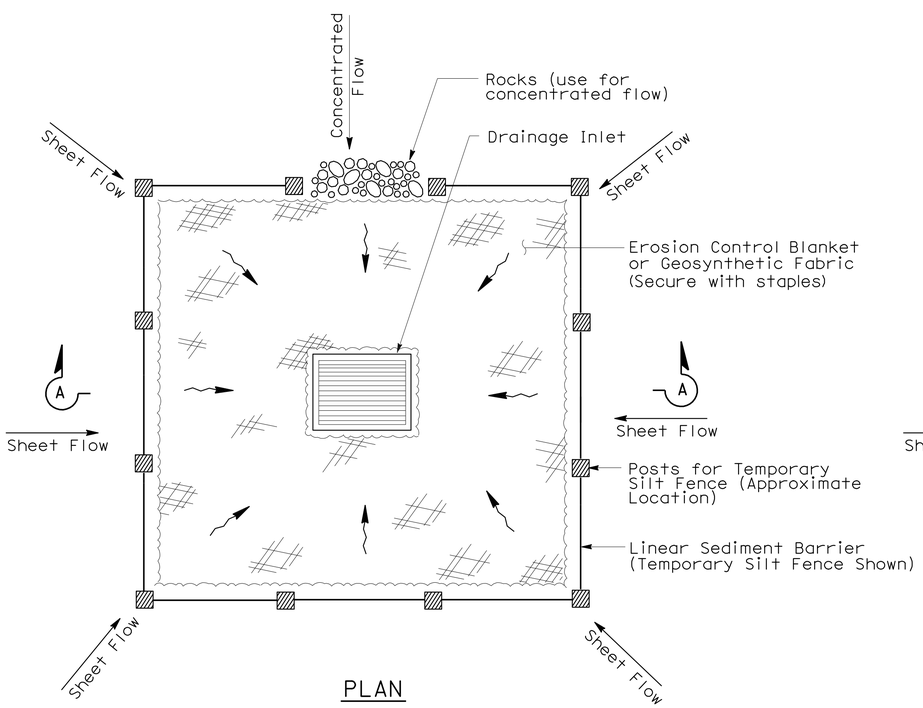

PLAN

TEMPORARY DRAINAGE
INLET PROTECTION (TYPE 1)

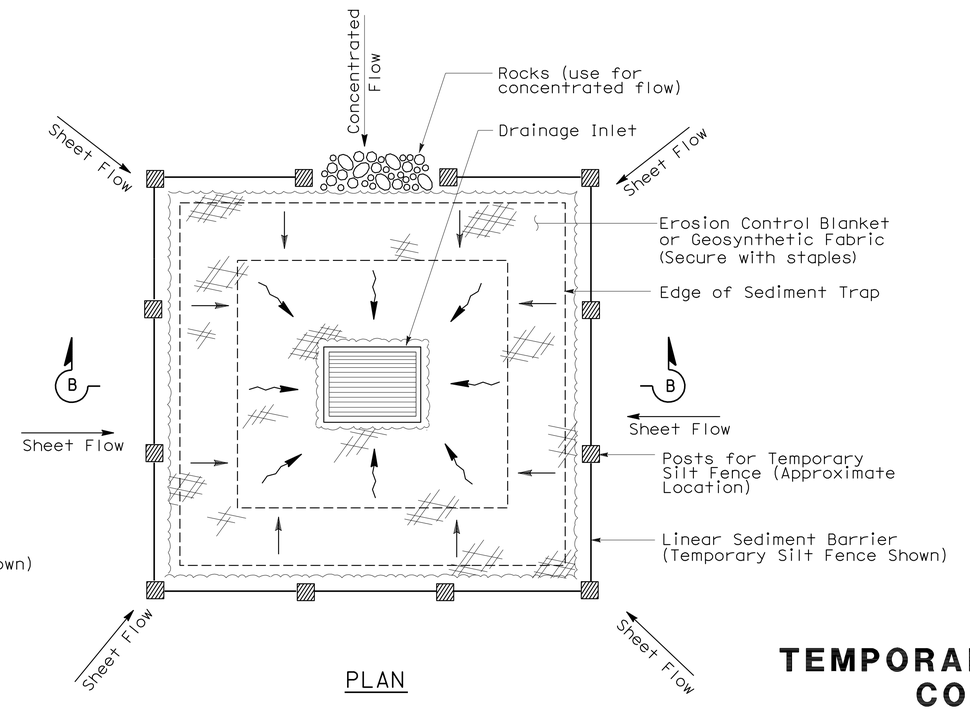

PLAN

TEMPORARY DRAINAGE
INLET PROTECTION (TYPE 2)
(EXCAVATED SEDIMENT TRAP)

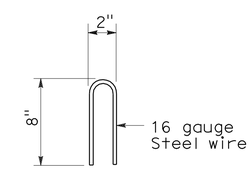

STAPLE DETAIL

STATE OF CALIFORNIA
DEPARTMENT OF TRANSPORTATION

TEMPORARY WATER POLLUTION CONTROL DETAILS (TEMPORARY DRAINAGE INLET PROTECTION)

NO SCALE

NSP T61 DATED AUGUST 15, 2008 SUPPLEMENTS
THE STANDARD PLANS BOOK DATED MAY 2006.

NEW STANDARD PLAN NSP T61

2006 NEW STANDARD PLAN NSP T61

7-11-08

DIST	COUNTY	ROUTE	POST MILES TOTAL PROJECT	SHEET NO.	TOTAL SHEETS
12	Ora	55	7.0/7.9	72	76

REGISTERED ELECTRICAL ENGINEER

October 5, 2007
PLANS APPROVAL DATE

REGISTERED PROFESSIONAL ENGINEER Jeffery G. McRae No. E14512 Exp. 6-30-08 ELECTRICAL STATE OF CALIFORNIA

The State of California or its officers or agents shall not be responsible for the accuracy or completeness of electronic copies of this plan sheet.

To accompany plans dated 12-28-09

ELECTROLIERS

STANDARD TYPES
15, 15D
15 STRUCTURE
21, 21D STRUCTURE
30
31
32
35
36-20A

High mast light pole

Double Arm lighting standard

Existing electrolier

Electrolier foundation (Future installation)

NOTES:

1. Luminaires shall be 310 W HPS when installed on Type 21, 21D, 30, 31, 32, 35 and 36-20A Standards, unless otherwise specified. Luminaires shall be 200 W HPS when installed on other type standards or poles, unless otherwise specified.
2. Luminaires shall be the cutoff type, ANSI Type III medium cutoff lighting distribution, unless otherwise specified.
3. Variations noted adjacent to symbol on project plans.

Electrolier (see project notes or project plans)

Luminaire on wood pole

STANDARD NOTES:

- AB — Abandon. If applied to conduit, remove conductors.
- BC — Install pull box in existing conduit run.
- BP — Pedestrian barricade, type as indicated on plan.
- CB — Install conduit into existing pull box.
- CC — Connect new and existing conduit. Remove existing conductors and install conductors as indicated.
- CF — Conduit to remain for future use. Remove conductors. Install pull wire or rope.
- DH — Detector handhole.
- FA — Foundation to be abandoned.
- IS — Install sign on signal mast arm.
- NS — No slip base on standard.
- PEC — Photoelectric control.
- PEU — Photoelectric unit.
- RC — Equipment or material to be removed and become the property of the Contractor.
- RE — Remove electrolier, fuses and ballast. Tape ends of conductors.
- RL — Relocate equipment.
- RR — Remove and reuse equipment.
- RS — Remove and salvage equipment.
- SC — Splice new to existing conductors.
- SD — Service disconnect.
- SF — Standard to remain for future use. Remove luminaire, pole conductors, fuses and ballast.
- TSP — Telephone service point.

ABBREVIATIONS AND EQUIPMENT DESIGNATIONS

PROPOSED	EXISTING	
BBS	bbs	Battery backup system
BC	bc	Bolt circle
C	C	Conduit
CCTV	cctv	Closed circuit television
CKT	ckt	Circuit
CMS	cms	Changeable message sign
DLC	dlc	Loop detector lead-in cable
EMS	ems	Extinguishable message sign
EVC	evc	Emergency vehicle cable
EVD	evd	Emergency vehicle detector
FB	fb	Flashing beacon
FBCA	fbca	Flashing beacon control assembly
FBS	fbs	Flashing beacon with slip base
FO	fo	Fiber optic
G	G	Ground (Equipment Grounding Conductor)
GFCI	GFCI	Ground fault circuit interrupt
HAR	har	Highway advisory radio
HEX	hex	Hexagonal
HPS	hps	High pressure sodium
IISNS	iisns	Internally illuminated street name sign
ISL	isl	Induction sign lighting
LED	led	Light emitting diode
LMA	lma	Luminaire mast arm
LPS	lps	Low pressure sodium
LTG	ltg	Lighting
LUM	lum	Luminaire
MAT	mat	Mast arm mounting vehicle signal faces, top attachment
MAS	mas	Mast arm mounting vehicle signal faces, side attachment
MAS-4A	mas-4A	Mast arm mounting vehicle signal faces, side attachment - 4 signal section
MAS-4B	mas-4B	
MAS-4C	mas-4C	
MAS-5A	mas-5A	Mast arm mounting vehicle signal faces, side attachment - 5 signal section
MAS-5B	mas-5B	
MC	mc	Mercury contactor
M/M	m/m	Multiple to multiple transformer
MT	mt	Conduit with pull wire or rope only
MTG	mtg	Mounting
	mv	Mercury vapor lighting fixture
N	N	Neutral (Grounded Conductor)
NC	NC	Normally closed
NO	NO	Normally open
PB	pb	Pull box
PEC	pec	Photoelectric control (Type I, II, III, IV or V as shown)
PED	ped	Pedestrian
PEU	peu	Photoelectric unit
PPB	ppb	Pedestrian push button
RL		Relocated equipment
RM	rm	Ramp metering
SB	sb	Slip base
SIC	sic	Signal interconnect cable
SIG	sig	Signal
SMA	sma	Signal mast arm
SNS	sns	Street name sign
SP	sp	Service point
TDC	tdc	Telephone demarcation cabinet
TMS	tms	Traffic monitoring station
TOS	tos	Traffic Operations System
VEH	veh	Vehicle
XFMR	xfmr	Transformer
COMM	comm	Communication
RWIS	rwis	Roadway weather information system

SOFFIT AND WALL MOUNTED LUMINAIRES

Pendant, 70 W HPS unless otherwise specified.

Flush, 70 W HPS unless otherwise specified.

Wall surface, 70 W HPS unless otherwise specified.

Existing soffit or wall luminaire to remain unmodified.

Existing soffit or wall luminaire to be modified as specified.

NOTE:

Arrow indicates "street side" of luminaire.

STATE OF CALIFORNIA
DEPARTMENT OF TRANSPORTATION

ELECTRICAL SYSTEMS (SYMBOLS AND ABBREVIATIONS)

NO SCALE

RSP ES-1A DATED OCTOBER 5, 2007 SUPERSEDES STANDARD PLAN ES-1A DATED MAY 1, 2006 - PAGE 400 OF THE STANDARD PLANS BOOK DATED MAY 2006.

REVISED STANDARD PLAN RSP ES-1A

2006 REVISED STANDARD PLAN RSP ES-1A

DIST	COUNTY	ROUTE	POST MILES TOTAL PROJECT	SHEET NO.	TOTAL SHEETS
12	Ora	55	7.0/7.9	73	76

REGISTERED ELECTRICAL ENGINEER

October 5, 2007
PLANS APPROVAL DATE

REGISTERED PROFESSIONAL ENGINEER Jeffery G. McRae No. E14512 Exp. 6-30-08 ELECTRICAL STATE OF CALIFORNIA

The State of California or its officers or agents shall not be responsible for the accuracy or completeness of electronic copies of this plan sheet.

To accompany plans dated 12-28-09

CONDUIT

PROPOSED	EXISTING	
		Lighting Conduit, unless otherwise indicated or noted
		Traffic signal conduit
C	c	Communication conduit
T	t	Telephone conduit
F	f	Fire alarm conduit
FO	fo	Fiber optic conduit
		Conduit termination (RSP ES-9A C)
R	r	Conduit riser in/on structure or service pole

SERVICE EQUIPMENT

PROPOSED	EXISTING	
OH	oh	Overhead lines
U	U	Wood pole "U" indicates utility owned
		Pole guy with anchor
		Utility transformer - ground mounted
III		Service equipment enclosure type
		Service equipment enclosure door indicates front of enclosure
T	t	Telephone demarcation cabinet

POLE-MOUNTED SERVICE DESIGNATION

Type of installation

TYPE H SERVICE - 28'-10" ← Pole height above grade

ILLUMINATED OVERHEAD SIGN

PROPOSED	EXISTING	
		Overhead sign - Single post
		Overhead sign - Two post
		Overhead sign - Mounted on structure
		Overhead sign with electrolier

SIGNAL EQUIPMENT

PROPOSED	EXISTING	
		Pedestrian signal face
		Pedestrian push button post
		Pedestrian barricade
		Vehicle signal face (with backplate, 3-Section: red, yellow and green)
		Vehicle signal face with angle visors
PV	PV	Modifications of basic symbols: "L" indicates all non-arrow sections louvered "LG" indicates louvered green section only "PV" indicates 12" programmed visibility sections "8" indicates all 8" sections (only when specified)
		Type 15TS and Vehicle signal face
		Vehicle signal face with red, yellow and green left arrow sections
		Vehicle signal face with red and yellow sections and up green arrow
		Vehicle signal face (5 Section) with red, yellow and green sections and yellow and green right arrows
		Type 1 Standard and attached vehicle signal faces
		Standard with signal mast arm only and attached vehicle signal faces and internally illuminated street name sign
		Type 33 Standard, Left-turn vehicle signal face and sign
		Standard with luminaire and signal mast arms and attached vehicle signal faces
		Cantilever flashing beacon Type 9 Frame, with a sign unless otherwise specified or indicated
		Type 15-FBS Standard with two vehicle signal face sections with lens, backplate and visor with a sign
R	Y	Flashing beacon. One vehicle signal face section with lens, backplate and visor. "R" indicates red indication, "Y" indicates yellow indication
		Controller assembly. Door indicates front of cabinet

SIGNAL EQUIPMENT Cont

PROPOSED	EXISTING	
		Guard post
		Type 1 Standard with "Meter On" sign
		Emergency Vehicle detector

NOTES:

1. All signal sections shall be 12" unless shown otherwise.
2. Signal heads shall be provided with backplates unless shown otherwise.
3. Signal indication shall be LED.

STATE OF CALIFORNIA
DEPARTMENT OF TRANSPORTATION

ELECTRICAL SYSTEMS (SYMBOLS AND ABBREVIATIONS)

NO SCALE

RSP ES-1B DATED OCTOBER 5, 2007 SUPERCEDES STANDARD PLAN ES-1B DATED MAY 1, 2006 - PAGE 401 OF THE STANDARD PLANS BOOK DATED MAY 2006.

REVISED STANDARD PLAN RSP ES-1B

2006 REVISED STANDARD PLAN RSP ES-1B

7-10-07

DIST	COUNTY	ROUTE	POST MILES TOTAL PROJECT	SHEET NO.	TOTAL SHEETS
12	Ora	55	7.0/7.9	74	76

REGISTERED ELECTRICAL ENGINEER

October 5, 2007
PLANS APPROVAL DATE

REGISTERED PROFESSIONAL ENGINEER Jeffery G. McRae No. E14512 Exp. 6-30-08 ELECTRICAL STATE OF CALIFORNIA

The State of California or its officers or agents shall not be responsible for the accuracy or completeness of electronic copies of this plan sheet.

To accompany plans dated 12-28-09

EQUIPMENT IDENTIFICATION

ILLUMINATED SIGN IDENTIFICATION NUMBER:

Sign No. 12345
10 ISL SCI 1.0

- Sign number - Place on post or structure
- Transformer rating (kVA)
- Lighting control type
- Number and type of fixtures

Do NOT place on standard or structure

ELECTROLIER OR EQUIPMENT IDENTIFICATION NUMBER:

12345 - 15'-0"

- Mast arm length, if shown. Do not place on standard or structure.
- Equipment number - Place on standard or structure. Existing equipment numbers are shown in parenthesis

CONDUIT AND CONDUCTOR IDENTIFICATION:

1½"C, 2#10, 15#14, 2 DLC

- Number and size of conductors and cables
- Size of conduit in inches

Ø1, Ø2, Ø2P, etc.	Traffic phase identification for signal faces, detectors and phase diagrams
1 2 3	Project note numbers
A B C	Equipment description, installation or item numbers
1 2 3	Conduit run numbers

SIGNAL AND LIGHTING STANDARD (TYPICAL DESIGNATION):

19A - 3 - 100

- Wind velocity = 100 mph
- Case 3 arm loading
- Standard type
- Standard Plan sheet number
- Detail number or letter

MISCELLANEOUS EQUIPMENT

PROPOSED	EXISTING	
CMS	cms	Changeable message sign
		Closed circuit television camera
		Highway advisory radio pole and antenna
EMS	ems	Extinguishable message sign
M V	m v	Detection device M = Microwave sensor V = Video image sensor

WIRING DIAGRAM LEGEND

P	Pole
CB	Circuit breaker
A	Ampere
V	Volt
M	Metered
UM	Unmetered
NB	Neutral bus
GB	Ground bus
G	Equipment grounding conductor
N	Grounded conductor (Neutral)

- External conductor
- Conductor or bus
- Tie point
- Contactor coil
- Contactor, Contact NO
- Terminal blocks
- Contactor, Contact NC
- Enclosure bond
- Grounding electrode
- Circuit breaker
- Receptacle

PULL BOXES

PROPOSED	EXISTING	
		Pull box-No. 5 unless otherwise indicated or noted.
3	9A(21)	Pull box-Additional designations or descriptions

3 = No. 3½ pull box
5 = No. 5 pull box
6 = No. 6 pull box
7 = No. 7 (Ceiling pull box)
8 = No. 8 (Pendant soffit pull box)
9 = No. 9 pull box
9A = No. 9A pull box

(C) = Communications pull box
(E) = Pull box with extension
(S) = Sprinkler control pull box
(21) = Anchor bolts and conduit for future installation of Type 21 Standard
(T) = Traffic pull box

VEHICLE DETECTORS

5 J 9 U

- Vehicle detector designation
- U = Upper
- L = Lower
- Slot number in input file
- Input file (I or J)
- Phase

PROPOSED	EXISTING	
		Type A detector loop. Outline of sawcut shown.
		Type B detector loop. Outline of sawcut shown.
		Type C detector loop. Outline of sawcut shown.
		Type D detector loop. Outline of sawcut shown.
		Type E detector loop. Outline of sawcut shown.
		Type Q detector loop. Outline of sawcut shown.
		Magnetic detector
DH	dh	Detector handhole
		Microwave or video detection zone

STATE OF CALIFORNIA
DEPARTMENT OF TRANSPORTATION

ELECTRICAL SYSTEMS (SYMBOLS AND ABBREVIATIONS)

NO SCALE

RSP ES-1C DATED OCTOBER 5, 2007 SUPERCEDES STANDARD PLAN ES-1C DATED MAY 1, 2006 - PAGE 402 OF THE STANDARD PLANS BOOK DATED MAY 2006.

REVISED STANDARD PLAN RSP ES-1C

2006 REVISED STANDARD PLAN RSP ES-1C

DIST	COUNTY	ROUTE	POST MILES TOTAL PROJECT	SHEET NO.	TOTAL SHEETS
12	Ora	55	7.0/7.9	75	76

REGISTERED ELECTRICAL ENGINEER

October 5, 2007
PLANS APPROVAL DATE

REGISTERED PROFESSIONAL ENGINEER Jeffery G. McRae No. E14512 Exp. 6-30-08 ELECTRICAL STATE OF CALIFORNIA

The State of California or its officers or agents shall not be responsible for the accuracy or completeness of electronic copies of this plan sheet.

To accompany plans dated 12-28-09

LOOP INSTALLATION PROCEDURE

1. Loops shall be centered in lanes.
2. Saw slots in pavement for loop conductors as shown in details.
3. Distance between side of loop and a lead-in saw cut from adjacent detectors shall be 2'-0" minimum. Distance between lead-in saw cuts shall be 6" minimum.
4. Bottom of saw slot shall be smooth with no sharp edges.
5. Slots shall be washed until clean, blown out and thoroughly dried before installing loop conductors.
6. Adjacent loops on the same sensor unit channel shall be wound in opposite directions.
7. Identify and tag loop circuit pairs in the pull box with loop number, start (S) and finish (F) of conductor. Identify and tag lead-in-cable with sensor number and phase.
8. Install loop conductor in slot using a 3/16" to 1/4" thick wood paddle. Hold loop conductors with wood paddles (at the bottom of the sawed slot) during sealant placement.
9. No more than 2 twisted pairs shall be installed in one sawed slot.
10. Allow additional 5'-0" of slack length of conductor for the lead-in run to pull box.
11. The additional length of each conductor for each loop shall be twisted together into a pair (6 turns per 3'-4" minimum) before being placed in the slot and conduit leading to pull box.
12. Test each loop circuit for continuity, circuit resistance and insulation resistance at the pull box before filling slots.
13. Fill slots as shown in details.
14. Splice loop conductors to lead-in-cable. Splices shall be soldered.
15. End of lead-in-cable and Type 2 loop conductor shall be waterproofed prior to installing in conduit to prevent moisture from entering the cable.
16. Lead-in-cable shall not be spliced between the pull box and the controller cabinet terminals.
17. Test each loop circuit for continuity, circuit resistance and insulation resistance at the controller cabinet location.
18. Where loop conductors are not to be spliced to a lead-in-cable, the ends of the conductors shall be taped and waterproofed with electrical insulating coating.

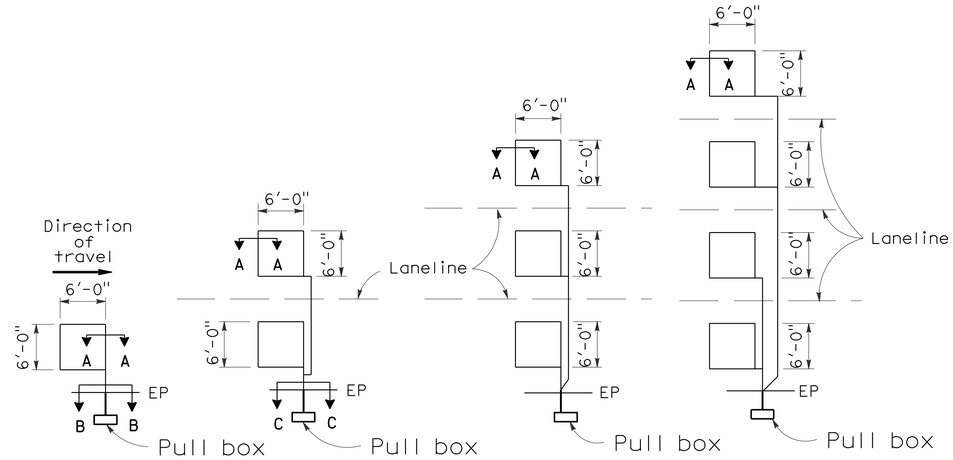

TYPE 1A INSTALLATION | TYPE 2A INSTALLATION | TYPE 3A INSTALLATION | TYPE 4A INSTALLATION

SAWCUT DETAILS

(Type A loop detector configurations illustrated)

1. 1A thru 4A = 1 Type A loop configuration in each lane.
2. 1B thru 4B = 1 Type B loop configuration in each lane.
3. 1C = 1 Type C loop configuration entering lanes as required.
4. 1D thru 4D = 1 Type D loop configuration in each lane.
5. 1E thru 4E = 1 Type E loop configuration in each lane.
6. 1Q thru 4Q = 1 Type Q loop configuration in each lane. (Use Type A, B, C, D, E or Q loop detector configurations only when specified or shown on plans)

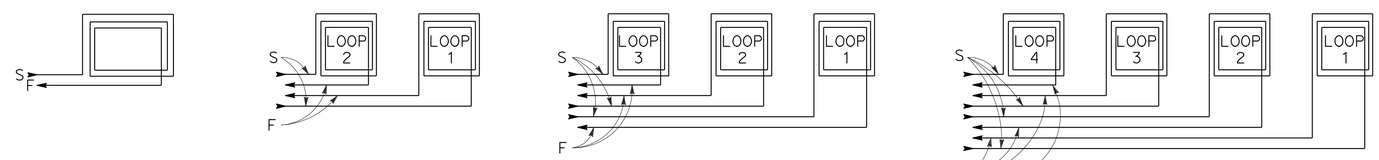

WINDING DETAILS

See Notes 6 and 7

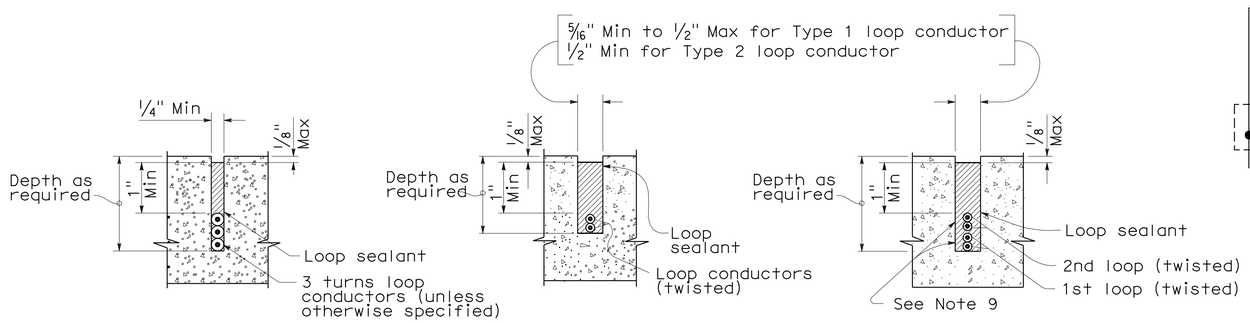

SECTION A-A | SECTION B-B | SECTION C-C

SLOT DETAILS - TYPE 1 AND TYPE 2 LOOP CONDUCTOR

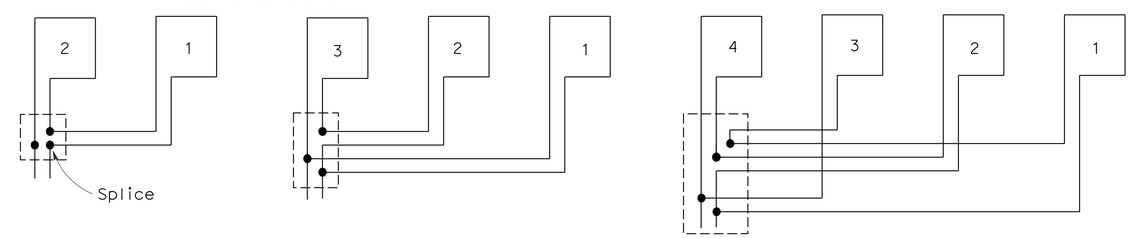

TYPICAL LOOP CONNECTIONS

(Dashed lines represent the pull box)

STATE OF CALIFORNIA
DEPARTMENT OF TRANSPORTATION

ELECTRICAL SYSTEMS (DETECTORS)

NO SCALE

RSP ES-5A DATED OCTOBER 5, 2007 SUPERCEDES STANDARD PLAN ES-5A DATED MAY 1, 2006 - PAGE 423 OF THE STANDARD PLANS BOOK DATED MAY 2006.

REVISED STANDARD PLAN RSP ES-5A

2006 REVISED STANDARD PLAN RSP ES-5A

8-17-07

DIST	COUNTY	ROUTE	POST MILES TOTAL PROJECT	SHEET NO.	TOTAL SHEETS
12	Ora	55	7.0/7.9	76	76

REGISTERED CIVIL ENGINEER

January 18, 2008
PLANS APPROVAL DATE

REGISTERED PROFESSIONAL ENGINEER
Stanley P. Johnson
No. C57793
Exp. 03-31-08
CIVIL
STATE OF CALIFORNIA

The State of California or its officers or agents shall not be responsible for the accuracy or completeness of electronic copies of this plan sheet.

To accompany plans dated 12-28-09

LUMINAIRE ARM DATA

PROJECTED LENGTH	THICKNESS	MINIMUM OD @ POLE	MOUNTING HEIGHT
* 6'-0"	0.1196"	3¼"	36'-9"±
8'-0"		3½"	37'-3"±
10'-0"		3¾"	38'-0"±
12'-0"		3¾"	39'-0"±
15'-0"		4¼"	39'-6"±
** 20'-0"	0.1793"	5"	37'-0"±

* Type 30 - arm length 6'-0" - 15'-0" maximum
** Type 31 - arm lengths 20'-0"

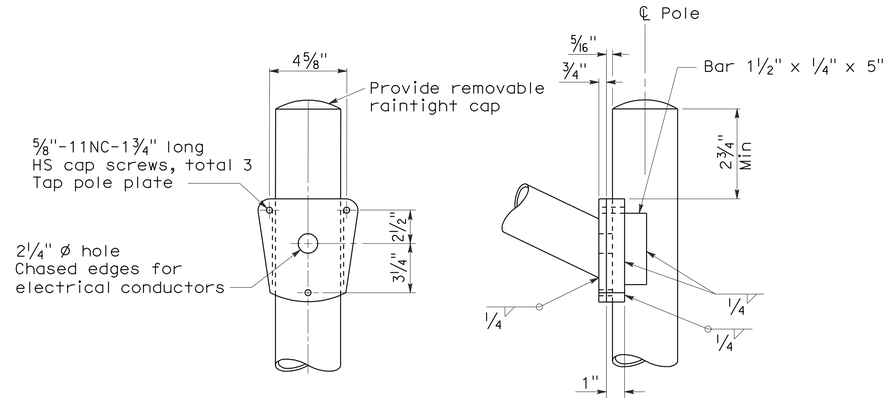

DETAIL A - TYPE 30

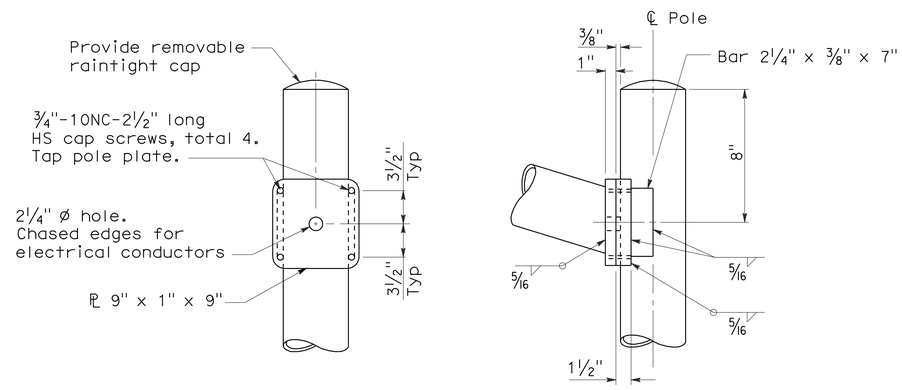

DETAIL A - TYPE 31

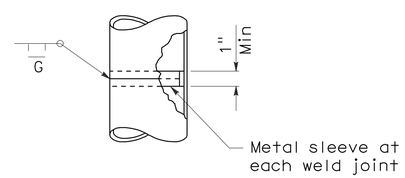

POLE SPLICE

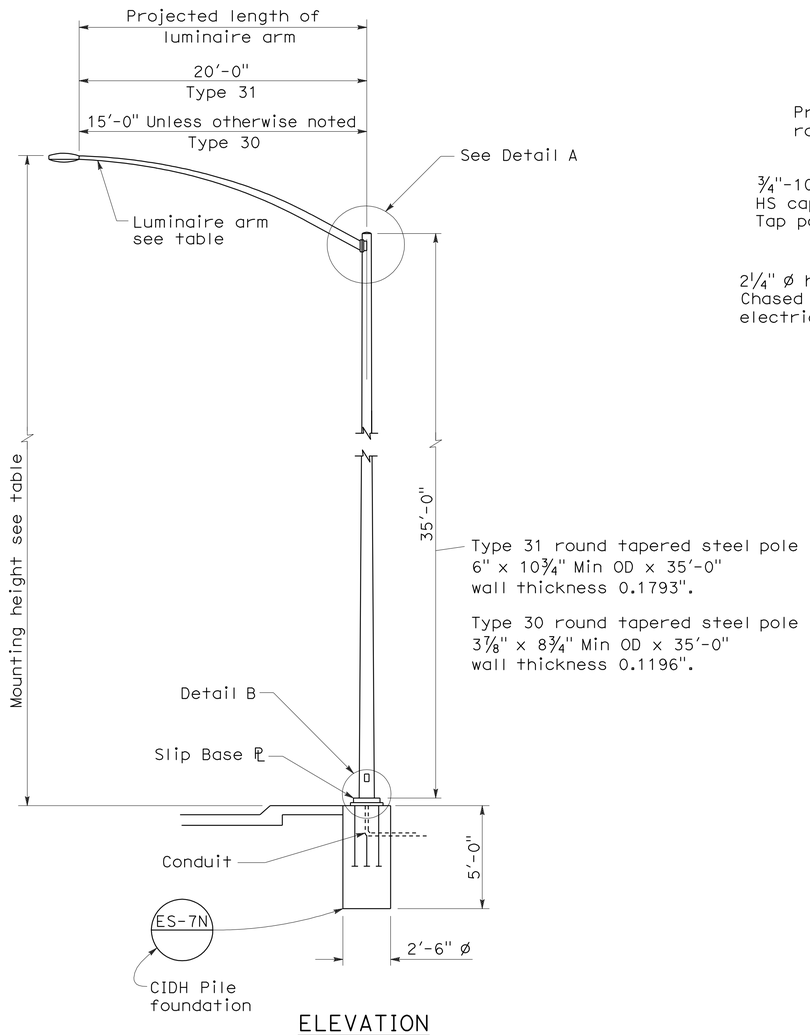

ELEVATION

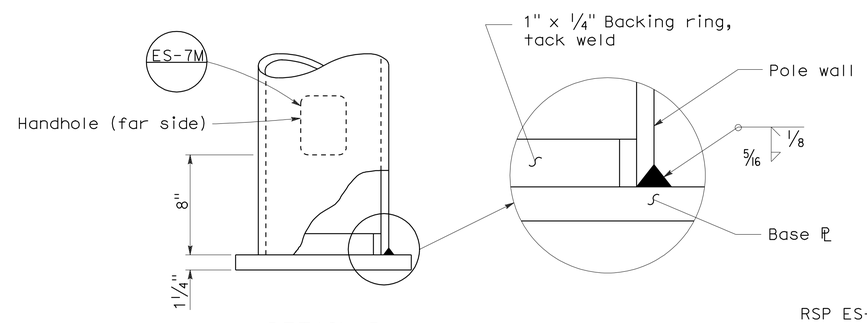

DETAIL B

NOTES:

1. Sheet steel shall have a minimum yield of 48,000 psi.
2. For slip base details see Standard Plan ES-6F.
3. For Type 30 fixed base use Type 15 base plate, and foundation shown on Revised Standard Plan RSP ES-6A. Use 1¼" Dia x 3'-6" x 4" anchor bolts.
4. For Type 31 fixed base use Type 32 base plate, anchor bolts and foundation on Standard Plan ES-6G.
5. Handhole shall be located on downstream side of traffic unless noted otherwise on plans.
6. For additional general notes refer to Standard Plan ES-7M.

STATE OF CALIFORNIA
DEPARTMENT OF TRANSPORTATION

ELECTRICAL SYSTEMS (LIGHTING STANDARD TYPES 30 AND 31)

NO SCALE

RSP ES-6E DATED JANUARY 18, 2008 SUPERCEDES STANDARD PLAN ES-6E DATED MAY 1, 2006 - PAGE 430 OF THE STANDARD PLANS BOOK DATED MAY 2006.

REVISED STANDARD PLAN RSP ES-6E

2006 REVISED STANDARD PLAN RSP ES-6E

11-19-07