| Dist | COUNTY | ROUTE | POST MILES TOTAL PROJECT | SHEET No. | TOTAL SHEETS |
|---|---|---|---|---|---|
| 12 | Ora | 5 | 6.8/14.5 | 101 | 171 |

REGISTERED CIVIL ENGINEER 09-30-10 DATE

11-29-10
PLANS APPROVAL DATE

REGISTERED PROFESSIONAL ENGINEER
TRANG LUONG
No. C64430
Exp. 06/30/11
CIVIL
STATE OF CALIFORNIA

*THE STATE OF CALIFORNIA OR ITS OFFICERS OR AGENTS SHALL NOT BE RESPONSIBLE FOR THE ACCURACY OR COMPLETENESS OF SCANNED COPIES OF THIS PLAN SHEET.*

NOTE:

1. FOR RIGHT OF WAY AND ACCURATE ACCESS DATA, CONTACT RIGHT OF WAY ENGINEERING MAPS AT THE DISTRICT OFFICE.

# PAVEMENT DELINEATION AND SIGN PLAN

SCALE: 1" = 50'

**PD-18**

THIS PLAN IS ACCURATE FOR PAVEMENT DELINEATION & SIGN WORK ONLY

STATE OF CALIFORNIA - DEPARTMENT OF TRANSPORTATION
Caltrans®
TRAFFIC DESIGN

FUNCTIONAL SUPERVISOR: ADEL MALEK
CALCULATED-DESIGNED BY: TRANG LUONG
CHECKED BY: ADEL MALEK
REVISED BY
DATE REVISED

LAST REVISION 00-00-00
DATE PLOTTED => 29-NOV-2010
TIME PLOTTED => 14:49

| Dist | COUNTY | ROUTE | POST MILES TOTAL PROJECT | SHEET No. | TOTAL SHEETS |
|---|---|---|---|---|---|
| 12 | Ora | 5 | 6.8/14.5 | 102 | 171 |

REGISTERED CIVIL ENGINEER 09-30-10 DATE

11-29-10
PLANS APPROVAL DATE

REGISTERED PROFESSIONAL ENGINEER
TRANG LUONG
No. C64430
Exp. 06/30/11
CIVIL
STATE OF CALIFORNIA

*THE STATE OF CALIFORNIA OR ITS OFFICERS OR AGENTS SHALL NOT BE RESPONSIBLE FOR THE ACCURACY OR COMPLETENESS OF SCANNED COPIES OF THIS PLAN SHEET.*

**NOTE:**

1. FOR RIGHT OF WAY AND ACCURATE ACCESS DATA, CONTACT RIGHT OF WAY ENGINEERING MAPS AT THE DISTRICT OFFICE.

# PAVEMENT DELINEATION AND SIGN PLAN

SCALE: 1" = 50'

**PD-19**

THIS PLAN IS ACCURATE FOR PAVEMENT DELINEATION & SIGN WORK ONLY

STATE OF CALIFORNIA - DEPARTMENT OF TRANSPORTATION
Caltrans
TRAFFIC DESIGN

FUNCTIONAL SUPERVISOR: ADEL MALEK
CALCULATED-DESIGNED BY: TRANG LUONG
CHECKED BY: ADEL MALEK
REVISED BY
DATE REVISED

LAST REVISION 00-00-00
DATE PLOTTED => 29-NOV-2010
TIME PLOTTED => 14:49

| Dist | COUNTY | ROUTE | POST MILES TOTAL PROJECT | SHEET No. | TOTAL SHEETS |
|---|---|---|---|---|---|
| 12 | Ora | 5 | 6.8/14.5 | 103 | 171 |

REGISTERED CIVIL ENGINEER 09-30-10 DATE

11-29-10
PLANS APPROVAL DATE

REGISTERED PROFESSIONAL ENGINEER
TRANG LUONG
No. C64430
Exp. 06/30/11
CIVIL
STATE OF CALIFORNIA

*THE STATE OF CALIFORNIA OR ITS OFFICERS OR AGENTS SHALL NOT BE RESPONSIBLE FOR THE ACCURACY OR COMPLETENESS OF SCANNED COPIES OF THIS PLAN SHEET.*

NOTE:

1. FOR RIGHT OF WAY AND ACCURATE ACCESS DATA, CONTACT RIGHT OF WAY ENGINEERING MAPS AT THE DISTRICT OFFICE.

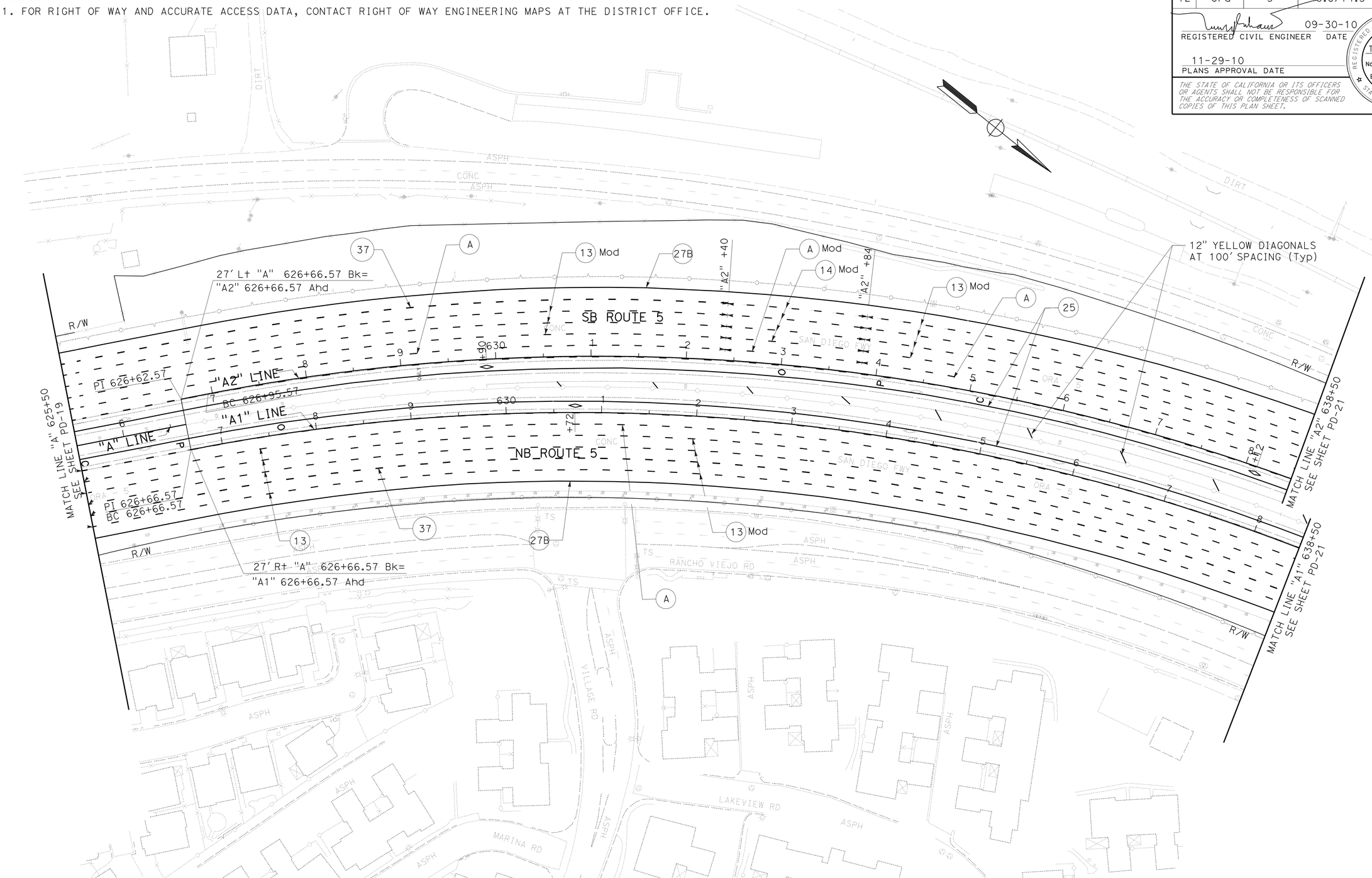


# PAVEMENT DELINEATION AND SIGN PLAN

SCALE: 1" = 50'

**PD-20**

THIS PLAN IS ACCURATE FOR PAVEMENT DELINEATION & SIGN WORK ONLY

| | |
|---|---|
| REVISED BY | TRANG LUONG |
| DATE REVISED | |
| CALCULATED-DESIGNED BY | ADEL MALEK |
| CHECKED BY | |
| FUNCTIONAL SUPERVISOR | ADEL MALEK |

STATE OF CALIFORNIA - DEPARTMENT OF TRANSPORTATION
Caltrans
TRAFFIC DESIGN

LAST REVISION 00-00-00
DATE PLOTTED => 29-NOV-2010
TIME PLOTTED => 14:49

| Dist | COUNTY | ROUTE | POST MILES TOTAL PROJECT | SHEET No. | TOTAL SHEETS |
|---|---|---|---|---|---|
| 12 | Ora | 5 | 6.8/14.5 | 104 | 171 |

REGISTERED CIVIL ENGINEER 09-30-10 DATE

11-29-10
PLANS APPROVAL DATE

REGISTERED PROFESSIONAL ENGINEER
TRANG LUONG
No. C64430
Exp. 06/30/11
CIVIL
STATE OF CALIFORNIA

*THE STATE OF CALIFORNIA OR ITS OFFICERS OR AGENTS SHALL NOT BE RESPONSIBLE FOR THE ACCURACY OR COMPLETENESS OF SCANNED COPIES OF THIS PLAN SHEET.*

NOTE:

1. FOR RIGHT OF WAY AND ACCURATE ACCESS DATA, CONTACT RIGHT OF WAY ENGINEERING MAPS AT THE DISTRICT OFFICE.

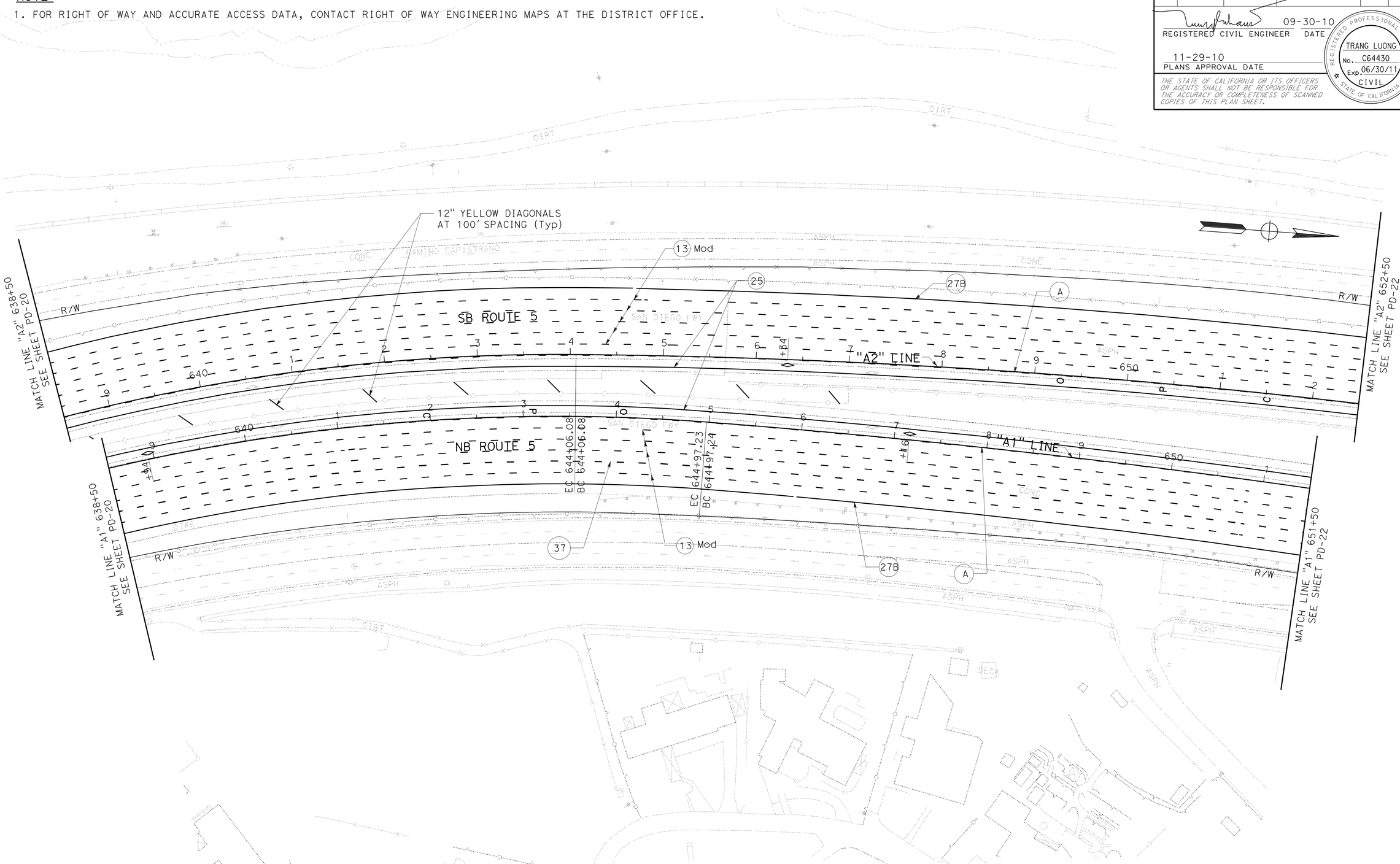


# PAVEMENT DELINEATION AND SIGN PLAN

SCALE: 1" = 50'

THIS PLAN IS ACCURATE FOR PAVEMENT DELINEATION & SIGN WORK ONLY

**PD-21**

STATE OF CALIFORNIA - DEPARTMENT OF TRANSPORTATION
Caltrans
TRAFFIC DESIGN

FUNCTIONAL SUPERVISOR: ADEL MALEK
CALCULATED-DESIGNED BY: TRANG LUONG
CHECKED BY: ADEL MALEK
REVISED BY
DATE REVISED

LAST REVISION 00-00-00
DATE PLOTTED => 29-NOV-2010
TIME PLOTTED => 14:49

| Dist | COUNTY | ROUTE | POST MILES TOTAL PROJECT | SHEET No. | TOTAL SHEETS |
|---|---|---|---|---|---|
| 12 | Ora | 5 | 6.8/14.5 | 105 | 171 |

REGISTERED CIVIL ENGINEER 09-30-10 DATE

11-29-10
PLANS APPROVAL DATE

REGISTERED PROFESSIONAL ENGINEER
TRANG LUONG
No. C64430
Exp. 06/30/11
CIVIL
STATE OF CALIFORNIA

*THE STATE OF CALIFORNIA OR ITS OFFICERS OR AGENTS SHALL NOT BE RESPONSIBLE FOR THE ACCURACY OR COMPLETENESS OF SCANNED COPIES OF THIS PLAN SHEET.*

NOTE:

1. FOR RIGHT OF WAY AND ACCURATE ACCESS DATA, CONTACT RIGHT OF WAY ENGINEERING MAPS AT THE DISTRICT OFFICE.

# PAVEMENT DELINEATION AND SIGN PLAN

SCALE: 1" = 50'

**PD-22**

THIS PLAN IS ACCURATE FOR PAVEMENT DELINEATION & SIGN WORK ONLY

STATE OF CALIFORNIA - DEPARTMENT OF TRANSPORTATION
Caltrans® TRAFFIC DESIGN

FUNCTIONAL SUPERVISOR: ADEL MALEK
CALCULATED-DESIGNED BY: TRANG LUONG
CHECKED BY: ADEL MALEK
REVISED BY
DATE REVISED

LAST REVISION 00-00-00
DATE PLOTTED => 29-NOV-2010
TIME PLOTTED => 14:49

| Dist | COUNTY | ROUTE | POST MILES TOTAL PROJECT | SHEET No. | TOTAL SHEETS |
|---|---|---|---|---|---|
| 12 | Ora | 5 | 6.8/14.5 | 106 | 171 |

REGISTERED CIVIL ENGINEER 09-30-10 DATE

11-29-10
PLANS APPROVAL DATE

REGISTERED PROFESSIONAL ENGINEER
TRANG LUONG
No. C64430
Exp. 06/30/11
CIVIL
STATE OF CALIFORNIA

*THE STATE OF CALIFORNIA OR ITS OFFICERS OR AGENTS SHALL NOT BE RESPONSIBLE FOR THE ACCURACY OR COMPLETENESS OF SCANNED COPIES OF THIS PLAN SHEET.*

**NOTE:**

1. FOR RIGHT OF WAY AND ACCURATE ACCESS DATA, CONTACT RIGHT OF WAY ENGINEERING MAPS AT THE DISTRICT OFFICE.

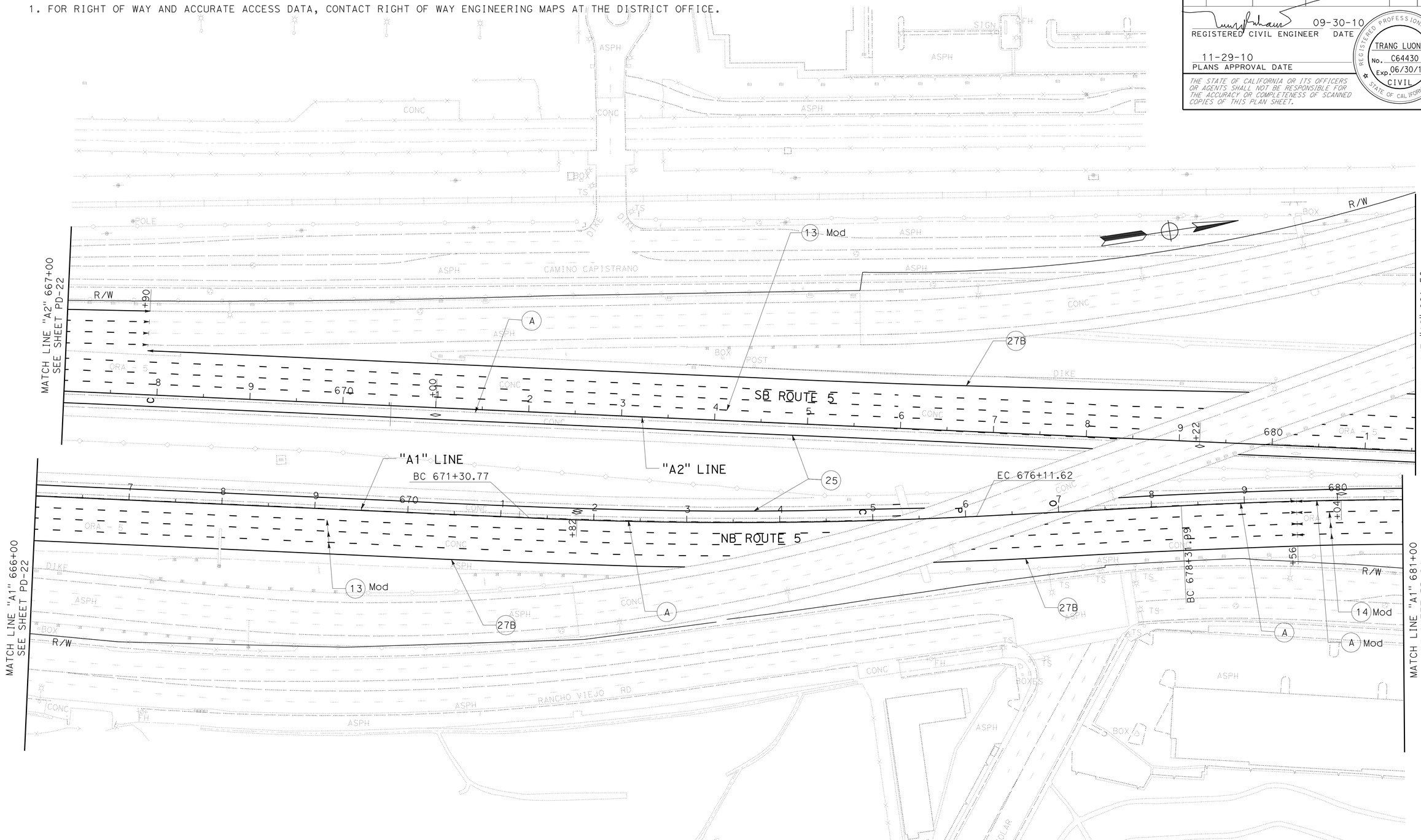


# PAVEMENT DELINEATION AND SIGN PLAN

SCALE: 1" = 50'

**PD-23**

THIS PLAN IS ACCURATE FOR PAVEMENT DELINEATION & SIGN WORK ONLY

| REVISED BY | DATE REVISED |
|---|---|
| | |

TRANG LUONG — ADEL MALEK
CALCULATED-DESIGNED BY — CHECKED BY
FUNCTIONAL SUPERVISOR: ADEL MALEK

STATE OF CALIFORNIA - DEPARTMENT OF TRANSPORTATION
Caltrans
TRAFFIC DESIGN

LAST REVISION 00-00-00 | DATE PLOTTED => 29-NOV-2010 | TIME PLOTTED => 14:49

| Dist | COUNTY | ROUTE | POST MILES TOTAL PROJECT | SHEET No. | TOTAL SHEETS |
|---|---|---|---|---|---|
| 12 | Ora | 5 | 6.8/14.5 | 107 | 171 |

REGISTERED CIVIL ENGINEER 09-30-10 DATE

11-29-10
PLANS APPROVAL DATE

REGISTERED PROFESSIONAL ENGINEER TRANG LUONG No. C64430 Exp. 06/30/11 CIVIL STATE OF CALIFORNIA

*THE STATE OF CALIFORNIA OR ITS OFFICERS OR AGENTS SHALL NOT BE RESPONSIBLE FOR THE ACCURACY OR COMPLETENESS OF SCANNED COPIES OF THIS PLAN SHEET.*

**NOTE:**

1. FOR RIGHT OF WAY AND ACCURATE ACCESS DATA, CONTACT RIGHT OF WAY ENGINEERING MAPS AT THE DISTRICT OFFICE.

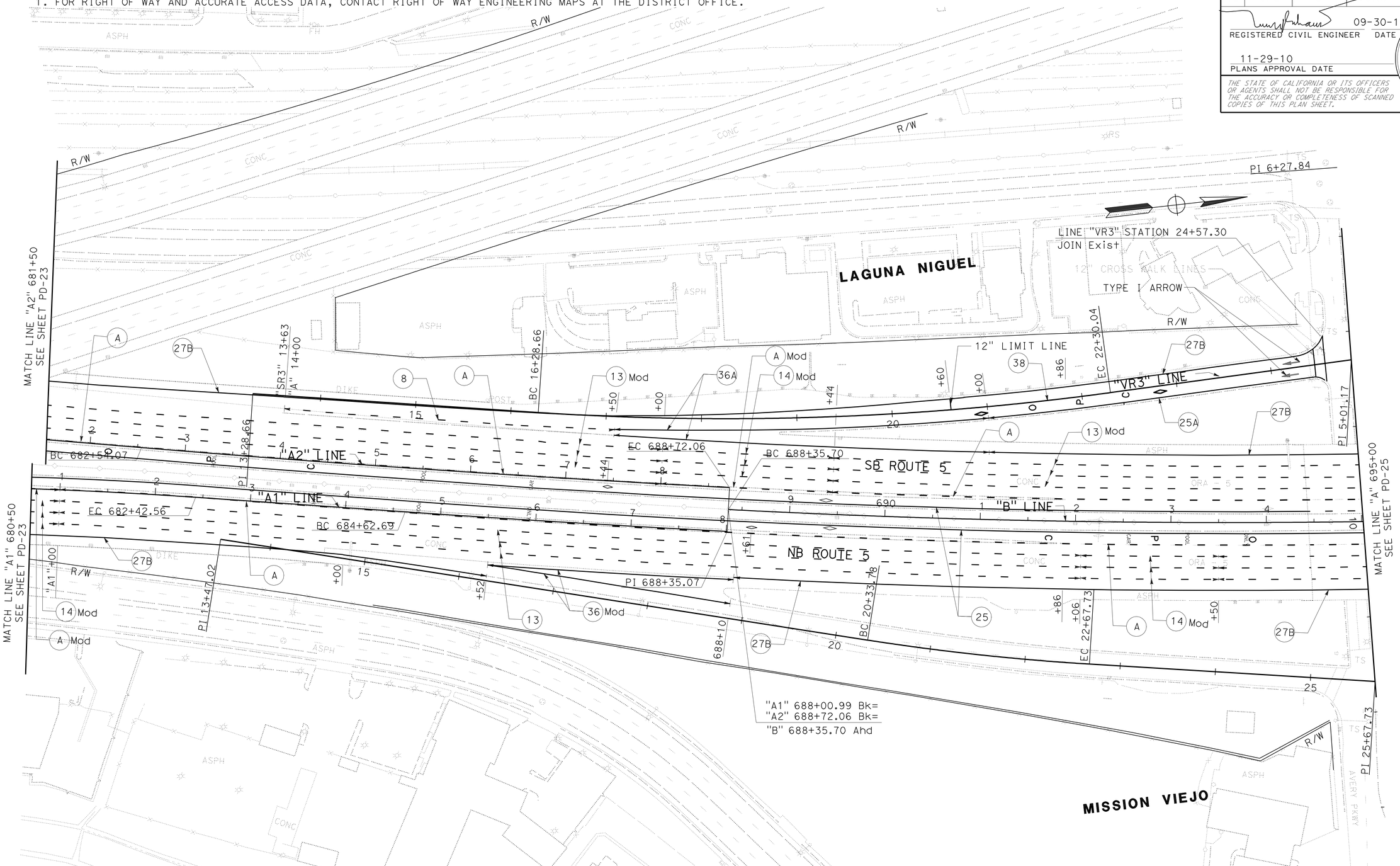


# PAVEMENT DELINEATION AND SIGN PLAN

SCALE: 1" = 50'

**PD-24**

THIS PLAN IS ACCURATE FOR PAVEMENT DELINEATION & SIGN WORK ONLY

STATE OF CALIFORNIA - DEPARTMENT OF TRANSPORTATION
Caltrans® TRAFFIC DESIGN

FUNCTIONAL SUPERVISOR: ADEL MALEK
CALCULATED-DESIGNED BY: TRANG LUONG
CHECKED BY: ADEL MALEK
REVISED BY
DATE REVISED

LAST REVISION 00-00-00
DATE PLOTTED => 29-NOV-2010
TIME PLOTTED => 14:54

| Dist | COUNTY | ROUTE | POST MILES TOTAL PROJECT | SHEET No. | TOTAL SHEETS |
|---|---|---|---|---|---|
| 12 | Ora | 5 | 6.8/14.5 | 108 | 171 |

REGISTERED CIVIL ENGINEER 09-30-10 DATE

11-29-10
PLANS APPROVAL DATE

REGISTERED PROFESSIONAL ENGINEER
TRANG LUONG
No. C64430
Exp. 06/30/11
CIVIL
STATE OF CALIFORNIA

*THE STATE OF CALIFORNIA OR ITS OFFICERS OR AGENTS SHALL NOT BE RESPONSIBLE FOR THE ACCURACY OR COMPLETENESS OF SCANNED COPIES OF THIS PLAN SHEET.*

**NOTE:**

1. FOR RIGHT OF WAY AND ACCURATE ACCESS DATA, CONTACT RIGHT OF WAY ENGINEERING MAPS AT THE DISTRICT OFFICE.

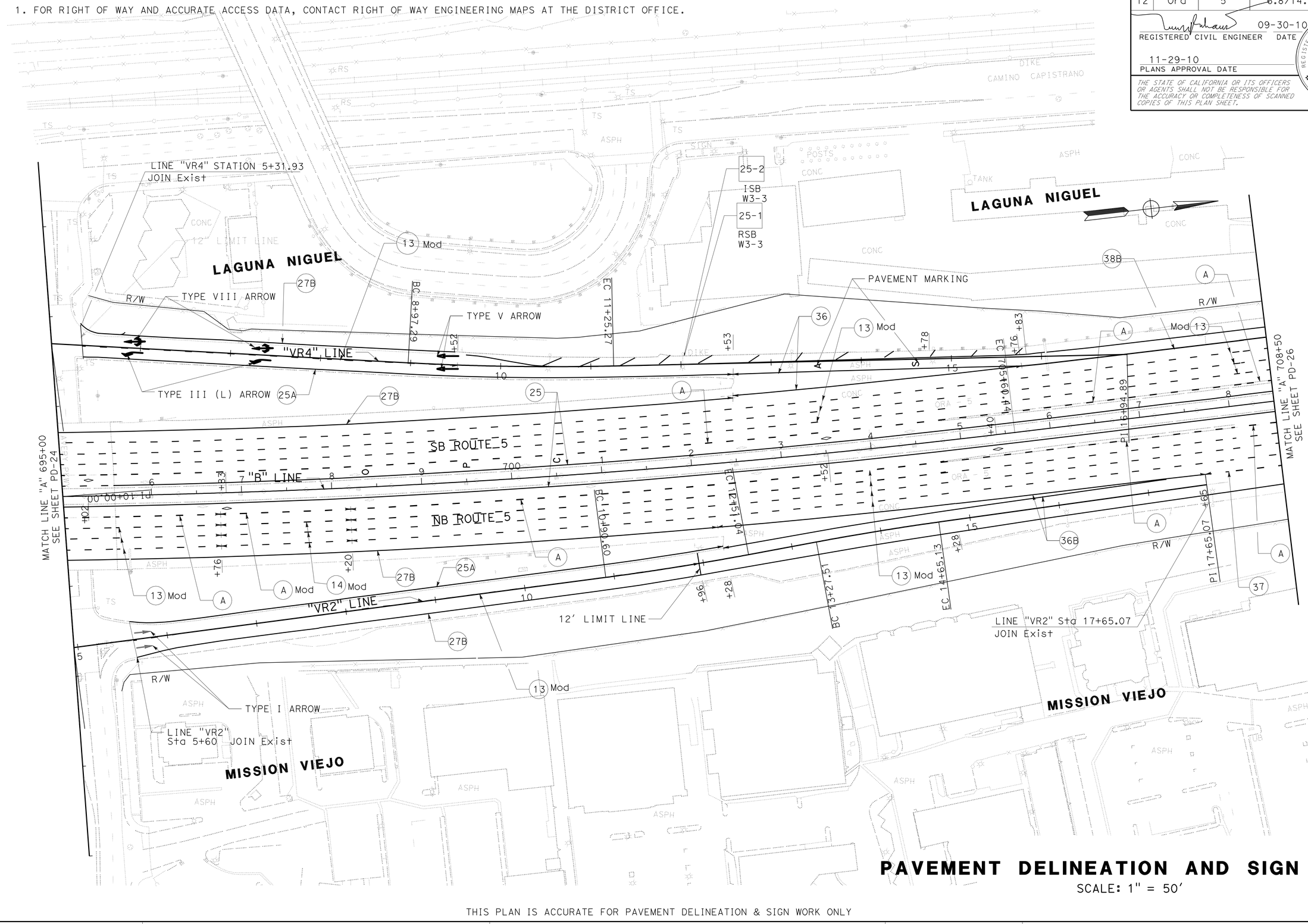


# PAVEMENT DELINEATION AND SIGN PLAN

SCALE: 1" = 50'

**PD-25**

THIS PLAN IS ACCURATE FOR PAVEMENT DELINEATION & SIGN WORK ONLY

STATE OF CALIFORNIA - DEPARTMENT OF TRANSPORTATION
Caltrans
TRAFFIC DESIGN

FUNCTIONAL SUPERVISOR: ADEL MALEK
CALCULATED-DESIGNED BY: TRANG LUONG
CHECKED BY: ADEL MALEK
REVISED BY
DATE REVISED

LAST REVISION 00-00-00 | DATE PLOTTED => 29-NOV-2010 | TIME PLOTTED => 14:27

BORDER LAST REVISED 7/2/2010 | USERNAME => trstrk | DGN FILE => c0e030na025.dgn | RELATIVE BORDER SCALE IS IN INCHES 0 1 2 3 | UNIT 3004 | PROJECT NUMBER & PHASE 12000000931

| Dist | COUNTY | ROUTE | POST MILES TOTAL PROJECT | SHEET No. | TOTAL SHEETS |
|---|---|---|---|---|---|
| 12 | Ora | 5 | 6.8/14.5 | 109 | 171 |

REGISTERED CIVIL ENGINEER 09-30-10 DATE

11-29-10
PLANS APPROVAL DATE

REGISTERED PROFESSIONAL ENGINEER
TRANG LUONG
No. C64430
Exp. 06/30/11
CIVIL
STATE OF CALIFORNIA

*THE STATE OF CALIFORNIA OR ITS OFFICERS OR AGENTS SHALL NOT BE RESPONSIBLE FOR THE ACCURACY OR COMPLETENESS OF SCANNED COPIES OF THIS PLAN SHEET.*

**NOTE:**

1. FOR RIGHT OF WAY AND ACCURATE ACCESS DATA, CONTACT RIGHT OF WAY ENGINEERING MAPS AT THE DISTRICT OFFICE.

# PAVEMENT DELINEATION AND SIGN PLAN

SCALE: 1" = 50'

**PD-26**

THIS PLAN IS ACCURATE FOR PAVEMENT DELINEATION & SIGN WORK ONLY

STATE OF CALIFORNIA - DEPARTMENT OF TRANSPORTATION
Caltrans
TRAFFIC DESIGN

FUNCTIONAL SUPERVISOR: ADEL MALEK
CALCULATED-DESIGNED BY: TRANG LUONG
CHECKED BY: ADEL MALEK
REVISED BY
DATE REVISED

LAST REVISION 00-00-00
DATE PLOTTED => 29-NOV-2010
TIME PLOTTED => 14:27

| Dist | COUNTY | ROUTE | POST MILES TOTAL PROJECT | SHEET No. | TOTAL SHEETS |
|---|---|---|---|---|---|
| 12 | Ora | 5 | 6.8/14.5 | 110 | 171 |

REGISTERED CIVIL ENGINEER 09-30-10 DATE

11-29-10
PLANS APPROVAL DATE

REGISTERED PROFESSIONAL ENGINEER
TRANG LUONG
No. C64430
Exp. 06/30/11
CIVIL
STATE OF CALIFORNIA

*THE STATE OF CALIFORNIA OR ITS OFFICERS OR AGENTS SHALL NOT BE RESPONSIBLE FOR THE ACCURACY OR COMPLETENESS OF SCANNED COPIES OF THIS PLAN SHEET.*

NOTE:

1. FOR RIGHT OF WAY AND ACCURATE ACCESS DATA, CONTACT RIGHT OF WAY ENGINEERING MAPS AT THE DISTRICT OFFICE.

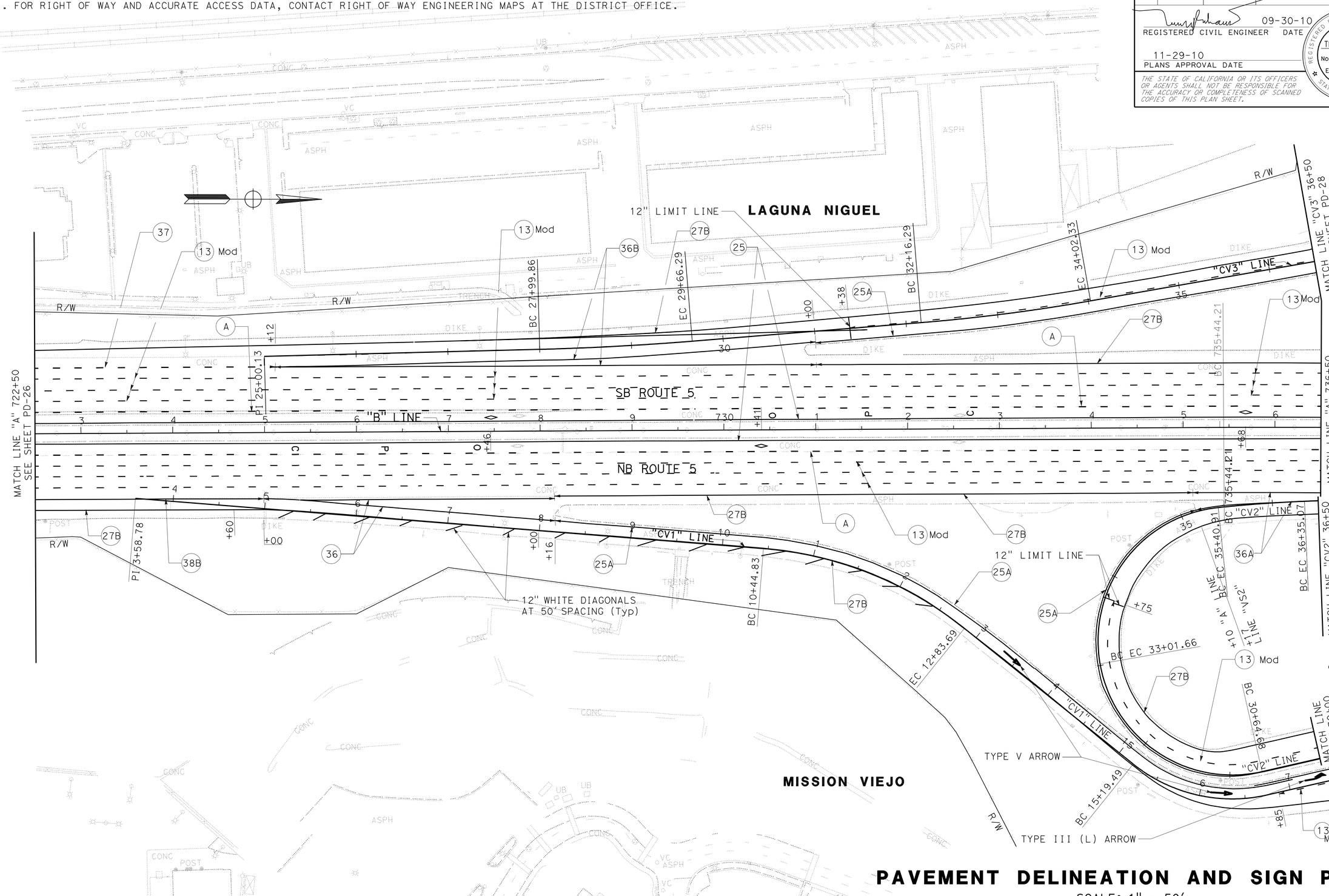


# PAVEMENT DELINEATION AND SIGN PLAN

SCALE: 1" = 50'

**PD-27**

THIS PLAN IS ACCURATE FOR PAVEMENT DELINEATION & SIGN WORK ONLY

STATE OF CALIFORNIA - DEPARTMENT OF TRANSPORTATION
Caltrans®
TRAFFIC DESIGN

FUNCTIONAL SUPERVISOR: ADEL MALEK
CALCULATED-DESIGNED BY: TRANG LUONG
CHECKED BY: ADEL MALEK
REVISED BY
DATE REVISED

LAST REVISION 00-00-00
DATE PLOTTED => 29-NOV-2010
TIME PLOTTED => 14:28

BORDER LAST REVISED 7/2/2010
USERNAME => trstrk
DGN FILE => c0e030na027.dgn
RELATIVE BORDER SCALE IS IN INCHES 0 1 2 3
UNIT 3004
PROJECT NUMBER & PHASE 12000000931

| Dist | COUNTY | ROUTE | POST MILES TOTAL PROJECT | SHEET No. | TOTAL SHEETS |
|---|---|---|---|---|---|
| 12 | Ora | 5 | 6.8/14.5 | 111 | 171 |

REGISTERED CIVIL ENGINEER 09-30-10 DATE

11-29-10
PLANS APPROVAL DATE

REGISTERED PROFESSIONAL ENGINEER
TRANG LUONG
No. C64430
Exp. 06/30/11
CIVIL
STATE OF CALIFORNIA

*THE STATE OF CALIFORNIA OR ITS OFFICERS OR AGENTS SHALL NOT BE RESPONSIBLE FOR THE ACCURACY OR COMPLETENESS OF SCANNED COPIES OF THIS PLAN SHEET.*

NOTES:

1. FOR RIGHT OF WAY AND ACCURATE ACCESS DATA, CONTACT RIGHT OF WAY ENGINEERING MAPS AT THE DISTRICT OFFICE.

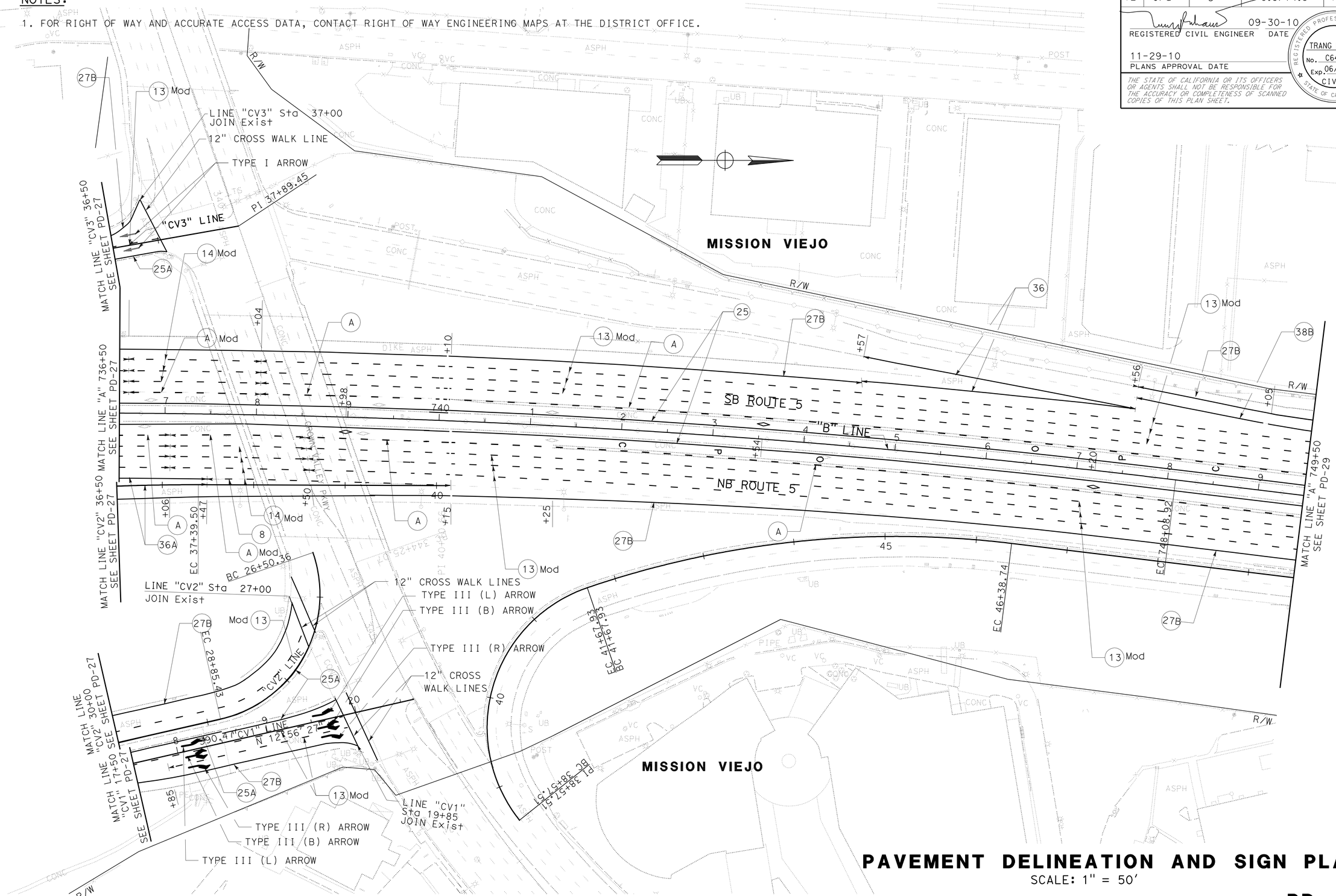


# PAVEMENT DELINEATION AND SIGN PLAN

SCALE: 1" = 50'

THIS PLAN IS ACCURATE FOR PAVEMENT DELINEATION & SIGN WORK ONLY

**PD- 28**

STATE OF CALIFORNIA - DEPARTMENT OF TRANSPORTATION
Caltrans®
TRAFFIC DESIGN

FUNCTIONAL SUPERVISOR: ADEL MALEK
CALCULATED-DESIGNED BY: TRANG LUONG
CHECKED BY: ADEL MALEK
REVISED BY
DATE REVISED

LAST REVISION 00-00-00
DATE PLOTTED => 30-NOV-2010
TIME PLOTTED => 12:31

| Dist | COUNTY | ROUTE | POST MILES TOTAL PROJECT | SHEET No. | TOTAL SHEETS |
|---|---|---|---|---|---|
| 12 | Ora | 5 | 6.8/14.5 | 112 | 171 |

REGISTERED CIVIL ENGINEER 09-30-10 DATE

11-29-10
PLANS APPROVAL DATE

REGISTERED PROFESSIONAL ENGINEER TRANG LUONG No. C64430 Exp. 06/30/11 CIVIL STATE OF CALIFORNIA

*THE STATE OF CALIFORNIA OR ITS OFFICERS OR AGENTS SHALL NOT BE RESPONSIBLE FOR THE ACCURACY OR COMPLETENESS OF SCANNED COPIES OF THIS PLAN SHEET.*

NOTES:

1. FOR RIGHT OF WAY AND ACCURATE ACCESS DATA, CONTACT RIGHT OF WAY ENGINEERING MAPS AT THE DISTRICT OFFICE.

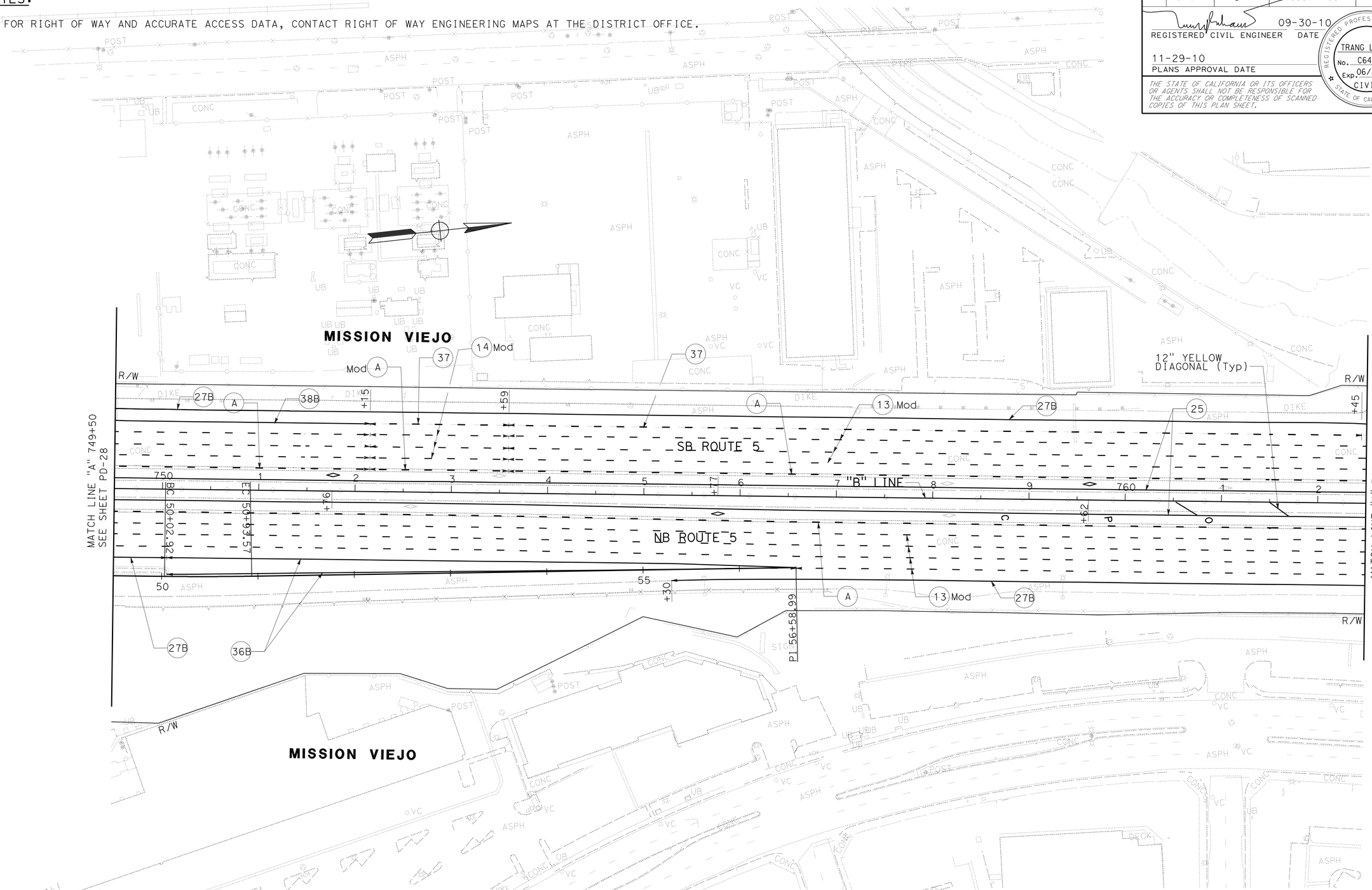


# PAVEMENT DELINEATION AND SIGN PLAN

SCALE: 1" = 50'

THIS PLAN IS ACCURATE FOR PAVEMENT DELINEATION & SIGN WORK ONLY

**PD- 29**

STATE OF CALIFORNIA - DEPARTMENT OF TRANSPORTATION
Caltrans® TRAFFIC DESIGN

FUNCTIONAL SUPERVISOR: ADEL MALEK
CALCULATED-DESIGNED BY: TRANG LUONG
CHECKED BY: ADEL MALEK
REVISED BY
DATE REVISED

LAST REVISION 00-00-00
DATE PLOTTED => 30-NOV-2010
TIME PLOTTED => 12:31

| Dist | COUNTY | ROUTE | POST MILES TOTAL PROJECT | SHEET No. | TOTAL SHEETS |
|---|---|---|---|---|---|
| 12 | Ora | 5 | 6.8/14.5 | 113 | 171 |

REGISTERED CIVIL ENGINEER DATE 09-30-10

11-29-10
PLANS APPROVAL DATE

REGISTERED PROFESSIONAL ENGINEER
TRANG LUONG
No. C64430
Exp. 06/30/11
CIVIL
STATE OF CALIFORNIA

*THE STATE OF CALIFORNIA OR ITS OFFICERS OR AGENTS SHALL NOT BE RESPONSIBLE FOR THE ACCURACY OR COMPLETENESS OF SCANNED COPIES OF THIS PLAN SHEET.*

NOTES:

1. FOR RIGHT OF WAY AND ACCURATE ACCESS DATA, CONTACT RIGHT OF WAY ENGINEERING MAPS AT THE DISTRICT OFFICE.

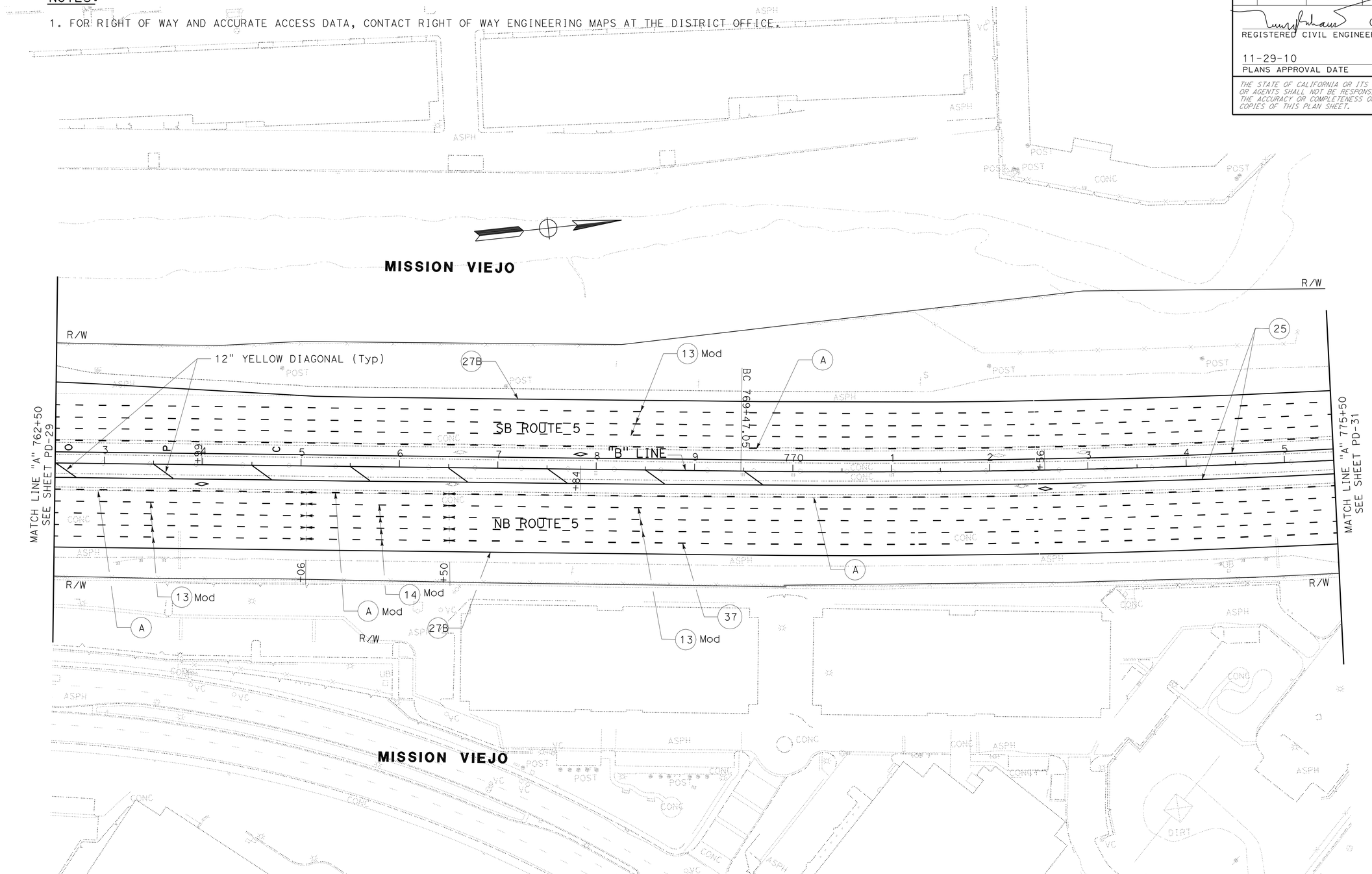


# PAVEMENT DELINEATION AND SIGN PLAN

SCALE: 1" = 50'

THIS PLAN IS ACCURATE FOR PAVEMENT DELINEATION & SIGN WORK ONLY

**PD- 30**

STATE OF CALIFORNIA - DEPARTMENT OF TRANSPORTATION
Caltrans
TRAFFIC DESIGN

FUNCTIONAL SUPERVISOR: ADEL MALEK
CALCULATED-DESIGNED BY: TRANG LUONG
CHECKED BY: ADEL MALEK
REVISED BY
DATE REVISED

LAST REVISION 00-00-00
DATE PLOTTED => 30-NOV-2010
TIME PLOTTED => 12:31

| Dist | COUNTY | ROUTE | POST MILES TOTAL PROJECT | SHEET No. | TOTAL SHEETS |
|---|---|---|---|---|---|
| 12 | Ora | 5 | 6.8/14.5 | 114 | 171 |

REGISTERED CIVIL ENGINEER DATE 09-30-10

11-29-10
PLANS APPROVAL DATE

REGISTERED PROFESSIONAL ENGINEER
TRANG LUONG
No. C64430
Exp. 06/30/11
CIVIL
STATE OF CALIFORNIA

*THE STATE OF CALIFORNIA OR ITS OFFICERS OR AGENTS SHALL NOT BE RESPONSIBLE FOR THE ACCURACY OR COMPLETENESS OF SCANNED COPIES OF THIS PLAN SHEET.*

NOTES:

1. FOR RIGHT OF WAY AND ACCURATE ACCESS DATA, CONTACT RIGHT OF WAY ENGINEERING MAPS AT THE DISTRICT OFFICE.

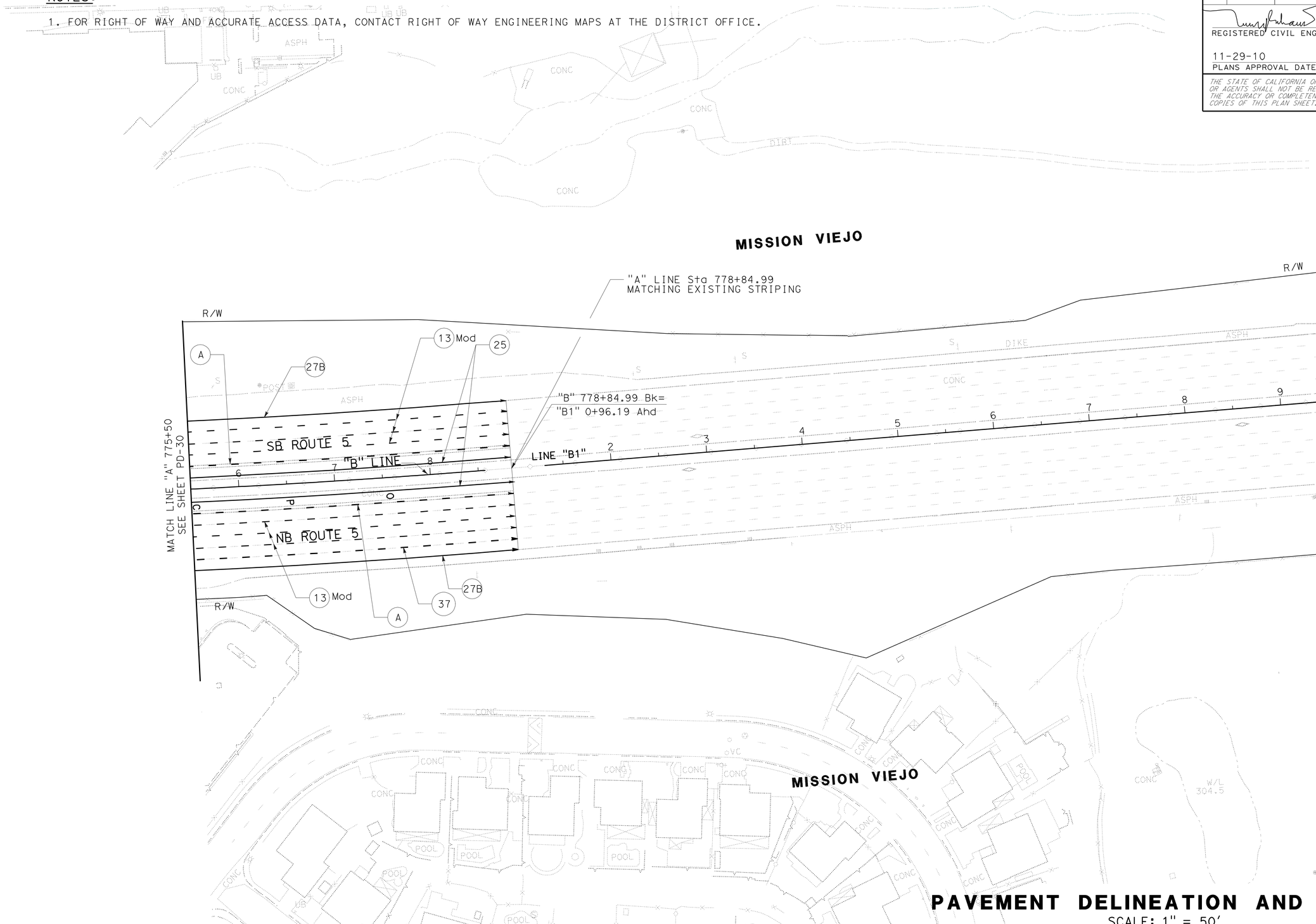


# PAVEMENT DELINEATION AND SIGN PLAN

SCALE: 1" = 50'

THIS PLAN IS ACCURATE FOR PAVEMENT DELINEATION & SIGN WORK ONLY

**PD- 31**

STATE OF CALIFORNIA - DEPARTMENT OF TRANSPORTATION
Caltrans
TRAFFIC DESIGN

FUNCTIONAL SUPERVISOR: ADEL MALEK
CALCULATED-DESIGNED BY: TRANG LUONG
CHECKED BY: ADEL MALEK
REVISED BY
DATE REVISED

LAST REVISION 00-00-00
DATE PLOTTED => 30-NOV-2010
TIME PLOTTED => 12:31

| Dist | COUNTY | ROUTE | POST MILES TOTAL PROJECT | SHEET No. | TOTAL SHEETS |
|---|---|---|---|---|---|
| 12 | Ora | 5 | 6.8/14.5 | 115 | 171 |

REGISTERED CIVIL ENGINEER 09-30-10 DATE

11-29-10
PLANS APPROVAL DATE

REGISTERED PROFESSIONAL ENGINEER
TRANG LUONG
No. C64430
Exp. 06/30/11
CIVIL
STATE OF CALIFORNIA

*THE STATE OF CALIFORNIA OR ITS OFFICERS OR AGENTS SHALL NOT BE RESPONSIBLE FOR THE ACCURACY OR COMPLETENESS OF SCANNED COPIES OF THIS PLAN SHEET.*

NOTE:

1. SEE STANDARD PLANS FOR PAVEMENT MARKING SYMBOL AND WORD DETAILS.

LEGENDS:

- TYPE H ONE-WAY YELLOW RETROREFLECTIVE MARKER
- TYPE G ONE-WAY CLEAR RETROREFLECTIVE MARKER
- TYPE C RED-CLEAR RETROREFLECTIVE MARKER
- TYPE A WHITE NON-REFLECTIVE MARKER
- 4" BLACK PAINT TRAFFIC STRIPE (2-COAT)
- 4" YELLOW THERMOPLASTIC TRAFFIC STRIPE
- 4" WHITE THERMOPLASTIC TRAFFIC STRIPE
- 8" WHITE THERMOPLASTIC TRAFFIC STRIPE
- DIRECTION OF TRAFFIC

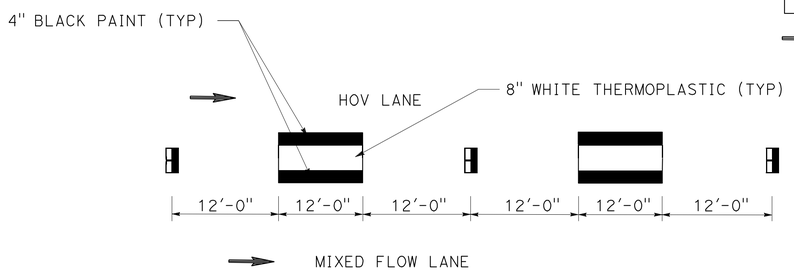


**DETAIL A**

(37C Mod) HOV LANE CONTINUOUS STRIPING DETAIL FOR PCC PAVEMENT

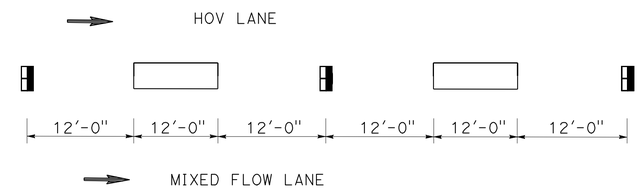


**DETAIL A**

(37C Mod) HOV LANE CONTINUOUS STRIPING DETAIL FOR AC PAVEMENT

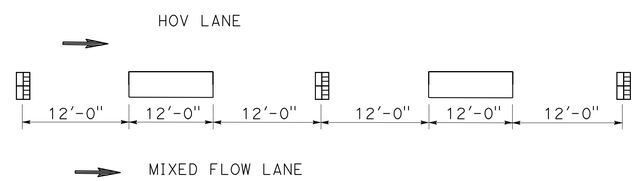


**DETAIL A Mod**

HOV LANE CONTINUOUS STRIPING DETAIL
(ADJACENT TO DETAIL 14 MOD)

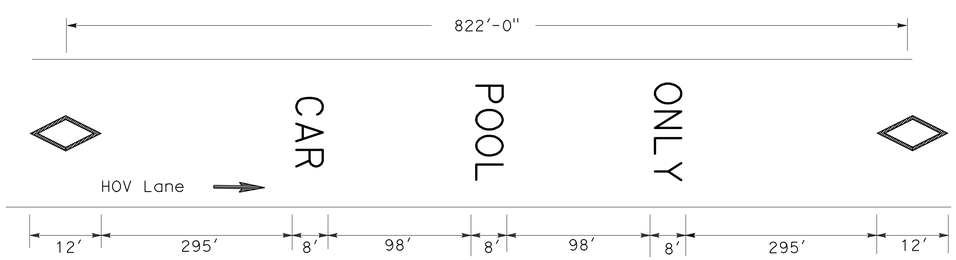


MIXED FLOW TRAFFIC

**DETAIL B**

TYPICAL HOV LANE PAVEMENT MARKING

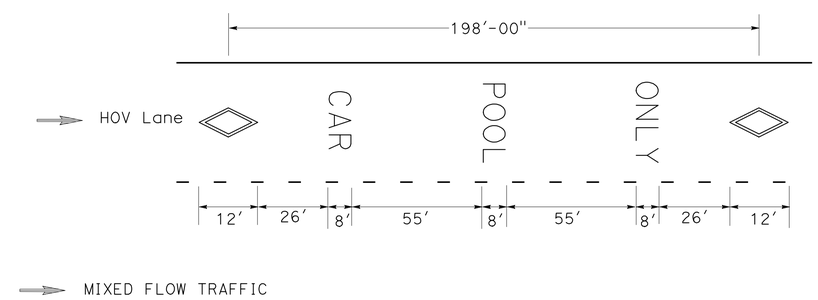


**DETAIL C**

HOV LANE PAVEMENT MARKING AT RAMPS

# PAVEMENT DELINEATION DETAILS

NO SCALE

**PDD-1**

STATE OF CALIFORNIA - DEPARTMENT OF TRANSPORTATION
Caltrans® TRAFFIC DESIGN

FUNCTIONAL SUPERVISOR: ADEL MALEK
CALCULATED-DESIGNED BY: TRANG LUONG
CHECKED BY: ADEL MALEK
REVISED BY
DATE REVISED

LAST REVISION 00-00-00
DATE PLOTTED => 29-NOV-2010
TIME PLOTTED => 13:48

| Dist | COUNTY | ROUTE | POST MILES TOTAL PROJECT | SHEET No. | TOTAL SHEETS |
|---|---|---|---|---|---|
| 12 | Ora | 5 | 6.8/14.5 | 116 | 171 |

REGISTERED CIVIL ENGINEER 09-30-10 DATE

11-29-10
PLANS APPROVAL DATE

REGISTERED PROFESSIONAL ENGINEER
TRANG LUONG
No. C64430
Exp. 06/30/11
CIVIL
STATE OF CALIFORNIA

*THE STATE OF CALIFORNIA OR ITS OFFICERS OR AGENTS SHALL NOT BE RESPONSIBLE FOR THE ACCURACY OR COMPLETENESS OF SCANNED COPIES OF THIS PLAN SHEET.*

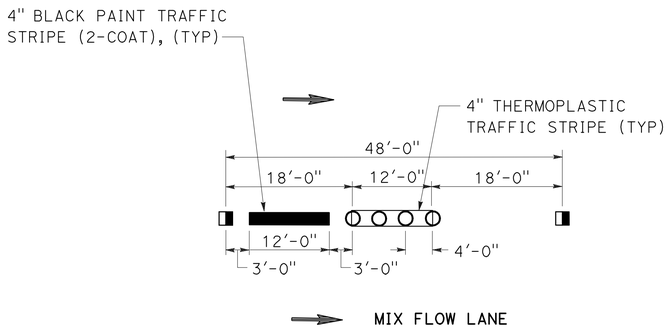


**DETAIL 13 MOD**

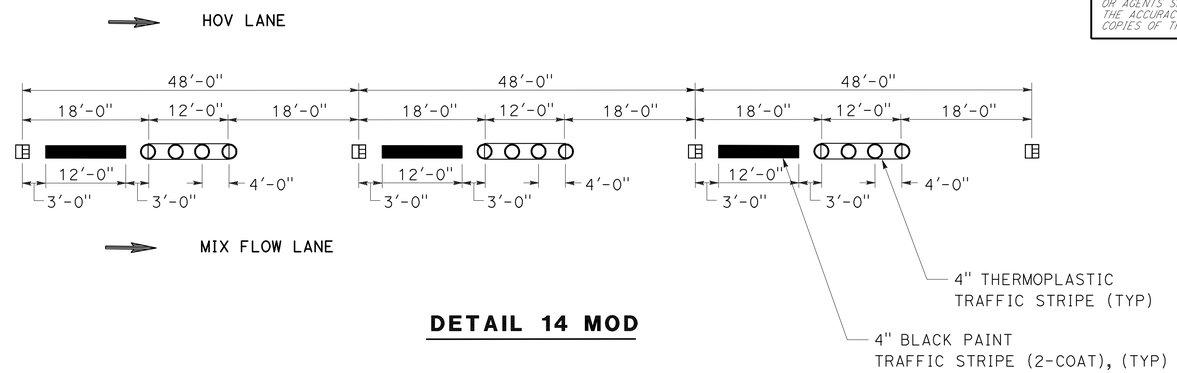


**DETAIL 14 MOD**

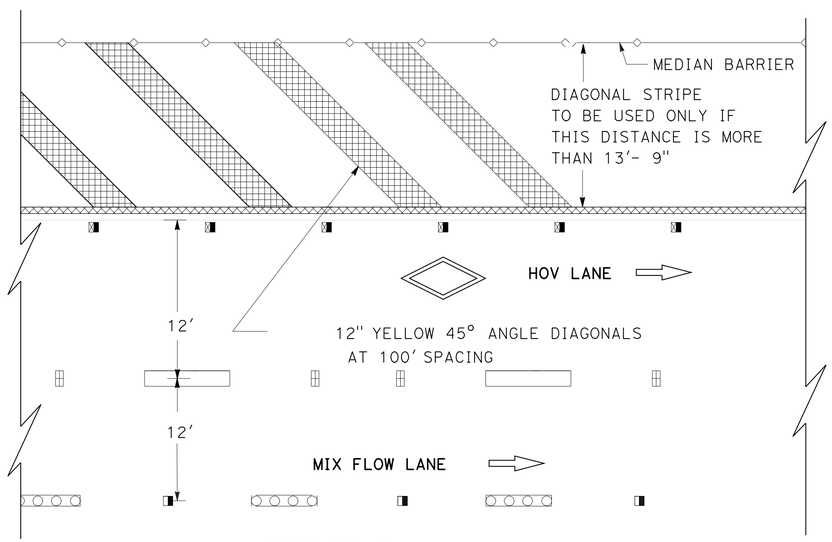


**DETAIL D**

**DIAGONAL DETAIL FOR INSIDE SHOULDER**

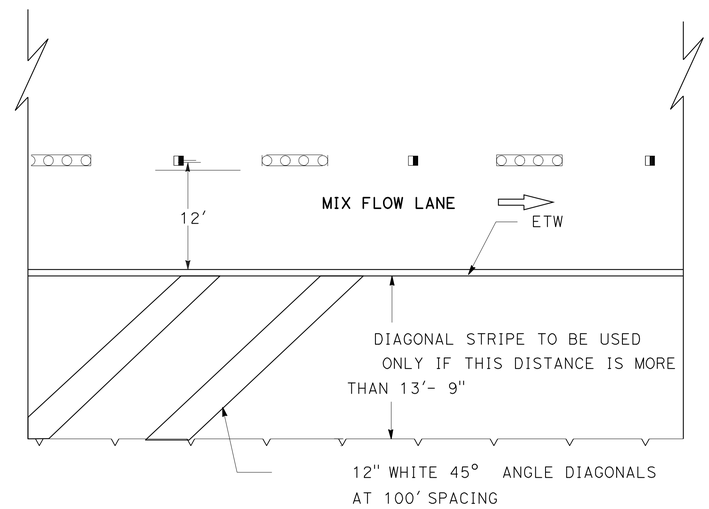


**DETAIL E**

**DIAGONAL DETAIL FOR OUTSIDE SHOULDER**

# PAVEMENT DELINEATION DETAILS

NO SCALE

**PDD-2**

STATE OF CALIFORNIA - DEPARTMENT OF TRANSPORTATION
Caltrans
TRAFFIC DESIGN

FUNCTIONAL SUPERVISOR: ADEL MALEK
CALCULATED-DESIGNED BY: TRANG LUONG
CHECKED BY: ADEL MALEK
REVISED BY
DATE REVISED

LAST REVISION 00-00-00
DATE PLOTTED => 29-NOV-2010
TIME PLOTTED => 13:48

| Dist | COUNTY | ROUTE | POST MILES TOTAL PROJECT | SHEET No. | TOTAL SHEETS |
|---|---|---|---|---|---|
| 12 | Ora | 5 | 6.8/14.5 | 117 | 171 |

REGISTERED CIVIL ENGINEER 09-30-10 DATE

11-29-10
PLANS APPROVAL DATE

REGISTERED PROFESSIONAL ENGINEER TRANG LUONG No. C64430 Exp. 06/30/11 CIVIL STATE OF CALIFORNIA

*THE STATE OF CALIFORNIA OR ITS OFFICERS OR AGENTS SHALL NOT BE RESPONSIBLE FOR THE ACCURACY OR COMPLETENESS OF SCANNED COPIES OF THIS PLAN SHEET.*

# PAVEMENT DELINEATION QUANTITIES

| SHEET No. | ALIGMENT AND STATIONS | THERMOPLASTIC TRAFFIC STRIPE | | | | | | | | | | | | | PAINT TRAFFIC STRIPE (2-COAT) | | | THERMOPLASTIC PAVEMENT MARKING | | | | | PAVEMENT MARKER | | | | REMOVE | | | | | |
|---|---|---|---|---|---|---|---|---|---|---|---|---|---|---|---|---|---|---|---|---|---|---|---|---|---|---|---|---|---|---|---|---|
| | | DETAIL 13 Mod 4" WHITE BROKEN (36-12) | DETAIL 14 Mod 4" WHITE BROKEN (36-12) | DETAIL 8 4" WHITE BROKEN (17-7) | DETAIL 37 (AUX) 8" WHITE BROKEN (12-3) | DETAIL A(HOV CONTINUOUS) 8" WHITE BROKEN (12-3) | DETAIL A MOD (HOV CONTINUOUS) 8" WHITE BROKEN (12-3) | DETAIL 38B 8" SOLID WHITE | DETAIL 36 8" SOLID WHITE | DETAIL 36A 8" SOLID WHITE | DETAIL 36B 8" SOLID WHITE | DETAIL 27B 4" SOLID WHITE | DETAIL 25 4" SOLID YELLOW | DETAIL 25A 4" SOLID YELLOW | DETAIL 13 Mod 4" BLACK BROKEN (36-12) | DETAIL 14 Mod 4" BLACK BROKEN (36-12) | DETAIL 37C Mod 4" BLACK BROKEN (36-12) | 12" SOLID DIAGONAL YELLOW | 12" SOLID DIAGONAL WHITE | HOV DIAMOND & LETTERS | ARROW | CROSS WALK LIMIT LINE | NON-REFLECTIVE TYPE A | RETROFLECTIVE TYPE H | RETROFLECTIVE TYPE G | RETROFLECTIVE TYPE C | YELLOW THERMOPLASTIC TRAFFIC STRIPE (HAZARDOUS WASTE) | THERMOPLASTIC TRAFFIC STRIP (WHITE) | PAINTED TRAFFIC STRIP (BLACK) | YELLOW THERMOPLASTIC PAVEMENT MARKING (HAZARDOUS WASTE) | THERMOPLASTIC PAVEMENT MARKING | PAVEMENT MARKER |
| | | LF | LF | LF | LF | LF | | LF | LF | LF | LF | LF | LF | LF | LF | LF | LF | SQFT | SQFT | SQFT | SQFT | SQFT | EA | EA | EA | EA | LF | LF | LF | SQFT | SQFT | EA |
| PD-1 | LINE "A" 369+31.25 TO 374+50 | 3114 | | | | | | | | | | 1038 | 1038 | | 3114 | | | 120 | | | | | 260 | 23 | 66 | | 1038 | | | 120 | | 349 |
| PD-1 | LINE "R1" 65+86.95 TO 71+12.77 | | | | | | | | | | | 705 | | 705 | | | | | 150 | | 25 | | | 30 | | | 705 | | | | | 30 |
| PD-1 | LINE "R2" 75+50 TO 69+76 | 387 | | | | | | | | 62 | | 575 | | 575 | 387 | | | | | | | | 33 | 25 | 13 | | 575 | 124 | | | | 71 |
| PD-1 | LINE "R3" 68+34.78 TO 72+18.91 | | | | | | | | 214 | | | 385 | | 195 | | | | | | | 66 | | | 10 | 10 | | 195 | | | | | 20 |
| PD-1 | LINE "R4" 72+18.91 TO 74+50 | 231 | | | | | | | | | | 231 | | 375 | 231 | | | | | 63 | | | 25 | 17 | 6 | | 375 | | | | | 48 |
| PD-2 | LINE "A" 374+50 TO 388+50 | 9327 | 432 | | 200 | 1400 | | 450 | | | | 1953 | 2800 | | | 432 | | 100 | | 84 | | | 826 | 60 | 295 | 31 | 2800 | 5727 | | 100 | 252 | 1580 |
| PD-2 | LINE "R2" 75+50 TO 88+59 | 57 | | | | | | | | 184 | | 1309 | | 1309 | 57 | | | | | | | 24 | 5 | 44 | 12 | | 1309 | 667 | | | 24 | 61 |
| PD-2 | LINE "R4" 74+50 TO 82+96.37 | 847 | | | | | | | 827 | | | 847 | | 433 | 847 | | | | | | | | 71 | 19 | 56 | | 433 | 2280 | | | | 146 |
| PD-3 | LINE "A" 388+50 TO 401+50 | 9100 | | 300 | | 1300 | | | | | | 2600 | 2600 | | 9100 | | 550 | | | 84 | | | 760 | 56 | 265 | 44 | 2600 | 5482 | | | 84 | 1447 |
| PD-4 | LINE "A" 401+50 TO 414+50 | 9100 | | | 663 | 1300 | | | | | 418 | 2600 | 2600 | | 9100 | | 1300 | | | 84 | | | 758 | 56 | 285 | | 2600 | 6364 | | | 168 | 1290 |
| PD-5 | LINE "A" 414+50 TO 429+50 | 10574 | 576 | | | 1500 | | | | | 250 | 3000 | 3000 | | 10574 | 576 | 1500 | | | 84 | 126 | | 934 | 64 | 308 | 16 | 3000 | 14818 | | | 84 | 1517 |
| PD-6 | LINE "A" 429+50 TO 444+50 | 9924 | 576 | | | 1500 | | | | | | 3000 | 3000 | | 9924 | 576 | 1500 | | | 84 | | | 875 | 64 | 294 | 16 | 3312 | 7053 | 1656 | | 336 | 1515 |
| SUB TOTAL | | 52661 | 1584 | 300 | 863 | 7000 | | 450 | 1041 | 246 | 668 | 18243 | 15038 | 3592 | 43334 | 1584 | 4850 | 220 | 150 | 483 | 217 | 24 | 4547 | 468 | 1610 | 107 | 18942 | 42515 | 1656 | 220 | 948 | 8074 |
| SHEET TOTAL | | 54245 | | 300 | 7863 | | | 2405 | | | | 36873 | | | 49768 | | | 1094 | | | | | 4547 | 2185 | | | 18942 | 42515 | 1656 | 220 | 948 | 8074 |

PAVEMENT DELINEATION QUANTITIES

PDQ-1

STATE OF CALIFORNIA - DEPARTMENT OF TRANSPORTATION
Caltrans TRAFFIC DESIGN

FUNCTIONAL SUPERVISOR: ADEL MALEK
CALCULATED-DESIGNED BY: TRANG LUONG
CHECKED BY: ADEL MALEK
REVISED BY
DATE REVISED

LAST REVISION 00-00-00
DATE PLOTTED => 30-NOV-2010
TIME PLOTTED => 12:39

| Dist | COUNTY | ROUTE | POST MILES TOTAL PROJECT | SHEET No. | TOTAL SHEETS |
|---|---|---|---|---|---|
| 12 | Ora | 5 | 6.8/14.5 | 118 | 171 |

REGISTERED CIVIL ENGINEER 09-30-10 DATE

11-29-10
PLANS APPROVAL DATE

REGISTERED PROFESSIONAL ENGINEER
TRANG LUONG
No. C64430
Exp. 06/30/11
CIVIL
STATE OF CALIFORNIA

*THE STATE OF CALIFORNIA OR ITS OFFICERS OR AGENTS SHALL NOT BE RESPONSIBLE FOR THE ACCURACY OR COMPLETENESS OF SCANNED COPIES OF THIS PLAN SHEET.*

# PAVEMENT DELINEATION QUANTITIES

| SHEET No. | ALIGMENT AND STATIONS | THERMOPLASTIC TRAFFIC STRIPE | | | | | | | | | | | | | PAINT TRAFFIC STRIPE (2-COAT) | | | THERMOPLASTIC PAVEMENT MARKING | | | | | PAVEMENT MARKER | | | | REMOVE | | | | | |
|---|---|---|---|---|---|---|---|---|---|---|---|---|---|---|---|---|---|---|---|---|---|---|---|---|---|---|---|---|---|---|---|---|
| | | DETAIL 13 Mod 4" WHITE BROKEN (36-12) | DETAIL 14 Mod 4" WHITE BROKEN (36-12) | DETAIL 8 4" WHITE BROKEN (17-7) | DETAIL 37 (AUX) 8" WHITE BROKEN (12-3) | DETAIL A(HOV CONTINUOS) 8" WHITE BROKEN (12-3) | DETAIL AMOD (HOV) 8" WHITE BROKEN (12-3) | DETAIL 38B 8" SOLID WHITE | DETAIL 36 8" SOLID WHITE | DETAIL 36A 8" SOLID WHITE | DETAIL 36B 8" SOLID WHITE | DETAIL 27B 4" SOLID WHITE | DETAIL 25 4" SOLID YELLOW | DETAIL 25A 4" SOLID YELLOW | DETAIL 13 Mod 4" BLACK BROKEN (36-12) | DETAIL 14 Mod 4" BLACK BROKEN (36-12) | DETAIL 37C Mod 4" BLACK BROKEN (36-12) | 12" SOLID DIAGONAL YELLOW | 12" SOLID DIAGONAL WHITE | HOV DIAMOND & LETTERS | ARROW | CROSS WALK AND LIMIT LINE | NON-REFLECTIVE TYPE A | RETROFLECTIVE TYPE H | RETROFLECTIVE TYPE G | RETROFLECTIVE TYPE C | YELLOW THERMOPLASTIC TRAFFIC STRIPE (HAZARDOUS WASTE) | THERMOPLASTIC TRAFFIC STRIP (WHITE) | PAINTED TRAFFIC STRIPE (BLACK) | YELLOW THERMOPLASTIC PAVEMENT MARKING (HAZARDOUS WASTE) | THERMOPLASTIC PAVEMENT MARKING | PAVEMENT MARKER |
| | | LF | LF | LF | LF | LF | | LF | LF | LF | LF | LF | LF | LF | LF | LF | LF | SQFT | SQFT | SQFT | SQFT | SQFT | EA | EA | EA | EA | LF | LF | LF | SQFT | SQFT | EA |
| PD-7 | LINE "A" 444+50 TO 458+50 | 9224 | 432 | | | 1256 | 144 | | 646 | | | 2477 | 2800 | | 9224 | 432 | 1256 | | 100 | 84 | | | 805 | 60 | 294 | 22 | 8400 | 7583 | 2800 | | 420 | 1544 |
| PD-8 | LINE "A" 458+50 TO 472+50 | 9400 | | | | 2100 | | | | 800 | | 3100 | 2800 | 300 | 9400 | | 2100 | | 1100 | 168 | 50 | | 725 | 550 | 220 | | 11500 | 9230 | 4200 | | 1360 | 1495 |
| | LINE "CM" 2+39.15 TO 11+04 | 250 | | 276 | | | | | | 585 | | 817 | | 347 | | | | | | | | | | 16 | 10 | | 347 | 253 | | | | 26 |
| PD-9 | LINE "A" 472+50 TO 486+50 | 7968 | 432 | 300 | | 2800 | 144 | | 570 | 160 | | 2800 | 2800 | | 7968 | 432 | 2800 | | 100 | 168 | | | 700 | 60 | 358 | 20 | 14000 | 5647 | 5600 | | 168 | 1440 |
| PD-10 | LINE "A" 486+50 TO 499+50 | 7800 | | | | | | | | | | 2600 | 2600 | | 7800 | | | | | 168 | | | 660 | 500 | 320 | | 13000 | 4550 | 5200 | | 336 | 1330 |
| PD-11 | LINE "A" 499+50 TO 512+50 | 7400 | 432 | | | 2456 | 144 | | | | | 2142 | 2600 | | 7400 | 432 | 2456 | | 2100 | 168 | | | 660 | 400 | 220 | 12 | 10701 | 6028 | 3856 | | 285 | 1292 |
| | LINE "OH1" 6+10.74 TO 13+00 | | | | | | | | 800 | | | 690 | | 120 | | | | | | 63 | | 30 | | 6 | 35 | | 120 | 2290 | | | 93 | 45 |
| | LINE "OH3" 4+50 TO 13+00 | 142 | | 240 | | | | | | 292 | | 562 | | 270 | 142 | | | | | | | | 12 | 13 | 18 | | 270 | 309 | | | | 45 |
| PD-12 | LINE "A" 512+50 TO 525+50 | 7368 | 432 | | | 2456 | 144 | | 200 | 130 | | 2500 | 2600 | | 7368 | 432 | 2456 | | | 168 | | | 872 | 56 | 213 | 22 | 2600 | 5110 | | | | 1380 |
| | LINE "OH1" 13+00 TO 18.92 | 592 | | | | | | | | | | 592 | | 592 | 592 | | | | | | 268 | 70 | 52 | 149 | 14 | | 592 | 740 | | | 340 | 215 |
| | LINE "OH2" 9+00 TO 15+00" | 650 | | | | | | | | | 100 | 650 | | 650 | 650 | | | | | | 62 | 94 | 56 | 28 | 20 | | 650 | 1013 | | | 160 | 104 |
| | LINE "OH3" 13+00 TO 17+25 | 425 | | | | | | | | | | 425 | | 425 | 425 | | | | | | 62 | 70 | 36 | 19 | 10 | | 425 | 532 | | | 130 | 65 |
| PD-13 | LINE "A" 525+50 TO 539+50 | 9368 | 432 | | 750 | 2800 | 144 | 425 | 450 | | | 2800 | 2800 | | 9368 | 432 | 2800 | | | 168 | | | 822 | 60 | 411 | 72 | 14000 | 9950 | 5600 | | 336 | 1711 |
| | LINE "OH2" 15+00 TO 20+00 | | | | | | | | | | 442 | 500 | | | | | | | | | | | | | 20 | | | 1384 | | | | 20 |
| | SUB TOTAL | 60587 | 2160 | 816 | | 13868 | 720 | 425 | 2666 | 1967 | 542 | 22655 | 19000 | 2704 | 60337 | 2160 | 13868 | | 3400 | 1155 | 442 | 264 | 5400 | 1917 | 2163 | 148 | 76605 | 54619 | 27256 | | 3628 | 10712 |
| | SHEET TOTAL | 62747 | | 816 | 14588 | | | 5600 | | | | 44359 | | | 76365 | | | 5261 | | | | | 5400 | 4228 | | | 76605 | 54619 | 27256 | | 3628 | 10712 |

# PAVEMENT DELINEATION QUANTITIES
## PDQ-2

STATE OF CALIFORNIA - DEPARTMENT OF TRANSPORTATION
Caltrans® TRAFFIC DESIGN

FUNCTIONAL SUPERVISOR: ADEL MALEK
CALCULATED-DESIGNED BY: TRANG LUONG
CHECKED BY: ADEL MALEK
REVISED BY
DATE REVISED

LAST REVISION 00-00-00
DATE PLOTTED => 30-NOV-2010
TIME PLOTTED => 12:39

| Dist | COUNTY | ROUTE | POST MILES TOTAL PROJECT | SHEET No. | TOTAL SHEETS |
|---|---|---|---|---|---|
| 12 | Ora | 5 | 6.8/14.5 | 119 | 171 |

REGISTERED CIVIL ENGINEER 09-30-10 DATE

11-29-10
PLANS APPROVAL DATE

REGISTERED PROFESSIONAL ENGINEER
TRANG LUONG
No. C64430
Exp. 06/30/11
CIVIL
STATE OF CALIFORNIA

*THE STATE OF CALIFORNIA OR ITS OFFICERS OR AGENTS SHALL NOT BE RESPONSIBLE FOR THE ACCURACY OR COMPLETENESS OF SCANNED COPIES OF THIS PLAN SHEET.*

# PAVEMENT DELINEATION QUANTITIES

| SHEET No. | ALIGMENT AND STATIONS | THERMOPLASTIC TRAFFIC STRIPE | | | | | | | | | | | | | PAINT TRAFFIC STRIPE (2-COAT) | | | THERMOPLASTIC PAVEMENT MARKING | | | | | PAVEMENT MARKER | | | | REMOVE | | | | | |
|---|---|---|---|---|---|---|---|---|---|---|---|---|---|---|---|---|---|---|---|---|---|---|---|---|---|---|---|---|---|---|---|---|
| | | DETAIL 13 Mod 4" WHITE BROKEN (36-12) | DETAIL 14 Mod 4" WHITE BROKEN (36-12) | DETAIL 8 4" WHITE BROKEN (17-7) | DETAIL 37 (AUX) 8" WHITE BROKEN (12-3) | DETAIL A(HOV CONTINUOS) 8" WHITE BROKEN (12-3) | DETAIL AMOD (HOV) 8" WHITE BROKEN (12-3) | DETAIL 38 8" SOLID WHITE | DETAIL 36 8" SOLID WHITE | DETAIL 36A 8" SOLID WHITE | DETAIL 36B 8" SOLID WHITE | DETAIL 27B 4" SOLID WHITE | DETAIL 25 4" SOLID YELLOW | DETAIL 25A 4" SOLID YELLOW | DETAIL 13 Mod 4" BLACK BROKEN (36-12) | DETAIL 14 Mod 4" BLACK BROKEN (36-12) | DETAIL 37C Mod 4" BLACK BROKEN (36-12) | 12" SOLID DIAGONAL YELLOW | 12" SOLID DIAGONAL WHITE | HOV DIAMOND & LETTERS | ARROW | CROSS WALK | NON-REFLECTIVE TYPE A | RETROFLECTIVE TYPE H | RETROFLECTIVE TYPE G | RETROFLECTIVE TYPE C | YELLOW THERMOPLASTIC TRAFFIC STRIPE (HAZARDOUS WASTE) | THERMOPLASTIC TRAFFIC STRIP (WHITE) | PAINTED TRAFFIC STRIPE (BLACK) | YELLOW THERMOPLASTIC PAVEMENT MARKING (HAZARDOUS WASTE) | THERMOPLASTIC PAVEMENT MARKING | PAVEMENT MARKER |
| | | LF | LF | LF | LF | LF | | LF | LF | LF | LF | LF | LF | LF | LF | LF | LF | SQFT | SQFT | SQFT | SQFT | SQFT | EA | EA | EA | EA | LF | LF | LF | SQFT | SQFT | EA |
| PD-14 | LINE "A" 539+50 TO 554+50 | 9924 | 576 | | 1500 | 2856 | 144 | | | | | 3000 | 3000 | | 9924 | 576 | 2856 | | | 168 | | | 876 | 64 | 408 | 162 | 12000 | 9000 | 6000 | | 168 | 1840 |
| PD-15 | LINE "A" 554+50 TO 569+50 | 11034 | 576 | | 390 | 2856 | 144 | | | | | 3000 | 3000 | | 11034 | 576 | 2856 | | | 168 | | | 968 | 64 | 413 | 82 | 15000 | 8981 | 6000 | | 168 | 1845 |
| PD-16 | LINE "A" 569+50 TO 584+50 | 11424 | 576 | | | 2856 | 144 | | 524 | | | 2607 | 3000 | 450 | 11424 | 576 | 2856 | | | 168 | | | 1000 | 64 | 425 | 13 | 11226 | 8500 | 3888 | | 336 | 1944 |
| | LINE "JS2" 4+41 TO 14+50 | 450 | | 241 | | | | | | 262 | | 750 | | 488 | 450 | | | | | 84 | | 12 | 40 | 22 | 12 | | | 300 | | | | 74 |
| PD-17 | LINE "A" 584+50 TO 599+50 | 10848 | 1152 | 200 | | 2712 | 288 | | 308 | 303 | | 2719 | 3000 | | 10848 | 1152 | 2712 | | | 756 | 50 | 112 | 1000 | 64 | 393 | 41 | 6611 | 7640 | | | | 1974 |
| | LINE "JS1" 18+17 TO 29+50 | | | 127 | | | | 721 | | 226 | | 1133 | | 888 | | | | | | 168 | 62 | 12 | | 37 | 42 | | 888 | 1664 | | | | 79 |
| | LINE "JS2" 14+50 TO 17+94 | 344 | | | | | | | | | | 344 | | 344 | 344 | | | | | 84 | 62 | 70 | 32 | 16 | 9 | | 344 | | | | | 57 |
| PD-18 | LINE "A" 599+50 TO 613+50 | 11174 | 576 | 115 | 892 | 2656 | 144 | 721 | 400 | | | 2592 | 2800 | | 11174 | 576 | 2656 | | | 168 | | | 984 | 60 | 348 | 90 | 14000 | 10803 | 5600 | | 168 | 1739 |
| PD-19 | LINE "A" 613+50 TO 625+50 | 10224 | 576 | | 1200 | 2256 | 144 | | | | | 2400 | 2400 | | 10224 | 576 | 2256 | | | 168 | | | 900 | 50 | 360 | 26 | 12000 | 7740 | 4800 | | 168 | 1556 |
| PD-20 | LINE "A", "A1", "A2" 625+50 TO 638+50 | 7690 | 576 | | | 2600 | | | | | | 2600 | 2600 | | 7690 | 576 | 2600 | | | 168 | | | 690 | 60 | 350 | 48 | 13000 | 7267 | 5200 | 120 | 336 | 1392 |
| PD-21 | LINE "A1", "A2" 638+50 TO 652+50 | 12200 | | | 1300 | 2700 | | | | | | 2700 | 2700 | | 12200 | | 2017 | 160 | | 168 | | | 1020 | 60 | 450 | 130 | 13900 | 11150 | 5600 | 160 | 336 | 1660 |
| PD-22 | LINE "A1", "A2" 651+50 TO 667+00 | 10710 | 1440 | | | 2900 | 1440 | | | | | 2900 | 2900 | | 10710 | 1440 | 1474 | | | 168 | | | 1056 | 70 | 400 | 95 | 14500 | 8838 | 5800 | | 336 | 1800 |
| PD-23 | LINE "A1", "A2" 666+00 TO 681+50 | 8688 | 282 | | | 2800 | 94 | | | | | 2900 | 2900 | | 8688 | 282 | 2800 | | | 168 | | | 760 | 62 | 432 | 14 | 14500 | 8043 | 5800 | | 168 | 1990 |
| | SUB TOTAL | 104710 | 4890 | 683 | 5282 | 27192 | 2542 | 1442 | 1232 | 791 | | 29645 | 28300 | 2170 | 104710 | 6330 | 25083 | 160 | | 2604 | 174 | 206 | 9326 | 693 | 4042 | 701 | 127969 | 89926 | 48688 | 280 | 2184 | 17950 |
| | SHEET TOTAL | 109600 | | 683 | 35016 | | | 3465 | | | | 60115 | | | 136123 | | | 3144 | | | | | 9326 | 5436 | | | 127969 | 89926 | 48688 | 280 | 2184 | 17950 |

PAVEMENT DELINEATION QUANTITIES

PDQ-3

STATE OF CALIFORNIA - DEPARTMENT OF TRANSPORTATION
Caltrans® TRAFFIC DESIGN

FUNCTIONAL SUPERVISOR: ADEL MALEK
CALCULATED-DESIGNED BY: TRANG LUONG
CHECKED BY: ADEL MALEK
REVISED BY
DATE REVISED

LAST REVISION 00-00-00
DATE PLOTTED => 30-NOV-2010
TIME PLOTTED => 12:39

| Dist | COUNTY | ROUTE | POST MILES TOTAL PROJECT | SHEET No. | TOTAL SHEETS |
|---|---|---|---|---|---|
| 12 | Ora | 5 | 6.8/14.5 | 120 | 171 |

REGISTERED CIVIL ENGINEER 09-30-10 DATE

11-29-10
PLANS APPROVAL DATE

REGISTERED PROFESSIONAL ENGINEER TRANG LUONG No. C64430 Exp. 06/30/11 CIVIL STATE OF CALIFORNIA

*THE STATE OF CALIFORNIA OR ITS OFFICERS OR AGENTS SHALL NOT BE RESPONSIBLE FOR THE ACCURACY OR COMPLETENESS OF SCANNED COPIES OF THIS PLAN SHEET.*

# PAVEMENT DELINEATION QUANTITIES

| SHEET No. | ALIGMENT AND STATIONS | THERMOPLASTIC TRAFFIC STRIPE | | | | | | | | | | | | | | PAINT TRAFFIC STRIPE (2-COAT) | | | THERMOPLASTIC PAVEMENT MARKING | | | | | PAVEMENT MARKER | | | | REMOVE | | | | | |
|---|---|---|---|---|---|---|---|---|---|---|---|---|---|---|---|---|---|---|---|---|---|---|---|---|---|---|---|---|---|---|---|---|---|
| | | | | | | | | | | | | | | | | | | | | | | | | NON-REFLECTIVE | RETROFLECTIVE | | | | | | | | |
| | | DETAIL 13 Mod 4" WHITE BROKEN (36-12) | DETAIL 14 Mod 4" WHITE BROKEN (36-12) | DETAIL 8 4" WHITE BROKEN (17-7) | DETAIL 37 (AUX) 8" WHITE BROKEN (12-3) | DETAIL A(HOV CONTINUOS) 8" WHITE BROKEN (12-3) | DETAIL AMOD (HOV) 8" WHITE BROKEN (12-3) | DETAIL 38 8" SOLID WHITE | DETAIL 38B 8" SOLID WHITE | DETAIL 36 8" SOLID WHITE | DETAIL 36A 8" SOLID WHITE | DETAIL 36B 8" SOLID WHITE | DETAIL 27B 4" SOLID WHITE | DETAIL 25 4" SOLID YELLOW | DETAIL 25A 4" SOLID YELLOW | DETAIL 13 Mod 4" BLACK BROKEN (36-12) | DETAIL 14 Mod 4" BLACK BROKEN (36-12) | DETAIL 37C Mod 4" BLACK BROKEN (36-12) | 12" SOLID DIAGONAL YELLOW | 12" SOLID DIAGONAL WHITE | HOV DIAMOND & LETTERS | ARROW | CROSS WALK AND LIMIT LINE | TYPE A | TYPE H | TYPE G | TYPE C | YELLOW THERMOPLASTIC TRAFFIC STRIPE (HAZARDOUS WASTE) | THERMOPLASTIC TRAFFIC STRIP (WHITE) | PAINTED TRAFFIC STRIP (BLACK) | YELLOW THERMOPLASTIC PAVEMENT MARKING (HAZARDOUS WASTE) | THERMOPLASTIC PAVEMENT MARKING | PAVEMENT MARKER |
| | | LF | LF | LF | LF | LF | LF | LF | LF | LF | LF | LF | LF | LF | LF | LF | LF | LF | SQFT | SQFT | SQFT | SQFT | SQFT | EA | EA | EA | EA | LF | LF | LF | SQFT | SQFT | EA |
| PD-24 | LINE "A1", "A2", "B" 680+50 TO 695+00 | 7240 | 1020 | | | 2700 | 914 | | 418 | 516 | 700 | | 2700 | 2700 | 460 | 7240 | 1020 | 2700 | | | 84 | | | 610 | 58 | 340 | 100 | 19736 | 10105 | 4144 | | 168 | 1820 |
| | LINE "VR3" 13+63 TO 24+57 | | | 400 | | | | 400 | | | 400 | | 760 | | 360 | | | | | | 84 | 62 | 80 | | | | | 360 | 520 | | | | 52 |
| PD-25 | LINE "B" 695+00 TO 708+50 | 1243 | 432 | | 100 | 2700 | 144 | 150 | | | | | 2170 | 2700 | | 1243 | 432 | 2700 | | | 168 | | | 140 | 60 | 200 | 40 | 6813 | 3567 | 1316 | | 336 | 1620 |
| | LINE "VR2" 5+60 TO 17+66 | 650 | | | | | | | | | | 538 | 1300 | | 670 | 650 | | | | | | 62 | 80 | 60 | 30 | 40 | | 670 | 2039 | | | 142 | 130 |
| | LINE "VR4" 5+32 TO 16+95 | 420 | | | | | | | | 700 | | | 1170 | | 270 | 420 | | | | 300 | 63 | | | 40 | 40 | 50 | | 270 | | | | | 1300 |
| PD-26 | LINE"B" 708+50 TO 722+50 | 7540 | 870 | | 2720 | 1080 | 290 | | 83 | | | | 2800 | 2800 | | 7540 | 870 | 1080 | | | 168 | | | 700 | 60 | 280 | 300 | 3920 | 8413 | 5600 | | 336 | 1780 |
| PD-27 | LINE "B" 722+50 TO 736+50 | 8400 | | | 262 | 2800 | | | 250 | | | | 2490 | | | 8400 | | 2800 | | | 168 | | | 744 | 60 | 300 | 32 | 7524 | 6343 | 2400 | | 336 | 880 |
| | LINE "CV1" 3+58 TO 17+50 | 65 | | | | | | | | 640 | | | 1260 | | 940 | 65 | | | | 320 | | 108 | | 8 | 40 | 33 | | 940 | | | | 320 | 81 |
| | LINE "CV2" 30+00 TO 36+50 | 375 | | | | | | | | | 133 | | 650 | | 520 | 375 | | | | | | | 30 | 32 | 23 | 16 | | 520 | | | | | 71 |
| | LINE "CV3" 25+00 TO 36+50 | 512 | | | | | | | | | | 588 | 1140 | | 590 | 512 | | | | | | | 30 | 44 | 26 | 40 | | 590 | 2000 | | | | 110 |
| | SUB TOTAL | 26445 | 2322 | 400 | 3082 | 9280 | 1348 | 550 | 751 | 1856 | 1233 | 1126 | 16440 | 8200 | 3810 | 26445 | 2322 | 9280 | | 620 | 735 | 232 | 220 | 2378 | 397 | 1299 | 472 | 41343 | 32987 | 13460 | | 1638 | 7844 |
| | SHEET TOTAL | 28767 | | 400 | 13710 | | | 5516 | | | | | 28450 | | | 38047 | | | 1807 | | | | | 2378 | 2168 | | | 41343 | 32987 | 13460 | | 1638 | 7844 |

# PAVEMENT DELINEATION QUANTITIES

## PDQ-4

STATE OF CALIFORNIA - DEPARTMENT OF TRANSPORTATION
Caltrans® TRAFFIC DESIGN

FUNCTIONAL SUPERVISOR: ADEL MALEK
CALCULATED-DESIGNED BY: TRANG LUONG
CHECKED BY: ADEL MALEK
REVISED BY
DATE REVISED

LAST REVISION 00-00-00
DATE PLOTTED => 30-NOV-2010
TIME PLOTTED => 12:39

| Dist | COUNTY | ROUTE | POST MILES TOTAL PROJECT | SHEET No. | TOTAL SHEETS |
|---|---|---|---|---|---|
| 12 | Ora | 5 | 6.8/14.5 | 121 | 171 |

REGISTERED CIVIL ENGINEER 09-30-10 DATE

11-29-10
PLANS APPROVAL DATE

REGISTERED PROFESSIONAL ENGINEER TRANG LUONG No. C64430 Exp. 06/30/11 CIVIL STATE OF CALIFORNIA

THE STATE OF CALIFORNIA OR ITS OFFICERS OR AGENTS SHALL NOT BE RESPONSIBLE FOR THE ACCURACY OR COMPLETENESS OF SCANNED COPIES OF THIS PLAN SHEET.

# PAVEMENT DELINEATION QUANTITIES

| SHEET No. | ALIGMENT AND STATIONS | THERMOPLASTIC TRAFFIC STRIPE | | | | | | | | | | | | | PAINT TRAFFIC STRIPE (2-COAT) | | | THERMOPLASTIC PAVEMENT MARKING | | | | | PAVEMENT MARKER | | | | REMOVE | | | | | |
|---|---|---|---|---|---|---|---|---|---|---|---|---|---|---|---|---|---|---|---|---|---|---|---|---|---|---|---|---|---|---|---|---|
| | | DETAIL 13 Mod 4" WHITE BROKEN (36-12) | DETAIL 14 Mod 4" WHITE BROKEN (36-12) | DETAIL 8 4" WHITE BROKEN (17-7) | DETAIL 37 (AUX) 8" WHITE BROKEN (12-3) | DETAIL A(HOV CONTINUOS) 8" WHITE BROKEN (12-3) | DETAIL AMOD (HOV) 8" WHITE BROKEN (12-3) | DETAIL 38B 8" SOLID WHITE | DETAIL 36 8" SOLID WHITE | DETAIL 36A 8" SOLID WHITE | DETAIL 36B 8" SOLID WHITE | DETAIL 27B 4" SOLID WHITE | DETAIL 25 4" SOLID YELLOW | DETAIL 25A 4" SOLID YELLOW | DETAIL 13 Mod 4" BLACK BROKEN (36-12) | DETAIL 14 Mod 4" BLACK BROKEN (36-12) | DETAIL 37C Mod 4" BLACK BROKEN (36-12) | 12" SOLID DIAGONAL YELLOW | 12" SOLID DIAGONAL WHITE | HOV DIAMOND & LETTERS | ARROW | CROSS WALK AND LIMIT LINE | NON-REFLECTIVE | RETROFLECTIVE | | | YELLOW THERMOPLASTIC TRAFFIC STRIPE (HAZARDOUS WASTE) | THERMOPLASTIC TRAFFIC STRIP (WHITE) | PAINTED TRAFFIC STRIPE (BLACK) | YELLOW THERMOPLASTIC PAVEMENT MARKING (HAZARDOUS WASTE) | THERMOPLASTIC PAVEMENT MARKING | PAVEMENT MARKER |
| | | | | | | | | | | | | | | | | | | | | | | | TYPE A | TYPE H | TYPE G | TYPE C | | | | | | |
| | | LF | LF | LF | LF | LF | LF | LF | LF | LF | LF | LF | LF | LF | LF | LF | LF | SQFT | SQFT | SQFT | SQFT | SQFT | EA | EA | EA | EA | LF | LF | LF | SQFT | SQFT | EA |
| PD-28 | LINE "B" 736+50 TO 749+50 | 6940 | 864 | 268 | | 2600 | 290 | 200 | 600 | 124 | | 2400 | 2600 | | 6940 | 864 | 2600 | | | 168 | | 100 | 750 | 60 | 200 | 40 | 9800 | 8077 | 3600 | | 336 | 1230 |
| | LINE "CV1" 17+50 TO 19+85 | 435 | | | | | | | | | | 235 | | 235 | 435 | | | | | | 314 | 36 | 36 | 11 | 10 | | 235 | 247 | | | 350 | 57 |
| | LINE "CV2" 27+00 TO 30+00 36+50 to 40+00 | 275 | | | | | | | 200 | | | 300 | | 250 | 275 | | | | | | | 30 | 28 | 12 | 19 | | 250 | | | | 42 | 47 |
| | LINE "CV3" 36+50 TO 37+00 | 50 | | | | | | | | | | 50 | | 50 | 50 | | | | | | 62 | 30 | 4 | 3 | 2 | | 50 | | | | 92 | 9 |
| PD-29 | LINE "B" 749+50 TO 762+50 | 7970 | 432 | | 1035 | 2600 | 144 | 265 | | | 710 | 2600 | 2600 | | 7970 | 432 | 2600 | 50 | | 168 | | | 670 | 56 | 230 | 50 | 10400 | 8658 | 5200 | 50 | 386 | 1880 |
| PD-30 | LINE "B" 762+50 TO 775+50 | 7480 | 576 | | 900 | 2600 | 144 | | | | | 2600 | 2600 | | 7480 | 576 | 2600 | 200 | | 168 | | | 680 | 56 | 340 | 120 | 7800 | 17794 | 5200 | 200 | 536 | 1685 |
| PD-31 | LINE "B" 775+50 TO778+85 | 2010 | | | 335 | 670 | | | | | | 670 | 670 | | 2010 | | 670 | | | 84 | | | 170 | 15 | 100 | 10 | 6030 | 2670 | 2680 | | | 501 |
| SUB TOTAL | | 25160 | 1872 | 268 | 2270 | 8470 | 578 | 465 | 800 | 124 | 710 | 8855 | 8470 | 535 | 25160 | 1872 | 8470 | 250 | | 588 | 376 | 196 | 2338 | 213 | 901 | 220 | 34565 | 37446 | 16680 | 250 | 1742 | 5409 |
| SHEET PDQ-5 TOTAL | | 27032 | | 268 | 11318 | | | 2099 | | | | 17860 | | | 35502 | | | 1410 | | | | | 2338 | 1334 | | | 34565 | 37446 | 16680 | 250 | 1742 | 5409 |
| SHEET PDQ-1 TOTAL | | 54245 | | 300 | 7863 | | | 2405 | | | | 36873 | | | 49768 | | | 1094 | | | | | 4547 | 2185 | | | 18942 | 42515 | 1656 | 220 | 948 | 8074 |
| SHEET PDQ-2 TOTAL | | 62747 | | 816 | 14588 | | | 5600 | | | | 44359 | | | 76365 | | | 5261 | | | | | 5400 | 4228 | | | 76605 | 54619 | 27256 | | 3628 | 10712 |
| SHEET PDQ-3 TOTAL | | 109600 | | 683 | 35016 | | | 3465 | | | | 60115 | | | 136123 | | | 3144 | | | | | 9326 | 5436 | | | 127969 | 89926 | 48688 | 280 | 2184 | 17950 |
| SHEET PDQ-4 TOTAL | | 28767 | | 400 | 13710 | | | 5516 | | | | 28450 | | | 38047 | | | 1807 | | | | | 2378 | 2168 | | | 41343 | 32987 | 13460 | | 1638 | 7844 |
| GRAND TOTAL | | 282391 | | 2467 | 82495 | | | 19085 | | | | 187657 | | | 335805 | | | 12716 | | | | | 23989 | 15351 | | | 299424 | 257493 | 107740 | 750 | 10140 | 49989 |

## PAVEMENT DELINEATION QUANTITIES
## PDQ-5

STATE OF CALIFORNIA - DEPARTMENT OF TRANSPORTATION
Caltrans® TRAFFIC DESIGN

FUNCTIONAL SUPERVISOR: ADEL MALEK
CALCULATED-DESIGNED BY: TRANG LUONG
CHECKED BY: ADEL MALEK
REVISED BY
DATE REVISED

LAST REVISION 00-00-00
DATE PLOTTED => 30-NOV-2010
TIME PLOTTED => 12:40

| Dist | COUNTY | ROUTE | POST MILES TOTAL PROJECT | SHEET No. | TOTAL SHEETS |
|---|---|---|---|---|---|
| 12 | Ora | 5 | 6.8/14.5 | 122 | 171 |

REGISTERED CIVIL ENGINEER 09-30-10 DATE

11-29-10
PLANS APPROVAL DATE

REGISTERED PROFESSIONAL ENGINEER
TRANG LUONG
No. C64430
Exp. 06/30/11
CIVIL
STATE OF CALIFORNIA

*THE STATE OF CALIFORNIA OR ITS OFFICERS OR AGENTS SHALL NOT BE RESPONSIBLE FOR THE ACCURACY OR COMPLETENESS OF SCANNED COPIES OF THIS PLAN SHEET.*

# ROADSIDE SIGNS

| SHEET No. | SIGN No. | SIGN CODE | PANEL SIZE (inch x inch) | REMOVE ROADSIDE SIGN | POST SIZE & LENGTH (N) | | | ROADSIDE SIGN - ONE POST | INSTALL ROADSIDE SIGN (STRAP & SADDLE BRACKET METHOD) | REMOVE ROADSIDE SIGN (STRAP & SADDLE BRACKET METHOD) | REMARK |
|---|---|---|---|---|---|---|---|---|---|---|---|
| | | | | EA | 4"x4" | 4"x6" | 6"x6" | EA | EA | EA | |
| PD-8 | 8-1 | MARKER TYPE N | | 1 | | | | | | | |
| | | W1-6R | | | | | | | | | |
| | 8-2 | OM1-3 | 18 x 18 | | | 16′ | | 1 | | | |
| | | W1-6R | 48 x 24 | | | | | | | | |
| PD-12 | 12-1 | G66-56(CA) | | 1 | | | | | | | |
| | | M6-1 | | | | | | | | | |
| | 12-2 | G66-56(CA) | 24 x 24 | | 14′ | | | 1 | | | |
| | | M6-1 | 21 x 15 | | | | | | | | |
| | 12-3 | W4-3R | | 1 | | | | | | | |
| | 12-4 | W4-3R | 48 x 48 | | | 14′ | | 1 | | | |
| | 12-5 | I-7 | | 1 | | | | | | | |
| | | G97A(CA) | | | | | | | | | |
| | | G97A(CA) (Mod) | | | | | | | | | |
| | | G33-1(CA) | | | | | | | | | |
| | 12-6 | I-7 | 24 x 24 | | 12′ | | | 1 | | | |
| | | G97A(CA) | 24 x 6 | | | | | | | | |
| | | G97A(CA) (Mod) | 24 x 6 | | | | | | | | |
| | | G33-1(CA) | 24 x 6 | | | | | | | | |
| PD-15 | 15-1 | R6-1 (CA) | | 1 | | | | | | | |
| | | R48-1(CA) | | | | | | | | | |
| | 15-2 | R6-3 (CA) | 48 x 60 | | | | 14′ | 1 | | | |
| | | R48-1(CA) | 36 x 18 | | | | | | | | |
| | 15-3 | R6-4 (CA) | 48 x 60 | | | | 16′ | 1 | | | |
| | | R48-1(CA) | 36 x 18 | | | | | | | | |
| PD-17 | 17-1 | W4-3R | | 1 | | | | | | | |
| | 17-2 | W4-3R | 48 x 48 | | | 14′ | | 1 | | | |
| PD-25 | 25-1 | W3-3 | | | | | | | | 1 | |
| | 25-2 | W3-3 | 48 x 48 | | | | | | 1 | | |
| TOTAL | | | | 6 | | | | 7 | 1 | 1 | |

(N): NOT A SEPARATE PAY ITEM, FOR INFORMATION ONLY

## SIGN QUANTITIES

SQ-1

STATE OF CALIFORNIA - DEPARTMENT OF TRANSPORTATION
Caltrans® TRAFFIC DESIGN

FUNCTIONAL SUPERVISOR: ADEL MALEK
CALCULATED-DESIGNED BY: TRANG LUONG
CHECKED BY: ADEL MALEK
REVISED BY
DATE REVISED

LAST REVISION 00-00-00
DATE PLOTTED => 29-NOV-2010
TIME PLOTTED => 16:03

| Dist | COUNTY | ROUTE | POST MILES TOTAL PROJECT | SHEET No. | TOTAL SHEETS |
|---|---|---|---|---|---|
| 12 | Ora | 5 | 6.8/14.5 | 123 | 171 |

REGISTERED CIVIL ENGINEER 09-30-10 DATE

11-29-10
PLANS APPROVAL DATE

REGISTERED PROFESSIONAL ENGINEER TRANG LUONG No. C64430 Exp. 06/30/11 CIVIL STATE OF CALIFORNIA

*THE STATE OF CALIFORNIA OR ITS OFFICERS OR AGENTS SHALL NOT BE RESPONSIBLE FOR THE ACCURACY OR COMPLETENESS OF SCANNED COPIES OF THIS PLAN SHEET.*

# MATERIAL SUMMARY (CONTRACTOR FURNISHED SIGNS)

| SHEET No. | SIGN No. | SIGN CODE | SIGN SIZE (L x H) inch x inch | SINGLE FACED | SINGLE FACING MATERIAL: BACK GROUND SHEETING COLOR | BACK GROUND RETROFLECTIVE ASTM TYPE | LEGEND SHEETING COLOR | LEGEND RETROFLECTIVE ASTM TYPE | FURNISH SINGLE SHEET ALUMINUM SIGN FRAMED 0.063" SQFT | FRAMED 0.080" SQFT | DESCRIPTION (REMARKS) |
|---|---|---|---|---|---|---|---|---|---|---|---|
| PD-8 | 8-2 | OM1-3 | 18 x 18 | X | Y | IV | | | 2.3 | | |
| | | W1-6R | 48 x 24 | X | Y | IV | Blk | non | | 8.0 | |
| PD-12 | 12-2 | G66-56(CA) | 24 x 24 | X | B | II | W | II | 4.0 | | |
| | | M6-1 | 21 x 15 | X | B | II | W | II | 2.2 | | |
| | 12-4 | W4-3R | 48 x 48 | X | Y | IV | Blk | non | 16.0 | | |
| | 12-6 | I-7 | 24 x 24 | X | G | IV | W | IV | 4.0 | | |
| | | G97A(CA) | 24 x 6 | X | G | IV | W | IV | 1.0 | | |
| | | G97A(CA)(Mod) | 24 x 6 | X | G | IV | W | IV | 1.0 | | |
| | | G33-1(CA) | 24 x 6 | X | G | IV | W | IV | 1.0 | | |
| PD-15 | 15-2 | R6-3 (CA) | 48 x 60 | X | W | IV | Blk | non | | 20.0 | |
| | | R48-1(CA) | 36 x 18 | X | W | IV | Blk | non | 4.5 | | |
| | 15-3 | R6-4 (CA) | 48 x 60 | X | W | IV | Blk | non | | 20.0 | |
| | | R48-1(CA) | 36 x 18 | X | W | IV | Blk | non | 4.5 | | |
| PD-17 | 17-2 | W4-3R | 48 x 48 | X | Y | IV | Blk | non | 16.0 | | |
| PD-25 | 25-2 | W3-3 | 48 x 48 | X | Y | IV | Blk | non | 16.0 | | |
| | TOTAL | | | | | | | | 72.5 | 48.0 | |

## LEGEND:

B = BLUE
Blk = BLACK
G = GREEN
R = RED
W = WHITE
Y = YELLOW
non = Non reflective

## SIGN QUANTITIES

SQ-2

STATE OF CALIFORNIA - DEPARTMENT OF TRANSPORTATION
Caltrans TRAFFIC DESIGN

FUNCTIONAL SUPERVISOR: ADEL MALEK
CALCULATED-DESIGNED BY: TRANG LUONG
CHECKED BY: ADEL MALEK
REVISED BY
DATE REVISED

LAST REVISION 00-00-00 DATE PLOTTED => 29-NOV-2010 TIME PLOTTED => 16:03

| Dist | COUNTY | ROUTE | POST MILES TOTAL PROJECT | SHEET No. | TOTAL SHEETS |
|---|---|---|---|---|---|
| 12 | Ora | 5 | 6.8/14.5 | 124 | 171 |

REGISTERED CIVIL ENGINEER DATE 09-30-10

11-29-10
PLANS APPROVAL DATE

REGISTERED PROFESSIONAL ENGINEER SON THANH NGUYEN No. C 62806 Exp 6/30/12 CIVIL STATE OF CALIFORNIA

*THE STATE OF CALIFORNIA OR ITS OFFICERS OR AGENTS SHALL NOT BE RESPONSIBLE FOR THE ACCURACY OR COMPLETENESS OF SCANNED COPIES OF THIS PLAN SHEET.*

NOTES:

1. PARTIAL SLABS ARE CONSIDERED AS 1/3 FULL SLAB AT EITHER END.
2. (N) NOT A SEPARATE PAY ITEM, FOR INFORMATION ONLY.

| STATION | ALIGNMENT | NUMBER OF PARTIAL OR FULL SLABS TO BE REPAIRED OR REMOVED & REPLACED (N) | | | | | | | | | | | | | | | | | | | | REPLACE CONCRETE PAVEMENT (RAPID STRENGTH CONCRETE) |
|---|---|---|---|---|---|---|---|---|---|---|---|---|---|---|---|---|---|---|---|---|---|---|
| | | NORTHBOUND LANES | | | | | | | | | | SOUTHBOUND LANES | | | | | | | | | | |
| | | LANE # 1 | | LANE # 2 | | LANE # 3 | | LANE # 4 | | LANE # 5 | | LANE # 1 | | LANE # 2 | | LANE # 3 | | LANE # 4 | | LANE # 5 | | |
| | | PARTIAL SLABS | FULL SLABS | PARTIAL SLABS | FULL SLABS | PARTIAL SLABS | FULL SLABS | PARTIAL SLABS | FULL SLABS | PARTIAL SLABS | FULL SLABS | PARTIAL SLABS | FULL SLABS | PARTIAL SLABS | FULL SLABS | PARTIAL SLABS | FULL SLABS | PARTIAL SLABS | FULL SLABS | PARTIAL SLABS | FULL SLABS | CY |
| 375+48.80 | A | | 1 | | 1 | | 1 | | 1 | | | | | | | | | | | | | 20.00 |
| 375+66.32 | A | | | | | | 1 | | 1 | | | | | | | | | | | | | 10.00 |
| 376+10.10 | A | | | | | 1 | | | | | | | | | | | | | | | | 1.67 |
| 376+34.55 | A | | | | | 1 | | | | | | | | | | | | | | | | 1.67 |
| 379+08.71 | A | | | | | 1 | | 1 | | | | | | | | | | | | | | 3.33 |
| 389+86.53 | A | 1 | | 1 | | | | | | | | | | | | | | | | | | 3.33 |
| FROM 389+47.85 TO 390+19.46 | A | | | | | | | | | | | | 8 | | 8 | | 8 | | 8 | | | 160.00 |
| FROM 395+95.26 TO 397+62.27 | A | | | | | | | | | | | | 16 | | 16 | | 16 | | 16 | | | 320.00 |
| FROM 400+47.34 TO 401+91.02 | A | | | | | | | | | | | | 10 | | 10 | | 10 | | 10 | | | 200.00 |
| 409+98.30 | A | | | | | | | | | | | 1 | | | | | | | | | | 1.67 |
| 412+02.50 | A | | | | | | 1 | | | | | | | | | | | | | | | 5.00 |
| 414+93.02 | A | | | | | | | | | | | 1 | | 1 | | | | | | | | 3.33 |
| 415+88.89 | A | | | | | | | | | | | | | | | | 1 | | 1 | | | 5.00 |
| 419+25.20 | A | | | | | | | | | | | | | | | | | | 1 | | | 10.00 |
| 420+15.46 | A | | | | | | | | 1 | | | | | | | | | | | | | 5.00 |
| 420+57.20 | A | | | | | | | | | | | | | | | 1 | | | | | | 1.67 |
| 427+19.37 | A | | | | | | | | | | | 1 | | 1 | | | | | | | | 5.00 |
| 428+17.02 | A | | | | | | | | | | | | | 1 | | | | | | | | 3.33 |
| 428+86.83 | A | | | | | | | | | | | | | | | | | | 1 | | | 1.67 |
| 429+48.59 | A | | | | | | | | | | | | | | | | | 1 | | | | 5.00 |
| 429+76.27 | A | | | | | | | | | | | | | | | | | | | | | 1.67 |
| 432+07.70 | A | | | | | | | | | | | | | 1 | | | | | | | | 1.67 |
| 436+84.04 | A | | | | | | | | | | | | | | | | | 1 | | | | 1.67 |
| 439+09.29 | A | | | | | | | | | | | | | | | 1 | | | | | | 1.67 |
| 439+53.30 | A | | | | | | | | | | | | | | | | | 1 | | | | 1.67 |
| 442+81.39 | A | | | | | | | 1 | | | | | | | | | | | | | | 1.67 |
| 443+26.69 | A | | | | | | | | | | | | | 1 | | | | | | | | 1.67 |
| 446+27.10 | A | | | 1 | | | | | | | | | | | | | | | | | | 1.67 |
| 448+29.10 | A | | | | | | | | | | | | | | | | | | 1 | | | 5.00 |
| 459+66.63 | A | | | | | | | 1 | | | | | | | | | | | | | | 1.67 |
| 459+72.98 | A | | | | | | | | 1 | | | | | | | | | | | | | 5.00 |
| 460+20.53 | A | | | | | | | | 1 | | | | | | | | | | | | | 5.00 |
| 468+89.12 | A | | | | | | | 1 | | | | | | | | | | | | | | 1.67 |
| SUB TOTAL SHEET Q-1 | | 1 | 1 | 2 | 1 | 3 | 3 | 4 | 5 | | | 3 | 34 | 5 | 34 | 2 | 35 | 3 | 39 | | | 798.37 |

# SUMMARY OF QUANTITIES

Q-1

STATE OF CALIFORNIA - DEPARTMENT OF TRANSPORTATION
Caltrans® DESIGN DIVISION

FUNCTIONAL SUPERVISOR: KAMRAN MAZHAR
CALCULATED-DESIGNED BY: DUNG PHAN
CHECKED BY: SON T NGUYEN
REVISED BY / DATE REVISED

LAST REVISION 00-00-00 | DATE PLOTTED => 29-NOV-2010 | TIME PLOTTED => 16:03

| Dist | COUNTY | ROUTE | POST MILES TOTAL PROJECT | SHEET No. | TOTAL SHEETS |
|---|---|---|---|---|---|
| 12 | Ora | 5 | 6.8/14.5 | 125 | 171 |

REGISTERED CIVIL ENGINEER DATE 09-30-10

11-29-10
PLANS APPROVAL DATE

REGISTERED PROFESSIONAL ENGINEER SON THANH NGUYEN No. C 62806 Exp. 6/30/12 CIVIL STATE OF CALIFORNIA

*THE STATE OF CALIFORNIA OR ITS OFFICERS OR AGENTS SHALL NOT BE RESPONSIBLE FOR THE ACCURACY OR COMPLETENESS OF SCANNED COPIES OF THIS PLAN SHEET.*

NOTES:

1. PARTIAL SLABS ARE CONSIDERED AS 1/3 FULL SLAB AT EITHER END.
2. (N) NOT A SEPARATE PAY ITEM, FOR INFORMATION ONLY.

| STATION | ALIGNMENT | NUMBER OF PARTIAL OR FULL SLABS TO BE REMOVED & REPLACED (N) | | | | | | | | | | | | | | | | | | | | REPLACE CONCRETE PAVEMENT (RAPID STRENGTH CONCRETE) |
|---|---|---|---|---|---|---|---|---|---|---|---|---|---|---|---|---|---|---|---|---|---|---|
| | | NORTHBOUND LANES | | | | | | | | | | SOUTHBOUND LANES | | | | | | | | | | |
| | | LANE # 1 | | LANE # 2 | | LANE # 3 | | LANE # 4 | | LANE # 5 | | LANE # 1 | | LANE # 2 | | LANE # 3 | | LANE # 4 | | LANE # 5 | | |
| | | PARTIAL SLABS | FULL SLABS | PARTIAL SLABS | FULL SLABS | PARTIAL SLABS | FULL SLABS | PARTIAL SLABS | FULL SLABS | PARTIAL SLABS | FULL SLABS | PARTIAL SLABS | FULL SLABS | PARTIAL SLABS | FULL SLABS | PARTIAL SLABS | FULL SLABS | PARTIAL SLABS | FULL SLABS | PARTIAL SLABS | FULL SLABS | CY |
| 485+44.33 | A | | | | | | | | | | | | | 1 | | | | | | | | 1.67 |
| 485+60.18 | A | | | | | | | | | | | | | | | | | | 1 | | | 5.00 |
| 486+82.86 | A | | | | | | | | | | | | | | | 1 | | 1 | | | | 3.33 |
| 488+51.68 | A | | | | | | 1 | | 1 | | | | | | | | | | | | | 10.00 |
| 488+82.63 | A | | | | | | 1 | | | | | | | | | | | | | | | 5.00 |
| 488+96.91 | A | | | | | | 1 | | | | | | | | | | | | | | | 5.00 |
| 489+40.57 | A | | | | | | 1 | | 1 | | | | | | | | | | | | | 10.00 |
| 489+69.61 | A | | | 1 | | | | | | | | | | | | | | | | | | 1.67 |
| 489+79.87 | A | | | 1 | | | | | | | | | | | | | | | | | | 1.67 |
| 489+92.28 | A | | | | | | | | 1 | | | | | | | | | | | | | 5.00 |
| 490+01.78 | A | | | | | | 1 | | 1 | | | | | | | | | | | | | 10.00 |
| 490+18.85 | A | | | | | | 1 | | | | | | | | | | | | | | | 5.00 |
| 490+25.59 | A | | | 1 | | | | | | | | | | | | | | | | | | 1.67 |
| 490+46.65 | A | | | | | | 1 | | | | | | | | | | | | | | | 5.00 |
| 490+46.72 | A | | | | | | | | | | | | | | | | | 1 | | | | 1.67 |
| 490+60.96 | A | | | | | | 1 | | | | | | | | | | | | | | | 5.00 |
| 490+72.77 | A | | | | | | 1 | | | | | | | | | | | | | | | 5.00 |
| 490+72.78 | A | | | 1 | | | | | | | | | | | | | | | | | | 1.67 |
| 490+99.92 | A | | | | 1 | | | | | | | | | | | | | | | | | 5.00 |
| 491+00.37 | A | | | | | | | | 1 | | | | | | | | | | | | | 5.00 |
| 491+16.94 | A | | | | 1 | | | | | | | | | | | | | | | | | 5.00 |
| 491+47.39 | A | | | | | | | | 1 | | | | | | | | | | | | | 5.00 |
| 491+53.30 | A | | | | | | | | | | | | | | | | | | 1 | | | 5.00 |
| 491+77.28 | A | | | | | | 1 | | 1 | | | | | | | | | | | | | 10.00 |
| 491+92.16 | A | | | | | | 1 | | 1 | | | | | | | | | | | | | 10.00 |
| 492+06.59 | A | | | | | | 1 | | 1 | | | | | | | | | | | | | 10.00 |
| 493+24.37 | A | | | | | | 1 | | | | | | | | | | | | | | | 5.00 |
| 492+58.14 | A | | | | | | | | | | | | | | | | | 1 | | | | 1.67 |
| 492+73.24 | A | | | | | | | | | | | | | | | | | | 1 | | | 5.00 |
| 492+95.41 | A | | | | | | 1 | | 1 | | | | | | | | | | | | | 10.00 |
| 493+12.56 | A | | | | | | 1 | | 1 | | | | | | | | | | | | | 10.00 |
| 493+29.45 | A | | | | | | | | 1 | | | | | | | | | | | | | 5.00 |
| TOTAL SHEET Q-2 | | | | 4 | 2 | | 15 | | 12 | | | | | 1 | | 1 | | 3 | 3 | | | 175.02 |
| TOTAL SHEET Q-1 | | 1 | 1 | 2 | 1 | 3 | 3 | 4 | 5 | | | 3 | 34 | 5 | 34 | 2 | 35 | 3 | 39 | | | 798.37 |
| TOTAL SHEET Q-1 AND SHEET Q-2 | | 1 | 1 | 6 | 3 | 3 | 18 | 4 | 17 | | | 3 | 34 | 6 | 34 | 3 | 35 | 6 | 42 | | | 973.39 |

# SUMMARY OF QUANTITIES

## Q-2

STATE OF CALIFORNIA - DEPARTMENT OF TRANSPORTATION
Caltrans DESIGN DIVISION

FUNCTIONAL SUPERVISOR: KAMRAN MAZHAR
CALCULATED-DESIGNED BY: DUNG PHAN
CHECKED BY: SON T NGUYEN
REVISED BY / DATE REVISED

LAST REVISION 00-00-00 | DATE PLOTTED => 29-NOV-2010 | TIME PLOTTED => 16:03

| Dist | COUNTY | ROUTE | POST MILES TOTAL PROJECT | SHEET No. | TOTAL SHEETS |
|---|---|---|---|---|---|
| 12 | Ora | 5 | 6.8/14.5 | 126 | 171 |

REGISTERED CIVIL ENGINEER 09-30-10 DATE

11-29-10
PLANS APPROVAL DATE

REGISTERED PROFESSIONAL ENGINEER SON THANH NGUYEN No. C 62806 Exp 6/30/12 CIVIL STATE OF CALIFORNIA

*THE STATE OF CALIFORNIA OR ITS OFFICERS OR AGENTS SHALL NOT BE RESPONSIBLE FOR THE ACCURACY OR COMPLETENESS OF SCANNED COPIES OF THIS PLAN SHEET.*

NOTES:

1. PARTIAL SLABS ARE CONSIDERED AS 1/3 FULL SLAB AT EITHER END.
2. (N) NOT A SEPARATE PAY ITEM, FOR INFORMATION ONLY.

| STATION | ALIGNMENT | NUMBER OF PARTIAL OR FULL SLABS TO BE REMOVED & REPLACED (N) | | | | | | | | | | | | | | | | | | | | REPLACE CONCRETE PAVEMENT (RAPID STRENGTH CONCRETE) |
|---|---|---|---|---|---|---|---|---|---|---|---|---|---|---|---|---|---|---|---|---|---|---|
| | | NORTHBOUND LANES | | | | | | | | | | SOUTHBOUND LANES | | | | | | | | | | |
| | | LANE # 1 | | LANE # 2 | | LANE # 3 | | LANE # 4 | | LANE # 5 | | LANE # 1 | | LANE # 2 | | LANE # 3 | | LANE # 4 | | LANE # 5 | | |
| | | PARTIAL SLABS | FULL SLABS | PARTIAL SLABS | FULL SLABS | PARTIAL SLABS | FULL SLABS | PARTIAL SLABS | FULL SLABS | PARTIAL SLABS | FULL SLABS | PARTIAL SLABS | FULL SLABS | PARTIAL SLABS | FULL SLABS | PARTIAL SLABS | FULL SLABS | PARTIAL SLABS | FULL SLABS | PARTIAL SLABS | FULL SLABS | CY |
| 493+45.28 | A | | | | | | | | 1 | | | | | | | | | | | | | 5.00 |
| 493+57.47 | A | | | 1 | | | | | | | | | | | | | | | | | | 1.67 |
| 493+90.74 | A | | | | | | | | 1 | | | | | | | | | | | | | 5.00 |
| 494+02.58 | A | | | | | | | | 1 | | | | | | | | | | | | | 5.00 |
| 494+17.52 | A | | | | | | | | 1 | | | | | | | | | | | | | 5.00 |
| 494+33.19 | A | | | | | | | | 1 | | | | | | | | | | | | | 5.00 |
| 494+46.96 | A | | | | | | | | 1 | | | | | | | | | | | | | 5.00 |
| 494+63.08 | A | | | | | | | | 1 | | | | | | | | | | | | | 5.00 |
| 494+78.98 | A | | | | | | | | 1 | | | | | | | | | | | | | 5.00 |
| 495+99.43 | A | | | | | | | | 1 | | | | | | | | | | | | | 5.00 |
| 496+13.75 | A | | | | | | | | 1 | | | | | | | | | | | | | 5.00 |
| 496+27.56 | A | | | | | | | | 1 | | | | | | | | | | | | | 5.00 |
| 496+40.44 | A | | | | | | | | 1 | | | | | | | | | | | | | 5.00 |
| 496+54.21 | A | | | | | | | | 1 | | | | | | | | | | | | | 5.00 |
| 496+71.12 | A | | | | | | | | 1 | | | | | | | | | | | | | 5.00 |
| 496+83.38 | A | | | | | | | | 1 | | | | | | | | | | | | | 5.00 |
| 496+99.81 | A | | | | | | | | 1 | | | | | | | | | | | | | 5.00 |
| 497+15.31 | A | | | | | | | | 1 | | | | | | | | | | | | | 5.00 |
| 497+69.12 | A | | | | | | | | | | | | | | | | 1 | | 1 | | | 10.00 |
| 499+99.22 | A | | | | | | | | 1 | | | | | | | | | | | | | 5.00 |
| 500+71.14 | A | | | | | | | | 1 | | | | | | | | | | | | | 5.00 |
| 501+66.48 | A | | | | | | | | | | | | | | | | | | 1 | | | 5.00 |
| 501+92.87 | A | | | | | | | 1 | | | | | | | | | | | | | | 1.67 |
| 502+54.06 | A | | | | | | | | 1 | | | | | | | | | | | | | 5.00 |
| 502+67.79 | A | | | | | | | | 1 | | | | | | | | | | | | | 5.00 |
| 502+83.27 | A | | | | | | | | 1 | | | | | | | | | | | | | 5.00 |
| 502+97.86 | A | | | | | | | | 1 | | | | | | | | | | | | | 5.00 |
| 503+11.73 | A | | | | | | | | 1 | | | | | | | | | | | | | 5.00 |
| 503+26.35 | A | | | | | | | 1 | | | | | | | | | | | | | | 1.67 |
| 503+43.59 | A | | | | | | | | | | | | | | | | | | 1 | | | 5.00 |
| 503+98.22 | A | | | | | | | | | | | | | | | | | | 1 | | | 5.00 |
| 503+99.95 | A | | | | | | | | 1 | | | | | | | | | | | | | 5.00 |
| 505+41.21 | A | 1 | | | | | | | | | | | | | | | | | | | | 1.67 |
| 505+71.43 | A | | | | | | | | | | | | | | | | 1 | | | | | 5.00 |
| 506+00.74 | A | | | | | | | | | | | | | | | | | | 1 | | | 5.00 |
| 507+46.55 | A | | | | | | | | | | | | | | | | | | 1 | | | 5.00 |
| 507+62.98 | A | | | | | | | | | | | | | | | | | | 1 | | | 5.00 |
| 507+92.55 | A | | | | | | | | | | | | | | | | | | 1 | | | 5.00 |
| 510+22.83 | A | | | | | | | | | | | | | | | 1 | | | | | | 1.67 |
| 512+67.78 | A | | | | | | 1 | | 1 | | | | | | | | | | | | | 10.00 |
| TOTAL SHEET Q-3 | | 1 | | 1 | | | 1 | 2 | 26 | | | | | | | 1 | 2 | | 8 | | | 193.35 |
| TOTAL SHEET Q-1 & Q-2 | | 1 | 1 | 6 | 3 | 3 | 18 | 4 | 17 | | | 3 | 34 | 6 | 34 | 3 | 35 | 6 | 42 | | | 973.39 |
| TOTAL FROM SHEET Q-1 TO SHEET Q-3 | | 2 | 1 | 7 | 3 | 3 | 19 | 6 | 43 | | | 3 | 34 | 6 | 34 | 4 | 37 | 6 | 50 | | | 1166.74 |

# SUMMARY OF QUANTITIES

## Q-3

REVISED BY | DATE REVISED

DUNG PHAN | SON T NGUYEN

CALCULATED-DESIGNED BY | CHECKED BY

FUNCTIONAL SUPERVISOR: KAMRAN MAZHAR

STATE OF CALIFORNIA - DEPARTMENT OF TRANSPORTATION
Caltrans® DESIGN DIVISION

LAST REVISION 00-00-00 | DATE PLOTTED => 29-NOV-2010 | TIME PLOTTED => 16:03

| Dist | COUNTY | ROUTE | POST MILES TOTAL PROJECT | SHEET No. | TOTAL SHEETS |
|---|---|---|---|---|---|
| 12 | Ora | 5 | 6.8/14.5 | 127 | 171 |

REGISTERED CIVIL ENGINEER 09-30-10 DATE

11-29-10
PLANS APPROVAL DATE

REGISTERED PROFESSIONAL ENGINEER SON THANH NGUYEN No. C 62806 Exp. 6/30/12 CIVIL STATE OF CALIFORNIA

*THE STATE OF CALIFORNIA OR ITS OFFICERS OR AGENTS SHALL NOT BE RESPONSIBLE FOR THE ACCURACY OR COMPLETENESS OF SCANNED COPIES OF THIS PLAN SHEET.*

NOTES:

1. PARTIAL SLABS ARE CONSIDERED AS 1/3 FULL SLAB AT EITHER END.
2. (N) NOT A SEPARATE PAY ITEM, FOR INFORMATION ONLY.

| STATION | ALIGNMENT | NUMBER OF SLABS TO BE REMOVED & REPLACED (N) | | | | | | | | | | | | | | | | | | | | REPLACE CONCRETE PAVEMENT (RAPID STRENGTH CONCRETE) |
|---|---|---|---|---|---|---|---|---|---|---|---|---|---|---|---|---|---|---|---|---|---|---|
| | | NORTHBOUND LANES | | | | | | | | | | SOUTHBOUND LANES | | | | | | | | | | |
| | | LANE # 1 | | LANE # 2 | | LANE # 3 | | LANE # 4 | | LANE # 5 | | LANE # 1 | | LANE # 2 | | LANE # 3 | | LANE # 4 | | LANE # 5 | | |
| | | PARTIAL SLABS | FULL SLABS | PARTIAL SLABS | FULL SLABS | PARTIAL SLABS | FULL SLABS | PARTIAL SLABS | FULL SLABS | PARTIAL SLABS | FULL SLABS | PARTIAL SLABS | FULL SLABS | PARTIAL SLABS | FULL SLABS | PARTIAL SLABS | FULL SLABS | PARTIAL SLABS | FULL SLABS | PARTIAL SLABS | FULL SLABS | CY |
| 512+80.37 | A | | | | | | 1 | | 1 | | | | | | | | | | | | | 10.00 |
| 512+95.21 | A | | | | | | 1 | | 1 | | | | | | | | | | | | | 10.00 |
| 513+55.08 | A | | | | | | | | 1 | | | | | | | | | | | | | 5.00 |
| 513+69.60 | A | | | | | | 1 | | 1 | | | | | | | | | | | | | 10.00 |
| 513+83.95 | A | | | | | | 1 | | 1 | | | | | | | | | | | | | 10.00 |
| 513+97.39 | A | | | | | | 1 | | 1 | | | | | | | | | | | | | 10.00 |
| 514+44.40 | A | | | | | | | | | | | | | | | | 1 | | | | | 5.00 |
| 514+68.42 | A | | | | | | | | | | | | | | | | 1 | | | | | 5.00 |
| 514+84.86 | A | | | | | | | | | | | | | | | | 1 | | | | | 5.00 |
| 514+98.49 | A | | | | | | | | | | | | | | | | 1 | | | | | 5.00 |
| 515+03.11 | A | | | | | | 1 | | | | | | | | | | | | | | | 5.00 |
| 515+14.52 | A | | | | | | | | | | | | | | | 1 | | | | | | 1.67 |
| 515+63.89 | A | | | | | | | | 1 | | | | | | | | | | | | | 5.00 |
| 516+38.65 | A | | | | | | | | 1 | | | | | | | | | | | | | 5.00 |
| 516+38.66 | A | | | | | | 1 | | | | | | | | | | | | | | | 5.00 |
| 516+94.97 | A | | | | | | | | | | | | | | | 1 | | | | | | 1.67 |
| 517+29.20 | A | | | | | | 1 | | | | | | | | | | | | | | | 5.00 |
| 520+80.65 | A | | | | | 1 | | | | | | | | | | | | | | | | 1.67 |
| 521+53.16 | A | | | | | | 1 | | | | | | | | | | | | | | | 5.00 |
| 521+65.95 | A | | | | | | 1 | | 1 | | | | | | | | | | | | | 10.00 |
| 521+79.66 | A | | | | | | 1 | | 1 | | | | | | | | | | | | | 10.00 |
| 521+93.65 | A | | | | | | 1 | | 1 | | | | | | | | | | | | | 10.00 |
| 522+09.20 | A | | | | | | 1 | | 1 | | | | | | | | | | | | | 10.00 |
| 522+24.23 | A | | | | | | 1 | | | | | | | | | | | | | | | 5.00 |
| 522+35.88 | A | | | 1 | | | | | | | | | | | | | | | | | | 1.67 |
| 522+35.90 | A | | | | | | 1 | | 1 | | | | | | | | | | | | | 10.00 |
| 522+54.79 | A | | | | | | 1 | | 1 | | | | | | | | | | | | | 10.00 |
| 522+69.32 | A | | | | | | 1 | | 1 | | | | | | | | | | | | | 10.00 |
| 522+83.83 | A | | | | | | 1 | | | | | | | | | | | | | | | 5.00 |
| 523+00.31 | A | | | | | | 1 | | | | | | | | | | | | | | | 5.00 |
| 523+00.48 | A | | | | | | | 1 | | | | | | | | | | | | | | 1.67 |
| 523+91.41 | A | | | | | | | | | | | | | | | | | 1 | | | | 1.67 |
| 524+53.98 | A | | | | | | | | 1 | | | | | | | | | 1 | | | | 1.67 |
| 527+98.79 | A | | | | | | | 1 | | | | | | | | | | | | | | 5.00 |
| 531+12.95 | A | | | | | | | | | | | | | | | | | | | | | 1.67 |
| 533+38.44 | A | | | | | | | | | | | | | | | | 1 | | 1 | | | 10.00 |
| 534+21.70 | A | | | | 1 | | | | | | | | | | | | | | | | | 5.00 |
| 534+42.21 | A | 1 | | 1 | | | | | | | | | | | | | | | | | | 3.33 |
| 535+24.17 | A | | | | | | | | 1 | | | | | | | | | | | | | 5.00 |
| 535+40.98 | A | | | | | | | | 1 | | | | | | | | | | | | | 5.00 |
| TOTAL SHEET Q-4 | | 1 | | 2 | 1 | 1 | 19 | 2 | 18 | | | | | | | 2 | 5 | 2 | 1 | | | 236.69 |
| TOTAL SHEET Q-1 TO Q-3 | | 2 | 1 | 7 | 3 | 3 | 19 | 6 | 43 | | | 3 | 34 | 6 | 34 | 4 | 37 | 6 | 50 | | | 1166.74 |
| TOTAL SHEET Q-1 TO SHEET Q-4 | | 3 | 1 | 9 | 4 | 4 | 38 | 8 | 61 | | | 3 | 34 | 6 | 34 | 6 | 42 | 8 | 51 | | | 1403.43 |

# SUMMARY OF QUANTITIES
## Q-4

STATE OF CALIFORNIA - DEPARTMENT OF TRANSPORTATION
Caltrans® DESIGN DIVISION

FUNCTIONAL SUPERVISOR: KAMRAN MAZHAR
CALCULATED-DESIGNED BY: DUNG PHAN
CHECKED BY: SON T NGUYEN
REVISED BY / DATE REVISED

LAST REVISION 00-00-00
DATE PLOTTED => 29-NOV-2010
TIME PLOTTED => 16:03

| Dist | COUNTY | ROUTE | POST MILES TOTAL PROJECT | SHEET No. | TOTAL SHEETS |
|---|---|---|---|---|---|
| 12 | Ora | 5 | 6.8/14.5 | 128 | 171 |

REGISTERED CIVIL ENGINEER 09-30-10 DATE

11-29-10
PLANS APPROVAL DATE

REGISTERED PROFESSIONAL ENGINEER SON THANH NGUYEN No. C 62806 Exp 6/30/12 CIVIL STATE OF CALIFORNIA

*THE STATE OF CALIFORNIA OR ITS OFFICERS OR AGENTS SHALL NOT BE RESPONSIBLE FOR THE ACCURACY OR COMPLETENESS OF SCANNED COPIES OF THIS PLAN SHEET.*

NOTES:

1. PARTIAL SLABS ARE CONSIDERED AS 1/3 FULL SLAB AT EITHER END.
2. (N) NOT A SEPARATE PAY ITEM, FOR INFORMATION ONLY.

| STATION | ALIGNMENT | NUMBER OF PARTIAL OR FULL SLABS TO BE REMOVED & REPLACED (N) | | | | | | | | | | | | | | | | | | | | REPLACE CONCRETE PAVEMENT (RAPID STRENGTH CONCRETE) |
|---|---|---|---|---|---|---|---|---|---|---|---|---|---|---|---|---|---|---|---|---|---|---|
| | | NORTHBOUND LANES | | | | | | | | | | SOUTHBOUND LANES | | | | | | | | | | |
| | | LANE # 1 | | LANE # 2 | | LANE # 3 | | LANE # 4 | | LANE # 5 | | LANE # 1 | | LANE # 2 | | LANE # 3 | | LANE # 4 | | LANE # 5 | | |
| | | PARTIAL SLABS | FULL SLABS | PARTIAL SLABS | FULL SLABS | PARTIAL SLABS | FULL SLABS | PARTIAL SLABS | FULL SLABS | PARTIAL SLABS | FULL SLABS | PARTIAL SLABS | FULL SLABS | PARTIAL SLABS | FULL SLABS | PARTIAL SLABS | FULL SLABS | PARTIAL SLABS | FULL SLABS | PARTIAL SLABS | FULL SLABS | CY |
| 535+55.09 | A | | | | | | | | 1 | | | | | | | | | | | | | 5.00 |
| 535+91.35 | A | | | | | | | | | | | | | | | | | | 1 | | | 5.00 |
| 540+92.95 | A | | | | | | | | | | | | | | | | | | | | 1 | 5.00 |
| 540+96.77 | A | | | | | | | | | | | | | | | | 1 | | 1 | | | 10.00 |
| 541+97.66 | A | | | | | | | | | | | | | | | 1 | | 1 | | | | 3.33 |
| 542+00.08 | A | | | | | | | | 1 | | | | | | | | | | | | | 5.00 |
| 542+07.33 | A | | | | | | | | 1 | | | | | | | | | | | | | 5.00 |
| 542+23.76 | A | | | | | | | | 1 | | | | | | | | | | | | | 5.00 |
| 542+40.06 | A | | | | | | | | 1 | | | | | | | | | | | | | 5.00 |
| 542+99.91 | A | | | | | | | | | | | | | | | | | | 1 | | | 5.00 |
| 543+24.66 | A | | | | | | | | | | | | | | | | | 1 | | | | 1.67 |
| 543+39.13 | A | | | | | | | | | | | | | | | | | 1 | | | | 1.67 |
| 543+39.13 | A | | | | | | | | | | | | | | | 1 | | | | | | 1.67 |
| 543+20.54 | A | | | | | | | | | | | | | | | | | 1 | | | | 1.67 |
| 543+62.37 | A | | | | | | 1 | | 1 | | | | | | | | | | | | | 10.00 |
| 543+72.13 | A | | | | | | | | | | | | | | | | 1 | | 1 | | | 10.00 |
| 543+74.26 | A | | | | | | 1 | | 1 | | | | | | | | | | | | | 10.00 |
| 544+27.50 | A | | | | | | | | | | | | | | | | 1 | | 1 | | | 10.00 |
| 544+38.83 | A | | | | | | 1 | | | | | | | | | | | | | | | 5.00 |
| 544+45.79 | A | | | | | | | | | | | | | | | | 1 | | 1 | | | 10.00 |
| 544+66.22 | A | | | | | | | 1 | | | | | | | | | | | | | | 1.67 |
| 544+82.56 | A | | | | | | | | 1 | | | | | | | | | | | | | 5.00 |
| 544+98.30 | A | | | | | | | 1 | | | | | | | | | | | | | | 1.67 |
| 545+11.36 | A | | | | | | | | 1 | | | | | | | | | | | | | 5.00 |
| 548+31.28 | A | | | | | | | | | | | | | | | | 1 | | 1 | | | 10.00 |
| 549+36.42 | A | | | | | | | | | | | | | | | | 1 | | | | | 5.00 |
| 549+85.78 | A | | | | | | | | | | | | | | | | | | 1 | | | 5.00 |
| 552+15.54 | A | | | | | | | | | | | | | | | | | 1 | | | | 1.67 |
| 554+29.14 | A | | | | | | | | | | | | | | | | | 1 | | | | 1.67 |
| 554+29.16 | A | | | | | | | | | | | | | | | | 1 | | | | | 5.00 |
| 558+99.83 | A | | | | | | | | | | | | | | | 1 | | | | | | 1.67 |
| 559+44.40 | A | | | | | | | | | | | | | | | | | | 1 | | | 5.00 |
| 561+70.38 | A | | | | | | | | | | | | | | | | 1 | | | | | 5.00 |
| 561+70.44 | A | | | | | | | | | | | | | | | | | | 1 | | | 5.00 |
| TOTAL SHEET Q-5 | | | | | | | 3 | 2 | 9 | | | | | | | 3 | 8 | 6 | 10 | | 1 | 173.36 |
| TOTAL FROM SHEET Q-1 TO SHEET Q-4 | | 3 | 1 | 9 | 4 | 4 | 38 | 8 | 61 | | | 3 | 34 | 6 | 34 | 6 | 42 | 8 | 51 | | | 1403.43 |
| TOTAL FROM SHEET Q-1 TO SHEET Q-5 | | 3 | 1 | 9 | 4 | 4 | 41 | 10 | 70 | | | 3 | 34 | 6 | 34 | 9 | 50 | 14 | 61 | | 1 | 1576.79 |

# SUMMARY OF QUANTITIES

## Q-5

STATE OF CALIFORNIA - DEPARTMENT OF TRANSPORTATION
Caltrans DESIGN DIVISION

FUNCTIONAL SUPERVISOR: KAMRAN MAZHAR
CALCULATED-DESIGNED BY: DUNG PHAN
CHECKED BY: SON T NGUYEN
REVISED BY
DATE REVISED

LAST REVISION 00-00-00 | DATE PLOTTED => 29-NOV-2010 | TIME PLOTTED => 16:03

| Dist | COUNTY | ROUTE | POST MILES TOTAL PROJECT | SHEET No. | TOTAL SHEETS |
|---|---|---|---|---|---|
| 12 | Ora | 5 | 6.8/14.5 | 129 | 171 |

REGISTERED CIVIL ENGINEER 09-30-10 DATE

11-29-10
PLANS APPROVAL DATE

REGISTERED PROFESSIONAL ENGINEER SON THANH NGUYEN No. C 62806 Exp 6/30/12 CIVIL STATE OF CALIFORNIA

*THE STATE OF CALIFORNIA OR ITS OFFICERS OR AGENTS SHALL NOT BE RESPONSIBLE FOR THE ACCURACY OR COMPLETENESS OF SCANNED COPIES OF THIS PLAN SHEET.*

NOTES:

1. PARTIAL SLABS ARE CONSIDERED AS 1/3 FULL SLAB AT EITHER END.
2. (N) NOT A SEPARATE PAY ITEM, FOR INFORMATION ONLY.

| STATION | ALIGNMENT | NUMBER OF PARTIAL OR FULL SLABS TO BE REMOVED & REPLACED (N) | | | | | | | | | | | | | | | | | | | | REPLACE CONCRETE PAVEMENT (RAPID STRENGTH CONCRETE) |
|---|---|---|---|---|---|---|---|---|---|---|---|---|---|---|---|---|---|---|---|---|---|---|
| | | NORTHBOUND LANES | | | | | | | | | | SOUTHBOUND LANES | | | | | | | | | | |
| | | LANE # 1 | | LANE # 2 | | LANE # 3 | | LANE # 4 | | LANE # 5 | | LANE # 1 | | LANE # 2 | | LANE # 3 | | LANE # 4 | | LANE # 5 | | |
| | | PARTIAL SLABS | FULL SLABS | PARTIAL SLABS | FULL SLABS | PARTIAL SLABS | FULL SLABS | PARTIAL SLABS | FULL SLABS | PARTIAL SLABS | FULL SLABS | PARTIAL SLABS | FULL SLABS | PARTIAL SLABS | FULL SLABS | PARTIAL SLABS | FULL SLABS | PARTIAL SLABS | FULL SLABS | PARTIAL SLABS | FULL SLABS | CY |
| 562+37.79 | A | | | | | | | | | | | | | | | | | | 1 | | | 5.00 |
| 562+73.79 | A | | | | | | | | | | | | | | | | | | 1 | | | 5.00 |
| 562+90.69 | A | | | | | | | | | | | | | | | | | | 1 | | | 5.00 |
| 563+17.32 | A | | | | | | | | | | | | | | | | | | 1 | | | 5.00 |
| 563+33.55 | A | | | | | | | | | | | | | | | | | | 1 | | | 5.00 |
| 563+92.40 | A | | | | | | | | | | | | | | | | | | 1 | | | 5.00 |
| 564+38.45 | A | | | | | | | | | | | | | | | | | | 1 | | | 5.00 |
| 564+67.27 | A | | | | | | | | | | | | | | | | | | 1 | | | 5.00 |
| 565+45.48 | A | | | | | | | | | | | | | | | | | | 1 | | | 5.00 |
| 565+66.67 | A | | | | | | | | | | | | | | | | | | 1 | | | 5.00 |
| 566+19.95 | A | | | | | | | | | | | | | | | | | | 1 | | | 5.00 |
| 566+77.32 | A | | | | | | | | | | | | | | | | | | 1 | | | 5.00 |
| 566+91.00 | A | | | | | | | | | | | | | | | | | | 1 | | | 5.00 |
| 567+09.29 | A | | | | | | | | | | | | | | | | | | 1 | | | 5.00 |
| 567+09.30 | A | | | | | | | | | | | | | | | | | | 1 | | | 5.00 |
| 567+25.82 | A | | | | | | | | | | | | | | | | 1 | | | | | 5.00 |
| 567+25.83 | A | | | | | | | | | | | | | | | | | | 1 | | | 5.00 |
| 567+50.98 | A | | | | | | | | | | | | | | | | | | 1 | | | 5.00 |
| 567+70.17 | A | | | | | | | | | | | | | | | 1 | | | | | | 1.67 |
| 567+70.18 | A | | | | | | | | | | | | | | | | | | 1 | | | 5.00 |
| 568+12.86 | A | | | | | | | | | | | | | | | | 1 | | 1 | | | 10.00 |
| 568+28.69 | A | | | | | | | | | | | | | | | | | | 1 | | | 5.00 |
| 568+55.44 | A | | | | | | | | | | | | | | | 1 | | 1 | | | | 3.33 |
| 568+75.31 | A | | | | | | | | | | | | | | | | | | 1 | | | 5.00 |
| 568+91.36 | A | | | | | | | | | | | | | | | | | 1 | | | | 1.67 |
| 569+19.11 | A | | | | | | | | | | | | | | | | | 1 | | | | 1.67 |
| 569+46.42 | A | | | | | | | | | | | | | | | | | 1 | | | | 1.67 |
| 569+67.25 | A | | | | | | | | | | | | | | | | | | 1 | | | 5.00 |
| 570+04.99 | A | | | | | | | | 1 | | | | | | | | | | | | | 5.00 |
| 570+59.56 | A | | | | | | | | | | | | | | | | | | | | 1 | 5.00 |
| 570+71.92 | A | | | | | | | | | | | | | | | | 1 | | | | | 5.00 |
| 571+32.92 | A | | | | | | | | | | | | | | | | | | 1 | | | 5.00 |
| 571+91.99 | A | | | | | | | | | | | | | | | | | 1 | | | | 1.67 |
| 573+00.14 | A | | | | | | | | | | | | | | | | | | 1 | | | 5.00 |
| 583+99.77 | A | | | | | | 1 | | 1 | | | | | | | | | | | | | 10.00 |
| 584+12.28 | A | | | | | | 1 | | 1 | | | | | | | | | | | | | 10.00 |
| 584+26.98 | A | | | | | | 1 | | 1 | | | | | | | | | | | | | 10.00 |
| 584+41.27 | A | | | | | | 1 | | 1 | | | | | | | | | | | | | 10.00 |
| 585+78.21 | A | | | | | | | | | | | | | | | | | | 1 | | | 5.00 |
| 585+91.97 | A | | | | | | | | | | | | | | | | | | 1 | | | 5.00 |
| TOTAL SHEET Q-6 | | | | | | | 4 | | 5 | | | | | | | 2 | 3 | 5 | 26 | | 1 | 206.68 |
| TOTAL FROM SHEET Q-1 TO SHEET Q-5 | | 3 | 1 | 9 | 4 | 4 | 41 | 10 | 70 | | | 3 | 34 | 6 | 34 | 9 | 50 | 14 | 51 | | | 1576.79 |
| TOTAL FROM SHEET Q-1 TO SHEET Q-6 | | 3 | 1 | 9 | 4 | 4 | 45 | 10 | 75 | | | 3 | 34 | 6 | 34 | 11 | 53 | 19 | 87 | | 2 | 1783.47 |

# SUMMARY OF QUANTITIES

## Q-6

STATE OF CALIFORNIA - DEPARTMENT OF TRANSPORTATION
Caltrans DESIGN DIVISION

FUNCTIONAL SUPERVISOR: KAMRAN MAZHAR
CALCULATED-DESIGNED BY: DUNG PHAN
CHECKED BY: SON T NGUYEN
REVISED BY / DATE REVISED

LAST REVISION 00-00-00
DATE PLOTTED => 29-NOV-2010
TIME PLOTTED => 16:03

| Dist | COUNTY | ROUTE | POST MILES TOTAL PROJECT | SHEET No. | TOTAL SHEETS |
|---|---|---|---|---|---|
| 12 | Ora | 5 | 6.8/14.5 | 130 | 171 |

REGISTERED CIVIL ENGINEER DATE 09-30-10

11-29-10
PLANS APPROVAL DATE

REGISTERED PROFESSIONAL ENGINEER SON THANH NGUYEN No. C 62806 Exp 6/30/12 CIVIL STATE OF CALIFORNIA

*THE STATE OF CALIFORNIA OR ITS OFFICERS OR AGENTS SHALL NOT BE RESPONSIBLE FOR THE ACCURACY OR COMPLETENESS OF SCANNED COPIES OF THIS PLAN SHEET.*

NOTES:

1. PARTIAL SLABS ARE CONSIDERED AS 1/3 FULL SLAB AT EITHER END.
2. (N) NOT A SEPARATE PAY ITEM, FOR INFORMATION ONLY.

| STATION | ALIGNMENT | NUMBER OF PARTIAL OR FULL SLABS TO BE REMOVED & REPLACED (N) | | | | | | | | | | | | | | | | | | | | REPLACE CONCRETE PAVEMENT (RAPID STRENGTH CONCRETE) |
|---|---|---|---|---|---|---|---|---|---|---|---|---|---|---|---|---|---|---|---|---|---|---|
| | | NORTHBOUND LANES | | | | | | | | | | SOUTHBOUND LANES | | | | | | | | | | |
| | | LANE # 1 | | LANE # 2 | | LANE # 3 | | LANE # 4 | | LANE # 5 | | LANE # 1 | | LANE # 2 | | LANE # 3 | | LANE # 4 | | LANE # 5 | | |
| | | PARTIAL SLABS | FULL SLABS | PARTIAL SLABS | FULL SLABS | PARTIAL SLABS | FULL SLABS | PARTIAL SLABS | FULL SLABS | PARTIAL SLABS | FULL SLABS | PARTIAL SLABS | FULL SLABS | PARTIAL SLABS | FULL SLABS | PARTIAL SLABS | FULL SLABS | PARTIAL SLABS | FULL SLABS | PARTIAL SLABS | FULL SLABS | CY |
| 586+11.57 | A | | | | | | | | | | | | | | | | | | 1 | | | 5.00 |
| 586+37.74 | A | | | | | | | | | | | | | | | | | | 1 | | | 5.00 |
| 586+53.55 | A | | | | | | | | | | | | | | | | | | 1 | | | 5.00 |
| 586+68.49 | A | | | | | | | | | | | | | | | | | | 1 | | | 5.00 |
| 586+83.29 | A | | | | | | | | 1 | | | | | | | | | | | | | 5.00 |
| 586+95.44 | A | | | | | | | | 1 | | | | | | | | | | | | | 5.00 |
| 588+96.73 | A | | 1 | | 1 | | | | | | | | | | | | | | | | | 10.00 |
| 589+06.96 | A | | | | | | | | | | | | | | | | | | 1 | | | 5.00 |
| 589+64.63 | A | | | | | | | | 1 | | | | | | | | | | | | | 5.00 |
| 591+89.52 | A | | | | 1 | | | | | | | | | | | | | | | | | 5.00 |
| 598+23.57 | A | | | | | | 1 | | | | | | | | | | | | | | | 5.00 |
| 601+56.41 | A | | | | | | | | | | | | | | | | | 1 | | | | 1.67 |
| 613+00.00 | A | | | | | | 1 | | | | | | | | | | | | | | | 5.00 |
| 615+72.16 | A | | | 1 | | | | | | | | | | | | | | | | | | 1.67 |
| 615+72.23 | A | | | | | | 1 | | | | | | | | | | | | | | | 5.00 |
| 616+00.00 | A | | | | | | 1 | | | | | | | | | | | | | | | 5.00 |
| 622+03.70 | A | | | | | | | | | | | | | | | | 1 | | | | | 5.00 |
| 624+14.60 | A | | | | | | | | | | | | | | | | 1 | | | | | 5.00 |
| 624+91.75 | A | | | | | | | | | | | | | | | | 1 | | | | | 5.00 |
| 625+61.24 | A | | | | | | | | | | | | | | | | 1 | | | | | 5.00 |
| 625+79.81 | A | | | | | | | | | | | | | | 1 | | 1 | | | | | 10.00 |
| 626+66.88 | A2 | | | | | | | | | | | | | | 1 | | | | | | | 5.00 |
| 626+87.14 | A2 | | | | | | | | | | | | | | | | 1 | | | | | 5.00 |
| 627+18.01 | A2 | | | | | | | | | | | | | | | | 1 | | | | | 5.00 |
| 627+46.52 | A2 | | | | | | | | | | | | | | | | 1 | | | | | 5.00 |
| 628+24.09 | A2 | | | | | | | | | | | | | | | | 1 | | | | | 5.00 |
| 628+37.47 | A2 | | | | | | | | | | | | | | | 1 | | | | | | 1.67 |
| 628+47.90 | A2 | | | | | | | | | | | | | | | 1 | | | | | | 1.67 |
| 628+65.92 | A2 | | | | | | | | | | | | | | | 1 | | | | | | 1.67 |
| 626+70.00 | A2 | | | | | | | | | | | | | | | | | | 1 | | | 5.00 |
| 628+92.51 | A1 | 1 | | | | | | | | | | | | | | | | | | | | 1.67 |
| 629+26.21 | A2 | | | | | | | | | | | | | | | | 1 | | | | | 5.00 |
| 629+58.34 | A2 | | | | | | | | | | | | | | | 1 | | | | | | 1.67 |
| 630+00.74 | A2 | | | | | | | | | | | | | | | | 1 | | | | | 5.00 |
| 636+51.78 | A2 | | | | | | | | | | | | | | | 1 | | 1 | | | | 3.33 |
| 641+10.41 | A2 | | | | | | | | | | | | | | | | | | | | 1 | 5.00 |
| 641+53.91 | A2 | | | | | | | | | | | | | | | | | 1 | | | | 1.67 |
| 651+60.00 | A1 | | | | | | 1 | | | | | | | | | | | | | | | 5.00 |
| 670+47.23 | A2 | | | | | | | | | | | | | | | | | | 1 | | | 5.00 |
| 670+64.37 | A2 | | | | | | | | | | | | | | | | | | 1 | | | 5.00 |
| 670+75.59 | A2 | | | | | | | | | | | | | | | | | | 1 | | | 5.00 |
| TOTAL SHEET Q-7 | | 1 | 1 | 1 | 2 | | 5 | | 3 | | | | | | 2 | 5 | 11 | 3 | 9 | | 1 | 186.69 |
| TOTAL FROM SHEET Q-1 TO SHEET Q-6 | | 3 | 1 | 9 | 4 | 4 | 45 | 10 | 75 | | | 3 | 34 | 6 | 34 | 11 | 53 | 19 | 87 | | 2 | 1783.47 |
| TOTAL FROM SHEET Q-1 TO SHEET Q-7 | | 4 | 2 | 10 | 6 | 4 | 50 | 10 | 78 | | | 3 | 34 | 6 | 36 | 16 | 64 | 22 | 96 | | 3 | 1970.16 |

# SUMMARY OF QUANTITIES
## Q-7

REVISED BY | DATE REVISED
DUNG PHAN | SON T NGUYEN
CALCULATED-DESIGNED BY | CHECKED BY
FUNCTIONAL SUPERVISOR: KAMRAN MAZHAR
STATE OF CALIFORNIA - DEPARTMENT OF TRANSPORTATION
Caltrans® DESIGN DIVISION

LAST REVISION 00-00-00 | DATE PLOTTED => 29-NOV-2010 | TIME PLOTTED => 16:03

| Dist | COUNTY | ROUTE | POST MILES TOTAL PROJECT | SHEET No. | TOTAL SHEETS |
|---|---|---|---|---|---|
| 12 | Ora | 5 | 6.8/14.5 | 131 | 171 |

REGISTERED CIVIL ENGINEER DATE 09-30-10

11-29-10
PLANS APPROVAL DATE

REGISTERED PROFESSIONAL ENGINEER SON THANH NGUYEN No. C 62806 Exp 6/30/12 CIVIL STATE OF CALIFORNIA

*THE STATE OF CALIFORNIA OR ITS OFFICERS OR AGENTS SHALL NOT BE RESPONSIBLE FOR THE ACCURACY OR COMPLETENESS OF SCANNED COPIES OF THIS PLAN SHEET.*

NOTES:

1. PARTIAL SLABS ARE CONSIDERED AS 1/3 FULL SLAB AT EITHER END.
2. (N) NOT A SEPARATE PAY ITEM, FOR INFORMATION ONLY.

| STATION | ALIGNMENT | NUMBER OF PARTIAL OR FULL SLABS TO BE REMOVED & REPLACED (N) | | | | | | | | | | | | | | | | | | | | REPLACE CONCRETE PAVEMENT (RAPID STRENGTH CONCRETE) |
|---|---|---|---|---|---|---|---|---|---|---|---|---|---|---|---|---|---|---|---|---|---|---|
| | | NORTHBOUND LANES | | | | | | | | | | SOUTHBOUND LANES | | | | | | | | | | |
| | | LANE # 1 | | LANE # 2 | | LANE # 3 | | LANE # 4 | | LANE # 5 | | LANE # 1 | | LANE # 2 | | LANE # 3 | | LANE # 4 | | LANE # 5 | | |
| | | PARTIAL SLABS | FULL SLABS | PARTIAL SLABS | FULL SLABS | PARTIAL SLABS | FULL SLABS | PARTIAL SLABS | FULL SLABS | PARTIAL SLABS | FULL SLABS | PARTIAL SLABS | FULL SLABS | PARTIAL SLABS | FULL SLABS | PARTIAL SLABS | FULL SLABS | PARTIAL SLABS | FULL SLABS | PARTIAL SLABS | FULL SLABS | CY |
| 673+15.15 | A2 | | | | | | | | | | | | | | | | | 1 | | | | 1.67 |
| 673+73.47 | A2 | | | | | | | | | | | | | | | | 1 | | 1 | | | 10.00 |
| 674+24.05 | A2 | | | | | | | | | | | | | | | | 1 | | | | | 5.00 |
| 674+39.34 | A2 | | | | | | | | | | | | | | | | 1 | | | | | 5.00 |
| 677+00.82 | A2 | | | | | | | | | | | | | | | | | 1 | | | | 1.67 |
| 677+22.91 | A2 | | | | | | | | | | | | | | | | 1 | | 1 | | | 10.00 |
| 677+98.03 | A2 | | | | | | | | | | | | | | | | | | 1 | | | 5.00 |
| 678+13.40 | A2 | | | | | | | | | | | | | | | | | | 1 | | | 5.00 |
| 678+26.02 | A2 | | | | | | | | | | | | | | | | | | 1 | | | 5.00 |
| 678+57.71 | A2 | | | | | | | | | | | | | | | | | | 1 | | | 5.00 |
| 678+59.58 | A2 | | | | | | | | | | | | | 1 | | | | | | | | 1.67 |
| 679+79.93 | A2 | | | | | | | | | | | | | | | | | | 1 | | | 5.00 |
| 680+70.00 | A1 | | | | | | 1 | | | | | | | | | | | | | | | 5.00 |
| 680+93.30 | A2 | | | | | | | | | | | | | | | | | | 1 | | | 5.00 |
| 681+10.38 | A2 | | | | | | | | | | | | | | | | | | 1 | | | 5.00 |
| 681+23.29 | A2 | | | | | | | | | | | | | | | | | | 1 | | | 5.00 |
| 689+82.61 | B | | | | | | | | | | | | | | | 1 | | | | | | 1.67 |
| 692+47.00 | B | | | | | | | | | | | | | | | | | | 1 | | | 5.00 |
| 692+61.46 | B | | | | | | | | | | | | | | | | 1 | | 1 | | | 10.00 |
| 692+74.85 | B | | | | | | | | | | | | | | | | 1 | | 1 | | | 10.00 |
| 692+91.05 | B | | | | | | | | | | | | | | | | 1 | | 1 | | | 10.00 |
| 693+07.17 | B | | | | | | | | | | | | | | | | 1 | | 1 | | | 10.00 |
| 693+21.17 | B | | | | | | | | | | | | | | | | 1 | | 1 | | | 10.00 |
| 693+37.50 | B | | | | | | | | | | | | | | | | 1 | | | | | 5.00 |
| 693+54.56 | B | | | | | | | | | | | | | | | | 1 | | | | | 5.00 |
| 693+68.10 | B | | | | | | | | | | | | | | | | 1 | | | | | 5.00 |
| 693+82.34 | B | | | | | 1 | | | | | | | | | | | | | | | | 1.67 |
| 693+82.37 | B | | | | | | | | 1 | | | | | | | | | | | | | 5.00 |
| 693+83.11 | B | | | | | | | | | | | | 1 | | 1 | | | | | | | 10.00 |
| 693+98.22 | B | | | | | | 1 | | 1 | | | | | | | | | | | | | 10.00 |
| 693+98.33 | B | | 1 | | 1 | | 1 | | 1 | | | | | | | | | | | | | 20.00 |
| FROM 695+88.69 TO 696+32.93 | B | | | | | | | | | | | | 4 | | 4 | | 4 | | | | | 60.00 |
| 695+99.64 | B | | | | | | | | | | | | | | | | | | 1 | | | 5.00 |
| FROM 696+32.93 TO 697+40.00 | B | | | | | | | | | | | | | | 7 | | 7 | | | | | 70.00 |
| 696+00.54 | B | | | | | | 1 | | 1 | | | | | | | | | | | | | 10.00 |
| 696+13.90 | B | | | | | | 1 | | 1 | | | | | | | | | | | | | 10.00 |
| 696+33.63 | B | | | | | | 1 | | 1 | | | | | | | | | | | | | 10.00 |
| 696+44.65 | B | | | | | | 1 | | 1 | | | | | | | | | | | | | 10.00 |
| TOTAL SHEET Q-8 | | | 1 | | 1 | 1 | 6 | | 7 | | | | 5 | 1 | 12 | 1 | 23 | 2 | 17 | | | 373.35 |
| TOTAL FROM SHEET Q-1 TO SHEET Q-7 | | 4 | 2 | 10 | 6 | 4 | 47 | 10 | 78 | | | 3 | 34 | 6 | 36 | 16 | 64 | 22 | 95 | | 3 | 1970.16 |
| TOTAL FROM SHEET Q-1 TO SHEET Q-8 | | 4 | 3 | 10 | 7 | 5 | 53 | 10 | 85 | | | 3 | 39 | 7 | 48 | 17 | 87 | 24 | 111 | | 3 | 2343.51 |

# SUMMARY OF QUANTITIES

## Q-8

STATE OF CALIFORNIA - DEPARTMENT OF TRANSPORTATION
Caltrans® DESIGN DIVISION

FUNCTIONAL SUPERVISOR: KAMRAN MAZHAR
CALCULATED-DESIGNED BY: DUNG PHAN
CHECKED BY: SON T NGUYEN
REVISED BY
DATE REVISED

LAST REVISION 00-00-00 | DATE PLOTTED => 29-NOV-2010 | TIME PLOTTED => 16:03

| Dist | COUNTY | ROUTE | POST MILES TOTAL PROJECT | SHEET No. | TOTAL SHEETS |
|---|---|---|---|---|---|
| 12 | Ora | 5 | 6.8/14.5 | 132 | 171 |

REGISTERED CIVIL ENGINEER DATE 09-30-10

11-29-10
PLANS APPROVAL DATE

REGISTERED PROFESSIONAL ENGINEER SON THANH NGUYEN No. C 62806 Exp 6/30/12 CIVIL STATE OF CALIFORNIA

THE STATE OF CALIFORNIA OR ITS OFFICERS OR AGENTS SHALL NOT BE RESPONSIBLE FOR THE ACCURACY OR COMPLETENESS OF SCANNED COPIES OF THIS PLAN SHEET.

NOTES:

1. PARTIAL SLABS ARE CONSIDERED AS 1/3 FULL SLAB AT EITHER END.
2. (N) NOT A SEPARATE PAY ITEM, FOR INFORMATION ONLY.

| STATION | ALIGNMENT | NUMBER OF PARTIAL OR FULL SLABS TO BE REMOVED & REPLACED (N) | | | | | | | | | | | | | | | | | | | | REPLACE CONCRETE PAVEMENT (RAPID STRENGTH CONCRETE) |
|---|---|---|---|---|---|---|---|---|---|---|---|---|---|---|---|---|---|---|---|---|---|---|
| | | NORTHBOUND LANES | | | | | | | | | | SOUTHBOUND LANES | | | | | | | | | | |
| | | LANE # 1 | | LANE # 2 | | LANE # 3 | | LANE # 4 | | LANE # 5 | | LANE # 1 | | LANE # 2 | | LANE # 3 | | LANE # 4 | | LANE # 5 | | |
| | | PARTIAL SLABS | FULL SLABS | PARTIAL SLABS | FULL SLABS | PARTIAL SLABS | FULL SLABS | PARTIAL SLABS | FULL SLABS | PARTIAL SLABS | FULL SLABS | PARTIAL SLABS | FULL SLABS | PARTIAL SLABS | FULL SLABS | PARTIAL SLABS | FULL SLABS | PARTIAL SLABS | FULL SLABS | PARTIAL SLABS | FULL SLABS | CY |
| 696+59.78 | B | | | | | | 1 | | 1 | | | | | | | | | | | | | 10.00 |
| 696+76.00 | B | | | | | | 1 | | 1 | | | | | | | | | | | | | 10.00 |
| 696+89.68 | B | | | | | | 1 | | 1 | | | | | | | | | | | | | 10.00 |
| 697+03.20 | B | | | | | | 1 | | 1 | | | | | | | | | | | | | 10.00 |
| 697+18.19 | B | | 1 | | 1 | | | | | | | | | | | | | | | | | 10.00 |
| 697+36.49 | B | | 1 | | 1 | | | | | | | | | | | | | | | | | 10.00 |
| 697+51.98 | B | | | | | | | | | | | | | | | | | | 1 | | | 10.00 |
| 697+89.44 | B | | | | | | | | | | | | | | | | | | 1 | | | 5.00 |
| 698+67.72 | B | | | | | | | | | | | | | | | | | 1 | | | | 5.00 |
| 699+79.25 | B | | | | | | | | | | | | | | | | | | 1 | | | 1.67 |
| 705+05.98 | B | | | | | | | | | | | | | | | | | | 1 | | | 5.00 |
| 705+65.30 | B | | | | | | | | | | | | | | | | | | 1 | | | 5.00 |
| 705+89.18 | B | | | | | | | | | | | | | | | | | 1 | | | | 5.00 |
| 710+62.68 | B | | | | | | | | | | | | | | | | | | 1 | | | 1.67 |
| 717+53.89 | B | | | | | | | | | | | | | | | | 1 | | | | | 5.00 |
| 717+66.66 | B | | | | | | | | | | | | | | | | 1 | | | | | 5.00 |
| 725+48.81 | B | | | | | | | | | | | | | | | | | | 1 | | | 5.00 |
| 737+63.49 | B | | | | | | | | 1 | | | | | | | | | | | | | 5.00 |
| 739+35.09 | B | | | | | | | | | | | | | | | 1 | | | | | | 5.00 |
| 739+51.14 | B | | | | | | | | | | | | | | | | | | 1 | | | 1.67 |
| 739+66.46 | B | | | | | | | | | | | | | | | | | | 1 | | | 5.00 |
| 740+10.75 | B | | | | | | | | | | | | | | | | | 1 | | | | 5.00 |
| 742+57.79 | B | | | | | | | | 1 | | | | | | | | | | | | | 1.67 |
| 742+88.50 | B | | | | | | | | 1 | | | | | | | | | | | | | 5.00 |
| 743+48.80 | B | | | | | | | | 1 | | | | | | | | | | | | | 5.00 |
| 748+05.38 | B | | | | | | | | | | | | | | | | 1 | | 1 | | | 5.00 |
| 748+85.92 | B | | | | | | | | | | | | | | | | 1 | | 1 | | | 10.00 |
| 750+74.67 | B | | | | | | | 1 | | | | | | | | | | | | | | 1.67 |
| 753+87.52 | B | | | | | | | | | | | | | | | | 1 | | 1 | | | 10.00 |
| 754+02.90 | B | | | | | | | | | | | | | | | | 1 | | 1 | | | 10.00 |
| 754+03.29 | B | | | | | | | | 1 | | | | | | | | | | | | | 5.00 |
| 754+16.56 | B | | | | | | | | | | | | | | | | 1 | | 1 | | | 10.00 |
| 754+31.51 | B | | | | | | | | | | | | | | | | 1 | | 1 | | | 10.00 |
| 754+47.63 | B | | | | | | | | | | | | | | | | 1 | | 1 | | | 10.00 |
| 754+64.18 | B | | | | | | | | | | | | | | | | 1 | | 1 | | | 10.00 |
| 754+78.86 | B | | | | | | | | | | | | | | | | 1 | | 1 | | | 10.00 |
| 754+89.57 | B | | | | | | | | | | | | | | | | 1 | | 1 | | | 5.00 |
| TOTAL SHEET Q-9 | | | 2 | | 2 | | 4 | 1 | 9 | | | | | | | 1 | 12 | 3 | 19 | | | 248.35 |
| TOTAL FROM SHEET Q-1 TO SHEET Q-8 | | 4 | 3 | 10 | 7 | 5 | 53 | 10 | 85 | | | 3 | 39 | 7 | 48 | 17 | 57 | 24 | 113 | | 3 | 2343.51 |
| TOTAL FROM SHEET Q-1 TO SHEET Q-9 | | 4 | 5 | 10 | 9 | 5 | 57 | 11 | 94 | | | 3 | 39 | 7 | 48 | 18 | 99 | 27 | 131 | | 3 | 2591.86 |

# SUMMARY OF QUANTITIES

## Q-9

STATE OF CALIFORNIA - DEPARTMENT OF TRANSPORTATION
Caltrans® DESIGN DIVISION

FUNCTIONAL SUPERVISOR: KAMRAN MAZHAR
CALCULATED-DESIGNED BY: DUNG PHAN
CHECKED BY: SON T NGUYEN
REVISED BY
DATE REVISED

LAST REVISION 00-00-00
DATE PLOTTED => 29-NOV-2010
TIME PLOTTED => 16:03

| Dist | COUNTY | ROUTE | POST MILES TOTAL PROJECT | SHEET No. | TOTAL SHEETS |
|---|---|---|---|---|---|
| 12 | Ora | 5 | 6.8/14.5 | 133 | 171 |

REGISTERED CIVIL ENGINEER DATE 09-30-10

11-29-10
PLANS APPROVAL DATE

REGISTERED PROFESSIONAL ENGINEER SON THANH NGUYEN No. C 62806 Exp 6/30/12 CIVIL STATE OF CALIFORNIA

*THE STATE OF CALIFORNIA OR ITS OFFICERS OR AGENTS SHALL NOT BE RESPONSIBLE FOR THE ACCURACY OR COMPLETENESS OF SCANNED COPIES OF THIS PLAN SHEET.*

NOTES:

1. PARTIAL SLABS ARE CONSIDERED AS 1/3 FULL SLAB AT EITHER END.
2. (N) NOT A SEPARATE PAY ITEM, FOR INFORMATION ONLY.

| STATION | ALIGNMENT | NUMBER OF PARTIAL OR FULL SLABS TO BE REMOVED & REPLACED (N) | | | | | | | | | | | | | | | | | | | | REPLACE CONCRETE PAVEMENT (RAPID STRENGTH CONCRETE) |
|---|---|---|---|---|---|---|---|---|---|---|---|---|---|---|---|---|---|---|---|---|---|---|
| | | NORTHBOUND LANES | | | | | | | | | | SOUTHBOUND LANES | | | | | | | | | | |
| | | LANE # 1 | | LANE # 2 | | LANE # 3 | | LANE # 4 | | LANE # 5 | | LANE # 1 | | LANE # 2 | | LANE # 3 | | LANE # 4 | | LANE # 5 | | |
| | | PARTIAL SLABS | FULL SLABS | PARTIAL SLABS | FULL SLABS | PARTIAL SLABS | FULL SLABS | PARTIAL SLABS | FULL SLABS | PARTIAL SLABS | FULL SLABS | PARTIAL SLABS | FULL SLABS | PARTIAL SLABS | FULL SLABS | PARTIAL SLABS | FULL SLABS | PARTIAL SLABS | FULL SLABS | PARTIAL SLABS | FULL SLABS | CY |
| 755+07.43 | B | | | | | | | | | | | | | | | | | | 1 | | | 5.00 |
| 755+23.28 | B | | | | | | | | | | | | | | | | | | 1 | | | 5.00 |
| 755+27.02 | B | | | | | | | | 1 | | | | | | | | | | | | | 5.00 |
| 755+39.57 | B | | | | | | | | 1 | | | | | | | | | | | | | 5.00 |
| 756+12.82 | B | | | | | | | | 1 | | | | | | | | | | | | | 5.00 |
| FROM 756+14.67 TO 758+41.17 | B | | | | | | | | | | | | | | | | 18 | | 18 | | | 180.00 |
| 760+50.30 | B | | | | | | | | | | 1 | | | | | | | | | | | 5.00 |
| 760+63.54 | B | | | | | | | | | | 1 | | | | | | | | | | | 5.00 |
| 761+38.42 | B | | | | | | | | | | | | | | | | | | 1 | | | 5.00 |
| 761+81.92 | B | | | | | | | | | | | | | | | | | | 1 | | | 5.00 |
| 762+88.08 | B | | | | | | | | 1 | | | | | | | | | | | | | 5.00 |
| 771+62.92 | B | | | | | | | | | | | | | | | 1 | | | | | | 1.67 |
| 772+03.60 | B | | | | | | | | | | | | | | | | | | 1 | | | 5.00 |
| 14+10.27 | B | | | | | 1 | | | | | | | | | | | | | | | | 1.67 |
| TOTAL SHEET Q-10 | | | | | | 1 | | | 4 | | 2 | | | | | 1 | 18 | | 23 | | | 238.33 |
| TOTAL FROM SHEET Q-1 TO SHEET Q-9 | | 4 | 5 | 10 | 9 | 5 | 57 | 11 | 94 | | | 3 | 39 | 7 | 48 | 18 | 99 | 27 | 132 | | 3 | 2591.86 |
| GRAND TOTAL FROM SHEET Q-1TO SHEET Q-10 | | 4 | 5 | 10 | 9 | 6 | 57 | 11 | 98 | | 2 | 3 | 39 | 7 | 48 | 19 | 117 | 27 | 154 | | 3 | 2830.19 |

## ADJUST FRAME AND GRATE TO GRADE

| SHEET NO | ALIGNMENT | DIRECTION | LOCATION | ADJUST FRAME AND GRATE TO GRADE |
|---|---|---|---|---|
| | | | | EA |
| L-1 | A | SB | 370+03 | 1 |
| | A | SB | 370+22 | 1 |
| L-2 | A | NB | 386+02 | 1 |
| | A | SB | 376+53 | 1 |
| | A | SB | 377+03 | 1 |
| | A | SB | 378+53 | 1 |
| | A | SB | 384+02 | 1 |
| | A | SB | 386+27 | 1 |
| L-3 | A | SB | 389+52 | 1 |
| | A | SB | 392+63 | 1 |
| | A | SB | 396+22 | 1 |
| TOTAL | | | | 11 |

# SUMMARY OF QUANTITIES

# Q-10

REVISED BY | DATE REVISED
DUNG PHAN | SON T NGUYEN
CALCULATED-DESIGNED BY | CHECKED BY
FUNCTIONAL SUPERVISOR: KAMRAN MAZHAR
STATE OF CALIFORNIA - DEPARTMENT OF TRANSPORTATION
Caltrans DESIGN DIVISION

LAST REVISION 00-00-00 | DATE PLOTTED => 29-NOV-2010 | TIME PLOTTED => 16:03

| Dist | COUNTY | ROUTE | POST MILES TOTAL PROJECT | SHEET No. | TOTAL SHEETS |
|---|---|---|---|---|---|
| 12 | Ora | 5 | 6.8/14.5 | 134 | 171 |

REGISTERED CIVIL ENGINEER 09-30-10 DATE

11-29-10
PLANS APPROVAL DATE

REGISTERED PROFESSIONAL ENGINEER SON THANH NGUYEN No. C 62806 Exp 6/30/12 CIVIL STATE OF CALIFORNIA

*THE STATE OF CALIFORNIA OR ITS OFFICERS OR AGENTS SHALL NOT BE RESPONSIBLE FOR THE ACCURACY OR COMPLETENESS OF SCANNED COPIES OF THIS PLAN SHEET.*

| SHEET | DIRECTION | LOCATION | ALIGNMENT | STATION FROM | STATION TO | COLD PLANE ASPHALT CONCRETE PAVEMENT 0.15' DEPTH | 0.20' DEPTH | 0.25' DEPTH | ASPHALTIC EMULSION (FOG SEAL COAT) | GRIND Exist Conc PAVEMENT | GROOVE Exist Conc PAVEMENT | RUBBERIZED HMA GAP GRADED | OPEN GRADED | TACK COAT | REMOVE AC DIKE | PLACE HMA DIKE TYPE E | TYPE A | HMA |
|---|---|---|---|---|---|---|---|---|---|---|---|---|---|---|---|---|---|---|
| | | | | | | SQYD | SQYD | SQYD | TON | SQYD | SQYD | TON | TON | TON | LF | LF | LF | TON |
| L-1 | SB | CAMINO LAS RAMBLAS SB OFF RAMP | R3 | 68+34.78 | 72+18.92 | | 1288 | | | | | 164.65 | | 0.536 | | | | |
| | SB | CAMINO LAS RAMBLAS SB OFF RAMP | R4 | 72+18.92 | 74+50.00 | | 982 | | | | | 125.46 | | 0.409 | | | | |
| | SB | SB OUTSIDE SHOULDER | A | 369+79.79 | 374+31.58 | | | | 0.222 | | | | | | | | | |
| | SB | SB ROUTE 5 | A | 369+79.79 | 374+31.58 | | | 2435 | | | | 389.01 | 155.60 | 2.028 | | | | |
| | SB | SB ROUTE 5 | A | 374+31.58 | 374+50.00 | | | | | | | 14.87 | 9.91 | 0.129 | | | | |
| | NB | CAMINO LAS RAMBLAS NB ON RAMP | R1 | 65+86.95 | 71+72.77 | | 1380 | | | | | 176.36 | | 0.575 | | | | |
| | NB | CAMINO LAS RAMBLAS NB ON RAMP | R2 | 71+72.77 | 75+50.00 | | 1899 | | | | | 242.75 | | 0.791 | | | | |
| | NB | NB OUTSIDE SHOULDER | A | 369+31.06 | 374+50.00 | | | | 0.254 | | | | | | | | | |
| | NB | NB ROUTE 5 | A | 369+31.06 | 374+50.00 | | | 3991 | | 155 | | 637.51 | 255.01 | 3.325 | | | | |
| L-2 | SB | CAMINO LAS RAMBLAS SB OFF RAMP | R4 | 74+50.00 | 78+83.30 | | 3280 | | | | | 414.26 | | | | | | |
| | SB | SB ROUTE 5 | A | 374+50.00 | 388+50.00 | | | | | 14167 | | 1357.80 | 905.25 | 11.070 | | | | |
| | NB | CAMINO LAS RAMBLAS NB ON RAMP | R2 | 75+50.00 | 76+06.74 | | 269 | | | | | 34.36 | | 0.112 | | | | |
| | NB | NB OUTSIDE SHOULDER | A | 374+50.00 | 375+44.75 | | | | 0.046 | | | | | | | | | |
| | NB | NB ROUTE 5 | A | 374+50.00 | 375+44.75 | | | 497 | | | | 79.33 | 31.74 | 0.414 | | | | |
| | NB | NB ROUTE 5 | A | 375+44.75 | 388+50.00 | | | | | 10117 | | 969.72 | 846.48 | 8.427 | | | | |
| L-3 | SB | SB OUTSIDE SHOULDER | A | 400+39.66 | 401+50.00 | | | | 0.059 | | | | | | | | | |
| | SB | SB ROUTE 5 | A | 388+50.00 | 397+14.40 | | | | | 7054 | 1170 | 626.21 | 450.78 | 5.876 | | | | |
| | SB | SB ROUTE 5 | A | 400+09.10 | 401+50.00 | | | | | 786 | 786 | | | | | | | |
| | NB | NB ROUTE 5 | A | 388+50.00 | 399+55.00 | | | | | 5866 | 2480 | 676.17 | 374.81 | 4.886 | | | | |
| L-4 | SB | SB OUTSIDE SHOULDER | A | 401+50.00 | 414+50.00 | | | | 0.857 | | | | | | | | | |
| | SB | SB ROUTE 5 | A | 401+50.00 | 414+50.00 | | | | | 10182 | 10182 | | | | | | | |
| | NB | NB OUTSIDE SHOULDER | A | 402+67.93 | 414+50.00 | | | | | | | | | | | | | |
| | NB | NB ROUTE 5 | A | 402+12.00 | 414+50.00 | | | | | 9911 | 9911 | | | | | | | |
| L-5 | SB | SB OUTSIDE SHOULDER | A | 414+50.00 | 429+50.00 | | | | 0.813 | | | | | | | | | |
| | SB | SB ROUTE 5 | A | 414+50.00 | 429+50.00 | | | | | 11656 | 11656 | | | | | | | |
| | NB | NB OUTSIDE SHOULDER | A | 414+50.00 | 416+90.30 | | | | 0.046 | | | | | | | | | |
| | NB | NB OUTSIDE SHOULDER | A | 416+90.30 | 429+50.00 | | | | 0.644 | | | | | | | | | |
| | NB | NB ROUTE 5 | A | 414+50.00 | 429+50.00 | | | | | 12913 | 12913 | | | | | | | |
| L-6 | SB | SB OUTSIDE SHOULDER | A | 429+50.00 | 444+50.00 | | | | 0.843 | | | | | | | | | |
| | SB | SB ROUTE 5 | A | 429+50.00 | 444+50.00 | | | | | 11853 | 11853 | | | | | | | |
| | NB | NB OUTSIDE SHOULDER | A | 429+50.00 | 435+00.00 | | | | 0.286 | | | | | | | | | |
| | NB | NB OUTSIDE SHOULDER | A | 435+00.00 | 444+50.00 | 1029 | | | | | | 98.69 | | 0.429 | | | | |
| | NB | NB ROUTE 5 | A | 429+50.00 | 444+50.00 | | | | | 12164 | 12164 | | | | | | | |
| | SB | SB OUTSIDE SHOULDER | A | 444+50.00 | 457+00.00 | | | | 0.658 | | | | | | | | | |
| L-7 | SB | SB ROUTE 5 | A | 444+50.00 | 458+50.00 | | | | | 11003 | 11003 | | | | | | | |
| | NB | NB OUTSIDE SHOULDER | A | 444+50.00 | 458+50.00 | 1410 | | | | | | 135.11 | | 0.587 | | | | |
| | NB | NB ROUTE 5 | A | 444+50.00 | 458+50.00 | | | | | 11101 | 11101 | | | | | | | |
| TOTAL QUANTITIES SHEET Q-11 | | | | | | 2439 | 9098 | 6923 | 5.371 | 128142 | 95219 | 6280.62 | 2829.58 | 41.691 | | | | |

# SUMMARY OF QUANTITIES

## Q-11

REVISED BY | DATE REVISED
DUNG PHAN | SON T NGUYEN
CALCULATED-DESIGNED BY | CHECKED BY
FUNCTIONAL SUPERVISOR: KAMRAN MAZHAR

STATE OF CALIFORNIA - DEPARTMENT OF TRANSPORTATION
Caltrans® DESIGN DIVISION

LAST REVISION 00-00-00 | DATE PLOTTED => 29-NOV-2010 | TIME PLOTTED => 16:04

| Dist | COUNTY | ROUTE | POST MILES TOTAL PROJECT | SHEET No. | TOTAL SHEETS |
|---|---|---|---|---|---|
| 12 | Ora | 5 | 6.8/14.5 | 135 | 171 |

REGISTERED CIVIL ENGINEER 09-30-10 DATE

11-29-10
PLANS APPROVAL DATE

REGISTERED PROFESSIONAL ENGINEER SON THANH NGUYEN No. C 62806 Exp 6/30/12 CIVIL STATE OF CALIFORNIA

*THE STATE OF CALIFORNIA OR ITS OFFICERS OR AGENTS SHALL NOT BE RESPONSIBLE FOR THE ACCURACY OR COMPLETENESS OF SCANNED COPIES OF THIS PLAN SHEET.*

| SHEET | DIRECTION | LOCATION | ALIGNMENT | STATION FROM | STATION TO | COLD PLANE ASPHALT Conc PAVEMENT 0.15' DEPTH | 0.20' DEPTH | 0.25' DEPTH | ASPHALTIC EMULSION (FOG SEAL COAT) | GRIND Exist Conc PAVEMENT | GROOVE Exist Conc PAVEMENT | RUBBERIZED HMA GAP GRADED | OPEN GRADED | TACK COAT | REMOVE AC DIKE | PLACE AC DIKE TYPE E | TYPE A | HMA |
|---|---|---|---|---|---|---|---|---|---|---|---|---|---|---|---|---|---|---|
| | | | | | | SQYD | SQYD | SQYD | TON | SQYD | SQYD | TON | TON | TON | LF | LF | LF | TON |
| L-8 | SB | CAMINO CAPISTRANO SB ON RAMP | CM | 02+39.15 | 8+51.43 | | 1767 | | | | | 169.34 | | 0.736 | | | | |
| | SB | SB ROUTE 5 | A | 458+50.00 | 472+50.00 | | | | | 10944 | 10944 | | | | | | | |
| | NB | NB OUTSIDE SHOULDER | A | 458+50.00 | 470+20.41 | 1428 | | | | | | 136.89 | | 0.595 | | | | |
| | NB | NB ROUTE 5 | A | 458+50.00 | 472+50.00 | | | | | 11301 | 11301 | | | | | | | |
| L-9 | SB | SB OUTSIDE SHOULDER | A | 484+05.70 | 486+50.00 | 303 | | | | | | 29.04 | | 0.126 | | | | |
| | SB | SB ROUTE 5 | A | 472+50.00 | 475+54.95 | | | | | 2494 | 2494 | | | | | | | |
| | SB | SB ROUTE 5 | A | 485+54.96 | 488+55.00 | | | | | 1813 | 1813 | | | | | | | |
| | SB | SB ROUTE 5 | A | 484+05.70 | 486+50.00 | | | | | 1138 | 1138 | | | | | | | |
| | NB | NB ROUTE 5 | A | 472+50.00 | 475+88.03 | | | | | 2623 | 2623 | | | | | | | |
| | NB | NB ROUTE 5 | A | 477+16.00 | 481+18.20 | | | | | 2795 | 2795 | | | | | | | |
| L-10 | SB | SB OUTSIDE SHOULDER | A | 486+50.00 | 499+50.00 | 1558 | | | | 83 | 83 | 149.31 | | 0.649 | 1171 | 1171 | | 31.00 |
| | SB | SB ROUTE 5 | A | 486+50.00 | 499+50.00 | | | | | 10153 | 10153 | | | | | | | |
| | NB | NB OUTSIDE SHOULDER | A | 487+43.40 | 499+50.00 | 1404 | | | | | | 134.55 | | 0.585 | | | | |
| | NB | NB ROUTE 5 | A | 487+42.50 | 499+50.00 | | | | | 10236 | 10236 | | | | | | | |
| L-11 | SB | ORTEGA HIGHWAY SB ON RAMP | OH1 | 04+50.00 | 11+58.52 | | 2227 | | | | | 284.64 | | 0.928 | | | | |
| | SB | SB OUTSIDE SHOULDER | A | 510+41.00 | 512+50.00 | | | | 0.088 | | | | | | | | | |
| | SB | SB ROUTE 5 | A | 499+50.00 | 512+50.00 | | | | | 10255 | 10255 | | | | | | | |
| | NB | NB OUTSIDE SHOULDER | A | 499+50.00 | 506+10.29 | 810 | | | | | | | | 0.337 | | | | |
| | NB | NB OUTSIDE SHOULDER | A | 510+65.28 | 512+50.00 | 293 | | | | | | | | 0.122 | | | | |
| | NB | NB ROUTE 5 | A | 499+50.00 | 509+00.00 | | | | | 7411 | 7411 | | | | | | | |
| | NB | NB ROUTE 5 | A | 509+00.00 | 512+50.00 | | | | | 1905 | 1905 | | | | | | | |
| L-12 | SB | SB OUTSIDE SHOULDER | A | 512+50.00 | 525+50.00 | | | | 0.669 | | | | | | | | | |
| | SB | SB ROUTE 5 | A | 512+50.00 | 525+50.00 | | | | | 10072 | 10072 | | | | | | | |
| | NB | NB OUTSIDE SHOULDER | A | 512+50.00 | 525+50.00 | | | | | | | | | | | | | |
| | NB | NB ROUTE 5 | A | 512+50.00 | 525+50.00 | | | | | 72 | 72 | | | | | | | |
| L-13 | SB | SB OUTSIDE SHOULDER | A | 525+50.00 | 527+37.51 | | | | 0.108 | | | | | | | | | |
| | SB | SB OUTSIDE SHOULDER | A | 529+00.00 | 538+56.37 | | | | 0.461 | | | | | | | | | |
| | SB | SB ROUTE 5 | A | 525+50.00 | 538+26.70 | | | | | 12841 | 12841 | | | | | | | |
| | NB | NB OUTSIDE SHOULDER | A | 525+50.00 | 528+13.31 | 430 | | | | | | 41.18 | | 0.179 | | | | |
| | NB | NB OUTSIDE SHOULDER | A | 531+59.79 | 539+50.00 | 1014 | | | | | | 97.20 | | 0.422 | 166 | | 166 | 4.32 |
| | NB | NB ROUTE 5 | A | 525+50.00 | 539+50.00 | | | | | 27 | 27 | | | | | | | |
| L-14 | SB | SB OUTSIDE SHOULDER | A | 540+35.89 | 554+50.00 | | | | 0.719 | | | | | | | | | |
| | SB | SB ROUTE 5 | A | 540+44.96 | 554+50.00 | | | | | 13160 | 13160 | | | | | | | |
| | NB | NB OUTSIDE SHOULDER | A | 539+50.00 | 540+24.83 | 95 | | | | | | 9.09 | | 0.040 | | | | |
| | NB | NB OUTSIDE SHOULDER | A | 542+02.75 | 554+50.00 | | | | 0.721 | | | | | | | | | |
| | NB | NB ROUTE 5 | A | 539+50.00 | 539+64.80 | | | | | 212 | 212 | | | | | | | |
| | NB | NB ROUTE 5 | A | 541+91.34 | 554+50.00 | | | | | 481 | 481 | | | | | | | |
| | | TOTAL QUANTITIES SHEET Q-12 | | | | 9534 | 3994 | | 2.766 | 109656 | 109656 | 1367.74 | | 4.719 | 1337 | 1171 | 166 | 35.32 |

# SUMMARY OF QUANTITIES

## Q-12

REVISED BY | DATE REVISED
DUNG PHAN | SON T NGUYEN
CALCULATED-DESIGNED BY | CHECKED BY
FUNCTIONAL SUPERVISOR: KAMRAN MAZHAR
STATE OF CALIFORNIA - DEPARTMENT OF TRANSPORTATION
Caltrans DESIGN DIVISION

LAST REVISION 00-00-00 | DATE PLOTTED => 29-NOV-2010 | TIME PLOTTED => 16:04

| Dist | COUNTY | ROUTE | POST MILES TOTAL PROJECT | SHEET No. | TOTAL SHEETS |
|---|---|---|---|---|---|
| 12 | Ora | 5 | 6.8/14.5 | 136 | 171 |

trmnguyen 09-30-10
REGISTERED CIVIL ENGINEER DATE

11-29-10
PLANS APPROVAL DATE

REGISTERED PROFESSIONAL ENGINEER SON THANH NGUYEN No. C 62806 Exp. 6/30/12 CIVIL STATE OF CALIFORNIA

*THE STATE OF CALIFORNIA OR ITS OFFICERS OR AGENTS SHALL NOT BE RESPONSIBLE FOR THE ACCURACY OR COMPLETENESS OF SCANNED COPIES OF THIS PLAN SHEET.*

| SHEET | DIRECTION | LOCATION | ALIGNMENT | STATION FROM | STATION TO | COLD PLANE ASPHALT Conc PAVEMENT 0.15' DEPTH | COLD PLANE ASPHALT Conc PAVEMENT 0.20' DEPTH | COLD PLANE ASPHALT Conc PAVEMENT 0.25' DEPTH | ASPHALTIC EMULSION (FOG SEAL COAT) | GRIND Exist Conc PAVEMENT | GROOVE Exist Conc PAVEMENT | RUBBERIZED HMA GAP GRADED | RUBBERIZED HMA OPEN GRADED | TACK COAT | REMOVE AC DIKE | PLACE HMA DIKE TYPE E | PLACE HMA DIKE TYPE A | HMA |
|---|---|---|---|---|---|---|---|---|---|---|---|---|---|---|---|---|---|---|
| | | | | | | SQYD | SQYD | SQYD | TON | SQYD | SQYD | TON | TON | TON | LF | LF | LF | TON |
| L-15 | SB | SB OUTSIDE SHOULDER | A | 554+50.00 | 569+50.00 | | | | 0.821 | | | | | | | | | |
| | SB | SB ROUTE 5 | A | 554+50.00 | 569+50.00 | | | | | 14317 | 14317 | | | | | | | |
| | NB | NB OUTSIDE SHOULDER | A | 554+50.00 | 569+50.00 | | | | 0.696 | | | | | | | | | |
| | NB | NB ROUTE 5 | A | 554+50.00 | 569+50.00 | | | | | 252 | 252 | | | | | | | |
| L-16 | SB | JUNIPERO SERRA Rd SB ON RAMP | JS2 | 06+32.92 | 14+50.00 | | 3084 | | | | | 394.19 | | 1.284 | | | | |
| | SB | SB OUTSIDE SHOULDER | A | 569+50.00 | 584+50.00 | | | | 0.825 | | | | | | | | | |
| | SB | SB ROUTE 5 | A | 569+50.00 | 584+50.00 | | | | | 14427 | 14427 | | | | | | | |
| | NB | NB OUTSIDE SHOULDER | A | 569+50.00 | 574+75.75 | | | | 0.243 | | | | | | | | | |
| | NB | NB OUTSIDE SHOULDER | A | 576+41.49 | 584+50.00 | | | | 0.543 | | | | | | | | | |
| | NB | NB ROUTE 5 | A | 569+50.00 | 584+50.00 | | | | | 270 | 270 | | | | | | | |
| L-17 | SB | JUNIPERO SERRA Rd SB ON RAMP | JS2 | 14+50.00 | 17+94.00 | | 1103 | | | | | 141.01 | | 0.459 | 676.64 | 676.64 | | 16.92 |
| | SB | SB OUTSIDE SHOULDER | A | 584+50.00 | 587+39.91 | | | | 0.175 | | | | | | | | | |
| | SB | SB OUTSIDE SHOULDER | A | 588+12.71 | 597+96.04 | | | | 0.473 | | | | | | | | | |
| | SB | SB ROUTE 5 | A | 584+50.00 | 587+39.91 | | | | | 2678 | 2678 | | | | | | | |
| | SB | SB ROUTE 5 | A | 588+12.71 | 599+50.00 | | | | | 10498 | 10498 | | | | | | | |
| | NB | JUNIPERO SERRA NB ON RAMP | JS1 | 18+16.96 | 25+21.64 | | 2252 | | | | | 287.83 | | 0.938 | | | | |
| | NB | NB OUTSIDE SHOULDER | A | 584+50.00 | 587+39.91 | | | | 0.177 | | | | | | | | | |
| | NB | NB OUTSIDE SHOULDER | A | 588+12.71 | 598+23.50 | | | | 0.561 | | | | | | | | | |
| | NB | NB ROUTE 5 | A | 584+50.00 | 587+39.91 | | | | | 37 | 37 | | | | | | | |
| | NB | NB ROUTE 5 | A | 588+12.71 | 599+50.00 | | | | | 143 | 143 | | | | | | | |
| L-18 | SB | SB OUTSIDE SHOULDER | A | 602+00.00 | 613+50.00 | | | | 0.571 | | | | | | | | | |
| | SB | SB ROUTE 5 | A | 599+50.00 | 602+60.00 | | | | | 3282 | 3282 | | | | | | | |
| | SB | SB ROUTE 5 | A | 602+60.00 | 613+50.00 | | | | | 18 | 18 | | | | | | | |
| | NB | NB OUTSIDE SHOULDER | A | 599+67.46 | 613+50.00 | 1981 | | | | | | 189.85 | | 0.825 | | | | |
| | NB | NB ROUTE 5 | A | 599+50.00 | 613+50.00 | | | | | 60 | 60 | | | | | | | |
| L-19 | SB | SB OUTSIDE SHOULDER | A | 613+50.00 | 614+24.00 | | | | 0.040 | | | | | | | | | |
| | SB | SB OUTSIDE SHOULDER | A | 617+04.00 | 625+50.00 | | | | 0.415 | | | | | | | | | |
| | SB | SB ROUTE 5 | A | 613+50.00 | 614+60.50 | | | | | 384 | 384 | | | | | | | |
| | SB | SB ROUTE 5 | A | 617+04.00 | 625+50.00 | | | | | 60 | 60 | | | | | | | |
| | NB | NB OUTSIDE SHOULDER | A | 613+50.00 | 616+39.64 | 393 | | | | | | 37.70 | | 0.164 | | | | |
| | NB | NB OUTSIDE SHOULDER | A | 618+79.46 | 625+50.00 | | | | 0.449 | | | | | | | | | |
| | NB | NB ROUTE 5 | A | 613+50.00 | 616+30.90 | | | | | 18 | 18 | | | | | | | |
| | NB | NB ROUTE 5 | A | 618+47.00 | 625+50.00 | | | | | 364 | 364 | | | | | | | |
| L-20 | SB | SB OUTSIDE SHOULDER | A | 625+50.00 | 626+66.57 | | | | 0.062 | | | | | | | | | |
| | SB | SB OUTSIDE SHOULDER | A2 | 626+66.57 | 638+50.00 | | | | 0.673 | | | | | | | | | |
| | SB | SB ROUTE 5 | A | 625+50.00 | 626+66.57 | | | | | 72 | 72 | | | | | | | |
| | SB | SB ROUTE 5 | A2 | 626+66.57 | 627+00.00 | | | | | 18 | 18 | | | | | | | |
| | SB | SB ROUTE 5 | A2 | 627+00.00 | 638+50.00 | | | | | 13067 | 13067 | | | | | | | |
| | NB | NB OUTSIDE SHOULDER | A | 625+50.00 | 626+66.57 | | | | 0.080 | | | | | | | | | |
| | NB | NB OUTSIDE SHOULDER | A1 | 626+66.57 | 638+50.00 | | | | 0.546 | | | | | | | | | |
| | NB | NB ROUTE 5 | A | 625+50.00 | 626+66.57 | | | | | 72 | 72 | | | | | | | |
| | NB | NB ROUTE 5 | A1 | 626+66.57 | 638+50.00 | | | | | 12851 | 12851 | | | | | | | |
| | | TOTAL QUANTITIES SHEET Q-13 | | | | 2374 | 6439 | | 7.350 | 73377 | 73377 | 1050.59 | | 3.670 | 676.64 | 676.64 | | 16.92 |

# SUMMARY OF QUANTITIES
## Q-13

REVISED BY | DATE REVISED
DUNG PHAN | SON T NGUYEN
CALCULATED-DESIGNED BY | CHECKED BY
FUNCTIONAL SUPERVISOR: KAMRAN MAZHAR
STATE OF CALIFORNIA - DEPARTMENT OF TRANSPORTATION
Caltrans® DESIGN DIVISION

LAST REVISION 00-00-00 | DATE PLOTTED => 29-NOV-2010 | TIME PLOTTED => 15:09

| Dist | COUNTY | ROUTE | POST MILES TOTAL PROJECT | SHEET No. | TOTAL SHEETS |
|---|---|---|---|---|---|
| 12 | Ora | 5 | 6.8/14.5 | 137 | 171 |

trmnguyen 09-30-10
REGISTERED CIVIL ENGINEER DATE

11-29-10
PLANS APPROVAL DATE

REGISTERED PROFESSIONAL ENGINEER SON THANH NGUYEN No. C 62806 Exp. 6/30/12 CIVIL STATE OF CALIFORNIA

*THE STATE OF CALIFORNIA OR ITS OFFICERS OR AGENTS SHALL NOT BE RESPONSIBLE FOR THE ACCURACY OR COMPLETENESS OF SCANNED COPIES OF THIS PLAN SHEET.*

| SHEET | DIRECTION | LOCATION | ALIGNMENT | STATION FROM | STATION TO | COLD PLANE ASPHALT Conc PAVEMENT 0.15′ DEPTH | 0.20′ DEPTH | 0.25′ DEPTH | ASPHALTIC EMULSION (FOG SEAL COAT) | GRIND Exist Conc PAVEMENT | GROOVE Exist Conc PAVEMENT | RUBBERIZED HMA GAP GREADED | OPEN GRADED | TACK COAT | REMOVE AC DIKE | PLACE HMA DIKE TYPE E | TYPE A | HMA |
|---|---|---|---|---|---|---|---|---|---|---|---|---|---|---|---|---|---|---|
| | | | | | | SQYD | SQYD | SQYD | TON | SQYD | SQYD | TON | TON | TON | LF | LF | LF | TON |
| L-21 | SB | SB OUTSIDE SHOULDER | A2 | 638+50.00 | 652+50.00 | | | | 0.775 | | | | | | | | | |
| | SB | SB ROUTE 5 | A2 | 638+50.00 | 645+67.33 | | | | | 9929 | 9929 | | | | | | | |
| | SB | SB ROUTE 5 | A2 | 645+67.33 | 652+50.00 | | | | | | | | 349.11 | 2.275 | | | | |
| | NB | NB OUTSIDE SHOULDER | A1 | 638+50.00 | 651+50.00 | | | | 0.696 | | | | | | | | | |
| | NB | NB ROUTE 5 | A1 | 638+50.00 | 651+50.00 | | | | | 72 | 72 | | | | | | | |
| L-22 | SB | SB OUTSIDE SHOULDER | A2 | 652+50.00 | 667+00.00 | | | | 0.776 | | | | | | | | | |
| | SB | SB ROUTE 5 | A2 | 652+50.00 | 666+66.00 | | | | | | | | 718.66 | 4.684 | | | | |
| | SB | SB ROUTE 5 | A2 | 666+66.00 | 667+00.00 | | | | | 262 | 262 | | | | | | | |
| | NB | NB OUTSIDE SHOULDER | A1 | 651+50.00 | 655+00.00 | | | | 0.163 | | | | | | | | | |
| | NB | NB ROUTE 5 | A1 | 651+50.00 | 666+00.00 | | | | | 18 | 18 | | | | | | | |
| L-23 | SB | SB OUTSIDE SHOULDER | A2 | 667+00.00 | 667+87.71 | | | | 0.037 | | | | | | | | | |
| | SB | SB OUTSIDE SHOULDER | A2 | 671+29.80 | 681+50.00 | 1196 | | | | | | 114.59 | | 0.498 | 778.50 | 778.50 | | 19.46 |
| | SB | SB ROUTE 5 | A2 | 667+00.00 | 681+50.00 | | | | | 13044 | 13044 | | | | | | | |
| | NB | NB OUTSIDE SHOULDER | A1 | 675+58.90 | 680+70.00 | | | | 0.315 | | | | | | | | | |
| | NB | NB ROUTE 5 | A1 | 666+00.00 | 680+70.00 | | | | | 378 | 378 | | | | | | | |
| L-24 | SB | AVERY PARKWAY SB ON RAMP | VR3 | 16+28.66 | 24+57.30 | | 2184 | | | | | 279.17 | | 0.910 | | | | |
| | SB | SB OUTSIDE SHOULDER | A2 | 681+50.00 | 683+66.76 | 235 | | | | | | 22.51 | | 0.098 | 216.76 | 216.76 | | 5.42 |
| | SB | SB OUTSIDE SHOULDER | A2 | 683+66.76 | 688+72.06 | | | | 0.087 | | | | | | | | | |
| | SB | SB OUTSIDE SHOULDER | B | 688+35.70 | 694+46.47 | | | | 0.323 | | | | | | | | | |
| | SB | SB ROUTE 5 | A2 | 681+50.00 | 688+72.06 | | | | | 5929 | 5929 | | | | | | | |
| | SB | SB ROUTE 5 | B | 688+35.70 | 694+46.47 | | | | | 4748 | 4748 | | | | | | | |
| | NB | NB OUTSIDE SHOULDER | A1 | 680+70.00 | 683+73.75 | | | | 0.151 | | | | | | | | | |
| | NB | NB OUTSIDE SHOULDER | A1 | 686+83.11 | 688+00.99 | 237 | | | | | | 22.72 | | 0.099 | | | | |
| | NB | NB OUTSIDE SHOULDER | B | 688+35.70 | 694+46.63 | 770 | | | | | | 73.84 | | 0.321 | | | | |
| | NB | NB ROUTE 5 | A1 | 680+70.00 | 688+00.99 | | | | | 18 | 18 | | | | | | | |
| | NB | NB ROUTE 5 | B | 688+35.70 | 694+48.63 | | | | | 144 | 144 | | | | | | | |
| L-25 | SB | AVERY PARKWAY SB OFF RAMP | VR4 | 05+31.93 | 15+80.00 | | 266 | | | | | 33.94 | | 0.111 | 653.00 | 369.05 | | 16.62 |
| | SB | SB OUTSIDE SHOULDER | B | 695+57.70 | 705+83.16 | | | | 0.559 | | | | | | | | | |
| | SB | SB OUTSIDE SHOULDER | B | 707+83.43 | 708+50.00 | | | | 0.121 | | | | | | | | | |
| | SB | SB ROUTE 5 | B | 695+57.70 | 708+50.00 | | | | | 6760 | 6760 | | | | | | | |
| | NB | AVERY PARKWAY NB ON RAMP | VR2 | 11+95.40 | 17+65.07 | | 2140 | | | | | 273.42 | | 0.891 | | | | |
| | NB | NB OUTSIDE SHOULDER | B | 695+60.11 | 708+50.00 | 823 | | | | | | 78.95 | | 0.343 | 83.33 | | 83.33 | |
| | NB | NB ROUTE 5 | B | 695.60.11 | 706+00.00 | | | | | 432 | 360 | | | | | | | |
| | NB | NB ROUTE 5 | B | 706+00.00 | 708+50.00 | | | | | 1939 | 1939 | | | | | | | |
| L-26 | SB | SB OUTSIDE SHOULDER | B | 708+50.00 | 722+50.00 | | | | 0.623 | | | | | | | | | |
| | SB | SB ROUTE 5 | B | 708+50.00 | 722+50.00 | | | | | 12841 | 12841 | | | | | | | |
| | NB | NB OUTSIDE SHOULDER | B | 708+50.00 | 722+50.00 | 1470 | | | | | | 140.94 | | 0.162 | 1400.00 | | 1400.00 | 36.44 |
| | NB | NB ROUTE 5 | B | 708+50.00 | 722+50.00 | | | | | 12762 | 12762 | | | | | | | |
| | | TOTAL QUANTITIES SHEET Q-14 | | | | 4731 | 4590 | | 4.539 | 69222 | 69222 | 1040.08 | 1067.77 | 10.842 | 3048.26 | 1364.31 | 1683.95 | 77.94 |

# SUMMARY OF QUANTITIES

Q-14

STATE OF CALIFORNIA - DEPARTMENT OF TRANSPORTATION
Caltrans® DESIGN DIVISION

FUNCTIONAL SUPERVISOR: KAMRAN MAZHAR
CALCULATED-DESIGNED BY: DUNG PHAN
CHECKED BY: SON T NGUYEN
REVISED BY
DATE REVISED

LAST REVISION 00-00-00 DATE PLOTTED => 29-NOV-2010 TIME PLOTTED => 15:09

| Dist | COUNTY | ROUTE | POST MILES TOTAL PROJECT | SHEET No. | TOTAL SHEETS |
|---|---|---|---|---|---|
| 12 | Ora | 5 | 6.8/14.5 | 138 | 171 |

trmnguyen 09-30-10
REGISTERED CIVIL ENGINEER DATE

11-29-10
PLANS APPROVAL DATE

REGISTERED PROFESSIONAL ENGINEER SON THANH NGUYEN No. C 62806 Exp 6/30/12 CIVIL STATE OF CALIFORNIA

*THE STATE OF CALIFORNIA OR ITS OFFICERS OR AGENTS SHALL NOT BE RESPONSIBLE FOR THE ACCURACY OR COMPLETENESS OF SCANNED COPIES OF THIS PLAN SHEET.*

| SHEET | DIRECTION | LOCATION | ALIGNMENT | STATION FROM | STATION TO | COL PLANE ASPHALT Conc PAVEMENT 0.15' DEPTH SQYD | 0.20' DEPTH SQYD | 0.25' DEPTH SQYD | ASPHALTIC EMULSION (FOG SEAL COAT) TON | GRIND Exist Conc PAVEMENT SQYD | GROOVE Exist Conc PAVEMENT SQYD | RUBBERIZED HMA GAP GRADED TON | RUBBERIZED HMA OPEN GRADED TON | TACK COAT TON | REMOVE AC DIKE LF | PLACE HMA DIKE TYPE E LF | PLACE HMA DIKE TYPE A LF | HMA TON |
|---|---|---|---|---|---|---|---|---|---|---|---|---|---|---|---|---|---|---|
| L-27 | SB | SB OUTSIDE SHOULDER | B | 722+50.00 | 736+50.00 | | | | 0.720 | | | | | | | | | |
| | SB | SB ROUTE 5 | B | 722+50.00 | 736+50.00 | | | | | 11467 | 11467 | | | | | | | |
| | SB | CROWN VALLEY Pkwy SB ON RAMP | CV3 | 27+99.86 | 36+50.00 | | 3233 | | | | | 413.15 | | 1.347 | 742.14 | 742.14 | | 18.56 |
| | NB | CROWN VALLEY Pkwy NB OFF RAMP | CV1 | 03+97.89 | 17+50.00 | | 3366 | | | | | 430.12 | | 1.402 | 1250.00 | 1250.00 | | 31.26 |
| | NB | CROWN VALLEY Pkwy NB LOOP ON RAMP | CV2 | 30+00.00 | 36+50.00 | | 1878 | | | | | 239.98 | | 0.782 | 479.00 | 479.00 | | 11.98 |
| | NB | NB OUTSIDE SHOULDER | B | 722+50.00 | 736+50.00 | 1531 | | | | | | 146.76 | | 0.638 | 251.48 | | 251.48 | 6.54 |
| | NB | NB ROUTE 5 | B | 722+50.00 | 736+50.00 | | | | | 11261 | 11261 | | | | | | | |
| L-28 | SB | SB OUTSIDE SHOULDER | B | 736+50.00 | 747+56.18 | | | | 0.665 | | | | | | | | | |
| | SB | SB OUTSIDE SHOULDER | B | 748+32.34 | 749+50.00 | | | | 0.008 | | | | | | | | | |
| | SB | SB ROUTE 5 | B | 736+50.00 | 749+50.00 | | | | | 10423 | 10423 | | | | | | | |
| | SB | CROWN VALLEY Pkwy SB ON RAMP | CV3 | 36+50.00 | 36+83.94 | | 334 | | | | | 42.74 | | 0.139 | | | | |
| | NB | CROWN VALLEY Pkwy NB OFF RAMP | CV1 | 17+50.00 | 18+51.19 | | 512 | | | | | 65.46 | | 0.213 | 101.19 | | 101.19 | 2.63 |
| | NB | CROWN VALLEY Pkwy NB LOOP ON RAMP | CV2 | 27+00.00 | 30+00.00 | | 1109 | | | | | 141.72 | | 0.462 | 300.00 | | 300.00 | 7.82 |
| | NB | CROWN VALLEY Pkwy NB LOOP ON RAMP | CV2 | 36+50.00 | 40+10.66 | | 799 | | | | | 55.02 | | 0.053 | | | | |
| | NB | NB OUTSIDE SHOULDER | B | 736+50.00 | 738+00.00 | 128 | | | | | | 12.28 | | 0.400 | | | | |
| | NB | NB OUTSIDE SHOULDER | B | 740+11.40 | 749+50.00 | 961 | | | | | | 92.09 | | | | | | |
| | NB | NB ROUTE 5 | B | 736+50.00 | 749+50.00 | | | | | 10809 | 10809 | | | | | | | |
| L-29 | SB | SB OUTSIDE SHOULDER | B | 749+50.00 | 762+50.00 | | | | 0.688 | | | | | | | | | |
| | SB | SB ROUTE 5 | B | 749+50.00 | 762+50.00 | | | | | 11838 | 11838 | | | | | | | |
| | NB | NB OUTSIDE SHOULDER | B | 749+50.00 | 762+50.00 | 1598 | | | | | | 153.22 | | 0.666 | | | | |
| | NB | NB ROUTE 5 | B | 749+50.00 | 762+50.00 | | | | | 10343 | 10343 | | | | | | | |
| L-30 | SB | SB OUTSIDE SHOULDER | B | 762+50.00 | 775+50.00 | | | | 0.861 | | | | | | | | | |
| | SB | SB ROUTE 5 | B | 762+50.00 | 775+50.00 | | | | | 10614 | 10614 | | | | | | | |
| | NB | NB OUTSIDE SHOULDER | B | 762+50.00 | 775+50.00 | 1545 | | | | | | 148.11 | | 0.643 | | | | |
| | NB | NB ROUTE 5 | B | 762+50.00 | 775+50.00 | | | | | 12444 | 12444 | | | | | | | |
| L-31 | SB | SB OUTSIDE SHOULDER | B | 775+50.00 | 778+84.99 | | | | 0.389 | | | | | | | | | |
| | SB | SB ROUTE 5 | B | 775+50.00 | 778+84.99 | | | | | 2611 | 2611 | | | | | | | |
| | NB | NB OUTSIDE SHOULDER | B | 775+50.00 | 778+84.99 | 426 | | | | | | 40.90 | | 0.177 | | | | |
| | NB | NB ROUTE 5 | B | 775+50.00 | 778+84.99 | | | | | 3171 | 3171 | | | | | | | |
| TOTAL QUANTITES SHEET Q-15 | | | | | | 6189 | 10432 | | 3.321 | 94981 | 94981 | 1926.51 | | 6.922 | 3123.81 | 2471.14 | 652.67 | 78.79 |
| TOTAL QUANTITES SHEET Q-14 | | | | | | 4731 | 4590 | | 4.539 | 69222 | 69222 | 1040.08 | 1067.77 | 10.842 | 3048.26 | 1364.31 | 1683.95 | 77.94 |
| TOTAL QUANTITES SHEET Q-13 | | | | | | 2374 | 6439 | | 7.350 | 73377 | 73377 | 1050.59 | | 3.670 | 676.64 | 676.64 | | 16.92 |
| TOTAL QUANTITES SHEET Q-12 | | | | | | 9534 | 3994 | | 2.766 | 109656 | 109656 | 1367.74 | | 4.719 | 1337.00 | 1171.00 | 166.00 | 35.32 |
| TOTAL QUANTITES SHEET Q-11 | | | | | | 2439 | 9098 | 6923 | 5.371 | 128142 | 95219 | 6280.62 | 2829.58 | 41.691 | | | | |
| TOTAL SHEET Q-11 TO SHEET Q-15 | | | | | | 25267 | 34553 | 6923 | 23.347 | 473973 | 546523 | 11665.51 | 3897.35 | 67.844 | 8185.71 | 5683.09 | 2502.62 | 208.97 |
| GRAND TOTAL | | | | | | | 66743 | | 23.347 | 475378 | 442455 | 11665.51 | 3897.35 | 67.844 | 8185.71 | 5683.09 | 2502.62 | 208.97 |

# SUMMARY OF QUANTITIES

## Q-15

STATE OF CALIFORNIA - DEPARTMENT OF TRANSPORTATION
Caltrans DESIGN DIVISION

FUNCTIONAL SUPERVISOR: KAMRAN MAZHAR
CALCULATED-DESIGNED BY: DUNG PHAN
CHECKED BY: SON T NGUYEN
REVISED BY
DATE REVISED

LAST REVISION 00-00-00 | DATE PLOTTED => 29-NOV-2010 | TIME PLOTTED => 15:09

| Dist | COUNTY | ROUTE | POST MILES TOTAL PROJECT | SHEET No. | TOTAL SHEETS |
|---|---|---|---|---|---|
| 12 | Ora | 5 | 6.8/14.5 | 139 | 171 |

REGISTERED ELECTRICAL ENGINEER 09-30-10 DATE

11-29-10
PLANS APPROVAL DATE

REGISTERED PROFESSIONAL ENGINEER JOANNE VO No. E 16748 Exp. 9/30/12 ELECT STATE OF CALIFORNIA

*THE STATE OF CALIFORNIA OR ITS OFFICERS OR AGENTS SHALL NOT BE RESPONSIBLE FOR THE ACCURACY OR COMPLETENESS OF SCANNED COPIES OF THIS PLAN SHEET.*

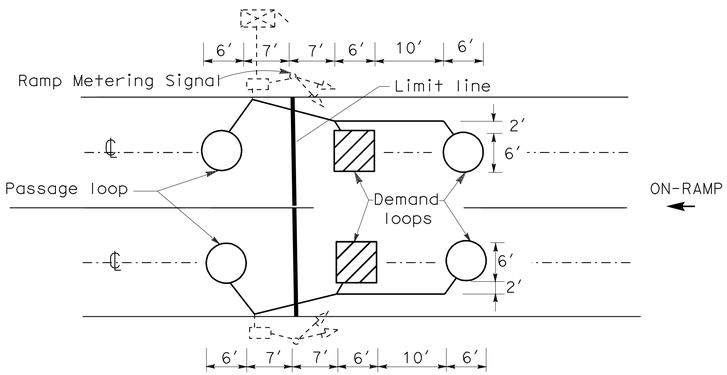


**TYPICAL 2-LANE RAMP METERING**

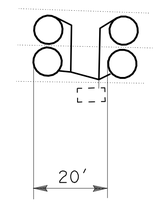


**TYPICAL DOUBLE LOOP AT MAINLINE**

## INDUCTIVE LOOP DETECTOR

| No. | SHEET No. | LOOP QUANTITY (EA) | DLC (Ft) | LOOP WIRES (Ft) | REPLACE WITH (T) PULL BOX | TRENCHING CONDUIT (Ft) |
|---|---|---|---|---|---|---|
| 1 | E-2 | 33 | - | 1240 | - | - |
| 2 | E-3 | 23 | 1370 | 1440 | - | 20 |
| 3 | E-4 | 31 | 1370 | 580 | - | 20 |
| 4 | E-5 | 59 | 1660 | 2310 | - | 20 |
| 5 | E-6 | 45 | 1660 | 2720 | - | 20 |
| 6 | E-7 | 56 | 4880 | 6720 | 1 | 60 |
| 7 | E-8 | 35 | - | 1440 | - | - |
| 8 | E-9 | 25 | - | 900 | - | - |
| 9 | E-10 | 12 | - | 1000 | - | - |
| **TOTAL** | | **319** | **10940** | **18350** | **1** | **140** |

NOTES: (FOR SHEETS E-1 TO E-10)

1. SPLICE NEW LOOP WIRES TO EXISTING dlc.
2. EXISTING MODEL 170 CONTROLLER ASSEMBLY IN MODEL 332 OR 334 CABINET.
3. Exist 2"C, REMOVE 4 Exist loop wires. INSTALL 4 LOOP WIRES.
4. Exist 2"C, REMOVE 6 Exist loop wires. INSTALL 6 LOOP WIRES.
5. Exist 2½"C, REMOVE 8 Exist loop wires. INSTALL 8 LOOP WIRES.
6. EXISTING 120/240 V METERED SERVICE IN TYPE III-BF OR III-CF SERVICE EQUIPMENT ENCLOSURE.
7. RC EXISTING PULL BOX. INSTALL 5(T) PULL BOX.
8. NO SPLICE IN THE MEDIAN PULL BOX.
9. PROTECT ALL EXISTING ELECTRICAL EQUIPMENT IN PLACE, UNLESS NOTIFY OTHERWISE.
10. THE CONTRACTOR SHALL VERIFY THE EXACT LOCATION OF EXISTING LOOPS PRIOR TO CUTTING NEW LOOPS AND REUSE EXISTING CONDUIT STUB OUT.
11. SIGNAL LOOPS SHALL BE ONE FOOT BEHIND THE LIMIT LINE.
12. LOOP DETECTORS SHALL BE INSTALLED AFTER THE PLACEMENT OF UPPERMOST LAYER OF NEW PAVEMENT, AND AFTER APPLYING TRAFFIC STRIPES AND PAVEMENT MARKINGS.
13. THE CONTRACTOR SHALL INFORM THE ENGINEER AND OPERATIONAL ENGINEER AT (949) 936-3480 A MINIMUM OF 48 HOURS BEFORE CUTTING LOOPS.

# INDUCTIVE LOOP DETECTOR
NO SCALE

THIS PLAN IS ACCURATE FOR ELECTRICAL WORK ONLY

**E-1**

STATE OF CALIFORNIA - DEPARTMENT OF TRANSPORTATION
Caltrans ELECTRICAL DESIGN

FUNCTIONAL SUPERVISOR: SHAHRAM SHAHRIARI
CALCULATED-DESIGNED BY: JOANNE VO
CHECKED BY: VANESSA TRUONG
REVISED BY
DATE REVISED

LAST REVISION 00-00-00 | DATE PLOTTED => 30-NOV-2010 | TIME PLOTTED => 12:45

| Dist | COUNTY | ROUTE | POST MILES TOTAL PROJECT | SHEET No. | TOTAL SHEETS |
|---|---|---|---|---|---|
| 12 | Ora | 5 | 6.8/14.5 | 140 | 171 |

REGISTERED ELECTRICAL ENGINEER 09-30-10 DATE

11-29-10
PLANS APPROVAL DATE

REGISTERED PROFESSIONAL ENGINEER JOANNE VO No. E 16748 Exp. 9/30/12 ELECT STATE OF CALIFORNIA

*THE STATE OF CALIFORNIA OR ITS OFFICERS OR AGENTS SHALL NOT BE RESPONSIBLE FOR THE ACCURACY OR COMPLETENESS OF SCANNED COPIES OF THIS PLAN SHEET.*

FOR ACCURATE RIGHT OF WAY AND ACCESS DATA,
CONTACT RIGHT OF WAY ENGINEERING AT THE DISTRICT OFFICE.

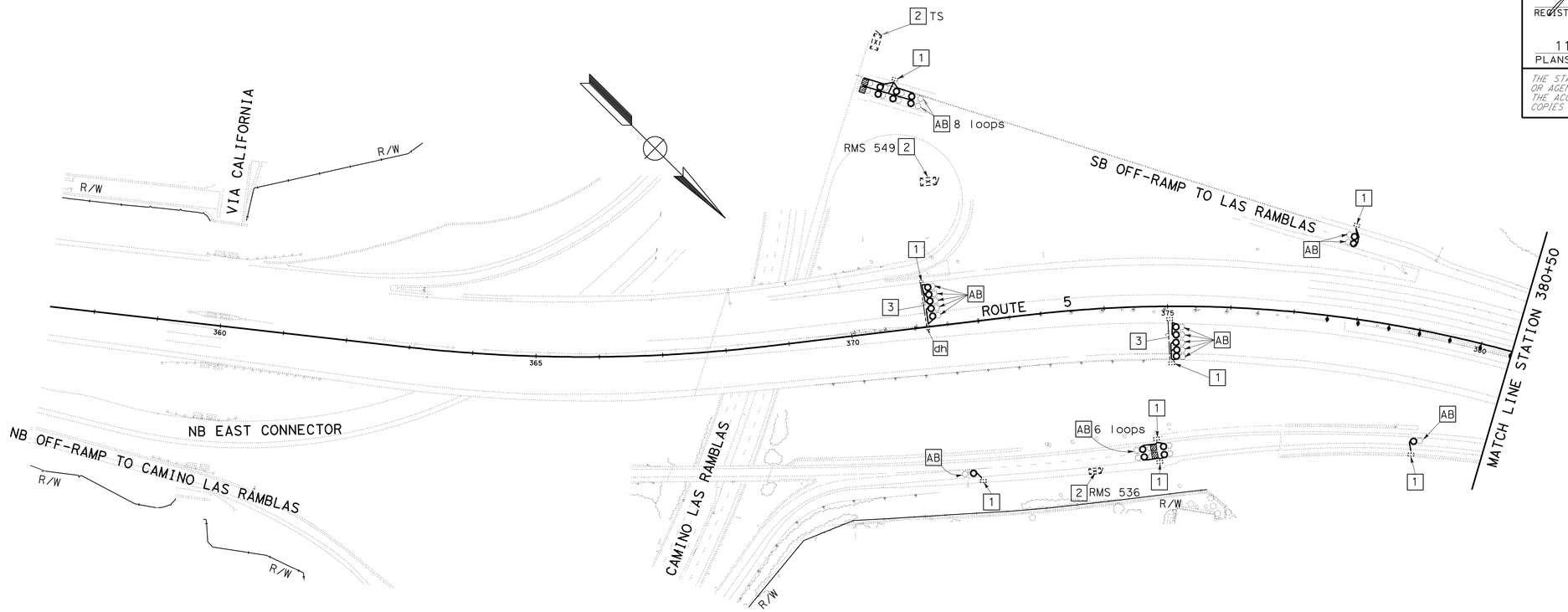


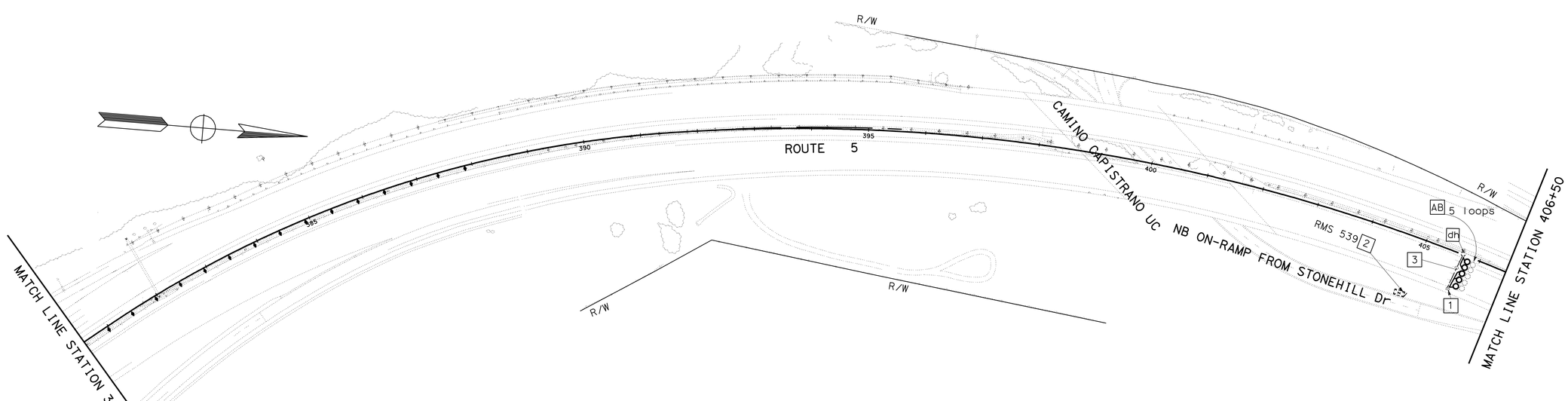


# INDUCTIVE LOOP DETECTOR

SCALE: 1" = 100'

SEE SHEET E-1 FOR NOTES AND DETAILS.
THIS PLAN IS ACCURATE FOR ELECTRICAL WORK ONLY

**E-2**

| REVISED BY | DATE REVISED |
|---|---|
| JOANNE VO | VANESSA TRUONG |
| CALCULATED-DESIGNED BY | CHECKED BY |
| FUNCTIONAL SUPERVISOR | SHAHRAM SHAHRIARI |

STATE OF CALIFORNIA - DEPARTMENT OF TRANSPORTATION
Caltrans
**ELECTRICAL DESIGN**

LAST REVISION 09-30-10 | DATE PLOTTED => 30-NOV-2010 | TIME PLOTTED => 12:49

| Dist | COUNTY | ROUTE | POST MILES TOTAL PROJECT | SHEET No. | TOTAL SHEETS |
|---|---|---|---|---|---|
| 12 | Ora | 5 | 6.8/14.5 | 141 | 171 |

REGISTERED ELECTRICAL ENGINEER 09-30-10 DATE

11-29-10
PLANS APPROVAL DATE

REGISTERED PROFESSIONAL ENGINEER
JOANNE VO
No. E 16748
Exp. 9/30/10
ELECT
STATE OF CALIFORNIA

*THE STATE OF CALIFORNIA OR ITS OFFICERS OR AGENTS SHALL NOT BE RESPONSIBLE FOR THE ACCURACY OR COMPLETENESS OF SCANNED COPIES OF THIS PLAN SHEET.*

FOR ACCURATE RIGHT OF WAY AND ACCESS DATA,
CONTACT RIGHT OF WAY ENGINEERING AT THE DISTRICT OFFICE.

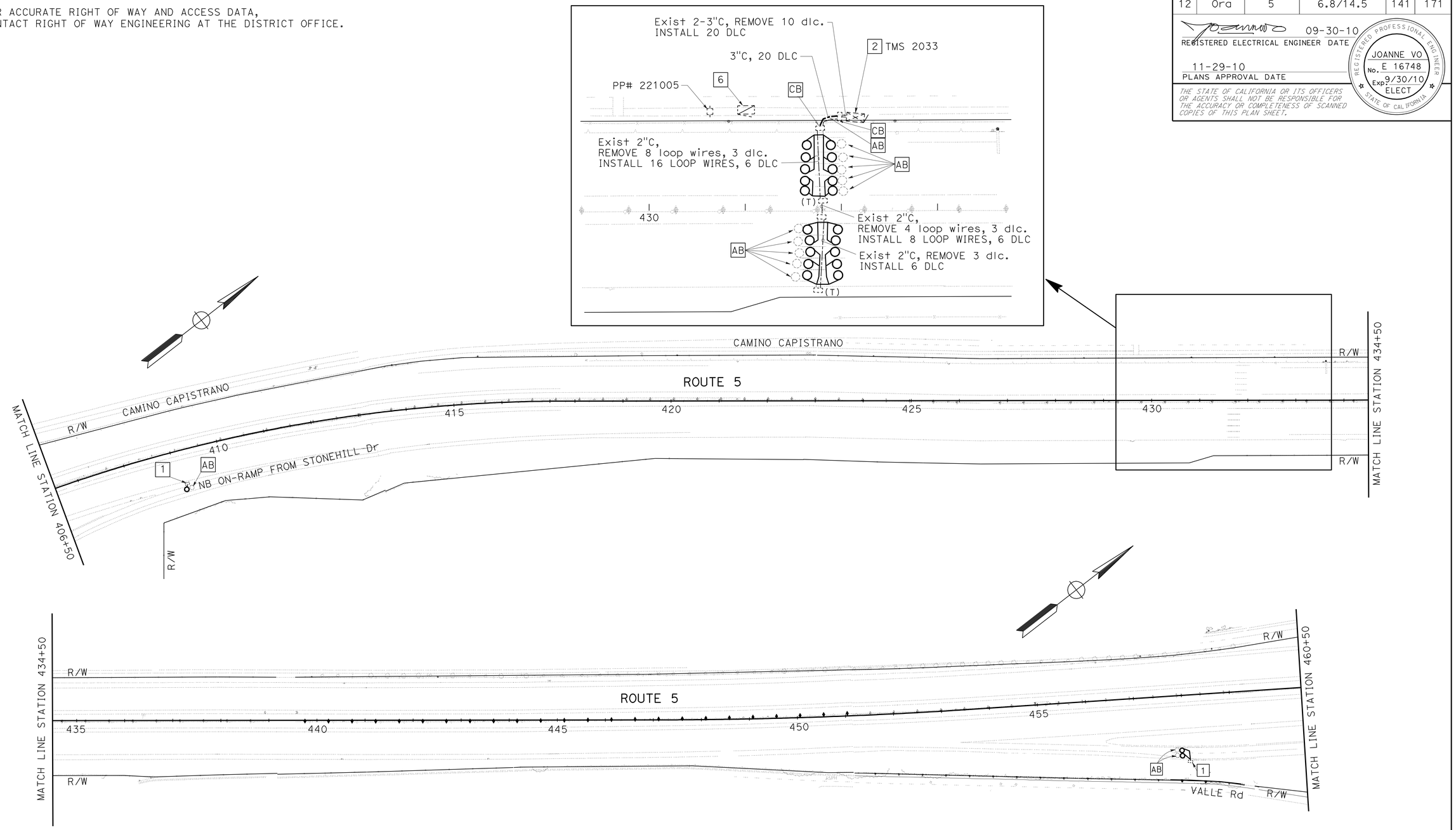


SEE SHEET E-1 FOR NOTES AND DETAILS.

THIS PLAN IS ACCURATE FOR ELECTRICAL WORK ONLY

# INDUCTIVE LOOP DETECTOR

SCALE: 1" = 100'

**E-3**

STATE OF CALIFORNIA - DEPARTMENT OF TRANSPORTATION
Caltrans® **ELECTRICAL DESIGN**

FUNCTIONAL SUPERVISOR: SHAHRAM SHAHRIARI

CALCULATED-DESIGNED BY: JOANNE VO
CHECKED BY: VANESSA TRUONG

REVISED BY
DATE REVISED

LAST REVISION 09-30-10
DATE PLOTTED => 29-NOV-2010
TIME PLOTTED => 17:36

| Dist | COUNTY | ROUTE | POST MILES TOTAL PROJECT | SHEET No. | TOTAL SHEETS |
|---|---|---|---|---|---|
| 12 | Ora | 5 | 6.8/14.5 | 142 | 171 |

REGISTERED ELECTRICAL ENGINEER 09-30-10 DATE

11-29-10
PLANS APPROVAL DATE

REGISTERED PROFESSIONAL ENGINEER
JOANNE VO
No. E 16748
Exp 9/30/12
ELECT
STATE OF CALIFORNIA

*THE STATE OF CALIFORNIA OR ITS OFFICERS OR AGENTS SHALL NOT BE RESPONSIBLE FOR THE ACCURACY OR COMPLETENESS OF SCANNED COPIES OF THIS PLAN SHEET.*

FOR ACCURATE RIGHT OF WAY AND ACCESS DATA,
CONTACT RIGHT OF WAY ENGINEERING AT THE DISTRICT OFFICE.

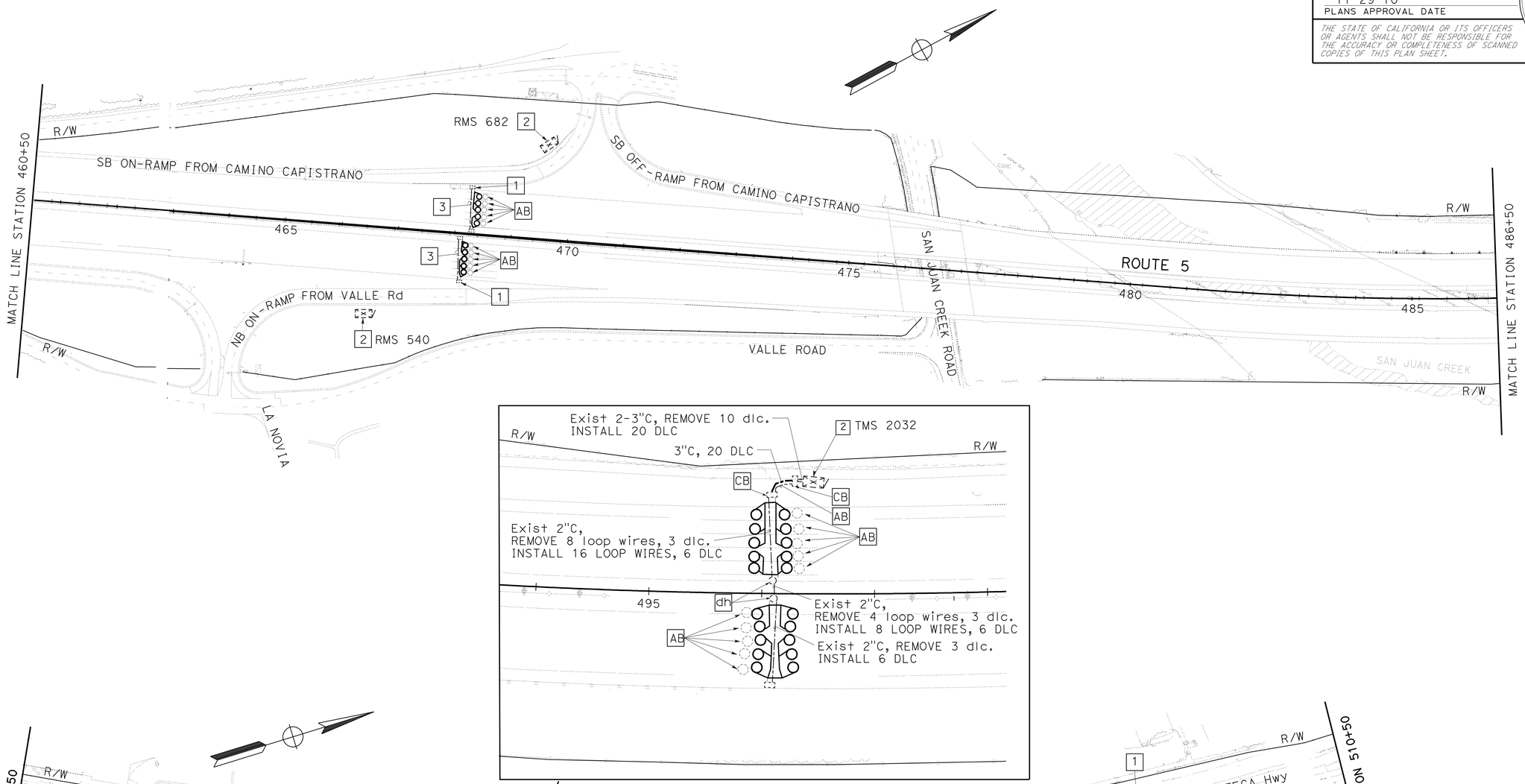


# INDUCTIVE LOOP DETECTOR

SCALE: 1" = 100'

E-4

SEE SHEET E-1 FOR NOTES AND DETAILS.

THIS PLAN IS ACCURATE FOR ELECTRICAL WORK ONLY

STATE OF CALIFORNIA - DEPARTMENT OF TRANSPORTATION
Caltrans® ELECTRICAL DESIGN

FUNCTIONAL SUPERVISOR: SHAHRAM SHAHRIARI
CALCULATED-DESIGNED BY: JOANNE VO
CHECKED BY: VANESSA TRUONG
REVISED BY
DATE REVISED

LAST REVISION 09-30-10
DATE PLOTTED => 29-NOV-2010
TIME PLOTTED => 17:36

| Dist | COUNTY | ROUTE | POST MILES TOTAL PROJECT | SHEET No. | TOTAL SHEETS |
|---|---|---|---|---|---|
| 12 | Ora | 5 | 6.8/14.5 | 143 | 171 |

REGISTERED ELECTRICAL ENGINEER 09-30-10 DATE

11-29-10
PLANS APPROVAL DATE

REGISTERED PROFESSIONAL ENGINEER
JOANNE VO
No. E 16748
Exp 9/30/12
ELECT
STATE OF CALIFORNIA

*THE STATE OF CALIFORNIA OR ITS OFFICERS OR AGENTS SHALL NOT BE RESPONSIBLE FOR THE ACCURACY OR COMPLETENESS OF SCANNED COPIES OF THIS PLAN SHEET.*

FOR ACCURATE RIGHT OF WAY AND ACCESS DATA,
CONTACT RIGHT OF WAY ENGINEERING AT THE DISTRICT OFFICE.

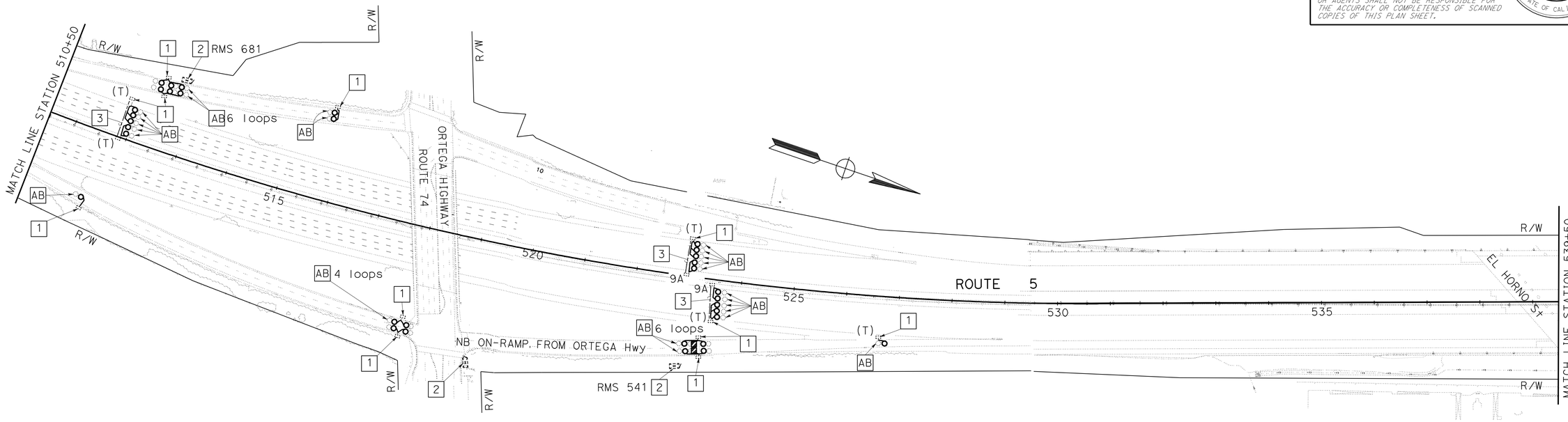


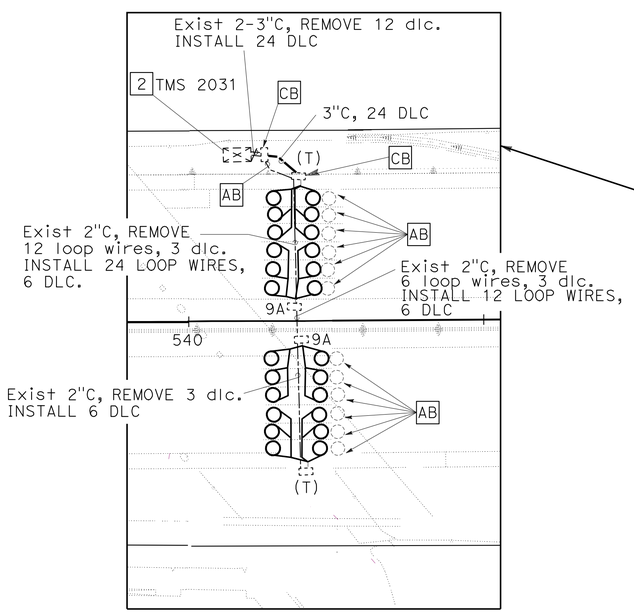


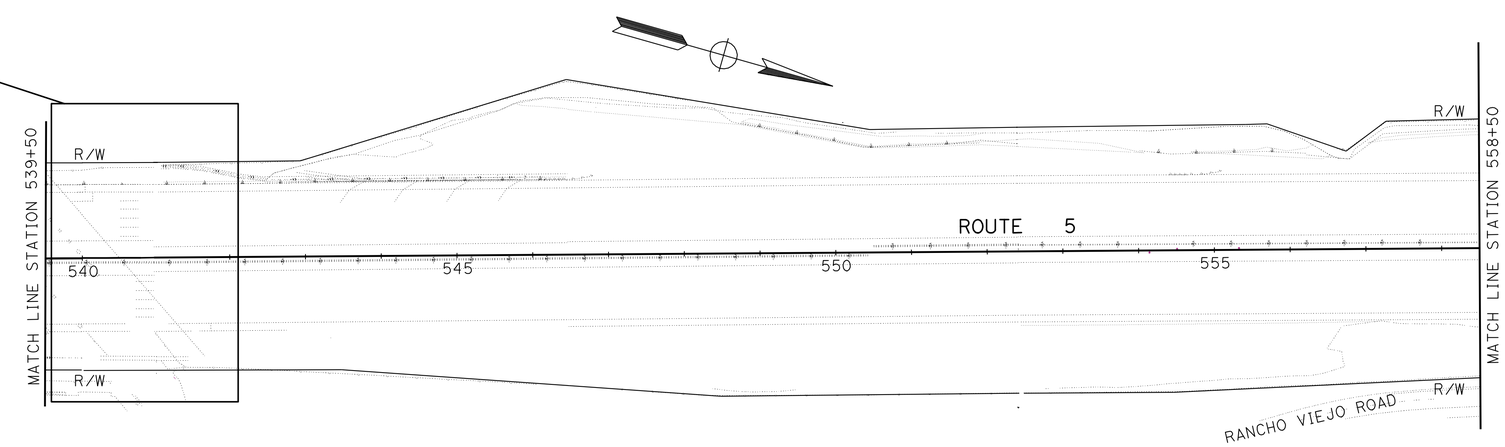


SEE SHEET E-1 FOR NOTES AND DETAILS.
THIS PLAN IS ACCURATE FOR ELECTRICAL WORK ONLY

# INDUCTIVE LOOP DETECTOR

SCALE: 1" = 100'

**E-5**

STATE OF CALIFORNIA - DEPARTMENT OF TRANSPORTATION
Caltrans® **ELECTRICAL DESIGN**

FUNCTIONAL SUPERVISOR: SHAHRAM SHAHRIARI
CALCULATED-DESIGNED BY: JOANNE VO
CHECKED BY: VANESSA TRUONG
REVISED BY
DATE REVISED

LAST REVISION 09-30-10
DATE PLOTTED => 29-NOV-2010
TIME PLOTTED => 17:39

| Dist | COUNTY | ROUTE | POST MILES TOTAL PROJECT | SHEET No. | TOTAL SHEETS |
|---|---|---|---|---|---|
| 12 | Ora | 5 | 6.8/14.5 | 144 | 171 |

REGISTERED ELECTRICAL ENGINEER 09-30-10 DATE

11-29-10
PLANS APPROVAL DATE

REGISTERED PROFESSIONAL ENGINEER
JOANNE VO
No. E 16748
Exp. 9/30/12
ELECT
STATE OF CALIFORNIA

*THE STATE OF CALIFORNIA OR ITS OFFICERS OR AGENTS SHALL NOT BE RESPONSIBLE FOR THE ACCURACY OR COMPLETENESS OF SCANNED COPIES OF THIS PLAN SHEET.*

FOR ACCURATE RIGHT OF WAY AND ACCESS DATA,
CONTACT RIGHT OF WAY ENGINEERING AT THE DISTRICT OFFICE.

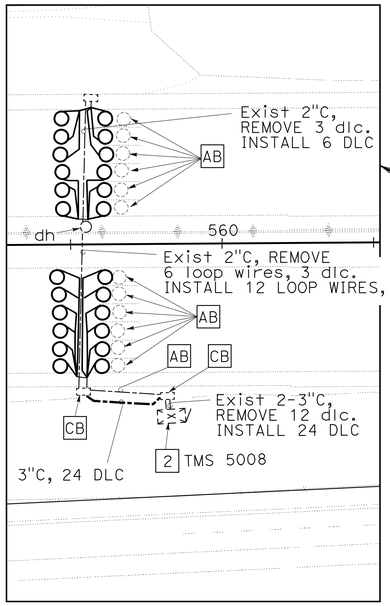


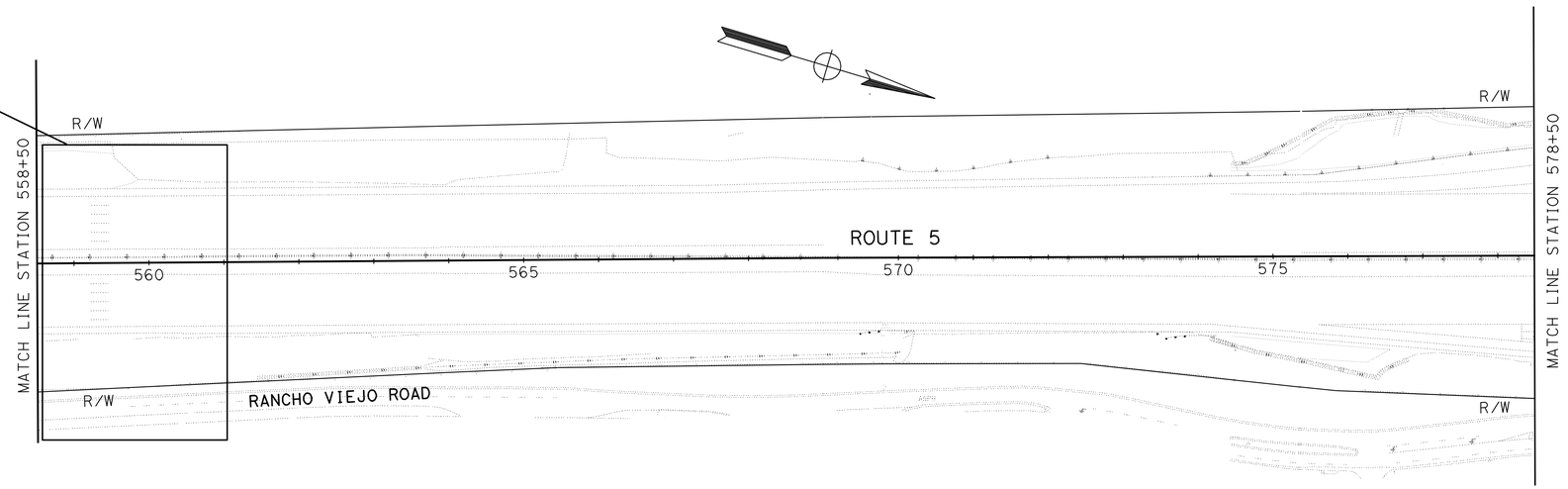


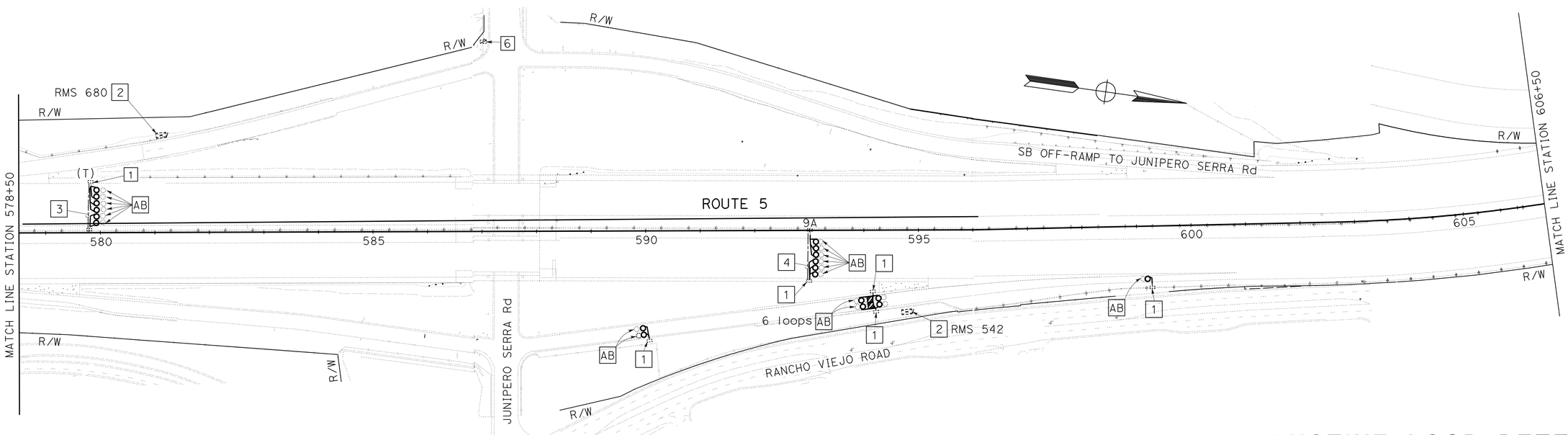


# INDUCTIVE LOOP DETECTOR

SCALE: 1" = 100'

**E-6**

SEE SHEET E-1 FOR NOTES AND DETAILS.
THIS PLAN IS ACCURATE FOR ELECTRICAL WORK ONLY

STATE OF CALIFORNIA - DEPARTMENT OF TRANSPORTATION
Caltrans
ELECTRICAL DESIGN

FUNCTIONAL SUPERVISOR: SHAHRAM SHAHRIARI
CALCULATED-DESIGNED BY: JOANNE VO
CHECKED BY: VANESSA TRUONG
REVISED BY
DATE REVISED

LAST REVISION 09-30-10 | DATE PLOTTED => 29-NOV-2010 | TIME PLOTTED => 17:39

BORDER LAST REVISED 7/2/2010 | USERNAME => trstrk | DGN FILE => c0e030ua006.dgn | RELATIVE BORDER SCALE IS IN INCHES 0 1 2 3 | UNIT 3024 | PROJECT NUMBER & PHASE 12000000931

| Dist | COUNTY | ROUTE | POST MILES TOTAL PROJECT | SHEET No. | TOTAL SHEETS |
|---|---|---|---|---|---|
| 12 | Ora | 5 | 6.8/14.5 | 145 | 171 |

REGISTERED ELECTRICAL ENGINEER 09-30-10 DATE

11-29-10
PLANS APPROVAL DATE

REGISTERED PROFESSIONAL ENGINEER
JOANNE VO
No. E 16748
Exp. 9/30/12
ELECT
STATE OF CALIFORNIA

*THE STATE OF CALIFORNIA OR ITS OFFICERS OR AGENTS SHALL NOT BE RESPONSIBLE FOR THE ACCURACY OR COMPLETENESS OF SCANNED COPIES OF THIS PLAN SHEET.*

FOR ACCURATE RIGHT OF WAY AND ACCESS DATA,
CONTACT RIGHT OF WAY ENGINEERING AT THE DISTRICT OFFICE.

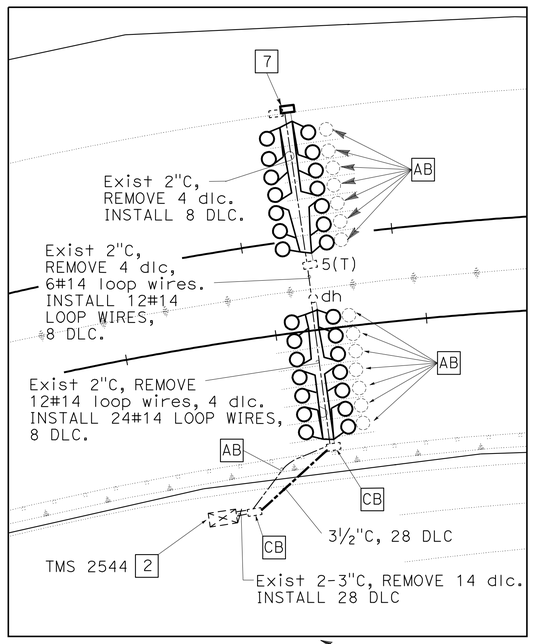


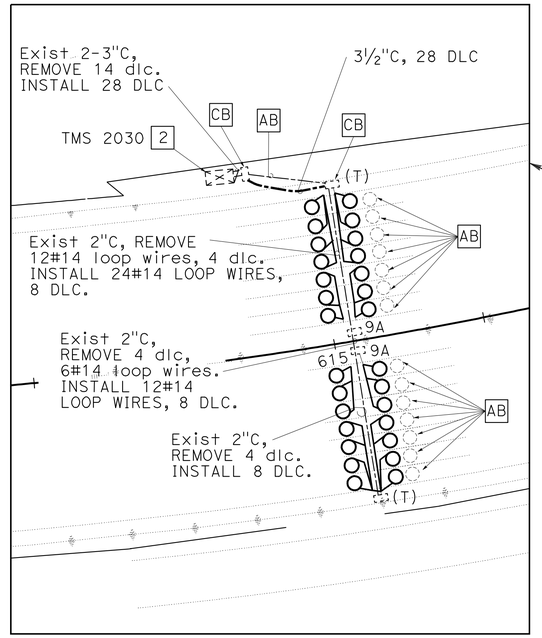


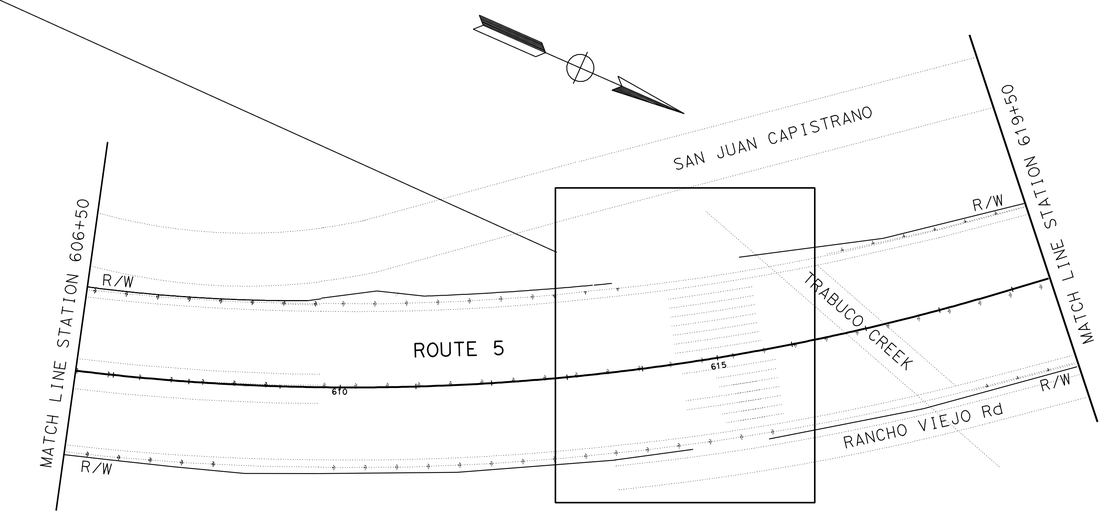


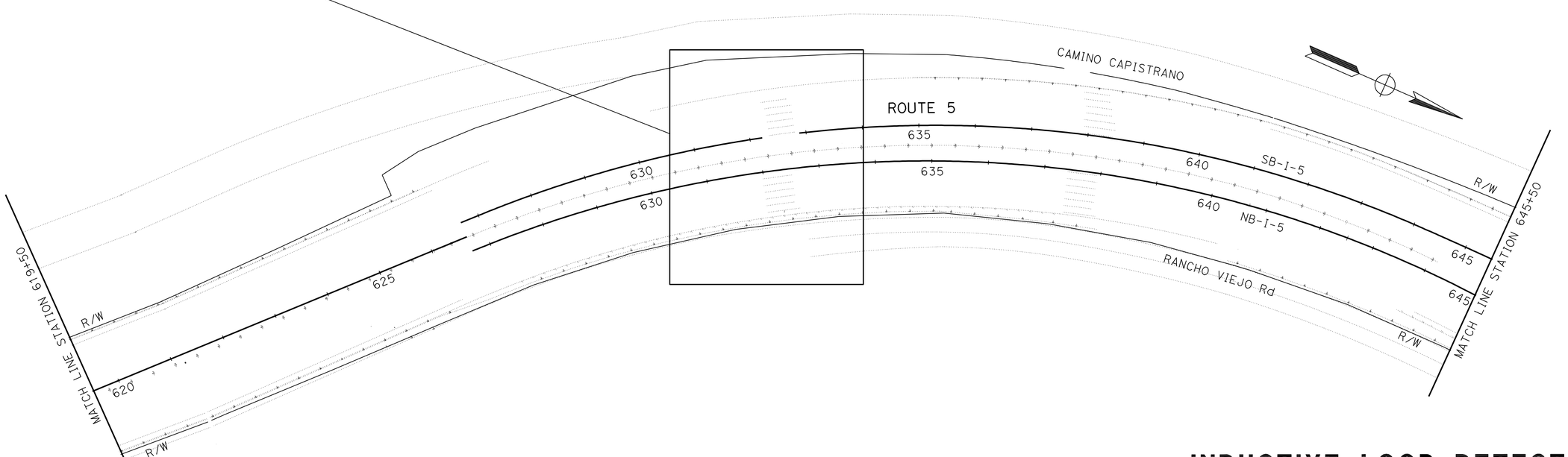


# INDUCTIVE LOOP DETECTOR

SCALE: 1" = 100'

**E-7**

SEE SHEET E-1 FOR NOTES AND DETAILS.
THIS PLAN IS ACCURATE FOR ELECTRICAL WORK ONLY

STATE OF CALIFORNIA - DEPARTMENT OF TRANSPORTATION
Caltrans® ELECTRICAL DESIGN

FUNCTIONAL SUPERVISOR: SHAHRAM SHAHRIARI
CALCULATED-DESIGNED BY: JOANNE VO
CHECKED BY: VANESSA TRUONG
REVISED BY
DATE REVISED

LAST REVISION 09-30-10
DATE PLOTTED => 29-NOV-2010
TIME PLOTTED => 17:36

| Dist | COUNTY | ROUTE | POST MILES TOTAL PROJECT | SHEET No. | TOTAL SHEETS |
|---|---|---|---|---|---|
| 12 | Ora | 5 | 6.8/14.5 | 146 | 171 |

REGISTERED ELECTRICAL ENGINEER 09-30-10 DATE

11-29-10
PLANS APPROVAL DATE

REGISTERED PROFESSIONAL ENGINEER JOANNE VO No. E 16748 Exp. 9/30/12 ELECT STATE OF CALIFORNIA

*THE STATE OF CALIFORNIA OR ITS OFFICERS OR AGENTS SHALL NOT BE RESPONSIBLE FOR THE ACCURACY OR COMPLETENESS OF SCANNED COPIES OF THIS PLAN SHEET.*

FOR ACCURATE RIGHT OF WAY AND ACCESS DATA,
CONTACT RIGHT OF WAY ENGINEERING AT THE DISTRICT OFFICE.

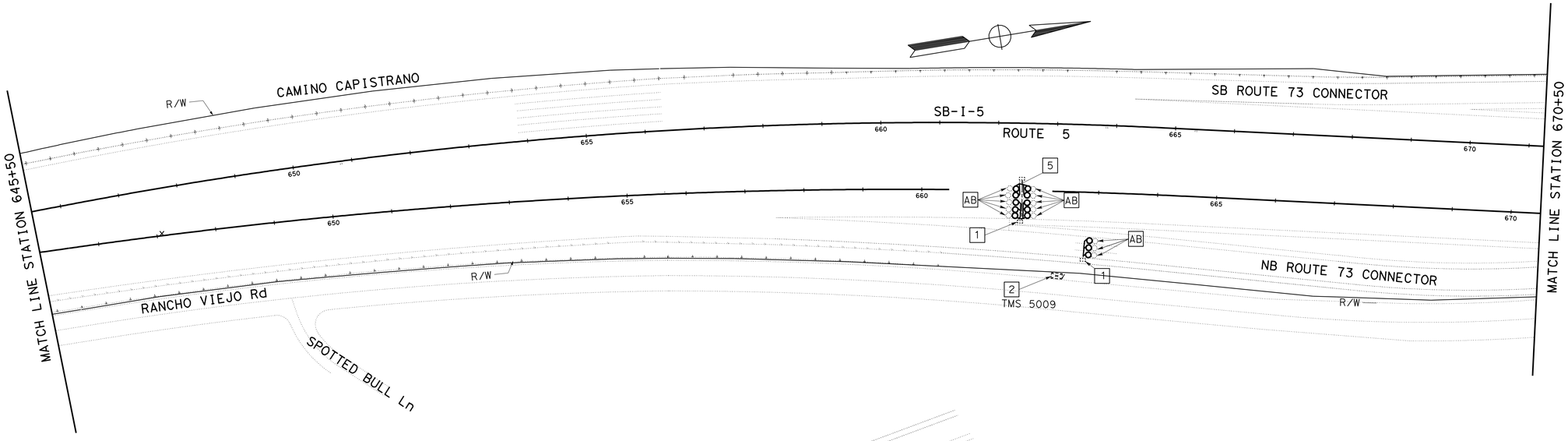


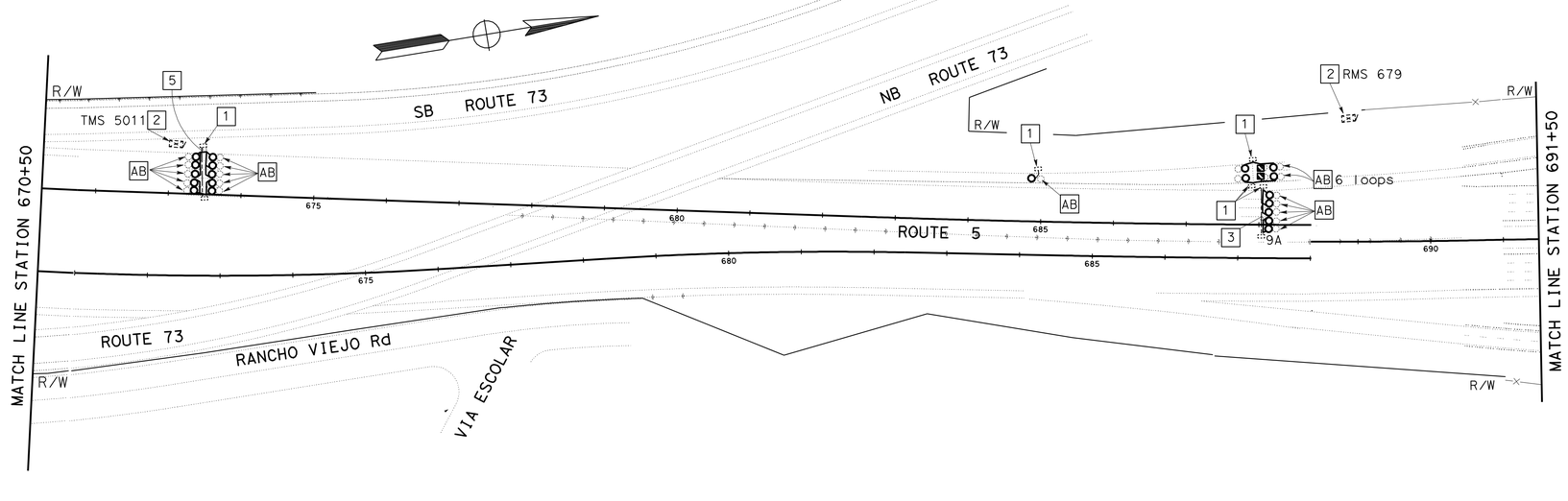


# INDUCTIVE LOOP DETECTOR

SCALE: 1" = 100'

SEE SHEET E-1 FOR NOTES AND DETAILS.

THIS PLAN IS ACCURATE FOR ELECTRICAL WORK ONLY

**E-8**

STATE OF CALIFORNIA - DEPARTMENT OF TRANSPORTATION
Caltrans® **ELECTRICAL DESIGN**

FUNCTIONAL SUPERVISOR: SHAHRAM SHAHRIARI
CALCULATED-DESIGNED BY: JOANNE VO
CHECKED BY: VANESSA TRUONG
REVISED BY
DATE REVISED

LAST REVISION 09-30-10 | DATE PLOTTED => 30-NOV-2010 | TIME PLOTTED => 08:24

| Dist | COUNTY | ROUTE | POST MILES TOTAL PROJECT | SHEET No. | TOTAL SHEETS |
|---|---|---|---|---|---|
| 12 | Ora | 5 | 6.8/14.5 | 147 | 171 |

REGISTERED ELECTRICAL ENGINEER 09-30-10 DATE

11-29-10
PLANS APPROVAL DATE

REGISTERED PROFESSIONAL ENGINEER
JOANNE VO
No. E 16748
Exp. 9/30/12
ELECT
STATE OF CALIFORNIA

*THE STATE OF CALIFORNIA OR ITS OFFICERS OR AGENTS SHALL NOT BE RESPONSIBLE FOR THE ACCURACY OR COMPLETENESS OF SCANNED COPIES OF THIS PLAN SHEET.*

FOR ACCURATE RIGHT OF WAY AND ACCESS DATA,
CONTACT RIGHT OF WAY ENGINEERING AT THE DISTRICT OFFICE.

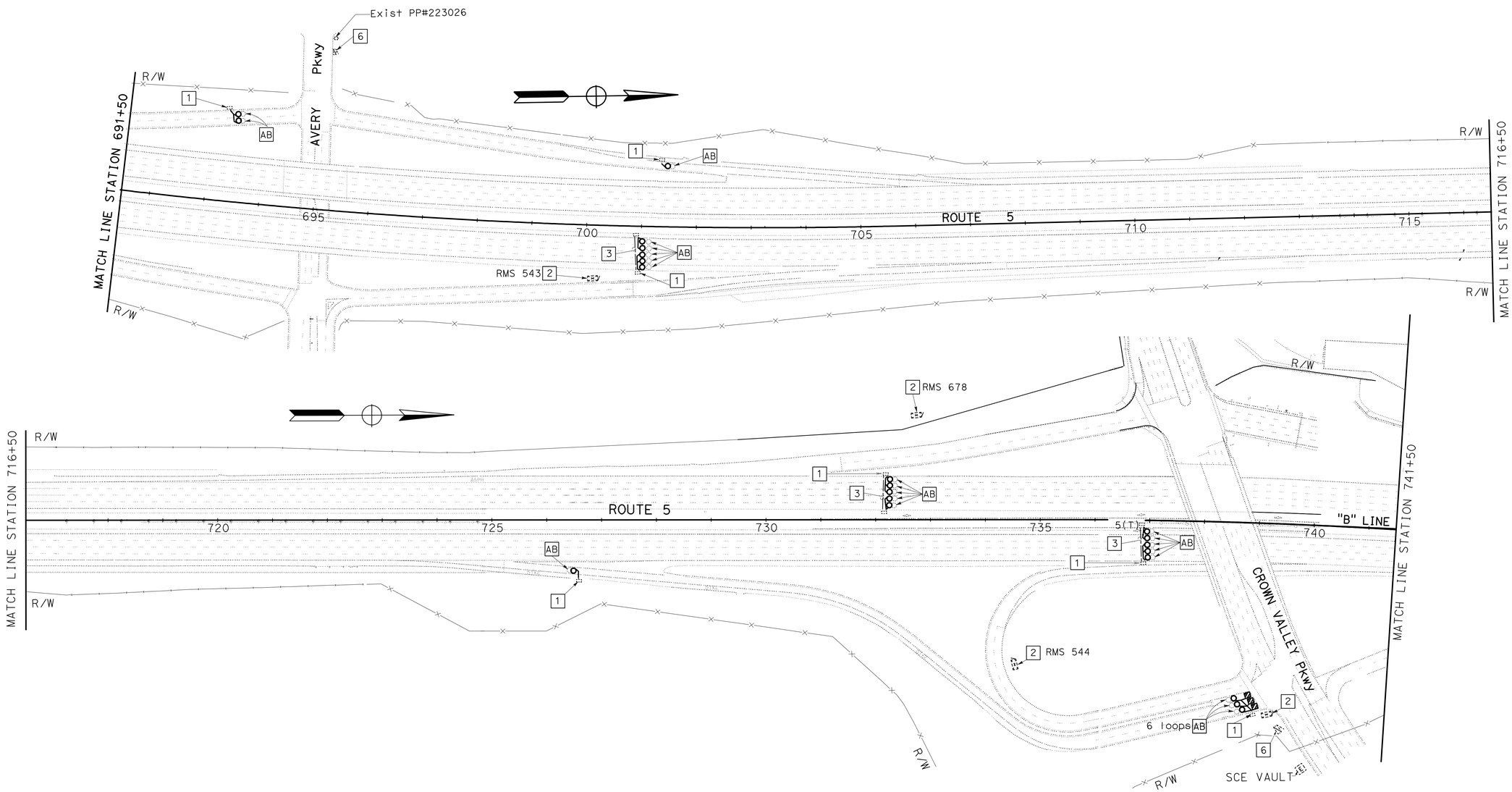


# INDUCTIVE LOOP DETECTOR

SCALE: 1" = 100'

SEE SHEET E-1 FOR NOTES AND DETAILS.
THIS PLAN IS ACCURATE FOR ELECTRICAL WORK ONLY.

**E-9**

| REVISED BY | DATE REVISED |
|---|---|
| JOANNE VO | VANESSA TRUONG |
| CALCULATED-DESIGNED BY | CHECKED BY |
| FUNCTIONAL SUPERVISOR | SHAHRAM SHAHRIARI |

STATE OF CALIFORNIA - DEPARTMENT OF TRANSPORTATION
Caltrans
**ELECTRICAL DESIGN**

LAST REVISION 09-30-10 | DATE PLOTTED => 30-NOV-2010 | TIME PLOTTED => 07:27

| Dist | COUNTY | ROUTE | POST MILES TOTAL PROJECT | SHEET No. | TOTAL SHEETS |
|---|---|---|---|---|---|
| 12 | Ora | 5 | 6.8/14.5 | 148 | 171 |

REGISTERED ELECTRICAL ENGINEER 09-30-10 DATE

11-29-10
PLANS APPROVAL DATE

REGISTERED PROFESSIONAL ENGINEER
JOANNE VO
No. E 16748
Exp. 9/30/12
ELECT
STATE OF CALIFORNIA

*THE STATE OF CALIFORNIA OR ITS OFFICERS OR AGENTS SHALL NOT BE RESPONSIBLE FOR THE ACCURACY OR COMPLETENESS OF SCANNED COPIES OF THIS PLAN SHEET.*

FOR ACCURATE RIGHT OF WAY AND ACCESS DATA,
CONTACT RIGHT OF WAY ENGINEERING AT THE DISTRICT OFFICE.

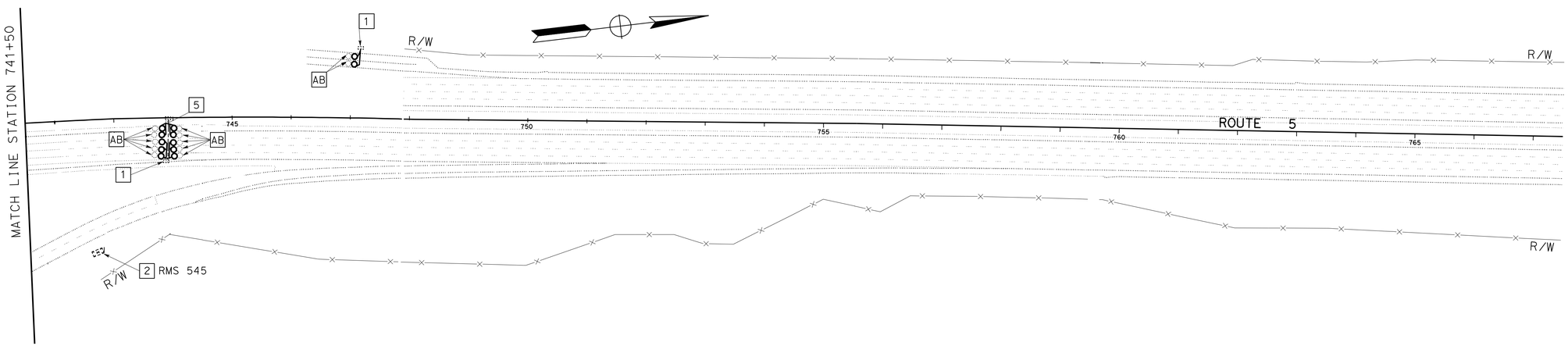


SEE SHEET E-1 FOR NOTES AND DETAILS.

THIS PLAN IS ACCURATE FOR ELECTRICAL WORK ONLY

# INDUCTIVE LOOP DETECTOR

SCALE: 1" = 100'

**E-10**

STATE OF CALIFORNIA - DEPARTMENT OF TRANSPORTATION
Caltrans® **ELECTRICAL DESIGN**

FUNCTIONAL SUPERVISOR: SHAHRAM SHAHRIARI
CALCULATED-DESIGNED BY: JOANNE VO
CHECKED BY: VANESSA TRUONG
REVISED BY
DATE REVISED

LAST REVISION 09-30-10
DATE PLOTTED => 30-NOV-2010
TIME PLOTTED => 08:18

| DIST | COUNTY | ROUTE | POST MILES TOTAL PROJECT | SHEET NO. | TOTAL SHEETS |
|---|---|---|---|---|---|
| 12 | Ora | 5 | 6.8/14.5 | 149 | 171 |

REGISTERED CIVIL ENGINEER

June 6, 2008
PLANS APPROVAL DATE

REGISTERED PROFESSIONAL ENGINEER
Donald E. Howe
No. C46402
Exp. 3-31-09
CIVIL
STATE OF CALIFORNIA

*The State of California or its officers or agents shall not be responsible for the accuracy or completeness of electronic copies of this plan sheet.*

*To accompany plans dated* 11-29-10

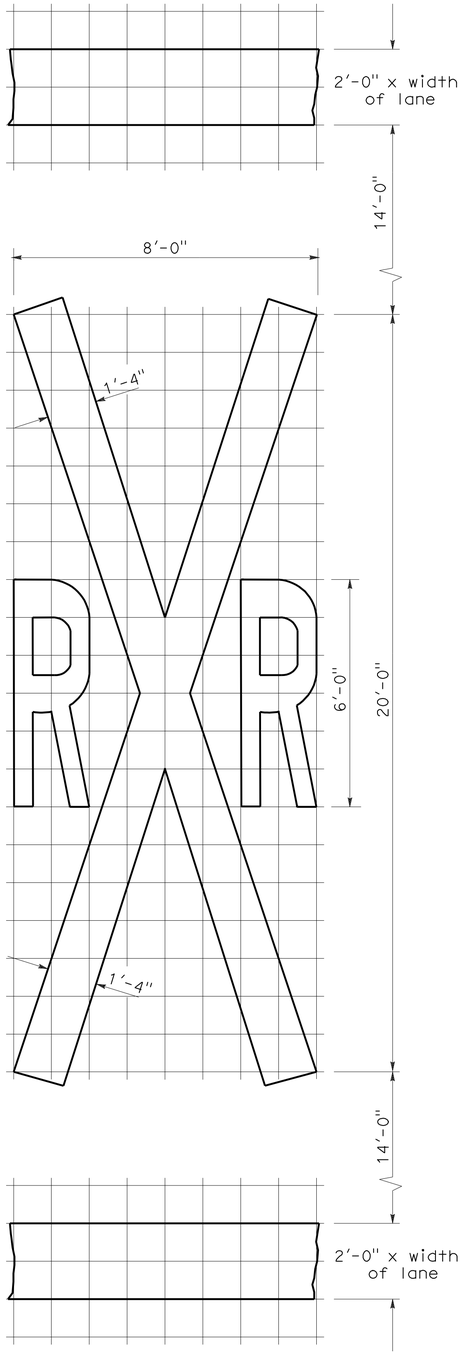


RAILROAD CROSSING SYMBOL

✳70 sq ft DOES NOT INCLUDE THE 2'-0" x VARIABLE WIDTH TRANSVERSE LINES.

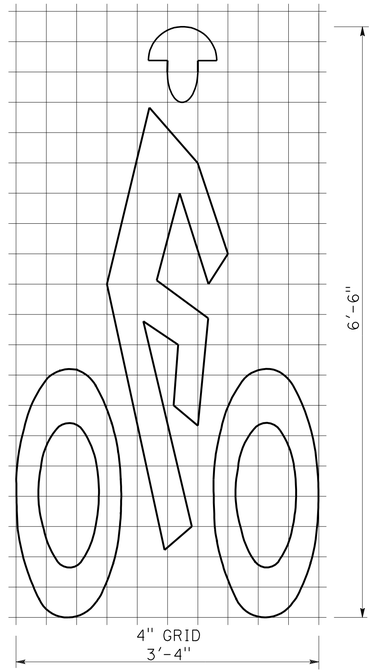


BIKE LANE SYMBOL

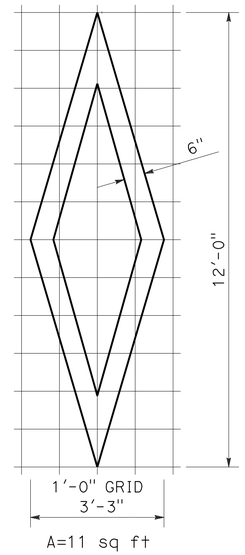


DIAMOND SYMBOL

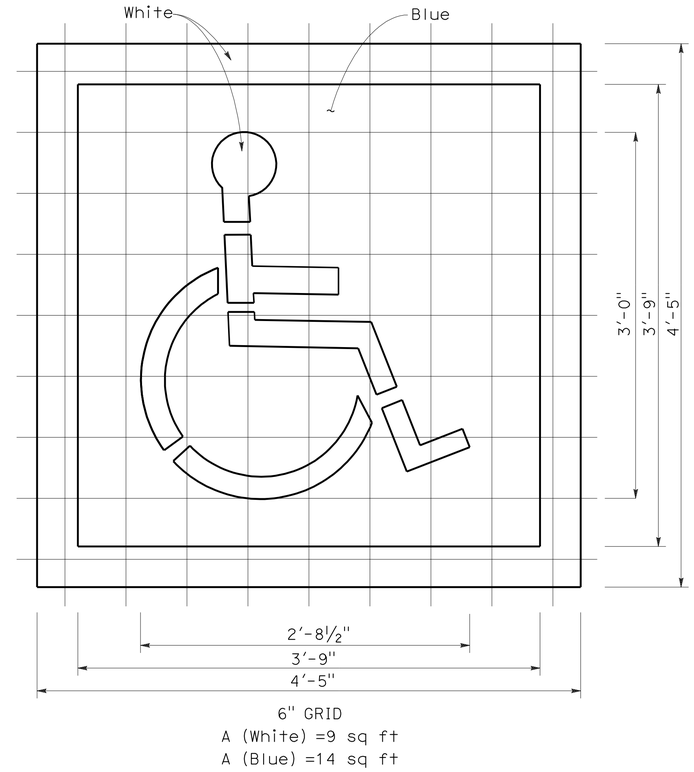


INTERNATIONAL SYMBOL OF ACCESSIBILITY MARKING

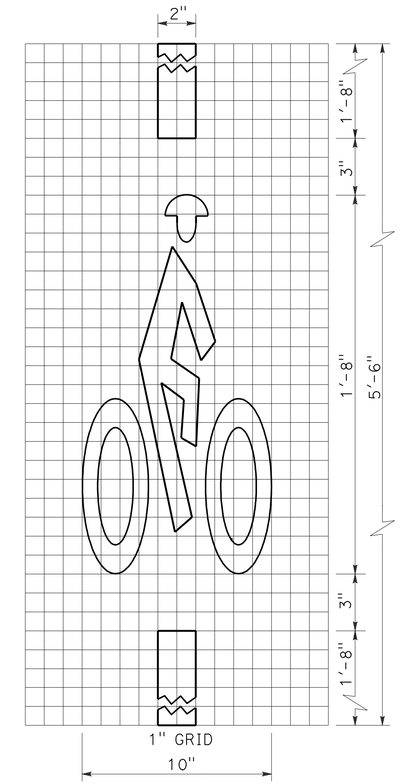


BICYCLE LOOP DETECTOR SYMBOL

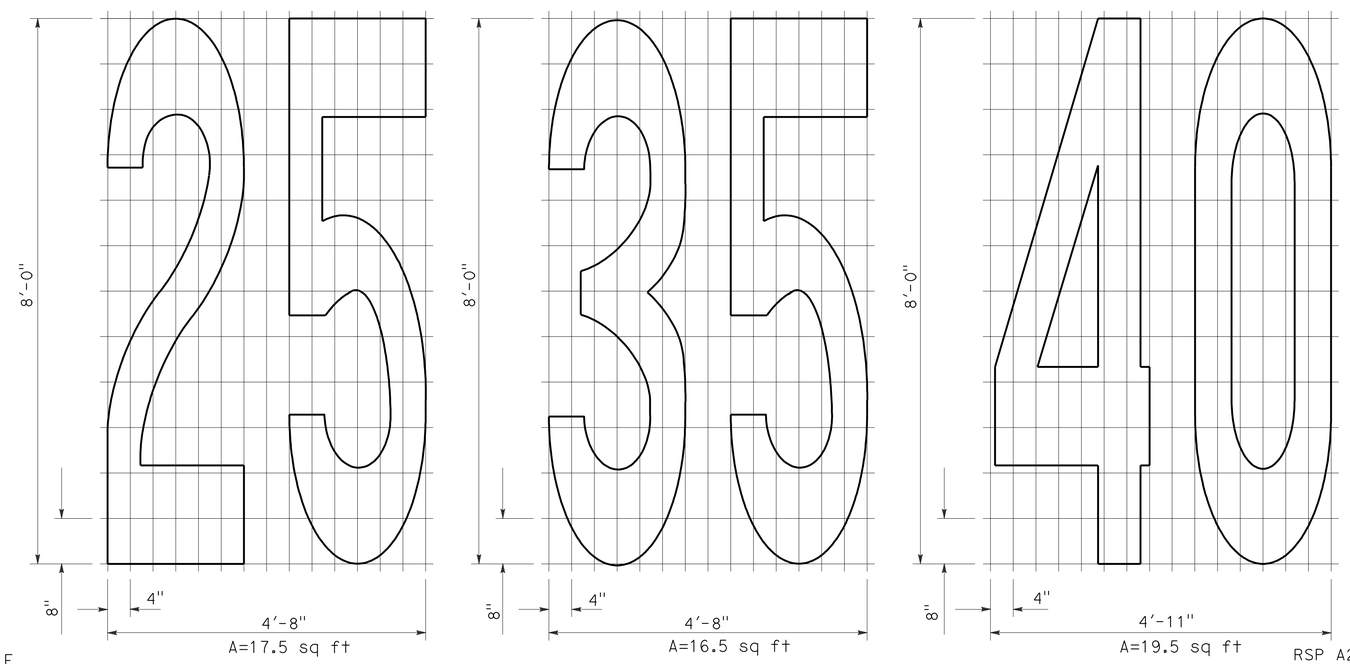


NUMERALS

NOTE:

1. Minor variations in dimensions may be accepted by the Engineer.

STATE OF CALIFORNIA
DEPARTMENT OF TRANSPORTATION

# PAVEMENT MARKINGS SYMBOLS AND NUMERALS

NO SCALE

RSP A24C DATED JUNE 6, 2008 SUPERSEDES STANDARD PLAN A24C DATED MAY 1, 2006 - PAGE 11 OF THE STANDARD PLANS BOOK DATED MAY 2006.

**REVISED STANDARD PLAN RSP A24C**

**2006 REVISED STANDARD PLAN RSP A24C**

5-27-08

| DIST | COUNTY | ROUTE | POST MILES TOTAL PROJECT | SHEET NO. | TOTAL SHEETS |
|---|---|---|---|---|---|
| 12 | Ora | 5 | 6.8/14.5 | 150 | 171 |

REGISTERED CIVIL ENGINEER

June 6, 2008
PLANS APPROVAL DATE

REGISTERED PROFESSIONAL ENGINEER Hector David Cordova No. C41957 Exp. 3-31-10 CIVIL STATE OF CALIFORNIA

*The State of California or its officers or agents shall not be responsible for the accuracy or completeness of electronic copies of this plan sheet.*

*To accompany plans dated* 11-29-10

**2006 REVISED STANDARD PLAN RSP A90A**

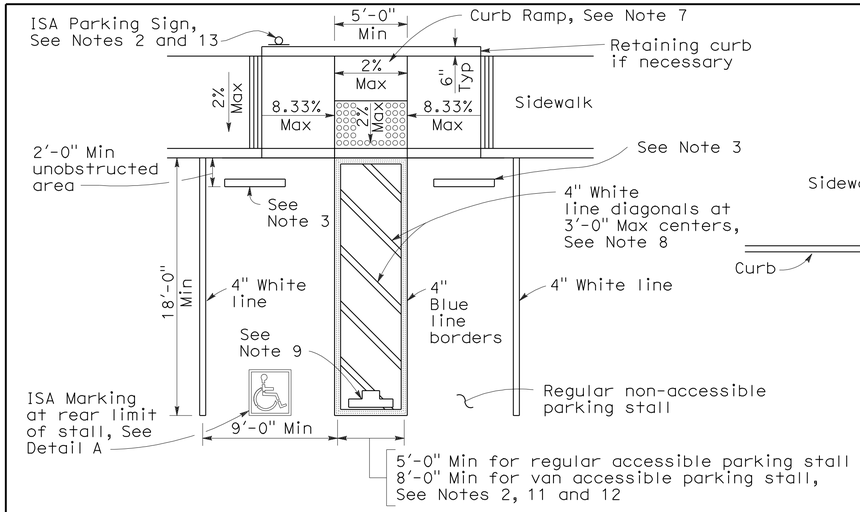


SINGLE PARKING STALL

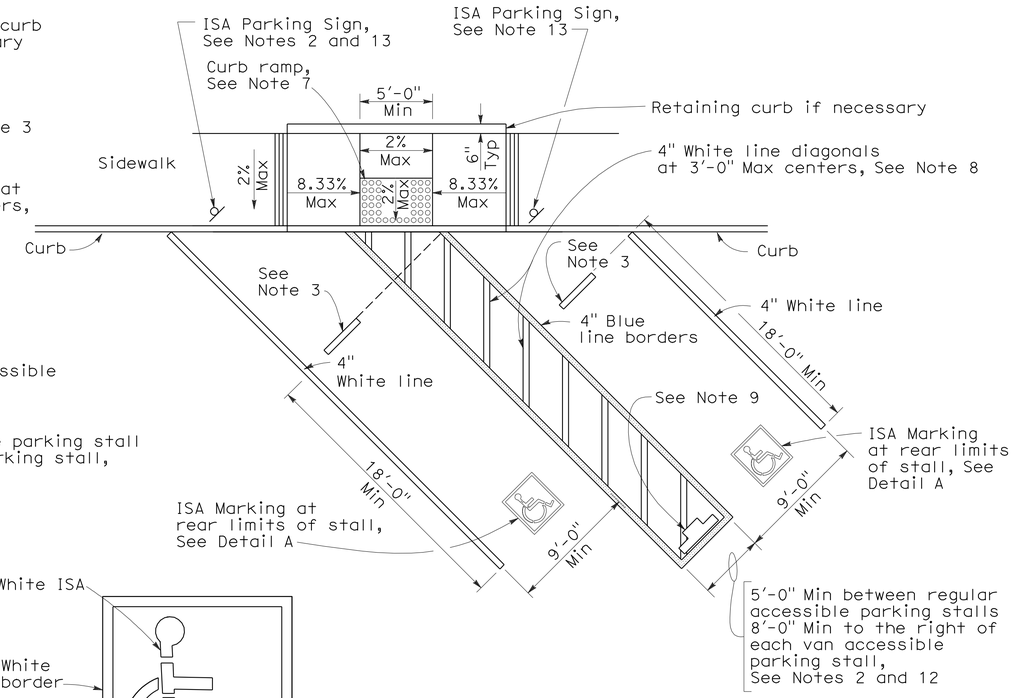


DIAGONAL DOUBLE PARKING STALLS

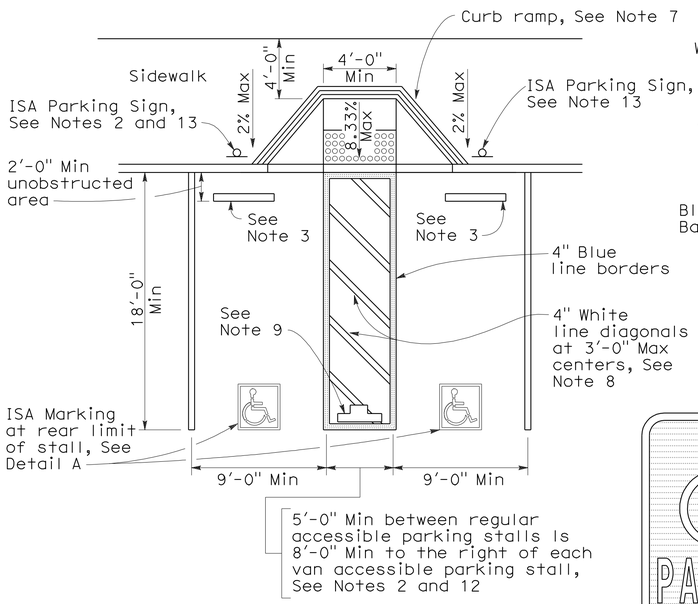


DOUBLE PARKING STALL

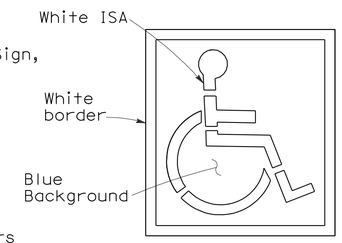


ISA MARKING
See Revised Std Plan RSP A24C

DETAIL A

TABLE A

| Total Number of Parking Spaces or Stalls | Minimum Number of Disabled Accessible Parking Spaces or Stalls |
|---|---|
| 1-25 | 1 |
| 26-50 | 2 |
| 51-75 | 3 |
| 76-100 | 4 |
| 101-150 | 5 |
| 151-200 | 6 |
| 201-300 | 7 |
| 301-400 | 8 |
| 401-500 | 9 |
| 501-1000 | 2 percent of total |
| Greater than 1001 | 20 plus 1 for each 100 or fraction thereof over 1001 |

SIGN R99 (CA)

PLAQUE R99B (CA)

SIGN R99 (CA) with PLAQUE R99B (CA)
See Note 6

SIGN R99C (CA)
See Note 6

UNAUTHORIZED VEHICLES PARKED IN DESIGNATED ACCESSIBLE SPACES NOT DISPLAYING DISTINGUISHING PLACARDS OR SPECIAL LICENSE PLATES ISSUED FOR PERSONS WITH DISABILITIES WILL BE TOWED AWAY AT THE OWNER'S EXPENSE

TOWED VEHICLES MAY BE RECLAIMED AT
(Insert Address)

OR BY TELEPHONING
(Insert Telephone Number)

SIGN R100B (CA)
See Note 10

SIGN R7-8b
See Notes 2 and 6

OFF-STREET PARKING SIGNS
(Parking lot or garage)
See Note 6

ISA = International Symbol of Accessibility

## NOTES:

1. Accessible parking spaces serving a particular building shall be located on the shortest accessible route of travel from adjacent parking to an accessible entrance. In parking facilities that do not serve a particular building, accessible parking shall be located on the shortest accessible route of travel to an accessible pedestrian entrance of the parking facility.
2. One in every eight accessible off-street parking stalls, but not less than one, shall be served by an accessible aisle of 8'-0" minimum width and shall be signed van accessible. The R7-8b sign shall be mounted below the R99B (CA) plaque or the R99C (CA) sign.
3. In each parking stall, a curb or bumper shall be provided and located to prevent encroachment of vehicles over the required width of walkways. Parking stalls shall be so located that persons with disabilities are not compelled to wheel or walk behind parked cars other than their own.
4. Surface slopes of accessible off-street parking stalls shall be the minimum possible and shall not exceed 2 percent in any direction.
5. Table A shall be used to determine the required number of accessible parking stalls in each parking lot or garage.
6. Where Plaque R99B (CA), Sign R99C (CA) or Sign R7-8b are installed, the bottom of the sign or plaque panel shall be a minimum of 7'-0" above the surrounding surface.
7. Curb ramps shall conform to the details shown on Revised Standard Plan RSP A88A.
8. Blue paint, instead of white may be used for marking accessibility aisles in areas where snow may cause white markings to not be visible.
9. The words "NO PARKING", shall be painted in white letters no less than 1'-0" high and located so that it is visible to traffic enforcement officials. See Revised Standard Plan RSP A90B for details of the "NO PARKING" pavement marking.
10. A R100B (CA) sign shall be posted in a conspicuous place at each entrance to off-street parking facilities or immediately adjacent to and visible from each stall. The sign shall include the address where the towed vehicle may be reclaimed and the telephone number of the local traffic law enforcement agency.
11. Where a single (non-van) accessible parking space is provided, the loading and unloading access aisle shall be on the passenger side of the vehicle as the vehicle is going forward into the parking space.
12. Where a van accessible parking space is provided, the loading and unloading access aisle shall be 8'-0" wide minimum, and shall be on the passenger side of the vehicle as the vehicle is going forward into the parking space.
13. Accessible Parking Only Sign shall be Sign R99C (CA) or Sign R99 (CA) with Plaque R99B (CA).

STATE OF CALIFORNIA
DEPARTMENT OF TRANSPORTATION

# ACCESSIBLE PARKING OFF-STREET

NO SCALE

RSP A90A DATED JUNE 6, 2008 SUPERSEDES STANDARD PLAN A90A
DATED MAY 1, 2006 - PAGE 117 OF THE STANDARD PLANS BOOK DATED MAY 2006.

**REVISED STANDARD PLAN RSP A90A**

6-3-08

| DIST | COUNTY | ROUTE | POST MILES TOTAL PROJECT | SHEET NO. | TOTAL SHEETS |
|---|---|---|---|---|---|
| 12 | Ora | 5 | 6.8/14.5 | 151 | 171 |

REGISTERED CIVIL ENGINEER

June 6, 2008
PLANS APPROVAL DATE

REGISTERED PROFESSIONAL ENGINEER
Hector David Cordova
No. C41957
Exp. 3-31-10
CIVIL
STATE OF CALIFORNIA

*The State of California or its officers or agents shall not be responsible for the accuracy or completeness of electronic copies of this plan sheet.*

*To accompany plans dated* 11-29-10

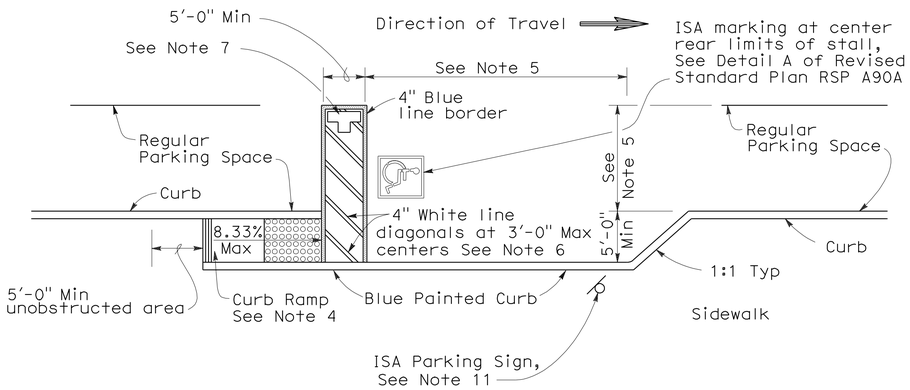


CONVENTIONAL

(See Note 9)

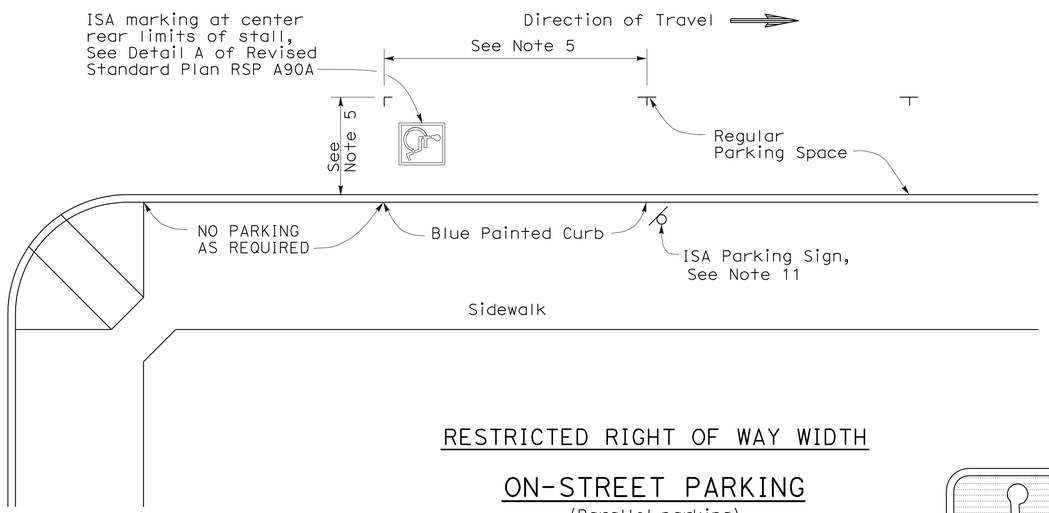


RESTRICTED RIGHT OF WAY WIDTH

ON-STREET PARKING

(Parallel parking)
(See Note 10)

PAVEMENT MARKING

See Note 7

SIGN R99 (CA)

SIGN R99C (CA)
See Note 3

PLAQUE R99B (CA)

SIGN R99 (CA) with PLAQUE R99B (CA)
See Note 3

ISA = International Symbol of Accessibility

## NOTES:

1. Parking spaces shall be so located that persons with disabilities are not compelled to wheel or walk behind parked cars other than their own.
2. Surface slopes of accessible on-street parking spaces shall be the minimum feasible.
3. Where Plaque R99B (CA) or Sign R99C (CA) are installed, the bottom of the sign or plaque panel shall be a minimum of 7'-0" above the surrounding surface.
4. Curb ramps shall conform to the details shown on Revised Standard Plan RSP A88A.
5. Accessible on-street parking spaces shall not be smaller in length or width than that specified by the local jurisdiction for other parking spaces, but not less than 20'-0" in length and not less than 8'-0" in width.
6. Blue paint, instead of white may be used for marking accessibility aisles in areas where snow may cause white markings to not be visible.
7. The words "NO PARKING", shall be painted in white letters no less than 1'-0" high on a contrasting background and located so that it is visible to traffic enforcement officials. See Standard Plan A24E for square foot area for painting the words "NO PARKING".
8. There shall be no obstructions on the sidewalk adjacent to and for the full length of the parking space, except for the ISA parking sign shown.
9. The Conventional detail should be the primary choice of accessible on-street parking. However, if the sidewalk lacks adequate space to construct a standard curb ramp, the Restricted Right of Way detail should be used.
10. If the Restricted Right of Way width detail is selected and it conflicts with a bus stop or other uses, this detail may apply to the other end of the block.
11. Accessible Parking Only Sign shall be Sign R99C (CA) or Sign R99 (CA) with Plaque R99B (CA).

STATE OF CALIFORNIA
DEPARTMENT OF TRANSPORTATION

# ACCESSIBLE PARKING ON-STREET

NO SCALE

RSP A90B DATED JUNE 6, 2008 SUPERSEDES STANDARD PLAN A90B
DATED MAY 1, 2006 - PAGE 118 OF THE STANDARD PLANS BOOK DATED MAY 2006.

**REVISED STANDARD PLAN RSP A90B**

**2006 REVISED STANDARD PLAN RSP A90B**

6-3-08

| DIST | COUNTY | ROUTE | POST MILES TOTAL PROJECT | SHEET NO. | TOTAL SHEETS |
|---|---|---|---|---|---|
| 12 | Ora | 5 | 6.8/14.5 | 152 | 171 |

REGISTERED CIVIL ENGINEER

May 15, 2009
PLANS APPROVAL DATE

REGISTERED PROFESSIONAL ENGINEER William K. Farnbach No. C49042 Exp. 9-30-10 CIVIL STATE OF CALIFORNIA

*The State of California or its officers or agents shall not be responsible for the accuracy or completeness of electronic copies of this plan sheet.*

*To accompany plans dated* 11-29-10

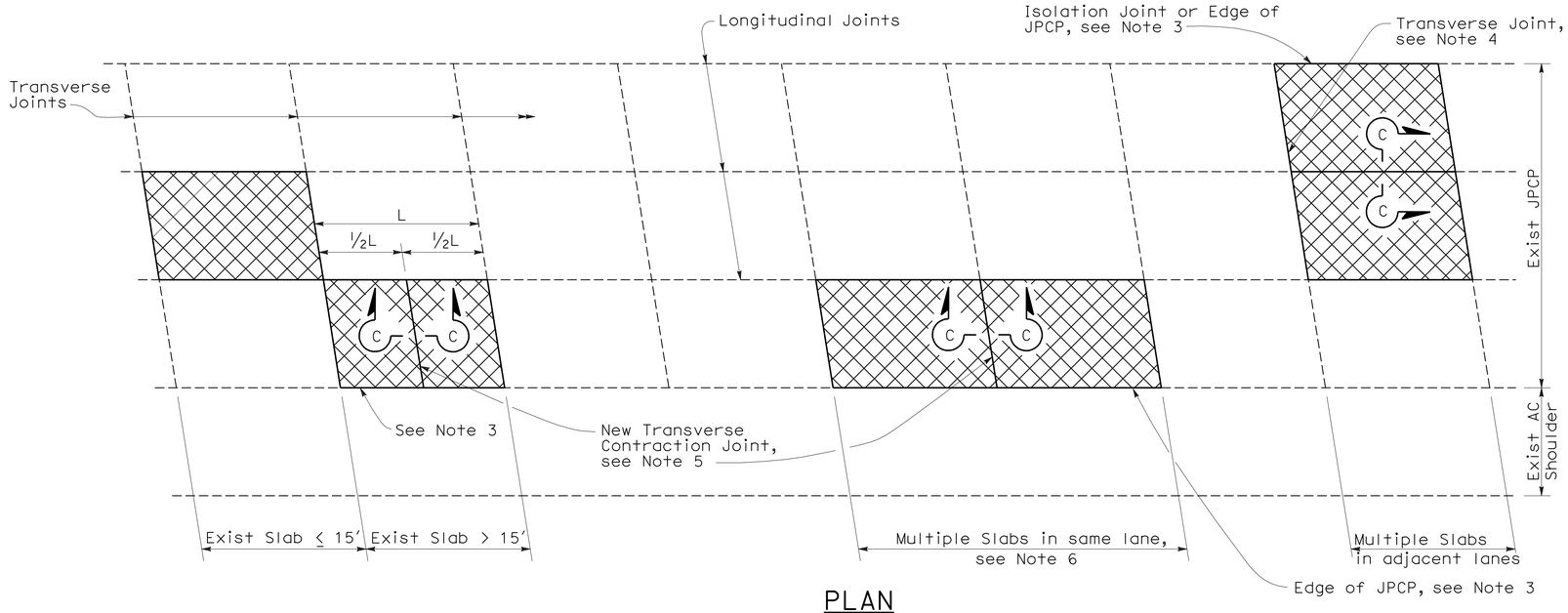


PLAN

## NOTES:

1. For details not shown, see Revised Standard Plan RSP P10.
2. Where the existing outer shoulder pavement is asphalt concrete pavement, the "a" dimension shall be 1′-0" and the "b" dimension shall be 2′-0".
3. Side forms shall be used where edge of pavement is adjacent to asphalt concrete.
4. For detail, see Transverse Construction Joint for existing concrete pavement detail on Revised Standard Plan RSP P10.
5. Transverse joint to match skew of existing joint. Omit dowel bars.
6. This Standard Plan only applicable when replacing multiple slabs in the same lane is less than 100′.

## LEGEND

Replace Concrete Pavement (See Slab Layout Detail)

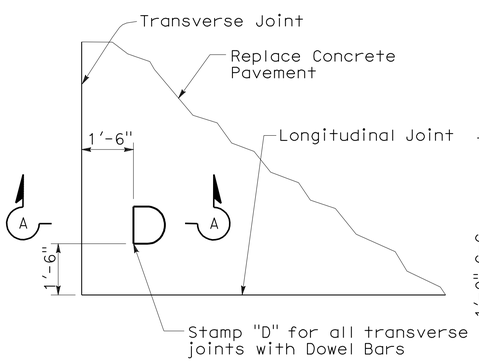


DOWEL STAMP DETAIL

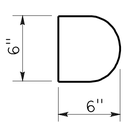


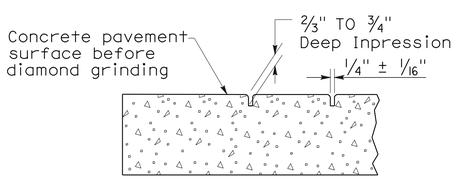


SECTION A-A

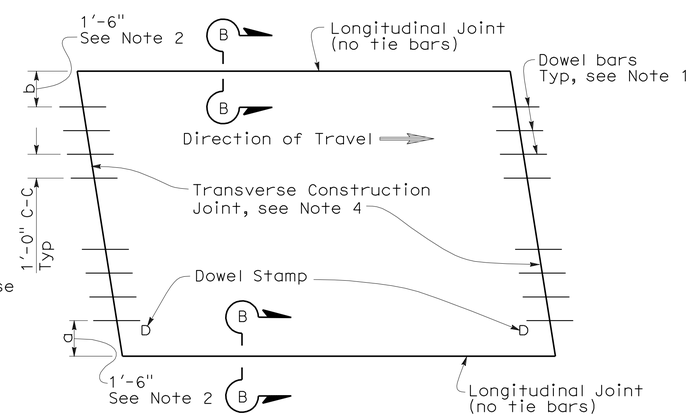


TYPE I
(traffic lane lines match longitudinal joints)

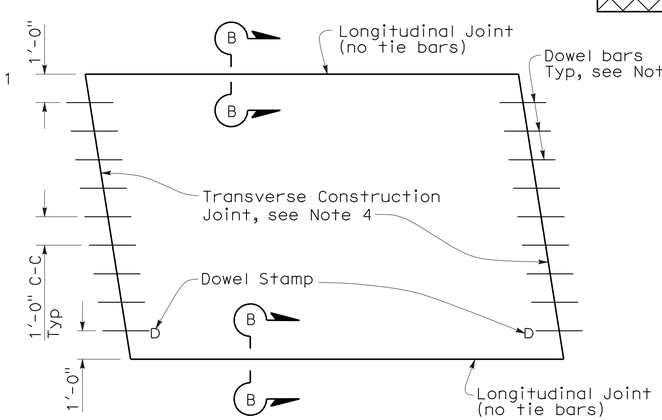


TYPE II
(traffic lane lines do not match longitudinal joints)

SLAB LAYOUT

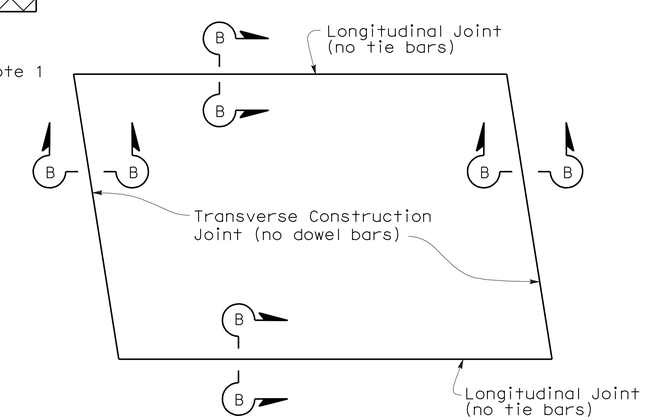


TYPE III
(for short term repairs < 5 yrs design life or for slab replacements with a cracking and seating operation)

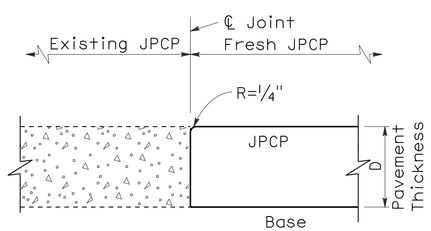


SECTION B-B

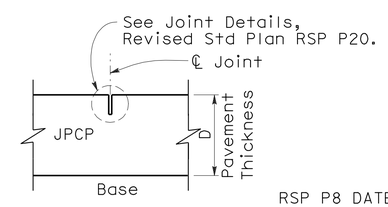


SECTION C-C

STATE OF CALIFORNIA
DEPARTMENT OF TRANSPORTATION

# JOINTED PLAIN CONCRETE PAVEMENT-INDIVIDUAL SLAB REPLACEMENT

NO SCALE

RSP P8 DATED MAY 15, 2009 SUPERSEDES RSP P8 DATED SEPTEMBER 1, 2006 AND STANDARD PLAN P8 DATED MAY 1, 2006 - PAGE 123 OF THE STANDARD PLANS BOOK DATED MAY 2006.

**REVISED STANDARD PLAN RSP P8**

**2006 REVISED STANDARD PLAN RSP P8**

5-8-09

| DIST | COUNTY | ROUTE | POST MILES TOTAL PROJECT | SHEET NO. | TOTAL SHEETS |
|---|---|---|---|---|---|
| 12 | Ora | 5 | 6.8/14.5 | 153 | 171 |

Randell D. Hiatt
REGISTERED CIVIL ENGINEER

June 6, 2008
PLANS APPROVAL DATE

REGISTERED PROFESSIONAL ENGINEER
Randell D. Hiatt
No. C50200
Exp. 6-30-09
CIVIL
STATE OF CALIFORNIA

*The State of California or its officers or agents shall not be responsible for the accuracy or completeness of electronic copies of this plan sheet.*

*To accompany plans dated* 11-29-10

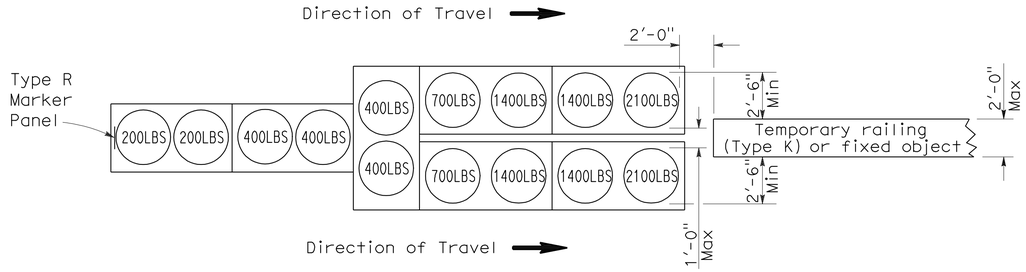


## ARRAY 'TU14'

Approach speed 45 mph or more

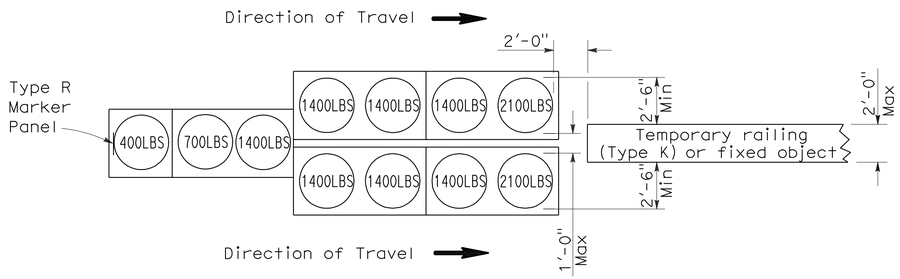


## ARRAY 'TU11'

Approach speed less than 45 mph

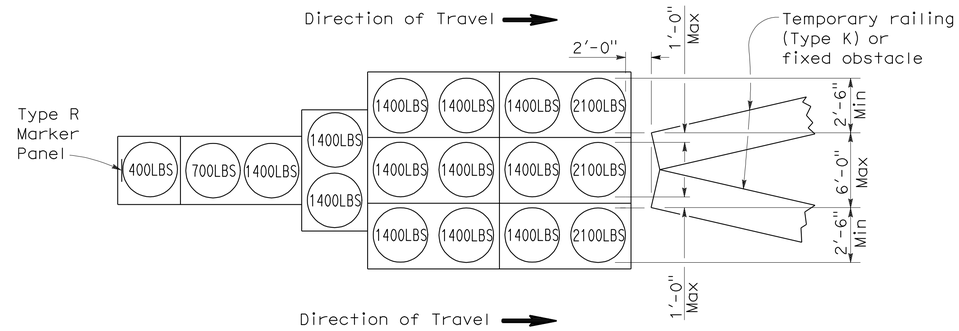


## ARRAY 'TU17'

Approach speed less than 45 mph

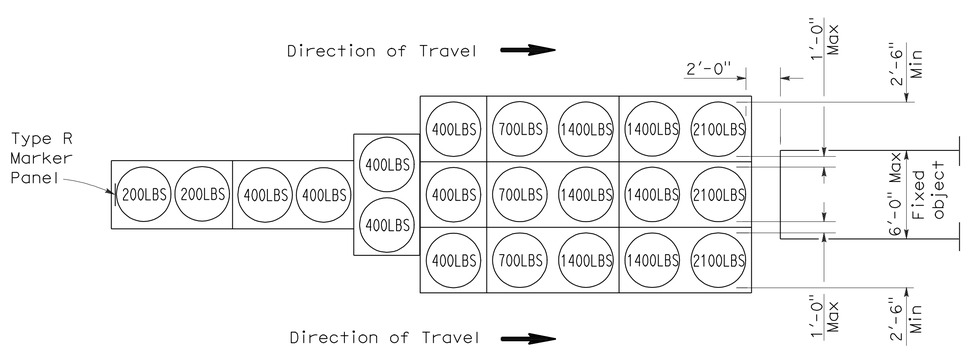


## ARRAY 'TU21'

Approach speed 45 mph or more

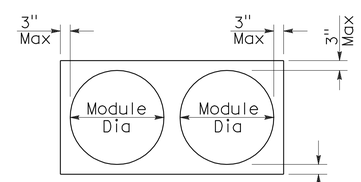


PLAN

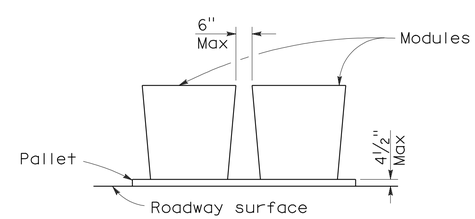


ELEVATION

## CRASH CUSHION PALLET DETAIL

See Note 7

## NOTES:

1. (XXX) Indicates sand filled module location and weight of sand in pounds for each module. Module spacing is based on the greater diameter of the module.
2. All sand weights are nominal.
3. Temporary crash cushion arrays shall not encroach on the traveled way.
4. Place the top of Type R marker panel 1" below the module lid.
5. Refer to Standard Plan A73B for marker details.
6. Approach speeds indicated conform to NCHRP 350 Report criteria.
7. Use of pallets is optional.

STATE OF CALIFORNIA
DEPARTMENT OF TRANSPORTATION

# TEMPORARY CRASH CUSHION, SAND FILLED (UNIDIRECTIONAL)

NO SCALE

RSP T1A DATED JUNE 6, 2008 SUPERSEDES STANDARD PLAN T1A
DATED MAY 1, 2006 - PAGE 211 OF THE STANDARD PLANS BOOK DATED MAY 2006.

**REVISED STANDARD PLAN RSP T1A**

**2006 REVISED STANDARD PLAN RSP T1A**

5-15-08

| DIST | COUNTY | ROUTE | POST MILES TOTAL PROJECT | SHEET NO. | TOTAL SHEETS |
|---|---|---|---|---|---|
| 12 | Ora | 5 | 6.8/14.5 | 154 | 171 |

Randell D. Hiatt
REGISTERED CIVIL ENGINEER

June 6, 2008
PLANS APPROVAL DATE

REGISTERED PROFESSIONAL ENGINEER
Randell D. Hiatt
No. C50200
Exp. 6-30-09
CIVIL
STATE OF CALIFORNIA

*The State of California or its officers or agents shall not be responsible for the accuracy or completeness of electronic copies of this plan sheet.*

*To accompany plans dated* 11-29-10

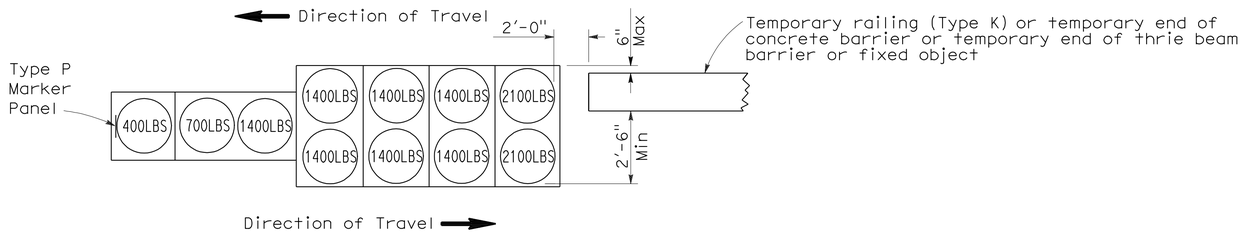


## ARRAY 'TB11'

Approach speed less than 45 mph

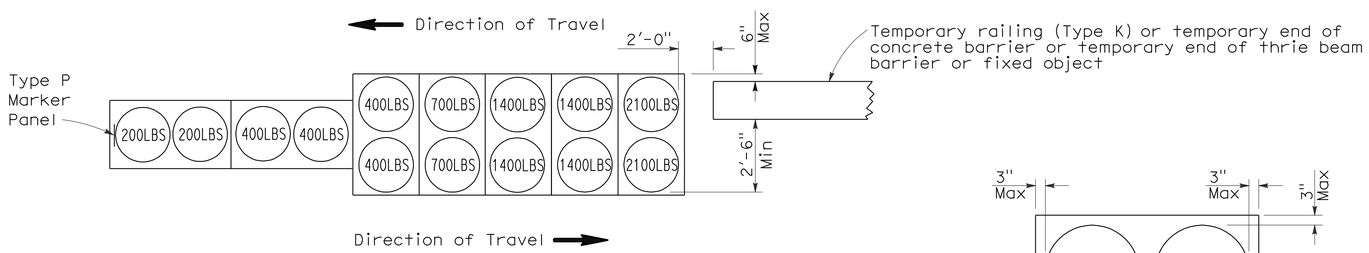


## ARRAY 'TB14'

Approach speed 45 mph or more

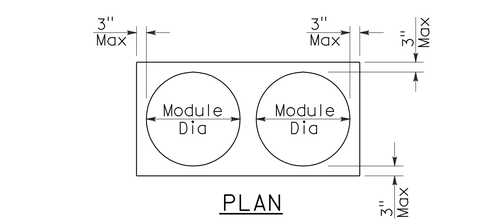


## PLAN

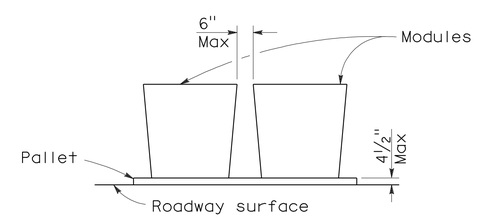


## ELEVATION

## CRASH CUSHION PALLET DETAIL

See Note 7

## NOTES:

1. (XXX) Indicates sand filled module location and weight of sand in pounds for each module. Module spacing is based on the greater diameter of the module.
2. All sand weights are nominal.
3. Temporary crash cushion arrays shall not encroach on the traveled way.
4. Place the Type P marker panel so that the bottom of the panel rests upon the pallet.
5. Refer to Standard Plan A73B for marker details.
6. Approach speeds indicated conform to NCHRP 350 Report criteria.
7. Use of pallets is optional.

STATE OF CALIFORNIA
DEPARTMENT OF TRANSPORTATION

# TEMPORARY CRASH CUSHION, SAND FILLED (BIDIRECTIONAL)

NO SCALE

RSP T1B DATED JUNE 6, 2008 SUPERSEDES STANDARD PLAN T1B
DATED MAY 1, 2006 - PAGE 212 OF THE STANDARD PLANS BOOK DATED MAY 2006.

**REVISED STANDARD PLAN RSP T1B**

**2006 REVISED STANDARD PLAN RSP T1B**

| DIST | COUNTY | ROUTE | POST MILES TOTAL PROJECT | SHEET NO. | TOTAL SHEETS |
|---|---|---|---|---|---|
| 12 | Ora | 5 | 6.8/14.5 | 155 | 171 |

Randell D. Hiatt
REGISTERED CIVIL ENGINEER

June 6, 2008
PLANS APPROVAL DATE

REGISTERED PROFESSIONAL ENGINEER
Randell D. Hiatt
No. C50200
Exp. 6-30-09
CIVIL
STATE OF CALIFORNIA

*The State of California or its officers or agents shall not be responsible for the accuracy or completeness of electronic copies of this plan sheet.*

*To accompany plans dated* 11-29-10

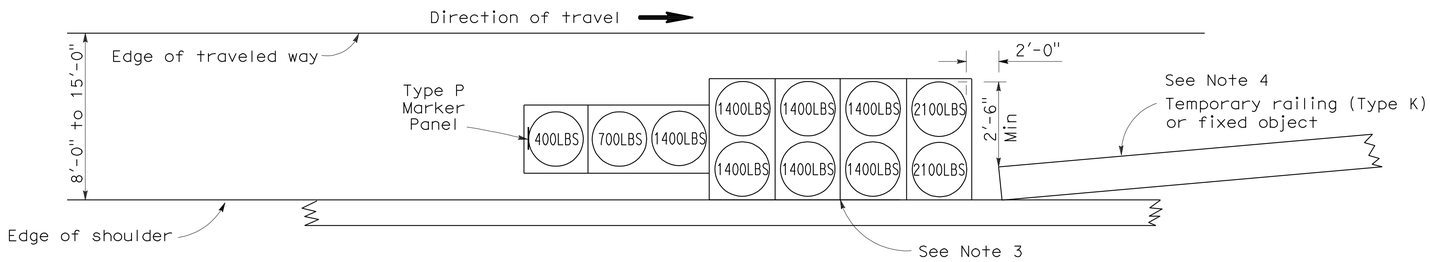


## ARRAY 'TS11'

Approach speed less than 45 mph
See Note 9

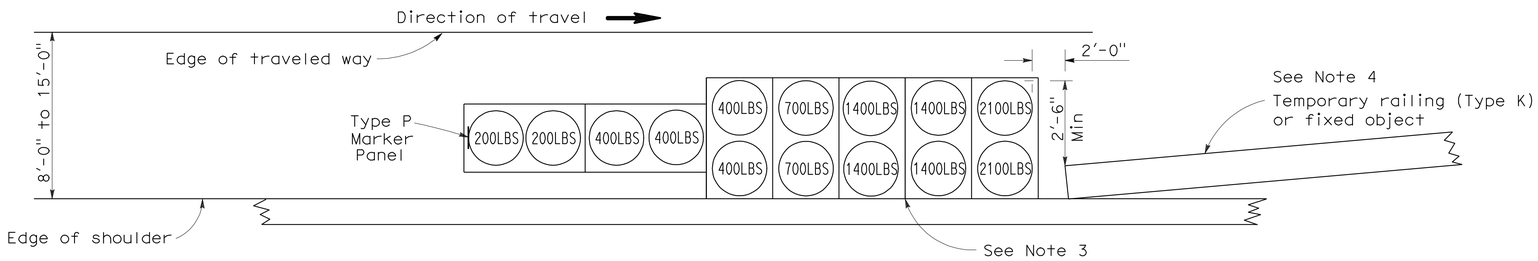


## ARRAY 'TS14'

Approach speed 45 mph or more
See Note 9

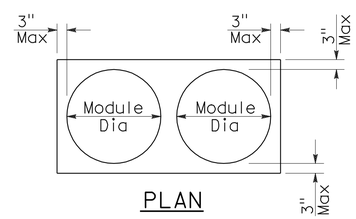


PLAN

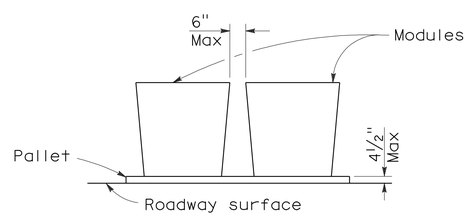


ELEVATION

## CRASH CUSHION PALLET DETAIL

See Note 11

## NOTES:

1. (XXX) Indicates sand filled module location and weight of sand in pounds for each module. Module spacing is based on the greater diameter of the module.
2. All sand weights are nominal.
3. The temporary crash cushion arrays shown on this plan shall be used only in locations where there will be traffic on one side of the temporary crash cushion array.
4. If the fixed object or approach end of the temporary railing is less than 15'-0" from the edge of traveled way, a temporary crash cushion is required in a construction or work zone.
5. Temporary crash cushion arrays shall not encroach on the traveled way.
6. Arrays for median shoulders shall conform to details shown on this plan for outside shoulders.
7. Place the Type P marker panel so that the bottom of the panel rests upon the pallet and faces traffic.
8. Refer to Standard Plan A73B for marker details.
9. For shoulder widths less than 8'-0", appropriate approved crash cushion protection, other than sand filled modules, shall be provided at fixed objects and at approach ends of temporary railing. The specific type of crash cushion shall be as shown on the project plans or as specified in the Special Provisions, or if not shown on the project plans or specified in the Special Provisions, shall be as approved by the Engineer.
10. Approach speeds indicated conform to NCHRP 350 Report criteria.
11. Use of pallets is optional.

STATE OF CALIFORNIA
DEPARTMENT OF TRANSPORTATION

# TEMPORARY CRASH CUSHION, SAND FILLED (SHOULDER INSTALLATIONS)

NO SCALE

RSP T2 DATED JUNE 6, 2008 SUPERSEDES STANDARD PLAN T2
DATED MAY 1, 2006 - PAGE 213 OF THE STANDARD PLANS BOOK DATED MAY 2006.

**REVISED STANDARD PLAN RSP T2**

**2006 REVISED STANDARD PLAN RSP T2**

| DIST | COUNTY | ROUTE | POST MILES TOTAL PROJECT | SHEET NO. | TOTAL SHEETS |
|---|---|---|---|---|---|
| 12 | Ora | 5 | 6.8/14.5 | 156 | 171 |

REGISTERED CIVIL ENGINEER

November 17, 2006
PLANS APPROVAL DATE

REGISTERED PROFESSIONAL ENGINEER
Greg W. Edwards
No. C36386
Exp. 6-30-08
CIVIL
STATE OF CALIFORNIA

*The State of California or its officers or agents shall not be responsible for the accuracy or completeness of electronic copies of this plan sheet.*

*To accompany plans dated* 11-29-10

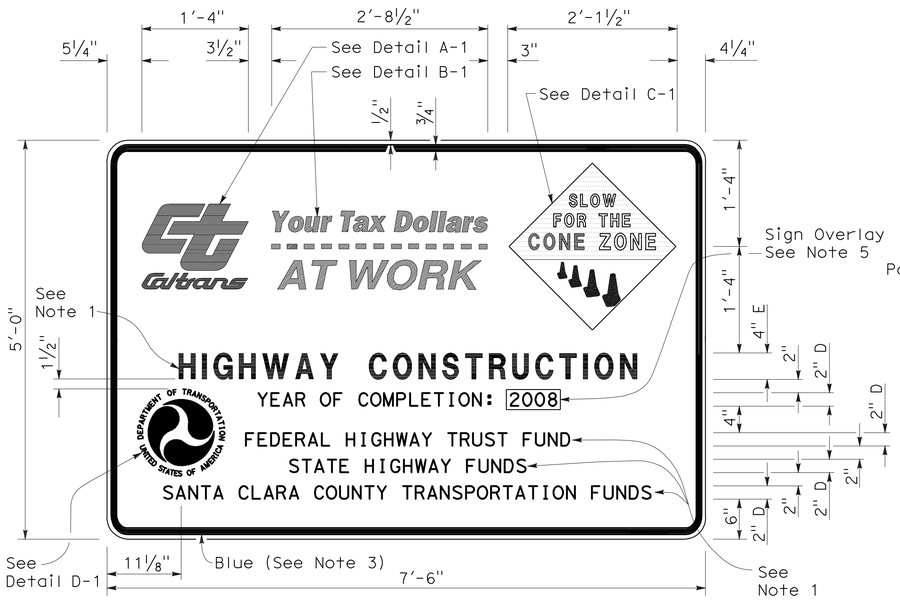


TYPE 1

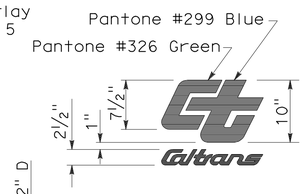


DETAIL A-1

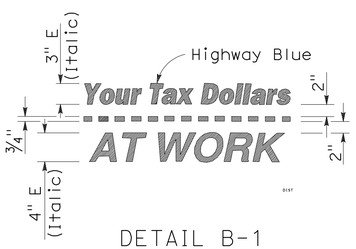


DETAIL B-1
(See Note 3)

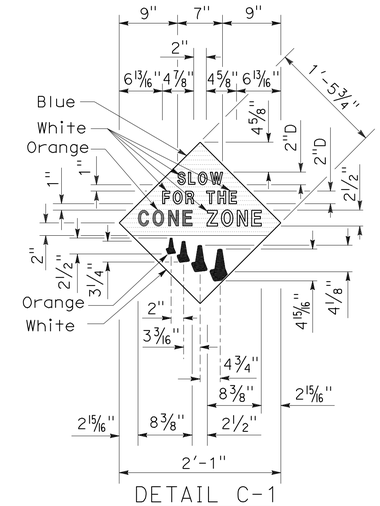


DETAIL C-1
(See Note 4)

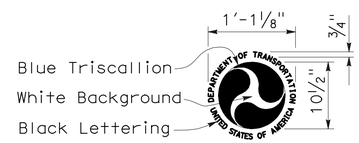


DETAIL D-1
(See Note 6)

## NOTES:

1. The sign messages shown for type of project and fund types are examples only. See the Special Provisions for the applicable type of project and fund type messages to be used.
2. Except as otherwise shown, the legend of sign shall be black on a white background (non-reflective).
3. The border of the signs and details "B-1" and "B-2" shall be blue (non-reflective).
4. The diamond in details "C-1" and "C-2" shall be blue for the background of message, " SLOW FOR THE CONE ZONE", and white background for the orange cones. The color and type of font for the "SLOW FOR THE CONE ZONE" message shall be: "SLOW" white D; "FOR THE" white D; "CONE" orange Arial font; "ZONE" white Arial font.
5. Year of completion of project construction shown on the overlay is an example only. See the Special Provisions.
6. Use when the Project involves Federal Highway Trust Fund.

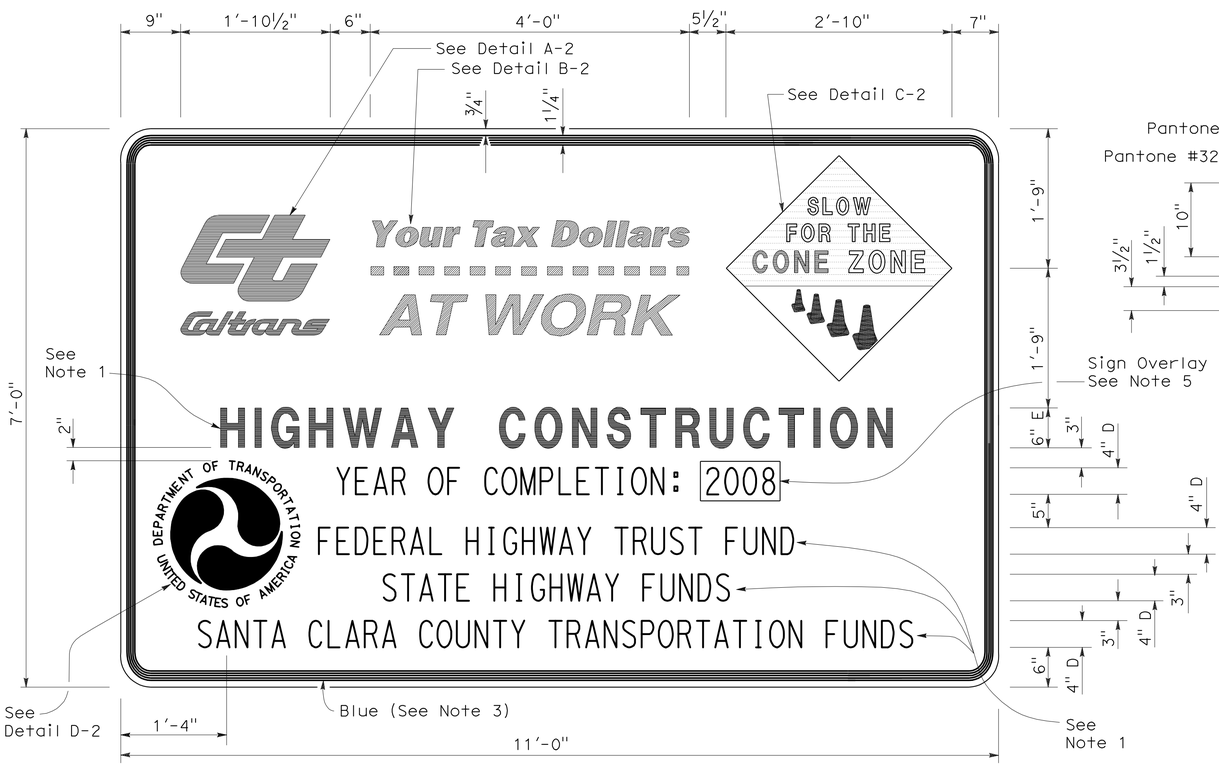


TYPE 2

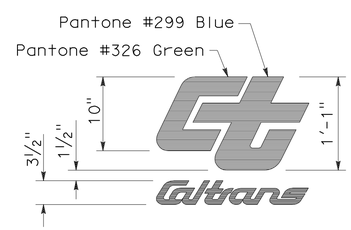


DETAIL A-2

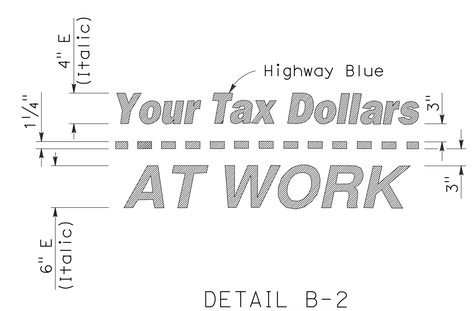


DETAIL B-2
(See Note 3)

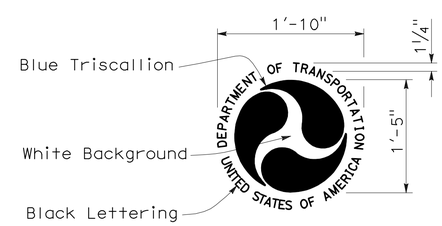


DETAIL D-2
(See Note 6)

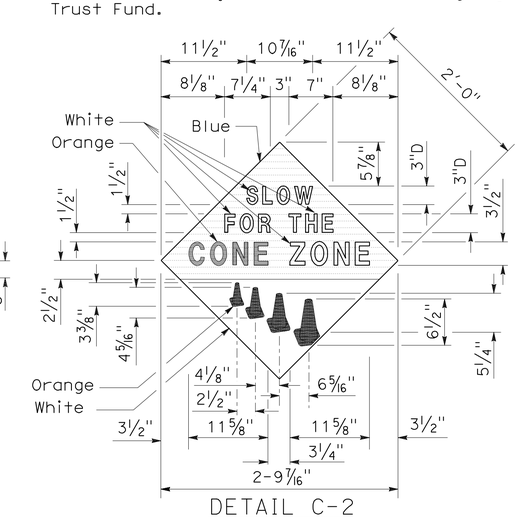


DETAIL C-2
(See Note 4)

STATE OF CALIFORNIA
DEPARTMENT OF TRANSPORTATION

# CONSTRUCTION PROJECT FUNDING IDENTIFICATION SIGNS

NO SCALE

RSP T7 DATED NOVEMBER 17, 2006 SUPERSEDES STANDARD PLAN T7
DATED MAY 1, 2006 - PAGE 217 OF THE STANDARD PLANS BOOK DATED MAY 2006.

**REVISED STANDARD PLAN RSP T7**

**2006 REVISED STANDARD PLAN RSP T7**

9-7-06

| DIST | COUNTY | ROUTE | POST MILES TOTAL PROJECT | SHEET NO. | TOTAL SHEETS |
|---|---|---|---|---|---|
| 12 | Ora | 5 | 6.8/14.5 | 157 | 171 |

Robert B Schott
LICENSED LANDSCAPE ARCHITECT

August 15, 2008
PLANS Approval DATE

LICENSED LANDSCAPE ARCHITECT
Robert B. Schott 3625
Robert B Schott
Signature
11-04-08
Renewal Date
08-11-08
Date
STATE OF CALIFORNIA

*The State of California or its officers or agents shall not be responsible for the accuracy or completeness of electronic copies of this plan sheet.*

*To accompany plans dated* 11-29-10

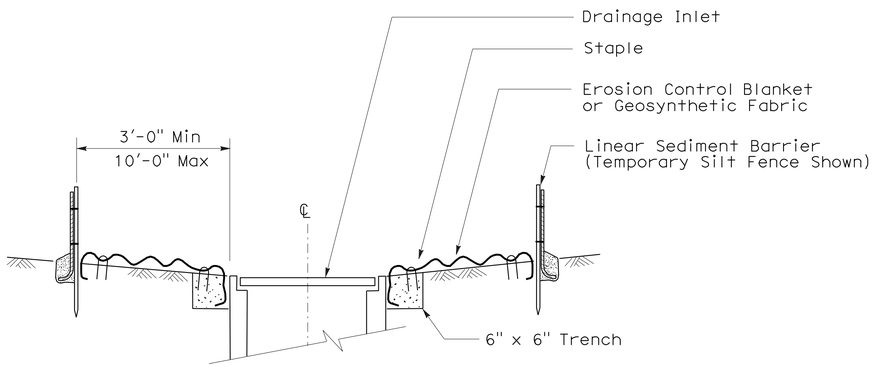


SECTION A-A

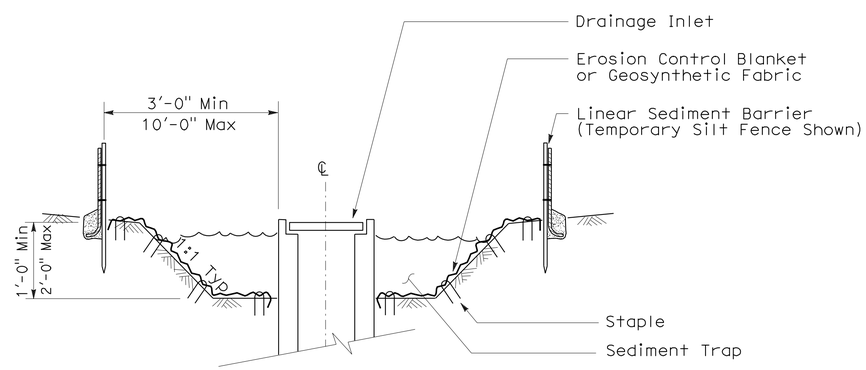


SECTION B-B

## NOTES:

1. See Standard Plan T51 for Temporary Silt Fence.
2. Dimensions may vary to fit field conditions.

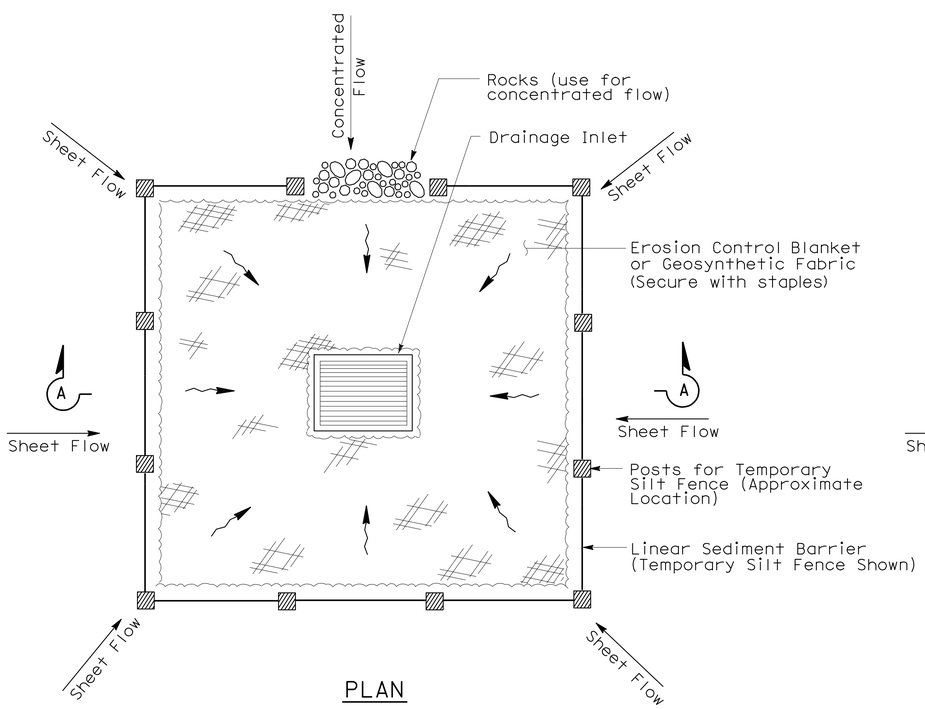


PLAN

TEMPORARY DRAINAGE INLET PROTECTION (TYPE 1)

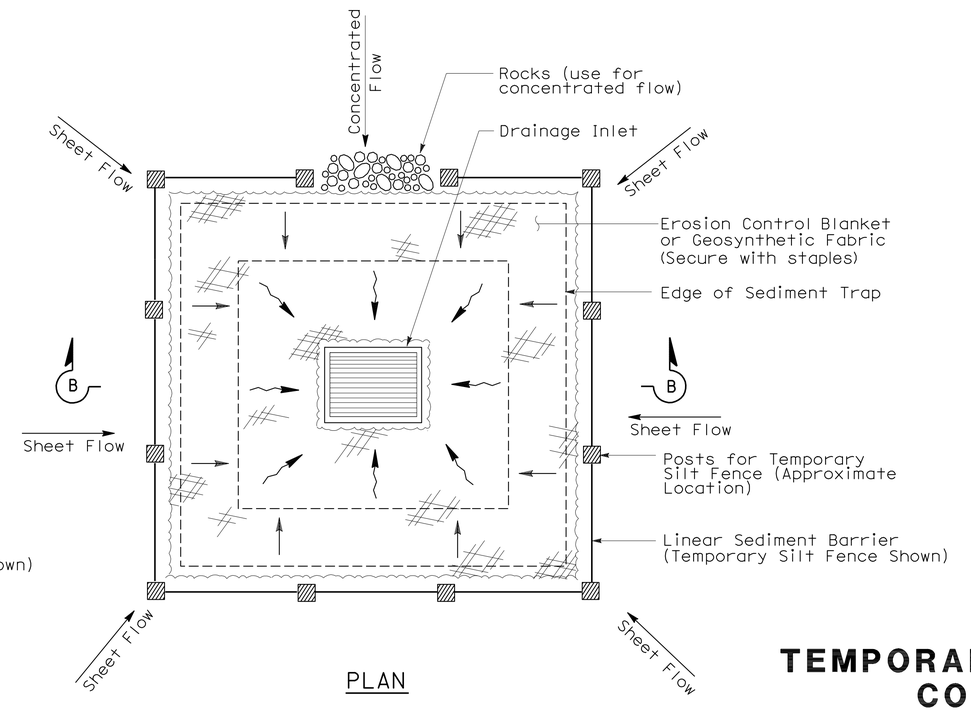


PLAN

TEMPORARY DRAINAGE INLET PROTECTION (TYPE 2) (EXCAVATED SEDIMENT TRAP)

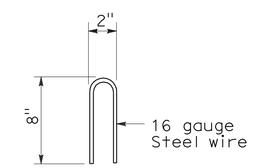


STAPLE DETAIL

STATE OF CALIFORNIA
DEPARTMENT OF TRANSPORTATION

# TEMPORARY WATER POLLUTION CONTROL DETAILS (TEMPORARY DRAINAGE INLET PROTECTION)

NO SCALE

NSP T61 DATED AUGUST 15, 2008 SUPPLEMENTS THE STANDARD PLANS BOOK DATED MAY 2006.

**NEW STANDARD PLAN NSP T61**

**2006 NEW STANDARD PLAN NSP T61**

7-11-08

| DIST | COUNTY | ROUTE | POST MILES TOTAL PROJECT | SHEET NO. | TOTAL SHEETS |
|---|---|---|---|---|---|
| 12 | Ora | 5 | 6.8/14.5 | 158 | 171 |

LICENSED LANDSCAPE ARCHITECT

August 15, 2008
PLANS APPROVAL DATE

LICENSED LANDSCAPE ARCHITECT Robert B. Schott 3625 Signature 11-04-08 Renewal Date 08-11-08 Date STATE OF CALIFORNIA

*The State of California or its officers or agents shall not be responsible for the accuracy or completeness of electronic copies of this plan sheet.*

*To accompany plans dated* 11-29-10

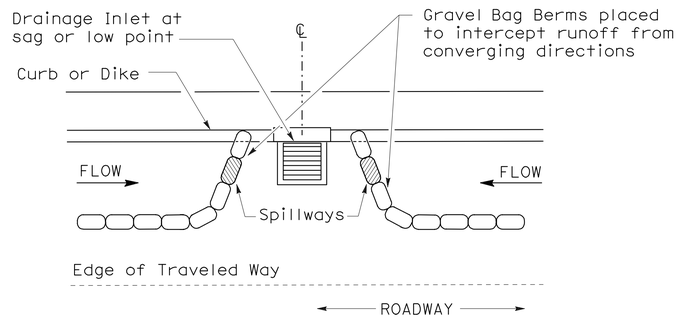


PLAN

## CONFIGURATION FOR SAG POINT INLET (GRAVEL BAG BERM)

## GRAVEL BAG BERM (TYPE 3A) SPACING TABLE

| SLOPE OF ROADWAY (PERCENT) | 1 to 3.9 | 4 to 5.9 | 6 to 7.9 | 8 to 10 | 10+ |
|---|---|---|---|---|---|
| INTERVAL BETWEEN BERM | 100′ | 75′ | 50′ | 25′ | 12′ |

For slope of less than 1%, install barriers only if erosion/sediment is prevalent

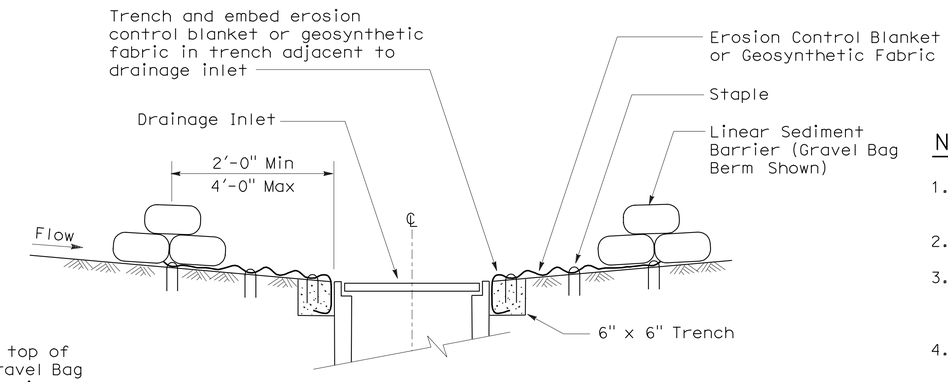


SECTION A-A

## NOTES:

1. Place safety cones adjacent to drainage inlet protection.
2. Dimensions may vary to fit field conditions.
3. Install a minimum of 3 gravel bag berms upstream of each drainage inlet to be protected.
4. Position erosion control blanket or geosynthetic fabric at edge of concrete apron and secure in trench.
5. Erosion control blanket or geosynthetic fabric is not required if the area adjacent to the drainage inlet is vegetated or paved.

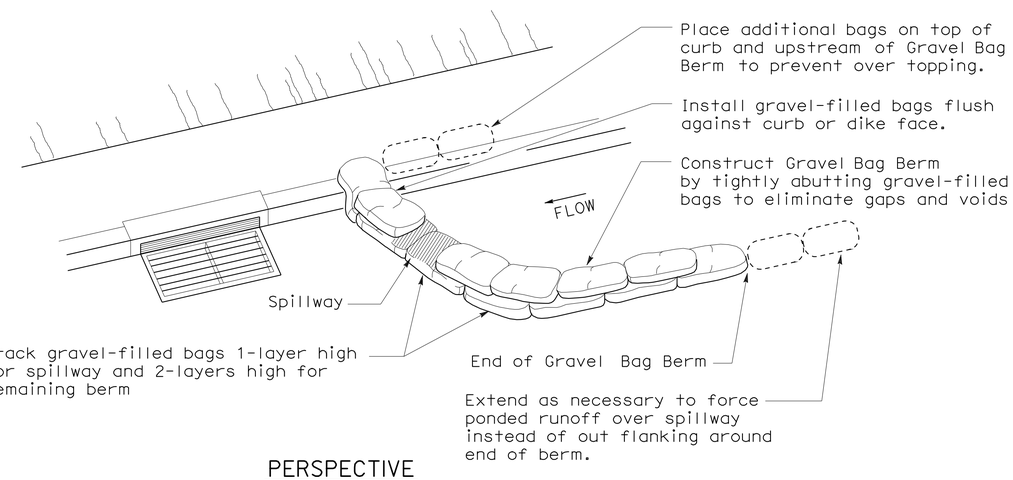


PERSPECTIVE

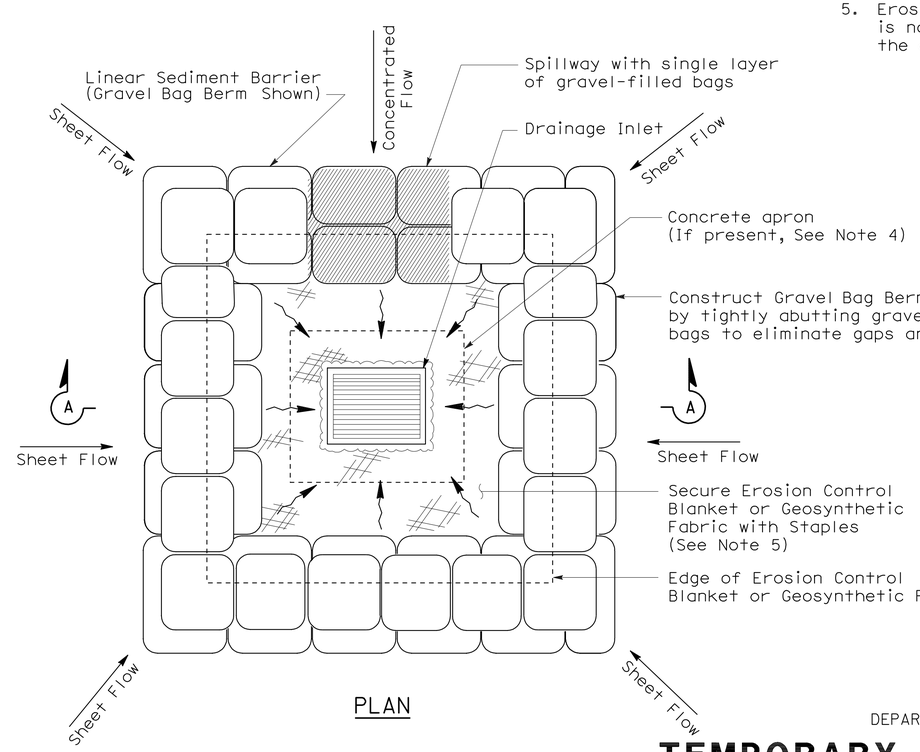


PLAN

## TEMPORARY DRAINAGE INLET PROTECTION (TYPE 3B)

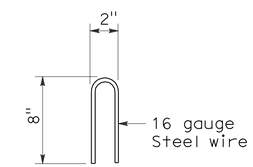


STAPLE DETAIL

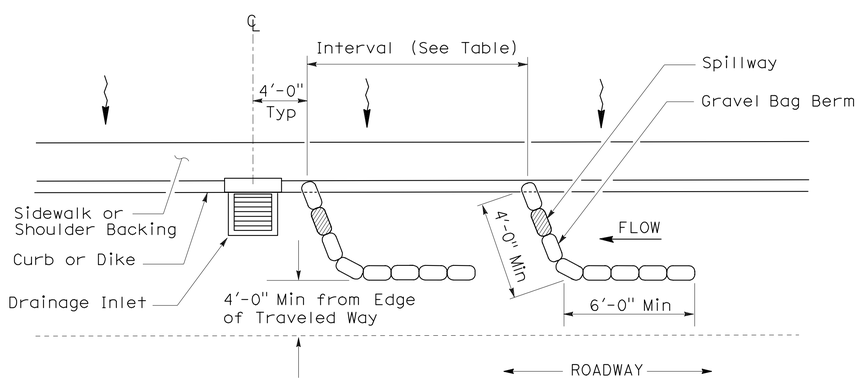


PLAN

## TEMPORARY DRAINAGE INLET PROTECTION (TYPE 3A) (GRAVEL BAG BERM)

STATE OF CALIFORNIA
DEPARTMENT OF TRANSPORTATION

# TEMPORARY WATER POLLUTION CONTROL DETAILS (TEMPORARY DRAINAGE INLET PROTECTION)

NO SCALE

NSP T62 DATED AUGUST 15, 2008 SUPPLEMENTS THE STANDARD PLANS BOOK DATED MAY 2006.

**NEW STANDARD PLAN NSP T62**

**2006 NEW STANDARD PLAN NSP T62**

7-11-08

| DIST | COUNTY | ROUTE | POST MILES TOTAL PROJECT | SHEET NO. | TOTAL SHEETS |
|---|---|---|---|---|---|
| 12 | Ora | 5 | 6.8/14.5 | 159 | 171 |

Robert B Schott
LICENSED LANDSCAPE ARCHITECT

August 15, 2008
PLANS APPROVAL DATE

*The State of California or its officers or agents shall not be responsible for the accuracy or completeness of electronic copies of this plan sheet.*

LICENSED LANDSCAPE ARCHITECT Robert B. Schott 3625 Signature 11-04-08 Renewal Date 08-11-08 Date STATE OF CALIFORNIA

*To accompany plans dated* 11-29-10

## FLEXIBLE SEDIMENT BARRIER SPACING TABLE

| SLOPE OF ROADWAY (PERCENT) | 0 to 0.9 | 1 to 1.9 | 2 to 2.9 | 3 to 4 | 5+ |
|---|---|---|---|---|---|
| INTERVAL BETWEEN BARRIERS | 50′ | 35′ | 30′ | 25′ | 20′ |
| ANGLE FROM FACE OF CURB | 70° | 70° | 70° | 45° | 45° |
| SUGGESTED BARRIER LENGTH | 6′ | 6′ | 6′ | 6′ | 6′ |

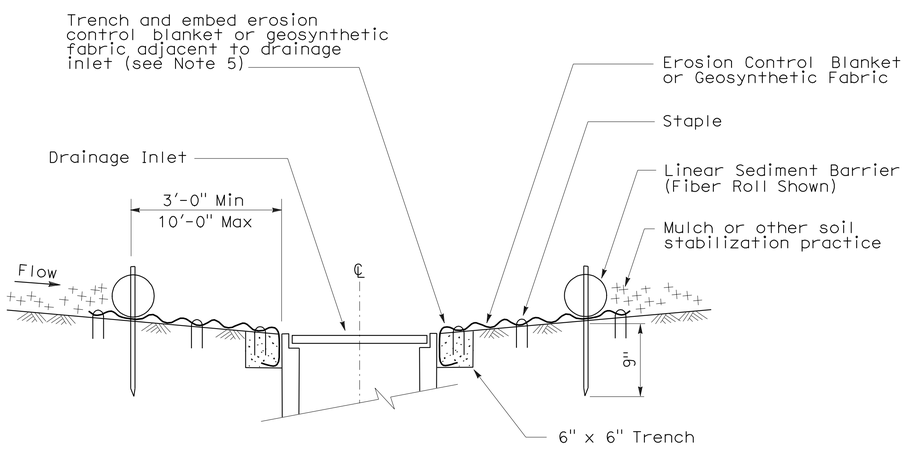


SECTION A-A

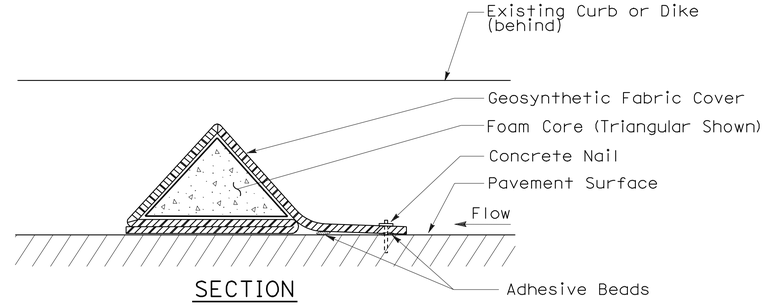


SECTION

## FLEXIBLE SEDIMENT BARRIER DETAIL (FOAM BARRIER SHOWN)

## NOTES:

1. See Standard Plan T51 for Temporary Silt Fence.
2. Dimensions may vary to fit field conditions.
3. Install a minimum of 3 flexible sediment barriers upstream of each drainage inlet to be protected.
4. Position erosion control blanket or geosynthetic fabric at edge of concrete apron and secure in trench.
5. Erosion control blanket or geosynthetic fabric is not required if the area adjacent to the drainage inlet is vegetated.

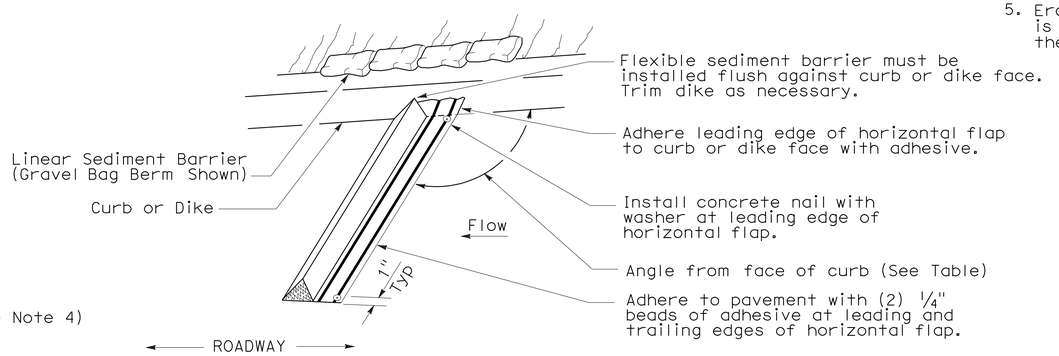


PERSPECTIVE

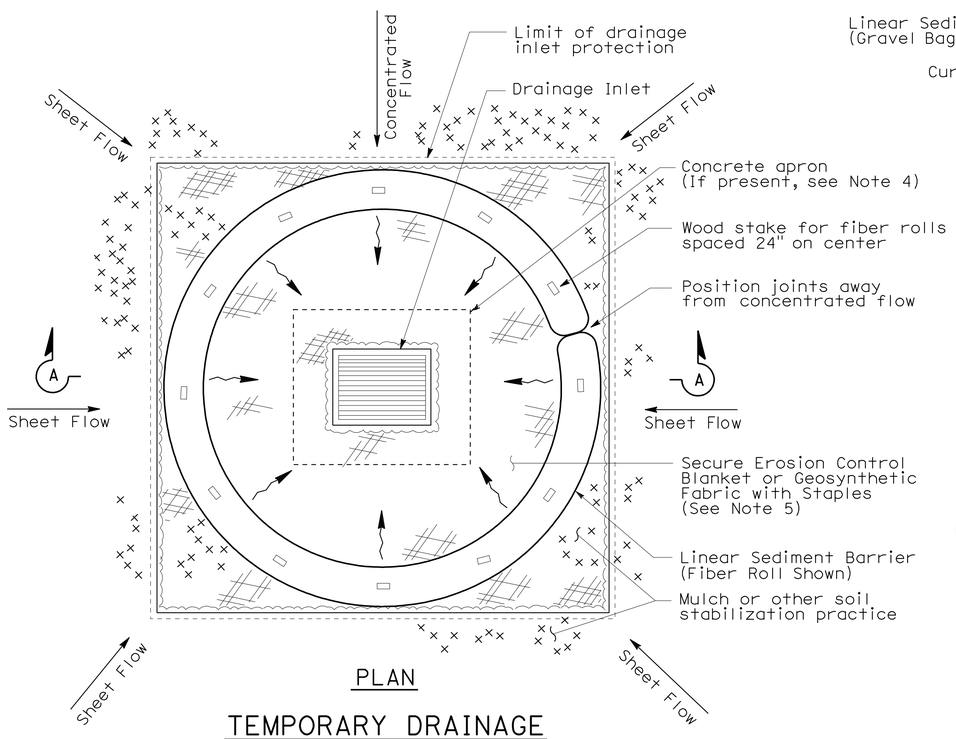


PLAN

## TEMPORARY DRAINAGE INLET PROTECTION (TYPE 4A)

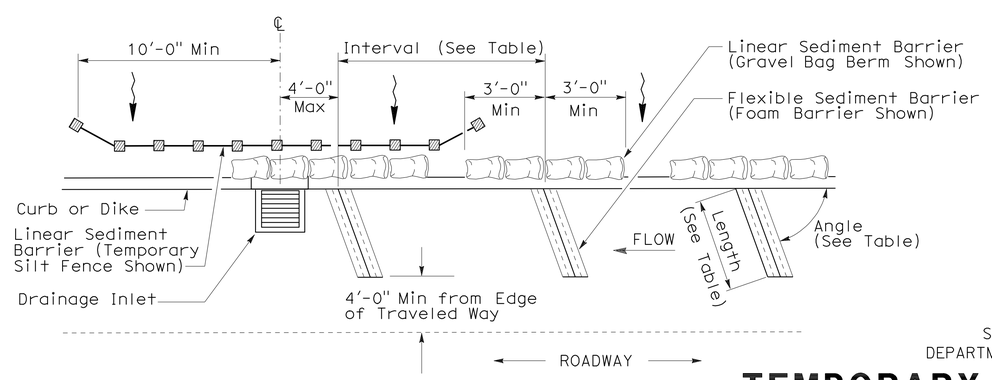


PLAN

## TEMPORARY DRAINAGE INLET PROTECTION (TYPE 4B) FLEXIBLE SEDIMENT BARRIER

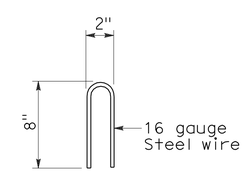


STAPLE DETAIL

STATE OF CALIFORNIA
DEPARTMENT OF TRANSPORTATION

# TEMPORARY WATER POLLUTION CONTROL DETAILS (TEMPORARY DRAINAGE INLET PROTECTION)

NO SCALE

NSP T63 DATED AUGUST 15, 2008 SUPPLEMENTS THE STANDARD PLANS BOOK DATED MAY 2006.

**NEW STANDARD PLAN NSP T63**

**2006 NEW STANDARD PLAN NSP T63**

7-11-08

| DIST | COUNTY | ROUTE | POST MILES TOTAL PROJECT | SHEET NO. | TOTAL SHEETS |
|---|---|---|---|---|---|
| 12 | Ora | 5 | 6.8/14.5 | 160 | 171 |

Robert B Schott
LICENSED LANDSCAPE ARCHITECT

August 15, 2008
PLANS APPROVAL DATE

LICENSED LANDSCAPE ARCHITECT
Robert B. Schott 3625
Robert B Schott
Signature
11-04-08
Renewal Date
08-11-08
Date
STATE OF CALIFORNIA

*The State of California or its officers or agents shall not be responsible for the accuracy or completeness of electronic copies of this plan sheet.*

*To accompany plans dated* 11-29-10

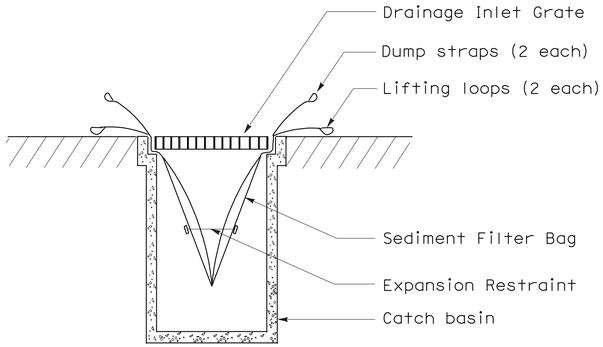


SECTION B-B

## SEDIMENT FILTER BAG DETAIL

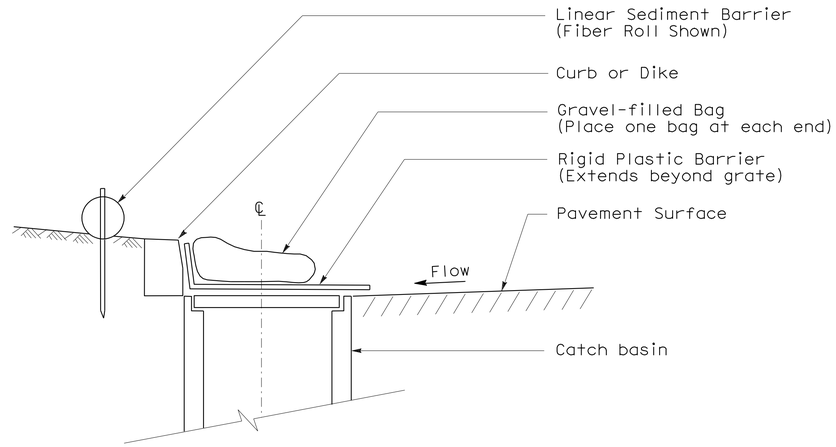


SECTION

## TEMPORARY DRAINAGE INLET PROTECTION (TYPE 6A) (CATCH BASIN WITH GRATE)

## NOTES:

1. See Standard Plan T51 for Temporary Silt Fence.
2. Dimensions may vary to fit field conditions.

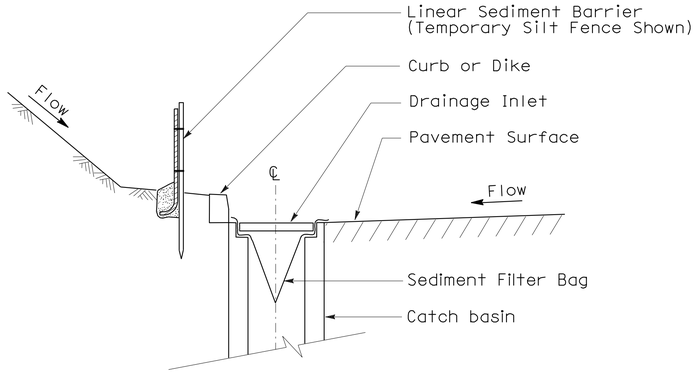


SECTION A-A

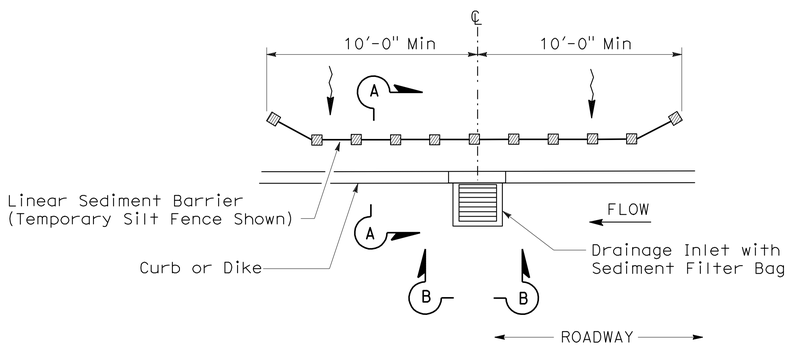


PLAN

## TEMPORARY DRAINAGE INLET PROTECTION (TYPE 5) (SEDIMENT FILTER BAG)

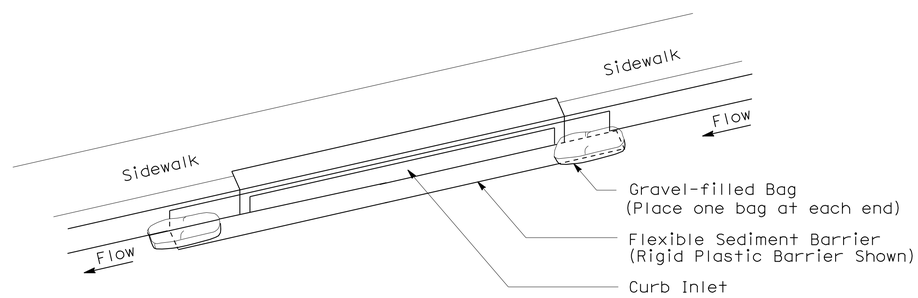


PERSPECTIVE

## TEMPORARY DRAINAGE INLET PROTECTION (TYPE 6B) (CURB INLET WITHOUT GRATE)

STATE OF CALIFORNIA
DEPARTMENT OF TRANSPORTATION

# TEMPORARY WATER POLLUTION CONTROL DETAILS (TEMPORARY DRAINAGE INLET PROTECTION)

NO SCALE

NSP T64 DATED AUGUST 15, 2008 SUPPLEMENTS
THE STANDARD PLANS BOOK DATED MAY 2006.

**NEW STANDARD PLAN NSP T64**

**2006 NEW STANDARD PLAN NSP T64**

7-11-08

| DIST | COUNTY | ROUTE | POST MILES TOTAL PROJECT | SHEET NO. | TOTAL SHEETS |
|---|---|---|---|---|---|
| 12 | Ora | 5 | 6.8/14.5 | 161 | 171 |

REGISTERED CIVIL ENGINEER

October 5, 2007
PLANS APPROVAL DATE

REGISTERED PROFESSIONAL ENGINEER Efthymios Delis No. C51434 Exp. 6-30-08 CIVIL STATE OF CALIFORNIA

*The State of California or its officers or agents shall not be responsible for the accuracy or completeness of electronic copies of this plan sheet.*

*To accompany plans dated* 11-29-10

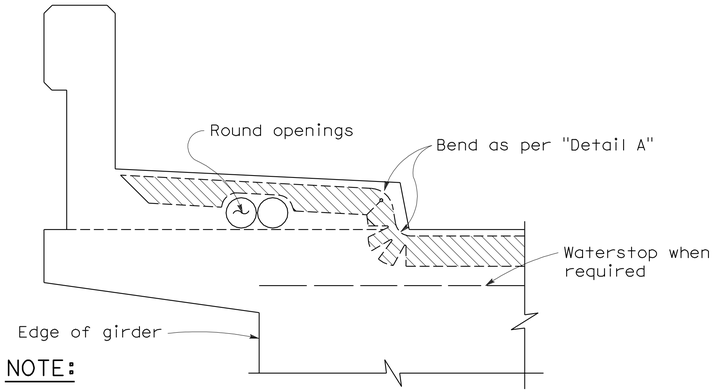


NOTE:

Type "B" seal shown. Type "A" seals to comform to the general path of seal shown, cuts for bending not required. Bend Type "A" seals 3" up into curb or barrier rail on only the low end of the seal.

CONCRETE BARRIER AND SIDEWALK

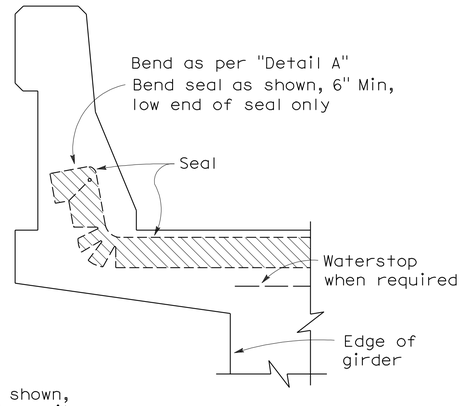


CONCRETE BARRIER

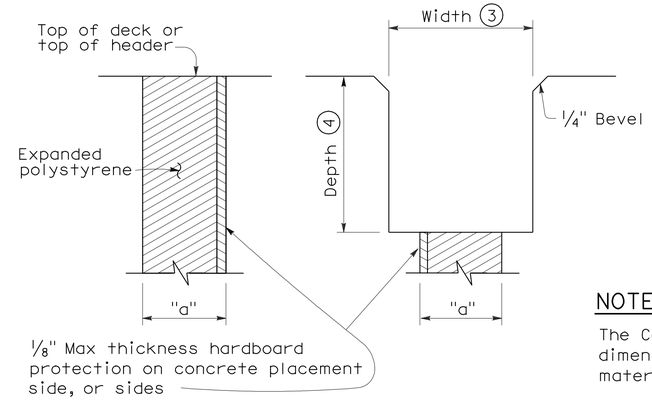


FORMING DETAIL SAWCUT DETAIL

NOTE:

The Contractor shall verify all controlling field dimensions before ordering or fabricatiing any material.

## JOINT SEALS DETAILS

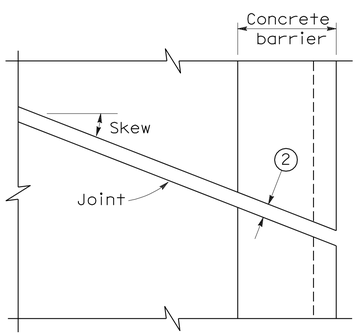


PLAN OF JOINT (SKEW ≤ 20°)

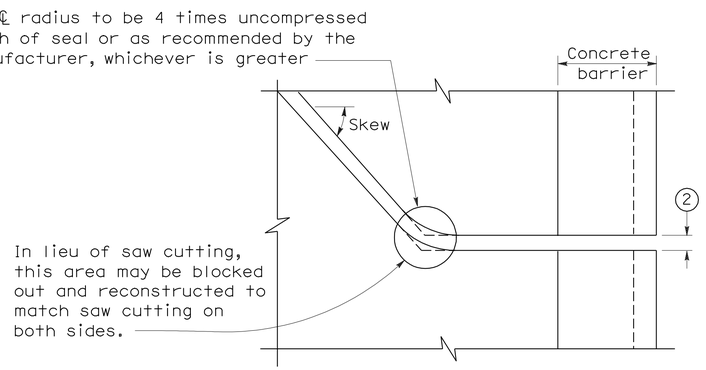


PLAN OF JOINT (SKEW > 20°)

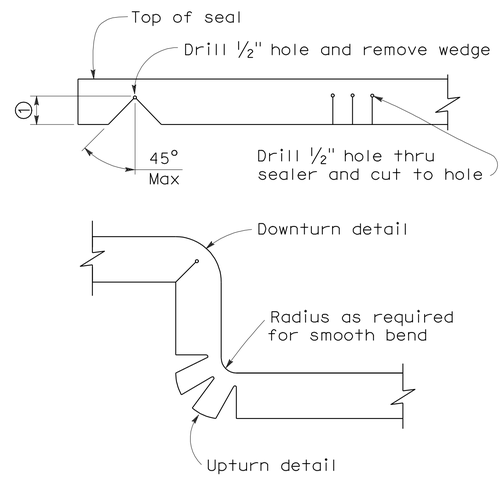


DETAIL A

NOTES:

1. Make smooth cuts from the bottom of seal to 1½" clear of top leaving at least one complete cell between the top of the cut and top of the seal. When necessary cut back of seal to clear conduit and round openings.
2. Opening in barrier to match width of sawn deck joint.
3. Sawcut groove widths shall be as ordered by the Engineer.
4. Depth of sawcut: Type A - Depth to be 2" minimum.
   Type B - Depth to be equal to or greater than the depth of seal measured along the contact surface, when compressed to minimum width position ($W_2$) plus dimensions shown.
5. MR (movement rating) as shown on other plan sheets.
6. Other depths must be approved by the Engineer.

DIMENSIONS "a" OF JOINT REQUIRED

| Movement Rating (MR) (5) | Bridge Type | "a" Dimension Deck Concrete Placed | | |
|---|---|---|---|---|
| | | Winter | Fall-Spring | Summer |
| 2" | All except CIP/PS | 1½" | 1¼" | ¾" |
| | CIP/PS | 1¼" | 1" | ½" |
| 1½" | All except CIP/PS | 1¼" | 1" | ½" |
| | CIP/PS | 1" | ¾" | ½" |
| 1" | All except CIP/PS | 1" | ¾" | ½" |
| | CIP/PS | ¾" | ½" | ½" |
| ½" | All except CIP/PS | ¾" | ¾" | ½" |
| | CIP/PS | ½" | ½" | ½" |

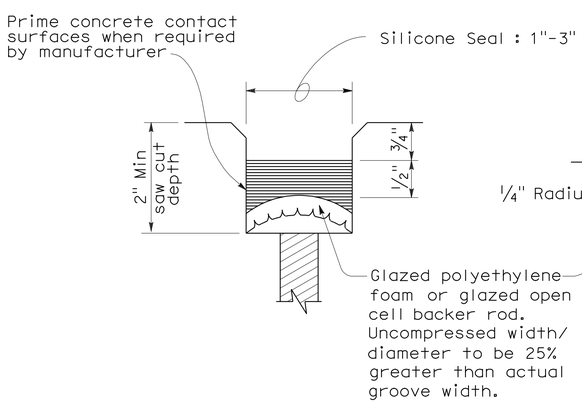


TYPE A SEAL

Movement rating : Silicone = 1" Max

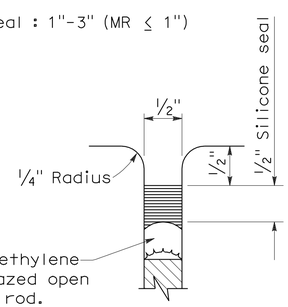


TYPE AL SEAL

Longitudinal joints only

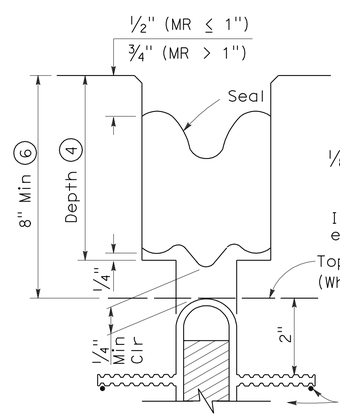


TYPE B JOINT SEAL IN MINIMUM WIDTH POSITION ($W_2$)

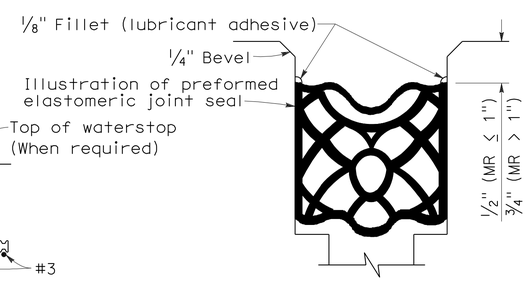


TYPE B SEAL

Movement Rating ≤ 2"

STATE OF CALIFORNIA
DEPARTMENT OF TRANSPORTATION

**JOINT SEALS (MAXIMUM MOVEMENT RATING = 2")**

NO SCALE

RSP B6-21 DATED OCTOBER 5, 2007 SUPERSEDES STANDARD PLAN B6-21 DATED MAY 1, 2006 - PAGE 258 OF THE STANDARD PLANS BOOK DATED MAY 2006.

**REVISED STANDARD PLAN RSP B6-21**

**2006 REVISED STANDARD PLAN RSP B6-21**

5-8-07

| DIST | COUNTY | ROUTE | POST MILES TOTAL PROJECT | SHEET NO. | TOTAL SHEETS |
|---|---|---|---|---|---|
| 12 | Ora | 5 | 6.8/14.5 | 162 | 171 |

REGISTERED ELECTRICAL ENGINEER

October 5, 2007
PLANS APPROVAL DATE

REGISTERED PROFESSIONAL ENGINEER Jeffery G. McRae No. E14512 Exp. 6-30-08 ELECTRICAL STATE OF CALIFORNIA

*The State of California or its officers or agents shall not be responsible for the accuracy or completeness of electronic copies of this plan sheet.*

*To accompany plans dated* 11-29-10

2006 REVISED STANDARD PLAN RSP ES-1A

## ELECTROLIERS

| STANDARD TYPES |
|---|
| 15, 15D |
| 15 STRUCTURE |
| 21, 21D STRUCTURE |
| 30 |
| 31 |
| 32 |
| 35 |
| 36-20A |

High mast light pole

Double Arm lighting standard

Existing electrolier

Electrolier foundation (Future installation)

### NOTES:

1. Luminaires shall be 310 W HPS when installed on Type 21, 21D, 30, 31, 32, 35 and 36-20A Standards, unless otherwise specified. Luminaires shall be 200 W HPS when installed on other type standards or poles, unless otherwise specified.
2. Luminaires shall be the cutoff type, ANSI Type Ⅲ medium cutoff lighting distribution, unless otherwise specified.
3. Variations noted adjacent to symbol on project plans.

Electrolier (see project notes or project plans)

Luminaire on wood pole

## STANDARD NOTES:

- AB — Abandon. If applied to conduit, remove conductors.
- BC — Install pull box in existing conduit run.
- BP — Pedestrian barricade, type as indicated on plan.
- CB — Install conduit into existing pull box.
- CC — Connect new and existing conduit. Remove existing conductors and install conductors as indicated.
- CF — Conduit to remain for future use. Remove conductors. Install pull wire or rope.
- DH — Detector handhole.
- FA — Foundation to be abandoned.
- IS — Install sign on signal mast arm.
- NS — No slip base on standard.
- PEC — Photoelectric control.
- PEU — Photoelectric unit.
- RC — Equipment or material to be removed and become the property of the Contractor.
- RE — Remove electrolier, fuses and ballast. Tape ends of conductors.
- RL — Relocate equipment.
- RR — Remove and reuse equipment.
- RS — Remove and salvage equipment.
- SC — Splice new to existing conductors.
- SD — Service disconnect.
- SF — Standard to remain for future use. Remove luminaire, pole conductors, fuses and ballast.
- TSP — Telephone service point.

## ABBREVIATIONS AND EQUIPMENT DESIGNATIONS

| PROPOSED | EXISTING | |
|---|---|---|
| BBS | bbs | Battery backup system |
| BC | bc | Bolt circle |
| C | C | Conduit |
| CCTV | cctv | Closed circuit television |
| CKT | ckt | Circuit |
| CMS | cms | Changeable message sign |
| DLC | dlc | Loop detector lead-in cable |
| EMS | ems | Extinguishable message sign |
| EVC | evc | Emergency vehicle cable |
| EVD | evd | Emergency vehicle detector |
| FB | fb | Flashing beacon |
| FBCA | fbca | Flashing beacon control assembly |
| FBS | fbs | Flashing beacon with slip base |
| FO | fo | Fiber optic |
| G | G | Ground (Equipment Grounding Conductor) |
| GFCI | GFCI | Ground fault circuit interrupt |
| HAR | har | Highway advisory radio |
| HEX | hex | Hexagonal |
| HPS | hps | High pressure sodium |
| IISNS | iisns | Internally illuminated street name sign |
| ISL | isl | Induction sign lighting |
| LED | led | Light emitting diode |
| LMA | lma | Luminaire mast arm |
| LPS | lps | Low pressure sodium |
| LTG | ltg | Lighting |
| LUM | lum | Luminaire |
| MAT | mat | Mast arm mounting vehicle signal faces, top attachment |
| MAS | mas | Mast arm mounting vehicle signal faces, side attachment |
| MAS-4A | mas-4A | Mast arm mounting vehicle signal faces, side attachment - 4 signal section |
| MAS-4B | mas-4B | |
| MAS-4C | mas-4C | |
| MAS-5A | mas-5A | Mast arm mounting vehicle signal faces, side attachment - 5 signal section |
| MAS-5B | mas-5B | |
| MC | mc | Mercury contactor |
| M/M | m/m | Multiple to multiple transformer |
| MT | mt | Conduit with pull wire or rope only |
| MTG | mtg | Mounting |
| | mv | Mercury vapor lighting fixture |
| N | N | Neutral (Grounded Conductor) |
| NC | NC | Normally closed |
| NO | NO | Normally open |
| PB | pb | Pull box |
| PEC | pec | Photoelectric control (Type Ⅰ, Ⅱ, Ⅲ, Ⅳ or Ⅴ as shown) |
| PED | ped | Pedestrian |
| PEU | peu | Photoelectric unit |
| PPB | ppb | Pedestrian push button |
| RL | | Relocated equipment |
| RM | rm | Ramp metering |
| SB | sb | Slip base |
| SIC | sic | Signal interconnect cable |
| SIG | sig | Signal |
| SMA | sma | Signal mast arm |
| SNS | sns | Street name sign |
| SP | sp | Service point |
| TDC | tdc | Telephone demarcation cabinet |
| TMS | tms | Traffic monitoring station |
| TOS | tos | Traffic Operations System |
| VEH | veh | Vehicle |
| XFMR | xfmr | Transformer |
| COMM | comm | Communication |
| RWIS | rwis | Roadway weather information system |

## SOFFIT AND WALL MOUNTED LUMINAIRES

Pendant, 70 W HPS unless otherwise specified.

Flush, 70 W HPS unless otherwise specified.

Wall surface, 70 W HPS unless otherwise specified.

Existing soffit or wall luminaire to remain unmodified.

Existing soffit or wall luminaire to be modified as specified.

### NOTE:

Arrow indicates "street side" of luminaire.

STATE OF CALIFORNIA
DEPARTMENT OF TRANSPORTATION

# ELECTRICAL SYSTEMS (SYMBOLS AND ABBREVIATIONS)

NO SCALE

RSP ES-1A DATED OCTOBER 5, 2007 SUPERSEDES STANDARD PLAN ES-1A DATED MAY 1, 2006 - PAGE 400 OF THE STANDARD PLANS BOOK DATED MAY 2006.

**REVISED STANDARD PLAN RSP ES-1A**

| DIST | COUNTY | ROUTE | POST MILES TOTAL PROJECT | SHEET NO. | TOTAL SHEETS |
|---|---|---|---|---|---|
| 12 | Ora | 5 | 6.8/14.5 | 163 | 171 |

REGISTERED ELECTRICAL ENGINEER

October 5, 2007
PLANS APPROVAL DATE

REGISTERED PROFESSIONAL ENGINEER
Jeffery G. McRae
No. E14512
Exp. 6-30-08
ELECTRICAL
STATE OF CALIFORNIA

*The State of California or its officers or agents shall not be responsible for the accuracy or completeness of electronic copies of this plan sheet.*

*To accompany plans dated* 11-29-10

## CONDUIT

| PROPOSED | EXISTING | |
|---|---|---|
| | | Lighting Conduit, unless otherwise indicated or noted |
| | | Traffic signal conduit |
| C | c | Communication conduit |
| T | t | Telephone conduit |
| F | f | Fire alarm conduit |
| FO | fo | Fiber optic conduit |
| | | Conduit termination (RSP ES-9A C) |
| R | r | Conduit riser in/on structure or service pole |

## SERVICE EQUIPMENT

| PROPOSED | EXISTING | |
|---|---|---|
| OH | oh | Overhead lines |
| U | U | Wood pole "U" indicates utility owned |
| | | Pole guy with anchor |
| | | Utility transformer - ground mounted |
| III | | Service equipment enclosure type |
| | | Service equipment enclosure door indicates front of enclosure |
| T | t | Telephone demarcation cabinet |

## POLE-MOUNTED SERVICE DESIGNATION

Type of installation

TYPE H SERVICE - 28'-10" ← Pole height above grade

## ILLUMINATED OVERHEAD SIGN

| PROPOSED | EXISTING | |
|---|---|---|
| | | Overhead sign - Single post |
| | | Overhead sign - Two post |
| | | Overhead sign - Mounted on structure |
| | | Overhead sign with electrolier |

## SIGNAL EQUIPMENT

| PROPOSED | EXISTING | |
|---|---|---|
| | | Pedestrian signal face |
| | | Pedestrian push button post |
| | | Pedestrian barricade |
| | | Vehicle signal face (with backplate, 3-Section: red, yellow and green) |
| | | Vehicle signal face with angle visors |
| PV | PV | Modifications of basic symbols: "L" indicates all non-arrow sections louvered "LG" indicates louvered green section only "PV" indicates 12" programmed visibility sections "8" indicates all 8" sections (only when specified) |
| | | Type 15TS and Vehicle signal face |
| | | Vehicle signal face with red, yellow and green left arrow sections |
| | | Vehicle signal face with red and yellow sections and up green arrow |
| | | Vehicle signal face (5 Section) with red, yellow and green sections and yellow and green right arrows |
| | | Type 1 Standard and attached vehicle signal faces |
| | | Standard with signal mast arm only and attached vehicle signal faces and internally illuminated street name sign |
| | | Type 33 Standard, Left-turn vehicle signal face and sign |
| | | Standard with luminaire and signal mast arms and attached vehicle signal faces |
| | | Cantilever flashing beacon Type 9 Frame, with a sign unless otherwise specified or indicated |
| | | Type 15-FBS Standard with two vehicle signal face sections with lens, backplate and visor with a sign |
| R | Y | Flashing beacon. One vehicle signal face section with lens, backplate and visor. "R" indicates red indication, "Y" indicates yellow indication |
| | | Controller assembly. Door indicates front of cabinet |

## SIGNAL EQUIPMENT Cont

| PROPOSED | EXISTING | |
|---|---|---|
| | | Guard post |
| | | Type 1 Standard with "Meter On" sign |
| | | Emergency Vehicle detector |

## NOTES:

1. All signal sections shall be 12" unless shown otherwise.
2. Signal heads shall be provided with backplates unless shown otherwise.
3. Signal indication shall be LED.

STATE OF CALIFORNIA
DEPARTMENT OF TRANSPORTATION

# ELECTRICAL SYSTEMS (SYMBOLS AND ABBREVIATIONS)

NO SCALE

RSP ES-1B DATED OCTOBER 5, 2007 SUPERCEDES STANDARD PLAN ES-1B DATED MAY 1, 2006 - PAGE 401 OF THE STANDARD PLANS BOOK DATED MAY 2006.

**REVISED STANDARD PLAN RSP ES-1B**

**2006 REVISED STANDARD PLAN RSP ES-1B**

| DIST | COUNTY | ROUTE | POST MILES TOTAL PROJECT | SHEET NO. | TOTAL SHEETS |
|---|---|---|---|---|---|
| 12 | Ora | 5 | 6.8/14.5 | 164 | 171 |

REGISTERED ELECTRICAL ENGINEER

October 5, 2007
PLANS APPROVAL DATE

REGISTERED PROFESSIONAL ENGINEER Jeffery G. McRae No. E14512 Exp. 6-30-08 ELECTRICAL STATE OF CALIFORNIA

*The State of California or its officers or agents shall not be responsible for the accuracy or completeness of electronic copies of this plan sheet.*

*To accompany plans dated* 11-29-10

# EQUIPMENT IDENTIFICATION

## ILLUMINATED SIGN IDENTIFICATION NUMBER:

Sign No. 12345 — Sign number - Place on post or structure

10 ISL SCI 1.0

- 1.0 — Transformer rating (kVA)
- SCI — Lighting control type
- ISL — Number and type of fixtures

Do NOT place on standard or structure

## ELECTROLIER OR EQUIPMENT IDENTIFICATION NUMBER:

12345 - 15'-0"

- 15'-0" — Mast arm length, if shown. Do not place on standard or structure.
- 12345 — Equipment number - Place on standard or structure. Existing equipment numbers are shown in parenthesis

## CONDUIT AND CONDUCTOR IDENTIFICATION:

1½"C, 2#10, 15#14, 2 DLC

- 2#10, 15#14, 2 DLC — Number and size of conductors and cables
- 1½"C — Size of conduit in inches

| | |
|---|---|
| Ø1, Ø2, Ø2P, etc. | Traffic phase identification for signal faces, detectors and phase diagrams |
| 1 2 3 | Project note numbers |
| A B C | Equipment description, installation or item numbers |
| 1 2 3 | Conduit run numbers |

## SIGNAL AND LIGHTING STANDARD (TYPICAL DESIGNATION):

19A - 3 - 100

- 100 — Wind velocity = 100 mph
- 3 — Case 3 arm loading
- 19A — Standard type
- Standard Plan sheet number
- Detail number or letter

## MISCELLANEOUS EQUIPMENT

| PROPOSED | EXISTING | |
|---|---|---|
| CMS | cms | Changeable message sign |
| | | Closed circuit television camera |
| | | Highway advisory radio pole and antenna |
| EMS | ems | Extinguishable message sign |
| M V | m v | Detection device<br>M = Microwave sensor<br>V = Video image sensor |

## WIRING DIAGRAM LEGEND

| | |
|---|---|
| P | Pole |
| CB | Circuit breaker |
| A | Ampere |
| V | Volt |
| M | Metered |
| UM | Unmetered |
| NB | Neutral bus |
| GB | Ground bus |
| G | Equipment grounding conductor |
| N | Grounded conductor (Neutral) |

- External conductor
- Conductor or bus
- Tie point
- Contactor coil
- Contactor, Contact NO
- Terminal blocks
- Contactor, Contact NC
- Enclosure bond
- Grounding electrode
- Circuit breaker
- Receptacle

## PULL BOXES

PROPOSED EXISTING

Pull box-No. 5 unless otherwise indicated or noted.

3 — 9A(21)

Pull box-Additional designations or descriptions

| | |
|---|---|
| 3 | = No. 3½ pull box |
| 5 | = No. 5 pull box |
| 6 | = No. 6 pull box |
| 7 | = No. 7 (Ceiling pull box) |
| 8 | = No. 8 (Pendant soffit pull box) |
| 9 | = No. 9 pull box |
| 9A | = No. 9A pull box |

(C) = Communications pull box
(E) = Pull box with extension
(S) = Sprinkler control pull box
(21) = Anchor bolts and conduit for future installation of Type 21 Standard
(T) = Traffic pull box

## VEHICLE DETECTORS

5 J 9 U

- U = Upper, L = Lower
- Slot number in input file
- Input file (I or J)
- Phase

PROPOSED EXISTING

| | |
|---|---|
| | Type A detector loop. Outline of sawcut shown. |
| | Type B detector loop. Outline of sawcut shown. |
| | Type C detector loop. Outline of sawcut shown. |
| | Type D detector loop. Outline of sawcut shown. |
| | Type E detector loop. Outline of sawcut shown. |
| | Type Q detector loop. Outline of sawcut shown. |
| | Magnetic detector |
| DH / dh | Detector handhole |
| | Microwave or video detection zone |

STATE OF CALIFORNIA
DEPARTMENT OF TRANSPORTATION

# ELECTRICAL SYSTEMS (SYMBOLS AND ABBREVIATIONS)

NO SCALE

RSP ES-1C DATED OCTOBER 5, 2007 SUPERCEDES STANDARD PLAN ES-1C DATED MAY 1, 2006 - PAGE 402 OF THE STANDARD PLANS BOOK DATED MAY 2006.

**REVISED STANDARD PLAN RSP ES-1C**

**2006 REVISED STANDARD PLAN RSP ES-1C**

7-10-07

| DIST | COUNTY | ROUTE | POST MILES TOTAL PROJECT | SHEET NO. | TOTAL SHEETS |
|---|---|---|---|---|---|
| 12 | Ora | 5 | 6.8/14.5 | 165 | 171 |

REGISTERED ELECTRICAL ENGINEER

October 5, 2007
PLANS APPROVAL DATE

REGISTERED PROFESSIONAL ENGINEER Jeffery G. McRae No. E14512 Exp. 6-30-08 ELECTRICAL STATE OF CALIFORNIA

*The State of California or its officers or agents shall not be responsible for the accuracy or completeness of electronic copies of this plan sheet.*

*To accompany plans dated* 11-29-10

# 2006 REVISED STANDARD PLAN RSP ES-5A

## LOOP INSTALLATION PROCEDURE

1. Loops shall be centered in lanes.
2. Saw slots in pavement for loop conductors as shown in details.
3. Distance between side of loop and a lead-in saw cut from adjacent detectors shall be 2'-0" minimum. Distance between lead-in saw cuts shall be 6" minimum.
4. Bottom of saw slot shall be smooth with no sharp edges.
5. Slots shall be washed until clean, blown out and thoroughly dried before installing loop conductors.
6. Adjacent loops on the same sensor unit channel shall be wound in opposite directions.
7. Identify and tag loop circuit pairs in the pull box with loop number, start (S) and finish (F) of conductor. Identify and tag lead-in-cable with sensor number and phase.
8. Install loop conductor in slot using a 3/16" to 1/4" thick wood paddle. Hold loop conductors with wood paddles (at the bottom of the sawed slot) during sealant placement.
9. No more than 2 twisted pairs shall be installed in one sawed slot.
10. Allow additional 5'-0" of slack length of conductor for the lead-in run to pull box.
11. The additional length of each conductor for each loop shall be twisted together into a pair (6 turns per 3'-4" minimum) before being placed in the slot and conduit leading to pull box.
12. Test each loop circuit for continuity, circuit resistance and insulation resistance at the pull box before filling slots.
13. Fill slots as shown in details.
14. Splice loop conductors to lead-in-cable. Splices shall be soldered.
15. End of lead-in-cable and Type 2 loop conductor shall be waterproofed prior to installing in conduit to prevent moisture from entering the cable.
16. Lead-in-cable shall not be spliced between the pull box and the controller cabinet terminals.
17. Test each loop circuit for continuity, circuit resistance and insulation resistance at the controller cabinet location.
18. Where loop conductors are not to be spliced to a lead-in-cable, the ends of the conductors shall be taped and waterproofed with electrical insulating coating.

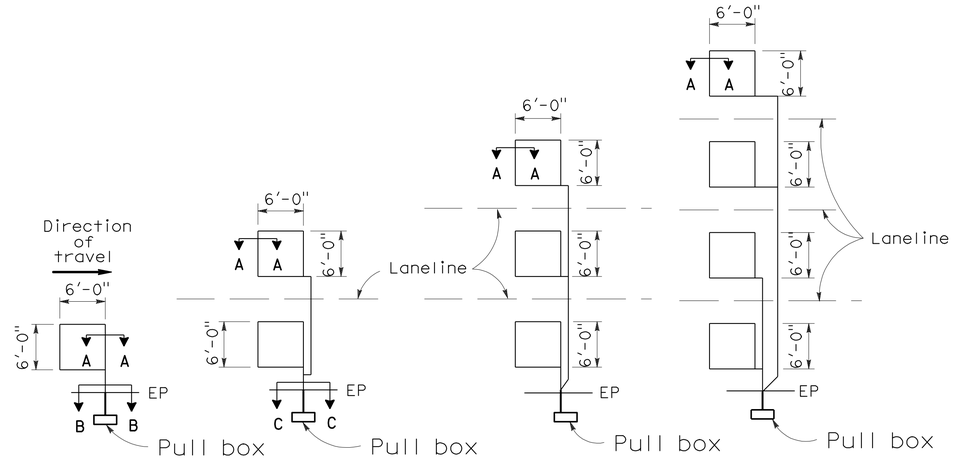


TYPE 1A INSTALLATION | TYPE 2A INSTALLATION | TYPE 3A INSTALLATION | TYPE 4A INSTALLATION

## SAWCUT DETAILS

(Type A loop detector configurations illustrated)

1. 1A thru 4A = 1 Type A loop configuration in each lane.
2. 1B thru 4B = 1 Type B loop configuration in each lane.
3. 1C = 1 Type C loop configuration entering lanes as required.
4. 1D thru 4D = 1 Type D loop configuration in each lane.
5. 1E thru 4E = 1 Type E loop configuration in each lane.
6. 1Q thru 4Q = 1 Type Q loop configuration in each lane. (Use Type A, B, C, D, E or Q loop detector configurations only when specified or shown on plans)

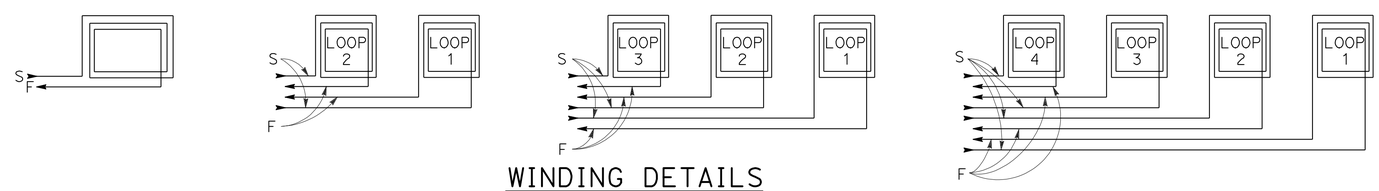


## WINDING DETAILS

See Notes 6 and 7

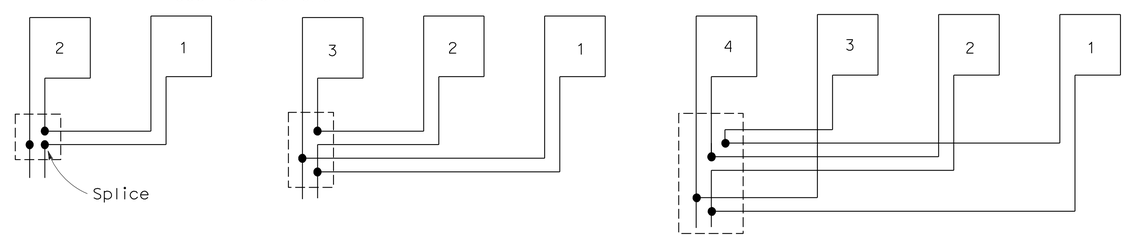


## TYPICAL LOOP CONNECTIONS

(Dashed lines represent the pull box)

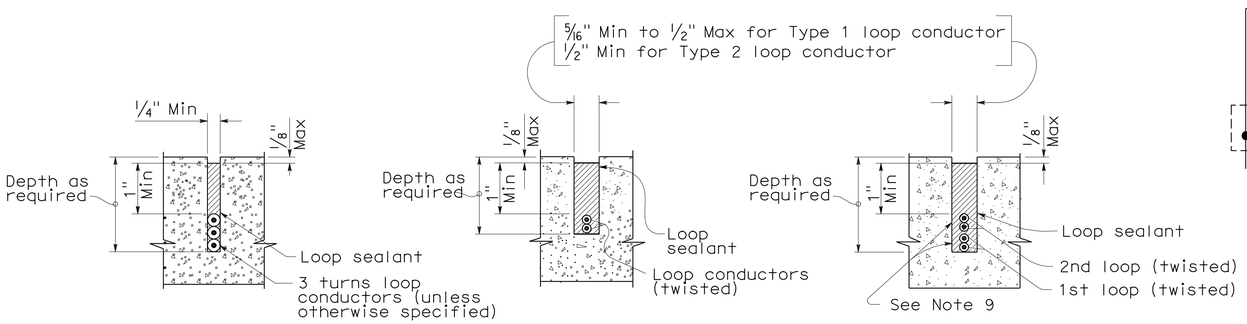


SECTION A-A | SECTION B-B | SECTION C-C

## SLOT DETAILS - TYPE 1 AND TYPE 2 LOOP CONDUCTOR

STATE OF CALIFORNIA
DEPARTMENT OF TRANSPORTATION

# ELECTRICAL SYSTEMS (DETECTORS)

NO SCALE

RSP ES-5A DATED OCTOBER 5, 2007 SUPERCEDES STANDARD PLAN ES-5A DATED MAY 1, 2006 - PAGE 423 OF THE STANDARD PLANS BOOK DATED MAY 2006.

**REVISED STANDARD PLAN RSP ES-5A**

8-17-07

| DIST | COUNTY | ROUTE | POST MILES TOTAL PROJECT | SHEET No | TOTAL SHEETS |
|---|---|---|---|---|---|
| 12 | Ora | 5 | 6.8/14.5 | 166 | 171 |

REGISTERED CIVIL ENGINEER 04/15/10 DATE

11-29-10
PLANS APPROVAL DATE

*The State of California or its officers or agents shall not be responsible for the accuracy or completeness of electronic copies of this plan sheet.*

REGISTERED PROFESSIONAL ENGINEER MOKSUDUR RAHMAN No. C69263 Exp. 06/30/10 CIVIL STATE OF CALIFORNIA

## STANDARD PLANS DATED MAY 2006

A10A ACRONYMS AND ABBREVIATIONS (A-L)
A10B ACRONYMS AND ABBREVIATIONS (M-Z)
B6-21 JOINT SEALS (MAXIMUM MOVEMENT RATING = 2")

STANDARD PLAN SHEET NO.
DETAIL NO.

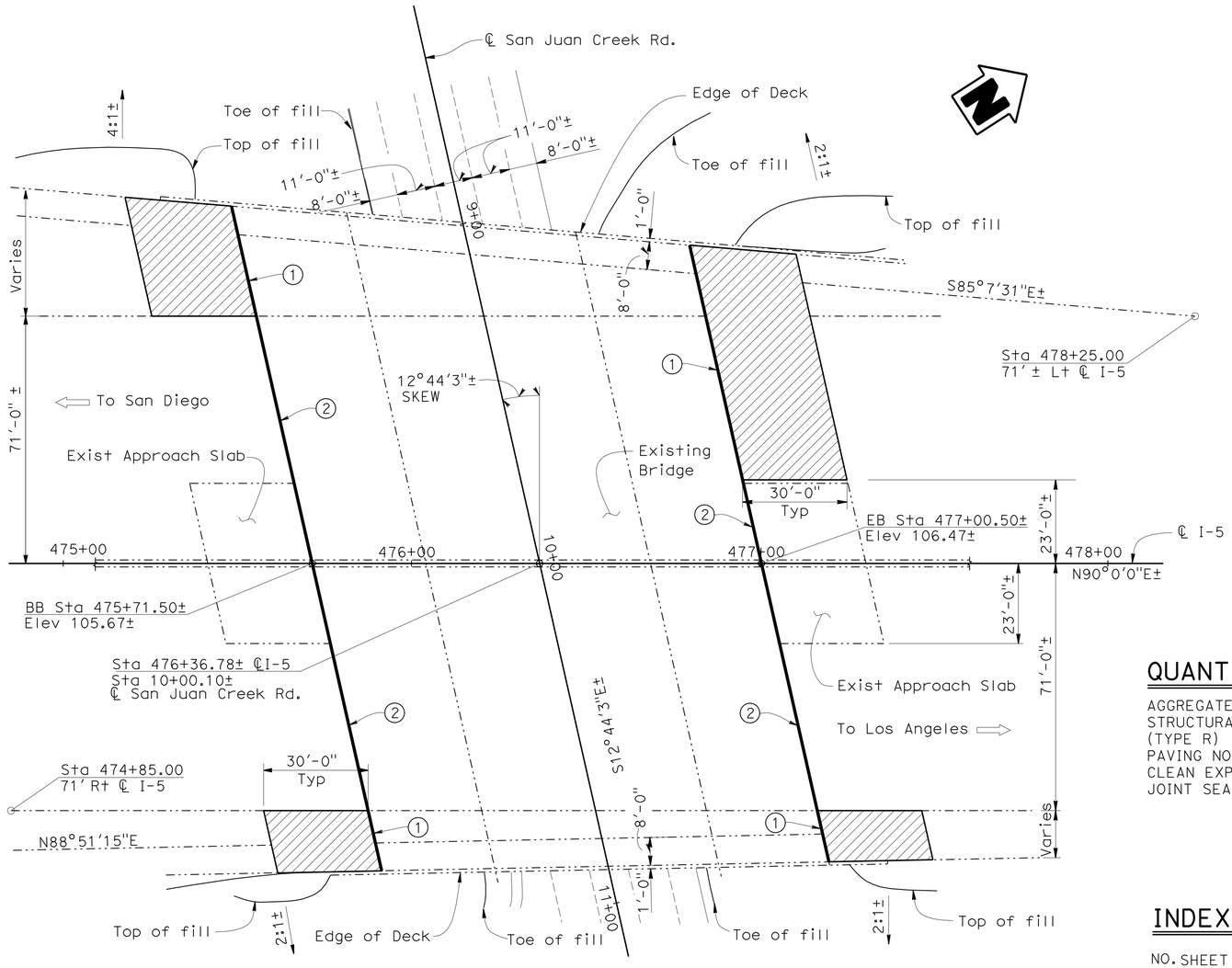


## PLAN
1" = 20'

NOTE:
THE CONTRACTOR SHALL VERIFY ALL CONTROLLING FIELD DIMENSIONS BEFORE ORDERING OR FABRICATING ANY MATERIAL.

## JOINT SEAL TABLE

| LOCATION | MIN "MR" (in) | APPROX. LENGTH (ft) RIGHT BRIDGE | APPROX. LENGTH (ft) LEFT BRIDGE |
|---|---|---|---|
| ABUTMENT 1 | 1/2 | 90 | 106 |
| ABUTMENT 4 | 1/2 | 87 | 94 |

## JOINT SEAL NOTES:

1. Seal must satisfy minimum Movement Rating (MR)
2. For details not shown, see B6-21

## NOTES:

(1) Paving notch extension at new approach slab only.

(2) Remove all Existing Joint Seal and Replace with new Joint Seal.

## QUANTITIES

| | |
|---|---|
| AGGREGATE BASE (APPROACH SLAB) | 15 CY |
| STRUCTURAL CONCRETE, APPROACH SLAB (TYPE R) | 146 CY |
| PAVING NOTCH EXTENSION | 100 CF |
| CLEAN EXPANSION JOINT | 242 LF |
| JOINT SEAL (MR 1/2") | 377 LF |

## INDEX TO PLANS


NO. SHEET NAME

1 SAN JUAN CREEK RD UC - GENERAL PLAN (BR. # 55-298R/L)
2 EL HORNO ST. UC - GENERAL PLAN (BR. # 55-0230)
3 AVERY PARKWAY UC - GENERAL PLAN (BR. # 55-232R/L)
4 CROWN VALLEY PARKWAY OC - GENERAL PLAN (BR. # 55-444)
5 STRUCTURE APPROACH TYPE R(30D)
6 SLOPE PAVING - FULL SLOPE


## LEGEND

Indicates Existing Structure

Joint Seal, see Note (2)

Indicates limits of Structure approach slab Type R(30D)

Indicates direction of traffic

MOHAMMAD RAVANIPOUR
DESIGN ENGINEER

| | BY | CHECKED |
|---|---|---|
| DESIGN | Moksudur Rahman | Charles Lomicka |
| DETAILS | Hengameh Mahboobi | Charles Lomicka |
| QUANTITIES | Moksudur Rahman | Charles Lomicka |

LOAD & RESISTANCE FACTOR DESIGN — LIVE LOADING: HL93 W/"LOW-BOY"; PERMIT DESIGN VEHICLE
LAYOUT BY Moksudur Rahman CHECKED Charles Lomicka
SPECIFICATIONS BY PLANS AND SPECS COMPARED

STATE OF CALIFORNIA
DEPARTMENT OF TRANSPORTATION

DIVISION OF ENGINEERING SERVICES
STRUCTURE DESIGN
DESIGN BRANCH 19

BRIDGE NO. 55-298R/L
POST MILE 8.8

# SAN JUAN CREEK ROAD UC
# GENERAL PLAN

STRUCTURES DESIGN GENERAL PLAN SHEET (ENGLISH) (REV. 10/25/05)

ORIGINAL SCALE IN INCHES FOR REDUCED PLANS 0 1 2 3

CU 12
EA 0E0301

DISREGARD PRINTS BEARING EARLIER REVISION DATES
REVISION DATES 04-06-09 04-29-09 05-21-09 06-04-09 06-09-09 02-09-10 02-10-10 04-12-10 04-15-10
SHEET 1 OF 6

FILE => 55-0298rl-a-gp01.dgn

STRUCTURES DESIGN GENERAL PLAN SHEET (ENGLISH) (REV.07-24-06)

USERNAME => trlenard DATE PLOTTED => 29-NOV-2010 TIME PLOTTED => 15:01

| DIST | COUNTY | ROUTE | POST MILES TOTAL PROJECT | SHEET No | TOTAL SHEETS |
|---|---|---|---|---|---|
| 12 | Ora | 5 | 6.8/14.5 | 167 | 171 |

REGISTERED CIVIL ENGINEER 04/15/2010 DATE

11-29-10
PLANS APPROVAL DATE

REGISTERED PROFESSIONAL ENGINEER MOKSUDUR RAHMAN No. C69263 Exp. 06/30/10 CIVIL STATE OF CALIFORNIA

*The State of California or its officers or agents shall not be responsible for the accuracy or completeness of electronic copies of this plan sheet.*

## STANDARD PLANS DATED MAY 2006

A10A ACRONYMS AND ABBREVIATIONS (A-L)
A10B ACRONYMS AND ABBREVIATIONS (M-Z)
B6-21 JOINT SEALS (MAXIMUM MOVEMENT RATING = 2")

STANDARD PLAN SHEET NO.
DETAIL NO.

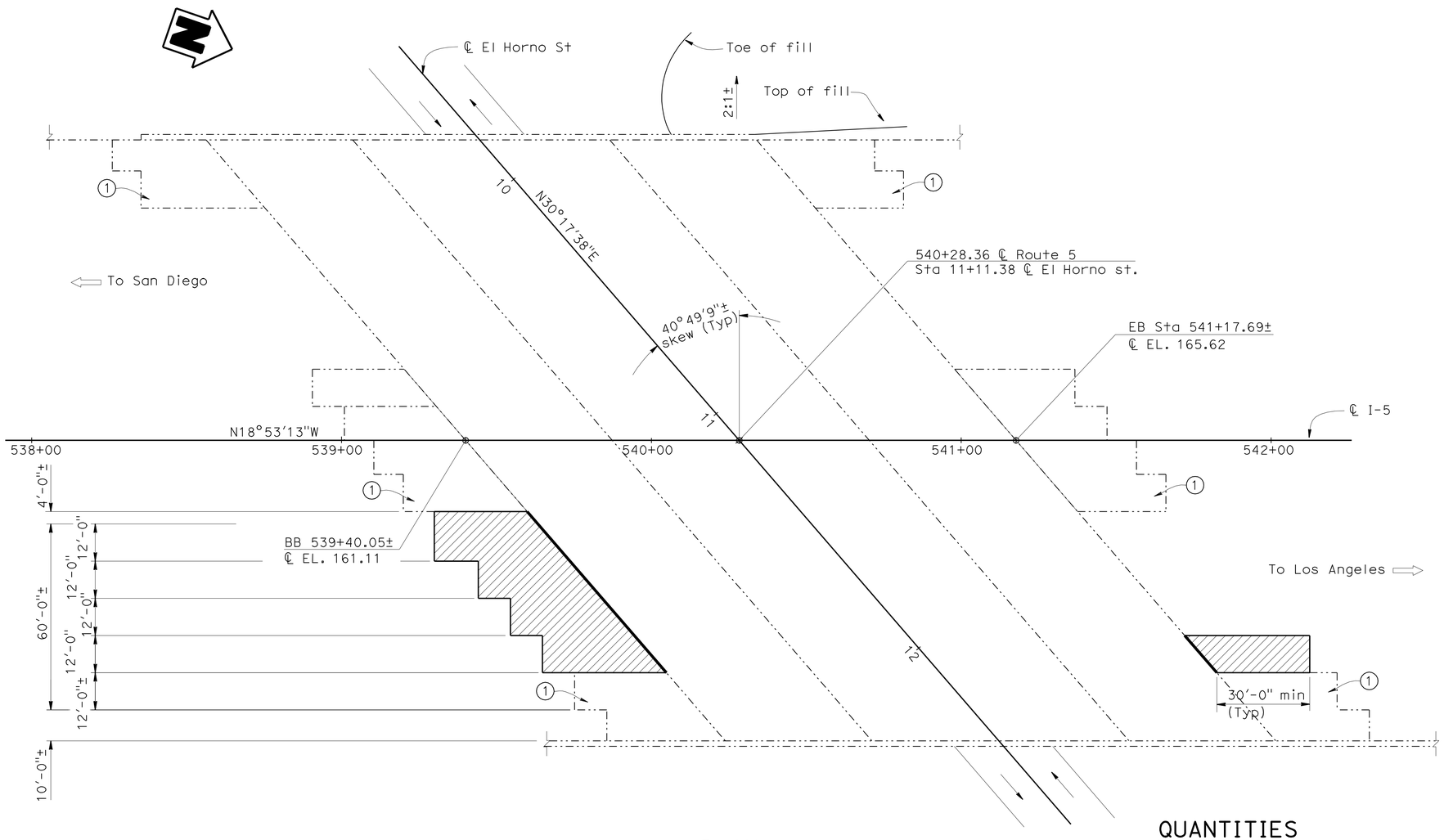


## PLAN
1" = 20'

NOTE:
THE CONTRACTOR SHALL VERIFY ALL CONTROLLING FIELD DIMENSIONS BEFORE ORDERING OR FABRICATING ANY MATERIAL.

## JOINT SEAL TABLE

| LOCATION | MIN "MR" (in) | APPROX. LENGTH (ft) RIGHT BRIDGE | APPROX. LENGTH (ft) LEFT BRIDGE |
|---|---|---|---|
| ABUTMENT 1 | 1 | 69 | 0.0 |
| ABUTMENT 4 | 1 | 16 | 0.0 |

## JOINT SEAL NOTES

1 Seal must satisfy minimum Movement Rating (MR)
2 For details not shown, see B6-21

## NOTE:

(1) Existing Approach Slab

## QUANTITIES

| | |
|---|---|
| AGGREGATE BASE (APPROACH SLAB) | 9 CY |
| STRUCTURAL CONCRETE, APPROACH SLAB (TYPE R) | 84 CY |
| PAVING NOTCH EXTENSION | 65 CF |
| JOINT SEAL (MR 1") | 85 LF |

## LEGEND

Indicates Existing Structure

Location of existing joint seal removal and placement of new joint seal. Paving notch extension at new Approach slab only

Indicates limits of Structure approach slab Type R(30D)

Indicates direction of traffic

| | | | | |
|---|---|---|---|---|
| DESIGN | BY Moksudur Rahman | CHECKED Charles Lomicka | LOAD & RESISTANCE FACTOR DESIGN | LIVE LOADING: HL93 W/"LOW-BOY"; PERMIT DESIGN VEHICLE |
| DETAILS | BY Hengameh Mahboobi | CHECKED Charles Lomicka | LAYOUT BY Moksudur Rahman | CHECKED Charles Lomicka |
| QUANTITIES | BY Moksudur Rahman | CHECKED Charles Lomicka | SPECIFICATIONS BY | PLANS AND SPECS COMPARED |

DESIGN ENGINEER

STATE OF CALIFORNIA
DEPARTMENT OF TRANSPORTATION

DIVISION OF ENGINEERING SERVICES
STRUCTURE DESIGN
DESIGN BRANCH 19

BRIDGE NO. 55-0230
POST MILE 10

# EL HORNO ST UNDERCROSSING
# GENERAL PLAN

STRUCTURES DESIGN GENERAL PLAN SHEET (ENGLISH) (REV. 10/25/05)

ORIGINAL SCALE IN INCHES FOR REDUCED PLANS 0 1 2 3

CU 12
EA 0E0301

DISREGARD PRINTS BEARING EARLIER REVISION DATES

REVISION DATES: 04-16-09 04-28-09 05-21-09 06-04-09 06-08-09 02-09-10 02-16-10 04-12-10 04-15-10

SHEET 2 OF 6

FILE => 55-0230-a-gp01.dgn

STRUCTURES DESIGN GENERAL PLAN SHEET (ENGLISH) (REV.07-24-06)

USERNAME => trlemard DATE PLOTTED => 29-NOV-2010 TIME PLOTTED => 15:01

| DIST | COUNTY | ROUTE | POST MILES TOTAL PROJECT | SHEET No | TOTAL SHEETS |
|---|---|---|---|---|---|
| 12 | Ora | 5 | 6.8/14.5 | 168 | 171 |

REGISTERED CIVIL ENGINEER 04/15/2010 DATE

11-29-10
PLANS APPROVAL DATE

REGISTERED PROFESSIONAL ENGINEER MOKSUDUR RAHMAN No. C69263 Exp. 06/30/10 CIVIL STATE OF CALIFORNIA

*The State of California or its officers or agents shall not be responsible for the accuracy or completeness of electronic copies of this plan sheet.*

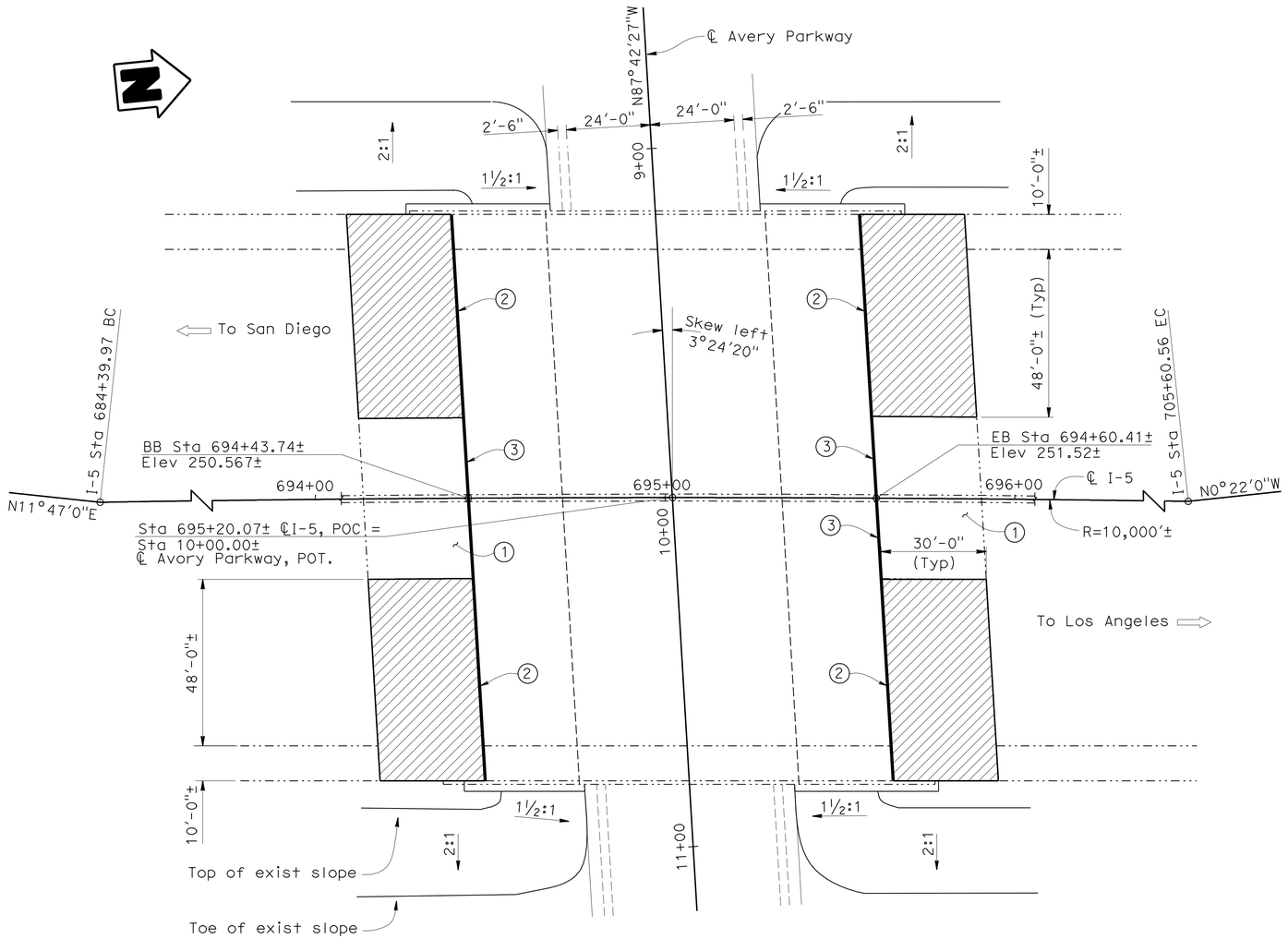


## PLAN
1" = 20'

## STANDARD PLANS DATED MAY 2006

| | |
|---|---|
| A10A | ACRONYMS AND ABBREVIATIONS (A-L) |
| A10B | ACRONYMS AND ABBREVIATIONS (M-Z) |
| B6-21 | JOINT SEALS (MAXIMUM MOVEMENT RATING = 2") |

STANDARD PLAN SHEET NO.

DETAIL NO.

## JOINT SEAL TABLE

| LOCATION | MIN "MR" (in) | APPROX. LENGTH (ft) | |
|---|---|---|---|
| | | RIGHT BRIDGE | LEFT BRIDGE |
| ABUTMENT 1 | 1 | 81 | 81 |
| ABUTMENT 4 | 1 | 81 | 81 |

## JOINT SEAL NOTES

1 Seal must satisfy minimum Movement Rating (MR)

2 For details not shown, see B6-21

## NOTES:

1. Existing Approach slab
2. Paving notch extension at new approach slab only
3. Remove all existing Joint Seal and Replace with new Joint Seal

## QUANTITIES

| | |
|---|---|
| AGGREGATE BASE (APPROACH SLAB) | 26 CY |
| STRUCTURAL CONCRETE, APPROACH SLAB (TYPE R) | 258 CY |
| PAVING NOTCH EXTENSION | 176 CF |
| CLEAN EXPANSION JOINT | 92 LF |
| JOINT SEAL (MR 1") | 325 LF |

## LEGEND

Indicates Existing Structure

Joint Seal, see Note 3

Indicates limits of Structure approach slab Type R(30D)

Indicates direction of traffic

NOTE:
THE CONTRACTOR SHALL VERIFY ALL CONTROLLING FIELD DIMENSIONS BEFORE ORDERING OR FABRICATING ANY MATERIAL.

DESIGN ENGINEER

| | BY | CHECKED |
|---|---|---|
| DESIGN | Moksudur Rahman | Charles Lomicka |
| DETAILS | Hengameh Mahboobi | Charles Lomicka |
| QUANTITIES | Moksudur Rahman | Charles Lomicka |

LOAD & RESISTANCE FACTOR DESIGN — LIVE LOADING: HL93 W/"LOW-BOY"; PERMIT DESIGN VEHICLE

LAYOUT — BY Moksudur Rahman — CHECKED Charles Lomicka

SPECIFICATIONS — BY — PLANS AND SPECS COMPARED

STATE OF CALIFORNIA DEPARTMENT OF TRANSPORTATION

DIVISION OF ENGINEERING SERVICES STRUCTURE DESIGN DESIGN BRANCH 19

BRIDGE NO. 55-0232R/L

POST MILE 12.94

# AVERY PARKWAY UC
# GENERAL PLAN

STRUCTURES DESIGN GENERAL PLAN SHEET (ENGLISH) (REV. 10/25/05)

ORIGINAL SCALE IN INCHES FOR REDUCED PLANS 0 1 2 3

CU 12
EA 0E0301

DISREGARD PRINTS BEARING EARLIER REVISION DATES

REVISION DATES: 04-16-09 04-29-09 06-04-09 06-08-09 07-08-10 07-10-10 04-12-10 04-15-10

SHEET 3 OF 6

FILE => 55-0232rl-a-gp01.dgn

STRUCTURES DESIGN GENERAL PLAN SHEET (ENGLISH) (REV.07-24-06)

USERNAME => trlenard DATE PLOTTED => 29-NOV-2010 TIME PLOTTED => 15:01

| DIST | COUNTY | ROUTE | POST MILES TOTAL PROJECT | SHEET No | TOTAL SHEETS |
|---|---|---|---|---|---|
| 12 | Ora | 5 | 6.8/14.5 | 169 | 171 |

REGISTERED CIVIL ENGINEER — DATE 04/15/2010

11-29-10
PLANS APPROVAL DATE

REGISTERED PROFESSIONAL ENGINEER — MOKSUDUR RAHMAN — No. C69263 — Exp. 06/30/10 — CIVIL — STATE OF CALIFORNIA

*The State of California or its officers or agents shall not be responsible for the accuracy or completeness of electronic copies of this plan sheet.*

## STANDARD PLANS DATED MAY 2006

A10A ACRONYMS AND ABBREVIATIONS (A-L)
A10B ACRONYMS AND ABBREVIATIONS (M-Z)

STANDARD PLAN SHEET NO.
DETAIL NO.

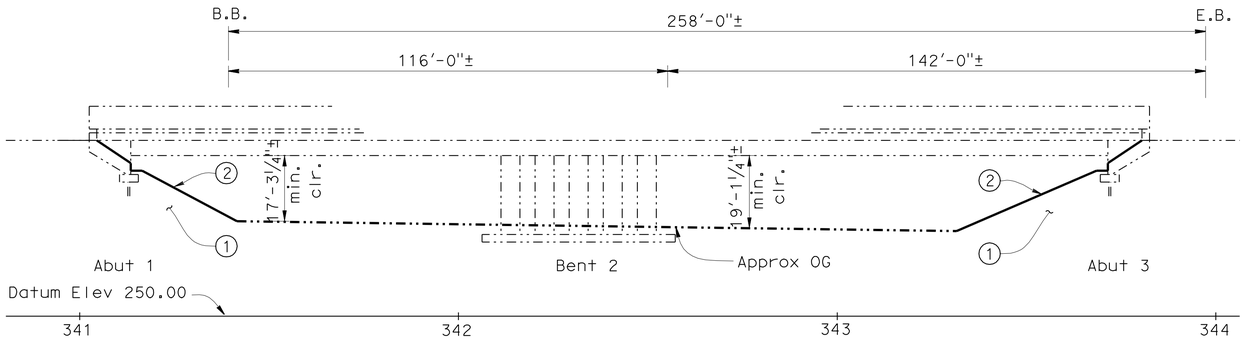


## ELEVATION
1" = 20'

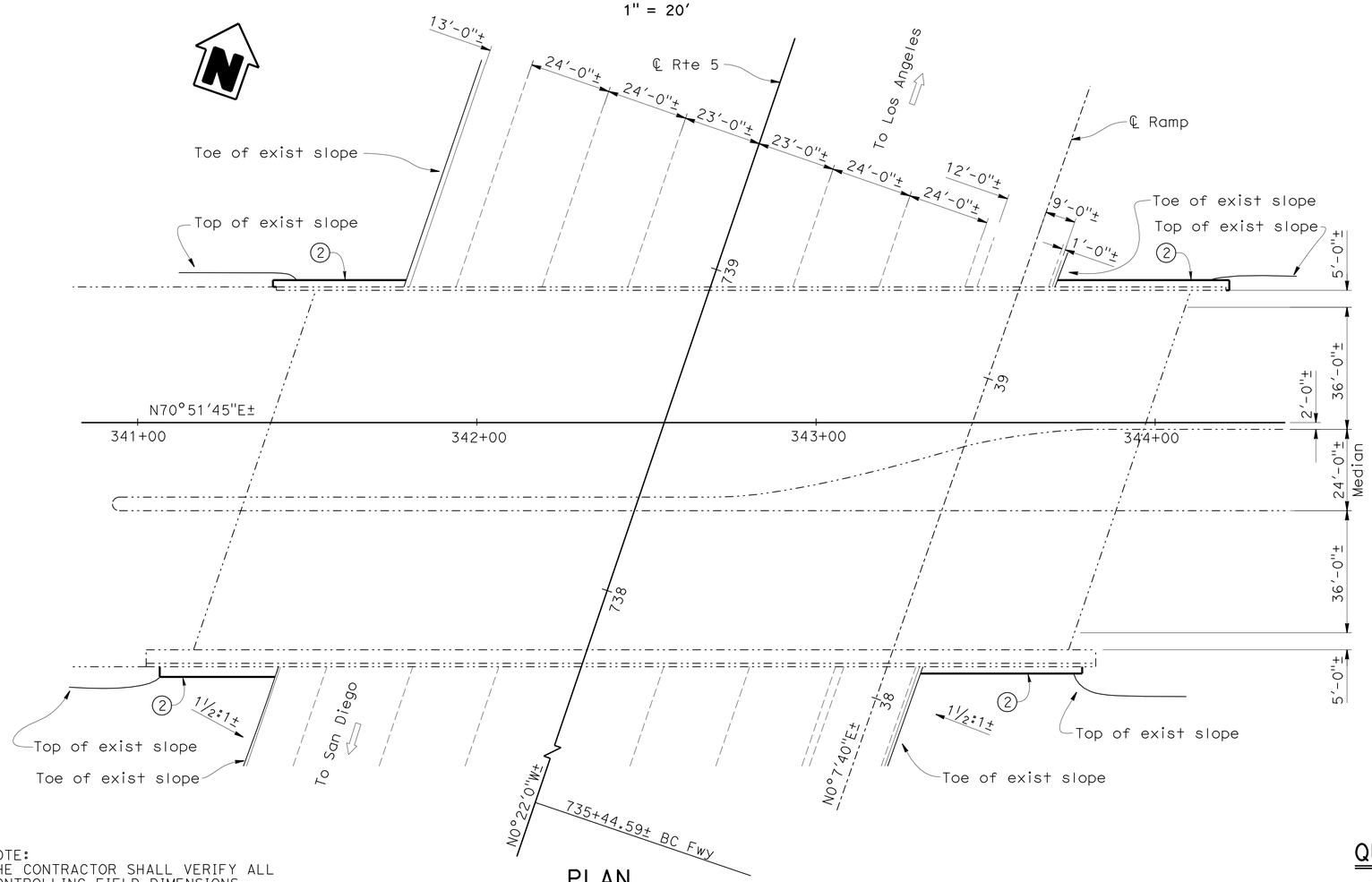


## PLAN
1" = 20'

NOTE:
THE CONTRACTOR SHALL VERIFY ALL CONTROLLING FIELD DIMENSIONS BEFORE ORDERING OR FABRICATING ANY MATERIAL.

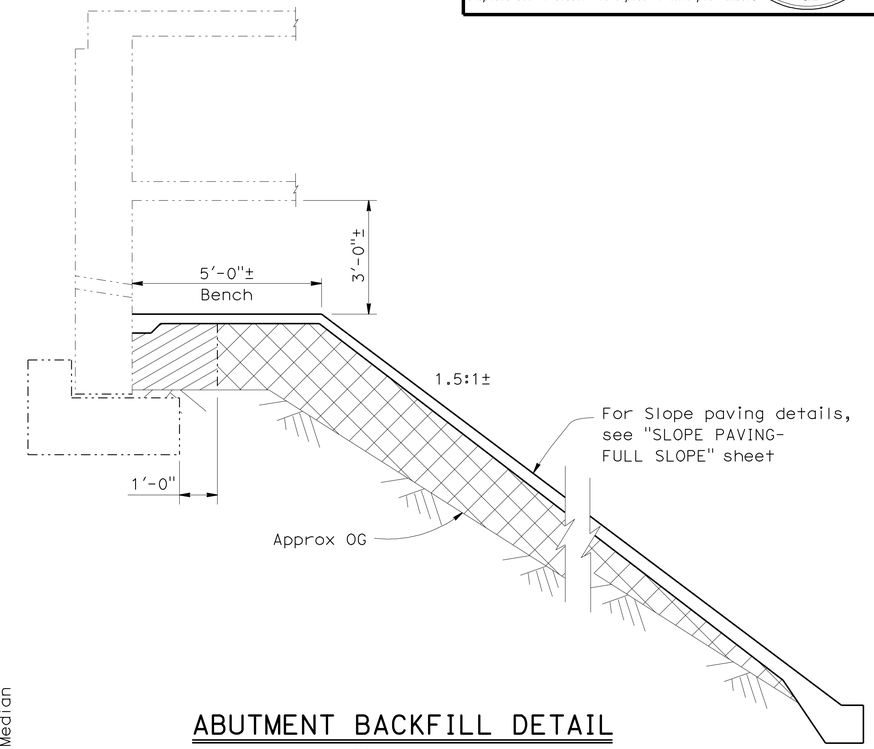


## ABUTMENT BACKFILL DETAIL
½" = 1'-0"

## NOTES:
1. Reconstruct slope
2. Slope paving (Concrete)

## LEGEND
- Indicates Existing Structure
- Indicates new slope Paving
- Indicates direction of traffic
- Structure Backfill (Bridge)
- Embankment

## QUANTITIES

| | |
|---|---|
| STRUCTURE BACKFILL (BRIDGE) | 35 CY |
| EMBANKMENT | 253 CY |
| SLOPE PAVING (CONCRETE) | 125 CY |

DESIGN ENGINEER

| | BY | CHECKED |
|---|---|---|
| DESIGN | Moksudur Rahman | Charles Lomicka |
| DETAILS | Hengameh Mahboobi | Charles Lomicka |
| QUANTITIES | Moksudur Rahman | Charles Lomicka |

LOAD & RESISTANCE FACTOR DESIGN — LIVE LOADING: HL93 W/"LOW-BOY"; PERMIT DESIGN VEHICLE
LAYOUT — BY Moksudur Rahman — CHECKED Charles Lomicka
SPECIFICATIONS — BY — PLANS AND SPECS COMPARED

STATE OF CALIFORNIA
DEPARTMENT OF TRANSPORTATION

DIVISION OF ENGINEERING SERVICES
STRUCTURE DESIGN
DESIGN BRANCH 19

BRIDGE NO. 55-444
POST MILE 13.7

# CROWN VALLEY PARKWAY OC
# GENERAL PLAN

STRUCTURES DESIGN GENERAL PLAN SHEET (ENGLISH) (REV. 10/25/05)

ORIGINAL SCALE IN INCHES FOR REDUCED PLANS 0 1 2 3

CU 12
EA 0E0301

DISREGARD PRINTS BEARING EARLIER REVISION DATES

REVISION DATES: 04-14-09 | 05-21-09 | 06-08-09 | 06-09-09 | 02-09-10 | 02-10-10 | 04-12-10 | 04-13-10 | 04-15-10

SHEET 4 OF 6

FILE => 55-0444-a-gp01.dgn

STRUCTURES DESIGN GENERAL PLAN SHEET (ENGLISH) (REV.07-24-06)

USERNAME => trlenard DATE PLOTTED => 29-NOV-2010 TIME PLOTTED => 15:01

| DIST. | COUNTY | ROUTE | MILE POST TOTAL PROJECT | SHEET NO. | TOTAL SHEETS |
|---|---|---|---|---|---|
| 12 | Ora | 5 | 6.8/14.5 | 170 | 171 |

REGISTERED ENGINEER - CIVIL

11-29-10

PLANS APPROVAL DATE

REGISTERED PROFESSIONAL ENGINEER MOKSUDUR RAHMAN No. C69263 Exp. 06/30/10 CIVIL STATE OF CALIFORNIA

*The State of California or its officers or agents shall not be responsible for the accuracy or completeness of electronic copies of this plan sheet.*

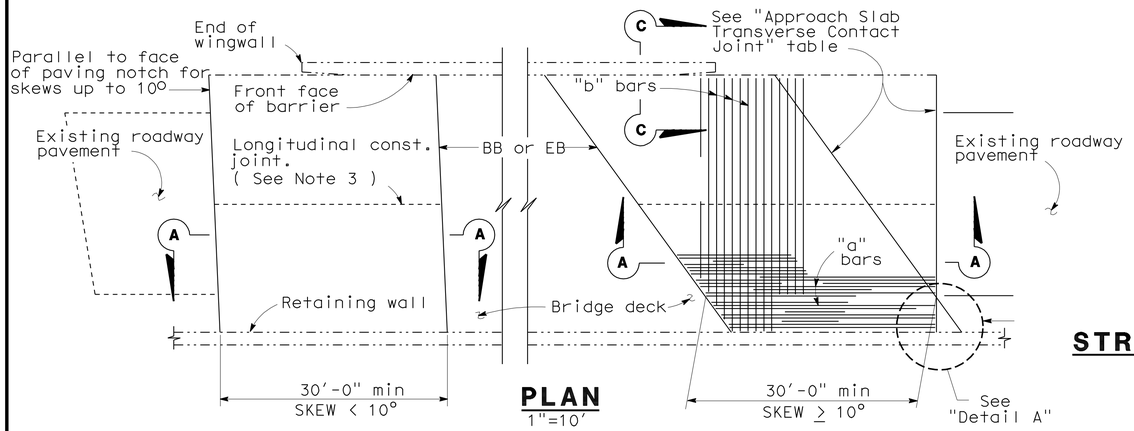


## PLAN

1"=10'

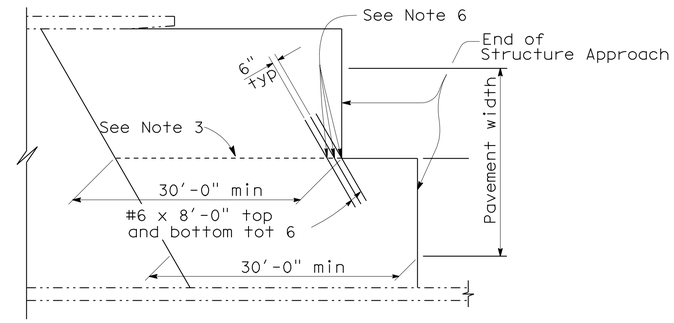


## STRUCTURE APPROACH - END STAGGER DETAIL

No Scale

| APPROACH SLAB TRANSVERSE CONTACT JOINT | | |
|---|---|---|
| APPROACH SKEW | WITH AC ROADWAY PAVEMENT | WITH PCC ROADWAY PAVEMENT |
| < 10° | Parallel to face of paving notch | Parallel to face of paving notch |
| 10° - 45° | Parallel to face of P N use (Detail A) | Stagger lines 24' to 36' apart |
| > 45° | Parallel to face of P N use (Detail A) | Stagger at each lane line |

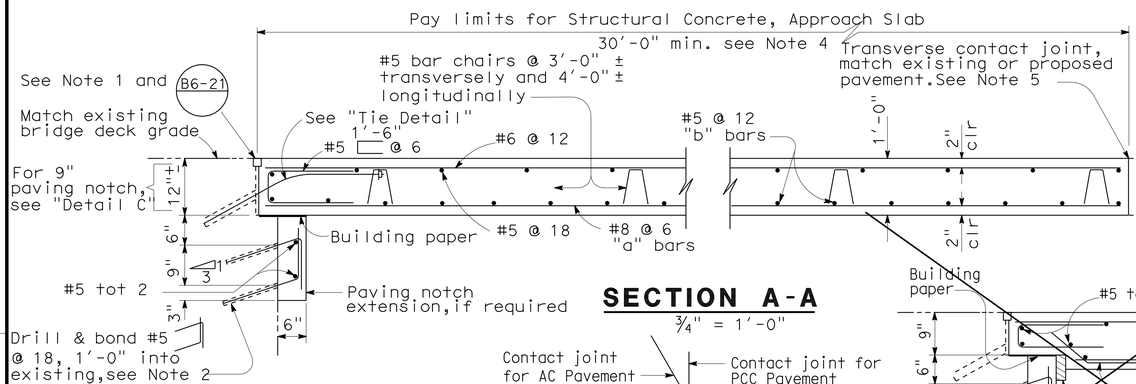


## SECTION A-A

¾" = 1'-0"

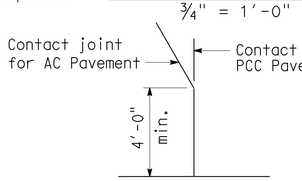


## DETAIL A

No Scale

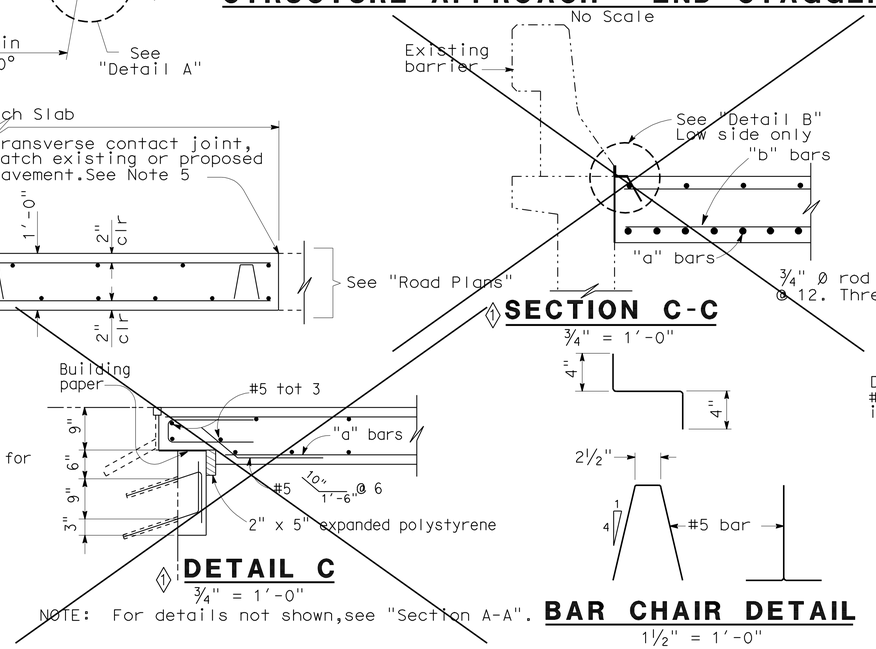


## SECTION C-C

¾" = 1'-0"

## DETAIL C

¾" = 1'-0"

NOTE: For details not shown, see "Section A-A".

## BAR CHAIR DETAIL

1½" = 1'-0"

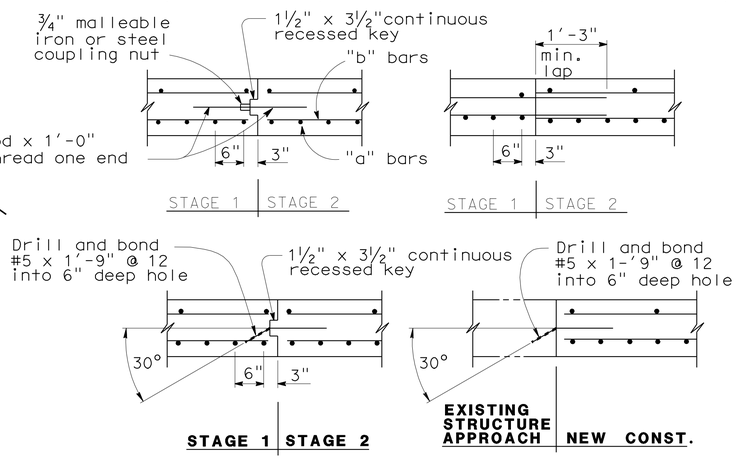


## LONGITUDINAL CONSTRUCTION JOINT ALTERNATIVES

¾" = 1'-0"

**NOTES:**

1. For details not shown or noted, see Structure Plans. Adjust bar reinforcement to clear a sawcut for sealed joint, when required.
2. Space to avoid existing prestress anchorages and main reinforcement.
3. Longitudinal construction joints, when permitted by the Engineer, shall be located on lane lines.
4. Transverse contact joint shall be a minimum of 5'-0" from an existing or constructed weakened plane joint.
5. For transverse contact joint with new PCC paving, refer to Standard Plan P10.
6. Couplers are required for stage construction.
7. End angle or plate at beginning of barrier transition, end of wingwall or end of structure approach as applicable.

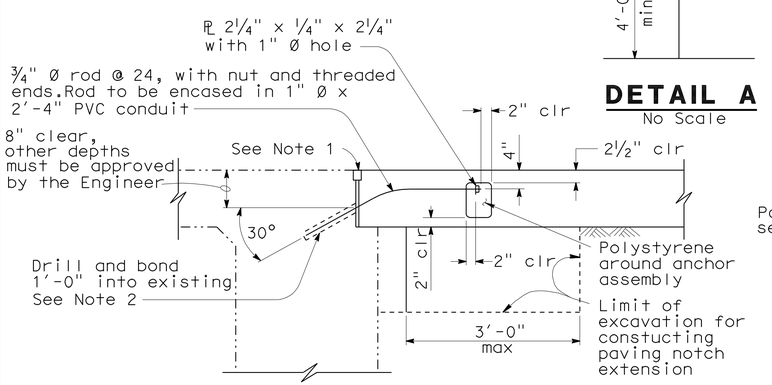


## TIE DETAIL

¾" = 1'-0"

NOTE:

THE CONTRACTOR SHALL VERIFY ALL CONTROLLING FIELD DIMENSIONS BEFORE ORDERING OR FABRICATING ANY MATERIAL.

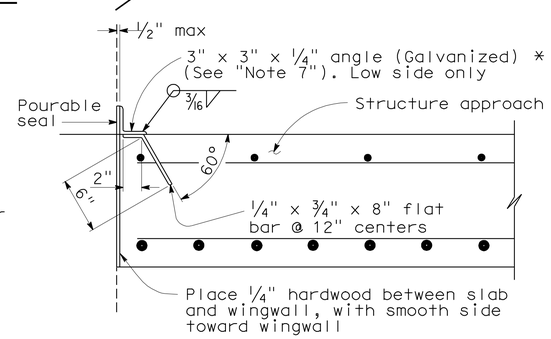


② *(TO BE USED WITH TYPE 1 CONCRETE BARRIER)

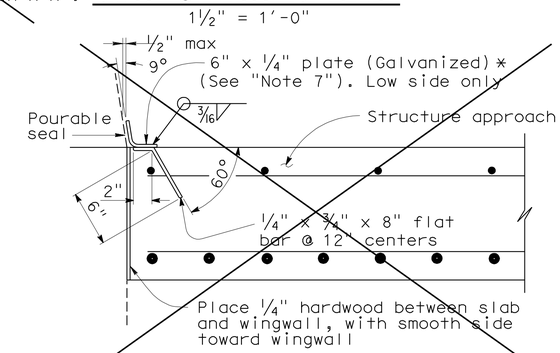


① *(TO BE USED WITH TYPE 732 OR TYPE 736 CONCRETE BARRIER)

## DETAIL B

1½" = 1'-0"

| STANDARD DRAWING | | | | |
|---|---|---|---|---|
| RELEASE DATE 3/14/05 | DESIGN | BY M.TRAFFALIS | CHECKED E.THORKILDSEN | RELEASED BY |
| FILE NO. xs3-140e | DETAILS | BY R.YEE | CHECKED E.THORKILDSEN | |
| | SUBMITTED | BY M.HA | DRAWING DATE 8/92 | OFFICE CHIEF |

① Deleted Details

② Revised Detail

STATE OF CALIFORNIA DEPARTMENT OF TRANSPORTATION

DIVISION OF ENGINEERING SERVICES

BRIDGE NO. VARIOUS

MILE POST VARIOUS

ROUTE 5 BRIDGES KP 8.8-13.7

STRUCTURE APPROACH TYPE R(30D)

DS OSD 2147A (ENGLISH) (REV. X/XX/XX)

ORIGINAL SCALE IN INCHES FOR REDUCED PLANS 0 1 2 3

CU 12
EA 0E0301

DISREGARD PRINTS BEARING EARLIER REVISION DATES

REVISION DATES (PRELIMINARY STAGE ONLY) 04-15-09 04-29-09 05-26-09 06-08-09 02-09-10 02-18-10 04-12-10 04-15-10

SHEET 5 OF 6

USERNAME => trlenard

55-0444-s-sa.dgn

DATE PLOTTED => 29-NOV-2010 TIME PLOTTED => 15:01

| DIST. | COUNTY | ROUTE | KILOMETER POST TOTAL PROJECT | SHEET NO. | TOTAL SHEETS |
|---|---|---|---|---|---|
| 12 | Ora | 5 | 6.8/14.5 | 171 | 171 |

REGISTERED ENGINEER - CIVIL

11-29-10

PLANS APPROVAL DATE

REGISTERED PROFESSIONAL ENGINEER MOKSUDUR RAHMAN No. 69263 Exp. 06/30/10 CIVIL STATE OF CALIFORNIA

*The State of California or its officers or agents shall not be responsible for the accuracy or completeness of electronic copies of this plan sheet.*

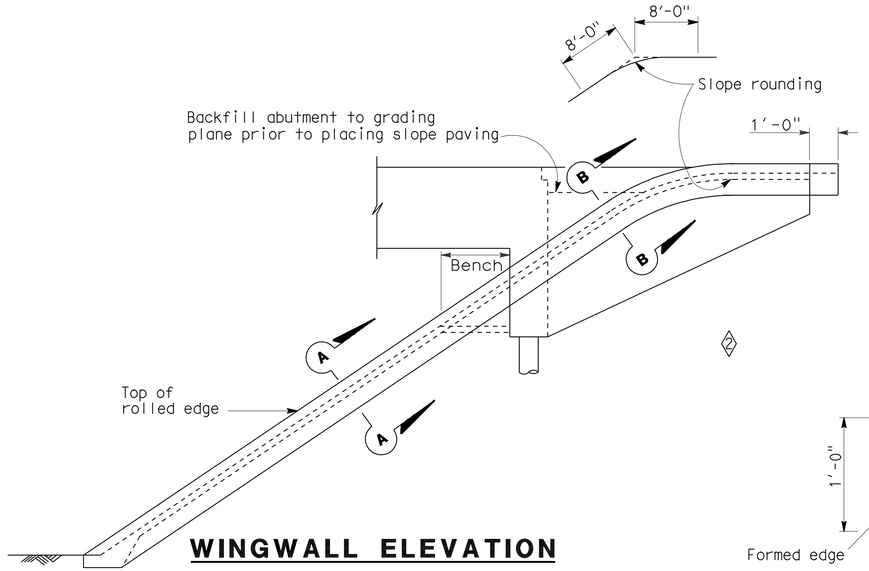


## WINGWALL ELEVATION

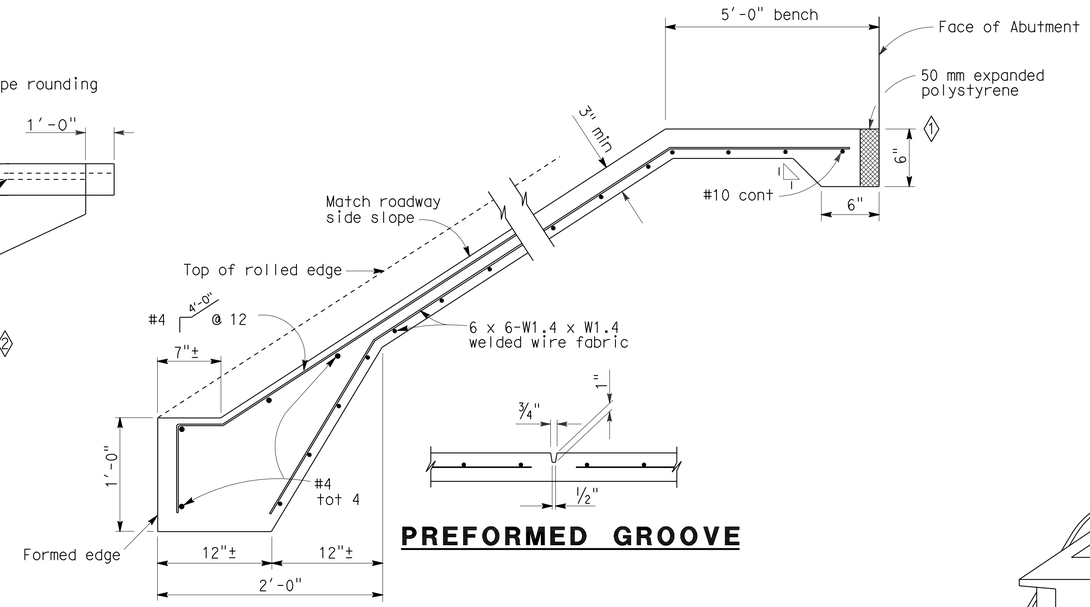


## TYPICAL SECTION - CONCRETE PAVING




## PREFORMED GROOVE

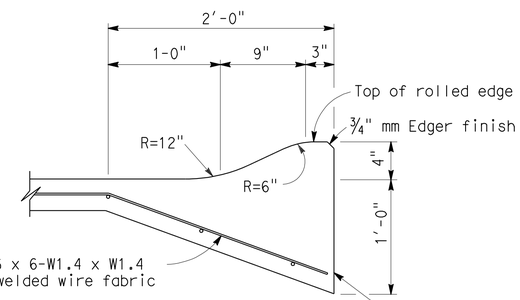


## SECTION A-A

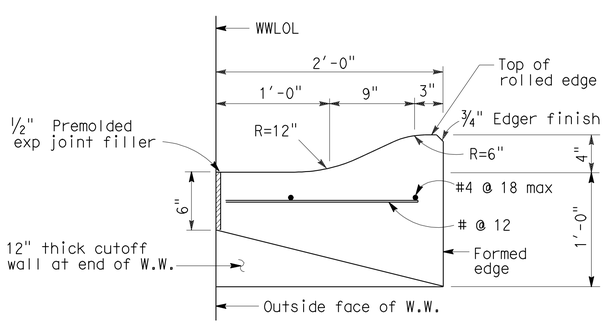


## 1 SECTION B-B

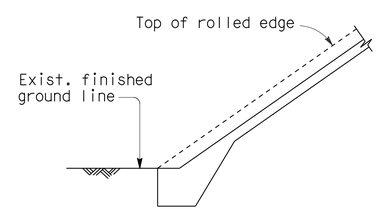


## 1 TYPICAL - NO CURB

**Crown Valley Parkway OC - East Slope**

2

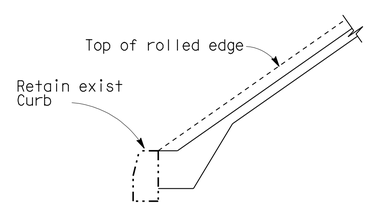


## 1 TYPICAL - WITH CURB

**Crown Valley Parkway OC-West Slope**

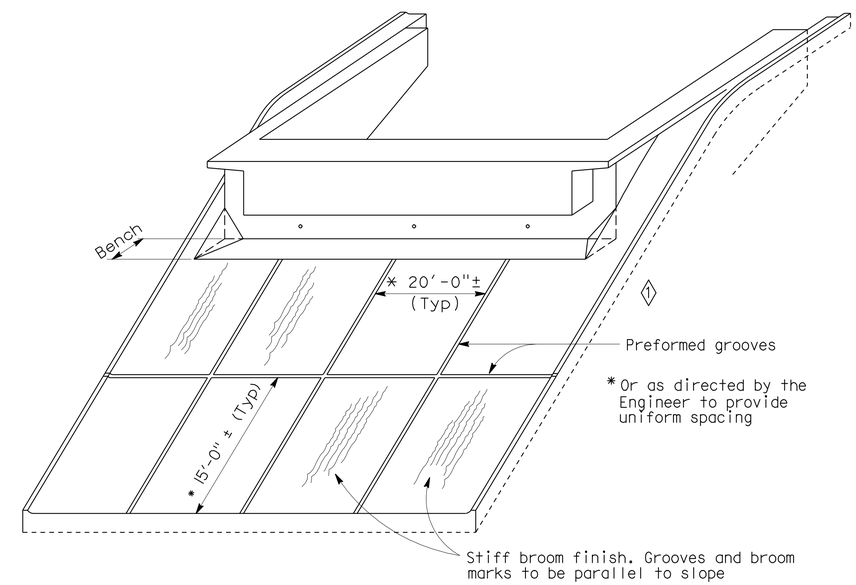


## PICTORIAL VIEW OF TYPICAL INSTALLATION

NOTE:
THE CONTRACTOR SHALL VERIFY ALL CONTROLLING FIELD DIMENSIONS BEFORE ORDERING OR FABRICATING ANY MATERIAL.

**NO SCALE**

| STANDARD DRAWING | | | | |
|---|---|---|---|---|
| RELEASE DATE 4/20/00 | DESIGN | BY | CHECKED | RELEASED BY |
| FILE NO. xs4-210 | DETAILS | BY R. YEE | CHECKED | OFFICE CHIEF |
| | SUBMITTED | BY C.W. PURKISS | DRAWING DATE 3/89 | |

DS OSD 2147A (METRIC) (REV. 2/25/97)

1 Revised Details

2 Deleted Details

STATE OF CALIFORNIA DEPARTMENT OF TRANSPORTATION

DIVISION OF ENGINEERING SERVICES

CU 12
EA 0E0301

BRIDGE NO. VARIOUS

KILOMETER POST VARIOUS

ROUTE 5 BRIDGES KP 8.8-13.7

SLOPE PAVING - FULL SLOPE

DISREGARD PRINTS BEARING EARLIER REVISION DATES

REVISION DATES (PRELIMINARY STAGE ONLY): 04-14-09 04-29-09 05-26-09 06-08-09 06-09-09 02-09-10 02-10-10 04-12-10 04-15-10

SHEET 6 OF 6

USERNAME => trlenard

55-0444-s-slppvng.dgn

DATE PLOTTED => 29-NOV-2010 TIME PLOTTED => 15:01