Dist	COUNTY	ROUTE	POST MILES TOTAL PROJECT	SHEET No.	TOTAL SHEETS
12	Ora	91	0.9/5.4	601	885

REGISTERED CIVIL ENGINEER 6/21/12 DATE

8-13-12
PLANS APPROVAL DATE

REGISTERED PROFESSIONAL ENGINEER ARMANDO SOLIS No. 72012 Exp. 6-30-14 CIVIL STATE OF CALIFORNIA

THE STATE OF CALIFORNIA OR ITS OFFICERS OR AGENTS SHALL NOT BE RESPONSIBLE FOR THE ACCURACY OR COMPLETENESS OF SCANNED COPIES OF THIS PLAN SHEET.

RBF CONSULTING
14725 ALTON PKWY
IRVINE, CA 92618

OCTA
550 S. MAIN STREET
ORANGE, CA 92863

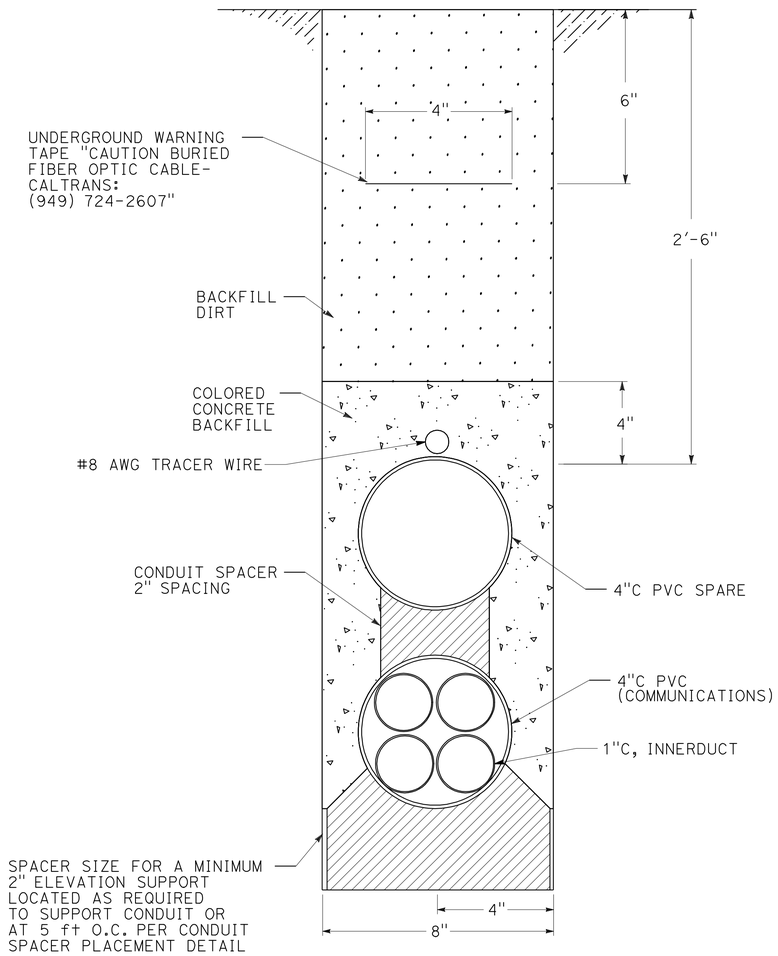

DETAIL

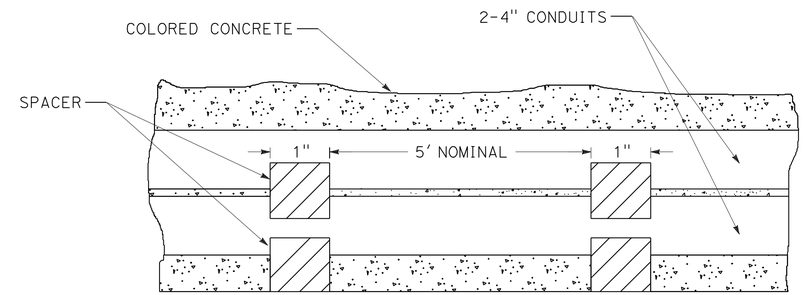

CONDUIT SPACER PLACEMENT

SIDE VIEW

NOTE:
FOR NOTES AND ABBREVIATIONS, SEE SHEETS E-99 AND E-100.

COMMUNICATION SYSTEM
(CONDUIT TRENCH DETAILS)
NO SCALE

APPROVED FOR ELECTRICAL WORK ONLY

E-115

STATE OF CALIFORNIA - DEPARTMENT OF TRANSPORTATION
Caltrans
CONSULTANT FUNCTIONAL SUPERVISOR: MIKE CHESNEY
CALCULATED-DESIGNED BY: ARMANDO SOLIS
CHECKED BY
REVISED BY
DATE REVISED

LAST REVISION 06-08-10
DATE PLOTTED => 14-AUG-2012
TIME PLOTTED => 09:31

Dist	COUNTY	ROUTE	POST MILES TOTAL PROJECT	SHEET No.	TOTAL SHEETS
12	Ora	91	0.9/5.4	602	885

REGISTERED CIVIL ENGINEER 6/21/12 DATE

8-13-12
PLANS APPROVAL DATE

REGISTERED PROFESSIONAL ENGINEER ARMANDO SOLIS No. 72012 Exp. 6-30-14 CIVIL STATE OF CALIFORNIA

THE STATE OF CALIFORNIA OR ITS OFFICERS OR AGENTS SHALL NOT BE RESPONSIBLE FOR THE ACCURACY OR COMPLETENESS OF SCANNED COPIES OF THIS PLAN SHEET.

RBF CONSULTING
14725 ALTON PKWY
IRVINE, CA 92618

OCTA
550 S. MAIN STREET
ORANGE, CA 92863

NOTES:

1. FOR ACCURATE RIGHT OF WAY DATA, CONTACT RIGHT OF WAY ENGINEERING AT THE DISTRICT OFFICE.
2. SEE SHEET E-99 AND E-100 FOR LEGEND, NOTES, AND ABBREVIATIONS.

CONDUCTOR AND CONDUIT SCHEDULE

CONDUCTOR TYPE	3	6	8	10
TYPE A FOC	-	-	-	-
TYPE B FOC	-	-	-	-
TYPE C FOC	-	-	-	-
TYPE D FOC	1*	2*	1*	1*
12 PR #19 SIC	-	1*	-	1*
CONDUIT SIZE	2"*	3"*	2-3"*	2-3"*

ALL CONDUIT AND CONDUCTORS ARE NEW UNLESS NOTED OTHERWISE:
* = Exist

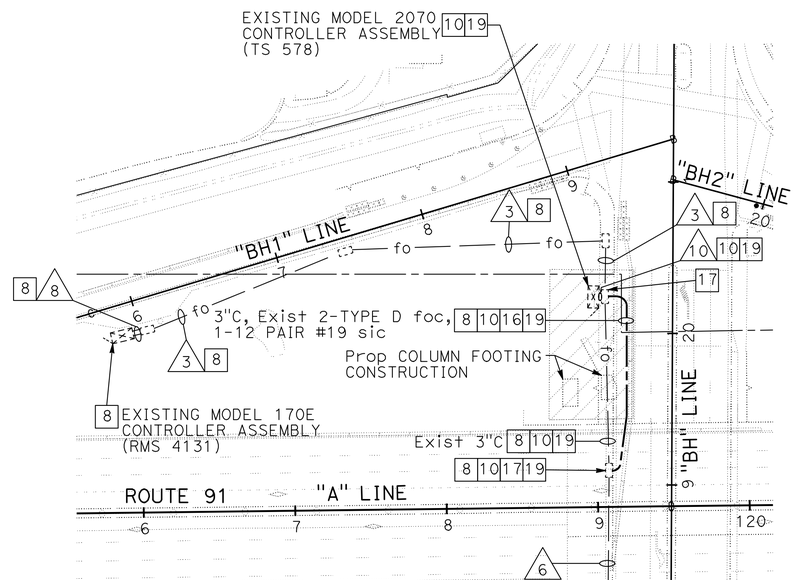

STAGE 1A.1

TEMPORARY COMMUNICATION SYSTEM

(STAGE 1A.1)

SCALE: 1" = 50'

E-116

APPROVED FOR ELECTRICAL WORK ONLY

STATE OF CALIFORNIA - DEPARTMENT OF TRANSPORTATION
Caltrans

CONSULTANT FUNCTIONAL SUPERVISOR: MIKE CHESNEY
CALCULATED-DESIGNED BY: ARMANDO SOLIS
CHECKED BY: CASEY MURDIE
REVISED BY
DATE REVISED

LAST REVISION 06-08-10
DATE PLOTTED => 14-AUG-2012
TIME PLOTTED => 09:31

NOTES:

1. FOR ACCURATE RIGHT OF WAY DATA, CONTACT RIGHT OF WAY ENGINEERING AT THE DISTRICT OFFICE.
2. SEE SHEET E-99 AND E-100 FOR LEGEND, NOTES, AND ABBREVIATIONS.

CONDUCTOR AND CONDUIT SCHEDULE

CONDUCTOR TYPE	1	2	3	4	5	8	23
TYPE A FOC	1*	-	-	1*	-	-	1*
TYPE B FOC	1*	-	-	1*	-	-	1*
TYPE C FOC	1*	-	-	1*	-	-	1*
TYPE D FOC	-	-	1*	1*	2*	1*	2*
CONDUIT SIZE	4"*	4"*	2"*	4"*	2"*	2-3"*	4"*

ALL CONDUIT AND CONDUCTORS ARE NEW UNLESS NOTED OTHERWISE:
* = Exist

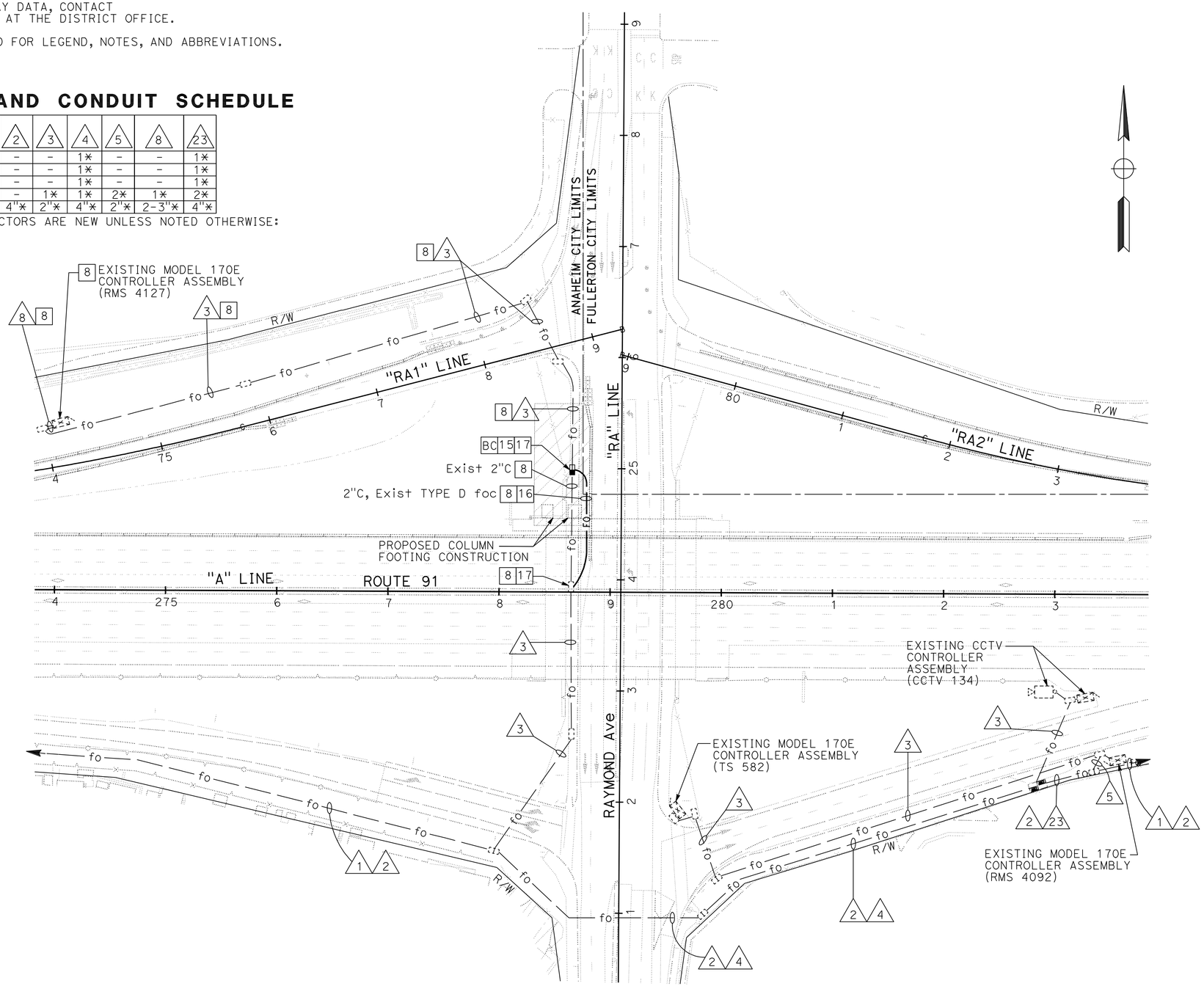

STAGE 1A.1

Dist	COUNTY	ROUTE	POST MILES TOTAL PROJECT	SHEET No.	TOTAL SHEETS
12	Ora	91	0.9/5.4	603	885

REGISTERED CIVIL ENGINEER 6/21/12 DATE

8-13-12
PLANS APPROVAL DATE

REGISTERED PROFESSIONAL ENGINEER ARMANDO SOLIS No. 72012 Exp. 6-30-14 CIVIL STATE OF CALIFORNIA

THE STATE OF CALIFORNIA OR ITS OFFICERS OR AGENTS SHALL NOT BE RESPONSIBLE FOR THE ACCURACY OR COMPLETENESS OF SCANNED COPIES OF THIS PLAN SHEET.

RBF CONSULTING
14725 ALTON PKWY
IRVINE, CA 92618

OCTA
550 S. MAIN STREET
ORANGE, CA 92863

TEMPORARY COMMUNICATION SYSTEM

(STAGE 1A.1)

SCALE: 1" = 50'

E-117

APPROVED FOR ELECTRICAL WORK ONLY

STATE OF CALIFORNIA - DEPARTMENT OF TRANSPORTATION
Caltrans

CONSULTANT FUNCTIONAL SUPERVISOR: MIKE CHESNEY
CALCULATED-DESIGNED BY: ARMANDO SOLIS
CHECKED BY: CASEY MURDIE
REVISED BY
DATE REVISED

LAST REVISION 06-08-10
DATE PLOTTED => 14-AUG-2012
TIME PLOTTED => 09:31

Dist	COUNTY	ROUTE	POST MILES TOTAL PROJECT	SHEET No.	TOTAL SHEETS
12	Ora	91	0.9/5.4	604	885

REGISTERED CIVIL ENGINEER 6/21/12 DATE

8-13-12
PLANS APPROVAL DATE

REGISTERED PROFESSIONAL ENGINEER ARMANDO SOLIS No. 72012 Exp. 6-30-14 CIVIL STATE OF CALIFORNIA

THE STATE OF CALIFORNIA OR ITS OFFICERS OR AGENTS SHALL NOT BE RESPONSIBLE FOR THE ACCURACY OR COMPLETENESS OF SCANNED COPIES OF THIS PLAN SHEET.

RBF CONSULTING
14725 ALTON PKWY
IRVINE, CA 92618

OCTA
550 S. MAIN STREET
ORANGE, CA 92863

NOTES:

1. FOR ACCURATE RIGHT OF WAY DATA, CONTACT RIGHT OF WAY ENGINEERING AT THE DISTRICT OFFICE.
2. SEE SHEET E-99 AND E-100 FOR LEGEND, NOTES, AND ABBREVIATIONS.

CONDUCTOR AND CONDUIT SCHEDULE

CONDUCTOR TYPE	1	2	3	4	7	9	13
TYPE A FOC	1*	–	–	1*	–	–	–
TYPE B FOC	1*	–	–	1*	–	–	–
TYPE C FOC	1*	–	–	1*	–	–	–
TYPE D FOC	–	–	1*	1*	1*	1*	1*
CONDUIT SIZE	4"*	4"*	2"*	4"*	2"	3"*	1½"*

ALL CONDUIT AND CONDUCTORS ARE NEW UNLESS NOTED OTHERWISE:
* = Exist

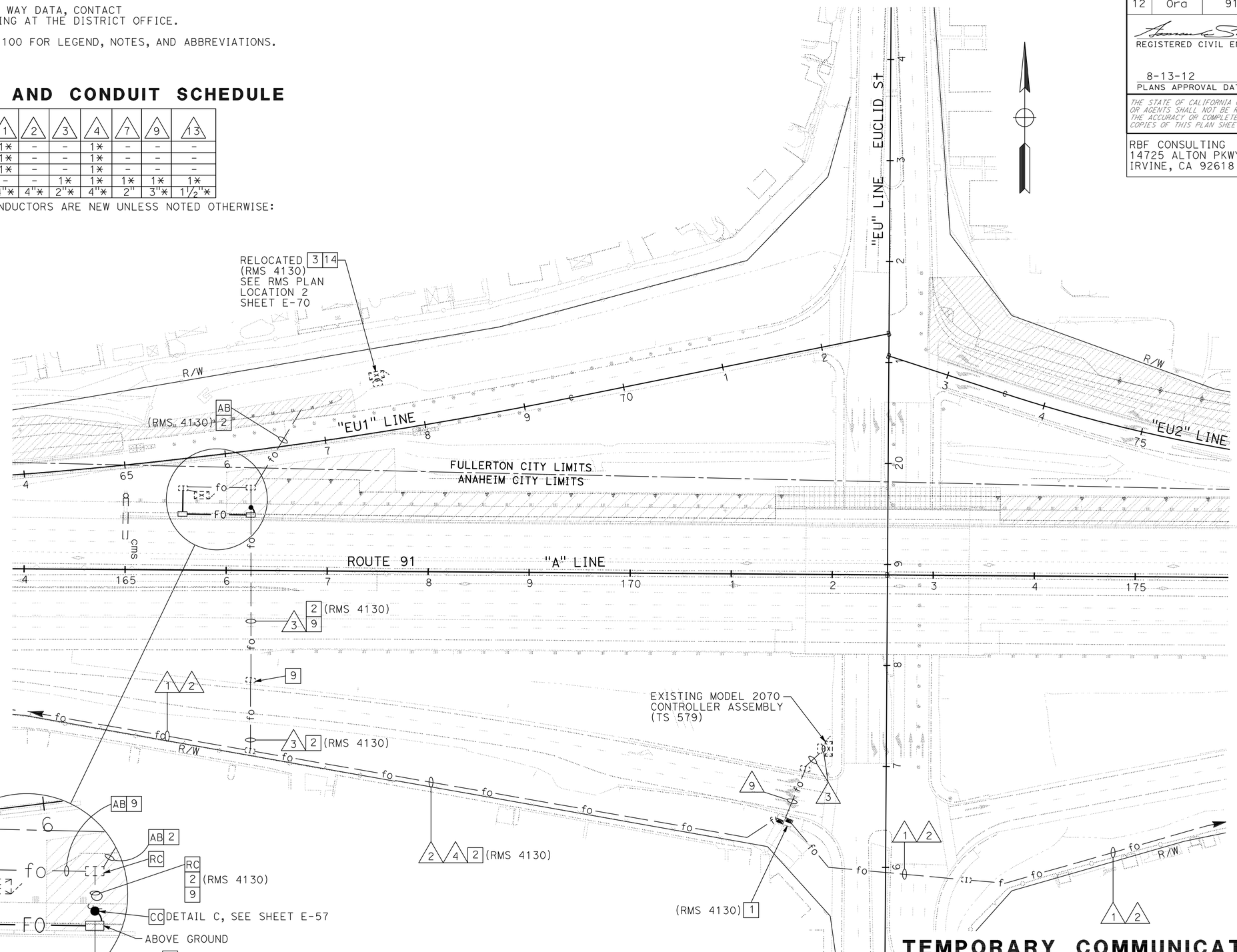

TEMPORARY COMMUNICATION SYSTEM

(STAGE 2A)

SCALE: 1" = 50'

APPROVED FOR ELECTRICAL WORK ONLY

E-118

STATE OF CALIFORNIA - DEPARTMENT OF TRANSPORTATION
Caltrans

CONSULTANT FUNCTIONAL SUPERVISOR: MIKE CHESNEY
CALCULATED-DESIGNED BY: ARMANDO SOLIS
CHECKED BY
REVISED BY
DATE REVISED

LAST REVISION DATE PLOTTED => 14-AUG-2012
06-08-10 TIME PLOTTED => 09:31

Dist	COUNTY	ROUTE	POST MILES TOTAL PROJECT	SHEET No.	TOTAL SHEETS
12	Ora	91	0.9/5.4	605	885

REGISTERED CIVIL ENGINEER 6/21/12 DATE

8-13-12
PLANS APPROVAL DATE

REGISTERED PROFESSIONAL ENGINEER ARMANDO SOLIS No. 72012 Exp. 6-30-14 CIVIL STATE OF CALIFORNIA

THE STATE OF CALIFORNIA OR ITS OFFICERS OR AGENTS SHALL NOT BE RESPONSIBLE FOR THE ACCURACY OR COMPLETENESS OF SCANNED COPIES OF THIS PLAN SHEET.

RBF CONSULTING
14725 ALTON PKWY
IRVINE, CA 92618

OCTA
550 S. MAIN STREET
ORANGE, CA 92863

NOTES:
1. FOR ACCURATE RIGHT OF WAY DATA, CONTACT RIGHT OF WAY ENGINEERING AT THE DISTRICT OFFICE.
2. SEE SHEET E-99 AND E-100 FOR LEGEND, NOTES, AND ABBREVIATIONS.

CONDUCTOR AND CONDUIT SCHEDULE

CONDUCTOR TYPE	1	2	3	9	18	20	21	22
TYPE A FOC	1*	-	-	-	-	1*	-	-
TYPE B FOC	1*	-	-	-	-	1*	-	-
TYPE C FOC	1*	-	-	-	-	1*	-	-
TYPE D FOC	-	-	1*	1*	1/1*	1/1*	1	1
CONDUIT SIZE	4"*	4"*	2"*	3"*	2"*	4"*	2"	2"*

ALL CONDUIT AND CONDUCTORS ARE NEW UNLESS NOTED OTHERWISE:
* = Exist

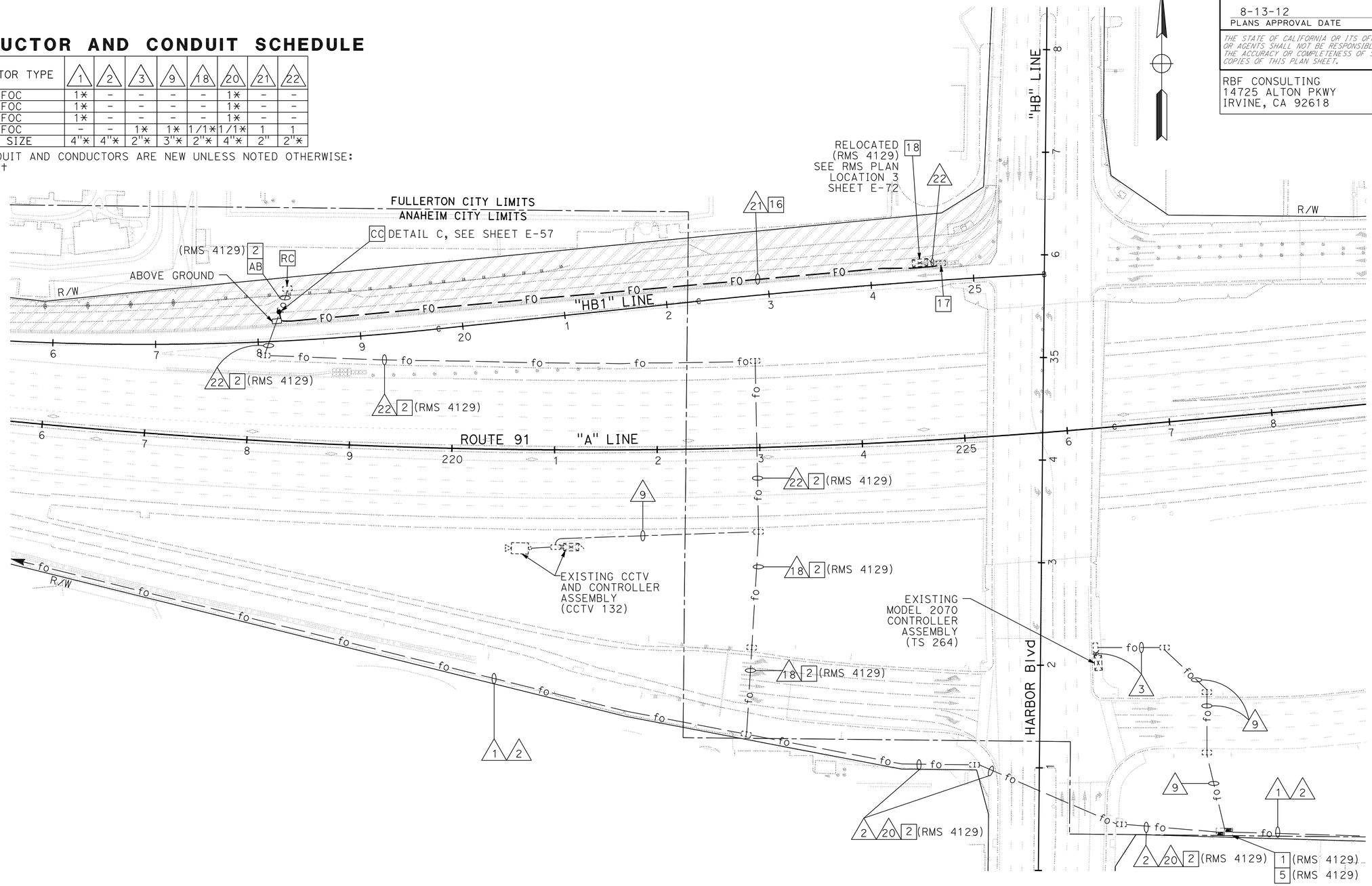

TEMPORARY COMMUNICATION SYSTEM
(STAGE 2A)
SCALE: 1" = 50'

E-119

APPROVED FOR ELECTRICAL WORK ONLY

STATE OF CALIFORNIA - DEPARTMENT OF TRANSPORTATION
Caltrans

CONSULTANT FUNCTIONAL SUPERVISOR: MIKE CHESNEY
CALCULATED-DESIGNED BY: ARMANDO SOLIS
CHECKED BY
REVISED BY: CASEY MURDIE
DATE REVISED

LAST REVISION 06-08-10
DATE PLOTTED => 14-AUG-2012
TIME PLOTTED => 09:31

Dist	COUNTY	ROUTE	POST MILES TOTAL PROJECT	SHEET No.	TOTAL SHEETS
12	Ora	91	0.9/5.4	606	885

REGISTERED CIVIL ENGINEER 6/21/12 DATE

8-13-12
PLANS APPROVAL DATE

REGISTERED PROFESSIONAL ENGINEER ARMANDO SOLIS No. 72012 Exp. 6-30-14 CIVIL STATE OF CALIFORNIA

THE STATE OF CALIFORNIA OR ITS OFFICERS OR AGENTS SHALL NOT BE RESPONSIBLE FOR THE ACCURACY OR COMPLETENESS OF SCANNED COPIES OF THIS PLAN SHEET.

RBF CONSULTING
14725 ALTON PKWY
IRVINE, CA 92618

OCTA
550 S. MAIN STREET
ORANGE, CA 92863

NOTES:

1. FOR ACCURATE RIGHT OF WAY DATA, CONTACT RIGHT OF WAY ENGINEERING AT THE DISTRICT OFFICE.
2. SEE SHEET E-99 AND E-100 FOR LEGEND, NOTES, AND ABBREVIATIONS.

CONDUCTOR AND CONDUIT SCHEDULE

CONDUCTOR TYPE	1	2	4
TYPE A FOC	1*	-	1*
TYPE B FOC	1*	-	1*
TYPE C FOC	1*	-	1*
TYPE D FOC	-	-	1*
CONDUIT SIZE	4"*	4"*	4"*

ALL CONDUIT AND CONDUCTORS ARE NEW UNLESS NOTED OTHERWISE:
* = Exist

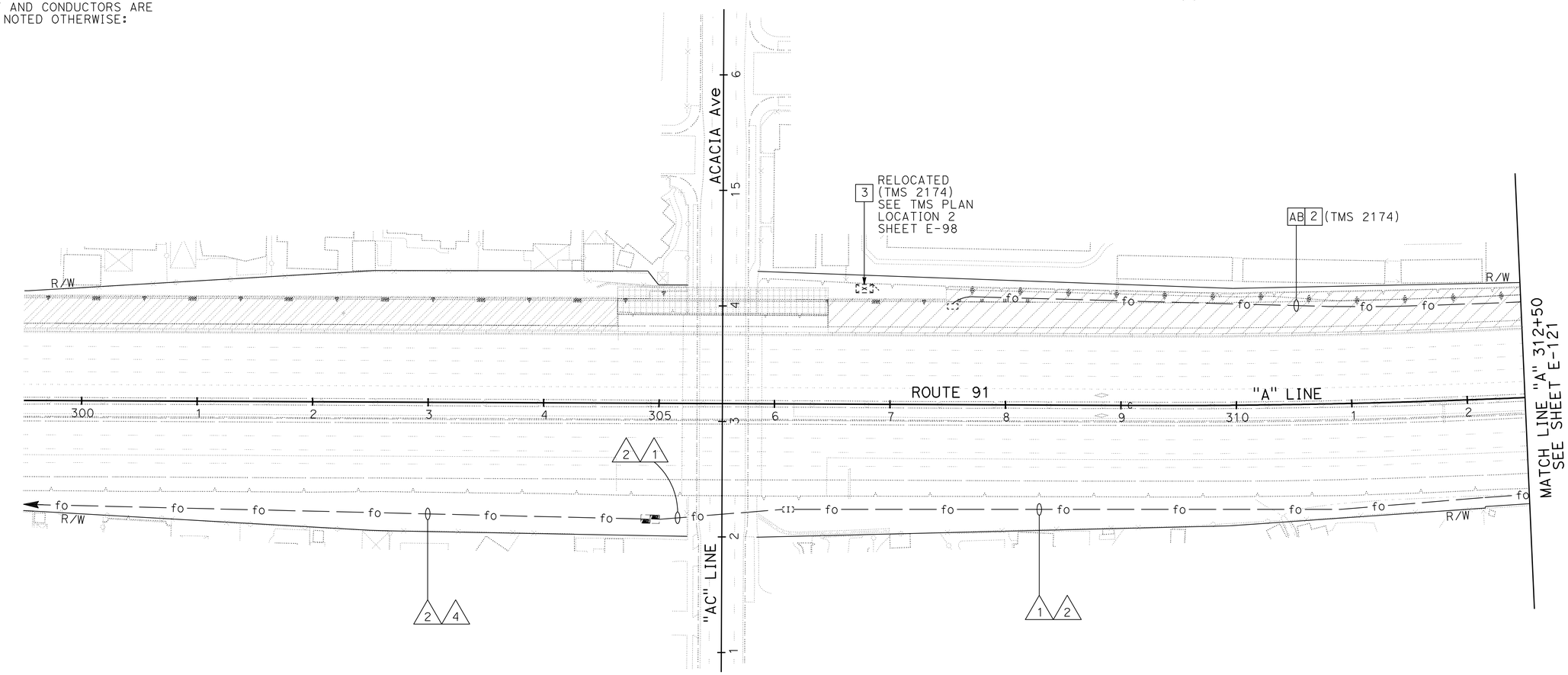

TEMPORARY COMMUNICATION SYSTEM

(STAGE 2A)

SCALE: 1" = 50'

E-120

APPROVED FOR ELECTRICAL WORK ONLY

STATE OF CALIFORNIA - DEPARTMENT OF TRANSPORTATION
Caltrans

CONSULTANT FUNCTIONAL SUPERVISOR: MIKE CHESNEY
CASEY MURDIE
ARMANDO SOLIS
CALCULATED-DESIGNED BY
CHECKED BY
REVISED BY
DATE REVISED

LAST REVISION 06-08-10
DATE PLOTTED => 14-AUG-2012
TIME PLOTTED => 08:37

BORDER LAST REVISED 7/2/2010
USERNAME => s114640
DGN FILE => 1200000079ua120.dgn
RELATIVE BORDER SCALE IS IN INCHES 0 1 2 3
UNIT 2295
PROJECT NUMBER & PHASE 12000000791

Dist	COUNTY	ROUTE	POST MILES TOTAL PROJECT	SHEET No.	TOTAL SHEETS
12	Ora	91	0.9/5.4	607	885

REGISTERED CIVIL ENGINEER 6/21/12 DATE

8-13-12
PLANS APPROVAL DATE

REGISTERED PROFESSIONAL ENGINEER ARMANDO SOLIS No. 72012 Exp. 6-30-14 CIVIL STATE OF CALIFORNIA

THE STATE OF CALIFORNIA OR ITS OFFICERS OR AGENTS SHALL NOT BE RESPONSIBLE FOR THE ACCURACY OR COMPLETENESS OF SCANNED COPIES OF THIS PLAN SHEET.

RBF CONSULTING
14725 ALTON PKWY
IRVINE, CA 92618

OCTA
550 S. MAIN STREET
ORANGE, CA 92863

NOTES:

1. FOR ACCURATE RIGHT OF WAY DATA, CONTACT RIGHT OF WAY ENGINEERING AT THE DISTRICT OFFICE.
2. SEE SHEET E-99 AND E-100 FOR LEGEND, NOTES, AND ABBREVIATIONS.

CONDUCTOR AND CONDUIT SCHEDULE

CONDUCTOR TYPE	1	2	36	37
TYPE A FOC	1*	-	-	-
TYPE B FOC	1*	-	-	-
TYPE C FOC	1*	-	-	-
TYPE B (TEMPORARY) FOC	-	-	1	1
TYPE C (TEMPORARY) FOC	-	-	1	1
CONDUIT SIZE	4"*	4"*	4"*	2"

ALL CONDUIT AND CONDUCTORS ARE NEW UNLESS NOTED OTHERWISE:
* = Exist

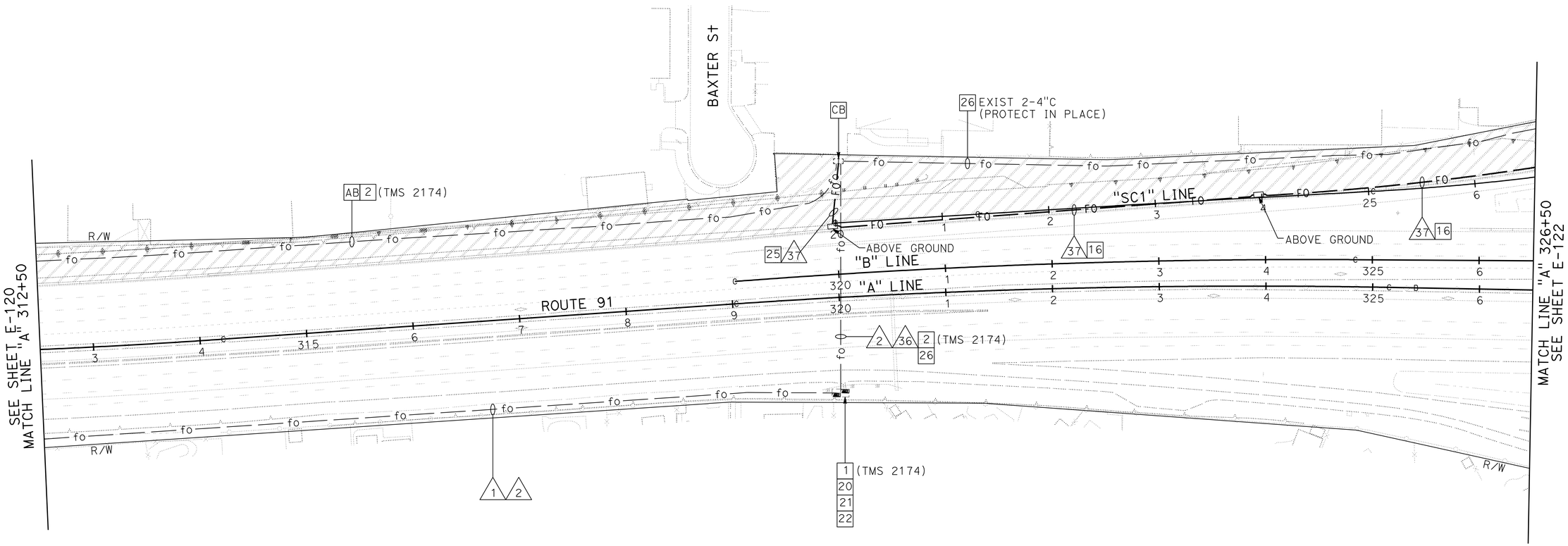

TEMPORARY COMMUNICATION SYSTEM

(STAGE 2A)

SCALE: 1" = 50'

E-121

APPROVED FOR ELECTRICAL WORK ONLY

STATE OF CALIFORNIA - DEPARTMENT OF TRANSPORTATION
Caltrans

CONSULTANT FUNCTIONAL SUPERVISOR: MIKE CHESNEY
CALCULATED-DESIGNED BY: ARMANDO SOLIS
CHECKED BY:
REVISED BY:
DATE REVISED:

LAST REVISION 06-08-10
DATE PLOTTED => 14-AUG-2012
TIME PLOTTED => 08:37

Dist	COUNTY	ROUTE	POST MILES TOTAL PROJECT	SHEET No.	TOTAL SHEETS
12	Ora	91	0.9/5.4	608	885

REGISTERED CIVIL ENGINEER 6/21/12 DATE

8-13-12
PLANS APPROVAL DATE

REGISTERED PROFESSIONAL ENGINEER ARMANDO SOLIS No. 72012 Exp. 6-30-14 CIVIL STATE OF CALIFORNIA

THE STATE OF CALIFORNIA OR ITS OFFICERS OR AGENTS SHALL NOT BE RESPONSIBLE FOR THE ACCURACY OR COMPLETENESS OF SCANNED COPIES OF THIS PLAN SHEET.

RBF CONSULTING
14725 ALTON PKWY
IRVINE, CA 92618

OCTA
550 S. MAIN STREET
ORANGE, CA 92863

NOTES:
1. FOR ACCURATE RIGHT OF WAY DATA, CONTACT RIGHT OF WAY ENGINEERING AT THE DISTRICT OFFICE.
2. SEE SHEET E-99 AND E-100 FOR LEGEND, NOTES, AND ABBREVIATIONS.

CONDUCTOR AND CONDUIT SCHEDULE

CONDUCTOR TYPE	1	2	3	4	8	10	13	29	37	39	40	41
TYPE A FOC	1*	-	-	1*	-	-	-	-	-	-	-	-
TYPE B FOC	1*	-	-	1*	-	-	-	-	-	-	-	-
TYPE C FOC	1*	-	-	1*	-	-	-	-	-	-	-	-
TYPE D FOC	-	-	1*	1*	1*	1*	1*	3*	-	1*	1*	1*
TYPE B (TEMPORARY) FOC	-	-	-	-	-	-	-	-	1	1	1	1
TYPE C (TEMPORARY) FOC	-	-	-	-	-	-	-	-	1	1	1	1
CONDUIT SIZE	4"*	4"*	2"*	4"*	2-3"*	2-3"*	1½"*	3"*	2"	2"	2"*	4"*

ALL CONDUIT AND CONDUCTORS ARE NEW UNLESS NOTED OTHERWISE:
* = Exist

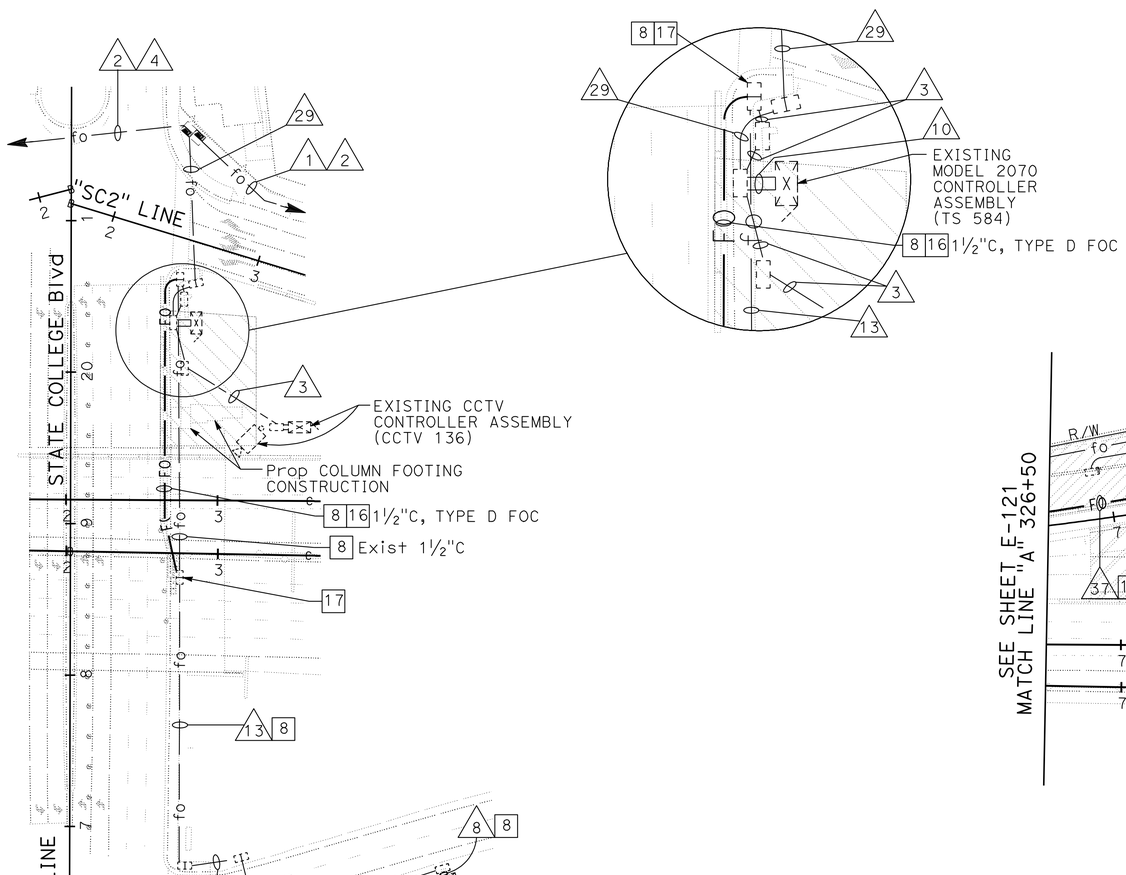

STAGE 2A.3

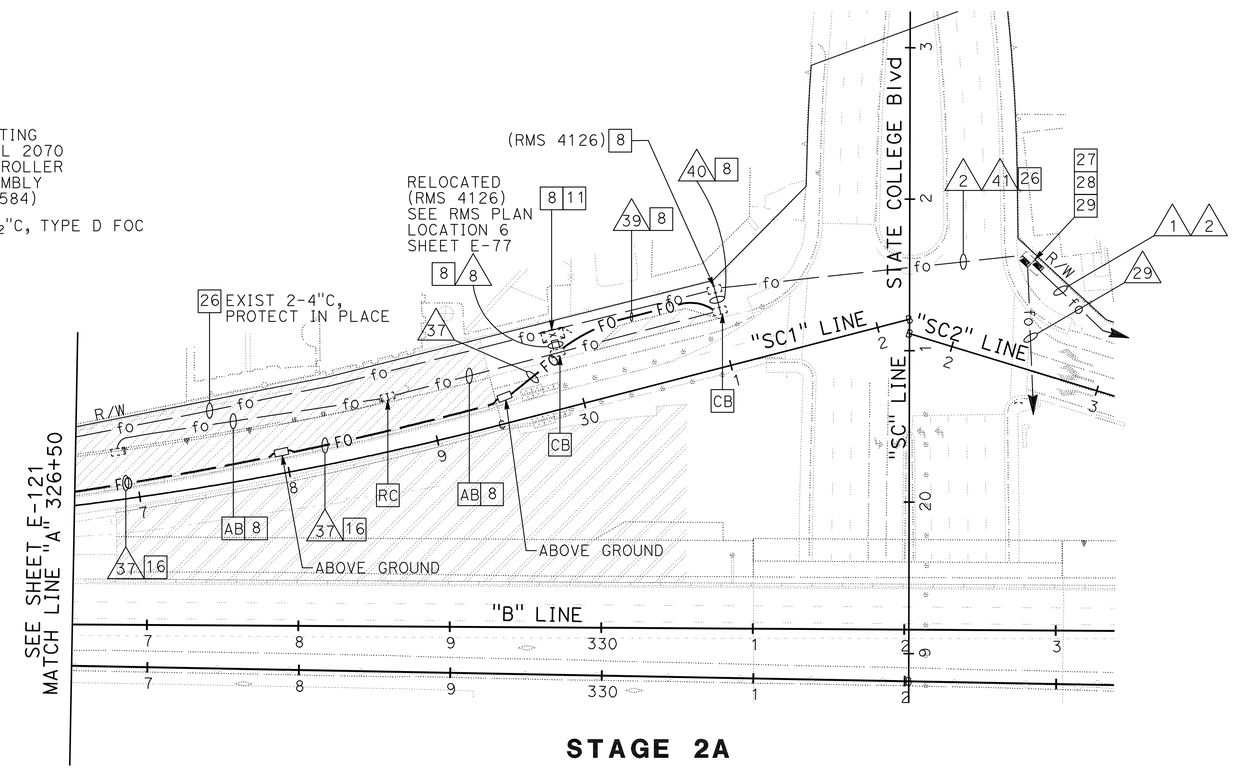

STAGE 2A

TEMPORARY COMMUNICATION SYSTEM
(STAGE 2A.3 & 2A)
SCALE: 1" = 50'

E-122

APPROVED FOR ELECTRICAL WORK ONLY

STATE OF CALIFORNIA - DEPARTMENT OF TRANSPORTATION
Caltrans
CONSULTANT FUNCTIONAL SUPERVISOR: MIKE CHESNEY
CALCULATED-DESIGNED BY: ARMANDO SOLIS
CHECKED BY
REVISED BY
DATE REVISED

LAST REVISION DATE PLOTTED => 14-AUG-2012
06-08-10 TIME PLOTTED => 08:37

Dist	COUNTY	ROUTE	POST MILES TOTAL PROJECT	SHEET No.	TOTAL SHEETS
12	Ora	91	0.9/5.4	609	885

REGISTERED CIVIL ENGINEER 6/21/12 DATE

8-13-12
PLANS APPROVAL DATE

REGISTERED PROFESSIONAL ENGINEER ARMANDO SOLIS No. 72012 Exp. 6-30-14 CIVIL STATE OF CALIFORNIA

THE STATE OF CALIFORNIA OR ITS OFFICERS OR AGENTS SHALL NOT BE RESPONSIBLE FOR THE ACCURACY OR COMPLETENESS OF SCANNED COPIES OF THIS PLAN SHEET.

RBF CONSULTING
14725 ALTON PKWY
IRVINE, CA 92618

OCTA
550 S. MAIN STREET
ORANGE, CA 92863

LEGEND (THIS SHEET):

*	- TEMPORARY GPRS RADIO
○	- Exist FO SPLICE
●	- PROPOSED FO SPLICE
——	- Exist CABLE(S)
——	- NEW CABLE(S)
×	- TERMINATED

NOTE:

FOR NOTES AND ABBREVIATIONS, SEE SHEETS E-99 AND E-100.

TEMPORARY COMMUNICATION SYSTEM

(ROUTE 91 FIELD ELEMENTS SCHEMATIC)

NO SCALE

APPROVED FOR ELECTRICAL WORK ONLY

E-123

STATE OF CALIFORNIA - DEPARTMENT OF TRANSPORTATION
Caltrans

CONSULTANT FUNCTIONAL SUPERVISOR: MIKE CHESNEY
CALCULATED-DESIGNED BY: CASEY MURDIE
CHECKED BY: ARMANDO SOLIS
REVISED BY
DATE REVISED

LAST REVISION DATE PLOTTED => 14-AUG-2012
06-08-10 TIME PLOTTED => 08:37

Dist	COUNTY	ROUTE	POST MILES TOTAL PROJECT	SHEET No.	TOTAL SHEETS
12	Ora	91	0.9/5.4	610	885

REGISTERED CIVIL ENGINEER 6/21/12 DATE

8-13-12
PLANS APPROVAL DATE

REGISTERED PROFESSIONAL ENGINEER ARMANDO SOLIS No. 72012 Exp. 6-30-14 CIVIL STATE OF CALIFORNIA

THE STATE OF CALIFORNIA OR ITS OFFICERS OR AGENTS SHALL NOT BE RESPONSIBLE FOR THE ACCURACY OR COMPLETENESS OF SCANNED COPIES OF THIS PLAN SHEET.

RBF CONSULTING
14725 ALTON PKWY
IRVINE, CA 92618

OCTA
550 S. MAIN STREET
ORANGE, CA 92863

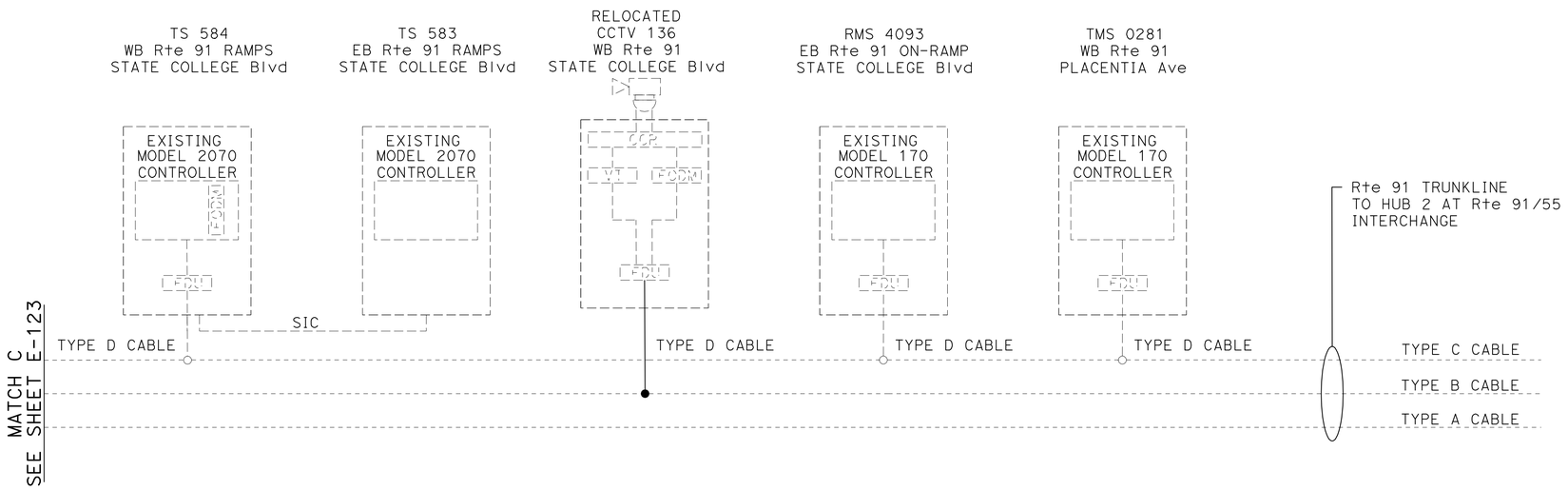

LEGEND (THIS SHEET):

- ○ - Exist FO SPLICE
- ● - PROPOSED FO SPLICE
- —— - Exist CABLE(S)
- —— - NEW CABLE(S)

NOTE:

FOR NOTES AND ABBREVIATIONS, SEE SHEETS E-99 AND E-100.

TEMPORARY COMMUNICATION SYSTEM

(ROUTE 91 FIELD ELEMENTS SCHEMATIC)

NO SCALE

APPROVED FOR ELECTRICAL WORK ONLY

E-124

STATE OF CALIFORNIA - DEPARTMENT OF TRANSPORTATION
Caltrans

CONSULTANT FUNCTIONAL SUPERVISOR: MIKE CHESNEY
CASEY MURDIE
ARMANDO SOLIS
CALCULATED-DESIGNED BY
CHECKED BY
REVISED BY
DATE REVISED

LAST REVISION 06-08-10
DATE PLOTTED => 14-AUG-2012
TIME PLOTTED => 08:37

Dist	COUNTY	ROUTE	POST MILES TOTAL PROJECT	SHEET No.	TOTAL SHEETS
12	Ora	91	0.9/5.4	611	885

REGISTERED CIVIL ENGINEER 6/21/12 DATE

8-13-12
PLANS APPROVAL DATE

REGISTERED PROFESSIONAL ENGINEER ARMANDO SOLIS No. 72012 Exp. 6-30-14 CIVIL STATE OF CALIFORNIA

THE STATE OF CALIFORNIA OR ITS OFFICERS OR AGENTS SHALL NOT BE RESPONSIBLE FOR THE ACCURACY OR COMPLETENESS OF SCANNED COPIES OF THIS PLAN SHEET.

RBF CONSULTING
14725 ALTON PKWY
IRVINE, CA 92618

OCTA
550 S. MAIN STREET
ORANGE, CA 92863

EXISTING 334 CABINET

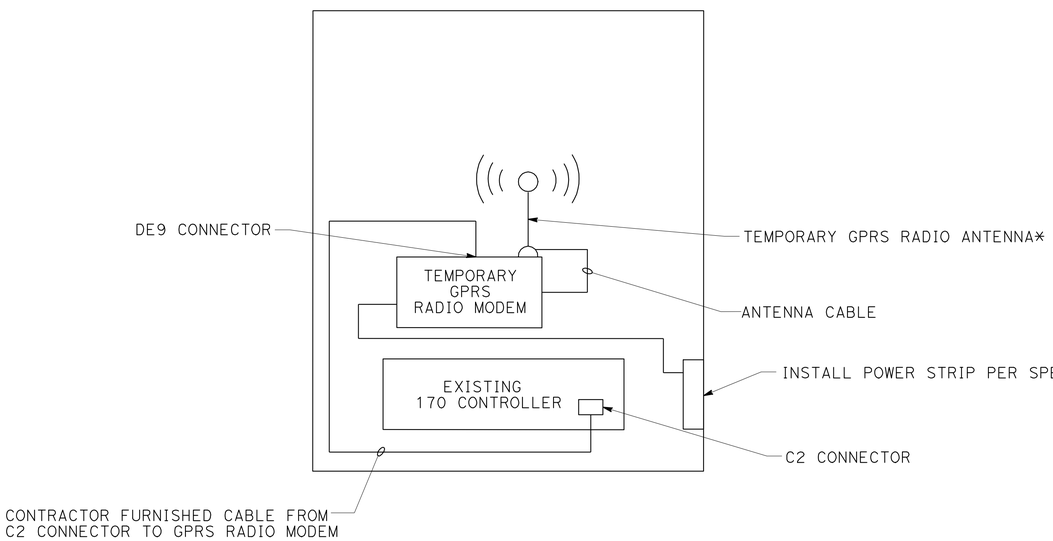

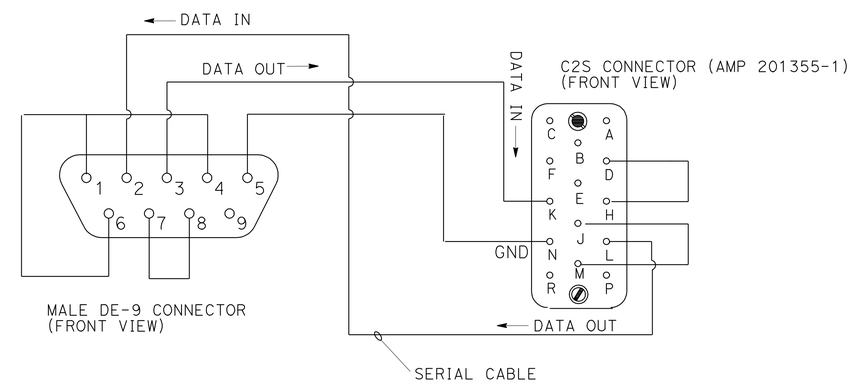

GPRS FIELD MODEM TO MODEL 170 CONNECTOR DETAIL

* MOUNTING OF TEMPORARY ANTENNA, INTERNAL OR EXTERNAL, TO CABINET SHALL BE DETERMINED BASED ON MANUFACURER'S REQUIREMENTS AND A SIGNAL STRENGTH ANALYSIS CONDUCTED BY CONTRACTOR IN THE FIELD.

NOTE:
FOR NOTES AND ABBREVIATIONS, SEE SHEETS E-99 AND E-100.

TEMPORARY COMMUNICATION SYSTEM
(GPRS MODEM DETAIL)
NO SCALE

E-125

APPROVED FOR ELECTRICAL WORK ONLY

STATE OF CALIFORNIA - DEPARTMENT OF TRANSPORTATION
Caltrans

CONSULTANT FUNCTIONAL SUPERVISOR: MIKE CHESNEY
CALCULATED-DESIGNED BY: CASEY MURDIE
CHECKED BY: ARMANDO SOLIS
REVISED BY
DATE REVISED

LAST REVISION 06-08-10
DATE PLOTTED => 14-AUG-2012
TIME PLOTTED => 08:37

Dist	COUNTY	ROUTE	POST MILES TOTAL PROJECT	SHEET No.	TOTAL SHEETS
12	Ora	91	0.9/5.4	612	885

REGISTERED CIVIL ENGINEER 6/21/12 DATE

8-13-12
PLANS APPROVAL DATE

REGISTERED PROFESSIONAL ENGINEER ARMANDO SOLIS No. 72012 Exp. 6-30-14 CIVIL STATE OF CALIFORNIA

THE STATE OF CALIFORNIA OR ITS OFFICERS OR AGENTS SHALL NOT BE RESPONSIBLE FOR THE ACCURACY OR COMPLETENESS OF SCANNED COPIES OF THIS PLAN SHEET.

RBF CONSULTING
14725 ALTON PKWY
IRVINE, CA 92618

OCTA
550 S. MAIN STREET
ORANGE, CA 92863

REVISED BY	DATE REVISED

CALCULATED-DESIGNED BY	CHECKED BY
CASEY MURDIE	ARMANDO SOLIS

CONSULTANT FUNCTIONAL SUPERVISOR: MIKE CHESNEY

STATE OF CALIFORNIA - DEPARTMENT OF TRANSPORTATION

Caltrans

TYPE B CABLE (ROUTE 91 FO MAINLINE)
FROM DATA NODE 6 (BROOKHURST St) TO CABLE NODE 3 (ROUTE 57/91 INTERCHANGE)

FIBER No.	EXISTING DATA NODE 6 CCTV 40	CCTV 168	CCTV 132	CCTV 169	CCTV 134	■ * CCTV 136	CCTV 133	EXISTING CABLE NODE 3 ROUTE 57/91 INTERCHANGE	FIBER No.	REMARKS
1	X>							<X>	1	
2		X>						<X>	2	
3			X>					<X>	3	
4				X>				<X>	4	
5					X>			<X>	5	Exist VIDEO
6						X>		<X>	6	
7							X>	<X>	7	
8-11								<O>	8-11	
12-14								<O>	12-14	
15-36								<O>	15-36	VIDEO - FUTURE
37-38	<X X>	<X>	<X>	<X>	<X>	<X>	<X>	<X>	37-38	Exist CCR 10 TO HUB 2
39-42								<O>	39-42	CCR - FUTURE
43	<O>	<O>	<O>	<O>	<O>	<O>	<O>	<O>	43	Exist VOICE
44-72								<O>	44-72	FUTURE

FOR REFERENCE ONLY
Exist TO REMAIN IN PLACE

FOR REFERENCE ONLY
Exist TO REMAIN IN PLACE

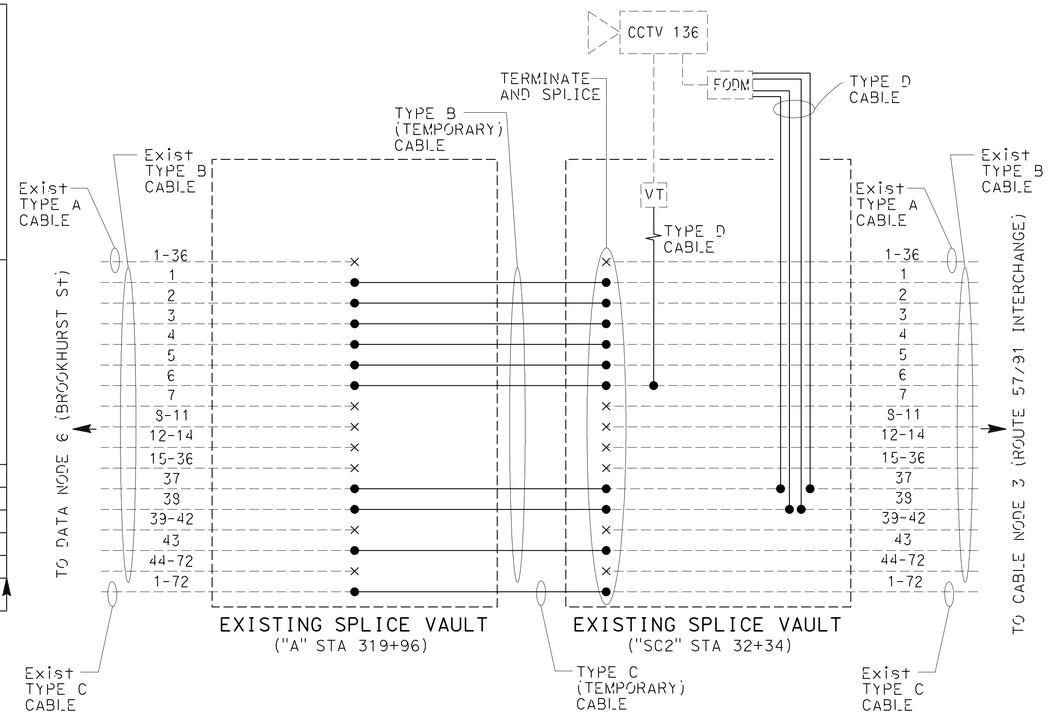

PROPOSED TYPE D CABLE TERMINATIONS AND CCTV DROP AND REPLACEMENT DETAILS (ROUTE 91 FO MAINLINE)

LEGEND (THIS SHEET):

X - TERMINATED ACTIVE
O - TERMINATED SPARE
< > - ARROW POINTS TO THE DIRECTION OF TRANSMISSION
* - TERMINATE NEW TYPE D CABLE TO EXISTING TYPE B CABLE
■ - DURING TEMPORARY CONDITIONS CCTV ELEMENTS SHALL BE TERMINATED TO EXISTING FIBER ASSIGNMENTS AND MAINTAINED THROUGHOUT CONSTRUCTION
● - PROPOSED FO SPLICE
——— - Exist CABLE(S)
——— - NEW CABLE(S)
× - TERMINATED

NOTE:

FOR NOTES AND ABBREVIATIONS, SEE SHEETS E-99 AND E-100.

TEMPORARY COMMUNICATION SYSTEM

(TYPE B CABLE FIBER ASSIGNMENT TABLE, TYPE D CABLE TERMINATIONS, CCTV DROP, AND TYPE B (TEMPORARY) CABLE REPLACEMENT DETAIL)

NO SCALE

E-126

APPROVED FOR ELECTRICAL WORK ONLY

LAST REVISION DATE PLOTTED => 14-AUG-2012
06-08-10 TIME PLOTTED => 08:37

Dist	COUNTY	ROUTE	POST MILES TOTAL PROJECT	SHEET No.	TOTAL SHEETS
12	Ora	91	0.9/5.4	613	885

REGISTERED CIVIL ENGINEER 6/21/12 DATE

8-13-12
PLANS APPROVAL DATE

REGISTERED PROFESSIONAL ENGINEER ARMANDO SOLIS No. 72012 Exp. 6-30-14 CIVIL STATE OF CALIFORNIA

THE STATE OF CALIFORNIA OR ITS OFFICERS OR AGENTS SHALL NOT BE RESPONSIBLE FOR THE ACCURACY OR COMPLETENESS OF SCANNED COPIES OF THIS PLAN SHEET.

RBF CONSULTING
14725 ALTON PKWY
IRVINE, CA 92618

OCTA
550 S. MAIN STREET
ORANGE, CA 92863

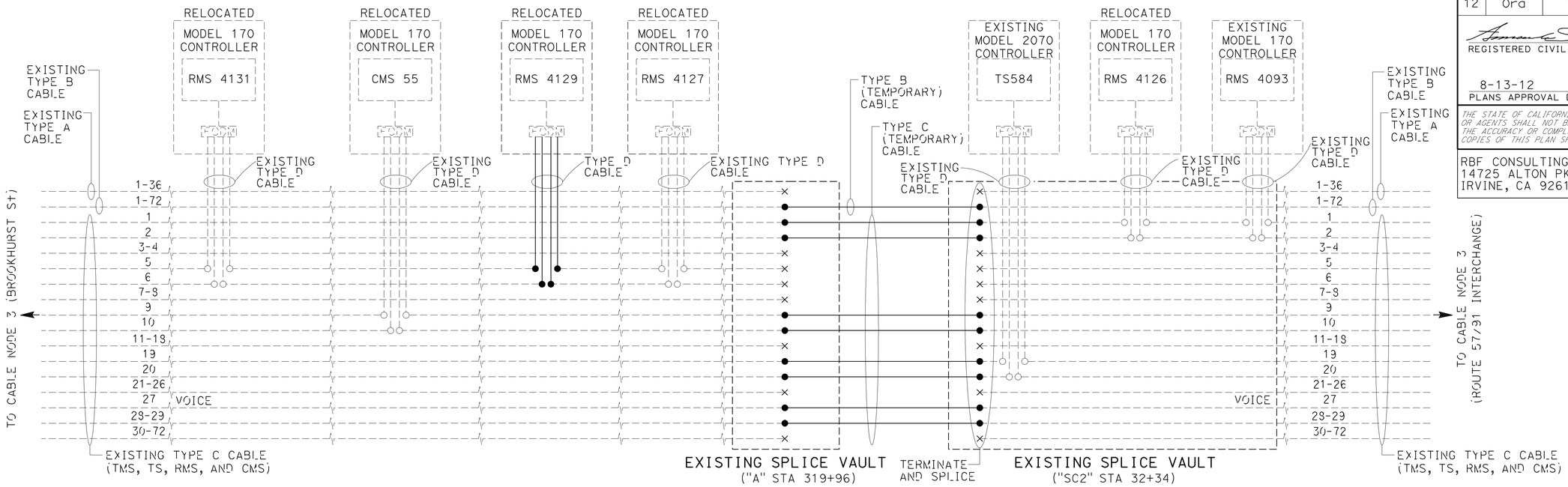

PROPOSED TYPE C CABLE TERMINATIONS AND RMS AND CMS DROP DETAIL (ROUTE 91 FO MAINLINE)

TYPE C CABLE (ROUTE 91 FO MAINLINE) FROM DATA NODE 6 (BROOKHURST St) TO CABLE NODE 3 (ROUTE 57/91 INTERCHANGE)

FIBER No.	EXISTING DATA NODE 6 (BROOKHURST St)	■ RMS 4131	TS-BROOKHURST	RMS 4088	■ CMS 55	TS-EUCLID	RMS 4089	■ RMS 4129	TS-HARBOR	TS-LEMON	RMS 4118	■ RMS 4127	TS-RAYMOND	RMS 4092	CMS 81	■ RMS 4126	TS-STATE COLLEGE	RMS 4093	TMS 0281	TMS 2376	Exist CABLE NODE 3 (57/91 INTERCHANGE)	FIBER No.	REMARKS
1-2	<X O>															<X>		<X>	<X>	<X>	<X>	1-2	TMS 9 TO HUB 2
3-4	O>																				<O>	3-4	TMS 10 TO HUB 2
5-6	X>	<X>		<X>			<X>	<X>			<X>	<X>		<X							<O>	5-6	TMS 36
7-8	O>																				<O>	7-8	FUTURE
9-10	O>				X>										<X>						<X>	9-10	CMS 13 TO HUB 2
11-18	O>																				<O>	11-18	FUTURE
19-20	X>		<X>			<X>			<X>	<X>			<X>				<X>				<X>	19-20	TS 13 (FUTURE) TO HUB 2
21-22	O>																				<O>	21-22	TS (FUTURE)
23-26	O>																				<O>	23-26	FUTURE
27	<O>	<O>	<O>	<O>	<O>	<O>	<O>	<O>	<O>	<O>	<O>	<O>	<O>	<O>	<O>	<O>	<O>	<O>	<O>	<O>	<O>	27	VOICE
28-29	X>																				<X>	28-29	DN 6 (DMUX) TO HUB 2
30-72	O>																				<O	30-72	FUTURE

FOR REFERENCE ONLY Exist TO REMAIN IN PLACE

FOR REFERENCE ONLY Exist TO REMAIN IN PLACE

FOR REFERENCE ONLY Exist TO REMAIN IN PLACE

FOR REFERENCE ONLY Exist TO REMAIN IN PLACE

FOR REFERENCE ONLY Exist TO REMAIN IN PLACE

FOR REFERENCE ONLY Exist TO REMAIN IN PLACE

LEGEND (THIS SHEET):

X - TERMINATED ACTIVE
O - TERMINATED SPARE
< > - ARROW POINTS TO THE DIRECTION OF TRANSMISSION
■ - DURING TEMPORARY CONDITIONS RMS AND CMS ELEMENTS SHALL BE TERMINATED TO EXISTING FIBER ASSIGNMENTS AND MAINTAINED THROUGHOUT CONSTRUCTION
○ - Exist FO SPLICE
● - PROPOSED FO SPLICE
—— - Exist CABLE(S)
—— - NEW CABLE(S)
× - TERMINATED

NOTE:

FOR NOTES AND ABBREVIATIONS, SEE SHEETS E-99 AND E-100.

TEMPORARY COMMUNICATION SYSTEM

(TYPE C CABLE FIBER ASSIGNMENT TABLE, EXISTING TYPE D CABLE TERMINATIONS, AND TYPE C (TEMPORARY) CABLE REPLACEMENT DETAIL)

NO SCALE

APPROVED FOR ELECTRICAL WORK ONLY

E-127

STATE OF CALIFORNIA - DEPARTMENT OF TRANSPORTATION
Caltrans

CONSULTANT FUNCTIONAL SUPERVISOR: MIKE CHESNEY
CASEY MURDIE
ARMANDO SOLIS
CALCULATED-DESIGNED BY
CHECKED BY
REVISED BY
DATE REVISED

LAST REVISION 06-08-10
DATE PLOTTED => 14-AUG-2012
TIME PLOTTED => 08:37

Dist	COUNTY	ROUTE	POST MILES TOTAL PROJECT	SHEET No.	TOTAL SHEETS
12	Ora	91	0.9/5.4	614	885

REGISTERED CIVIL ENGINEER 6/21/12 DATE

8-13-12
PLANS APPROVAL DATE

REGISTERED PROFESSIONAL ENGINEER ARMANDO SOLIS No. 72012 Exp. 6-30-14 CIVIL STATE OF CALIFORNIA

THE STATE OF CALIFORNIA OR ITS OFFICERS OR AGENTS SHALL NOT BE RESPONSIBLE FOR THE ACCURACY OR COMPLETENESS OF SCANNED COPIES OF THIS PLAN SHEET.

RBF CONSULTING
14725 ALTON PKWY
IRVINE, CA 92618

OCTA
550 S. MAIN STREET
ORANGE, CA 92863

NOTE:

FOR NOTES AND ABBREVIATIONS, SEE SHEETS E-99 AND E-100.

LEGEND (THIS SHEET):

- ● - PROPOSED FO SPLICE
- —— - Exist CABLE(S)
- —— - NEW CABLE(S)

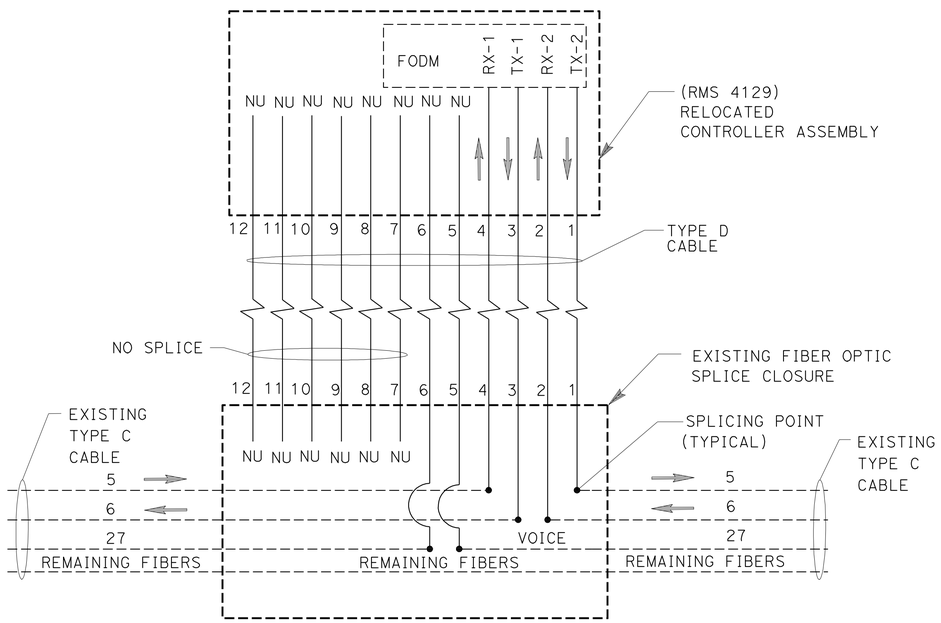

CONNECTION OF TYPE D TO EXISTING TYPE C FOR RMS SITE AT EXISTING SPLICE VAULT ("A" STA 227+18)

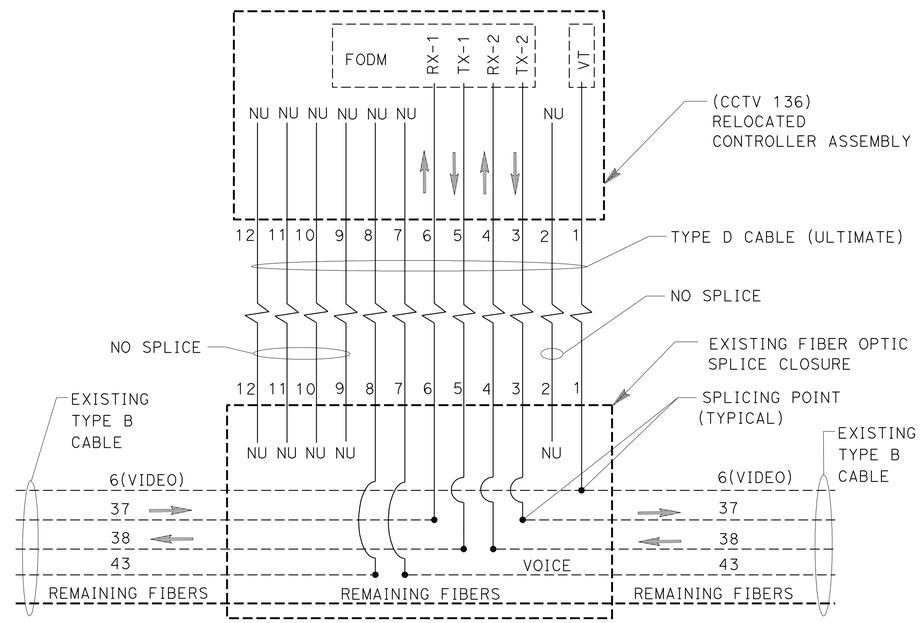

CONNECTION OF TYPE D TO EXISTING TYPE B AT CCTV SITE AT EXISTING SPLICE VAULT ("SC2" STA 32+34)

TEMPORARY COMMUNICATION SYSTEM

(FIBER OPTIC SPLICING DETAIL TYPE D TO TYPE B AND TYPE C)

NO SCALE

E-128

APPROVED FOR ELECTRICAL WORK ONLY

STATE OF CALIFORNIA - DEPARTMENT OF TRANSPORTATION
Caltrans

CONSULTANT FUNCTIONAL SUPERVISOR: MIKE CHESNEY
CALCULATED-DESIGNED BY: ARMANDO SOLIS
CHECKED BY
REVISED BY: CASEY MURDIE
DATE REVISED

LAST REVISION 06-08-10
DATE PLOTTED => 14-AUG-2012
TIME PLOTTED => 08:37

Dist	COUNTY	ROUTE	POST MILES TOTAL PROJECT	SHEET No.	TOTAL SHEETS
12	Ora	91	0.9/5.4	615	885

REGISTERED CIVIL ENGINEER 6/21/12 DATE

8-13-12
PLANS APPROVAL DATE

REGISTERED PROFESSIONAL ENGINEER ARMANDO SOLIS No. 72012 Exp. 6-30-14 CIVIL STATE OF CALIFORNIA

THE STATE OF CALIFORNIA OR ITS OFFICERS OR AGENTS SHALL NOT BE RESPONSIBLE FOR THE ACCURACY OR COMPLETENESS OF SCANNED COPIES OF THIS PLAN SHEET.

RBF CONSULTING
14725 ALTON PKWY
IRVINE, CA 92618

OCTA
550 S. MAIN STREET
ORANGE, CA 92863

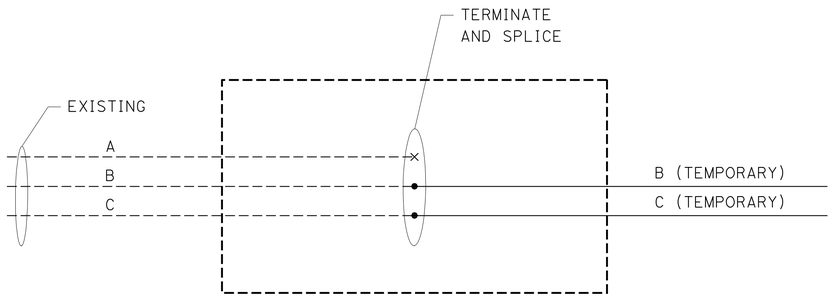

CONNECTION OF EXISTING TYPE B AND C TO TYPE B (TEMPORARY) AND C (TEMPORARY) AT EXISTING SPLICE VAULT ("A" STA 319+96)

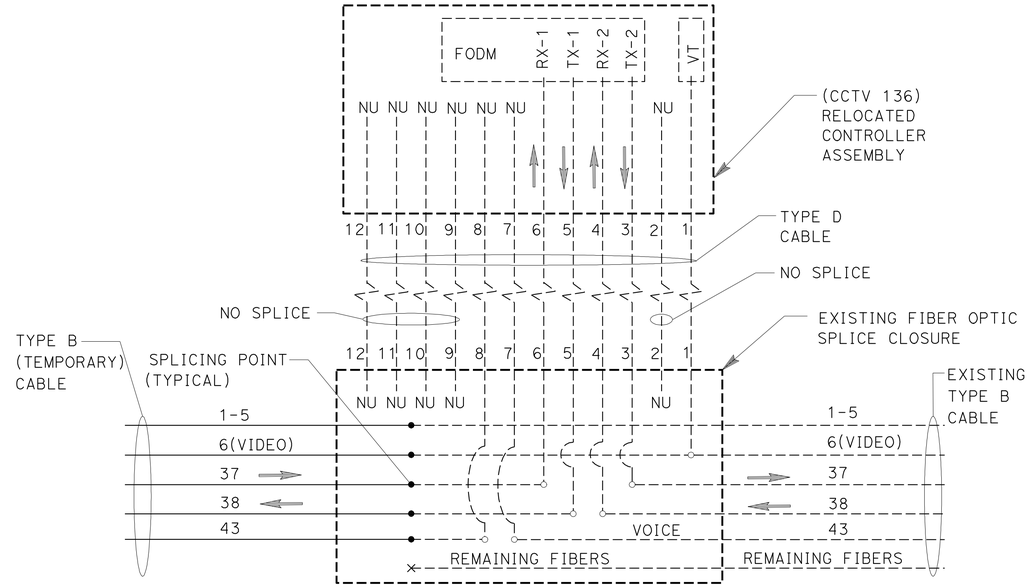

CONNECTION OF TYPE B (TEMPORARY) TO EXISTING TYPE B AT EXISTING SPLICE VAULT ("SC2" STA 32+34)

NOTE:

FOR NOTES AND ABBREVIATIONS, SEE SHEETS E-99 AND E-100.

LEGEND (THIS SHEET):

- ○ - Exist FO SPLICE
- ● - PROPOSED FO SPLICE
- —— - Exist CABLE(S)
- —— - NEW CABLE(S)
- × - TERMINATED

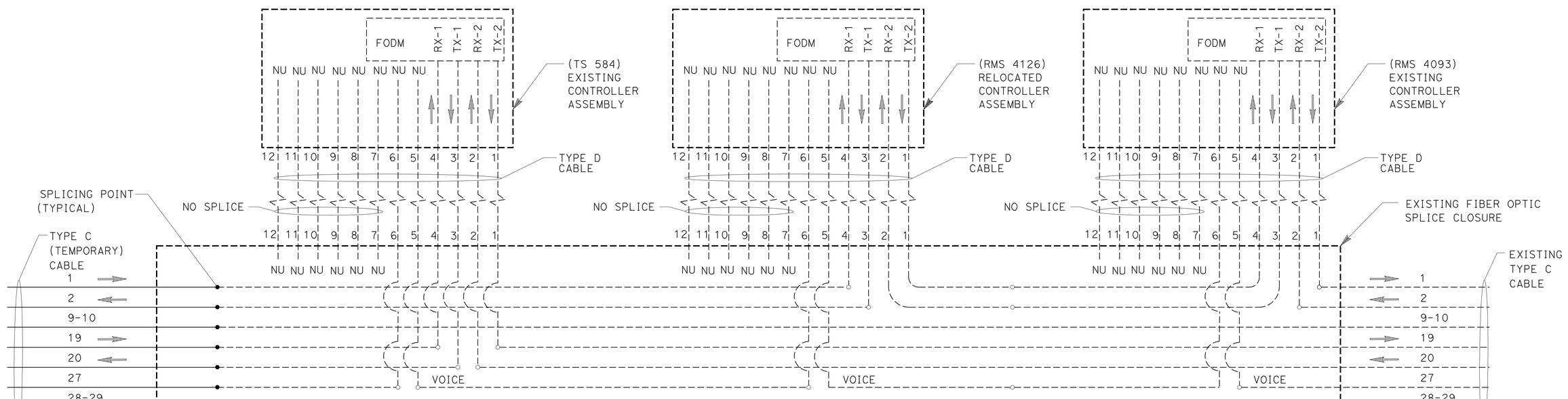

CONNECTION OF TYPE C (TEMPORARY) TO EXISTING TYPE C AT EXISTING SPLICE VAULT ("SC2" STA 32+34)

TEMPORARY COMMUNICATION SYSTEM

(FIBER OPTIC SPLICING DETAIL TYPE B (TEMPORARY) AND TYPE C (TEMPORARY) TO EXISTING TYPE B AND TYPE C)

NO SCALE

APPROVED FOR ELECTRICAL WORK ONLY

E-129

REVISED BY | DATE REVISED
CASEY MURDIE | ARMANDO SOLIS
CALCULATED-DESIGNED BY | CHECKED BY
CONSULTANT FUNCTIONAL SUPERVISOR | MIKE CHESNEY
STATE OF CALIFORNIA - DEPARTMENT OF TRANSPORTATION
Caltrans

LAST REVISION 06-08-10 | DATE PLOTTED => 14-AUG-2012 | TIME PLOTTED => 08:37

Dist	COUNTY	ROUTE	POST MILES TOTAL PROJECT	SHEET No.	TOTAL SHEETS
12	Ora	91	0.9/5.4	616	885

REGISTERED CIVIL ENGINEER 6/21/12 DATE

8-13-12
PLANS APPROVAL DATE

REGISTERED PROFESSIONAL ENGINEER ARMANDO SOLIS No. 72012 Exp. 6-30-14 CIVIL STATE OF CALIFORNIA

THE STATE OF CALIFORNIA OR ITS OFFICERS OR AGENTS SHALL NOT BE RESPONSIBLE FOR THE ACCURACY OR COMPLETENESS OF SCANNED COPIES OF THIS PLAN SHEET.

RBF CONSULTING
14725 ALTON PKWY
IRVINE, CA 92618

OCTA
550 S. MAIN STREET
ORANGE, CA 92863

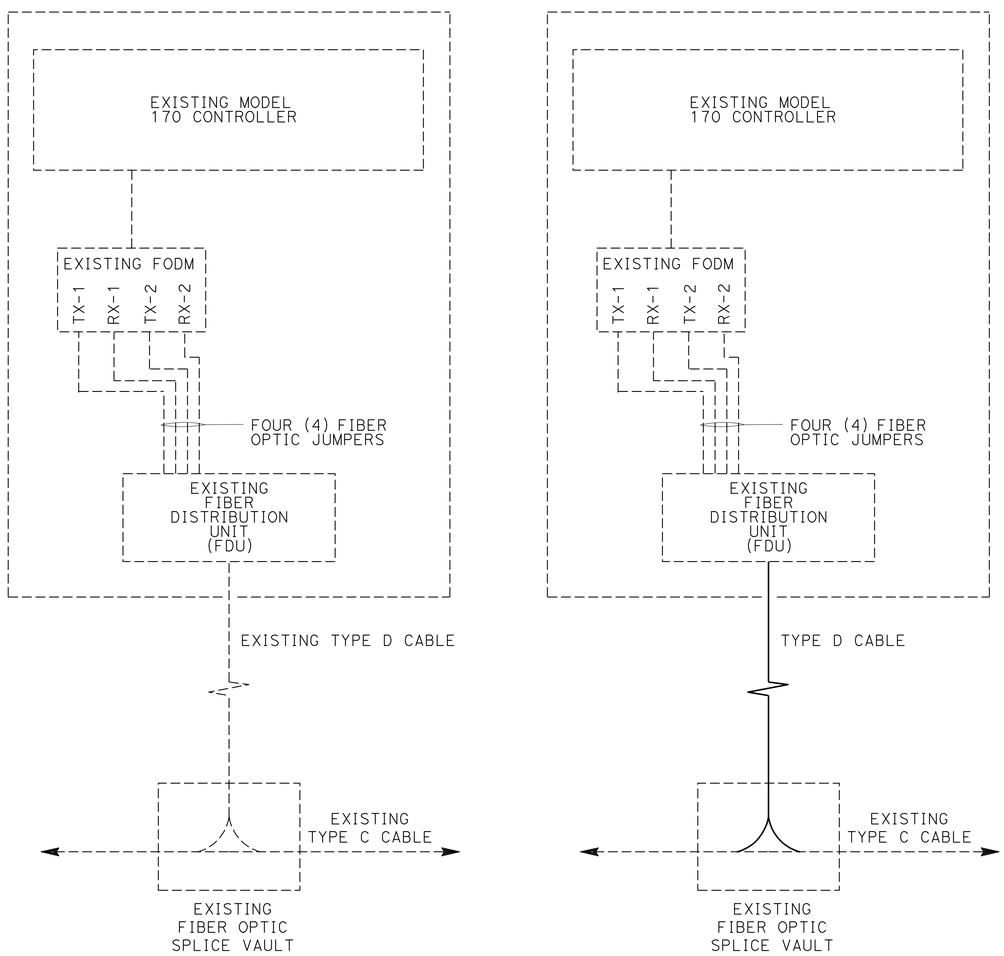

SCHEMATIC FOR RMS 4131, CMS 55, RMS 4127 AND RMS 4126

SCHEMATIC FOR RMS 4129

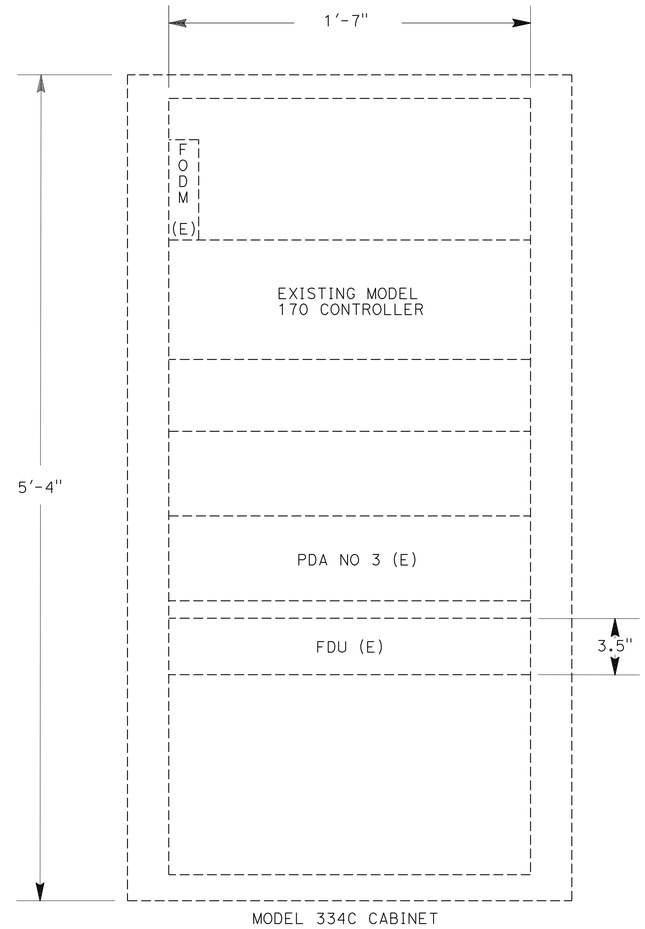

EQUIPMENT RACK LAYOUT

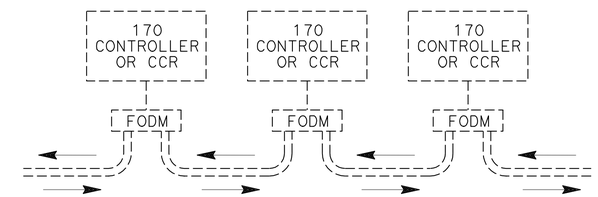

TYPICAL CONNECTION OF FIELD CONTROLLERS WITH SMFO

LEGEND (THIS SHEET):

TX-1 : TRANSMIT FIBER IN DIRECTION OF MASTER FODM
RX-1 : RECEIVE FIBER IN DIRECTION OF MASTER FODM
TX-2 : TRANSMIT FIBER IN OPPOSITE DIRECTION OF MASTER FODM
RX-2 : RECEIVE FIBER IN OPPOSITE DIRECTION OF MASTER FODM
(E) : EXISTING
—— : Exist CABLE(S)
—— : NEW CABLE(S)

NOTE:

FOR NOTES AND ABBREVIATIONS, SEE SHEETS E-99 AND E-100.

TEMPORARY COMMUNICATION SYSTEM
(CONTROLLER INTERFACE)

NO SCALE

APPROVED FOR ELECTRICAL WORK ONLY

E-130

STATE OF CALIFORNIA - DEPARTMENT OF TRANSPORTATION
Caltrans

CONSULTANT FUNCTIONAL SUPERVISOR: MIKE CHESNEY
CALCULATED-DESIGNED BY: ARMANDO SOLIS
CHECKED BY
REVISED BY
DATE REVISED
CASEY MURDIE

LAST REVISION 06-08-10
DATE PLOTTED => 14-AUG-2012
TIME PLOTTED => 08:37

Dist	COUNTY	ROUTE	POST MILES TOTAL PROJECT	SHEET No.	TOTAL SHEETS
12	Ora	91	0.9/5.4	617	885

REGISTERED CIVIL ENGINEER 6/21/12 DATE

8-13-12
PLANS APPROVAL DATE

REGISTERED PROFESSIONAL ENGINEER ARMANDO SOLIS No. 72012 Exp. 6-30-14 CIVIL STATE OF CALIFORNIA

THE STATE OF CALIFORNIA OR ITS OFFICERS OR AGENTS SHALL NOT BE RESPONSIBLE FOR THE ACCURACY OR COMPLETENESS OF SCANNED COPIES OF THIS PLAN SHEET.

RBF CONSULTING
14725 ALTON PKWY
IRVINE, CA 92618

OCTA
550 S. MAIN STREET
ORANGE, CA 92863

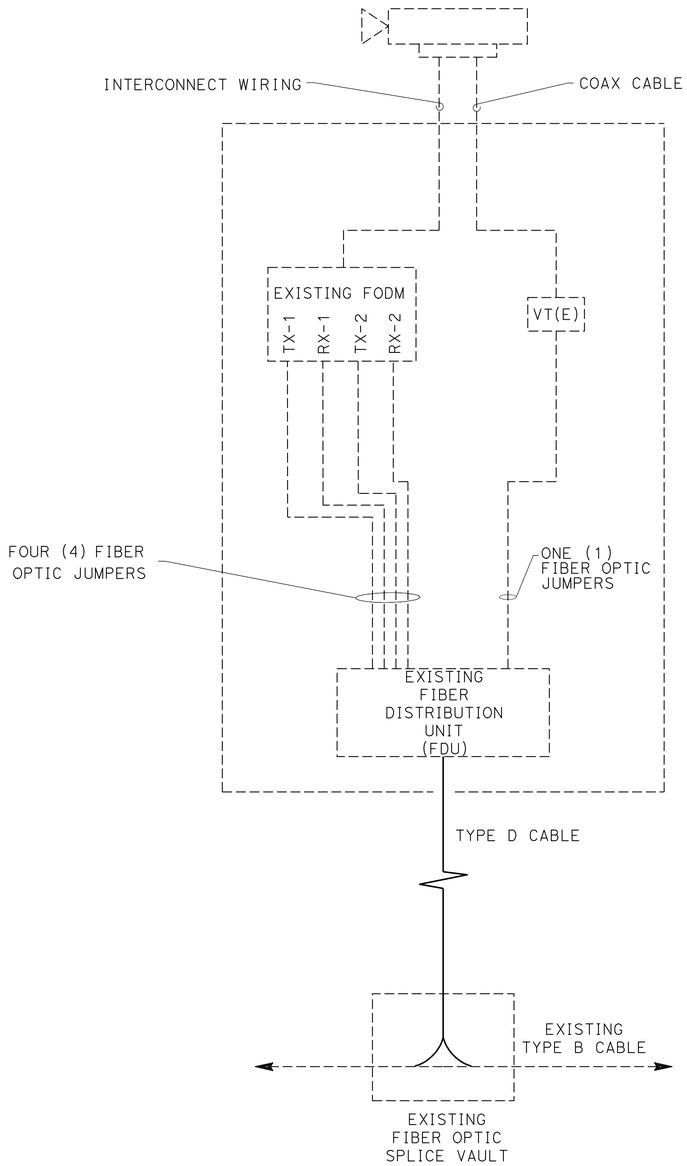

TYPICAL DETAIL RELOCATED CCTV 136

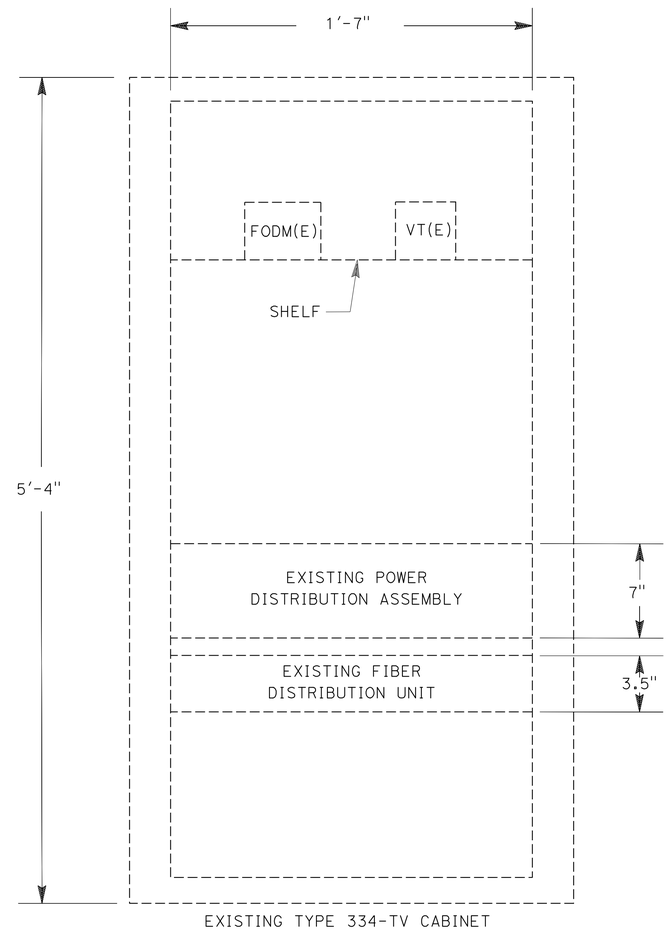

EXISTING EQUIPMENT RACK LAYOUT

LEGEND (THIS SHEET):

TX-1 : TRANSMIT FIBER IN DIRECTION OF MASTER FODM
RX-1 : RECEIVE FIBER IN DIRECTION OF MASTER FODM
TX-2 : TRANSMIT FIBER IN OPPOSITE DIRECTION OF MASTER FODM
RX-2 : RECEIVE FIBER IN OPPOSITE DIRECTION OF MASTER FODM
(E): EXISTING

NOTE:

FOR NOTES AND ABBREVIATIONS, SEE SHEETS E-99 AND E-100.

TEMPORARY COMMUNICATION SYSTEM
(CCTV INTERFACE)

NO SCALE

APPROVED FOR ELECTRICAL WORK ONLY

E-131

STATE OF CALIFORNIA - DEPARTMENT OF TRANSPORTATION
Caltrans

CONSULTANT FUNCTIONAL SUPERVISOR: MIKE CHESNEY
CALCULATED-DESIGNED BY: CASEY MURDIE
CHECKED BY: ARMANDO SOLIS
REVISED BY
DATE REVISED

LAST REVISION 06-08-10
DATE PLOTTED => 14-AUG-2012
TIME PLOTTED => 08:37

Dist	COUNTY	ROUTE	POST MILES TOTAL PROJECT	SHEET No.	TOTAL SHEETS
12	Ora	91	0.9/5.4	618	885

REGISTERED CIVIL ENGINEER

April 20, 2012
PLANS APPROVAL DATE

REGISTERED PROFESSIONAL ENGINEER
Roberta L. McLaughlin
No. C40375
Exp. 3-31-13
CIVIL
STATE OF CALIFORNIA

THE STATE OF CALIFORNIA OR ITS OFFICERS OR AGENTS SHALL NOT BE RESPONSIBLE FOR THE ACCURACY OR COMPLETENESS OF SCANNED COPIES OF THIS PLAN SHEET.

TO ACCOMPANY PLANS DATED 8-13-12

2010 REVISED STANDARD PLAN RSP A24A

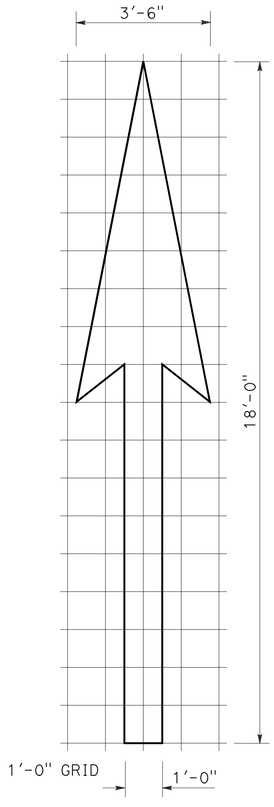

A=25 ft^2

TYPE I 18'-0" ARROW

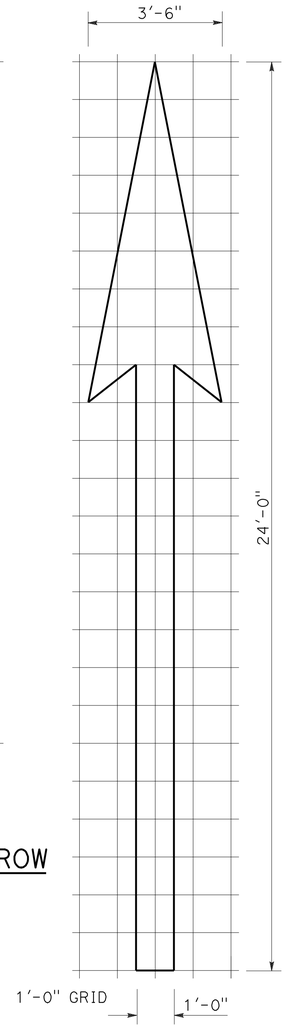

A=31 ft^2

TYPE I 24'-0" ARROW

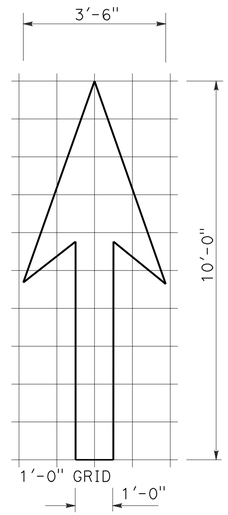

A=14 ft^2

TYPE I 10'-0" ARROW

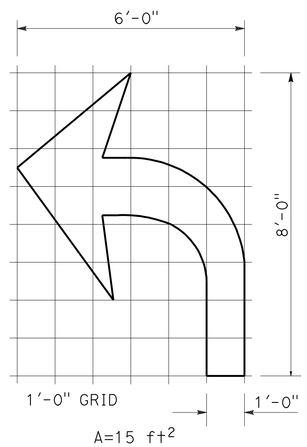

A=15 ft^2

TYPE IV (L) ARROW

(For Type IV (R) arrow, use mirror image)

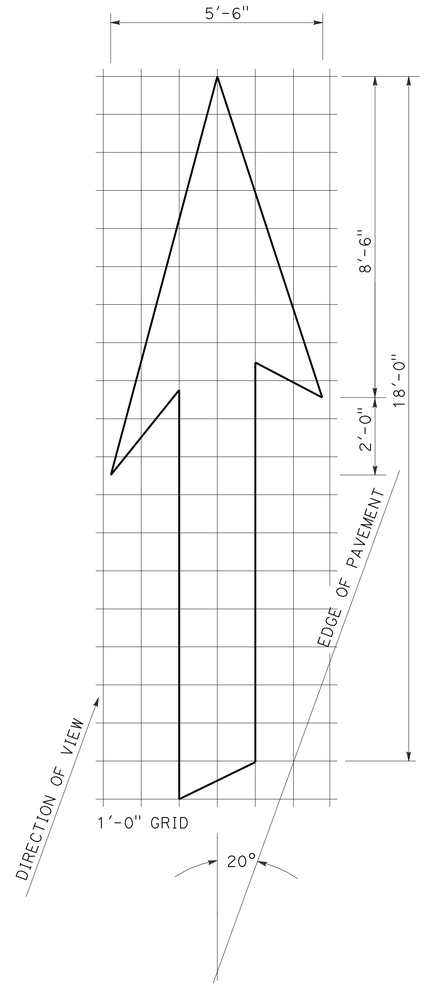

A=42 ft^2

TYPE VI ARROW

Right lane drop arrow
(For left lane, use mirror image)

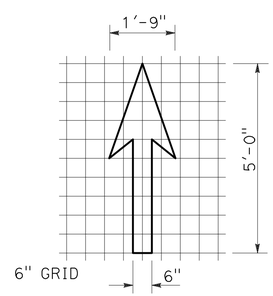

A=3.5 ft^2

BIKE LANE ARROW

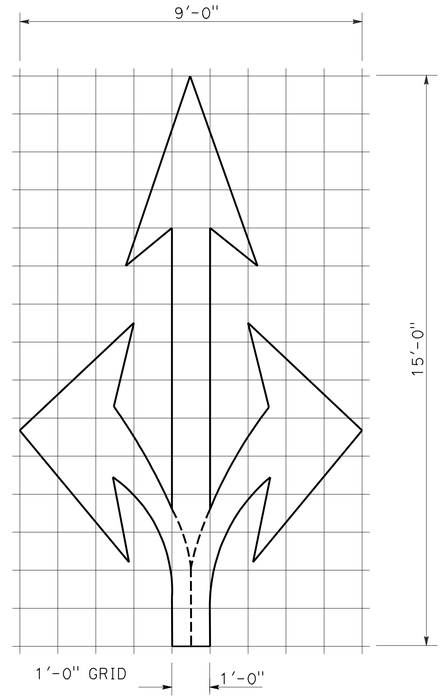

A=36 ft^2

TYPE VIII ARROW

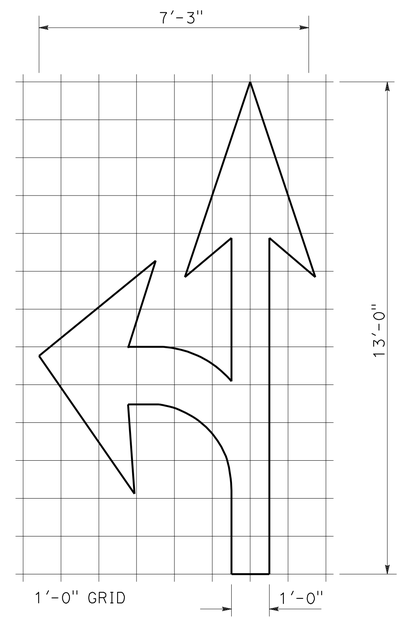

A=27 ft^2

TYPE VII (L) ARROW

(For Type VII (R) arrow, use mirror image)

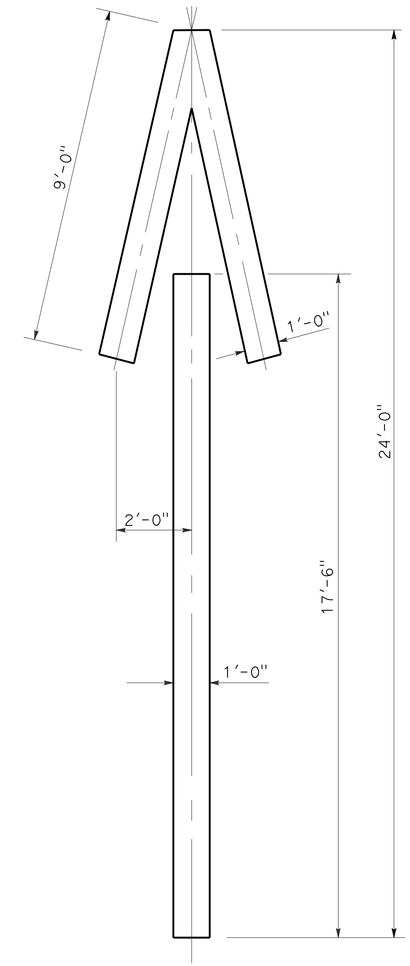

A=33 ft^2

TYPE V ARROW

NOTE:
Minor variations in dimensions may be accepted by the Engineer.

STATE OF CALIFORNIA
DEPARTMENT OF TRANSPORTATION

PAVEMENT MARKINGS ARROWS

NO SCALE

RSP A24A DATED APRIL 20, 2012 SUPERSEDES STANDARD PLAN A24A DATED MAY 20, 2011 - PAGE 13 OF THE STANDARD PLANS BOOK DATED 2010.

REVISED STANDARD PLAN RSP A24A

3-14-12

Dist	COUNTY	ROUTE	POST MILES TOTAL PROJECT	SHEET No.	TOTAL SHEETS
12	Ora	91	0.9/5.4	619	885

REGISTERED CIVIL ENGINEER

July 20, 2012
PLANS APPROVAL DATE

REGISTERED PROFESSIONAL ENGINEER
Roberta L. McLaughlin
No. C40375
Exp. 3-31-13
CIVIL
STATE OF CALIFORNIA

THE STATE OF CALIFORNIA OR ITS OFFICERS OR AGENTS SHALL NOT BE RESPONSIBLE FOR THE ACCURACY OR COMPLETENESS OF SCANNED COPIES OF THIS PLAN SHEET.

TO ACCOMPANY PLANS DATED 8-13-12

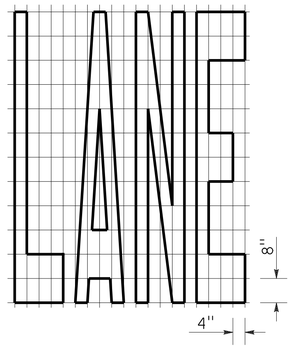

A=24 ft^2

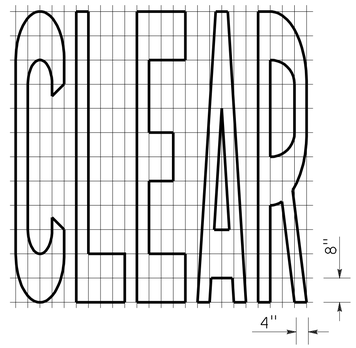

A=27 ft^2

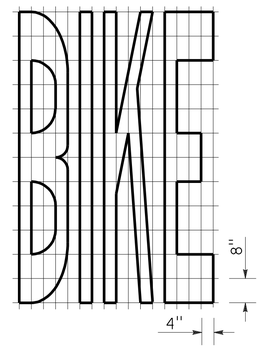

A=21 ft^2

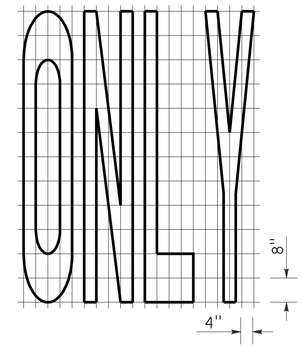

A=22 ft^2

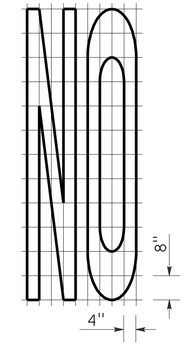

A=14 ft^2

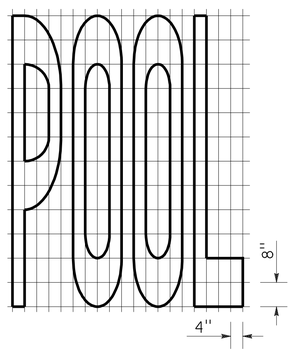

A=23 ft^2

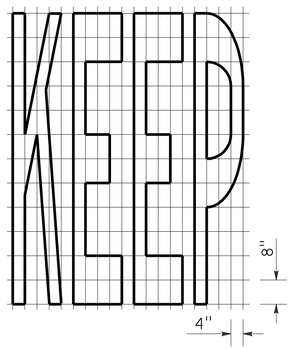

A=24 ft^2

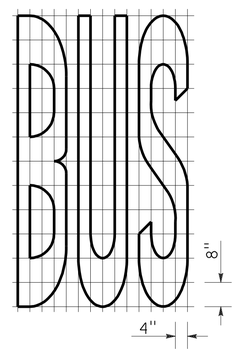

A=20 ft^2

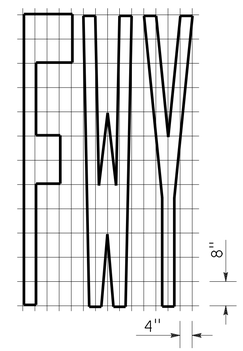

A=16 ft^2

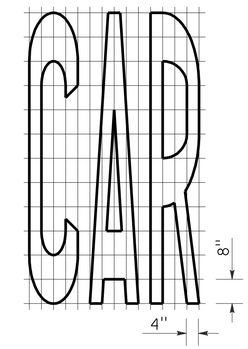

A=17 ft^2

WORD MARKINGS			
ITEM	ft^2	ITEM	ft^2
LANE	24	NO	14
POOL	23	BIKE	21
CAR	17	BUS	20
CLEAR	27	ONLY	22
KEEP	24	FWY	16

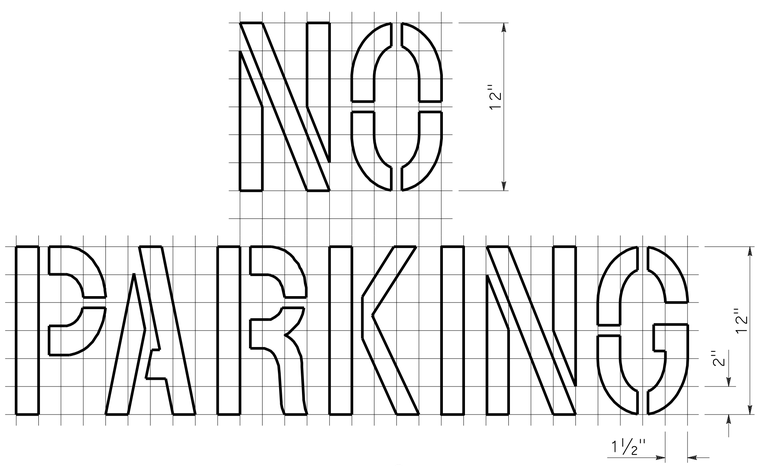

A=2 ft^2

See Notes 6 and 7

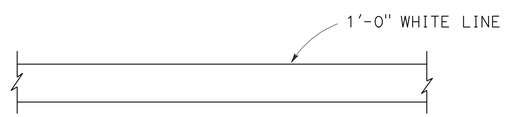

LIMIT LINE (STOP LINE)

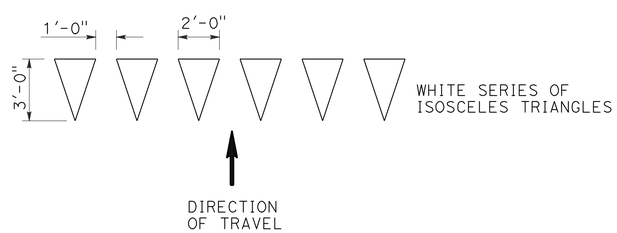

YIELD LINE

NOTES:

1. If a message consists of more than one word, it should read "UP", i.e., the first word should be nearest the driver.
2. The space between words should be at least four times the height of the characters for low speed roads, but not more than ten times the height of the characters. The space may be reduced appropriately where there is limited space because of local conditions.
3. Minor variations in dimensions may be accepted by the Engineer.
4. Portions of a letter, number or symbol may be separated by connecting segments not to exceed 2" in width.
5. The words "NO PARKING" pavement marking is to be used for parking facilities. For typical locations of markings, see Standard Plans A90A and A90B.
6. The words "NO PARKING", shall be painted in white letters no less than 1'-0" high on a contrasting background and located so that it is visible to traffic enforcement officials.

STATE OF CALIFORNIA
DEPARTMENT OF TRANSPORTATION

PAVEMENT MARKINGS WORDS, LIMIT AND YIELD LINES

NO SCALE

RSP A24E DATED JULY 20, 2012 SUPERSEDES STANDARD PLAN A24E
DATED MAY 20, 2011 - PAGE 17 OF THE STANDARD PLANS BOOK DATED 2010.

REVISED STANDARD PLAN RSP A24E

2010 REVISED STANDARD PLAN RSP A24E

6-12-12

Dist	COUNTY	ROUTE	POST MILES TOTAL PROJECT	SHEET No.	TOTAL SHEETS
12	Ora	91	0.9/5.4	620	885

REGISTERED CIVIL ENGINEER

July 20, 2012
PLANS APPROVAL DATE

REGISTERED PROFESSIONAL ENGINEER
Roberta L. McLaughlin
No. C40375
Exp. 3-31-13
CIVIL
STATE OF CALIFORNIA

THE STATE OF CALIFORNIA OR ITS OFFICERS OR AGENTS SHALL NOT BE RESPONSIBLE FOR THE ACCURACY OR COMPLETENESS OF SCANNED COPIES OF THIS PLAN SHEET.

TO ACCOMPANY PLANS DATED 8-13-12

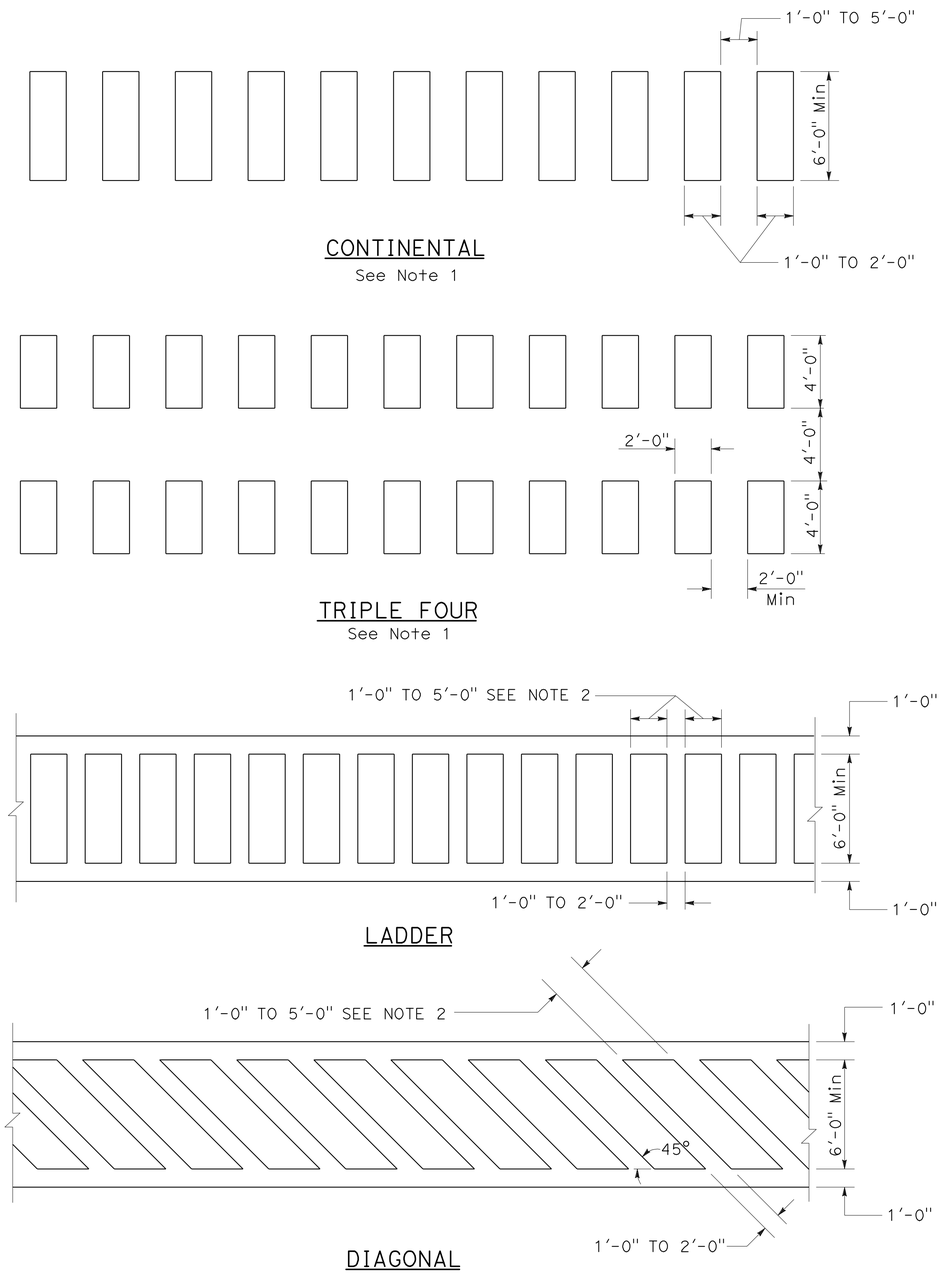

HIGHER VISIBILITY CROSSWALKS

NOTES:

1. Spaces between markings should be placed in wheel tracks of each lane.
2. Spacings not to exceed 2.5 times width of longitudinal line.
3. All crosswalk markings must be white except for those near schools must be yellow.

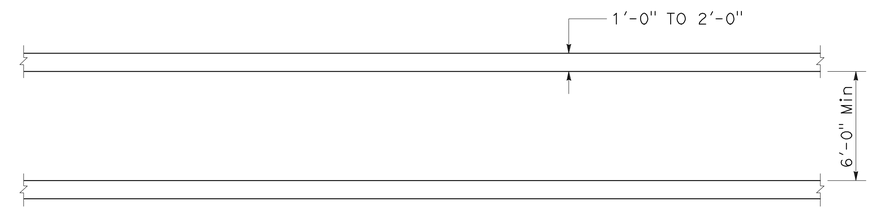

BASIC

STATE OF CALIFORNIA
DEPARTMENT OF TRANSPORTATION

PAVEMENT MARKINGS CROSSWALKS

NO SCALE

RSP A24F DATED JULY 20, 2012 SUPPLEMENTS THE STANDARD PLANS BOOK DATED 2010.

REVISED STANDARD PLAN RSP A24F

2010 REVISED STANDARD PLAN RSP A24F

6-28-12

Dist	COUNTY	ROUTE	POST MILES TOTAL PROJECT	SHEET No.	TOTAL SHEETS
12	Ora	91	0.9/5.4	621	885

REGISTERED CIVIL ENGINEER

April 20, 2012
PLANS APPROVAL DATE

REGISTERED PROFESSIONAL ENGINEER William K. Farnbach No. C49042 Exp. 9-30-12 CIVIL STATE OF CALIFORNIA

THE STATE OF CALIFORNIA OR ITS OFFICERS OR AGENTS SHALL NOT BE RESPONSIBLE FOR THE ACCURACY OR COMPLETENESS OF SCANNED COPIES OF THIS PLAN SHEET.

TO ACCOMPANY PLANS DATED 8-13-12

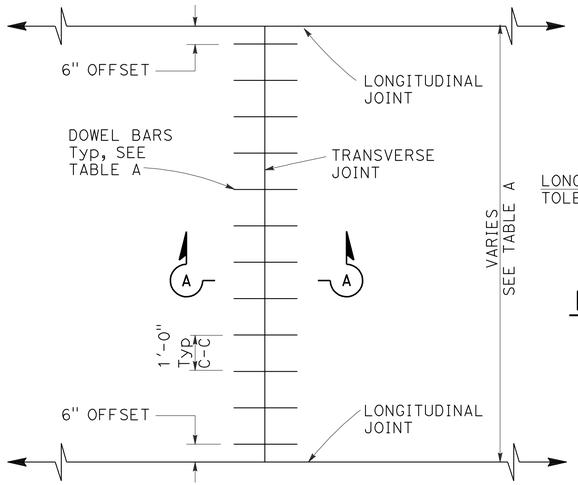

TRANSVERSE JOINT DOWEL BAR LAYOUT

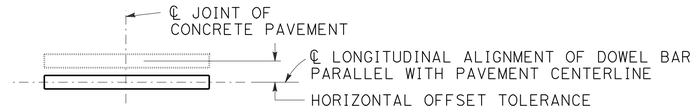

PLAN

HORIZONTAL OFFSET TOLERANCE

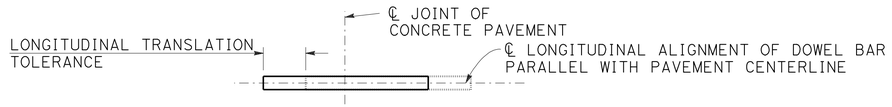

PLAN

LONGITUDINAL TRANSLATION TOLERANCE

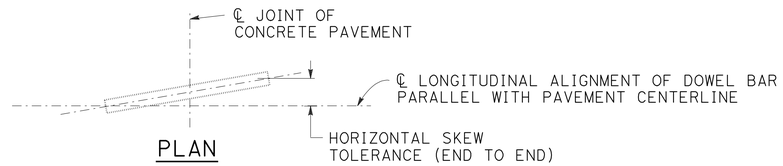

PLAN

HORIZONTAL SKEW TOLERANCE

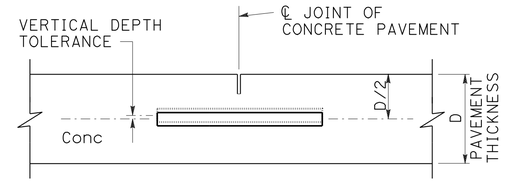

ELEVATION

VERTICAL DEPTH TOLERANCE

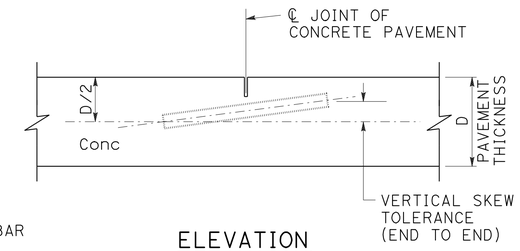

ELEVATION

VERTICAL SKEW TOLERANCE

NOTES:

1. See Standard Plan P1 for typical dowel bar placement and locations.
2. 1½" Dia dowel bars are to be used with a pavement thickness, D, equal to or greater than 0.70 feet. For pavement thickness, D, less than 0.70 feet, use 1¼" Dia dowel bars.
3. For widths not shown, see Project Plans.
4. If fresh concrete pavement is placed adjacent to existing concrete pavement, the top corner of the existing concrete pavement does not need to be rounded to the ¼" radius, as shown.
5. May also use ¾" Dia dowel bars 2'-4" ± ¼" in length. Center the length of dowel bars at the centerline of longitudinal joint.

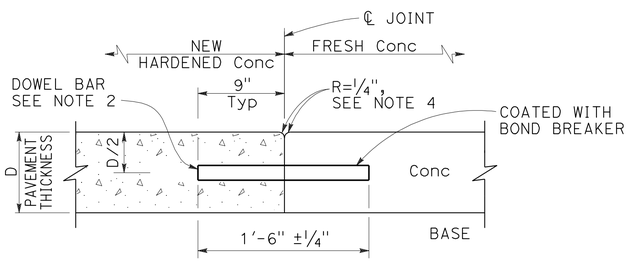

SECTION A-A

TRANSVERSE CONSTRUCTION JOINT DETAIL

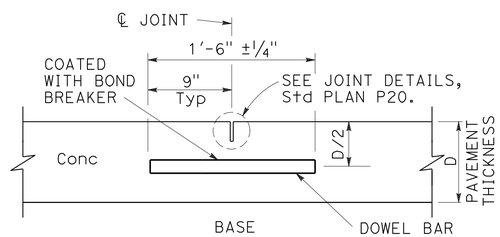

TRANSVERSE CONTRACTION JOINT

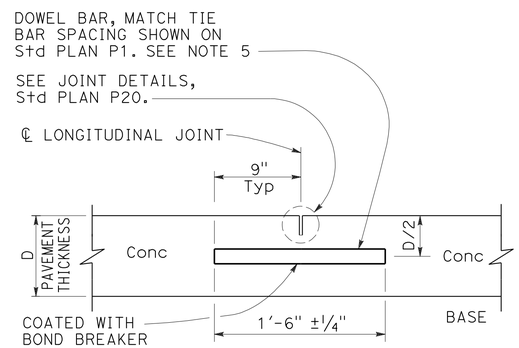

LONGITUDINAL CONTRACTION JOINT WITH DOWEL BARS

See Revised Std Plan RSP P18

TABLE A (See Note 3)

DOWEL BAR TRANSVERSE SPACING TABLE	
WIDTH BETWEEN LONGITUDINAL JOINTS	NUMBER OF DOWELS BETWEEN LONGITUDINAL JOINTS
14'-0"	14
13'-0"	13
12'-0"	12
11'-0"	11
10'-0"	10
8'-0"	8
5'-0"	5
4'-0"	4

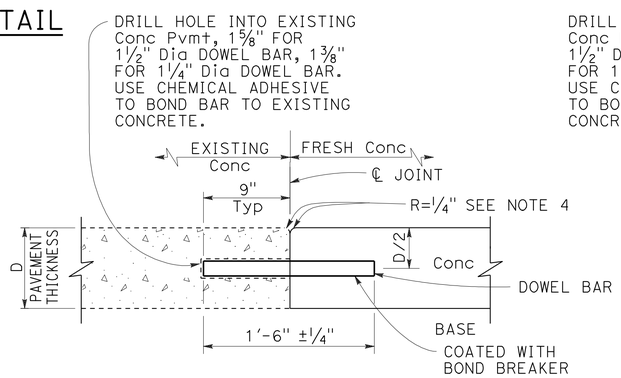

TRANSVERSE CONSTRUCTION JOINT FOR EXISTING CONCRETE PAVEMENT

Drill and bond locations

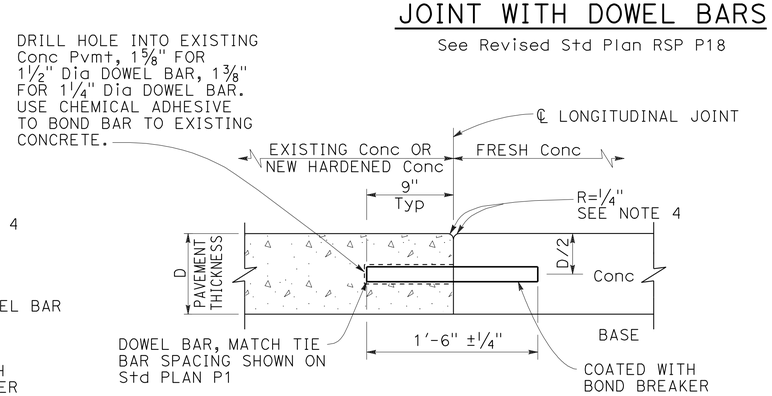

LONGITUDINAL CONSTRUCTION JOINT WITH DOWEL BARS

See Revised Std Plan RSP P18

STATE OF CALIFORNIA
DEPARTMENT OF TRANSPORTATION

CONCRETE PAVEMENT-DOWEL BAR DETAILS

NO SCALE

RSP P10 DATED APRIL 20, 2012 SUPERSEDES STANDARD PLAN P10 DATED MAY 20, 2011 - PAGE 131 OF THE STANDARD PLANS BOOK DATED 2010.

REVISED STANDARD PLAN RSP P10

2010 REVISED STANDARD PLAN RSP P10

2-22-12

Dist	COUNTY	ROUTE	POST MILES TOTAL PROJECT	SHEET No.	TOTAL SHEETS
12	Ora	91	0.9/5.4	622	885

William K. Farnbach
REGISTERED CIVIL ENGINEER

April 20, 2012
PLANS APPROVAL DATE

REGISTERED PROFESSIONAL ENGINEER
William K. Farnbach
No. C49042
Exp. 9-30-12
CIVIL
STATE OF CALIFORNIA

THE STATE OF CALIFORNIA OR ITS OFFICERS OR AGENTS SHALL NOT BE RESPONSIBLE FOR THE ACCURACY OR COMPLETENESS OF SCANNED COPIES OF THIS PLAN SHEET.

TO ACCOMPANY PLANS DATED 8-13-12

2010 REVISED STANDARD PLAN RSP P18

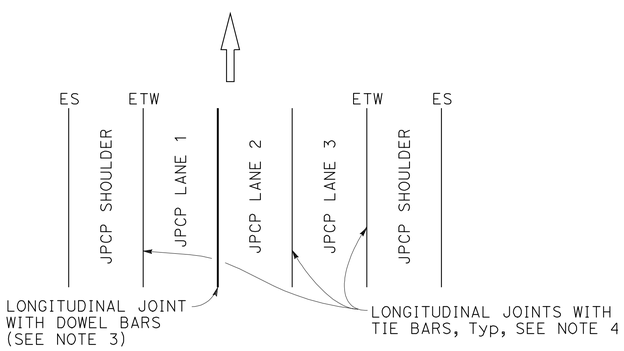

3 LANES WITH CONCRETE SHOULDERS
PLAN

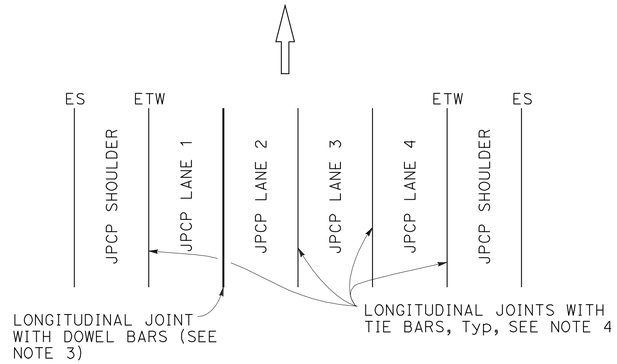

4 LANES WITH CONCRETE SHOULDERS
PLAN

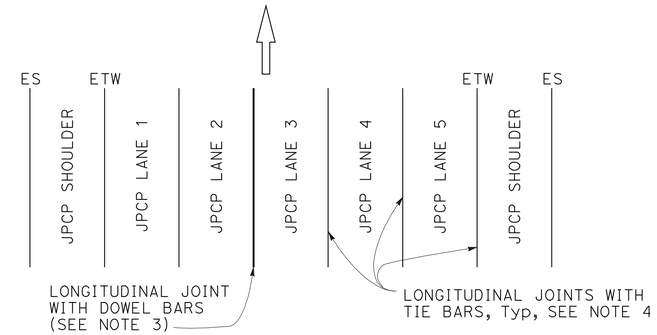

5 LANES WITH CONCRETE SHOULDERS
PLAN

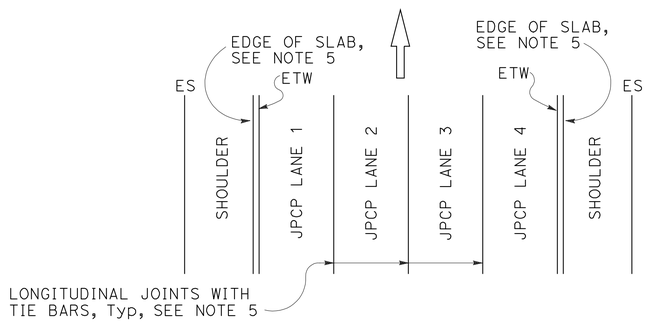

4 LANES OR LESS WITH AC SHOULDERS
PLAN

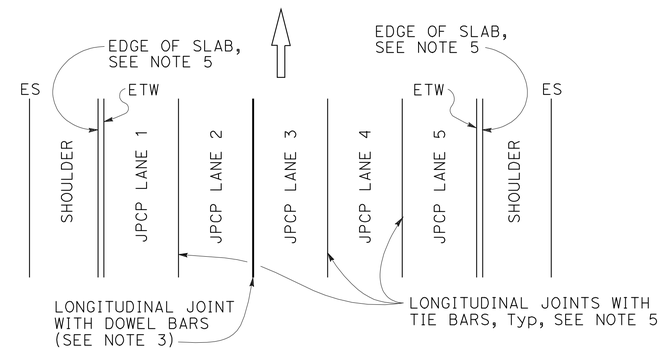

5 LANES WITH AC SHOULDERS
PLAN

NEW CONSTRUCTION

Location of Longitudinal Joints For JPCP

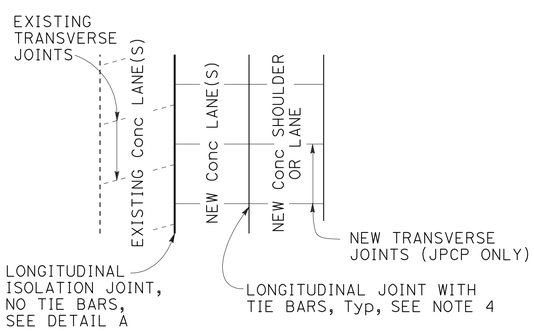

CASE 1
PLAN

Transverse Joints do not align between new and existing.

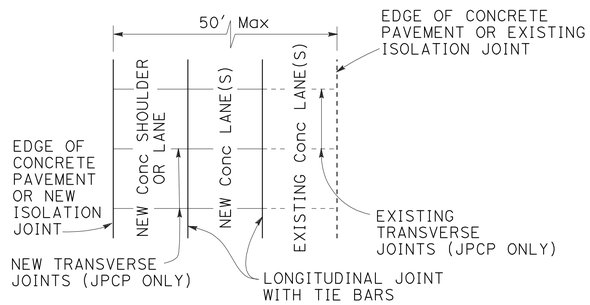

CASE 2
PLAN

Transverse Joints align between new and existing.

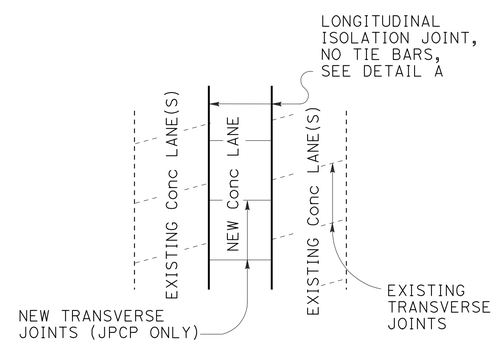

CASE 3 (INTERIOR LANE REPLACEMENT)
PLAN

Transverse Joints do not align between new and existing.

LANE/SHOULDER ADDITION OR RECONSTRUCTION

For JPCP and CRCP

NOTES:

1. Where Lean Concrete Base is not used as base material, the joint filler material used for the longitudinal isolation joint shall only extend to the bottom of the new concrete slab. See Detail A.
2. Use 5/8" ±1/16" dimension for silicone sealant.
3. See Revised Standard Plan RSP P10 for longitudinal joint with dowel bars.
4. See Standard Plan P1.
5. See Standard Plan P2.

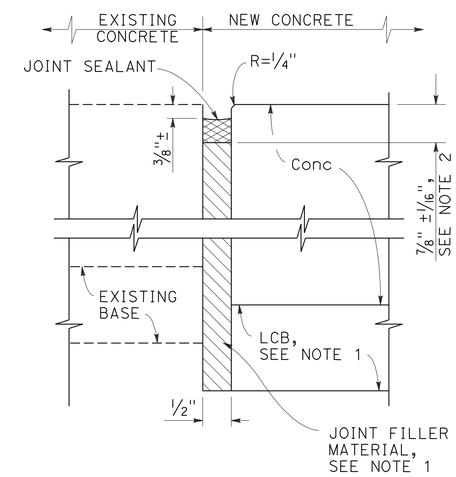

DETAIL "A"

ISOLATION JOINT

STATE OF CALIFORNIA
DEPARTMENT OF TRANSPORTATION

CONCRETE PAVEMENT-LANE SCHEMATICS AND ISOLATION JOINT DETAIL

NO SCALE

RSP P18 DATED APRIL 20, 2012 SUPERSEDES STANDARD PLAN P18 DATED MAY 20, 2011 - PAGE 135 OF THE STANDARD PLANS BOOK DATED 2010.

REVISED STANDARD PLAN RSP P18

2-22-12

Dist	COUNTY	ROUTE	POST MILES TOTAL PROJECT	SHEET No.	TOTAL SHEETS
12	Ora	91	0.9/5.4	623	885

William K. Farnbach
REGISTERED CIVIL ENGINEER

April 20, 2012
PLANS APPROVAL DATE

REGISTERED PROFESSIONAL ENGINEER
William K. Farnbach
No. C49042
Exp. 9-30-12
CIVIL
STATE OF CALIFORNIA

THE STATE OF CALIFORNIA OR ITS OFFICERS OR AGENTS SHALL NOT BE RESPONSIBLE FOR THE ACCURACY OR COMPLETENESS OF SCANNED COPIES OF THIS PLAN SHEET.

TO ACCOMPANY PLANS DATED 8-13-12

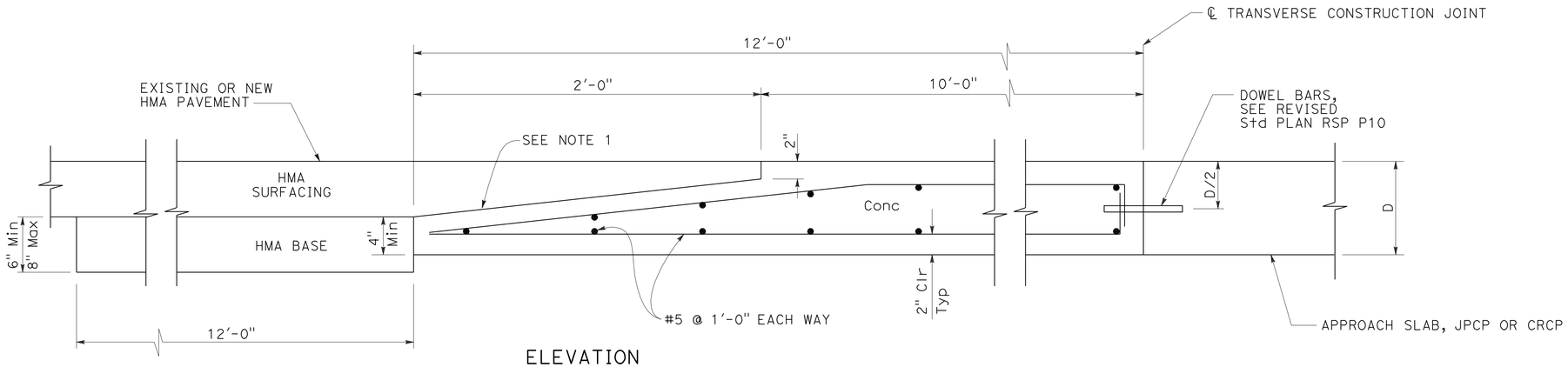

ELEVATION

CONCRETE PAVEMENT TRANSITION PANEL

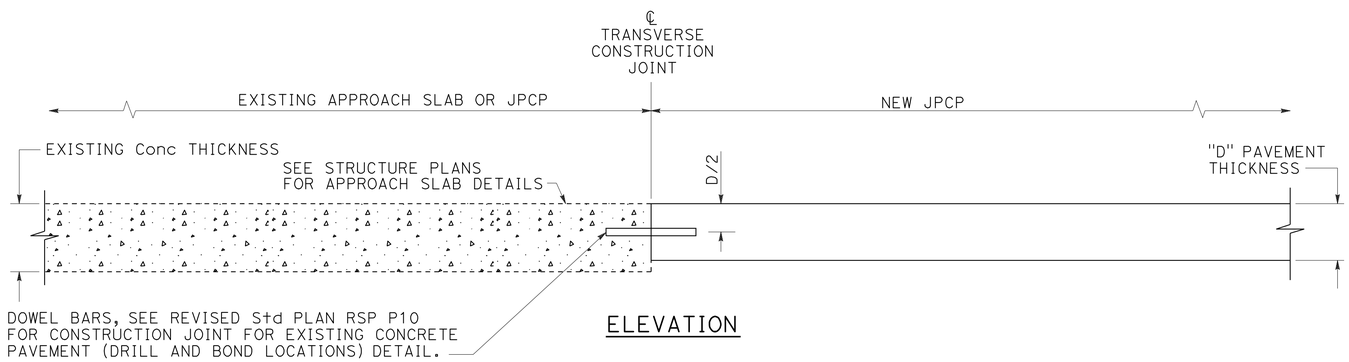

ELEVATION

TERMINAL JOINT TYPE 1

For Exist JPCP or Structure Approach Slab

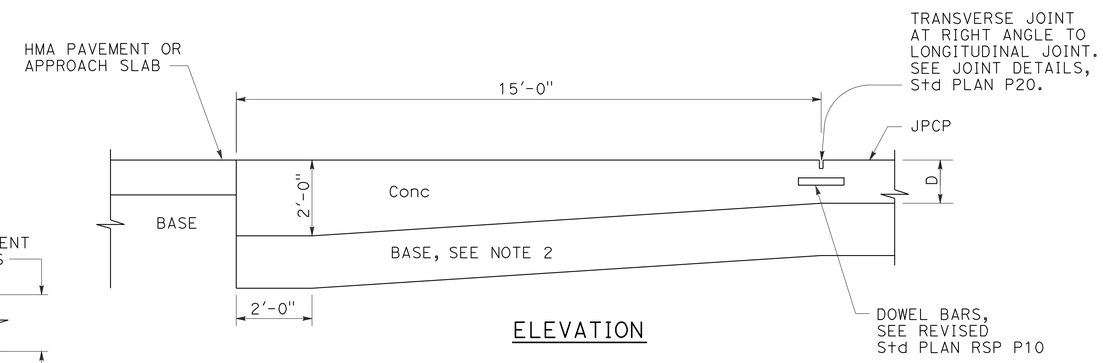

ELEVATION

PAVEMENT END ANCHOR

For HMA Pvmt or Structure Approach Slab

NOTES:

1. Heavy broom finish.
2. Maintain same base thickness as JPCP.

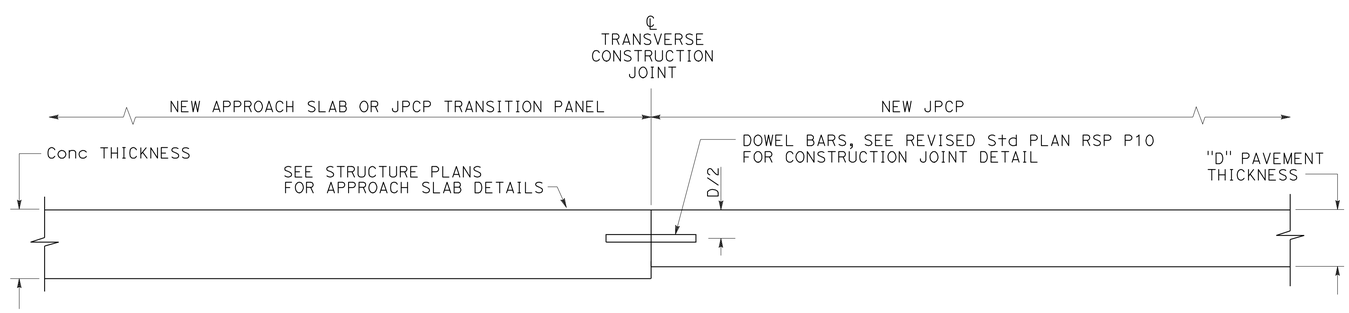

ELEVATION

TERMINAL JOINT TYPE 2

For JPCP Transition Panel or Structure Approach Slab

STATE OF CALIFORNIA
DEPARTMENT OF TRANSPORTATION

CONCRETE PAVEMENT-END PANEL PAVEMENT TRANSITIONS

NO SCALE

RSP P30 DATED APRIL 20, 2012 SUPERSEDES STANDARD PLAN P30
DATED MAY 20, 2011 - PAGE 137 OF THE STANDARD PLANS BOOK DATED 2010.

REVISED STANDARD PLAN RSP P30

2010 REVISED STANDARD PLAN RSP P30

2-22-12

DIST	COUNTY	ROUTE	POST MILES TOTAL PROJECT	SHEET No.	TOTAL SHEETS
12	Ora	91	0.9/5.4	624	885

REGISTERED CIVIL ENGINEER

January 20, 2012
PLANS APPROVAL DATE

REGISTERED PROFESSIONAL ENGINEER Cornelis M. Hakim No. C55610 Exp. 12-31-12 CIVIL STATE OF CALIFORNIA

THE STATE OF CALIFORNIA OR ITS OFFICERS OR AGENTS SHALL NOT BE RESPONSIBLE FOR THE ACCURACY OR COMPLETENESS OF SCANNED COPIES OF THIS PLAN SHEET.

TO ACCOMPANY PLANS DATED 8-13-12

LEGEND:

- HMA PAVEMENT
- HMA OR CONCRETE PAVEMENT
- CONCRETE PAVEMENT

ABBREVIATIONS:

SE SAFETY EDGE
TT TOTAL THICKNESS OF SE
HW HINGE WIDTH, DISTANCE FROM ES OR EP TO HP

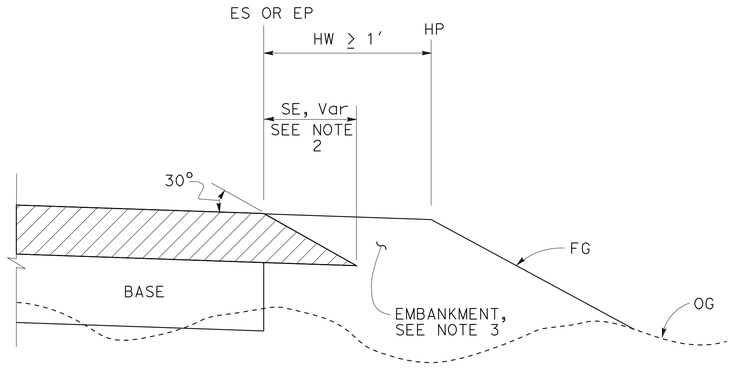

CASE K
Safety Edge - Fill Section, HW ≥ 1′

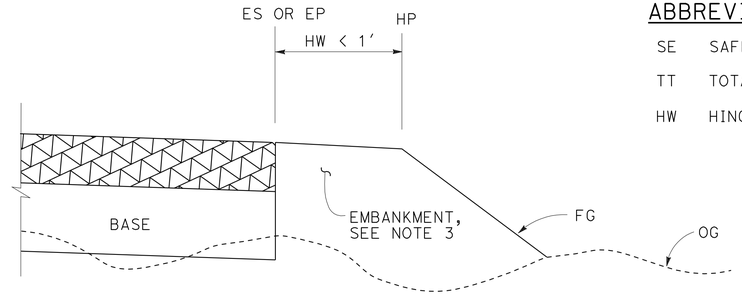

CASE L
Vertical Edge - Fill Section, HW < 1′

FILL SECTION

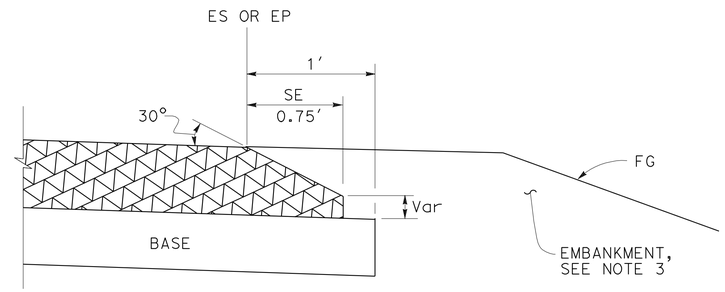

DETAIL "B"
For HMA pavement thickness more than 0.43′ or concrete pavement

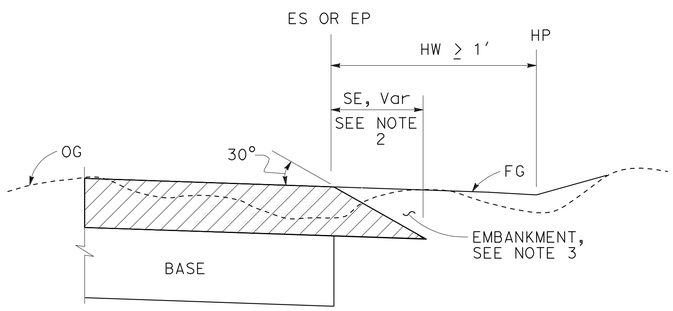

CASE M
Safety Edge - Cut Section, HW ≥ 1′

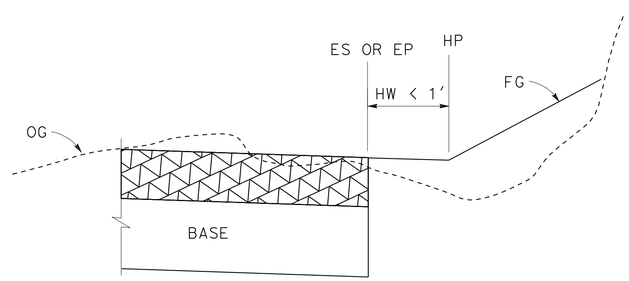

CASE N
Vertical Edge - Cut Section, HW < 1′

CUT SECTION

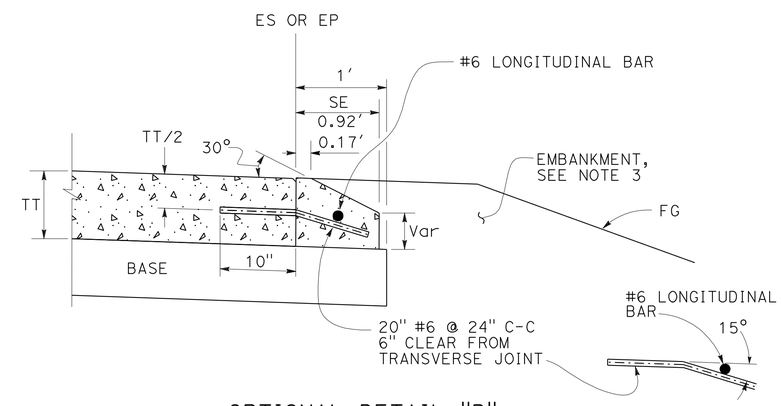

OPTIONAL DETAIL "B"
For concrete pavement
See Note 4

NOTES:

1. For limits of safety edge and vertical edge treatments, see Revised Standard Plan RSP P74
2. Details shown for HMA pavement thickness less than 0.43′. See Detail "B" for HMA pavement thickness more than 0.43′ or concrete pavement.
3. For locations and limits of embankment see project plans.
4. Safety edge transverse joint must match pavement transverse joint. End of #6 longitudinal bar must be 2" ±½" clear from transverse joint.
5. Safety edge is not needed in the area of MBGR, barrier, right turn lane and acceleration lane. See Revised Standard Plan RSP P74.

STATE OF CALIFORNIA
DEPARTMENT OF TRANSPORTATION

PAVEMENT EDGE TREATMENTS-NEW CONSTRUCTION

NO SCALE

RSP P76 DATED JANUARY 20, 2012 SUPPLEMENTS THE STANDARD PLANS BOOK DATED 2010.

REVISED STANDARD PLAN RSP P76

2010 REVISED STANDARD PLAN RSP P76

01-09-12

Dist	COUNTY	ROUTE	POST MILES TOTAL PROJECT	SHEET No.	TOTAL SHEETS
12	Ora	91	0.9/5.4	625	885

Raymond Don Tsztoo
REGISTERED CIVIL ENGINEER

July 20, 2012
PLANS APPROVAL DATE

REGISTERED PROFESSIONAL ENGINEER Raymond Don Tsztoo No. C37332 Exp. 6-30-14 CIVIL STATE OF CALIFORNIA

THE STATE OF CALIFORNIA OR ITS OFFICERS OR AGENTS SHALL NOT BE RESPONSIBLE FOR THE ACCURACY OR COMPLETENESS OF SCANNED COPIES OF THIS PLAN SHEET.

TO ACCOMPANY PLANS DATED 8-13-12

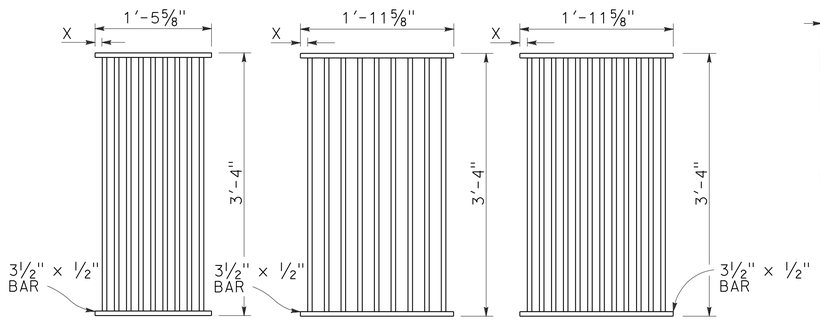

TYPE 18-9

1⅜" Clear spacing. Use within the roadbed on highways where bicycles and pedestrians are excluded.

TYPE 24-9

2" Clear spacing. Use in locations off the roadbed on all types of highways.

TYPE 24-12

1⅜" Clear spacing. Use within the roadbed on highways where bicycles and pedestrians are excluded.

RECTANGULAR GRATE DETAILS

(See table below)

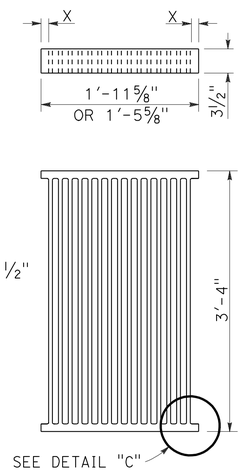

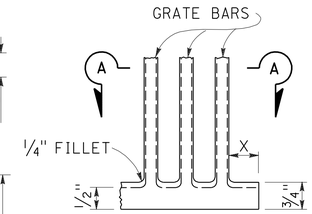

DETAIL "C"

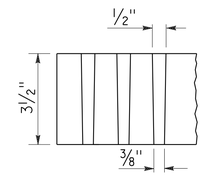

SECTION A-A

ALTERNATIVE CAST DUCTILE IRON GRATE OR CAST CARBON STEEL GRATE

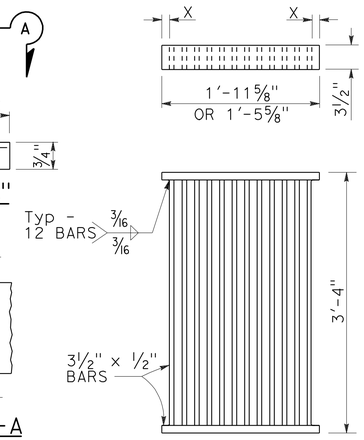

ALTERNATIVE WELDED GRATE

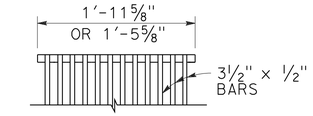

CAST END BLOCK

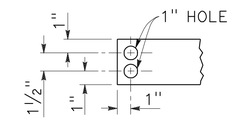

END OF BAR

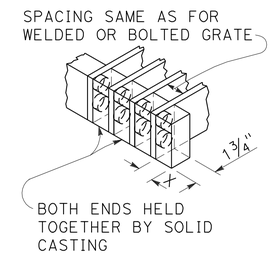

ALTERNATIVE CAST DUCTILE IRON OR CAST CARBON STEEL END BLOCK GRATE

NOTES:

1. Grate type numbers refer to approximate width of grate in inches and number of bars, respectively.
2. Contractor has the option of using cast ductile iron, cast carbon steel, welded, bolted, or cast end block grate.
3. Rounded top of bars optional on all grates.
4. Pipe inlets with a grate shall be placed so that bars parallel direction of principle surface flow.
5. Complete joint penetration butt welds may be substituted for the fillet welds on all anchors.
6. Standard square, hexagon, round or equivalent headed anchors may be substituted for the right angle hooks on the anchors shown on this plan.
7. Grate and frame weights are based on welded grates (weights of face angles, steps, protection bars, etc. are not included).
8. Connect chain to grate and frame only at locations shown on the plans. When chain is required, do not use cast ductile iron grates.

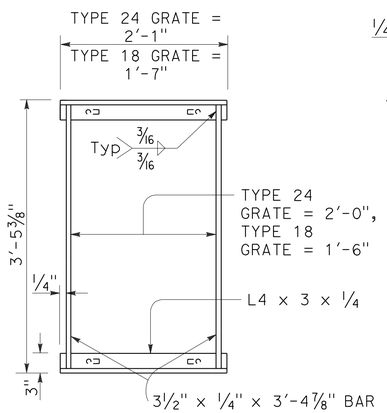

TYPICAL FRAME

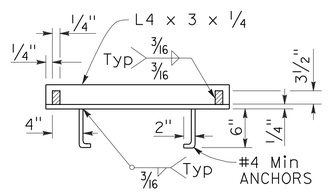

CROSS SECTION

(Thru frame)

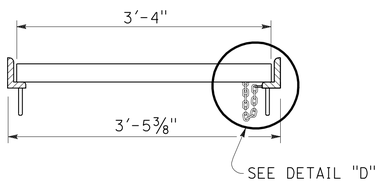

LONGITUDINAL SECTION

(Thru frame and grate)

RECTANGULAR FRAME DETAILS

(For all rectangular grates)

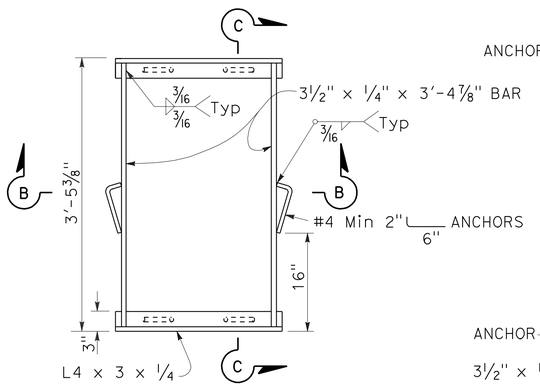

TYPICAL FRAME

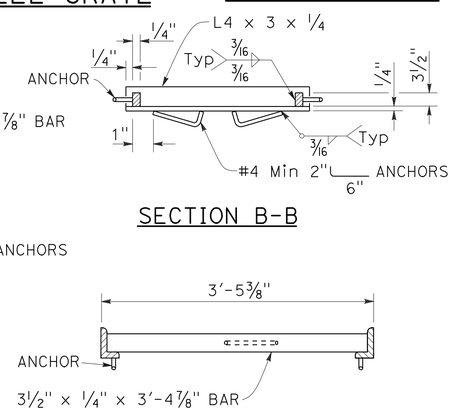

SECTION B-B

SECTION C-C

ALTERNATIVE ANCHOR FOR RECTANGULAR FRAME

(For details not shown, See Rectangular Frame Details)

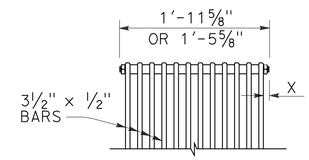

BOLTED END BLOCK

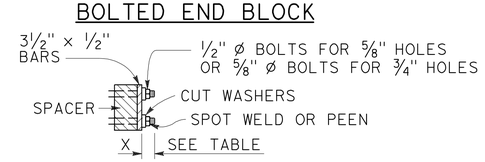

BOLTING DETAIL

ALTERNATIVE BOLTED GRATE

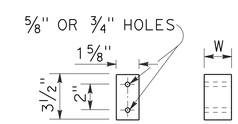

BAR SPACER

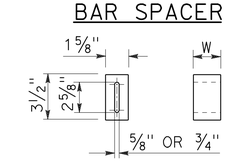

ALTERNATIVE SPACER

W = 1⅜" or 2"

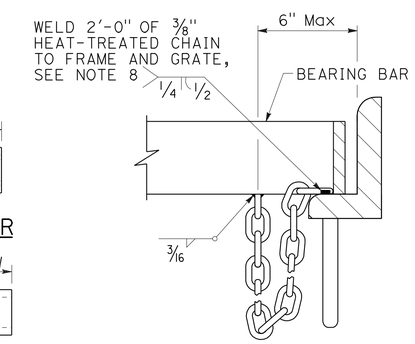

DETAIL "D"

(Steel grates only)

GRATE BAR SPACING TABLE

TYPE	No. OF BARS	CLEAR BAR SPACING	X
18-9	9	1⅜"	1 1/16"
24-9	9	2"	1 9/16"
24-12	12	1⅜"	1¼"

INLET TYPE	COVER TYPE	WEIGHT LB
OS	PLATE	174
OL-7	PLATE	170
OL-10	PLATE	170
OL-14	PLATE	170
OL-21	PLATE	170
OCP	PLATE	112
OCPI	PLATE	112
OCPI	REDWOOD	42
OMP	PLATE	177
OMPI	PLATE	177

INLET TYPE	GRATE TYPE	No. OF GRATES	WEIGHT LB
GDO	24-12	2	634
GOL-7	24-12	1	326
GOL-10	24-12	1	326
GO,G1,G2,G3,G4 (TYPE 24)	24-9	1	263
	24-12	1	326
G4 (TYPE 18),G5,G6	18-9	1	249
GT1	18-9	2	498
GT2	18-9	2	498
GT3	24-12	2	652
GT4	24-12	2	652
TRASH RACK			22
GRATE CHAIN			3

BASIS FOR Misc IRON & STEEL FINAL PAY WEIGHTS FOR DRAINAGE INLETS

(See Note 7)

STATE OF CALIFORNIA
DEPARTMENT OF TRANSPORTATION

GRATE DETAILS

NO SCALE

RSP D77A DATED JULY 20, 2012 SUPERSEDES STANDARD PLAN D77A DATED MAY 20, 2011 - PAGE 164 OF THE STANDARD PLANS BOOK DATED 2010.

REVISED STANDARD PLAN RSP D77A

2010 REVISED STANDARD PLAN RSP D77A

6-13-12

Dist	COUNTY	ROUTE	POST MILES TOTAL PROJECT	SHEET No.	TOTAL SHEETS
12	Ora	91	0.9/5.4	626	885

REGISTERED CIVIL ENGINEER

April 20, 2012
PLANS APPROVAL DATE

REGISTERED PROFESSIONAL ENGINEER Gary Wang No. C58298 Exp. 6-30-12 CIVIL STATE OF CALIFORNIA

THE STATE OF CALIFORNIA OR ITS OFFICERS OR AGENTS SHALL NOT BE RESPONSIBLE FOR THE ACCURACY OR COMPLETENESS OF SCANNED COPIES OF THIS PLAN SHEET.

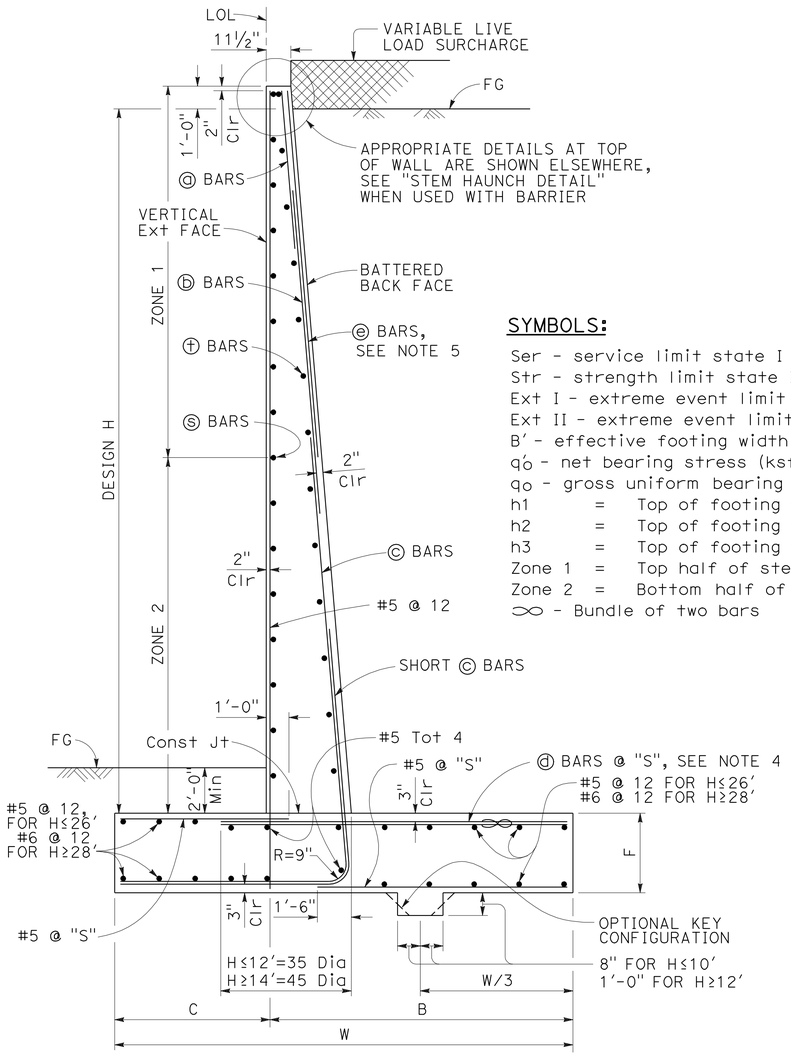

TYPICAL SECTION

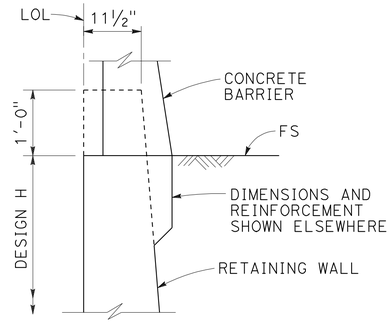

STEM HAUNCH DETAIL

SYMBOLS:

Ser - service limit state I
Str - strength limit state I
Ext I - extreme event limit state I
Ext II - extreme event limit state II
B' - effective footing width (ft)
q_o' - net bearing stress (ksf), OG assumed to be FG at toe
q_o - gross uniform bearing stress (ksf)
h1 = Top of footing to top of short ⓒ bar
h2 = Top of footing to top of ⓒ bar
h3 = Top of footing to top of ⓑ bar
Zone 1 = Top half of stem height
Zone 2 = Bottom half of stem height
∞ - Bundle of two bars

DESIGN CONDITIONS:

Design H may be exceeded by 6" before going to the next size. Special footing design is required where foundation material is incapable of supporting bearing stress listed in the table.

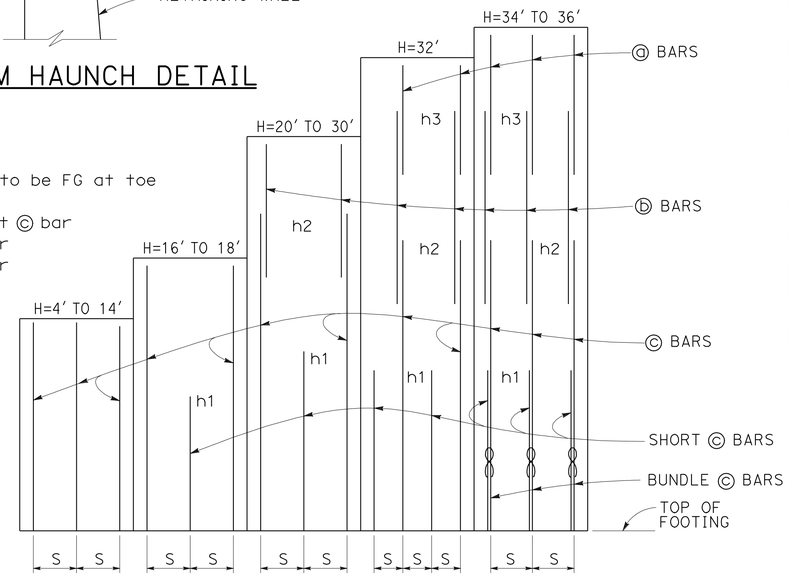

ELEVATION

DESIGN NOTES:

TO ACCOMPANY PLANS DATED 8-13-12

DESIGN: AASHTO LRFD Bridge Design Specifications, 4th Edition with California Amendments

LS: Varied surcharge on level ground surface

DC: Stem Architectural Treatment of thickness up to 6" of concrete (75 psf) considered

CT: 54 kip transverse force applied at He = 32", distributed over 10 feet at the top of wall and 1 : 1 distribution down and outward. Distribution below footing taken no less than 40'.

SEISMIC: $k_h = 0.2$, $k_v = 0.0$

SOIL: $\phi = 34°$, $\gamma = 120$ pcf

REINFORCED CONCRETE: f'c = 3,600 psi
fy = 60,000 psi

LOAD COMBINATIONS AND LIMIT STATES:

Service I	$Q = 1.00DC+1.00EV+1.00EH+1.00LS$
Strength I	$Q = \alpha DC+\phi EV+\eta EH+1.75LS$
Extreme I	$Q = 1.00DC+1.00EV+1.00EH+1.00EQD+1.00EQE$
Extreme II	$Q = 1.00DC+1.00EV+1.00EH+1.00CT$

Where:

Q:	Force Effects
α:	1.25 or 0.90, Whichever Controls Design
φ:	1.35 or 1.00, Whichever Controls Design
η:	1.50 or 0.90, Whichever Controls Design
DC:	Dead Load of Structure Components
EH:	Horizontal Earth Fill Pressure
EV:	Vertical Earth Pressure from Earth Fill Weight
LS:	Live Load Surcharge
EQE:	Seismic Earth Pressure
EQD:	Soil and Structural and Nonstructural Components Inertia
CT:	Vehicular Collision Force

NOTES:

1. For details not shown and drainage notes see RSP B3-5
2. For wall stem joint details see B0-3 / 3-3 and B0-3 / 3-4
3. At ⓒ bars:
   H ≤ 6', no splices are allowed within 1'-8" above the top of footing.
   H > 6', no splices are allowed within H/4 above the top of footing.
4. Bundle ⓓ bars for H = 34' & 36'.
5. Provide #6 @ 10" x 15'-0" ⓔ bars over a distance of 8'-0" measured from all expansion joints, begin wall and end wall locations. For H ≤ 14', hook ⓔ bar into footing and reduce bar length as needed to maintain Min Clr cover.

TABLE OF REINFORCING STEEL, DIMENSIONS AND DATA

DESIGN H	4'	6'	8'	10'	12'	14'	16'	18'	20'	22'	24'	26'	28'	30'	32'	34'	36'
W	6'-10"	7'-0"	7'-3"	7'-7"	8'-4"	9'-7"	10'-9"	12'-0"	13'-3"	14'-6"	15'-9"	17'-1"	18'-5"	19'-10"	21'-2"	22'-7"	24'-0"
C	2'-2"	2'-3"	2'-3"	2'-4"	2'-6"	3'-0"	3'-6"	4'-0"	4'-6"	5'-0"	5'-5"	6'-0"	6'-6"	7'-2"	7'-8"	8'-2"	9'-0"
B	4'-8"	4'-9"	5'-0"	5'-3"	5'-10"	6'-7"	7'-3"	8'-0"	8'-9"	9'-6"	10'-4"	11'-1"	11'-11"	12'-8"	13'-6"	14'-5"	15'-0"
F	1'-4"	1'-4"	1'-4"	1'-4"	1'-6"	1'-8"	1'-8"	1'-9"	1'-9"	1'-11"	2'-2"	2'-5"	2'-10"	3'-3"	3'-6"	4'-0"	4'-3"
BATTER	½: 12	½: 12	½: 12	½: 12	½: 12	½: 12	½: 12	½: 12	½: 12	½: 12	⅝: 12	⅝: 12	¾: 12	⅞: 12	1 : 12	1 : 12	1 : 12
SPACING "S"	9"	9"	9"	9"	9"	7"	6"	5"	6"	6"	6"	6"	6"	6"	6"	10"	8"
ⓐ BARS	-	-	-	-	-	-	-	-	-	-	-	-	-	-	#7	#7	#6
ⓑ BARS	-	-	-	-	-	-	-	-	#7	#7	#7	#7	#7	#7	#9	#9	#8
ⓒ BARS	#6	#6	#6	#6	#6	#6	#7	#7	#8	#9	#9	#10	#10	#10	#11	#11	#11
ⓓ BARS	#5	#5	#6	#6	#6	#6	#9	#8	#8	#9	#9	#10	#10	#10	#11	#11	#11
h1	-	-	-	-	-	-	5'-9"	5'-10"	8'-0"	9'-0"	10'-1"	11'-0"	12'-1"	13'-0"	13'-0"	12'-7"	11'-6"
h2	-	-	-	-	-	-	-	-	10'-5"	13'-0"	14'-7"	17'-6"	19'-0"	20'-5"	19'-0"	18'-0"	20'-2"
h3	-	-	-	-	-	-	-	-	-	-	-	-	-	-	21'-2"	21'-10"	24'-0"
ZONE 1 ⓢ BARS	#5 @ 18	#5 @ 18	#5 @ 18	#5 @ 18	#5 @ 18	#5 @ 18	#5 @ 18	#5 @ 18	#5 @ 18	#5 @ 18	#5 @ 12	#5 @ 12	#5 @ 12	#5 @ 12	#5 @ 12	#5 @ 12	#5 @ 12
ZONE 2 ⓢ BARS	#5 @ 18	#5 @ 18	#5 @ 18	#5 @ 18	#5 @ 18	#5 @ 18	#5 @ 12	#5 @ 12	#5 @ 12	#5 @ 12	#5 @ 12	#5 @ 12	#6 @ 12	#6 @ 12	#6 @ 12	#7 @ 12	#7 @ 12
ZONE 1 ⓣ BARS	#4 @ 18	#4 @ 18	#4 @ 18	#4 @ 18	#4 @ 18	#4 @ 18	#4 @ 18	#4 @ 18	#4 @ 18	#4 @ 18	#4 @ 12	#4 @ 12	#4 @ 18	#4 @ 12	#4 @ 12	#4 @ 12	#4 @ 12
ZONE 2 ⓣ BARS	#4 @ 18	#4 @ 18	#4 @ 18	#4 @ 18	#4 @ 18	#4 @ 18	#4 @ 18	#4 @ 18	#4 @ 18	#4 @ 18	#4 @ 12	#4 @ 12	#4 @ 12	#4 @ 12	#5 @ 12	#5 @ 12	#5 @ 12
Ser: B', q_o'	6.8, 0.7	6.5, 1.0	6.2, 1.3	6.0, 1.6	6.3, 2.0	7.5, 2.1	8.6, 2.2	9.8, 2.3	11.0, 2.4	12.1, 2.5	13.2, 2.8	14.4, 2.9	15.5, 3.1	16.8, 3.3	18.0, 3.5	19.2, 3.7	20.6, 3.7
Str: B', q_o	6.6, 1.6	5.0, 1.8	3.6, 2.3	3.0, 3.3	3.2, 4.0	4.3, 3.8	5.3, 3.7	6.4, 3.7	7.4, 3.8	8.2, 4.1	9.0, 4.4	9.9, 4.6	10.7, 4.9	11.7, 5.2	12.6, 5.4	13.6, 5.8	14.6, 5.9
Ext I: B', q_o	5.2, 1.1	4.7, 1.5	3.9, 2.2	3.1, 3.4	2.8, 4.8	3.2, 5.3	3.6, 5.7	4.1, 6.1	4.6, 6.4	5.0, 6.9	5.3, 7.6	5.8, 8.1	6.1, 8.9	6.7, 9.4	7.1, 10.0	7.5, 10.7	8.2, 10.9
Ext II: B', q_o	2.6, 2.2	2.7, 2.6	2.8, 3.1	2.9, 3.6	3.7, 3.6	5.2, 3.3	6.7, 3.1	8.3, 3.0	9.8, 3.0	11.2, 3.1	12.5, 3.2	13.9, 3.4	15.2, 3.6	16.7, 3.8	18.0, 4.0	19.3, 4.2	20.8, 4.3

STATE OF CALIFORNIA
DEPARTMENT OF TRANSPORTATION

RETAINING WALL TYPE 1 (CASE 1)

NO SCALE

RSP B3-1A DATED APRIL 20, 2012 SUPPLEMENTS THE STANDARD PLANS BOOK DATED 2010.

REVISED STANDARD PLAN RSP B3-1A

2010 REVISED STANDARD PLAN RSP B3-1A

2-22-12

Dist	COUNTY	ROUTE	POST MILES TOTAL PROJECT	SHEET No.	TOTAL SHEETS
12	Ora	91	0.9/5.4	627	885

TO ACCOMPANY PLANS DATED 8-13-12

REGISTERED CIVIL ENGINEER

April 20, 2012
PLANS APPROVAL DATE

REGISTERED PROFESSIONAL ENGINEER Gary Wang No. C58298 Exp. 6-30-12 CIVIL STATE OF CALIFORNIA

THE STATE OF CALIFORNIA OR ITS OFFICERS OR AGENTS SHALL NOT BE RESPONSIBLE FOR THE ACCURACY OR COMPLETENESS OF SCANNED COPIES OF THIS PLAN SHEET.

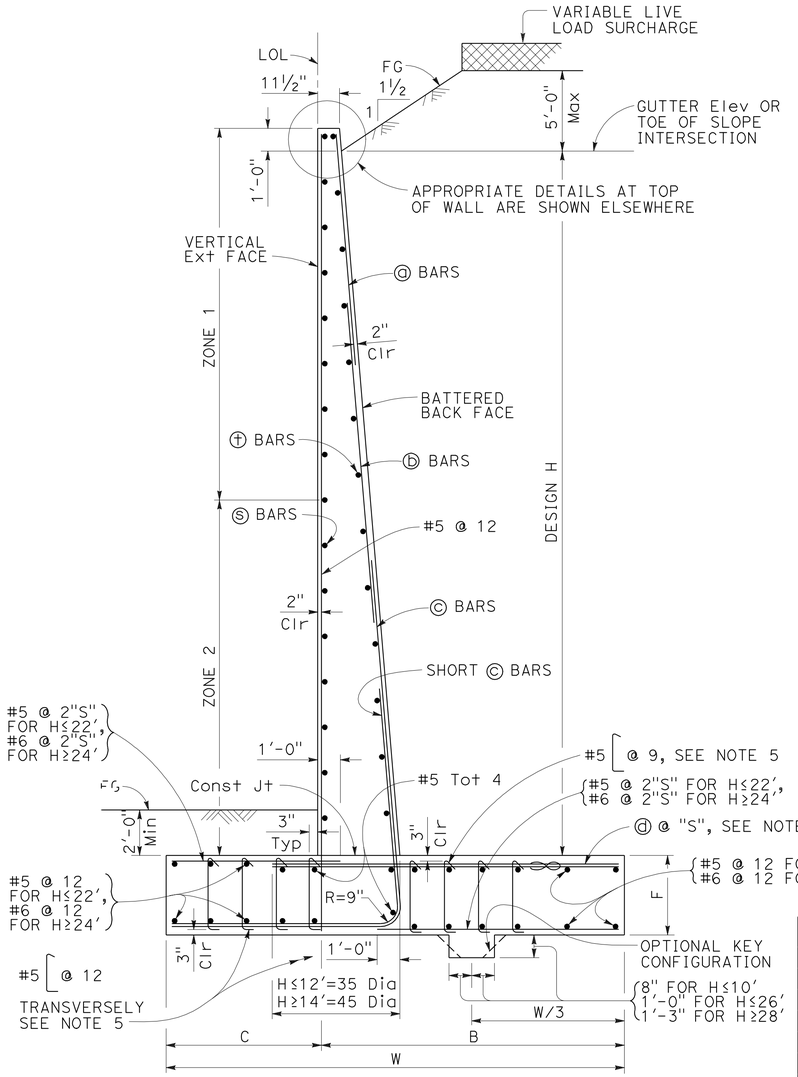

TYPICAL SECTION

DESIGN CONDITIONS:

Design H may be exceeded by 6" before going to the next size. Special footing design is required where foundation material is incapable of supporting bearing stress listed in the table.

DESIGN NOTES:

DESIGN: AASHTO LRFD Bridge Design Specifications, 4th Edition with California Amendments

LS: Varied surcharge on level ground surface

DC: Stem Architectural Treatment of thickness up to 6" of concrete (75 psf) considered

SEISMIC: $k_h = 0.2$
$k_v = 0.0$

SOIL: $\phi = 34°$
$\gamma = 120$ pcf

REINFORCED CONCRETE: $f'c = 3{,}600$ psi
$fy = 60{,}000$ psi

LOAD COMBINATIONS AND LIMIT STATES:

Service I $Q = 1.00DC+1.00EV+1.00EH+1.00LS$
Strength I $Q = \alpha DC+\beta EV+\eta EH+1.75LS$
Extreme I $Q = 1.00DC+1.00EV+1.00EH+1.00EQD+1.00EQE$

Where:

Q: Force Effects
α: 1.25 or 0.90, Whichever Controls Design
β: 1.35 or 1.00, Whichever Controls Design
η: 1.50 or 0.90, Whichever Controls Design
DC: Dead Load of Structure Components
EH: Horizontal Earth Fill Pressure
EV: Vertical Earth Pressure from Earth Fill Weight
LS: Live Load Surcharge
EQE: Seismic Earth Pressure
EQD: Soil and Structural and Nonstructural Components Inertia

SYMBOLS:

Ser - service limit state I
Str - strength limit state I
Ext - extreme event limit state I
B' - effective footing width (ft)
q_o' - net bearing stress (ksf), OG assumed to be FG at toe
q_o - gross uniform bearing stress (ksf)
h1 = Top of footing to top of short ⓒ bar
h2 = Top of footing to top of ⓒ bar
h3 = Top of footing to top of ⓑ bar
Zone 1 = Top half of stem height
Zone 2 = Bottom half of stem height
∞ - Bundle of two bars

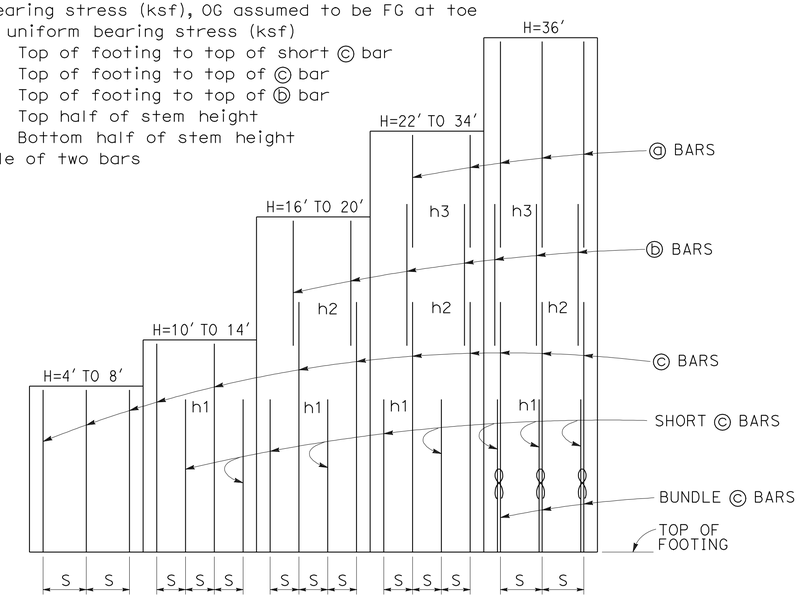

ELEVATION

TABLE OF REINFORCING STEEL, DIMENSIONS AND DATA

DESIGN H	4'	6'	8'	10'	12'	14'	16'	18'	20'	22'	24'	26'	28'	30'	32'	34'	36'
W	6'-5"	7'-3"	8'-3"	9'-3"	10'-8"	12'-6"	13'-9"	15'-1"	16'-6"	17'-10"	19'-3"	20'-4"	21'-5"	22'-8"	23'-11"	25'-1"	26'-4"
C	2'-2"	2'-6"	3'-0"	3'-6"	3'-8"	3'-11"	4'-0"	4'-7"	5'-3"	6'-0"	7'-0"	7'-9"	8'-3"	8'-8"	9'-0"	9'-6"	9'-10"
B	4'-3"	4'-9"	5'-3"	5'-9"	7'-0"	8'-7"	9'-9"	10'-6"	11'-3"	11'-10"	12'-3"	12'-7"	13'-2"	14'-0"	14'-11"	15'-7"	16'-6"
F	1'-4"	1'-4"	1'-4"	1'-6"	1'-6"	1'-6"	1'-8"	2'-0"	2'-4"	2'-9"	3'-2"	3'-0"	3'-0"	3'-0"	3'-3"	3'-3"	3'-3"
BATTER	½: 12	½: 12	½: 12	½: 12	½: 12	½: 12	½: 12	½: 12	½: 12	½: 12	⅝: 12	¾: 12	1 : 12	1 : 12	1⅛: 12	1⅛: 12	1⅛: 12
SPACING "S"	16"	16"	16"	8"	8"	7"	7"	7"	6"	6"	7"	7"	7"	6"	6"	6"	8"
ⓓ BARS	-	-	-	-	-	-	-	-	-	#5	#5	#5	#5	#5	#5	#6	#6
ⓑ BARS	-	-	-	-	-	-	#5	#5	#5	#7	#7	#7	#8	#8	#8	#9	#9
ⓒ BARS	#5	#5	#6	#5	#6	#6	#7	#8	#8	#9	#10	#10	#10	#10	#10	#11	#11
ⓓ BARS	#5	#5	#6	#5	#6	#8	#9	#9	#9	#10	#11	#9	#9	#9	#10	#10	#9
h1	-	-	-	4'-2"	4'-7"	6'-2"	7'-3"	8'-6"	8'-8"	9'-8"	11'-0"	12'-2"	14'-0"	13'-0"	15'-10"	14'-6"	12'-0"
h2	-	-	-	-	-	-	10'-6"	12'-9"	14'-2"	13'-8"	17'-0"	18'-6"	17'-10"	18'-9"	20'-3"	21'-0"	17'-0"
h3	-	-	-	-	-	-	-	-	-	15'-6"	17'-9"	19'-6"	21'-8"	23'-0"	24'-8"	25'-6"	24'-8"
No. of Toe Stirrups	0	0	0	0	0	0	0	0	0	0	0	6	6	7	7	7	8
No. of Heel Stirrups	0	0	0	0	0	0	0	0	0	0	0	6	6	6	6	6	6
ZONE 1 ⓢ BARS	#5 @ 18	#5 @ 18	#5 @ 18	#5 @ 18	#5 @ 18	#5 @ 18	#5 @ 18	#5 @ 18	#5 @ 18	#5 @ 18	#5 @ 18	#5 @ 12	#5 @ 12	#5 @ 12	#5 @ 12	#5 @ 12	#5 @ 12
ZONE 2 ⓢ BARS	#5 @ 18	#5 @ 18	#5 @ 18	#5 @ 18	#5 @ 18	#5 @ 18	#5 @ 12	#5 @ 12	#5 @ 12	#5 @ 12	#5 @ 12	#6 @ 12	#6 @ 12	#6 @ 12	#7 @ 12	#7 @ 12	#7 @ 12
ZONE 1 ⓣ BARS	#4 @ 18	#4 @ 18	#4 @ 18	#4 @ 18	#4 @ 18	#4 @ 18	#4 @ 18	#4 @ 18	#4 @ 18	#4 @ 18	#4 @ 18	#4 @ 18	#4 @ 12	#4 @ 12	#4 @ 12	#4 @ 12	#4 @ 12
ZONE 2 ⓣ BARS	#4 @ 18	#4 @ 18	#4 @ 18	#4 @ 18	#4 @ 18	#4 @ 18	#4 @ 18	#4 @ 18	#4 @ 18	#4 @ 18	#4 @ 12	#4 @ 12	#5 @ 12	#5 @ 12	#5 @ 12	#5 @ 12	#5 @ 12
Ser: B', q_o'	4.3, 0.8	4.9, 1.1	5.6, 1.3	7.1, 1.5	8.0, 1.8	9.3, 2.1	10.6, 2.3	11.9, 2.5	13.3, 2.6	14.6, 2.8	15.9, 2.9	17.0, 3.0	18.0, 3.1	19.3, 3.3	20.4, 3.5	21.5, 3.7	22.7, 3.9
Str: B', q_o	2.4, 2.2	2.4, 2.7	2.7, 3.2	3.0, 3.7	4.3, 3.8	5.9, 3.8	7.0, 4.1	7.9, 4.3	9.0, 4.5	9.9, 4.7	10.8, 4.9	11.6, 5.0	12.3, 5.2	13.3, 5.4	14.2, 5.7	15.0, 5.9	16.0, 6.1
Ext: B', q_o	4.1, 1.5	3.9, 2.1	3.8, 2.8	3.5, 3.9	3.6, 4.9	4.2, 5.5	4.6, 6.3	5.0, 7.0	5.6, 7.4	6.0, 8.0	6.5, 8.4	6.9, 8.6	7.2, 9.2	7.7, 9.6	8.1, 10.4	8.4, 10.9	8.9, 11.3

NOTES:

1. For details not shown and drainage notes see RSP B3-5
2. For wall stem joint details see B0-3/3-3 and B0-3/3-4
3. At ⓒ bars:
   H ≤ 6', no splices are allowed within 1'-8" above the top of footing.
   H > 6', no splices are allowed within H/4 above the top of footing.
4. Bundle ⓓ bars for H = 36'.
5. Hook stirrups around & space with alternating transverse reinforcement at 2 x "S".

RSP B3-1C DATED APRIL 20, 2012 SUPPLEMENTS THE STANDARD PLANS BOOK DATED 2010.

STATE OF CALIFORNIA
DEPARTMENT OF TRANSPORTATION

RETAINING WALL TYPE 1 (CASE 3)

NO SCALE

REVISED STANDARD PLAN RSP B3-1C

2010 REVISED STANDARD PLAN RSP B3-1C

3-30-12

Dist	COUNTY	ROUTE	POST MILES TOTAL PROJECT	SHEET No.	TOTAL SHEETS
12	Ora	91	0.9/5.4	628	885

REGISTERED CIVIL ENGINEER

April 20, 2012
PLANS APPROVAL DATE

REGISTERED PROFESSIONAL ENGINEER Gary Wang No. C58298 Exp. 6-30-12 CIVIL STATE OF CALIFORNIA

THE STATE OF CALIFORNIA OR ITS OFFICERS OR AGENTS SHALL NOT BE RESPONSIBLE FOR THE ACCURACY OR COMPLETENESS OF SCANNED COPIES OF THIS PLAN SHEET.

TO ACCOMPANY PLANS DATED 8-13-12

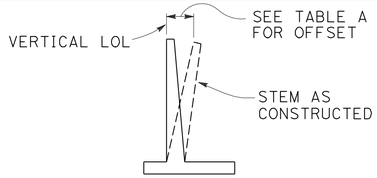

APPROXIMATE WALL OFFSET VALUES

Values for offseting forms to be determined by the Engineer.

TABLE A

H	OFFSET
4'-12'	H/200
14'-16'	H/160
18'-20'	H/140
22'-24'	H/130
26'-36'	2½"

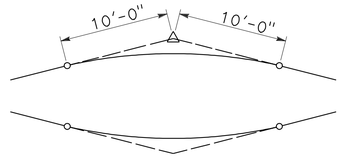

20'-0" VC AT TOP OF WALL SLOPE CHANGE

Where shown on the plans

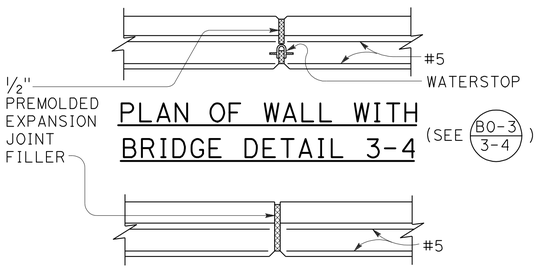

PLAN OF WALL WITH BRIDGE DETAIL 3-4

(SEE B0-3 / 3-4)

PLAN OF WALL WITH EXPANSION JOINT ONLY

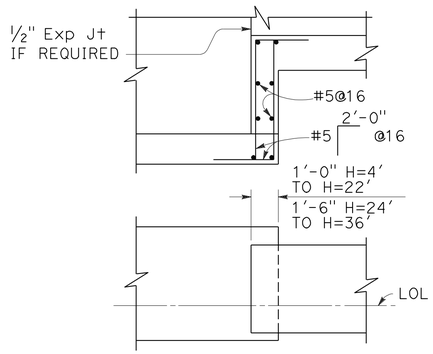

FOOTING STEP

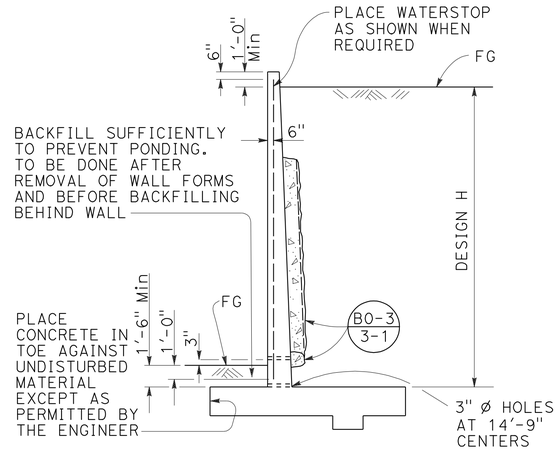

DESIGN AND DRAINAGE

DESIGN CONDITIONS:

Design "H" may be exceeded by 6" before going to the next size. Special footing design is required where foundation material is incapable of supporting bearing stress listed in table

Return wall not required unless shown elsewhere

DESIGN NOTES:

DESIGN: AASHTO LRFD Bridge Design Specifications, 4th edition with California Amendments

LIVE LOAD: Surcharge on level ground surface

SOIL: ø = 34°
γ = 120 pcf

REINFORCED CONCRETE: fy = 60,000 psi
fc' = 3,600 psi

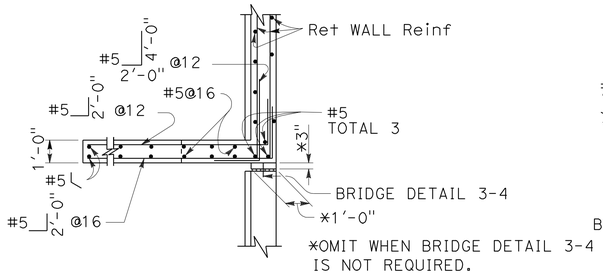

PLAN

(For return wall Type "A")

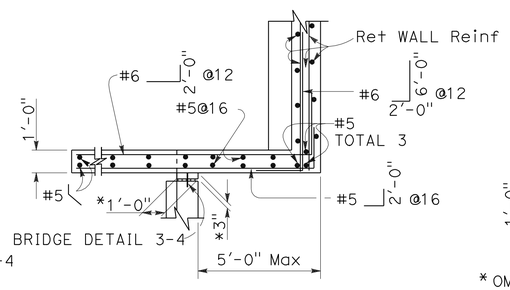

PLAN

(For return wall Type "B")

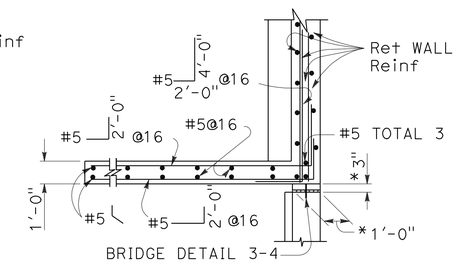

*OMIT WHEN BRIDGE DETAIL 3-4 IS NOT REQUIRED.

PLAN

(For return wall Type "C")

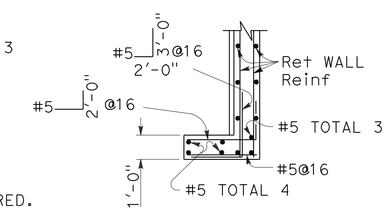

PLAN

(For return wall Type "D")

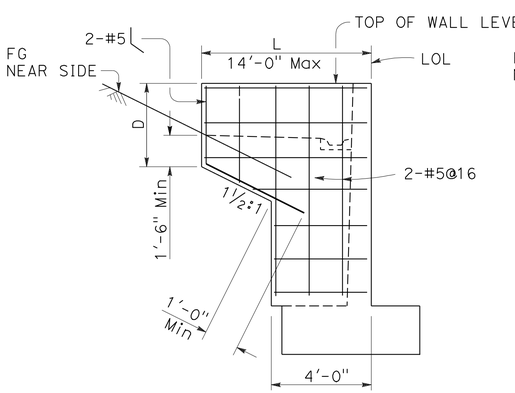

ELEVATION

RETURN WALL TYPE "A"

Use where H=8' or less

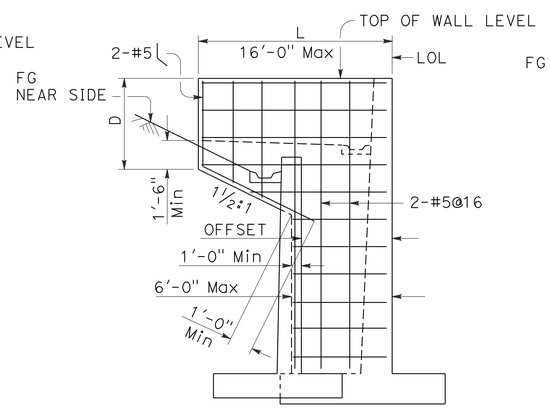

ELEVATION

RETURN WALL TYPE "B"

Use where H=10' or more on offset walls

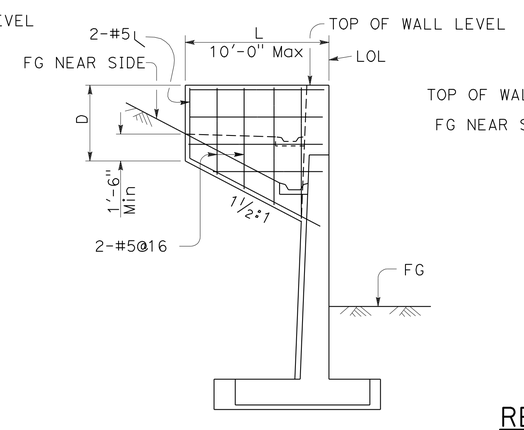

ELEVATION

RETURN WALL TYPE "C"

Use where H=10' or more on straight walls

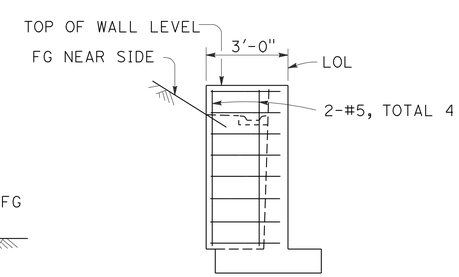

ELEVATION

RETURN WALL TYPE "D"

Use where H=6' or less

STATE OF CALIFORNIA
DEPARTMENT OF TRANSPORTATION

RETAINING WALL DETAILS No. 1

NO SCALE

RSP B3-5 DATED APRIL 20, 2012 SUPERSEDES STANDARD PLAN B3-5 DATED MAY 20, 2011 - PAGE 277 OF THE STANDARD PLANS BOOK DATED 2010.

REVISED STANDARD PLAN RSP B3-5

2010 REVISED STANDARD PLAN RSP B3-5

2-22-12

Dist	COUNTY	ROUTE	POST MILES TOTAL PROJECT	SHEET No.	TOTAL SHEETS
12	Ora	91	0.9/5.4	629	885

REGISTERED CIVIL ENGINEER

October 21, 2011
PLANS APPROVAL DATE

REGISTERED PROFESSIONAL ENGINEER
Tillat Satter
No. C42892
Exp. 3-31-12
CIVIL
STATE OF CALIFORNIA

THE STATE OF CALIFORNIA OR ITS OFFICERS OR AGENTS SHALL NOT BE RESPONSIBLE FOR THE ACCURACY OR COMPLETENESS OF SCANNED COPIES OF THIS PLAN SHEET.

TO ACCOMPANY PLANS DATED 8-13-12

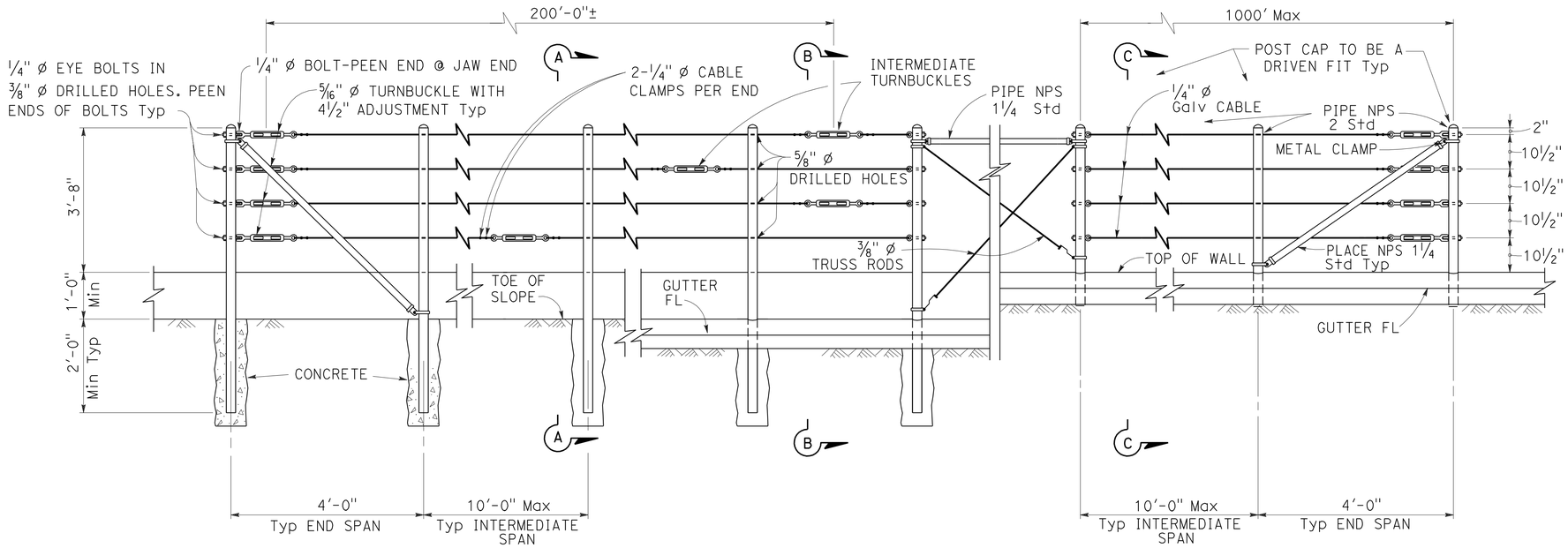

EXISTING WALL (WITHOUT GUTTER)
Existing

RETAINING WALL (WITH GUTTER)
Existing

RETAINING WALL (WITH GUTTER)
New construction

ELEVATION

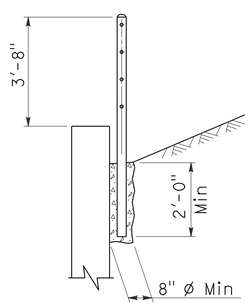

SECTION A-A
Existing

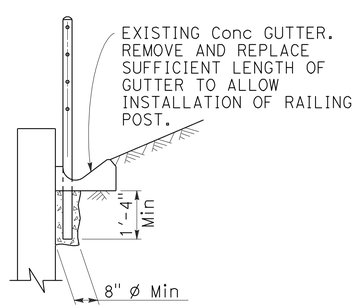

SECTION B-B
Existing

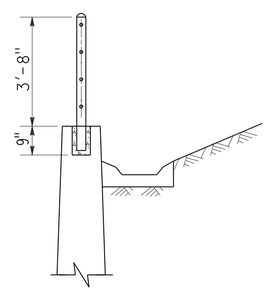

SECTION C-C
New construction

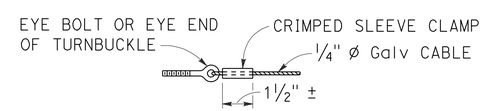

ALTERNATIVE CABLE CONNECTION

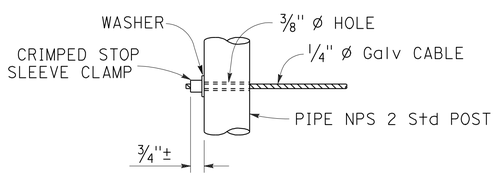

ALTERNATIVE DEAD END ANCHORAGE

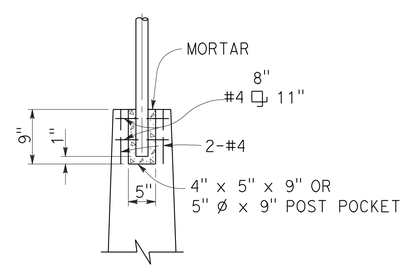

POST POCKET

NOTES:

1. Maximum distance between turnbuckles shall be 200'-0"±.
2. Intermediate turnbuckles to be placed in adjacent spans.
3. Cable shall not be spliced between intermediate turnbuckles and end posts.
4. Posts to be vertical.
5. Alignment of holes in posts may vary to conform to slope of top of retaining wall.
6. The Contractor shall verify all dependent dimensions in the field before ordering or fabricating any material.
7. Line posts shall be braced horizontally and trussed diagonally in both directions at intervals not to exceed 1000'.
8. Post pockets to be centered in top of wall.
9. Typical end spans, braced in both directions, shall be constructed at changes in line where the angle of deflection is 15° or more.
10. Provide thimbles at all cable loops.

STATE OF CALIFORNIA
DEPARTMENT OF TRANSPORTATION

CABLE RAILING

NO SCALE

RSP B11-47 DATED OCTOBER 21, 2011 SUPERSEDES STANDARD PLAN B11-47 DATED MAY 20, 2011 - PAGE 293 OF THE STANDARD PLANS BOOK DATED 2010.

REVISED STANDARD PLAN RSP B11-47

2010 REVISED STANDARD PLAN RSP B11-47

9-14-11

DIST	COUNTY	ROUTE	POST MILES TOTAL PROJECT	SHEET NO.	TOTAL SHEETS
12	Ora	91	0.9/5.4	630	885

REGISTERED ELECTRICAL ENGINEER

January 20, 2012
PLANS APPROVAL DATE

REGISTERED PROFESSIONAL ENGINEER Jeffery G. McRae No. E14512 Exp. 6-30-12 ELECTRICAL STATE OF CALIFORNIA

THE STATE OF CALIFORNIA OR ITS OFFICERS OR AGENTS SHALL NOT BE RESPONSIBLE FOR THE ACCURACY OR COMPLETENESS OF SCANNED COPIES OF THIS PLAN SHEET.

TO ACCOMPANY PLANS DATED 8-13-12

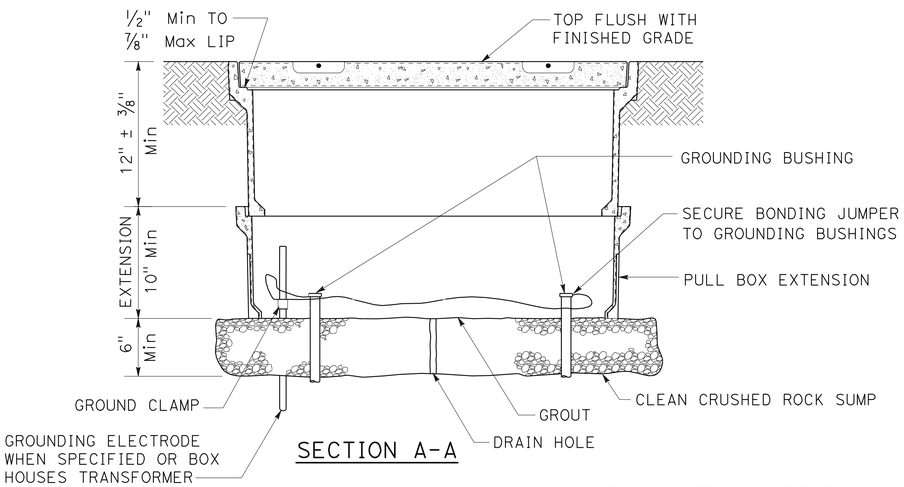

SECTION A-A

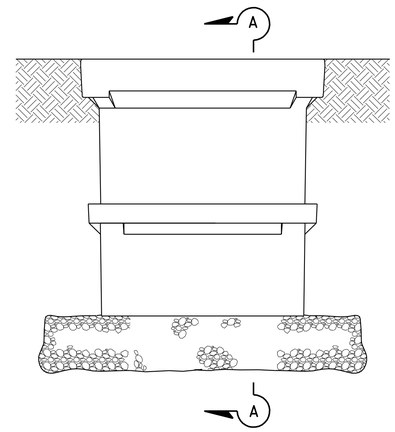

SIDE VIEW

INSTALLATION DETAILS

DETAIL A

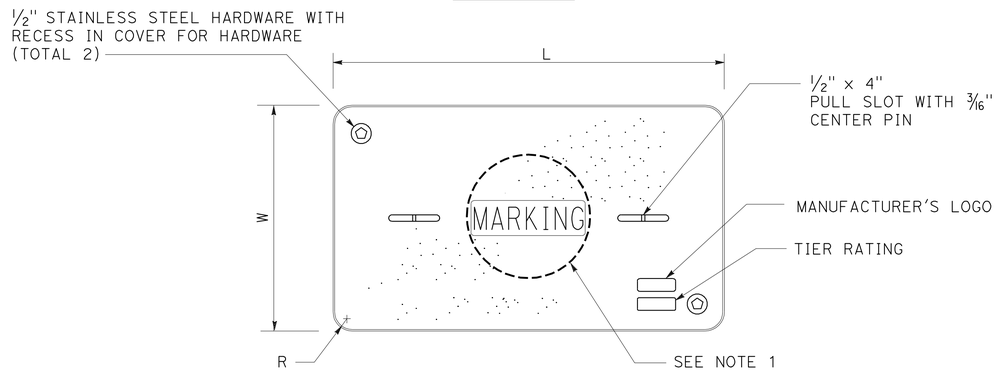

COVER TOP VIEW

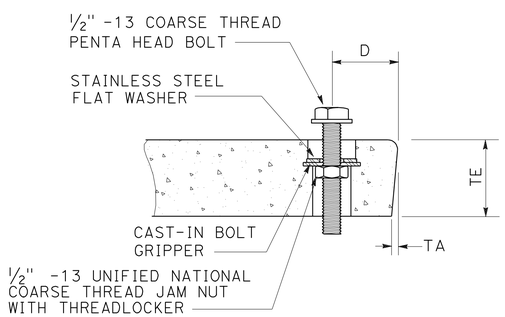

TYPICAL COVER CAPTIVE BOLT

OR SIMILAR

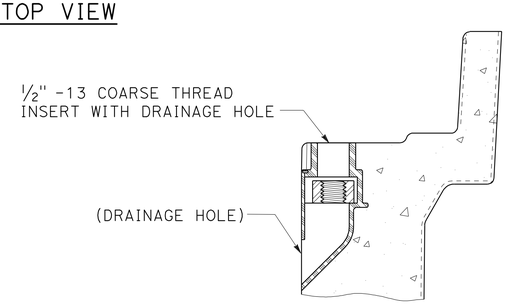

TYPICAL THREADED INSERT

OR SIMILAR

DIMENSION TABLE										
PULL BOX	PULL BOX			COVER						
	MINIMUM DEPTH BOX	MINIMUM DEPTH EXTENSION	MAXIMUM WEIGHT	L	W	R	TE	TA	D	MAXIMUM WEIGHT
No. 3 1/2	12"	N/A	40 lb	1' - 3 3/8"	10 1/8"	1 3/8"	2"	1/8"	1 3/4"	30 lb
No. 5	12"	10"	55 lb	1' - 11 1/4"	1' - 1 3/4"	1 3/8"	2"	1/8"	1 3/4"	60 lb
No. 6	12"	10"	70 lb	2' - 6 1/2"	1' - 5 1/2"	1 3/8"	2"	1/8"	2"	85 lb

NOTES ON PULL BOXES:

1. Pull box covers must be marked as follows: "SERVICE" Service circuits between service point and service disconnect; "SPRINKLER-CONTROL" sprinkler control circuits, 50 V or less; "CALTRANS" on all pull boxes, except pull boxes marked "SPRINKLER-CONTROL"; and "TELEPHONE" Telephone service;

   A) No. 3 1/2 pull box.
      1) "SIGNAL" - Traffic signal circuits with or without street or sign lighting circuits.
      2) "ST LIGHTING" - Street or sign lighting circuits where voltage is under 600 V.

   B) No. 5, 6, 9 or 9A pull box.
      1) "TRAFFIC SIGNAL" - Traffic signal circuits with or without street or sign lighting circuits.
      2) "STREET LIGHTING" - Street or sign lighting circuits where voltage is under 600 V.
      3) "STREET LIGHTING-HIGH VOLTAGE" - Street or sign lighting circuits where voltage is above 600 V.
      4) "IRRIGATION" - Circuits to irrigation controller 120 V or more.
      5) "RAMP METER" - Ramp meter circuits.
      6) "COUNT STATION" - Count or speed monitor circuits.
      7) "COMMUNICATIONS" - Communication circuits.
      8) "TOS COMMUNICATIONS" - TOS communication line.
      9) "TOS POWER" - TOS power.
      10) "TDC POWER" - Telephone demarcation cabinet power.
      11) "CCTV" - Closed circuit television circuits.
      12) "TMS" - Traffic monitoring station circuits.
      13) "CMS" - Changeable message sign circuits.
      14) "HAR" - Highway advisory radio circuits.

2. The nominal dimensions of the opening in which the cover sets must be the same as the cover dimensions (L and W) plus 1/8" or greater.

3. Covers and boxes must be interchangeable with California Standard. When interchanged with a standard, the top surfaces must be flush within 1/8". Top outside radius of covers and pull boxes must have a 1/8" radius.

4. Pull box extension may be another pull box as long as the bottom edge of the pull box can fit into the cover opening.

STATE OF CALIFORNIA
DEPARTMENT OF TRANSPORTATION

ELECTRICAL SYSTEMS (PULL BOX)

NO SCALE

RSP ES-8A DATED JANUARY 20, 2012 SUPPLEMENTS THE STANDARD PLANS BOOK DATED 2010.

REVISED STANDARD PLAN RSP ES-8A

2010 REVISED STANDARD PLAN RSP ES-8A

01-09-12

DIST	COUNTY	ROUTE	POST MILES TOTAL PROJECT	SHEET NO.	TOTAL SHEETS
12	Ora	91	0.9/5.4	631	885

REGISTERED ELECTRICAL ENGINEER

January 20, 2012
PLANS APPROVAL DATE

REGISTERED PROFESSIONAL ENGINEER
Jeffery G. McRae
No. E14512
Exp. 6-30-12
ELECTRICAL
STATE OF CALIFORNIA

THE STATE OF CALIFORNIA OR ITS OFFICERS OR AGENTS SHALL NOT BE RESPONSIBLE FOR THE ACCURACY OR COMPLETENESS OF SCANNED COPIES OF THIS PLAN SHEET.

TO ACCOMPANY PLANS DATED 8-13-12

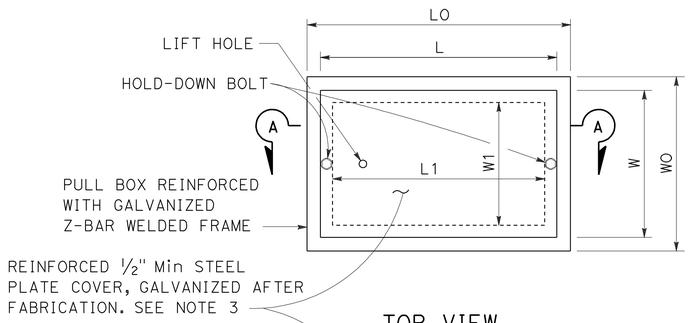

TOP VIEW

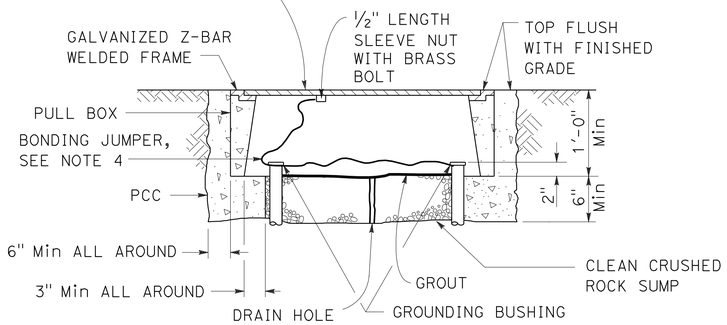

SECTION A-A

No. 3½(T), No. 5(T) AND No. 6(T) TRAFFIC PULL BOX

NOTES ON PULL BOXES:

1. Traffic pull box shall be provided with steel cover and special concrete footing. Steel cover shall have embossed non-skid pattern.
2. Steel reinforcing shall be as regularly used in the standard products of the respective manufacturer.
3. Pull box covers must be marked as follows: "SERVICE" Service circuits between service point and service disconnect; "SPRINKLER-CONTROL" Sprinkler control circuits, 50 V or less; "CALTRANS" On all pull boxes, except pull boxes marked "SPRINKLER-CONTROL"; and "TELEPHONE" Telephone service.
   A) No. 3½(T) pull box.
      1) "SIGNAL" - Traffic signal circuits with or without street or sign lighting circuits.
      2) "ST LIGHTING" - Street or sign lighting circuits where voltage is under 600 V.
   B) No. 5(T) or 6(T) pull box.
      1) "TRAFFIC SIGNAL" - Traffic signal circuits with or without street or sign lighting circuits.
      2) "STREET LIGHTING" - Street or sign lighting circuits where voltage is under 600 V.
      3) "STREET LIGHTING-HIGH VOLTAGE" - Street or sign lighting circuits where voltage is above 600 V.
      4) "IRRIGATION" - Circuits to irrigation controller 120 V or more.
      5) "RAMP METER" - Ramp meter circuits.
      6) "COUNT STATION" - Count or speed monitor circuits.
      7) "COMMUNICATION" - Communication circuits.
      8) "TOS COMMUNICATIONS" - TOS communications line.
      9) "TOS POWER" - TOS power.
      10) "TDC POWER" - Telephone demarcation cabinet power.
      11) "CCTV" - Closed circuit television circuits.
      12) "TMS" - Traffic monitoring station circuits.
      13) "CMS" - Changeable message sign circuits.
      14) "HAR" - Highway advisory radio circuits.
4. Bonding jumper for metal covers shall be 3' long, minimum.
5. The nominal dimensions of the opening in which the cover sets must be the same as the cover dimensions except the length and width dimensions shall be ⅛" greater.
6. Covers and boxes must be interchangeable with California standard male and female gages. When interchanged with a standard male or female gage, the top surfaces must be flush within ⅛".

DIMENSION TABLE

PULL BOX	BOX						COVER				
	MINIMUM * THICKNESS	MINIMUM DEPTH BOX AND EXTENSION	WO	LO	L1	W1	L **	W **	R	EDGE THICKNESS	EDGE TAPER
No. 3½(T)	1½"	1'-0"	1'-5"± 1"	1'-8⅞"±	1'-2½"±	10⅝"± 1"	1'-8"±	1'-1¾"±	0"	½"	NONE
No. 5(T)	1¾"	1'-0"	1'-11½"± 1"	2'-5½"±	1'-7"±	1'-1"± 1"	2'-3"±	1'-4"±	0"	½"	NONE
No. 6(T)	2"	1'-0"	2'-6"± 1"	2'-11½"±	1'-11½"±	1'-5"± 1"	2'-9"±	1'-8"±	0"	½"	NONE

* EXCLUDING CONDUIT WEB ** TOP DIMENSION

STATE OF CALIFORNIA
DEPARTMENT OF TRANSPORTATION

ELECTRICAL SYSTEMS (TRAFFIC RATED PULL BOX)

NO SCALE

RSP ES-8B DATED JANUARY 20, 2012 SUPPLEMENTS THE STANDARD PLANS BOOK DATED 2010.

REVISED STANDARD PLAN RSP ES-8B

2010 REVISED STANDARD PLAN RSP ES-8B

Dist	COUNTY	ROUTE	POST MILES TOTAL PROJECT	SHEET No.	TOTAL SHEETS
12	Ora	91	0.9/5.4	632	885

REGISTERED ELECTRICAL ENGINEER

July 20, 2012
PLANS APPROVAL DATE

REGISTERED PROFESSIONAL ENGINEER
Jeffery G. McRae
No. E14512
Exp. 6-30-14
ELECTRICAL
STATE OF CALIFORNIA

THE STATE OF CALIFORNIA OR ITS OFFICERS OR AGENTS SHALL NOT BE RESPONSIBLE FOR THE ACCURACY OR COMPLETENESS OF SCANNED COPIES OF THIS PLAN SHEET.

TO ACCOMPANY PLANS DATED 8-13-12

ISOFOOTCANDLE CURVE - MINIMUM

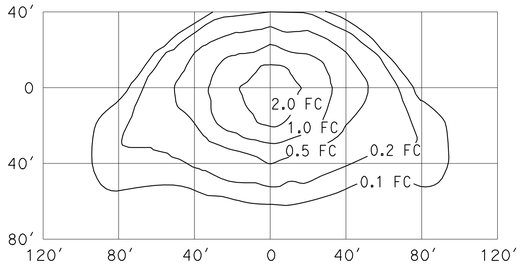

TYPE III MEDIUM CUTOFF

Cutoff Luminaire
34′ Mounting Height
Lamp operated at 22,000 lm
200-W high pressure sodium lamp
ANSI Designation S66

ISOFOOTCANDLE CURVE - MINIMUM

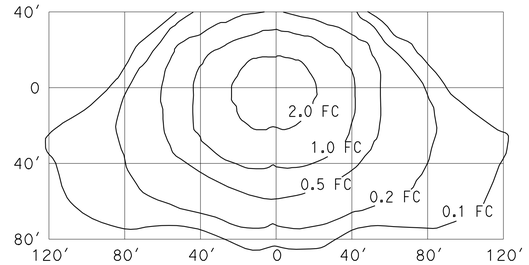

TYPE III MEDIUM CUTOFF

Cutoff Luminaire
40′ Mounting Height
Lamp operated at 37,000 lm
310-W high pressure sodium lamp
ANSI Designation S67

ISOFOOTCANDLE CURVE - MINIMUM

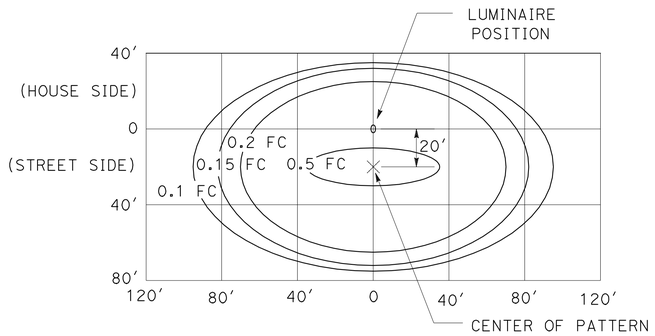

LED LUMINAIRE ROADWAY 1

200-W HPS Equivalent at 34′ Mounting Height

ISOFOOTCANDLE CURVE - MINIMUM

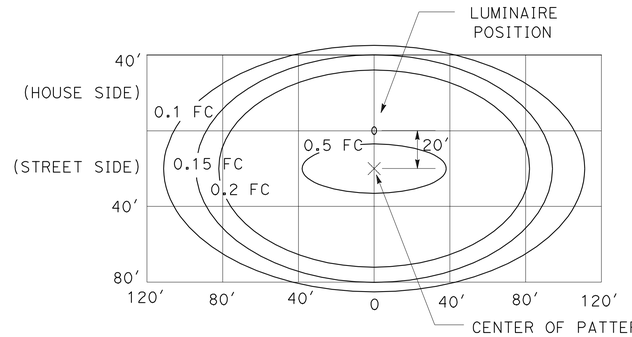

LED LUMINAIRE ROADWAY 2

310-W HPS Equivalent at 40′ Mounting Height

ISOFOOTCANDLE CURVE - MINIMUM

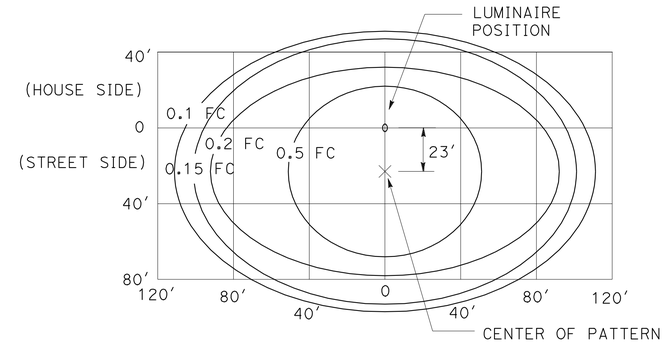

LED LUMINAIRE ROADWAY 4

400-W HPS Equivalent at 40′ Mounting Height

ISOFOOTCANDLE CURVE - MINIMUM

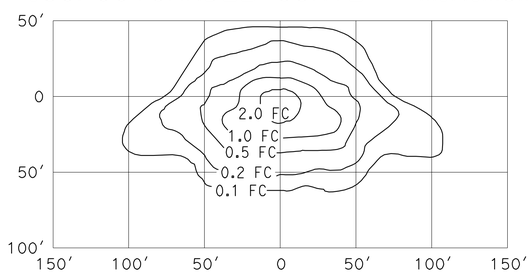

TYPE III MEDIUM CUTOFF

Cutoff Luminaire
30′ Mounting Height
Lamp operated at 16,000 lm
150-W high pressure sodium lamp
ANSI Designation S55

ISOFOOTCANDLE CURVE - MINIMUM

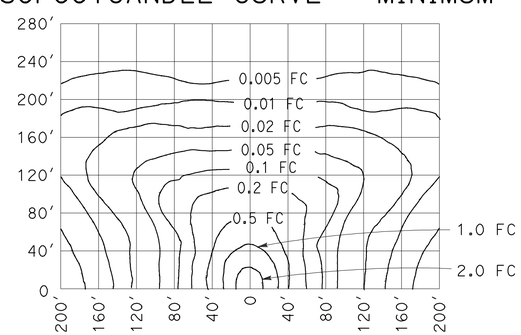

LOW PRESSURE SODIUM LUMINAIRE

40′ Mounting Height
Lamp operated at 33,000 lm
180-W low pressure sodium lamp

STATE OF CALIFORNIA
DEPARTMENT OF TRANSPORTATION

ELECTRICAL SYSTEMS (ISOFOOTCANDLE DIAGRAMS)

NO SCALE

RSP ES-10A DATED JULY 20, 2012 SUPPLEMENTS THE STANDARD PLANS BOOK DATED 2010.

REVISED STANDARD PLAN RSP ES-10A

2010 REVISED STANDARD PLAN RSP ES-10A

Dist	COUNTY	ROUTE	POST MILES TOTAL PROJECT	SHEET No.	TOTAL SHEETS
12	Ora	91	0.9/5.4	633	885

REGISTERED ELECTRICAL ENGINEER

July 20, 2012
PLANS APPROVAL DATE

REGISTERED PROFESSIONAL ENGINEER
Jeffery G. McRae
No. E14512
Exp. 6-30-14
ELECTRICAL
STATE OF CALIFORNIA

THE STATE OF CALIFORNIA OR ITS OFFICERS OR AGENTS SHALL NOT BE RESPONSIBLE FOR THE ACCURACY OR COMPLETENESS OF SCANNED COPIES OF THIS PLAN SHEET.

TO ACCOMPANY PLANS DATED 8-13-12

ISOFOOTCANDLE CURVE - MINIMUM

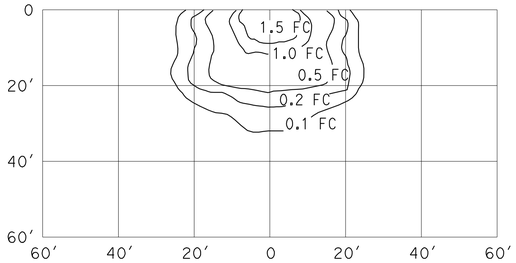

WALL LUMINAIRE
15′ Mounting Height
Lamp operated at 5,800 lm
70-W high pressure sodium lamp
ANSI Designation S62

ISOFOOTCANDLE CURVE - MINIMUM

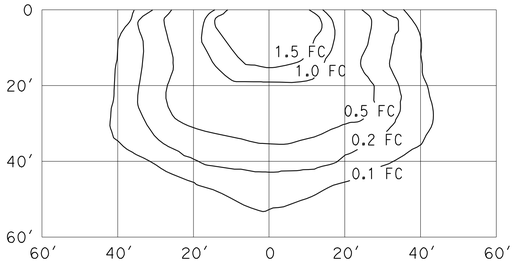

WALL LUMINAIRE
15′ Mounting Height
Lamp operated at 9,500 lm
100-W high pressure sodium lamp
ANSI Designation S54

ISOFOOTCANDLE CURVE - MINIMUM

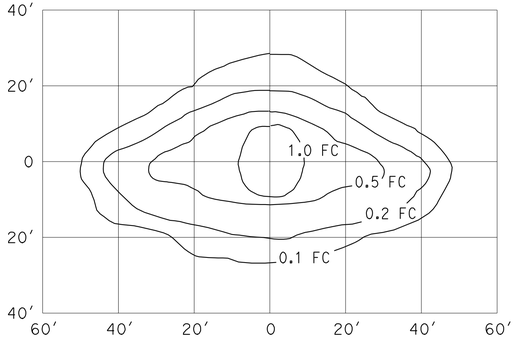

PENDANT SOFFIT LUMINAIRE
TYPE III SHORT
17′ Mounting Height
Lamp operated at 5,800 lm
70-W high pressure sodium lamp
ANSI Designation S62

ISOFOOTCANDLE CURVE - MINIMUM

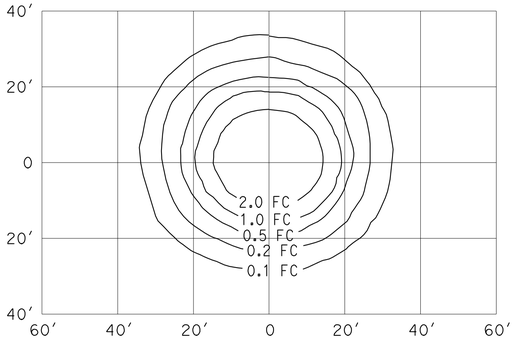

PENDANT SOFFIT LUMINAIRE
17′ Mounting Height
Lamp operated at 5,800 lm
70-W high pressure sodium lamp
ANSI Designation S62

ISOFOOTCANDLE CURVE - MINIMUM

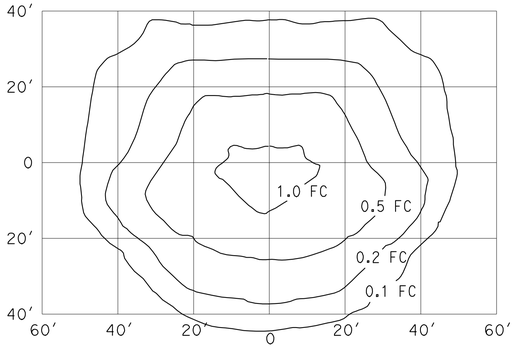

FLUSH SOFFIT LUMINAIRE
17′ Mounting Height
Lamp operated at 5,800 lm
70-W high pressure sodium lamp
ANSI Designation S62

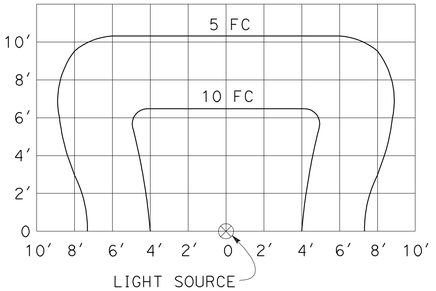

SIGN LIGHTING FIXTURE
ISOFOOTCANDLE DIAGRAM

NOTES:

1. Curves represent the minimum footcandle (FC) of initial illumination on a 10′-0" x 20′-0" panel.
2. The FC shown are with the fixture attached to the light fixture mounting channel which places the center of the source 4′-8" in front of panel and 1′-0" below the bottom edge.
3. Applicable lamp: 85-W fluorescent phosphor coated induction lamp.

STATE OF CALIFORNIA
DEPARTMENT OF TRANSPORTATION

ELECTRICAL SYSTEMS (ISOFOOTCANDLE DIAGRAMS)

NO SCALE

RSP ES-10B DATED JULY 20, 2012 SUPPLEMENTS THE STANDARD PLANS BOOK DATED 2010.

REVISED STANDARD PLAN RSP ES-10B

2010 REVISED STANDARD PLAN RSP ES-10B

DIST	COUNTY	ROUTE	POST MILES TOTAL PROJECT	SHEET No	TOTAL SHEETS
12	Ora	91	0.9/5.4	634	885

Jared Cole 7/30/12
REGISTERED CIVIL ENGINEER DATE

8-13-12
PLANS APPROVAL DATE

REGISTERED PROFESSIONAL ENGINEER Jared A. Cole No. C66188 Exp. 06/30/14 CIVIL STATE OF CALIFORNIA

The State of California or its officers or agents shall not be responsible for the accuracy or completeness of scanned copies of this plan sheet.

ORANGE COUNTY TRANSPORTATION AUTHORITY
550 SOUTH MAIN STREET
ORANGE, CA 92868

T.Y. LIN INTERNATIONAL
3550 VINE STREET, SUITE 120
RIVERSIDE, CA 92507

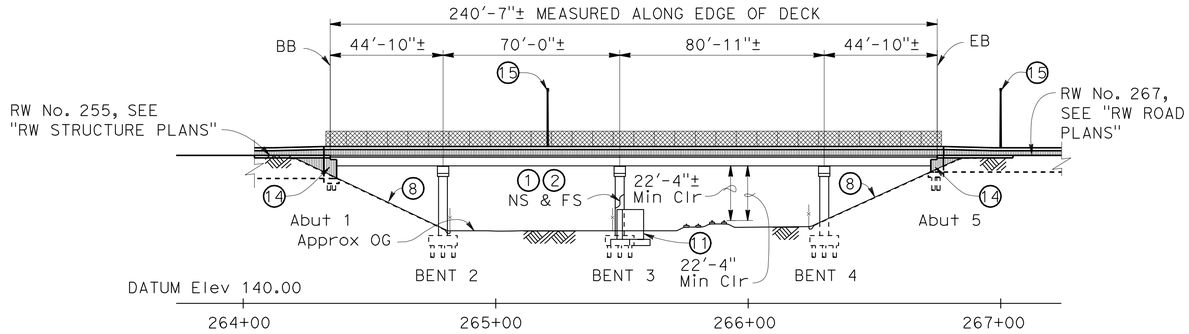

MIRRORED ELEVATION

1"=30'-0"

NOTE:
For "PILE DATA TABLE" see "FOUNDATION PLAN" sheet

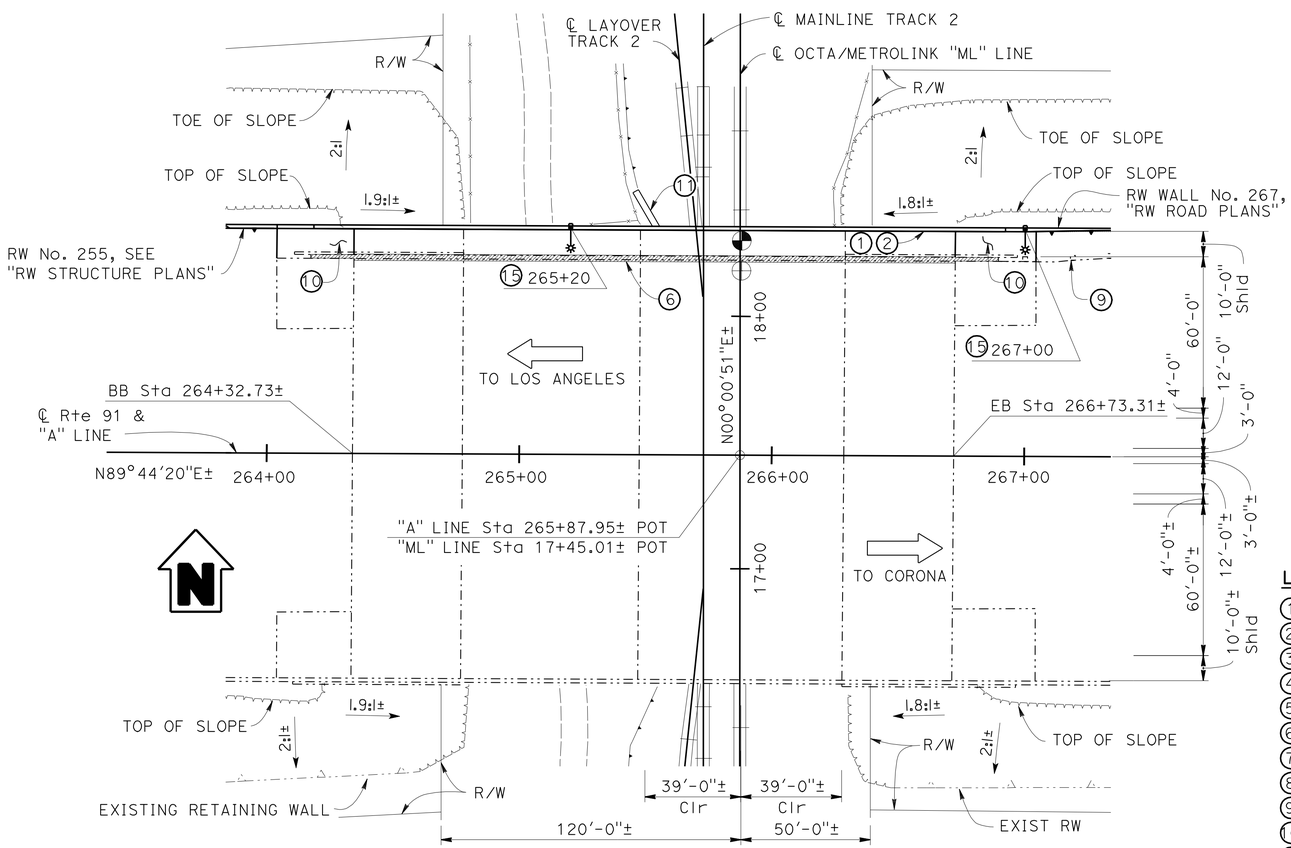

NOTE:
THE CONTRACTOR SHALL VERIFY ALL CONTROLLING FIELD DIMENSIONS BEFORE ORDERING OR FABRICATING ANY MATERIAL

PLAN

1"=30'-0"

NOTE: For "GENERAL NOTES" and "INDEX TO PLANS" see "INDEX TO PLANS" sheet

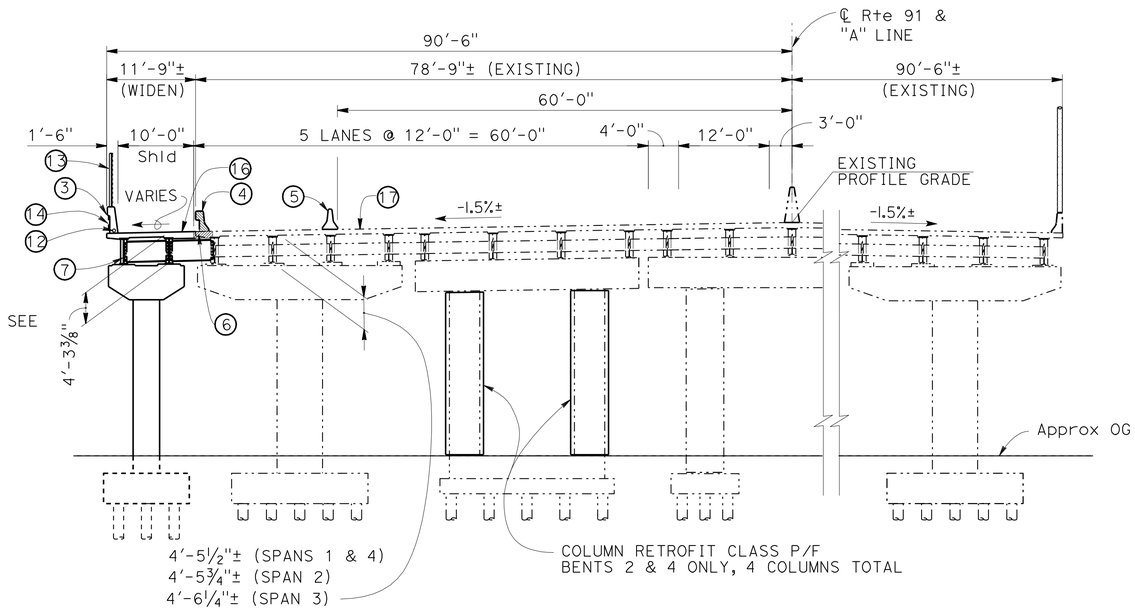

TYPICAL SECTION

1"=10'-0"

LEGEND:

1. Paint "North Anaheim Overhead"
2. Paint "Br No. 55-0216" and Year Constructed
3. Concrete Barrier Type 742 (Mod)
4. Remove exist barrier and portion of overhang
5. Temporary Railing (Type K), see "ROAD PLANS"
6. Closure pour
7. Composite steel girders, Typ
8. Slope paving
9. Remove exist MBGR, See "ROAD PLANS"
10. Structure Approach Type N(30S) and Type R(30S)
11. Pier Protection Wall
12. 1½" Lighting And Sign Illumination Conduit, See "ELECTRICAL PLANS"
13. Chain Link Railing Type 7
14. Fractured Rib Texture
15. Overhead Light, see "ELECTRICAL PLANS"
16. Polyester Concrete Overlay, match existing
17. Existing 0.1'± Polyester Concrete Overlay, see CAPM Plans 12-0K5304

- Indicates Bridge Removal (Portion), Location A
- Indicates Closure pour
- Widening Pt of Minimum Vertical Clr (22'-4")
- Existing Pt of minimum Vertical Clr (22'-4"±)
- Indicates New Structure
- Indicates Existing Structure
- Indicates Direction of Traffic

Luqi Yang DESIGN OVERSIGHT Luqi Yang 8-6-12 SIGN OFF DATE	DESIGN	BY Jared Cole	CHECKED Roya Golchoobian	LOAD & RESISTANCE FACTOR DESIGN	LIVE LOADING: HL93 W/"LOW-BOY"; PERMIT DESIGN VEHICLE
	DETAILS	BY Oscar Colcol	CHECKED Roya Golchoobian	LAYOUT BY Jared Cole	CHECKED Roya Golchoobian
	QUANTITIES	BY Sabina Piras	CHECKED Tim Fuller	SPECIFICATIONS BY Sal Sheikh	PLANS AND SPECS COMPARED Sal Sheikh

PREPARED FOR THE STATE OF CALIFORNIA DEPARTMENT OF TRANSPORTATION

David Griffith
PROJECT ENGINEER

BRIDGE NO. 55-0216
POST MILES 4.0

NORTH ANAHEIM OH (WIDEN)
GENERAL PLAN

DESIGN GENERAL PLAN SHEET (ENGLISH) (REV.7/16/10)

ORIGINAL SCALE IN INCHES FOR REDUCED PLANS 0 1 2 3

UNIT: 2295
PROJECT NUMBER & PHASE: 12000000791 CONTRACT NO.: 12-0C5701

DISREGARD PRINTS BEARING EARLIER REVISION DATES

REVISION DATES: 03/15/12 07/30/12 12/20/11 2/13/12

SHEET 1 OF 27

FILE => 55-0216-a-gp.dgn

DIST	COUNTY	ROUTE	POST MILES TOTAL PROJECT	SHEET No	TOTAL SHEETS
12	Ora	91	0.9/5.4	635	885

Jared Cole 7/30/12
REGISTERED CIVIL ENGINEER DATE

8-13-12
PLANS APPROVAL DATE

REGISTERED PROFESSIONAL ENGINEER Jared A. Cole No. C66188 Exp. 06/30/14 CIVIL STATE OF CALIFORNIA

The State of California or its officers or agents shall not be responsible for the accuracy or completeness of scanned copies of this plan sheet.

ORANGE COUNTY TRANSPORTATION AUTHORITY
550 SOUTH MAIN STREET
ORANGE, CA 92868

T.Y. LIN INTERNATIONAL
3550 VINE STREET, SUITE 120
RIVERSIDE, CA 92507

GENERAL NOTES
LOAD AND RESISTANCE FACTOR DESIGN

DESIGN:
AASHTO LRFD Bridge Design Specifications, 4th edition and the Caltrans Amendments, preface dated September 2010; except that bridge details (including barrier and railing details) taken from Standard Plans 2010 and Standard Bridge Details xs sheets, and Bridge Abutments are designed using Bridge Design Specifications (1996 AASHTO with Revisions by Caltrans).

SEISMIC DESIGN:
Caltrans Seismic Design Criteria (SDC), Version 1.5 dated September 2009.

DEAD LOAD:
Includes 15 psf for Polyester Concrete Overlay and 20 psf for future wearing surface.

The deck load between girders has been increased by a factor of 10% to allow for the use of steel deck forms.

LIVE LOADING:
HL93 and permit design load.

SEISMIC LOADING:

Soil profile: V_s^{30} =886 ft/sec.
Moment Magnitude: 7.6 g
Peak Ground Acceleration: 0.52g

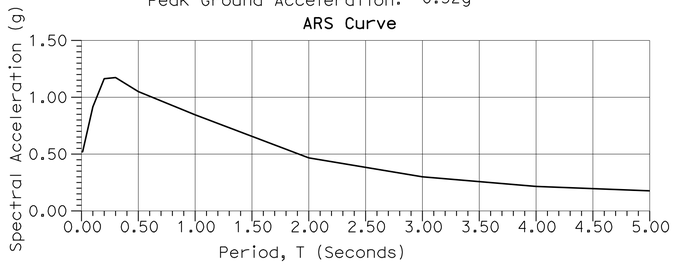

REINFORCED CONCRETE:

NEW:	EXIST:
f_y = 60 ksi	f_y = 60 ksi
f'_c = 3.6 ksi	f'_c = 3.25 ksi
n = 8	

STRUCTURAL STEEL:

NEW:	EXIST:
ASTM A709 GRADE 50	ASTM A709 GRADE 36

PLAN SYMBOLS

Section Identification

Standard Plan Sheet No.

Detail No.

NOTE:
THE CONTRACTOR SHALL VERIFY ALL CONTROLLING FIELD DIMENSIONS BEFORE ORDERING OR FABRICATING ANY MATERIAL

INDEX TO BRIDGE PLANS

SHEET No.	TITLE
1	GENERAL PLAN
2	INDEX TO PLANS
3	FOUNDATION PLAN
4	ABUTMENT LAYOUT
5	ABUTMENT DETAILS No. 1
6	ABUTMENT DETAILS No. 2
7	BENT DETAILS NO.1
8	BENT DETAILS NO.2
9	TYPICAL SECTION
10	GIRDER LAYOUT
11	GIRDER DETAILS No. 1
12	GIRDER DETAILS No. 2
13	GIRDER DETAILS No. 3
14	STEEL GIRDER TRANSVERSE STIFFENER DETAILS
15	STEEL GIRDER CONNECTION STIFFENER DETAILS
16	STRUCTURE APPROACH TYPE N(30S)
17	STRUCTURE APPROACH TYPE R(30S)
18	STRUCTURE APPROACH DRAINAGE DETAILS
19	SLOPE PAVING - FULL SLOPE
20	BRIDGE REMOVAL PLAN
21	BRIDGE REMOVAL DETAILS
22	MISCELLANEOUS DETAILS
23	PIER PROTECTION WALL
24	COLUMN CASING - STEEL
25	LOG OF TEST BORINGS 1 OF 3
26	LOG OF TEST BORINGS 2 OF 3
27	LOG OF TEST BORINGS 3 OF 3

STANDARD PLANS DATED 2010

A10A	ABBREVIATIONS (Sheet 1 Of 2)
A10B	ABBREVIATIONS (Sheet 2 Of 2)
A10C	LINES AND SYMBOLS (SHEET 1 OF 3)
A10D	LINES AND SYMBOLS (SHEET 2 OF 3)
A10E	LINES AND SYMBOLS (SHEET 3 OF 3)
A10F	LEGEND - SOIL (SHEET 1 OF 2)
A10G	LEGEND - SOIL (SHEET 2 OF 2)
A62C	LIMITS OF PAYMENT FOR EXCAVATION AND BACKFILL BRIDGE
RSP P10	CONCRETE PAVEMENT - DOWEL BAR DETAILS
B0-1	BRIDGE DETAILS
B0-3	BRIDGE DETAILS
B0-5	BRIDGE DETAILS
B0-13	BRIDGE DETAILS
B2-3	16" AND 24" CAST-IN-DRILLED-HOLE CONCRETE PILE
B6-21	JOINT SEALS (MAXIMUM MOVEMENT RATING = 2")
B11-52	CHAIN LINK RAILING TYPE 7
B11-57	CONCRETE BARRIER TYPE 742
T3A	TEMPORARY RAILING TYPE K

NORTH ANAHEIM OH (WIDEN) BR No. 55-0216

QUANTITIES

PREPARE CONCRETE BRIDGE DECK SURFACE	3,683	SQFT
BRIDGE REMOVAL (PORTION), LOCATION A	LUMP	SUM
STRUCTURE EXCAVATION (BRIDGE)	230	CY
STRUCTURE BACKFILL (BRIDGE)	155	CY
AGGREGATE BASE (APPROACH SLAB)	1	CY
16" CAST-IN-DRILLED-HOLE CONCRETE PILING	1,033	LF
STRUCTURAL CONCRETE, BRIDGE FOOTING	69	CY
STRUCTURAL CONCRETE, BRIDGE	152	CY
STRUCTURAL CONCRETE, APPROACH SLAB (TYPE N)	23	CY
STRUCTURAL CONCRETE, APPROACH SLAB (TYPE R)	4	CY
FRACTURED RIB TEXTURE	480	SQFT
DRILL AND BOND DOWEL	75	LF
FURNISH POLYESTER CONCRETE OVERLAY	461	CF
PLACE POLYESTER CONCRETE OVERLAY	3,683	SQFT
JOINT SEAL (MR1/2")	59	LF
BAR REINFORCING STEEL (BRIDGE)	46,000	LB
COLUMN CASING	21,000	LB
FURNISH STRUCTURAL STEEL (BRIDGE)	97,440	LB
ERECT STRUCTURAL STEEL (BRIDGE)	97,440	LB
CLEAN AND PAINT STRUCTURAL STEEL	LUMP	SUM
SLOPE PAVING (CONCRETE)	32	CY
CHAIN LINK RAILING (TYPE 7)	244	LF
CONCRETE BARRIER (TYPE 742)	246	LF

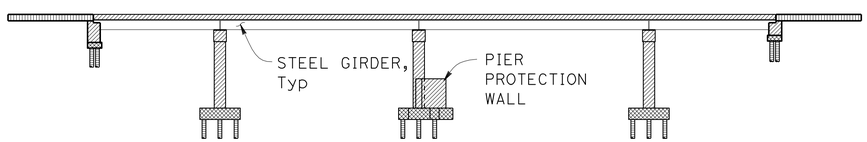

CONCRETE STRENGTH AND TYPE LIMITS
NO SCALE

LEGEND:

Structural Concrete, Bridge

Structural Concrete, Bridge Footing

Cast-In-Drilled-Hole Concrete Pile (f'c = 4.0 ksi at 28 days)

Structural Concrete, Approach Slab

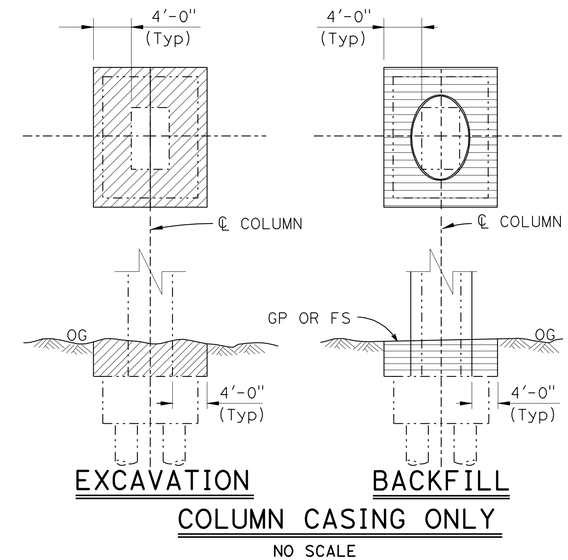

COLUMN CASING ONLY
NO SCALE

LEGEND:

Low Expansive Material EI<50 and SE>20

Structure Excavation (Bridge)

Structure Backfill (Bridge)

Roadway Excavation (see "Road Plans")

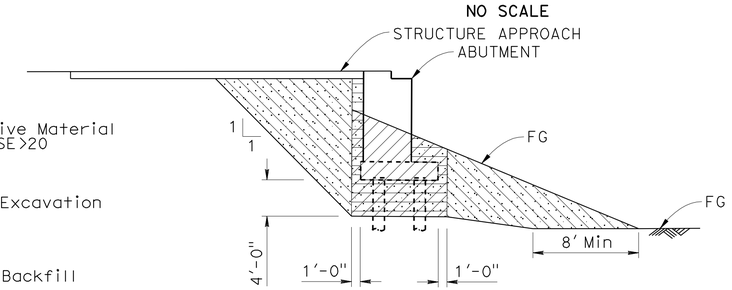

LIMITS OF EXPANSIVE SOIL EXCLUSION ZONE IN BRIDGE EMBANKMENT
NO SCALE

NOTE:
1. Transverse limit of Low Expansive Material shall be 12" from edges of abutment footing to end of existing abutment stem.

Luqi Yang
DESIGN OVERSIGHT Luqi Yang
8-6-12
SIGN OFF DATE

	BY	CHECKED
DESIGN	Jared Cole	Roya Golchoobian
DETAILS	Oscar Colcol	Roya Golchoobian
QUANTITIES	Sabina Piras	Tim Fuller

PREPARED FOR THE STATE OF CALIFORNIA DEPARTMENT OF TRANSPORTATION

David Griffith
PROJECT ENGINEER

BRIDGE NO. 55-0216
POST MILES 4.0

NORTH ANAHEIM OH (WIDEN)
INDEX TO PLANS

DESIGN DETAIL SHEET (ENGLISH) (REV.7/16/10)

ORIGINAL SCALE IN INCHES FOR REDUCED PLANS 0 1 2 3

UNIT: 2295
PROJECT NUMBER & PHASE: 12000000791 CONTRACT NO.: 12-0C5701

DISREGARD PRINTS BEARING EARLIER REVISION DATES

REVISION DATES: 01/15/12 07/30/12 12/27/12 2/12/12

SHEET 2 OF 27

FILE => 55-0216-b-itp.dgn

Filename: $FILE$ Date: $DATE$ Time: $TIME$

DIST	COUNTY	ROUTE	POST MILES TOTAL PROJECT	SHEET No	TOTAL SHEETS
12	Ora	91	0.9/5.4	636	885

Jared Cole 6/19/12
REGISTERED CIVIL ENGINEER DATE

8-13-12
PLANS APPROVAL DATE

REGISTERED PROFESSIONAL ENGINEER Jared A. Cole No. C66188 Exp. 06/30/14 CIVIL STATE OF CALIFORNIA

The State of California or its officers or agents shall not be responsible for the accuracy or completeness of scanned copies of this plan sheet.

ORANGE COUNTY TRANSPORTATION AUTHORITY
550 SOUTH MAIN STREET
ORANGE, CA 92868

T.Y. LIN INTERNATIONAL
3550 VINE STREET, SUITE 120
RIVERSIDE, CA 92507

BENCHMARKS:

Elevations as shown hereon are in terms of the North American Vertical Datum of 1988 (NAVD88), based locally upon the following Benchmarks as published by the County of Orange:

Designation: 2F-25-04 Elev = 162.70
Described by OCS 2004 - Found 3¾" OCS Aluminum Benchmark Disk Stamped "2F-25-04", set in the northwesterly corner of a 7.5 ft. by 4.5 ft. Concrete Catch Basin. Monument is located in the northeasterly corner of the intersection of Harbor Boulevard and the Eastbound 91 Freeway On-Ramp, 39 ft. northerly of the centerline of the On-Ramp and 40 ft. easterly of the centerline of Harbor Boulevard. Monument is set level with the sidewalk

Designation: 2D-35-86 Elev = 188.58
Described by OCS 2003 - Found 3¾" OCS Aluminum Benchmark Disk Stamped "2D-35-86", set in the northwesterly corner of a 7 ft. by 14 ft. Concrete Catch Basin. Monument is located in the southeasterly corner of the intersection of Placentia Avenue and State College Boulevard, 38 ft. easterly of the centerline of State College and 70.5 ft. southerly of the centerline of Placentia. Monument is set level with the sidewalk

BASIS OF COORDINATES:

Bearings and Coordinates as shown hereon are in terms of the California Coordinate System of 1983 (CCS83, Epoch 1991.35), Zone 6; based locally upon the following Control Stations as published by the County of Orange:

Name	Northing (ft)-Grid	Easting (ft)-Grid
OCS GPS 3511R1	2257877.29	6037582.77
OCS GPS 3518	2260444.33	6053380.91
OCS GPS 5260	2257149.07	6063970.03

PILE DATA TABLE

Location	Pile Type	Nominal Resistance (kips)		Design Tip Elevation (ft)	Specified Tip Elev (ft)
		Compression	Tension		
Abut 1	16" CIDH	140	0	+155 (a) +168 (d)	+155
Bent 2	16" CIDH	240	140	+130 (a) +133 (b) +143 (d)	+130
Bent 3 (Note 5)	16" CIDH	240	140	+130 (a) +133 (b) +143 (d)	+130
Bent 4	16" CIDH	240	140	+130 (a) +133 (b) +143 (d)	+130
Abut 5	16" CIDH	140	0	+155 (a) +170 (d)	+155

NOTES:

1) Design tip elevation are controlled by the following demands: (a) Compression, (b) Tension, (c) Settlement, and (d) Lateral Load
2) There is no design tip elevation for Tension at Abutments 1 and 5.
3) There is no design tip elevation for Settlement at Abutments 1 and 5, and Bents 2, 3, and 4.
4) The specified tip elevations shall not be raised above the design tip elevation for Tension and Lateral Load.
5) Also applies to pier protection wall pile.

NOTE:
THE CONTRACTOR SHALL VERIFY ALL CONTROLLING FIELD DIMENSIONS BEFORE ORDERING OR FABRICATING ANY MATERIAL

WARNING:

The Contractor shall be aware of the existing 12 kv OH distribution lines near Bent 2. The contractor shall be aware of the existing fiber optic line near Bent 3. Contractor shall work with extreme care during pile drilling construction and girder erection. Anaheim Public Utilities Department (APUD) and Sprint must be notified prior to start of construction work. For fiber optic line, see notes 5 and 6 on "BENT DETAILS NO. 1" sheet.

UTILITIES:

1 - Electrical (OH)(APUD), protect in place
2 - Fiber Optic (Sprint), protect in place
3 - Communication and Signal (SCRRA), protect in place

LEGEND:

- Indicates bottom of footing elevation.
- Indicates 16"Ø CIDH pile (all not shown)
- Indicates existing pile (all not shown)
- Indicates existing structure
- Indicates new construction
- Indicates chain link fence
- indicates bridge removal (portion), Location A
1 - 41'-6"±
2 - 24'-9"±
3 - See "PIER PROTECTION WALL" sheet

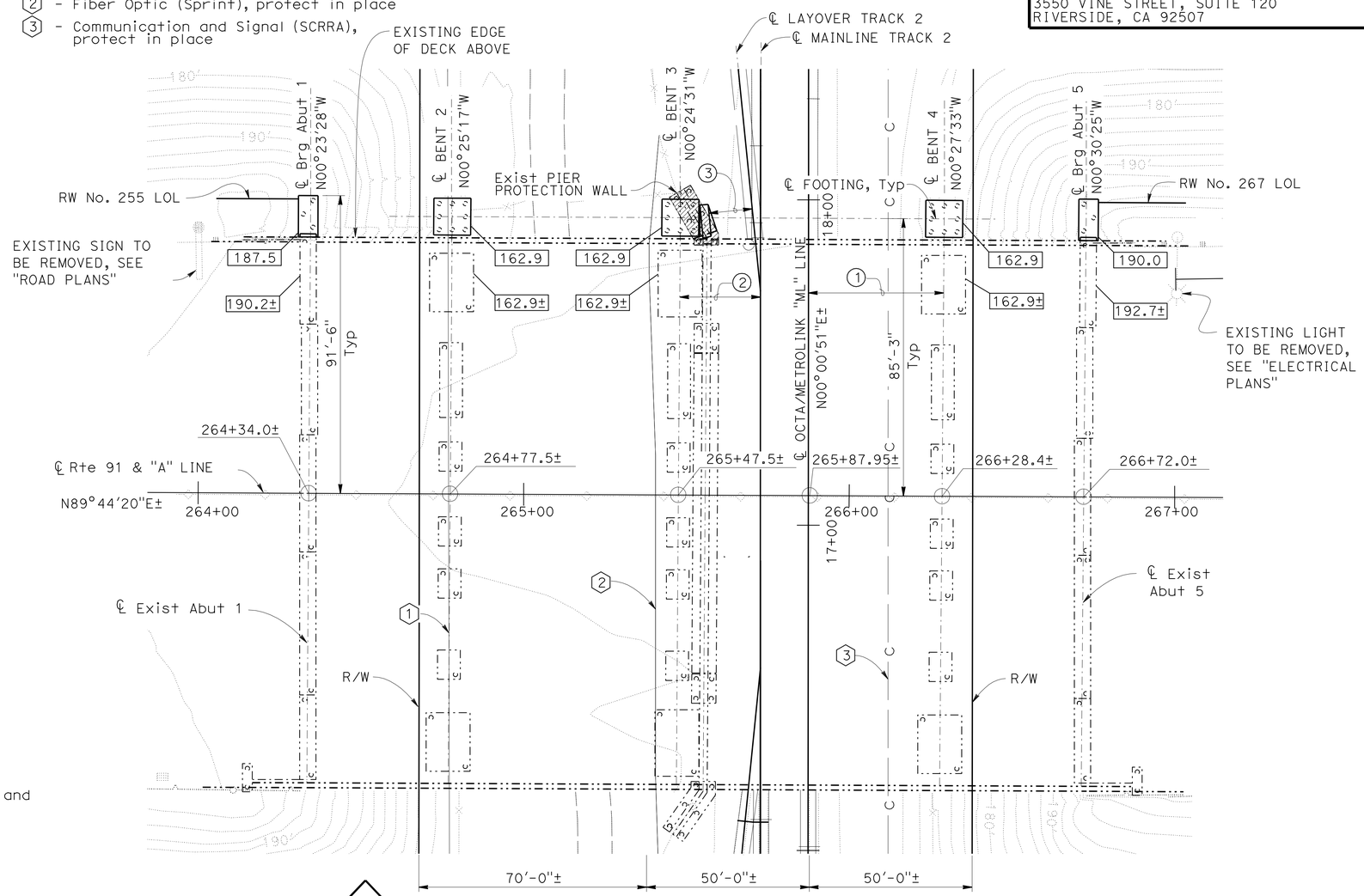

PLAN
1"=20'-0"

GEOTECHNICAL PROFESSIONAL APPROVAL DATE 3/15/12

Luqi Yang DESIGN OVERSIGHT Luqi Yang 6-21-12 SIGN OFF DATE	SCALE: AS SHOWN	VERT.DATUM NAVD 88	HORZ.DATUM NAD 83 (1991.35)	DESIGN BY Jared Cole	CHECKED Roya Golchoobian	PREPARED FOR THE STATE OF CALIFORNIA DEPARTMENT OF TRANSPORTATION	David Griffith PROJECT ENGINEER
	PHOTOGRAMMETRY AS OF: 04-15-2010	ALIGNMENT TIES		DETAILS BY Oscar Colcol	CHECKED Roya Golchoobian		
	SURVEYED BY B. Cox	DRAFTED BY G. Ciampaglia		QUANTITIES BY Sabina Piras	CHECKED Tim Fuller		
	FIELD CHECKED BY B. Cox	CHECKED BY B. Cox					

BRIDGE NO. 55-0216
POST MILES 4.0

NORTH ANAHEIM OH (WIDEN)
FOUNDATION PLAN

FOUNDATION PLAN SHEET (ENGLISH) (REV.7/16/10)

ORIGINAL SCALE IN INCHES FOR REDUCED PLANS 0 1 2 3

UNIT: 2295
PROJECT NUMBER & PHASE: 12000000791 CONTRACT NO.: 12-0C5701

DISREGARD PRINTS BEARING EARLIER REVISION DATES

REVISION DATES 03/15/12 ~~09/16/11~~ ~~12/22/11~~ ~~2/12/12~~

SHEET 3 OF 27

FILE => 55-0216-e-fdp1.dgn

Filename: $FILE$ Date: $DATE$ Time: $TIME$

DIST	COUNTY	ROUTE	POST MILES TOTAL PROJECT	SHEET No	TOTAL SHEETS
12	Ora	91	0.9/5.4	637	885

Jared Cole 3/15/12
REGISTERED CIVIL ENGINEER DATE

8-13-12
PLANS APPROVAL DATE

REGISTERED PROFESSIONAL ENGINEER Jared A. Cole No. C66188 Exp. 06/30/14 CIVIL STATE OF CALIFORNIA

The State of California or its officers or agents shall not be responsible for the accuracy or completeness of scanned copies of this plan sheet.

ORANGE COUNTY TRANSPORTATION AUTHORITY
550 SOUTH MAIN STREET
ORANGE, CA 92868

T.Y. LIN INTERNATIONAL
3550 VINE STREET, SUITE 120
RIVERSIDE, CA 92507

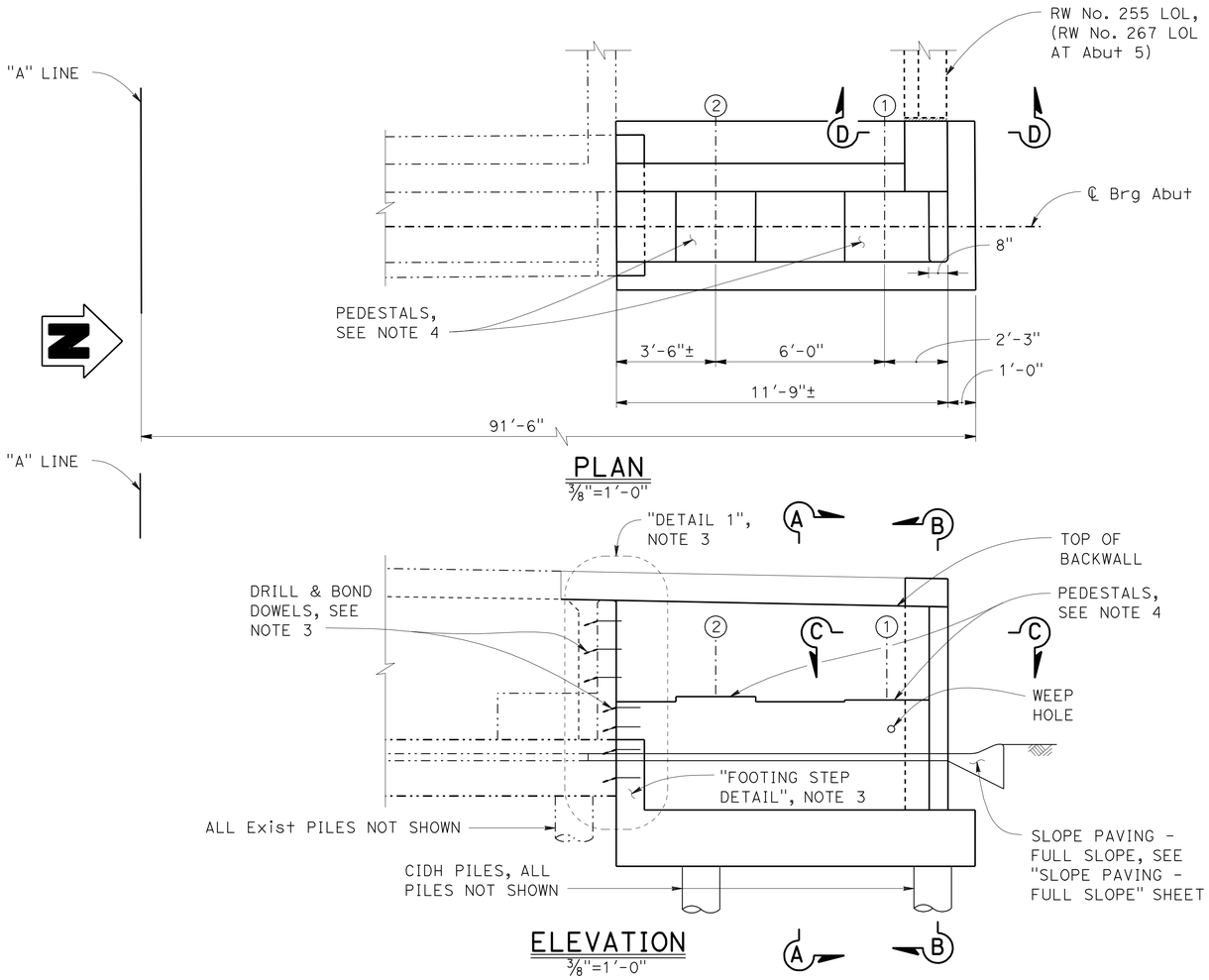

PLAN
3/8"=1'-0"

ELEVATION
3/8"=1'-0"

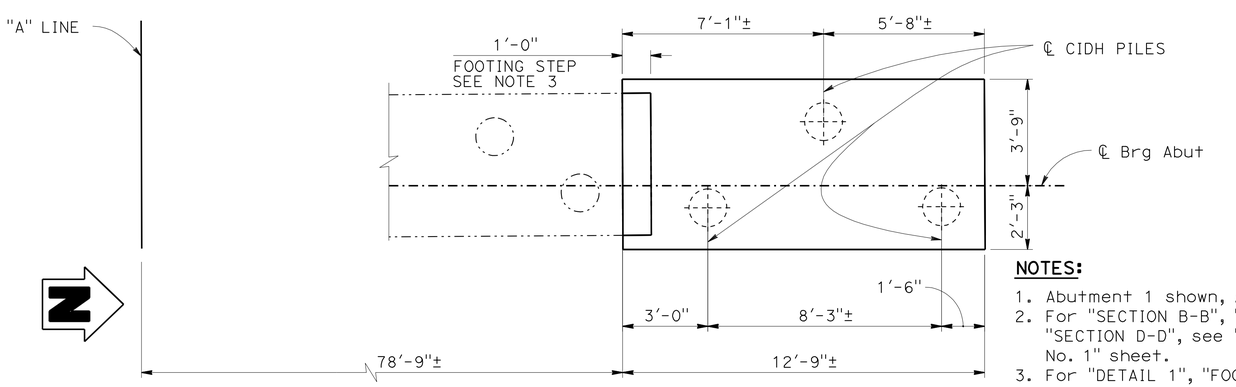

NOTE:
THE CONTRACTOR SHALL VERIFY ALL CONTROLLING FIELD DIMENSIONS BEFORE ORDERING OR FABRICATING ANY MATERIAL

FOOTING PLAN
3/8"=1'-0"

LEGEND:

- -·-·- Indicates Existing Structure
- —— Indicates New Structure
- ①&② Indicates ℄ Girder, see "GIRDER LAYOUT" sheet
- ▨ Indicates Polyester Concrete Overlay

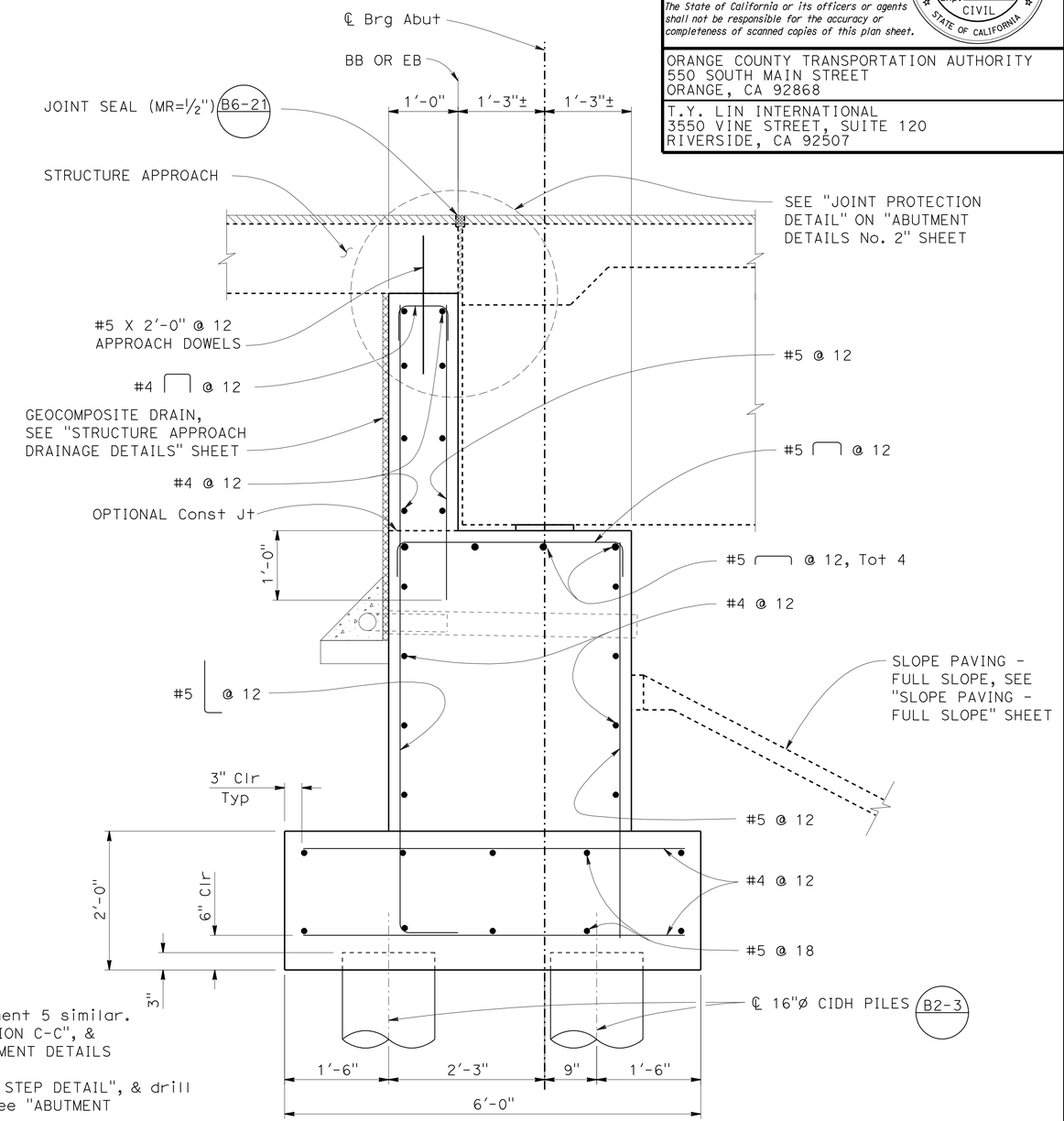

SECTION A-A
1"=1'-0"

NOTES:

1. Abutment 1 shown, Abutment 5 similar.
2. For "SECTION B-B", "SECTION C-C", & "SECTION D-D", see "ABUTMENT DETAILS No. 1" sheet.
3. For "DETAIL 1", "FOOTING STEP DETAIL", & drill & bond dowel location, see "ABUTMENT DETAILS No. 2" sheet.
4. See "PEDESTAL DETAILS" on "ABUTMENT DETAILS No. 1" sheet.

Luqi Yang
DESIGN OVERSIGHT Luqi Yang
3-29-12
SIGN OFF DATE

	BY	CHECKED
DESIGN	Jared Cole	Roya Golchoobian
DETAILS	Oscar Colcol	Roya Golchoobian
QUANTITIES	Sabina Piras	Tim Fuller

PREPARED FOR THE STATE OF CALIFORNIA DEPARTMENT OF TRANSPORTATION

David Griffith
PROJECT ENGINEER

BRIDGE NO. 55-0216
POST MILES 4.0

NORTH ANAHEIM OH (WIDEN)
ABUTMENT LAYOUT

DESIGN DETAIL SHEET (ENGLISH) (REV.7/16/10)

ORIGINAL SCALE IN INCHES FOR REDUCED PLANS 0 1 2 3

UNIT: 2295
PROJECT NUMBER & PHASE: 12000000791 CONTRACT NO.: 12-0C5701

DISREGARD PRINTS BEARING EARLIER REVISION DATES

REVISION DATES 03/15/12 03/16/11 12/22/11 2/13/12 SHEET 4 OF 27

FILE => 55-0216-f-a01_lo1.dgn

Filename: $FILE$ Date: $DATE$ Time: $TIME$

DIST	COUNTY	ROUTE	POST MILES TOTAL PROJECT	SHEET No	TOTAL SHEETS
12	Ora	91	0.9/5.4	638	885

Jared Cole 7/30/12
REGISTERED CIVIL ENGINEER DATE

8-13-12
PLANS APPROVAL DATE

REGISTERED PROFESSIONAL ENGINEER Jared A. Cole No. C66188 Exp. 06/30/14 CIVIL STATE OF CALIFORNIA

The State of California or its officers or agents shall not be responsible for the accuracy or completeness of scanned copies of this plan sheet.

ORANGE COUNTY TRANSPORTATION AUTHORITY
550 SOUTH MAIN STREET
ORANGE, CA 92868

T.Y. LIN INTERNATIONAL
3550 VINE STREET, SUITE 120
RIVERSIDE, CA 92507

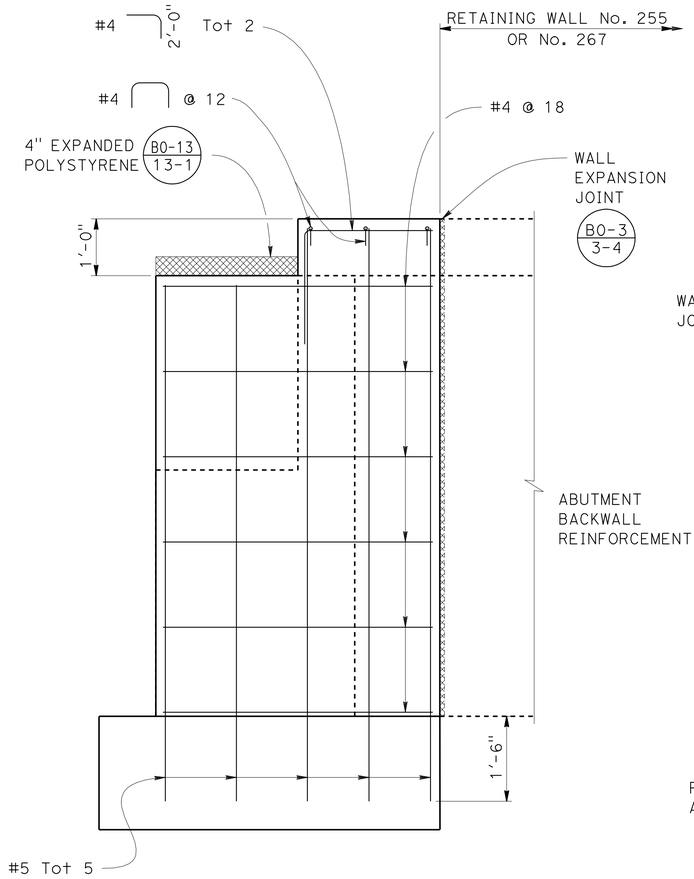

SECTION B-B
3/4"=1'-0"

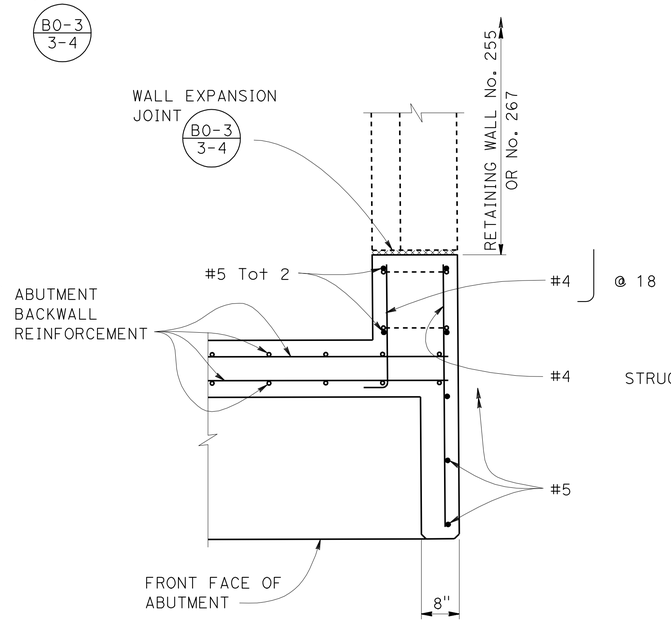

SECTION C-C
3/4"=1'-0"

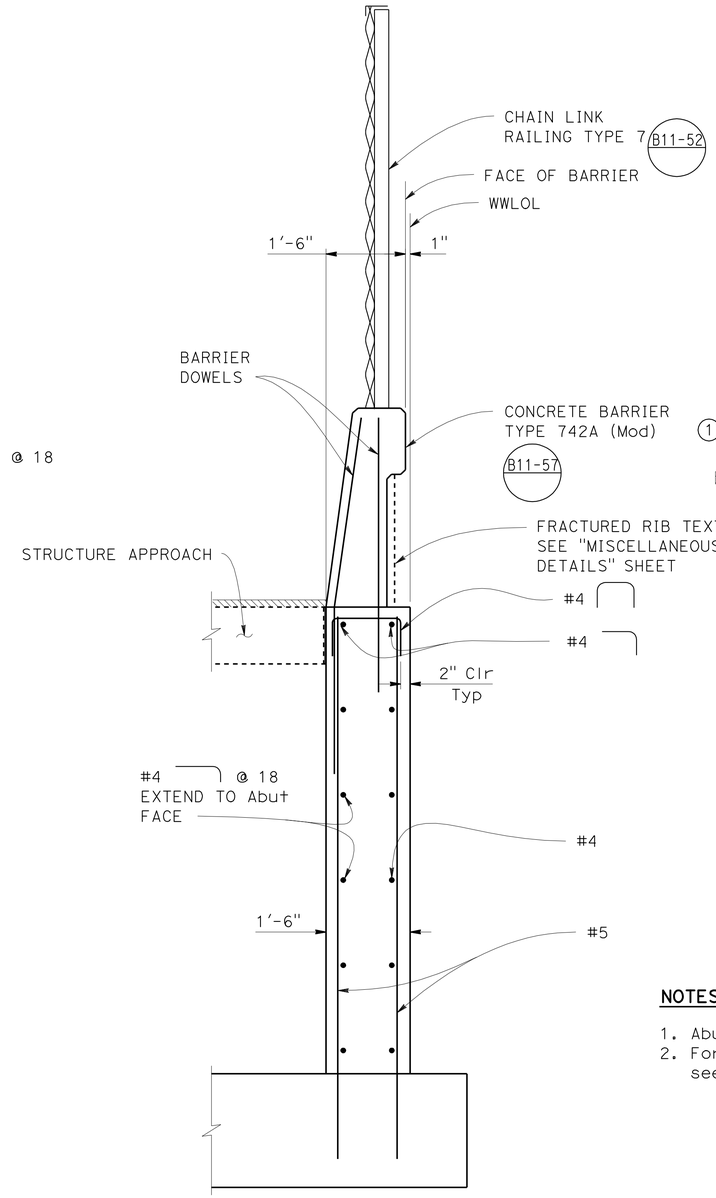

SECTION D-D
3/4"=1'-0"

LEGEND:

- -·-·- Indicates Existing Structure
- —— Indicates New Structure
- (1) & (2) Indicates ℄ Girder, see "GIRDER LAYOUT" sheet
- ▨ Indicates Polyester Concrete Overlay

NOTES:

1. Abutment 1 shown, Abutment 5 similar.
2. For anchor bolts and bearing pads, see "GIRDER DETAILS No. 1" sheet

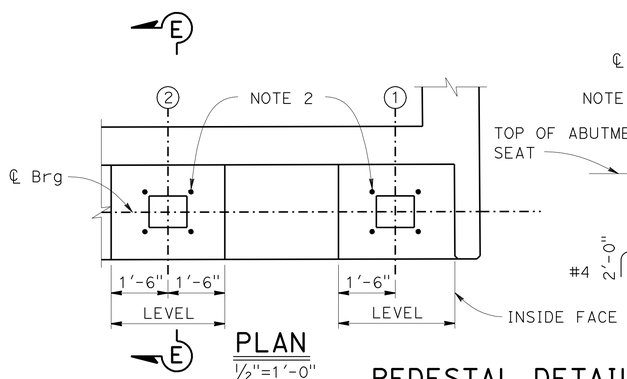

PLAN
1/2"=1'-0"

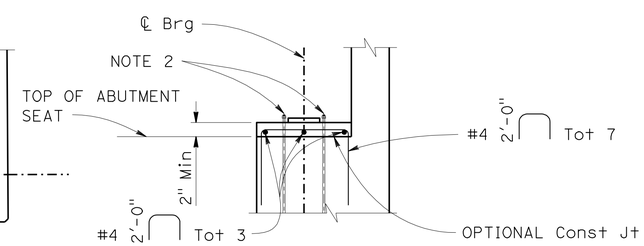

SECTION E-E
1/2"=1'-0"

PEDESTAL DETAILS

NOTE:
THE CONTRACTOR SHALL VERIFY ALL CONTROLLING FIELD DIMENSIONS BEFORE ORDERING OR FABRICATING ANY MATERIAL

Luqi Yang
DESIGN OVERSIGHT Luqi Yang
8-6-12
SIGN OFF DATE

	BY	CHECKED
DESIGN	Jared Cole	Roya Golchoobian
DETAILS	Oscar Colcol	Roya Golchoobian
QUANTITIES	Sabina Piras	Tim Fuller

PREPARED FOR THE STATE OF CALIFORNIA DEPARTMENT OF TRANSPORTATION

David Griffith
PROJECT ENGINEER

BRIDGE NO. 55-0216
POST MILES 4.0

NORTH ANAHEIM OH (WIDEN)
ABUTMENT DETAILS No. 1

DESIGN DETAIL SHEET (ENGLISH) (REV.7/16/10)

ORIGINAL SCALE IN INCHES FOR REDUCED PLANS 0 1 2 3

UNIT: 2295
PROJECT NUMBER & PHASE: 12000000791 CONTRACT NO.: 12-0C5701

DISREGARD PRINTS BEARING EARLIER REVISION DATES → 01/25/12 01/30/12 12/22/11 2/1/12

SHEET 5 OF 27

FILE => 55-0216-f-a01dt01.dgn

Filename: $FILE$ Date: $DATE$ Time: $TIME$

DIST	COUNTY	ROUTE	POST MILES TOTAL PROJECT	SHEET No	TOTAL SHEETS
12	Ora	91	0.9/5.4	639	885

Jared Cole 7/30/12
REGISTERED CIVIL ENGINEER DATE

8-13-12
PLANS APPROVAL DATE

REGISTERED PROFESSIONAL ENGINEER Jared A. Cole No. C66188 Exp. 06/30/14 CIVIL STATE OF CALIFORNIA

The State of California or its officers or agents shall not be responsible for the accuracy or completeness of scanned copies of this plan sheet.

ORANGE COUNTY TRANSPORTATION AUTHORITY
550 SOUTH MAIN STREET
ORANGE, CA 92868

T.Y. LIN INTERNATIONAL
3550 VINE STREET, SUITE 120
RIVERSIDE, CA 92507

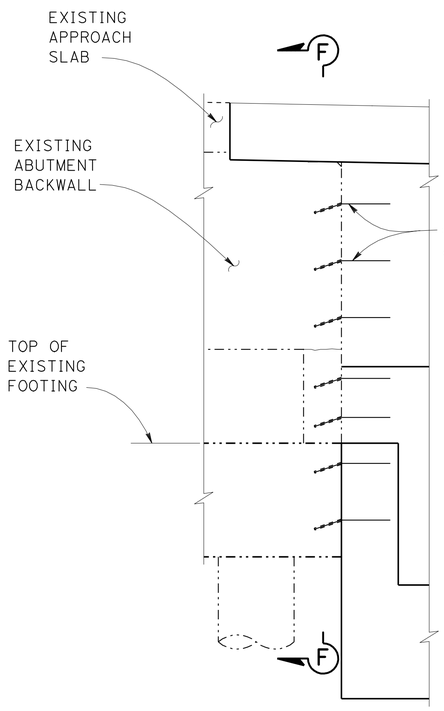

DETAIL 1
3/4"=1'-0"

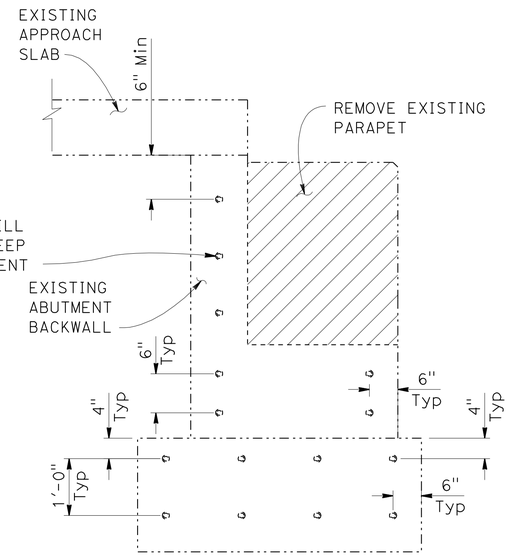

SECTION F-F
3/4"=1'-0"

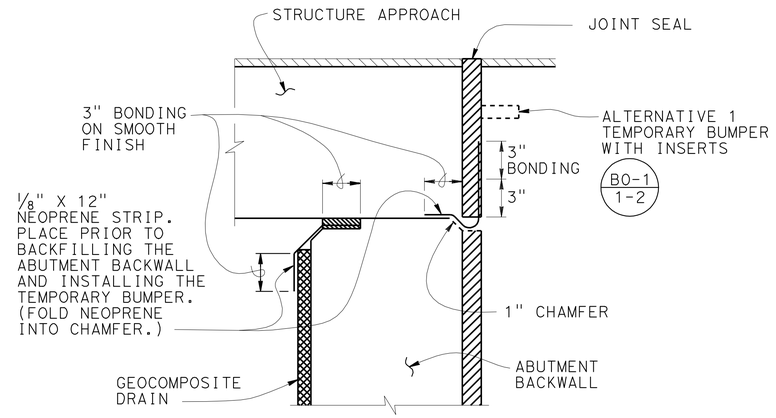

JOINT PROTECTION DETAIL
2"=1'-0"

LEGEND:

- Indicates Bridge Removal (Portion), Location A see "BRIDGE REMOVAL PLAN" sheet
- Indicates existing structure
- Indicates new structure
- Indicates Polyester Concrete Overlay

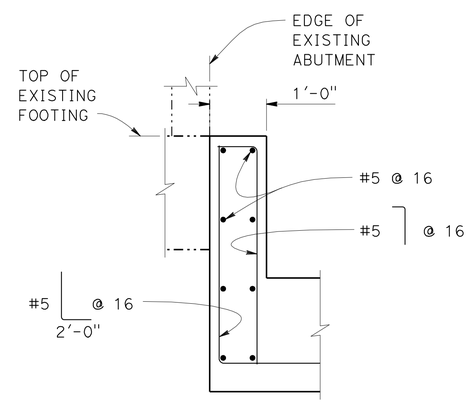

FOOTING STEP DETAIL
3/4"=1'-0"

NOTE:

1. Abutment 1 shown, Abutment 5 similar.

NOTE:
THE CONTRACTOR SHALL VERIFY ALL CONTROLLING FIELD DIMENSIONS BEFORE ORDERING OR FABRICATING ANY MATERIAL

Luqi Yang
DESIGN OVERSIGHT Luqi Yang
8-6-12
SIGN OFF DATE

	BY	CHECKED
DESIGN	Jared Cole	Roya Golchoobian
DETAILS	Oscar Colcol	Roya Golchoobian
QUANTITIES	Sabina Piras	Tim Fuller

PREPARED FOR THE STATE OF CALIFORNIA DEPARTMENT OF TRANSPORTATION

David Griffith
PROJECT ENGINEER

BRIDGE NO. 55-0216
POST MILES 4.0

NORTH ANAHEIM OH (WIDEN)
ABUTMENT DETAILS No. 2

DESIGN DETAIL SHEET (ENGLISH) (REV.7/16/10)

ORIGINAL SCALE IN INCHES FOR REDUCED PLANS 0 1 2 3

UNIT: 2295
PROJECT NUMBER & PHASE: 12000000791 CONTRACT NO.: 12-0C5701

DISREGARD PRINTS BEARING EARLIER REVISION DATES → REVISION DATES 03/15/12 01/30/12 12/22/11 2/17/12

SHEET 6 OF 27

FILE => 55-0216-f-a01dt02.dgn

Time: $TIME$ Date: $DATE$ $FILE$ Filename:

DIST	COUNTY	ROUTE	POST MILES TOTAL PROJECT	SHEET No	TOTAL SHEETS
12	Ora	91	0.9/5.4	640	885

REGISTERED CIVIL ENGINEER 6/19/12 DATE

8-13-12
PLANS APPROVAL DATE

REGISTERED PROFESSIONAL ENGINEER Jared A. Cole No. C66188 Exp. 06/30/14 CIVIL STATE OF CALIFORNIA

The State of California or its officers or agents shall not be responsible for the accuracy or completeness of scanned copies of this plan sheet.

ORANGE COUNTY TRANSPORTATION AUTHORITY
550 SOUTH MAIN STREET
ORANGE, CA 92868

T.Y. LIN INTERNATIONAL
3550 VINE STREET, SUITE 120
RIVERSIDE, CA 92507

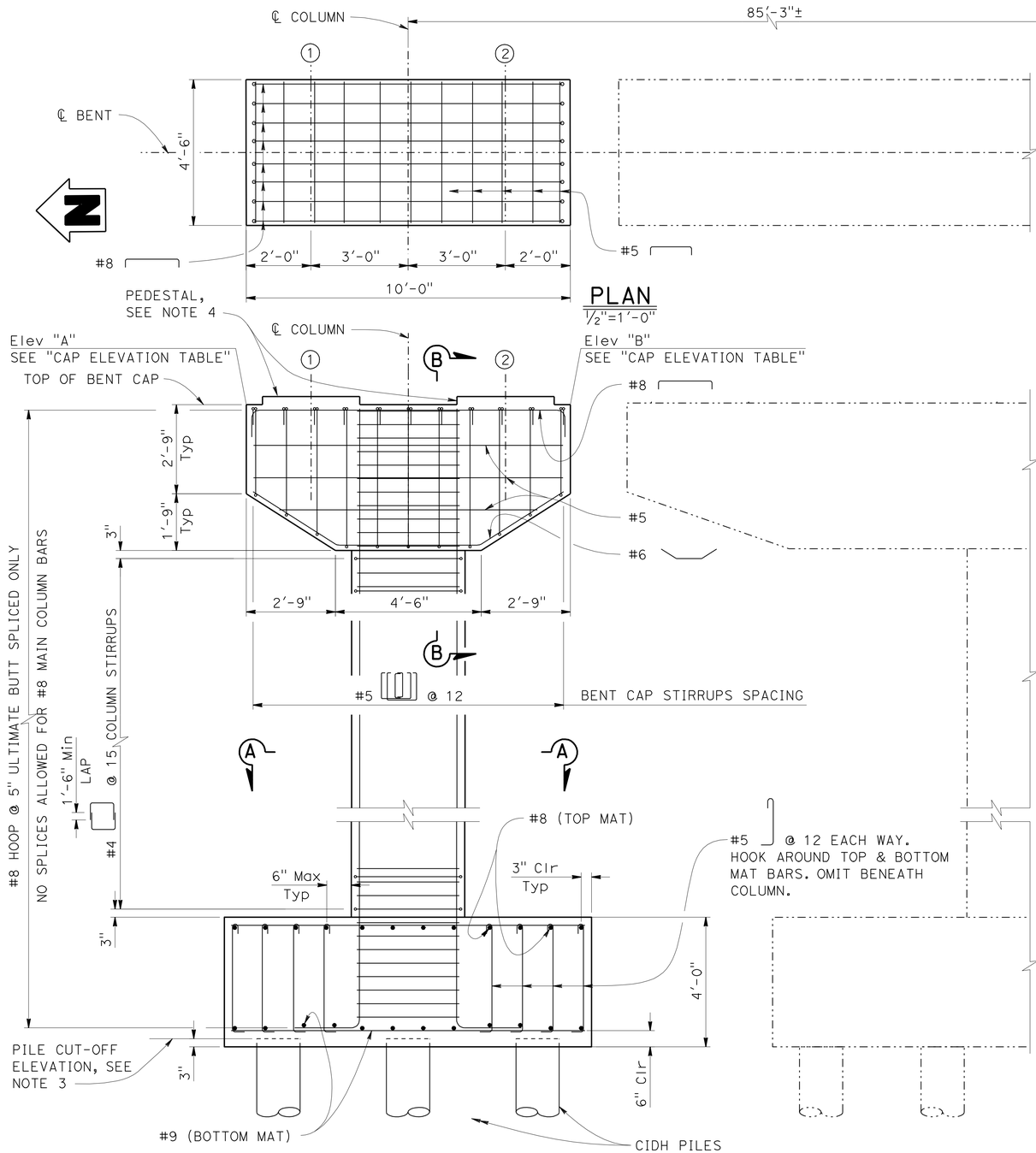

NOTE:
THE CONTRACTOR SHALL VERIFY ALL CONTROLLING FIELD DIMENSIONS BEFORE ORDERING OR FABRICATING ANY MATERIAL

LEGEND:

-·-·- Indicates Existing Structure
——— Indicates New Structure
①② Indicates ℄ Girder, see "GIRDER LAYOUT" sheet

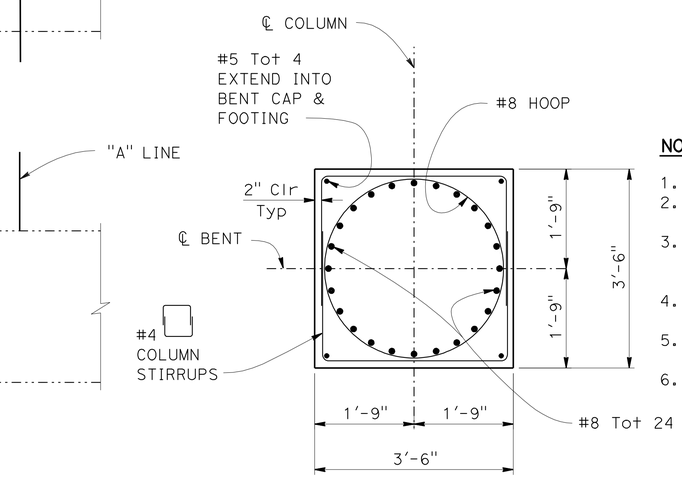

NOTES:

1. Bent 2 shown, Bents 3 & 4 similar.
2. No splices allowed for main column bars. All hoops are ultimate butt spliced.
3. For pile cut-off elevation, see "PILE DATA TABLE" on "FOUNDATION PLAN" sheet.
4. For "PEDESTAL DETAILS" & "SECTION B-B", see "BENT DETAILS No. 2" sheet.
5. At Bent 3, no mechanized excavation within 24 in clear to Sprint fiber optic line.
6. At Bent 3, maintain 12 in clear to Sprint fiber optic line during construction.

CAP ELEVATION TABLE

Location	Elev "A"	Elev "B"
Bent 2	194.39	194.59
Bent 3	195.25	195.45
Bent 4	195.80	196.00

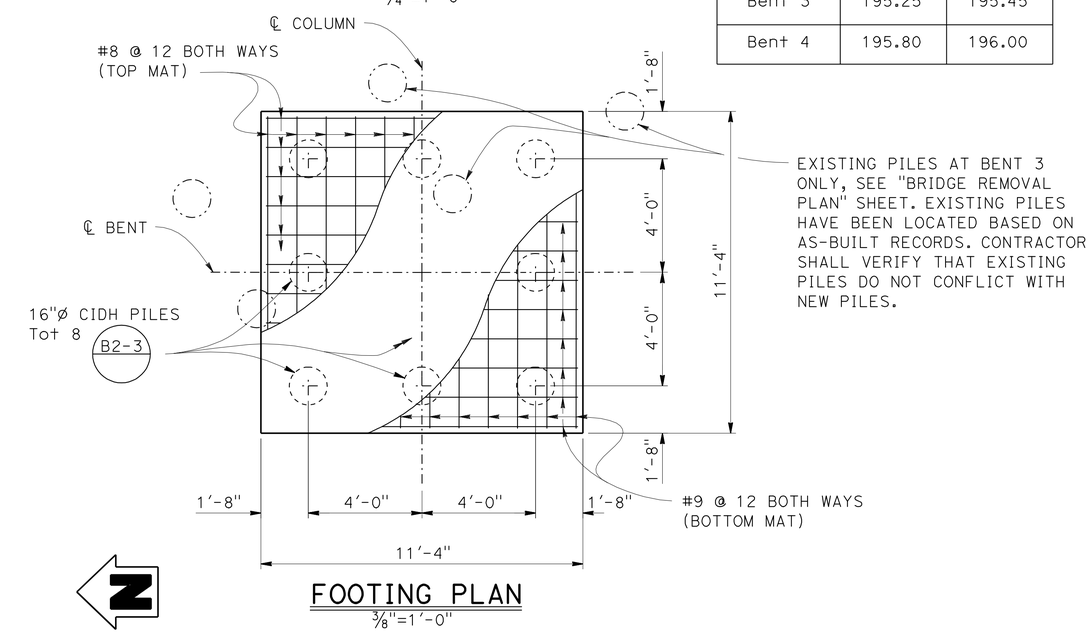

DESIGN OVERSIGHT Luqi Yang 6-21-12 SIGN OFF DATE	DESIGN	BY Jared Cole	CHECKED Roya Golchoobian	PREPARED FOR THE STATE OF CALIFORNIA DEPARTMENT OF TRANSPORTATION	David Griffith PROJECT ENGINEER
	DETAILS	BY Oscar Colcol	CHECKED Roya Golchoobian		BRIDGE NO. 55-0216
	QUANTITIES	BY Sabina Piras	CHECKED Tim Fuller		POST MILES 4.0

NORTH ANAHEIM OH (WIDEN)
BENT DETAILS No. 1

DESIGN DETAIL SHEET (ENGLISH) (REV.7/16/10)

ORIGINAL SCALE IN INCHES FOR REDUCED PLANS 0 1 2 3

UNIT: 2295
PROJECT NUMBER & PHASE: 12000000791 CONTRACT NO.: 12-0C5701

DISREGARD PRINTS BEARING EARLIER REVISION DATES → REVISION DATES 03/15/12 03/26/11 12/22/11 2/17/12 SHEET 7 OF 27

FILE => 55-0216-h-b01dt01.dgn

Filename: $FILE$ Date: $DATE$ Time: $TIME$

DIST	COUNTY	ROUTE	POST MILES TOTAL PROJECT	SHEET No	TOTAL SHEETS
12	Ora	91	0.9/5.4	641	885

Jared Cole 3/15/12
REGISTERED CIVIL ENGINEER DATE

8-13-12
PLANS APPROVAL DATE

REGISTERED PROFESSIONAL ENGINEER
Jared A. Cole
No. C66188
Exp. 06/30/14
CIVIL
STATE OF CALIFORNIA

The State of California or its officers or agents shall not be responsible for the accuracy or completeness of scanned copies of this plan sheet.

ORANGE COUNTY TRANSPORTATION AUTHORITY
550 SOUTH MAIN STREET
ORANGE, CA 92868

T.Y. LIN INTERNATIONAL
3550 VINE STREET, SUITE 120
RIVERSIDE, CA 92507

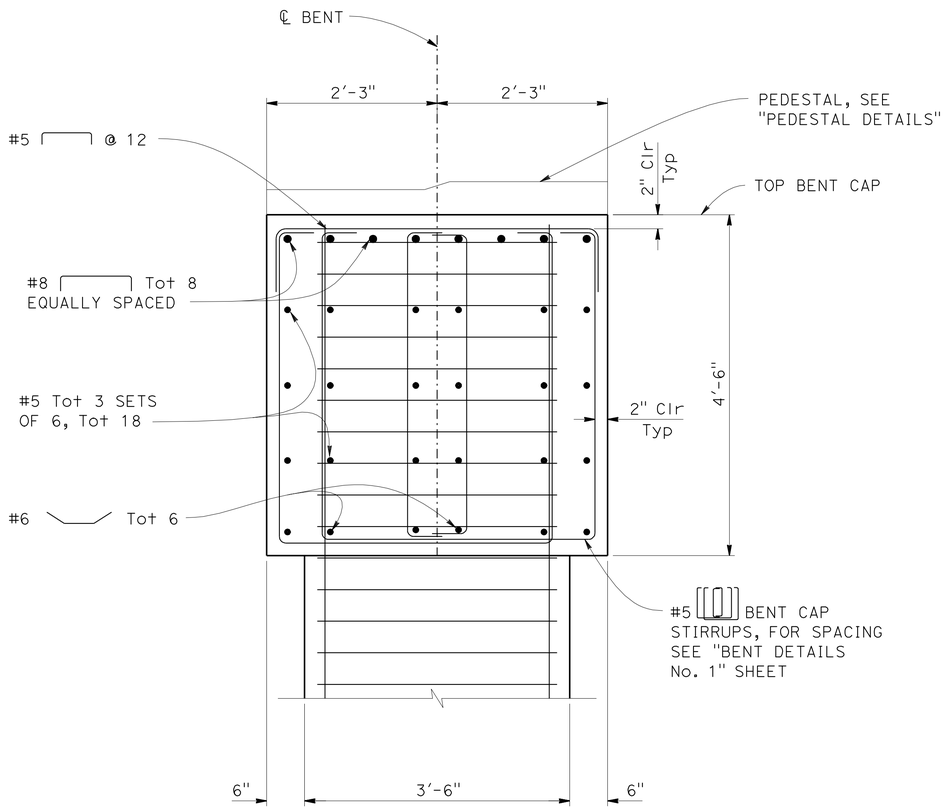

SECTION B-B
1"=1'-0"

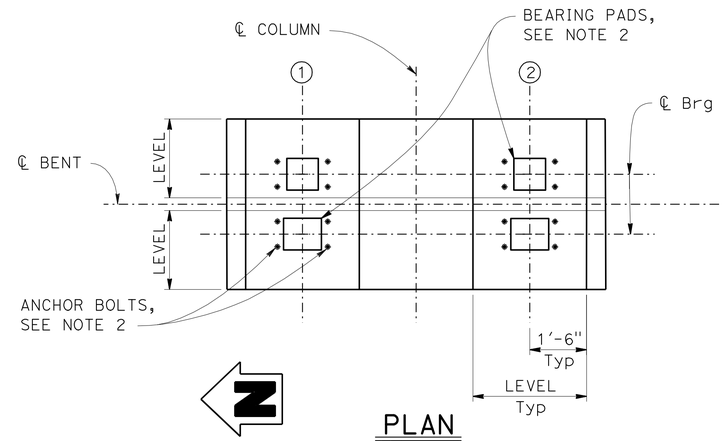

PLAN
1/2"=1'-0"

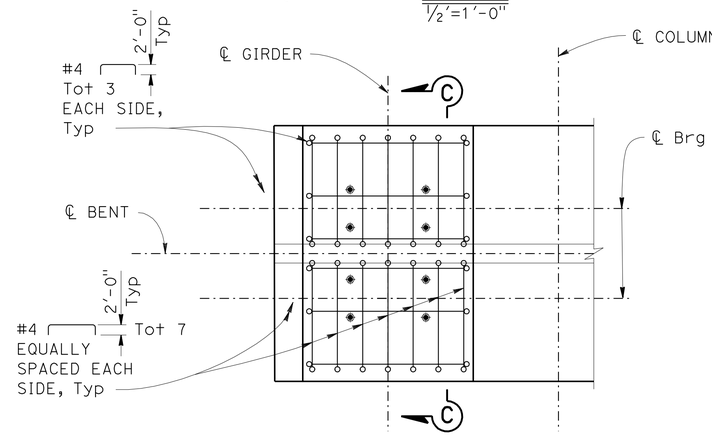

PLAN - REINFORCEMENT
3/4"=1'-0"

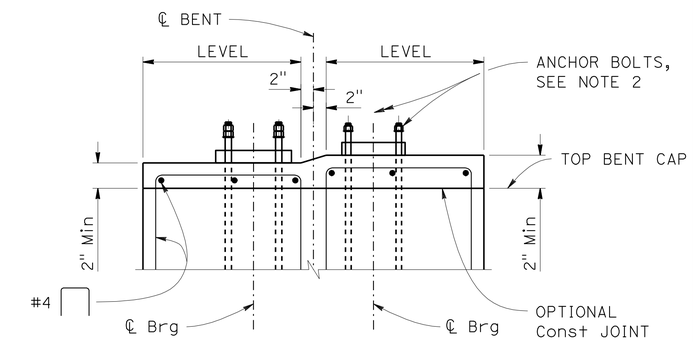

SECTION C-C
1"=1'-0"

NOTES:

1. Bent 2 shown, Bents 3 & 4 similar.
2. For anchor bolts and bearing pads, see "GIRDER DETAILS No. 1" sheet.

LEGEND:

①② - Indicates ℄ Girder, see "GIRDER LAYOUT" sheet

PEDESTAL DETAILS

NOTE:
THE CONTRACTOR SHALL VERIFY ALL CONTROLLING FIELD DIMENSIONS BEFORE ORDERING OR FABRICATING ANY MATERIAL

Luqi Yang
DESIGN OVERSIGHT Luqi Yang
3-29-12
SIGN OFF DATE

	BY	CHECKED
DESIGN	Jared Cole	Roya Golchoobian
DETAILS	Oscar Colcol	Roya Golchoobian
QUANTITIES	Sabina Piras	Tim Fuller

PREPARED FOR THE STATE OF CALIFORNIA DEPARTMENT OF TRANSPORTATION

David Griffith
PROJECT ENGINEER

BRIDGE NO. 55-0216
POST MILES 4.0

NORTH ANAHEIM OH (WIDEN)
BENT DETAILS No. 2

DESIGN DETAIL SHEET (ENGLISH) (REV.7/16/10)

ORIGINAL SCALE IN INCHES FOR REDUCED PLANS 0 1 2 3

UNIT: 2295
PROJECT NUMBER & PHASE: 12000000791 CONTRACT NO.: 12-0C5701

DISREGARD PRINTS BEARING EARLIER REVISION DATES

REVISION DATES 03/15/12 ~~09/16/11~~ ~~12/22/11~~ ~~2/13/12~~

SHEET 8 OF 27

FILE => 55-0216-h-b01dt02.dgn

Filename: $FILE$ Date: $DATE$ Time: $TIME$

DIST	COUNTY	ROUTE	POST MILES TOTAL PROJECT	SHEET No	TOTAL SHEETS
12	Ora	91	0.9/5.4	642	885

REGISTERED CIVIL ENGINEER — DATE 7/30/12

8-13-12
PLANS APPROVAL DATE

REGISTERED PROFESSIONAL ENGINEER — Jared A. Cole — No. C66188 — Exp. 06/30/14 — CIVIL — STATE OF CALIFORNIA

The State of California or its officers or agents shall not be responsible for the accuracy or completeness of scanned copies of this plan sheet.

ORANGE COUNTY TRANSPORTATION AUTHORITY
550 SOUTH MAIN STREET
ORANGE, CA 92868

T.Y. LIN INTERNATIONAL
3550 VINE STREET, SUITE 120
RIVERSIDE, CA 92507

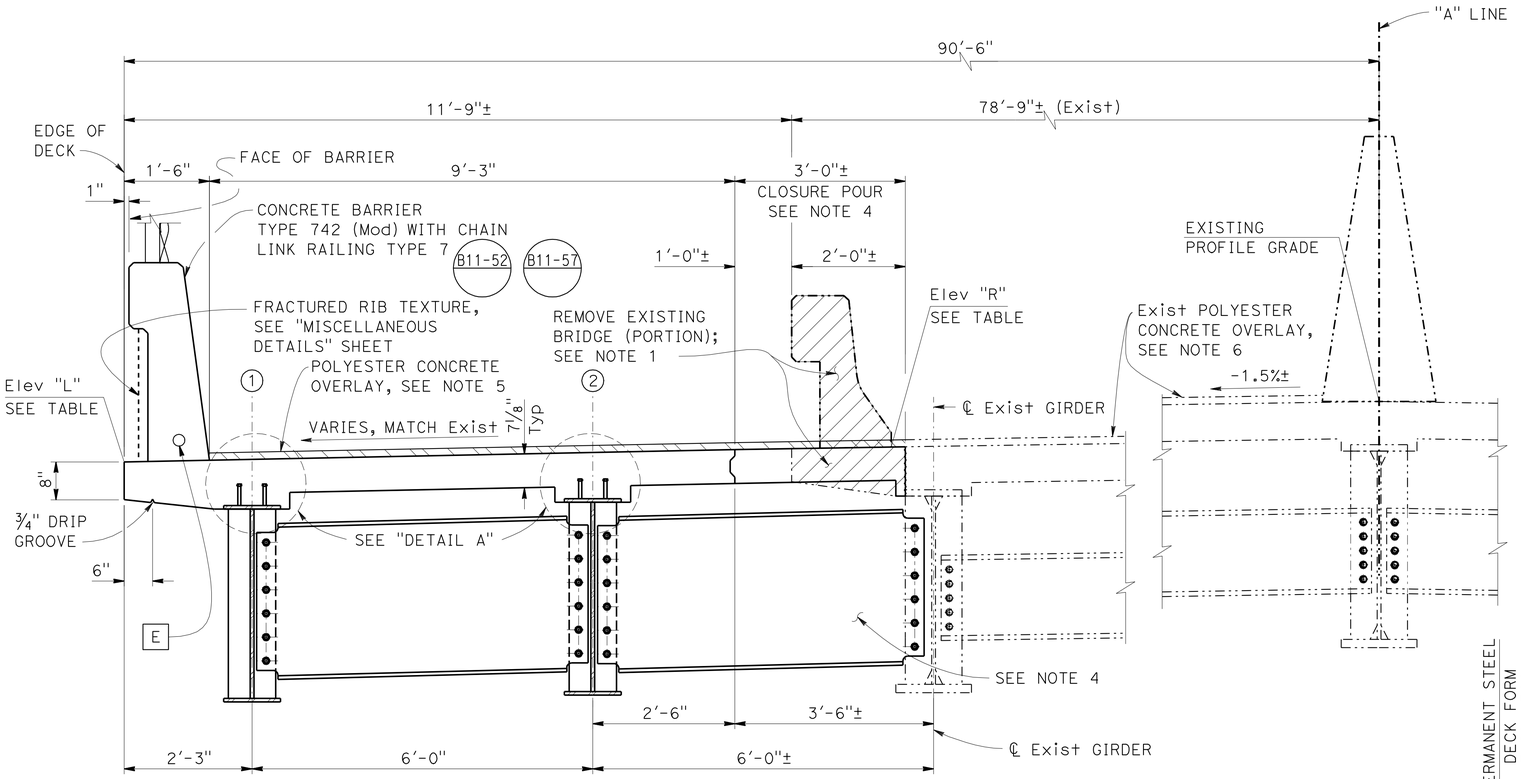

TYPICAL SECTION

3/4"=1'-0"

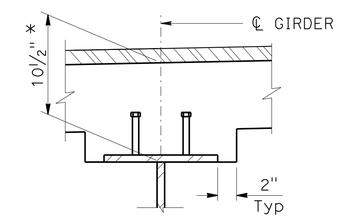

DETAIL A

1 1/2"=1'-0"

* - Min Dimension at ℄ Bearings. Dimension may vary.

DECK ELEVATION TABLE

	Station	Elev "L"	Elev "R"
	264+30.00	198.20±	198.47±
BB	264+32.73±	198.24±	198.52±
	264+40.00	198.38±	198.64±
	264+60.00	198.72±	199.01±
	264+80.00	199.03±	199.33±
	265+00.00	199.32±	199.61±
	265+20.00	199.57±	199.85±
	265+40.00	199.79±	200.12±
	265+60.00	199.98±	200.26±
	265+80.00	200.14±	200.41±
	266+00.00	200.27±	200.68±
	266+20.00	200.37±	200.79±
	266+40.00	200.44±	200.78±
	266+60.00	200.48±	200.80±
EB	266+73.31±	200.49±	200.78±
	266+80.00	200.48±	200.74±

Elevations do not include overlay

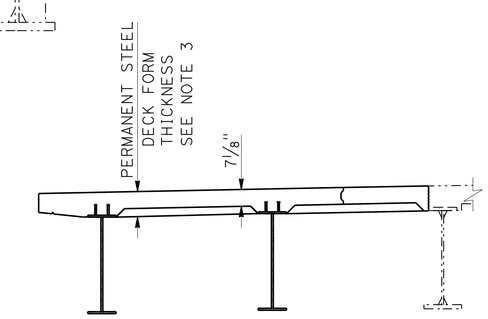

STEEL DECK FORM

3/8"=1'-0"

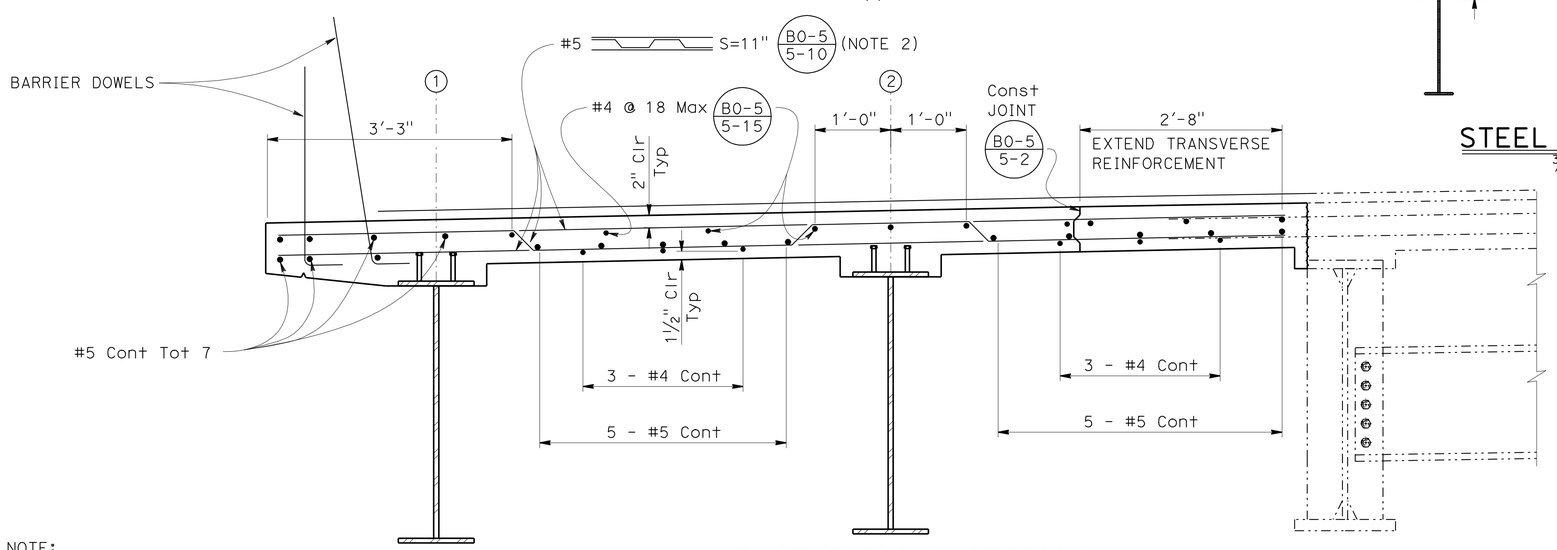

PART TYPICAL SECTION

1"=1'-0"

NOTE:
THE CONTRACTOR SHALL VERIFY ALL CONTROLLING FIELD DIMENSIONS BEFORE ORDERING OR FABRICATING ANY MATERIAL

NOTE:
Diaphragm stiffeners and Polyester Concrete Overlay not shown for clarity.

LEGEND

- - Indicates Existing Structure
- - Indicates New Structure
- - Indicates Bridge Removal (Portion), Location A
- (1) - Indicates ℄ Exterior Girder
- (2) - Indicates ℄ Interior Girder
- - Indicates Polyester Concrete Overlay
- [E] - Indicates Electrical Conduit, see "ROAD PLANS"

NOTES:

1. Remove existing barrier, and deck (portion), existing transverse reinforcement to remain. For other details not shown, see "BRIDGE REMOVAL PLAN" sheet.
2. Place parallel to ℄ supports and space along ℄ girders.
3. Permanent steel deck forms are required between all girders in span 3. Use of permanent deck forms is optional for spans 1, 2 & 4.
4. Intermediate diaphragm to be placed between existing and new girders after deck pour and before closure pour.
5. See "POLYESTER CONCRETE OVERLAY" on "MISCELLANEOUS DETAILS" sheet.
6. Existing 0.1'± Polyester Concrete Overlay, see CAPM Plans 12-0K5304.

Luqi Yang
DESIGN OVERSIGHT Luqi Yang
8-6-12
SIGN OFF DATE

DESIGN	BY Jared Cole	CHECKED Roya Golchoobian	
DETAILS	BY Oscar Colcol	CHECKED Roya Golchoobian	
QUANTITIES	BY Sabina Piras	CHECKED Tim Fuller	

PREPARED FOR THE STATE OF CALIFORNIA DEPARTMENT OF TRANSPORTATION

David Griffith
PROJECT ENGINEER

BRIDGE NO. 55-0216
POST MILES 4.0

NORTH ANAHEIM OH (WIDEN)
TYPICAL SECTION

DESIGN DETAIL SHEET (ENGLISH) (REV.7/16/10)

ORIGINAL SCALE IN INCHES FOR REDUCED PLANS 0 1 2 3

UNIT: 2295
PROJECT NUMBER & PHASE: 12000000791
CONTRACT NO.: 12-0C5701

DISREGARD PRINTS BEARING EARLIER REVISION DATES — REVISION DATES 03/15/12 01/30/12 12/22/11 2/17/12

SHEET 9 OF 27

FILE => 55-0216-k-ts01.dgn

Time: $TIME$ Date: $DATE$ $FILE$ Filename:

DIST	COUNTY	ROUTE	POST MILES TOTAL PROJECT	SHEET No	TOTAL SHEETS
12	Ora	91	0.9/5.4	643	885

REGISTERED CIVIL ENGINEER — DATE 3/15/12

8-13-12
PLANS APPROVAL DATE

The State of California or its officers or agents shall not be responsible for the accuracy or completeness of scanned copies of this plan sheet.

REGISTERED PROFESSIONAL ENGINEER — Jared A. Cole — No. C66188 — Exp. 06/30/14 — CIVIL — STATE OF CALIFORNIA

ORANGE COUNTY TRANSPORTATION AUTHORITY
550 SOUTH MAIN STREET
ORANGE, CA 92868

T.Y. LIN INTERNATIONAL
3550 VINE STREET, SUITE 120
RIVERSIDE, CA 92507

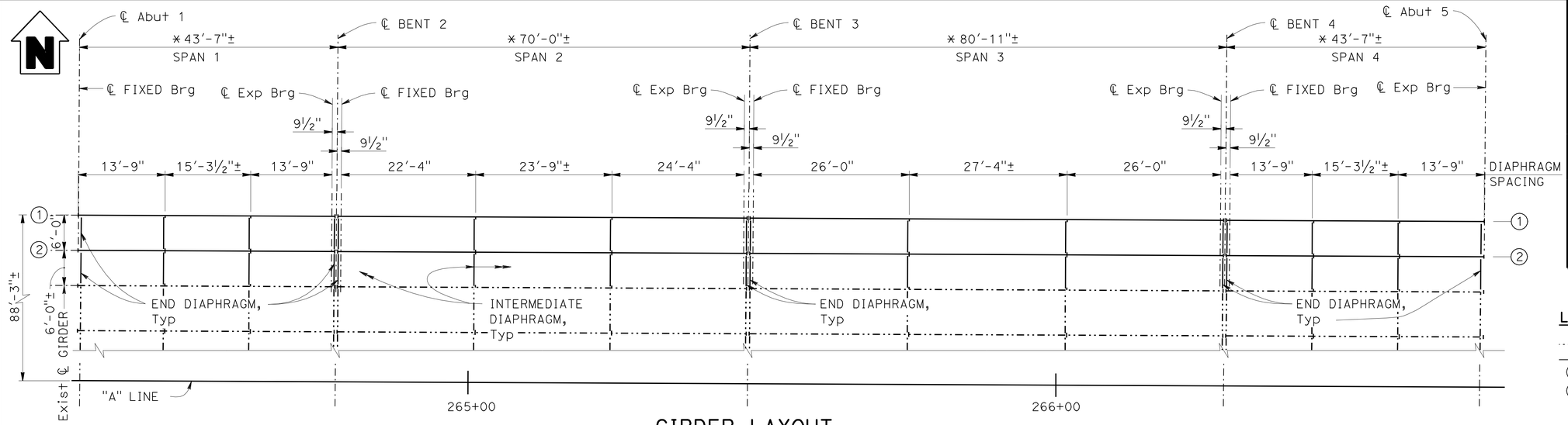

GIRDER LAYOUT
NO SCALE

LEGEND:

- -·-·- -Indicates Existing Structure
- ——— -Indicates New Structure
- (1) -Indicates ℄ Exterior Girder
- (2) -Indicates ℄ Interior Girder

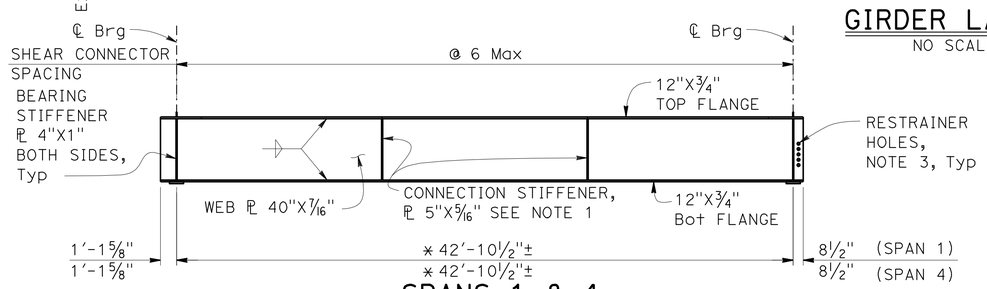

SPANS 1 & 4
(SEE NOTE 2)

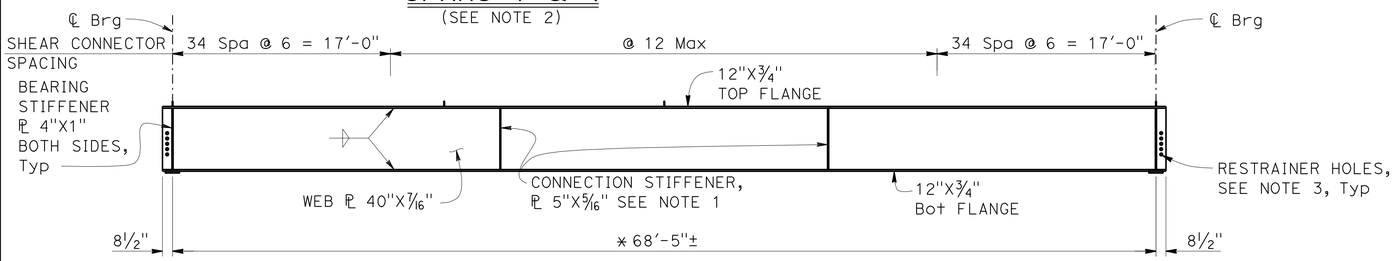

SPAN 2
(SEE NOTE 2)

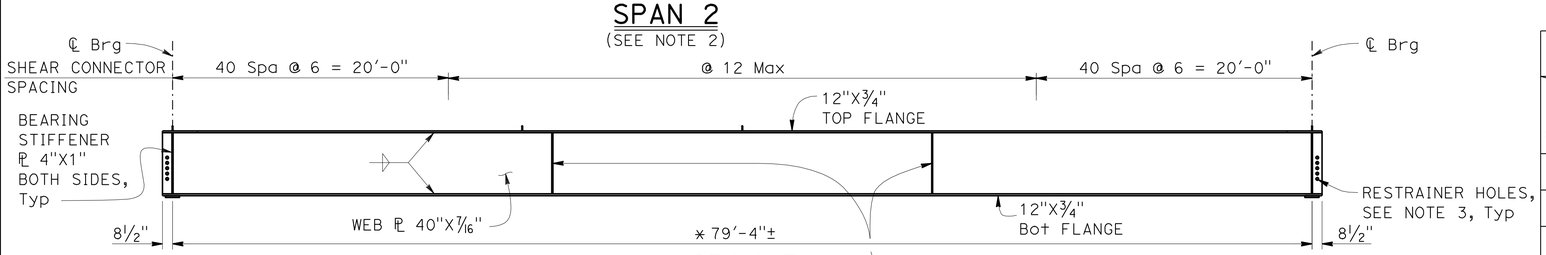

SPAN 3
(SEE NOTE 2)

NOTE:
THE CONTRACTOR SHALL VERIFY ALL CONTROLLING FIELD DIMENSIONS BEFORE ORDERING OR FABRICATING ANY MATERIAL

GIRDER ELEVATION
NO SCALE

NOTES:

∗ Prior to fabrication, dimensions to be verified in field after completion of abutment and bent construction.

1. Intermediate diaphragm connection stiffener are on both sides of interior girder and inside face of exterior girder only.
2. A W40X149 with the same connection plates, bearing stiffeners, and shear connectors, may be substituted for the built up girders. Pedestal elevations and camber will need to be adjusted accordingly.
3. For restrainer holes see, "GIRDER DETAILS No. 3" sheet

IDENTIFICATION OF STEEL BRIDGE MEMBERS:

Main Members:
- All girder bottom flanges and lower half of web (T)
- All girder top flanges and upper half of web (C)
- End Diaphragms
- (T) - Indicates Main Tension Member (Non-Fracture-Critical)
- (C) - Indicates Main Compression Member

Primary Components of Main Members:
- Intermediate Diaphragms
- Transverse Stiffeners and Connection Plates
- Bearing Stiffeners

Secondary Members:
- All structural members not listed above

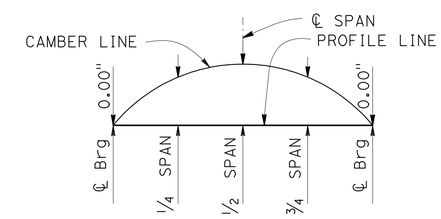

CAMBER DIAGRAM
NO SCALE

CAMBER VALUES - GIRDERS (1) & (2)

Camber Components \ Ordinates	Spans 1 & 4			Span 2			Span 3		
	¼	½	¾	¼	½	¾	¼	½	¾
Deck Slab Dead Load (ft)	0.01	0.02	0.01	0.07	0.10	0.07	0.12	0.18	0.12
Steel Girder Dead Load (ft)	0.00	0.00	0.00	0.02	0.03	0.02	0.03	0.05	0.03
∗∗ Additional Dead Load (ft)	0.01	0.01	0.01	0.04	0.05	0.04	0.06	0.10	0.06
Total Camber (ft)	**0.02**	**0.03**	**0.02**	**0.13**	**0.18**	**0.13**	**0.21**	**0.33**	**0.21**

∗∗ Does not include polyester concrete overlay or future wearing surface

Luqi Yang
DESIGN OVERSIGHT — Luqi Yang
3-29-12
SIGN OFF DATE

	BY	CHECKED
DESIGN	Jared Cole	Roya Golchoobian
DETAILS	Oscar Colcol	Roya Golchoobian
QUANTITIES	Sabina Piras	Tim Fuller

PREPARED FOR THE STATE OF CALIFORNIA DEPARTMENT OF TRANSPORTATION

David Griffith
PROJECT ENGINEER

BRIDGE NO. 55-0216
POST MILES 4.0

NORTH ANAHEIM OH (WIDEN)
GIRDER LAYOUT

DESIGN DETAIL SHEET (ENGLISH) (REV.7/16/10)

ORIGINAL SCALE IN INCHES FOR REDUCED PLANS 0 1 2 3

UNIT: 2295
PROJECT NUMBER & PHASE: 12000000791
CONTRACT NO.: 12-0C5701

DISREGARD PRINTS BEARING EARLIER REVISION DATES

REVISION DATES: 03/15/12 ~~09/06/11~~ ~~12/22/11~~ ~~2/13/12~~

SHEET 10 OF 27

FILE => 55-0216-1-g_1o01.dgn

Filename: $FILE$ Date: $DATE$ Time: $TIME$

DIST	COUNTY	ROUTE	POST MILES TOTAL PROJECT	SHEET No	TOTAL SHEETS
12	Ora	91	0.9/5.4	644	885

REGISTERED CIVIL ENGINEER — DATE 3/15/12

PLANS APPROVAL DATE 8-13-12

REGISTERED PROFESSIONAL ENGINEER — Jared A. Cole — No. C66188 — Exp. 06/30/14 — CIVIL — STATE OF CALIFORNIA

The State of California or its officers or agents shall not be responsible for the accuracy or completeness of scanned copies of this plan sheet.

ORANGE COUNTY TRANSPORTATION AUTHORITY
550 SOUTH MAIN STREET
ORANGE, CA 92868

T.Y. LIN INTERNATIONAL
3550 VINE STREET, SUITE 120
RIVERSIDE, CA 92507

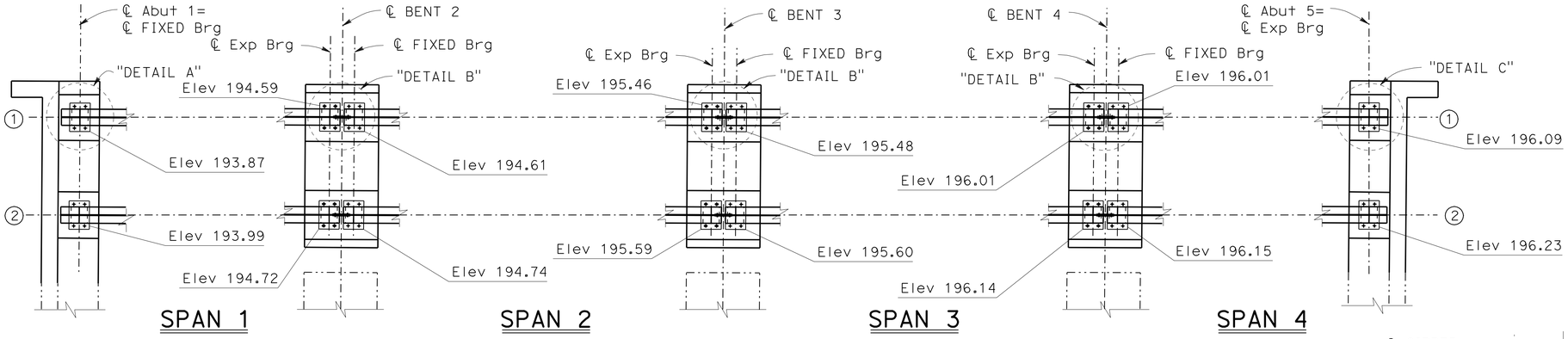

ANCHOR BOLT LAYOUT AND TOP OF PEDESTAL ELEVATION

NO SCALE

NOTE: Top of pedestal elevations are approximate.

All Girders	Location	"T" @ ℄ Brg	Bevel	Bearing Pad	Hole	Anchor Bolt
Span 1	Abut 1	1"	3/16" / 12"	10"X10"X1"	1¼"Ø	1"Ø
	BENT 2			10"X10"X1"	1¼"X2" SLOT	1"Ø
Span 2	BENT 2	1"	5/32" / 12"	10"X12"X1"	1¼"Ø	1"Ø
	BENT 3			10"X12"X1"	1¼"X2" SLOT	1"Ø
Span 3	BENT 3	1"	3/32" / 12"	10"X14"X1"	1¼"Ø	1"Ø
	BENT 4			10"X14"X1"	1¼"X2" SLOT	1"Ø
Span 4	BENT 4	1"	1/32" / 12"	10"X10"X1"	1¼"Ø	1"Ø
	Abut 5			10"X10"X1"	1¼"X2" SLOT	1"Ø

Bearing pads shall be Steel Reinforced Elastomer. Thickness shown is for Elastomer only. Place longer side normal to girder centerline.

LEGEND:

-·-·-·- -Indicates Existing Structure
——— -Indicates New Structure
① -Indicates ℄ Exterior Girder
② -Indicates ℄ Interior Girder

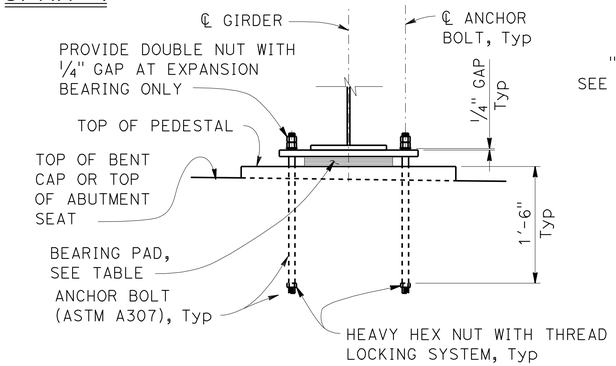

BEARING DETAILS

1"=1'-0"

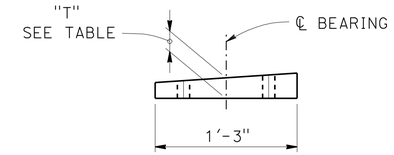

BEVELED SOLE PLATE

1½"=1'-0"

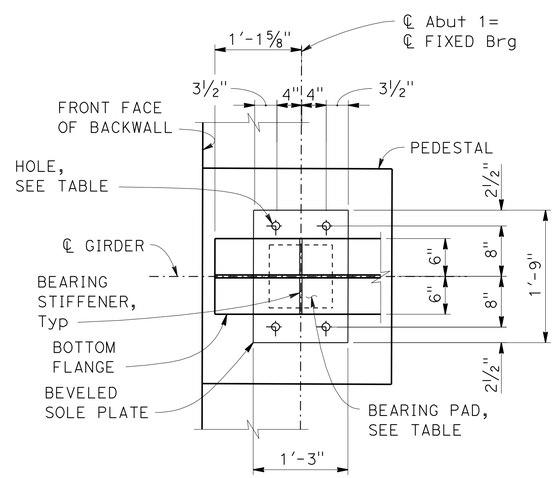

DETAIL A

1"=1'-0"

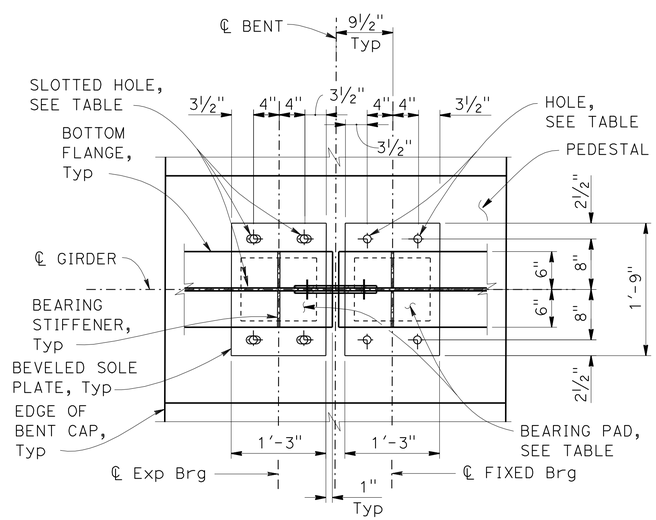

DETAIL B

1"=1'-0"

NOTE:
Bent 2 shown, Bent 3 & Bent 4 similar

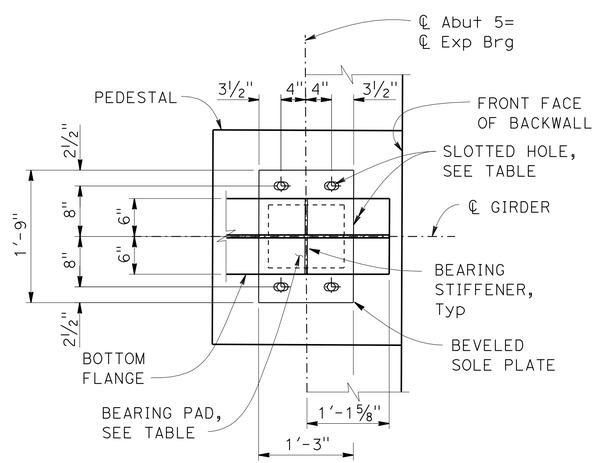

DETAIL C

1"=1'-0"

NOTE:
THE CONTRACTOR SHALL VERIFY ALL CONTROLLING FIELD DIMENSIONS BEFORE ORDERING OR FABRICATING ANY MATERIAL

Luqi Yang
DESIGN OVERSIGHT Luqi Yang
3-29-12
SIGN OFF DATE

	BY	CHECKED
DESIGN	Jared Cole	Roya Golchoobian
DETAILS	Oscar Colcol	Roya Golchoobian
QUANTITIES	Sabina Piras	Tim Fuller

PREPARED FOR THE STATE OF CALIFORNIA DEPARTMENT OF TRANSPORTATION

David Griffith
PROJECT ENGINEER

BRIDGE NO. 55-0216
POST MILES 4.0

NORTH ANAHEIM OH (WIDEN)
GIRDER DETAILS No. 1

DESIGN DETAIL SHEET (ENGLISH) (REV.7/16/10)

ORIGINAL SCALE IN INCHES FOR REDUCED PLANS 0 1 2 3

UNIT: 2295
PROJECT NUMBER & PHASE: 12000000791
CONTRACT NO.: 12-0C5701

DISREGARD PRINTS BEARING EARLIER REVISION DATES — REVISION DATES 03/15/12 ~~09/06/11~~ ~~12/22/11~~ ~~2/17/12~~

SHEET 11 OF 27

FILE => 55-0216-1-gdt01.dgn

Filename: $FILE$ Date: $DATE$ Time: $TIME$

DIST	COUNTY	ROUTE	POST MILES TOTAL PROJECT	SHEET No	TOTAL SHEETS
12	Ora	91	0.9/5.4	645	885

REGISTERED CIVIL ENGINEER — DATE 3/15/12

8-13-12
PLANS APPROVAL DATE

REGISTERED PROFESSIONAL ENGINEER — Jared A. Cole — No. C66188 — Exp. 06/30/14 — CIVIL — STATE OF CALIFORNIA

The State of California or its officers or agents shall not be responsible for the accuracy or completeness of scanned copies of this plan sheet.

ORANGE COUNTY TRANSPORTATION AUTHORITY
550 SOUTH MAIN STREET
ORANGE, CA 92868

T.Y. LIN INTERNATIONAL
3550 VINE STREET, SUITE 120
RIVERSIDE, CA 92507

LEGEND:

-·-·- -Indicates Existing Structure
——— -Indicates New Structure
① -Indicates ℄ Exterior Girder
② -Indicates ℄ Interior Girder

NOTES:

1. All bolts are 7/8"ø high-strength (HS) ASTM A325 unless noted otherwise.
2. At girders, length of studs to be determined by the Contractor. Alternative types of shear connectors may be permitted subject to approval by the Engineer.

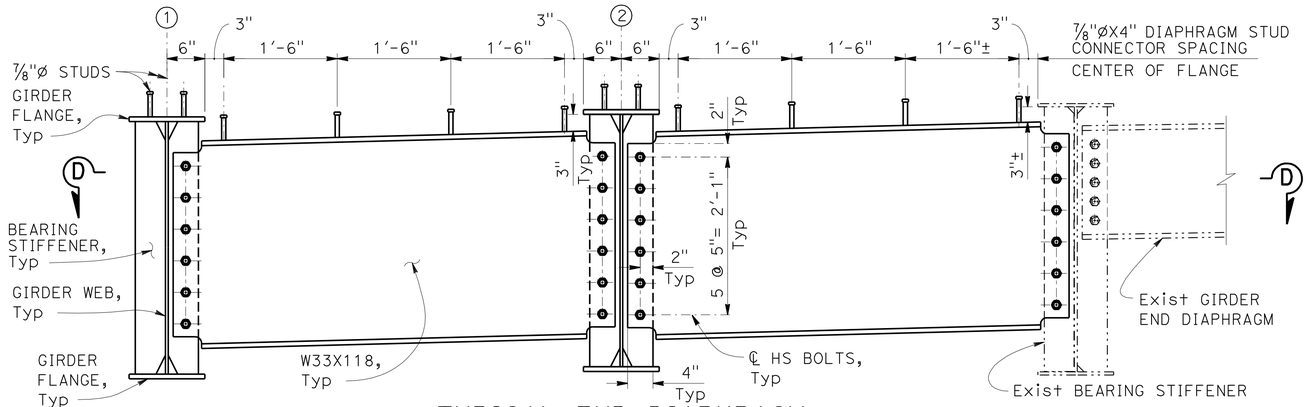

TYPICAL END DIAPHRAGM
1"=1'-0"

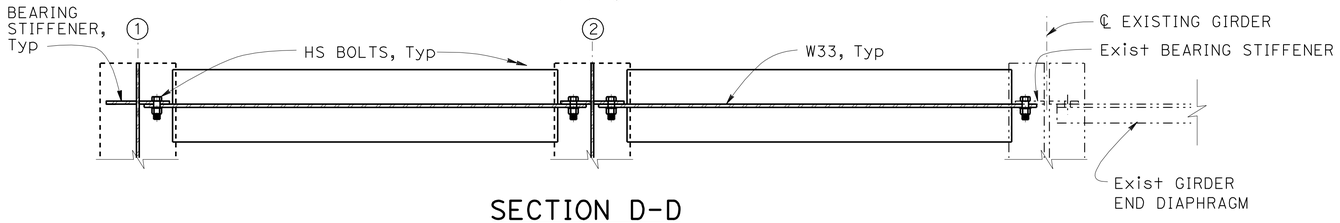

SECTION D-D
1"=1'-0"

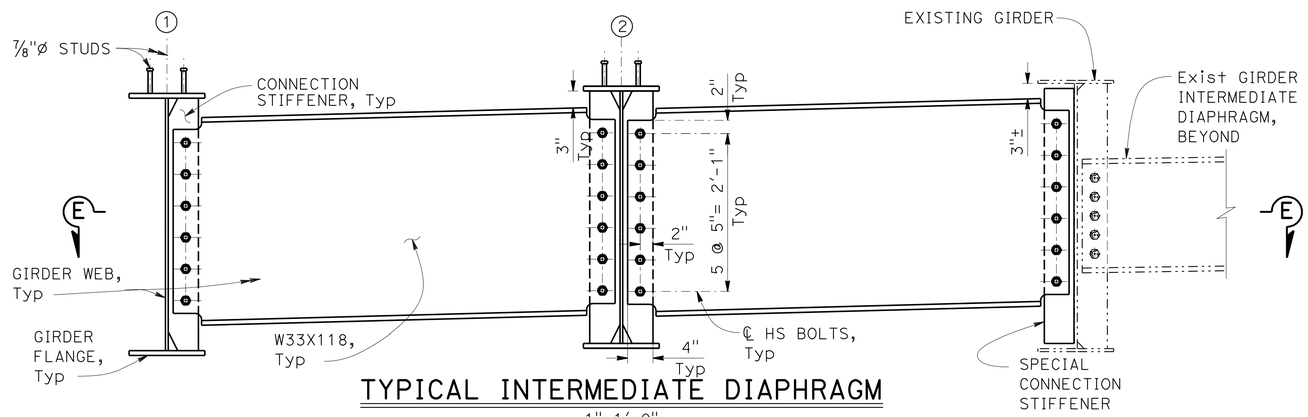

TYPICAL INTERMEDIATE DIAPHRAGM
1"=1'-0"

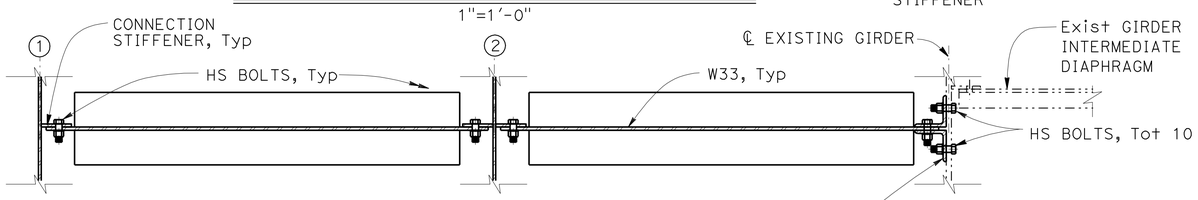

SECTION E-E
1"=1'-0"

NOTE:
THE CONTRACTOR SHALL VERIFY ALL CONTROLLING FIELD DIMENSIONS BEFORE ORDERING OR FABRICATING ANY MATERIAL

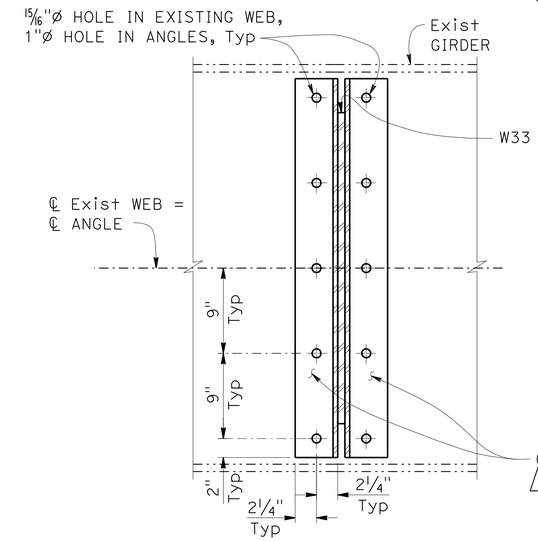

SPECIAL CONNECTION STIFFENER
1 1/2"=1'-0"

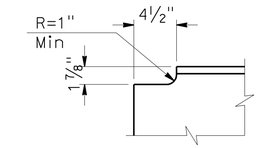

COPE DETAIL
1 1/2"=1'-0"

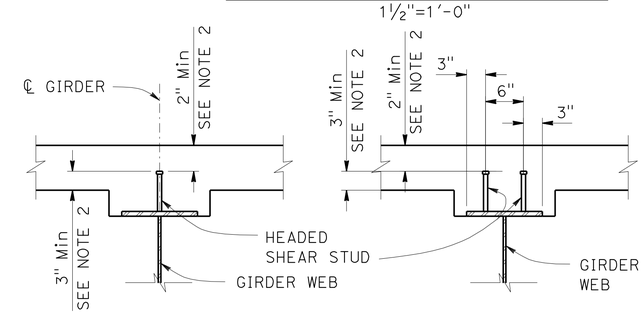

SPANS 1 & 4
1"=1'-0"

SPANS 2 & 3
1"=1'-0"

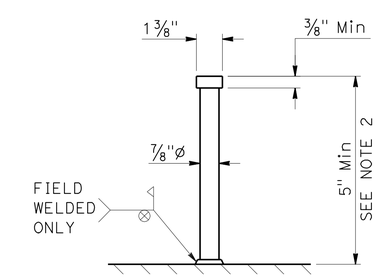

STUD CONNECTOR
3"=1'-0"

SHEAR CONNECTOR DETAILS

Luqi Yang
DESIGN OVERSIGHT — Luqi Yang
3-29-12
SIGN OFF DATE

	BY	CHECKED
DESIGN	Jared Cole	Roya Golchoobian
DETAILS	Oscar Colcol	Roya Golchoobian
QUANTITIES	Sabina Piras	Tim Fuller

PREPARED FOR THE STATE OF CALIFORNIA DEPARTMENT OF TRANSPORTATION

David Griffith
PROJECT ENGINEER

BRIDGE NO. 55-0216
POST MILES 4.0

NORTH ANAHEIM OH (WIDEN)
GIRDER DETAILS No. 2

DESIGN DETAIL SHEET (ENGLISH) (REV.7/16/10)

ORIGINAL SCALE IN INCHES FOR REDUCED PLANS 0 1 2 3

UNIT: 2295
PROJECT NUMBER & PHASE: 12000000791 CONTRACT NO.: 12-0C5701

DISREGARD PRINTS BEARING EARLIER REVISION DATES → REVISION DATES 03/15/12 09/06/11 12/20/11 2/13/12 — SHEET 12 OF 27

FILE => 55-0216-1-gd+02.dgn

Filename: $FILE$ Date: $DATE$ Time: $TIME$

DIST	COUNTY	ROUTE	POST MILES TOTAL PROJECT	SHEET No	TOTAL SHEETS
12	Ora	91	0.9/5.4	646	885

REGISTERED CIVIL ENGINEER — DATE 3/15/12

8-13-12
PLANS APPROVAL DATE

REGISTERED PROFESSIONAL ENGINEER — Jared A. Cole — No. C66188 — Exp. 06/30/14 — CIVIL — STATE OF CALIFORNIA

The State of California or its officers or agents shall not be responsible for the accuracy or completeness of scanned copies of this plan sheet.

ORANGE COUNTY TRANSPORTATION AUTHORITY
550 SOUTH MAIN STREET
ORANGE, CA 92868

T.Y. LIN INTERNATIONAL
3550 VINE STREET, SUITE 120
RIVERSIDE, CA 92507

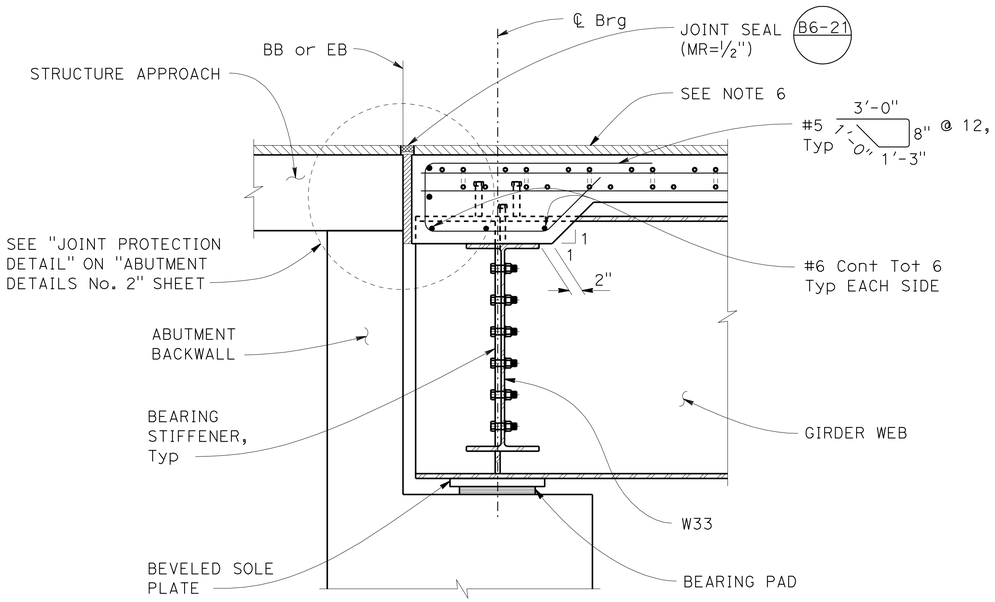

SECTION AT ABUTMENT

1"=1'-0"

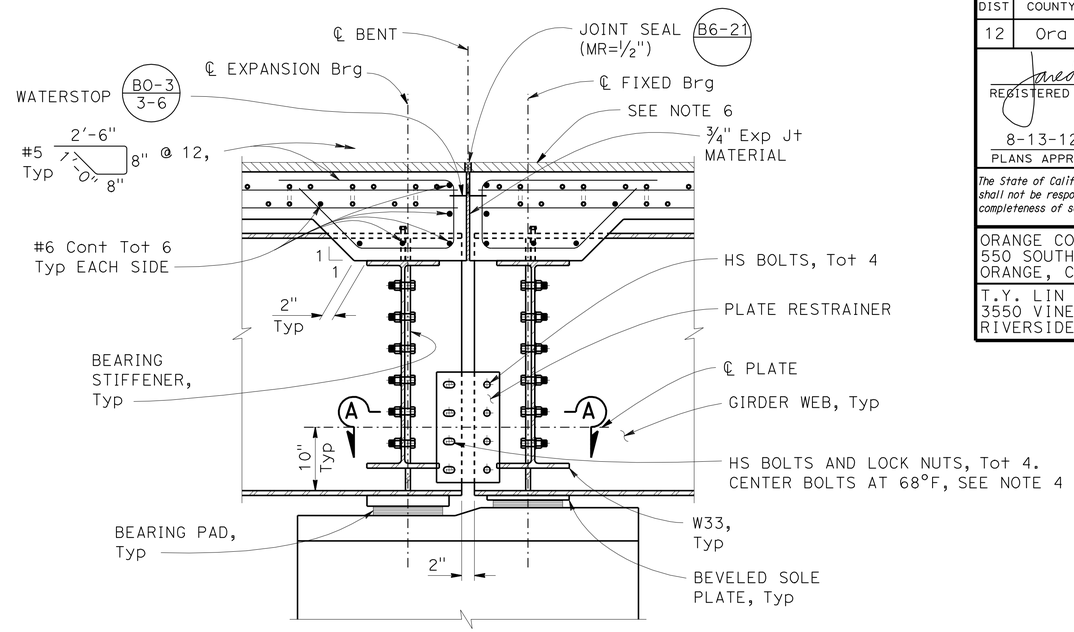

SECTION AT BENT

1"=1'-0"

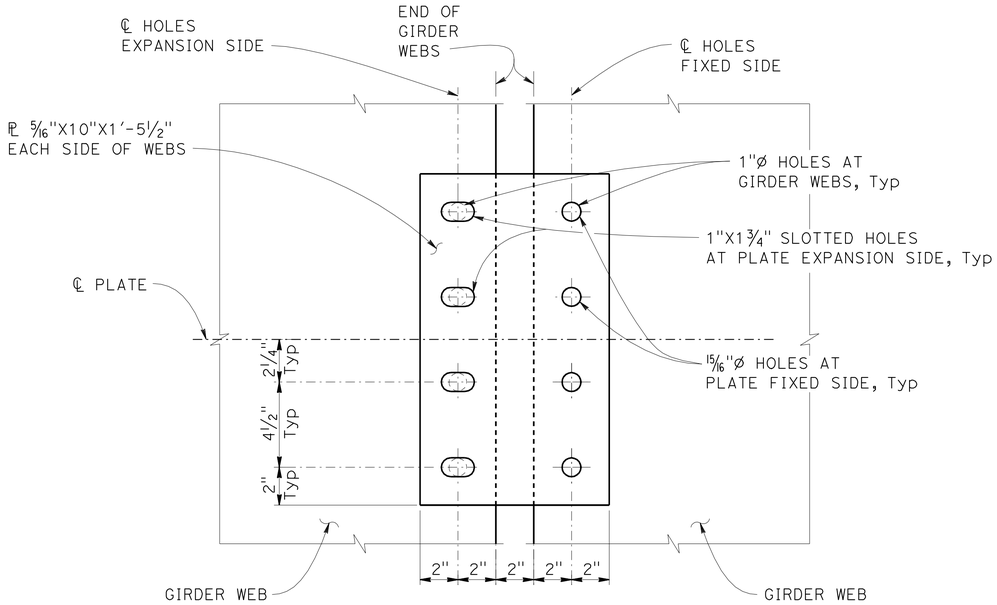

PLATE RESTRAINER

3"=1'-0"

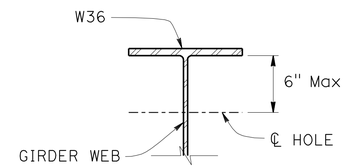

SEE NOTES 1 & 2

HOLES FOR CONDUIT AND FALSEWORK

NO SCALE

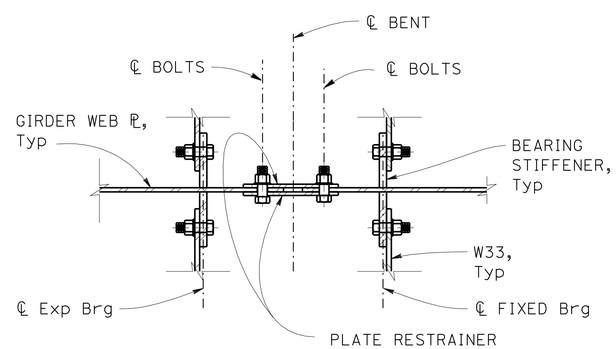

SECTION A-A

NO SCALE

NOTES:

1. 1" Max diameter hole at 4'-0" minimum spacing to be used for falsework support when specified by the Contractor. Contractor to determine location, size, and spacing.
2. 2" Max diameter hole to be drilled when lighting conduit passes through girder web. For location and size of hole see "ELECTRICAL PLAN".
3. All bolts are 7/8"Ø high-strength (HS) ASTM A325 unless noted otherwise.
4. Bolts thru slotted holes shall be secured with a gap not to exceed 1/16" to allow for temperature movement.
5. All diaphragm bolts shall be tightened after placing closure pour.
6. See "POLYESTER CONCRETE OVERLAY", on "MISCELLANEOUS DETAILS" sheet.

NOTE:
THE CONTRACTOR SHALL VERIFY ALL CONTROLLING FIELD DIMENSIONS BEFORE ORDERING OR FABRICATING ANY MATERIAL

DESIGN OVERSIGHT Luqi Yang — Luqi Yang
3-29-12
SIGN OFF DATE

	BY	CHECKED
DESIGN	Jared Cole	Roya Golchoobian
DETAILS	Oscar Colcol	Roya Golchoobian
QUANTITIES	Sabina Piras	Tim Fuller

PREPARED FOR THE STATE OF CALIFORNIA DEPARTMENT OF TRANSPORTATION

David Griffith
PROJECT ENGINEER

BRIDGE NO. 55-0216
POST MILES 4.0

NORTH ANAHEIM OH (WIDEN)
GIRDER DETAILS No. 3

DESIGN DETAIL SHEET (ENGLISH) (REV.7/16/10)

ORIGINAL SCALE IN INCHES FOR REDUCED PLANS 0 1 2 3

UNIT: 2295
PROJECT NUMBER & PHASE: 12000000791
CONTRACT NO.: 12-0C5701

DISREGARD PRINTS BEARING EARLIER REVISION DATES

REVISION DATES: 03/15/12 03/16/11 12/22/11 2/13/12

SHEET 13 OF 27

FILE => 55-0216-1-gdt03.dgn

Filename: $FILE$ Date: $DATE$ Time: $TIME$

DIST	COUNTY	ROUTE	POST MILES TOTAL PROJECT	SHEET No.	TOTAL SHEETS
12	Ora	91	0.9/5.4	647	885

Jared Cole 7/30/12
REGISTERED CIVIL ENGINEER DATE

8-13-12
PLANS APPROVAL DATE

REGISTERED PROFESSIONAL ENGINEER
Jared A. Cole
No. C66188
Exp. 06/30/14
CIVIL
STATE OF CALIFORNIA

The State of California or its officers or agents shall not be responsible for the accuracy or completeness of scanned copies of this plan sheet.

ORANGE COUNTY TRANSPORTATION AUTHORITY
550 SOUTH MAIN STREET
ORANGE, CA 92868

T.Y. LIN INTERNATIONAL
3550 VINE STREET, SUITE 120
RIVERSIDE, CA 92507

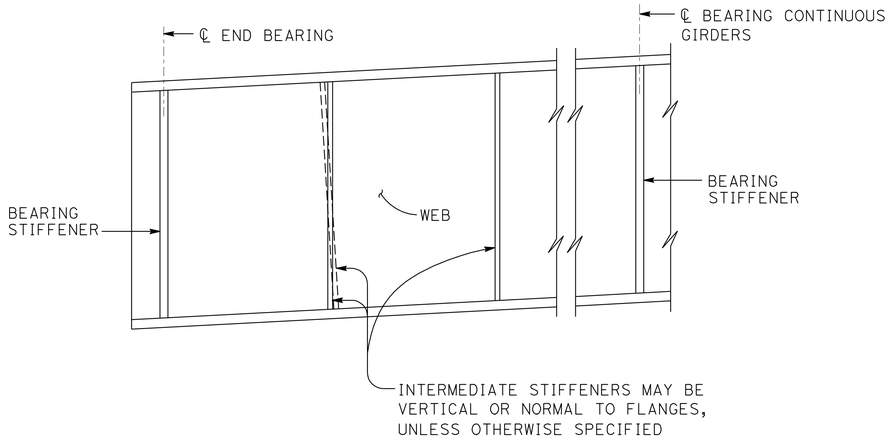

TRANSVERSE STIFFENERS

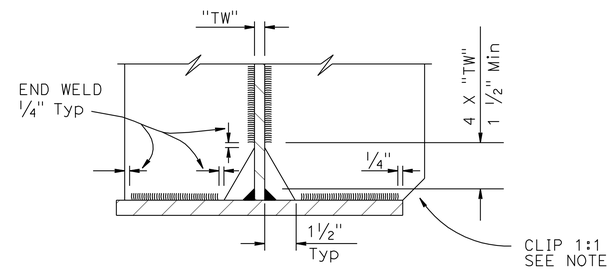

COPE AND WELDING DETAIL

NOTE: Omit clip at bottom flange when less than 2"

NOTES:

1. Under full dead load as shown on the camber diagram, girder ends and bearing stiffeners shall be vertical except they may be normal to grade for grades less than 2%
3. For intermediate stiffeners which have Cross Frames or Diaphragms attached, see "STEEL GIRDER CONNECTION STIFFENER DETAILS" sheet
2. For Bearing Stiffeners which have Cross Frames or Diaphragms attached, use details shown on this sheet.
   See Project Plan sheets for locations where bolted connection is required
4. For stiffener sizes see Project Plan sheets
5. Fillet Weld size to be minimum size from Project Specifications unless otherwise shown on Project Plan sheets

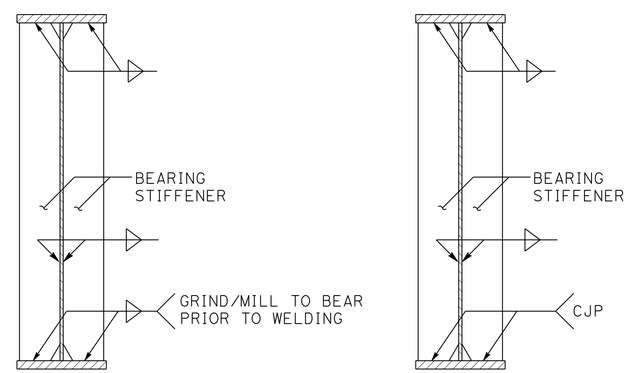

ALTERNATIVE 1 ALTERNATIVE 2

BEARING STIFFENERS

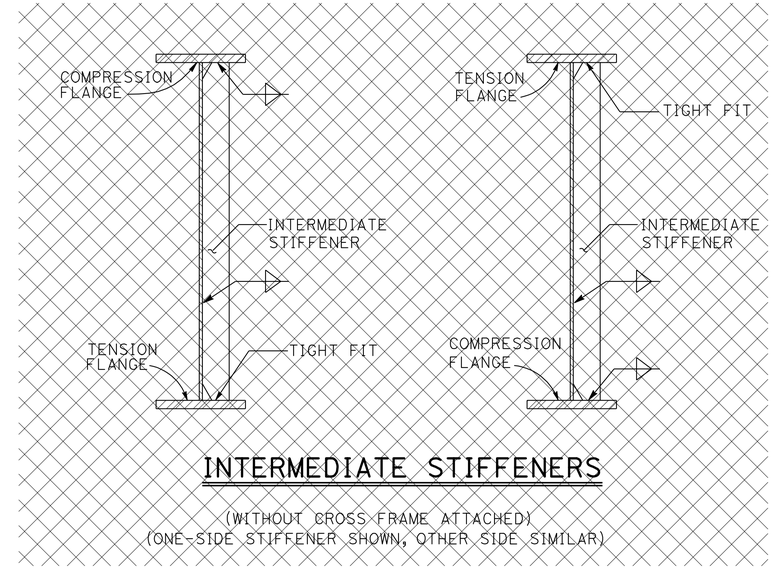

INTERMEDIATE STIFFENERS

(WITHOUT CROSS FRAME ATTACHED)
(ONE-SIDE STIFFENER SHOWN, OTHER SIDE SIMILAR)

1

NOTE:
THE CONTRACTOR SHALL VERIFY ALL CONTROLLING FIELD DIMENSIONS BEFORE ORDERING OR FABRICATING ANY MATERIAL

NO SCALE

REVISED STANDARD DRAWING

FILE NO. xs1-410-2

APPROVAL DATE July 2011

1 Deleted detail
2 Revised note
3 Modified note

STATE OF CALIFORNIA
DEPARTMENT OF TRANSPORTATION

DIVISION OF ENGINEERING SERVICES

BRIDGE NO. 55-0216
POST MILE 4.0

NORTH ANAHEIM OH (WIDEN)
STEEL GIRDER TRANSVERSE STIFFENER DETAILS

DS OSD 2147A (ENGLISH STANDARD DRAWING "XS" BORDER REV. (02-02-11)

ORIGINAL SCALE IN INCHES FOR REDUCED PLANS 0 1 2 3

UNIT: 2295
PROJECT NUMBER & PHASE: 12000000791
CONTRACT NO.: 12-0C5701

DISREGARD PRINTS BEARING EARLIER REVISION DATES

REVISION DATES 03/15/12 07/30/12 12/20/11 2/12/12

SHEET 14 OF 27

FILE => 55-0216-1-gdt04.dgn

USERNAME => s123631 DATE PLOTTED => 17-AUG-2012 TIME PLOTTED => 15:46

DIST	COUNTY	ROUTE	POST MILES TOTAL PROJECT	SHEET No.	TOTAL SHEETS
12	Ora	91	0.9/5.4	648	885

Jared Cole 3/15/12
REGISTERED CIVIL ENGINEER DATE

8-13-12
PLANS APPROVAL DATE

REGISTERED PROFESSIONAL ENGINEER
Jared A. Cole
No. C66188
Exp. 06/30/14
CIVIL
STATE OF CALIFORNIA

The State of California or its officers or agents shall not be responsible for the accuracy or completeness of scanned copies of this plan sheet.

ORANGE COUNTY TRANSPORTATION AUTHORITY
550 SOUTH MAIN STREET
ORANGE, CA 92868

T.Y. LIN INTERNATIONAL
3550 VINE STREET, SUITE 120
RIVERSIDE, CA 92507

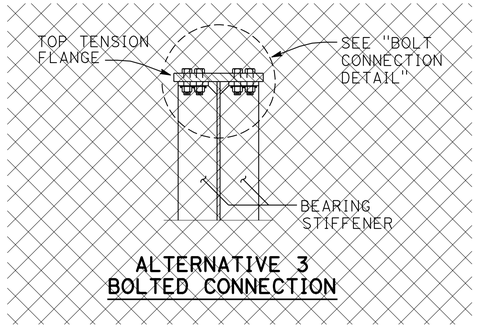

1

ALTERNATIVE 3
BOLTED CONNECTION

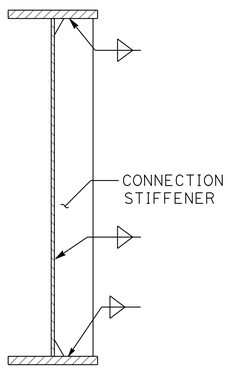

ALTERNATIVE 1
WELDED CONNECTION

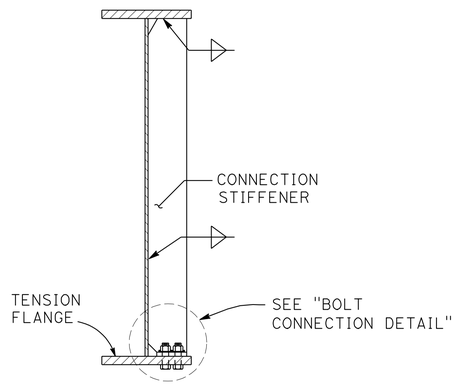

ALTERNATIVE 2
BOLTED CONNECTION

CONNECTION STIFFENER

CROSS FRAME OR DIAPHRAGM NOT SHOWN
(ONE-SIDE STIFFENER SHOWN, OTHER SIDE SIMILAR)

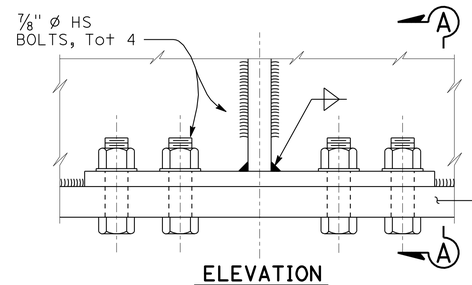

ELEVATION

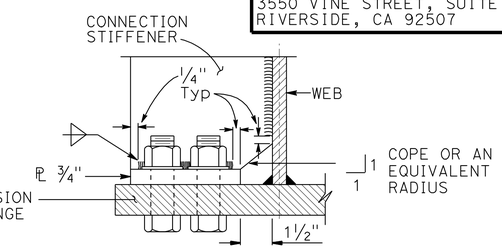

SECTION A-A

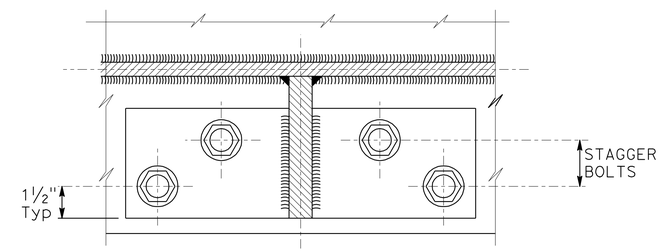

PLAN VIEW

BOLT CONNECTION DETAIL

FOR 3/4" PLATE:
WIDTH TO BE AS DRAWN.
LENGTH TO BE MINIMUM TO PROVIDE FOR INSTALLATION CLEARANCE AND 2 5/8" C-C BETWEEN ADJACENT BOLTS.

NOTES:

1. For stiffener sizes see Project Plan sheets.
2. Fillet Weld size to be minimum size from Project Specifications unless otherwise shown on Project Plan sheets.
3. See Project Plan sheets for locations where where bolted connection is required.

NOTE:
THE CONTRACTOR SHALL VERIFY ALL CONTROLLING FIELD DIMENSIONS BEFORE ORDERING OR FABRICATING ANY MATERIAL

NO SCALE

STANDARD DRAWING
FILE NO. xs1-410-3
APPROVAL DATE July 2011

1 Deleted detail

STATE OF CALIFORNIA
DEPARTMENT OF TRANSPORTATION

DIVISION OF ENGINEERING SERVICES

BRIDGE NO. 55-0216
POST MILE 4.0

NORTH ANAHEIM OH (WIDEN)
STEEL GIRDER CONNECTION STIFFENER DETAILS

DS OSD 2147A (ENGLISH STANDARD DRAWING "XS" BORDER REV. (02-02-11)

ORIGINAL SCALE IN INCHES FOR REDUCED PLANS 0 1 2 3

UNIT: 2295
PROJECT NUMBER & PHASE: 12000000791
CONTRACT NO.: 12-0C5701

DISREGARD PRINTS BEARING EARLIER REVISION DATES

REVISION DATES: 3/15/12 ~~9/16/11~~ ~~12/20/11~~ ~~2/12/12~~

SHEET 15 OF 27

FILE => 55-0216-1-gdt05.dgn

USERNAME => s123631 DATE PLOTTED => 17-AUG-2012 TIME PLOTTED => 15:46

DIST	COUNTY	ROUTE	POST MILES TOTAL PROJECT	SHEET No.	TOTAL SHEETS
12	Ora	91	0.9/5.4	649	885

REGISTERED CIVIL ENGINEER 7/30/12 DATE

8-13-12
PLANS APPROVAL DATE

The State of California or its officers or agents shall not be responsible for the accuracy or completeness of scanned copies of this plan sheet.

REGISTERED PROFESSIONAL ENGINEER Jared A. Cole No. C66188 Exp. 06/30/14 CIVIL STATE OF CALIFORNIA

ORANGE COUNTY TRANSPORTATION AUTHORITY
550 SOUTH MAIN STREET
ORANGE, CA 92868

T.Y. LIN INTERNATIONAL
3550 VINE STREET, SUITE 120
RIVERSIDE, CA 92507

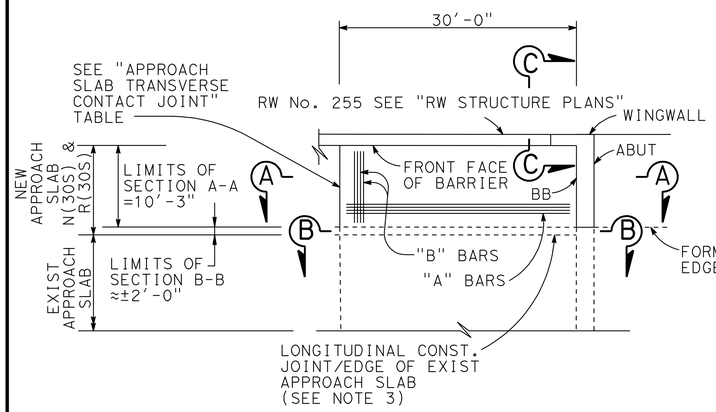

ABUT 1 PLAN 1 2

1" = 10'

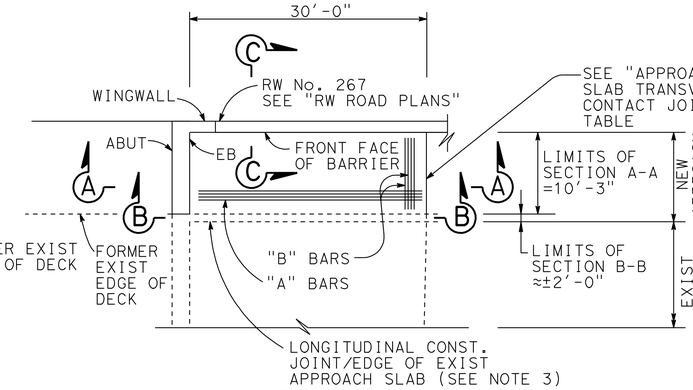

ABUT 5 PLAN 1 2

1" = 10'

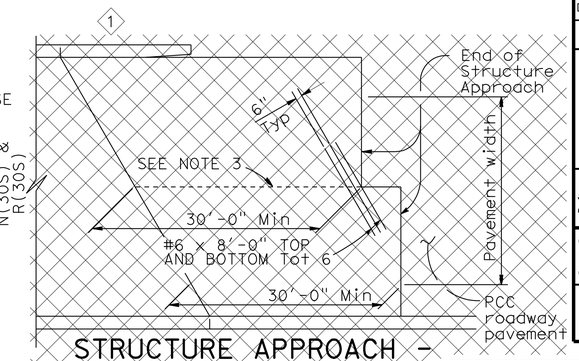

STRUCTURE APPROACH - END STAGGER DETAIL

No Scale

APPROACH SLAB TRANSVERSE CONTACT JOINT		
APPROACH SKEW	WITH AC ROADWAY PAVEMENT	WITH PCC ROADWAY PAVEMENT
< 20°	PARALLEL TO FACE OF PN	PARALLEL TO FACE OF PN
20° - 45°	PARALLEL TO FACE OF PN USE "DETAIL A"	STAGGER LINES 24" TO 36" APART
> 45°	PARALLEL TO FACE OF PN USE "DETAIL A"	STAGGER AT EACH LANE LINE

1

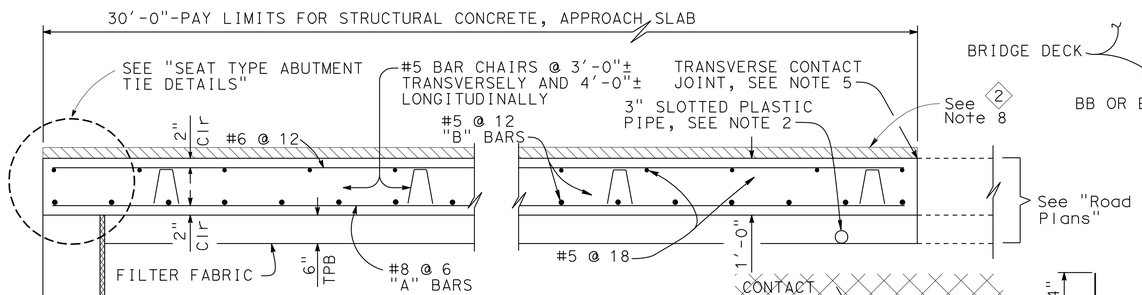

SECTION A-A 3

¾"=1'-0"

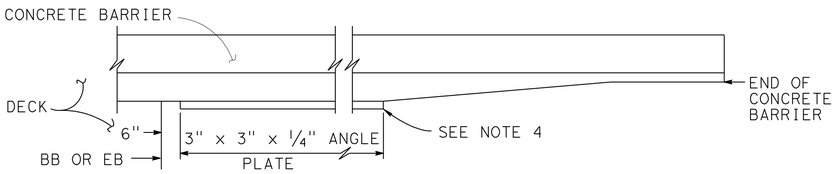

EDGE ANGLE DETAIL

½"=1'-0"

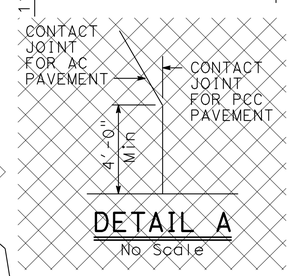

DETAIL A

No Scale

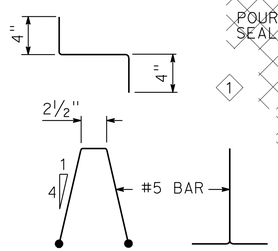

BAR CHAIR DETAIL

1½"=1'-0"

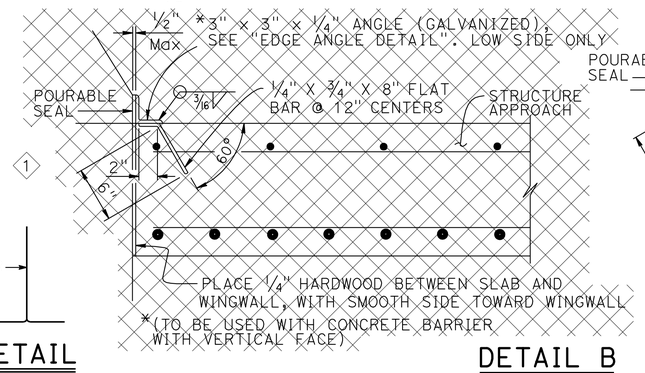

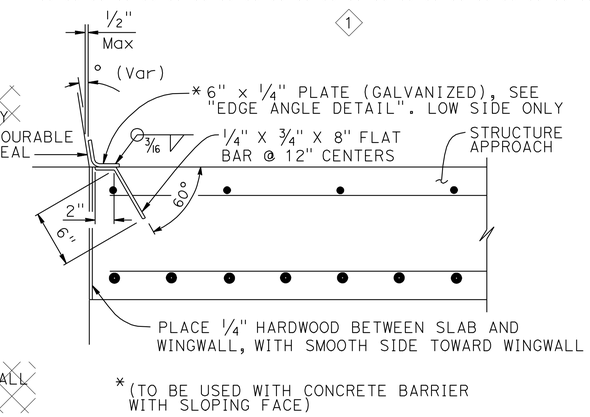

DETAIL B

1½" = 1'-0"

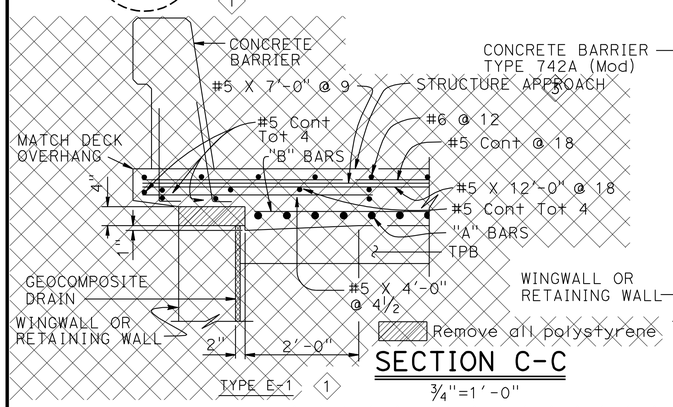

SECTION C-C

¾"=1'-0"

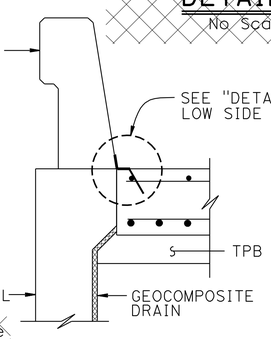

TYPE E-2

(Type E-1 to be used, unless otherwise shown on plans)

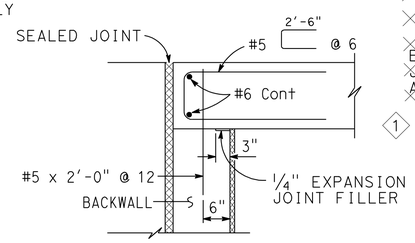

MR ≤ 2"

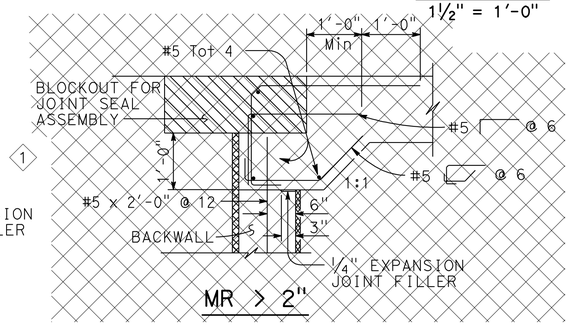

MR > 2"

SEAT TYPE ABUTMENT TIE DETAILS (SEE NOTE 1)

¾"=1'-0"

NOTES:

1. For details not shown, see Structure Plans. For MR ≤ 2", adjust bar reinforcement to clear a sawcut for sealed joint, when required
2. For drainage details, see "STRUCTURE APPROACH DRAINAGE DETAILS" sheet
3. Longitudinal construction joints, when permitted by the Engineer, shall be located on lane lines
4. End angle or plate at beginning of barrier transition, end of wingwall or end of structure approach as applicable
5. For transverse contact joint with new PCC paving, refer to Revised Standard Plan P10 (3)
6. At the Contractor's option, approach slab transverse reinforcement may be placed parallel to paving notch. Spacing of transverse reinforcement is measured along ℄ roadway
7. For Section B-B, see "Structure Approach Type R(30S)" sheet (2)
8. See "POLYESTER CONCRETE OVERLAY", on "MISCELLANEOUS DETAILS" sheet (2)

NOTE:
THE CONTRACTOR SHALL VERIFY ALL CONTROLLING FIELD DIMENSIONS BEFORE ORDERING OR FABRICATING ANY MATERIAL.

REVISED STANDARD DRAWING

FILE NO. xs3-120

APPROVAL DATE July 2011

1 Deleted Detail or Note
2 Added Detail or Note
3 Modified Detail or Note

STATE OF CALIFORNIA
DEPARTMENT OF TRANSPORTATION

DIVISION OF ENGINEERING SERVICES

BRIDGE NO. 55-0216
POST MILE 4.0

NORTH ANAHEIM OH (WIDEN)
STRUCTURE APPROACH TYPE N(30S)

DS OSD 2147A (ENGLISH STANDARD DRAWING "XS" BORDER REV. (02-02-11)

ORIGINAL SCALE IN INCHES FOR REDUCED PLANS 0 1 2 3

UNIT: 2295
PROJECT NUMBER & PHASE: 12000000791
CONTRACT NO.: 12-0C5701

DISREGARD PRINTS BEARING EARLIER REVISION DATES

REVISION DATES 3/15/12 7/30/12 12/20/11 2/17/12

SHEET 16 OF 27

FILE => 55-0216-s-sadd01.dgn

USERNAME => s123631 DATE PLOTTED => 17-AUG-2012 TIME PLOTTED => 15:46

DIST	COUNTY	ROUTE	POST MILES TOTAL PROJECT	SHEET No.	TOTAL SHEETS
12	Ora	91	0.9/5.4	650	885

REGISTERED CIVIL ENGINEER — DATE 7/30/12

8-13-12
PLANS APPROVAL DATE

The State of California or its officers or agents shall not be responsible for the accuracy or completeness of scanned copies of this plan sheet.

REGISTERED PROFESSIONAL ENGINEER — Jared A. Cole — No. C66188 — Exp. 06/30/14 — CIVIL — STATE OF CALIFORNIA

ORANGE COUNTY TRANSPORTATION AUTHORITY
550 SOUTH MAIN STREET
ORANGE, CA 92868

T.Y. LIN INTERNATIONAL
3550 VINE STREET, SUITE 120
RIVERSIDE, CA 92507

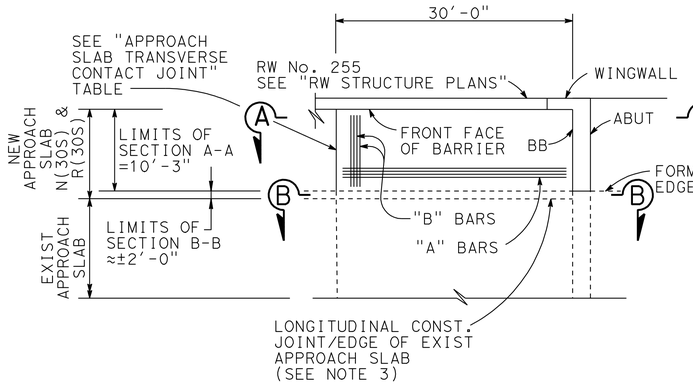

ABUT 1 PLAN 1 2

1" = 10'

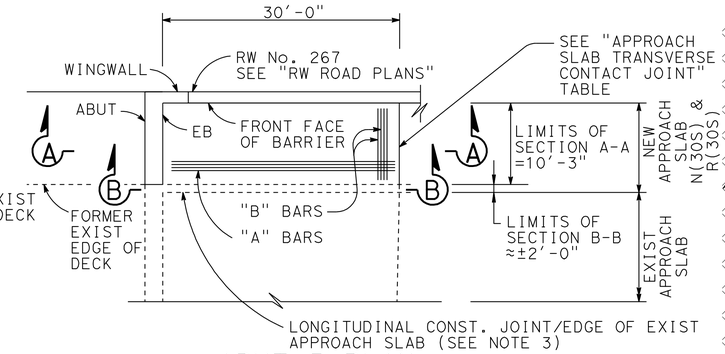

ABUT 5 PLAN 1 2

1" = 10'

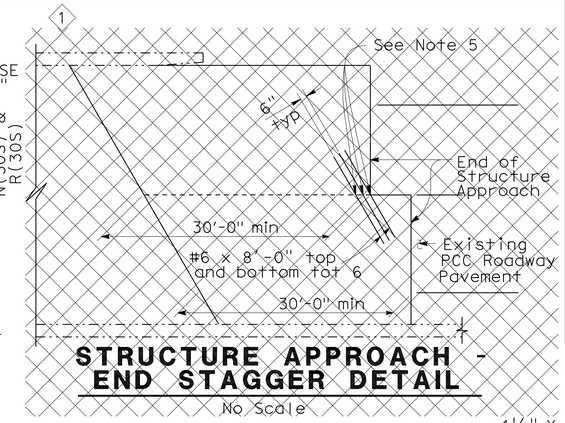

STRUCTURE APPROACH - END STAGGER DETAIL

No Scale

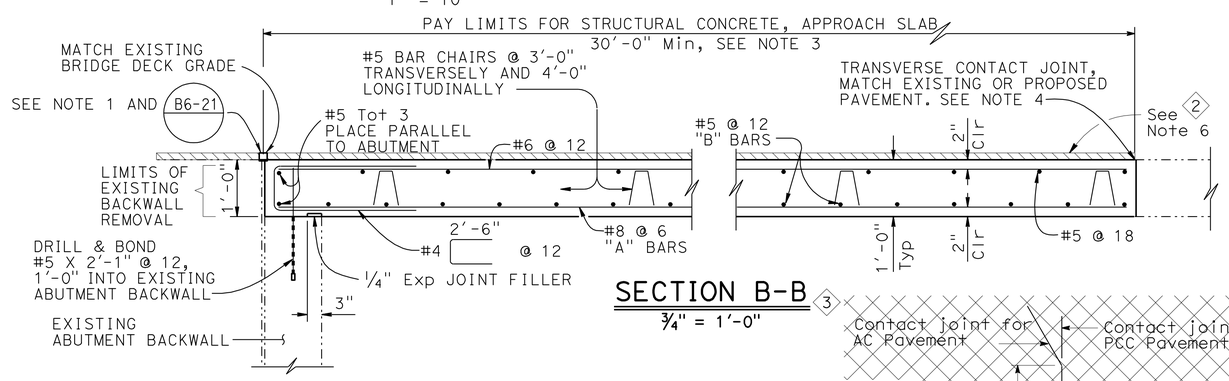

SECTION B-B 3

3/4" = 1'-0"

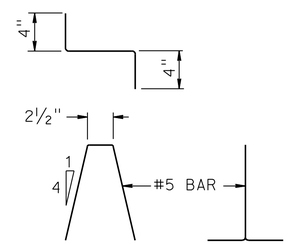

BAR CHAIR DETAIL

1 1/2" = 1'-0"

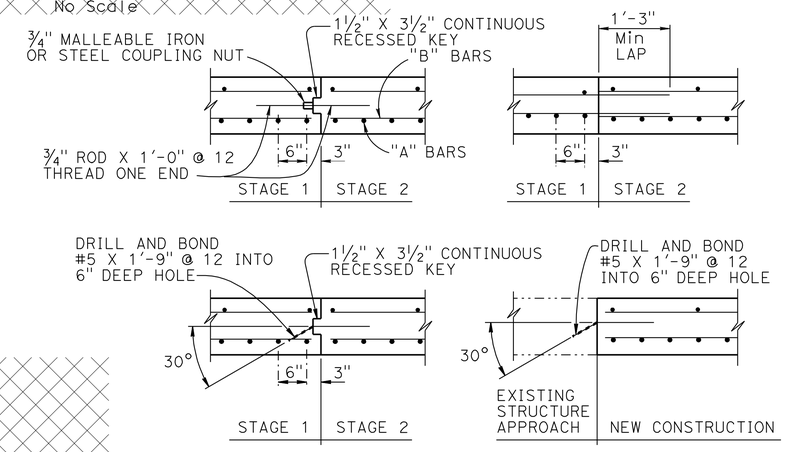

LONGITUDINAL CONSTRUCTION JOINT ALTERNATIVES

3/4" = 1'-0"

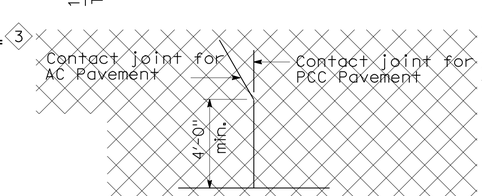

DETAIL A 1

No Scale

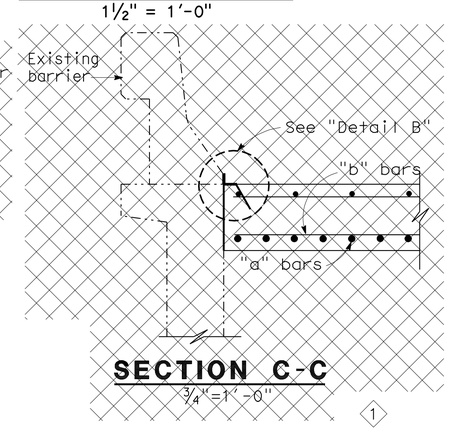

SECTION C-C 1

3/4"=1'-0"

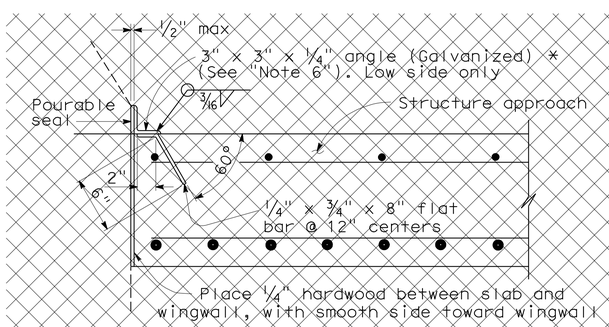

*(TO BE USED WITH TYPE 25 OR TYPE 27 CONCRETE BARRIER)

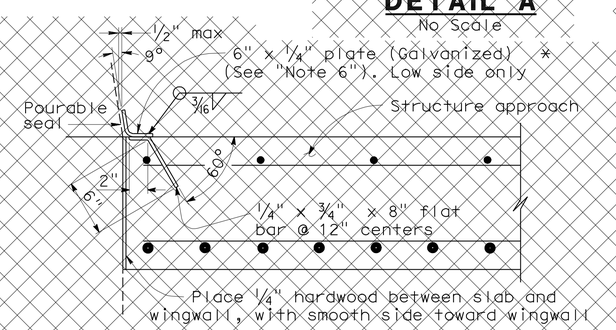

*(TO BE USED WITH TYPE 732 OR TYPE 736 CONCRETE BARRIER)

DETAIL B 1

1 1/2"=1'-0"

APPROACH SLAB TRANSVERSE CONTACT JOINT		
APPROACH SKEW	WITH AC ROADWAY PAVEMENT	WITH PCC ROADWAY PAVEMENT
< 10°	PARALLEL TO FACE OF PN	PARALLEL TO FACE OF PN
10°- 45°	Parallel to face of P N use (Detail A)	Stagger lines 24' to 36' apart
> 45°	Parallel to face of P N use (Detail A)	Stagger at each lane line

1

NOTES:

1. Sealed joint,for MR see Structure Plans. Adjust bar reinforcement to clear a sawcut for sealed joint, when required
2. Longitudinal construction joints, when permitted by Engineer, shall be located on lane lines
3. Transverse contact joint shall be a minimum of 5'-0" from an existing or constructed weakened plane joint
4. (3) For transverse contact joint with new PCC paving, refer to Revised Standard Plan P10
5. (1) Couplers are required for stage construction.
6. (1) End angle or plate at beginning of barrier transition, end of wingwall or end of structure approach as applicable.
5. (2) For Section A-A, see "Structure Approach Type N(30S)" sheet
6. (2) See "POLYESTER CONCRETE OVERLAY" on 'MISCELLANEOUS DETAILS" sheet

NOTE:
THE CONTRACTOR SHALL VERIFY ALL CONTROLLING FIELD DIMENSIONS BEFORE ORDERING OR FABRICATING ANY MATERIAL.

REVISED STANDARD DRAWING

FILE NO. xs3-130

APPROVAL DATE July 2011

1 Deleted Detail or Note
2 Added Detail or Note
3 Modified Detail or Note

STATE OF CALIFORNIA
DEPARTMENT OF TRANSPORTATION

DIVISION OF ENGINEERING SERVICES

BRIDGE NO. 55-0216
POST MILE 4.0

NORTH ANAHEIM OH (WIDEN)
STRUCTURE APPROACH TYPE R(30S)

DS OSD 2147A (ENGLISH STANDARD DRAWING "XS" BORDER REV. (02-02-11)

ORIGINAL SCALE IN INCHES FOR REDUCED PLANS 0 1 2 3

UNIT: 2295
PROJECT NUMBER & PHASE: 12000000791
CONTRACT NO.: 12-0C5701

DISREGARD PRINTS BEARING EARLIER REVISION DATES

REVISION DATES: 3/15/12 7/30/12 12/22/11 2/17/12

SHEET 17 OF 27

FILE => 55-0216-s-sadd02.dgn

USERNAME => s123631 DATE PLOTTED => 17-AUG-2012 TIME PLOTTED => 15:46

DIST	COUNTY	ROUTE	POST MILES TOTAL PROJECT	SHEET No.	TOTAL SHEETS
12	Ora	91	0.9/5.4	651	885

REGISTERED CIVIL ENGINEER 7/30/12 DATE

8-13-12
PLANS APPROVAL DATE

REGISTERED PROFESSIONAL ENGINEER Jared A. Cole No. C66188 Exp. 06/30/14 CIVIL STATE OF CALIFORNIA

The State of California or its officers or agents shall not be responsible for the accuracy or completeness of scanned copies of this plan sheet.

ORANGE COUNTY TRANSPORTATION AUTHORITY
550 SOUTH MAIN STREET
ORANGE, CA 92868

T.Y. LIN INTERNATIONAL
3550 VINE STREET, SUITE 120
RIVERSIDE, CA 92507

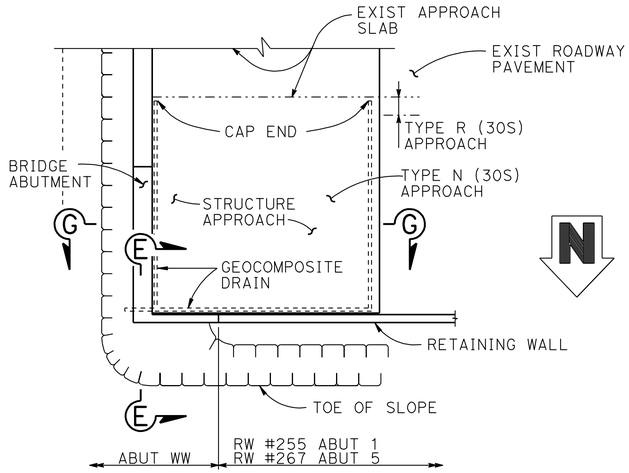

TYPICAL PLAN
1" = 10'

3 ABUT 1 SHOWN, ABUT 5 SIMILAR

* FOR PIPE LAYOUT AT STAGGERED END, SEE "DETAIL B"

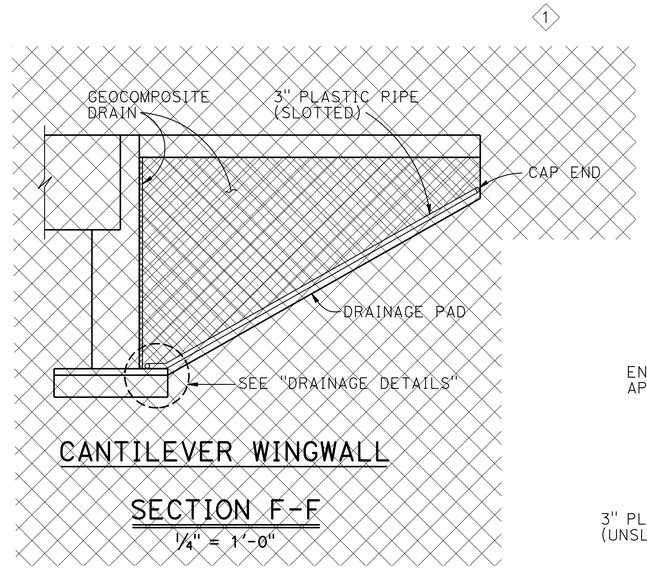

CANTILEVER WINGWALL
SECTION F-F
1/4" = 1'-0"

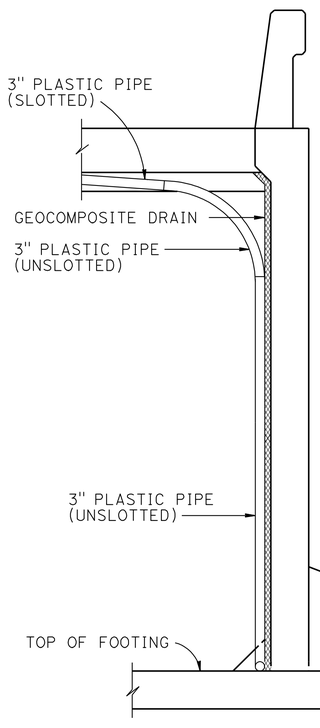

SECTION E-E
1/2" = 1'-0"

3

NOTE: Bends and junctions in 3" plastic pipe are 30" radius Min

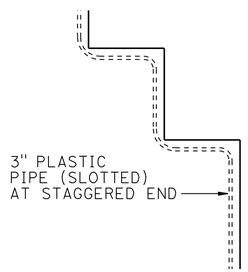

DETAIL B
No Scale

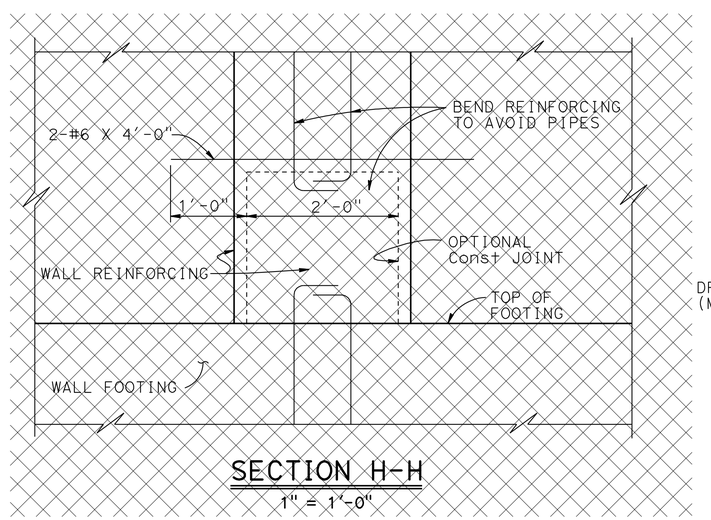

SECTION H-H
1" = 1'-0"

1

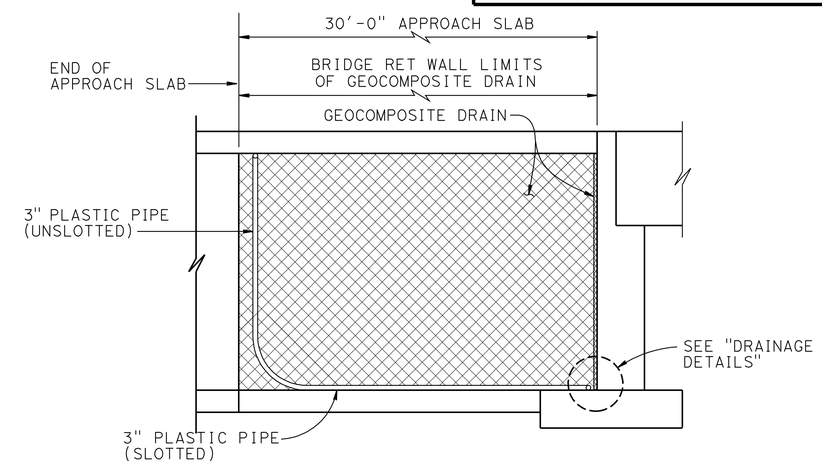

RETAINING WALL WINGWALL DRAINAGE DETAILS

SECTION G-G
1/4" = 1'-0"

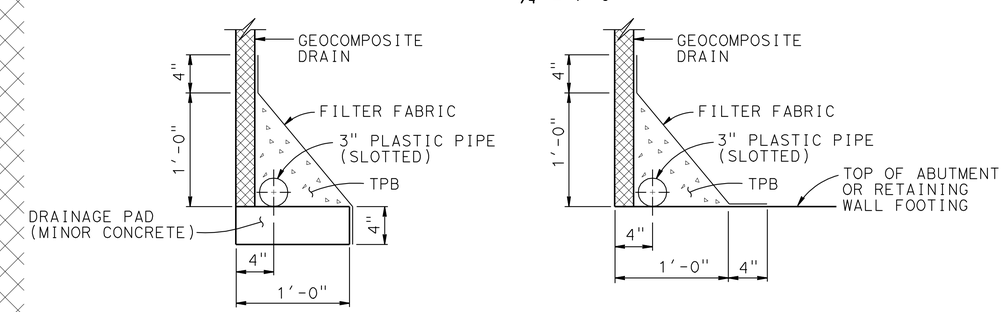

WITHOUT FOOTING

WITH FOOTING

DRAINAGE DETAILS
1 1/2" = 1'-0"

NOTE:
THE CONTRACTOR SHALL VERIFY ALL CONTROLLING FIELD DIMENSIONS BEFORE ORDERING OR FABRICATING ANY MATERIAL.

REVISED STANDARD DRAWING

FILE NO. xs3-110

APPROVAL DATE July 2011

1 Deleted Detail or Note
2 Added Detail or Note
3 Modified Detail or Note

STATE OF CALIFORNIA
DEPARTMENT OF TRANSPORTATION

DIVISION OF ENGINEERING SERVICES

BRIDGE NO. 55-0216
POST MILE 4.0

NORTH ANAHEIM OH (WIDEN)
STRUCTURE APPROACH DRAINAGE DETAILS

DS OSD 2147A (ENGLISH STANDARD DRAWING "XS" BORDER REV. (02-02-11)

ORIGINAL SCALE IN INCHES FOR REDUCED PLANS 0 1 2 3

UNIT: 2295
PROJECT NUMBER & PHASE: 12000000791
CONTRACT NO.: 12-0C5701

DISREGARD PRINTS BEARING EARLIER REVISION DATES

REVISION DATES 3/15/12 7/30/12 12/22/11 2/27/12

SHEET 18 OF 27

FILE => 55-0216-s-sadd03.dgn

USERNAME => s123631 DATE PLOTTED => 17-AUG-2012 TIME PLOTTED => 15:47

DIST	COUNTY	ROUTE	POST MILES TOTAL PROJECT	SHEET No.	TOTAL SHEETS
12	Ora	91	0.9/5.4	652	885

Jared Cole 7/30/12
REGISTERED CIVIL ENGINEER DATE

8-13-12
PLANS APPROVAL DATE

REGISTERED PROFESSIONAL ENGINEER Jared A. Cole No. C66188 Exp. 06/30/14 CIVIL STATE OF CALIFORNIA

The State of California or its officers or agents shall not be responsible for the accuracy or completeness of scanned copies of this plan sheet.

ORANGE COUNTY TRANSPORTATION AUTHORITY
550 SOUTH MAIN STREET
ORANGE, CA 92868

T.Y. LIN INTERNATIONAL
3550 VINE STREET, SUITE 120
RIVERSIDE, CA 92507

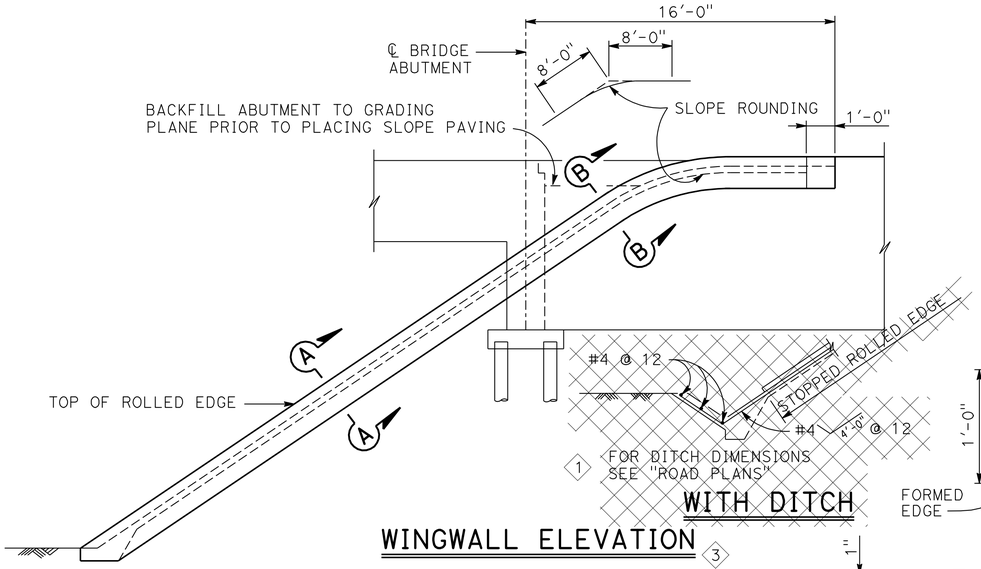

WITH DITCH

WINGWALL ELEVATION 3

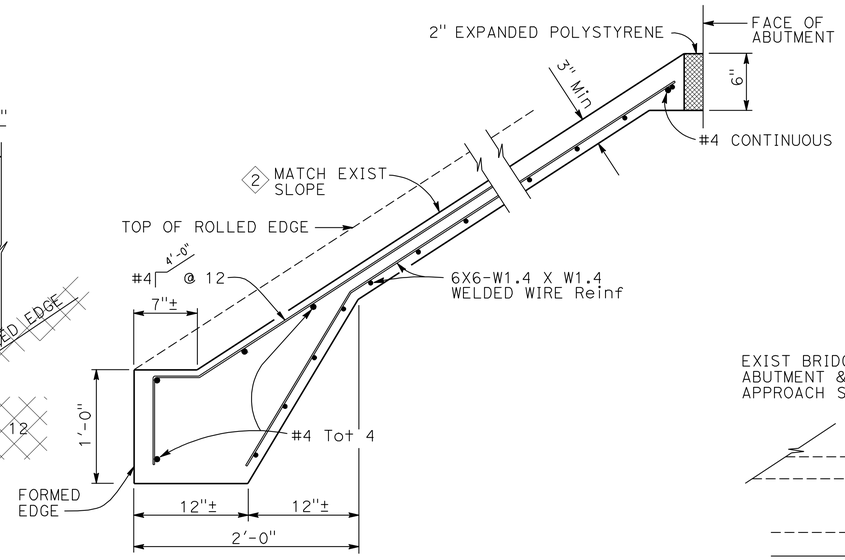

TYPICAL SECTION - CONCRETE PAVING

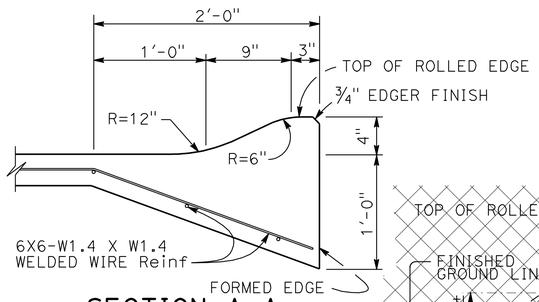

SECTION A-A

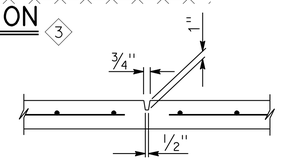

PREFORMED GROOVE

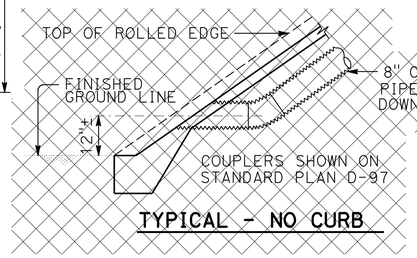

TYPICAL - NO CURB 1

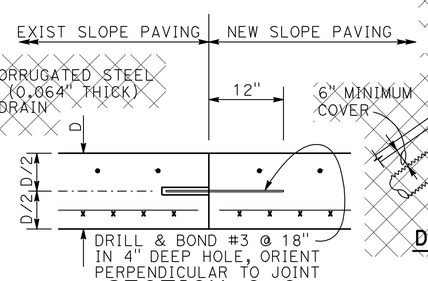

SECTION C-C 2

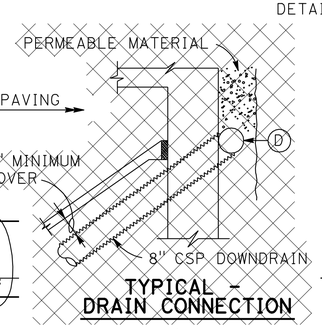

TYPICAL - DRAIN CONNECTION 1

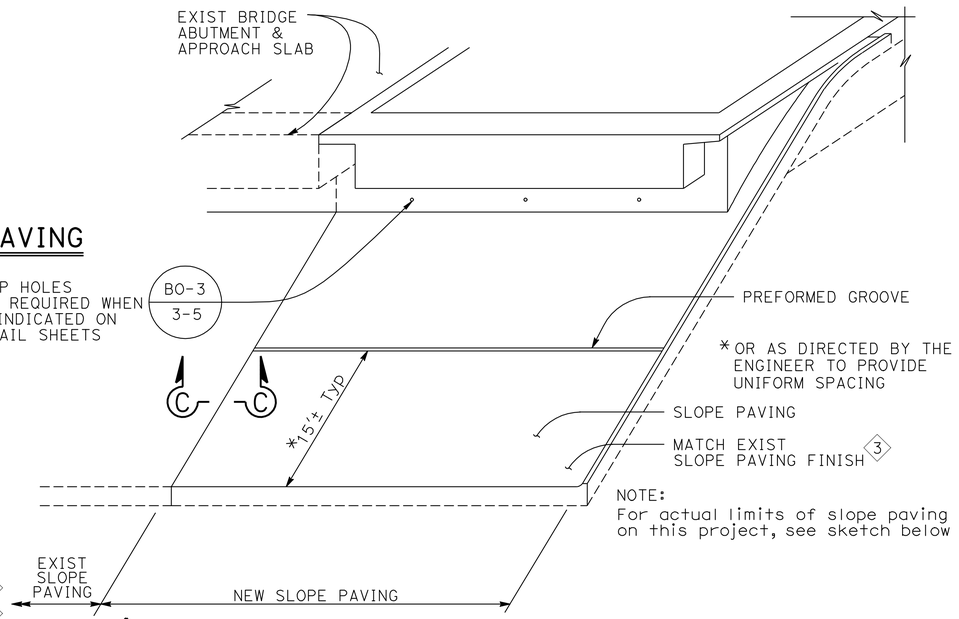

PICTORIAL VIEW OF TYPICAL INSTALLATION 3

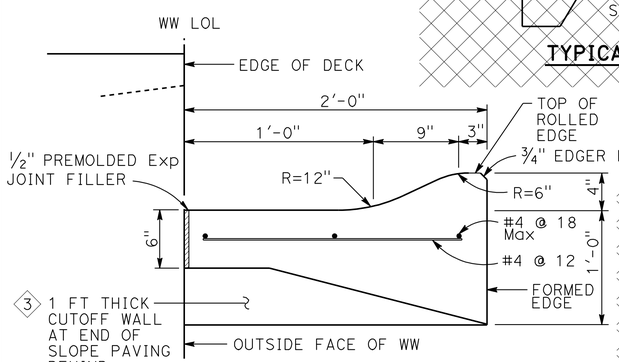

SECTION B-B 3

TYPICAL - WITH SIDEWALK TYPICAL - WITH CURB

DRAINAGE DETAILS

NOTE: SAWCUT EXISTING SIDEWALK AND CURB TO PLACE DRAIN PIPE. REPLACE SIDEWALK AND CURB IN KIND. 1

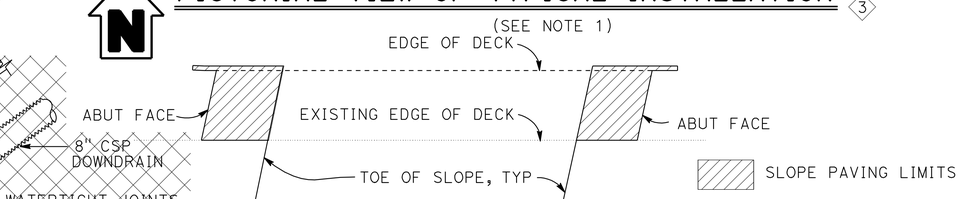

LIMITS OF SLOPE PAVING & DRAINAGE LAYOUT 2

NOTES:
2 1. See "Bridge Removal Details" sheet for limits of existing slope paving removal.

(A) Top of rolled edge

(B) Conduit:
0.064" galv corrugated steel or 0.109" smooth galv steel

(C) Taper: { 0.064" galv corrugated steel or 0.109" smooth galv steel

(D) 8" perforated steel pipe (0.064" thick) underdrain behind abutment. Connect to downdrain as shown on limits of Slope Paving & Drainage layout. 1

NOTE:
THE CONTRACTOR SHALL VERIFY ALL CONTROLLING FIELD DIMENSIONS BEFORE ORDERING OR FABRICATING ANY MATERIAL.

REVISED STANDARD DRAWING

FILE NO. xs4-210

APPROVAL DATE July 2011

1 Deleted Detail
2 Added Detail or Note
3 Modified Detail or Note

STATE OF CALIFORNIA
DEPARTMENT OF TRANSPORTATION

DIVISION OF ENGINEERING SERVICES

BRIDGE NO. 55-0216
POST MILE 4.0

NORTH ANAHEIM OH (WIDEN)

SLOPE PAVING-FULL SLOPE

DS OSD 2147A (ENGLISH STANDARD DRAWING "XS" BORDER REV. (02-02-11)

ORIGINAL SCALE IN INCHES FOR REDUCED PLANS 0 1 2 3

UNIT: 2295
PROJECT NUMBER & PHASE: 12000000791
CONTRACT NO.: 12-0C5701

DISREGARD PRINTS BEARING EARLIER REVISION DATES

REVISION DATES 3/15/12 7/30/12 12/20/11 2/12/12

SHEET 19 OF 27

FILE => 55-0216-s-slpa01.dgn

USERNAME => s123631 DATE PLOTTED => 17-AUG-2012 TIME PLOTTED => 15:47

DIST	COUNTY	ROUTE	POST MILES TOTAL PROJECT	SHEET No	TOTAL SHEETS
12	Ora	91	0.9/5.4	653	885

Jared Cole 7/30/12
REGISTERED CIVIL ENGINEER DATE

8-13-12
PLANS APPROVAL DATE

REGISTERED PROFESSIONAL ENGINEER Jared A. Cole No. C66188 Exp. 06/30/14 CIVIL STATE OF CALIFORNIA

The State of California or its officers or agents shall not be responsible for the accuracy or completeness of scanned copies of this plan sheet.

ORANGE COUNTY TRANSPORTATION AUTHORITY
550 SOUTH MAIN STREET
ORANGE, CA 92868

T.Y. LIN INTERNATIONAL
3550 VINE STREET, SUITE 120
RIVERSIDE, CA 92507

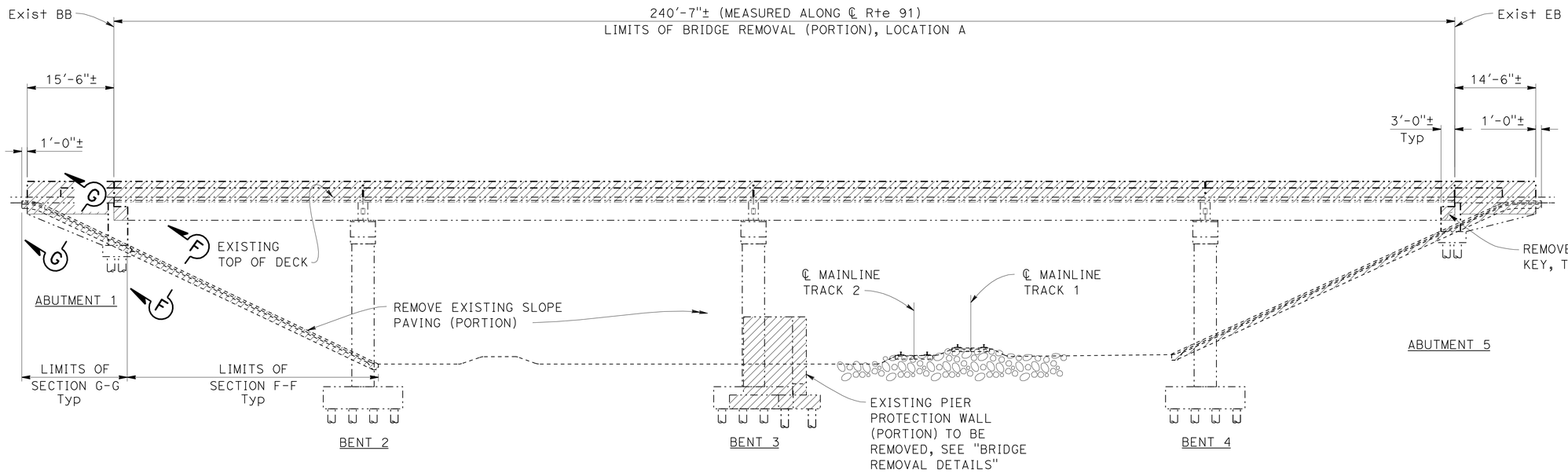

MIRRORED ELEVATION OF EXISTING BRIDGE

3/32"=1'-0"

LEGEND:

- - Indicates Existing Structure

- - Indicates Bridge Removal (Portion), Location A

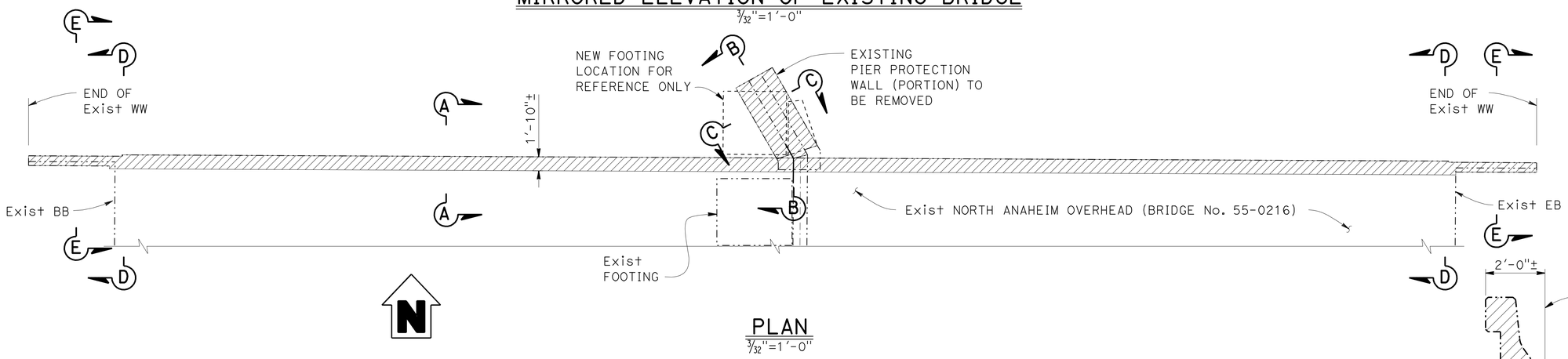

PLAN

3/32"=1'-0"

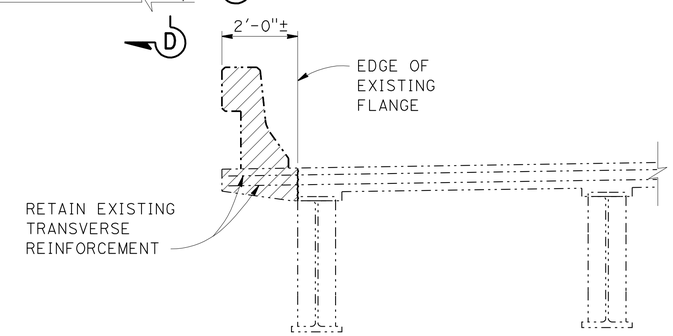

SECTION A-A

1/2"=1'-0"

NOTES:

1. Remove existing barrier and bridge deck (portion); retain existing transverse reinforcement at bridge deck.
2. Remove existing abutment exterior shear key and existing reinforcement.
3. Remove 3'-0"± of existing wingwall and existing wingwall reinforcement at seat level.
4. For "SECTION B-B", "SECTION C-C", "SECTION D-D", "SECTION E-E", "SECTION F-F", and "SECTION G-G" see "BRIDGE REMOVAL DETAILS" sheet.

NOTE:
THE CONTRACTOR SHALL VERIFY ALL CONTROLLING FIELD DIMENSIONS BEFORE ORDERING OR FABRICATING ANY MATERIAL

Luqi Yang
DESIGN OVERSIGHT Luqi Yang
8-6-12
SIGN OFF DATE

	BY	CHECKED
DESIGN	Jared Cole	Roya Golchoobian
DETAILS	Oscar Colcol	Roya Golchoobian
QUANTITIES	Sabina Piras	Tim Fuller

PREPARED FOR THE STATE OF CALIFORNIA DEPARTMENT OF TRANSPORTATION

David Griffith
PROJECT ENGINEER

BRIDGE NO. 55-0216
POST MILES 4.0

NORTH ANAHEIM OH (WIDEN)
BRIDGE REMOVAL PLAN

DESIGN DETAIL SHEET (ENGLISH) (REV.7/16/10)

ORIGINAL SCALE IN INCHES FOR REDUCED PLANS 0 1 2 3

UNIT: 2295
PROJECT NUMBER & PHASE: 12000000791 CONTRACT NO.: 12-0C5701

DISREGARD PRINTS BEARING EARLIER REVISION DATES

REVISION DATES: 03/15/12 07/30/12 12/22/11 2/13/12

SHEET 20 OF 27

FILE => 55-0216-u-miscdt01.dgn

Filename: $FILE$ Date: $DATE$ Time: $TIME$

DIST	COUNTY	ROUTE	POST MILES TOTAL PROJECT	SHEET No	TOTAL SHEETS
12	Ora	91	0.9/5.4	654	885

Jared Cole 7/30/12
REGISTERED CIVIL ENGINEER DATE

8-13-12
PLANS APPROVAL DATE

REGISTERED PROFESSIONAL ENGINEER
Jared A. Cole
No. C66188
Exp. 06/30/14
CIVIL
STATE OF CALIFORNIA

The State of California or its officers or agents shall not be responsible for the accuracy or completeness of scanned copies of this plan sheet.

ORANGE COUNTY TRANSPORTATION AUTHORITY
550 SOUTH MAIN STREET
ORANGE, CA 92868

T.Y. LIN INTERNATIONAL
3550 VINE STREET, SUITE 120
RIVERSIDE, CA 92507

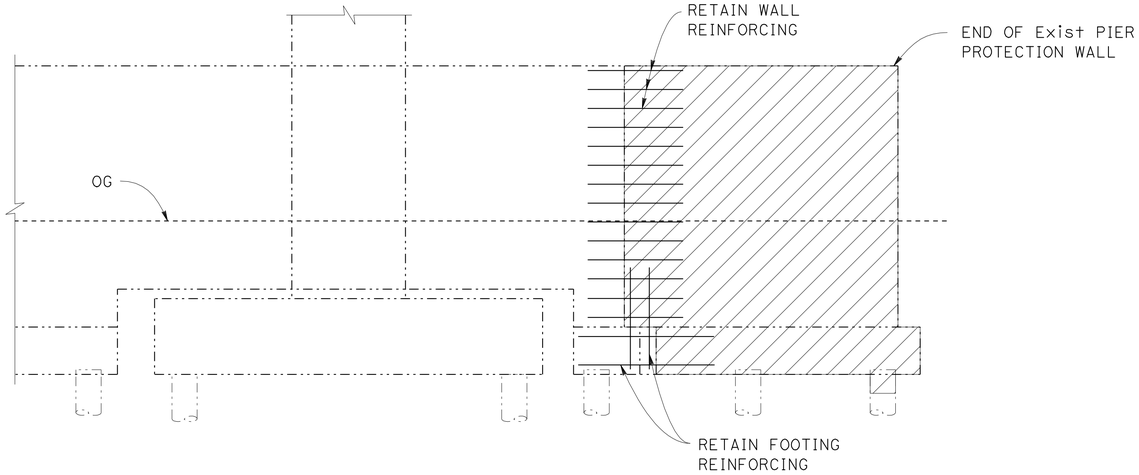

ELEVATION B-B
1/4"=1'-0"

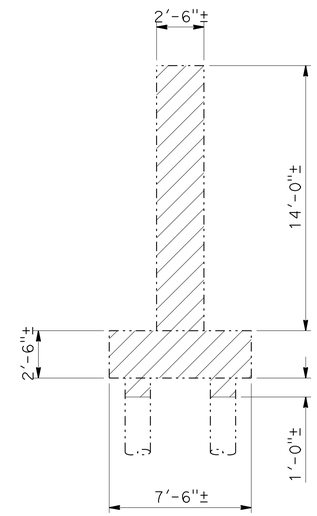

SECTION C-C
1/4"=1'-0"

LEGEND:

- - Indicates Existing Structure

- Indicates Bridge Removal (Portion), Location A

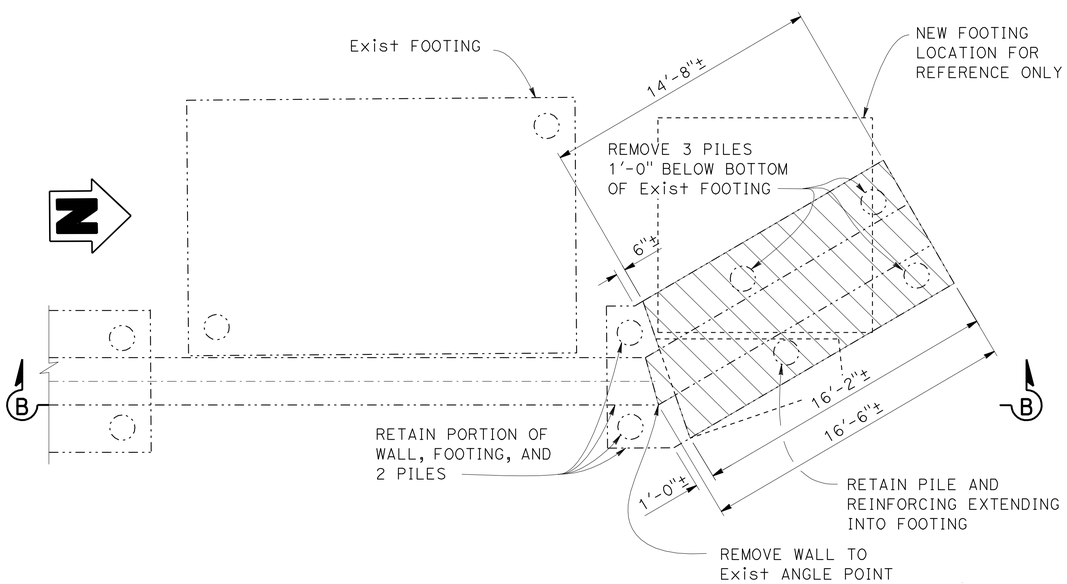

PLAN
1/4"=1'-0"

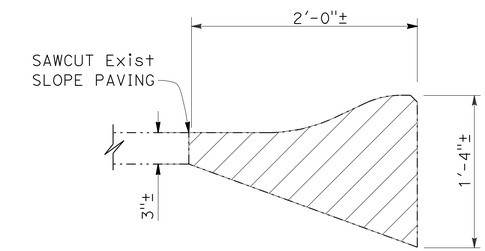

SECTION F-F
NO SCALE

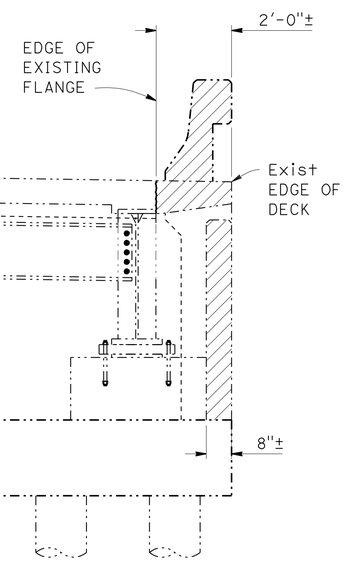

SECTION D-D
1/2"=1'-0"

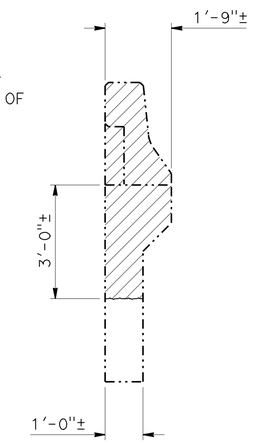

SECTION E-E
1/2"=1'-0"

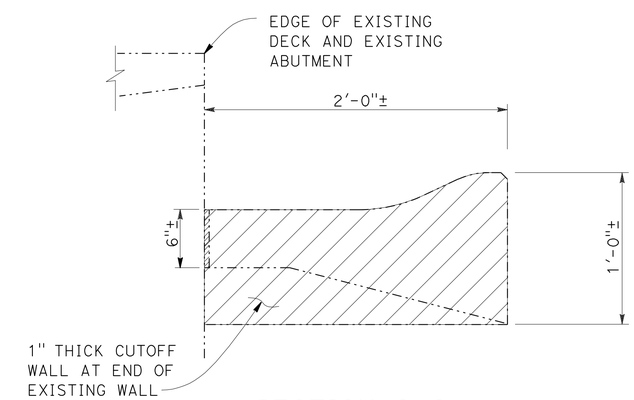

SECTION G-G
NO SCALE

NOTE:
THE CONTRACTOR SHALL VERIFY ALL CONTROLLING FIELD DIMENSIONS BEFORE ORDERING OR FABRICATING ANY MATERIAL

Luqi Yang
DESIGN OVERSIGHT Luqi Yang
8-6-12
SIGN OFF DATE

	BY	CHECKED
DESIGN	Jared Cole	Roya Golchoobian
DETAILS	Oscar Colcol	Roya Golchoobian
QUANTITIES	Sabina Piras	Tim Fuller

PREPARED FOR THE STATE OF CALIFORNIA DEPARTMENT OF TRANSPORTATION

David Griffith
PROJECT ENGINEER

BRIDGE NO. 55-0216
POST MILES 4.0

NORTH ANAHEIM OH (WIDEN)
BRIDGE REMOVAL DETAILS

DESIGN DETAIL SHEET (ENGLISH) (REV.7/16/10)

ORIGINAL SCALE IN INCHES FOR REDUCED PLANS 0 1 2 3

UNIT: 2295
PROJECT NUMBER & PHASE: 12000000791 CONTRACT NO.: 12-0C5701

DISREGARD PRINTS BEARING EARLIER REVISION DATES

REVISION DATES: 03/15/12 07/30/12 12/07/11 2/13/12

SHEET 21 OF 27

FILE => 55-0216-u-miscdt02.dgn

Filename: $FILE$ Date: $DATE$ Time: $TIME$

DIST	COUNTY	ROUTE	POST MILES TOTAL PROJECT	SHEET No	TOTAL SHEETS
12	Ora	91	0.9/5.4	655	885

Jared Cole 7/30/12
REGISTERED CIVIL ENGINEER DATE

8-13-12
PLANS APPROVAL DATE

REGISTERED PROFESSIONAL ENGINEER
Jared A. Cole
No. C66188
Exp. 06/30/14
CIVIL
STATE OF CALIFORNIA

The State of California or its officers or agents shall not be responsible for the accuracy or completeness of scanned copies of this plan sheet.

ORANGE COUNTY TRANSPORTATION AUTHORITY
550 SOUTH MAIN STREET
ORANGE, CA 92868

T.Y. LIN INTERNATIONAL
3550 VINE STREET, SUITE 120
RIVERSIDE, CA 92507

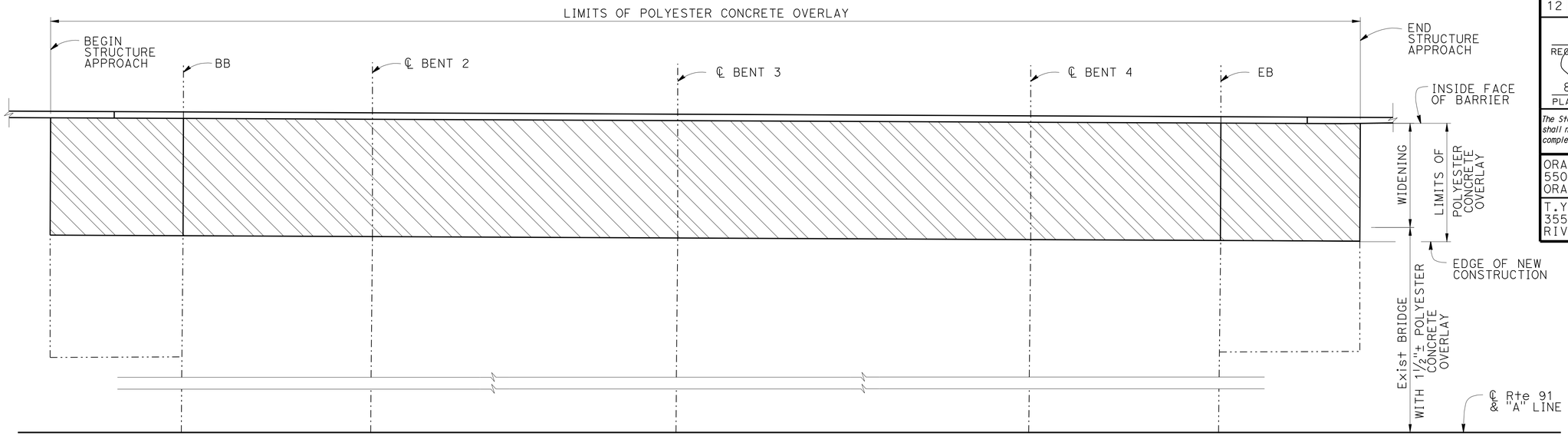

POLYESTER CONCRETE OVERLAY

NO SCALE

LEGEND:

- 0.1'± Polyester Concrete Overlay, Match existing. Refer to CAPM Plans 12-0K5304

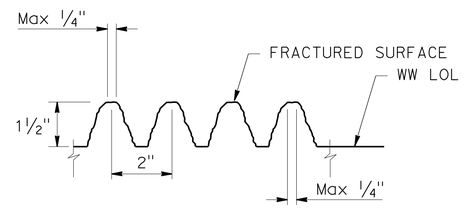

FRACTURED RIB TEXTURE 1-1/2" (PROJECTING)

NO SCALE

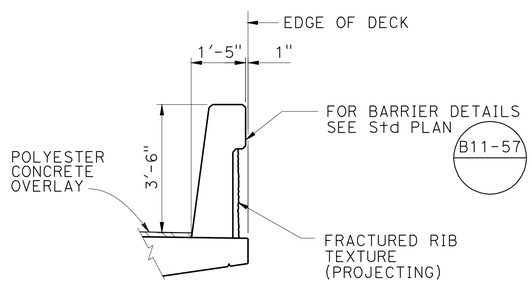

CONCRETE BARRIER TYPE 742 (MODIFIED) ON BRIDGE DECK

½" = 1'-0"

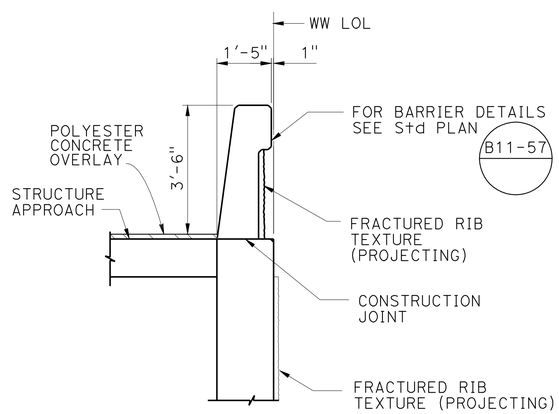

CONCRETE BARRIER TYPE 742A (MODIFIED) ON WINGWALL

½" = 1'-0"

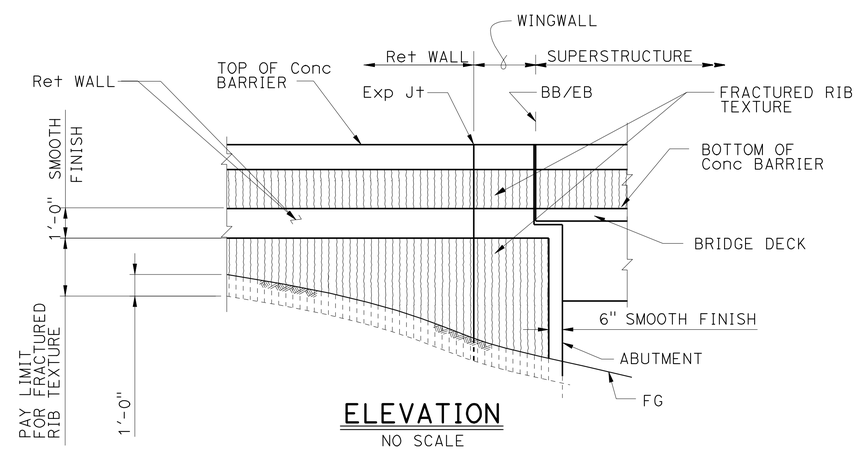

ELEVATION

NO SCALE

NOTE:
THE CONTRACTOR SHALL VERIFY ALL CONTROLLING FIELD DIMENSIONS BEFORE ORDERING OR FABRICATING ANY MATERIAL

Luqi Yang
DESIGN OVERSIGHT Luqi Yang
8-6-12
SIGN OFF DATE

	BY	CHECKED
DESIGN	Jared Cole	Roya Golchoobian
DETAILS	Oscar Colcol	Roya Golchoobian
QUANTITIES	Sabina Piras	Tim Fuller

PREPARED FOR THE STATE OF CALIFORNIA DEPARTMENT OF TRANSPORTATION

David Griffith
PROJECT ENGINEER

BRIDGE NO. 55-0216
POST MILES 4.0

NORTH ANAHEIM OH (WIDEN)
MISCELLANEOUS DETAILS

DESIGN DETAIL SHEET (ENGLISH) (REV.7/16/10)

ORIGINAL SCALE IN INCHES FOR REDUCED PLANS 0 1 2 3

UNIT: 2295
PROJECT NUMBER & PHASE: 12000000791 CONTRACT NO.: 12-0C5701

DISREGARD PRINTS BEARING EARLIER REVISION DATES

REVISION DATES: 03/15/12 01/30/12 12/22/11 2/11/12

SHEET 22 OF 27

FILE => 55-0216-u-miscdt04.dgn

Time: $TIME$ Date: $DATE$ Filename: $FILE$

DIST	COUNTY	ROUTE	POST MILES TOTAL PROJECT	SHEET No	TOTAL SHEETS
12	Ora	91	0.9/5.4	656	885

Jared Cole 7/30/12
REGISTERED CIVIL ENGINEER DATE

8-13-12
PLANS APPROVAL DATE

REGISTERED PROFESSIONAL ENGINEER Jared A. Cole No. C66188 Exp. 06/30/14 CIVIL STATE OF CALIFORNIA

The State of California or its officers or agents shall not be responsible for the accuracy or completeness of scanned copies of this plan sheet.

ORANGE COUNTY TRANSPORTATION AUTHORITY
550 SOUTH MAIN STREET
ORANGE, CA 92868

T.Y. LIN INTERNATIONAL
3550 VINE STREET, SUITE 120
RIVERSIDE, CA 92507

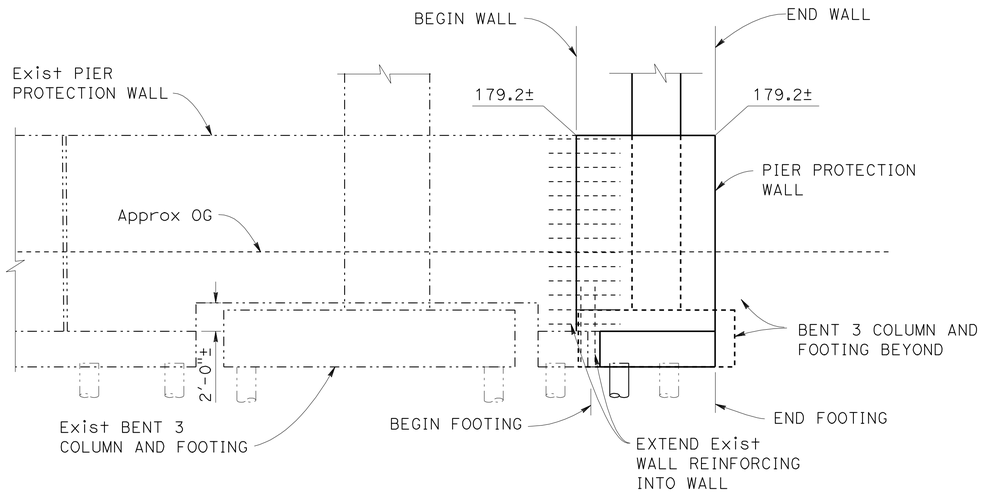

ELEVATION B-B
3/16"=1'-0"

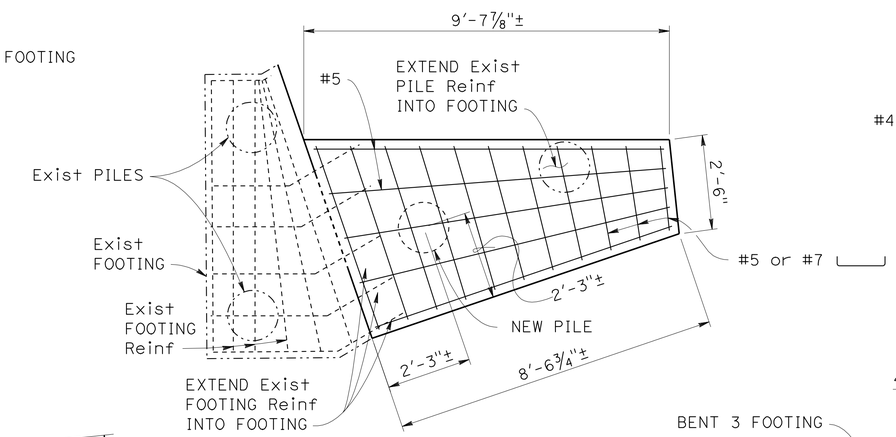

FOOTING
1/2"=1'-0"

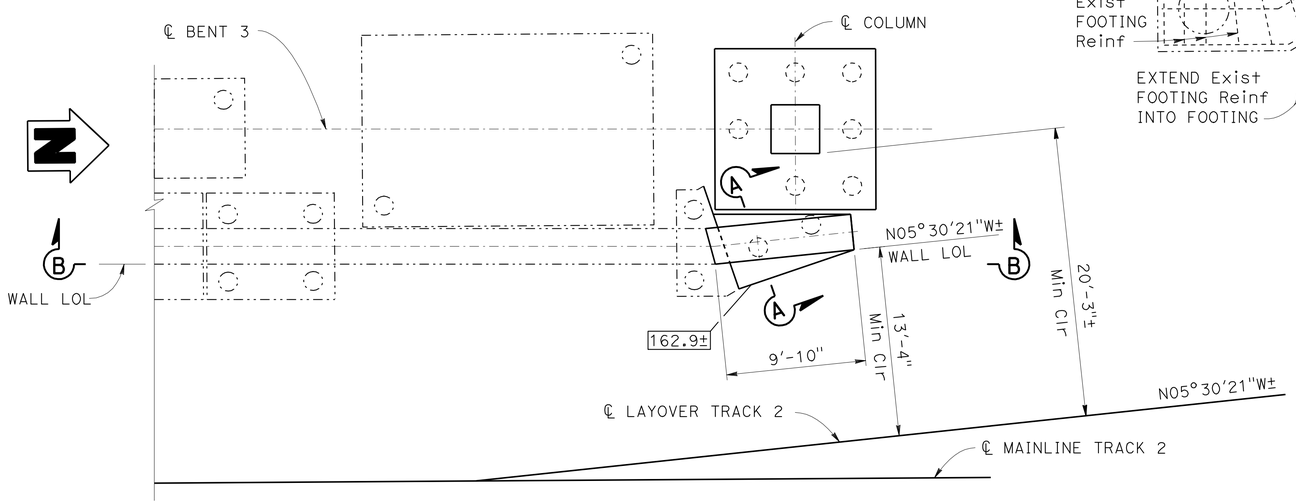

PIER PROTECTION WALL PLAN
3/16"=1'-0"

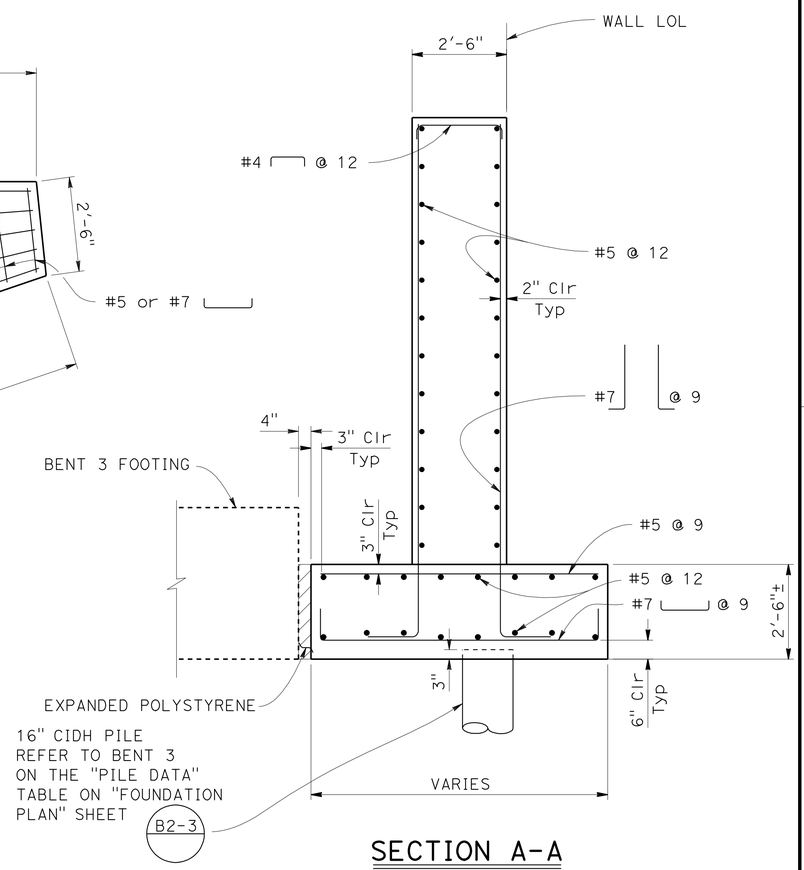

SECTION A-A
1/2"=1'-0"

NOTE:
THE CONTRACTOR SHALL VERIFY ALL CONTROLLING FIELD DIMENSIONS BEFORE ORDERING OR FABRICATING ANY MATERIAL

NOTES:

1. For existing pier protection wall removal concrete (portion) details, see "BRIDGE REMOVAL DETAILS" sheet.
2. For concrete strength and type limits of pier protection wall, see "INDEX TO PLANS" sheet.
3. Pier protection wall extension is for Bent 3 only.

LEGEND:

- Indicates Existing Structure
- Indicates New Structure
- Indicates Bridge Removal (Portion), Location A
- Indicates bottom of footing elevation

Luqi Yang
DESIGN OVERSIGHT Luqi Yang
8-6-12
SIGN OFF DATE

	BY	CHECKED
DESIGN	Jared Cole	Roya Golchoobian
DETAILS	Oscar Colcol	Roya Golchoobian
QUANTITIES	Sabina Piras	Tim Fuller

PREPARED FOR THE STATE OF CALIFORNIA DEPARTMENT OF TRANSPORTATION

David Griffith
PROJECT ENGINEER

BRIDGE NO. 55-0216
POST MILES 4.0

NORTH ANAHEIM OH (WIDEN)
PIER PROTECTION WALL

DESIGN DETAIL SHEET (ENGLISH) (REV.7/16/10)

ORIGINAL SCALE IN INCHES FOR REDUCED PLANS 0 1 2 3

UNIT: 2295
PROJECT NUMBER & PHASE: 12000000791 CONTRACT NO.: 12-0C5701

DISREGARD PRINTS BEARING EARLIER REVISION DATES

REVISION DATES 03/15/12 07/30/12 12/07/11 2/13/12

SHEET 23 OF 27

FILE => 55-0216-u-ppwalldt01.dgn

Filename: $FILE$ Date: $DATE$ Time: $TIME$

DIST	COUNTY	ROUTE	POST MILES TOTAL PROJECT	SHEET No.	TOTAL SHEETS
12	Ora	91	0.9/5.4	657	885

REGISTERED CIVIL ENGINEER 7/30/12 DATE

8-13-12
PLANS APPROVAL DATE

REGISTERED PROFESSIONAL ENGINEER Jared A. Cole No. C66188 Exp. 06/30/14 CIVIL STATE OF CALIFORNIA

The State of California or its officers or agents shall not be responsible for the accuracy or completeness of scanned copies of this plan sheet.

ORANGE COUNTY TRANSPORTATION AUTHORITY
550 SOUTH MAIN STREET
ORANGE, CA 92868

T.Y. LIN INTERNATIONAL
3550 VINE STREET, SUITE 120
RIVERSIDE, CA 92507

COLUMN INFORMATION

COLUMN SIZE	CASING CLASS	X	Y	CASING THICKNESS
2'-6"±X4'-0"±	P/F	9 7/16"	5 7/8"	1/2"

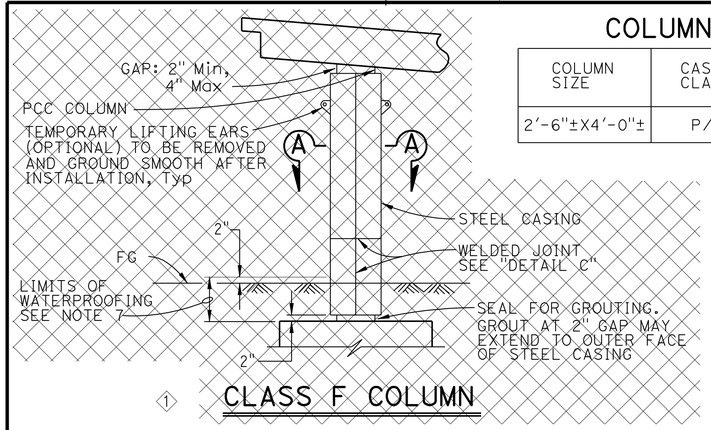

1 CLASS F COLUMN

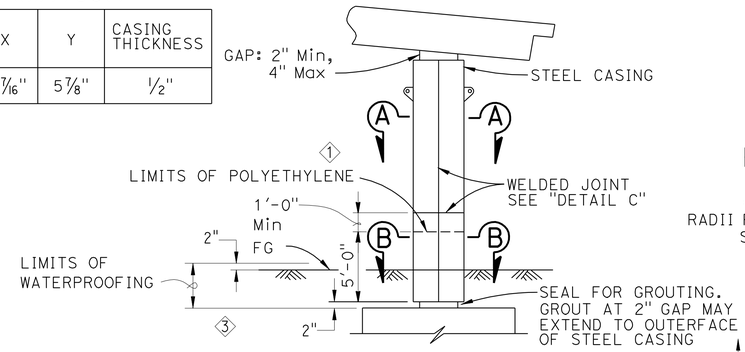

1 3 CLASS P/F COLUMN

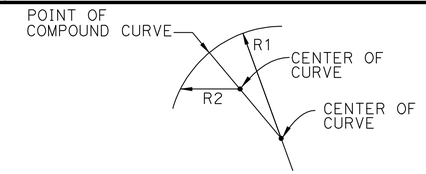

ELLIPTICAL CASING DETAIL P/F COLUMN

3

RADII R1 AND R2 TO BE DETERMINED BY THE CONTRACTOR SUBJECT TO THE APPROVAL OF THE ENGINEER

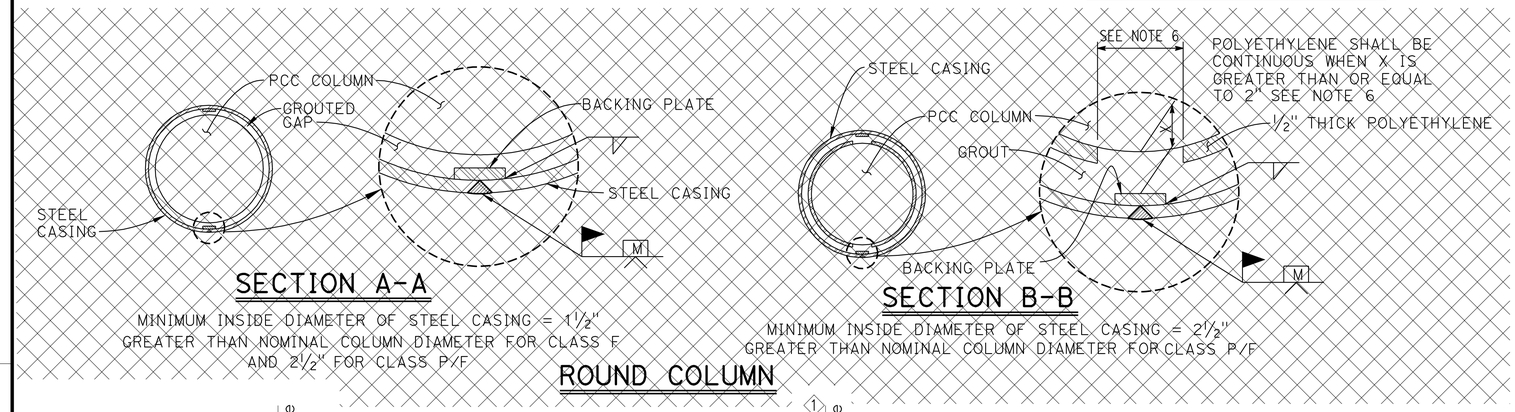

SECTION A-A

MINIMUM INSIDE DIAMETER OF STEEL CASING = 1 1/2" GREATER THAN NOMINAL COLUMN DIAMETER FOR CLASS F AND 2 1/2" FOR CLASS P/F

SECTION B-B

MINIMUM INSIDE DIAMETER OF STEEL CASING = 2 1/2" GREATER THAN NOMINAL COLUMN DIAMETER FOR CLASS P/F

ROUND COLUMN

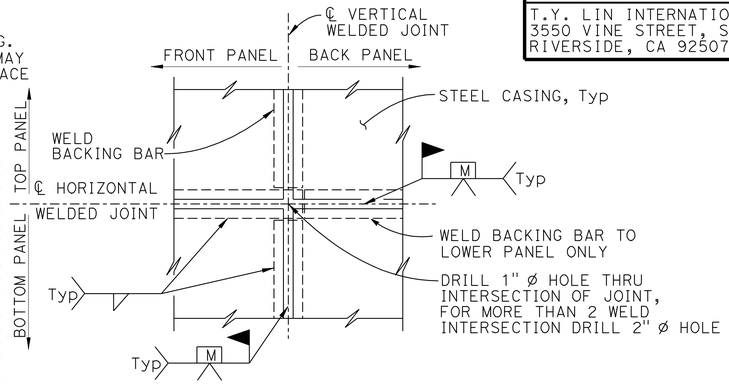

(TWO WELD INTERSECTION JOINT)

DETAIL C

NOTES:

1. For varying thickness, steel casing inside surface to remain flush. Minimum clearance from PCC column to casing shall be maintained
2. Appropriate injection nozzles to be provided on casing, but removed and ground flush following completion of grouting operation
3. All voids between steel casing and polyethylene and steel casing and PCC column to be filled with grout 3
4. Location and number of vertical and horizontal welds to be determined by the Contractor and subject to the approval of the Engineer. The location of casing welds are for illustration. No skip welds allowed
5. Circular steel casing to be 1/4" thick minimum for casings with a 4'-4" diameter or less; all other steel casings to be 3/8" thick unless noted differently on contract plans. Backing plates to be the same thickness as casing up to maximum 3/8" thick
6. Contractor shall remove 12" polyethylene strip behind backing plate if backing plate is closer than 2" from face of column
7. Waterproof limits for steel casings. Typical for Class "F" and "P/F" 1
8. For pipe extensions, opening shall be no more than 1/4" greater than the pipe extension diameter. For other openings, the opening diameter to be determined by the Engineer

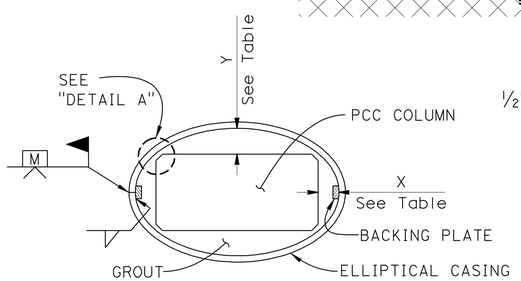

SECTION A-A 3

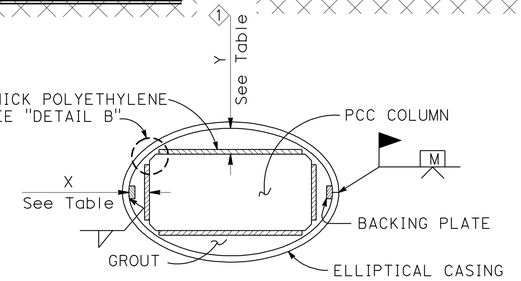

SECTION B-B 3

RECTANGULAR COLUMN

DETAIL A

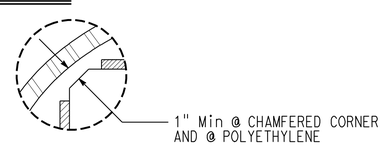

DETAIL B

NOTE:
THE CONTRACTOR SHALL VERIFY ALL CONTROLLING FIELD DIMENSIONS BEFORE ORDERING OR FABRICATING ANY MATERIAL

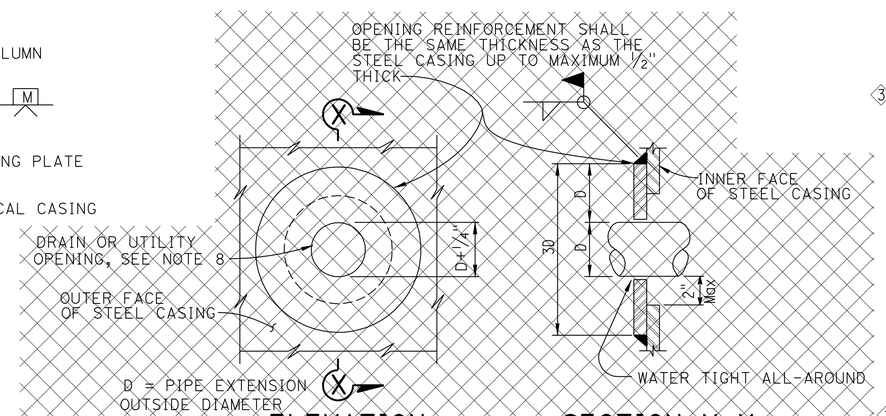

ELEVATION

SECTION X-X

CASING OPENING

NOTE: OPENING REINFORCEMENT REQUIRED FOR DRAIN OR UTILITY OPENINGS LARGER THAN 4"

1

NO SCALE

REVISED STANDARD DRAWING

FILE NO. xs7-010

APPROVAL DATE July 2011

1 Deleted Detail or Note
2 Added Detail or Note
3 Modified Detail or Note

STATE OF CALIFORNIA
DEPARTMENT OF TRANSPORTATION

DIVISION OF ENGINEERING SERVICES

BRIDGE NO. 55-0216
POST MILE 4.0

NORTH ANAHEIM OH (WIDEN)

COLUMN CASING - STEEL

DS OSD 2147A (ENGLISH STANDARD DRAWING "XS" BORDER REV. (02-02-11)

ORIGINAL SCALE IN INCHES FOR REDUCED PLANS 0 1 2 3

UNIT: 2295
PROJECT NUMBER & PHASE: 12000000791
CONTRACT NO.: 12-0C5701

DISREGARD PRINTS BEARING EARLIER REVISION DATES

REVISION DATES 3/16/12 1/30/12 12/22/11 2/11/12

SHEET 24 OF 27

FILE => 55-0216-u-ppwcasingdt02.dgn

USERNAME => s123631 DATE PLOTTED => 17-AUG-2012 TIME PLOTTED => 15:47

DIST	COUNTY	ROUTE	POST MILES TOTAL PROJECT	SHEET No	TOTAL SHEETS
12	Ora	91	0.9/5.4	658	885

REGISTERED ENGINEER — DATE 3/15/12

PLANS APPROVAL DATE 8-13-12

REGISTERED PROFESSIONAL ENGINEER S. PIRATHIVIRAJ NO. C71662 EXP. 12/31/13 CIVIL STATE OF CALIFORNIA

The State of California or its officers or agents shall not be responsible for the accuracy or completeness of scanned copies of this plan sheet.

ORANGE COUNTY TRANSPORTATION AUTHORITY
550 SOUTH MAIN STREET
ORANGE, CA 92868

EARTH MECHANICS, INC.
17800 NEWHOPE STREET, SUITE B
FOUNTAIN VALLEY, CA 92708

BENCH MARK

Designation: 1G-164-05 Elev = 109.804
Described by OCS 2005 - Found 3¾" OCS Aluminum Benchmark Disk Stamped "1G-164-05", set in the Nothwesterly Corner of a 4.5 ft. by 11.0 ft. Concrete Catch Basin. Monument is located in the Southeasterly Corner of the intersection of Magnolia Avenue and Buckingham Street, 200 ft. ± from the centerline of Buckingham and 47 ft. Easterly of the centerline of Magnolia. Monument is set level with the Sidewalk
Designation: 2F-25-04 Elev = 162.700
Described by OCS 2004 - Found 3¾" OCS Aluminum Benchmark Disk Stamped "2F-25-04", set in the Nothwesterly Corner of a 7.5 ft. by 4.5 ft. Concrete Catch Basin. Monument is located in the Northeasterly Corner of the intersection of Harbor Boulevard and the Eastbound 91 Freeway On-Ramp, 39 ft. Northerly of the centerline of the On-Ramp and 40 ft. Easterly of the centerline of Harbor Boulevard. Monument is set level with the Sidewalk

BENCH MARK

Designation: 2D-35-86 Elev = 188.576
Described by OCS 2003 - Found 3¾" OCS Aluminum Benchmark Disk Stamped "2D-35-86", set in the Nothwesterly Corner of a 7 ft. by 14 ft. Concrete Catch Basin. Monument is located in the Southeasterly Corner of the intersection of Placentia Avenue and State College Boulevard, 38 ft. Easterly of the centerline of State College and 70.5 ft. Southerly of the centerline of Placentia. Monument is set level with the Sidewalk

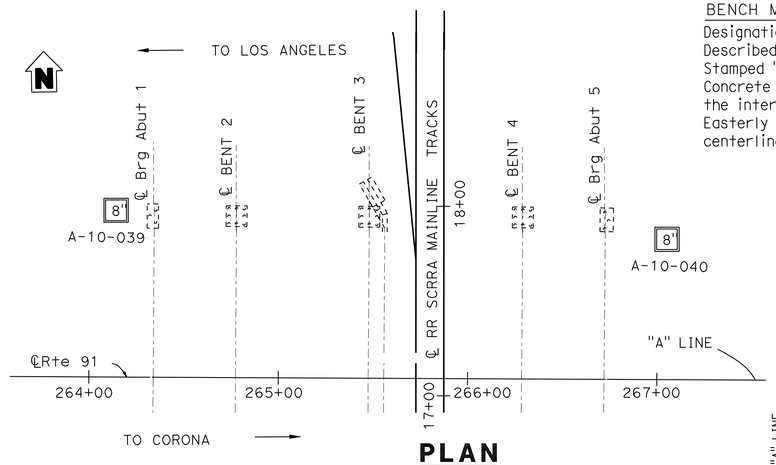

PLAN

1" = 40'

NOTES:

(1) This LOTB sheet was prepared in accordance with the Caltrans Soil and Rock Logging, Classification and Presentation Manual (June 2010).

(2) 2.4" samples were taken using a California Modified Sampler.

(3) An automatic trip hammer system consisting of a hammer weight of 140 lbs falling a distance of 30" was used to advance the drive sampler.

(4) Conversion factor from 2.4" Modified California Ring Sampler blowcounts to Standard Penetration Test (SPT) blowcounts is 0.5.

A-10-039

"A" LINE STA. 264+14±; 88'Lt±

El. +198.40 ft

Blows	Sample	Symbols	Description
	8		POORLY GRADED SAND WITH SILT (SP-SM): OLIVE-BROWN, DRY, COARSE TO FINE SAND, TRACE FINE GRAVEL, NONPLASTIC, WEAK CEMENTATION
64	2.4 1	M UW CR	SILTY SAND (SM): DENSE, OLIVE-BROWN, MOIST, COARSE TO FINE SAND, NONPLASTIC, WEAK CEMENTATION
30	1.4 2	M	
48	2.4 3	M UW DS	CLAYEY SAND (SC): DENSE, OLIVE-BROWN, MOIST, COARSE TO FINE SAND, TRACE FINE GRAVEL, LOW PLASTICITY, WEAK CEMENTATION
10	1.4 4	M PA	SILTY SAND (SM): MEDIUM DENSE, DARK OLIVE-BROWN, MOIST, 8% FINE GRAVEL, 60% COARSE TO FINE SAND, 32% FINES, NONPLASTIC, WEAK CEMENTATION
50/4"	2.4 5	M UW	VERY DENSE
21	1.4 6	M	MEDIUM DENSE
37	2.4 7	M UW	CLAYEY SAND (SC): MEDIUM DENSE, OLIVE-BROWN, MOIST, COARSE TO FINE SAND, TRACE FINE GRAVEL, LOW PLASTICITY, WEAK CEMENTATION
18	1.4 8	M	POORLY GRADED SAND (SP): MEDIUM DENSE, OLIVE-BROWN, DRY, COARSE TO FINE SAND, TRACE FINE GRAVEL, NONPLASTIC, WEAK CEMENTATION
77	2.4 9	M UW	POORLY GRADED SAND WITH SILT (SP-SM): MEDIUM DENSE, OLIVE-BROWN, DRY, COARSE TO FINE SAND, TRACE FINE GRAVEL, NONPLASTIC, WEAK CEMENTATION
23	1.4 10	M	DENSE MEDIUM DENSE
74	2.4 11	M UW	SILTY SAND (SM): DENSE, OLIVE-BROWN, MOIST, COARSE TO FINE SAND, NONPLASTIC, WEAK CEMENTATION
12	1.4 12	M PA	SANDY SILT (ML): STIFF, BROWN, MOIST, 48% FINE SAND, 52% FINES, LOW PLASTICITY
58	2.4 13	M UW DS	SILTY SAND (SM): DENSE, BROWN TO OLIVE-BROWN, MOIST, COARSE TO FINE SAND, NONPLASTIC, WEAK CEMENTATION
22	1.4 14	M	MEDIUM DENSE
32	2.4 15	M UW CR UU PI	ELASTIC SILT (MH): STIFF, OLIVE-BROWN, MOIST, FEW FINE SAND, HIGH PLASTICITY, PP=1.75 TSF
36	1.4 16	M	POORLY GRADED SAND (SP): DENSE, OLIVE-BROWN, DRY, COARSE TO FINE SAND, NONPLASTIC, WEAK CEMENTATION
98/10.5"	2.4 17	M UW	POORLY GRADED SAND WITH SILT (SP-SM): VERY DENSE, OLIVE-BROWN, DRY, COARSE TO FINE SAND, TRACE FINE GRAVEL, NONPLASTIC, WEAK CEMENTATION
45	1.4 18	M	
59	2.4 19	M UW	DENSE, WITH LENS OF SILTY SAND
69	1.4 20	M	VERY DENSE

TERMINATED AT EL. +96.9'
DRILLED ON 01-20-2011
HAMMER EFFICIENCY RATIO (ERI) = 75%
GROUNDWATER NOT ENCOUNTERED DURING DRILLING

A-10-040

"A" LINE STA. 267+05±; 74'Lt±

El. +201.20 ft

Blows	Sample	Symbols	Description
	8		9" ASPHALT CONCRETE; 12" BASE
Bulk	R		POORLY GRADED SAND WITH SILT (SP-SM): DARK OLIVE-BROWN, MOIST, COARSE TO FINE SAND, TRACE FINE GRAVEL, NONPLASTIC, WEAK CEMENTATION
20	1.4 1	M	SILTY SAND WITH GRAVEL (SM): MEDIUM DENSE, DARK OLIVE-BROWN, MOIST, LITTLE COARSE TO FINE GRAVL, COARSE TO FINE SAND, NONPLASTIC, WEAK CEMENTATION
63	2.4 2	M UW	POORLY GRADED SAND WITH SILT (SP-SM): DENSE, OLIVE-BROWN, MOIST, COARSE TO FINE SAND, NONPLASTIC, WEAK CEMENTATION
43	1.4 3	M	VERY DENSE
106	2.4 4	M UW	SILTY SAND (SM): VERY DENSE, DARK OLIVE-BROWN, MOIST, MEDIUM TO FINE SAND, NONPLASTIC, WEAK CEMENTATION
39	1.4 5	M	DENSE
63	2.4 6	M UW	
14	1.4 7	M	POORLY GRADED SAND WITH SILT (SP-SM): MEDIUM DENSE, OLIVE-BROWN, DRY, COARSE TO FINE SAND, NONPLASTIC, WEAK CEMENTATION
31	2.4 8	M UW DS	POORLY GRADED SAND (SP): MEDIUM DENSE, OLIVE-BROWN, DRY, COARSE TO FINE SAND, NONPLASTIC, WEAK CEMENTATION
28	1.4 9	M	DENSE
84	2.4 10	M UW	VERY DENSE
18	1.4 11	M	SILTY SAND (SM): MEDIUM DENSE, DARK OLIVE-BROWN, MOIST, MEDIUM TO FINE SAND, NONPLASTIC, WEAK CEMENTATION
81	2.4 12	M UW	POORLY GRADED SAND WITH SILT (SP-SM): VERY DENSE, OLIVE-BROWN, MOIST, COARSE TO FINE SAND, NONPLASTIC, WEAK CEMENTATION
26	1.4 13	M	DENSE
75	2.4 14	M UW	POORLY GRADED SAND (SP): DENSE, OLIVE-BROWN, DRY, COARSE TO FINE SAND, NONPLASTIC, WEAK CEMENTATION
41	1.4 15	M	VERY DENSE
69	2.4 16	M UW	POORLY GRADED SAND WITH SILT (SP-SM): DENSE, OLIVE-BROWN, DRY, MEDIUM TO FINE SAND, NONPLASTIC, WEAK CEMENTATION
61	1.4 17	M	VERY DENSE
53	2.4 18	M UW	DENSE SILT WITH SAND (ML): HARD, OLIVE-BROWN, MOIST, FINE SAND, LOW PLASTICITY
29	1.4 19	M	POORLY GRADED SAND WITH SILT (SP-SM): DENSE, OLIVE-BROWN, MOIST, COARSE TO FINE SAND, NONPLASTIC, WEAK CEMENTATION
REF	2.4 20	M UW	VERY DENSE

TERMINATED AT EL. +100.7'
DRILLED ON 01-06-2011
HAMMER EFFICIENCY RATIO (ERI) = 75%
GROUNDWATER NOT ENCOUNTERED DURING DRILLING

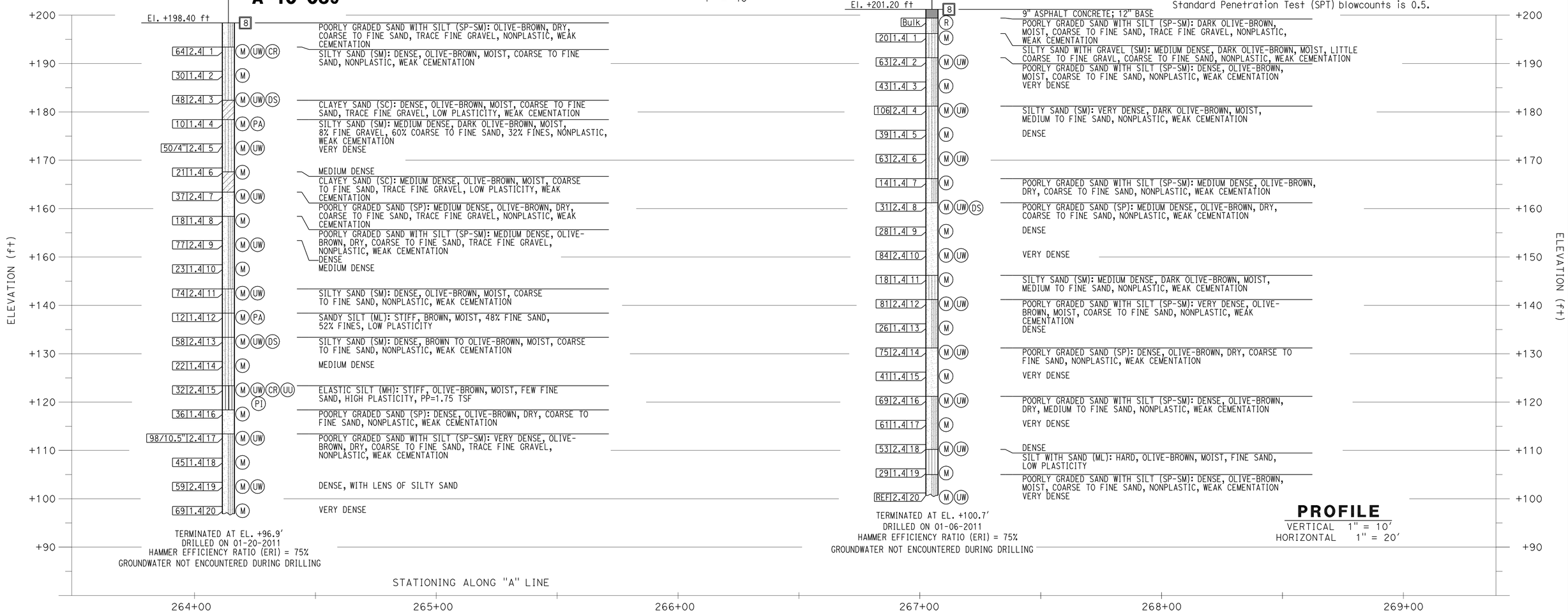

PROFILE

VERTICAL 1" = 10'
HORIZONTAL 1" = 20'

Luqi Yang — DESIGN OVERSIGHT Luqi Yang; 3-29-12 SIGN OFF DATE	DRAWN BY J. Fang	R. Jie — FIELD INVESTIGATION BY:	PREPARED FOR THE STATE OF CALIFORNIA DEPARTMENT OF TRANSPORTATION
	CHECKED BY G. J. Gunaranjan	DATE: 12/2010,1/2011	

S. Pirathiviraj — PROJECT ENGINEER

BRIDGE NO. 55-0216
POST MILES 4.0

NORTH ANAHEIM OH (WIDEN)

LOG OF TEST BORINGS 1 OF 3

GS GEOTECHNICAL LOG OF TEST BORINGS SHEET (ENGLISH) (REV. 7/16/10)

ORIGINAL SCALE IN INCHES FOR REDUCED PLANS 0 1 2 3

UNIT: 2295
PROJECT NUMBER & PHASE: 12000000791

DISREGARD PRINTS BEARING EARLIER REVISION DATES — REVISION DATES 12/27/11 2/27/12 3/15/12

SHEET 25 OF 27

FILE => 55-0216-z-1tb1.dgn

CONTRACT NO.: 12-0C5701 PROJECT ID:

FED. ROAD DIV. NO.	STATE	PROJ. NO.	FISCAL YEAR	SHEET NO.	TOTAL SHEETS
7	CAL.			103	151

DIST.	COUNTY	ROUTE	SECTION	SHEET NO.	TOTAL SHEETS
07	ORA	91	3/1/98	198	323

Date approved April 19, 1965

TO ACCOMPANY PLANS DATED 8-13-12

DIVISION OF ENGINEERING SERVICES - GEOTECHNICAL SERVICES					
As-Built Log of Test Borings sheet is considered an informational document only. As such, the State of California registration seal with signature, license number and registration certificate expiration date confirm that this is a true and accurate copy of the original document. This drawing is available and presented only for the convenience of any bidder, contractor or other interested party.					
DIST.	COUNTY	ROUTE	POST MILES-TOTAL PROJECT	Sheet No.	Total Sheets
12	Ora	91	0.9/5.4	659	885
GEOTECHNICAL PROFESSIONAL				3/15/12 DATE	

NORTH ANAHEIM OH (WIDEN)

LOG OF TEST BORINGS 2 OF 3

NOTE: A COPY OF THIS LOG OF TEST BORINGS IS AVAILABLE AT OFFICE OF STRUCTURE MAINTENANCE AND INVESTIGATIONS, SACRAMENTO, CALIFORNIA

UNIT: 2295
PROJECT NUMBER & PHASE: 12000000791

BRIDGE No.	Sheet	of
55-0216	26	27

REGISTERED PROFESSIONAL ENGINEER
S. PIRATHIVIRAJ
NO. C71662
EXP. 12/31/13
CIVIL
STATE OF CALIFORNIA

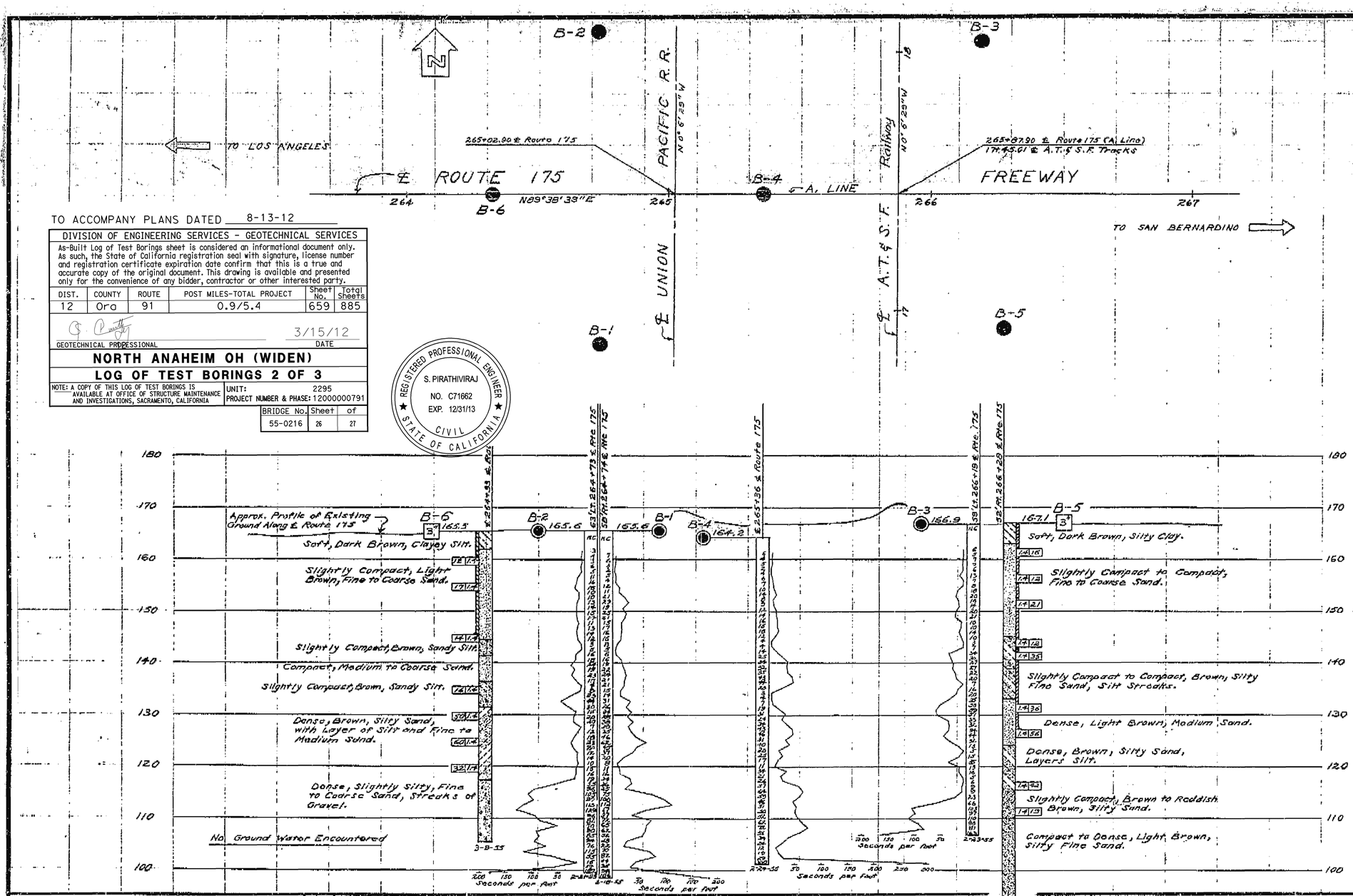

AS BUILT PLANS
Contract No. 07-037424
Date Completed 2-17-67
Document No. 700000 22

B.M. 260 B54
Brass cap in 8" P.C.C. Mon. 260' Rt. Sta. 257+32 I "P" Line 2.2' off chain Link Fence. Buried 1'
Elev. 162.65'

B.M. 260 b B54
Chis'ld Knob in S.E. Cor. R.R. Signal Switch box 8½' Lt. Sta. 17+40 S.P. R.R. Tracks.
Elev. 170.96'

Test Boring by Bridge Dept.

AS BUILT
No CORRECTIONS BY C.J. Hixson 4/18/67
CONTRACT NO. 07-037424(503)
DATE 2/21/67

SHEET	OF
8	8

BRIDGE DEPARTMENT

FIELD STUDY	R. D. McCURDY	4-15-55
DRAWN	W. WISZ	4-15-55
CHECKED	W. LUM	4-21-55

Approval Recommended: Chief, Bridge Design

Approved: Bridge Engineer

CLASSIFICATION OF MATERIAL BASED ON STANDARD GRADE SIZE LIMITS

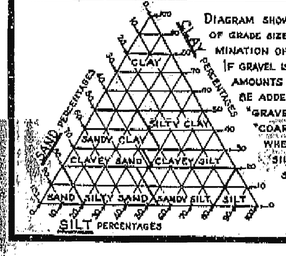

DIAGRAM SHOWING THE BASIS FOR ESTIMATES OF GRADE SIZE DISTRIBUTION USED IN DETERMINATION OF CLASS NAMES.
IF GRAVEL IS PRESENT IN APPRECIABLE AMOUNTS THE TERM "GRAVELLY" MAY BE ADDED TO THE CLASS NAME, VIZ. "GRAVELLY SAND." THE TERMS "COARSE," "MEDIUM" AND "FINE" WHEN USED TO DESCRIBE SAND, SILT AND GRAVEL REFER TO STANDARD GRADE SIZE LIMITS.

LEGEND OF EARTH MATERIALS

- GRAVEL
- SAND
- SILT
- CLAY
- SANDY CLAY OR CLAYEY SAND
- SANDY SILT OR SILTY SAND
- SILTY CLAY OR CLAYEY SILT
- PEAT AND/OR ORGANIC MATTER
- FILL MATERIAL
- IGNEOUS ROCK
- SEDIMENTARY ROCK
- METAMORPHIC ROCK

LEGEND OF BORINGS

- PLAN OF ANY BORING
- PENETROMETER
- 2¼" CONE PENETROMETER
- SAMPLER BORING (DRY)
- ROTARY BORING (WET)
- AUGER BORING (DRY)
- JET BORING
- CORE BORING
- TEST PIT

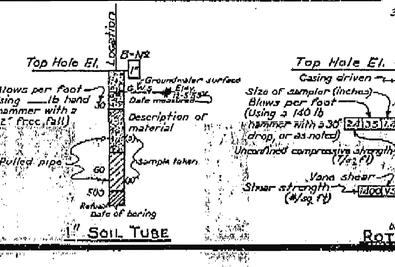

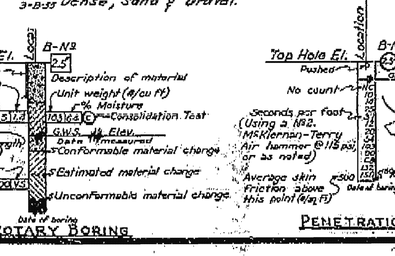

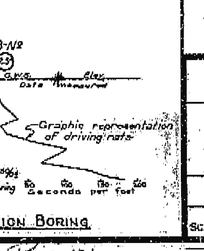

NOTES

The contractor's attention is directed to Section 2, Article (c) of the Standard Specifications and to the Special Provisions accompanying this set of plans.

Classification of earth material as shown on this sheet is based upon field inspection and is not to be construed to imply mechanical analysis.

STATE OF CALIFORNIA
DEPARTMENT OF PUBLIC WORKS
DIVISION OF HIGHWAYS

NORTH ANAHEIM O.H.

LOG OF TEST BORINGS

SCALE Horiz. 1" = 20' Vert. 1" = 10' | BRIDGE 55-216 % | FILE | DRAWING 55216-8

FILENAME => 55-0216-z-1tb2.tif

Box 181

DIST.	COUNTY	ROUTE	POST MILES TOTAL PROJECT	SHEET NO.	TOTAL SHEETS
12	Ora	91	2.8/5.0	454	615

GEOTECHNICAL PROFESSIONAL 12/1/92

1-20-97
PLANS APPROVAL DATE

REGISTERED PROFESSIONAL ENGINEER THOMAS D. SWANTKO NO. G.E. 813 EXP. 12/31/97 STATE OF CALIFORNIA

GEOFON, Inc.
5552 Cerritos Avenue, Suite B
Cypress, California 90630
Job Number: 92-337

The State of California or its officers or agents shall not be responsible for the accuracy or completeness of electronic copies of this plan sheet.

Bench Mark: 288-C-72 (PM 4.4)
Set R.S. Nail on Top of Headwall, 175 Feet West of Beginning of Westbound Off-Ramp to Raymond Avenue, 15 Feet North of Edge of Shoulder on North Side of Fwy.
Elevation: 176.48 Feet

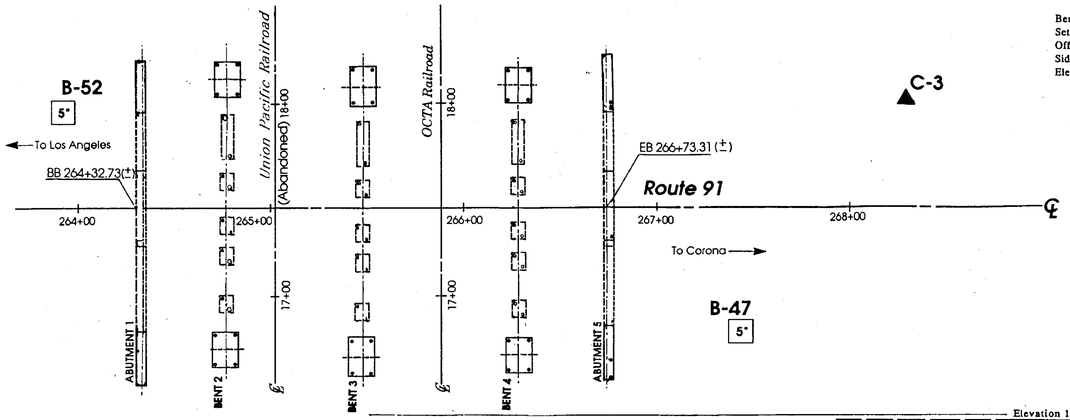

North

PLAN
SCALE: 1" = 40 FEET

NO AS BUILT CHANGES **AS BUILT**
JJ CORRECTIONS BY D K H
CONTRACT NO. 12 0174 V4
10-25-02 DATE 7-5-00

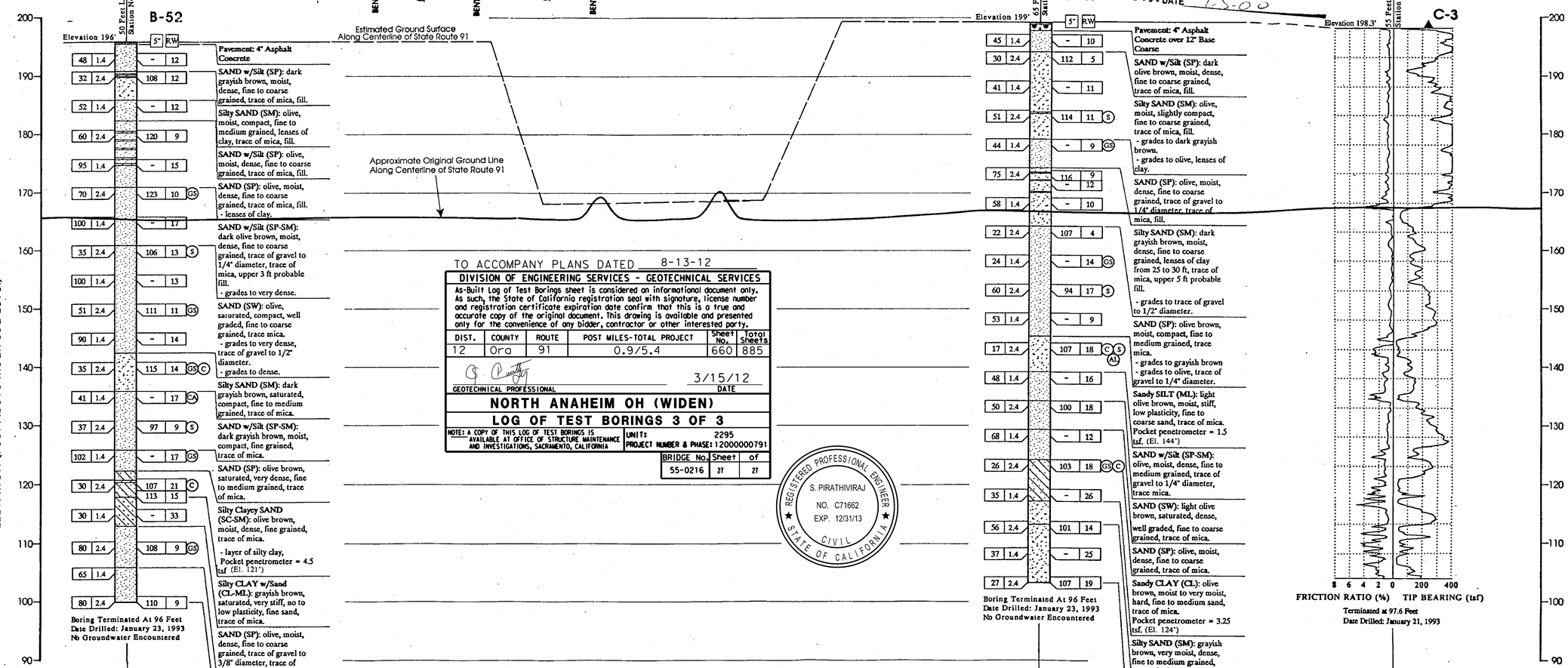

TO ACCOMPANY PLANS DATED 8-13-12

DIVISION OF ENGINEERING SERVICES - GEOTECHNICAL SERVICES

As-Built Log of Test Borings sheet is considered an informational document only. As such, the State of California registration seal with signature, license number and registration certificate expiration date confirm that this is a true and accurate copy of the original document. This drawing is available and presented only for the convenience of any bidder, contractor or other interested party.

DIST.	COUNTY	ROUTE	POST MILES-TOTAL PROJECT	Sheet No.	Total Sheets
12	Ora	91	0.9/5.4	660	885

GEOTECHNICAL PROFESSIONAL — 3/15/12 DATE

NORTH ANAHEIM OH (WIDEN)

LOG OF TEST BORINGS 3 OF 3

NOTE: A COPY OF THIS LOG OF TEST BORINGS IS AVAILABLE AT OFFICE OF STRUCTURE MAINTENANCE AND INVESTIGATIONS, SACRAMENTO, CALIFORNIA

UNIT: 2295
PROJECT NUMBER & PHASE: 12000000791

BRIDGE No.	Sheet	of
55-0216	27	27

REGISTERED PROFESSIONAL ENGINEER S. PIRATHIVIRAJ NO. C71662 EXP. 12/31/13 CIVIL STATE OF CALIFORNIA

PROFILE
VERTICAL SCALE: 1" = 10 FEET
HORIZONTAL SCALE: 1" = 40 FEET

263+00 264+00 265+00 266+00 267+00 268+00 269+00
STATION NUMBER

LEGEND OF BORING OPERATIONS

Cone Penetrometer dimensions and testing procedures are in accordance with ASTM standard D-3441-75, or as noted.

ELECTRONIC CONE PENETROMETER TEST

2 1/4" CONE PENETRATION BORING

ROTARY SAMPLE BORING (WET) & HOLLOW STEM AUGER BORING (DRY)

SAMPLE BORING (DRY)

2 1/4" CONE PENETROMETER — SAMPLE BORING (DRY) — SAMPLE BORING (WET) — AUGER BORING (DRY) — TEST PIT — DIAMOND CORE BORING — JET BORING — ELECTRONIC CONE PENETROMETER

Soil Test Designations: (C) Consolidation (CN) Compaction (PP) Pocket Penetrometer (S) Direct Shear (AL) Atterberg Limits (GA) Chemical Analysis (GS) Grain Size (RV) R-Value (UC) Unconfined Compression

*NOTE: Where a 1.4" size sampler is used, this value is the standard penetration N-value.

LEGEND FOR EARTH MATERIALS

GRAVEL — SAND — SILT — CLAY — SANDY CLAY or CLAYEY SAND — SANDY SILT or SILTY SAND — SILTY CLAY — CLAYEY SILT — PEAT and/or ORGANIC MATTER — FILL MATERIAL — IGNEOUS ROCK — SEDIMENTARY ROCK — METAMORPHIC ROCK

NOTE: Classification of earth material as shown on this sheet is based upon field inspection and is not to be construed to imply mechanical analysis.

CONSISTENCY CLASSIFICATION FOR SOILS

According to the Standard Penetration Test

Penetration Index (Blows/Ft.)	Granular	Cohesive
0-4	Very Loose	Very Soft
5-9	Loose	Soft
10-19	Slightly Compact	Stiff
20-34	Compact	Very Stiff
35-69	Dense	Hard
>70	Very Dense	Very Hard

DESIGN OVERSIGHT: BE NGUYEN — SIGN OFF DATE: 7-22-96	DRAWN BY: H. LEE	FIELD INVESTIGATOR: J. KNIGHT	PREPARED FOR THE STATE OF CALIFORNIA DEPARTMENT OF TRANSPORTATION
	CHECKED BY: D. MAR	DATE: SEE EXPLORATION	PROJECT ENGINEER: D. K. HAGHIGHI

BRIDGE NO. 55-216
POST MILE 4.01

NORTH ANAHEIM OVERHEAD WIDEN AND RETROFIT

LOG OF TEST BORINGS

ORIGINAL SCALE IN INCHES FOR REDUCED PLANS 0 1 2 3

CU 12209
EA 0124 V1

DISREGARD PRINTS BEARING EARLIER REVISION DATES

REVISION DATES (PRELIMINARY STAGE ONLY) 12/93 1/96 4/96

SHEET 17 OF 26

FILENAME => 55-0216-z-1tb3.tif

DIST	COUNTY	ROUTE	POST MILES TOTAL PROJECT	SHEET No	TOTAL SHEETS
12	Ora	91	0.9/5.4	661	885

Jared Cole 7/30/12
REGISTERED CIVIL ENGINEER DATE

8-13-12
PLANS APPROVAL DATE

REGISTERED PROFESSIONAL ENGINEER Jared A. Cole No. C66188 Exp. 06/30/14 CIVIL STATE OF CALIFORNIA

The State of California or its officers or agents shall not be responsible for the accuracy or completeness of scanned copies of this plan sheet.

ORANGE COUNTY TRANSPORTATION AUTHORITY
550 SOUTH MAIN STREET
ORANGE, CA 92868

T.Y. LIN INTERNATIONAL
3550 VINE STREET, SUITE 120
RIVERSIDE, CA 92507

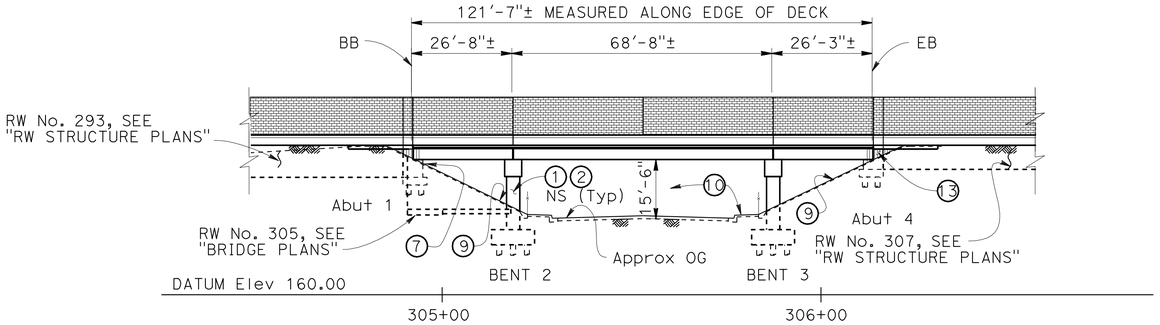

MIRRORED ELEVATION
1"=20'-0"

NOTE:
For "PILE DATA TABLE" see "FOUNDATION PLAN" sheet

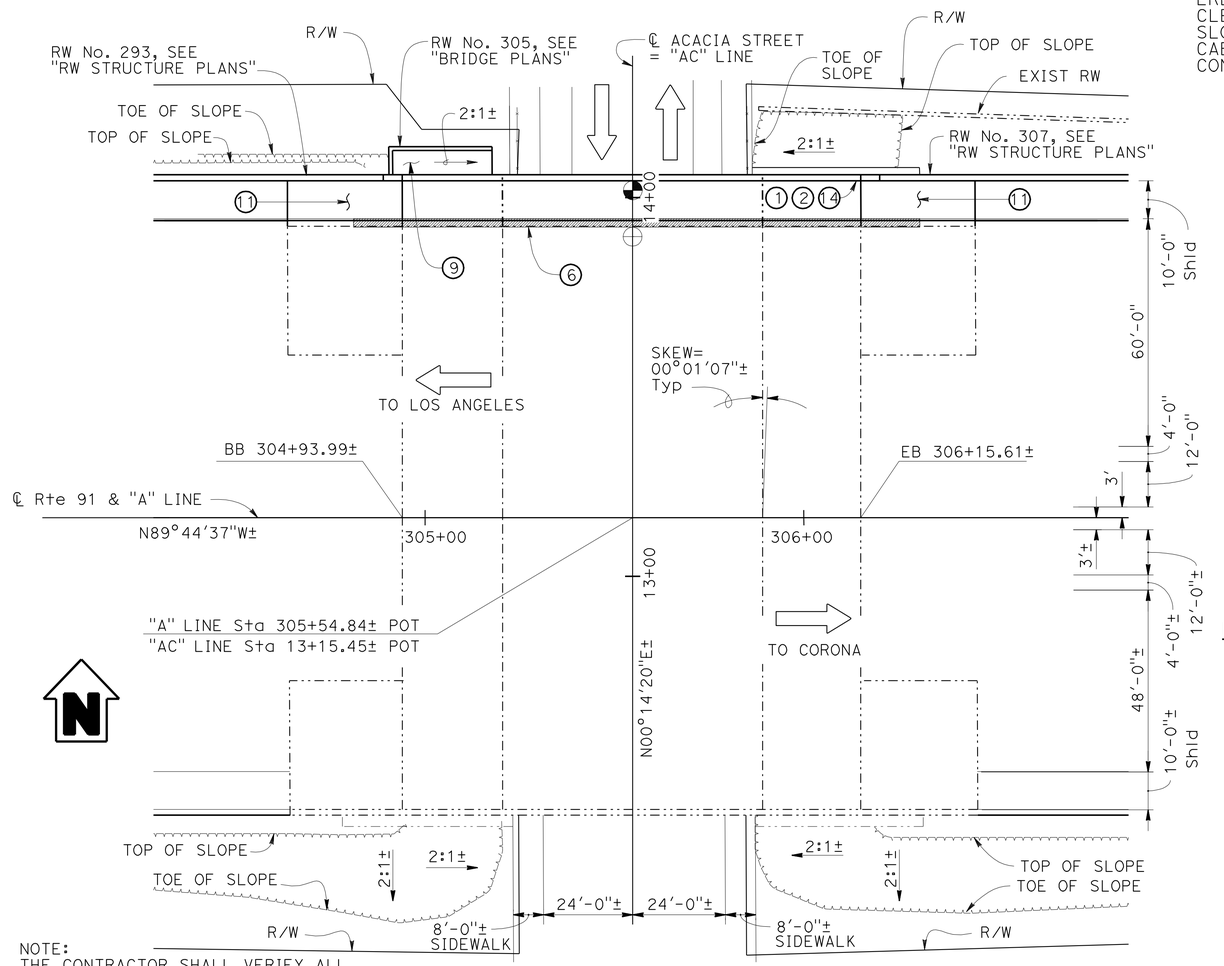

NOTE:
THE CONTRACTOR SHALL VERIFY ALL CONTROLLING FIELD DIMENSIONS BEFORE ORDERING OR FABRICATING ANY MATERIAL

PLAN
1"=20'-0"

NOTE: For "GENERAL NOTES", and "INDEX TO PLANS", see "INDEX TO PLANS" sheet

ACACIA STREET UC (WIDEN) BR No. 55-0218

QUANTITIES

BRIDGE REMOVAL (PORTION), LOCATION B	LUMP	SUM
STRUCTURE EXCAVATION (BRIDGE)	182	CY
STRUCTURE EXCAVATION (RETAINING WALL)	47	CY
STRUCTURE BACKFILL (BRIDGE)	140	CY
STRUCTURE BACKFILL (RETAINING WALL)	53	CY
AGGREGATE BASE (APPROACH SLAB)	1	CY
16" CAST-IN-DRILLED-HOLE CONCRETE PILING	998	LF
STRUCTURAL CONCRETE, BRIDGE FOOTING	51	CY
STRUCTURAL CONCRETE, BRIDGE	88	CY
STRUCTURAL CONCRETE, RETAINING WALL	23	CY
STRUCTURAL CONCRETE, APPROACH SLAB (TYPE N)	23	CY
STRUCTURAL CONCRETE, APPROACH SLAB (TYPE R)	4	CY
FRACTURED RIB TEXTURE	205	SQFT
DRILL AND BOND DOWEL	95	LF
SOUND WALL (MASONRY BLOCK)	930	SQFT
JOINT SEAL (MR ½")	49	LF
BAR REINFORCING STEEL (BRIDGE)	25,350	LB
BAR REINFORCING STEEL (RETAINING WALL)	2,070	LB
FURNISH STRUCTURAL STEEL (BRIDGE)	41,300	LB
ERECT STRUCTURAL STEEL (BRIDGE)	41,300	LB
CLEAN AND PAINT STRUCTURAL STEEL	LUMP	SUM
SLOPE PAVING (CONCRETE)	16	CY
CABLE RAILING	33	LF
CONCRETE BARRIER (TYPE 736 MODIFIED)	128	LF

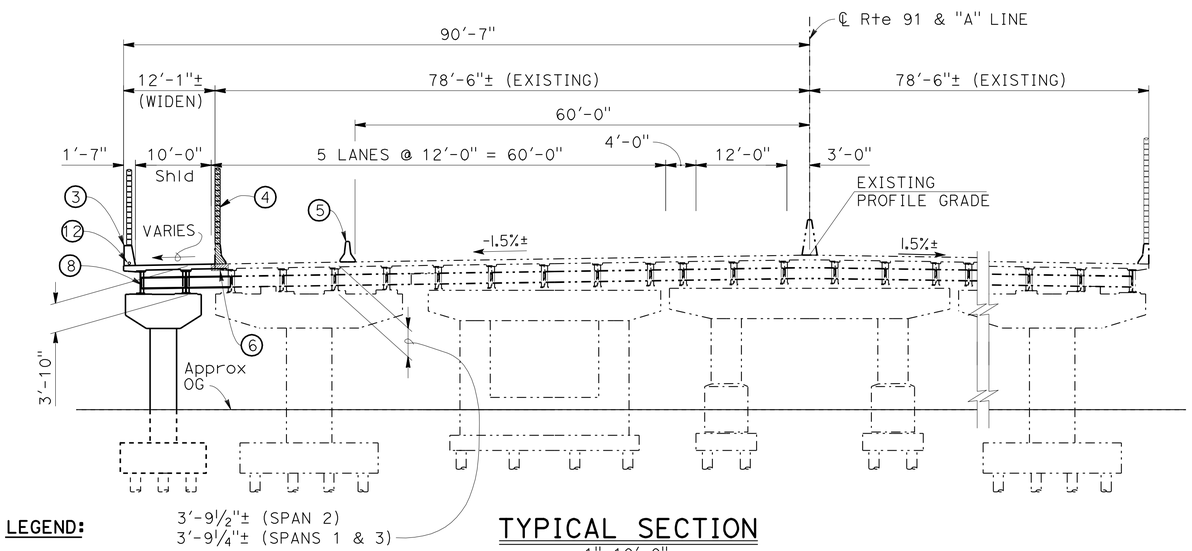

TYPICAL SECTION
1"=10'-0"

LEGEND:

1. Paint "Acacia Street UC"
2. Paint "Br No. 55-0218" and year constructed
3. Concrete Barrier Type 736 (Mod) with 7'-4" Soundwall
4. Remove exist barrier with soundwall and portion of overhang
5. Temporary Railing (Type K), see "ROAD PLANS"
6. Closure pour
7. Extend existing irrigation lines and strap to slope paving, see "IRRIGATION PLANS"
8. Composite steel girders,Typ
9. Slope paving
10. Remove and replace portion of Exist sidewalk, see "ROAD PLANS"
11. Structure Approach Type N(30S) and R(30S)
12. 2" Lighting And Sign Illumination Conduit, see "ELECTRICAL PLANS"
13. Fractured Rib Texture
14. Bridge Information Sign, see "MISCELLANEOUS DETAILS" sheet and "SIGN PLANS"

- Indicates Bridge Removal (Portion), Location B
- Indicates Closure pour
- Widening Pt of Minimum Vertical Clr (15'-6")
- Existing Pt of minimum Vertical Clr (15'-6"±)
- Indicates New Structure
- Indicates Existing Structure
- Indicates Direction of Traffic

Luqi Yang DESIGN OVERSIGHT Luqi Yang 8-6-12 SIGN OFF DATE	DESIGN	BY Jared Cole	CHECKED Roya Golchoobian	LOAD & RESISTANCE FACTOR DESIGN	LIVE LOADING: HL93 W/"LOW-BOY"; PERMIT DESIGN VEHICLE
	DETAILS	BY Oscar Colcol	CHECKED Roya Golchoobian	LAYOUT BY Jared Cole	CHECKED Roya Golchoobian
	QUANTITIES	BY Sabina Piras	CHECKED Tim Fuller	SPECIFICATIONS BY Sal Sheikh	PLANS AND SPECS COMPARED Sal Sheikh

PREPARED FOR THE STATE OF CALIFORNIA DEPARTMENT OF TRANSPORTATION

David Griffith
PROJECT ENGINEER

BRIDGE NO. 55-0218
POST MILES 4.8

ACACIA STREET UC (WIDEN)
GENERAL PLAN

DESIGN GENERAL PLAN SHEET (ENGLISH) (REV.7/16/10)

ORIGINAL SCALE IN INCHES FOR REDUCED PLANS 0 1 2 3

UNIT: 2295
PROJECT NUMBER & PHASE: 12000000791 CONTRACT NO.: 12-0C5701

DISREGARD PRINTS BEARING EARLIER REVISION DATES

REVISION DATES 03/15/12 01/30/12 12/22/11 2/13/12 SHEET 1 OF 30

FILE => 55-0218-a-gp.dgn

Filename: $FILE$ Date: $DATE$ Time: $TIME$

DIST	COUNTY	ROUTE	POST MILES TOTAL PROJECT	SHEET No	TOTAL SHEETS
12	Ora	91	0.9/5.4	662	885

Jared Cole 3/15/12
REGISTERED CIVIL ENGINEER DATE

8-13-12
PLANS APPROVAL DATE

REGISTERED PROFESSIONAL ENGINEER Jared A. Cole No. C66188 Exp. 06/30/14 CIVIL STATE OF CALIFORNIA

The State of California or its officers or agents shall not be responsible for the accuracy or completeness of scanned copies of this plan sheet.

ORANGE COUNTY TRANSPORTATION AUTHORITY
550 SOUTH MAIN STREET
ORANGE, CA 92868

T.Y. LIN INTERNATIONAL
3550 VINE STREET, SUITE 120
RIVERSIDE, CA 92507

GENERAL NOTES
LOAD AND RESISTANCE FACTOR DESIGN

DESIGN:
AASHTO LRFD Bridge Design Specifications, 4th edition and the Caltrans Amendments, preface dated September 2010; except that bridge details (including barrier and railing details) taken from Standard Plans 2010 and Standard Bridge Details xs sheets, and Bridge Abutments are designed using Bridge Design Specifications (1996 AASHTO with Revisions by Caltrans).

SEISMIC DESIGN:
Caltrans Seismic Design Criteria (SDC), Version 1.5 dated September 2009.

DEAD LOAD:
Includes 35 psf for future wearing surface.

The deck load between girders has been increased by a factor of 10% to allow for the use of steel deck forms.

The soundwall dead load is distributed on the left side of the bridge with 75% to the exterior girder and 25% to the first interior girder.

LIVE LOADING:
HL93 and permit design load.

SEISMIC LOADING:

Soil profile: V_s^{30} =886 ft/sec.
Moment Magnitude: 7.6 g
Peak Ground Acceleration: 0.52g

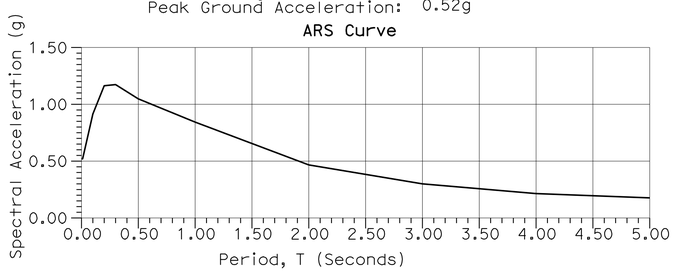

REINFORCED CONCRETE:

NEW:	EXIST:
f_y = 60 ksi	f_y = 60 ksi
f'_c = 3.6 ksi	f'_c = 3.25 ksi
n = 8	

STRUCTURAL STEEL:

NEW:	EXIST:
ASTM A709 GRADE 50	ASTM A709 GRADE 36

NOTE:
THE CONTRACTOR SHALL VERIFY ALL CONTROLLING FIELD DIMENSIONS BEFORE ORDERING OR FABRICATING ANY MATERIAL

INDEX TO BRIDGE PLANS

SHEET No.	TITLE
1	GENERAL PLAN
2	INDEX TO PLANS
3	FOUNDATION PLAN
4	ABUTMENT 1 LAYOUT
5	ABUTMENT 4 LAYOUT
6	ABUTMENT DETAILS No. 1
7	ABUTMENT DETAILS No. 2
8	BENT DETAILS No. 1
9	BENT DETAILS No. 2
10	TYPICAL SECTION
11	GIRDER LAYOUT
12	GIRDER DETAILS No. 1
13	GIRDER DETAILS No. 2
14	GIRDER DETAILS No. 3
15	STEEL GIRDER TRANSVERSE STIFFENER DETAILS
16	STEEL GIRDER CONNECTION STIFFENER DETAILS
17	STRUCTURE APPROACH TYPE N(30S)
18	STRUCTURE APPROACH TYPE R(30S)
19	STRUCTURE APPROACH DRAINAGE DETAILS
20	SLOPE PAVING - FULL SLOPE
21	BRIDGE REMOVAL PLAN
22	MISCELLANEOUS DETAILS
23	RETAINING WALL No. 305 STRUCTURE PLAN
24	RETAINING WALL No. 305 FOUNDATION PLAN
25	RETAINING WALL No. 305 MISCELLANEOUS DETAILS No. 1
26	RETAINING WALL No. 305 MISCELLANEOUS DETAILS No. 2
27	LIMITS OF PAYMENT FOR EXCAVATION AND BACKFILL
28	LOG OF TEST BORINGS 1 OF 3
29	LOG OF TEST BORINGS 2 OF 3
30	LOG OF TEST BORINGS 3 OF 3

STANDARD PLANS DATED 2010

A10A	ABBREVIATIONS (SHEET 1 OF 2)
A10B	ABBREVIATIONS (SHEET 2 OF 2)
A10C	LINES AND SYMBOLS (SHEET 1 OF 3)
A10D	LINES AND SYMBOLS (SHEET 2 OF 3)
A10E	LINES AND SYMBOLS (SHEET 3 OF 3)
A10F	LEGEND - SOIL (SHEET 1 OF 2)
A10G	LEGEND - SOIL (SHEET 2 OF 2)
A62C	LIMITS OF PAYMENT FOR EXCAVATION AND BACKFILL BRIDGE
RSP P10	CONCRETE PAVEMENT - DOWEL BAR DETAILS
B0-1	BRIDGE DETAILS
B0-3	BRIDGE DETAILS
B0-5	BRIDGE DETAILS
B0-13	BRIDGE DETAILS
B2-3	16" AND 24" CAST-IN-DRILLED-HOLE CONCRETE PILE
RSP B3-1C	RETAINING WALL TYPE 1 (CASE 3)
B6-21	JOINT SEALS (MAXIMUM MOVEMENT RATING = 2")
RSP B11-47	CABLE RAILING
B11-56	CONCRETE BARRIER TYPE 736
B15-6	SOUND WALL MASONRY ON TYPE 736S/SV BARRIER DETAILS (1)
B15-7	SOUND WALL MASONRY ON TYPE 736S/SV BARRIER DETAILS (2)
T3A	TEMPORARY RAILING TYPE K

PLAN SYMBOLS

Section Identification

Standard Plan Sheet No.
Detail No.

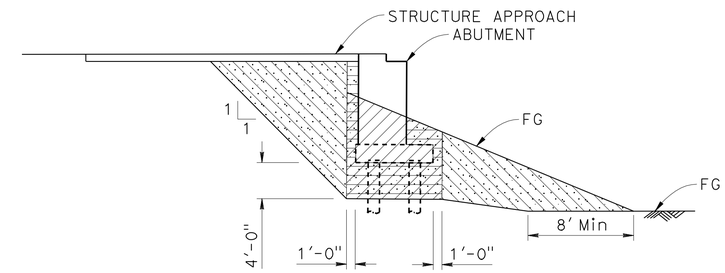

LIMITS OF EXPANSIVE SOIL EXCLUSION ZONE IN BRIDGE EMBANKMENT

NO SCALE

LEGEND:

Low Expansive Material EI<50 and SE>20

Structure Excavation (Bridge)

Structure Backfill (Bridge)

Roadway Excavation (see "Road Plans")

NOTE:

1. Transverse limit of Low Expansive Material shall be 12" from edges of abutment footing to end of existing abutment stem.

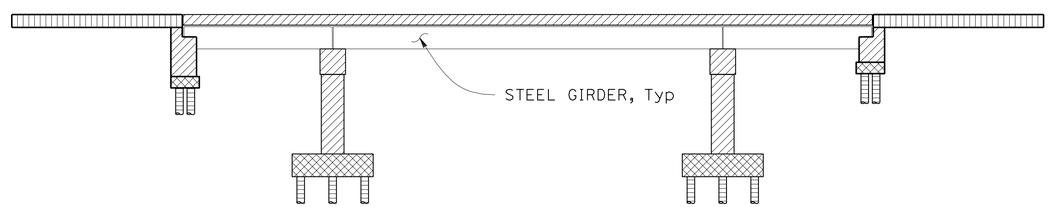

CONCRETE STRENGTH AND TYPE LIMITS

NO SCALE

LEGEND:

Structural Concrete, Bridge

Structural Concrete, Bridge Footing

Cast-In-Drilled-Hole Concrete Pile (f'c = 4.0 Ksi at 28 days)

Structural Concrete, Approach Slab

Luqi Yang
DESIGN OVERSIGHT Luqi Yang
3-29-12
SIGN OFF DATE

DESIGN	BY Jared Cole	CHECKED Roya Golchoobian	
DETAILS	BY Oscar Colcol	CHECKED Roya Golchoobian	
QUANTITIES	BY Sabina Piras	CHECKED Tim Fuller	

PREPARED FOR THE STATE OF CALIFORNIA DEPARTMENT OF TRANSPORTATION

David Griffith
PROJECT ENGINEER

BRIDGE NO. 55-0218
POST MILES 4.8

ACACIA STREET UC (WIDEN)
INDEX TO PLANS

DESIGN DETAIL SHEET (ENGLISH) (REV.7/16/10)

ORIGINAL SCALE IN INCHES FOR REDUCED PLANS 0 1 2 3

UNIT: 2295
PROJECT NUMBER & PHASE: 12000000791
CONTRACT NO.: 12-0C5701

DISREGARD PRINTS BEARING EARLIER REVISION DATES

REVISION DATES 03/15/12 09/16/11 12/22/11 2/13/12

SHEET 2 OF 30

FILE => 55-0218-b-itp.dgn

DIST	COUNTY	ROUTE	POST MILES TOTAL PROJECT	SHEET No	TOTAL SHEETS
12	Ora	91	0.9/5.4	663	885

REGISTERED CIVIL ENGINEER — DATE 3/15/12

8-13-12
PLANS APPROVAL DATE

REGISTERED PROFESSIONAL ENGINEER — Jared A. Cole — No. C66188 — Exp. 06/30/14 — CIVIL — STATE OF CALIFORNIA

The State of California or its officers or agents shall not be responsible for the accuracy or completeness of scanned copies of this plan sheet.

ORANGE COUNTY TRANSPORTATION AUTHORITY
550 SOUTH MAIN STREET
ORANGE, CA 92868

T.Y. LIN INTERNATIONAL
3550 VINE STREET, SUITE 120
RIVERSIDE, CA 92507

BENCHMARKS:

Elevations as shown hereon are in terms of the North American Vertical Datum of 1988 (NAVD88), based locally upon the following Benchmarks as published by the County of Orange:

Designation: 2F-25-04 Elev = 162.70
Described by OCS 2004 - Found 3¾" OCS Aluminum Benchmark Disk Stamped "2F-25-04", set in the northwesterly corner of a 7.5 ft. by 4.5 ft. Concrete Catch Basin. Monument is located in the northeasterly corner of the intersection of Harbor Boulevard and the Eastbound 91 Freeway On-Ramp, 39 ft. northerly of the centerline of the On-Ramp and 40 ft. easterly of the centerline of Harbor Boulevard. Monument is set level with the sidewalk

Designation: 2D-35-86 Elev = 188.58
Described by OCS 2003 - Found 3¾" OCS Aluminum Benchmark Disk Stamped "2D-35-86", set in the northwesterly corner of a 7 ft. by 14 ft. Concrete Catch Basin. Monument is located in the southeasterly corner of the intersection of Placentia Avenue and State College Boulevard, 38 ft. easterly of the centerline of State College and 70.5 ft. southerly of the centerline of Placentia. Monument is set level with the sidewalk

BASIS OF COORDINATES:

Bearings and Coordinates as shown hereon are in terms of the California Coordinate System of 1983 (CCS83, Epoch 1991.35), Zone 6; based locally upon the following Control Stations as published by the County of Orange:

Name	Northing (ft)-Grid	Easting (ft)-Grid
OCS GPS 3511R1	2257877.29	6037582.77
OCS GPS 3518	2260444.33	6053380.91
OCS GPS 5260	2257149.07	6063970.03

PILE DATA TABLE

Location	Pile Type	Nominal Resistance (kips)		Design Tip Elevation (ft)	Specified Tip Elev (ft)
		Compression	Tension		
Abut 1	16" CIDH	160	0	+152 (a) +168 (d)	+152
Bent 2	16" CIDH	240	140	+136 (a) +140 (b) +153 (d)	+136
Bent 3	16" CIDH	240	140	+136 (a) +140 (b) +153 (d)	+136
Abut 4	16" CIDH	160	0	+154 (a) +171 (d)	+154

NOTES:

1) Design tip elevation are controlled by the following demands: (a) Compression, (b) Tension, (c) Settlement, and (d) Lateral Load
2) There is no design tip elevation for Tension at Abutments 1 and 4.
3) There is no design tip elevation for Settlement at Abutments 1 and 4, and Bents 2 and 3.
4) The specified tip elevations shall not be raised above the design tip elevation for Tension and Lateral Load.

GEOTECHNICAL PROFESSIONAL — 3/15/12 APPROVAL DATE

NOTE:
THE CONTRACTOR SHALL VERIFY ALL CONTROLLING FIELD DIMENSIONS BEFORE ORDERING OR FABRICATING ANY MATERIAL

WARNING:

The Contractor shall be aware of the existing 12 kv UG transmission lines near Bent 3. Contractor shall work with extreme care during pile drilling construction and girder erection. Southern California Edison must be notified prior to start of construction work.

UTILITIES:

1. 12KV underground electrical (Anaheim Electric)
2. Telephone line
3. 8" Dia water line (Anaheim Water)
4. 8" Dia sewer
5. Exist 3" GSP and 2" SCC, Protect in place. Extend lines, see "IRRIGATION PLANS"

LEGEND:

- Indicates bottom of footing elevation.
- Indicates 16"Ø CIDH pile
- Indicates exist piles (all not shown)
- Indicates existing structure
- Indicates new structure
- Indicates chain link fence

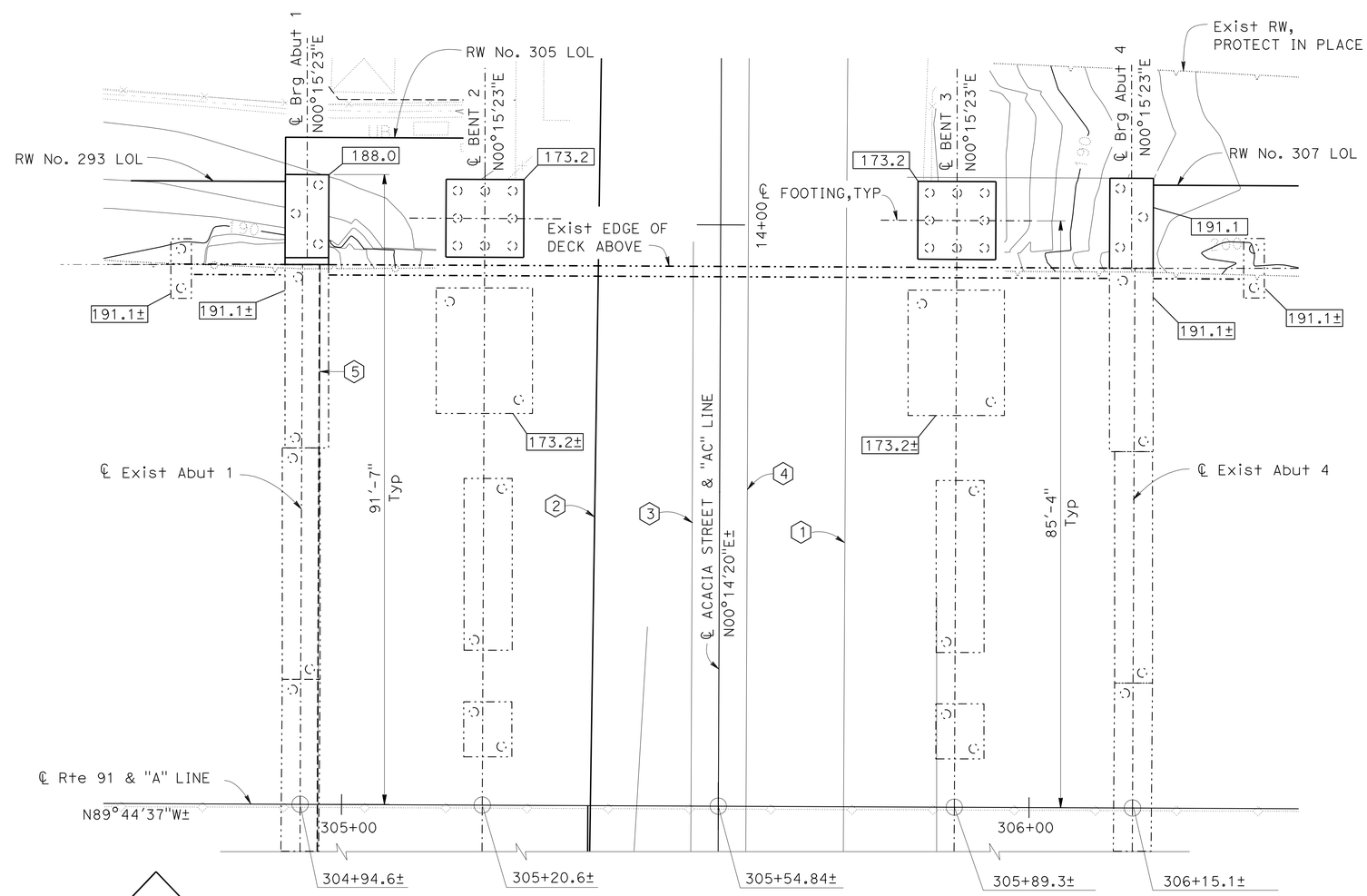

PLAN
1'=10'-0"

Luqi Yang — DESIGN OVERSIGHT — Luqi Yang — 3-29-12 — SIGN OFF DATE	SCALE: AS SHOWN	VERT.DATUM NAVD 88	HORZ.DATUM NAD 83 (1991.35)	DESIGN — BY Jared Cole	CHECKED Roya Golchoobian
	PHOTOGRAMMETRY AS OF: 04-15-2010	ALIGNMENT TIES		DETAILS — BY Oscar Colcol	CHECKED Roya Golchoobian
	SURVEYED — BY B. Cox	DRAFTED — BY G. Ciampaglia		QUANTITIES — BY Sabina Piras	CHECKED Tim Fuller
	FIELD CHECKED — BY B. Cox	CHECKED — BY B. Cox			

PREPARED FOR THE STATE OF CALIFORNIA DEPARTMENT OF TRANSPORTATION

David Griffith
PROJECT ENGINEER

BRIDGE NO. 55-0218
POST MILES 4.8

ACACIA STREET UC (WIDEN)
FOUNDATION PLAN

FOUNDATION PLAN SHEET (ENGLISH) (REV.7/16/10)

ORIGINAL SCALE IN INCHES FOR REDUCED PLANS 0 1 2 3

UNIT: 2295
PROJECT NUMBER & PHASE: 12000000791 CONTRACT NO.: 12-0C5701

DISREGARD PRINTS BEARING EARLIER REVISION DATES

REVISION DATES: 03/15/12 ~~09/06/11~~ ~~12/22/11~~ ~~2/17/12~~

SHEET 3 OF 30

FILE => 55-0218-e-fdpl.dgn

DIST	COUNTY	ROUTE	POST MILES TOTAL PROJECT	SHEET No	TOTAL SHEETS
12	Ora	91	0.9/5.4	664	885

REGISTERED CIVIL ENGINEER — DATE 3/15/12

8-13-12
PLANS APPROVAL DATE

REGISTERED PROFESSIONAL ENGINEER — Jared A. Cole — No. C66188 — Exp. 06/30/14 — CIVIL — STATE OF CALIFORNIA

The State of California or its officers or agents shall not be responsible for the accuracy or completeness of scanned copies of this plan sheet.

ORANGE COUNTY TRANSPORTATION AUTHORITY
550 SOUTH MAIN STREET
ORANGE, CA 92868

T.Y. LIN INTERNATIONAL
3550 VINE STREET, SUITE 120
RIVERSIDE, CA 92507

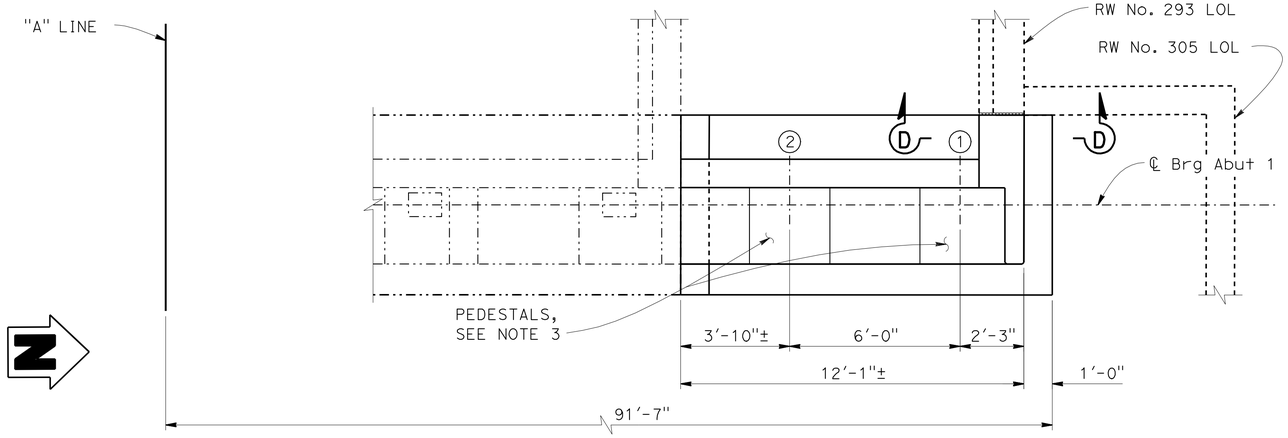

PLAN
3/8"=1'-0"

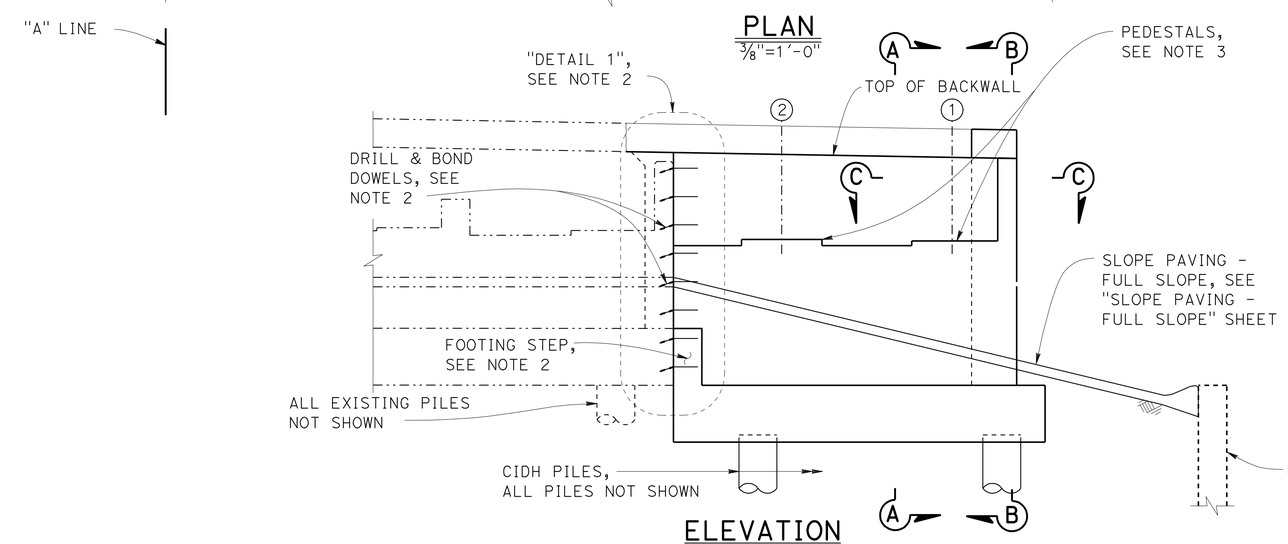

ELEVATION
3/8"=1'-0"

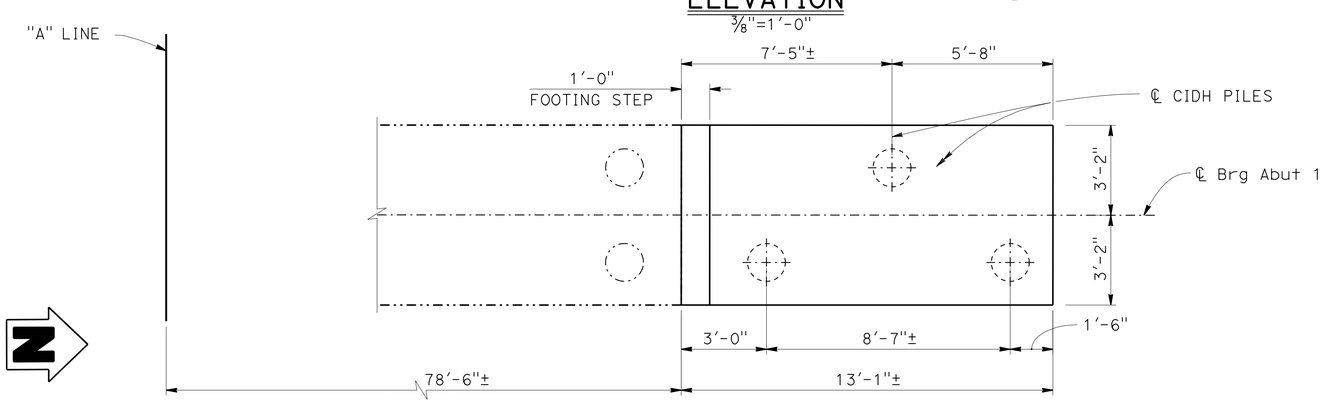

FOOTING PLAN
3/8"=1'-0"

NOTE:
THE CONTRACTOR SHALL VERIFY ALL CONTROLLING FIELD DIMENSIONS BEFORE ORDERING OR FABRICATING ANY MATERIAL

LEGEND:

——— - Indicates new structure
-·-·-·- - Indicates existing structure
①&② - Indicates ℄ Girder, see "GIRDER LAYOUT" sheet

NOTES:

1. For "SECTION B-B", "SECTION C-C", and "SECTION D-D", see "ABUTMENT DETAILS No. 1" sheet.
2. For drill & bond dowel location, "DETAIL 1", and "FOOTING STEP DETAIL", see "ABUTMENT DETAILS No. 2"sheet.
3. See "PEDESTAL DETAILS" on "ABUTMENT DETAILS No. 1" sheet

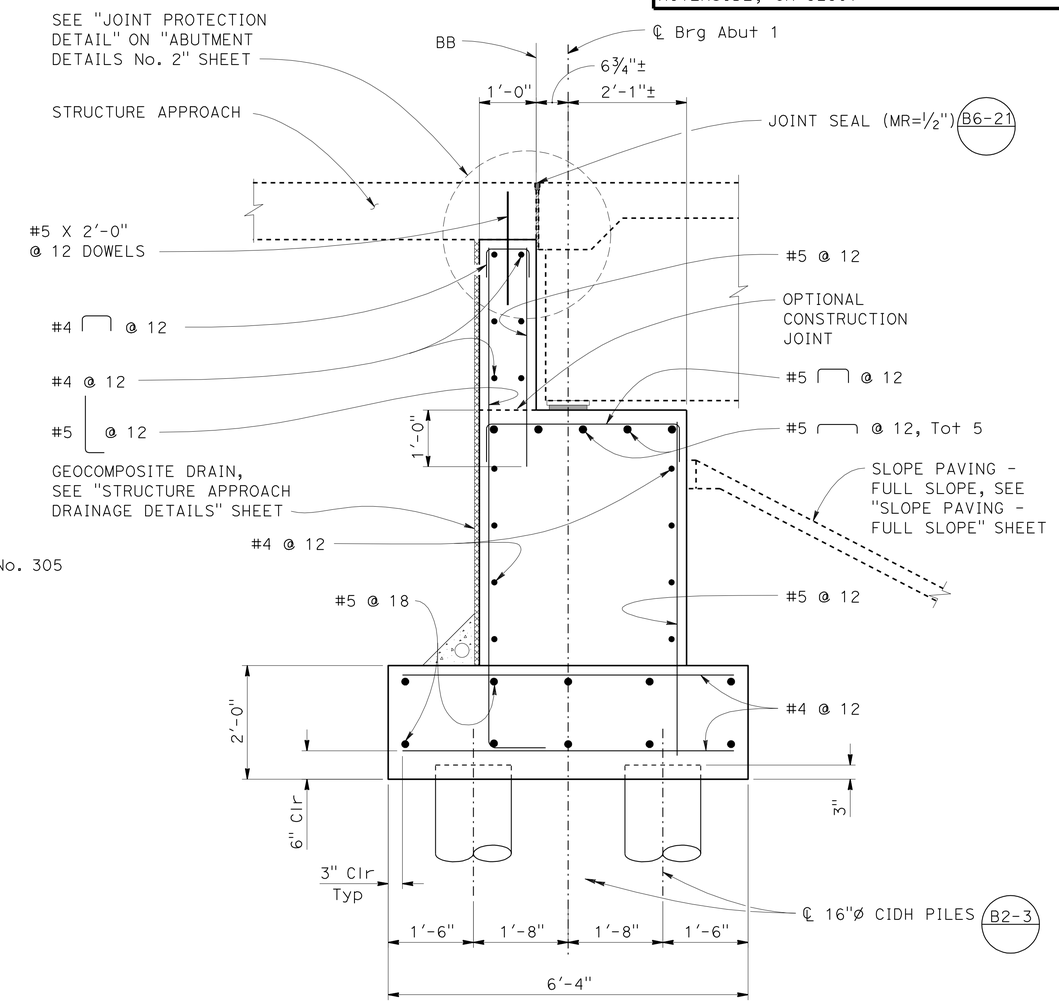

SECTION A-A
3/4"=1'-0"

Luqi Yang — DESIGN OVERSIGHT — Luqi Yang — 3-29-12 SIGN OFF DATE	DESIGN	BY Jared Cole	CHECKED Roya Golchoobian	PREPARED FOR THE STATE OF CALIFORNIA DEPARTMENT OF TRANSPORTATION	David Griffith — PROJECT ENGINEER
	DETAILS	BY Oscar Colcol	CHECKED Roya Golchoobian		
	QUANTITIES	BY Sabina Piras	CHECKED Tim Fuller		

BRIDGE NO. 55-0218
POST MILES 4.8

ACACIA STREET UC (WIDEN)
ABUTMENT 1 LAYOUT

DESIGN DETAIL SHEET (ENGLISH) (REV.7/16/10)

ORIGINAL SCALE IN INCHES FOR REDUCED PLANS 0 1 2 3

UNIT: 2295
PROJECT NUMBER & PHASE: 12000000791 CONTRACT NO.: 12-0C5701

DISREGARD PRINTS BEARING EARLIER REVISION DATES

REVISION DATES: 03/15/12 09/16/11 12/20/11 2/13/12

SHEET 4 OF 30

FILE => 55-0218-f-a01_lo1.dgn

DIST	COUNTY	ROUTE	POST MILES TOTAL PROJECT	SHEET No	TOTAL SHEETS
12	Ora	91	0.9/5.4	665	885

Jared Cole 3/15/12
REGISTERED CIVIL ENGINEER DATE

8-13-12
PLANS APPROVAL DATE

REGISTERED PROFESSIONAL ENGINEER Jared A. Cole No. C66188 Exp. 06/30/14 CIVIL STATE OF CALIFORNIA

The State of California or its officers or agents shall not be responsible for the accuracy or completeness of scanned copies of this plan sheet.

ORANGE COUNTY TRANSPORTATION AUTHORITY
550 SOUTH MAIN STREET
ORANGE, CA 92868

T.Y. LIN INTERNATIONAL
3550 VINE STREET, SUITE 120
RIVERSIDE, CA 92507

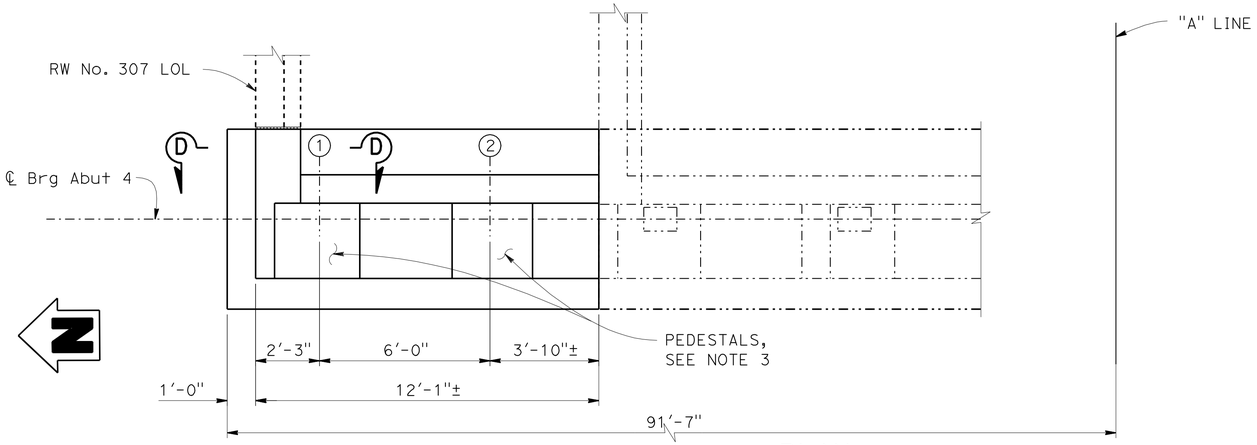

PLAN
3/8"=1'-0"

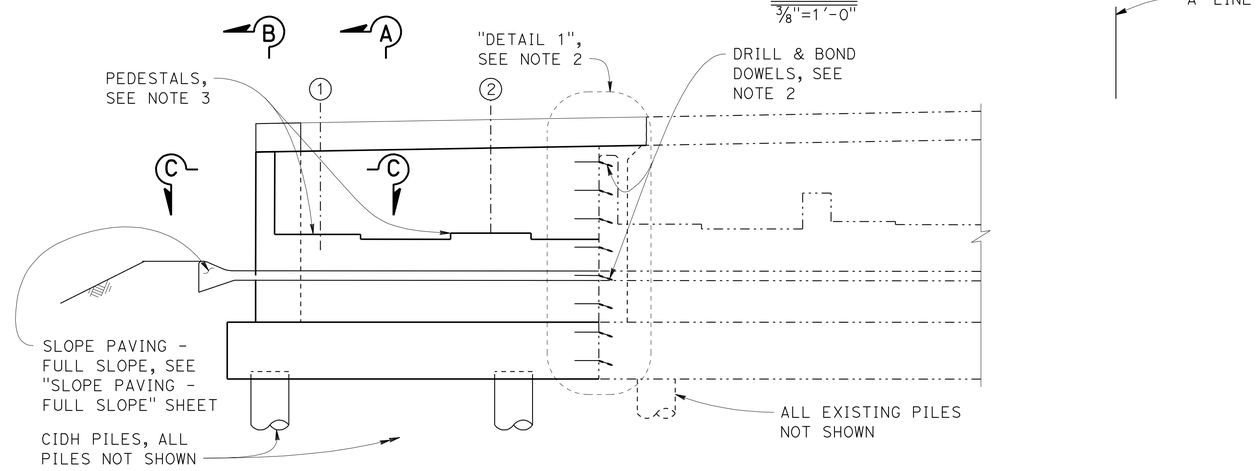

ELEVATION
3/8"=1'-0"

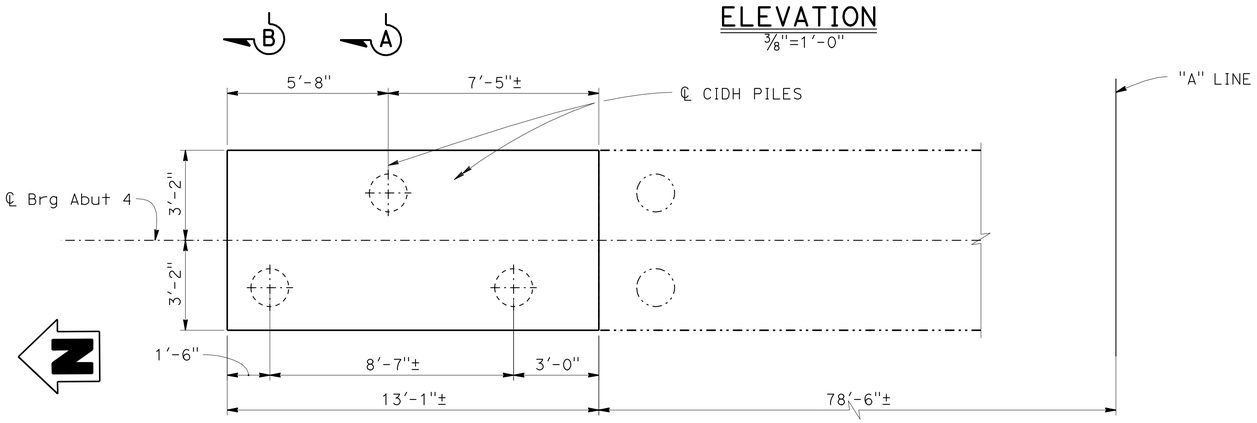

FOOTING PLAN
3/8"=1'-0"

NOTE:
THE CONTRACTOR SHALL VERIFY ALL CONTROLLING FIELD DIMENSIONS BEFORE ORDERING OR FABRICATING ANY MATERIAL

LEGEND:

——— - Indicates new structure
-·-·-·- - Indicates existing structure
1 & 2 - Indicates ℄ Girder, see "GIRDER LAYOUT" sheet

NOTES:

1. For "SECTION B-B", "SECTION C-C", and "SECTION D-D", see "ABUTMENT DETAILS No. 1" sheet.
2. For drill & bond dowel location, and "DETAIL 1", see "ABUTMENT DETAILS No. 2" sheet.
3. See "PEDESTAL DETAILS" on "ABUTMENT DETAILS No. 1" sheet

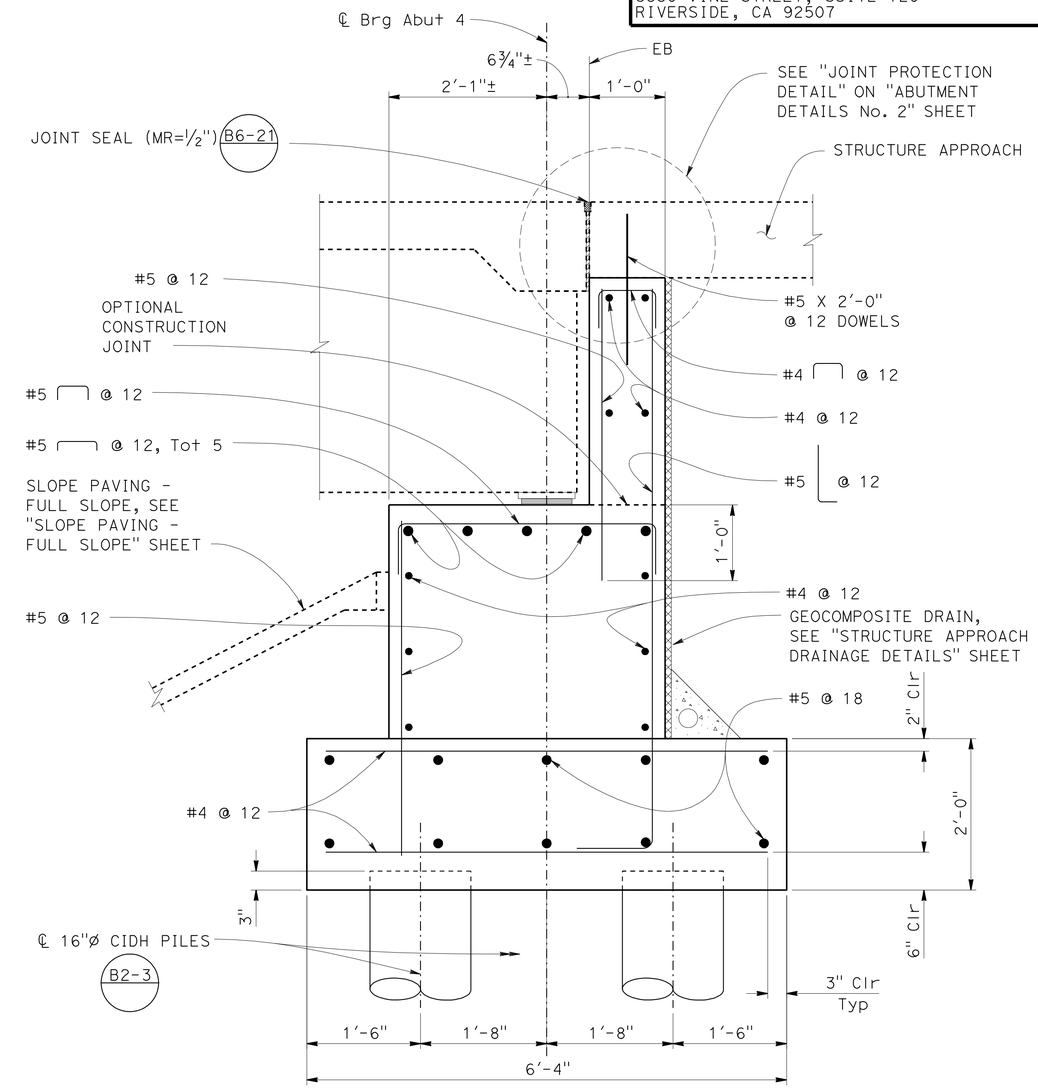

SECTION A-A
1"=1'-0"

Luqi Yang
DESIGN OVERSIGHT Luqi Yang
3-29-12
SIGN OFF DATE

DESIGN	BY Jared Cole	CHECKED Roya Golchoobian	
DETAILS	BY Oscar Colcol	CHECKED Roya Golchoobian	
QUANTITIES	BY Sabina Piras	CHECKED Tim Fuller	

PREPARED FOR THE STATE OF CALIFORNIA DEPARTMENT OF TRANSPORTATION

David Griffith
PROJECT ENGINEER

BRIDGE NO. 55-0218
POST MILES 4.8

ACACIA STREET UC (WIDEN)
ABUTMENT 4 LAYOUT

DESIGN DETAIL SHEET (ENGLISH) (REV.7/16/10)

ORIGINAL SCALE IN INCHES FOR REDUCED PLANS 0 1 2 3

UNIT: 2295
PROJECT NUMBER & PHASE: 12000000791 CONTRACT NO.: 12-0C5701

DISREGARD PRINTS BEARING EARLIER REVISION DATES

REVISION DATES 03/15/12 09/16/11 12/20/11 2/13/12

SHEET 5 OF 30

FILE => 55-0218-f-a01_lo2.dgn

DIST	COUNTY	ROUTE	POST MILES TOTAL PROJECT	SHEET No	TOTAL SHEETS
12	Ora	91	0.9/5.4	666	885

REGISTERED CIVIL ENGINEER — DATE 7/30/12

8-13-12
PLANS APPROVAL DATE

The State of California or its officers or agents shall not be responsible for the accuracy or completeness of scanned copies of this plan sheet.

REGISTERED PROFESSIONAL ENGINEER — Jared A. Cole — No. C66188 — Exp. 06/30/14 — CIVIL — STATE OF CALIFORNIA

ORANGE COUNTY TRANSPORTATION AUTHORITY
550 SOUTH MAIN STREET
ORANGE, CA 92868

T.Y. LIN INTERNATIONAL
3550 VINE STREET, SUITE 120
RIVERSIDE, CA 92507

SOUND WALL DESIGN NOTES:

DESIGN

Uniform Building Code, 1997 Edition and the Bridge Design Specifications.

DESIGN WIND LOAD

37 psf

DESIGN SEISMIC LOAD

2.00 Dead load

CONCRETE MASONRY HIGH STRENGTH

f'm	= 2500 psi
fb	= 830 psi
fs	= 24,000 psi
n	= 15.5
CMU Strength	= 3750 psi

LEGEND:

- ——— Indicates new structure
- —·—·— Indicates existing structure
- (1) & (2) Indicates ℄ Girder, see "GIRDER LAYOUT" sheet

NOTES:

1. Abutment 1 shown, Abutment 4 similar.
2. For anchor bolts and bearing pads, see "GIRDER DETAILS No. 1" sheet

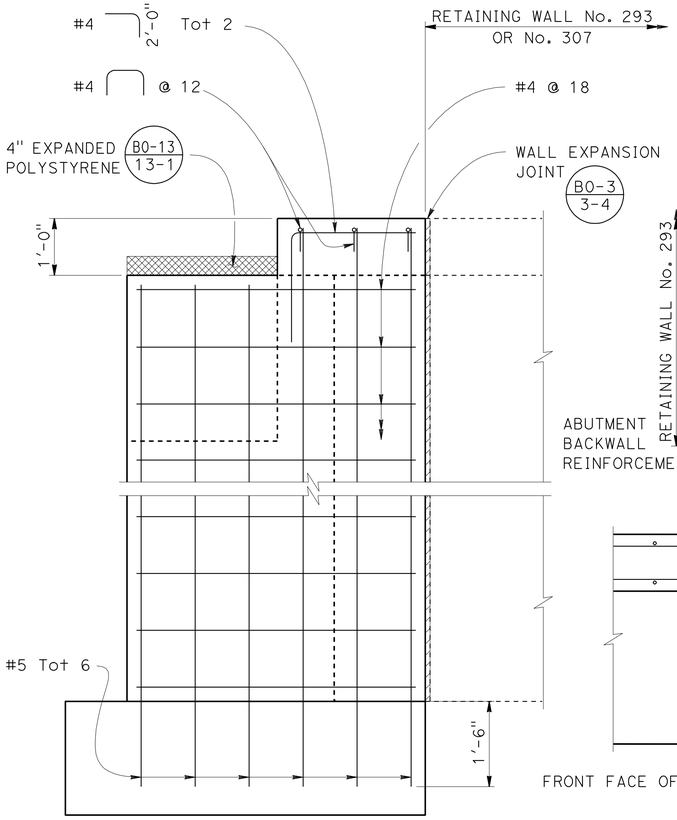

SECTION B-B
3/4"=1'-0"

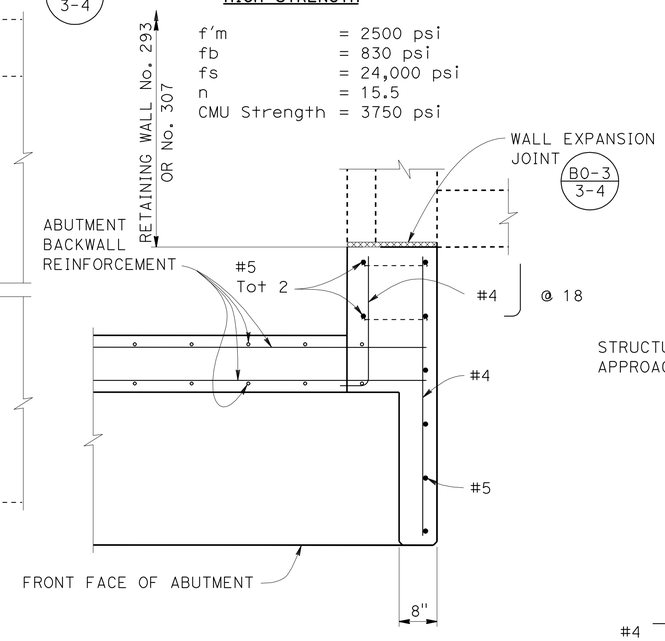

SECTION C-C
3/4"=1'-0"

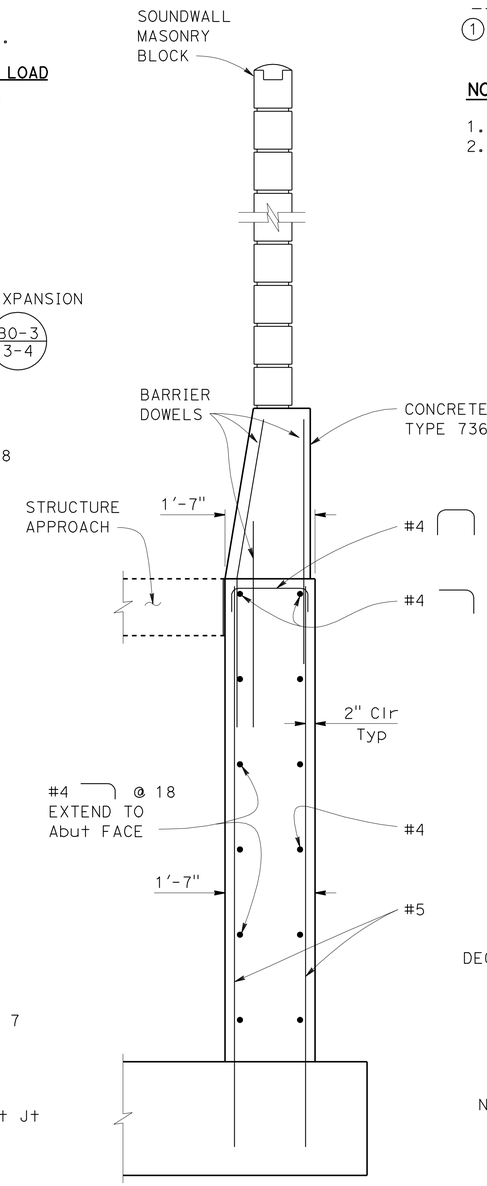

SECTION D-D
3/4"=1'-0"

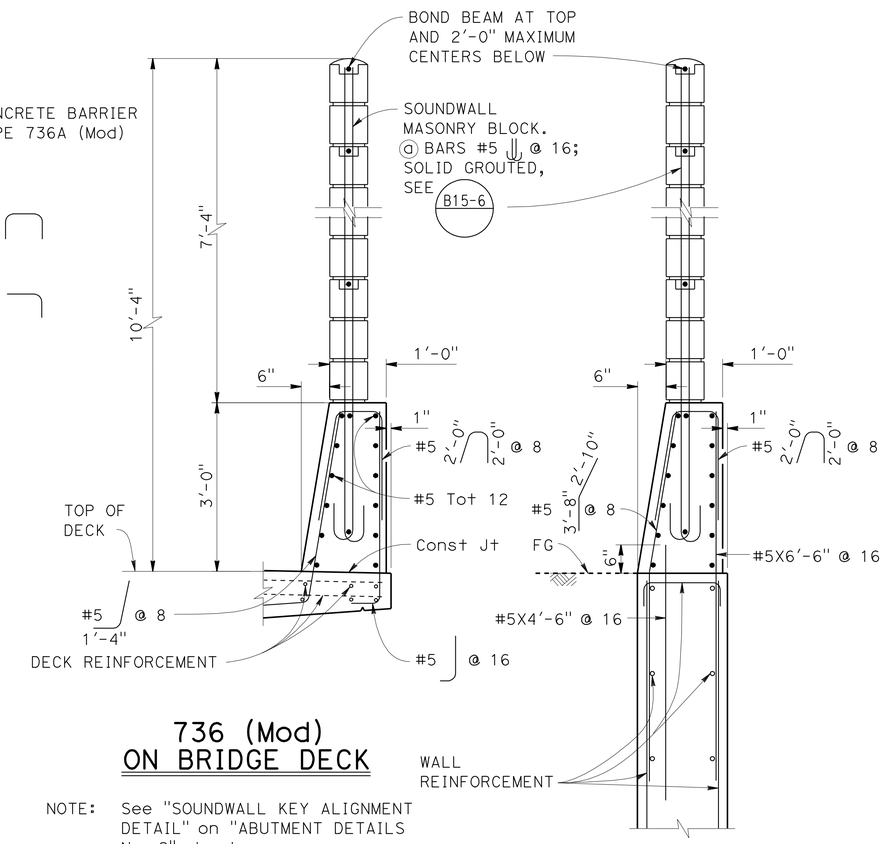

736 (Mod)
ON BRIDGE DECK

NOTE: See "SOUNDWALL KEY ALIGNMENT DETAIL" on "ABUTMENT DETAILS No. 2" sheet

736A (Mod)
ON ABUTMENT

For details not shown see B11-56 B15-6 B15-7

CONCRETE BARRIER TYPE 736 (MODIFIED)
3/4"=1'-0"

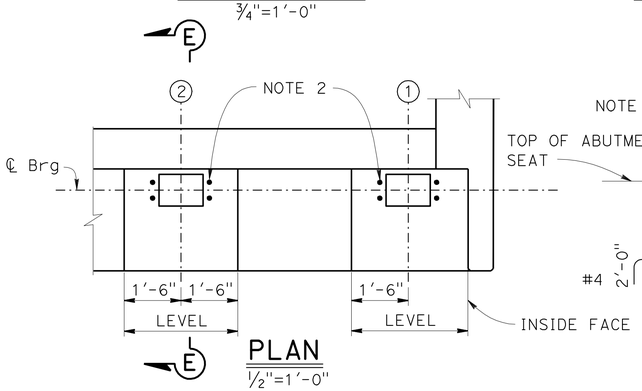

PLAN
1/2"=1'-0"

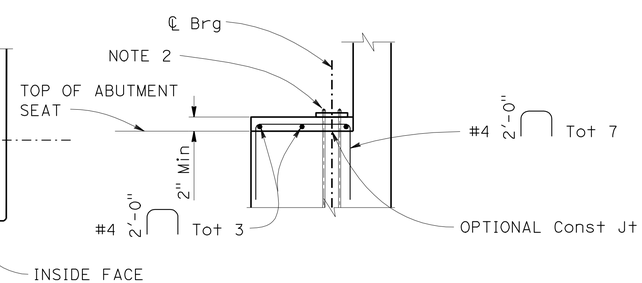

SECTION E-E
1/2"=1'-0"

PEDESTAL DETAILS

NOTE:
THE CONTRACTOR SHALL VERIFY ALL CONTROLLING FIELD DIMENSIONS BEFORE ORDERING OR FABRICATING ANY MATERIAL

DESIGN OVERSIGHT Luqi Yang — Luqi Yang — 8-6-12 SIGN OFF DATE	DESIGN	BY Jared Cole	CHECKED Roya Golchoobian
	DETAILS	BY Oscar Colcol	CHECKED Roya Golchoobian
	QUANTITIES	BY Sabina Piras	CHECKED Tim Fuller

PREPARED FOR THE STATE OF CALIFORNIA DEPARTMENT OF TRANSPORTATION

David Griffith — PROJECT ENGINEER

BRIDGE NO. 55-0218
POST MILES 4.8

ACACIA STREET UC (WIDEN)
ABUTMENT DETAILS No. 1

DESIGN DETAIL SHEET (ENGLISH) (REV.7/16/10)

ORIGINAL SCALE IN INCHES FOR REDUCED PLANS 0 1 2 3

UNIT: 2295
PROJECT NUMBER & PHASE: 12000000791
CONTRACT NO.: 12-0C5701

DISREGARD PRINTS BEARING EARLIER REVISION DATES — REVISION DATES 03/15/12 01/30/12 12/22/11 2/11/12 — SHEET 6 OF 30

FILE => 55-0218-f-a01dt01.dgn

Filename: $FILE$ Date: $DATE$ Time: $TIME$

DIST	COUNTY	ROUTE	POST MILES TOTAL PROJECT	SHEET No	TOTAL SHEETS
12	Ora	91	0.9/5.4	667	885

REGISTERED CIVIL ENGINEER — DATE 3/15/12

PLANS APPROVAL DATE 8-13-12

REGISTERED PROFESSIONAL ENGINEER — Jared A. Cole — No. C66188 — Exp. 06/30/14 — CIVIL — STATE OF CALIFORNIA

The State of California or its officers or agents shall not be responsible for the accuracy or completeness of scanned copies of this plan sheet.

ORANGE COUNTY TRANSPORTATION AUTHORITY
550 SOUTH MAIN STREET
ORANGE, CA 92868

T.Y. LIN INTERNATIONAL
3550 VINE STREET, SUITE 120
RIVERSIDE, CA 92507

LEGEND:

- Indicates Bridge Removal (Portion), Location B see "BRIDGE REMOVAL PLAN" sheet.
- Indicates existing structure
- Indicates new structure

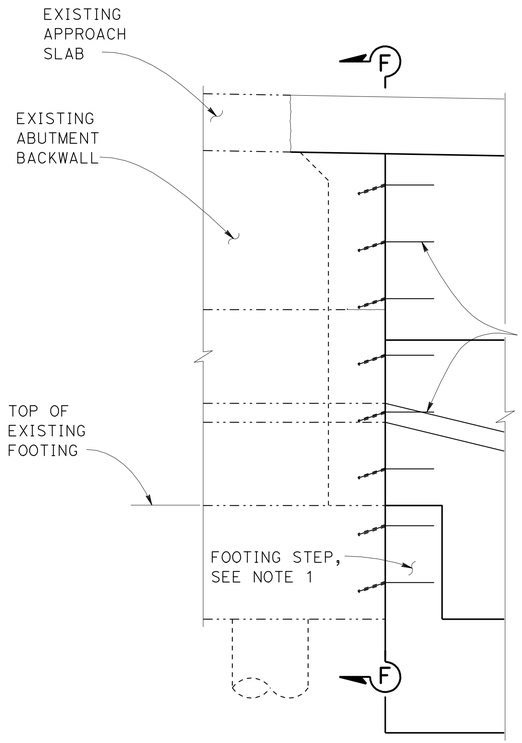

DETAIL 1

3/4"=1'-0"

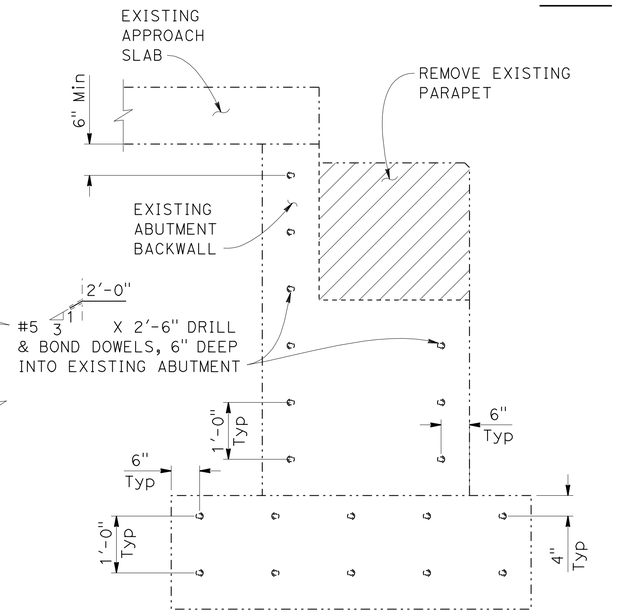

SECTION F-F

3/4"=1'-0"

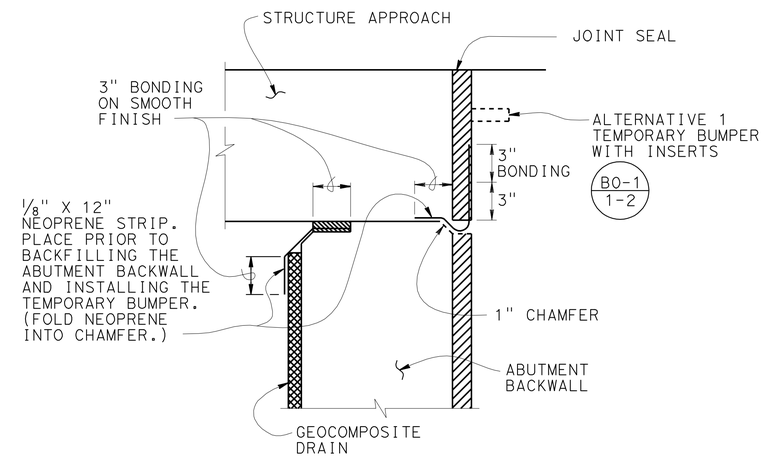

JOINT PROTECTION DETAIL

2"=1'-0"

NOTES:

1. Footing step at Abutment 1 only.
2. Abutment 1 shown, Abutment 4 similar unless noted otherwise.

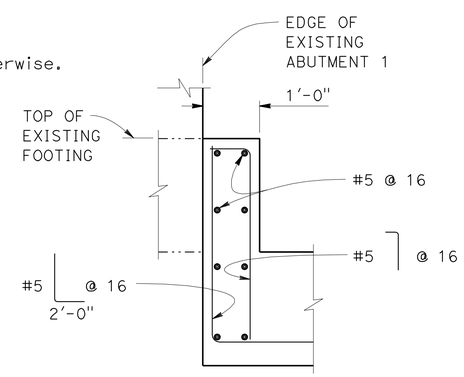

FOOTING STEP DETAIL

3/4"=1'-0"

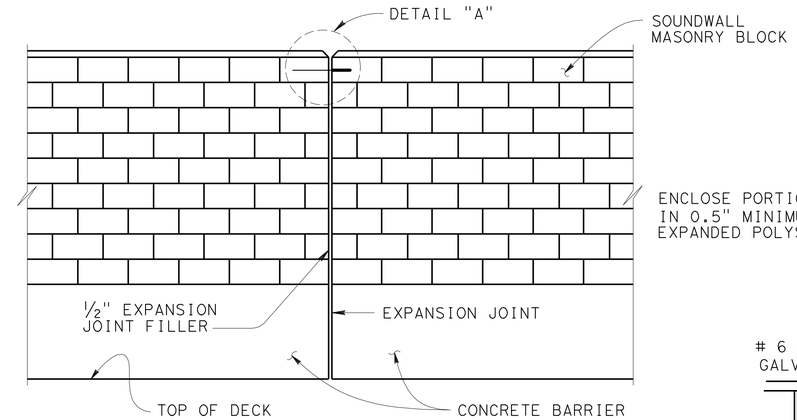

SOUNDWALL ALIGNMENT KEY DETAIL

NO SCALE

NOTE: For details not shown, see "CONCRETE BARRIER TYPE 736 (MODIFIED)" on "ABUTMENT DETAILS No. 1" sheet

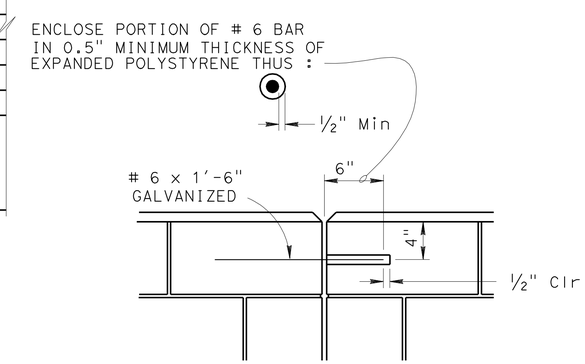

DETAIL A

NO SCALE

NOTE:
THE CONTRACTOR SHALL VERIFY ALL CONTROLLING FIELD DIMENSIONS BEFORE ORDERING OR FABRICATING ANY MATERIAL

DESIGN OVERSIGHT — Luqi Yang — 3-29-12 SIGN OFF DATE

	BY	CHECKED
DESIGN	Jared Cole	Roya Golchoobian
DETAILS	Oscar Colcol	Roya Golchoobian
QUANTITIES	Sabina Piras	Tim Fuller

PREPARED FOR THE STATE OF CALIFORNIA DEPARTMENT OF TRANSPORTATION

David Griffith — PROJECT ENGINEER

BRIDGE NO. 55-0218 — POST MILES 4.8

ACACIA STREET UC (WIDEN)
ABUTMENT DETAILS No. 2

DESIGN DETAIL SHEET (ENGLISH) (REV.7/16/10)

ORIGINAL SCALE IN INCHES FOR REDUCED PLANS 0 1 2 3

UNIT: 2295
PROJECT NUMBER & PHASE: 12000000791 CONTRACT NO.: 12-0C5701

DISREGARD PRINTS BEARING EARLIER REVISION DATES

REVISION DATES: 03/15/12 09/16/11 12/22/11 2/17/12 — SHEET 7 OF 30

FILE => 55-0218-f-a01dt02.dgn

DIST	COUNTY	ROUTE	POST MILES TOTAL PROJECT	SHEET No	TOTAL SHEETS
12	Ora	91	0.9/5.4	668	885

REGISTERED CIVIL ENGINEER — DATE 3/15/12

8-13-12
PLANS APPROVAL DATE

REGISTERED PROFESSIONAL ENGINEER — Jared A. Cole — No. C66188 — Exp. 06/30/14 — CIVIL — STATE OF CALIFORNIA

The State of California or its officers or agents shall not be responsible for the accuracy or completeness of scanned copies of this plan sheet.

ORANGE COUNTY TRANSPORTATION AUTHORITY
550 SOUTH MAIN STREET
ORANGE, CA 92868

T.Y. LIN INTERNATIONAL
3550 VINE STREET, SUITE 120
RIVERSIDE, CA 92507

LEGEND:

- - - - Indicates Existing Structure
——— Indicates New Structure
①② Indicates ℄ Girder, see "GIRDER LAYOUT" sheet

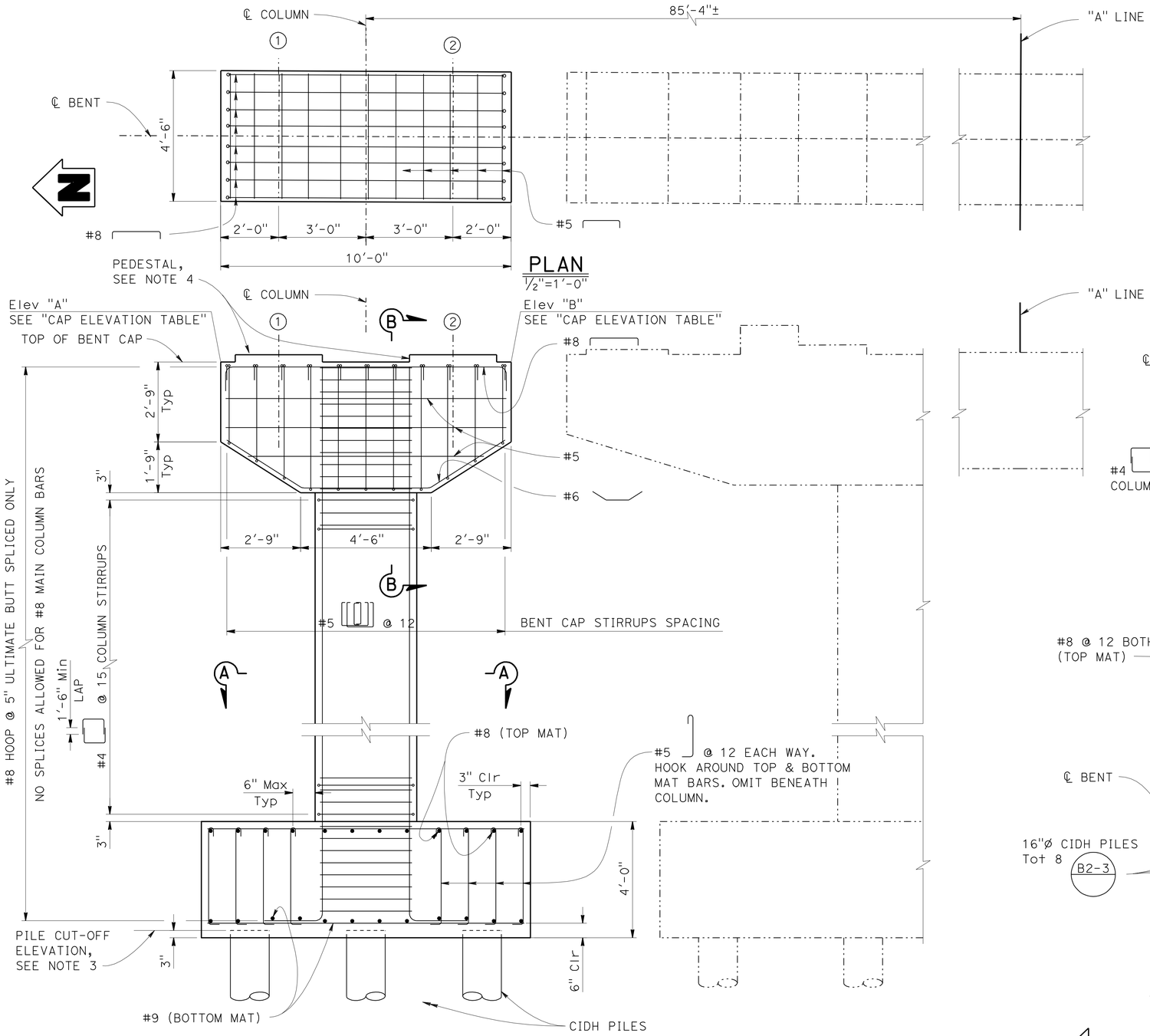

PLAN
½"=1'-0"

ELEVATION
½"=1'-0"

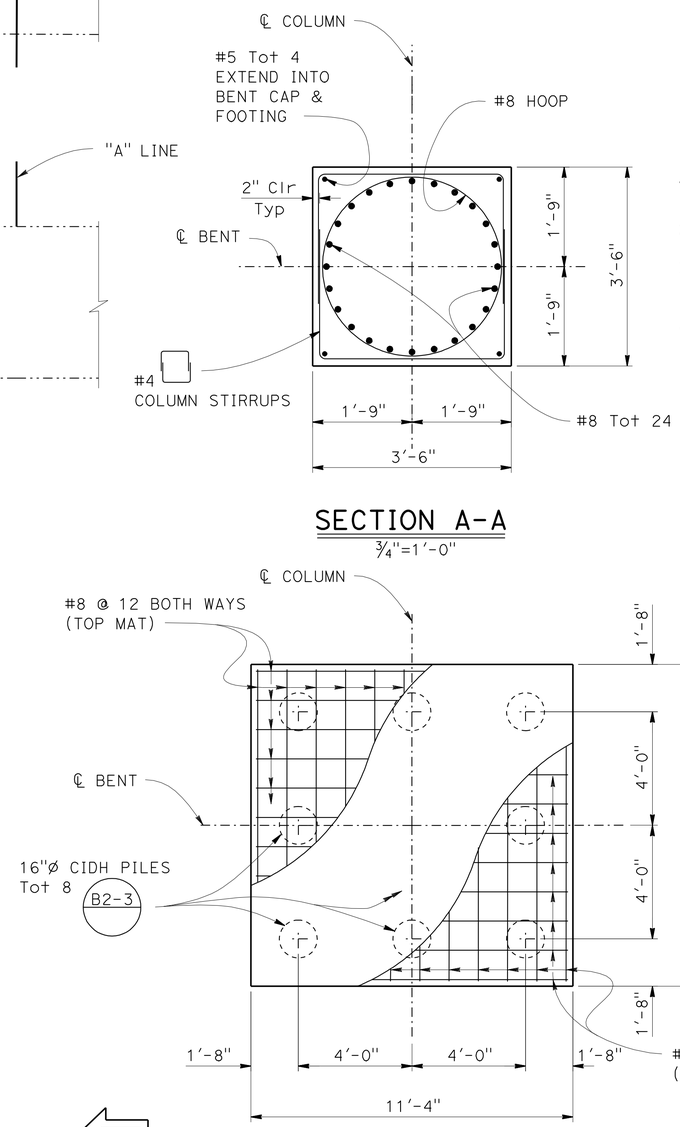

SECTION A-A
¾"=1'-0"

FOOTING PLAN
⅜"=1'-0"

NOTES:

1. Bent 2 shown, Bents 3 similar.
2. No splices allowed for main column bars. All hoops are ultimate butt spliced.
3. For pile cut-off elevation, see "PILE DATA TABLE" on "FOUNDATION PLAN" sheet.
4. For "PEDESTAL DETAILS" & "SECTION B-B", see "BENT DETAILS No. 2" sheet.

CAP ELEVATION TABLE

Location	Elev "A"	Elev "B"
Bent 2	196.25	196.50
Bent 3	196.29	196.54

NOTE:
THE CONTRACTOR SHALL VERIFY ALL CONTROLLING FIELD DIMENSIONS BEFORE ORDERING OR FABRICATING ANY MATERIAL

Luqi Yang
DESIGN OVERSIGHT — Luqi Yang
3-29-12
SIGN OFF DATE

	BY	CHECKED
DESIGN	Jared Cole	Roya Golchoobian
DETAILS	Oscar Colcol	Roya Golchoobian
QUANTITIES	Sabina Piras	Tim Fuller

PREPARED FOR THE STATE OF CALIFORNIA DEPARTMENT OF TRANSPORTATION

David Griffith
PROJECT ENGINEER

BRIDGE NO. 55-0218
POST MILES 4.8

ACACIA STREET UC (WIDEN)
BENT DETAILS No. 1

DESIGN DETAIL SHEET (ENGLISH) (REV.7/16/10)

ORIGINAL SCALE IN INCHES FOR REDUCED PLANS 0 1 2 3

UNIT: 2295
PROJECT NUMBER & PHASE: 12000000791
CONTRACT NO.: 12-0C5701

DISREGARD PRINTS BEARING EARLIER REVISION DATES

REVISION DATES: 03/15/12 09/06/11 12/22/11 2/13/12

SHEET 8 OF 30

FILE => 55-0218-h-b01dt01.dgn

DIST	COUNTY	ROUTE	POST MILES TOTAL PROJECT	SHEET No	TOTAL SHEETS
12	Ora	91	0.9/5.4	669	885

Jared Cole 3/15/12
REGISTERED CIVIL ENGINEER DATE

8-13-12
PLANS APPROVAL DATE

REGISTERED PROFESSIONAL ENGINEER Jared A. Cole No. C66188 Exp. 06/30/14 CIVIL STATE OF CALIFORNIA

The State of California or its officers or agents shall not be responsible for the accuracy or completeness of scanned copies of this plan sheet.

ORANGE COUNTY TRANSPORTATION AUTHORITY
550 SOUTH MAIN STREET
ORANGE, CA 92868

T.Y. LIN INTERNATIONAL
3550 VINE STREET, SUITE 120
RIVERSIDE, CA 92507

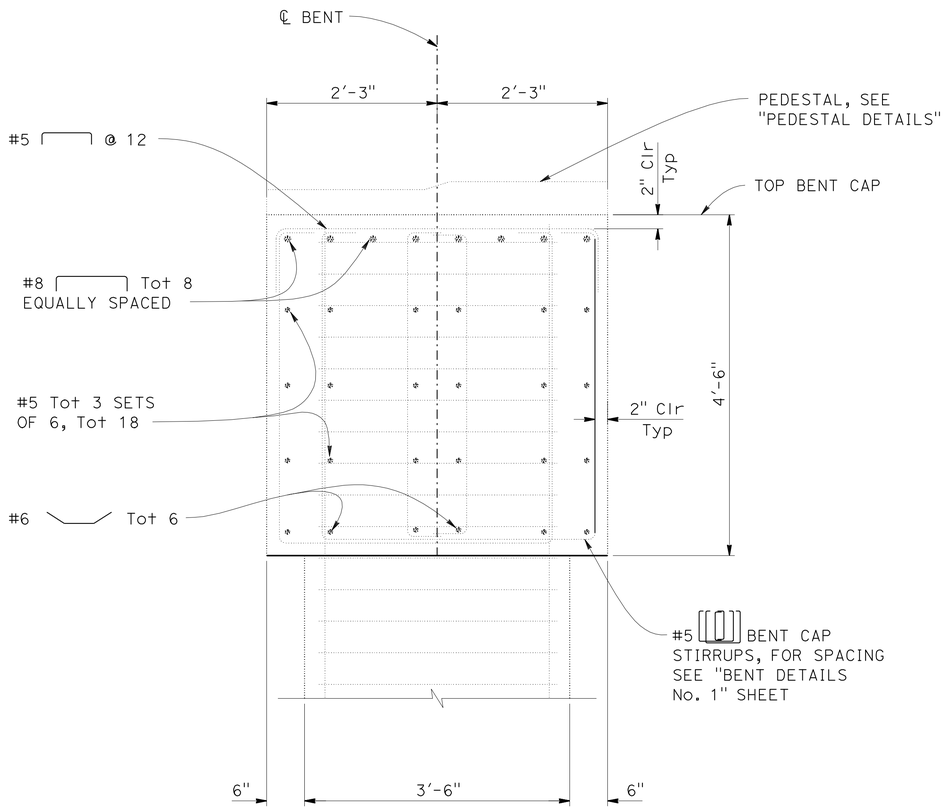

SECTION B-B
1"=1'-0"

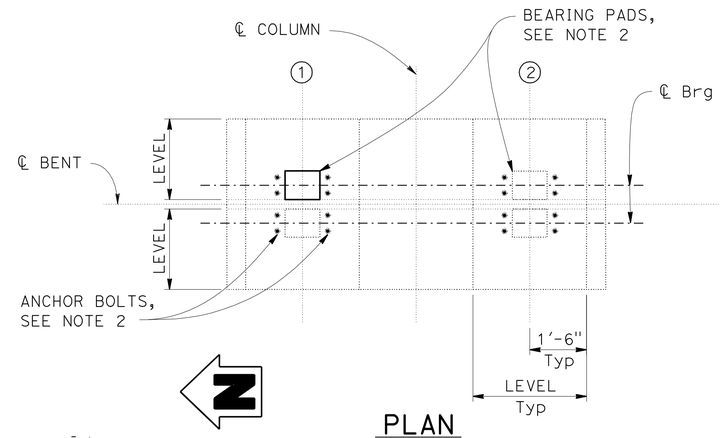

PLAN
1/2"=1'-0"

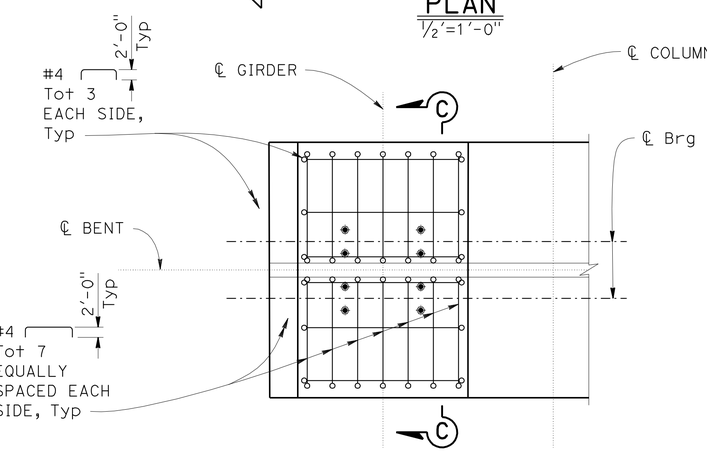

PLAN - REINFORCEMENT
3/4"=1'-0"

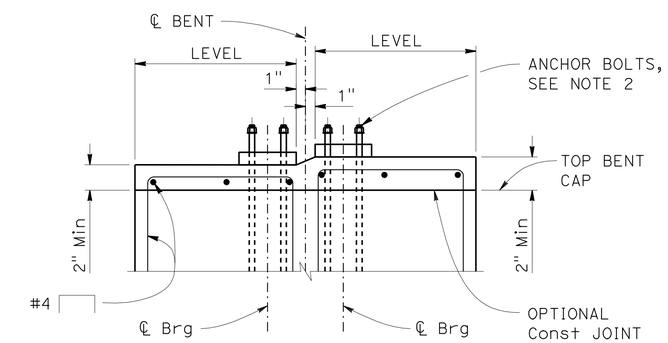

SECTION C-C
1"=1'-0"

NOTES:

1. Bent 2 shown, Bent 3 similar.
2. For anchor bolts and bearing pads, see "GIRDER DETAILS No. 1" sheet.

LEGEND:

①② - Indicates ℄ Girder, see "GIRDER LAYOUT" sheet

PEDESTAL DETAILS

NOTE:
THE CONTRACTOR SHALL VERIFY ALL CONTROLLING FIELD DIMENSIONS BEFORE ORDERING OR FABRICATING ANY MATERIAL

Luqi Yang
DESIGN OVERSIGHT Luqi Yang
3-29-12
SIGN OFF DATE

	BY	CHECKED
DESIGN	Jared Cole	Roya Golchoobian
DETAILS	Oscar Colcol	Roya Golchoobian
QUANTITIES	Sabina Piras	Tim Fuller

PREPARED FOR THE STATE OF CALIFORNIA DEPARTMENT OF TRANSPORTATION

David Griffith
PROJECT ENGINEER

BRIDGE NO. 55-0218
POST MILES 4.8

ACACIA STREET UC (WIDEN)
BENT DETAILS No. 2

DESIGN DETAIL SHEET (ENGLISH) (REV.7/16/10)

ORIGINAL SCALE IN INCHES FOR REDUCED PLANS 0 1 2 3

UNIT: 2295
PROJECT NUMBER & PHASE: 12000000791 CONTRACT NO.: 12-0C5701

DISREGARD PRINTS BEARING EARLIER REVISION DATES

REVISION DATES 03/15/12 09/16/11 12/20/11 2/13/12 SHEET 9 OF 30

FILE => 55-0218-h-b01dt02.dgn

Filename: $FILE$ Date: $DATE$ Time: $TIME$

DIST	COUNTY	ROUTE	POST MILES TOTAL PROJECT	SHEET No	TOTAL SHEETS
12	Ora	91	0.9/5.4	670	885

Jared Cole 3/15/12
REGISTERED CIVIL ENGINEER DATE

8-13-12
PLANS APPROVAL DATE

REGISTERED PROFESSIONAL ENGINEER Jared A. Cole No. C66188 Exp. 06/30/14 CIVIL STATE OF CALIFORNIA

The State of California or its officers or agents shall not be responsible for the accuracy or completeness of scanned copies of this plan sheet.

ORANGE COUNTY TRANSPORTATION AUTHORITY
550 SOUTH MAIN STREET
ORANGE, CA 92868

T.Y. LIN INTERNATIONAL
3550 VINE STREET, SUITE 120
RIVERSIDE, CA 92507

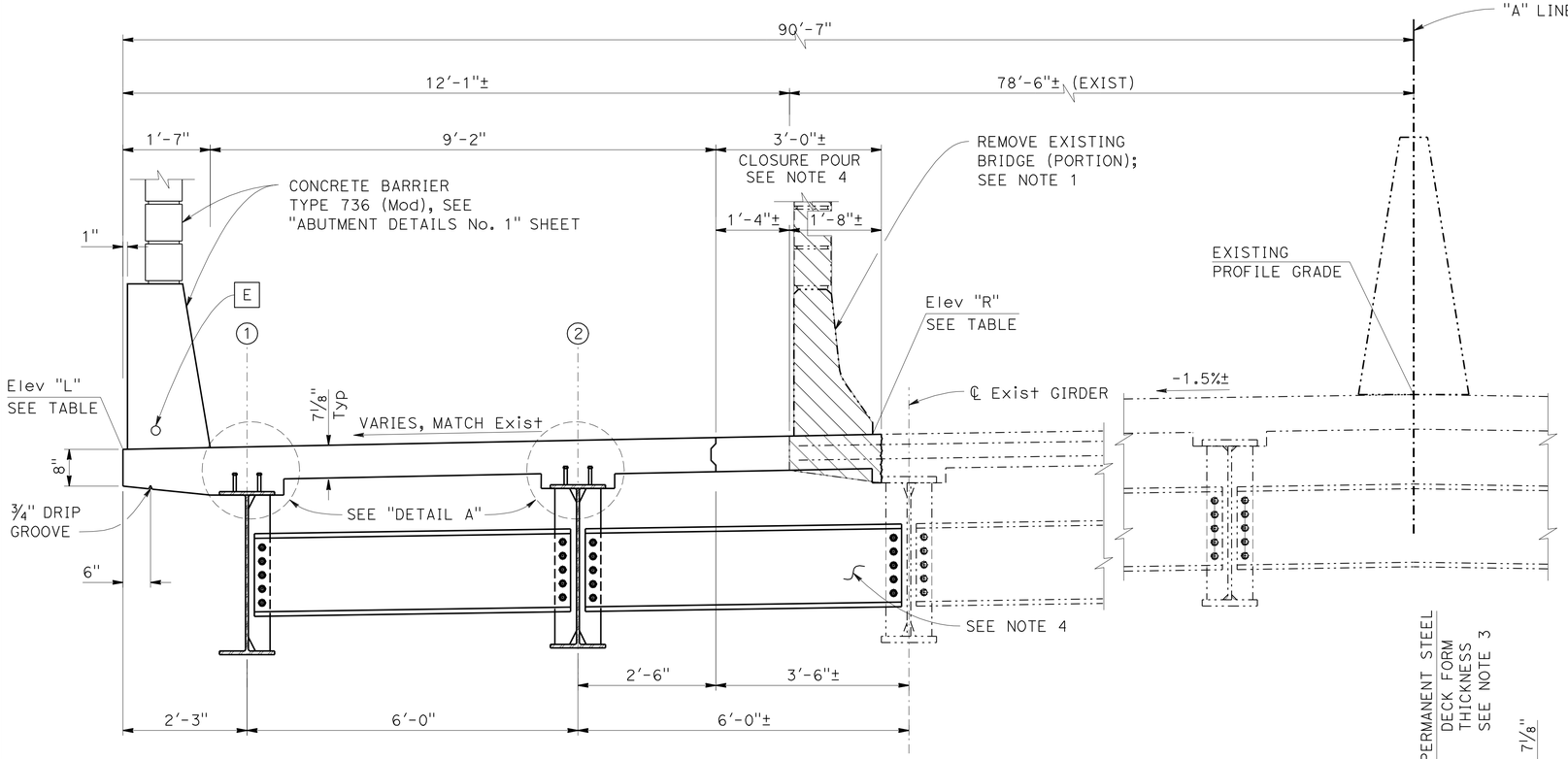

TYPICAL SECTION
3/4"=1'-0"

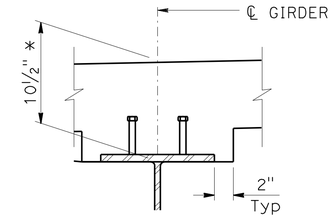

DETAIL A
1 1/2"=1'-0"

* - Min Dimension at ℄ Bearings.
Dimension may vary.

DECK ELEVATION TABLE

	Station	Elev "L"	Elev "R"
	304+85.00	200.13±	200.53±
BB	304+93.99±	200.20±	200.61±
	305+00.00	200.25±	200.63±
	305+20.00	200.36±	200.76±
	305+40.00	200.44±	200.70±
	305+60.00	200.46±	200.69±
	305+80.00	200.45±	200.76±
	306+00.00	200.39±	200.72±
EB	306+15.61±	200.30±	200.69±
	306+20.00	200.27±	200.67±

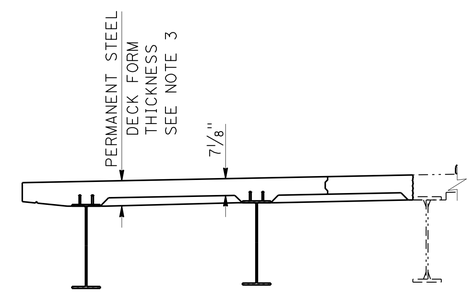

STEEL DECK FORM
3/8"=1'-0"

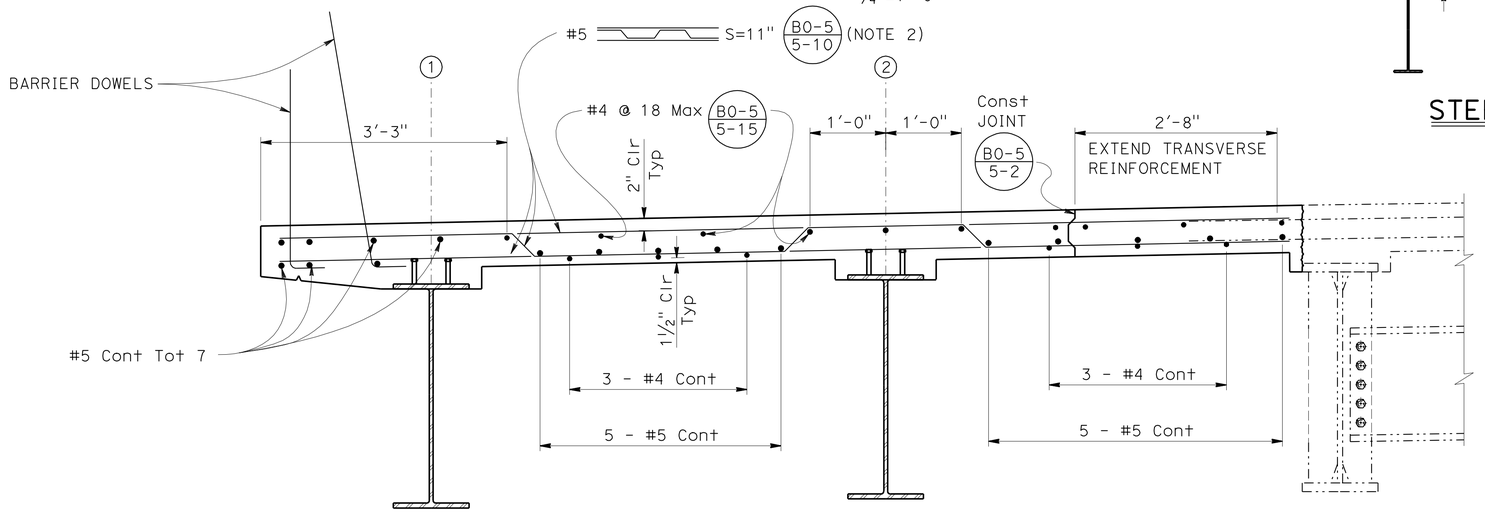

PART TYPICAL SECTION
1"=1'-0"

NOTE:
Diaphragm stiffeners not shown for clarity.

LEGEND:

- Indicates Existing Structure
- Indicates New Structure
- Indicates Bridge Removal (Portion), Location B
- (1) - Indicates ℄ Exterior Girder
- (2) - Indicates ℄ Interior Girder
- [E] - Indicates Electrical Conduit, see "ELECTRICAL PLANS"

NOTES:

1. Remove existing barrier, and deck (portion), existing transverse reinforcement to remain. For other details not shown, see "BRIDGE REMOVAL PLAN" sheet.
2. Place parallel to ℄ supports and space along ℄ girders.
3. Use of permanent steel deck forms is optional.
4. Intermediate diaphragm to be placed between existing and new girders after deck pour and before closure pour.

NOTE:
THE CONTRACTOR SHALL VERIFY ALL CONTROLLING FIELD DIMENSIONS BEFORE ORDERING OR FABRICATING ANY MATERIAL

Luqi Yang
DESIGN OVERSIGHT Luqi Yang
3-29-12
SIGN OFF DATE

	BY	CHECKED
DESIGN	Jared Cole	Roya Golchoobian
DETAILS	Oscar Colcol	Roya Golchoobian
QUANTITIES	Sabina Piras	Tim Fuller

PREPARED FOR THE STATE OF CALIFORNIA DEPARTMENT OF TRANSPORTATION

David Griffith
PROJECT ENGINEER

BRIDGE NO. 55-0218
POST MILES 4.8

ACACIA STREET UC (WIDEN)
TYPICAL SECTION

DESIGN DETAIL SHEET (ENGLISH) (REV.7/16/10)

ORIGINAL SCALE IN INCHES FOR REDUCED PLANS 0 1 2 3

UNIT: 2295
PROJECT NUMBER & PHASE: 12000000791 CONTRACT NO.: 12-0C5701

DISREGARD PRINTS BEARING EARLIER REVISION DATES → 03/15/12 ~~09/16/11~~ ~~12/20/11~~ ~~2/12/12~~

SHEET 10 OF 30

FILE => 55-0218-k-ts01.dgn

Filename: $FILE$ Date: $DATE$ Time: $TIME$

DIST	COUNTY	ROUTE	POST MILES TOTAL PROJECT	SHEET No	TOTAL SHEETS
12	Ora	91	0.9/5.4	671	885

REGISTERED CIVIL ENGINEER — DATE 3/15/12

8-13-12
PLANS APPROVAL DATE

The State of California or its officers or agents shall not be responsible for the accuracy or completeness of scanned copies of this plan sheet.

REGISTERED PROFESSIONAL ENGINEER — Jared A. Cole No. C66188 Exp. 06/30/14 CIVIL — STATE OF CALIFORNIA

ORANGE COUNTY TRANSPORTATION AUTHORITY
550 SOUTH MAIN STREET
ORANGE, CA 92868

T.Y. LIN INTERNATIONAL
3550 VINE STREET, SUITE 120
RIVERSIDE, CA 92507

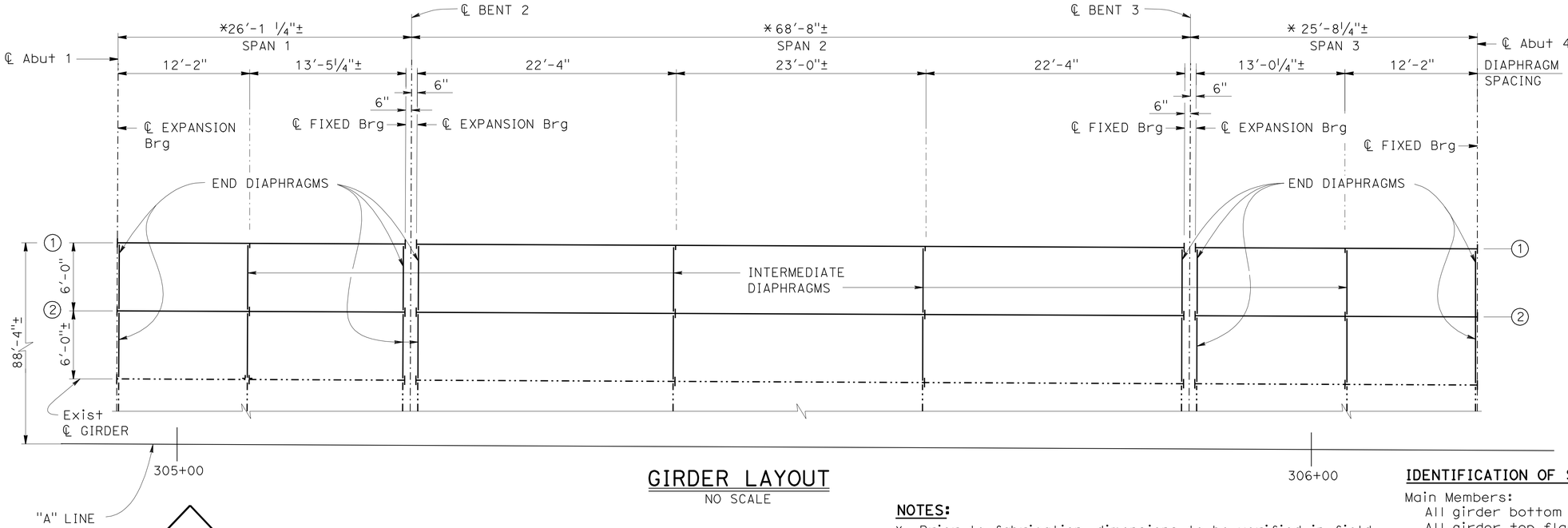

GIRDER LAYOUT

NO SCALE

LEGEND:

-·-·-·- -Indicates Existing Structure
——— -Indicates New Structure
① -Indicates ℄ Exterior Girder
② -Indicates ℄ Interior Girder

NOTES:

* Prior to fabrication, dimensions to be verified in field after completion of abutment and bent construction.
1. Intermediate diaphragm connection plates are on both sides of interior girder and inside face of exterior girder only.
2. For Restrainer holes, see "GIRDER DETAILS No. 3" sheet.

IDENTIFICATION OF STEEL BRIDGE MEMBERS

Main Members:
- All girder bottom flanges and lower half of web (T)
- All girder top flanges and upper half of web (C)
- End Diaphragms
- (T) - Indicates Main Tension Member (Non-Fracture-Critical)
- (C) - Indicates Main Compression Member

Primary Components of Main Members:
- Intermediate Diaphragms
- Transverse Stiffeners and Connection Plates
- Bearing Stiffeners

Secondary Members:
- All structural members not listed above

SPANS 1 & 3

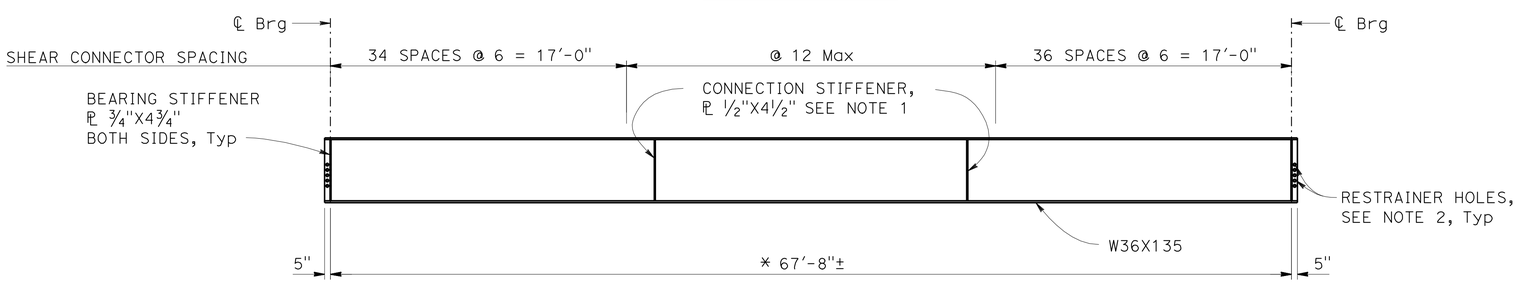

SPAN 2

GIRDER ELEVATION

NO SCALE

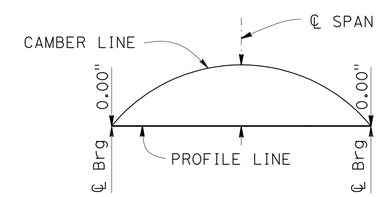

CAMBER DIAGRAM

NO SCALE

CAMBER VALUES - GIRDERS ① & ②

Camber Components \ Ordinates	Spans 1 & 3**	Span 2
Deck Slab Dead Load (ft)	0.00	0.12
Steel Girder Dead Load (ft)	0.00	0.03
Additional Dead Load (ft)	0.00	0.10
Total Camber (ft)	**0.00**	**0.25**

** Place natural camber up

NOTE:
THE CONTRACTOR SHALL VERIFY ALL CONTROLLING FIELD DIMENSIONS BEFORE ORDERING OR FABRICATING ANY MATERIAL

DESIGN OVERSIGHT Luqi Yang — 3-29-12 — SIGN OFF DATE

	BY	CHECKED
DESIGN	Jared Cole	Roya Golchoobian
DETAILS	Oscar Colcol	Roya Golchoobian
QUANTITIES	Sabina Piras	Tim Fuller

PREPARED FOR THE STATE OF CALIFORNIA DEPARTMENT OF TRANSPORTATION

David Griffith — PROJECT ENGINEER

BRIDGE NO. 55-0218
POST MILES 4.8

ACACIA STREET UC (WIDEN)
GIRDER LAYOUT

DESIGN DETAIL SHEET (ENGLISH) (REV.7/16/10)

ORIGINAL SCALE IN INCHES FOR REDUCED PLANS 0 1 2 3

UNIT: 2295
PROJECT NUMBER & PHASE: 12000000791 CONTRACT NO.: 12-0C5701

DISREGARD PRINTS BEARING EARLIER REVISION DATES — REVISION DATES 03/15/12 ~~09/16/11~~ ~~12/20/11~~ ~~2/13/12~~

SHEET 11 OF 30

FILE => 55-0218-1-g_1o01.dgn

DIST	COUNTY	ROUTE	POST MILES TOTAL PROJECT	SHEET No	TOTAL SHEETS
12	Ora	91	0.9/5.4	672	885

Jared Cole 3/15/12
REGISTERED CIVIL ENGINEER DATE

8-13-12
PLANS APPROVAL DATE

REGISTERED PROFESSIONAL ENGINEER Jared A. Cole No. C66188 Exp. 06/30/14 CIVIL STATE OF CALIFORNIA

The State of California or its officers or agents shall not be responsible for the accuracy or completeness of scanned copies of this plan sheet.

ORANGE COUNTY TRANSPORTATION AUTHORITY
550 SOUTH MAIN STREET
ORANGE, CA 92868

T.Y. LIN INTERNATIONAL
3550 VINE STREET, SUITE 120
RIVERSIDE, CA 92507

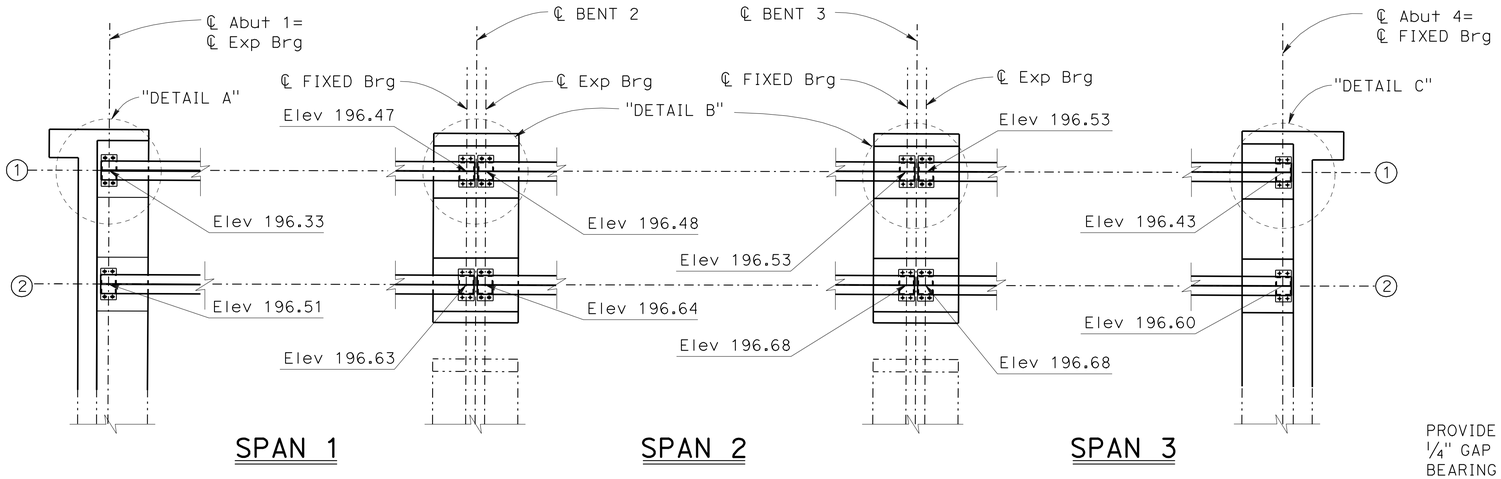

ANCHOR BOLT LAYOUT AND TOP OF PEDESTAL ELEVATION

NO SCALE

NOTE: Top of pedestal elevations are approximate.

LEGEND:

-·-·- -Indicates Existing Structure
——— -Indicates New Structure
① -Indicates ℄ Exterior Girder
② -Indicates ℄ Interior Girder

All Girders	Location	"T" @ ℄ Brg	Bevel	Bearing Pad	Hole	Anchor Bolt
Span 1	Abut 1	1"	1/16" / 12"	10"X10"X1"	1¼"Ø	1"Ø
	BENT 2			10"X10"X1"	1¼"X2" SLOT	1"Ø
Span 2	BENT 2	1"	1/32" / 12"	10"X12"X1"	1¼"Ø	1"Ø
	BENT 3			10"X12"X1"	1¼"X2" SLOT	1"Ø
Span 3	BENT 3	1"	1/32" / 12"	10"X10"X1"	1¼"Ø	1"Ø
	Abut 4			10"X10"X1"	1¼"X2" SLOT	1"Ø

Bearing pads shall be Steel Reinforced Elastomer. Thickness shown is for Elastomer only. Place longer side normal to girder centerline.

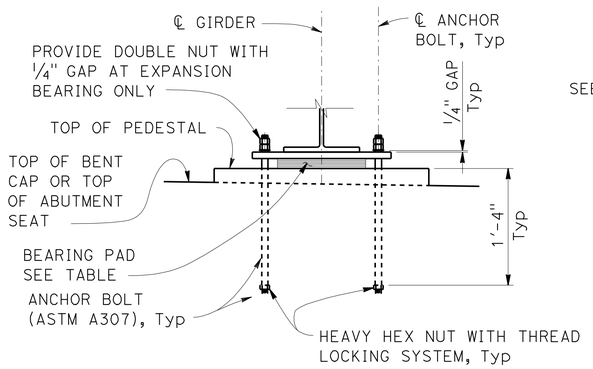

BEARING DETAILS

1"=1'-0"

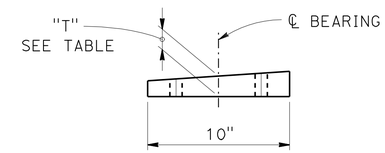

BEVELED SOLE PLATE

NO SCALE

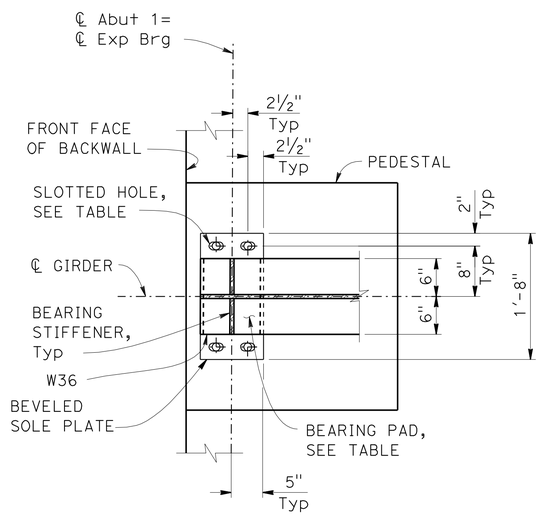

DETAIL A

1"=1'-0"

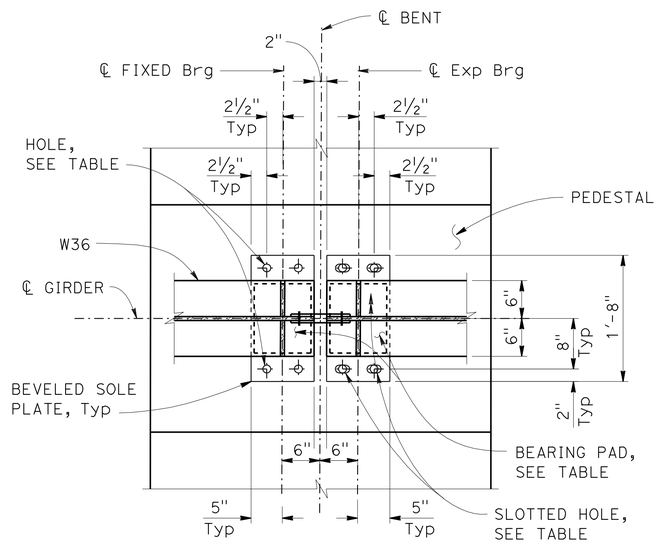

NOTE: Bent 2 shown, Bent 3 similar

DETAIL B

1"=1'-0"

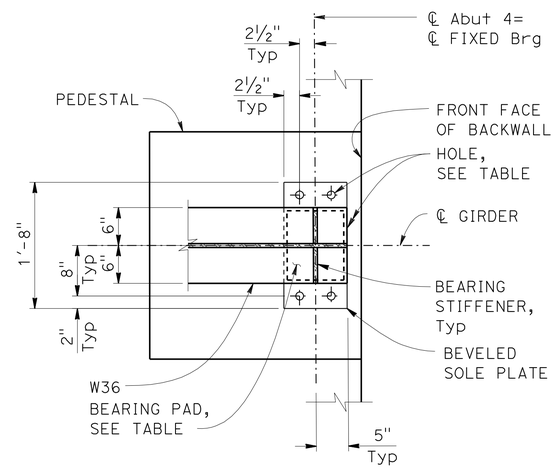

DETAIL C

1"=1'-0"

NOTE:
THE CONTRACTOR SHALL VERIFY ALL CONTROLLING FIELD DIMENSIONS BEFORE ORDERING OR FABRICATING ANY MATERIAL

Luqi Yang
DESIGN OVERSIGHT Luqi Yang
3-29-12
SIGN OFF DATE

	BY	CHECKED
DESIGN	Jared Cole	Roya Golchoobian
DETAILS	Oscar Colcol	Roya Golchoobian
QUANTITIES	Sabina Piras	Tim Fuller

PREPARED FOR THE STATE OF CALIFORNIA DEPARTMENT OF TRANSPORTATION

David Griffith
PROJECT ENGINEER

BRIDGE NO. 55-0218
POST MILES 4.8

ACACIA STREET UC (WIDEN)
GIRDER DETAILS No. 1

DESIGN DETAIL SHEET (ENGLISH) (REV.7/16/10)

ORIGINAL SCALE IN INCHES FOR REDUCED PLANS 0 1 2 3

UNIT: 2295
PROJECT NUMBER & PHASE: 12000000791 CONTRACT NO.: 12-0C5701

DISREGARD PRINTS BEARING EARLIER REVISION DATES

REVISION DATES 03/15/12 09/06/11 12/20/11 2/12/12

SHEET 12 OF 30

FILE => 55-0218-1-gdt01.dgn

DIST	COUNTY	ROUTE	POST MILES TOTAL PROJECT	SHEET No	TOTAL SHEETS
12	Ora	91	0.9/5.4	673	885

REGISTERED CIVIL ENGINEER — DATE 3/15/12

8-13-12
PLANS APPROVAL DATE

The State of California or its officers or agents shall not be responsible for the accuracy or completeness of scanned copies of this plan sheet.

REGISTERED PROFESSIONAL ENGINEER — Jared A. Cole — No. C66188 — Exp. 06/30/14 — CIVIL — STATE OF CALIFORNIA

ORANGE COUNTY TRANSPORTATION AUTHORITY
550 SOUTH MAIN STREET
ORANGE, CA 92868

T.Y. LIN INTERNATIONAL
3550 VINE STREET, SUITE 120
RIVERSIDE, CA 92507

LEGEND:

-·-·- -Indicates Existing Structure
——— -Indicates New Structure
① -Indicates ℄ Exterior Girder
② -Indicates ℄ Interior Girder

NOTES:

1. All bolts are 7/8"ø high-strength (HS) ASTM A325 unless noted otherwise.
2. At girders, length of studs to be determined by the Contractor. Alternative types of shear connectors may be permitted subject to approval by the Engineer.

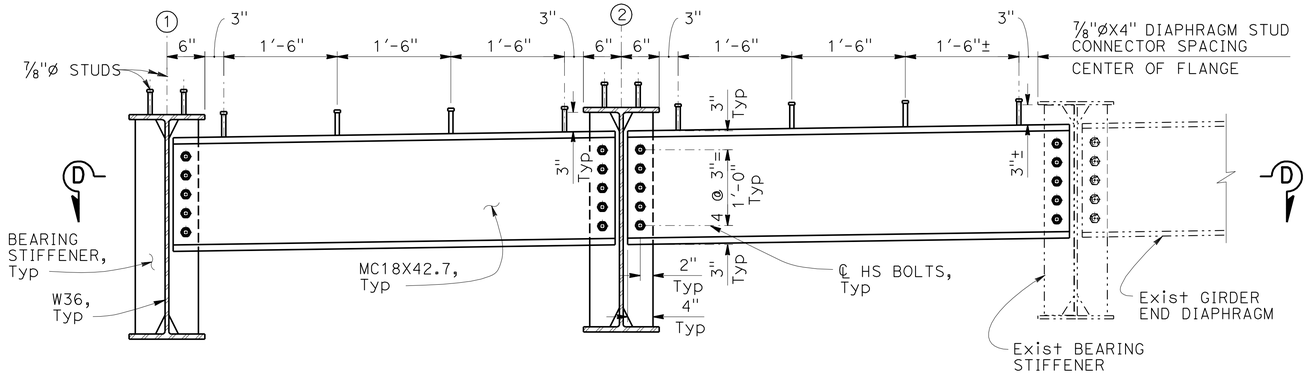

TYPICAL END DIAPHRAGM

1"=1'-0"

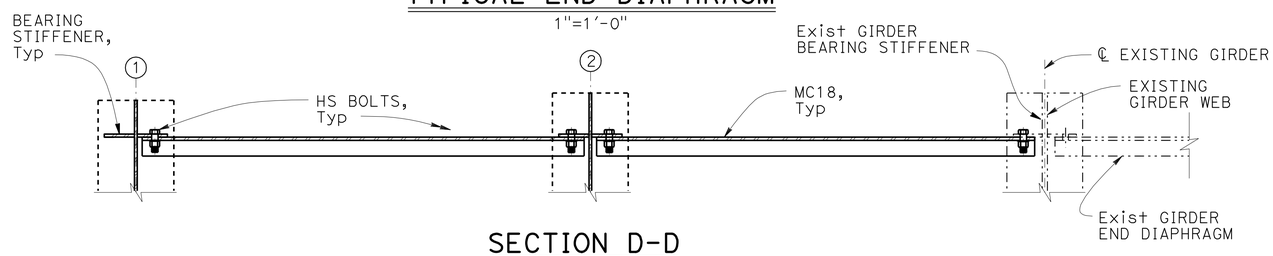

SECTION D-D

1"=1'-0"

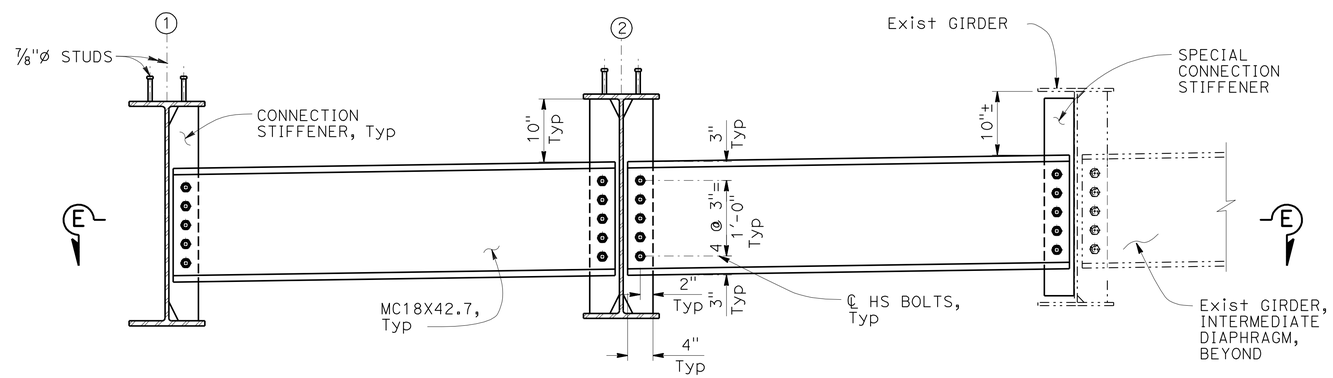

TYPICAL INTERMEDIATE DIAPHRAGM

1"=1'-0"

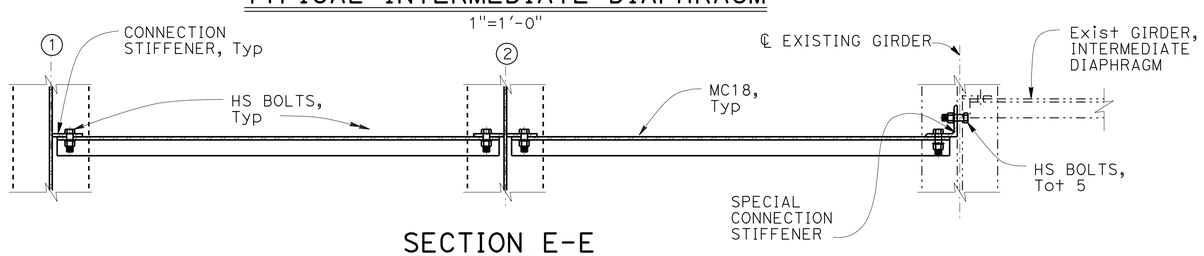

SECTION E-E

1"=1'-0"

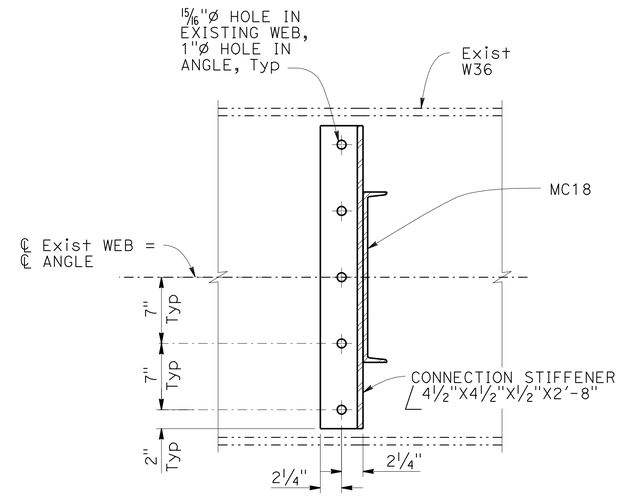

SPECIAL CONNECTION STIFFENER

1 1/2"=1'-0"

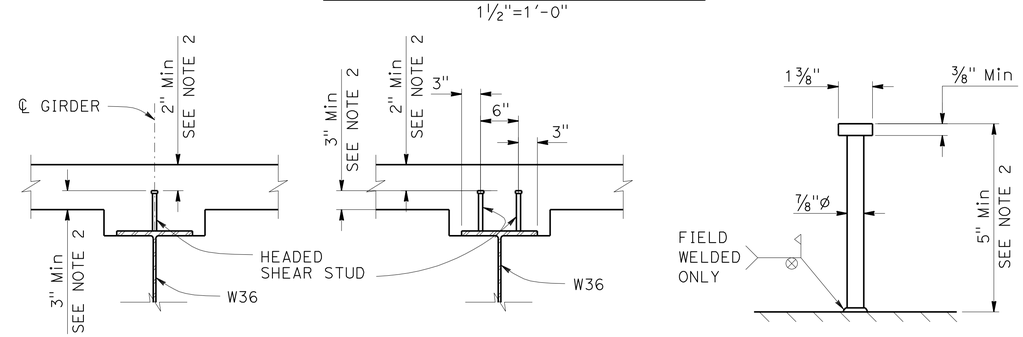

SPANS 1 & 3

1"=1'-0"

SPAN 2

1"=1'-0"

STUD CONNECTOR

3"=1'-0"

SHEAR CONNECTOR DETAILS

NOTE:
THE CONTRACTOR SHALL VERIFY ALL CONTROLLING FIELD DIMENSIONS BEFORE ORDERING OR FABRICATING ANY MATERIAL

Luqi Yang
DESIGN OVERSIGHT — Luqi Yang
3-29-12
SIGN OFF DATE

	BY	CHECKED
DESIGN	Jared Cole	Roya Golchoobian
DETAILS	Oscar Colcol	Roya Golchoobian
QUANTITIES	Sabina Piras	Tim Fuller

PREPARED FOR THE STATE OF CALIFORNIA DEPARTMENT OF TRANSPORTATION

David Griffith
PROJECT ENGINEER

BRIDGE NO. 55-0218
POST MILES 4.8

ACACIA STREET UC (WIDEN)
GIRDER DETAILS No. 2

DESIGN DETAIL SHEET (ENGLISH) (REV.7/16/10)

ORIGINAL SCALE IN INCHES FOR REDUCED PLANS 0 1 2 3

UNIT: 2295
PROJECT NUMBER & PHASE: 12000000791 CONTRACT NO.: 12-0C5701

DISREGARD PRINTS BEARING EARLIER REVISION DATES → REVISION DATES 03/15/12 09/16/11 12/22/11 2/13/12

SHEET 13 OF 30

FILE => 55-0218-1-gdt02.dgn

DIST	COUNTY	ROUTE	POST MILES TOTAL PROJECT	SHEET No	TOTAL SHEETS
12	Ora	91	0.9/5.4	674	885

REGISTERED CIVIL ENGINEER — DATE 3/15/12

8-13-12
PLANS APPROVAL DATE

REGISTERED PROFESSIONAL ENGINEER — Jared A. Cole — No. C66188 — Exp. 06/30/14 — CIVIL — STATE OF CALIFORNIA

The State of California or its officers or agents shall not be responsible for the accuracy or completeness of scanned copies of this plan sheet.

ORANGE COUNTY TRANSPORTATION AUTHORITY
550 SOUTH MAIN STREET
ORANGE, CA 92868

T.Y. LIN INTERNATIONAL
3550 VINE STREET, SUITE 120
RIVERSIDE, CA 92507

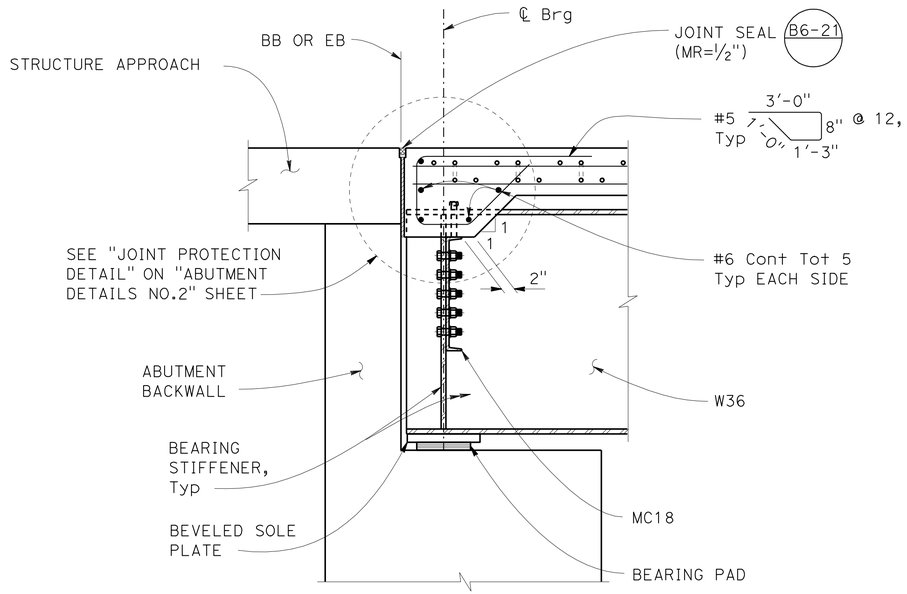

SECTION AT ABUTMENT

1"=1'-0"

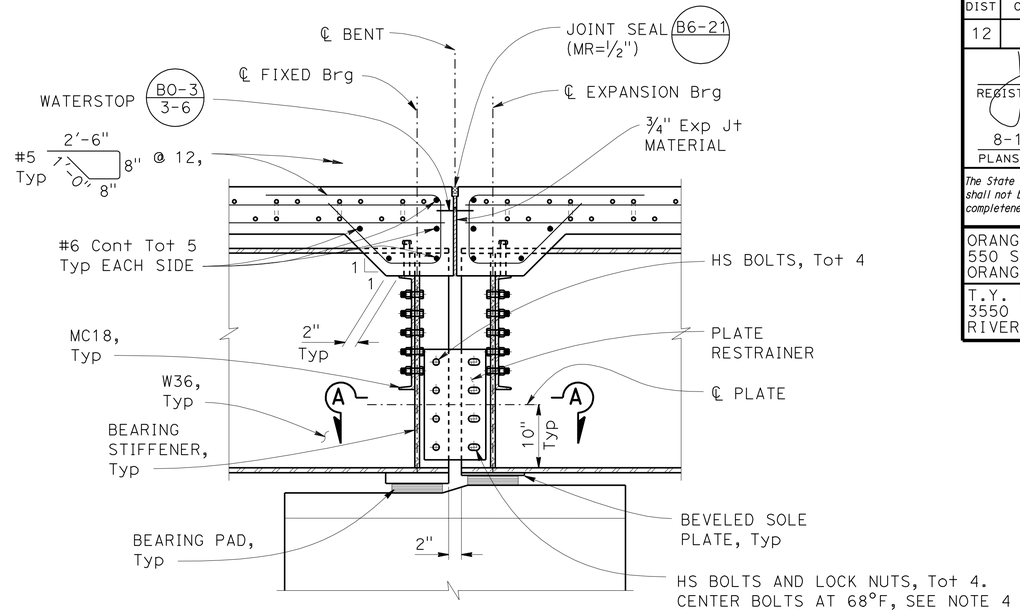

SECTION AT BENT

1"=1'-0"

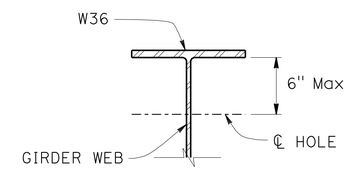

SEE NOTES 1 AND 2

HOLES FOR CONDUIT AND FALSEWORK

NO SCALE

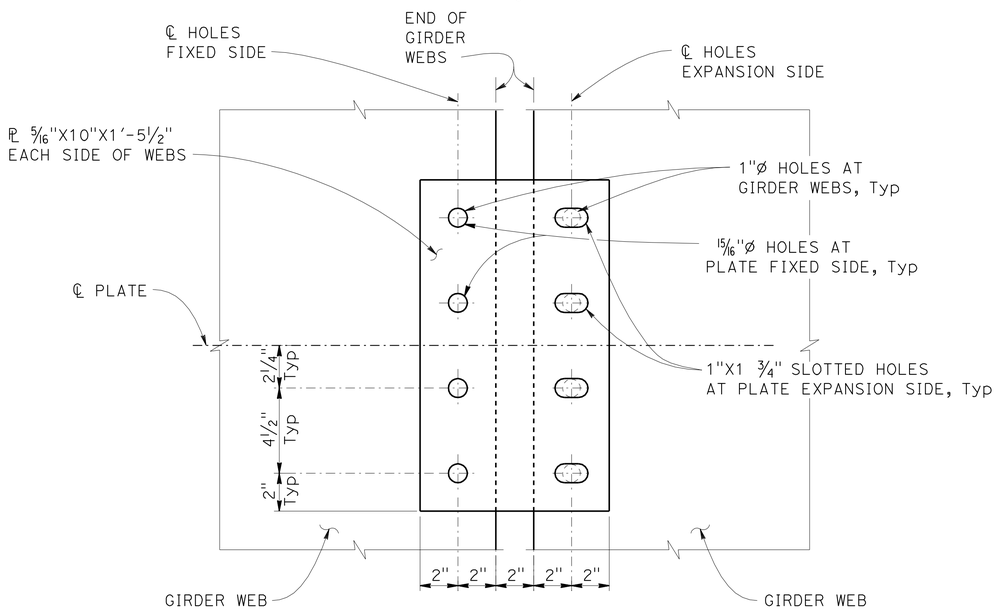

PLATE RESTRAINER

3"=1'-0"

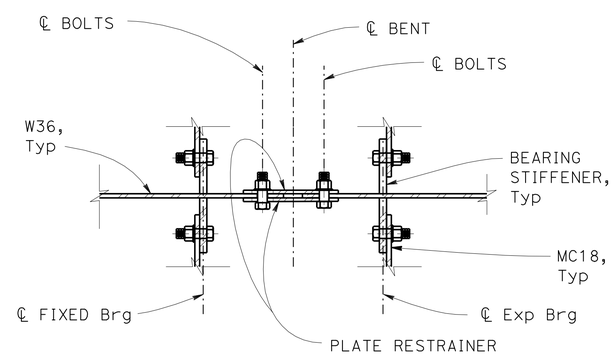

SECTION A-A

NO SCALE

NOTES:

1. 1" Max diameter hole at 4'-0" minimum spacing to be used for falsework support when specified by the Contractor. Contractor to determine location, size, and spacing.
2. 2" Max diameter hole to be drilled when lighting conduit passes through girder web. For location and size of hole see "ELECTRICAL PLAN".
3. All bolts are 7/8"ø high-strength (HS) ASTM A325 unless noted otherwise.
4. Bolts thru slotted holes shall be secured with a gap not to exceed 1/16" to allow for temperature movement.
5. All diaphragm bolts shall be tightened after placing closure pour.

NOTE:
THE CONTRACTOR SHALL VERIFY ALL CONTROLLING FIELD DIMENSIONS BEFORE ORDERING OR FABRICATING ANY MATERIAL

Luqi Yang
DESIGN OVERSIGHT — Luqi Yang
3-29-12
SIGN OFF DATE

	BY	CHECKED
DESIGN	Jared Cole	Roya Golchoobian
DETAILS	Oscar Colcol	Roya Golchoobian
QUANTITIES	Sabina Piras	Tim Fuller

PREPARED FOR THE STATE OF CALIFORNIA DEPARTMENT OF TRANSPORTATION

David Griffith
PROJECT ENGINEER

BRIDGE NO. 55-0218
POST MILES 4.8

ACACIA STREET UC (WIDEN)
GIRDER DETAILS No. 3

DESIGN DETAIL SHEET (ENGLISH) (REV.7/16/10)

ORIGINAL SCALE IN INCHES FOR REDUCED PLANS 0 1 2 3

UNIT: 2295
PROJECT NUMBER & PHASE: 12000000791
CONTRACT NO.: 12-0C5701

DISREGARD PRINTS BEARING EARLIER REVISION DATES

REVISION DATES: 03/15/12 03/16/11 12/20/11 2/22/12

SHEET 14 OF 30

FILE => 55-0218-1-gdt03.dgn

Filename: $FILE$ Date: $DATE$ Time: $TIME$

DIST	COUNTY	ROUTE	POST MILES TOTAL PROJECT	SHEET No.	TOTAL SHEETS
12	Ora	91	0.9/5.4	675	885

Jared Cole 3/15/12
REGISTERED CIVIL ENGINEER DATE

8-13-12
PLANS APPROVAL DATE

REGISTERED PROFESSIONAL ENGINEER
Jared A. Cole
No. C66188
Exp. 06/30/14
CIVIL
STATE OF CALIFORNIA

The State of California or its officers or agents shall not be responsible for the accuracy or completeness of scanned copies of this plan sheet.

ORANGE COUNTY TRANSPORTATION AUTHORITY
550 SOUTH MAIN STREET
ORANGE, CA 92868

T.Y. LIN INTERNATIONAL
3550 VINE STREET, SUITE 120
RIVERSIDE, CA 92507

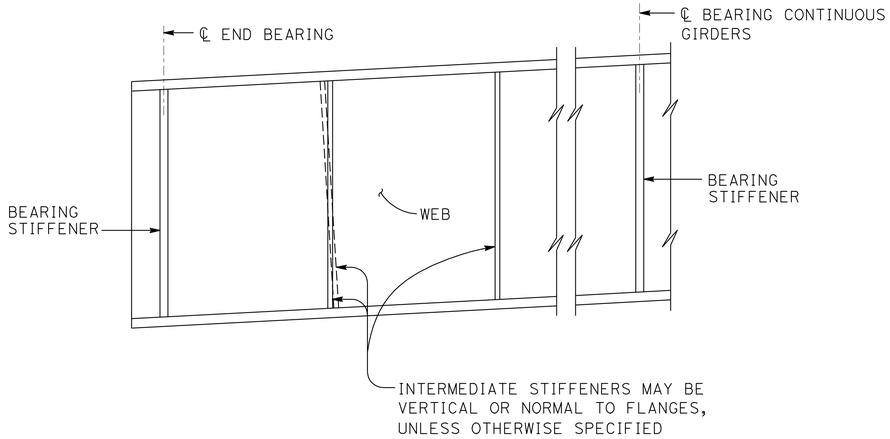

TRANSVERSE STIFFENERS

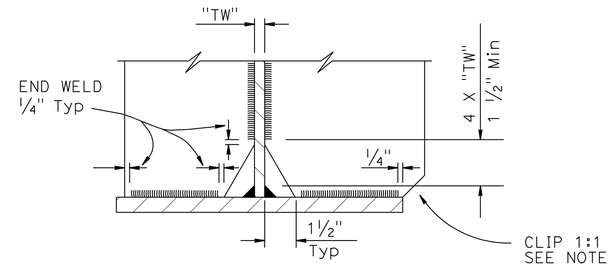

COPE AND WELDING DETAIL

NOTE: Omit clip at bottom flange when less than 2"

NOTES:

1. Under full dead load as shown on the camber diagram, girder ends and bearing stiffeners shall be vertical except they may be normal to grade for grades less than 2%
2. ◇2 For intermediate stiffeners which have Cross Frames or Diaphragms attached, see "STEEL GIRDER CONNECTION STIFFENER DETAILS" sheet
3. ◇2 For Bearing Stiffeners which have Cross Frames or Diaphragms attached, use details shown on this sheet.
   See Project Plan sheets for locations where bolted connection is required
4. For stiffener sizes see Project Plan sheets
5. Fillet Weld size to be minimum size from Project Specifications unless otherwise shown on Project Plan sheets

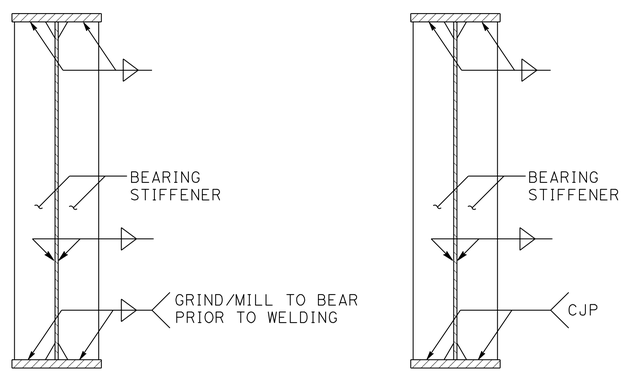

ALTERNATIVE 1 ALTERNATIVE 2

BEARING STIFFENERS

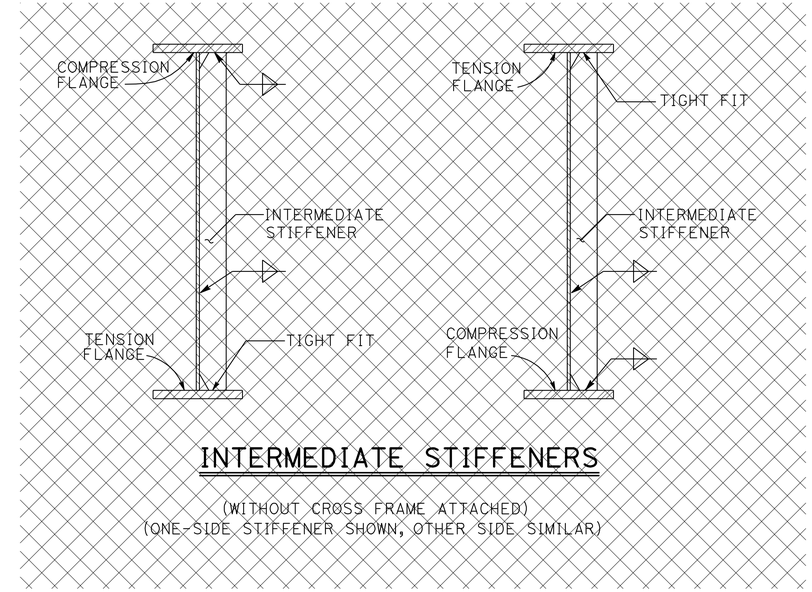

INTERMEDIATE STIFFENERS

(WITHOUT CROSS FRAME ATTACHED)
(ONE-SIDE STIFFENER SHOWN, OTHER SIDE SIMILAR)

◇1

NO SCALE

NOTE:
THE CONTRACTOR SHALL VERIFY ALL CONTROLLING FIELD DIMENSIONS BEFORE ORDERING OR FABRICATING ANY MATERIAL

REVISED STANDARD DRAWING

FILE NO. xs1-410-2

APPROVAL DATE July 2011

◇1 Deleted detail
◇2 Revised note

STATE OF CALIFORNIA
DEPARTMENT OF TRANSPORTATION

DIVISION OF ENGINEERING SERVICES

BRIDGE NO. 55-0218
POST MILE 4.8

ACACIA STREET UC (WIDEN)

STEEL GIRDER TRANSVERSE STIFFENER DETAILS

DS OSD 2147A (ENGLISH STANDARD DRAWING "XS" BORDER REV. (02-02-11)

ORIGINAL SCALE IN INCHES FOR REDUCED PLANS 0 1 2 3

UNIT: 2295
PROJECT NUMBER & PHASE: 12000000791
CONTRACT NO.: 12-0C5701

DISREGARD PRINTS BEARING EARLIER REVISION DATES

REVISION DATES: 3/15/12 09/26/11 12/22/11 2/17/12

SHEET 15 OF 30

FILE => 55-0218-1-gdt04.dgn

USERNAME => s12614 DATE PLOTTED => 17-AUG-2012 TIME PLOTTED => 05:58

DIST	COUNTY	ROUTE	POST MILES TOTAL PROJECT	SHEET No.	TOTAL SHEETS
12	Ora	91	0.9/5.4	676	885

Jared Cole 3/15/12
REGISTERED CIVIL ENGINEER DATE

8-13-12
PLANS APPROVAL DATE

REGISTERED PROFESSIONAL ENGINEER
Jared A. Cole
No. C66188
Exp. 06/30/14
CIVIL
STATE OF CALIFORNIA

The State of California or its officers or agents shall not be responsible for the accuracy or completeness of scanned copies of this plan sheet.

ORANGE COUNTY TRANSPORTATION AUTHORITY
550 SOUTH MAIN STREET
ORANGE, CA 92868

T.Y. LIN INTERNATIONAL
3550 VINE STREET, SUITE 120
RIVERSIDE, CA 92507

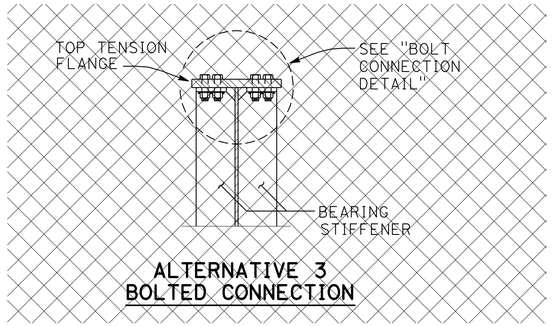

ALTERNATIVE 3
BOLTED CONNECTION

1

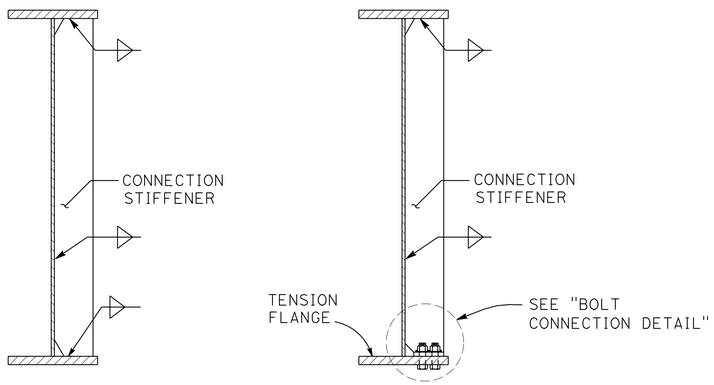

ALTERNATIVE 1
WELDED CONNECTION

ALTERNATIVE 2
BOLTED CONNECTION

CONNECTION STIFFENER

CROSS FRAME OR DIAPHRAGM NOT SHOWN
(ONE-SIDE STIFFENER SHOWN, OTHER SIDE SIMILAR)

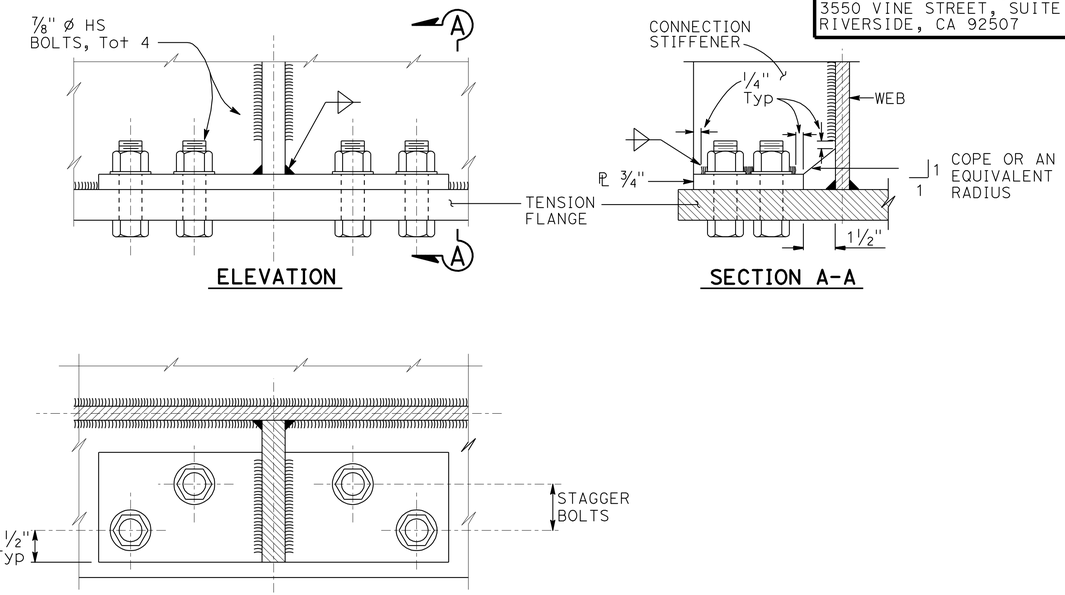

ELEVATION

SECTION A-A

PLAN VIEW

BOLT CONNECTION DETAIL

FOR 3/4" PLATE:
WIDTH TO BE AS DRAWN.
LENGTH TO BE MINIMUM TO PROVIDE FOR INSTALLATION CLEARANCE AND 2 5/8" C-C BETWEEN ADJACENT BOLTS.

NOTES:

1. For stiffener sizes see Project Plan sheets.
2. Fillet Weld size to be minimum size from Project Specifications unless otherwise shown on Project Plan sheets.
3. See Project Plan sheets for locations where where bolted connection is required.

NOTE:
THE CONTRACTOR SHALL VERIFY ALL CONTROLLING FIELD DIMENSIONS BEFORE ORDERING OR FABRICATING ANY MATERIAL

NO SCALE

STANDARD DRAWING
FILE NO. xs1-410-3
APPROVAL DATE July 2011

1 Deleted detail

STATE OF CALIFORNIA
DEPARTMENT OF TRANSPORTATION

DIVISION OF ENGINEERING SERVICES

BRIDGE NO. 55-0218
POST MILE 4.8

ACACIA STREET UC (WIDEN)
STEEL GIRDER CONNECTION STIFFENER DETAILS

DS OSD 2147A (ENGLISH STANDARD DRAWING "XS" BORDER REV. (02-02-11)

ORIGINAL SCALE IN INCHES FOR REDUCED PLANS 0 1 2 3

UNIT: 2295
PROJECT NUMBER & PHASE: 12000000791
CONTRACT NO.: 12-0C5701

DISREGARD PRINTS BEARING EARLIER REVISION DATES
REVISION DATES 3/15/12 09/26/11 12/20/11 2/12/12
SHEET 16 OF 30

FILE => 55-0218-1-gdt05.dgn

USERNAME => s12614 DATE PLOTTED => 17-AUG-2012 TIME PLOTTED => 05:58

DIST	COUNTY	ROUTE	POST MILES TOTAL PROJECT	SHEET No.	TOTAL SHEETS
12	Ora	91	0.9/5.4	677	885

REGISTERED CIVIL ENGINEER — DATE 3/15/12

8-13-12
PLANS APPROVAL DATE

The State of California or its officers or agents shall not be responsible for the accuracy or completeness of scanned copies of this plan sheet.

REGISTERED PROFESSIONAL ENGINEER — Jared A. Cole — No. C66188 — Exp. 06/30/14 — CIVIL — STATE OF CALIFORNIA

ORANGE COUNTY TRANSPORTATION AUTHORITY
550 SOUTH MAIN STREET
ORANGE, CA 92868

T.Y. LIN INTERNATIONAL
3550 VINE STREET, SUITE 120
RIVERSIDE, CA 92507

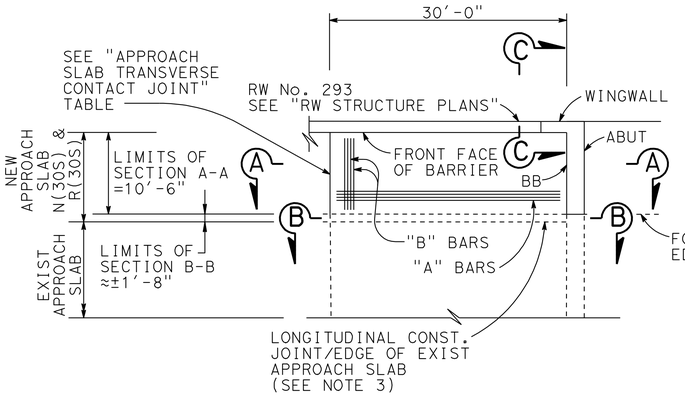

ABUT 1 PLAN 1 2

1" = 10'

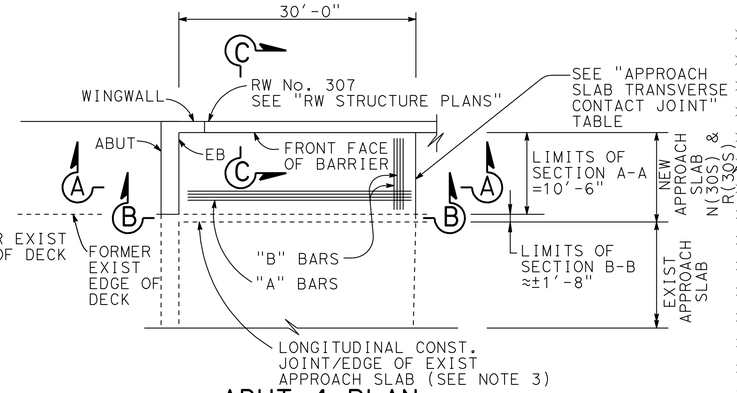

ABUT 4 PLAN 1 2

1" = 10'

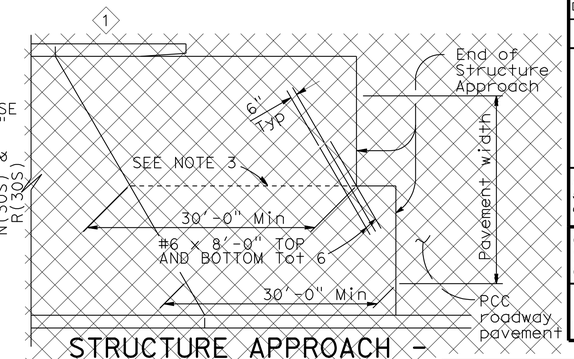

STRUCTURE APPROACH - END STAGGER DETAIL

No Scale

APPROACH SLAB TRANSVERSE CONTACT JOINT		
APPROACH SKEW	WITH AC ROADWAY PAVEMENT	WITH PCC ROADWAY PAVEMENT
< 20°	PARALLEL TO FACE OF PN	PARALLEL TO FACE OF PN
20° - 45°	PARALLEL TO FACE OF PN USE "DETAIL A"	STAGGER LINES 24" TO 36" APART
> 45°	PARALLEL TO FACE OF PN USE "DETAIL A"	STAGGER AT EACH LANE LINE

1

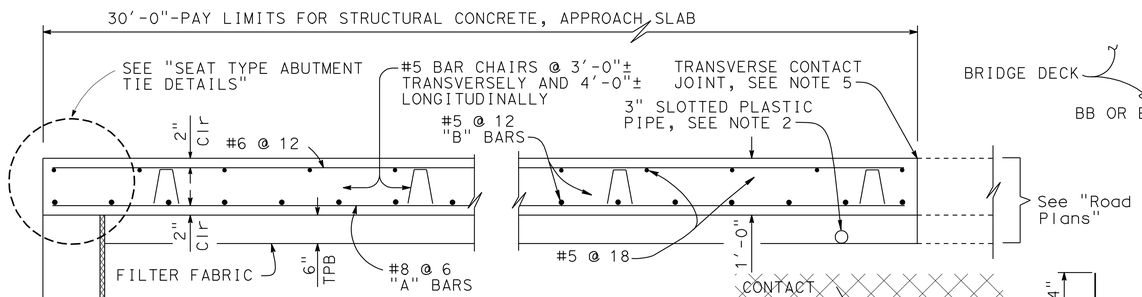

SECTION A-A

¾"=1'-0"

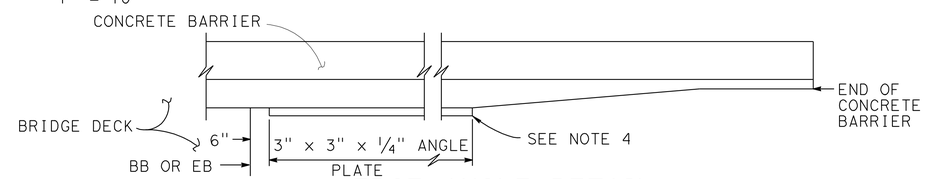

EDGE ANGLE DETAIL

½"=1'-0"

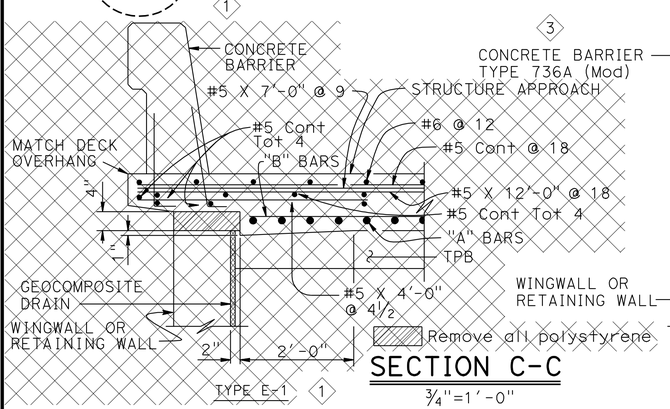

SECTION C-C

¾"=1'-0"

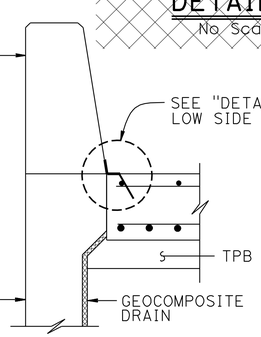

(Type E-1 to be used, unless otherwise shown on plans)

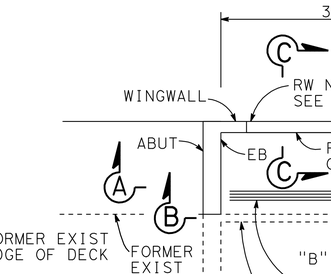

DETAIL A

No Scale

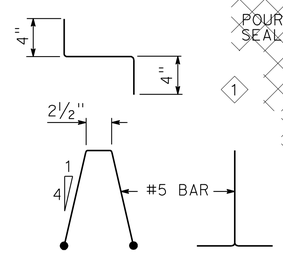

BAR CHAIR DETAIL

1½"=1'-0"

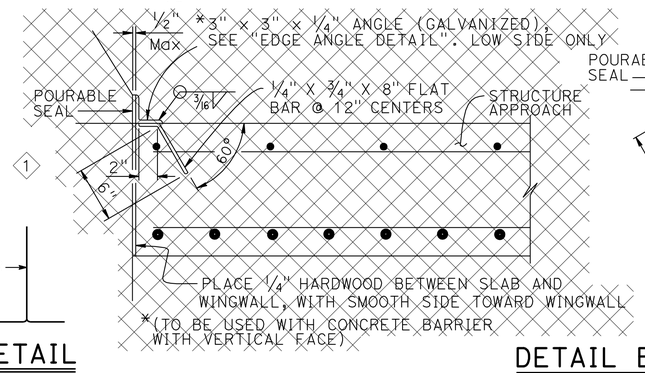

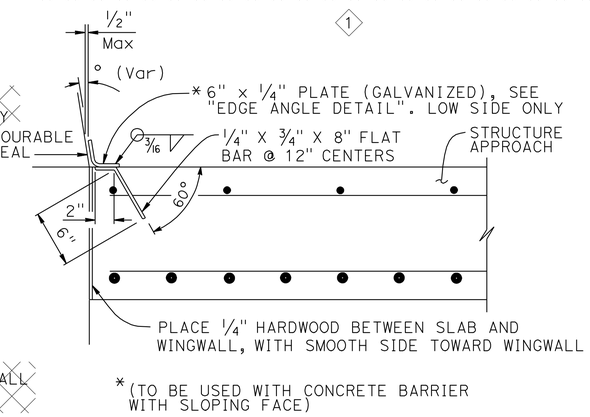

DETAIL B

1½" = 1'-0"

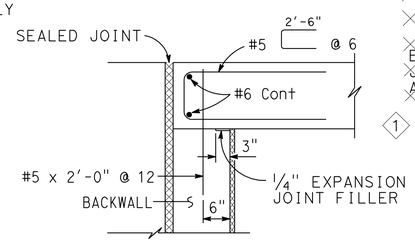

MR ≤ 2"

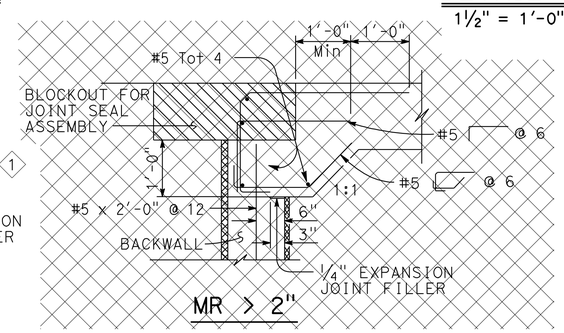

MR > 2"

SEAT TYPE ABUTMENT TIE DETAILS (SEE NOTE 1)

¾"=1'-0"

NOTES:

1. For details not shown, see Structure Plans. For MR ≤ 2", adjust bar reinforcement to clear a sawcut for sealed joint, when required
2. For drainage details, see "STRUCTURE APPROACH DRAINAGE DETAILS" sheet
3. Longitudinal construction joints, when permitted by the Engineer, shall be located on lane lines
4. End angle or plate at beginning of barrier transition, end of wingwall or end of structure approach as applicable
5. 3 For transverse contact joint with new PCC paving, refer to Revised Standard Plan P10
6. At the Contractor's option, approach slab transverse reinforcement may be placed parallel to paving notch. Spacing of transverse reinforcement is measured along ℄ roadway
7. 2 For Section B-B, see "Structure Approach Type R(30S)" sheet

NOTE:
THE CONTRACTOR SHALL VERIFY ALL CONTROLLING FIELD DIMENSIONS BEFORE ORDERING OR FABRICATING ANY MATERIAL.

REVISED STANDARD DRAWING

FILE NO. xs3-120

APPROVAL DATE July 2011

1 Deleted Detail or Note
2 Added Detail or Note
3 Modified Detail or Note

STATE OF CALIFORNIA
DEPARTMENT OF TRANSPORTATION

DIVISION OF ENGINEERING SERVICES

BRIDGE NO. 55-0218
POST MILE 4.8

ACACIA STREET UC (WIDEN)
STRUCTURE APPROACH TYPE N(30S)

DS OSD 2147A (ENGLISH STANDARD DRAWING "XS" BORDER REV. (02-02-11)

ORIGINAL SCALE IN INCHES FOR REDUCED PLANS 0 1 2 3

UNIT: 2295
PROJECT NUMBER & PHASE: 12000000791
CONTRACT NO.: 12-0C5701

DISREGARD PRINTS BEARING EARLIER REVISION DATES

REVISION DATES: 3/15/12 09/18/11 12/22/11 2/21/12

SHEET 17 OF 30

FILE => 55-0218-s-sadd01.dgn

USERNAME => s121614 DATE PLOTTED => 17-AUG-2012 TIME PLOTTED => 05:59

DIST	COUNTY	ROUTE	POST MILES TOTAL PROJECT	SHEET No.	TOTAL SHEETS
12	Ora	91	0.9/5.4	678	885

REGISTERED CIVIL ENGINEER 3/15/12 DATE

8-13-12
PLANS APPROVAL DATE

The State of California or its officers or agents shall not be responsible for the accuracy or completeness of scanned copies of this plan sheet.

REGISTERED PROFESSIONAL ENGINEER Jared A. Cole No. C66188 Exp. 06/30/14 CIVIL STATE OF CALIFORNIA

ORANGE COUNTY TRANSPORTATION AUTHORITY
550 SOUTH MAIN STREET
ORANGE, CA 92868

T.Y. LIN INTERNATIONAL
3550 VINE STREET, SUITE 120
RIVERSIDE, CA 92507

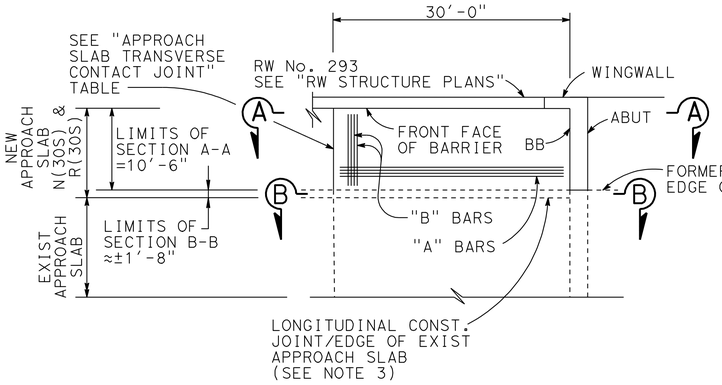

ABUT 1 PLAN 1 2

1" = 10'

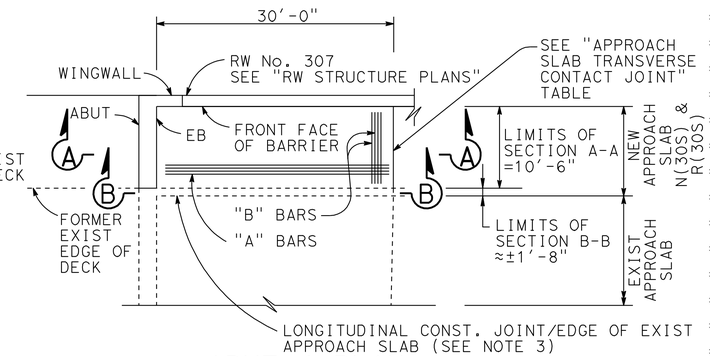

ABUT 4 PLAN 1 2

1" = 10'

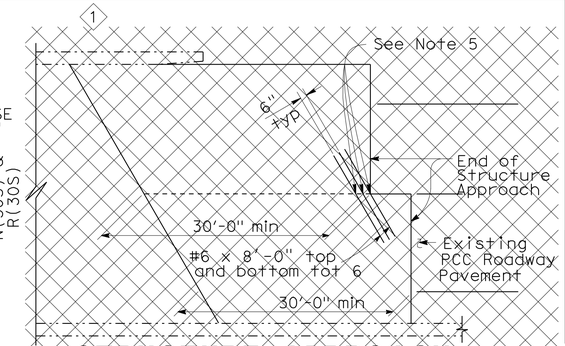

STRUCTURE APPROACH - END STAGGER DETAIL

No Scale

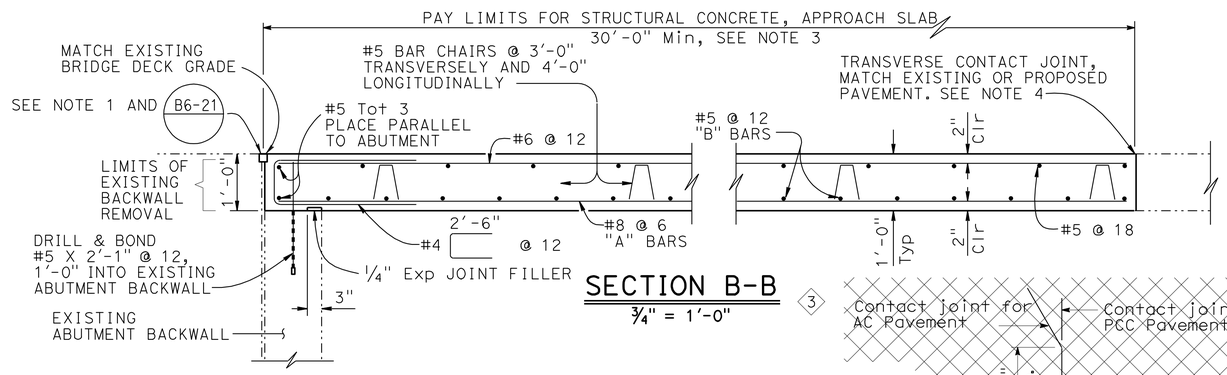

SECTION B-B 3

3/4" = 1'-0"

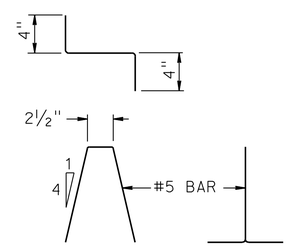

BAR CHAIR DETAIL

1 1/2" = 1'-0"

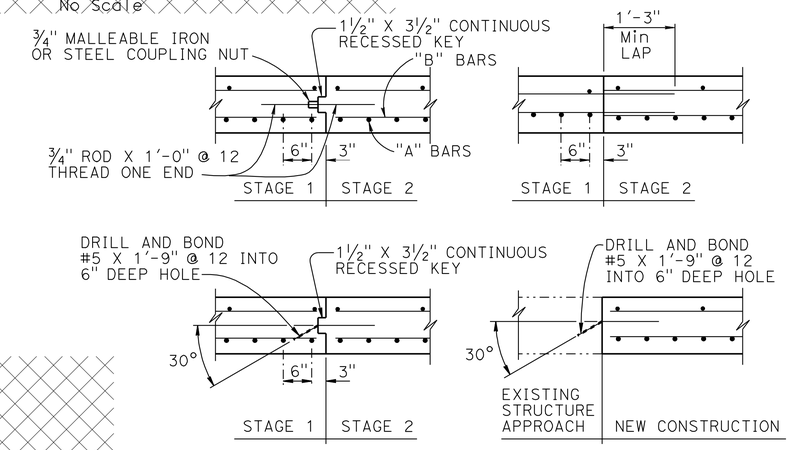

LONGITUDINAL CONSTRUCTION JOINT ALTERNATIVES

3/4" = 1'-0"

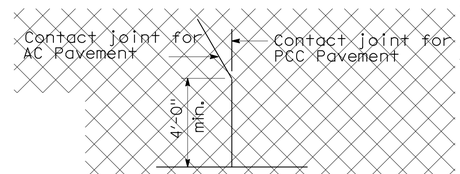

DETAIL A 1

No Scale

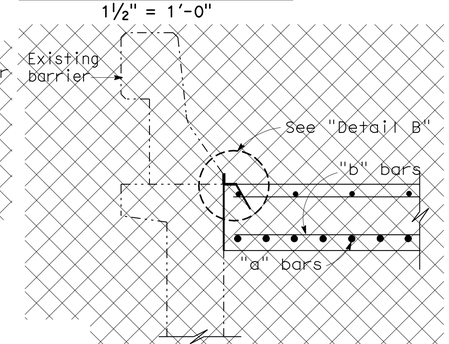

SECTION C-C 1

3/4"=1'-0"

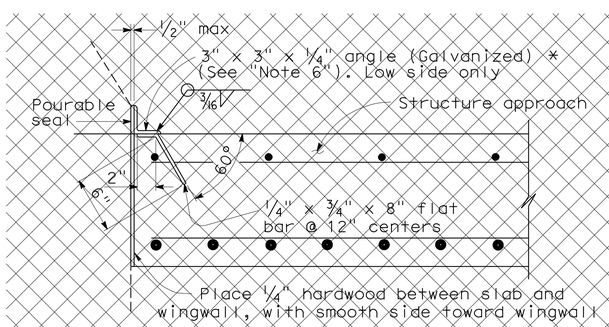

*(TO BE USED WITH TYPE 25 OR TYPE 27 CONCRETE BARRIER)

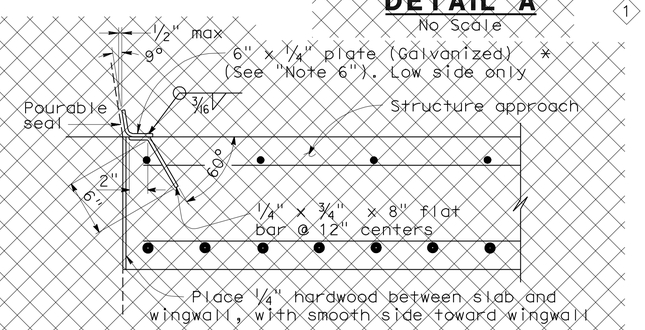

*(TO BE USED WITH TYPE 732 OR TYPE 736 CONCRETE BARRIER)

DETAIL B

1 1/2"=1'-0" 1

APPROACH SLAB TRANSVERSE CONTACT JOINT		
APPROACH SKEW	WITH AC ROADWAY PAVEMENT	WITH PCC ROADWAY PAVEMENT
< 10°	PARALLEL TO FACE OF PN	PARALLEL TO FACE OF PN
10°- 45°	Parallel to face of P N use (Detail A)	Stagger lines 24' to 36' apart
> 45°	Parallel to face of P N use (Detail A)	Stagger at each lane line

1

NOTES:

1. Sealed joint,for MR see Structure Plans. Adjust bar reinforcement to clear a sawcut for sealed joint, when required
2. Longitudinal construction joints, when permitted by Engineer, shall be located on lane lines
3. Transverse contact joint shall be a minimum of 5'-0" from an existing or constructed weakened plane joint
4. (4) For transverse contact joint with new PCC paving, refer to Revised Standard Plan P10
5. (1) Couplers are required for stage construction.
6. (1) End angle or plate at beginning of barrier transition, end of wingwall or end of structure approach as applicable.
5. (2) For Section A-A, see "Structure Approach Type N(30S)" sheet

NOTE:
THE CONTRACTOR SHALL VERIFY ALL CONTROLLING FIELD DIMENSIONS BEFORE ORDERING OR FABRICATING ANY MATERIAL.

REVISED STANDARD DRAWING

FILE NO. xs3-130

APPROVAL DATE July 2011

1 Deleted Detail or Note
2 Added Detail or Note
3 Modified Detail
4 Modified Note

STATE OF CALIFORNIA
DEPARTMENT OF TRANSPORTATION

DIVISION OF ENGINEERING SERVICES

BRIDGE NO. 55-0218
POST MILE 4.8

ACACIA STREET UC (WIDEN)
STRUCTURE APPROACH TYPE R(30S)

DS OSD 2147A (ENGLISH STANDARD DRAWING "XS" BORDER REV. (02-02-11)

ORIGINAL SCALE IN INCHES FOR REDUCED PLANS 0 1 2 3

UNIT: 2295
PROJECT NUMBER & PHASE: 12000000791
CONTRACT NO.: 12-0C5701

DISREGARD PRINTS BEARING EARLIER REVISION DATES

REVISION DATES 3/15/12 09/06/11 12/20/11 2/22/12 SHEET 18 OF 30

FILE => 55-0218-s-sadd02.dgn

USERNAME => s121614 DATE PLOTTED => 17-AUG-2012 TIME PLOTTED => 05:59

DIST	COUNTY	ROUTE	POST MILES TOTAL PROJECT	SHEET No.	TOTAL SHEETS
12	Ora	91	0.9/5.4	679	885

Jared Cole 3/15/12
REGISTERED CIVIL ENGINEER DATE

8-13-12
PLANS APPROVAL DATE

REGISTERED PROFESSIONAL ENGINEER Jared A. Cole No. C66188 Exp. 06/30/14 CIVIL STATE OF CALIFORNIA

The State of California or its officers or agents shall not be responsible for the accuracy or completeness of scanned copies of this plan sheet.

ORANGE COUNTY TRANSPORTATION AUTHORITY
550 SOUTH MAIN STREET
ORANGE, CA 92868

T.Y. LIN INTERNATIONAL
3550 VINE STREET, SUITE 120
RIVERSIDE, CA 92507

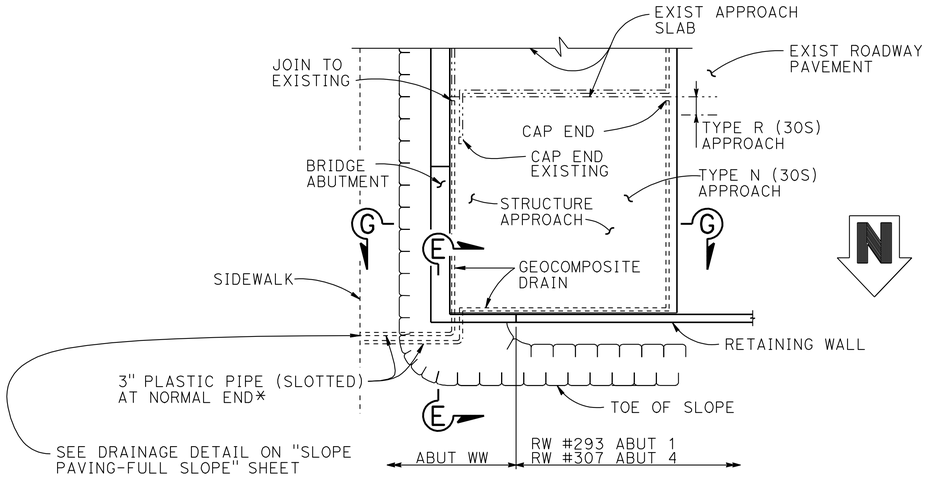

TYPICAL PLAN

1" = 10′ (3) ABUT 1 SHOWN, ABUT 4 SIMILAR

* FOR PIPE LAYOUT AT STAGGERED END, SEE "DETAIL B"

(1)

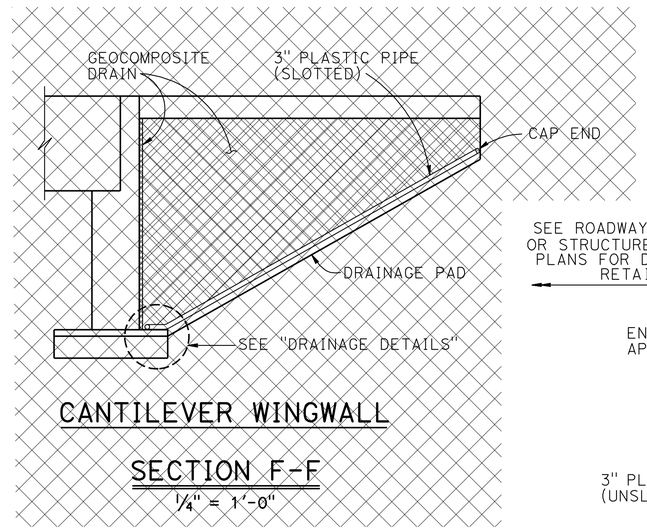

CANTILEVER WINGWALL

SECTION F-F

¼" = 1′-0"

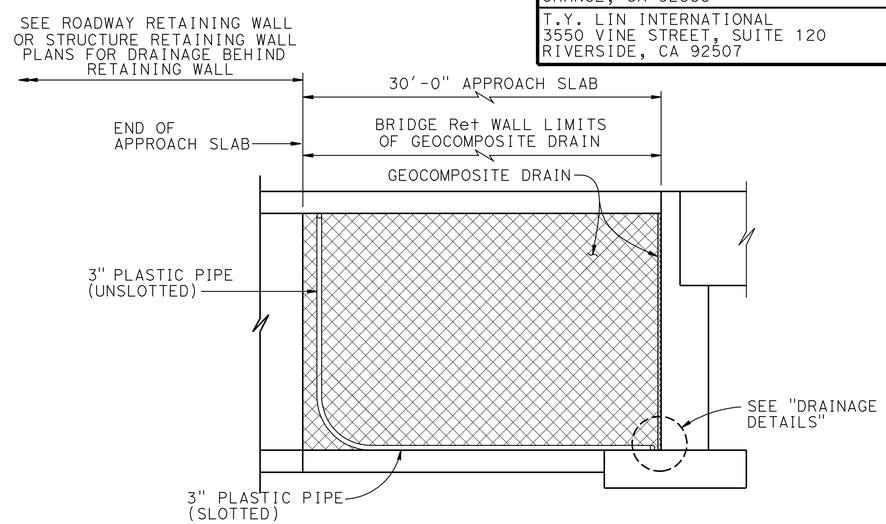

RETAINING WALL WINGWALL DRAINAGE DETAILS

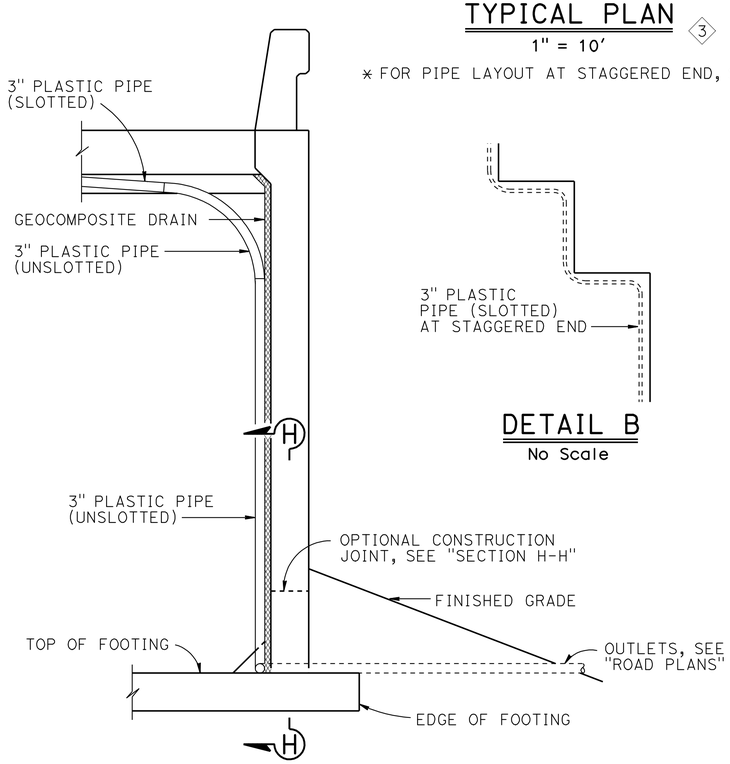

SECTION E-E

½" = 1′-0" (3)

NOTE: Bends and junctions in 3" plastic pipe are 30" radius Min

DETAIL B

No Scale

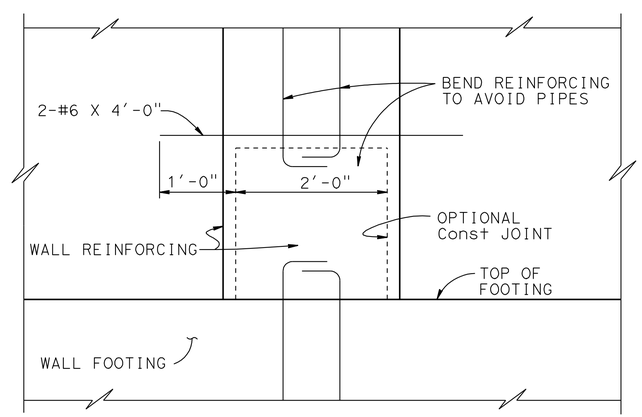

SECTION H-H

1" = 1′-0"

(1)

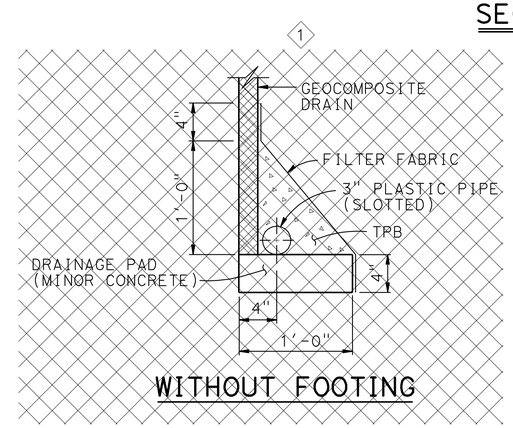

WITHOUT FOOTING

SECTION G-G

¼" = 1′-0" (3)

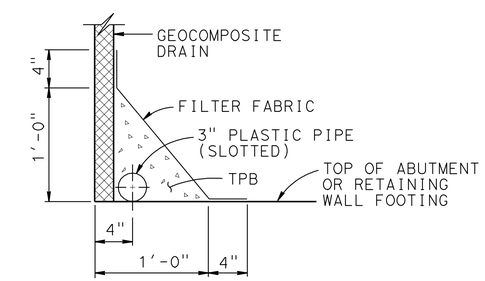

WITH FOOTING

DRAINAGE DETAILS

1½" = 1′-0"

NOTE:
THE CONTRACTOR SHALL VERIFY ALL CONTROLLING FIELD DIMENSIONS BEFORE ORDERING OR FABRICATING ANY MATERIAL.

REVISED STANDARD DRAWING

FILE NO. xs3-110

APPROVAL DATE July 2011

(1) Deleted Detail or Note
(2) Added Detail or Note
(3) Modified Detail or Note

STATE OF CALIFORNIA
DEPARTMENT OF TRANSPORTATION

DIVISION OF ENGINEERING SERVICES

BRIDGE NO. 55-0218
POST MILE 4.8

ACACIA STREET UC (WIDEN)

STRUCTURE APPROACH DRAINAGE DETAILS

DS OSD 2147A (ENGLISH STANDARD DRAWING "XS" BORDER REV. (02-02-11)

ORIGINAL SCALE IN INCHES FOR REDUCED PLANS 0 1 2 3

UNIT: 2295
PROJECT NUMBER & PHASE: 12000000791
CONTRACT NO.: 12-0C5701

DISREGARD PRINTS BEARING EARLIER REVISION DATES

REVISION DATES: 3/15/12 09/16/11 12/20/11 2/17/12

SHEET 19 OF 30

FILE => 55-0218-s-sadd03.dgn

USERNAME => s126614 DATE PLOTTED => 17-AUG-2012 TIME PLOTTED => 05:59

DIST	COUNTY	ROUTE	POST MILES TOTAL PROJECT	SHEET No.	TOTAL SHEETS
12	Ora	91	0.9/5.4	680	885

REGISTERED CIVIL ENGINEER 3/15/12 DATE

8-13-12
PLANS APPROVAL DATE

The State of California or its officers or agents shall not be responsible for the accuracy or completeness of scanned copies of this plan sheet.

REGISTERED PROFESSIONAL ENGINEER Jared A. Cole No. C66188 Exp. 06/30/14 CIVIL STATE OF CALIFORNIA

ORANGE COUNTY TRANSPORTATION AUTHORITY
550 SOUTH MAIN STREET
ORANGE, CA 92868

T.Y. LIN INTERNATIONAL
3550 VINE STREET, SUITE 120
RIVERSIDE, CA 92507

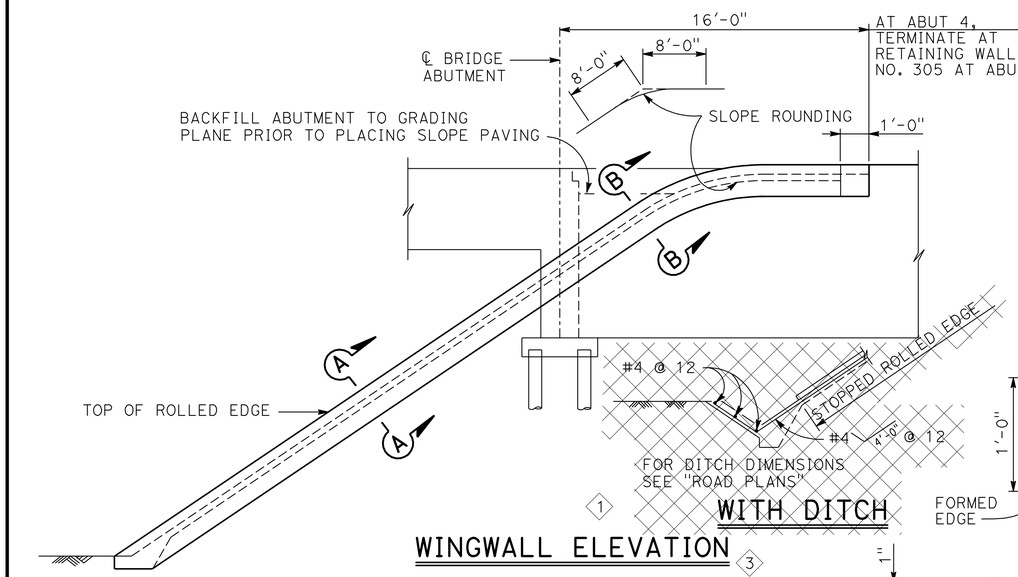

WINGWALL ELEVATION 3

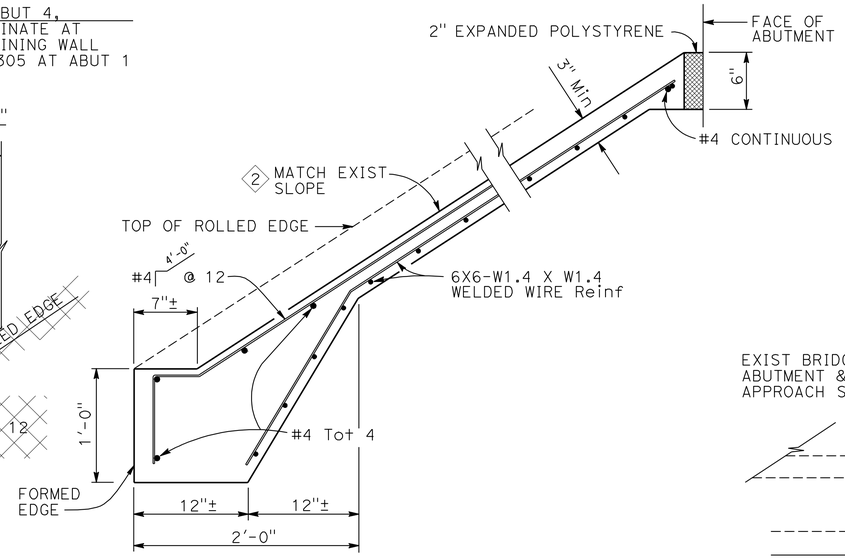

TYPICAL SECTION - CONCRETE PAVING

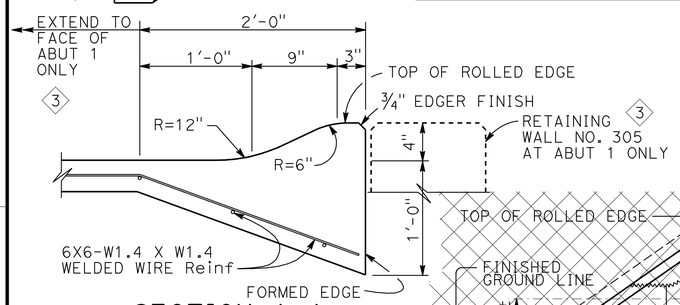

SECTION A-A

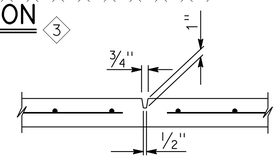

PREFORMED GROOVE

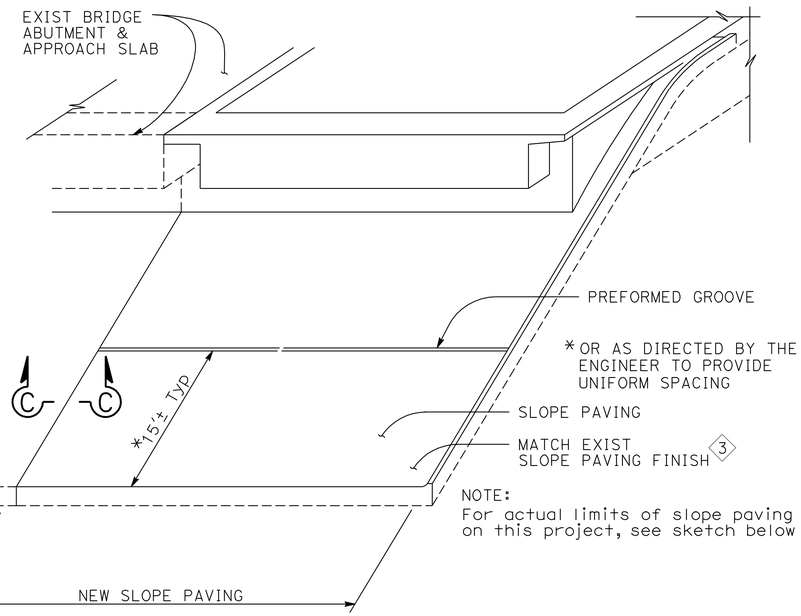

PICTORIAL VIEW OF TYPICAL INSTALLATION 3

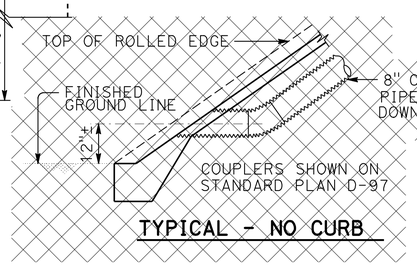

TYPICAL - NO CURB

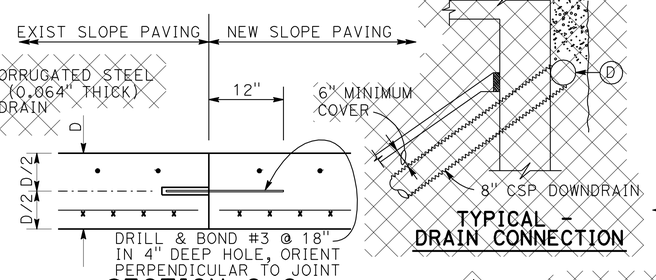

SECTION C-C 2

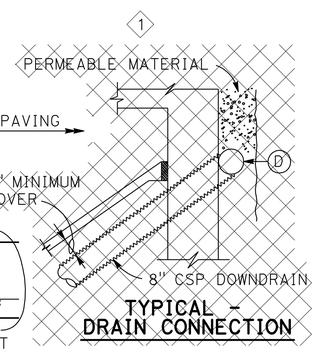

TYPICAL - DRAIN CONNECTION

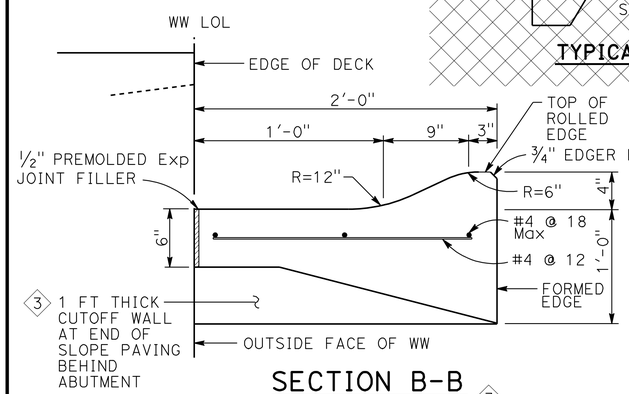

SECTION B-B 3

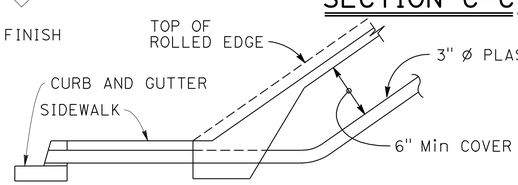

TYPICAL - WITH SIDEWALK 3

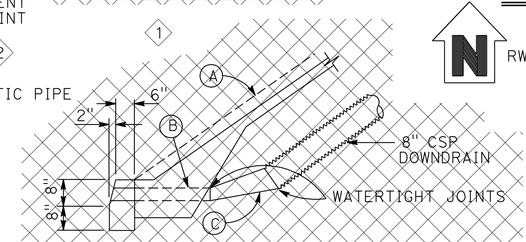

TYPICAL - WITH CURB

DRAINAGE DETAILS

NOTE: SAWCUT EXISTING SIDEWALK AND CURB TO PLACE DRAIN PIPE. REPLACE SIDEWALK AND CURB IN KIND.

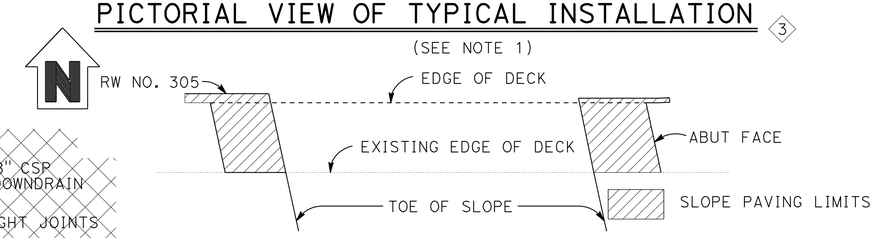

LIMITS OF SLOPE PAVING & DRAINAGE LAYOUT 2

NOTES:
1. See "Bridge Removal Details" sheet for limits of existing slope paving removal.

(A) Top of rolled edge

(B) Conduit: 0.064" galv corrugated steel or 0.109" smooth galv steel

(C) Taper: 0.064" galv corrugated steel or 0.109" smooth galv steel

(D) 8" perforated steel pipe (0.064" thick) underdrain behind abutment. Connect to downdrain as shown on limits of Slope Paving & Drainage layout.

NOTE:
THE CONTRACTOR SHALL VERIFY ALL CONTROLLING FIELD DIMENSIONS BEFORE ORDERING OR FABRICATING ANY MATERIAL.

REVISED STANDARD DRAWING

FILE NO. xs4-210

APPROVAL DATE July 2011

1 Deleted Detail
2 Added Detail or Note
3 Modified Detail or Note

STATE OF CALIFORNIA
DEPARTMENT OF TRANSPORTATION

DIVISION OF ENGINEERING SERVICES

BRIDGE NO. 55-0218
POST MILE 4.8

ACACIA STREET UC (WIDEN)
SLOPE PAVING-FULL SLOPE

DS OSD 2147A (ENGLISH STANDARD DRAWING "XS" BORDER REV. (02-02-11)

ORIGINAL SCALE IN INCHES FOR REDUCED PLANS 0 1 2 3

UNIT: 2295
PROJECT NUMBER & PHASE: 12000000791
CONTRACT NO.: 12-0C5701

DISREGARD PRINTS BEARING EARLIER REVISION DATES

REVISION DATES 3/15/12 09/14/11 12/20/11 2/12/12

SHEET 20 OF 30

FILE => 55-0218-s-slpa01.dgn

USERNAME => s12161d DATE PLOTTED => 17-AUG-2012 TIME PLOTTED => 05:59

DIST	COUNTY	ROUTE	POST MILES TOTAL PROJECT	SHEET No	TOTAL SHEETS
12	Ora	91	0.9/5.4	681	885

REGISTERED CIVIL ENGINEER — DATE 3/15/12

8-13-12
PLANS APPROVAL DATE

REGISTERED PROFESSIONAL ENGINEER — Jared A. Cole — No. C66188 — Exp. 06/30/14 — CIVIL — STATE OF CALIFORNIA

The State of California or its officers or agents shall not be responsible for the accuracy or completeness of scanned copies of this plan sheet.

ORANGE COUNTY TRANSPORTATION AUTHORITY
550 SOUTH MAIN STREET
ORANGE, CA 92868

T.Y. LIN INTERNATIONAL
3550 VINE STREET, SUITE 120
RIVERSIDE, CA 92507

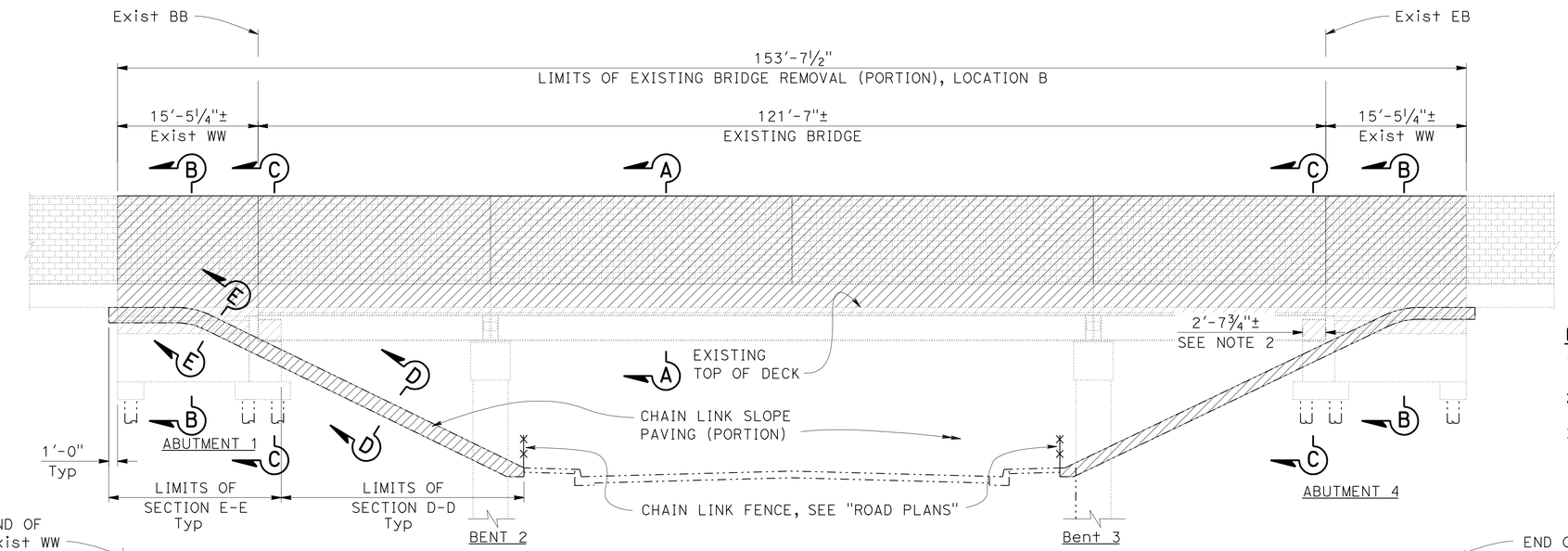

MIRRORED ELEVATION OF EXISTING BRIDGE

⅛"=1'-0"

NOTES:

1. Remove existing soundwall, barrier, and bridge deck (portion); retain existing transverse reinforcement at bridge deck.
2. Remove existing abutment exterior shear key and existing reinforcement at seat level.
3. Remove 3'-0"± of existing wingwall and existing wingwall reinforcement.

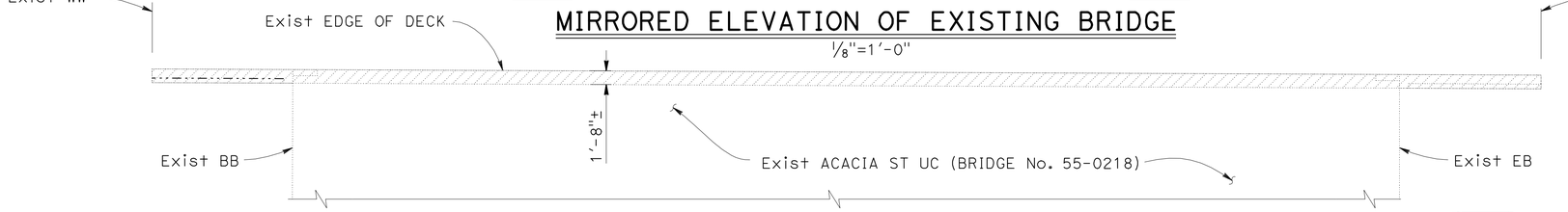

PLAN

⅛"=1'-0"

LEGEND:

- - Indicates Existing Structure

▨ - Indicates Bridge Removal (Portion), Location B

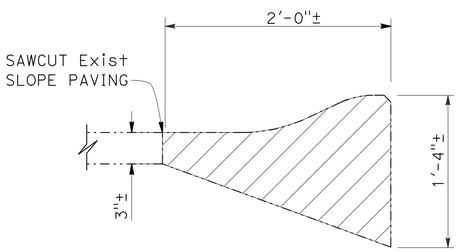

SECTION D-D

NO SCALE

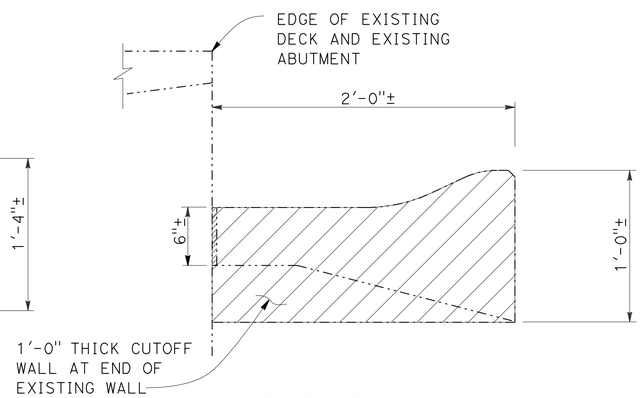

SECTION E-E

No Scale

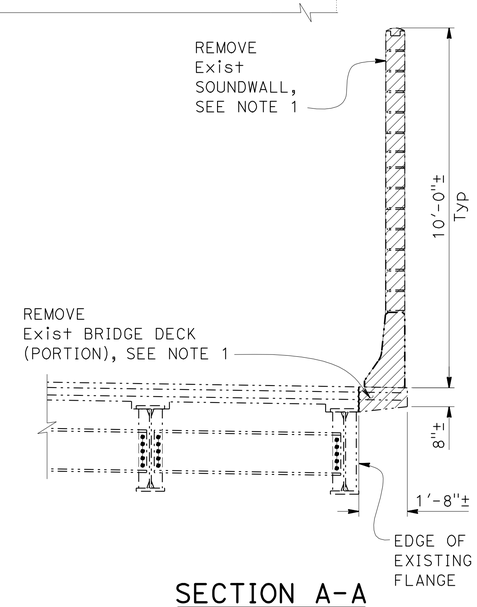

SECTION A-A

⅜"=1'-0"

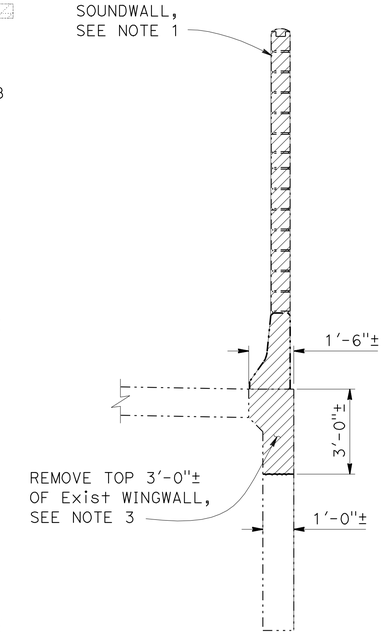

SECTION B-B

⅜"=1'-0"

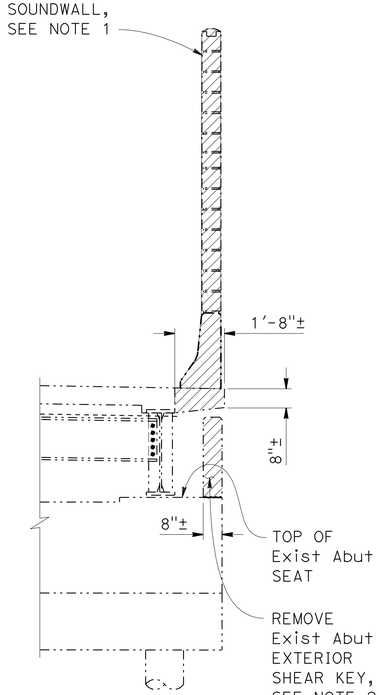

SECTION C-C

⅜"=1'-0"

NOTE:
THE CONTRACTOR SHALL VERIFY ALL CONTROLLING FIELD DIMENSIONS BEFORE ORDERING OR FABRICATING ANY MATERIAL

DESIGN OVERSIGHT Luqi Yang	DESIGN	BY Jared Cole	CHECKED Roya Golchoobian
3-29-12 SIGN OFF DATE	DETAILS	BY Oscar Colcol	CHECKED Roya Golchoobian
	QUANTITIES	BY Sabina Piras	CHECKED Tim Fuller

PREPARED FOR THE STATE OF CALIFORNIA DEPARTMENT OF TRANSPORTATION

David Griffith
PROJECT ENGINEER

BRIDGE NO. 55-0218
POST MILES 4.8

ACACIA STREET UC (WIDEN)
BRIDGE REMOVAL PLAN

DESIGN DETAIL SHEET (ENGLISH) (REV.7/16/10)

ORIGINAL SCALE IN INCHES FOR REDUCED PLANS 0 1 2 3

UNIT: 2295
PROJECT NUMBER & PHASE: 12000000791 CONTRACT NO.: 12-0C5701

DISREGARD PRINTS BEARING EARLIER REVISION DATES

REVISION DATES: 03/15/12 09/16/11 12/20/11 2/13/12

SHEET 21 OF 30

FILE => 55-0218-u-miscdt01.dgn

Time: $TIME$ Date: $DATE$ $FILE$ Filename:

DIST	COUNTY	ROUTE	POST MILES TOTAL PROJECT	SHEET No	TOTAL SHEETS
12	Ora	91	0.9/5.4	682	885

REGISTERED CIVIL ENGINEER — DATE 7/30/12

8-13-12
PLANS APPROVAL DATE

REGISTERED PROFESSIONAL ENGINEER — Jared A. Cole — No. C66188 — Exp. 06/30/14 — CIVIL — STATE OF CALIFORNIA

The State of California or its officers or agents shall not be responsible for the accuracy or completeness of scanned copies of this plan sheet.

ORANGE COUNTY TRANSPORTATION AUTHORITY
550 SOUTH MAIN STREET
ORANGE, CA 92868

T.Y. LIN INTERNATIONAL
3550 VINE STREET, SUITE 120
RIVERSIDE, CA 92507

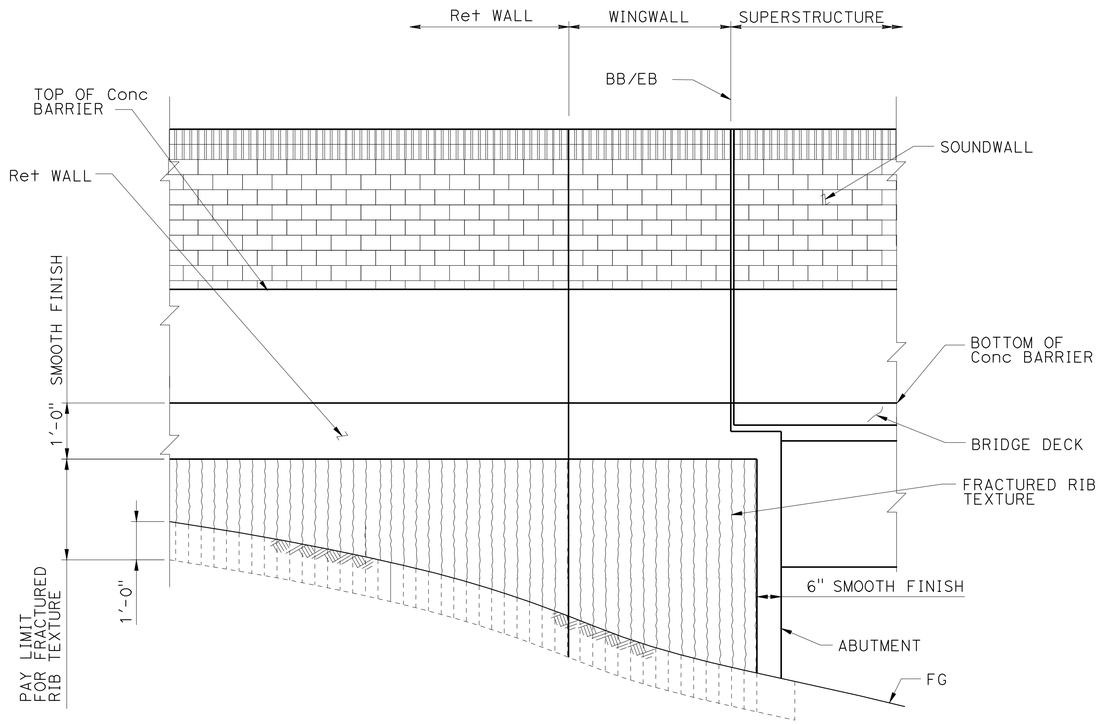

ELEVATION
NO SCALE

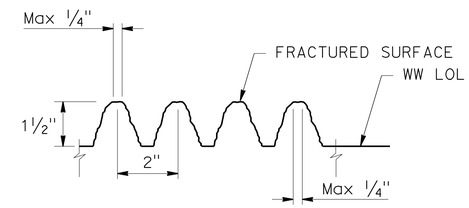

FRACTURED RIB TEXTURE 1-1/2" (PROJECTING)
NO SCALE

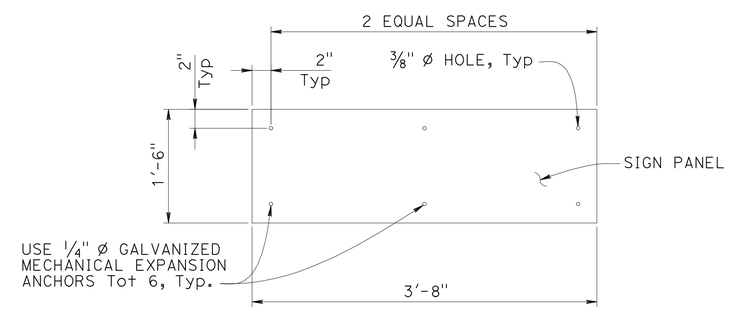

BRIDGE INFORMATION SIGN
NO SCALE

Note: For location of Bridge Information Sign, see "GENERAL PLAN" sheet and "SIGN PLANS"

NOTE:
THE CONTRACTOR SHALL VERIFY ALL CONTROLLING FIELD DIMENSIONS BEFORE ORDERING OR FABRICATING ANY MATERIAL

DESIGN OVERSIGHT — Luqi Yang
8-6-12
SIGN OFF DATE

	BY	CHECKED
DESIGN	Jared Cole	Roya Golchoobian
DETAILS	Oscar Colcol	Roya Golchoobian
QUANTITIES	Sabina Piras	Tim Fuller

PREPARED FOR THE STATE OF CALIFORNIA DEPARTMENT OF TRANSPORTATION

David Griffith
PROJECT ENGINEER

BRIDGE NO. 55-0218
POST MILES 4.8

ACACIA STREET UC (WIDEN)
MISCELLANEOUS DETAILS

DESIGN DETAIL SHEET (ENGLISH) (REV.7/16/10)

ORIGINAL SCALE IN INCHES FOR REDUCED PLANS 0 1 2 3

UNIT: 2295
PROJECT NUMBER & PHASE: 12000000791
CONTRACT NO.: 12-0C5701

DISREGARD PRINTS BEARING EARLIER REVISION DATES → REVISION DATES 01/25/12 01/30/12 12/22/11 2/13/12

SHEET 22 OF 30

FILE => 55-0218-u-miscdt03.dgn

Filename: $FILE$ Date: $DATE$ Time: $TIME$

DIST	COUNTY	ROUTE	POST MILES TOTAL PROJECT	SHEET No	TOTAL SHEETS
12	Ora	91	0.9/5.4	683	885

REGISTERED CIVIL ENGINEER 3/15/12 DATE

8-13-12
PLANS APPROVAL DATE

REGISTERED PROFESSIONAL ENGINEER Christopher Cho No. C74020 Exp. 06/30/13 CIVIL STATE OF CALIFORNIA

The State of California or its officers or agents shall not be responsible for the accuracy or completeness of scanned copies of this plan sheet.

OCTA
550 S MAIN STREET
ORANGE, CA 92868

RBF CONSULTING
14725 ALTON PARKWAY
IRVINE, CA 92677

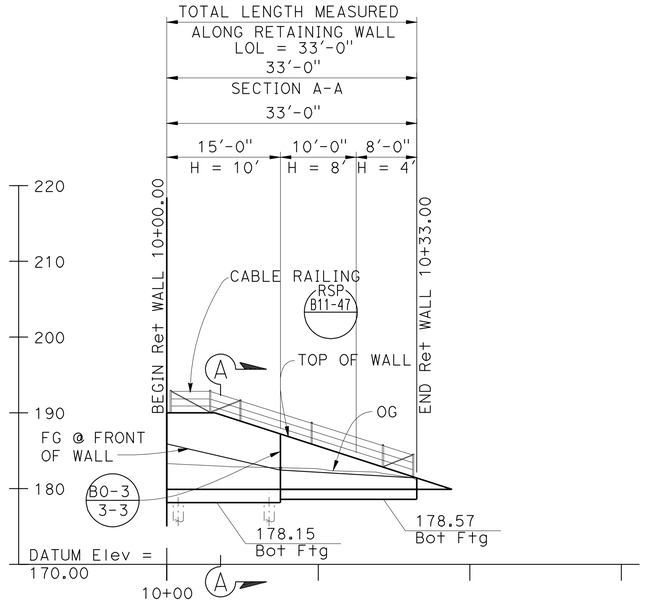

MIRRORED ELEVATION

SCALE: 1" = 10'

TOP OF WALL ELEVATION TABLE

WALL LOL STATION	TOP OF WALL Elev
10+00.00	190.00
+06.33	190.00
+10	188.82
+20	185.59
+30	182.37
+33.00	181.40

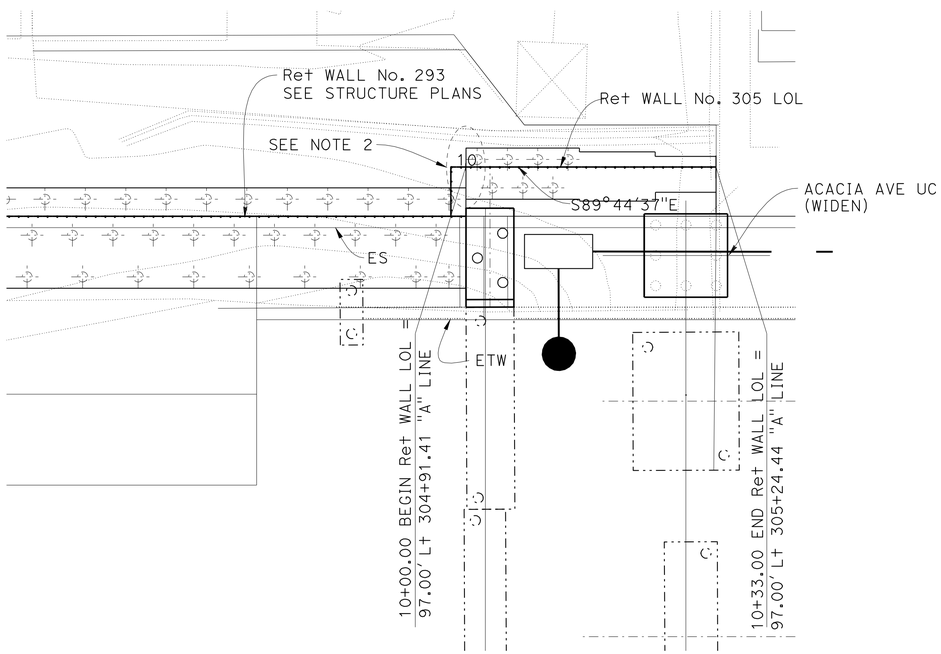

PLAN

1" = 10'

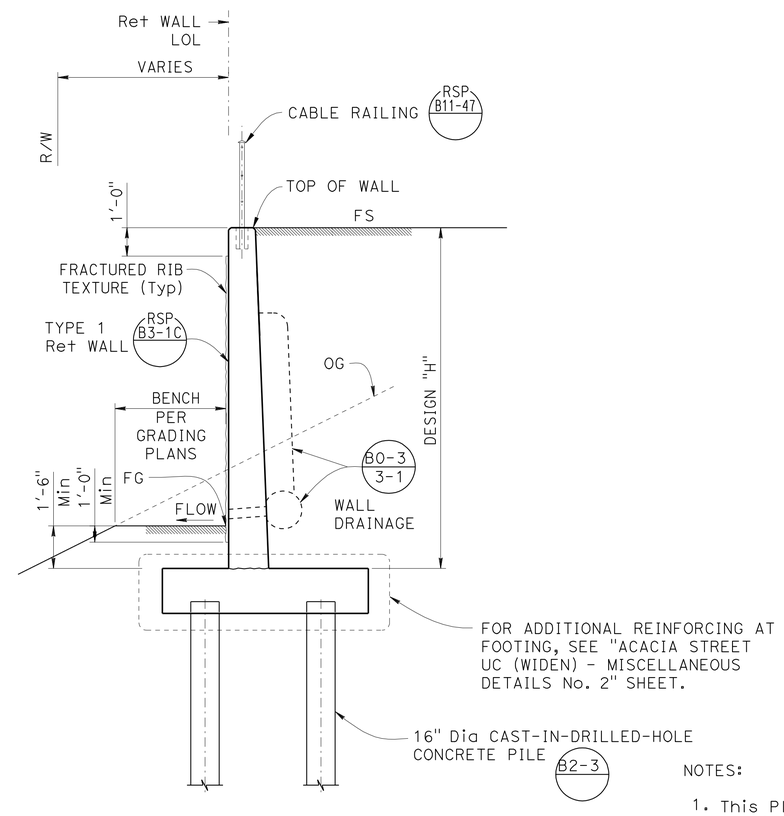

SECTION A-A

NOTES:

1. This Plan Accurate for Retaining Wall work Only.
2. For End of Wall and Corner Detail, see "ACACIA STREET UC (WIDEN) RETAINING WALL No. 305- MISCELLANEOUS DETAILS No. 2" sheet.
3. For Excavation and Backfill Details, see "ACACIA STREET UC (WIDEN) RETAINING WALL No. 305- LIMITS OF PAYMENT FOR EXCAVATION AND BACKFILL" sheet.

NOTE:
THE CONTRACTOR SHALL VERIFY ALL CONTROLLING FIELD DIMENSIONS BEFORE ORDERING OR FABRICATING ANY MATERIAL.

Luqi Yang
DESIGN OVERSIGHT Luqi Yang
3-29-12
SIGN OFF DATE

	BY	CHECKED
DESIGN	C. CHO	C. HARDEN
DETAILS	J. SALDANA	C. HARDEN
QUANTITIES	C. HARDEN	J. VOEPEL

LOAD & RESISTANCE FACTOR DESIGN — LIVE LOADING: HL93 W/"LOW-BOY": PERMIT DESIGN VEHICLE

	BY	CHECKED
LAYOUT	C. CHO	C. HARDEN
SPECIFICATIONS	S. SHEIKH	PLANS AND SPECS COMPARED S. SHEIKH

PREPARED FOR THE STATE OF CALIFORNIA DEPARTMENT OF TRANSPORTATION

CHAD HARDEN
PROJECT ENGINEER

BRIDGE No. 55-0218
POST MILES 4.7

ACACIA STREET UC (WIDEN)
RETAINING WALL No. 305
STRUCTURE PLAN

DESIGN GENERAL PLAN SHEET (ENGLISH) (REV.7/16/10)

ORIGINAL SCALE IN INCHES FOR REDUCED PLANS 0 1 2 3

UNIT: 2295
PROJECT NUMBER & PHASE: 12000000791 CONTRACT NO.: 12-0C5701

DISREGARD PRINTS BEARING EARLIER REVISION DATES

REVISION DATES

SHEET 23 OF 30

FILE => 55-0218-u-miscdt04.dgn

USERNAME => s121614 DATE PLOTTED => 17-AUG-2012 TIME PLOTTED => 13:54

DIST	COUNTY	ROUTE	POST MILES TOTAL PROJECT	SHEET No	TOTAL SHEETS
12	Ora	91	0.9/5.4	684	885

REGISTERED CIVIL ENGINEER 3/15/12 DATE

8-13-12
PLANS APPROVAL DATE

REGISTERED PROFESSIONAL ENGINEER Christopher Cho No. C74020 Exp. 06/30/13 CIVIL STATE OF CALIFORNIA

The State of California or its officers or agents shall not be responsible for the accuracy or completeness of scanned copies of this plan sheet.

OCTA
550 S MAIN STREET
ORANGE, CA. 92868

RBF CONSULTING
14725 ALTON PARKWAY
IRVINE, CA 92677

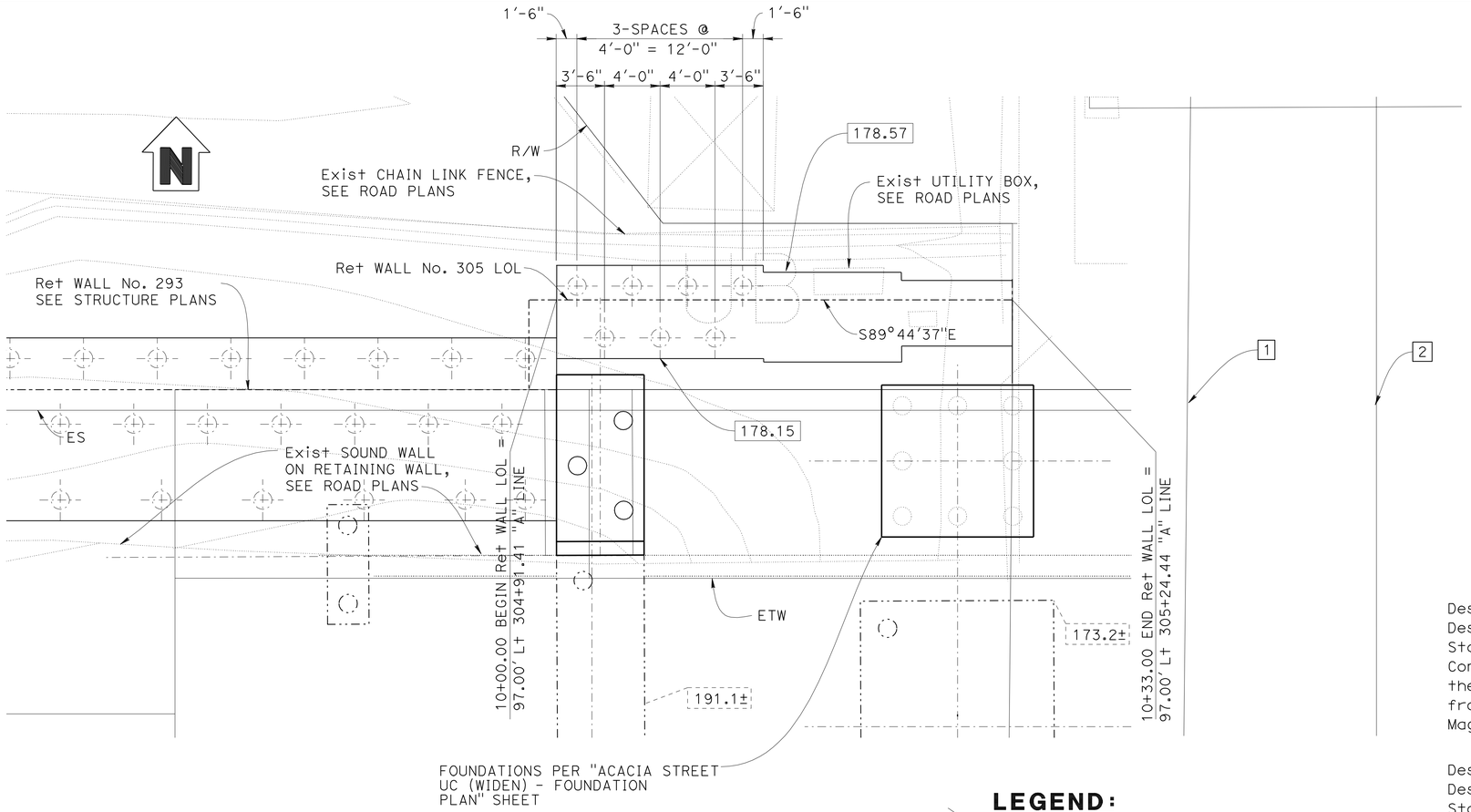

FOUNDATION PLAN

SCALE: 1" = 5'

NOTES:

1. All Piles not shown
2. Location of Exist Structure Foundations is Approximate.

UTILITY NOTES:

1. Telephone Lines
2. 8" Dia Water Line (Anaheim Water)
3. 8" Dia Sewer

LEGEND:

- XXX.XX — Indicates Bottom of Footing Elevation
- XXX.XX± — Indicates Bottom of Existing Footing Elevation
- Indicates Existing Structure
- Indicates New Construction
- Indicates Existing Piling
- Indicates New Piling

BENCHMARKS:

Designation: 1G-164-05 Elev = 109.804
Described by OCS 2005 - Found 3¾" OCS Aluminum Benchmark Disk Stamped "1G-164-05", set in the Nothwesterly Corner of a 4.5 ft. by 11.0 ft. Concrete Catch Basin. Monument is located in the Southeasterly Corner of the intersection of Magnolia Avenue and Buckingham Street, 200 ft. ± from the centerline of Buckingham and 47 ft. Easterly of the centerline of Magnolia. Monument is set level with the Sidewalk

Designation: 2F-25-04 Elev = 162.700
Described by OCS 2004 - Found 3¾" OCS Aluminum Benchmark Disk Stamped "2F-25-04", set in the Nothwesterly Corner of a 7.5 ft. by 4.5 ft. Concrete Catch Basin. Monument is located in the Northeasterly Corner of the intersection of Harbor Boulevard and the Eastbound 91 Freeway On-Ramp, 39 ft. Northerly of the centerline of the On-Ramp and 40 ft. Easterly of the centerline of Harbor Boulevard. Monument is set level with the Sidewalk

Designation: 2D-35-86 Elev = 188.576
Described by OCS 2003 - Found 3¾" OCS Aluminum Benchmark Disk Stamped "2D-35-86", set in the Nothwesterly Corner of a 7 ft. by 14 ft. Concrete Catch Basin. Monument is located in the Southeasterly Corner of the intersection of Placentia Avenue and State College Boulevard, 38 ft. Easterly of the centerline of State College and 70.5 ft. Southerly of the centerline of Placentia. Monument is set level with the Sidewalk

PILE DATA TABLE

LOCATION	PILE TYPE	NOMINAL RESISTANCE (kips)		DESIGN TIP ELEVATION (ft)	SPECIFIED TIP ELEVATION (ft)
		COMPRESSION	TENSION		
RW 305 STATION 10+00 TO 10+15	16" Dia CIDH PILE	80	10	+153 (a) +168 (b) +161 (d)	+153

NOTES:

1. Design Tip Elevations are controlled by: (a) Compression, (b) Tension, and (d) Lateral Load.
2. The Specified Tip Elevation shall not be raised above the Design Tip Elevations for Compression Load, Tension Load, and Lateral Load.

BASIS OF COORDINATES:

Bearings and Coordinates as shown heron are in terms of the California Coordinate System of 1983 (CCS83, Epoch 1881.35), Zone 6; based locally upon the following Control Stations as published by the County of Orange:

Name	Northing (ft)-Grid	Easting (ft)-Grid
3511 OCS GPS 3511R1	2257877.29	6037582.77
3518 OCS GPS 3518	2260444.33	6053380.91
5260 OCS GPS 5260	2257149.07	6063970.03

GEOTECHNICAL PROFESSIONAL APPROVAL DATE

Luqi Yang
DESIGN OVERSIGHT Luqi Yang
3-29-12
SIGN OFF DATE

SCALE:	VERT.DATUM NAVD88	HORZ.DATUM NAD83 (1991.35)	
PHOTOGRAMMETRY AS OF: 04-15-2010		ALIGNMENT TIES	
SURVEYED	BY B. COX	DRAFTED	BY G. CIAMPAGLIA
FIELD CHECKED	BY B. COX	CHECKED	BY B. COX

DESIGN	BY C. CHO	CHECKED C. HARDEN
DETAILS	BY J. SALDANA	CHECKED C. HARDEN
QUANTITIES	BY C. HARDEN	CHECKED J. VOEPEL

PREPARED FOR THE STATE OF CALIFORNIA DEPARTMENT OF TRANSPORTATION

CHAD HARDEN
PROJECT ENGINEER

BRIDGE No. 55-0218
POST MILES 4.7

ACACIA STREET UC (WIDEN)
RETAINING WALL No. 305
FOUNDATION PLAN

FOUNDATION PLAN SHEET (ENGLISH) (REV.7/16/10)

ORIGINAL SCALE IN INCHES FOR REDUCED PLANS 0 1 2 3

UNIT: 2295
PROJECT NUMBER & PHASE: 12000000791 CONTRACT NO.: 12-0C5701

DISREGARD PRINTS BEARING EARLIER REVISION DATES

REVISION DATES

SHEET 24 OF 30

FILE => 55-0218-u-miscdt05.dgn

USERNAME => s114926 DATE PLOTTED => 17-AUG-2012 TIME PLOTTED => 08:51

DIST	COUNTY	ROUTE	POST MILES TOTAL PROJECT	SHEET No	TOTAL SHEETS
12	Ora	91	0.9/5.4	685	885

REGISTERED CIVIL ENGINEER 3/15/12 DATE

8-13-12
PLANS APPROVAL DATE

REGISTERED PROFESSIONAL ENGINEER Christopher Cho No. C74020 Exp. 06/30/13 CIVIL STATE OF CALIFORNIA

The State of California or its officers or agents shall not be responsible for the accuracy or completeness of scanned copies of this plan sheet.

OCTA
550 S MAIN STREET
ORANGE, CA. 92868

RBF CONSULTING
14725 ALTON PARKWAY
IRVINE, CA 92677

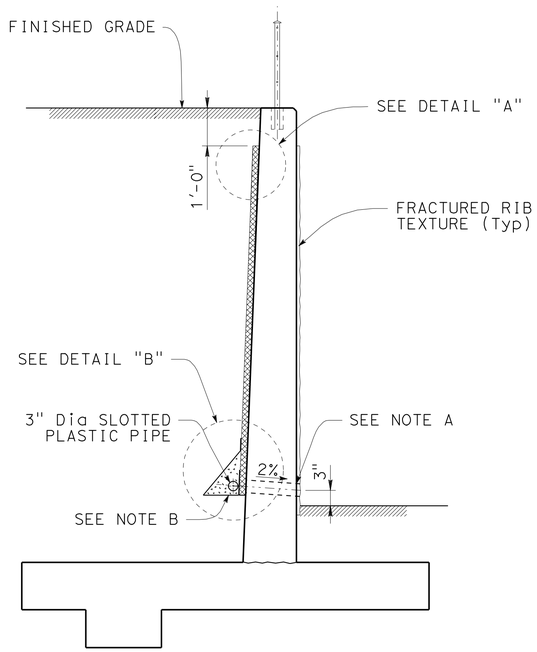

RETAINING WALL WEEP HOLE AND GEOCOMPOSITE DRAIN

NO SCALE

ALTERNATIVE TO BRIDGE DETAIL BO-3 / 3-1

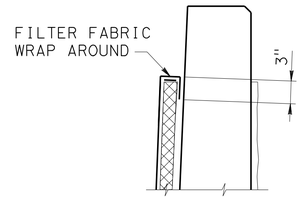

DETAIL "A"

NO SCALE

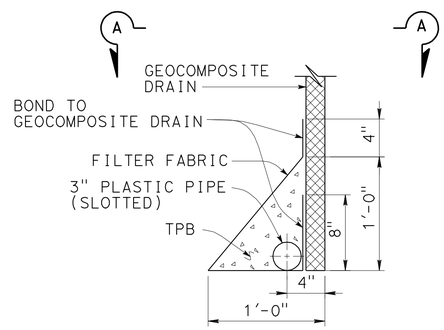

DETAIL "B"

NO SCALE

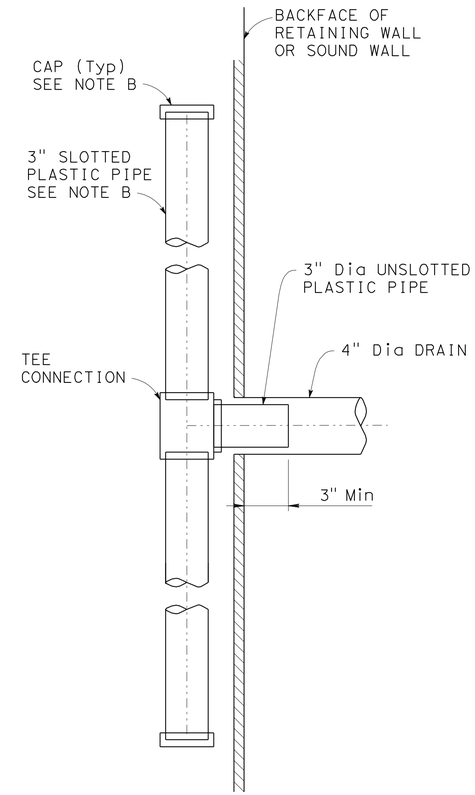

SECTION A-A

NO SCALE

NOTES

A. 4" Dia Drains at Intermediate Sag Points and at 25' Max Center to Center. For Walls Adjacent to Sidewalks or Curbs, Provide 4' Cast Iron or Asbestos Cement Pipe under the Sidewalk to Discharge through Curb Face. Exposed Wall Drains shall be Located 3"± above Finished Grade.

B. Geocomposite Drain, Cement Treated Permeable Base, and 3" Dia Slotted Plastic Pipe continuous behind Retaining Wall or Abutment. Cap Ends of Pipe. Provide 'Tee' Connection at Each 4" Dia Drain.

C. Connect the low End of Plastic Pipe to the main Outlet Pipe as applicable.

Luqi Yang
DESIGN OVERSIGHT Luqi Yang
3-29-12
SIGN OFF DATE

	BY	CHECKED
DESIGN	C. CHO	C. HARDEN
DETAILS	C. CHO	C. HARDEN
QUANTITIES	C. CHO	J. VOEPEL

PREPARED FOR THE STATE OF CALIFORNIA DEPARTMENT OF TRANSPORTATION

CHAD HARDEN
PROJECT ENGINEER

BRIDGE No. 55-0218
POST MILES VARIES

ACACIA STREET UC (WIDEN)
RETAINING WALL No. 305
MISCELLANEOUS DETAILS No. 1

DESIGN DETAIL SHEET (ENGLISH) (REV.7/16/10)

ORIGINAL SCALE IN INCHES FOR REDUCED PLANS 0 1 2 3

UNIT: 2295
PROJECT NUMBER & PHASE: 12000000791
CONTRACT NO.: 12-0C5701

DISREGARD PRINTS BEARING EARLIER REVISION DATES

REVISION DATES

SHEET 25 OF 30

FILE => 55-0218-u-miscdt06.dgn

USERNAME => s121614 DATE PLOTTED => 17-AUG-2012 TIME PLOTTED => 06:00

DIST	COUNTY	ROUTE	POST MILES TOTAL PROJECT	SHEET No	TOTAL SHEETS
12	Ora	91	0.9/5.4	686	885

REGISTERED CIVIL ENGINEER 3/15/12 DATE

8-13-12
PLANS APPROVAL DATE

REGISTERED PROFESSIONAL ENGINEER Christopher Cho No. C74020 Exp. 06/30/13 CIVIL STATE OF CALIFORNIA

The State of California or its officers or agents shall not be responsible for the accuracy or completeness of scanned copies of this plan sheet.

OCTA
550 S MAIN STREET
ORANGE, CA. 92868

RBF CONSULTING
14725 ALTON PARKWAY
IRVINE, CA 92677

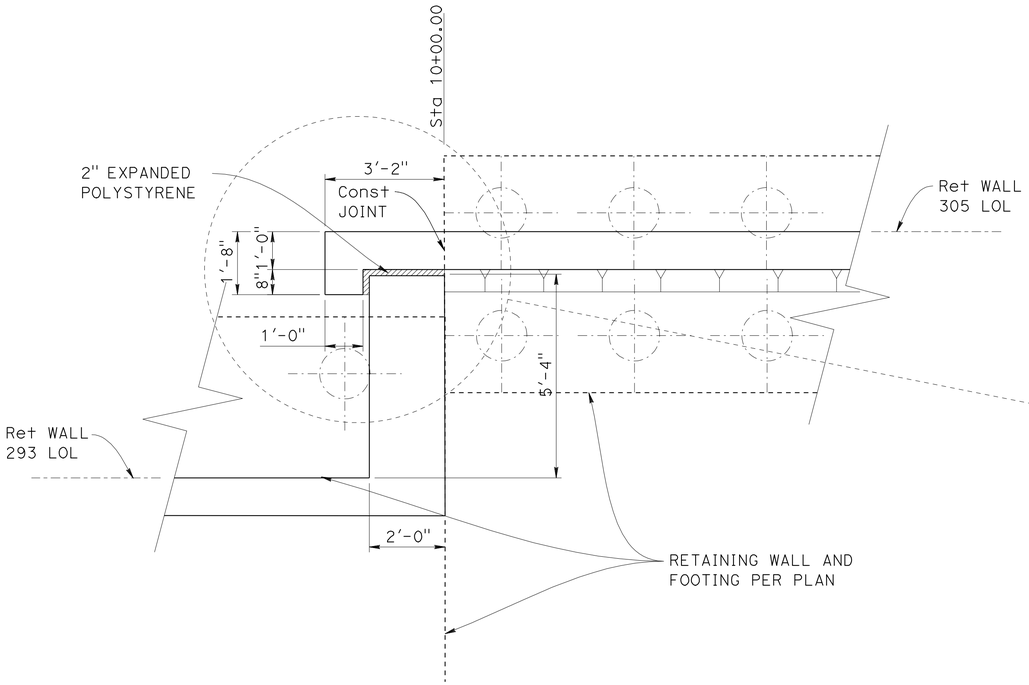

RETAINING WALL OVERLAP DETAIL

NO SCALE

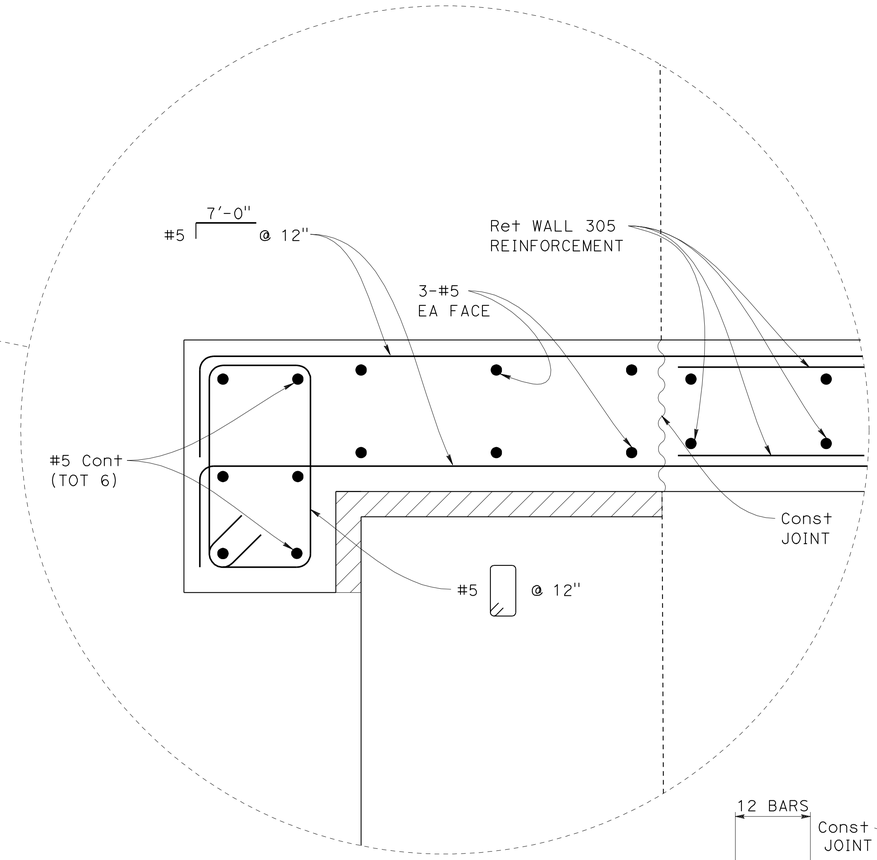

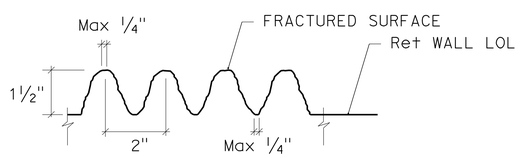

FRACTURED RIB TEXTURE 1 1/2" (PROJECTING)

NO SCALE

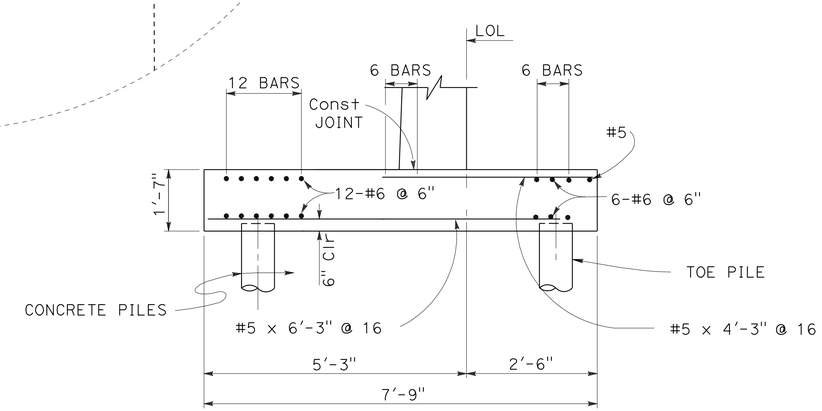

90 kip PILE FOOTING SECTION

Reinforcement Detailed is to be Placed in Addition to that shown for Spread Footing. All Piles not shown, see Pile Layout on other sheets.

Luqi Yang
DESIGN OVERSIGHT Luqi Yang
3-29-12
SIGN OFF DATE

	BY	CHECKED
DESIGN	C. Cho	C. Harden
DETAILS	C. Cho	C. Harden
QUANTITIES	C. Cho	J. Voepel

PREPARED FOR THE STATE OF CALIFORNIA DEPARTMENT OF TRANSPORTATION

Chad Harden
PROJECT ENGINEER

BRIDGE No. 55-0218
POST MILES 4.7

ACACIA STREET UC (WIDEN)
RETAINING WALL No. 305
MISCELLANEOUS DETAILS No. 2

DESIGN DETAIL SHEET (ENGLISH) (REV.7/16/10)

ORIGINAL SCALE IN INCHES FOR REDUCED PLANS 0 1 2 3

UNIT: 2295
PROJECT NUMBER & PHASE: 12000000791 CONTRACT NO.: 12-0C5701

DISREGARD PRINTS BEARING EARLIER REVISION DATES

REVISION DATES

SHEET 26 OF 30

FILE => 55-0218-u-miscdt07.dgn

USERNAME => s12614 DATE PLOTTED => 17-AUG-2012 TIME PLOTTED => 06:00

DIST	COUNTY	ROUTE	POST MILES TOTAL PROJECT	SHEET No	TOTAL SHEETS
12	Ora	91	0.9/5.4	687	885

REGISTERED CIVIL ENGINEER 3/15/12 DATE

8-13-12
PLANS APPROVAL DATE

REGISTERED PROFESSIONAL ENGINEER Christopher Cho No. C74020 Exp. 06/30/13 CIVIL STATE OF CALIFORNIA

The State of California or its officers or agents shall not be responsible for the accuracy or completeness of scanned copies of this plan sheet.

OCTA
550 S MAIN STREET
ORANGE, CA. 92868

RBF CONSULTING
14725 ALTON PARKWAY
IRVINE, CA 92677

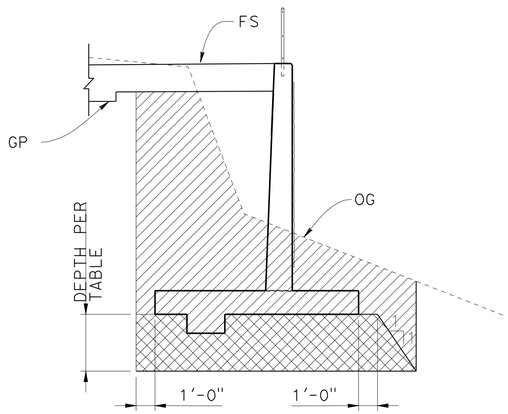

EXCAVATION
NO SCALE

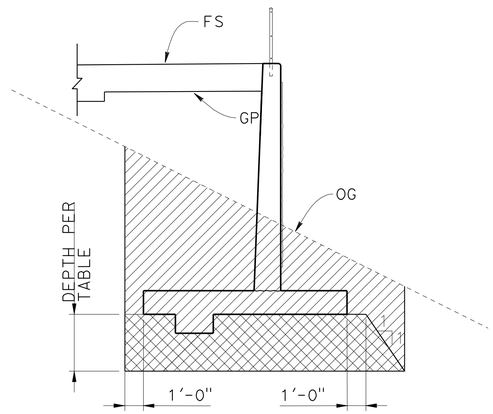

EXCAVATION
NO SCALE

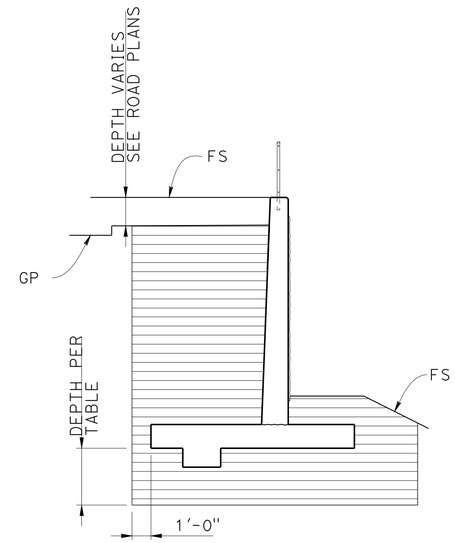

BACKFILL
NO SCALE

RETAINING WALL IN FILL AND CUT

LIMITS OF PAYMENT FOR RETAINING WALL EXCAVATION AND BACKFILL

TABLE OF OVER EXCAVATION

Ret WALL STATION LIMITS	OVER EXCAVATION DEPTH
10+00.00 TO 10+15.00	0'-0"
10+15.00 TO 10+33.00	1'-0"

LEGEND:

- Structure Excavation (Retaining Wall)
- Structure Backfill (Retaining Wall)
- Structure Over Excavation

Luqi Yang
DESIGN OVERSIGHT Luqi Yang
3-29-12
SIGN OFF DATE

	BY	CHECKED
DESIGN	C. CHO	C. HARDEN
DETAILS	C. CHO	C. HARDEN
QUANTITIES	C. CHO	J. VOEPEL

PREPARED FOR THE STATE OF CALIFORNIA DEPARTMENT OF TRANSPORTATION

CHAD HARDEN
PROJECT ENGINEER

BRIDGE No. 55-0218
POST MILES 4.7

ACACIA STREET UC (WIDEN)
RETAINING WALL No. 305
LIMITS OF PAYMENT FOR EXCAVATION AND BACKFILL

DESIGN DETAIL SHEET (ENGLISH) (REV.7/16/10)

ORIGINAL SCALE IN INCHES FOR REDUCED PLANS 0 1 2 3

UNIT: 2295
PROJECT NUMBER & PHASE: 12000000791 CONTRACT NO.: 12-0C5701

DISREGARD PRINTS BEARING EARLIER REVISION DATES

REVISION DATES

SHEET 27 OF 30

FILE => 55-0218-u-miscdt08.dgn

USERNAME => s121614 DATE PLOTTED => 17-AUG-2012 TIME PLOTTED => 06:00

BENCH MARK

Designation: 1G-164-05 Elev = 109.804
Described by OCS 2005 - Found 3¾" OCS Aluminum Benchmark Disk Stamped "1G-164-05", set in the Nothwesterly Corner of a 4.5 ft. by 11.0 ft. Concrete Catch Basin. Monument is located in the Southeasterly Corner of the intersection of Magnolia Avenue and Buckingham Street, 200 ft. ± from the centerline of Buckingham and 47 ft. Easterly of the centerline of Magnolia. Monument is set level with the Sidewalk

Designation: 2F-25-04 Elev = 162.700
Described by OCS 2004 - Found 3¾" OCS Aluminum Benchmark Disk Stamped "2F-25-04", set in the Nothwesterly Corner of a 7.5 ft. by 4.5 ft. Concrete Catch Basin. Monument is located in the Northeasterly Corner of the intersection of Harbor Boulevard and the Eastbound 91 Freeway On-Ramp, 39 ft. Northerly of the centerline of the On-Ramp and 40 ft. Easterly of the centerline of Harbor Boulevard. Monument is set level with the Sidewalk

Designation: 2D-35-86 Elev = 188.576
Described by OCS 2003 - Found 3¾" OCS Aluminum Benchmark Disk Stamped "2D-35-86", set in the Nothwesterly Corner of a 7 ft. by 14 ft. Concrete Catch Basin. Monument is located in the Southeasterly Corner of the intersection of Placentia Avenue and State College Boulevard, 38 ft. Easterly of the centerline of State College and 70.5 ft. Southerly of the centerline of Placentia. Monument is set level with the Sidewalk

DIST	COUNTY	ROUTE	POST MILES TOTAL PROJECT	SHEET No	TOTAL SHEETS
12	Ora	91	0.9/5.4	688	885

REGISTERED ENGINEER 3/15/12 DATE

8-13-12
PLANS APPROVAL DATE

REGISTERED PROFESSIONAL ENGINEER S. PIRATHIVIRAJ NO. C71662 EXP. 12/31/13 CIVIL STATE OF CALIFORNIA

The State of California or its officers or agents shall not be responsible for the accuracy or completeness of scanned copies of this plan sheet.

ORANGE COUNTY TRANSPORTATION AUTHORITY
550 SOUTH MAIN STREET
ORANGE, CA 92868

EARTH MECHANICS, INC.
17800 NEWHOPE STREET, SUITE B
FOUNTAIN VALLEY, CA 92708

NOTES:

(1) This LOTB sheet was prepared in accordance with the Caltrans Soil and Rock Logging, Classification and Presentation Manual (June 2010).

(2) 2.4" samples were taken using a California Modified Sampler.

(3) An automatic trip hammer system consisting of a hammer weight of 140 lbs falling a distance of 30" was used to advance the drive sampler.

(4) Conversion factor from 2.4" Modified California Ring Sampler blowcounts to Standard Penetration Test (SPT) blowcounts is 0.5.

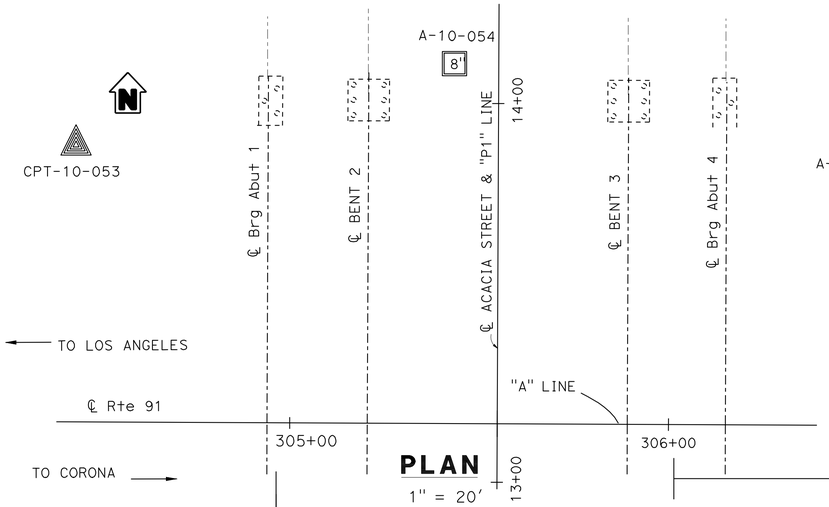

PLAN
1" = 20'

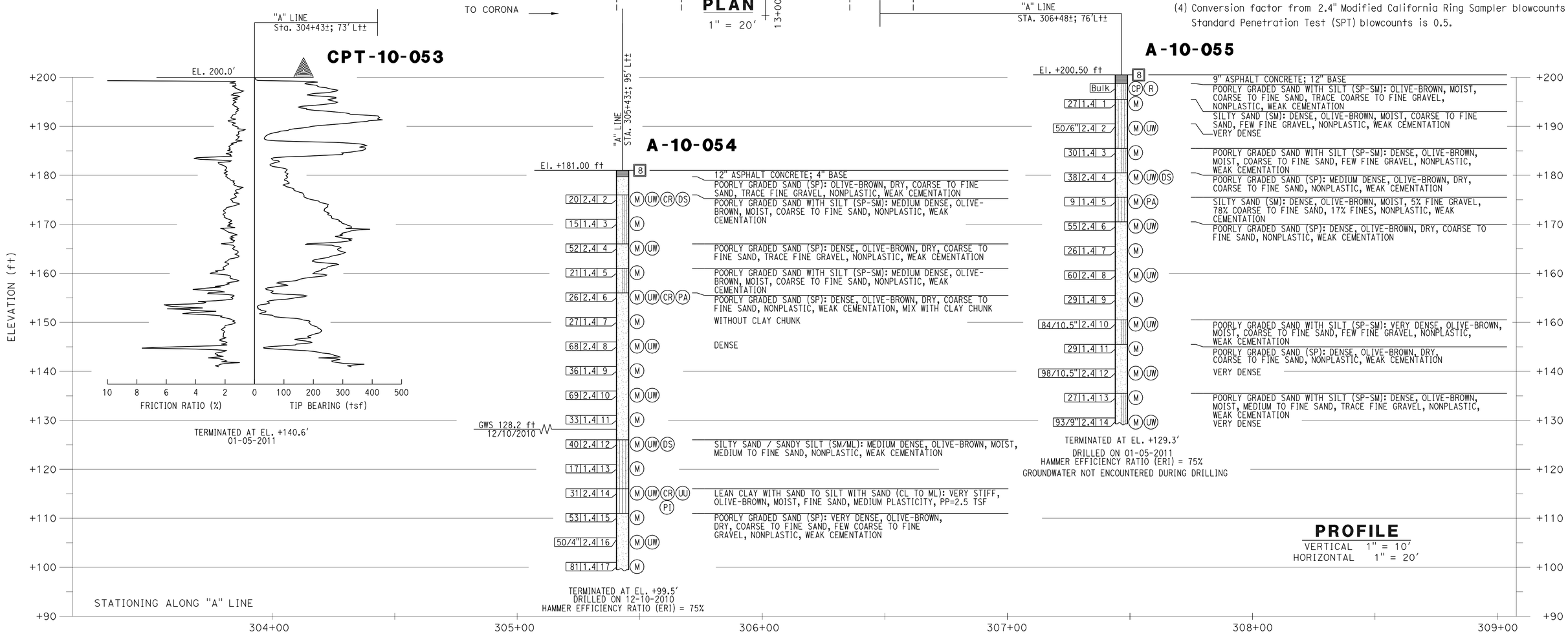

PROFILE
VERTICAL 1" = 10'
HORIZONTAL 1" = 20'

Luqi Yang DESIGN OVERSIGHT Luqi Yang 3-29-12 SIGN OFF DATE	DRAWN BY J. Fang	R. Jie FIELD INVESTIGATION BY:	PREPARED FOR THE STATE OF CALIFORNIA DEPARTMENT OF TRANSPORTATION	S. Pirathiviraj PROJECT ENGINEER	BRIDGE NO. 55-0218 POST MILES 4.8	ACACIA STREET UC (WIDEN)
	CHECKED BY G. J. Gunaranjan	DATE: 12/2010,1/2011				LOG OF TEST BORINGS 1 OF 3

GS GEOTECHNICAL LOG OF TEST BORINGS SHEET (ENGLISH) (REV. 7/16/10)

ORIGINAL SCALE IN INCHES FOR REDUCED PLANS 0 1 2 3

UNIT: 2295
PROJECT NUMBER & PHASE: 12000000791

DISREGARD PRINTS BEARING EARLIER REVISION DATES 12/28/11 2/27/12 3/15/12

REVISION DATES

SHEET 28 OF 30

FILE => 55-0218-z-ltb1.dgn

CONTRACT NO.:12-0C5701 PROJECT ID:

DIST.	COUNTY	ROUTE	SECTION	SHEET NO.	TOTAL SHEETS
07	Ora	91	3.9/9.6	214	323

STEPHEN CHAPLICK CIVIL ENGINEER LICENSE 6055

DATE APPROVED JULY 11 1958

To accompany plans dated April 19, 1965

TO ACCOMPANY PLANS DATED 8-13-12

DIVISION OF ENGINEERING SERVICES - GEOTECHNICAL SERVICES					
As-Built Log of Test Borings sheet is considered an informational document only. As such, the State of California registration seal with signature, license number and registration certificate expiration date confirm that this is a true and accurate copy of the original document. This drawing is available and presented only for the convenience of any bidder, contractor or other interested party.					
DIST.	COUNTY	ROUTE	POST MILES-TOTAL PROJECT	Sheet No.	Total Sheets
12	Ora	91	0.9/5.4	689	885
GEOTECHNICAL PROFESSIONAL				DATE 3/15/12	
ACACIA STREET UC (WIDEN)					
LOG OF TEST BORINGS 2 OF 3					
NOTE: A COPY OF THIS LOG OF TEST BORINGS IS AVAILABLE AT OFFICE OF STRUCTURE MAINTENANCE AND INVESTIGATIONS, SACRAMENTO, CALIFORNIA			UNIT: 2295 PROJECT NUMBER & PHASE: 12000000791		
			BRIDGE No.	Sheet	of
			55-0218	29	30

REGISTERED PROFESSIONAL ENGINEER S. PIRATHIVIRAJ NO. C71662 EXP. 12/31/13 CIVIL STATE OF CALIFORNIA

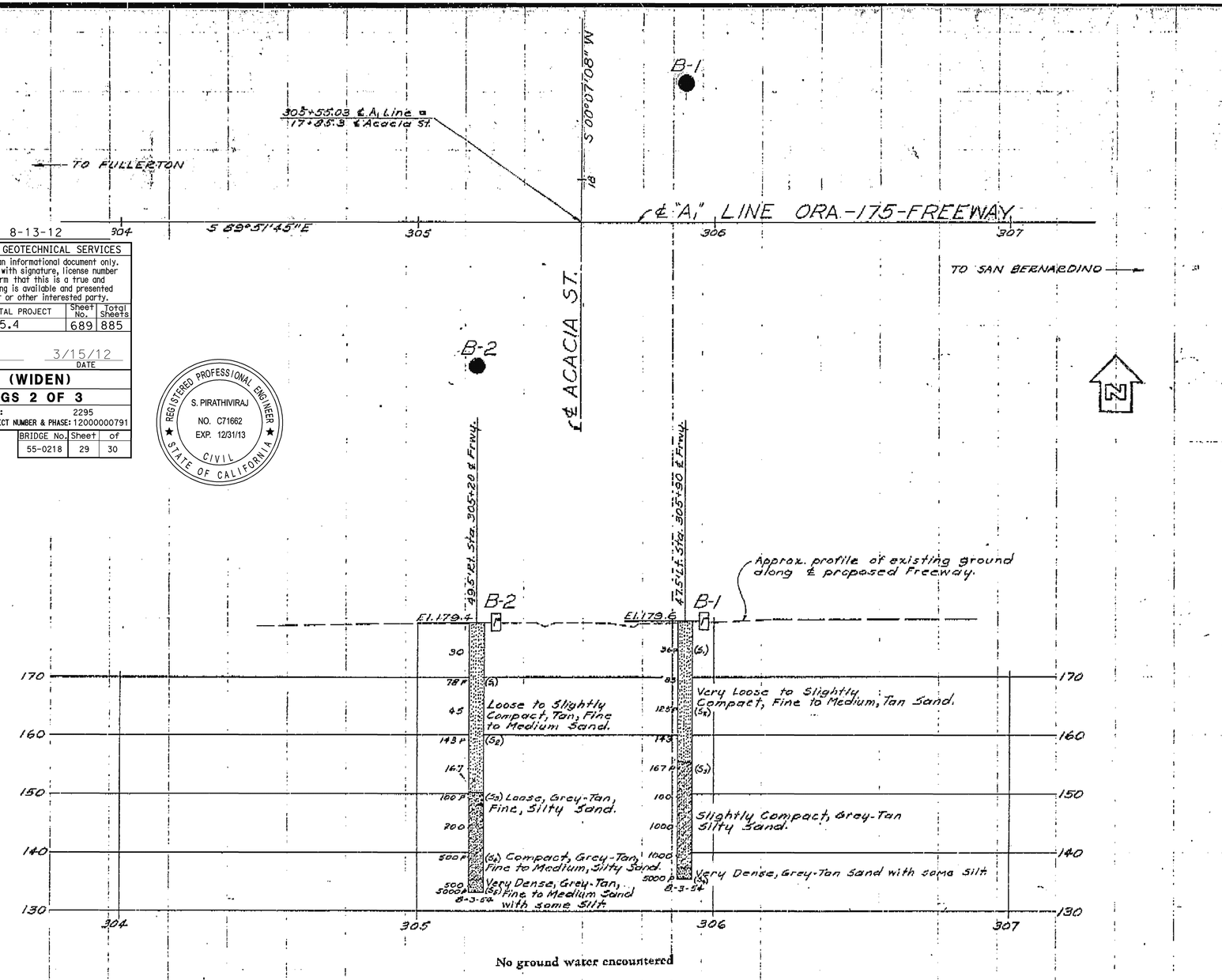

AS BUILT PLANS
Contract No. 07-037424
Date Completed 2-17-67
Document No. 7000022

Test Boring By Bridge Dept.

B.M. 30-B-54, ELEV. = 180.00'
Chisl. knob End Of Demler Egg Room Driveway Curb 22'± Rt. of Sta. 23+18 Acacia St.

B.M. 29-B-54, ELEV.=174.58'
Brass Cap In 8" P.C.C. Mon. 275'± Rt. Sta. 290+28, 2" E.P.P. #103039 E. Buried 1"!

INFORMATION ON ACTUAL FOUNDATION CONDITIONS ENCOUNTERED IS ON FILE IN BRIDGE GEOLOGY SECTION

SHEET	OF
8	12

CLASSIFICATION OF MATERIAL BASED ON STANDARD GRADE SIZE LIMITS

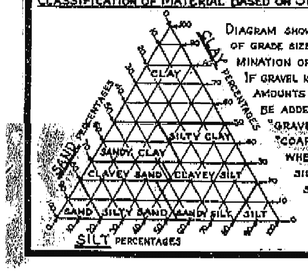

DIAGRAM SHOWING THE BASIS FOR ESTIMATES OF GRADE SIZE DISTRIBUTION USED IN DETERMINATION OF CLASS NAMES.

IF GRAVEL IS PRESENT IN APPRECIABLE AMOUNTS THE TERM "GRAVELLY" MAY BE ADDED TO THE CLASS NAME, VIZ. "GRAVELLY SAND". THE TERMS, "COARSE", "MEDIUM" AND "FINE" WHEN USED TO DESCRIBE SAND, SILT AND GRAVEL REFER TO STANDARD GRADE SIZE LIMITS.

LEGEND OF EARTH MATERIALS

- GRAVEL
- SAND
- SILT
- CLAY
- SANDY CLAY OR CLAYEY SAND
- SANDY SILT OR SILTY SAND
- SILTY CLAY OR CLAYEY SILT
- PEAT AND/OR ORGANIC MATTER
- FILL MATERIAL
- IGNEOUS ROCK
- SEDIMENTARY ROCK
- METAMORPHIC ROCK

LEGEND OF BORING OPERATIONS

- PLAN OF ANY BORING
- PENETROMETER
- 2 1/4" CONE PENETROMETER
- SAMPLER BORING (DRY)
- ROTARY BORING (WET)
- AUGER BORING (DRY)
- JET BORING
- CORE BORING
- TEST PIT

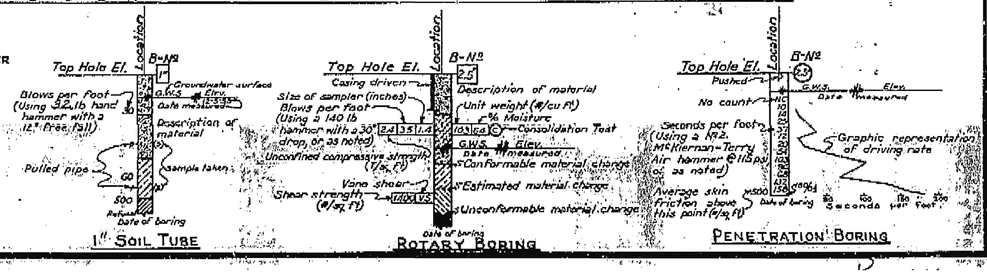

NOTES

The contractor's attention is directed to Section 2, Article (c) of the Standard Specifications and to the Special Provisions accompanying this set of plans.

Classification of earth material as shown on this sheet is based upon field inspection and is not to be construed to imply mechanical analysis.

STATE OF CALIFORNIA
DEPARTMENT OF PUBLIC WORKS
DIVISION OF HIGHWAYS

ACACIA STREET U.C.

LOG OF TEST BORINGS

SCALE Horiz. 1" = 20' Vert. 1" = 10' | BRIDGE 55-218 L&R | FILE E-55 | DRAWING 55218-1

FILENAME => 55-0218-z-1tb2.tif

DIVISION OF ENGINEERING SERVICES - GEOTECHNICAL SERVICES					
As-Built Log of Test Borings sheet is considered an informational document only. As such, the State of California registration seal with signature, license number and registration certificate expiration date confirm that this is a true and accurate copy of the original document. This drawing is available and presented only for the convenience of any bidder, contractor or other interested party.					
DIST.	COUNTY	ROUTE	POST MILES-TOTAL PROJECT	Sheet No.	Total Sheets
12	Ora	91	0.9/5.4	690	885
GEOTECHNICAL PROFESSIONAL			3/15/12 DATE		
ACACIA STREET UC (WIDEN)					
LOG OF TEST BORINGS 3 OF 3					
NOTE: A COPY OF THIS LOG OF TEST BORINGS IS AVAILABLE AT OFFICE OF STRUCTURE MAINTENANCE AND INVESTIGATIONS, SACRAMENTO, CALIFORNIA			UNIT: 2295 PROJECT NUMBER & PHASE: 12000000791		
			BRIDGE No. 55-0218	Sheet 30	of 30

TO ACCOMPANY PLANS DATED 8-13-12

REGISTERED PROFESSIONAL ENGINEER S. PIRATHIVIRAJ NO. C71662 EXP. 12/31/13 CIVIL STATE OF CALIFORNIA

Bench Mark: 310-C-72 (PM 4.85)
Set R.S. Nail on Top of Headwall at Station 310 on North Side of Fwy, 30 Feet North of Edge of Shoulder
Elevation: 184.14 Feet

DIST.	COUNTY	ROUTE	POST MILES TOTAL PROJECT	SHEET NO.	TOTAL SHEETS
12	Ora	91	2.8/5.0	577	615

GEOTECHNICAL PROFESSIONAL

1-20-97
PLANS APPROVAL DATE

REGISTERED PROFESSIONAL ENGINEER THOMAS D. SWANTKO NO. G.E. 813 EXP. 12/31/97 STATE OF CALIFORNIA

GEOFON, Inc.
5552 Cerritos Avenue, Suite B
Cypress, California 90630
Job Number 92-337

The State of California or its officers or agents shall not be responsible for the accuracy or completeness of electronic copies of this plan sheet.

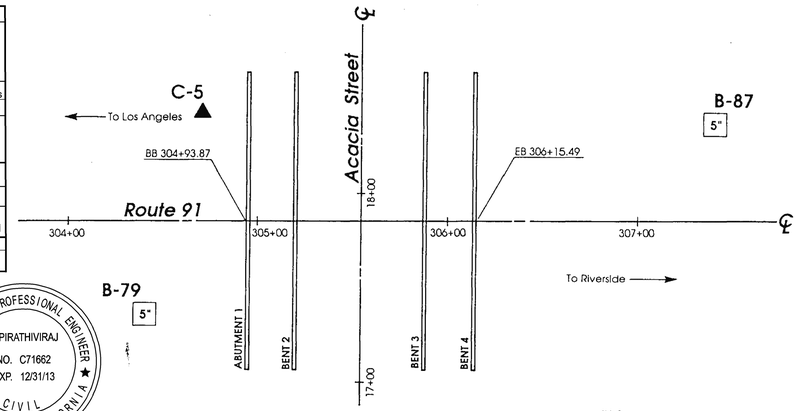

PLAN
SCALE: 1"= 40 FEET

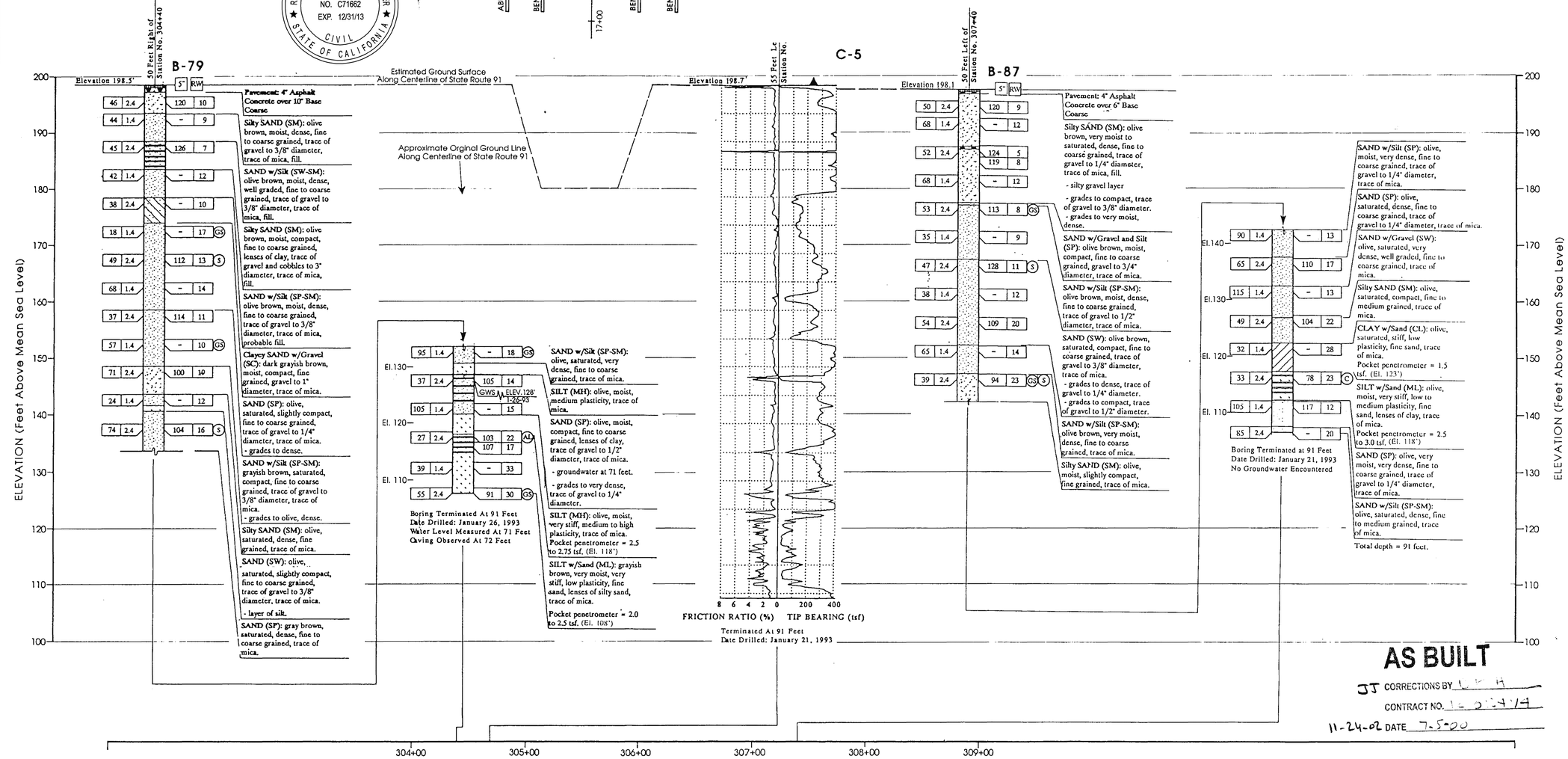

PROFILE
VERTICAL SCALE: 1"= 10 FEET
HORIZONTAL SCALE: 1" = 50 FEET

AS BUILT
JJ CORRECTIONS BY
CONTRACT NO.
11-24-02 DATE 7-5-00

NO AS BUILT CHANGES

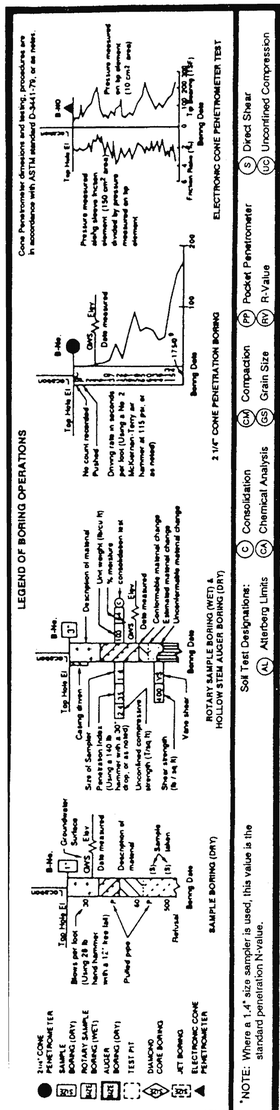

Soil Test Designations:
(S) Direct Shear
(UC) Unconfined Compression
(PP) Pocket Penetrometer
(RV) R-Value
(CM) Compaction
(GS) Grain Size
(C) Consolidation
(CA) Chemical Analysis
(AL) Atterberg Limits

*NOTE: Where a 1.4" size sampler is used, this value is the standard penetration N-value.

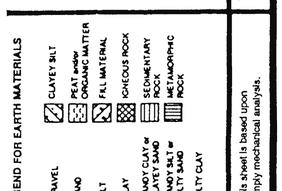

CONSISTENCY CLASSIFICATION FOR SOILS
According to the Standard Penetration Test

Penetration Resistance (Blows/Ft.)	Granular	Cohesive
0-4	Very Loose	Very Soft
5-9	Loose	Soft
10-19	Slightly Compact	Stiff
20-34	Compact	Very Stiff
35-69	Dense	Hard
>70	Very Dense	Very Hard

*NOTE: Classification of earth material as shown on this sheet is based upon field inspection and is not to be construed to imply mechanical analysis.

DESIGN OVERSIGHT BE NGUYEN 7-22-96 SIGN OFF DATE	DRAWN BY H. LEE	S. MOHAMMAD J. CUNNEEN FIELD INVESTIGATOR	PREPARED FOR THE STATE OF CALIFORNIA DEPARTMENT OF TRANSPORTATION	D. K. HAGHIGHI PROJECT ENGINEER
	CHECKED BY D. CORDS	SEE EXPLORATION DATE		

BRIDGE NO.	POST MILE
55-218	4.8

ACACIA STREET UNDERCROSSING WIDEN AND RETROFIT

LOG OF TEST BORINGS

FILENAME => 55-0218-z-ltb3.tif

DIST	COUNTY	ROUTE	POST MILES TOTAL PROJECT	SHEET No	TOTAL SHEETS
12	Ora	91	0.9/5.4	691	885

REGISTERED CIVIL ENGINEER — DATE 3-15-2012

8-13-12
PLANS APPROVAL DATE

REGISTERED PROFESSIONAL ENGINEER — T. A. Kirilov — No. C67708 — Exp. 06/30/13 — CIVIL — STATE OF CALIFORNIA

The State of California or its officers or agents shall not be responsible for the accuracy or completeness of scanned copies of this plan sheet.

OCTA
550 S MAIN STREET
ORANGE, CA 92868

RBF CONSULTING
14725 ALTON PARKWAY
IRVINE, CA 92618

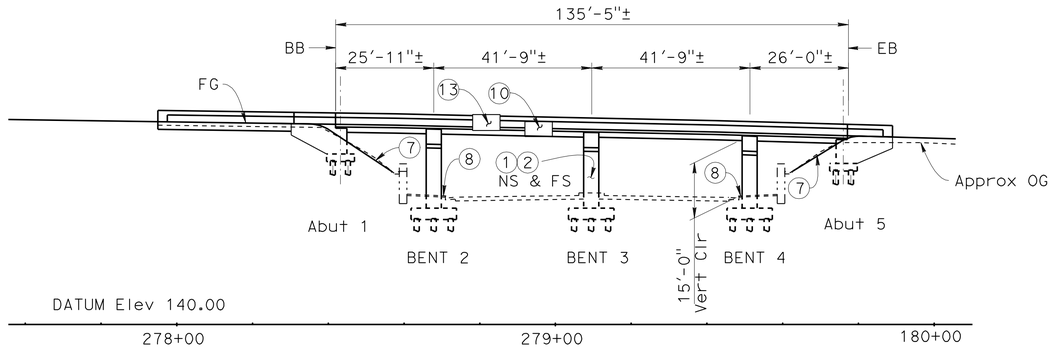

MIRROR ELEVATION

1" = 20'

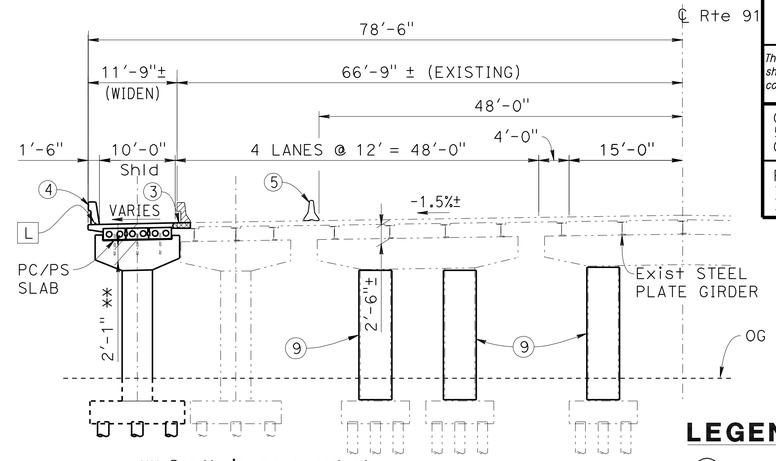

** Depth is measured at Abutments and Bent Supports

TYPICAL SECTION

1" = 10'

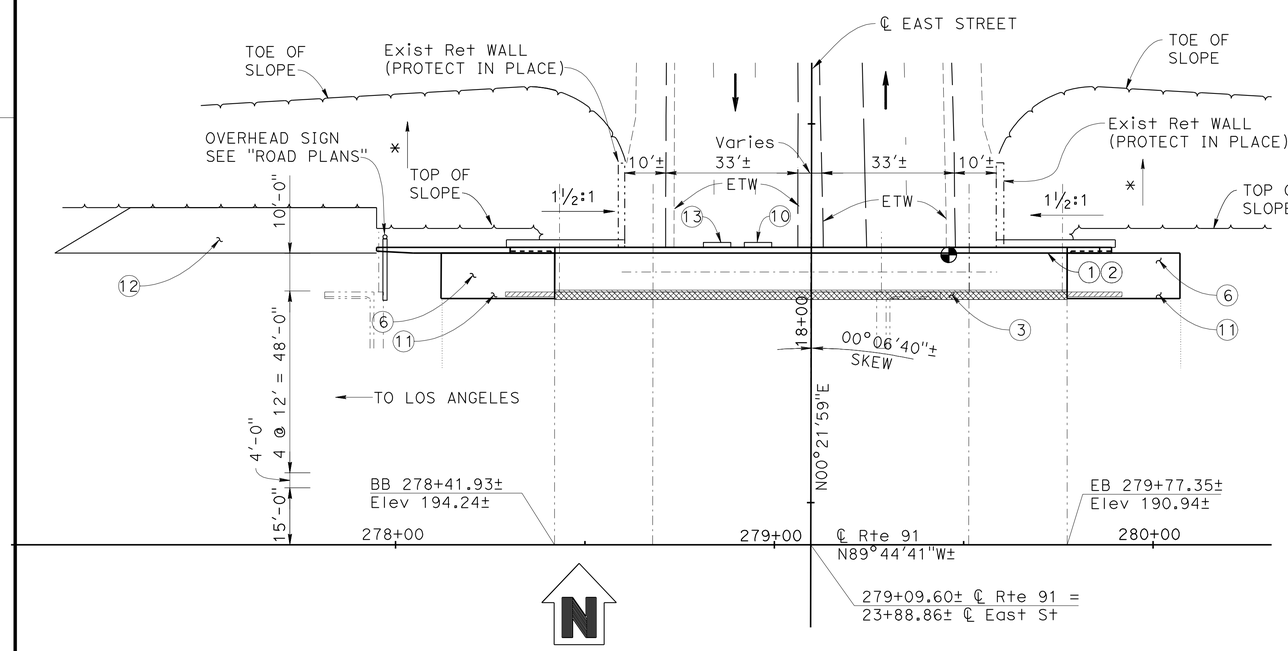

PLAN

1" = 20'

EAST STREET UC(WIDEN) — 1" = 10' — BR No. 55-0245

QUANTITIES

BRIDGE REMOVAL (PORTION), LOCATION C	LUMP	SUM
STRUCTURE EXCAVATION (BRIDGE)	480	CY
STRUCTURE BACKFILL (BRIDGE)	380	CY
AGGREGATE BASE (APPROACH SLAB)	1	CY
16" CAST-IN-DRILLED-HOLE CONCRETE PILING	308	LF
18" CAST-IN-DRILLED-HOLE CONCRETE PILING	1,188	LF
STRUCTURAL CONCRETE, BRIDGE FOOTING	65	CY
STRUCTURAL CONCRETE, BRIDGE	120	CY
STRUCTURAL CONCRETE, APPROACH SLAB (TYPE N)	23	CY
STRUCTURAL CONCRETE, APPROACH SLAB (TYPE R)	5	CY
FRACTURED RIB TEXTURE	45	SQFT
DRILL AND BOND DOWEL	17	LF
FURNISH PRECAST PRESTRESSED CONCRETE SLAB (TYPE SIII)	1,218	SQFT
ERECT PRECAST PRESTRESSED CONCRETE DECK UNIT	12	EA
JOINT SEAL (MR½")	68	LF
BAR REINFORCING STEEL (BRIDGE)	48,450	LB
HEADED BAR REINFORCEMENT	462	EA
ASPHALT MEMBRANE WATERPROOFING	852	SQFT
COLUMN CASING	61,000	LB
FURNISH SIGN STRUCTURE (BRIDGE MOUNTED WITHOUT WALKWAY)	634	LB
INSTALL SIGN STRUCTURE (BRIDGE MOUNTED WITHOUT WALKWAY)	634	LB
SLOPE PAVING (CONCRETE)	9	CY
MISCELLANEOUS METAL (BRIDGE)	335	LB
CONCRETE BARRIER (TYPE 736 MODIFIED)	195	LF

LEGEND:

1. Paint "BRIDGE No. 55-0245" and year constructed
2. Paint "EAST STREET UC"
3. Closure Pour
4. Concrete Barrier Type 736 (Mod)
5. Temporary Rail, Type K, see "ROAD PLANS"
6. Structure Approach Type N(30S)
7. Slope Paving
8. Remove and Replace Portion of Exist Sidewalk, see "ROAD PLANS"
9. Column Casing (Class P/F) Total 18. Place symmetrical about ℄ Rte 91 at all bents
10. Bridge Mounted Sign, see "SIGN PLANS" and "BRIDGE MOUNTED SIGN DETAILS" sheet
11. Structure Approach Type R (30S)
12. MVP - Maintenance Vehicle Pullout, see "ROAD PLANS"
13. Sign, see "TYPICAL SECTION" sheet and "SIGN PLANS"

Existing Structure
New Construction
Bridge Removal (Portion), Location C
Closure Pour
Point of Min Vert Clearance
* Match Existing Slope

NOTES:

1. For General Notes and Index to Plans, see "INDEX TO PLANS" sheet.
2. For Pile Data Table, see "FOUNDATION PLAN" sheet.

UTILITIES:

L — 2" Lighting and Sign Illumination Conduit, see "ELECTRICAL PLANS"

NOTE:
THE CONTRACTOR SHALL VERIFY ALL CONTROLLING FIELD DIMENSIONS BEFORE ORDERING OR FABRICATING ANY MATERIAL.

Luqi Yang — DESIGN OVERSIGHT — Luqi Yang — 3-29-12 SIGN OFF DATE	DESIGN	BY T. Kirilov	CHECKED V. J. Mosquera	LOAD & RESISTANCE FACTOR DESIGN — LIVE LOADING: HL93 W/"LOW-BOY"; PERMIT DESIGN VEHICLE
	DETAILS	BY J. Saldana	CHECKED V. J. Mosquera	LAYOUT — BY J. Saldana — CHECKED T. Kirilov
	QUANTITIES	BY C. Stelea	CHECKED R. Kelcher	SPECIFICATIONS — BY S. Sheikh — PLANS AND SPECS COMPARED S. Sheikh

PREPARED FOR THE STATE OF CALIFORNIA DEPARTMENT OF TRANSPORTATION

V. Jessica Mosquera — PROJECT ENGINEER

BRIDGE NO. 55-0245 — POST MILES 4.26

EAST St UC (WIDEN)
GENERAL PLAN

DESIGN GENERAL PLAN SHEET (ENGLISH) (REV.7/16/10)

ORIGINAL SCALE IN INCHES FOR REDUCED PLANS 0 1 2 3

UNIT: 2295
PROJECT NUMBER & PHASE: 12000000791 — CONTRACT NO.: 12-0C5701

DISREGARD PRINTS BEARING EARLIER REVISION DATES — REVISION DATES 09/16/11 12/28/11 02/17/12 03/15/12 — SHEET 1 OF 22

FILE => 55-0245-a-gp01.dgn

USERNAME => s114926 DATE PLOTTED => 17-AUG-2012 TIME PLOTTED => 08:52

DIST	COUNTY	ROUTE	POST MILES TOTAL PROJECT	SHEET No	TOTAL SHEETS
12	Ora	91	0.9/5.4	692	885

REGISTERED CIVIL ENGINEER — DATE 3-15-2012

8-13-12
PLANS APPROVAL DATE

REGISTERED PROFESSIONAL ENGINEER — T. A. Kirilov — No. C 67708 — Exp. 06/30/13 — CIVIL — STATE OF CALIFORNIA

The State of California or its officers or agents shall not be responsible for the accuracy or completeness of scanned copies of this plan sheet.

OCTA
550 S MAIN STREET
ORANGE, CA. 92868

RBF CONSULTING
14725 ALTON PARKWAY
IRVINE, CA 92618

GENERAL NOTES
LOAD AND RESISTANCE FACTOR DESIGN

DESIGN:
AASHTO LRFD Bridge Design Specifications, 4th edition and the Caltrans Amendments, preface dated September 2010; except that bridge details (including barrier and railing details) taken from Standard Plans 2010 and Standard Bridge Details 2011 XS sheets, and Bridge Abutments are designed using Bridge Design Specifications (1996 AASHTO with Revisions by Caltrans).

SEISMIC DESIGN:
Caltrans Seismic Design Criteria (SDC), Version 1.5 dated September 2009.

DEAD LOAD:
Includes 35 psf for future wearing surface.

LIVE LOADING:
HL93 and permit design load.

SEISMIC LOADING:

Soil profile: V_s^{30} =886 ft/sec.
Moment Magnitude: 7.6
Peak Ground Acceleration: 0.52g

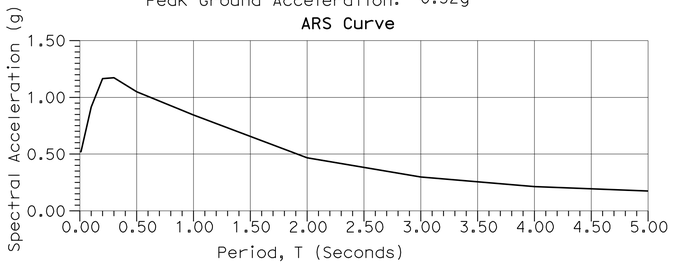

REINFORCED CONCRETE:

NEW:
f_y = 60 ksi
f'_c = 3.6 ksi
n = 8.0

EXISTING:
f_y = 40 ksi
f'_c = 3.25 ksi

PRESTRESSED CONCRETE:
See prestressing notes on "GIRDER LAYOUT" sheet.

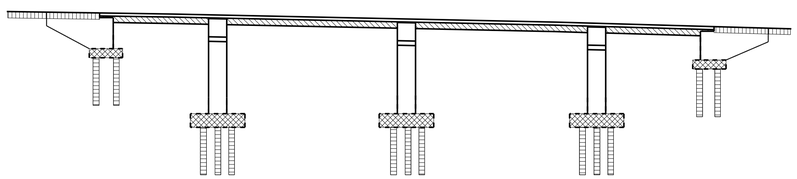

CONCRETE STRENGTH AND TYPE LIMITS

NO SCALE

LEGEND:

- Structural Concrete, Bridge
- Structural Concrete, Bridge Footing
- PC / PS Slab, see "GIRDER LAYOUT" sheet
- Cast-in-Drilled Hole Concrete Pile (f'c = 4.0 ksi @ 28 days)
- Structural Concrete, Approach Slab

INDEX TO PLANS

SHEET No.	TITLE
1.	General Plan
2.	Index to Plans
3.	Bridge Removal Details
4.	Foundation Plan
5.	Abutment Layout
6.	Abutment Details No. 1
7.	Abutment Details No. 2
8.	Miscellaneous Details
9.	Bent Layout
10.	Bent Details
11.	Typical Section
12.	Girder Layout
13.	Column Casing-Steel
14.	Structure Approach Type N (30S)
15.	Structure Approach Type R (30S)
16.	Structure Approach Drainage Details
17.	Slope Paving - Full Slope
18.	Architectural Details
19.	Bridge Mounted Sign Details
20.	Log of Test Borings 1 of 3
21.	Log of Test Borings 2 of 3
22.	Log of Test Borings 3 of 3

STANDARD PLANS DATED 2010

A10A	Abbreviations (Sheet 1 of 2)
A10B	Abbreviations (Sheet 2 of 2)
A10C	Lines and Symbols (Sheet 1 of 3)
A10D	Lines and Symbols (Sheet 2 of 3)
A10E	Lines and Symbols (Sheet 3 of 3)
A10F	Legend - Soil (Sheet 1 of 2)
A10G	Legend - Soil (Sheet 2 of 2)
A62C	Limits of Payment for Excavation and Backfill (Bridge)
B0-1	Bridge Details
B0-3	Bridge Details
B0-5	Bridge Details
B0-13	Bridge Details
B2-3	16" and 24" Cast-in-Drilled-Hole Concrete Pile
B6-21	Joint Seal (Maximum Movement Rating = 2")
B11-56	Concrete Barrier Type 736
B14-3	Communication and Sprinkler Control Conduits (Conduits less Than Size 4")
RSP P10	Concrete Pavement - Dowel Bar Details
T3A	Temporary Railing (Type K)

PLAN SYMBOLS

STANDARD PLAN SHEET No.
DETAIL No.
SECTION IDENTIFICATION

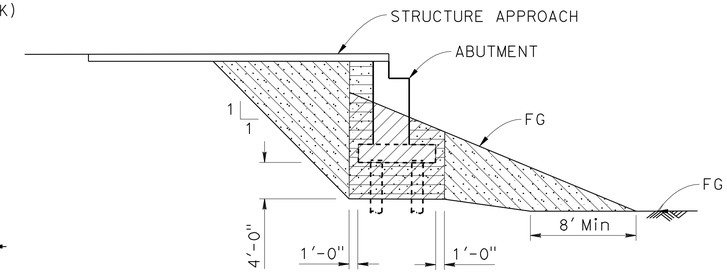

LIMITS OF EXPANSIVE SOIL EXCLUSION ZONE IN BRIDGE EMBANKMENT

NO SCALE

LEGEND:

- Low Expansive Material EI<50 and SE>20
- Structure Excavation (Bridge)
- Structure Backfill (Bridge)
- Roadway Excavation (see "ROAD PLANS")

Note:
1. Transverse limit of Low Expansive Material shall be 12" from edges of abutment footing to end of existing abutment stem.

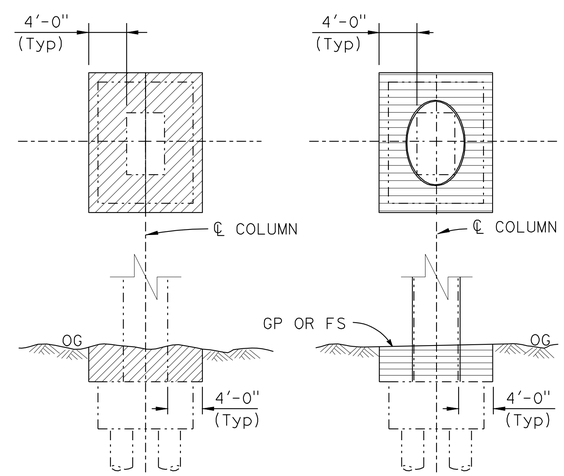

EXCAVATION — BACKFILL

LIMITS OF PAYMENT FOR EXCAVATION & BACKFILL AT COLUMN CASING

NO SCALE

NOTE:
THE CONTRACTOR SHALL VERIFY ALL CONTROLLING FIELD DIMENSIONS BEFORE ORDERING OR FABRICATING ANY MATERIAL.

DESIGN OVERSIGHT Luqi Yang — 3-29-12 SIGN OFF DATE

	BY	CHECKED
DESIGN	T. Kirilov	V. J. Mosquera
DETAILS	J. Saldana	V. J. Mosquera
QUANTITIES	C. Stelea	R. Kelcher

PREPARED FOR THE STATE OF CALIFORNIA DEPARTMENT OF TRANSPORTATION

V. Jessica Mosquera
PROJECT ENGINEER

BRIDGE NO. 55-0245
POST MILES 4.26

EAST St UC (WIDEN)
INDEX TO PLANS

DESIGN DETAIL SHEET (ENGLISH) (REV.7/16/10)

ORIGINAL SCALE IN INCHES FOR REDUCED PLANS 0 1 2 3

UNIT: 2295
PROJECT NUMBER & PHASE: 12000000791 CONTRACT NO.: 12-0C5701

DISREGARD PRINTS BEARING EARLIER REVISION DATES — REVISION DATES 08/30/10 09/08/11 12/22/11 02/17/12 — SHEET 2 OF 22

FILE => 55-0245-a-itp.dgn

USERNAME => s114926 DATE PLOTTED => 17-AUG-2012 TIME PLOTTED => 08:52

DIST	COUNTY	ROUTE	POST MILES TOTAL PROJECT	SHEET No	TOTAL SHEETS
12	Ora	91	0.9/5.4	693	885

REGISTERED CIVIL ENGINEER — DATE 3-15-2012

8-13-12
PLANS APPROVAL DATE

REGISTERED PROFESSIONAL ENGINEER — T. A. Kirilov — No. C 67708 — Exp. 06/30/13 — CIVIL — STATE OF CALIFORNIA

The State of California or its officers or agents shall not be responsible for the accuracy or completeness of scanned copies of this plan sheet.

OCTA
550 S MAIN STREET
ORANGE, CA. 92868

RBF CONSULTING
14725 ALTON PARKWAY
IRVINE, CA 92618

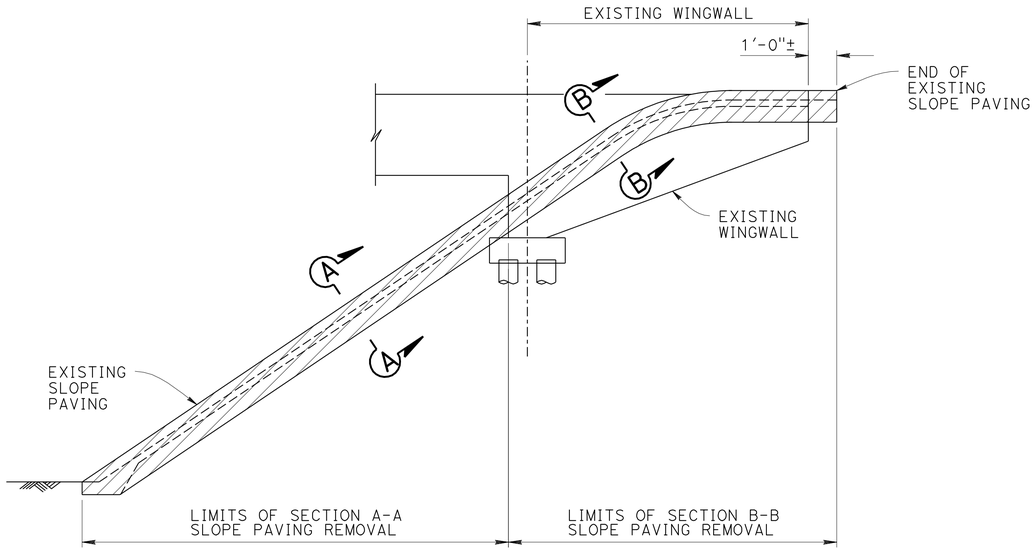

REMOVE SLOPE PAVING

NO SCALE

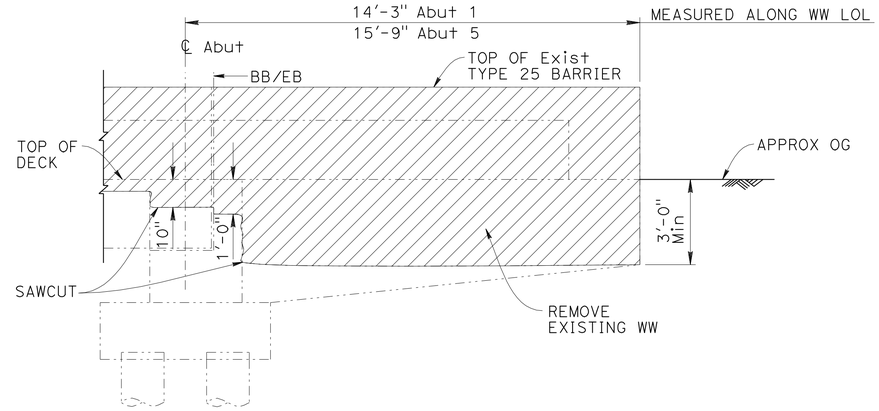

WINGWALL REMOVAL LIMITS

NO SCALE

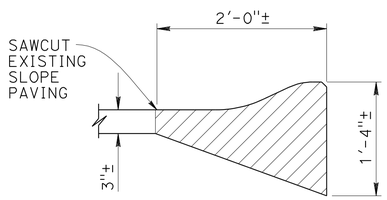

SECTION A-A

NO SCALE

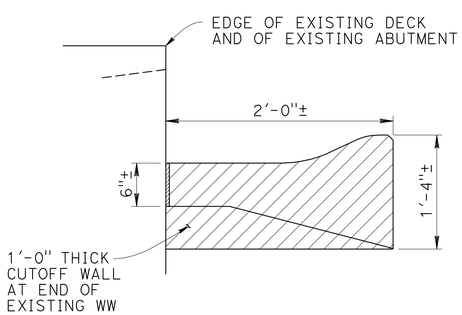

SECTION B-B

NO SCALE

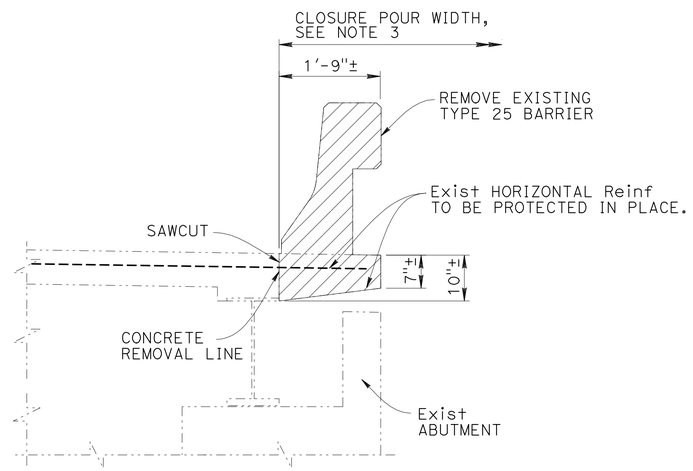

ABUTMENT CORNER REMOVAL DETAIL

NO SCALE

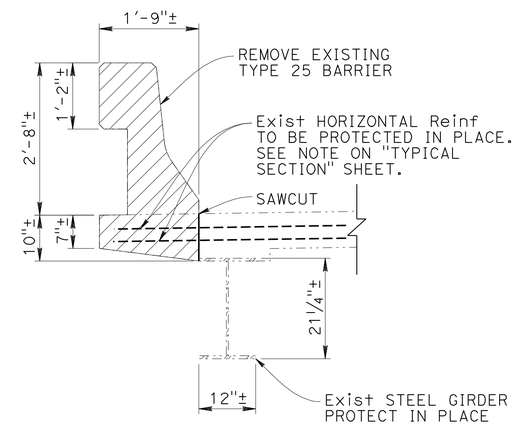

OVERHANG REMOVAL DETAIL

NO SCALE

NOTE:
THE CONTRACTOR SHALL VERIFY ALL CONTROLLING FIELD DIMENSIONS BEFORE ORDERING OR FABRICATING ANY MATERIAL.

LEGEND:

Bridge Removal (Portion), Location C

Existing Structure

NOTES:

1. The limit of Overhang Removal is from BB to EB.
2. The limit of Barrier Removal is between ends of WW.
3. Overhang at Abut shall be removed to depth shown times width limits within the deck closure pour.

Luqi Yang
DESIGN OVERSIGHT — Luqi Yang
3-29-12
SIGN OFF DATE

	BY	CHECKED
DESIGN	T. Kirilov	V. J. Mosquera
DETAILS	J. Saldana	V. J. Mosquera
QUANTITIES	C. Stelea	R. Kelcher

PREPARED FOR THE STATE OF CALIFORNIA DEPARTMENT OF TRANSPORTATION

V. Jessica Mosquera
PROJECT ENGINEER

BRIDGE NO. 55-0245
POST MILES 4.26

EAST St UC (WIDEN)
BRIDGE REMOVAL DETAILS

DESIGN DETAIL SHEET (ENGLISH) (REV.7/16/10)

ORIGINAL SCALE IN INCHES FOR REDUCED PLANS 0 1 2 3

UNIT: 2295
PROJECT NUMBER & PHASE: 12000000791
CONTRACT NO.: 12-0C5701

DISREGARD PRINTS BEARING EARLIER REVISION DATES

REVISION DATES: 08/30/10 09/06/11 12/22/11

SHEET 3 OF 22

FILE => 55-0245-b-br-rmv.dgn

USERNAME => s121614 DATE PLOTTED => 17-AUG-2012 TIME PLOTTED => 06:01

DIST	COUNTY	ROUTE	POST MILES TOTAL PROJECT	SHEET No	TOTAL SHEETS
12	Ora	91	0.9/5.4	694	885

REGISTERED CIVIL ENGINEER — DATE 3-15-2012

8-13-12
PLANS APPROVAL DATE

REGISTERED PROFESSIONAL ENGINEER — T. A. Kirilov — No. C67708 — Exp. 06/30/13 — CIVIL — STATE OF CALIFORNIA

The State of California or its officers or agents shall not be responsible for the accuracy or completeness of scanned copies of this plan sheet.

OCTA
550 S MAIN STREET
ORANGE, CA. 92868

RBF CONSULTING
14725 ALTON PARKWAY
IRVINE, CA 92618

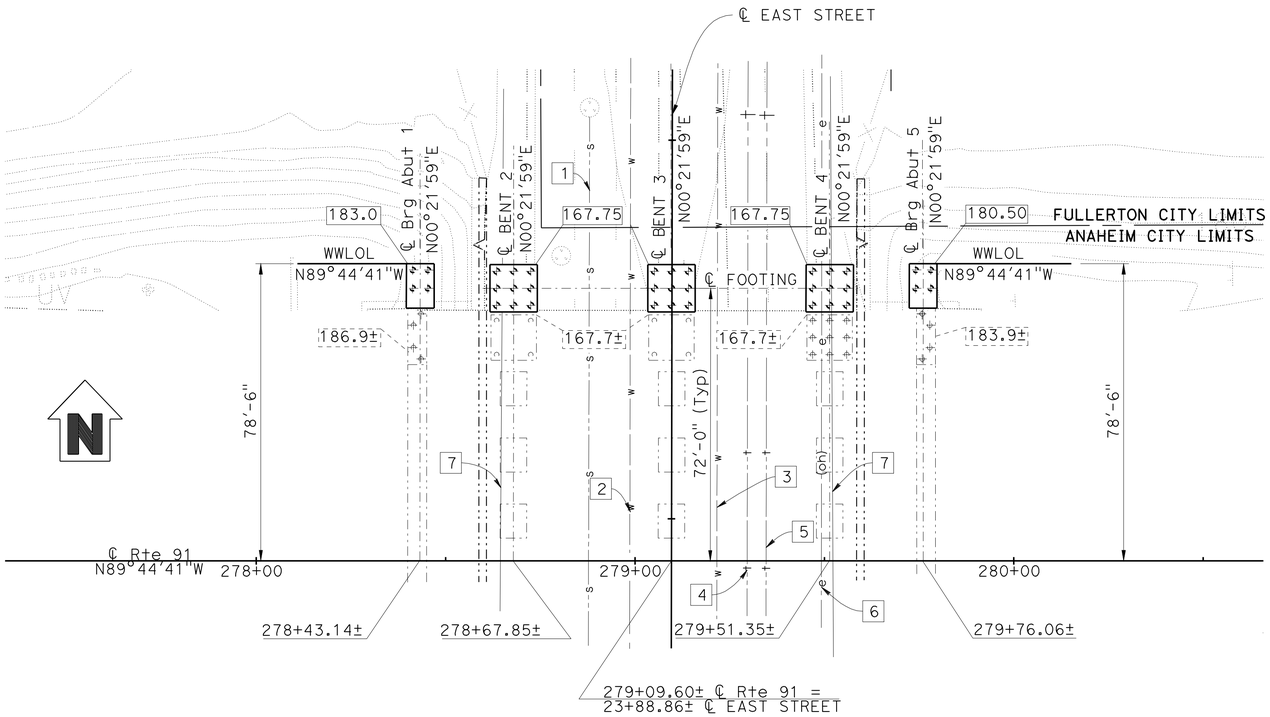

FOUNDATION PLAN

1" = 20'

NOTES:

1. All existing piles not shown.
2. Location of exist structure foundations is approximate.
3. For R/W beyond bridge plan limits, see "ROAD PLANS".

LEGEND:

- XXX.XX — Bottom of Footing Elevation
- XXX.XX± — Bottom of Existing Footing Elevation
- Existing Structure
- New Construction
- Existing Piling
- New Piling

BENCHMARKS:

Elevations as shown hereon are in terms of the North American Vertical Datum of 1988 (NAVD88), based locally upon the following Benchmarks as published by the County of Orange:

Designation: 1G-164-05 Elev = 109.80
Described by OCS 2005 - Found 3¾" OCS Aluminum Benchmark Disk Stamped "1G-164-05", set in the northwesterly corner of a 4.5 ft. by 11.0 ft. Concrete Catch Basin. Monument is located in the southeasterly corner of the intersection of Magnolia Avenue and Buckingham Street, 200 ft. ± from the centerline of Buckingham and 47 ft. easterly of the centerline of Magnolia. Monument is set level with the sidewalk

Designation: 2F-25-04 Elev = 162.70
Described by OCS 2004 - Found 3¾" OCS Aluminum Benchmark Disk Stamped "2F-25-04", set in the northwesterly corner of a 7.5 ft. by 4.5 ft. Concrete Catch Basin. Monument is located in the northeasterly corner of the intersection of Harbor Boulevard and the Eastbound 91 Freeway On-Ramp, 39 ft. northerly of the centerline of the On-Ramp and 40 ft. easterly of the centerline of Harbor Boulevard. Monument is set level with the sidewalk

Designation: 2D-35-86 Elev = 188.58
Described by OCS 2003 - Found 3¾" OCS Aluminum Benchmark Disk Stamped "2D-35-86", set in the northwesterly corner of a 7 ft. by 14 ft. Concrete Catch Basin. Monument is located in the southeasterly corner of the intersection of Placentia Avenue and State College Boulevard, 38 ft. easterly of the centerline of State College and 70.5 ft. southerly of the centerline of Placentia. Monument is set level with the sidewalk

PILE DATA TABLE

Location	Pile Type	Nominal Resistance (kips)		Design Tip Elevation (ft)	Specified Tip Elevation (ft)
		Compression	Tension		
Abut 1	16" CIDH	150	-	+145(a), +161(d)	+145
Bent 2	18" CIDH	330	200	+124(a), +129(b), +152(c), +146(d)	+124
Bent 3	18" CIDH	330	200	+124(a), +129(b), +152(c), +146(d)	+124
Bent 4	18" CIDH	330	200	+124(a), +129(b), +152(c), +146(d)	+124
Abut 5	16" CIDH	150	-	+142(a), +158(d)	+142

NOTES:

1. Design tip elevations are controlled by the followings demands: (a) Compression, (b) Tension, (c) Settlement, and (d) Lateral Load.
2. There are no design tip elevations for Tension and Tolerable Settlements at Abutments 1 and 5.
3. The specified tip elevations for Abutments 1 and 5 shall not be raised above the design tip elevations for Lateral Load.
4. The specified tip elevations for Bents 2 through 4 shall not be raised above the design tip elevations for Tension, Tolerable Settlement and Lateral Load.

NOTE:
THE CONTRACTOR SHALL VERIFY ALL CONTROLLING FIELD DIMENSIONS BEFORE ORDERING OR FABRICATING ANY MATERIAL.

UTILITY NOTES:

1. Exist 18" VCP Sewer, City of Fullerton, Protect in place
2. Exist 12" Ø Water, APUD, Protect in place
3. Exist 36" Ø Water MWD, Protect in place
4. Exist Telephone, AT&T, Protect in place
5. Exist Telephone, MCI/Verizon, Protect in place
6. Exist Electrical Overhead, Protect in place
7. For Exist Conduits in Exist Sidewalk, see "ROAD PLANS"

WARNING:

The Contractor shall be aware of the existing 12 kv OH transmission lines near Bent 4. Contractor shall work with extreme care during pile drilling construction and precast girder erection. City of Anaheim Public Utilities must be notified prior to start of construction work.

BASIS OF COORDINATES:

Bearings and Coordinates as shown hereon are in terms of the California Coordinate System of 1983 (CCS83, Epoch 1991.35), Zone 6; based locally upon the following Control Stations as published by the County of Orange:

Name	Northing (ft)-Grid	Easting (ft)-Grid
OCS GPS 3511R1	2257877.29	6037582.77
OCS GPS 3518	2260444.33	6053380.91
OCS GPS 5260	2257149.07	6063970.03

GEOTECHNICAL PROFESSIONAL — APPROVAL DATE 3-15-2012

DESIGN OVERSIGHT Luqi Yang — 3-29-12 — SIGN OFF DATE

SCALE: X	VERT.DATUM NAVD 88	HORZ.DATUM NAD 83 (1991.35)	
PHOTOGRAMMETRY AS OF: 04-15-2010		ALIGNMENT TIES	
SURVEYED	BY B. Cox	DRAFTED	BY G. Ciampaglia
FIELD CHECKED	BY B. Cox	CHECKED	BY B. Cox

DESIGN	BY T. Kirilov	CHECKED V. J. Mosquera
DETAILS	BY J. Saldana	CHECKED V. J. Mosquera
QUANTITIES	BY C. Stelea	CHECKED R. Kelcher

PREPARED FOR THE STATE OF CALIFORNIA DEPARTMENT OF TRANSPORTATION

V. Jessica Mosquera
PROJECT ENGINEER

BRIDGE NO. 55-0245
POST MILES 4.26

EAST St UC (WIDEN)
FOUNDATION PLAN

FOUNDATION PLAN SHEET (ENGLISH) (REV.7/16/10)

ORIGINAL SCALE IN INCHES FOR REDUCED PLANS 0 1 2 3

UNIT: 2295
PROJECT NUMBER & PHASE: 12000000791 CONTRACT NO.: 12-0C5701

DISREGARD PRINTS BEARING EARLIER REVISION DATES → 08/30/10 09/16/11 12/22/11

SHEET 4 OF 22

FILE => 55-0245-e-fdp101.dgn

USERNAME => s114926 DATE PLOTTED => 17-AUG-2012 TIME PLOTTED => 08:52

DIST	COUNTY	ROUTE	POST MILES TOTAL PROJECT	SHEET No	TOTAL SHEETS
12	Ora	91	0.9/5.4	695	885

REGISTERED CIVIL ENGINEER — DATE 3-15-2012

PLANS APPROVAL DATE 8-13-12

REGISTERED PROFESSIONAL ENGINEER — T. A. Kirilov — No. C 67708 — Exp. 06/30/13 — CIVIL — STATE OF CALIFORNIA

The State of California or its officers or agents shall not be responsible for the accuracy or completeness of scanned copies of this plan sheet.

OCTA
550 S MAIN STREET
ORANGE, CA. 92868

RBF CONSULTING
14725 ALTON PARKWAY
IRVINE, CA 92618

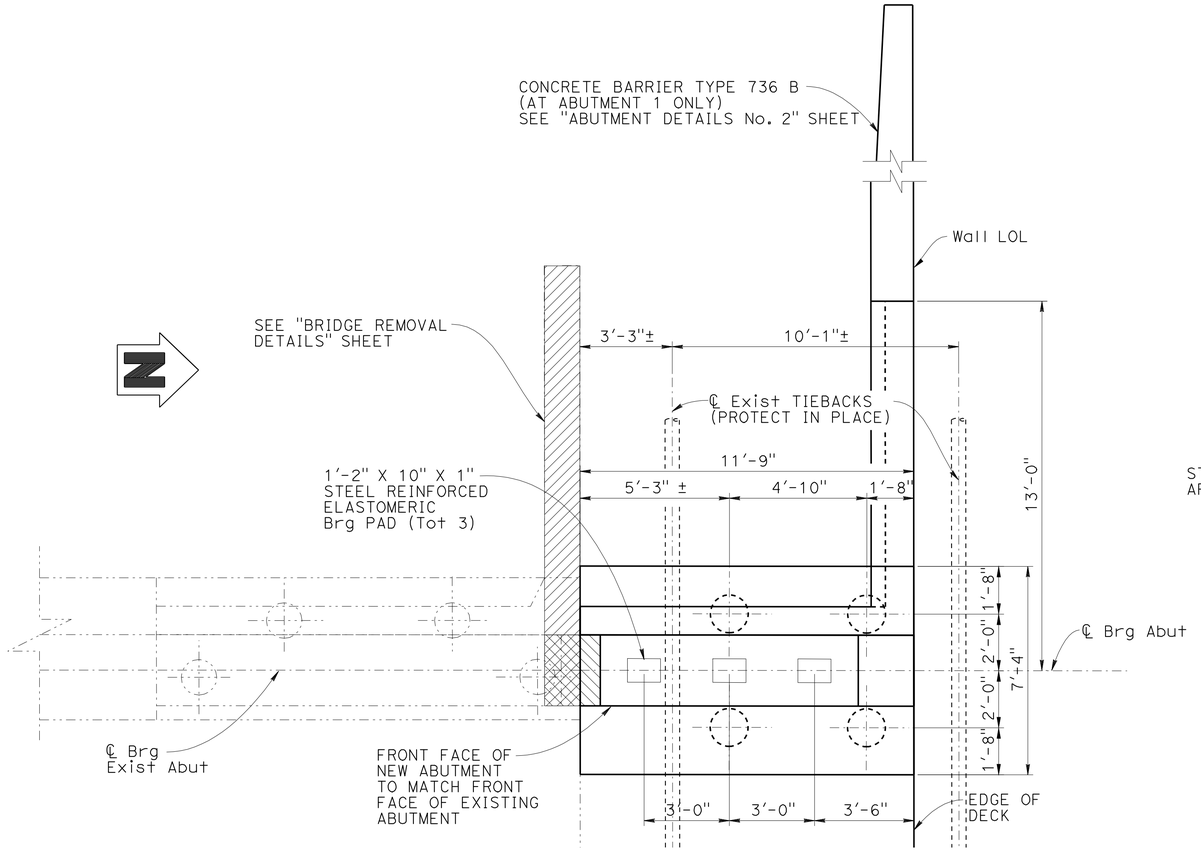

PLAN ABUTMENT 1 SHOWN, ABUTMENT 5 SIMILAR

3/8" = 1'-0"

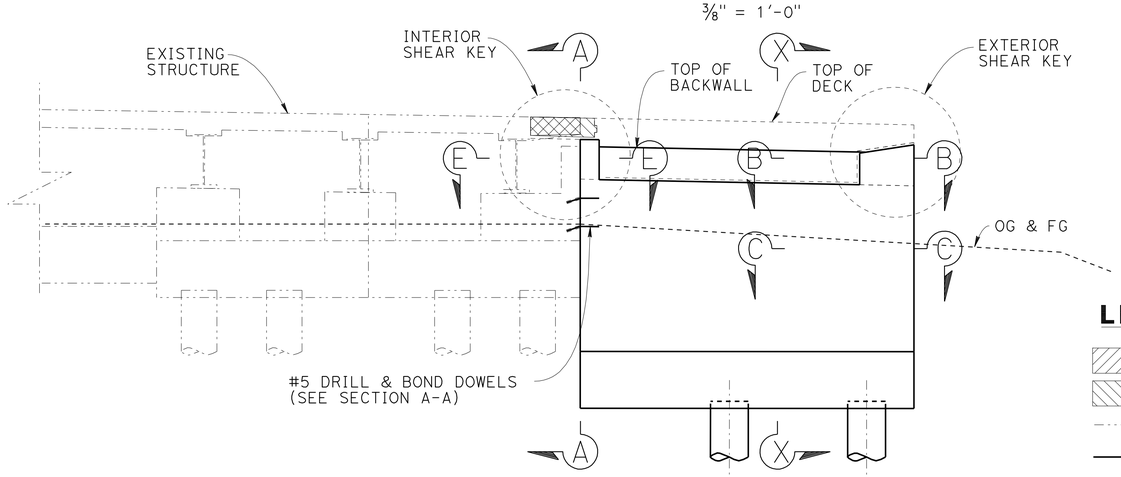

ELEVATION

3/8" = 1'-0"

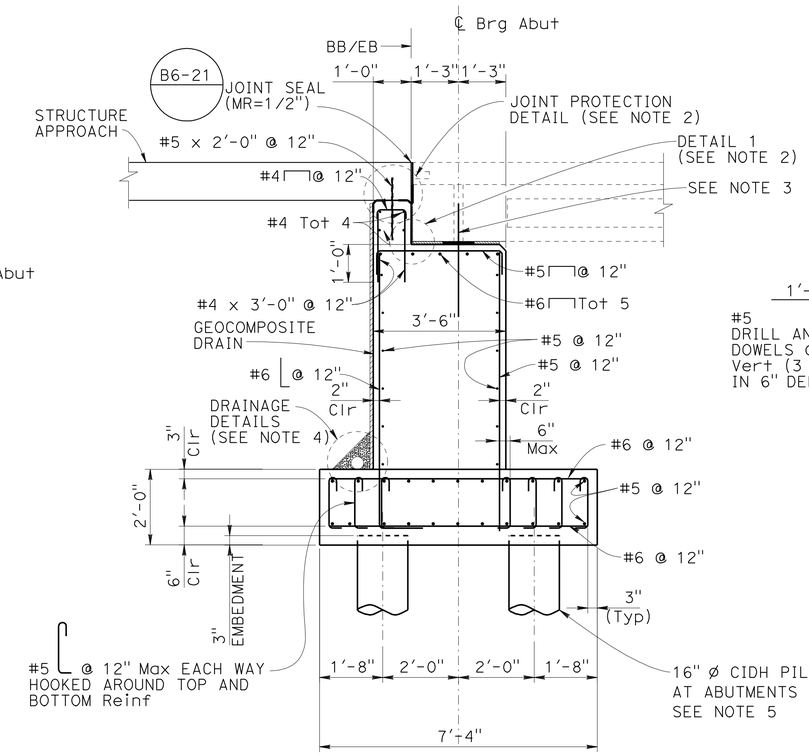

TYPICAL SECTION X-X

1/2" = 1'-0"

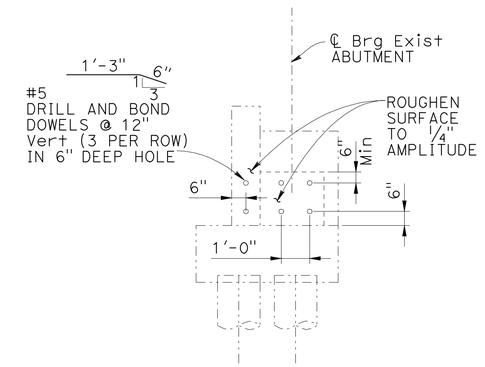

SECTION A-A

3/8" = 1'-0"

LEGEND:

- Limits of Bridge Removal (Portion), Location C
- Closure Pour
- Existing Structure
- New Construction

NOTES:

1. For Section B-B, Section C-C, Section E-E, Exterior Shear Key Detail, and Interior Shear Key Detail, see "ABUTMENT DETAILS No. 1" sheet.
2. For Detail 1 and Joint Protection Detail, see "MISCELLANEOUS DETAILS" sheet.
3. For abutment support details, see "GIRDER LAYOUT" sheet.
4. For Drainage Details, see "STRUCTURE APPROACH DRAINAGE DETAILS" sheet.
5. Abutment Pile Main Longitudinal reinf shall be extended 1'-6" into the Pile Cap.

NOTE:
THE CONTRACTOR SHALL VERIFY ALL CONTROLLING FIELD DIMENSIONS BEFORE ORDERING OR FABRICATING ANY MATERIAL.

	BY	CHECKED
DESIGN	T. Kirilov	V. J. Mosquera
DETAILS	J. Saldana	V. J. Mosquera
QUANTITIES	C. Stelea	R. Kelcher

DESIGN OVERSIGHT Luqi Yang — 3-29-12 SIGN OFF DATE

PREPARED FOR THE STATE OF CALIFORNIA DEPARTMENT OF TRANSPORTATION

V. Jessica Mosquera — PROJECT ENGINEER

BRIDGE NO. 55-0245 — POST MILES 4.26

EAST St UC (WIDEN)
ABUTMENT LAYOUT

DESIGN DETAIL SHEET (ENGLISH) (REV.7/16/10)

ORIGINAL SCALE IN INCHES FOR REDUCED PLANS 0 1 2 3

UNIT: 2295
PROJECT NUMBER & PHASE: 12000000791 CONTRACT NO.: 12-0C5701

DISREGARD PRINTS BEARING EARLIER REVISION DATES — REVISION DATES 08/30/10 09/16/11 12/22/11

SHEET 5 OF 22

FILE => 55-0245-f-a01_lo1.dgn

USERNAME => s121614 DATE PLOTTED => 17-AUG-2012 TIME PLOTTED => 06:01

DIST	COUNTY	ROUTE	POST MILES TOTAL PROJECT	SHEET No	TOTAL SHEETS
12	Ora	91	0.9/5.4	696	885

REGISTERED CIVIL ENGINEER — DATE 3-15-2012

8-13-12
PLANS APPROVAL DATE

The State of California or its officers or agents shall not be responsible for the accuracy or completeness of scanned copies of this plan sheet.

REGISTERED PROFESSIONAL ENGINEER — T. A. Kirilov — No. C 67708 — Exp. 06/30/13 — CIVIL — STATE OF CALIFORNIA

OCTA
550 S MAIN STREET
ORANGE, CA. 92868

RBF CONSULTING
14725 ALTON PARKWAY
IRVINE, CA 92618

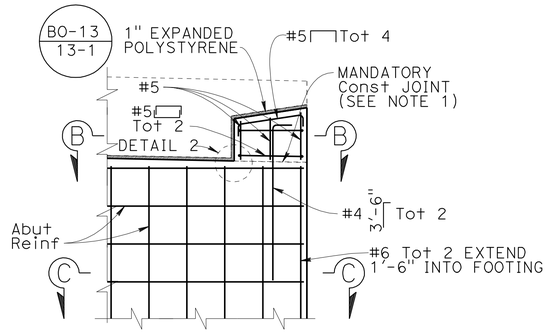

EXTERIOR SHEAR KEY

½" = 1'-0"

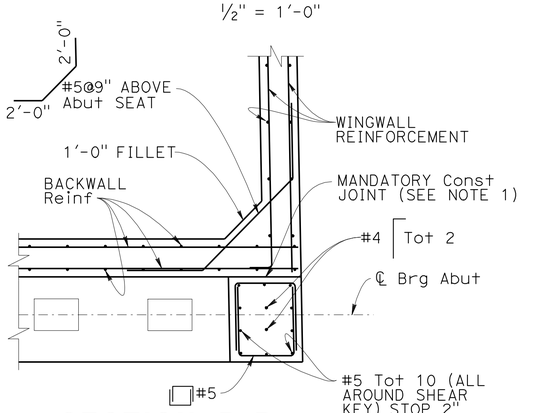

SECTION B-B

½" = 1'-0"

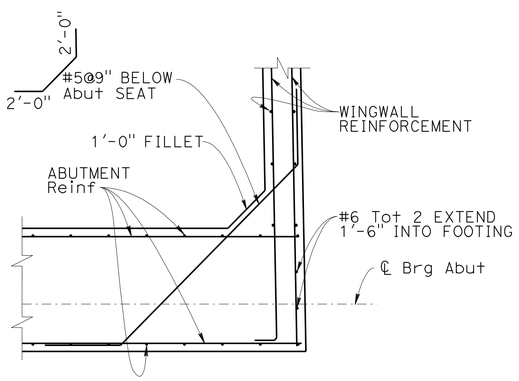

SECTION C-C

½" = 1'-0"

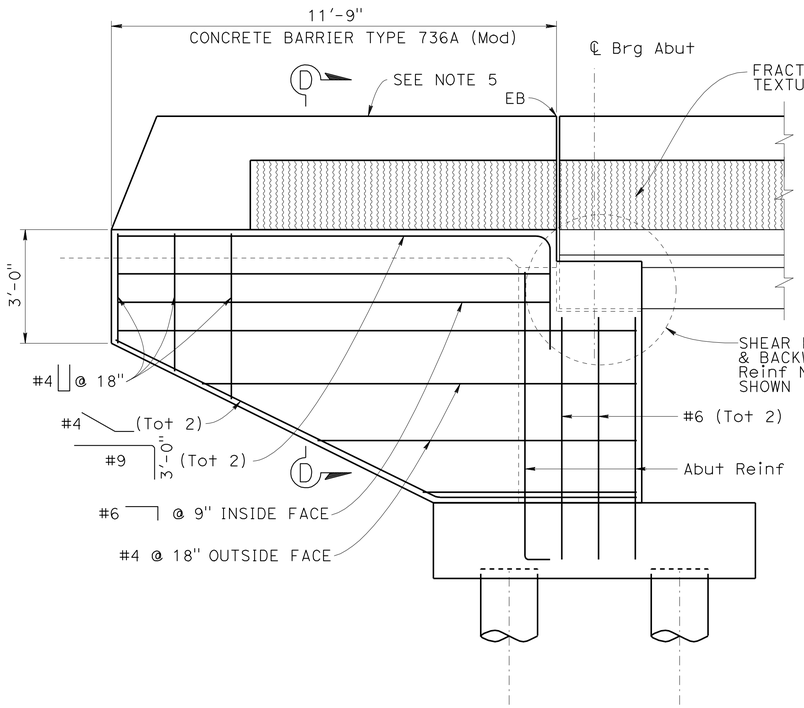

Abut 5
WINGWALL ELEVATION

½" = 1'-0"

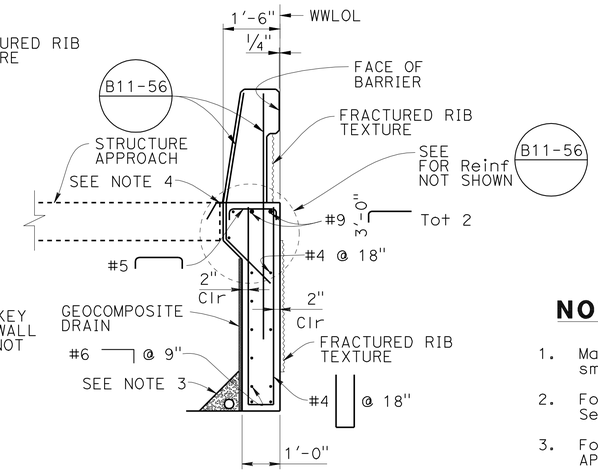

SECTION D-D

½" = 1'-0"

NOTES:

1. Mandatory joint surface shall be level smooth finished.
2. For bars and bond dowels detail, see Section A-A on "ABUTMENT LAYOUT" sheet.
3. For Drainage Details, see "STRUCTURE APPROACH DRAINAGE DETAILS" sheet.
4. For angle, see "DETAIL B" in "STRUCTURE APPROACH TYPE N (30S)" sheet.
5. For concrete barrier and wingwall aesthetic details, see "ARCHITECTURAL DETAILS" sheet.
6. For "DETAIL 2", see "MISCELLANEOUS DETAILS" sheet.

LEGEND:

- Limits of Bridge Removal (Portion), Location C
- Closure Pour
- Existing Structure
- New Construction

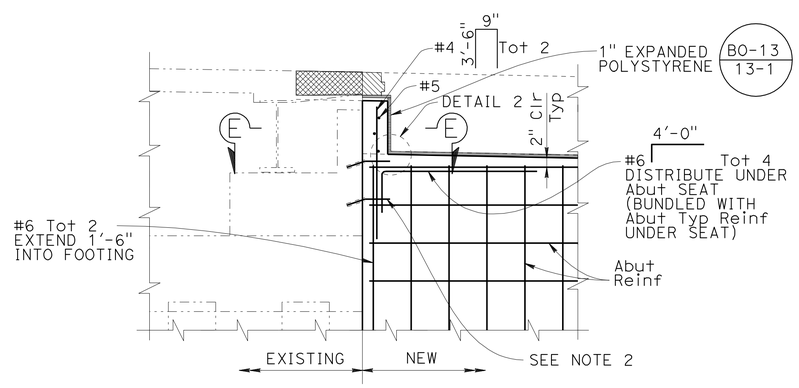

INTERIOR SHEAR KEY

½" = 1'-0"

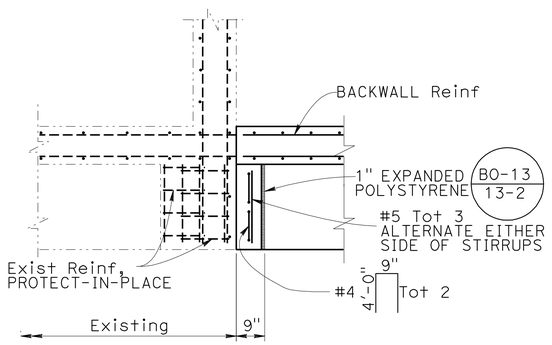

INTERIOR SHEAR KEY
SECTION E-E

½" = 1'-0"

NOTE:
THE CONTRACTOR SHALL VERIFY ALL CONTROLLING FIELD DIMENSIONS BEFORE ORDERING OR FABRICATING ANY MATERIAL.

Luqi Yang
DESIGN OVERSIGHT — Luqi Yang
3-29-12
SIGN OFF DATE

	BY	CHECKED
DESIGN	T. Kirilov	V. J. Mosquera
DETAILS	J. Saldana	V. J. Mosquera
QUANTITIES	C. Stelea	R. Kelcher

PREPARED FOR THE STATE OF CALIFORNIA DEPARTMENT OF TRANSPORTATION

V. Jessica Mosquera
PROJECT ENGINEER

BRIDGE NO. 55-0245
POST MILES 4.26

EAST St UC (WIDEN)
ABUTMENT DETAILS No. 1

DESIGN DETAIL SHEET (ENGLISH) (REV.7/16/10)

ORIGINAL SCALE IN INCHES FOR REDUCED PLANS 0 1 2 3

UNIT: 2295
PROJECT NUMBER & PHASE: 12000000791 CONTRACT NO.: 12-0C5701

DISREGARD PRINTS BEARING EARLIER REVISION DATES — REVISION DATES 08/30/10 09/06/11 12/22/11

SHEET 6 OF 22

FILE => 55-0245-f-a01dt01.dgn

USERNAME => s121614 DATE PLOTTED => 17-AUG-2012 TIME PLOTTED => 06:01

DIST	COUNTY	ROUTE	POST MILES TOTAL PROJECT	SHEET No	TOTAL SHEETS
12	Ora	91	0.9/5.4	697	885

REGISTERED CIVIL ENGINEER — DATE 3-15-2012

8-13-12
PLANS APPROVAL DATE

REGISTERED PROFESSIONAL ENGINEER — T. A. Kirilov — No. C 67708 — Exp. 06/30/13 — CIVIL — STATE OF CALIFORNIA

The State of California or its officers or agents shall not be responsible for the accuracy or completeness of scanned copies of this plan sheet.

OCTA
550 S MAIN STREET
ORANGE, CA. 92868

RBF CONSULTING
14725 ALTON PARKWAY
IRVINE, CA 92618

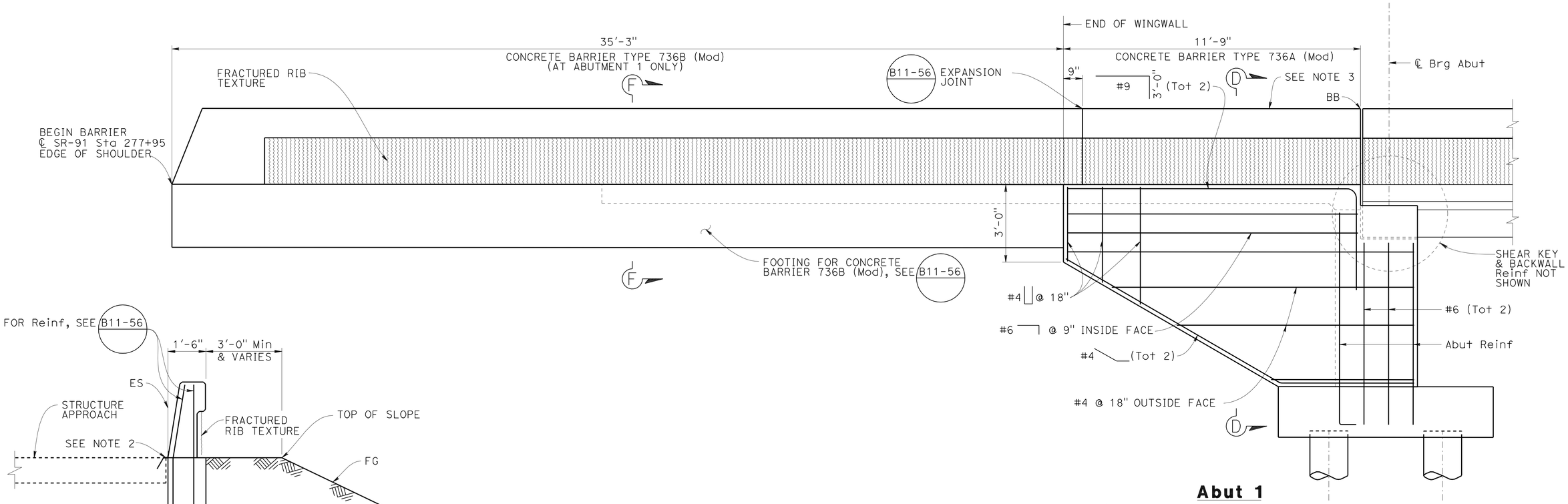

Abut 1
MIRRORED WINGWALL ELEVATION
½" = 1'-0"

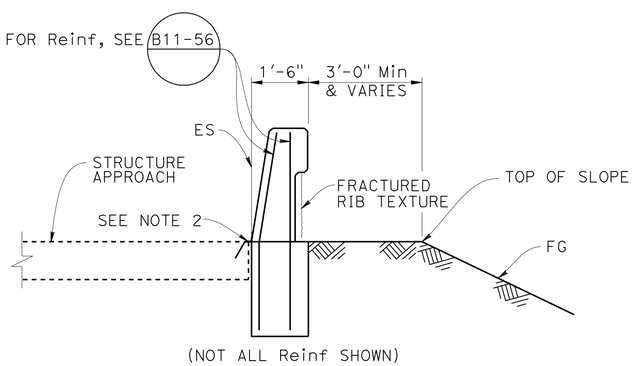

SECTION F-F
½" = 1'-0"

NOTES:

1. For Section D-D, see "ABUTMENT DETAILS No. 1" sheet.
2. For angle, see "DETAIL B" in "STRUCTURE APPROACH TYPE N (30S)" sheet.
3. For concrete barrier and wingwall aesthetic details, see "ARCHITECTURAL DETAILS" sheet.

NOTE:
THE CONTRACTOR SHALL VERIFY ALL CONTROLLING FIELD DIMENSIONS BEFORE ORDERING OR FABRICATING ANY MATERIAL.

Luqi Yang
DESIGN OVERSIGHT — Luqi Yang
3-29-12
SIGN OFF DATE

	BY	CHECKED
DESIGN	T. Kirilov	V. J. Mosquera
DETAILS	J. Saldana	V. J. Mosquera
QUANTITIES	C. Stelea	R. Kelcher

PREPARED FOR THE STATE OF CALIFORNIA DEPARTMENT OF TRANSPORTATION

V. Jessica Mosquera
PROJECT ENGINEER

BRIDGE NO. 55-0245
POST MILES 4.26

EAST St UC (WIDEN)
ABUTMENT DETAILS No. 2

DESIGN DETAIL SHEET (ENGLISH) (REV.7/16/10)

ORIGINAL SCALE IN INCHES FOR REDUCED PLANS 0 1 2 3

UNIT: 2295
PROJECT NUMBER & PHASE: 12000000791 CONTRACT NO.: 12-0C5701

DISREGARD PRINTS BEARING EARLIER REVISION DATES → 08/30/10 09/06/11 12/22/11

SHEET 7 OF 22

FILE => 55-0245-f-a01dt02.dgn

USERNAME => s121614 DATE PLOTTED => 17-AUG-2012 TIME PLOTTED => 06:02

DIST	COUNTY	ROUTE	POST MILES TOTAL PROJECT	SHEET No	TOTAL SHEETS
12	Ora	91	0.9/5.4	698	885

REGISTERED CIVIL ENGINEER — DATE: 3-15-2012

8-13-12
PLANS APPROVAL DATE

REGISTERED PROFESSIONAL ENGINEER — T. A. Kirilov — No. C 67708 — Exp. 06/30/13 — CIVIL — STATE OF CALIFORNIA

The State of California or its officers or agents shall not be responsible for the accuracy or completeness of scanned copies of this plan sheet.

OCTA
550 S MAIN STREET
ORANGE, CA. 92868

RBF CONSULTING
14725 ALTON PARKWAY
IRVINE, CA 92618

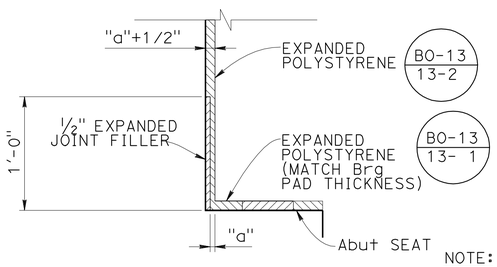

DETAIL 1
AT ABUTMENT SEAT
NO SCALE

NOTE:
For "a" dimension refer to B6-21

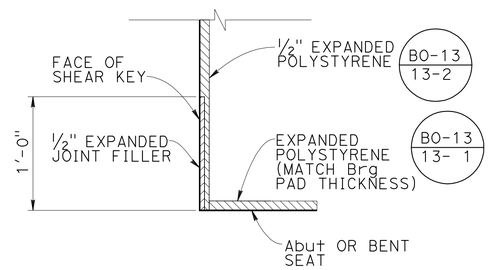

DETAIL 2
AT ABUTMENT OR BENT SHEAR KEY
NO SCALE

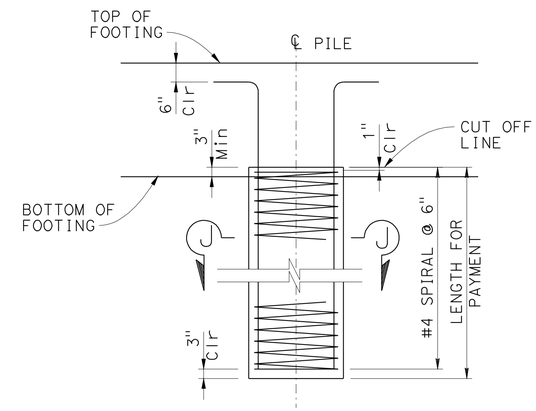

BENT PILE
18" CIDH CONCRETE PILE
NO SCALE

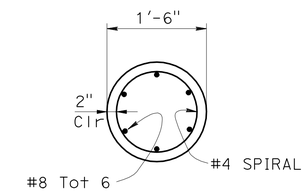

SECTION J-J
NO SCALE

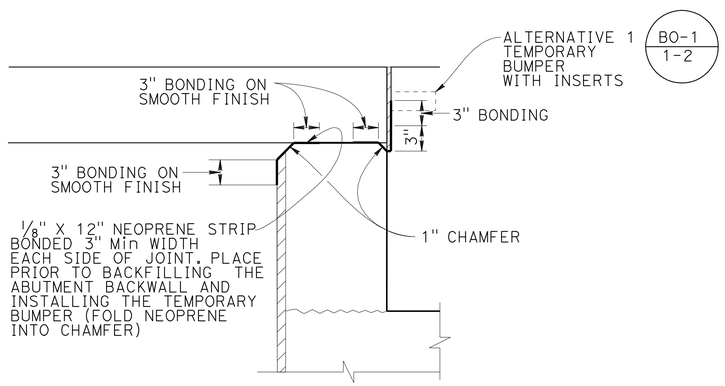

JOINT PROTECTION DETAIL
NO SCALE

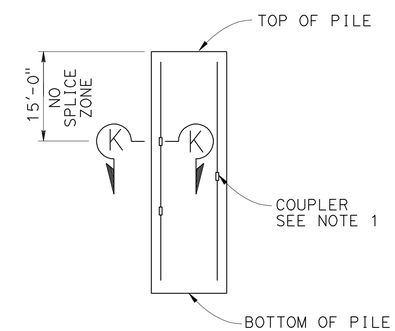

BENT 4
BENT PILE SPLICING
NOTE: SPIRAL Reinf NOT SHOWN
NO SCALE

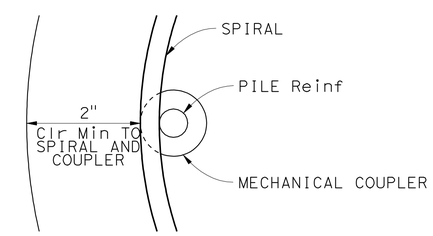

SECTION K-K
NO SCALE

NOTES:

1. Reinforcement at Bent 4 CIDH piles shall be spliced with service splice couplers, for construction under the overhead lines. Splices shall be staggered.
2. Location of splice may be modified ± 5 ft, as directed by Engineer.
3. This splice detail is only for Bent 4 piles.
4. For additional notes, see B2-3

NOTE:
THE CONTRACTOR SHALL VERIFY ALL CONTROLLING FIELD DIMENSIONS BEFORE ORDERING OR FABRICATING ANY MATERIAL.

DESIGN OVERSIGHT: Luqi Yang — 3-29-12 — SIGN OFF DATE

	BY	CHECKED
DESIGN	T. Kirilov	V. J. Mosquera, F. Sanchez
DETAILS	J. Saldana	V. J. Mosquera, F. Sanchez
QUANTITIES	C. Stelea	R. Kelcher

PREPARED FOR THE STATE OF CALIFORNIA DEPARTMENT OF TRANSPORTATION

V. Jessica Mosquera — PROJECT ENGINEER

BRIDGE NO. 55-0245
POST MILES 4.26

EAST St UC (WIDEN)
MISCELLANEOUS DETAILS

DESIGN DETAIL SHEET (ENGLISH) (REV.7/16/10)

ORIGINAL SCALE IN INCHES FOR REDUCED PLANS 0 1 2 3

UNIT: 2295
PROJECT NUMBER & PHASE: 12000000791
CONTRACT NO.: 12-0C5701

DISREGARD PRINTS BEARING EARLIER REVISION DATES
REVISION DATES: 08/30/10 09/16/11 12/22/11

SHEET 8 OF 22

FILE => 55-0245-f-a01dt03.dgn

USERNAME => s121614 DATE PLOTTED => 17-AUG-2012 TIME PLOTTED => 06:02

DIST	COUNTY	ROUTE	POST MILES TOTAL PROJECT	SHEET No	TOTAL SHEETS
12	Ora	91	0.9/5.4	699	885

REGISTERED CIVIL ENGINEER — DATE: 3-15-2012

PLANS APPROVAL DATE: 8-13-12

REGISTERED PROFESSIONAL ENGINEER — T. A. Kirilov — No. C 67708 — Exp. 06/30/13 — CIVIL — STATE OF CALIFORNIA

The State of California or its officers or agents shall not be responsible for the accuracy or completeness of scanned copies of this plan sheet.

OCTA
550 S MAIN STREET
ORANGE, CA. 92868

RBF CONSULTING
14725 ALTON PARKWAY
IRVINE, CA 92618

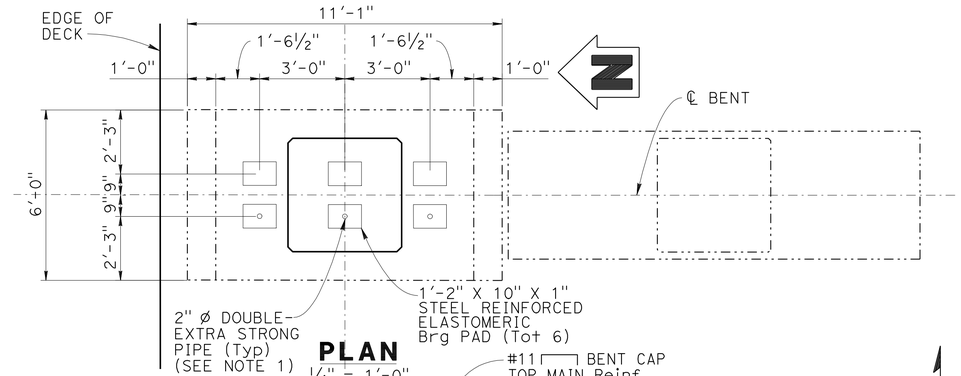

PLAN
¼" = 1'-0"

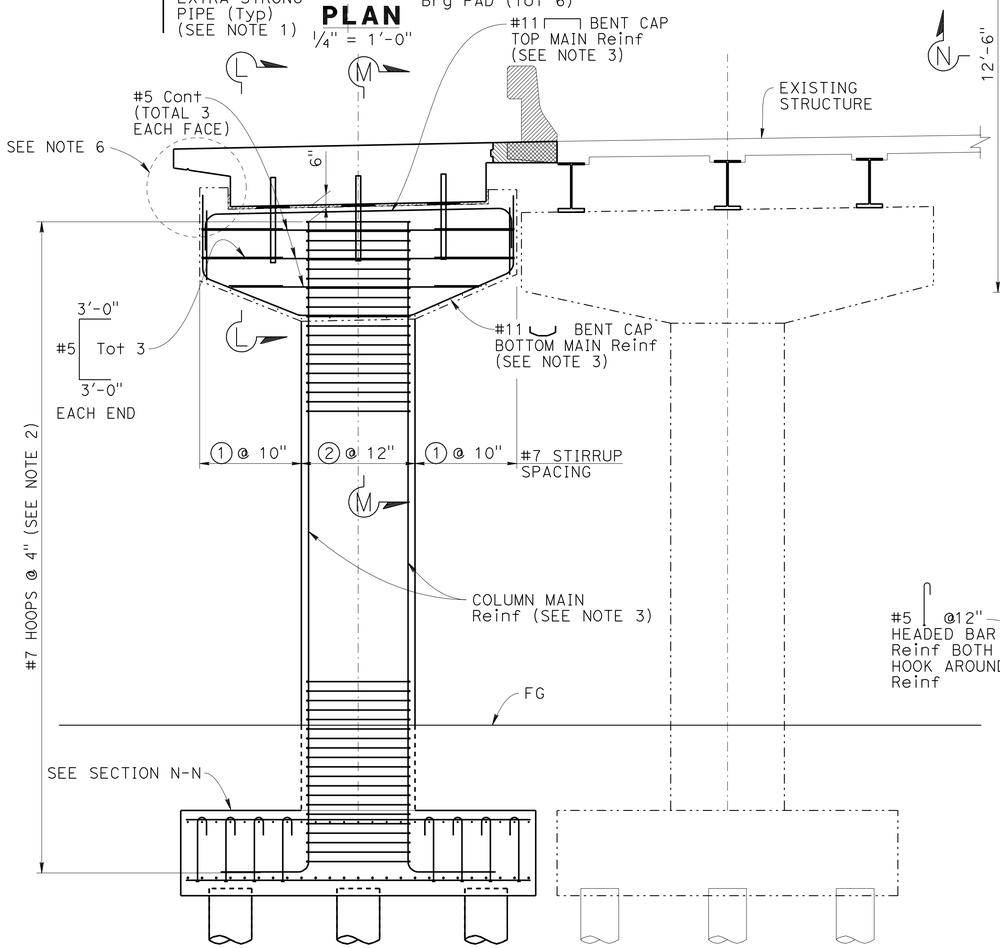

ELEVATION
¼" = 1'-0"

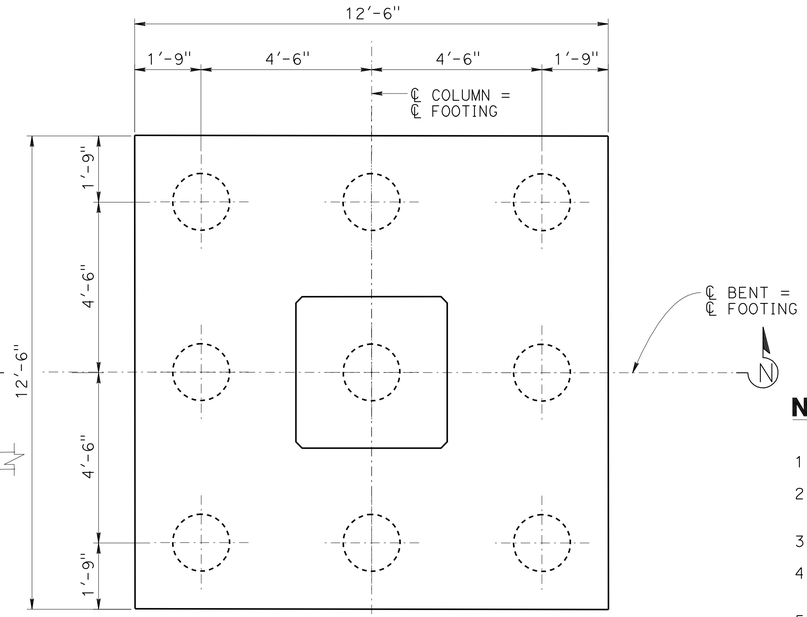

PLAN
½" = 1'-0"

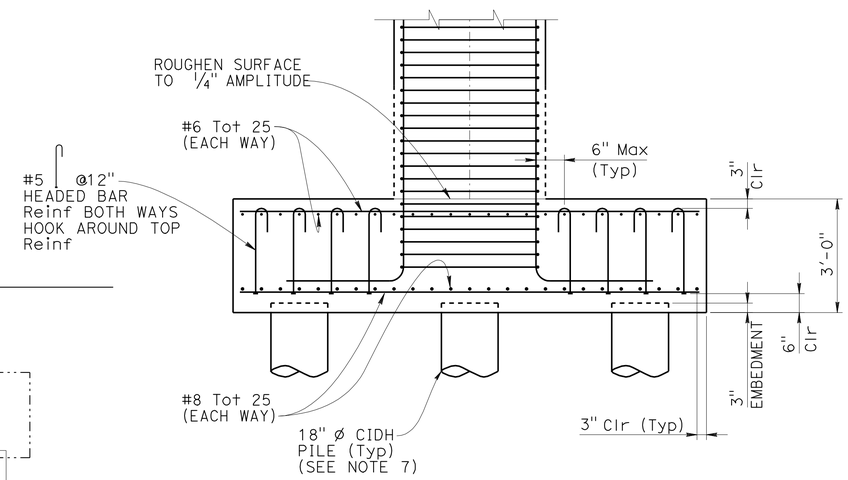

SECTION N-N
½" = 1'-0"

NOTES:

1. For Bent Support Details, see "GIRDER LAYOUT" sheet.
2. All hoops shall be butt welded and meet the "Ultimate Splice" requirements.
3. No splice permitted in column and bent cap main reinforcement.
4. Vertically and horizontally alternate 135° bends in stirrup cross ties.
5. For detail of bar placement through column and Section L-L and M-M, see "BENT DETAILS" sheet.
6. For shear key details at bent cap, see "BENT DETAILS" sheet.
7. For Bent Pile Details, see "MISCELLANEOUS DETAILS" sheet.

LEGEND:

- Limits of Bridge Removal (Portion), Location C
- Closure Pour
- Existing Structure
- New Construction

LOCATION	#7 STIRRUP CONFIGURATION
①	(See Note 4)
②	5'-0" Min Lap

BENT CAP STIRRUP TABLE

NOTE:
THE CONTRACTOR SHALL VERIFY ALL CONTROLLING FIELD DIMENSIONS BEFORE ORDERING OR FABRICATING ANY MATERIAL.

DESIGN OVERSIGHT: Luqi Yang — SIGN OFF DATE: 3-29-12

	BY	CHECKED
DESIGN	T. Kirilov	F. Sanchez
DETAILS	J. Saldana	F. Sanchez
QUANTITIES	C. Stelea	R. Kelcher

PREPARED FOR THE STATE OF CALIFORNIA DEPARTMENT OF TRANSPORTATION

V. Jessica Mosquera — PROJECT ENGINEER

BRIDGE NO. 55-0245 — POST MILES 4.26

EAST St UC (WIDEN)
BENT LAYOUT

DESIGN DETAIL SHEET (ENGLISH) (REV.7/16/10)

ORIGINAL SCALE IN INCHES FOR REDUCED PLANS 0 1 2 3

UNIT: 2295
PROJECT NUMBER & PHASE: 12000000791 — CONTRACT NO.: 12-0C5701

DISREGARD PRINTS BEARING EARLIER REVISION DATES → 08/30/10 09/16/11 12/22/11 02/17/12

SHEET 9 OF 22

FILE => 55-0245-h-b01_lo01.dgn

USERNAME => s121614 DATE PLOTTED => 17-AUG-2012 TIME PLOTTED => 06:02

DIST	COUNTY	ROUTE	POST MILES TOTAL PROJECT	SHEET No	TOTAL SHEETS
12	Ora	91	0.9/5.4	700	885

REGISTERED CIVIL ENGINEER — DATE 3-15-2012

8-13-12
PLANS APPROVAL DATE

REGISTERED PROFESSIONAL ENGINEER — T. A. Kirilov — No. C 67708 — Exp. 06/30/13 — CIVIL — STATE OF CALIFORNIA

The State of California or its officers or agents shall not be responsible for the accuracy or completeness of scanned copies of this plan sheet.

OCTA
550 S MAIN STREET
ORANGE, CA. 92868

RBF CONSULTING
14725 ALTON PARKWAY
IRVINE, CA 92618

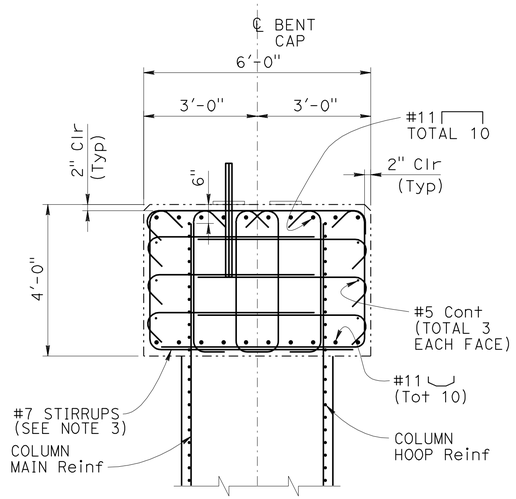

SECTION M-M

½" = 1'-0"

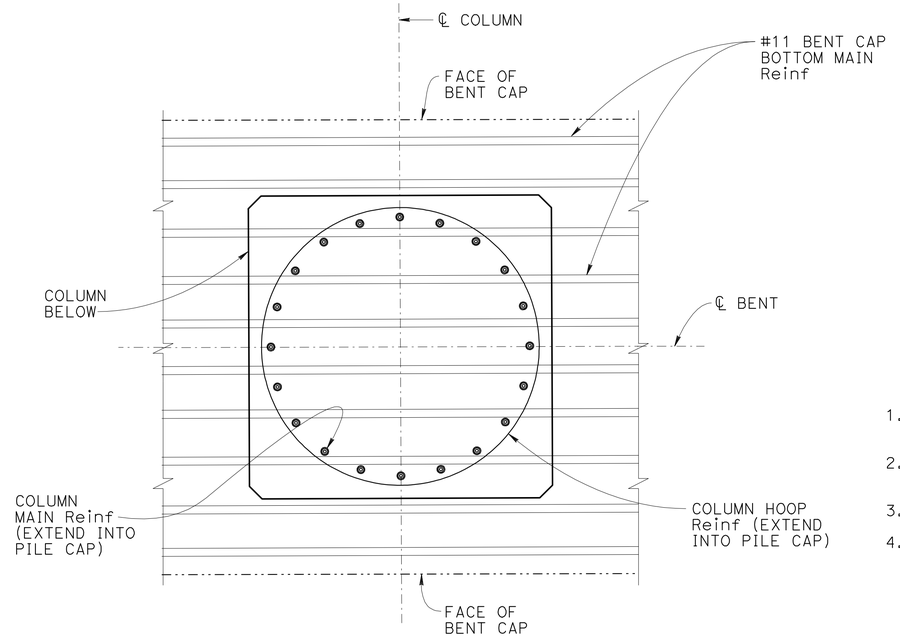

BAR PLACEMENT DETAIL

1" = 1'-0"

NOTES:

1. All hoops shall be butt welded and meet the "Ultimate Splice" requirements.
2. Vertically and horizontally alternate 135° bends in stirrups cross-ties.
3. For stirrup table, see "BENT LAYOUT" sheet
4. For Detail 2, see "MISCELLANEOUS DETAILS" sheet.

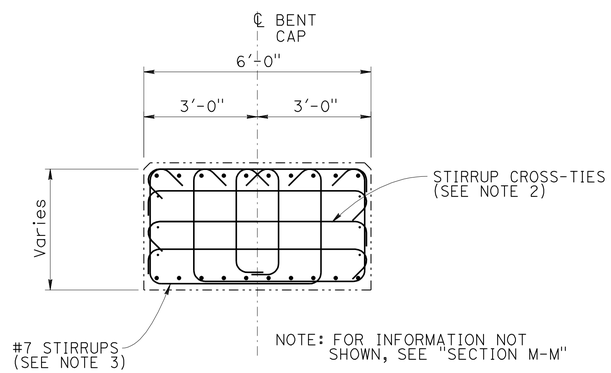

SECTION L-L

½" = 1'-0"

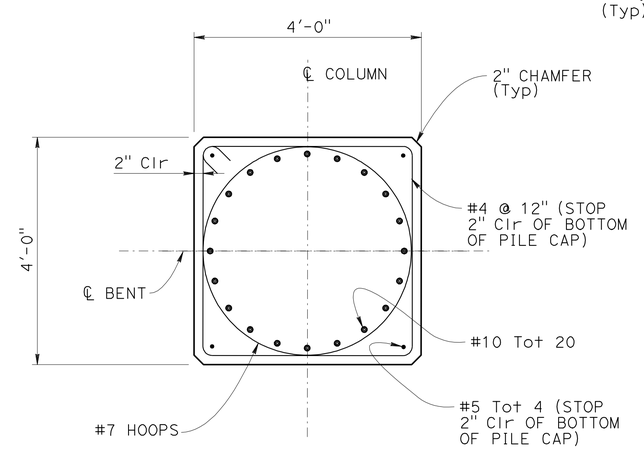

TYPICAL COLUMN SECTION

¾" = 1'-0"

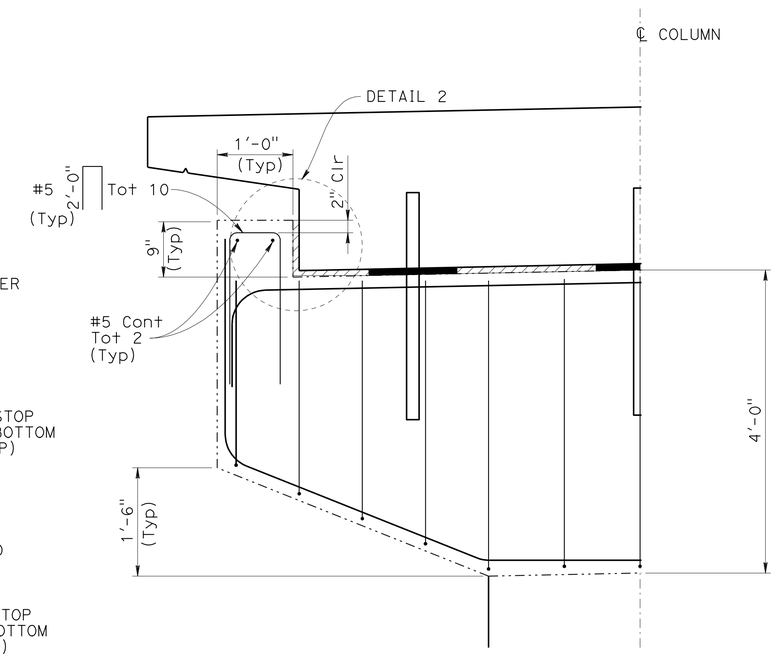

SHEAR KEY AT BENT CAP

1" = 1'-0"

NOTE:
THE CONTRACTOR SHALL VERIFY ALL CONTROLLING FIELD DIMENSIONS BEFORE ORDERING OR FABRICATING ANY MATERIAL.

Luqi Yang
DESIGN OVERSIGHT — Luqi Yang
3-29-12
SIGN OFF DATE

	BY	CHECKED
DESIGN	T. Kirilov	F. Sanchez
DETAILS	J. Saldana	F. Sanchez
QUANTITIES	C. Stelea	R. Kelcher

PREPARED FOR THE STATE OF CALIFORNIA DEPARTMENT OF TRANSPORTATION

V. Jessica Mosquera
PROJECT ENGINEER

BRIDGE NO. 55-0245
POST MILES 4.26

EAST St UC (WIDEN)
BENT DETAILS

DESIGN DETAIL SHEET (ENGLISH) (REV.7/16/10)

ORIGINAL SCALE IN INCHES FOR REDUCED PLANS 0 1 2 3

UNIT: 2295
PROJECT NUMBER & PHASE: 12000000791 CONTRACT NO.: 12-0C5701

DISREGARD PRINTS BEARING EARLIER REVISION DATES

REVISION DATES: 08/30/10 09/06/11 12/22/11

SHEET 10 OF 22

FILE => 55-0245-h-b01dt01.dgn

USERNAME => s121614 DATE PLOTTED => 17-AUG-2012 TIME PLOTTED => 06:02