DIST	COUNTY	ROUTE	POST MILES TOTAL PROJECT	SHEET No	TOTAL SHEETS
12	Ora	22,405, 605	R0.3/R0.9, 22.3/24.0,3.0/R1.6	1501	1929

REGISTERED CIVIL ENGINEER 07-27-09 DATE

2-1-10
PLANS APPROVAL DATE

REGISTERED PROFESSIONAL ENGINEER J. Hermstad No. C 66045 Exp. 06-30-10 CIVIL STATE OF CALIFORNIA

The State of California or its officers or agents shall not be responsible for the accuracy or completeness of electronic copies of this plan sheet.

OCTA
550 SOUTH MAIN STREET
ORANGE, CA 92863

TRC
21 TECHNOLOGY DR
IRVINE, CA 92618

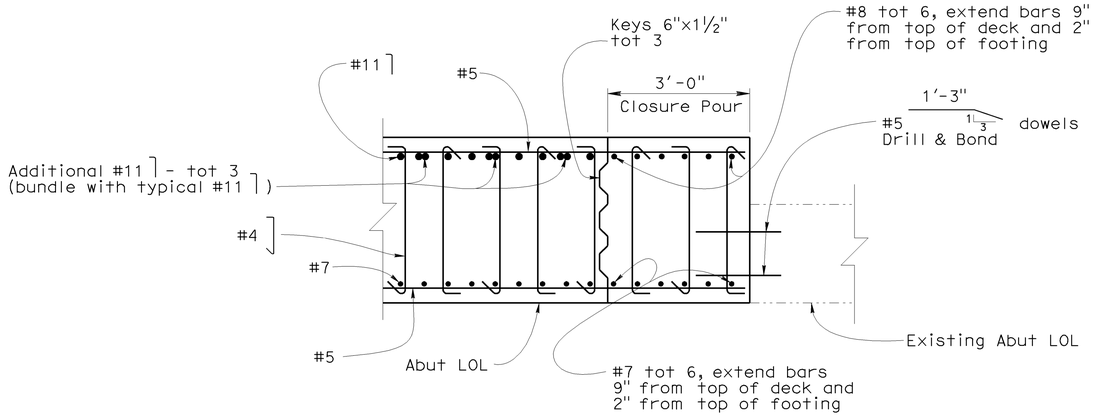

Note: Abut 1 shown, Abut 2 similar

ABUTMENT WALL CLOSURE POUR DETAIL (SECTION D-D)

⅝"= 1'-0"

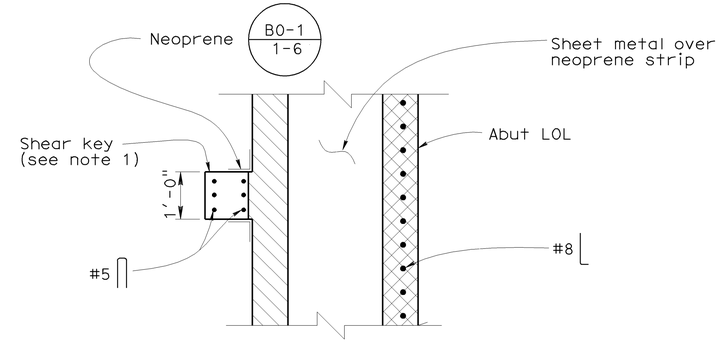

SECTION K-K

⅝"= 1'-0"

LEGEND

- Expansion Joint Filler
- Blockout
- New Structure
- Existing Structure

NOTES

1. See abutment layout sheets for locations of shear keys

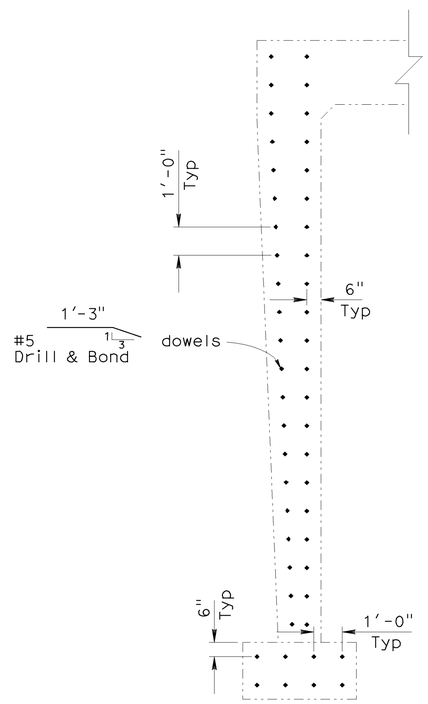

Note: Abut 1 shown, Abut 2 similar

DOWEL LAYOUT (SECTION E-E)

⅜"= 1'-0"

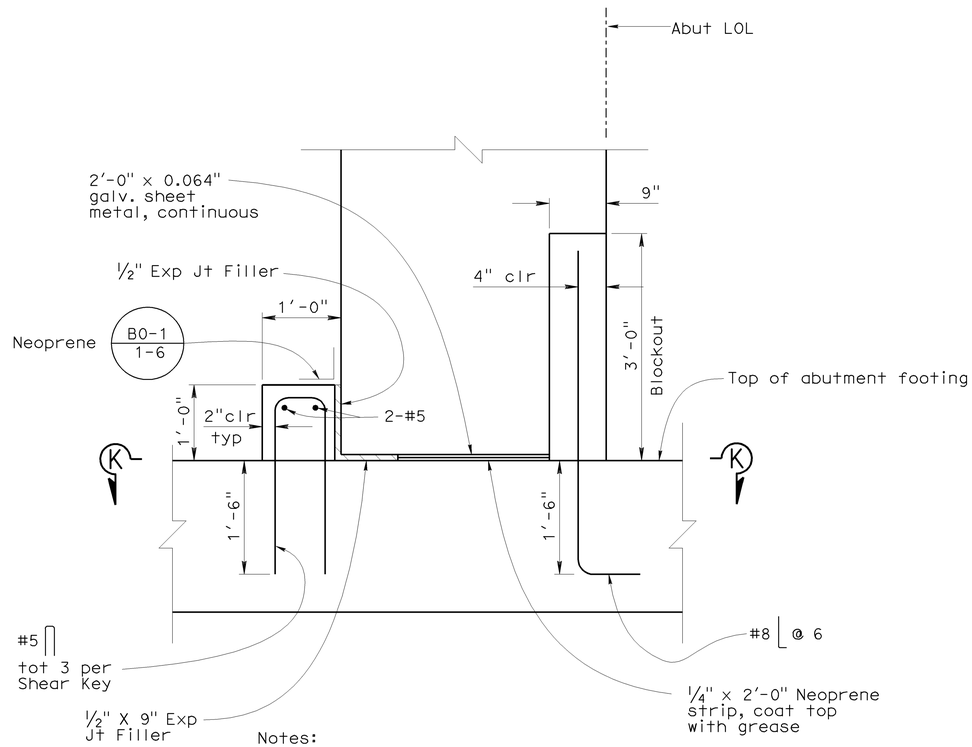

Notes:

1. Abutment and footing reinforcement not shown
2. Extend sheet metal, neoprene strip, and #8 @ 6 through closure pour. Blockout does not occur at abutment wall closure pour.

DETAIL 3

1"= 1'-0"

NOTE:
THE CONTRACTOR SHALL VERIFY ALL CONTROLLING FIELD DIMENSIONS BEFORE ORDERING OR FABRICATING ANY MATERIAL.

Sudhakar Vatti
DESIGN OVERSIGHT Sudhakar Vatti
8-10-09
SIGN OFF DATE

	BY	CHECKED
DESIGN	J. Hermstad	A. Priley
DETAILS	J. Hermstad	A. Priley
QUANTITIES	J. Hermstad	J. Wong

PREPARED FOR THE STATE OF CALIFORNIA DEPARTMENT OF TRANSPORTATION

J. Hermstad
PROJECT ENGINEER

CU 12235
EA 071631

BRIDGE NO. 55-0415
POST MILE R0.16

E22-N405 CONNECTOR UC (LENGTHEN)
ABUTMENT DETAILS NO. 4

DESIGN DETAIL SHEET (ENGLISH) (REV. 2/25/05)

ORIGINAL SCALE IN INCHES FOR REDUCED PLANS 0 1 2 3

DISREGARD PRINTS BEARING EARLIER REVISION DATES

REVISION DATES (PRELIMINARY STAGE ONLY) 09/17/08 04/06/09 07/27/09

SHEET 13 OF 22

FILE => 55-0415-f-ad04.dgn

USERNAME => friehard DATE PLOTTED => 02-FEB-2010 TIME PLOTTED => 14:07

DIST	COUNTY	ROUTE	POST MILES TOTAL PROJECT	SHEET No	TOTAL SHEETS
12	Ora	22,405, 605	R0.3/R0.9, 22.3/24.0,3.0/R1.6	1502	1929

REGISTERED CIVIL ENGINEER 07-27-09 DATE

2-1-10
PLANS APPROVAL DATE

REGISTERED PROFESSIONAL ENGINEER J. Hermstad No. C 66045 Exp. 06-30-10 CIVIL STATE OF CALIFORNIA

The State of California or its officers or agents shall not be responsible for the accuracy or completeness of electronic copies of this plan sheet.

OCTA
550 SOUTH MAIN STREET
ORANGE, CA 92863

TRC
21 TECHNOLOGY DR
IRVINE, CA 92618

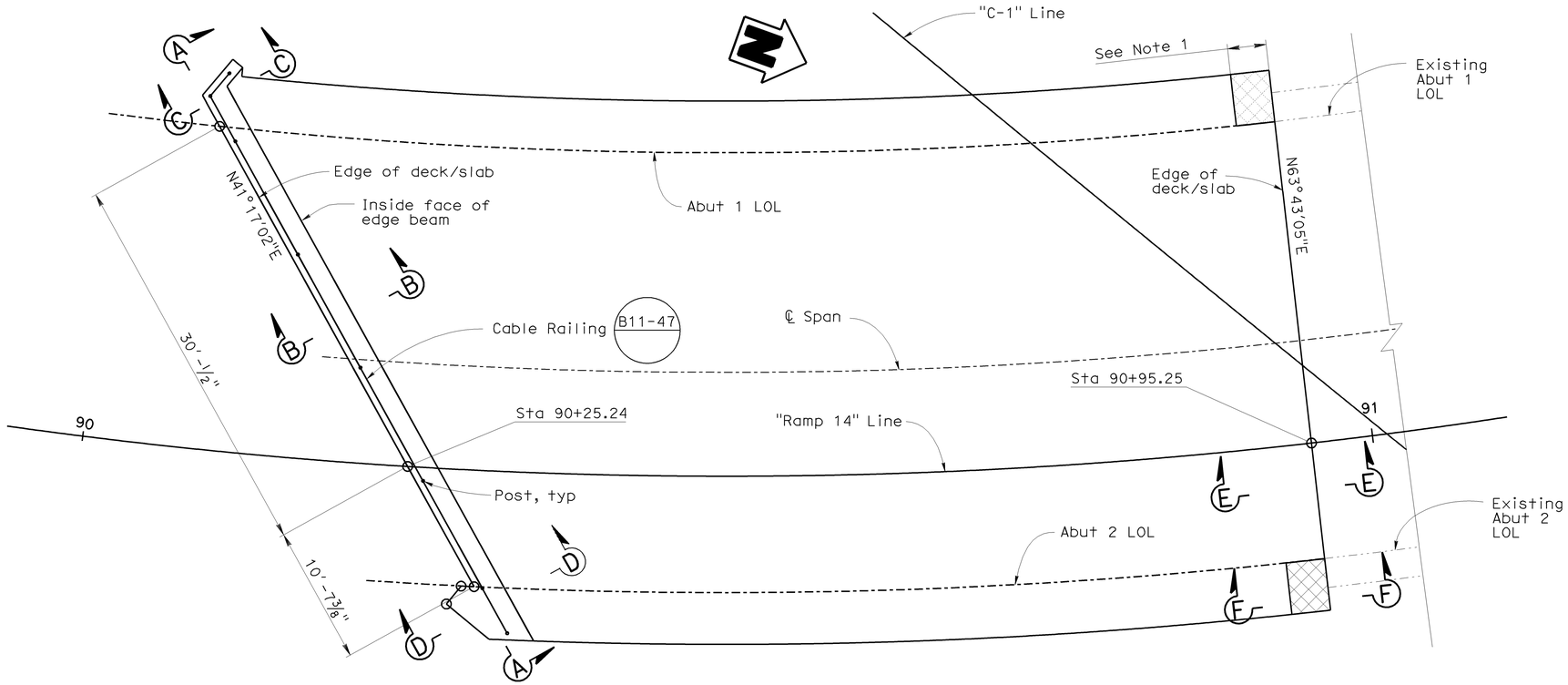

SLAB PLAN

3/16"= 1-0'

LEGEND

Closure Pour

New Structure

Existing Structure

NOTES

1. For limits of abutment wall closure pour, see Abutment Layout sheets
2. For Sections D-D and E-E, see "Bottom Slab Reinforcement" sheet
3. For Section F-F, see "Top Slab Reinforcement" sheet
4. Contractor shall verify edge beam height relative to final grade prior to construction of edge beam
5. Place #5 normal to edge of deck and space along edge of deck

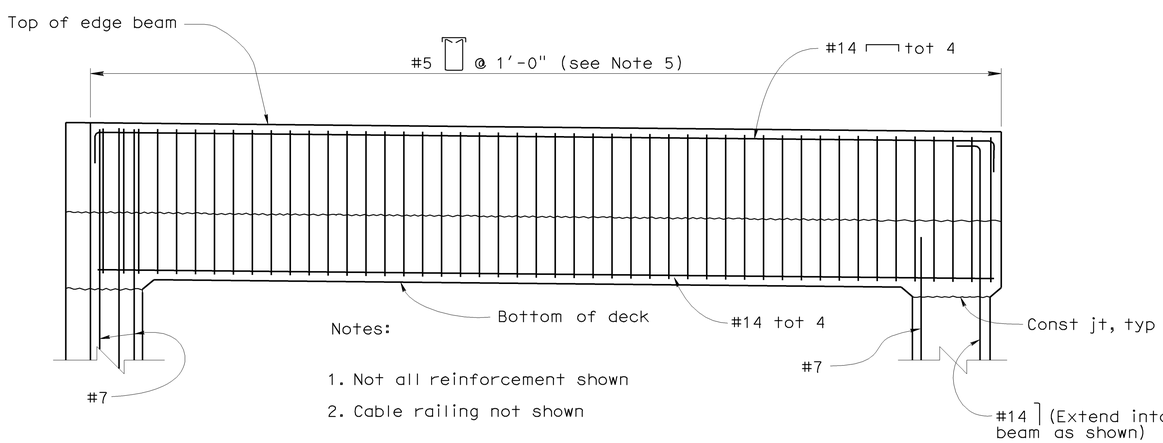

Notes:

1. Not all reinforcement shown
2. Cable railing not shown

EDGE BEAM ELEVATION (SECTION A-A)

1/4"= 1-0'

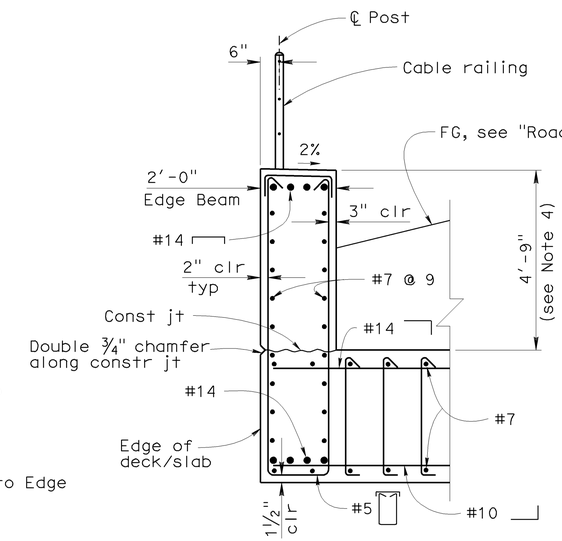

SECTION B-B

1/2"= 1-0'

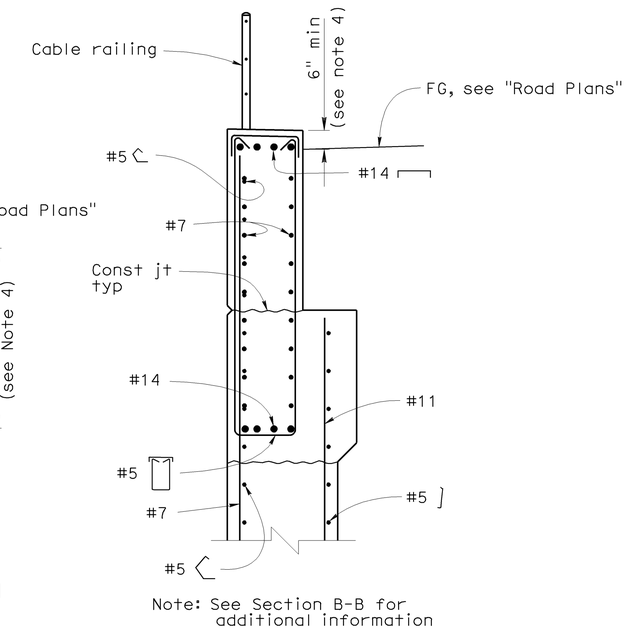

Note: See Section B-B for additional information

SECTION C-C

1/2"= 1-0'

NOTE:
THE CONTRACTOR SHALL VERIFY ALL CONTROLLING FIELD DIMENSIONS BEFORE ORDERING OR FABRICATING ANY MATERIAL.

Sudhakar Vatti
DESIGN OVERSIGHT Sudhakar Vatti
8-10-09
SIGN OFF DATE

	BY	CHECKED
DESIGN	J. Hermstad	A. Priley
DETAILS	J. Hermstad	A. Priley
QUANTITIES	J. Hermstad	J. Wong

PREPARED FOR THE STATE OF CALIFORNIA DEPARTMENT OF TRANSPORTATION

J. Hermstad
PROJECT ENGINEER

BRIDGE NO. 55-0415
POST MILE R0.16

E22-N405 CONNECTOR UC (LENGTHEN)
SLAB LAYOUT

DESIGN DETAIL SHEET (ENGLISH) (REV. 2/25/05)

ORIGINAL SCALE IN INCHES FOR REDUCED PLANS 0 1 2 3

CU 12235
EA 071631

DISREGARD PRINTS BEARING EARLIER REVISION DATES

REVISION DATES (PRELIMINARY STAGE ONLY) 09/17/08 04/06/09 07/27/09

SHEET 14 OF 22

FILE => 55-0415-1-g_lo01.dgn

USERNAME => trlenard DATE PLOTTED => 02-FEB-2010 TIME PLOTTED => 14:07

DIST	COUNTY	ROUTE	POST MILES TOTAL PROJECT	SHEET No	TOTAL SHEETS
12	Ora	22,405, 605	R0.3/R0.9, 22.3/24.0,3.0/R1.6	1503	1929

REGISTERED CIVIL ENGINEER 07-27-09 DATE

2-1-10
PLANS APPROVAL DATE

The State of California or its officers or agents shall not be responsible for the accuracy or completeness of electronic copies of this plan sheet.

REGISTERED PROFESSIONAL ENGINEER J. Hermstad No. C 66045 Exp. 06-30-10 CIVIL STATE OF CALIFORNIA

OCTA
550 SOUTH MAIN STREET
ORANGE, CA 92863

TRC
21 TECHNOLOGY DR
IRVINE, CA 92618

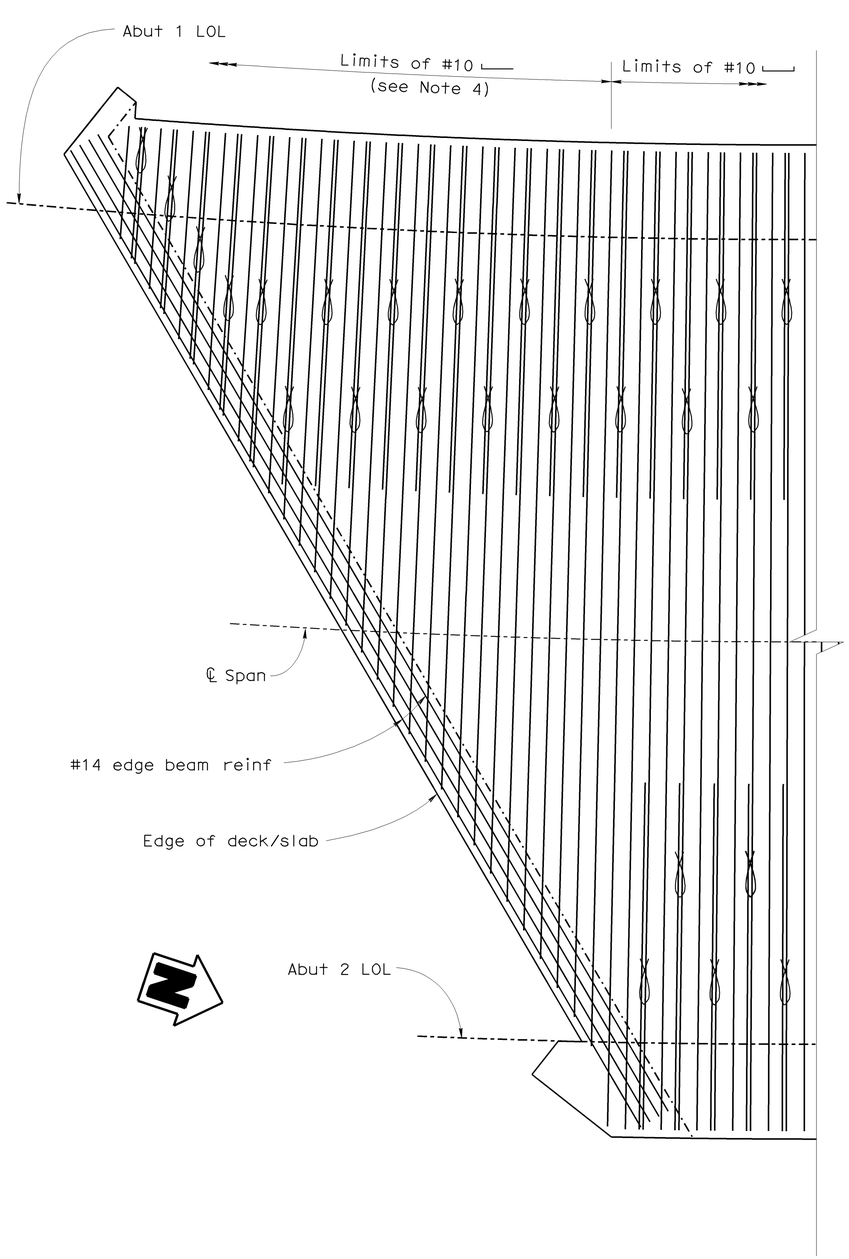

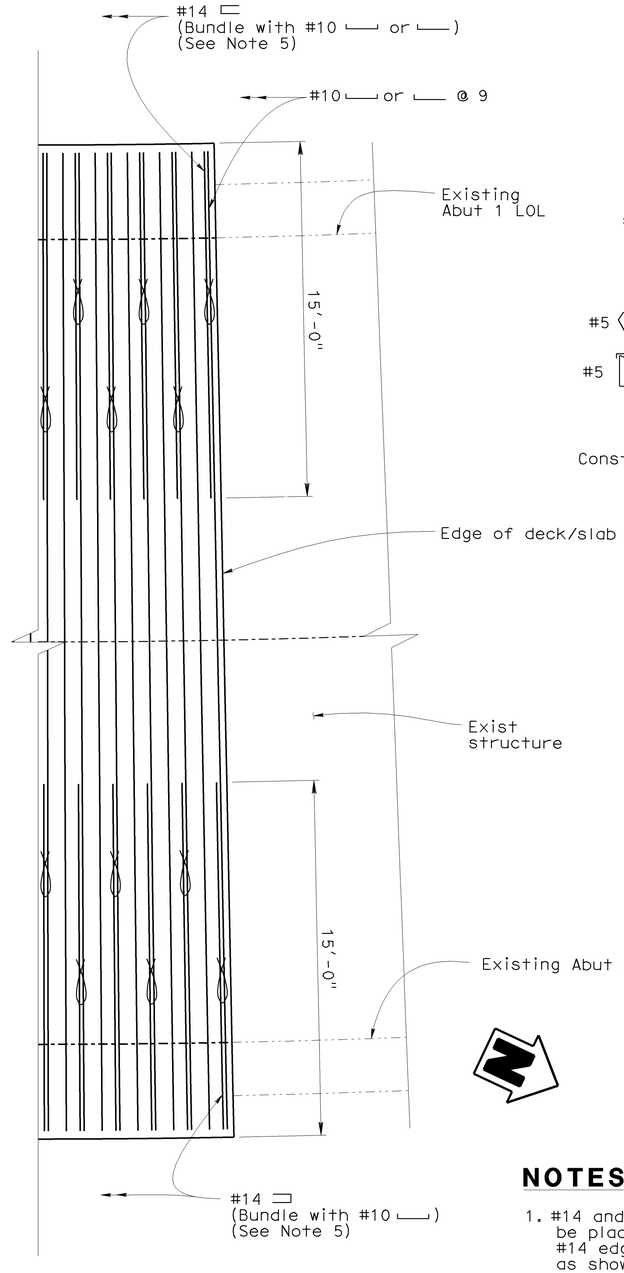

PLAN

5/16"= 1-0'

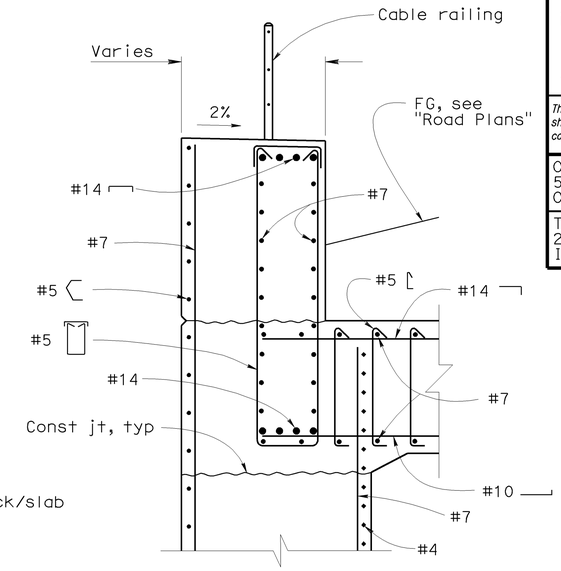

Note: See Section B-B on "Slab Layout" sheet for additional information

SECTION D-D

1/2"= 1-0'

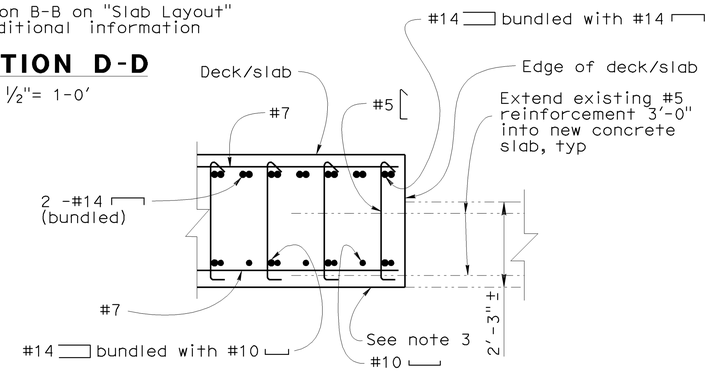

SECTION E-E

1/2"= 1-0'

LEGEND

- New Structure
- Existing Structure
- Indicates bundled bars

NOTES

1. #14 and #10 typical slab reinforcement to be placed perpendicular (radial) to ℄ Span. #14 edge beam reinforcement to be placed as shown.
2. Reinforcement spacing shown in plan view may be reduced at inside edge of horizontal curve (Abutment 1) to allow for radial placement per Note 1.
3. Along interface with existing slab, match existing bottom of slab elevation
4. #10 occur where typical slab reinf terminate at skewed edge of deck. Hook shall be maintained at Abut 1.
5. Spacing of #14 or is indicated on "Top Slab Reinforcement" sheet

NOTE:
THE CONTRACTOR SHALL VERIFY ALL CONTROLLING FIELD DIMENSIONS BEFORE ORDERING OR FABRICATING ANY MATERIAL.

Sudhakar Vatti
DESIGN OVERSIGHT Sudhakar Vatti
8-10-09
SIGN OFF DATE

	BY	CHECKED
DESIGN	J. Hermstad	A. Priley
DETAILS	J. Hermstad	A. Priley
QUANTITIES	J. Hermstad	J. Wong

PREPARED FOR THE STATE OF CALIFORNIA DEPARTMENT OF TRANSPORTATION

J. Hermstad
PROJECT ENGINEER

BRIDGE NO. 55-0415
POST MILE R0.16

E22-N405 CONNECTOR UC (LENGTHEN)
BOTTOM SLAB REINFORCEMENT

DESIGN DETAIL SHEET (ENGLISH) (REV. 2/25/05)

ORIGINAL SCALE IN INCHES FOR REDUCED PLANS 0 1 2 3

CU 12235
EA 071631

DISREGARD PRINTS BEARING EARLIER REVISION DATES

REVISION DATES (PRELIMINARY STAGE ONLY) 09/17/08 04/06/09 07/21/09

SHEET 15 OF 22

FILE => 55-0415-1-grf01.dgn

USERNAME => rtrenord DATE PLOTTED => 02-FEB-2010 TIME PLOTTED => 14:07

DIST	COUNTY	ROUTE	POST MILES TOTAL PROJECT	SHEET No	TOTAL SHEETS
12	Ora	22,405, 605	R0.3/R0.9, 22.3/24.0,3.0/R1.6	1504	1929

REGISTERED CIVIL ENGINEER — DATE 07-27-09

2-1-10
PLANS APPROVAL DATE

REGISTERED PROFESSIONAL ENGINEER — J. Hermstad — No. C 66045 — Exp. 06-30-10 — CIVIL — STATE OF CALIFORNIA

The State of California or its officers or agents shall not be responsible for the accuracy or completeness of electronic copies of this plan sheet.

OCTA
550 SOUTH MAIN STREET
ORANGE, CA 92863

TRC
21 TECHNOLOGY DR
IRVINE, CA 92618

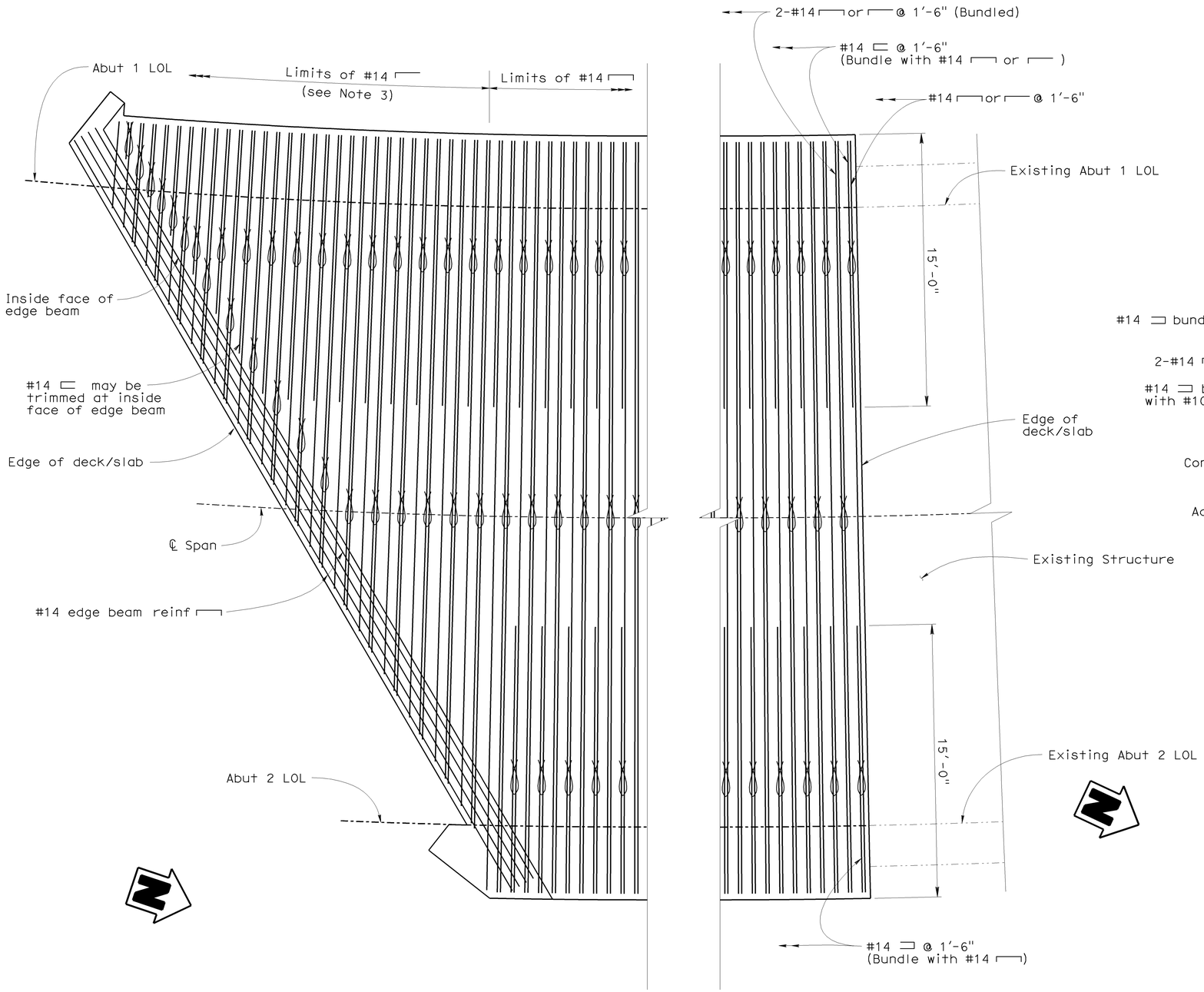

PLAN

5/16"= 1-0'

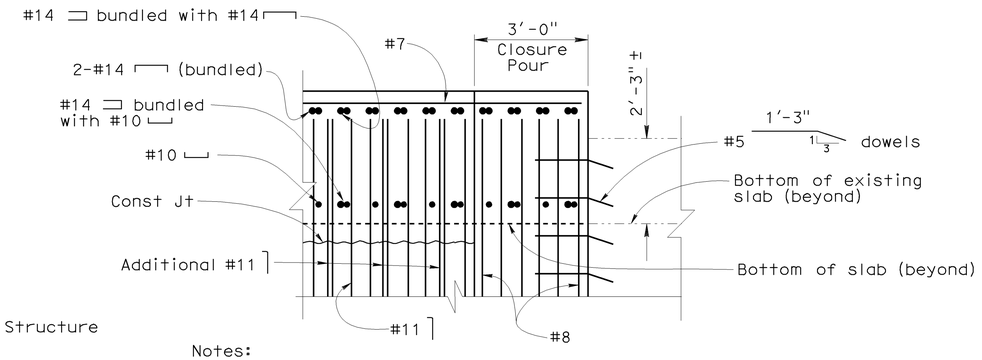

Notes:

1. Horizontal wall reinforcement and ties not shown
2. See "Abutment Wall Closure Pour Detail" for additional information

SECTION F-F

1/2"= 1-0'

LEGEND

- New Structure
- Existing Structure
- Indicates bundled bars

NOTES

1. #14 typical slab reinforcement to be placed perpendicular (radial) to ℄ Span. #14 ⌐ edge beam reinforcement to be placed as shown.
2. Reinforcement spacing shown in plan view may be reduced at inside edge of horizontal curve (Abutment 1) to allow for radial placement per Note 1.
3. #14 ⌐ occur where typical slab reinf terminate at skewed edge of deck. Hook shall be maintained at Abut 1.

NOTE:
THE CONTRACTOR SHALL VERIFY ALL CONTROLLING FIELD DIMENSIONS BEFORE ORDERING OR FABRICATING ANY MATERIAL.

Sudhakar Vatti
DESIGN OVERSIGHT — Sudhakar Vatti
8-10-09
SIGN OFF DATE

	BY	CHECKED
DESIGN	J. Hermstad	A. Priley
DETAILS	J. Hermstad	A. Priley
QUANTITIES	J. Hermstad	J. Wong

PREPARED FOR THE STATE OF CALIFORNIA DEPARTMENT OF TRANSPORTATION

J. Hermstad
PROJECT ENGINEER

BRIDGE NO. 55-0415
POST MILE R0.16

E22-N405 CONNECTOR UC (LENGTHEN)
TOP SLAB REINFORCEMENT

DESIGN DETAIL SHEET (ENGLISH) (REV. 2/25/05)

ORIGINAL SCALE IN INCHES FOR REDUCED PLANS 0 1 2 3

CU 12235
EA 071631

DISREGARD PRINTS BEARING EARLIER REVISION DATES — REVISION DATES (PRELIMINARY STAGE ONLY) 09/17/08 04/06/09 07/21/09

SHEET 16 OF 22

FILE => 55-0415-1-grf02.dgn

USERNAME => rtrenord DATE PLOTTED => 02-FEB-2010 TIME PLOTTED => 14:07

DIST	COUNTY	ROUTE	POST MILES TOTAL PROJECT	SHEET No	TOTAL SHEETS
12	Ora	22,405, 605	R0.3/R0.9, 22.3/24.0,3.0/R1.6	1505	1929

REGISTERED CIVIL ENGINEER 07-27-09 DATE

2-1-10
PLANS APPROVAL DATE

REGISTERED PROFESSIONAL ENGINEER J. Hermstad No. C 66045 Exp. 06-30-10 CIVIL STATE OF CALIFORNIA

The State of California or its officers or agents shall not be responsible for the accuracy or completeness of electronic copies of this plan sheet.

OCTA
550 SOUTH MAIN STREET
ORANGE, CA 92863

TRC
21 TECHNOLOGY DR
IRVINE, CA 92618

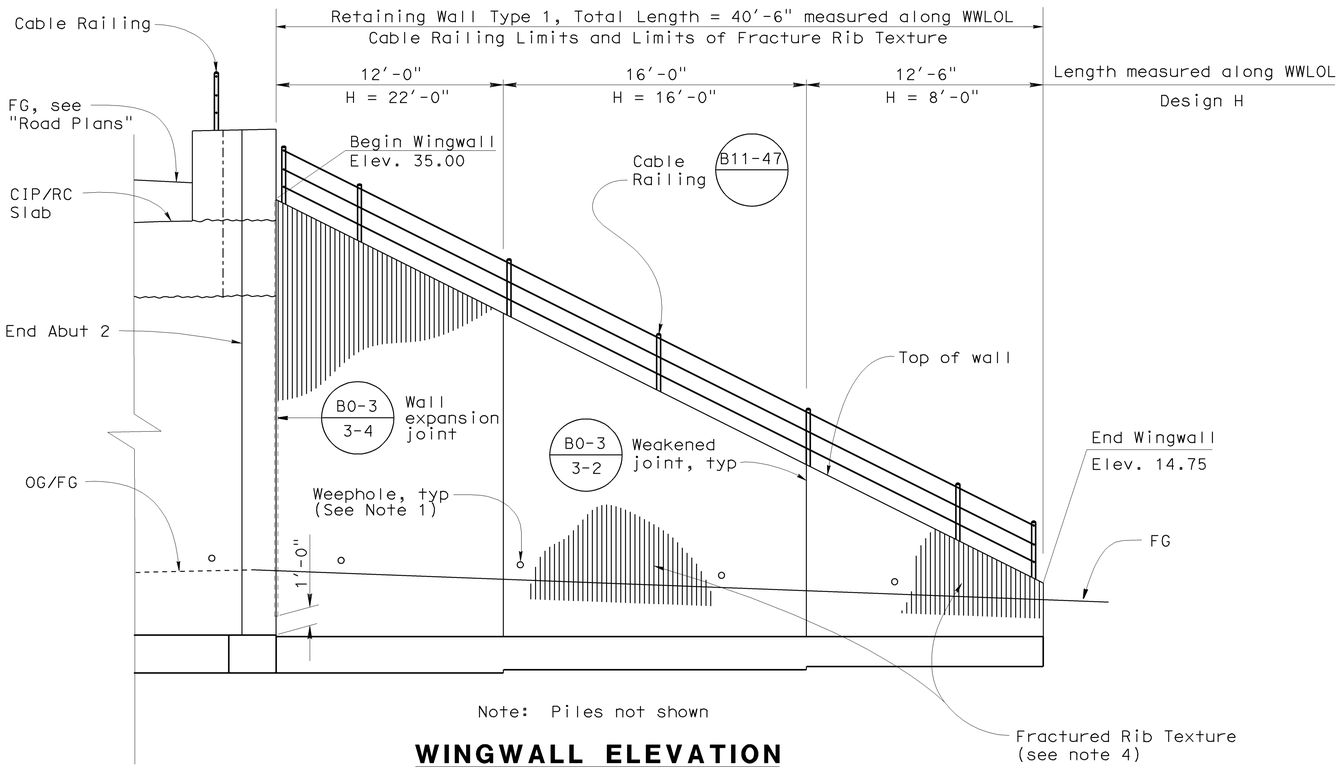

Note: Piles not shown

WINGWALL ELEVATION

1/4"= 1'-0"

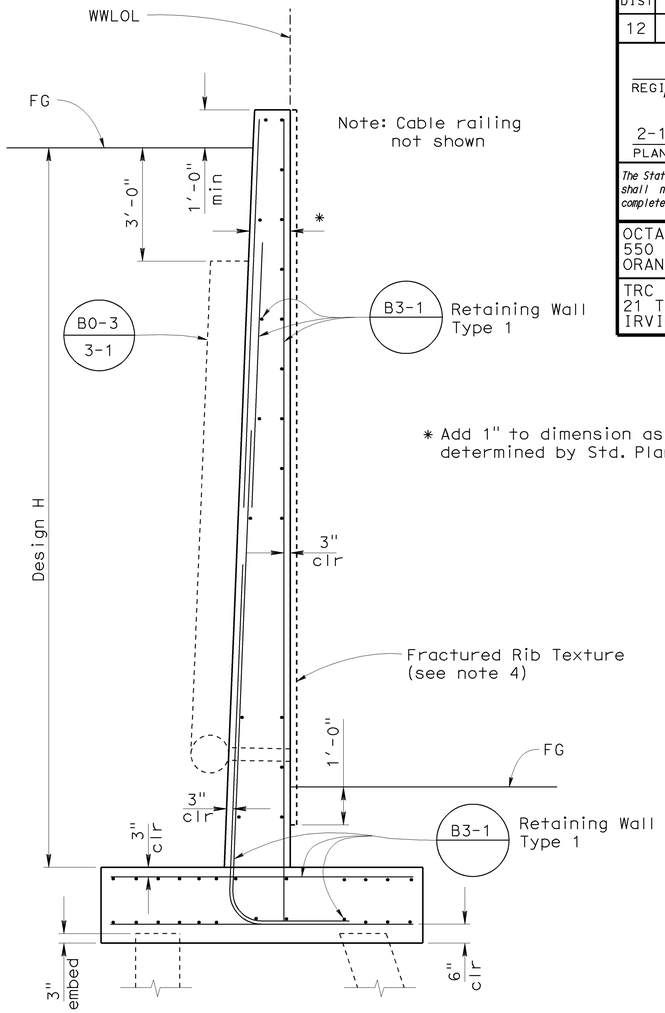

Note: Cable Railing not shown

TYPICAL SECTION

1/2"= 1'-0"

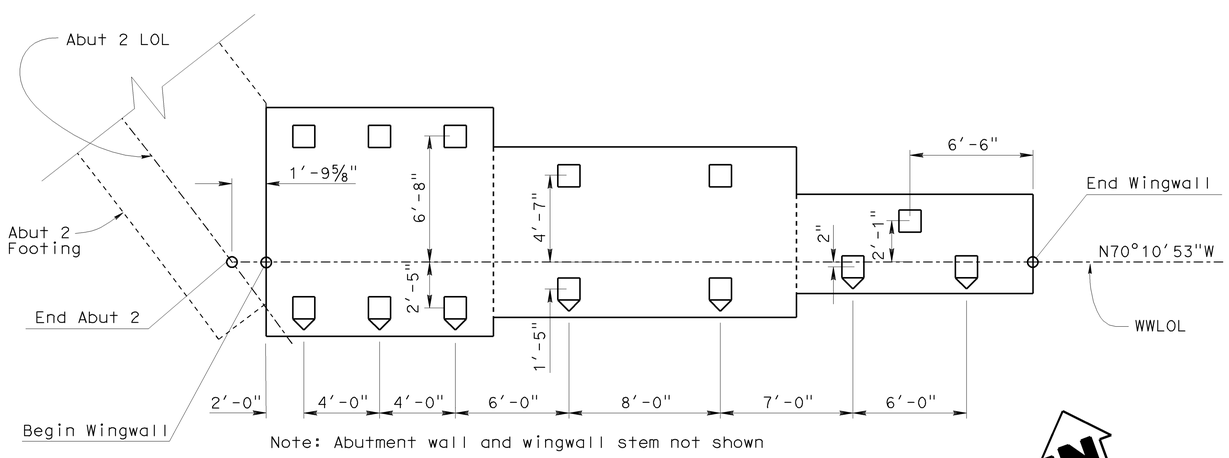

Note: Abutment wall and wingwall stem not shown

WINGWALL PLAN

1/4"= 1'-0"

LEGEND

- ☐ Indicates Class 200, Alt "X" Pile
- ☐ Indicates Class 200, Alt "X" Pile (Battered 3:1)

NOTES

1. Provide 4 weepholes through retaining wall at 8'-0" spacing
2. Wing wall shall be in accordance to Std Plan B3-1, except as noted. Footings shall conform to "90K Pile Footing Section" detail shown on Std. Plan B3-1.
3. For bottom of footing elevations, see "Foundation Plan" sheet
4. See "Architectural Details" sheet for Fractured Rib Texture Detail

NOTE:
THE CONTRACTOR SHALL VERIFY ALL CONTROLLING FIELD DIMENSIONS BEFORE ORDERING OR FABRICATING ANY MATERIAL.

DESIGN OVERSIGHT Sudhakar Vatti
8-10-09
SIGN OFF DATE

	BY	CHECKED
DESIGN	J. Hermstad	A. Priley
DETAILS	J. Hermstad	A. Priley
QUANTITIES	J. Hermstad	J. Wong

PREPARED FOR THE STATE OF CALIFORNIA DEPARTMENT OF TRANSPORTATION

J. Hermstad
PROJECT ENGINEER

BRIDGE NO. 55-0415
POST MILE R0.16

E22-N405 CONNECTOR UC (LENGTHEN)
WINGWALL DETAILS

DESIGN DETAIL SHEET (ENGLISH) (REV. 2/25/05)

ORIGINAL SCALE IN INCHES FOR REDUCED PLANS 0 1 2 3

CU 12235
EA 071631

DISREGARD PRINTS BEARING EARLIER REVISION DATES
REVISION DATES (PRELIMINARY STAGE ONLY) 09/17/08 04/06/09 07/27/09

SHEET 17 OF 22

FILE => 55-0415-1-wwd.dgn

USERNAME => trlenard DATE PLOTTED => 02-FEB-2010 TIME PLOTTED => 14:07

DIST	COUNTY	ROUTE	POST MILES TOTAL PROJECT	SHEET No	TOTAL SHEETS
12	Ora	22, 405, 605	R0.3/R0.9, 22.3/24.0,3.0/R1.6	1506	1929

LICENSED LANDSCAPE ARCHITECT

2-1-10
PLANS APPROVAL DATE

LICENSED LANDSCAPE ARCHITECT
CATHY L. JOHNSON
NO. 4545
01-31-10
Renewal Date
07-27-09
Date
STATE OF CALIFORNIA

The State of California or its officers or agents shall not be responsible for the accuracy or completeness of electronic copies of this plan sheet.

OCTA
550 SOUTH MAIN STREET
ORANGE, CA 92863

RBF CONSULTING
14725 ALTON PARKWAY
IRVINE, CA 92618

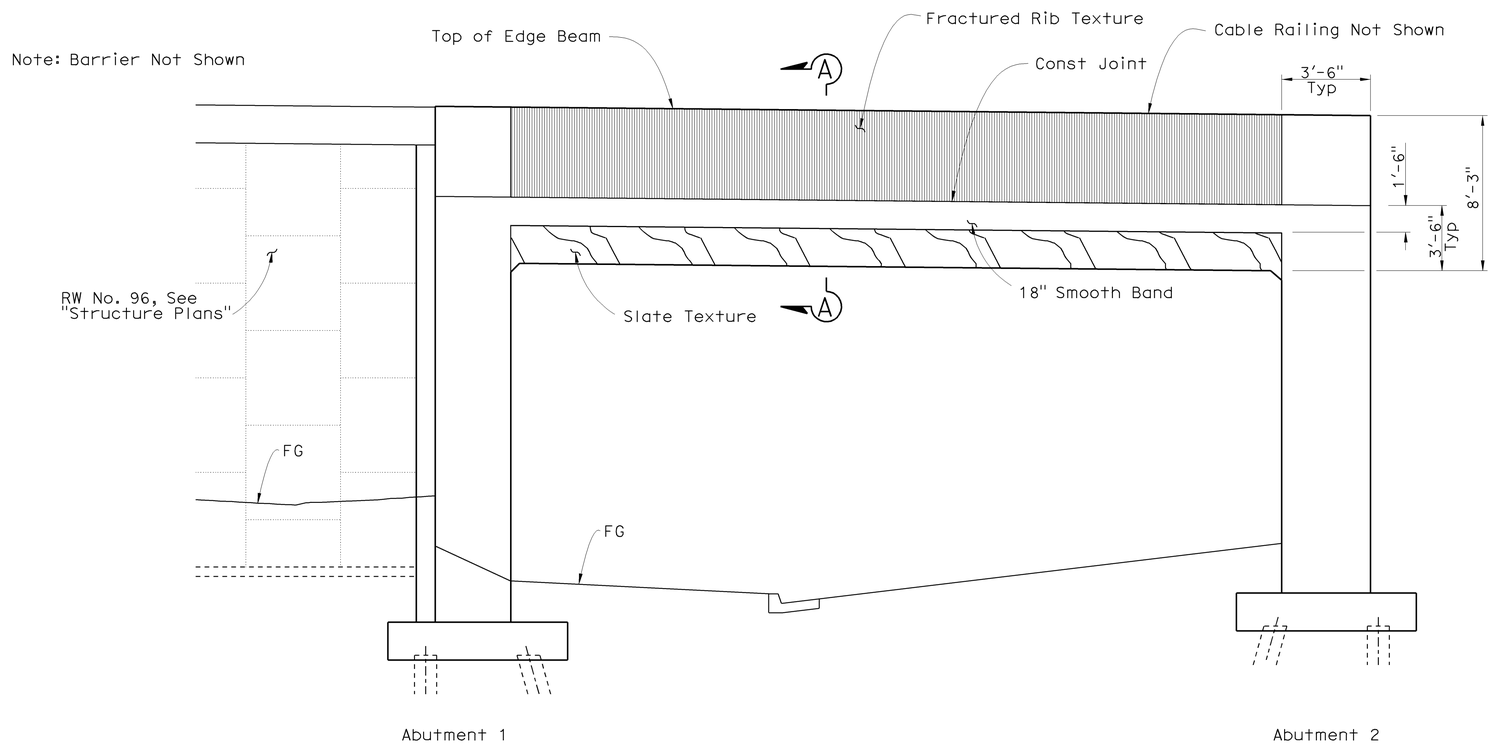

ARCHITECTURAL TEXTURE - EDGE BEAM

1/4"= 1'-0"

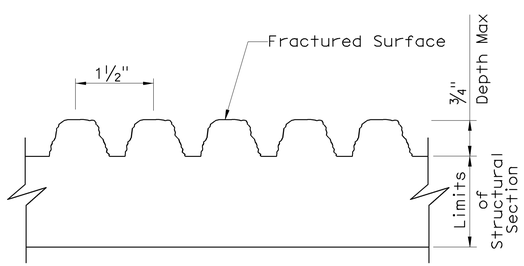

FRACTURED RIB TEXTURE

No Scale

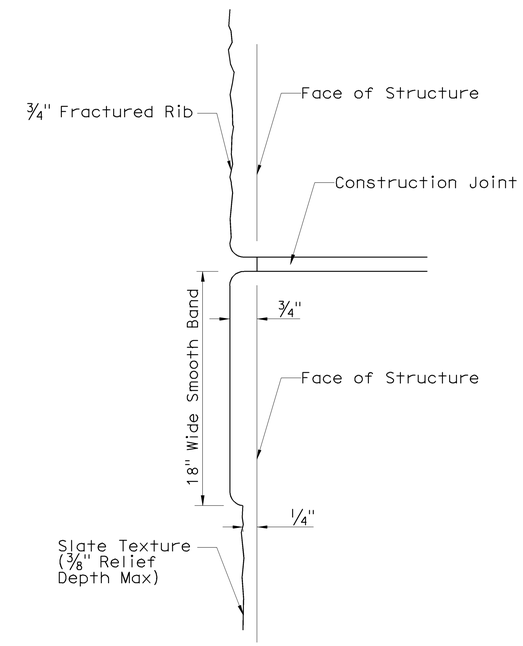

SECTION A-A

No Scale

Sudhakar Vatti
DESIGN OVERSIGHT Sudhakar Vatti
8-10-09
SIGN OFF DATE

DESIGN DETAIL SHEET (ENGLISH) (REV. 2/25/05)

	BY	CHECKED
DESIGN	C. JOHNSON	A. SU
DETAILS	R. KELCHER	A. SU
QUANTITIES	J. WONG	J. HERMSTAD

ORIGINAL SCALE IN INCHES FOR REDUCED PLANS 0 1 2 3

PREPARED FOR THE STATE OF CALIFORNIA DEPARTMENT OF TRANSPORTATION

J. HERMSTAD
PROJECT ENGINEER

CU 12235
EA 071631

BRIDGE NO. 55-0415
POST MILE R0.16

E22-N405 CONNECTOR UC (LENGTHEN)
ARCHITECTURAL DETAILS

DISREGARD PRINTS BEARING EARLIER REVISION DATES

REVISION DATES (PRELIMINARY STAGE ONLY) 04/06/09 07/27/09

SHEET 18 OF 22

FILE => 55-0415-s-arch01.dgn

USERNAME => friehard DATE PLOTTED => 02-FEB-2010 TIME PLOTTED => 14:07

REFERENCE: CALTRANS SOIL & ROCK LOGGING, CLASSIFICATION, AND PRESENTATION MANUAL (JUNE 2007)

DIST	COUNTY	ROUTE	POST MILES TOTAL PROJECT	SHEET No	TOTAL SHEETS
12	Ora	22,405, 605	R0.3/R0.9, 22.3/24.0,3.0/R1.6	1507	1929

REGISTERED CIVIL ENGINEER 07/27/09 DATE

2-1-10
PLANS APPROVAL DATE

REGISTERED PROFESSIONAL ENGINEER Eric Brown No. GE-2806 Exp. 06/30/10 GEOTECHNICAL STATE OF CALIFORNIA

The State of California or its officers or agents shall not be responsible for the accuracy or completeness of electronic copies of this plan sheet.

OCTA
550 SOUTH MAIN STREET
ORANGE, CA 92863

EARTH MECHANICS, INC
17660 NEWHOPE STREET, SUITE E
FOUNTAIN VALLEY, CA 92708

CEMENTATION

Description	Criteria
Weak	Crumbles or breaks with handling or little finger pressure.
Moderate	Crumbles or breaks with considerable finger pressure.
Strong	Will not crumble or break with finger pressure.

CONSISTENCY OF COHESIVE SOILS

Description	Unconfined Compressive Strength (tsf)	Pocket Penetrometer Measurement (tsf)	Torvane Measurement (tsf)	Field Approximation
Very Soft	< 0.25	< 0.25	< 0.12	Easily penetrated several inches by fist
Soft	0.25 to 0.50	0.25 to 0.50	0.12 to 0.25	Easily penetrated several inches by thumb
Medium Stiff	0.50 to 1.0	0.50 to 1.0	0.25 to 0.50	Penetrated several inches by thumb with moderate effort
Stiff	1 to 2	1 to 2	0.50 to 1.0	Readily indented by thumb but penetrated only with great effort
Very Stiff	2 to 4	2 to 4	1.0 to 2.0	Readily indented by thumbnail
Hard	> 4.0	> 4.0	> 2.0	Indented by thumbnail with difficulty

BOREHOLE IDENTIFICATION

Symbol	Hole Type	Description
Size	A	Auger Boring
Size	R P	Rotary drilled boring Rotary percussion boring (air)
Size	R	Rotary drilled diamond core
Size	HD HA	Hand driven (1-inch soil tube) Hand Auger
◉	D	Dynamic Cone Penetration Boring
▲	CPT	Cone Penetration Test (ASTM D 5778-95)
□	O	Other

Note: Size in inches.

PLASTICITY OF FINE-GRAINED SOILS

Description	Criteria
Nonplastic	A 1/8-inch thread cannot be rolled at any water content.
Low	The thread can barely be rolled and the lump cannot be formed when drier than the plastic limit.
Medium	The thread is easy to roll and not much time is required to reach the plastic limit. The thread cannot be rerolled after reaching the plastic limit. The lump crumbles when drier than the plastic limit.
High	It takes considerable time rolling and kneading to reach the plastic limit. The thread can be rerolled several times after reaching the plastic limit. The lump can be formed without crumbling when drier than the plastic limit.

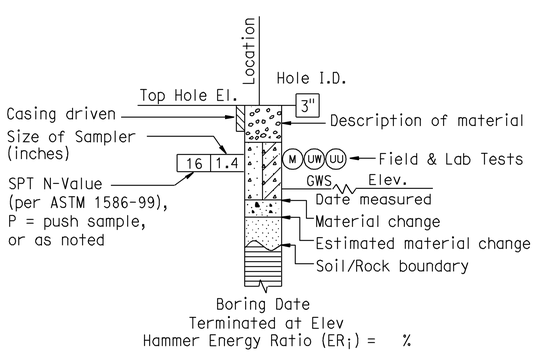

ROTARY BORING

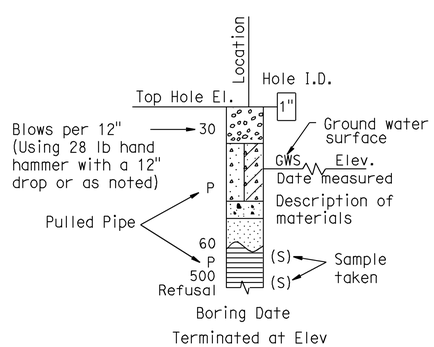

HAND BORING

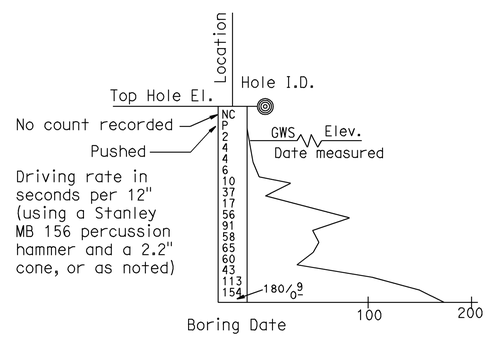

DYNAMIC CONE PENETRATION BORING

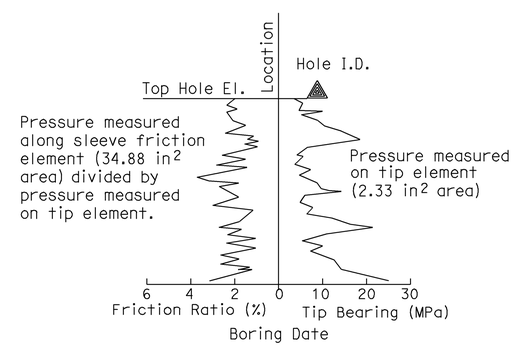

CONE PENETRATION TEST (CPT) SOUNDING

Sudhakar Vatti
DESIGN OVERSIGHT Sudhakar Vatti
8-10-09
SIGN OFF DATE

DRAWN BY: E.Brown
CHECKED BY: G.J.Gunaranjan

FIELD INVESTIGATION BY: R.Jie

PREPARED FOR THE STATE OF CALIFORNIA DEPARTMENT OF TRANSPORTATION

E.Brown
PROJECT ENGINEER

BRIDGE NO. 55-0415
POST MILE R0.16

E22-N405 CONNECTOR UC (LENGTHEN)
LOG OF TEST BORINGS NO. 1

OSF CIVIL LOG OF TEST BORINGS SHEET (ENGLISH) (REV. 2-25-05)

ORIGINAL SCALE IN INCHES FOR REDUCED PLANS 0 1 2 3

CU 12235
EA 071631

DISREGARD PRINTS BEARING EARLIER REVISION DATES
REVISION DATES (PRELIMINARY STAGE ONLY) 08/29/08 03/25/09 04/06/09 07/27/09

SHEET 19 OF 22

FILE => 55-0415-z-1tb01.dgn

USERNAME => trienard DATE PLOTTED => 02-FEB-2010 TIME PLOTTED => 14:07

REFERENCE: CALTRANS SOIL & ROCK LOGGING, CLASSIFICATION, AND PRESENTATION MANUAL (JUNE 2007)

DIST	COUNTY	ROUTE	KILOMETER POST TOTAL PROJECT	SHEET No	TOTAL SHEETS
12	Ora	22,405, 605	R0.3/R0.9, 22.3/24.0,3.0/R1.6	1508	1929

07/27/09
REGISTERED CIVIL ENGINEER DATE

2-1-10
PLANS APPROVAL DATE

REGISTERED PROFESSIONAL ENGINEER Eric Brown No. GE-2806 Exp. 06/30/10 GEOTECHNICAL STATE OF CALIFORNIA

The State of California or its officers or agents shall not be responsible for the accuracy or completeness of electronic copies of this plan sheet.

OCTA
550 SOUTH MAIN STREET
ORANGE, CA 92863

EARTH MECHANICS, INC
17660 NEWHOPE STREET, SUITE E
FOUNTAIN VALLEY, CA 92708

GROUP SYMBOLS AND NAMES

Graphic/Symbol	Group Names	Graphic/Symbol	Group Names
GW	Well-graded GRAVEL Well-graded GRAVEL with SAND	CL	Lean CLAY Lean CLAY with SAND Lean CLAY with GRAVEL SANDY lean CLAY SANDY lean CLAY with GRAVEL GRAVELLY lean CLAY GRAVELLY lean CLAY with SAND
GP	Poorly graded GRAVEL Poorly graded GRAVEL with SAND		
GW-GM	Well-graded GRAVEL with SILT Well-graded GRAVEL with SILT and SAND	CL-ML	SILTY CLAY SILTY CLAY with SAND SILTY CLAY with GRAVEL SANDY SILTY CLAY SANDY SILTY CLAY with GRAVEL GRAVELLY SILTY CLAY GRAVELLY SILTY CLAY with SAND
GW-GC	Well-graded GRAVEL with CLAY (or SILTY CLAY) Well-graded GRAVEL with CLAY and SAND (or SILTY CLAY and SAND)		
GP-GM	Poorly graded GRAVEL with SILT Poorly graded GRAVEL with SILT and SAND	ML	SILT SILT with SAND SILT with GRAVEL SANDY SILT SANDY SILT with GRAVEL GRAVELLY SILT GRAVELLY SILT with SAND
GP-GC	Poorly graded GRAVEL with CLAY (or SILTY CLAY) Poorly graded GRAVEL with CLAY and SAND (or SILTY CLAY and SAND)		
GM	SILTY GRAVEL SILTY GRAVEL with SAND	OL	ORGANIC lean CLAY ORGANIC lean CLAY with SAND ORGANIC lean CLAY with GRAVEL SANDY ORGANIC lean CLAY SANDY ORGANIC lean CLAY with GRAVEL GRAVELLY ORGANIC lean CLAY GRAVELLY ORGANIC lean CLAY with SAND
GC	CLAYEY GRAVEL CLAYEY GRAVEL with SAND		
GC-GM	SILTY, CLAYEY GRAVEL SILTY, CLAYEY GRAVEL with SAND	OL	ORGANIC SILT ORGANIC SILT with SAND ORGANIC SILT with GRAVEL SANDY ORGANIC SILT SANDY ORGANIC SILT with GRAVEL GRAVELLY ORGANIC SILT GRAVELLY ORGANIC SILT with SAND
SW	Well-graded SAND Well-graded SAND with GRAVEL		
SP	Poorly graded SAND Poorly graded SAND with GRAVEL	CH	Fat CLAY Fat CLAY with SAND Fat CLAY with GRAVEL SANDY fat CLAY SANDY fat CLAY with GRAVEL GRAVELLY fat CLAY GRAVELLY fat CLAY with SAND
SW-SM	Well-graded SAND with SILT Well-graded SAND with SILT and GRAVEL		
SW-SC	Well-graded SAND with CLAY (or SILTY CLAY) Well-graded SAND with CLAY and GRAVEL (or SILTY CLAY and GRAVEL)	MH	Elastic SILT Elastic SILT with SAND Elastic SILT with GRAVEL SANDY elastic SILT SANDY elastic SILT with GRAVEL GRAVELLY elastic SILT GRAVELLY elastic SILT with SAND
SP-SM	Poorly graded SAND with SILT Poorly graded SAND with SILT and GRAVEL		
SP-SC	Poorly graded SAND with CLAY (or SILTY CLAY) Poorly graded SAND with CLAY and GRAVEL (or SILTY CLAY and GRAVEL)	OH	ORGANIC fat CLAY ORGANIC fat CLAY with SAND ORGANIC fat CLAY with GRAVEL SANDY ORGANIC fat CLAY SANDY ORGANIC fat CLAY with GRAVEL GRAVELLY ORGANIC fat CLAY GRAVELLY ORGANIC fat CLAY with SAND
SM	SILTY SAND SILTY SAND with GRAVEL		
SC	CLAYEY SAND CLAYEY SAND with GRAVEL	OH	ORGANIC elastic SILT ORGANIC elastic SILT with SAND ORGANIC elastic SILT with GRAVEL SANDY ORGANIC elastic SILT SANDY ORGANIC elastic SILT with GRAVEL GRAVELLY ORGANIC elastic SILT GRAVELLY ORGANIC elastic SILT with SAND
SC-SM	SILTY, CLAYEY SAND SILTY, CLAYEY SAND with GRAVEL		
PT	PEAT	OL/OH	ORGANIC SOIL ORGANIC SOIL with SAND ORGANIC SOIL with GRAVEL SANDY ORGANIC SOIL SANDY ORGANIC SOIL with GRAVEL GRAVELLY ORGANIC SOIL GRAVELLY ORGANIC SOIL with SAND
	COBBLES COBBLES and BOULDERS BOULDERS		

FIELD AND LABORATORY TESTING

- (C) Consolidation (ASTM D 2435)
- (CL) Collapse Potential (ASTM D 5333)
- (CP) Compaction Curve (CTM 216)
- (CR) Corrosivity Testing (CTM 643, CTM 422, CTM 417)
- (CU) Consolidated Undrained Triaxial (ASTM D 4767)
- (DS) Direct Shear (ASTM D 3080)
- (EI) Expansion Index (ASTM D 4829)
- (M) Moisture Content (ASTM D 2216)
- (OC) Organic Content-% (ASTM D 2974)
- (P) Permeability (CTM 220)
- (PA) Particle Size Analysis (ASTM D 422)
- (PI) Plasticity Index (AASHTO T 90) Liquid Limit (AASHTO T 89)
- (PL) Point Load Index (ASTM D 5731)
- (PM) Pressure Meter
- (PP) Pocket Penetrometer
- (R) R-Value (CTM 301)
- (SE) Sand Equivalent (CTM 217)
- (SG) Specific Gravity (AASHTO T 100)
- (SL) Shrinkage Limit (ASTM D 427)
- (SW) Swell Potential (ASTM D 4546)
- (TV) Pocket Torvane
- (UC) Unconfined Compression-Soil (ASTM D 2166) Unconfined Compression-Rock (ASTM D 2938)
- (UU) Unconsolidated Undrained Triaxial (ASTM D 2850)
- (UW) Unit Weight (ASTM D 4767)
- (VS) Vane Shear (AASHTO T 223)

APPARENT DENSITY OF COHESIONLESS SOILS

Description	SPT N_{60} (Blows / 12 inches)
Very loose	0 - 4
Loose	5 - 10
Medium Dense	11 - 30
Dense	31 - 50
Very Dense	> 50

MOISTURE

Description	Criteria
Dry	Absence of moisture, dusty, dry to the touch
Moist	Damp but no visible water
Wet	Visible free water, usually soil is below water table

PERCENT OR PROPORTION OF SOILS

Description	Criteria
Trace	Particles are present but estimated to be less than 5%
Few	5 to 10%
Little	15 to 25%
Some	30 to 45%
Mostly	50 to 100%

PARTICLE SIZE

Description		Size
Boulder		> 12"
Cobble		3" to 12"
Gravel	Coarse	3/4" to 3"
	Fine	No. 4 to 3/4"
Sand	Coarse	No. 10 to No. 4
	Medium	No. 40 to No. 10
	Fine	No. 200 to No. 40

Sudhakar Vatti
DESIGN OVERSIGHT Sudhakar Vatti
8-10-09
SIGN OFF DATE

DRAWN BY: E.Brown
CHECKED BY: G.J.Gunaranjan

FIELD INVESTIGATION BY: R.Jie

PREPARED FOR THE STATE OF CALIFORNIA DEPARTMENT OF TRANSPORTATION

E.Brown
PROJECT ENGINEER

BRIDGE NO. 55-0415
POST MILE R0.16

E22-N405 CONNECTOR UC (LENGTHEN)
LOG OF TEST BORINGS NO. 2

GS LOTB SOIL LEGEND

ORIGINAL SCALE IN INCHES FOR REDUCED PLANS 0 1 2 3

CU 12235
EA 071631

DISREGARD PRINTS BEARING EARLIER REVISION DATES 08/28/08 03/23/09 04/06/09 07/21/09

REVISION DATES

SHEET 20 OF 22

FILE => 55-0415-z-ltb02.dgn

USERNAME => friehard DATE PLOTTED => 02-FEB-2010 TIME PLOTTED => 14:07

DIST	COUNTY	ROUTE	POST MILES TOTAL PROJECT	SHEET No	TOTAL SHEETS
12	Ora	22,405, 605	R0.3/R0.9, 22.3/24.0,3.0/R1.6	1509	1929

REGISTERED CIVIL ENGINEER 07/27/09 DATE

2-1-10
PLANS APPROVAL DATE

REGISTERED PROFESSIONAL ENGINEER Eric Brown No. GE-2806 Exp. 06/30/10 GEOTECHNICAL STATE OF CALIFORNIA

The State of California or its officers or agents shall not be responsible for the accuracy or completeness of electronic copies of this plan sheet.

OCTA
550 SOUTH MAIN STREET
ORANGE, CA 92863

EARTH MECHANICS, INC
17660 NEWHOPE STREET, SUITE E
FOUNTAIN VALLEY, CA 92708

BENCHMARKS:

Monument: 1A-144-04

Described by OCS 2005 - Found 3.75" OCS aluminum benchmark disk stamped "1A-144-04", set in the southwesterly corner of a 4.4 ft by 4.4 ft concrete catch basin. Monument is located in the northeasterly corner of the intersection of Seal Beach Boulevard and St. Cloud Drive, 44 ft easterly of the centerline of Seal Beach Boulevard and 58 ft northerly of the centerline of St. Cloud Dr. Monument is set level with the sidewalk.

Elevation: 15.37 feet

NOTES:

(1) This LOTB sheet (Boring Record) was prepared in accordance with the Caltrans Soil and Rock Classification Logging, Classification and Presentation Manual (June 2007).

(2) 2.4" samples were taken using a California Modified Sampler.

(3) A rope and cat-head hammer system consisting of a hammer weight of 140 lbs falling a distance of 30" was used to advance the drive sampler.

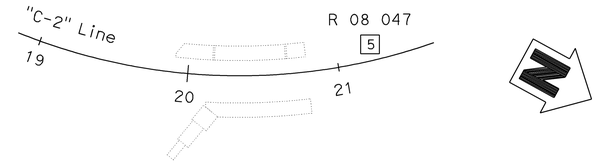

PLAN

1" = 50'

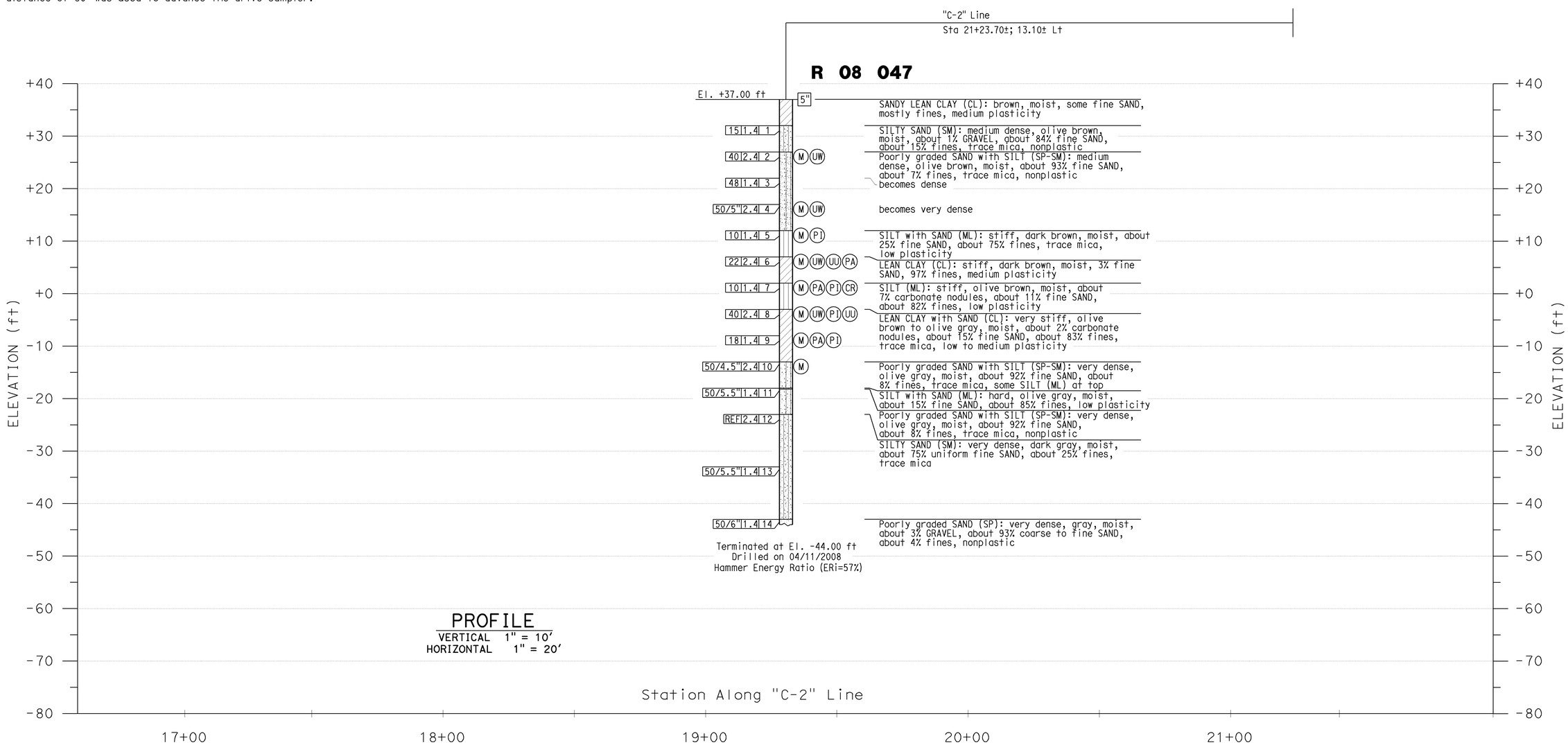

Sudhakar Vatti
DESIGN OVERSIGHT Sudhakar Vatti

8-10-09
SIGN OFF DATE

DRAWN BY: E.Brown

CHECKED BY: G.J.Gunaranjan

FIELD INVESTIGATION BY: R.Jie

PREPARED FOR THE STATE OF CALIFORNIA DEPARTMENT OF TRANSPORTATION

E.Brown
PROJECT ENGINEER

BRIDGE NO. 55-0415
POST MILE R0.16

E22-N405 CONNECTOR UC (LENGTHEN)

LOG OF TEST BORINGS NO. 3

OSF CIVIL LOG OF TEST BORINGS SHEET (ENGLISH) (REV. 2-25-05)

ORIGINAL SCALE IN INCHES FOR REDUCED PLANS 0 1 2 3

CU 12235
EA 071631

DISREGARD PRINTS BEARING EARLIER REVISION DATES

REVISION DATES (PRELIMINARY STAGE ONLY) 08/29/08 03/25/09 04/06/09 07/27/09

SHEET 21 OF 22

FILE => 55-0415-z-ltb03.dgn

USERNAME => rtrienord DATE PLOTTED => 02-FEB-2010 TIME PLOTTED => 14:07

FED. ROAD DIV. NO.	STATE	PROJ. NO.	FISCAL YEAR	SHEET NO.	TOTAL SHEETS
7	CAL.				

DIST.	COUNTY	ROUTE	SECTION	SHEET NO.	TOTAL SHEETS
7/11	ORA	170	A	217	755

(11-[illegible]) Bridge Engineer — Civil Engineer — Electrical Engineer

Date approved April 20, 1964

BRIDGE DEPARTMENT

BM # 189-A-62 Elev. 12.58

Fd chis. square in PCC end for fence post, 750 ft. northerly along block wall prod. from BM 483-A-62 & southerly of EW. CHL. fence on southerly side of Kempton storm drain channel, 65 ft. westerly of intersection block wall and chain link fence.

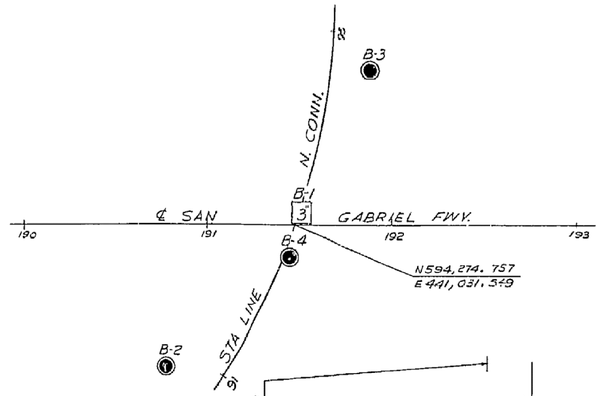

PLAN
Scale: 1"=40'

DIVISION OF ENGINEERING SERVICES - GEOTECHNICAL SERVICES					
As-Built Log of Test Borings sheet is considered an informational document only. As such, the State of California registration seal with signature, license number and registration certificate expiration date confirm that this is a true and accurate copy of the original document. This drawing is available and presented only for the convenience of any bidder, contractor or other interested party.					
DIST.	COUNTY	ROUTE	KILOMETER POST-TOTAL PROJECT	Sheet No.	Total Sheets
12	Ora	22,405, 605	R0.3/R0.9,22.3/24.0,3.0/R1.6	1510	1929
REGISTERED CIVIL ENGINEER			07/27/09 DATE		

LOG OF TEST BORINGS NO. 4

NOTE: A COPY OF THIS LOG OF TEST BORINGS IS AVAILABLE AT OFFICE OF STRUCTURE MAINTENANCE AND INVESTIGATIONS, SACRAMENTO, CALIFORNIA	CU: 12235 EA: 071631	BRIDGE No. 55-0415	
Revisions made to this Log of Test Borings from the original 1966 Log of Test Borings are the addition of the following table and notes:		Sheet 22	of 22

To accompany plans dated 2-1-10

REGISTERED PROFESSIONAL ENGINEER
Eric Brown
No. GE-2806
Exp. 06/30/10
GEOTECHNICAL
STATE OF CALIFORNIA

Boring	Station	Offset from "C-2" Line

AS BUILT PLANS
Contract No. 07-033914
Date Completed
Document No. 70001891

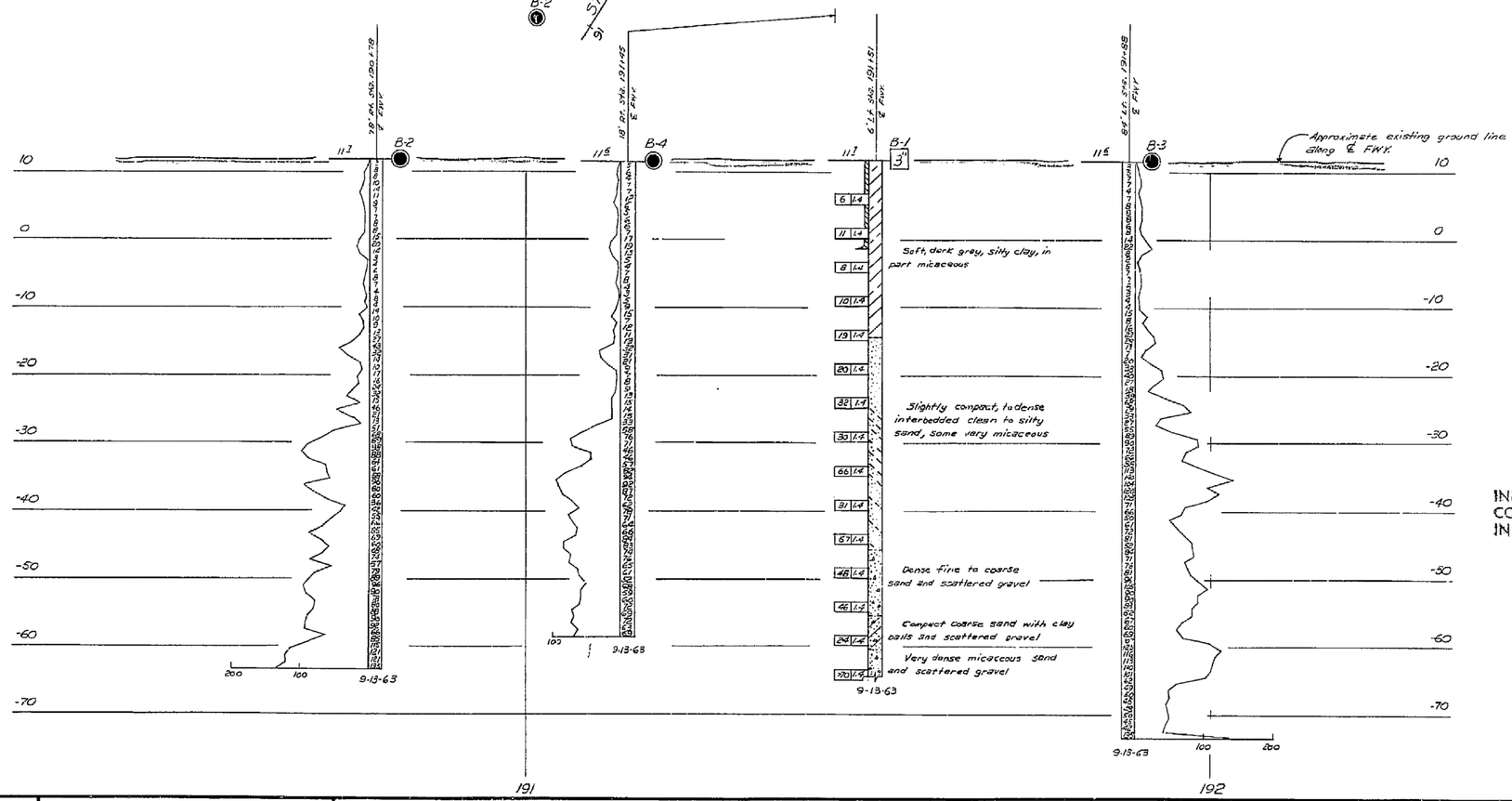

PROFILE
Scale: 1"=10'

INFORMATION ON ACTUAL FOUNDATION CONDITIONS ENCOUNTERED IS ON FILE IN BRIDGE GEOLOGY SECTION

NO GROUND WATER

6 of 6

CLASSIFICATION OF MATERIAL BASED ON STANDARD GRADE SIZE LIMITS

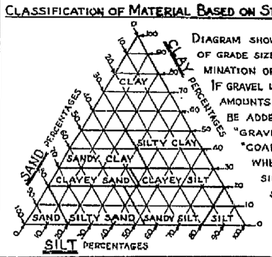

DIAGRAM SHOWING THE BASIS FOR ESTIMATES OF GRADE SIZE DISTRIBUTION USED IN DETERMINATION OF CLASS NAMES.

IF GRAVEL IS PRESENT IN APPRECIABLE AMOUNTS THE TERM "GRAVELLY" MAY BE ADDED TO THE CLASS NAME, VIZ. "GRAVELLY SAND". THE TERMS "COARSE", "MEDIUM" AND "FINE" WHEN USED TO DESCRIBE SAND, SILT AND GRAVEL REFER TO STANDARD GRADE SIZE LIMITS.

LEGEND OF EARTH MATERIALS

- GRAVEL
- SAND
- SILT
- CLAY
- SANDY CLAY OR CLAYEY SAND
- SANDY SILT OR SILTY SAND
- SILTY CLAY OR CLAYEY SILT
- PEAT AND/OR ORGANIC MATTER
- FILL MATERIAL
- IGNEOUS ROCK
- SEDIMENTARY ROCK
- METAMORPHIC ROCK

LEGEND OF BORING OPERATIONS

- PENETROMETER
- 2¼" CONE PENETROMETER
- SAMPLER BORING (DRY)
- ROTARY BORING (WET)
- AUGER BORING (DRY)
- JET BORING
- CORE BORING
- TEST PIT

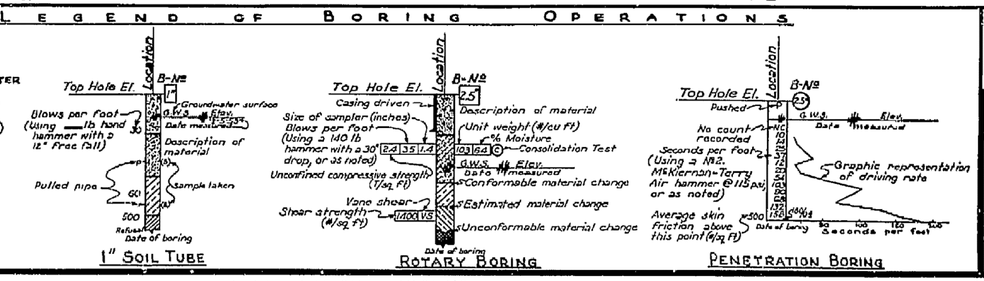

NOTE

Classification of earth material as shown on this sheet is based upon field inspection and is not to be construed to imply mechanical analysis.

STATE OF CALIFORNIA
DEPARTMENT OF PUBLIC WORKS
DIVISION OF HIGHWAYS

NORTH CONNECTOR UNDERCROSSING

LOG OF TEST BORINGS

SCALE As Noted	BRIDGE 55-415	FILE	DRAWING 35415-6

PREL. DRAWING NO. P-

FIELD STUDY: B: J.B. Jones 9-13-63
DRAWN: B: W.L. Ryan 9-23-63
CHECKED: B: K. Fechino 10-3-63
Approval Recommended: Engineering Geologist
Approved: Chief Bridge Engineer

217

FILENAME => 55-0415-z-ltb04.tif

DIST	COUNTY	ROUTE	POST MILES TOTAL PROJECT	SHEET No	TOTAL SHEETS
12	Ora	22,405, 605	R0.3/R0.9, 22.3/24.0,3.0/R1.6	1511	1929

Khaled Allam 07-27-09
REGISTERED CIVIL ENGINEER DATE

2-1-10
PLANS APPROVAL DATE

REGISTERED PROFESSIONAL ENGINEER Khaled Allam No. 67110 Exp. 09-30-10 CIVIL STATE OF CALIFORNIA

The State of California or its officers or agents shall not be responsible for the accuracy or completeness of electronic copies of this plan sheet.

OCTA
550 SOUTH MAIN STREET
ORANGE, CA 92863

PBS&J
625 THE CITY DRIVE SOUTH, SUITE 200
ORANGE, CA 92868

LEGEND

- (1) Paint "Bridge No. 55-1096G" and year constructed
- (2) Paint "E22-N405/405 Separation"
- (3) Paint "E22-N405/405 Separation" and Bent No.
- (8) Conc Slope Paving
- (11) Conc Barrier Type 736 (Mod)
- (14) Conc Barrier (Type 60R), see "Road Plans"
- (18) Structure Approach, Type N(30S)
- (29) Remove Exist Bridge (Br No. 55-0412G)
- (30) Remove Exist Bridge (Br No. 55-0412R) , see "E22-N605/405 Separation (Replace)" plans
- (31) Temporary Railing (Type K), see "Road Plans"
- (32) Crash cushion, See "Road Plans"
- (33) Metal Beam Guard Rail, see "Road Plans"
- (34) 2- 2" dia type 1 Electrical conduit, see "Electrical Plans"
- (54) Bridge Lighting Type 21, see "Lighting Plans"

Bridge Removal, Location D
Point of Minimum Vertical Clearance
Existing Structure
New Structure
Bridge Lighting type 21, see "Lighting Plans"

NOTES

1. For pile data table, see "Deck Contours" sheet
2. All piles not shown
3. Exist structure not shown on the Elevation for clarity

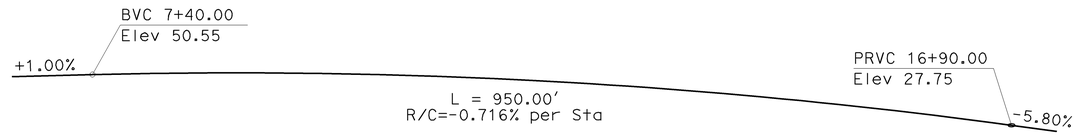

PROFILE GRADE

No Scale

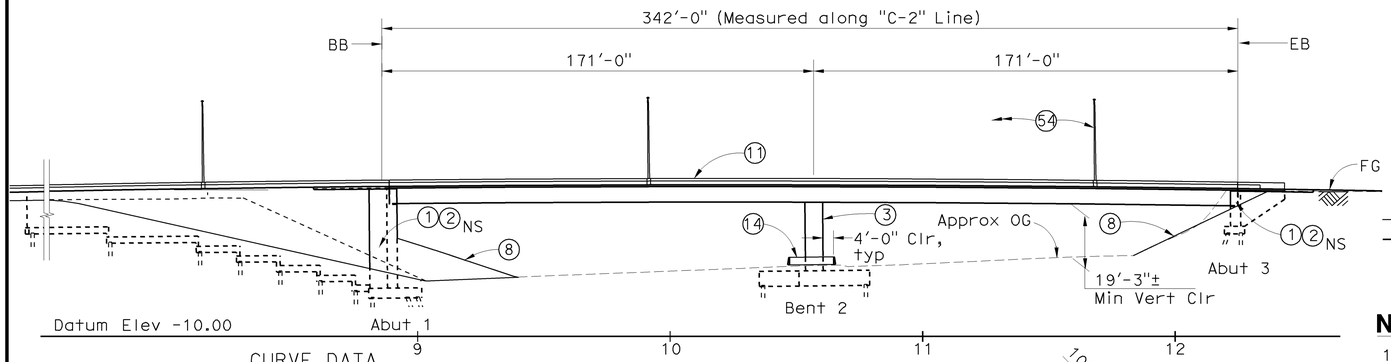

CURVE DATA

NO.	R	Δ	T	L
(I)	1560.00'	29°50'08"	415.60'	812.34'
(J)	2400.00'	33°19'34"	718.35'	1395.96'
(G)	2200.00'	50°59'22"	1049.10'	1957.86'
(H)	2000.00'	30°02'39"	536.72'	1048.74'

ELEVATION

1" = 30'

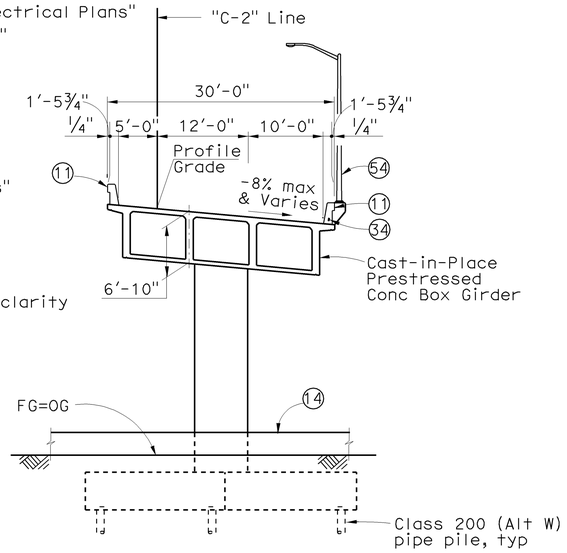

TYPICAL SECTION

1" = 10'

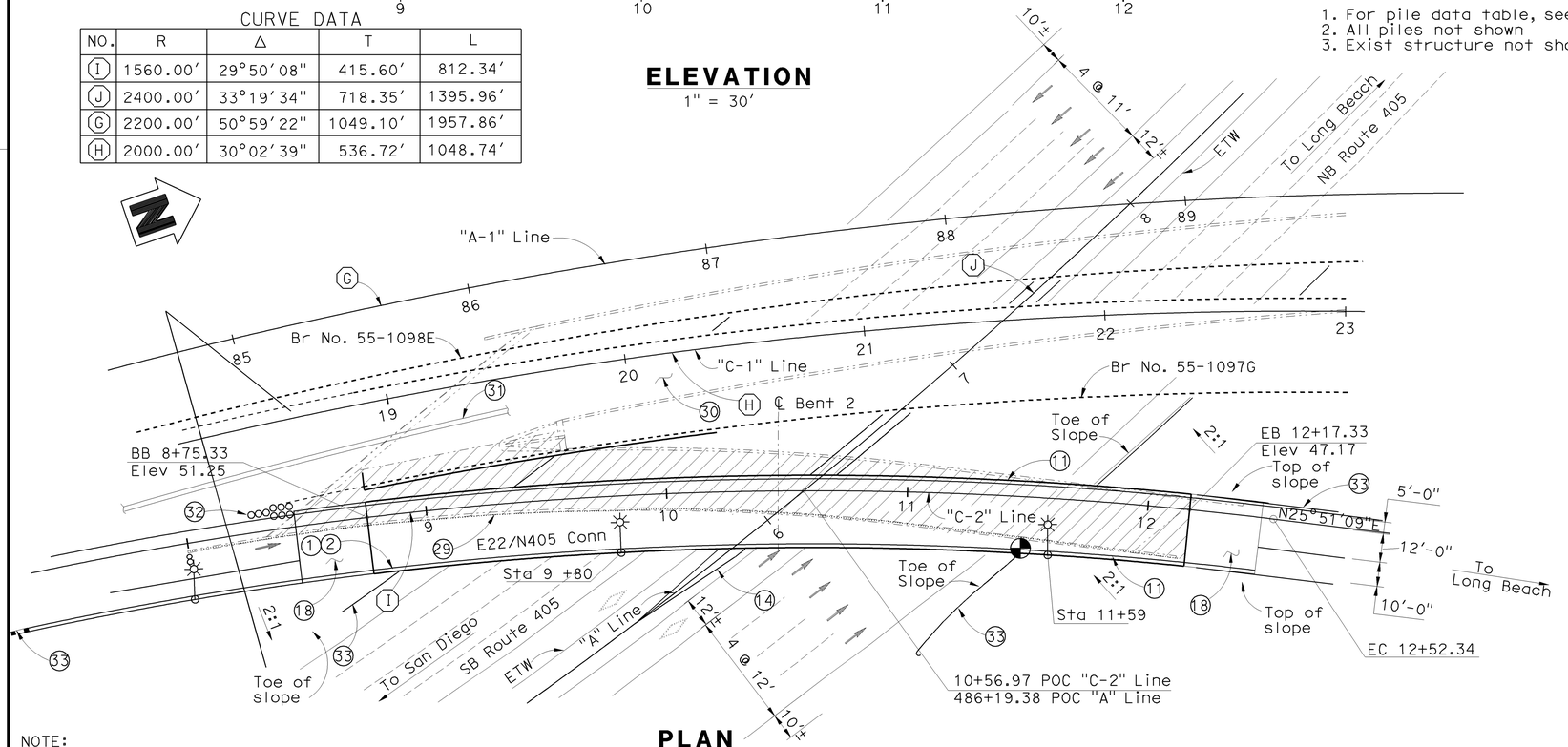

PLAN

1" = 30'

E22-N405 SEPARATION (REPLACE) QUANTITIES — BR NO 55-1096G

BRIDGE REMOVAL, LOCATION D	LUMP	SUM
STRUCTURE EXCAVATION (BRIDGE)	1,170	CY
STRUCTURE EXCAVATION (RETAINING WALL)	1,130	CY
STRUCTURE BACKFILL (BRIDGE)	850	CY
STRUCTURE BACKFILL (RETAINING WALL)	1,670	CY
FURNISH PILING (CLASS 200) (ALTERNATIVE W)	2,554	LF
DRIVE PILE (CLASS 200) (ALTERNATIVE W)	42	EA
FURNISH PILING (CLASS 200) (ALTERNATIVE X)	7,615	LF
DRIVE PILE (CLASS 200)(ALTERNATIVE X)	134	EA
PRESTRESSING CAST-IN-PLACE CONCRETE	LUMP	SUM
STRUCTURAL CONCRETE, BRIDGE FOOTING	274	CY
STRUCTURAL CONCRETE, BRIDGE	1,007	CY
STRUCTURAL CONCRETE, RETAINING WALL	560	CY
STRUCTURAL CONCRETE, APPROACH SLAB (TYPE N)	67	CY
FRACTURED RIB TEXTURE	3,000	SQFT
JOINT SEAL (MR 2")	60	LF
BAR REINFORCING STEEL (BRIDGE)	383,100	LB
BAR REINFORCING STEEL (RETAINING WALL)	101,200	LB
HEADED BAR REINFORCEMENT	650	EA
SLOPE PAVING (CONCRETE)(RIVER COBBLE)	33	CY
CONCRETE BARRIER (TYPE 736 MODIFIED)	1,063	LF

NOTE:
THE CONTRACTOR SHALL VERIFY ALL CONTROLLING FIELD DIMENSIONS BEFORE ORDERING OR FABRICATING ANY MATERIAL.

Sudhakar Vatti
DESIGN OVERSIGHT Sudhakar Vatti
8-10-09
SIGN OFF DATE

	BY	CHECKED		BY	CHECKED
DESIGN	K. Allam	Y. Deng	LOAD AND RESISTANCE FACTOR DESIGN (LRFD)	LIVE LOADING: HL-93 W/"LOW BOY" AND PERMIT DESIGN VEHICLE	
DETAILS	N. Shu	Y. Deng	LAYOUT	A. Moubayed	S. Xie
QUANTITIES	L. Khaleghi	T. Tesch	SPECIFICATIONS	E. Tyk	PLANS AND SPECS COMPARED P. Morel

PREPARED FOR THE STATE OF CALIFORNIA DEPARTMENT OF TRANSPORTATION

Alaedin Moubayed
PROJECT ENGINEER

BRIDGE NO. 55-1096G
POST MILES R0.39

E22-N405/405 SEPARATION (REPLACE)
GENERAL PLAN

DESIGN GENERAL PLAN SHEET (ENGLISH) (REV.2/25/05)

ORIGINAL SCALE IN INCHES FOR REDUCED PLANS 0 1 2 3

CU 12235
EA 071631

DISREGARD PRINTS BEARING EARLIER REVISION DATES

REVISION DATES (PRELIMINARY STAGE ONLY): 02/18/08 06/02/08 09/17/08 04/06/09 07/27/09

SHEET 1 OF 30

FILE => 55-1096g-a-gp01.dgn

USERNAME => ttrenord DATE PLOTTED => 02-FEB-2010 TIME PLOTTED => 14:19

DIST	COUNTY	ROUTE	POST MILES TOTAL PROJECT	SHEET No	TOTAL SHEETS
12	Ora	22,405, 605	R0.3/R0.9, 22.3/24.0,3.0/R1.6	1512	1929

Khaled Allam 07-27-09
REGISTERED CIVIL ENGINEER DATE

2-1-10
PLANS APPROVAL DATE

REGISTERED PROFESSIONAL ENGINEER Khaled Allam No. 67110 Exp. 09-30-10 CIVIL STATE OF CALIFORNIA

The State of California or its officers or agents shall not be responsible for the accuracy or completeness of electronic copies of this plan sheet.

OCTA
550 SOUTH MAIN STREET
ORANGE, CA 92863

PBS&J
625 THE CITY DRIVE SOUTH, SUITE 200
ORANGE, CA 92868

STANDARD PLANS DATED MAY 2006

	A10A	Acronyms and Abbreviations (Sheet 1 of 2)
	A10B	Acronyms and Abbreviations (Sheet 2 of 2)
	A10C	Symbols (Sheet 1 of 2)
	A10D	Symbols (Sheet 2 of 2)
	A62B	Limits of payment for excavation and backfill-bridge Surcharge and Wall
	A62C	Limits of payment for excavation and backfill-bridge
	A74	Survey Monuments
	D99B	Edge Drain outlet and vent Details
	B0-1	Bridge Details
	B0-3	Bridge Details
	B0-5	Bridge Details
RSP	B0-13	Bridge Details
	B2-8	Pile Details Class 200
	B3-1	Retaining Wall Type 1 H= 4′ Through 30′
	B3-2	Retaining Wall Type 1 H= 32′ Through 36′
RSP	B3-8	Retaining Wall Details No. 1
	B6-21	Joint Seals (Maximum Movement Rating = 2")
	B7-1	Box Girder Details
	B7-10	Utility Opening - Box Girder
	B7-11	Utility Details
	B8-5	Cast-in-Place Prestressed Girder Details
	B11-56	Concrete Barrier Type 736
	ES-6A	Electrical Systems (Lighting Standard Type 15 and 21)

INDEX TO PLANS

SHEET NO.	TITLE
1	General Plan
2	Index to Plans
3	Deck Contours
4	Bridge Removal Plan
5	Foundation Plan
6	Abutment 1 Layout
7	Abutment 3 Layout
8	Abutment Details No. 1
9	Abutment Details No. 2
10	Abutment Details No. 3
11	Abutment Details No. 4
12	Abutment Details No. 5
13	Bent Layout
14	Bent Details No. 1
15	Bent Details No. 2
16	Typical Section
17	Girder Layout
18	Girder Reinforcement Details
19	Architectural Details No. 1
20	Architectural Details No. 2
21	Structure Approach Type N(30S)
22	Structure Approach Drainage Details
23	Slope Paving
24	Log ot Test Borings No. 1
25	Log of Test Borings No. 2
26	Log of Test Borings No. 3
27	Log of Test Borings No. 4
28	Log of Test Borings No. 5
29	Log of Test Borings No. 6 (As Built)
30	Log of Test Borings No. 7 (As Built)

GENERAL NOTES
LOAD AND RESISTANCE FACTOR DESIGN

DESIGN: AASHTO LRFD Bridge Design Specifications, 3rd edition with Interims through 2006 and the Caltrans Amendments v3.06.01; except that earth retaining systems, bridge barrier and structure approach slabs are designed using Bridge Design Specifications (1996 AASHTO w/ Revisions by Caltrans).

SEISMIC DESIGN: CALTRANS SEISMIC DESIGN CRITERIA (SDC), Version 1.4 dated June 2006.

DEAD LOAD: Includes 35 psf for future wearing surface

LIVE LOADING: HL93 and permit design load.

SEISMIC LOADING: Site Specific ARS as Shown

Modified SDC ARS Curve for Soil Profile D (M=7.25± 0.25)
Includes modifications for distance to fault
(Peak Rock Acceleration = 0.6g)

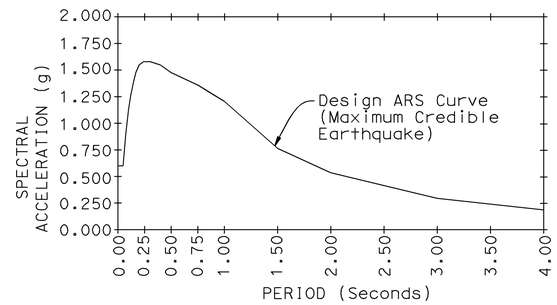

CONCRETE: f_y = 60 ksi
f'_c = 3.6 ksi (min)
n = 8
See "Prestressing Notes" on "Girder Layout" sheet

STRUCTURAL STEEL: f_y = ASTM A709 Grade 50
Class 200 Alt "W" Piles: ASTM 252 Grade 3

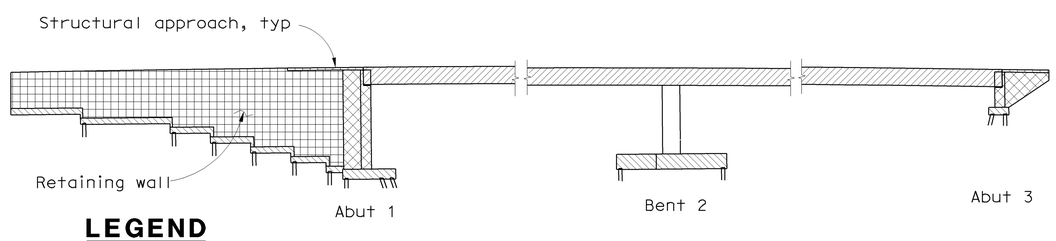

LEGEND

- Structural Concrete, Bridge (f′c = 4.0 ksi @ 28 days)
- Structural Concrete, Abut, Wingwall & Return Wall
- Structural Concrete, Bridge (f′c = 5.0 ksi @ 28 days)
- Structural Concrete, Bridge Footing
- Structural Concrete, Approach Slab
- Structural Concrete, Retaining Wall

CONCRETE STRENGTH AND TYPE LIMITS

No Scale

PLAN SYMBOLS

Standard Plan Sheet No.

Detail No.

Section Identification

Sudhakar Vatti
DESIGN OVERSIGHT Sudhakar Vatti
8-10-09
SIGN OFF DATE

DESIGN DETAIL SHEET (ENGLISH) (REV. 2/25/05)

	BY	CHECKED
DESIGN	K. Allam	Y. Deng
DETAILS	N. Shu	Y. Deng
QUANTITIES	L. Khaleghi	T. Tesch

ORIGINAL SCALE IN INCHES FOR REDUCED PLANS 0 1 2 3

PREPARED FOR THE STATE OF CALIFORNIA DEPARTMENT OF TRANSPORTATION

Alaedin Moubayed
PROJECT ENGINEER

CU 12235
EA 071631

BRIDGE NO. 55-1096G
POST MILE R0.39

E22-N405/405 SEPARATION (REPLACE)
INDEX TO PLANS

DISREGARD PRINTS BEARING EARLIER REVISION DATES

REVISION DATES (PRELIMINARY STAGE ONLY) 02/28/08 06/02/08 09/27/08 04/06/09 07/27/09

SHEET 2 OF 30

FILE => 55-1096g-a-itp.dgn

USERNAME => rtrienard DATE PLOTTED => 02-FEB-2010 TIME PLOTTED => 14:20

DIST	COUNTY	ROUTE	POST MILES TOTAL PROJECT	SHEET No	TOTAL SHEETS
12	Ora	22,405, 605	R0.3/R0.9, 22.3/24.0,3.0/R1.6	1513	1929

Khaled Allam 07-27-09
REGISTERED CIVIL ENGINEER DATE

2-1-10
PLANS APPROVAL DATE

REGISTERED PROFESSIONAL ENGINEER Khaled Allam No. 67110 Exp. 09-30-10 CIVIL STATE OF CALIFORNIA

The State of California or its officers or agents shall not be responsible for the accuracy or completeness of electronic copies of this plan sheet.

OCTA
550 SOUTH MAIN STREET
ORANGE, CA 92863

PBS&J
625 THE CITY DRIVE SOUTH, SUITE 200
ORANGE, CA 92868

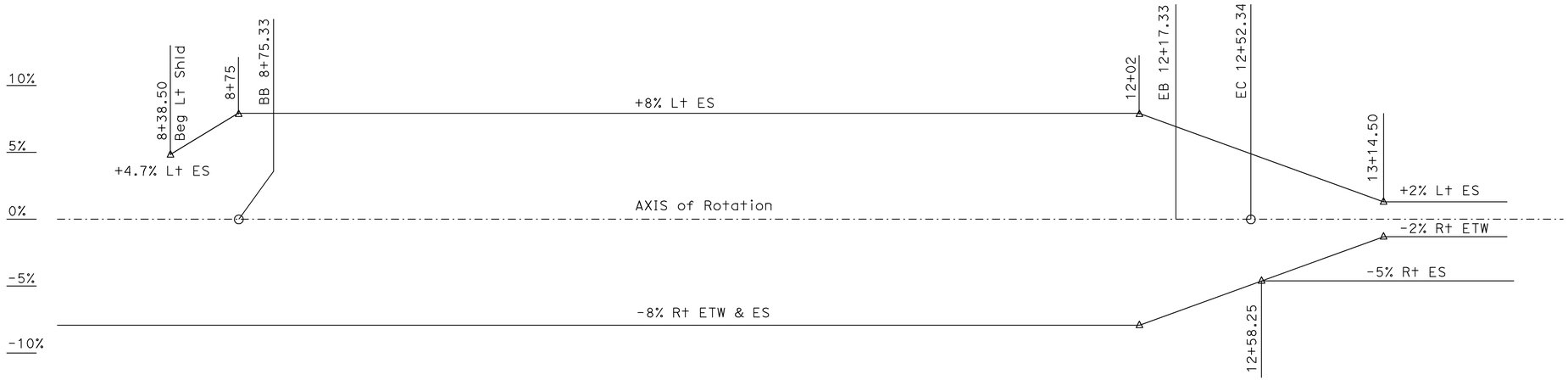

SUPERELEVATION DIAGRAM

No Scale

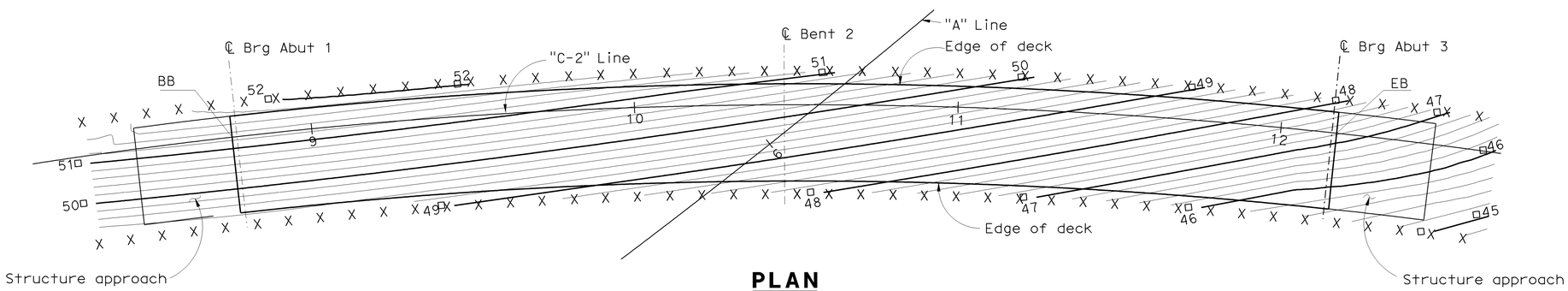

PLAN

1" = 20'

NOTES

1. Contour interval is 0.2'.
2. Contours do not include camber.

LEGEND

X - Denotes 10' intervals along "C-2" Line

□ - Denotes even foot contours.

Sudhakar Vatti
DESIGN OVERSIGHT Sudhakar Vatti
8-10-09
SIGN OFF DATE

DESIGN	BY K. Allam	CHECKED Y. Deng	
DETAILS	BY N. Shu	CHECKED Y. Deng	
QUANTITIES	BY L. Khaleghi	CHECKED T. Tesch	

PREPARED FOR THE STATE OF CALIFORNIA DEPARTMENT OF TRANSPORTATION

Alaedin Moubayed
PROJECT ENGINEER

BRIDGE NO. 55-1096G
POST MILE R0.39

E22-N405/405 SEPARATION (REPLACE)
DECK CONTOURS

DESIGN DETAIL SHEET (ENGLISH) (REV. 2/25/05)

ORIGINAL SCALE IN INCHES FOR REDUCED PLANS 0 1 2 3

CU 12235
EA 071631

DISREGARD PRINTS BEARING EARLIER REVISION DATES

REVISION DATES (PRELIMINARY STAGE ONLY) 02/18/08 06/02/08 09/17/08 04/06/09 07/27/09

SHEET 3 OF 30

FILE => 55-1096g-d-dc01.dgn

USERNAME => trhenard DATE PLOTTED => 02-FEB-2010 TIME PLOTTED => 14:20

DIST	COUNTY	ROUTE	POST MILES TOTAL PROJECT	SHEET No	TOTAL SHEETS
12	Ora	22,405, 605	R0.3/R0.9 22.3/24.0,3.0/R1.6	1514	1929

Khaled Allam 07-27-09
REGISTERED CIVIL ENGINEER DATE

2-1-10
PLANS APPROVAL DATE

REGISTERED PROFESSIONAL ENGINEER Khaled Allam No. 67110 Exp. 09-30-10 CIVIL STATE OF CALIFORNIA

The State of California or its officers or agents shall not be responsible for the accuracy or completeness of electronic copies of this plan sheet.

OCTA
550 SOUTH MAIN STREET
ORANGE, CA 92863

PBS&J
625 THE CITY DRIVE SOUTH, SUITE 200
ORANGE, CA 92868

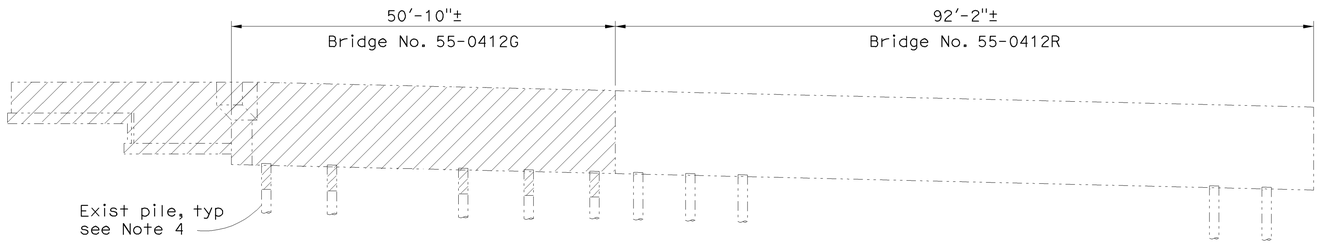

ABUTMENT 1 ELEVATION
1" = 10'

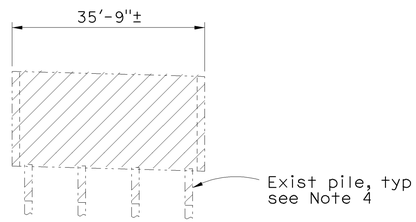

ABUTMENT 5 ELEVATION
1" = 10'

EXISTING PILING REMOVAL LIMITS

Existing Bridge Locations	Abut 1 & Ret wall	Abut 5	Bent 2	Bent 3	Bent 4
Pile Removal Elevation	22.30	25.50	4.00	6.00	9.00

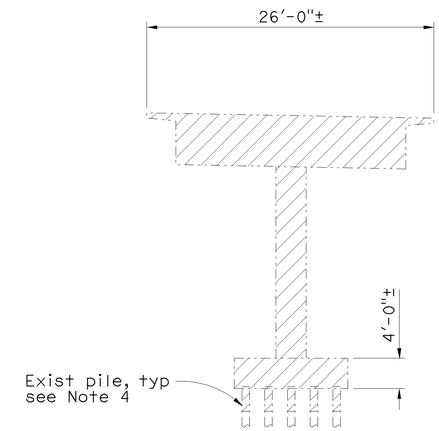

TYPICAL SECTION
1" = 10'

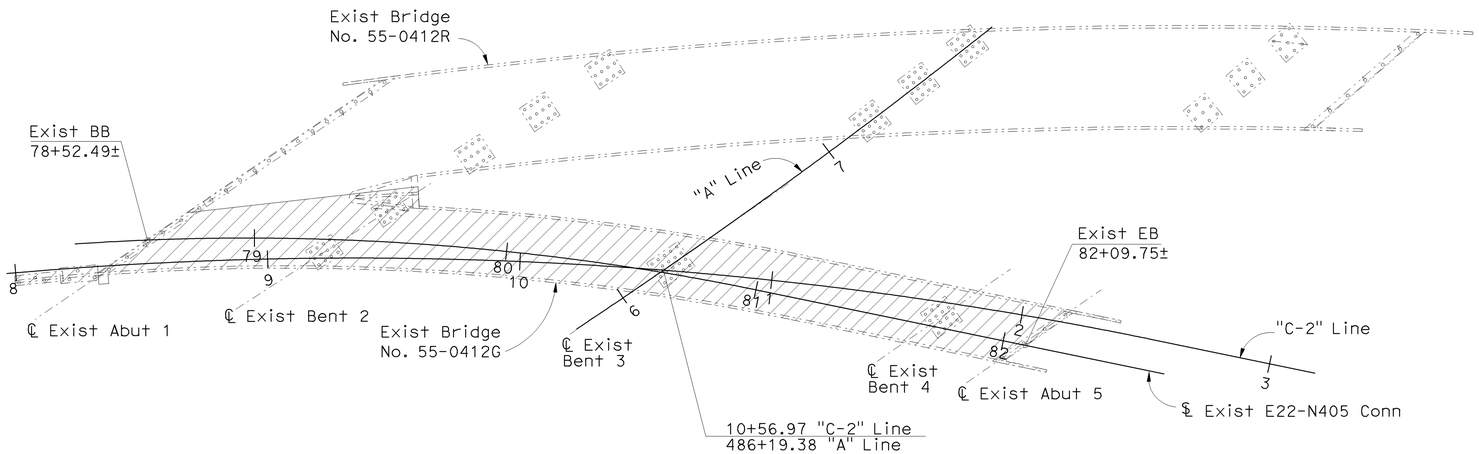

PLAN
1" = 30'

NOTES

1. Exist Abut 5 shown, exist Abut 1 similar.
2. All piles not shown.
3. For dimensions, details and information not shown, see as-built plans.
4. For exist piling removal, see "Existing Piling Removal Limits" table.

LEGEND

Bridge Removal, Location D

Exist Structure

NOTE:
THE CONTRACTOR SHALL VERIFY ALL CONTROLLING FIELD DIMENSIONS BEFORE ORDERING OR FABRICATING ANY MATERIAL.

Sudhakar Vatti
DESIGN OVERSIGHT Sudhakar Vatti
8-10-09
SIGN OFF DATE

	BY	CHECKED
DESIGN	K. Allam	Y. Deng
DETAILS	N. Shu	Y. Deng
QUANTITIES	L. Khaleghi	T. Tesch

PREPARED FOR THE STATE OF CALIFORNIA DEPARTMENT OF TRANSPORTATION

Alaedin Moubayed
PROJECT ENGINEER

BRIDGE NO. 55-1096G
POST MILE R0.39

E22-N405/405 SEPARATION (REPLACE)
BRIDGE REMOVAL PLAN

DESIGN DETAIL SHEET (ENGLISH) (REV. 2/25/05)

ORIGINAL SCALE IN INCHES FOR REDUCED PLANS 0 1 2 3

CU 12235
EA 071631

DISREGARD PRINTS BEARING EARLIER REVISION DATES

REVISION DATES (PRELIMINARY STAGE ONLY) 02/18/08 06/06/08 09/17/08 04/06/09 07/27/09

SHEET 4 OF 30

FILE => 55-1096g-d-rem01.dgn

USERNAME => trienard DATE PLOTTED => 02-FEB-2010 TIME PLOTTED => 14:20

DIST	COUNTY	ROUTE	POST MILES TOTAL PROJECT	SHEET No	TOTAL SHEETS
12	Ora	22,405, 605	R0.3/R0.9, 22.3/24.0,3.0/R1.6	1515	1929

Khaled Allam 07-27-09
REGISTERED CIVIL ENGINEER DATE

2-1-10
PLANS APPROVAL DATE

REGISTERED PROFESSIONAL ENGINEER Khaled Allam No. 67110 Exp. 09-30-10 CIVIL STATE OF CALIFORNIA

The State of California or its officers or agents shall not be responsible for the accuracy or completeness of electronic copies of this plan sheet.

OCTA
550 SOUTH MAIN STREET
ORANGE, CA 92863

PBS&J
625 THE CITY DRIVE SOUTH, SUITE 200
ORANGE, CA 92868

PILE DATA TABLE

Location	Pile Type	Nominal Resistance		Design Tip Elevation (ft)	Specified Tip Elevation (ft)	Nominal Driving Resistance (kips)
		Compression (kips)	Tension (kips)			
Abut 1 Easterly Retaining Wall	Class 200 (Alt X)	280	0	-40 (a), -32 (c), & -23 (d)	-40	280
Abut 1	Class 200 (Alt X)	260	0	-40 (a), -32 (c), & -23 (d)	-40	260
Bent 2	Class 200 (Alt W)	400	200	-52 (a), -42 (b), -28 (c) & -20 (d)	-52	400
Abut 3	Class 200 (Alt X)	280	0	-32 (a), -28 (c), & -2 (d)	-32	280
Abut 3 Westerly Retaining Wall	Class 200 (Alt X)	280	0	-32 (a), -28 (c), & -2 (d)	-32	280

Note:
(1) Design tip elevation are controlled by the following demands: (a) Compression, (b) Tension, (c)Settlement, and (d) Lateral Loads.
(2) The specified tip elevation shall not be raised above the design tip elevations for tension, settlement, and lateral load.

BASIS OF COORDINATES

Bearings and coordinates as shown hereon are in terms of the California Cordinate System of 1983 (Epoch 1991.35), Zone 6; based locally upon the following County of Orange Control Stations as published by the County of Orange

Name	Northing (ft)	Easting (ft)
3756	2,230,831.57	6,007,513.47
3898R1	2,236,670.48	6,003,468.80

NOTES

1. All piles not shown
2. Locations of existing structure foundations are approximate
3. For 405/605 HOV Conn & E22-N605/405 Separation footings, see "405/605 Hov Conn" & "E22-N605/405 Separation (Replace)" plans, respectively

LEGEND

XX.XX Denotes bottom of footing elevation
XX.XX± Denotes bottom of existing footing elevation
Bridge Removal, Location D
Denotes 16" Dia Pipe Pile
Denotes Vertical Pile
Denotes Battered Piles (1:3)
Existing Structure
New Structure

BENCHMARKS

Monument: 1A-144-04

Described by OCS 2005 - Found 3¾" OCS aluminum benchmark disk stamped "1A-144-04", set in the southwesterly corner of a 4.4 ft by 4.4 ft concrete catch basin. Monument is located in the northeasterly corner of the intersection of Seal Beach Boulevard and St. Cloud Drive, 44 ft easterly of the centerline of Seal Beach Boulevard and 58 ft northerly of the centerline of St. Cloud Dr. Monument is set level with the sidewalk.

Elevation: 15.370 feet

Monument: 1A-123-70

Described by OCS 2002 - Found 3¾" OCS aluminum benchmark disk stamped "1A-123-70", set in concrete channel wall. Monument is located 0.6 miles northerly along Seal Beach Boulevard from its intersection with Westminister Avenue, 65 ft. Easterly from the centerline of Seal Beach Boulevard and 1ft. northeasterly of the south end of a concrete headwall. Monument is down 1.5 ft. from the top of the headwall.

Elevation: 11.631 feet

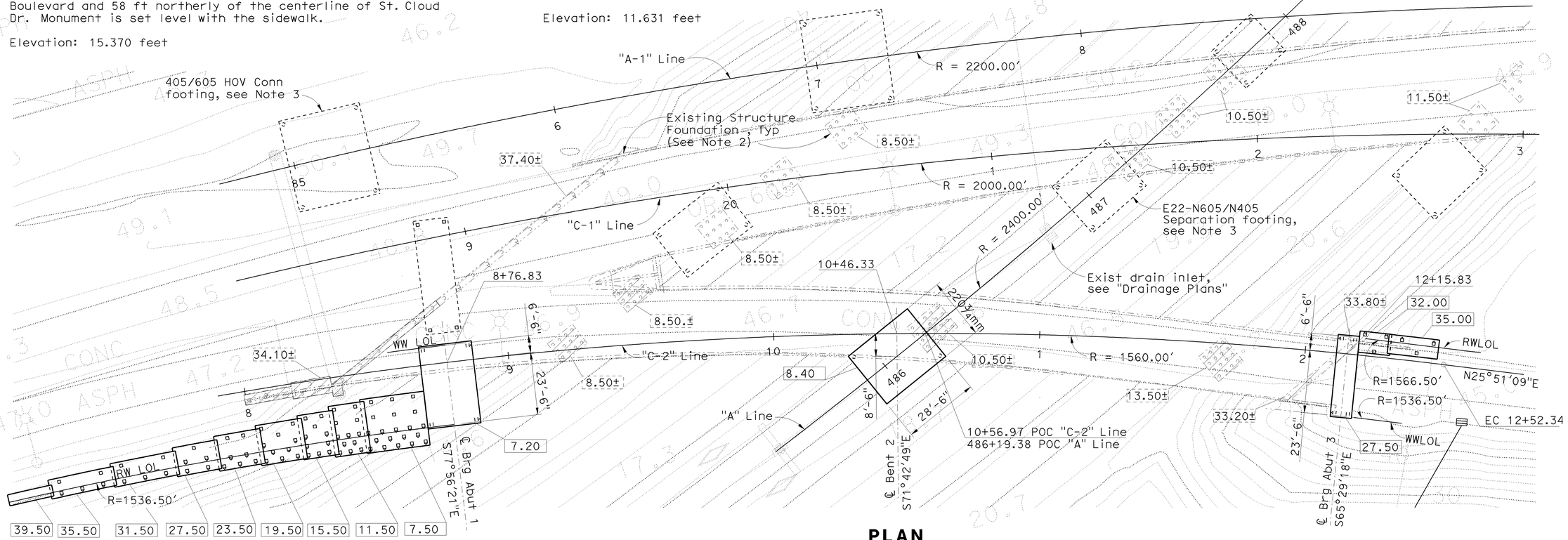

NOTE:
THE CONTRACTOR SHALL VERIFY ALL CONTROLLING FIELD DIMENSIONS BEFORE ORDERING OR FABRICATING ANY MATERIAL.

PLAN
1" = 20'

07-27-09
GEOTECHNICAL PROFESSIONAL APPROVAL DATE

Sudhakar Vatti
DESIGN OVERSIGHT Sudhakar Vatti
8-10-09
SIGN OFF DATE

SCALE:	VERT.DATUM NAVD88	HORZ.DATUM CCS83	
PHOTOGRAMMETRY AS OF: 12/07	ALIGNMENT TIES		
SURVEYED BY CALTRANS	DRAFTED BY AE, Inc.		
FIELD CHECKED BY AE, Inc	CHECKED BY AE, Inc.		

DESIGN	BY K. Allam	CHECKED Y. Deng	
DETAILS	BY N. Shu	CHECKED Y. Deng	
QUANTITIES	BY L. Khaleghi	CHECKED T. Tesch	

PREPARED FOR THE STATE OF CALIFORNIA DEPARTMENT OF TRANSPORTATION

Alaedin Moubayed
PROJECT ENGINEER

CU 12235
EA 071631

BRIDGE NO. 55-1096G
POST MILE R0.39

E22-N405/405 SEPARATION (REPLACE)
FOUNDATION PLAN

FOUNDATION PLAN SHEET (ENGLISH) (REV. 2-25-05)

ORIGINAL SCALE IN INCHES FOR REDUCED PLANS 0 1 2 3

DISREGARD PRINTS BEARING EARLIER REVISION DATES

REVISION DATES (PRELIMINARY STAGE ONLY) 02/06/08 05/06/08 03/27/08 04/06/09 07/27/09

SHEET 5 OF 30

FILE => 55-1096g-e-fdp101.dgn

USERNAME => trlenard DATE PLOTTED => 02-FEB-2010 TIME PLOTTED => 14:20

DIST	COUNTY	ROUTE	POST MILES TOTAL PROJECT	SHEET No	TOTAL SHEETS
12	Ora	22,405, 605	R0.3/R0.9, 22.3/24.0,3.0/R1.6	1516	1929

Khaled Allam 07-27-09
REGISTERED CIVIL ENGINEER DATE

REGISTERED PROFESSIONAL ENGINEER Khaled Allam No. 67110 Exp. 09-30-10 CIVIL STATE OF CALIFORNIA

2-1-10
PLANS APPROVAL DATE

The State of California or its officers or agents shall not be responsible for the accuracy or completeness of electronic copies of this plan sheet.

OCTA
550 SOUTH MAIN STREET
ORANGE, CA 92863

PBS&J
625 THE CITY DRIVE SOUTH, SUITE 200
ORANGE, CA 92868

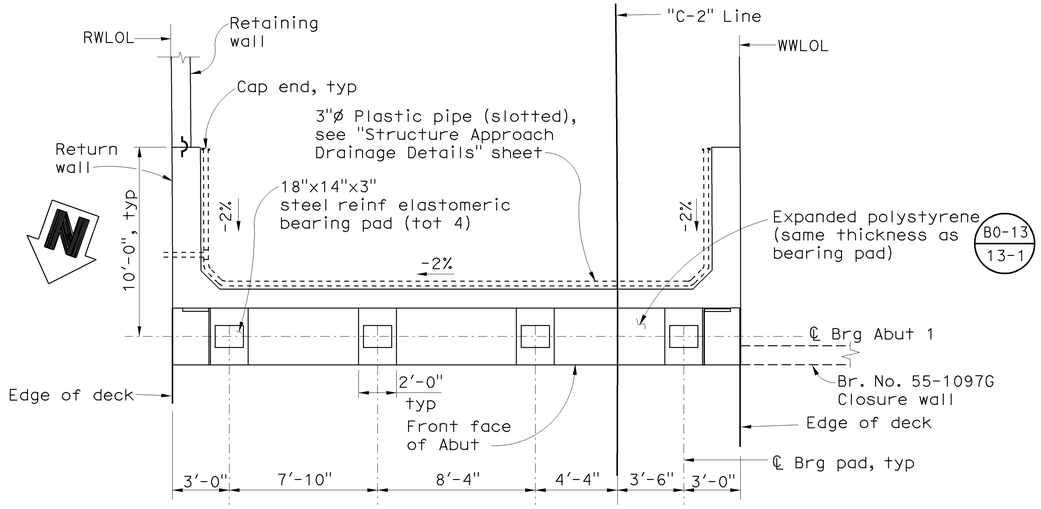

PLAN
1/4" = 1'-0"

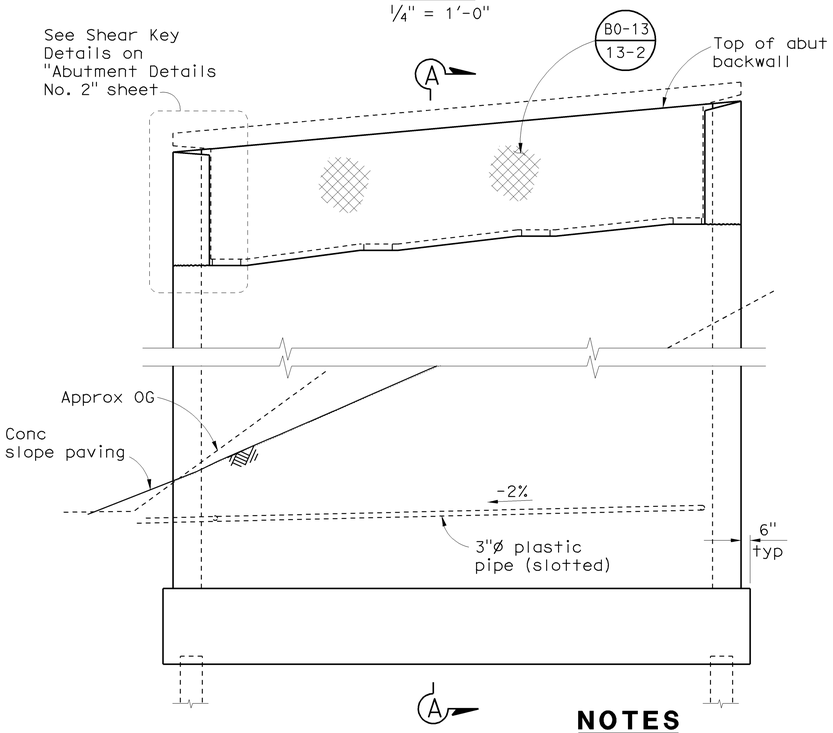

ELEVATION
1/4" = 1'-0"

NOTES
1. All piles not shown. For pile location and footing dimensions, see "Abutment Details No. 1" sheet.
2. Concrete barriers not shown.
3. For Detail 1, see "Abutment Details No. 1" sheet.
4. For typical bearing pad details, see "Abutment Details No. 1" sheet.
5. For drainage details, see "Structure Approach Drainage Details" sheet.

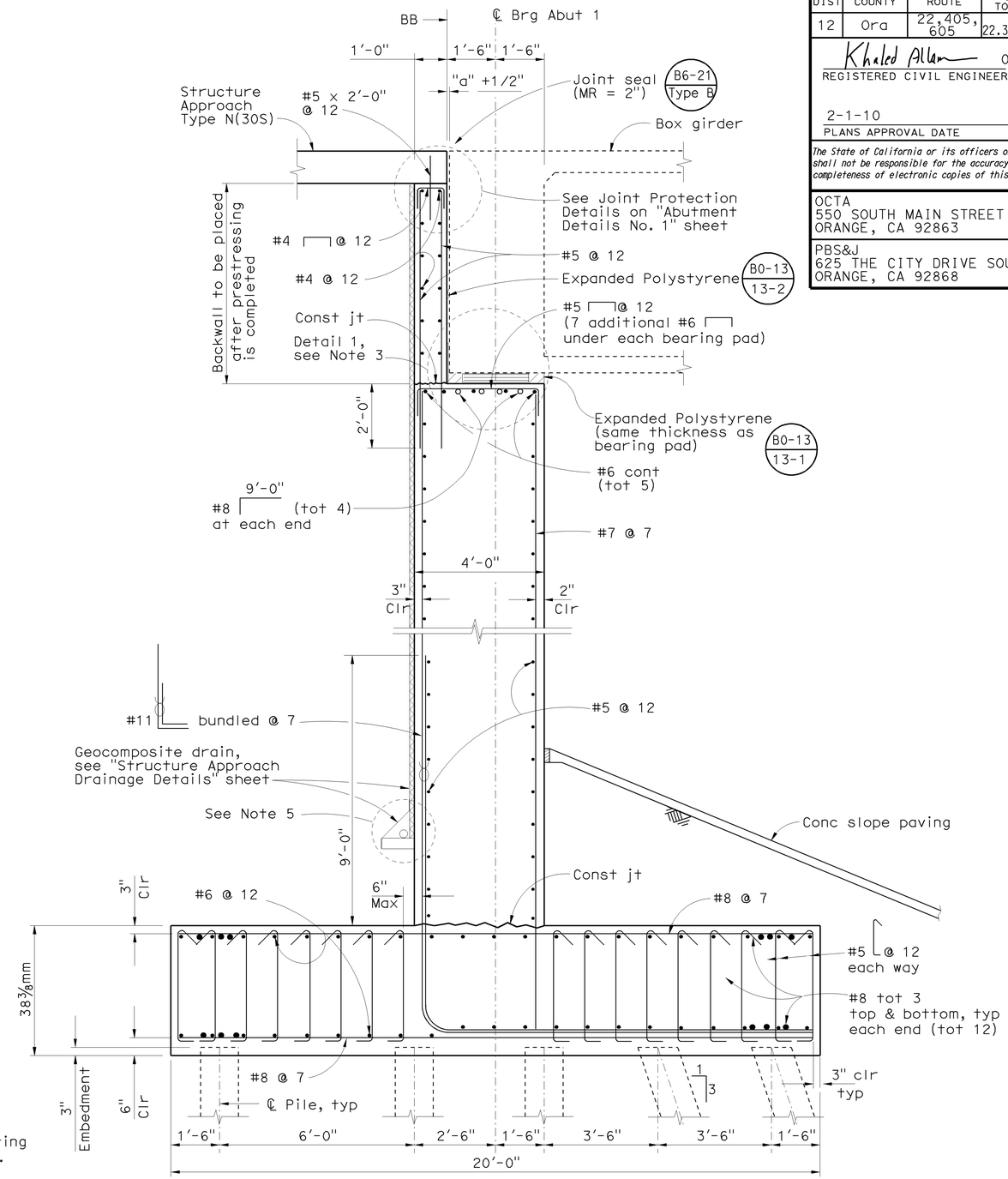

SECTION A-A
1/2" = 1'-0"

Sudhakar Vatti
DESIGN OVERSIGHT Sudhakar Vatti
8-10-09
SIGN OFF DATE

	BY	CHECKED
DESIGN	E. Cheung	Y. Deng
DETAILS	N. Shu	Y. Deng
QUANTITIES	L. Khaleghi	T. Tesch

PREPARED FOR THE STATE OF CALIFORNIA DEPARTMENT OF TRANSPORTATION

Alaedin Moubayed
PROJECT ENGINEER

BRIDGE NO. 55-1096G
POST MILE R0.39

E22-N405/405 SEPARATION (REPLACE)
ABUTMENT 1 LAYOUT

DESIGN DETAIL SHEET (ENGLISH) (REV. 2/25/05)

ORIGINAL SCALE IN INCHES FOR REDUCED PLANS 0 1 2 3

CU 12235
EA 071631

DISREGARD PRINTS BEARING EARLIER REVISION DATES

REVISION DATES (PRELIMINARY STAGE ONLY) 02/18/08 06/06/08 09/17/08 04/06/09 07/27/09

SHEET 6 OF 30

FILE => 55-1096g-f-ab1o01.dgn

USERNAME => trlemard DATE PLOTTED => 02-FEB-2010 TIME PLOTTED => 14:20

DIST	COUNTY	ROUTE	POST MILES TOTAL PROJECT	SHEET No	TOTAL SHEETS
12	Ora	22,405, 605	R0.3/R0.9 22.3/24.0,3.0/R1.6	1517	1929

Khaled Allam 07-27-09
REGISTERED CIVIL ENGINEER DATE

2-1-10
PLANS APPROVAL DATE

REGISTERED PROFESSIONAL ENGINEER Khaled Allam No. 67110 Exp. 09-30-10 CIVIL STATE OF CALIFORNIA

The State of California or its officers or agents shall not be responsible for the accuracy or completeness of electronic copies of this plan sheet.

OCTA
550 SOUTH MAIN STREET
ORANGE, CA 92863

PBS&J
625 THE CITY DRIVE SOUTH, SUITE 200
ORANGE, CA 92868

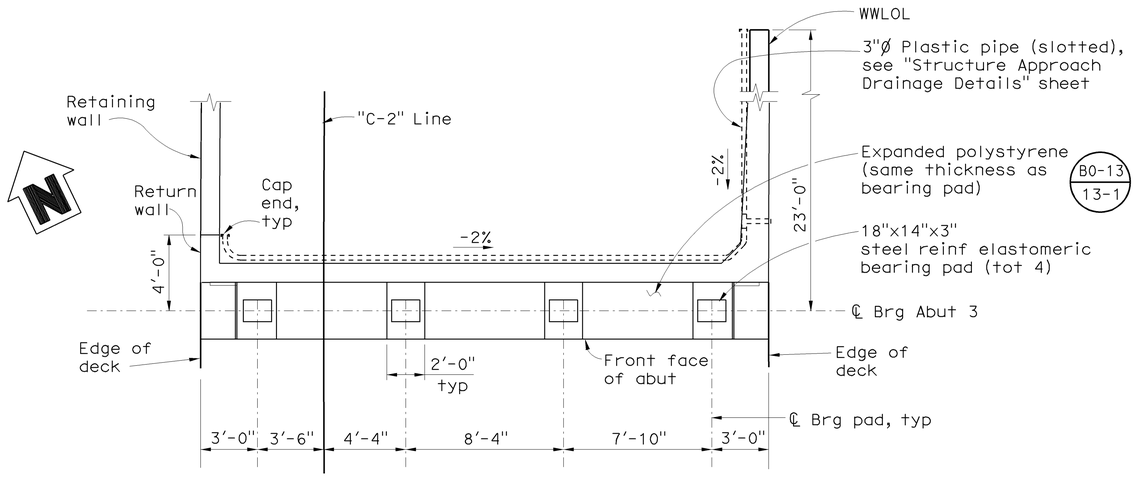

PLAN
1/4" = 1'-0"

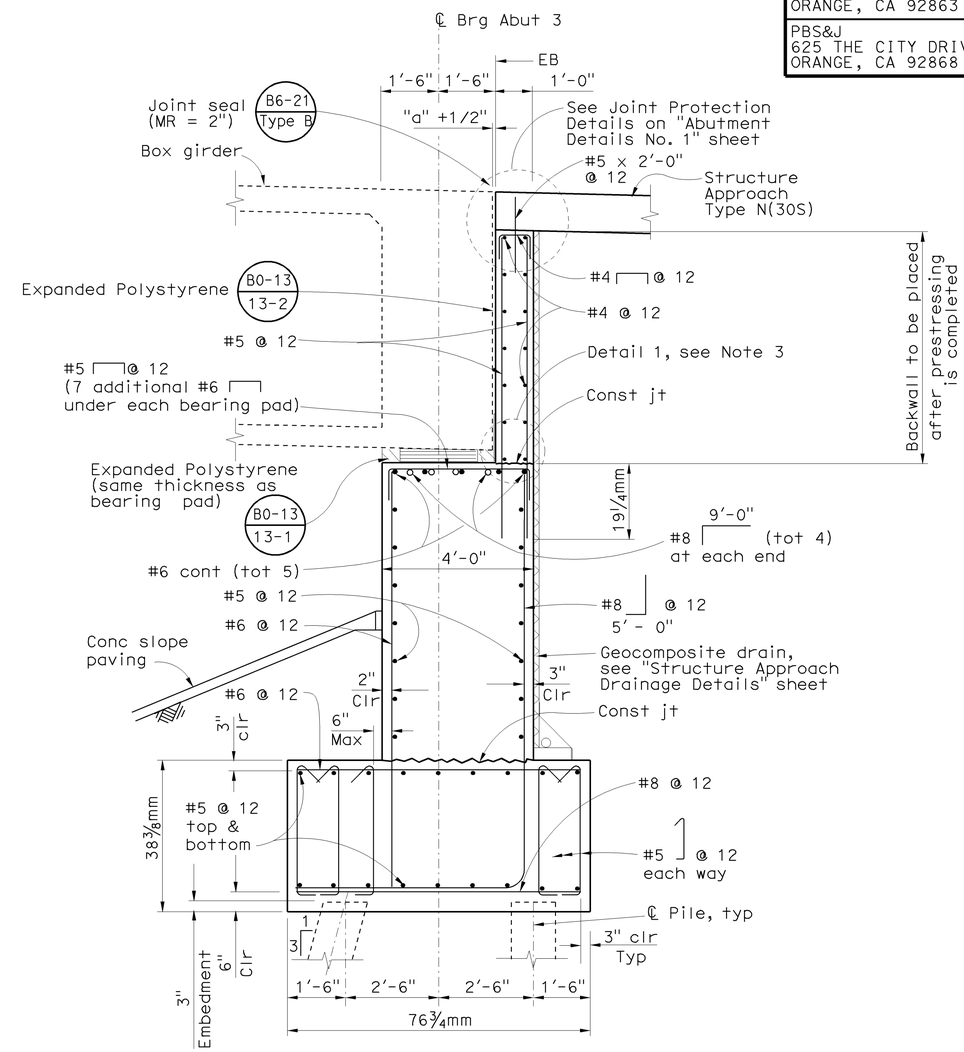

SECTION B-B
1/2" = 1'-0"

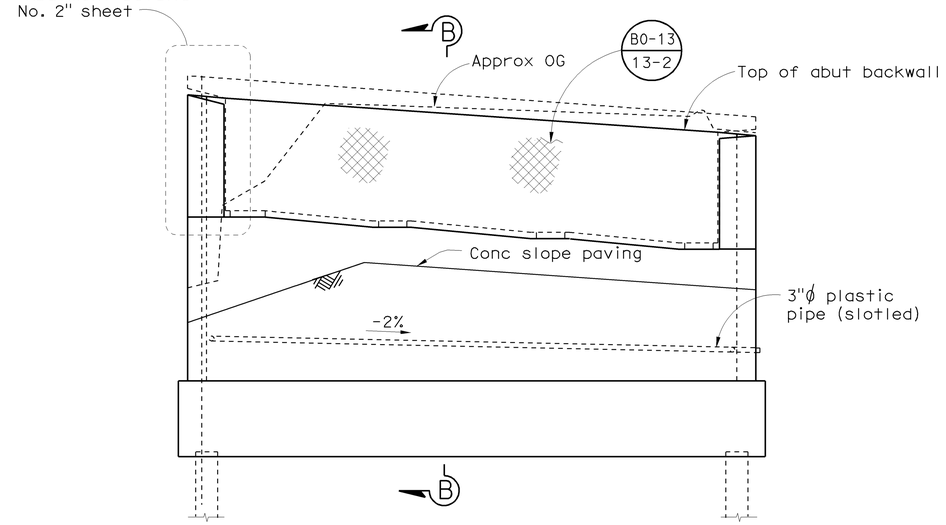

ELEVATION
1/4" = 1'-0"

NOTES

1. All piles not shown. For pile location and footing dimensions, see "Abutment Details No. 1" sheet.
2. Concrete barriers not shown.
3. For Detail 1, see "Abutment Details No. 1" sheet.
4. For typical bearing pad details, see "Abutment Details No. 1" sheet.

Sudhakar Vatti
DESIGN OVERSIGHT Sudhakar Vatti
8-10-09
SIGN OFF DATE

	BY	CHECKED
DESIGN	E. Cheung	Y. Deng
DETAILS	N. Shu	Y. Deng
QUANTITIES	L. Khaleghi	T. Tesch

PREPARED FOR THE STATE OF CALIFORNIA DEPARTMENT OF TRANSPORTATION

Alaedin Moubayed
PROJECT ENGINEER

BRIDGE NO. 55-1096G
POST MILE R0.39

E22-N405/405 SEPARATION (REPLACE)
ABUTMENT 3 LAYOUT

DESIGN DETAIL SHEET (ENGLISH) (REV. 2/25/05)

ORIGINAL SCALE IN INCHES FOR REDUCED PLANS 0 1 2 3

CU 12235
EA 071631

DISREGARD PRINTS BEARING EARLIER REVISION DATES

REVISION DATES (PRELIMINARY STAGE ONLY) 02/28/08 06/02/08 09/27/08 04/06/09 07/27/09

SHEET 7 OF 30

FILE => 55-1096g-f-ab1o03.dgn

USERNAME => rfriehard DATE PLOTTED => 02-FEB-2010 TIME PLOTTED => 14:20

DIST	COUNTY	ROUTE	POST MILES TOTAL PROJECT	SHEET No	TOTAL SHEETS
12	Ora	22,405, 605	R0.3/R0.9 22.3/24.0,3.0/R1.6	1518	1929

Khaled Allam 07-27-09
REGISTERED CIVIL ENGINEER DATE

2-1-10
PLANS APPROVAL DATE

The State of California or its officers or agents shall not be responsible for the accuracy or completeness of electronic copies of this plan sheet.

REGISTERED PROFESSIONAL ENGINEER Khaled Allam No. 67110 Exp. 09-30-10 CIVIL STATE OF CALIFORNIA

OCTA
550 SOUTH MAIN STREET
ORANGE, CA 92863

PBS&J
625 THE CITY DRIVE SOUTH, SUITE 200
ORANGE, CA 92868

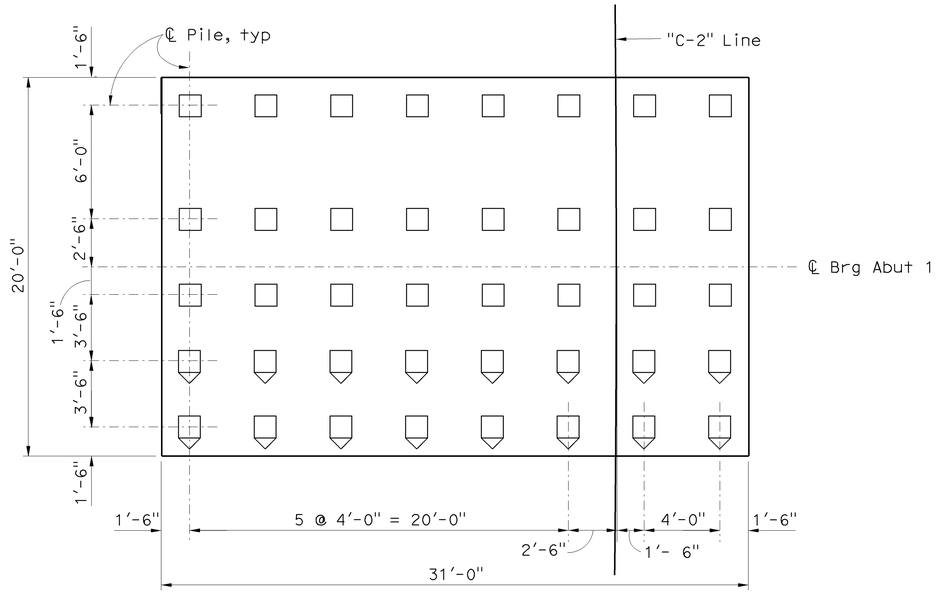

ABUTMENT 1 PILE LAYOUT
1/4" = 1'-0"

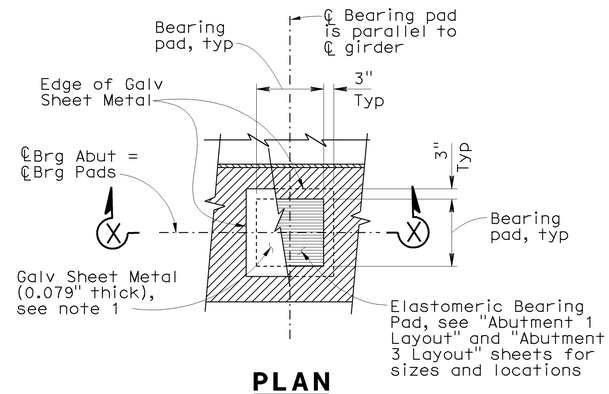

PLAN

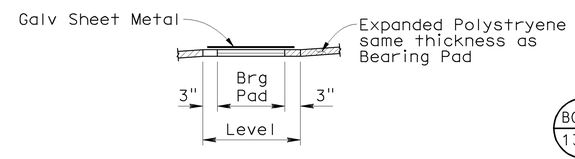

SECTION X-X

TYPICAL BEARING PAD DETAIL
No Scale

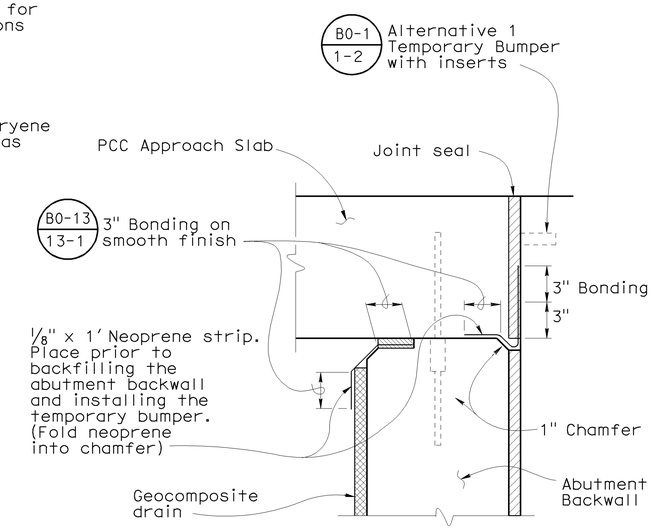

JOINT PROTECTION DETAIL
No Scale

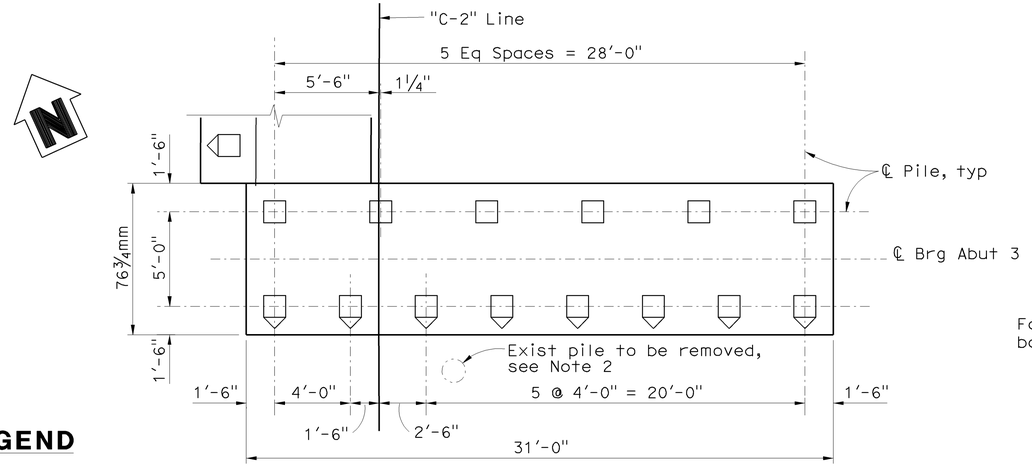

ABUTMENT 3 PILE LAYOUT
1/4" = 1'-0"

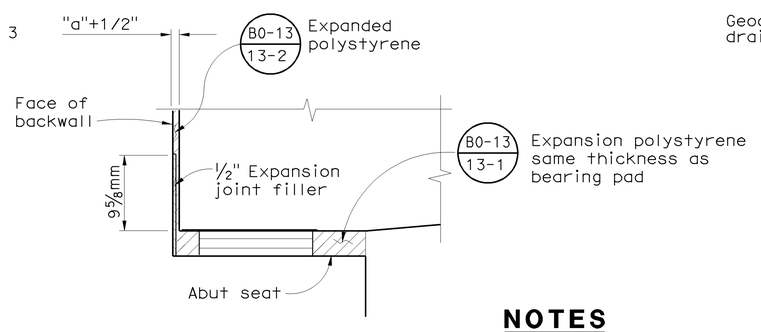

DETAIL 1
1" = 1'-0"

LEGEND

- Denotes vertical pile
- Denotes battered pile (1:3)
- Denotes exist pile

NOTE:
THE CONTRACTOR SHALL VERIFY ALL CONTROLLING FIELD DIMENSIONS BEFORE ORDERING OR FABRICATING ANY MATERIAL.

NOTES

1. Coat top of bearing pad with silicone grease prior to placing sheet metal
2. For limits of pile removal, see "Bridge Removal Plan" sheet

Sudhakar Vatti
DESIGN OVERSIGHT Sudhakar Vatti
8-10-09
SIGN OFF DATE

	BY	CHECKED
DESIGN	E. Cheung	Y. Deng
DETAILS	N. Shu	Y. Deng
QUANTITIES	L. Khaleghi	T. Tesch

PREPARED FOR THE STATE OF CALIFORNIA DEPARTMENT OF TRANSPORTATION

Alaedin Moubayed
PROJECT ENGINEER

BRIDGE NO. 55-1096G
POST MILE R0.39

E22-N405/405 SEPARATION (REPLACE)
ABUTMENT DETAILS NO. 1

DESIGN DETAIL SHEET (ENGLISH) (REV. 2/25/05)

ORIGINAL SCALE IN INCHES FOR REDUCED PLANS 0 1 2 3

CU 12235
EA 071631

DISREGARD PRINTS BEARING EARLIER REVISION DATES

REVISION DATES (PRELIMINARY STAGE ONLY) 02/18/08 06/02/08 09/17/08 04/06/09 07/27/09

SHEET 8 OF 30

FILE => 55-1096g-f-adt01.dgn

USERNAME => trlenard DATE PLOTTED => 02-FEB-2010 TIME PLOTTED => 14:20

DIST	COUNTY	ROUTE	POST MILES TOTAL PROJECT	SHEET No	TOTAL SHEETS
12	Ora	22,405, 605	R0.3/R0.9, 22.3/24.0,3.0/R1.6	1519	1929

Khaled Allam 07-27-09
REGISTERED CIVIL ENGINEER DATE

2-1-10
PLANS APPROVAL DATE

REGISTERED PROFESSIONAL ENGINEER Khaled Allam No. 67110 Exp. 09-30-10 CIVIL STATE OF CALIFORNIA

The State of California or its officers or agents shall not be responsible for the accuracy or completeness of electronic copies of this plan sheet.

OCTA
550 SOUTH MAIN STREET
ORANGE, CA 92863

PBS&J
625 THE CITY DRIVE SOUTH, SUITE 200
ORANGE, CA 92868

NOTES

1. For information not shown on section "E-E", See "Section D-D"
2. Outer 6" expanded polystyrene to be removed after construction

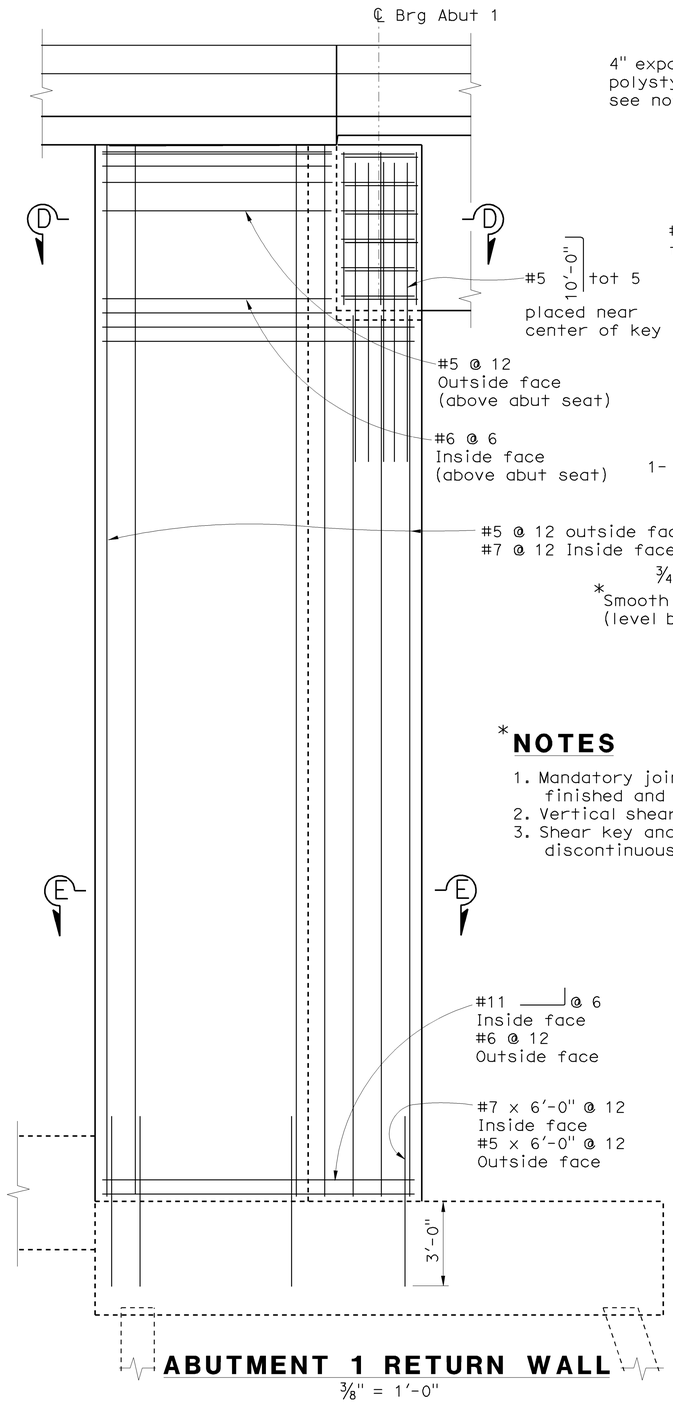

ABUTMENT 1 RETURN WALL

3/8" = 1'-0"

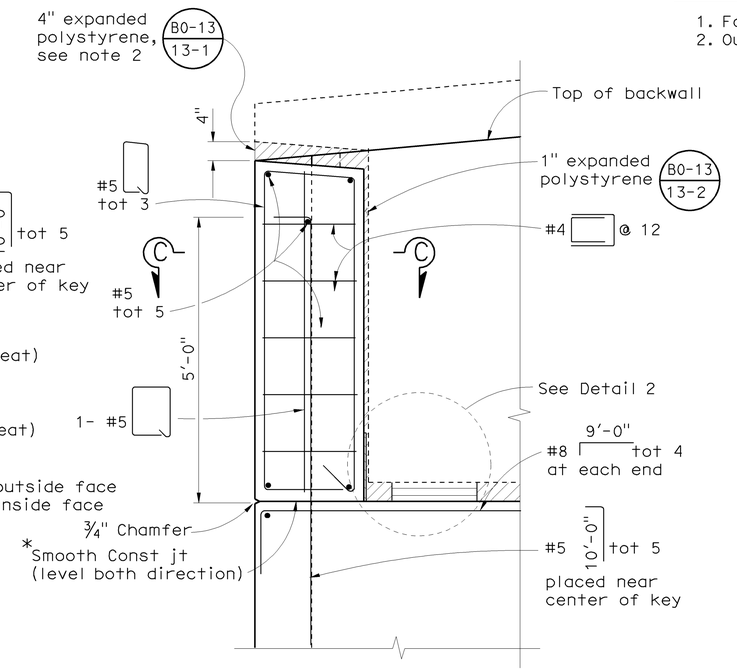

SHEAR KEY DETAIL

3/4" = 1'-0"

*NOTES

1. Mandatory joint surface to be smooth finished and lined with 15 lb const paper.
2. Vertical shear key reinforcement to be galvanized.
3. Shear key and wingwall reinforcement to be discontinuous as shown.

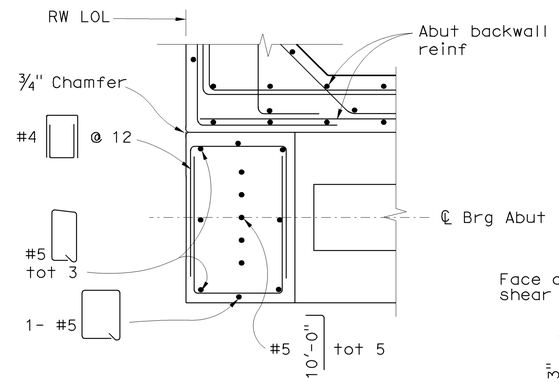

SECTION C-C

3/4" = 1'-0"

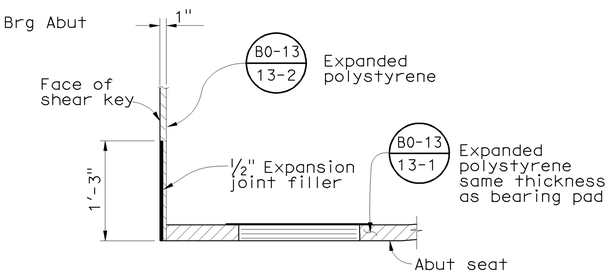

DETAIL 2

No Scale

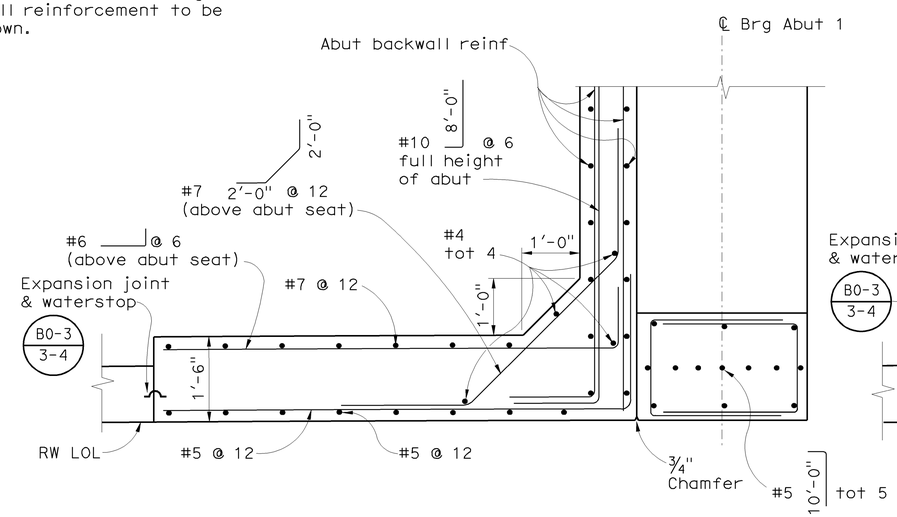

SECTION D-D

3/4" = 1'-0"

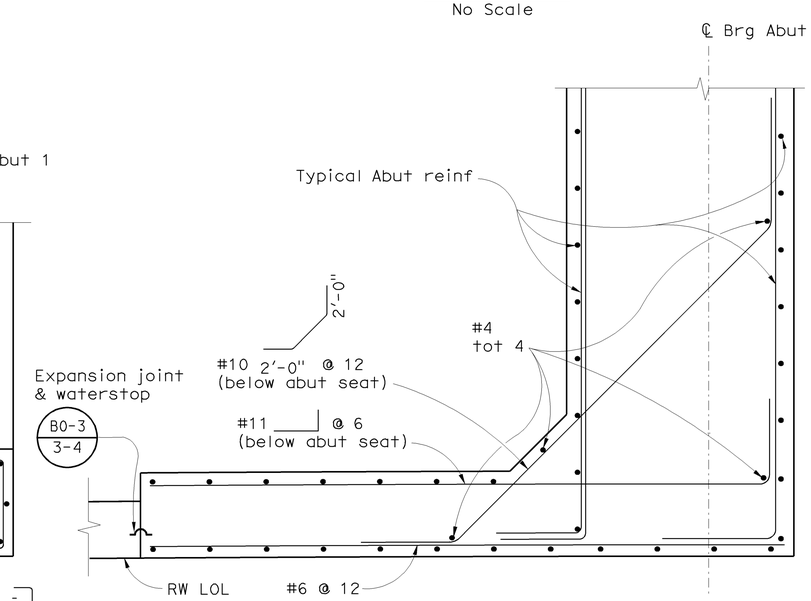

SECTION E-E

3/4" = 1'-0"

Sudhakar Vatti
DESIGN OVERSIGHT Sudhakar Vatti
8-10-09
SIGN OFF DATE

	BY	CHECKED
DESIGN	E. Cheung	Y. Deng
DETAILS	N. Shu	Y. Deng
QUANTITIES	L. Khaleghi	T. Tesch

PREPARED FOR THE STATE OF CALIFORNIA DEPARTMENT OF TRANSPORTATION

Alaedin Moubayed
PROJECT ENGINEER

BRIDGE NO. 55-1096G
POST MILE R0.39

E22-N405/405 SEPARATION (REPLACE)
ABUTMENT DETAILS NO. 2

DESIGN DETAIL SHEET (ENGLISH) (REV. 2/25/05)

ORIGINAL SCALE IN INCHES FOR REDUCED PLANS 0 1 2 3

CU 12235
EA 071631

DISREGARD PRINTS BEARING EARLIER REVISION DATES

REVISION DATES (PRELIMINARY STAGE ONLY) 02/18/08 06/02/08 09/17/08 09/08/09 07/27/09

SHEET 9 OF 30

FILE => 55-1096g-f-adt02.dgn

USERNAME => rtirenord DATE PLOTTED => 02-FEB-2010 TIME PLOTTED => 14:20

DIST	COUNTY	ROUTE	POST MILES TOTAL PROJECT	SHEET No	TOTAL SHEETS
12	Ora	22,405, 605	R0.3/R0.9, 22.3/24.0,3.0/R1.6	1520	1929

Khaled Allam 07-27-09
REGISTERED CIVIL ENGINEER DATE

2-1-10
PLANS APPROVAL DATE

REGISTERED PROFESSIONAL ENGINEER Khaled Allam No. 67110 Exp. 09-30-10 CIVIL STATE OF CALIFORNIA

The State of California or its officers or agents shall not be responsible for the accuracy or completeness of electronic copies of this plan sheet.

OCTA
550 SOUTH MAIN STREET
ORANGE, CA 92863

PBS&J
625 THE CITY DRIVE SOUTH, SUITE 200
ORANGE, CA 92868

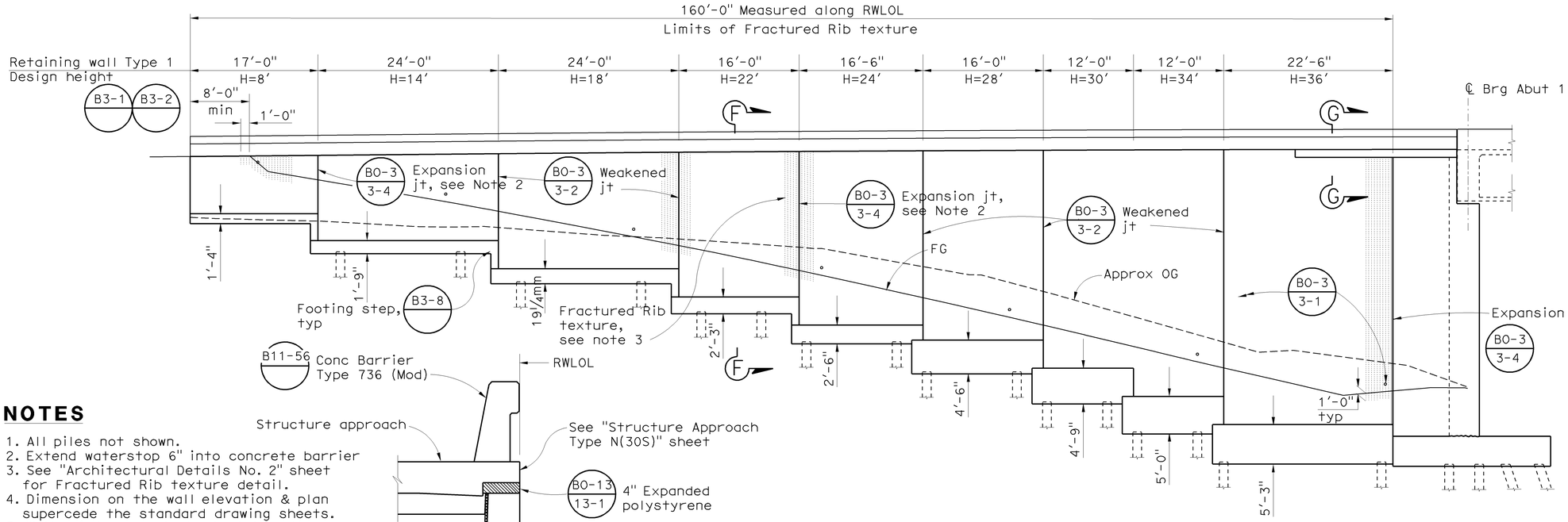

ABUTMENT 1 EAST RETAINING WALL ELEVATION

1/8" = 1'-0"

NOTES

1. All piles not shown.
2. Extend waterstop 6" into concrete barrier
3. See "Architectural Details No. 2" sheet for Fractured Rib texture detail.
4. Dimension on the wall elevation & plan supercede the standard drawing sheets.
5. Wall reinforcement should follow the standard drawing sheets B3-1

LEGEND

☐ Denotes vertical pile

⊔ Denotes battered pile (1:3)

SECTION G-G

1/2" = 1'-0"

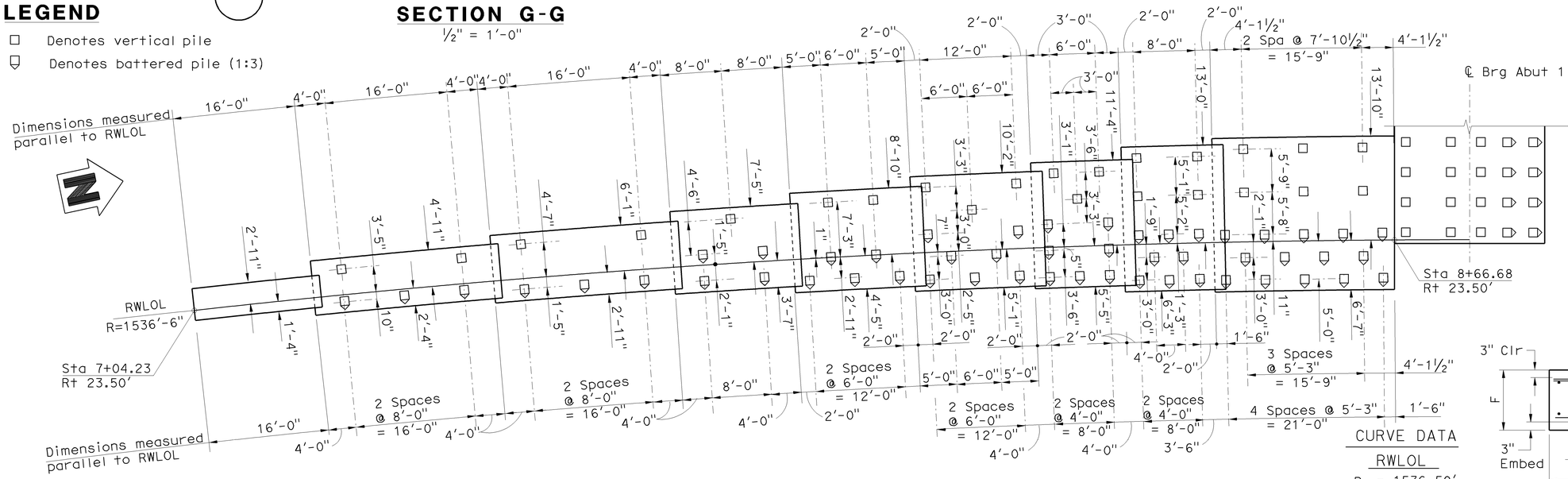

ABUTMENT 1 EAST RETAINING WALL PLAN

1/8" = 1'-0"

CURVE DATA

RWLOL

R = 1536.50'
Δ = 5°57'59"
T = 80.07'
L = 160.0'

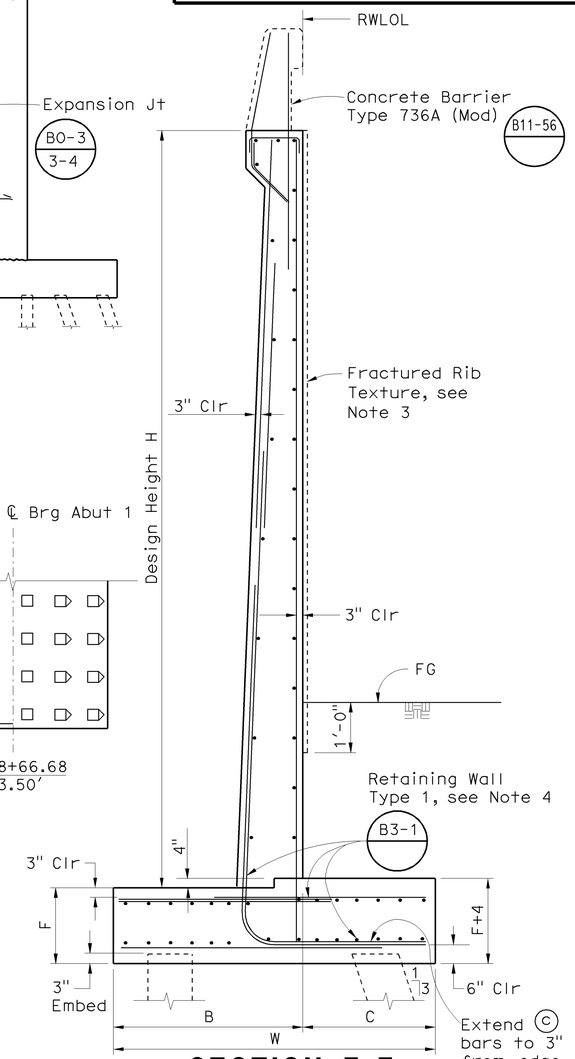

SECTION F-F

1/2" = 1'-0"

Sudhakar Vatti
DESIGN OVERSIGHT Sudhakar Vatti
8-10-09
SIGN OFF DATE

	BY	CHECKED
DESIGN	K. Allam	Y. Deng
DETAILS	N. Shu	Y. Deng
QUANTITIES	L. Khaleghi	T. Tesch

PREPARED FOR THE STATE OF CALIFORNIA DEPARTMENT OF TRANSPORTATION

Alaedin Moubayed
PROJECT ENGINEER

BRIDGE NO. 55-1096G
POST MILE R0.39

E22-N405/405 SEPARATION (REPLACE)

ABUTMENT DETAILS NO. 3

DESIGN DETAIL SHEET (ENGLISH) (REV. 2/25/05)

ORIGINAL SCALE IN INCHES FOR REDUCED PLANS 0 1 2 3

CU 12235
EA 071631

DISREGARD PRINTS BEARING EARLIER REVISION DATES

REVISION DATES (PRELIMINARY STAGE ONLY) 02/18/08 06/26/08 09/17/08 04/06/09 07/27/09

SHEET 10 OF 30

FILE => 55-1096g-f-adt03.dgn

USERNAME => trienard DATE PLOTTED => 03-FEB-2010 TIME PLOTTED => 05:16

DIST	COUNTY	ROUTE	POST MILES TOTAL PROJECT	SHEET No	TOTAL SHEETS
12	Ora	22,405, 605	R0.3/R0.9, 22.3/24.0,3.0/R1.6	1521	1929

Khaled Allam 07-27-09
REGISTERED CIVIL ENGINEER DATE

2-1-10
PLANS APPROVAL DATE

REGISTERED PROFESSIONAL ENGINEER Khaled Allam No. 67110 Exp. 09-30-10 CIVIL STATE OF CALIFORNIA

The State of California or its officers or agents shall not be responsible for the accuracy or completeness of electronic copies of this plan sheet.

OCTA
550 SOUTH MAIN STREET
ORANGE, CA 92863

PBS&J
625 THE CITY DRIVE SOUTH, SUITE 200
ORANGE, CA 92868

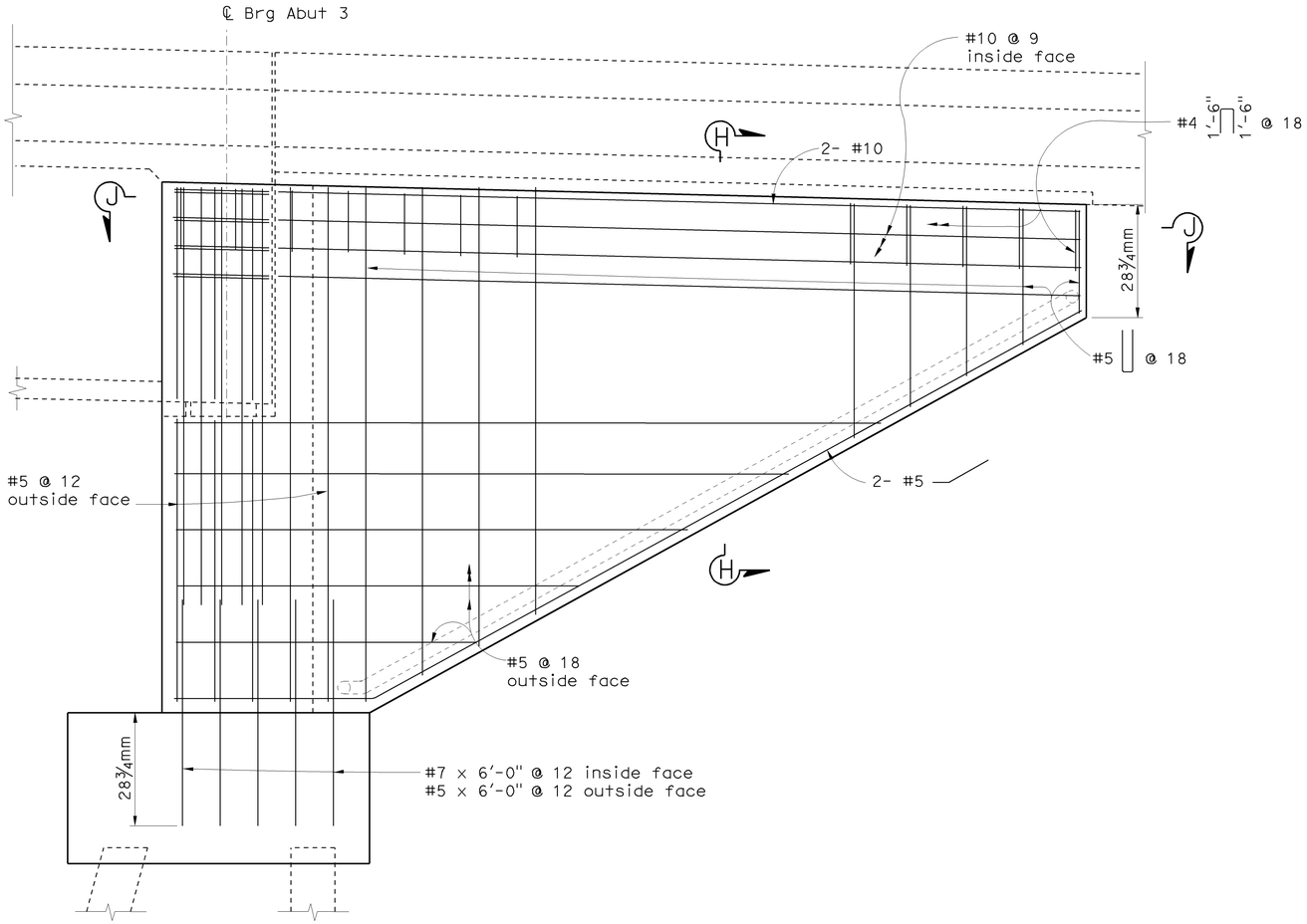

ABUTMENT 3 EAST WING WALL

½" = 1'-0"

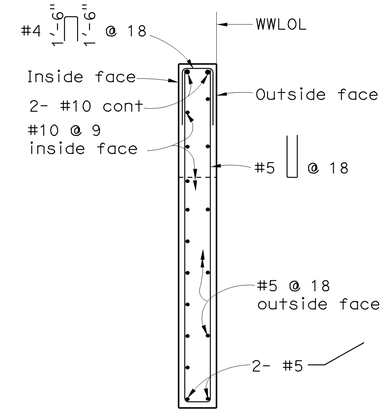

SECTION H-H

½" = 1'-0"

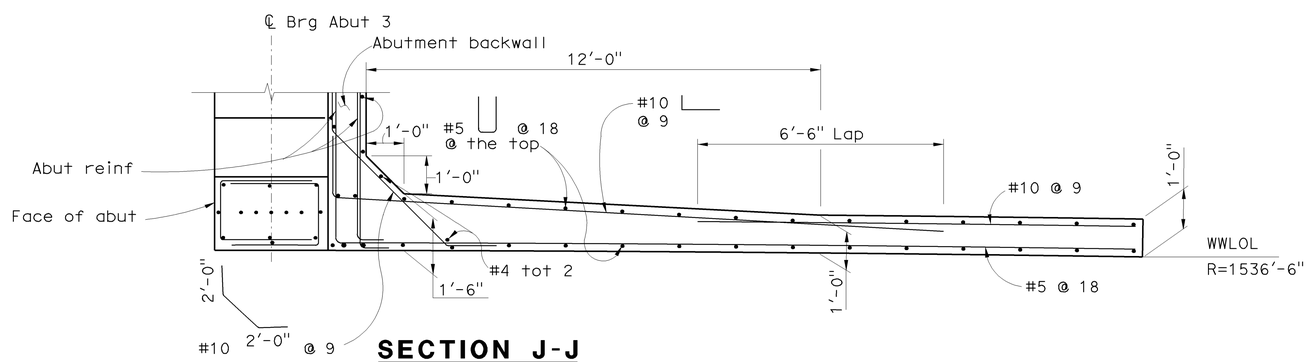

SECTION J-J

½" = 1'-0"

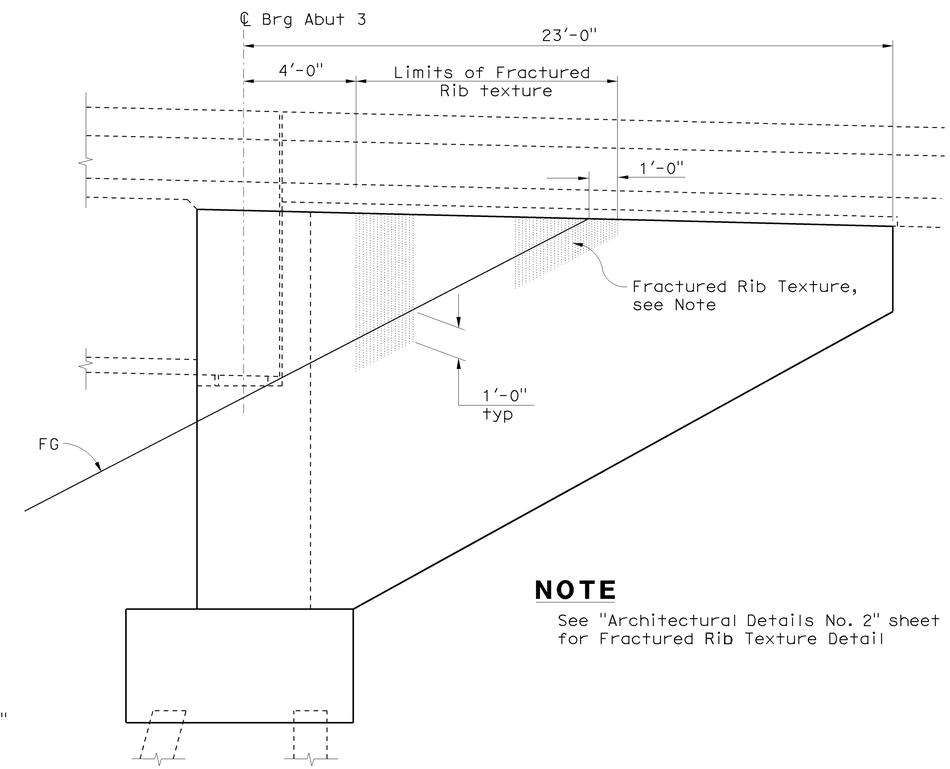

NOTE

See "Architectural Details No. 2" sheet for Fractured Rib Texture Detail

ABUTMENT 3 EAST WINGWALL ARCHITECTURAL TEXTURE

⅜" = 1'-0"

Sudhakar Vatti
DESIGN OVERSIGHT Sudhakar Vatti

8-10-09
SIGN OFF DATE

DESIGN DETAIL SHEET (ENGLISH) (REV. 2/25/05)

	BY	CHECKED
DESIGN	E. Cheung	Y. Deng
DETAILS	N. Shu	Y. Deng
QUANTITIES	L. Khaleghi	T. Tesch

ORIGINAL SCALE IN INCHES FOR REDUCED PLANS 0 1 2 3

PREPARED FOR THE
STATE OF CALIFORNIA
DEPARTMENT OF TRANSPORTATION

Alaedin Moubayed
PROJECT ENGINEER

CU 12235
EA 071631

BRIDGE NO. 55-1096G
POST MILE R0.39

E22-N405/405 SEPARATION (REPLACE)
ABUTMENT DETAILS NO. 4

DISREGARD PRINTS BEARING EARLIER REVISION DATES →

REVISION DATES (PRELIMINARY STAGE ONLY) 02/08/08 05/02/08 09/27/08 04/06/09 07/27/09

SHEET 11 OF 30

FILE => 55-1096g-f-adt04.dgn

USERNAME => trlenard DATE PLOTTED => 03-FEB-2010 TIME PLOTTED => 05:16

DIST	COUNTY	ROUTE	POST MILES TOTAL PROJECT	SHEET No	TOTAL SHEETS
12	Ora	22,405, 605	R0.3/R0.9, 22.3/24.0,3.0/R1.6	1522	1929

Khaled Allam 07-27-09
REGISTERED CIVIL ENGINEER DATE

2-1-10
PLANS APPROVAL DATE

REGISTERED PROFESSIONAL ENGINEER Khaled Allam No. 67110 Exp. 09-30-10 CIVIL STATE OF CALIFORNIA

The State of California or its officers or agents shall not be responsible for the accuracy or completeness of electronic copies of this plan sheet.

OCTA
550 SOUTH MAIN STREET
ORANGE, CA 92863

PBS&J
625 THE CITY DRIVE SOUTH, SUITE 200
ORANGE, CA 92868

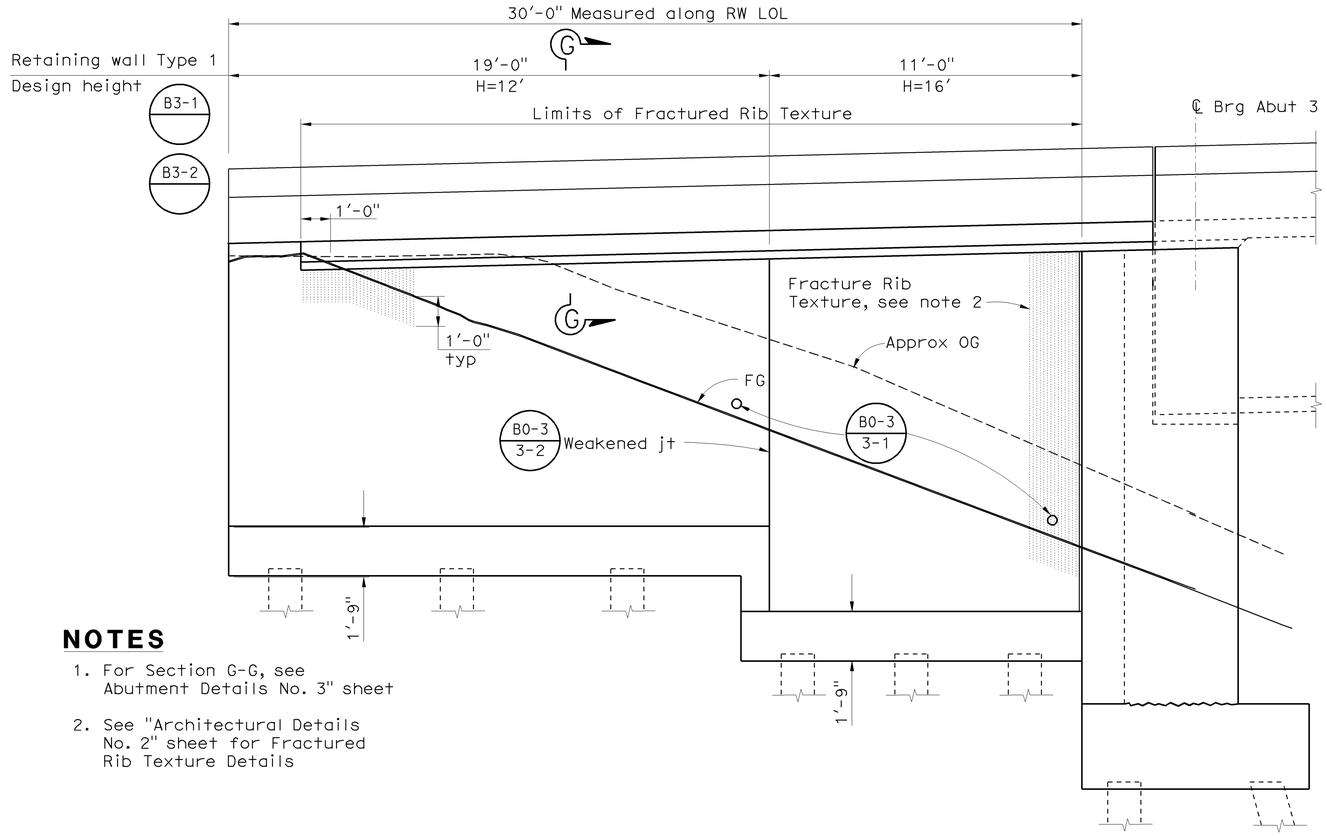

ABUTMENT 3 WEST RETAINING WALL ELEVATION

3/8" = 1'-0"

NOTES

1. For Section G-G, see Abutment Details No. 3" sheet
2. See "Architectural Details No. 2" sheet for Fractured Rib Texture Details

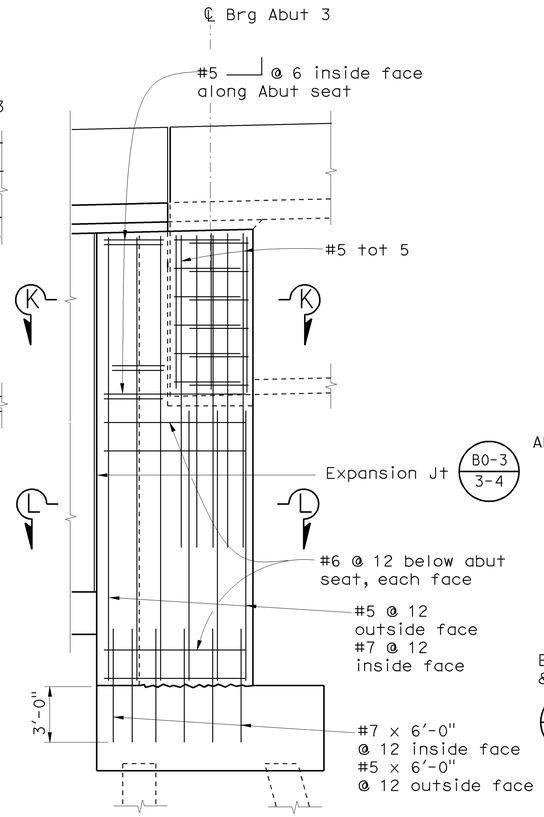

ABUTMENT 3 WEST RETURN WALL REINFORCEMENT

3/8" = 1'-0"

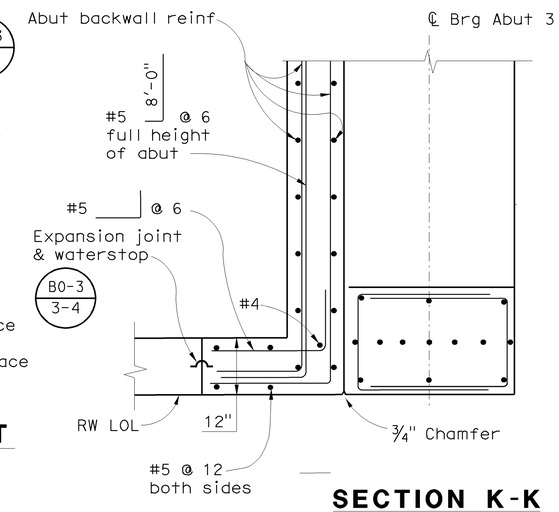

SECTION K-K

3/4" = 1'-0"

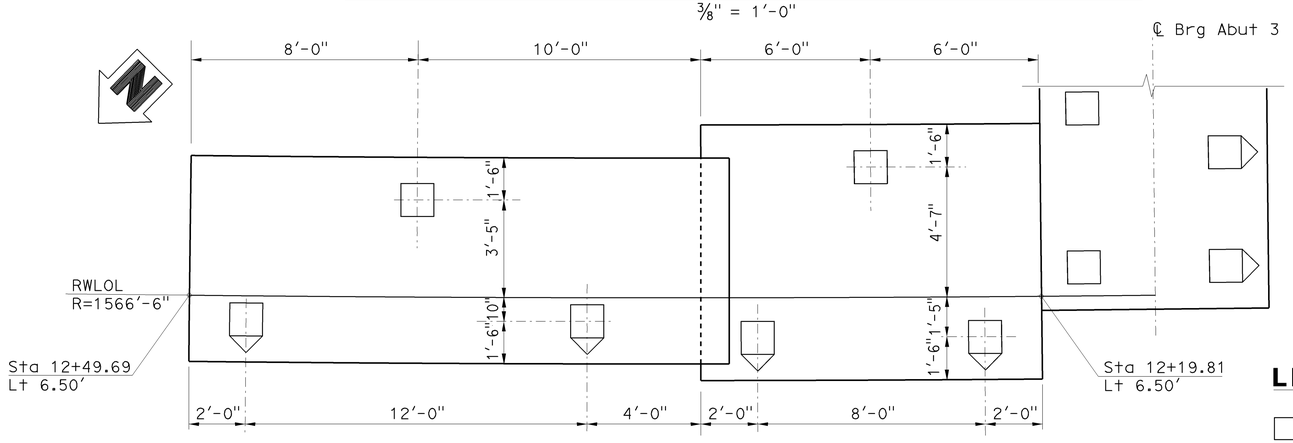

ABUTMENT 3 WEST RETAINING WALL PLAN

3/8" = 1'-0"

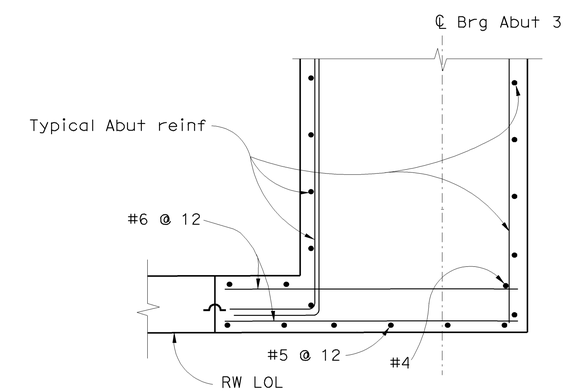

SECTION L-L

3/4" = 1'-0"

LEGEND

Denotes vertical pile

Denotes battered pile (1:3)

Sudhakar Vatti
DESIGN OVERSIGHT Sudhakar Vatti
8-10-09
SIGN OFF DATE

	BY	CHECKED
DESIGN	E. Cheung	Y. Deng
DETAILS	N. Shu	Y. Deng
QUANTITIES	L. Khaleghi	T. Tesch

PREPARED FOR THE STATE OF CALIFORNIA DEPARTMENT OF TRANSPORTATION

Alaedin Moubayed
PROJECT ENGINEER

BRIDGE NO. 55-1096G
POST MILE R0.39

E22-N405/405 SEPARATION (REPLACE)
ABUTMENT DETAILS NO. 5

DESIGN DETAIL SHEET (ENGLISH) (REV. 2/25/05)

ORIGINAL SCALE IN INCHES FOR REDUCED PLANS 0 1 2 3

CU 12235
EA 071631

DISREGARD PRINTS BEARING EARLIER REVISION DATES

REVISION DATES (PRELIMINARY STAGE ONLY) 02/18/08 06/02/08 09/17/08 04/06/09 07/27/09

SHEET 12 OF 30

FILE => 55-1096g-f-adt05.dgn

USERNAME => trienard DATE PLOTTED => 03-FEB-2010 TIME PLOTTED => 05:16

DIST	COUNTY	ROUTE	POST MILES TOTAL PROJECT	SHEET No	TOTAL SHEETS
12	Ora	22,405, 605	R0.3/R0.9, 22.3/24.0,3.0/R1.6	1523	1929

Khaled Allam 07-27-09
REGISTERED CIVIL ENGINEER DATE

2-1-10
PLANS APPROVAL DATE

REGISTERED PROFESSIONAL ENGINEER Khaled Allam No. 67110 Exp. 09-30-10 CIVIL STATE OF CALIFORNIA

The State of California or its officers or agents shall not be responsible for the accuracy or completeness of electronic copies of this plan sheet.

OCTA
550 SOUTH MAIN STREET
ORANGE, CA 92863

PBS&J
625 THE CITY DRIVE SOUTH, SUITE 200
ORANGE, CA 92868

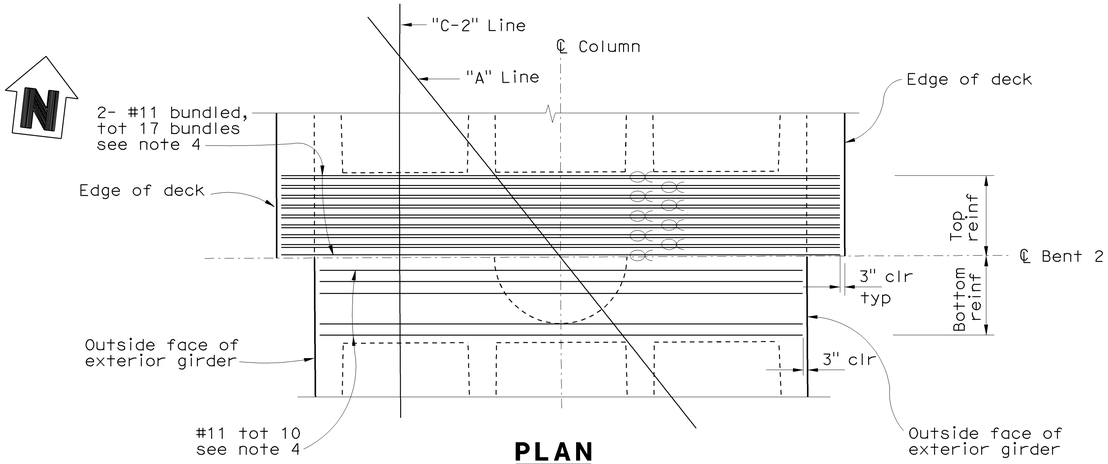

PLAN
1/4" = 1'-0"

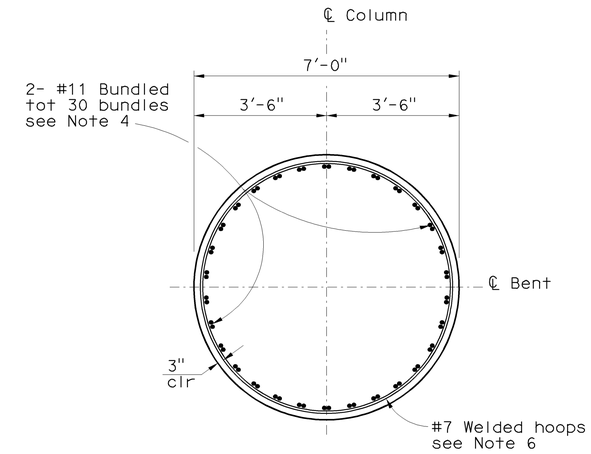

SECTION A-A
1/2" = 1'-0"

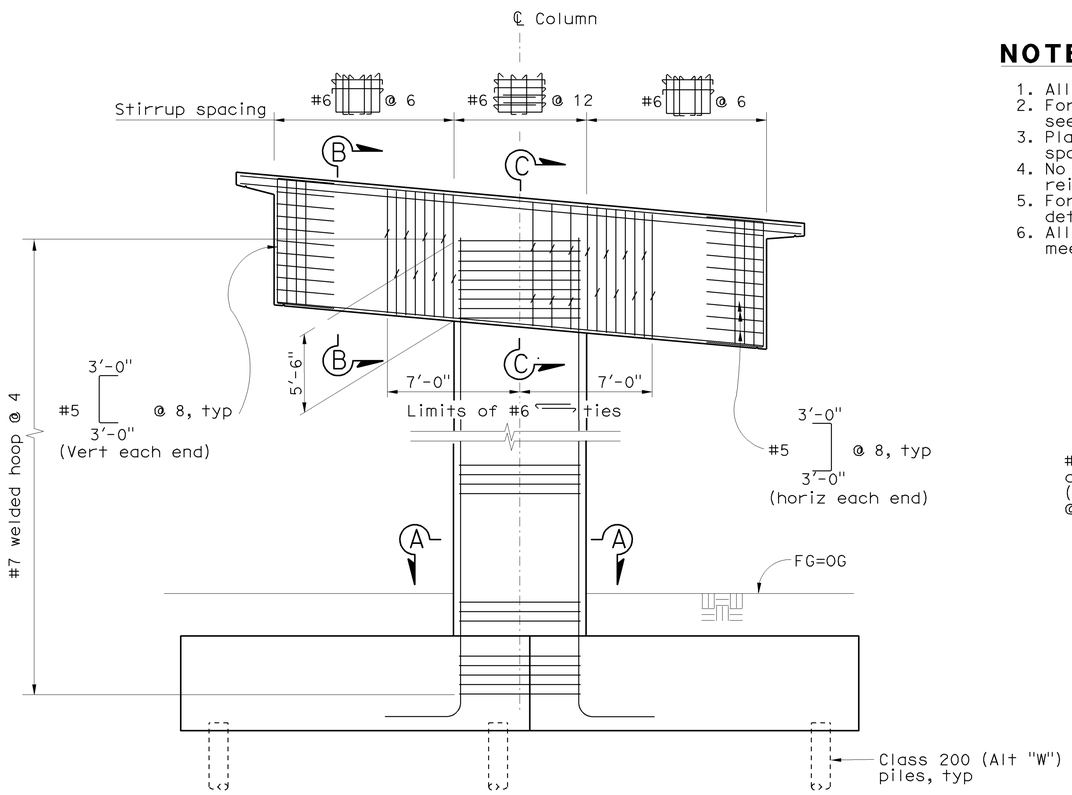

ELEVATION
1/4" = 1'-0"

NOTES

1. All piles not shown.
2. For Sections B-B & C-C, see "Bent Details No. 2" sheet.
3. Place stirrups reinf normal to and space along ℄ Bent.
4. No splices allowed in main column and main bent cap reinforcement.
5. For column footing and pile layout, see "bent details No. 1" sheet.
6. All hoops shall be butt welded continuous and meet "ultimate butt splice" requirements.

LEGEND

Denotes bundled bars.

Denotes Headed Bar Reinforcement.

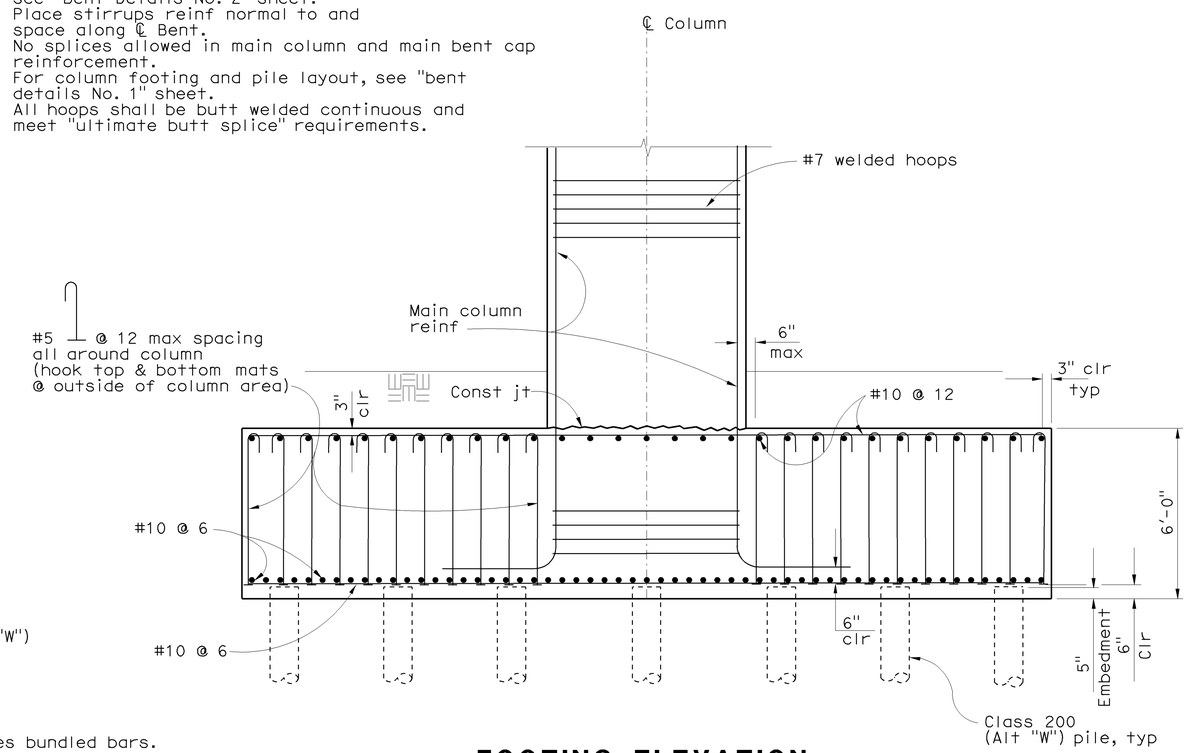

FOOTING ELEVATION
3/8" = 1'-0"

Sudhakar Vatti
DESIGN OVERSIGHT Sudhakar Vatti
8-10-09
SIGN OFF DATE

	BY	CHECKED
DESIGN	K. Allam	Y. Deng
DETAILS	N. Shu	Y. Deng
QUANTITIES	L. Khaleghi	T. Tesch

PREPARED FOR THE STATE OF CALIFORNIA DEPARTMENT OF TRANSPORTATION

Alaedin Moubayed
PROJECT ENGINEER

BRIDGE NO. 55-1096G
POST MILE R0.39

E22-N405/405 SEPARATION (REPLACE)
BENT LAYOUT

DESIGN DETAIL SHEET (ENGLISH) (REV. 2/25/05)

ORIGINAL SCALE IN INCHES FOR REDUCED PLANS 0 1 2 3

CU 12235
EA 071631

DISREGARD PRINTS BEARING EARLIER REVISION DATES

REVISION DATES (PRELIMINARY STAGE ONLY) 02/18/08 06/02/08 09/17/08 04/06/09 07/27/09

SHEET 13 OF 30

FILE => 55-1096g-h-b01.dgn

USERNAME => rrlenord DATE PLOTTED => 03-FEB-2010 TIME PLOTTED => 05:16

DIST	COUNTY	ROUTE	POST MILES TOTAL PROJECT	SHEET No	TOTAL SHEETS
12	Ora	22,405, 605	R0.3/R0.9, 22.3/24.0,3.0/R1.6	1524	1929

Khaled Allam 07-27-09
REGISTERED CIVIL ENGINEER DATE

2-1-10
PLANS APPROVAL DATE

REGISTERED PROFESSIONAL ENGINEER Khaled Allam No. 67110 Exp. 09-30-10 CIVIL STATE OF CALIFORNIA

The State of California or its officers or agents shall not be responsible for the accuracy or completeness of electronic copies of this plan sheet.

OCTA
550 SOUTH MAIN STREET
ORANGE, CA 92863

PBS&J
625 THE CITY DRIVE SOUTH, SUITE 200
ORANGE, CA 92868

LEGEND

○ Denotes Class 200 (Alt W) pile

◌ Denote exist pile

NOTE:

Location of piles may be adjusted to avoid conflict with existing pile, as permitted by the engineer.

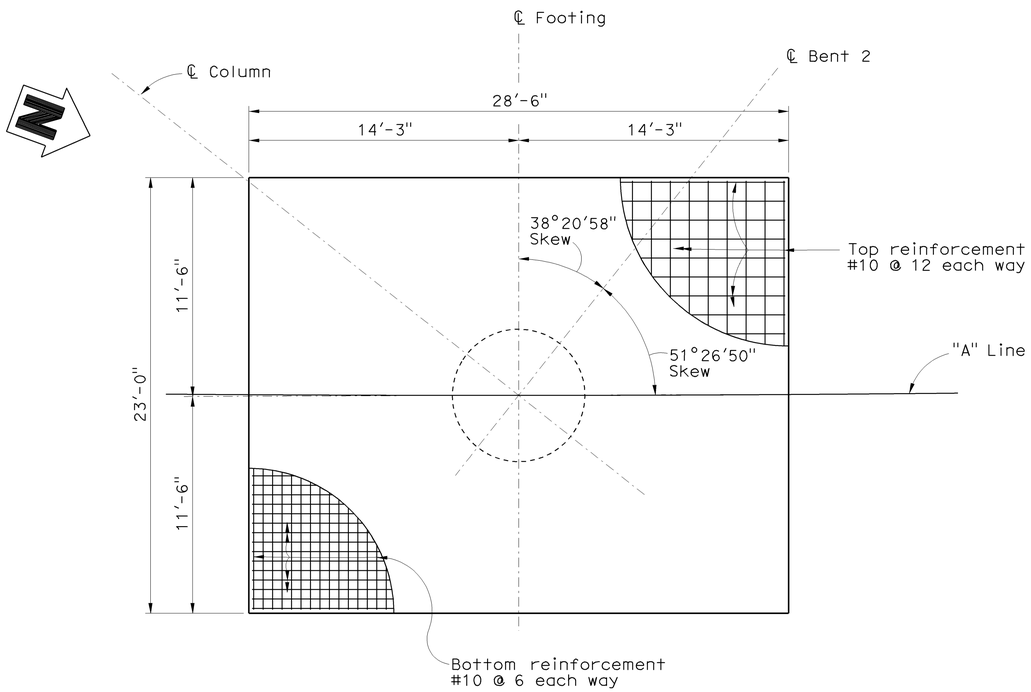

FOOTING REINFORCEMENT PLAN

1/4″ = 1′-0″

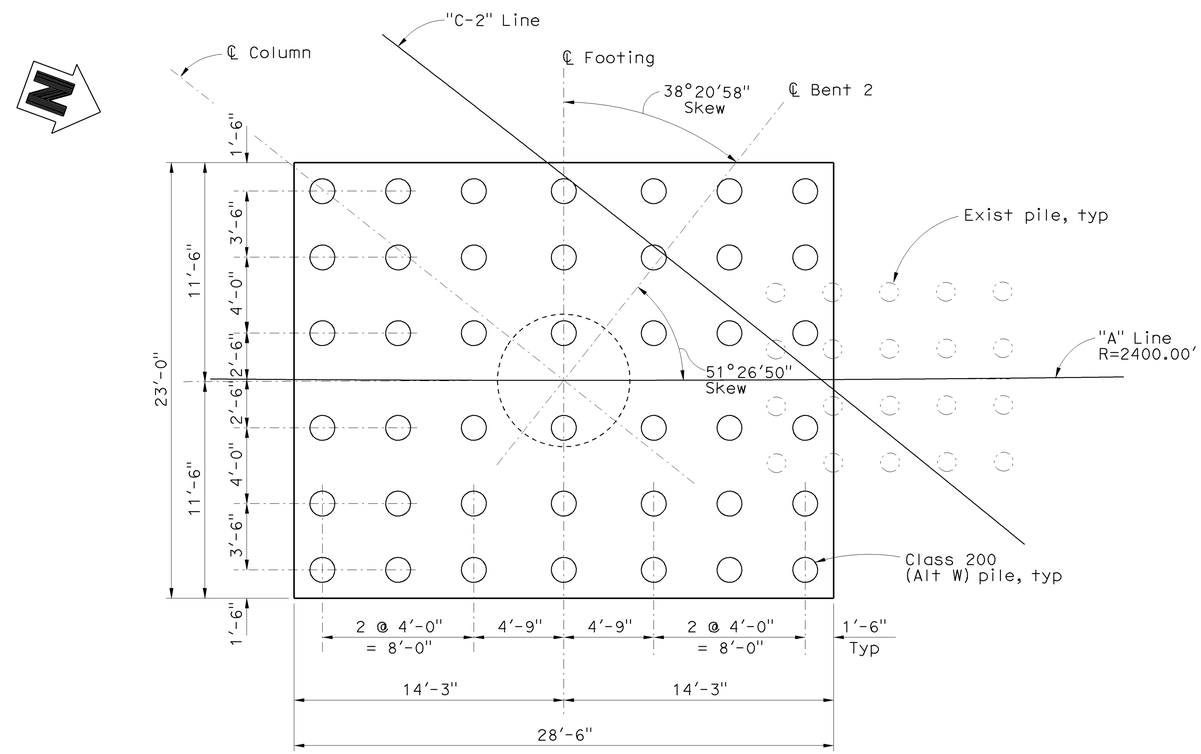

FOOTING & PILE LAYOUT

1/4″ = 1′-0″

NOTE:
THE CONTRACTOR SHALL VERIFY ALL CONTROLLING FIELD DIMENSIONS BEFORE ORDERING OR FABRICATING ANY MATERIAL.

Sudhakar Vatti
DESIGN OVERSIGHT Sudhakar Vatti
8-10-09
SIGN OFF DATE

	BY	CHECKED
DESIGN	E. Cheung	Y. Deng
DETAILS	N. Shu	Y. Deng
QUANTITIES	L. Khaleghi	T. Tesch

PREPARED FOR THE STATE OF CALIFORNIA DEPARTMENT OF TRANSPORTATION

Alaedin Moubayed
PROJECT ENGINEER

BRIDGE NO. 55-1096G
POST MILE R0.39

E22-N405/405 SEPARATION (REPLACE)
BENT DETAILS NO. 1

DESIGN DETAIL SHEET (ENGLISH) (REV. 2/25/05)

ORIGINAL SCALE IN INCHES FOR REDUCED PLANS 0 1 2 3

CU 12235
EA 071631

DISREGARD PRINTS BEARING EARLIER REVISION DATES

REVISION DATES (PRELIMINARY STAGE ONLY) 02/18/08 06/02/08 09/17/08 04/06/09 07/27/09

SHEET 14 OF 30

FILE => 55-1096g-h-bdt01.dgn

USERNAME => friehard DATE PLOTTED => 03-FEB-2010 TIME PLOTTED => 05:16

DIST	COUNTY	ROUTE	POST MILES TOTAL PROJECT	SHEET No	TOTAL SHEETS
12	Ora	22,405, 605	R0.3/R0.9 22.3/24.0,3.0/R1.6	1525	1929

Khaled Allam 07-27-09
REGISTERED CIVIL ENGINEER DATE

2-1-10
PLANS APPROVAL DATE

REGISTERED PROFESSIONAL ENGINEER Khaled Allam No. 67110 Exp. 09-30-10 CIVIL STATE OF CALIFORNIA

The State of California or its officers or agents shall not be responsible for the accuracy or completeness of electronic copies of this plan sheet.

OCTA
550 SOUTH MAIN STREET
ORANGE, CA 92863

PBS&J
625 THE CITY DRIVE SOUTH, SUITE 200
ORANGE, CA 92868

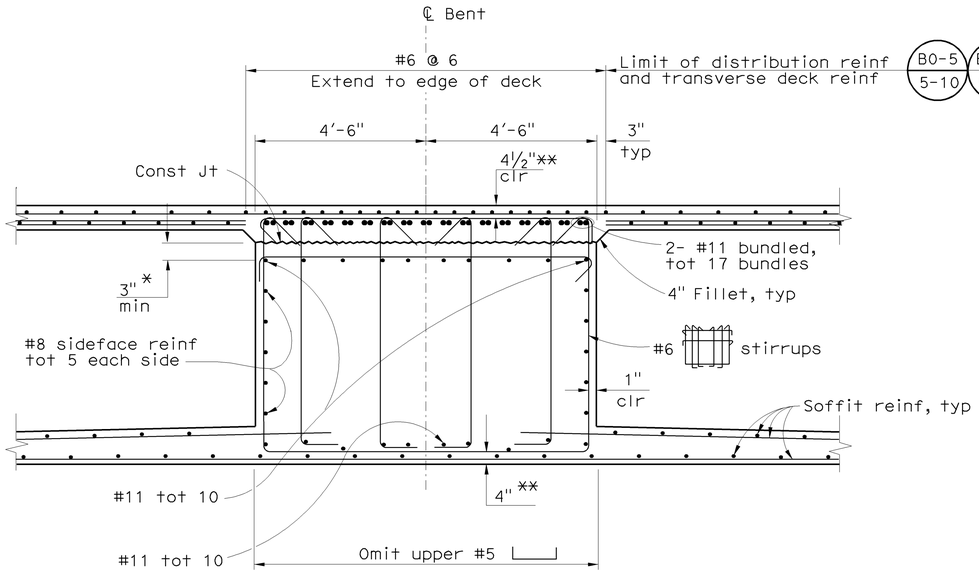

SECTION B-B

½" = 1'-0"

LEGEND

* Reinf may be lowered to clear prestressing ducts
** Clearance to main cap reinf

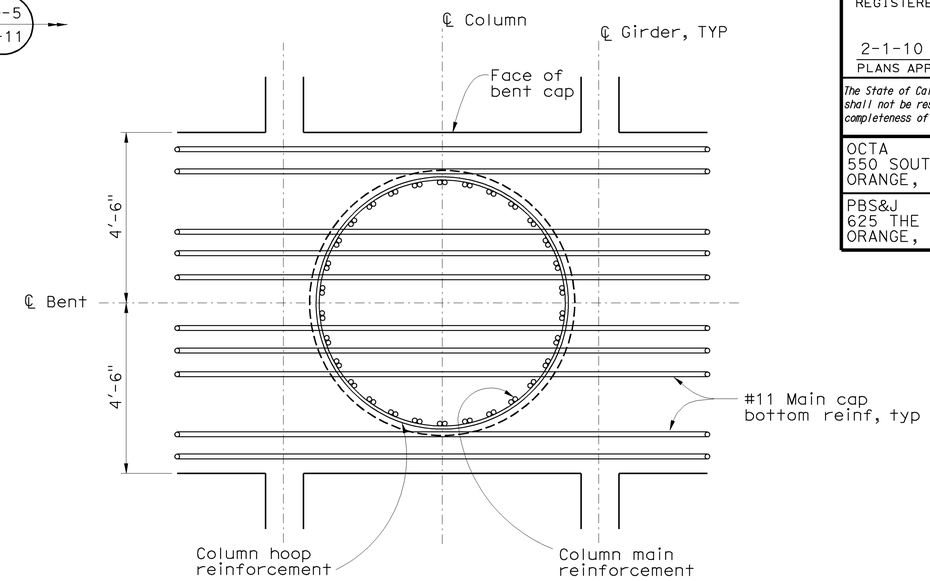

MAIN CAP BOTTOM REINFORCEMENT LAYOUT

½" = 1'-0"

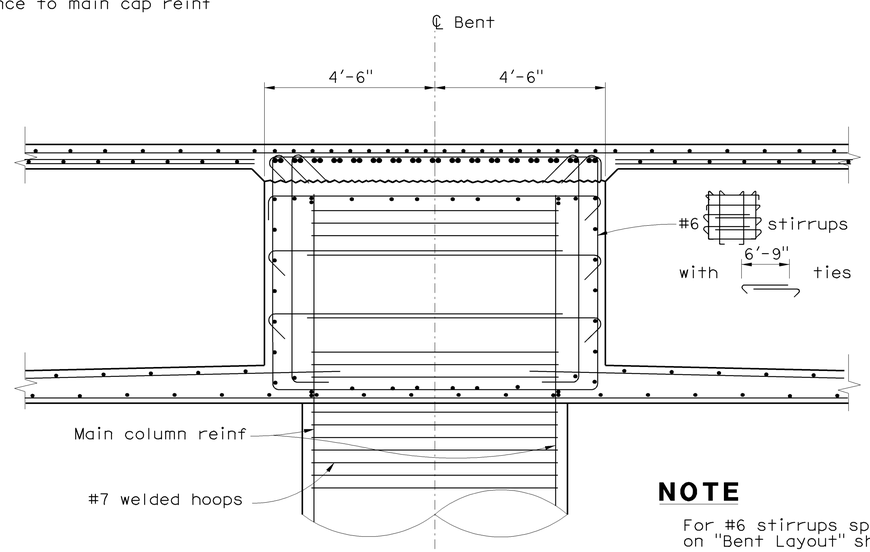

SECTION C-C

½" = 1'-0"

NOTE

For #6 stirrups spacing, see elevation on "Bent Layout" sheet.

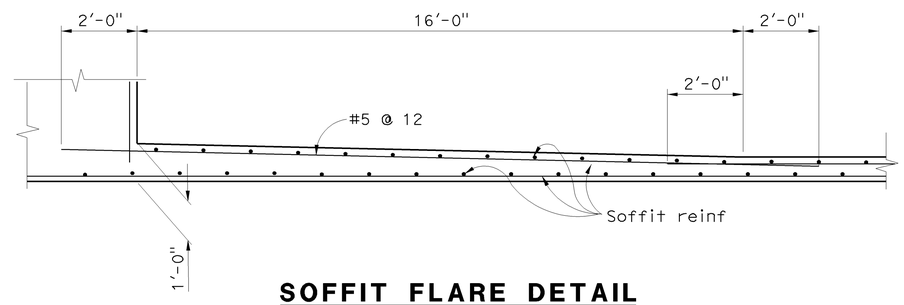

SOFFIT FLARE DETAIL

½" = 1'-0"

Sudhakar Vatti
DESIGN OVERSIGHT Sudhakar Vatti
8-10-09
SIGN OFF DATE

	BY	CHECKED
DESIGN	K. Allam	Y. Deng
DETAILS	N. Shu	Y. Deng
QUANTITIES	L. Khaleghi	T. Tesch

PREPARED FOR THE STATE OF CALIFORNIA DEPARTMENT OF TRANSPORTATION

Alaedin Moubayed
PROJECT ENGINEER

BRIDGE NO. 55-1096G
POST MILE R0.39

E22-N405/405 SEPARATION (REPLACE)
BENT DETAILS NO. 2

DESIGN DETAIL SHEET (ENGLISH) (REV. 2/25/05)

ORIGINAL SCALE IN INCHES FOR REDUCED PLANS 0 1 2 3

CU 12235
EA 071631

DISREGARD PRINTS BEARING EARLIER REVISION DATES

REVISION DATES (PRELIMINARY STAGE ONLY) 02/18/08 06/02/08 09/17/08 04/06/09 07/27/09

SHEET 15 OF 30

FILE => 55-1096g-h-bdt02.dgn

USERNAME => friehard DATE PLOTTED => 03-FEB-2010 TIME PLOTTED => 05:16

DIST	COUNTY	ROUTE	POST MILES TOTAL PROJECT	SHEET No	TOTAL SHEETS
12	Ora	22,405, 605	R0.3/R0.9, 22.3/24.0,3.0/R1.6	1526	1929

Khaled Allam 07-27-09
REGISTERED CIVIL ENGINEER DATE

2-1-10
PLANS APPROVAL DATE

REGISTERED PROFESSIONAL ENGINEER Khaled Allam No. 67110 Exp. 09-30-10 CIVIL STATE OF CALIFORNIA

The State of California or its officers or agents shall not be responsible for the accuracy or completeness of electronic copies of this plan sheet.

OCTA
550 SOUTH MAIN STREET
ORANGE, CA 92863

PBS&J
625 THE CITY DRIVE SOUTH, SUITE 200
ORANGE, CA 92868

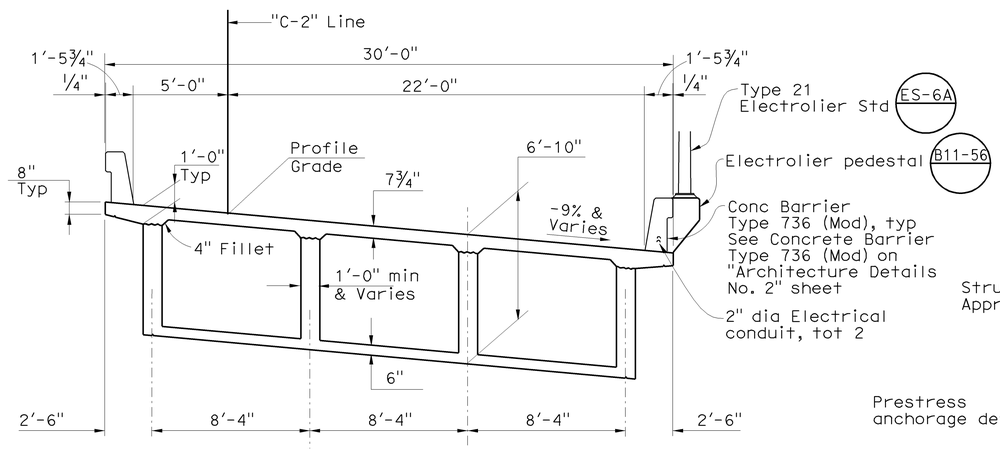

TYPICAL SECTION
¼" = 1'-0"

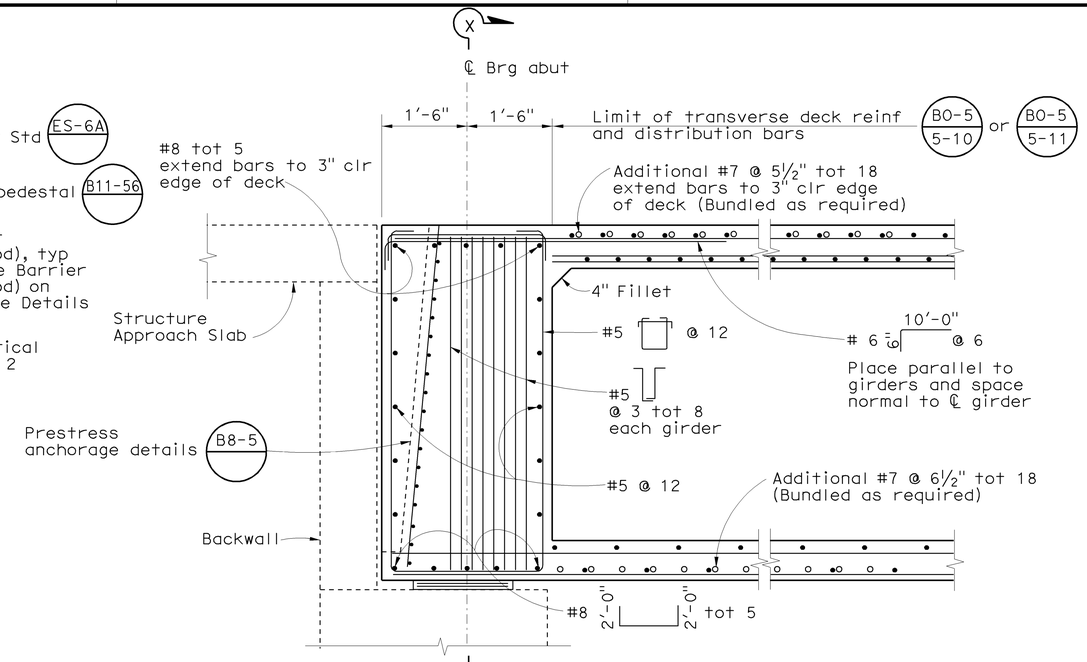

END DIAPHRAGM DETAIL
¾" = 1'-0"

NOTE
For stirrups placement and prestressing information, see " Girder layout " sheet.

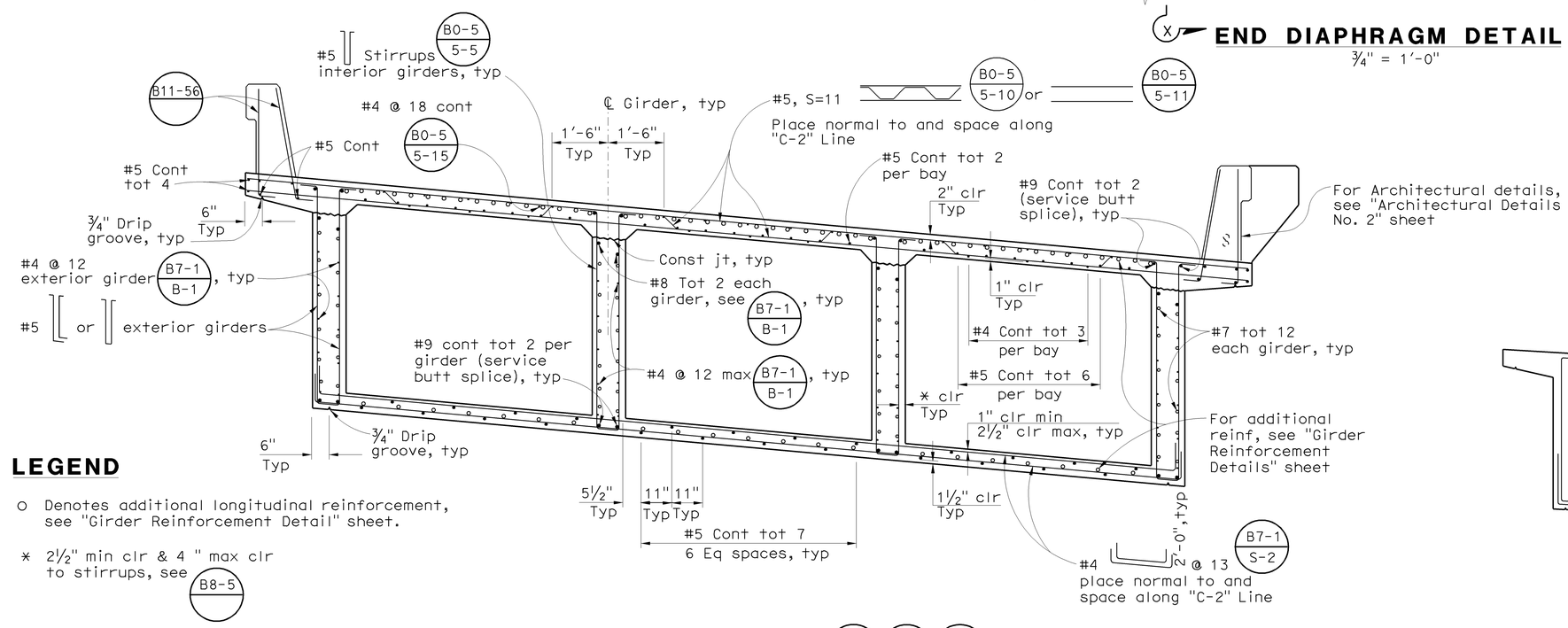

LEGEND

○ Denotes additional longitudinal reinforcement, see "Girder Reinforcement Detail" sheet.

* 2½" min clr & 4 " max clr to stirrups, see B8-5

TYPICAL SECTION B7-1 B8-5 B0-5
½" = 1'-0"

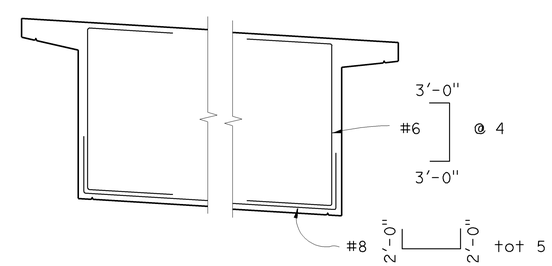

SECTION X-X
⅜" = 1'-0"

Sudhakar Vatti
DESIGN OVERSIGHT Sudhakar Vatti
8-10-09
SIGN OFF DATE

DESIGN	BY K. Allam	CHECKED Y. Deng	
DETAILS	BY N. Shu	CHECKED Y. Deng	
QUANTITIES	BY L. Khaleghi	CHECKED T. Tesch	

PREPARED FOR THE STATE OF CALIFORNIA DEPARTMENT OF TRANSPORTATION

Alaedin Moubayed
PROJECT ENGINEER

BRIDGE NO. 55-1096G
POST MILE R0.39

E22-N405/405 SEPARATION (REPLACE)
TYPICAL SECTION

DESIGN DETAIL SHEET (ENGLISH) (REV. 2/25/05)

ORIGINAL SCALE IN INCHES FOR REDUCED PLANS 0 1 2 3

CU 12235
EA 071631

DISREGARD PRINTS BEARING EARLIER REVISION DATES

REVISION DATES (PRELIMINARY STAGE ONLY) 02/28/08 06/02/08 09/27/08 04/06/09 07/27/09

SHEET 16 OF 30

FILE => 55-1096g-k-ts01.dgn

USERNAME => rtrenford DATE PLOTTED => 03-FEB-2010 TIME PLOTTED => 05:17

DIST	COUNTY	ROUTE	POST MILES TOTAL PROJECT	SHEET No	TOTAL SHEETS
12	Ora	22,405, 605	R0.3/R0.9, 22.3/24.0,3.0/R1.6	1527	1929

Khaled Allam 07-27-09
REGISTERED CIVIL ENGINEER DATE

2-1-10
PLANS APPROVAL DATE

REGISTERED PROFESSIONAL ENGINEER Khaled Allam No. 67110 Exp. 09-30-10 CIVIL STATE OF CALIFORNIA

The State of California or its officers or agents shall not be responsible for the accuracy or completeness of electronic copies of this plan sheet.

OCTA
550 SOUTH MAIN STREET
ORANGE, CA 92863

PBS&J
625 THE CITY DRIVE SOUTH, SUITE 200
ORANGE, CA 92868

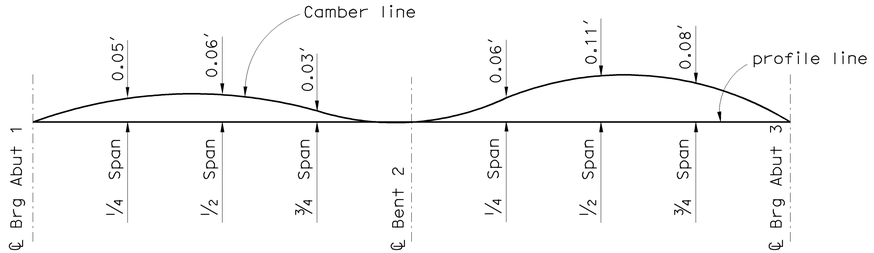

CAMBER DIAGRAM

No Scale

NOTES

1. Camber does not include allowance for falsework settlement.
2. Girder flare length is measured along ℄ of each girder.
3. For soffit light locations, see "Road Plans".

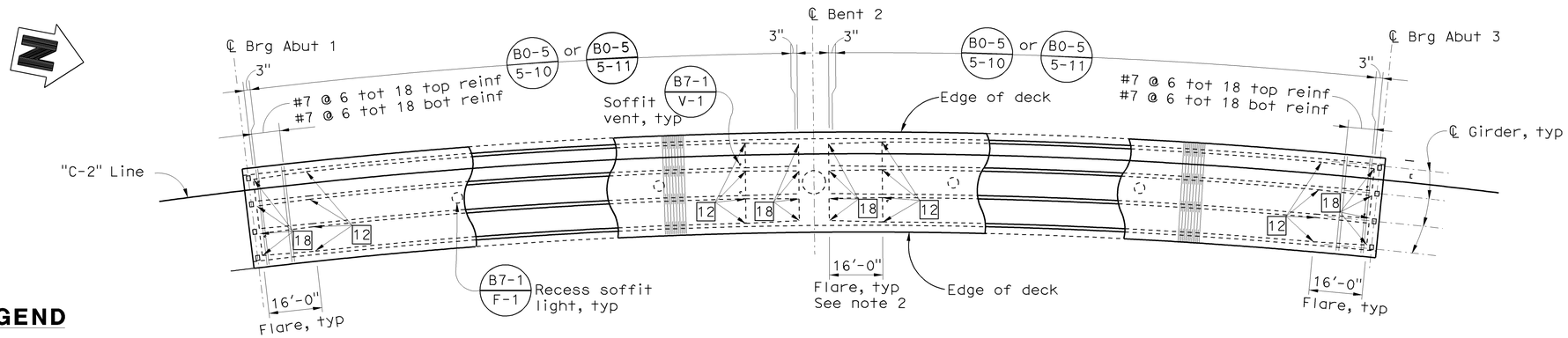

PLAN B7-1

1"=20'

LEGEND

⊠ Indicates theoretical point of no movement for stressing

☐ Indicates girder stem width in inch, see B7-1 / S-3

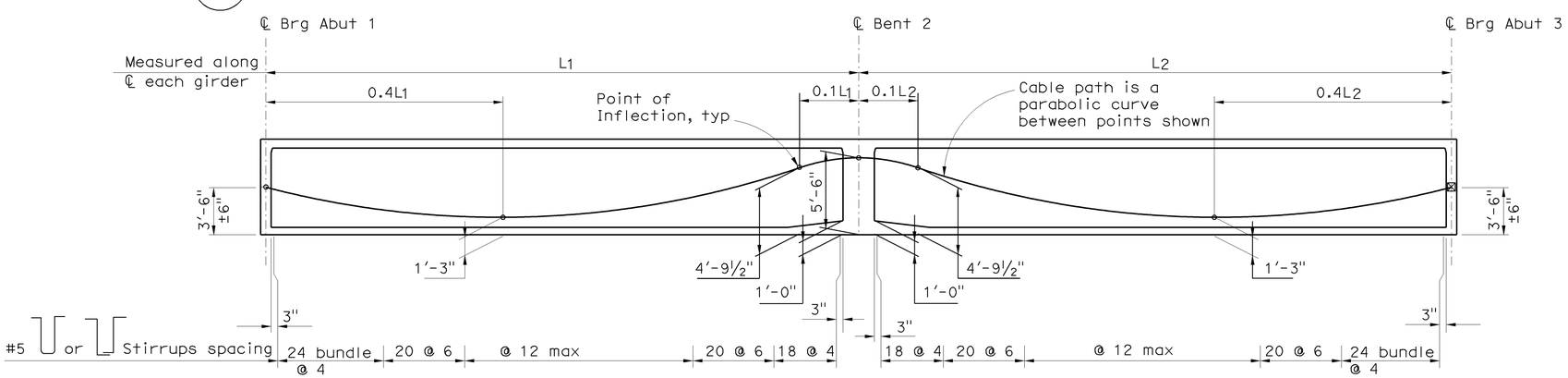

LONGITUDINAL SECTION B8-5

No Scale

PRESTRESSING NOTES

270 Ksi Low Relaxation Strands:	
Pjack	= 9,900 kips
Anchor Set	= 3/8 inch
Total Number of Girders	= 4
Friction curvature coefficient	$\mu = 15 \times 10^{-2}$(1/rad)
Friction wobble coefficient	$K = 20 \times 10^{-5}$(1/ft)
Distribution of prestress force (Pjack) between girders shall not exceed the ratio of 3:2.	
Maximum final force variation between girders shall not exceed 725 kips.	
Concrete: f'_c = 5.0 ksi @ 28 days f'_{ci} = 3.6 ksi @ time of stressing	
Contractor shall submit elongation calculations based on inital stress at ⊠ = 0.8670 times jacking stress	
One end stressing shall be performed from Abutment 1	

Sudhakar Vatti
DESIGN OVERSIGHT Sudhakar Vatti
8-10-09
SIGN OFF DATE

	BY	CHECKED
DESIGN	K. Allam	Y. Deng
DETAILS	N. Shu	Y. Deng
QUANTITIES	L. Khaleghi	T. Tesch

PREPARED FOR THE STATE OF CALIFORNIA DEPARTMENT OF TRANSPORTATION

Alaedin Moubayed
PROJECT ENGINEER

BRIDGE NO. 55-1096G
POST MILE R0.39

E22-N405/405 SEPARATION (REPLACE)
GIRDER LAYOUT

DESIGN DETAIL SHEET (ENGLISH) (REV. 2/25/05)

ORIGINAL SCALE IN INCHES FOR REDUCED PLANS 0 1 2 3

CU 12235
EA 071631

DISREGARD PRINTS BEARING EARLIER REVISION DATES

REVISION DATES (PRELIMINARY STAGE ONLY) 02/18/08 06/02/08 09/17/08 04/06/09 07/27/09

SHEET 17 OF 30

FILE => 55-1096g-l-gl001.dgn

USERNAME => trlenard DATE PLOTTED => 03-FEB-2010 TIME PLOTTED => 05:17

DIST	COUNTY	ROUTE	POST MILES TOTAL PROJECT	SHEET No	TOTAL SHEETS
12	Ora	22,405, 605	R0.3/R0.9, 22.3/24.0,3.0/R1.6	1528	1929

Khaled Allam 07-27-09
REGISTERED CIVIL ENGINEER DATE

2-1-10
PLANS APPROVAL DATE

REGISTERED PROFESSIONAL ENGINEER Khaled Allam No. 67110 Exp. 09-30-10 CIVIL STATE OF CALIFORNIA

The State of California or its officers or agents shall not be responsible for the accuracy or completeness of electronic copies of this plan sheet.

OCTA
550 SOUTH MAIN STREET
ORANGE, CA 92863

PBS&J
625 THE CITY DRIVE SOUTH, SUITE 200
ORANGE, CA 92868

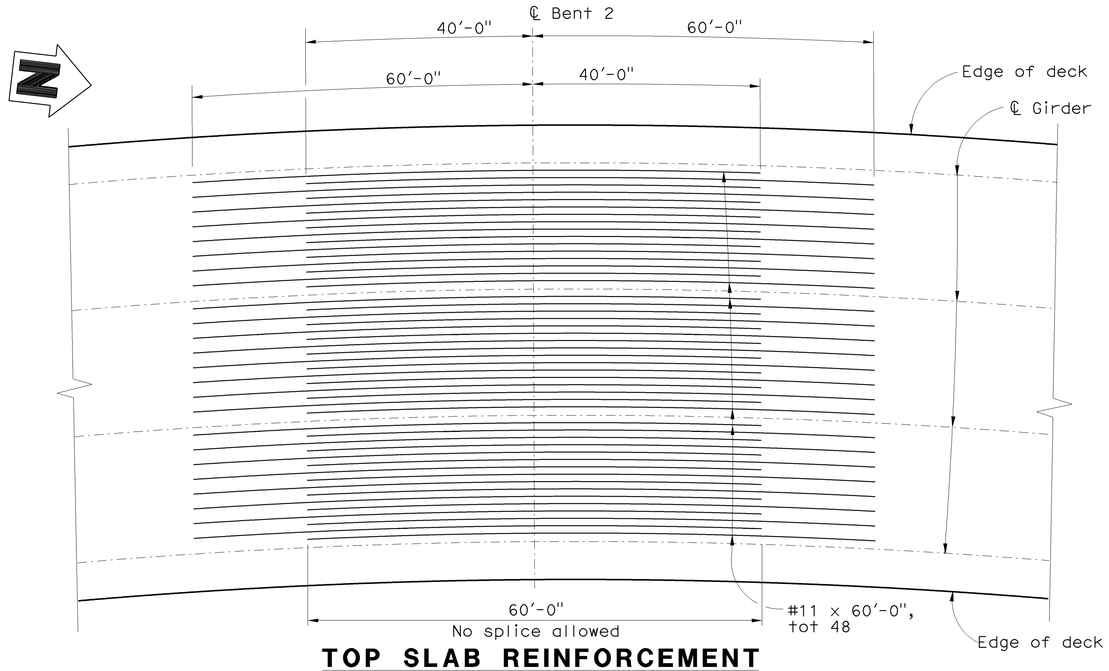

TOP SLAB REINFORCEMENT

NO SCALE

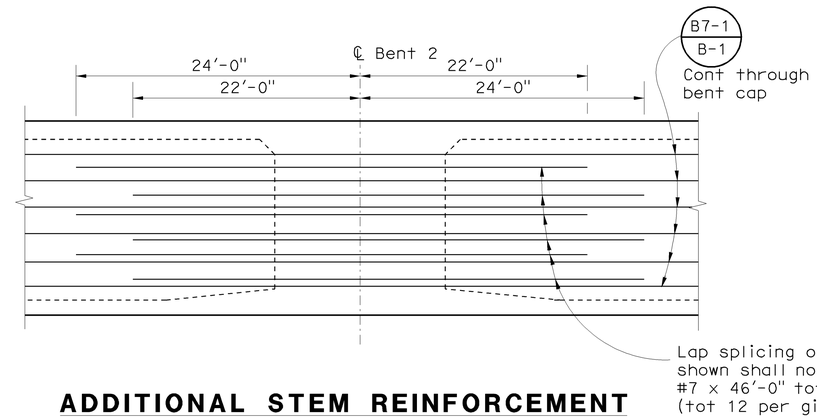

ADDITIONAL STEM REINFORCEMENT

No Scale

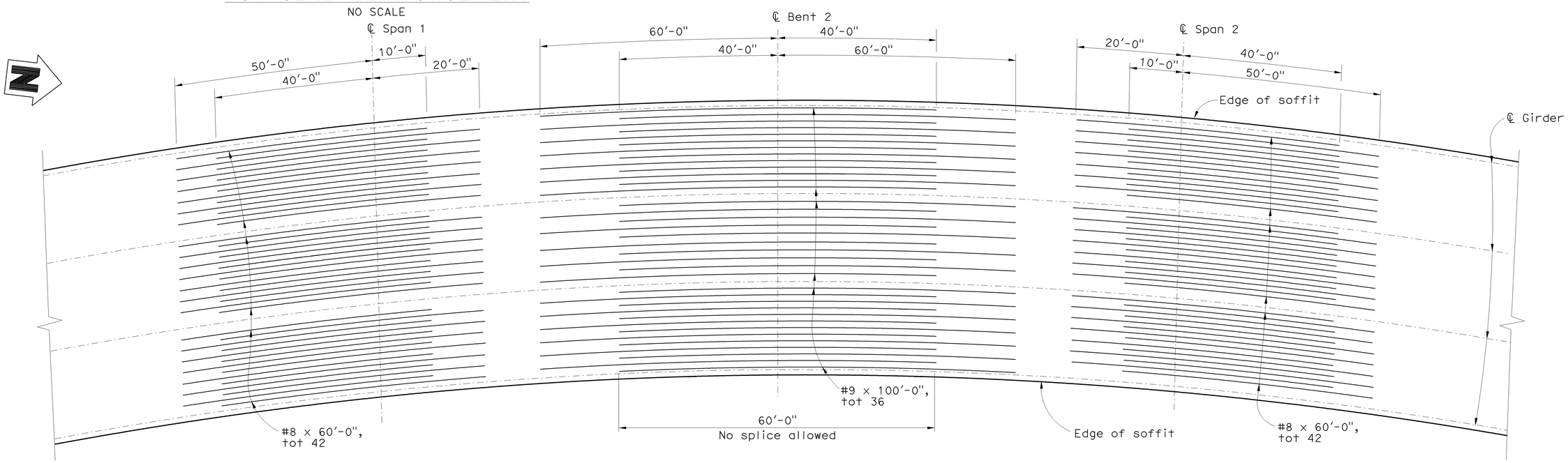

BOTTOM SLAB REINFORCEMENT

NO SCALE

NOTES

1. All dimensions measured along centerline girders.
2. Splice shall be "Service Butt Splice".

NOTE:
THE CONTRACTOR SHALL VERIFY ALL CONTROLLING FIELD DIMENSIONS BEFORE ORDERING OR FABRICATING ANY MATERIAL.

Sudhakar Vatti
DESIGN OVERSIGHT Sudhakar Vatti
8-10-09
SIGN OFF DATE

	BY	CHECKED
DESIGN	K. Allam	Y. Deng
DETAILS	N. Shu	Y. Deng
QUANTITIES	L. Khaleghi	T. Tesch

PREPARED FOR THE STATE OF CALIFORNIA DEPARTMENT OF TRANSPORTATION

Alaedin Moubayed
PROJECT ENGINEER

BRIDGE NO. 55-1096G
POST MILE R0.39

E22-N405/405 SEPARATION (REPLACE)
GIRDER REINFORCEMENT DETAILS

DESIGN DETAIL SHEET (ENGLISH) (REV. 2/25/05)

ORIGINAL SCALE IN INCHES FOR REDUCED PLANS 0 1 2 3

CU 12235
EA 071631

DISREGARD PRINTS BEARING EARLIER REVISION DATES
REVISION DATES (PRELIMINARY STAGE ONLY) 02/18/08 06/02/08 09/17/08 04/06/09 07/27/09

SHEET 18 OF 30

FILE => 55-1096g-o-grf01.dgn

USERNAME => friehard DATE PLOTTED => 03-FEB-2010 TIME PLOTTED => 05:17

DIST	COUNTY	ROUTE	POST MILES TOTAL PROJECT	SHEET No	TOTAL SHEETS
12	Ora	22, 405, 605	R0.3/R0.9, 22.3/24.0,3.0/R1.6	1529	1929

LICENSED LANDSCAPE ARCHITECT

2-1-10
PLANS APPROVAL DATE

LICENSED LANDSCAPE ARCHITECT
CATHY L. JOHNSON
NO. 4545
01-31-10
Renewal Date
07-27-09
Date
STATE OF CALIFORNIA

The State of California or its officers or agents shall not be responsible for the accuracy or completeness of electronic copies of this plan sheet.

OCTA
550 SOUTH MAIN STREET
ORANGE, CA 92863

RBF CONSULTING
14725 ALTON PARKWAY
IRVINE, CA 92618

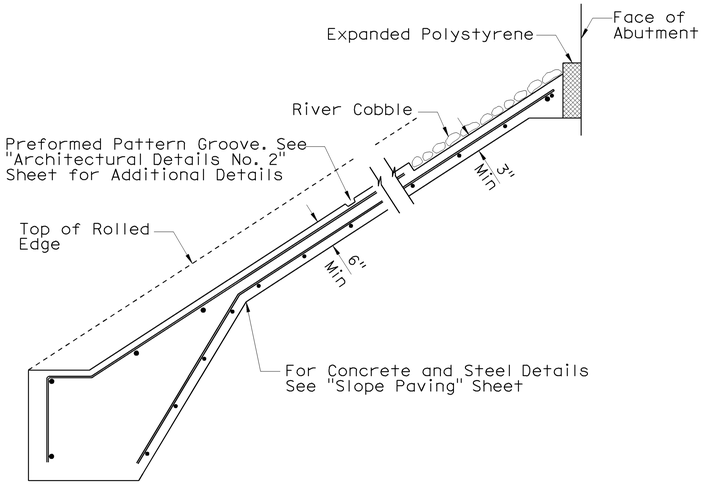

TYPICAL SECTION - CONCRETE PAVING

No Scale

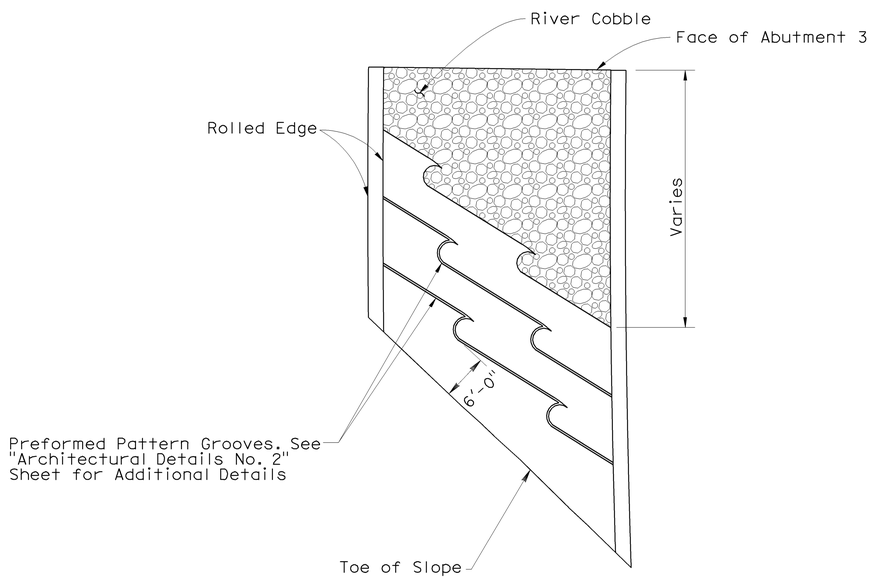

SLOPE PAVING ARCHITECTURAL TEXTURE LAYOUT - ABUTMENT 3

No Scale

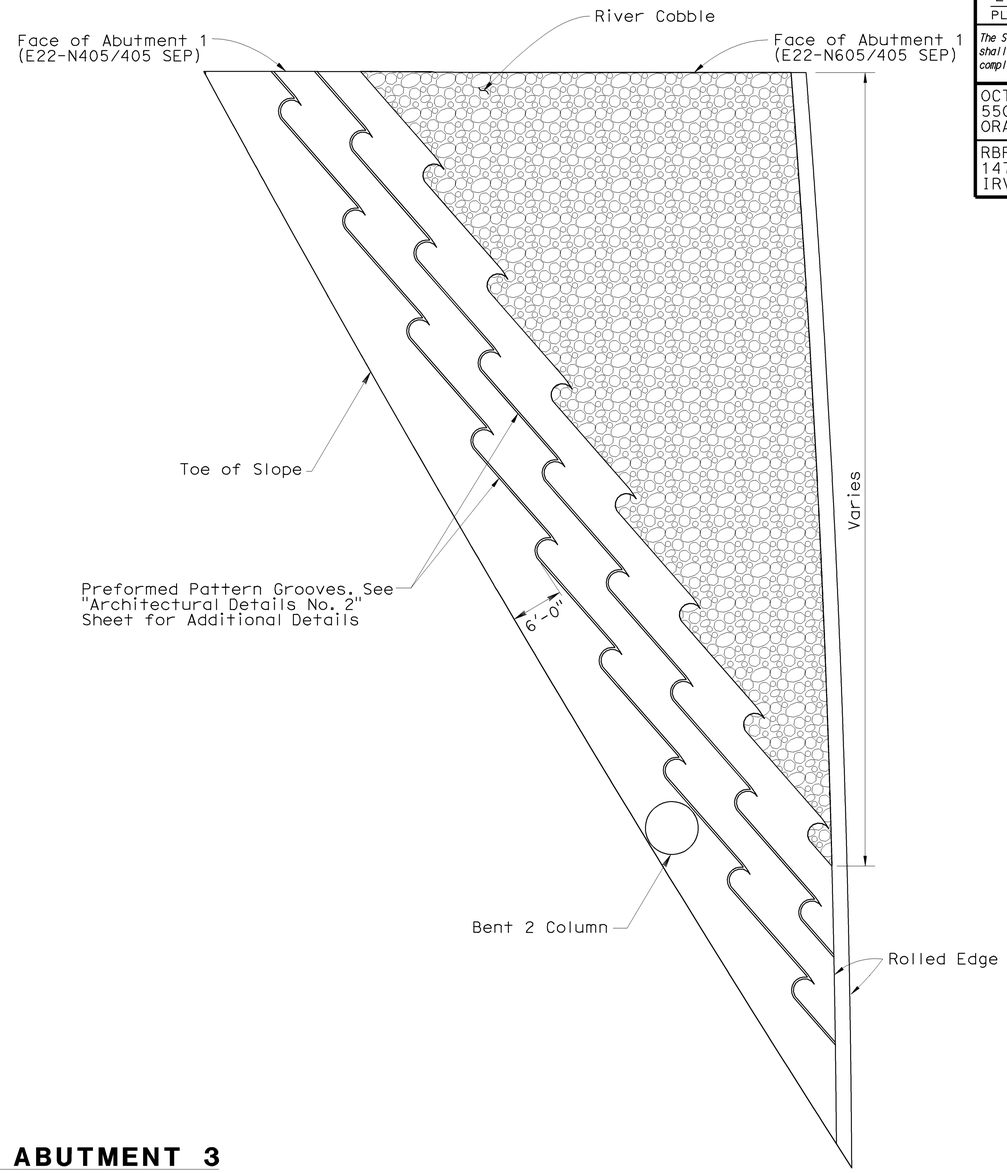

SLOPE PAVING ARCHITECTURAL TEXTURE LAYOUT - ABUTMENT 1

No Scale

Sudhakar Vatti
DESIGN OVERSIGHT Sudhakar Vatti
8-10-09
SIGN OFF DATE

DESIGN DETAIL SHEET (ENGLISH) (REV. 2/25/05)

	BY	CHECKED
DESIGN	C. JOHNSON	A. SU
DETAILS	R. KELCHER	A. SU
QUANTITIES	V. NONG	K. ALLAM

ORIGINAL SCALE IN INCHES FOR REDUCED PLANS 0 1 2 3

PREPARED FOR THE STATE OF CALIFORNIA DEPARTMENT OF TRANSPORTATION

A. MOUBAYED
PROJECT ENGINEER

CU 12235
EA 071631

BRIDGE NO. 55-1096G
POST MILE R0.39

E22-N405/405 SEPARATION (REPLACE)
ARCHITECTURAL DETAILS NO. 1

DISREGARD PRINTS BEARING EARLIER REVISION DATES
REVISION DATES (PRELIMINARY STAGE ONLY) 04/06/09 07/27/09

SHEET 19 OF 30

FILE => 55-1096g-s-arch01.dgn

USERNAME => trlenard DATE PLOTTED => 03-FEB-2010 TIME PLOTTED => 05:17

DIST	COUNTY	ROUTE	POST MILES TOTAL PROJECT	SHEET No	TOTAL SHEETS
12	Ora	22, 405, 605	R0.3/R0.9 22.3/24.0,3.0/R1.6	1530	1929

LICENSED LANDSCAPE ARCHITECT

2-1-10
PLANS APPROVAL DATE

LICENSED LANDSCAPE ARCHITECT
CATHY L. JOHNSON
NO. 4545
01-31-10
Renewal Date
07-27-09
Date
STATE OF CALIFORNIA

The State of California or its officers or agents shall not be responsible for the accuracy or completeness of electronic copies of this plan sheet.

OCTA
550 SOUTH MAIN STREET
ORANGE, CA 92863

RBF CONSULTING
14725 ALTON PARKWAY
IRVINE, CA 92618

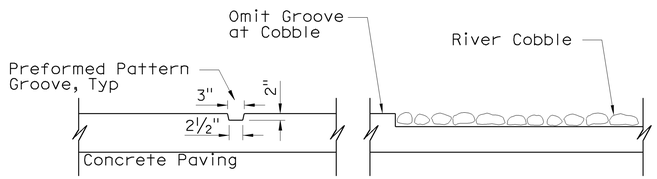

TYPICAL SECTION - PATTERN DETAIL

No Scale

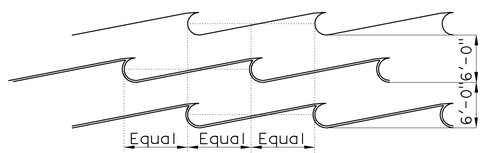

DETAIL

No Scale

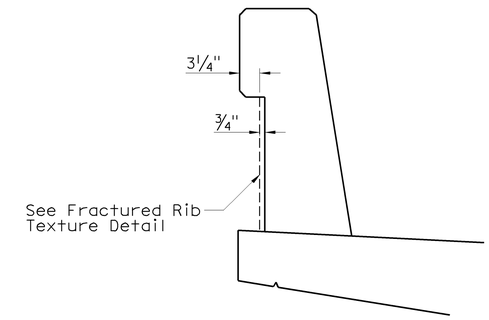

CONCRETE BARRIER (TYPE 736 MOD)

SCALE: 1"=1'-0"

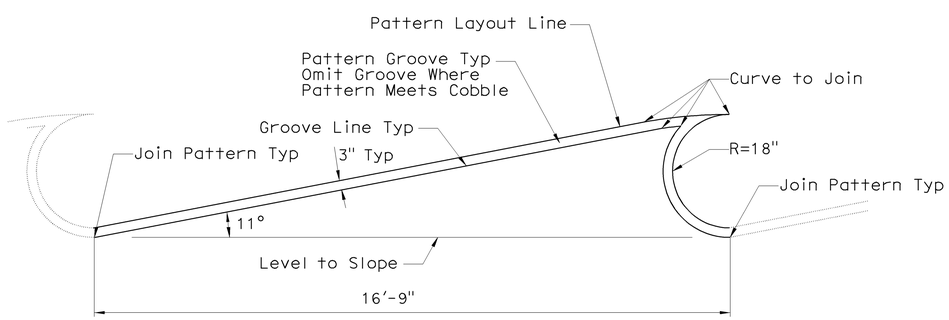

SLOPE PAVING PATTERN DETAIL

No Scale

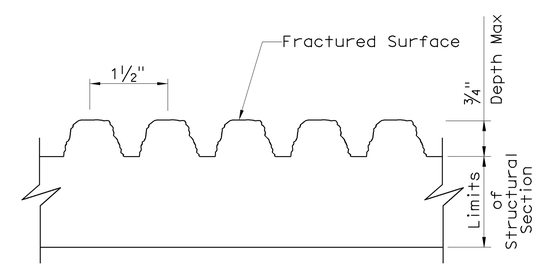

FRACTURED RIB TEXTURE

No Scale

Sudhakar Vatti
DESIGN OVERSIGHT Sudhakar Vatti
8-10-09
SIGN OFF DATE

	BY	CHECKED
DESIGN	C. JOHNSON	A. SU
DETAILS	R. KELCHER	A. SU
QUANTITIES	V. NONG	K. ALLAM

PREPARED FOR THE STATE OF CALIFORNIA DEPARTMENT OF TRANSPORTATION

A. MOUBAYED
PROJECT ENGINEER

BRIDGE NO. 55-1096G
POST MILE R0.39

E22-N405/405 SEPARATION (REPLACE)
ARCHITECTURAL DETAILS NO. 2

DESIGN DETAIL SHEET (ENGLISH) (REV. 2/25/05)

ORIGINAL SCALE IN INCHES FOR REDUCED PLANS 0 1 2 3

CU 12235
EA 071631

DISREGARD PRINTS BEARING EARLIER REVISION DATES → REVISION DATES (PRELIMINARY STAGE ONLY) 04/06/09 07/21/09

SHEET 20 OF 30

FILE => 55-1096g-s-arch02.dgn

USERNAME => trlehard DATE PLOTTED => 03-FEB-2010 TIME PLOTTED => 05:17

RELEASED 11-4-97

DIST.	COUNTY	ROUTE	POST MILES TOTAL PROJECT	SHEET NO.	TOTAL SHEETS
12	Ora	22, 405, 605	R0.3/R0.9, 22.3/24.0,3.0/R1.6	1531	1929

Khaled Allam 07-27-09
REGISTERED ENGINEER - CIVIL

2-1-10
PLANS APPROVAL DATE

REGISTERED PROFESSIONAL ENGINEER Khaled Allam No. 67110 Exp. 09-30-10 CIVIL STATE OF CALIFORNIA

The State of California or its officers or agents shall not be responsible for the accuracy or completeness of electronic copies of this plan sheet.

OCTA
550 SOUTH MAIN STREET
ORANGE, CA 92863

PBS&J
625 THE CITY DRIVE SOUTH, SUITE 200
ORANGE, CA 92868

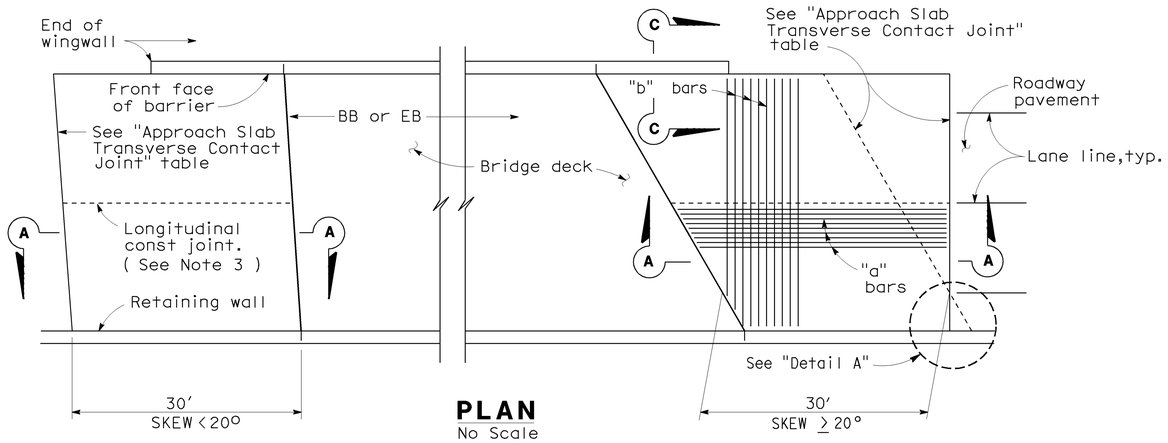

PLAN
No Scale

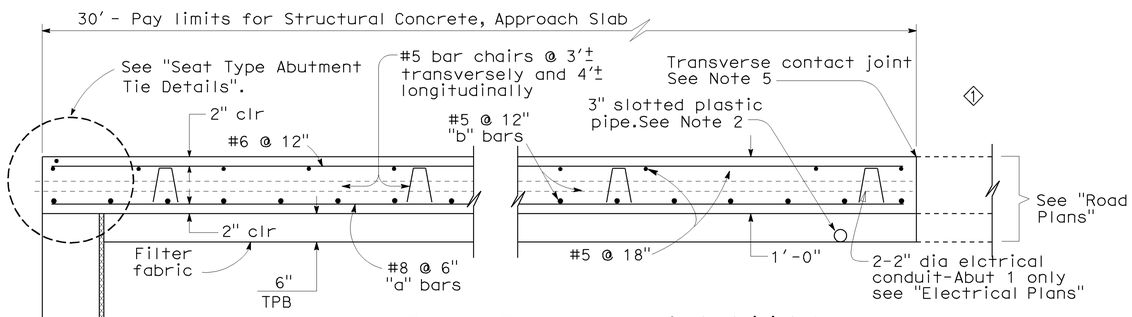

SECTION A-A
¾" = 1′-0"

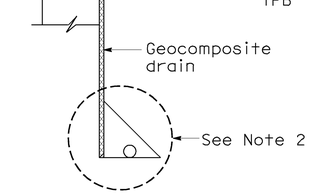

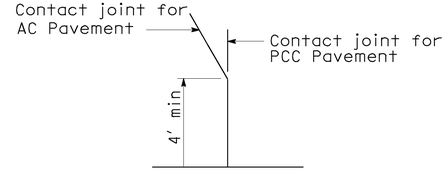

DETAIL A
No Scale

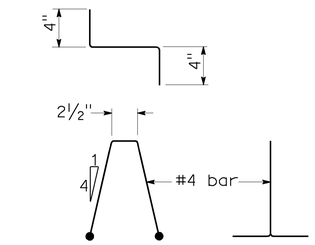

BAR CHAIR DETAIL
1½" = 1′-0"

APPROACH SLAB TRANSVERSE CONTACT JOINT		
APPROACH SKEW	WITH AC ROADWAY PAVEMENT	WITH PCC ROADWAY PAVEMENT
< 20°	Parallel to face of paving notch	Parallel to face of paving notch
20°- 45°	Parallel to face of P N use (Detail A)	Stagger lines 24′ to 36′ apart.
> 45°	Parallel to face of P N use (Detail A)	Stagger at each lane line.

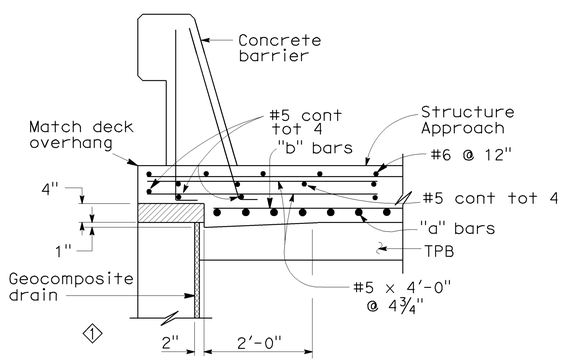

TYPE E-1

SECTION C-C
¾" = 1′-0"
(Type E-1 to be used,unless otherwise shown on plans)

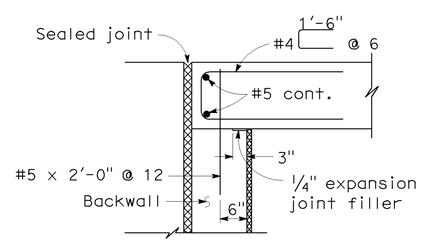

MR ≤ 2''

SEAT TYPE ABUTMENT TIE DETAILS (SEE NOTE 1)
¾" = 1′-0"

NOTES:

1.
2. For drainage details,see "Structure Approach Drainage Details" sheet.
3. Longitudinal construction joints,when permitted by the Engineer, shall be located on lane lines.
4. End angle or plate at beginning of barrier transition, end of wingwall or end of structure approach as applicable.
5. For transverse contact joint with new PCC paving, refer to Standard Plan P10.
6. At the contractor's option, approach slab transverse reinforcement may be placed parallel to paving notch. Spacing of transverse reinforcement is measured along C ⌊roadway.

Expanded polystyrene
Remove outer 6" after construction.

SPECIAL DETAILS

STANDARD DRAWING

FILE NO. XS 22-18	DESIGN	BY M. TRAFFALIS	CHECKED E. THORKILDSEN	APPROVAL RECOMMENDED BY
DESIGN DATE Revised	DETAILS	BY R. YEE	CHECKED E. THORKILDSEN	DESIGN SUPERVISOR
	SUBMITTED BY M. HA			

1 Modified Details
2 Deleted Details

STATE OF CALIFORNIA
DEPARTMENT OF TRANSPORTATION

DIVISION OF STRUCTURES
STRUCTURE DESIGN

BRIDGE NO. 55-1096G
POST MILE R0.39

E22-N405/405 SEPARATION (REPLACE)
STRUCTURE APPROACH TYPE N(30S)

DS OSD 2147A (CADD 4/89)

ORIGINAL SCALE IN INCHES FOR REDUCED PLANS 0 1 2 3

CU 12235
EA 071631

DISREGARD PRINTS BEARING EARLIER REVISION DATES → 03/26/09 07/27/09

REVISION DATES (PRELIMINARY STAGE ONLY) SHEET 21 OF 30

FILE => 55-1096g-s-sa01.dgn

XS22I8.DGN V(=)

USERNAME => friemard DATE PLOTTED => 03-17-2010 TIME PLOTTED => 08:17

DIST	COUNTY	ROUTE	POST MILES TOTAL PROJECT	SHEET No	TOTAL SHEETS
12	Ora	22,405, 605	R0.3/R0.9, 22.3/24.0,3.0/R1.6	1532	1929

Khaled Allam 07-27-09
REGISTERED CIVIL ENGINEER DATE

2-1-10
PLANS APPROVAL DATE

REGISTERED PROFESSIONAL ENGINEER Khaled Allam No. 67110 Exp. 09-30-10 CIVIL STATE OF CALIFORNIA

The State of California or its officers or agents shall not be responsible for the accuracy or completeness of electronic copies of this plan sheet.

OCTA
550 SOUTH MAIN STREET
ORANGE, CA 92863

PBS&J
625 THE CITY DRIVE SOUTH, SUITE 200
ORANGE, CA 92868

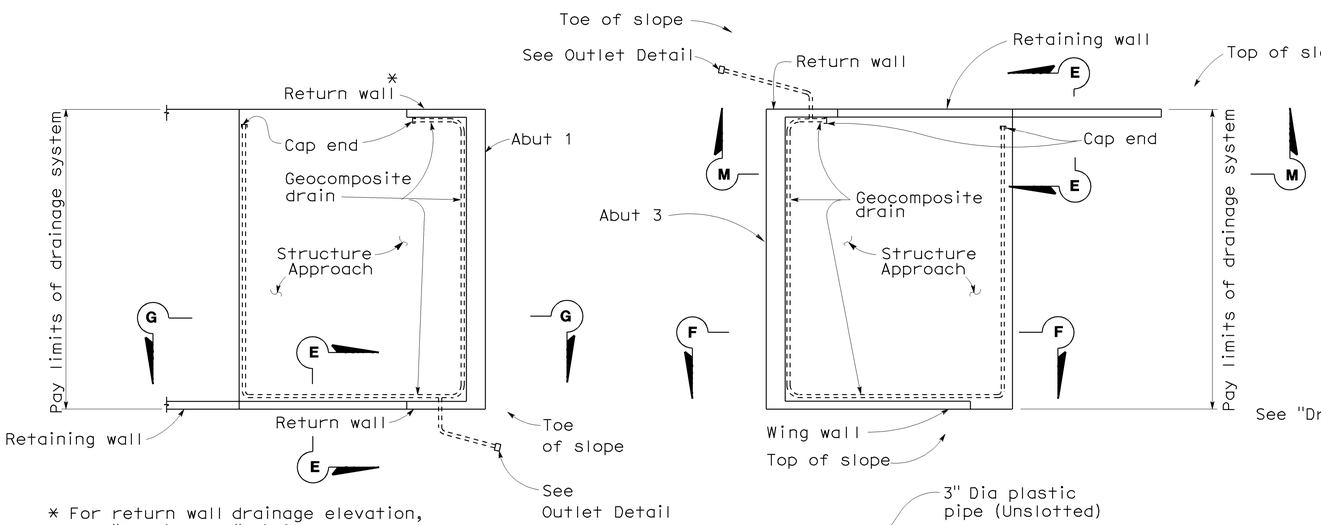

* For return wall drainage elevation, see "Section M-M" similar.

PLAN

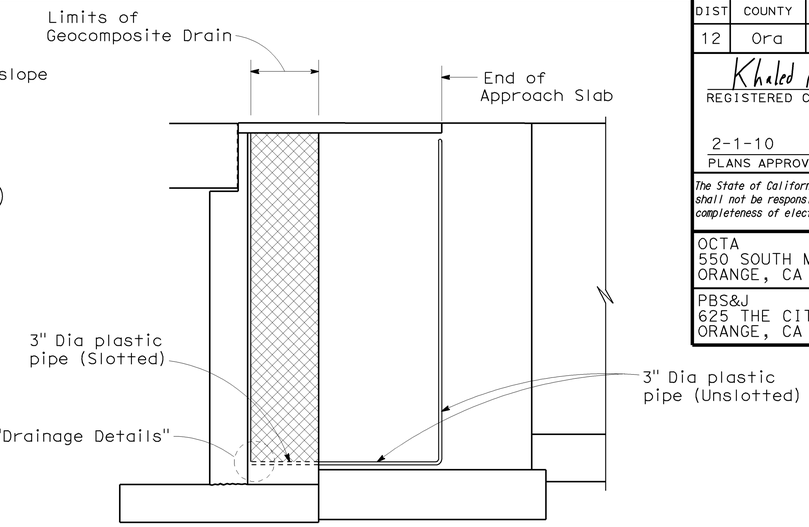

SECTION G-G

No Scale

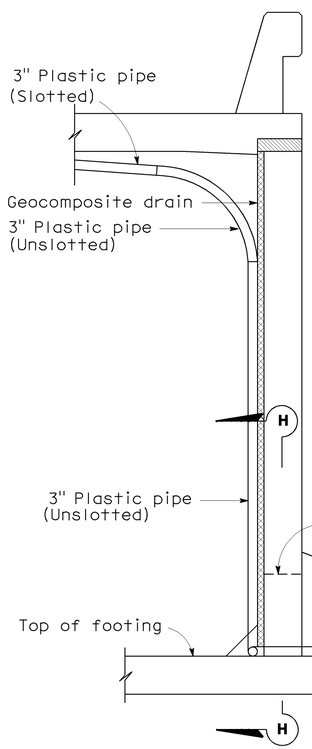

SECTION E-E

No Scale

NOTE: Bends and junctions in 3" plastic pipe are 2'-6" radius min.

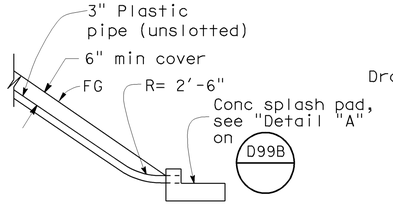

OUTLET DETAIL

NO SCALE

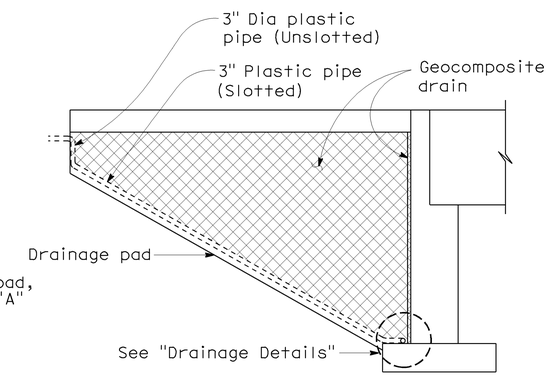

CANTILEVER WINGWALL

SECTION F-F

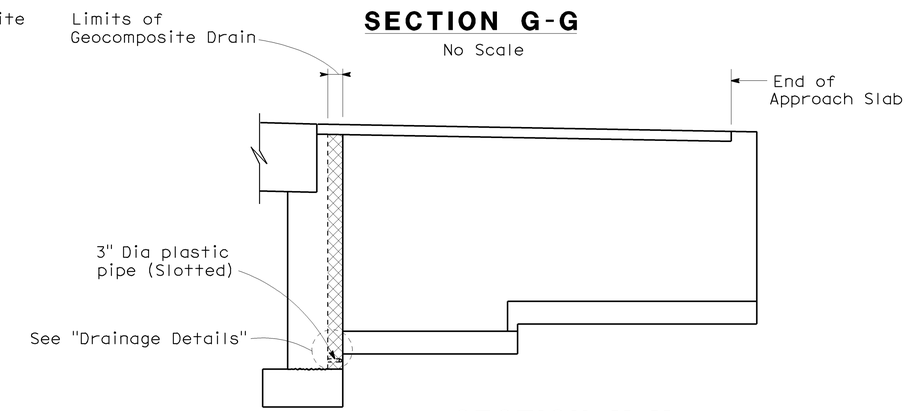

SECTION M-M

No Scale

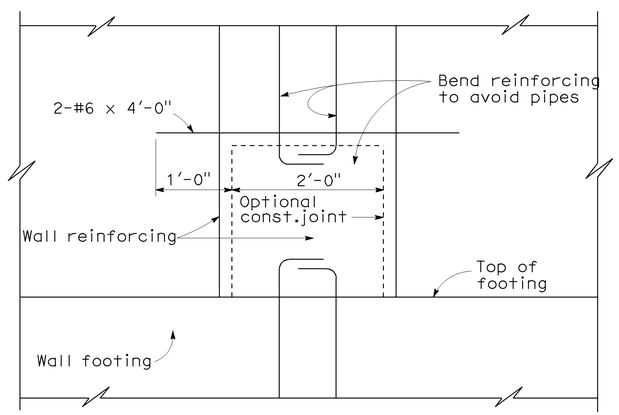

SECTION H-H

No Scale

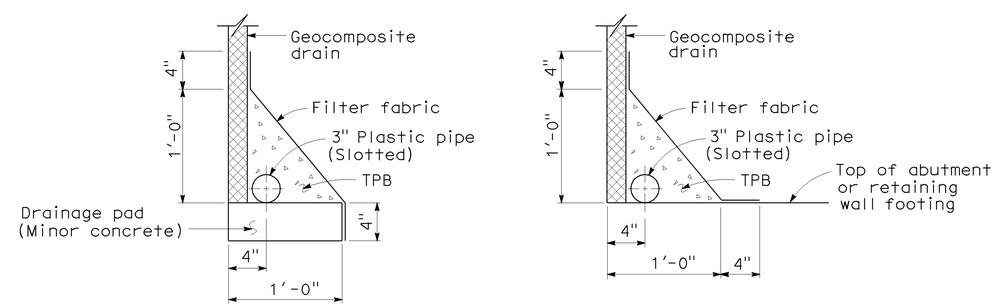

WITHOUT FOOTING WITH FOOTING

DRAINAGE DETAILS

No Scale

Sudhakar Vatti
DESIGN OVERSIGHT Sudhakar Vatti
8-10-09
SIGN OFF DATE

DESIGN	BY K. Allam	CHECKED Y. Deng	
DETAILS	BY N. Shu	CHECKED Y. Deng	
QUANTITIES	BY L. Khaleghi	CHECKED T. Tesch	

PREPARED FOR THE STATE OF CALIFORNIA DEPARTMENT OF TRANSPORTATION

Alaedin Moubayed
PROJECT ENGINEER

BRIDGE NO. 55-1096G
POST MILE R0.39

E22-N405/405 SEPARATION (REPLACE)

STRUCTURE APPROACH DRAINAGE DETAILS

DESIGN DETAIL SHEET (ENGLISH) (REV. 2/25/05)

ORIGINAL SCALE IN INCHES FOR REDUCED PLANS 0 1 2 3

CU 12235
EA 071631

DISREGARD PRINTS BEARING EARLIER REVISION DATES

REVISION DATES (PRELIMINARY STAGE ONLY) 02/28/08 06/02/08 09/23/08 04/06/09 07/27/09

SHEET 22 OF 30

FILE => 55-1096g-s-sadd.dgn

USERNAME => rtrenford DATE PLOTTED => 03-FEB-2010 TIME PLOTTED => 05:42

DIST.	COUNTY	ROUTE	KILOMETER POST TOTAL PROJECT	SHEET NO.	TOTAL SHEETS
12	Ora	22,405, 605	R0.3/R0.9, 22.3/24.0,3.0/R1.6	1533	1929

Khaled Allam 07-27-09
REGISTERED ENGINEER - CIVIL

2-1-10
PLANS APPROVAL DATE

REGISTERED PROFESSIONAL ENGINEER Khaled Allam No. 67110 Exp. 09-30-10 CIVIL STATE OF CALIFORNIA

The State of California or its officers or agents shall not be responsible for the accuracy or completeness of electronic copies of this plan sheet.

ORANGE COUNTY TRANSPORTATION AUTHORITY
550 SOUTH MAIN STREET, P.O. BOX 14184
ORANGE, CA 92863-1584

PBS&J
625 The City Drive South, Suite 200
Orange, CA 92868-4946

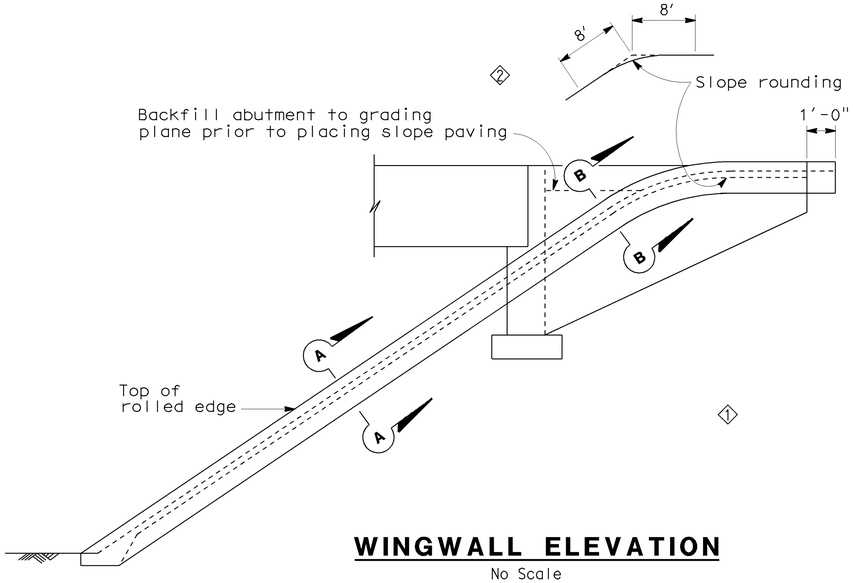

WINGWALL ELEVATION
No Scale

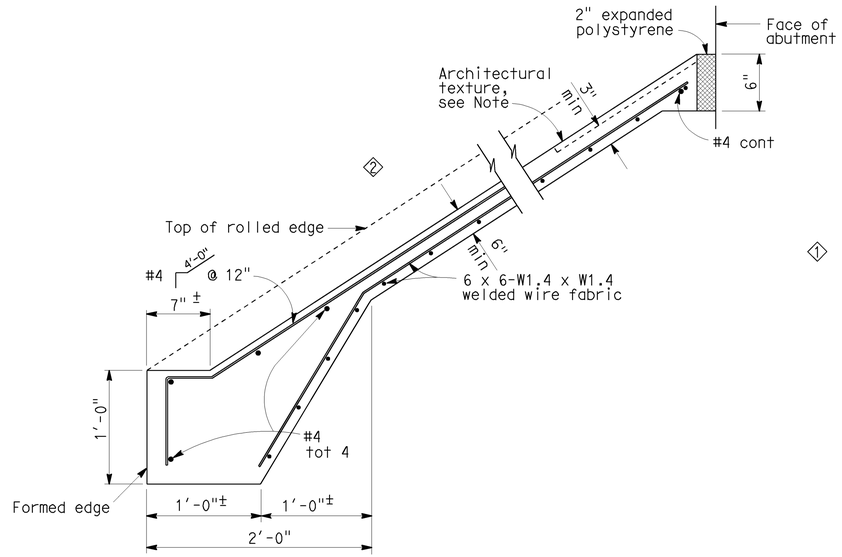

TYPICAL SECTION - CONCRETE PAVING
No Scale

SECTION A-A
No Scale

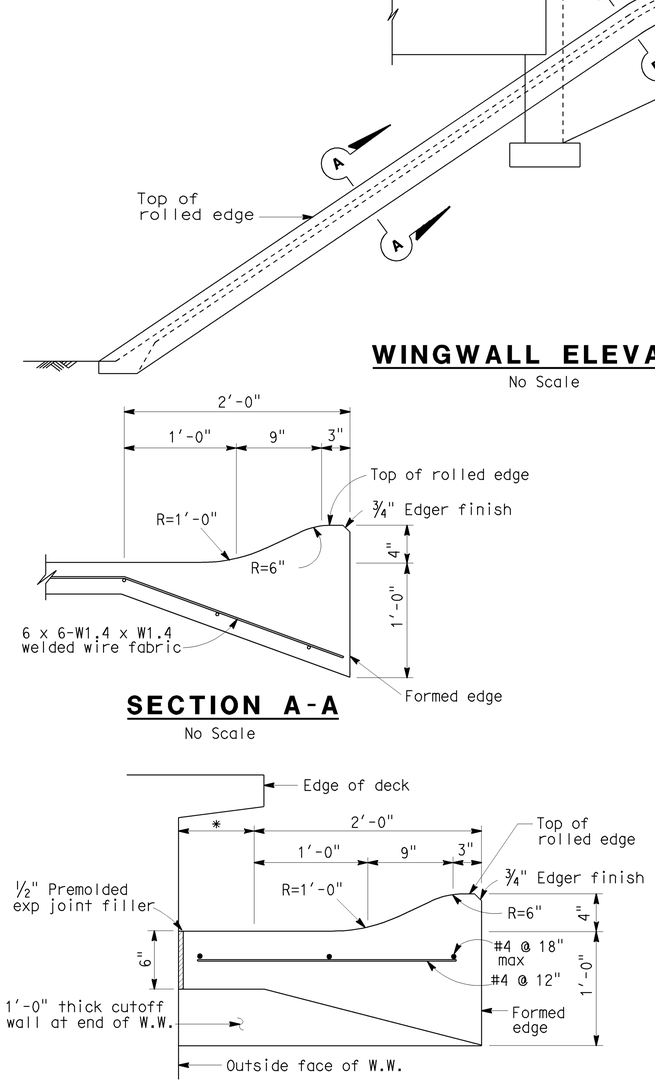

SECTION B-B
No Scale

*This dimension becomes zero when edge of deck is at outside face of W.W.

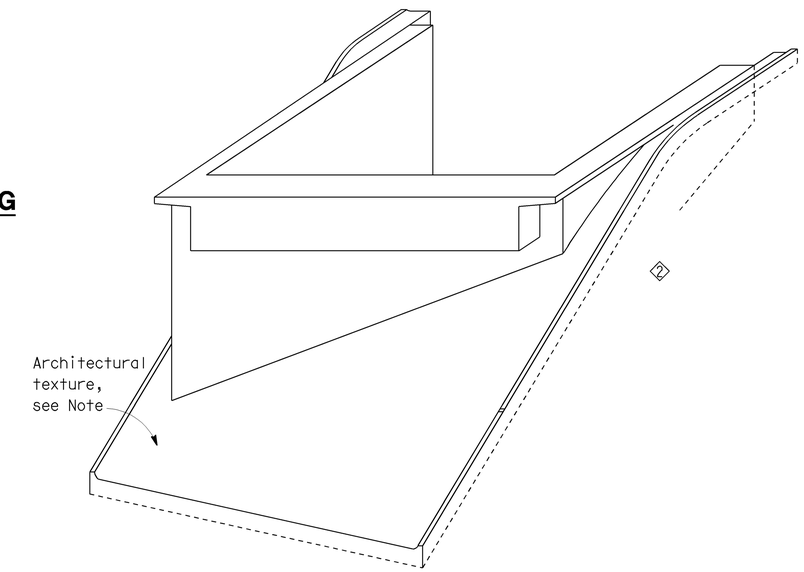

PICTORIAL VIEW OF TYPICAL INSTALLATION
No Scale

NOTE
See "Architectural Details No. 1 & 2" sheet for Architectural Texture details.

1

STANDARD DRAWING				
RELEASE DATE **Revised**	DESIGN	BY M. TRAFFALIS	CHECKED E. THORKILDSEN	RELEASED BY
FILE NO. **xs3-110**	DETAILS	BY R. YEE	CHECKED E. THORKILDSEN	
	SUBMITTED	BY M. HA	DRAWING DATE 4/98	OFFICE CHIEF

1 Deleted Details
2 Modified Details

STATE OF **CALIFORNIA** DEPARTMENT OF TRANSPORTATION

DIVISION OF ENGINEERING SERVICES

BRIDGE NO. 55-1096G
KILOMETER POST R0.39

E22-N405/405 SEPARATION (REPLACE)
SLOPE PAVING

DS OSD 2147A (METRIC) (REV. 2/25/97)

ORIGINAL SCALE IN MILLIMETERS FOR REDUCED PLANS 0 10 20 30 40 50 60 70 80 90 100

CU 12235
EA 071631

DISREGARD PRINTS BEARING EARLIER REVISION DATES 03/26/09 07/27/09

REVISION DATES (PRELIMINARY STAGE ONLY)

SHEET 23 OF 30

FILE => 55-1096g-s-slp.dgn

FILE => 55-1096g-s-slp.dgn

DATE PLOTTED => 03-FEB-2010 TIME PLOTTED => 05:17

REFERENCE: CALTRANS SOIL & ROCK LOGGING, CLASSIFICATION, AND PRESENTATION MANUAL (JUNE 2007)

DIST	COUNTY	ROUTE	POST MILES TOTAL PROJECT	SHEET No	TOTAL SHEETS
12	Ora	22,405, 605	R0.3/R0.9, 22.3/24.0,3.0/R1.6	1534	1929

REGISTERED CIVIL ENGINEER — DATE 07/27/09

2-1-10
PLANS APPROVAL DATE

REGISTERED PROFESSIONAL ENGINEER — Eric Brown — No. GE-2806 — Exp. 06/30/10 — GEOTECHNICAL — STATE OF CALIFORNIA

The State of California or its officers or agents shall not be responsible for the accuracy or completeness of electronic copies of this plan sheet.

OCTA
550 SOUTH MAIN STREET
ORANGE, CA 92863

EARTH MECHANICS, INC.
17660, NEWHOPE STREET, SUITE E
FOUNTAIN VALLEY, CA 92708

CEMENTATION

Description	Criteria
Weak	Crumbles or breaks with handling or little finger pressure.
Moderate	Crumbles or breaks with considerable finger pressure.
Strong	Will not crumble or break with finger pressure.

CONSISTENCY OF COHESIVE SOILS

Description	Unconfined Compressive Strength (tsf)	Pocket Penetrometer Measurement (tsf)	Torvane Measurement (tsf)	Field Approximation
Very Soft	< 0.25	< 0.25	< 0.12	Easily penetrated several inches by fist
Soft	0.25 to 0.50	0.25 to 0.50	0.12 to 0.25	Easily penetrated several inches by thumb
Medium Stiff	0.50 to 1.0	0.50 to 1.0	0.25 to 0.50	Penetrated several inches by thumb with moderate effort
Stiff	1 to 2	1 to 2	0.50 to 1.0	Readily indented by thumb but penetrated only with great effort
Very Stiff	2 to 4	2 to 4	1.0 to 2.0	Readily indented by thumbnail
Hard	> 4.0	> 4.0	> 2.0	Indented by thumbnail with difficulty

BOREHOLE IDENTIFICATION

Symbol	Hole Type	Description
Size	A	Auger Boring
Size	R P	Rotary drilled boring Rotary percussion boring (air)
Size	R	Rotary drilled diamond core
Size	HD HA	Hand driven (1-inch soil tube) Hand Auger
●	D	Dynamic Cone Penetration Boring
▲	CPT	Cone Penetration Test (ASTM D 5778-95)
□	O	Other

Note: Size in inches.

PLASTICITY OF FINE-GRAINED SOILS

Description	Criteria
Nonplastic	A 1/8-inch thread cannot be rolled at any water content.
Low	The thread can barely be rolled and the lump cannot be formed when drier than the plastic limit.
Medium	The thread is easy to roll and not much time is required to reach the plastic limit. The thread cannot be rerolled after reaching the plastic limit. The lump crumbles when drier than the plastic limit.
High	It takes considerable time rolling and kneading to reach the plastic limit. The thread can be rerolled several times after reaching the plastic limit. The lump can be formed without crumbling when drier than the plastic limit.

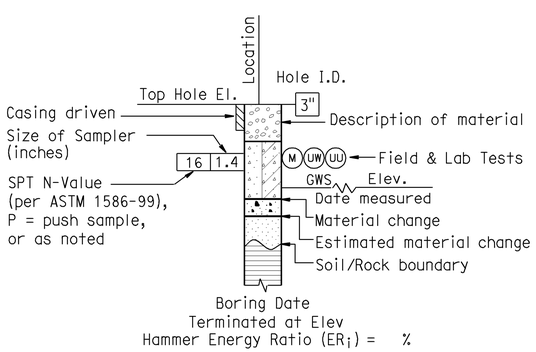

ROTARY BORING

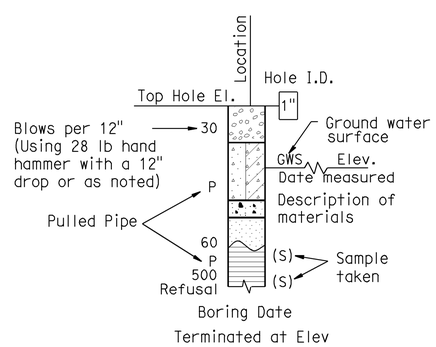

HAND BORING

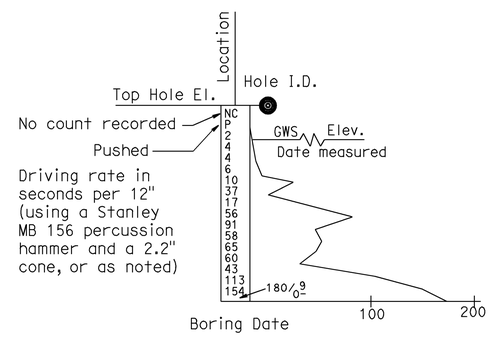

DYNAMIC CONE PENETRATION BORING

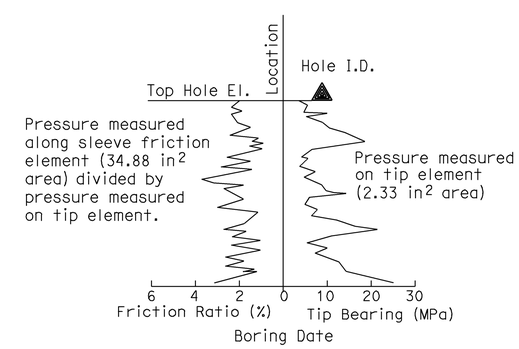

CONE PENETRATION TEST (CPT) SOUNDING

Sudhakar Vatti
DESIGN OVERSIGHT Sudhakar Vatti
8-10-09
SIGN OFF DATE

DRAWN BY: E.Brown
CHECKED BY: G.J.Gunaranjan

FIELD INVESTIGATION BY:
R.Jie

PREPARED FOR THE STATE OF CALIFORNIA DEPARTMENT OF TRANSPORTATION

E.Brown
PROJECT ENGINEER

BRIDGE NO. 55-1096G
POST MILE R0.39

E22-N405/405 SEPARATION (REPLACE)
LOG OF TEST BORINGS NO. 1

OSF CIVIL LOG OF TEST BORINGS SHEET (ENGLISH) (REV. 2-25-05)

ORIGINAL SCALE IN INCHES FOR REDUCED PLANS 0 1 2 3

CU 12235
EA 071631

DISREGARD PRINTS BEARING EARLIER REVISION DATES
REVISION DATES (PRELIMINARY STAGE ONLY) 08/28/08 03/25/09 04/06/09 07/21/09

SHEET 24 OF 30

FILE => 55-1096g-z-1tb01.dgn

USERNAME = friehard DATE PLOTTED => 03-FEB-2010 TIME PLOTTED => 05:17

REFERENCE: CALTRANS SOIL & ROCK LOGGING, CLASSIFICATION, AND PRESENTATION MANUAL (JUNE 2007)

DIST	COUNTY	ROUTE	POST MILES TOTAL PROJECT	SHEET No	TOTAL SHEETS
12	Ora	22,405, 605	R0.3/R0.9, 22.3/24.0,3.0/R1.6	1535	1929

REGISTERED CIVIL ENGINEER 07/27/09 DATE

2-1-10
PLANS APPROVAL DATE

REGISTERED PROFESSIONAL ENGINEER Eric Brown No. GE-2806 Exp. 06/30/10 GEOTECHNICAL STATE OF CALIFORNIA

The State of California or its officers or agents shall not be responsible for the accuracy or completeness of electronic copies of this plan sheet.

OCTA
550 SOUTH MAIN STREET
ORANGE, CA 92863

EARTH MECHANICS, INC.
17660, NEWHOPE STREET, SUITE E
FOUNTAIN VALLEY, CA 92708

GROUP SYMBOLS AND NAMES

Graphic/Symbol	Group Names
GW	Well-graded GRAVEL Well-graded GRAVEL with SAND
GP	Poorly graded GRAVEL Poorly graded GRAVEL with SAND
GW-GM	Well-graded GRAVEL with SILT Well-graded GRAVEL with SILT and SAND
GW-GC	Well-graded GRAVEL with CLAY (or SILTY CLAY) Well-graded GRAVEL with CLAY and SAND (or SILTY CLAY and SAND)
GP-GM	Poorly graded GRAVEL with SILT Poorly graded GRAVEL with SILT and SAND
GP-GC	Poorly graded GRAVEL with CLAY (or SILTY CLAY) Poorly graded GRAVEL with CLAY and SAND (or SILTY CLAY and SAND)
GM	SILTY GRAVEL SILTY GRAVEL with SAND
GC	CLAYEY GRAVEL CLAYEY GRAVEL with SAND
GC-GM	SILTY, CLAYEY GRAVEL SILTY, CLAYEY GRAVEL with SAND
SW	Well-graded SAND Well-graded SAND with GRAVEL
SP	Poorly graded SAND Poorly graded SAND with GRAVEL
SW-SM	Well-graded SAND with SILT Well-graded SAND with SILT and GRAVEL
SW-SC	Well-graded SAND with CLAY (or SILTY CLAY) Well-graded SAND with CLAY and GRAVEL (or SILTY CLAY and GRAVEL)
SP-SM	Poorly graded SAND with SILT Poorly graded SAND with SILT and GRAVEL
SP-SC	Poorly graded SAND with CLAY (or SILTY CLAY) Poorly graded SAND with CLAY and GRAVEL (or SILTY CLAY and GRAVEL)
SM	SILTY SAND SILTY SAND with GRAVEL
SC	CLAYEY SAND CLAYEY SAND with GRAVEL
SC-SM	SILTY, CLAYEY SAND SILTY, CLAYEY SAND with GRAVEL
PT	PEAT
	COBBLES COBBLES and BOULDERS BOULDERS

Graphic/Symbol	Group Names
CL	Lean CLAY Lean CLAY with SAND Lean CLAY with GRAVEL SANDY lean CLAY SANDY lean CLAY with GRAVEL GRAVELLY lean CLAY GRAVELLY lean CLAY with SAND
CL-ML	SILTY CLAY SILTY CLAY with SAND SILTY CLAY with GRAVEL SANDY SILTY CLAY SANDY SILTY CLAY with GRAVEL GRAVELLY SILTY CLAY GRAVELLY SILTY CLAY with SAND
ML	SILT SILT with SAND SILT with GRAVEL SANDY SILT SANDY SILT with GRAVEL GRAVELLY SILT GRAVELLY SILT with SAND
OL	ORGANIC lean CLAY ORGANIC lean CLAY with SAND ORGANIC lean CLAY with GRAVEL SANDY ORGANIC lean CLAY SANDY ORGANIC lean CLAY with GRAVEL GRAVELLY ORGANIC lean CLAY GRAVELLY ORGANIC lean CLAY with SAND
OL	ORGANIC SILT ORGANIC SILT with SAND ORGANIC SILT with GRAVEL SANDY ORGANIC SILT SANDY ORGANIC SILT with GRAVEL GRAVELLY ORGANIC SILT GRAVELLY ORGANIC SILT with SAND
CH	Fat CLAY Fat CLAY with SAND Fat CLAY with GRAVEL SANDY fat CLAY SANDY fat CLAY with GRAVEL GRAVELLY fat CLAY GRAVELLY fat CLAY with SAND
MH	Elastic SILT Elastic SILT with SAND Elastic SILT with GRAVEL SANDY elastic SILT SANDY elastic SILT with GRAVEL GRAVELLY elastic SILT GRAVELLY elastic SILT with SAND
OH	ORGANIC fat CLAY ORGANIC fat CLAY with SAND ORGANIC fat CLAY with GRAVEL SANDY ORGANIC fat CLAY SANDY ORGANIC fat CLAY with GRAVEL GRAVELLY ORGANIC fat CLAY GRAVELLY ORGANIC fat CLAY with SAND
OH	ORGANIC elastic SILT ORGANIC elastic SILT with SAND ORGANIC elastic SILT with GRAVEL SANDY ORGANIC elastic SILT SANDY ORGANIC elastic SILT with GRAVEL GRAVELLY ORGANIC elastic SILT GRAVELLY ORGANIC elastic SILT with SAND
OL/OH	ORGANIC SOIL ORGANIC SOIL with SAND ORGANIC SOIL with GRAVEL SANDY ORGANIC SOIL SANDY ORGANIC SOIL with GRAVEL GRAVELLY ORGANIC SOIL GRAVELLY ORGANIC SOIL with SAND

FIELD AND LABORATORY TESTING

- (C) Consolidation (ASTM D 2435)
- (CL) Collapse Potential (ASTM D 5333)
- (CP) Compaction Curve (CTM 216)
- (CR) Corrosivity Testing (CTM 643, CTM 422, CTM 417)
- (CU) Consolidated Undrained Triaxial (ASTM D 4767)
- (DS) Direct Shear (ASTM D 3080)
- (EI) Expansion Index (ASTM D 4829)
- (M) Moisture Content (ASTM D 2216)
- (OC) Organic Content-% (ASTM D 2974)
- (P) Permeability (CTM 220)
- (PA) Particle Size Analysis (ASTM D 422)
- (PI) Plasticity Index (AASHTO T 90) Liquid Limit (AASHTO T 89)
- (PL) Point Load Index (ASTM D 5731)
- (PM) Pressure Meter
- (PP) Pocket Penetrometer
- (R) R-Value (CTM 301)
- (SE) Sand Equivalent (CTM 217)
- (SG) Specific Gravity (AASHTO T 100)
- (SL) Shrinkage Limit (ASTM D 427)
- (SW) Swell Potential (ASTM D 4546)
- (TV) Pocket Torvane
- (UC) Unconfined Compression-Soil (ASTM D 2166) Unconfined Compression-Rock (ASTM D 2938)
- (UU) Unconsolidated Undrained Triaxial (ASTM D 2850)
- (UW) Unit Weight (ASTM D 4767)
- (VS) Vane Shear (AASHTO T 223)

APPARENT DENSITY OF COHESIONLESS SOILS

Description	SPT N_{60} (Blows / 12 inches)
Very loose	0 - 4
Loose	5 - 10
Medium Dense	11 - 30
Dense	31 - 50
Very Dense	> 50

MOISTURE

Description	Criteria
Dry	Absence of moisture, dusty, dry to the touch
Moist	Damp but no visible water
Wet	Visible free water, usually soil is below water table

PERCENT OR PROPORTION OF SOILS

Description	Criteria
Trace	Particles are present but estimated to be less than 5%
Few	5 to 10%
Little	15 to 25%
Some	30 to 45%
Mostly	50 to 100%

PARTICLE SIZE

Description		Size
Boulder		> 12"
Cobble		3" to 12"
Gravel	Coarse	3/4" to 3"
	Fine	No. 4 to 3/4"
Sand	Coarse	No. 10 to No. 4
	Medium	No. 40 to No. 10
	Fine	No. 200 to No. 40

Sudhakar Vatti
DESIGN OVERSIGHT Sudhakar Vatti
8-10-09
SIGN OFF DATE

DRAWN BY: E.Brown
CHECKED BY: G.J.Gunaranjan

FIELD INVESTIGATION BY: R.Jie

PREPARED FOR THE STATE OF CALIFORNIA DEPARTMENT OF TRANSPORTATION

E.Brown
PROJECT ENGINEER

BRIDGE NO. 55-1096G
POST MILE R0.39

E22-N405/405 SEPARATION (REPLACE)
LOG OF TEST BORINGS NO. 2

OSF CIVIL LOG OF TEST BORINGS SHEET (ENGLISH) (REV. 2-25-05)

ORIGINAL SCALE IN INCHES FOR REDUCED PLANS 0 1 2 3

CU 12235
EA 071631

DISREGARD PRINTS BEARING EARLIER REVISION DATES

REVISION DATES (PRELIMINARY STAGE ONLY) 08/29/08 03/23/09 04/06/09 07/21/09

SHEET 25 OF 30

FILE => 55-1096g-z-1tb02.dgn

USERNAME => trlenard DATE PLOTTED => 03-FEB-2010 TIME PLOTTED => 06:17

DIST	COUNTY	ROUTE	POST MILES TOTAL PROJECT	SHEET No	TOTAL SHEETS
12	Ora	22,405, 605	R0.3/R0.9, 22.3/24.0,3.0/R1.6	1536	1929

REGISTERED CIVIL ENGINEER 07/27/09 DATE

2-1-10
PLANS APPROVAL DATE

REGISTERED PROFESSIONAL ENGINEER Eric Brown No. GE-2806 Exp. 06/30/10 GEOTECHNICAL STATE OF CALIFORNIA

The State of California or its officers or agents shall not be responsible for the accuracy or completeness of electronic copies of this plan sheet.

OCTA
550 SOUTH MAIN STREET
ORANGE, CA 92863

EARTH MECHANICS, INC
17660 NEWHOPE STREET, SUITE E
FOUNTAIN VALLEY, CA 92708

BENCHMARKS:

Monument: 1A-144-04

Described by OCS 2005 - Found 3.75" OCS aluminum benchmark disk stamped "1A-144-04", set in the southwesterly corner of a 4.4 ft by 4.4 ft concrete catch basin. Monument is located in the northeasterly corner of the intersection of Seal Beach Boulevard and St. Cloud Drive, 44 ft easterly of the centerline of Seal Beach Boulevard and 58 ft northerly of the centerline of St. Cloud Dr. Monument is set level with the sidewalk.

Elevation: 15.37 feet

NOTES:

(1) This LOTB sheet (Boring Record) was prepared in accordance with the Caltrans Soil and Rock Classification Logging, Classification and Presentation Manual (June 2007).

(2) 2.4" samples were taken using a California Modified Sampler.

(3) A rope and cat-head hammer system consisting of a hammer weight of 140 lbs falling a distance of 30" was used to advance the drive sampler.

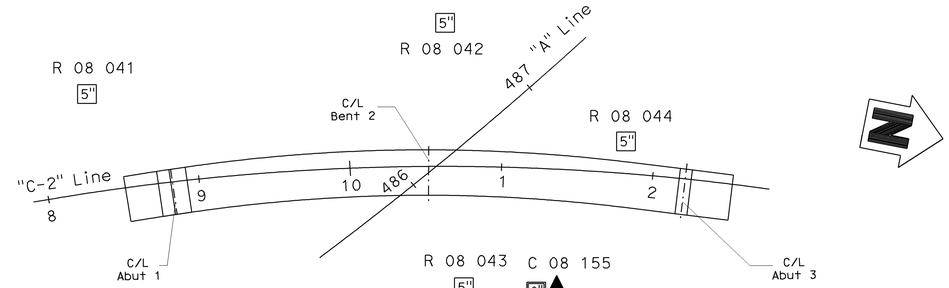

PLAN
1" = 50'

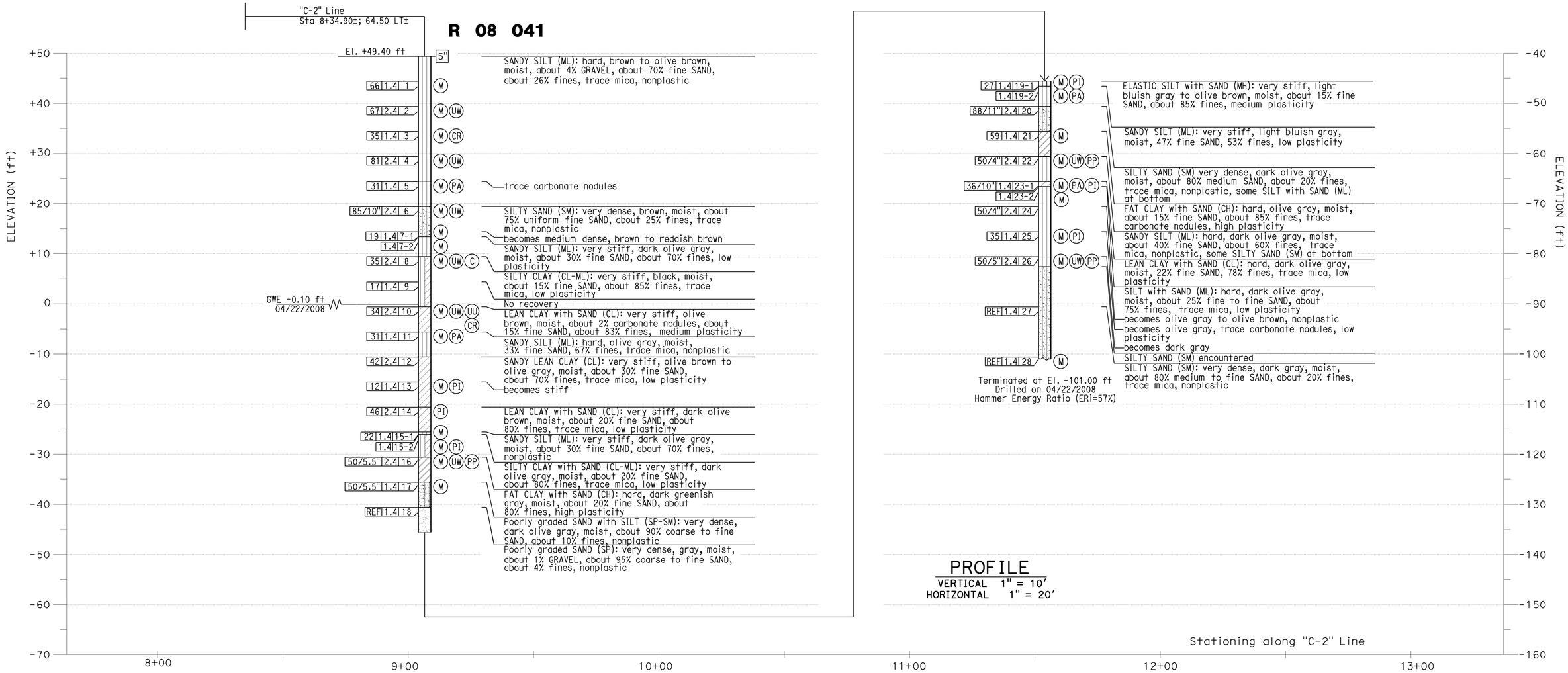

PROFILE
VERTICAL 1" = 10'
HORIZONTAL 1" = 20'

Sudhakar Vatti
DESIGN OVERSIGHT Sudhakar Vatti
8-10-09
SIGN OFF DATE

DRAWN BY: E.Brown
CHECKED BY: G.J.Gunaranjan

FIELD INVESTIGATION BY: R.Jie

PREPARED FOR THE STATE OF CALIFORNIA DEPARTMENT OF TRANSPORTATION

E.Brown
PROJECT ENGINEER

BRIDGE NO. 55-1096G
POST MILE R0.39

E22-N405/405 SEPARATION (REPLACE)
LOG OF TEST BORINGS NO. 3

OSF CIVIL LOG OF TEST BORINGS SHEET (ENGLISH) (REV. 2-25-05)

ORIGINAL SCALE IN INCHES FOR REDUCED PLANS 0 1 2 3

CU 12235
EA 071631

DISREGARD PRINTS BEARING EARLIER REVISION DATES

REVISION DATES (PRELIMINARY STAGE ONLY) 08/29/08 03/25/09 04/06/09 07/27/09

SHEET 26 OF 30

FILE => 55-1096g-z-ltb03.dgn

USERNAME => trlenard DATE PLOTTED => 03-FEB-2010 TIME PLOTTED => 05:17

DIST	COUNTY	ROUTE	POST MILES TOTAL PROJECT	SHEET No	TOTAL SHEETS
12	Ora	22,405, 605	R0.3/R0.9, 22.3/24.0,3.0/R1.6	1537	1929

REGISTERED CIVIL ENGINEER 07/27/09 DATE

2-1-10
PLANS APPROVAL DATE

REGISTERED PROFESSIONAL ENGINEER Eric Brown No. GE-2806 Exp. 06/30/10 GEOTECHNICAL STATE OF CALIFORNIA

The State of California or its officers or agents shall not be responsible for the accuracy or completeness of electronic copies of this plan sheet.

OCTA
550 SOUTH MAIN STREET
ORANGE, CA 92863

EARTH MECHANICS, INC
17660 NEWHOPE STREET, SUITE E
FOUNTAIN VALLEY, CA 92708

BENCHMARKS:

Monument: 1A-144-04

Described by OCS 2005 - Found 3.75" OCS aluminum benchmark disk stamped "1A-144-04", set in the southwesterly corner of a 4.4 ft by 4.4 ft concrete catch basin. Monument is located in the northeasterly corner of the intersection of Seal Beach Boulevard and St. Cloud Drive, 44 ft easterly of the centerline of Seal Beach Boulevard and 58 ft northerly of the centerline of St. Cloud Dr. Monument is set level with the sidewalk.

Elevation: 15.37 feet

NOTES:

(1) This LOTB sheet (Boring Record) was prepared in accordance with the Caltrans Soil and Rock Classification Logging, Classification and Presentation Manual (June 2007).

(2) 2.4" samples were taken using a California Modified Sampler.

(3) A rope and cat-head hammer system consisting of a hammer weight of 140 lbs falling a distance of 30" was used to advance the drive sampler.

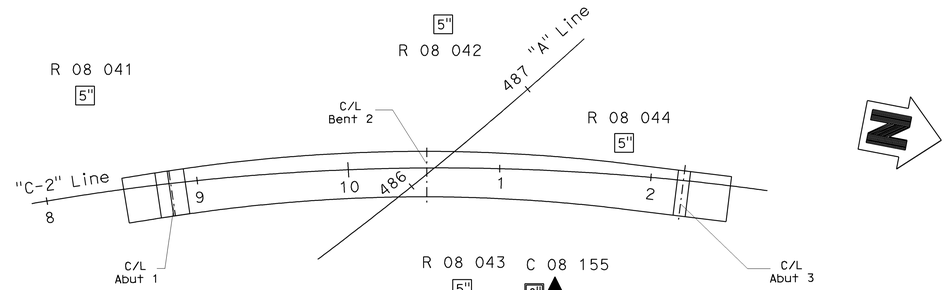

PLAN
1" = 50'

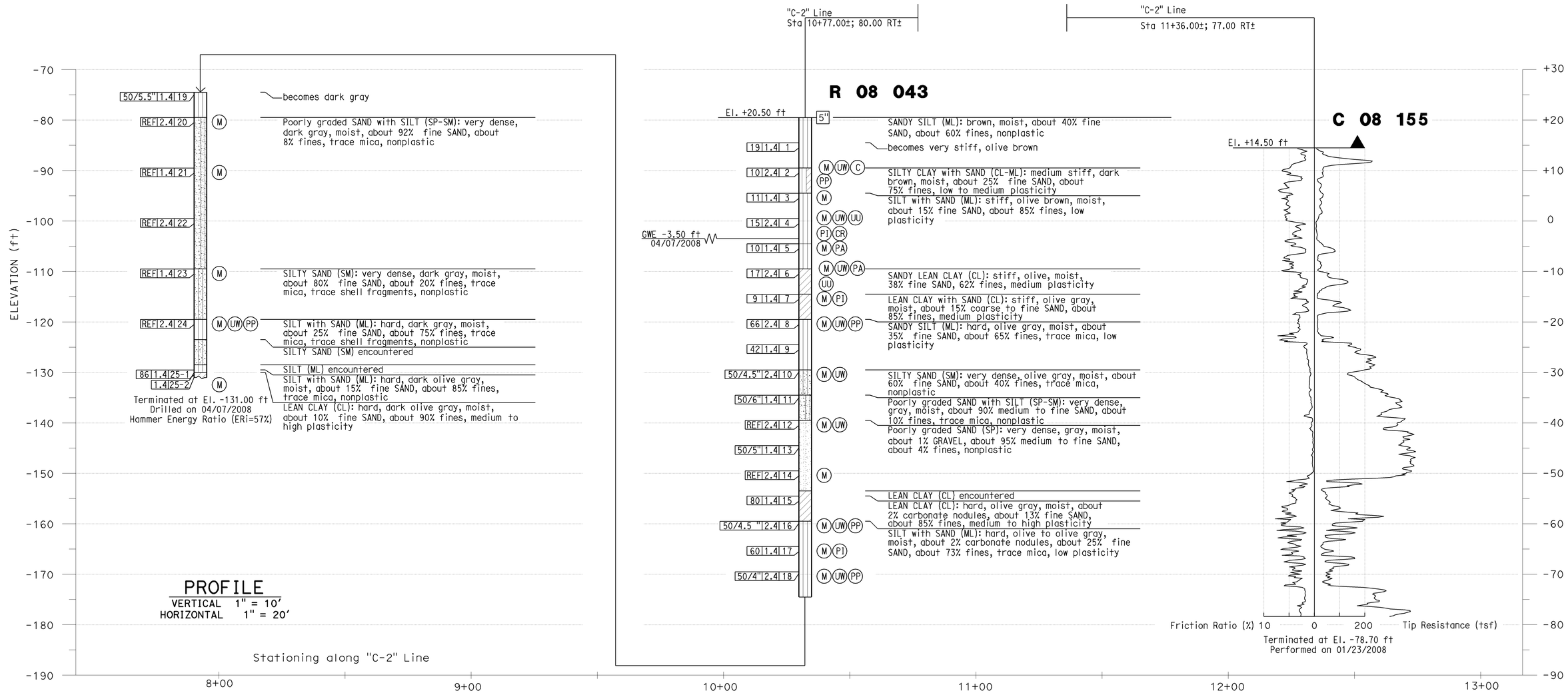

PROFILE
VERTICAL 1" = 10'
HORIZONTAL 1" = 20'

Sudhakar Vatti — DESIGN OVERSIGHT Sudhakar Vatti; 8-10-09 SIGN OFF DATE	DRAWN BY: E.Brown; CHECKED BY: G.J.Gunaranjan	FIELD INVESTIGATION BY: R.Jie	PREPARED FOR THE STATE OF CALIFORNIA DEPARTMENT OF TRANSPORTATION	E.Brown PROJECT ENGINEER	BRIDGE NO. 55-1096G; POST MILE R0.39

E22-N405/405 SEPARATION (REPLACE)

LOG OF TEST BORINGS NO. 4

OSF CIVIL LOG OF TEST BORINGS SHEET (ENGLISH) (REV. 2-25-05)

ORIGINAL SCALE IN INCHES FOR REDUCED PLANS 0 1 2 3

CU 12235
EA 071631

DISREGARD PRINTS BEARING EARLIER REVISION DATES

REVISION DATES (PRELIMINARY STAGE ONLY) 08/29/08 03/25/09 04/06/09 07/21/09

SHEET 27 OF 30

FILE => 55-1096g-z-lttb04.dgn

USERNAME => rtriehord DATE PLOTTED => 03-FEB-2010 TIME PLOTTED => 05:17

DIST	COUNTY	ROUTE	POST MILES TOTAL PROJECT	SHEET No	TOTAL SHEETS
12	Ora	22,405, 605	R0.3/R0.9, 22.3/24.0,3.0/R1.6	1538	1929

REGISTERED CIVIL ENGINEER 07/27/09 DATE

2-1-10
PLANS APPROVAL DATE

REGISTERED PROFESSIONAL ENGINEER Eric Brown No. GE-2806 Exp. 06/30/10 GEOTECHNICAL STATE OF CALIFORNIA

The State of California or its officers or agents shall not be responsible for the accuracy or completeness of electronic copies of this plan sheet.

OCTA
550 SOUTH MAIN STREET
ORANGE, CA 92863

EARTH MECHANICS, INC
17660 NEWHOPE STREET, SUITE E
FOUNTAIN VALLEY, CA 92708

BENCHMARKS:

Monument: 1A-144-04
Described by OCS 2005 - Found 3.75" OCS aluminum benchmark disk stamped "1A-144-04", set in the southwesterly corner of a 4.4 ft by 4.4 ft concrete catch basin. Monument is located in the northeasterly corner of the intersection of Seal Beach Boulevard and St. Cloud Drive, 44 ft easterly of the centerline of Seal Beach Boulevard and 58 ft northerly of the centerline of St. Cloud Dr. Monument is set level with the sidewalk.

Elevation: 15.37 feet

NOTES:

(1) This LOTB sheet (Boring Record) was prepared in accordance with the Caltrans Soil and Rock Classification Logging, Classification and Presentation Manual (June 2007).
(2) 2.4" samples were taken using a California Modified Sampler.
(3) A rope and cat-head hammer system consisting of a hammer weight of 140 lbs falling a distance of 30" was used to advance the drive sampler.
(4) An automatic trip hammer system consisting of a hammer weight of 140 lbs falling a distance of 30" was used to advance the drive sampler through hollow-stem auger borings.

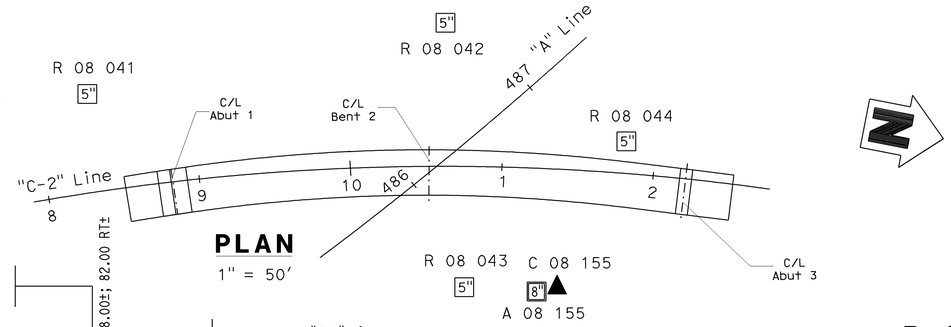

PLAN

1" = 50'

PROFILE

VERTICAL 1" = 10'
HORIZONTAL 1" = 20'

Sudhakar Vatti DESIGN OVERSIGHT Sudhakar Vatti 8-10-09 SIGN OFF DATE	DRAWN BY: E.Brown CHECKED BY: G.J.Gunaranjan	FIELD INVESTIGATION BY: R.Jie	PREPARED FOR THE STATE OF CALIFORNIA DEPARTMENT OF TRANSPORTATION	E.Brown PROJECT ENGINEER	BRIDGE NO. 55-1096G POST MILE R0.39

E22-N405/405 SEPARATION (REPLACE)

LOG OF TEST BORINGS NO. 5

OSF CIVIL LOG OF TEST BORINGS SHEET (ENGLISH) (REV. 2-25-05)

ORIGINAL SCALE IN INCHES FOR REDUCED PLANS 0 1 2 3

CU 12235
EA 071631

DISREGARD PRINTS BEARING EARLIER REVISION DATES

REVISION DATES (PRELIMINARY STAGE ONLY) 08/28/08 03/23/09 04/06/09 07/21/09

SHEET 28 OF 30

FILE => 55-1096g-z-1tb05.dgn

USERNAME => trlenard DATE PLOTTED => 03-FEB-2010 TIME PLOTTED => 08:17

(Old-VII-Ora-170-A)

FED. ROAD DIV. NO.	STATE	F. A. PROJECT No.	SHEET NO.	TOTAL SHEETS
7	CALIF.			

DIST	COUNTY	ROUTE	SECTION	SHEET NO.	TOTAL SHEETS
07	Ora	605		161	161

BRIDGE ENGINEER CIVIL ENGINEER - LICENSE EXP.

DATE APPROVED March 22, 1965

TBM Elev. 14.20

Sta 182 + 92.94 POC NBD
Sta 488 + 10.80 ℄ PTI 158

BM # 483-A-62 Elev. 2.83

Fd 2" I.P. and standard brass cap with fence post marker, 450' right of Sta. 483+00 San Diego Fwy., 8' west of 6' block wall and power pole 1285406-E

DIVISION OF ENGINEERING SERVICES - GEOTECHNICAL SERVICES					
As-Built Log of Test Borings sheet is considered an informational document only. As such, the State of California registration seal with signature, license number and registration certificate expiration date confirm that this is a true and accurate copy of the original document. This drawing is available and presented only for the convenience of any bidder, contractor or other interested party.					
DIST.	COUNTY	ROUTE	KILOMETER POST-TOTAL PROJECT	Sheet No.	Total Sheets
12	Ora	22,405, 605	R0.3/R0.9,22.3/24.0,3.0/R1.6	1539	1929
REGISTERED CIVIL ENGINEER			DATE 07/27/09		

LOG OF TEST BORINGS NO. 6

NOTE: A COPY OF THIS LOG OF TEST BORINGS IS AVAILABLE AT OFFICE OF STRUCTURE MAINTENANCE AND INVESTIGATIONS, SACRAMENTO, CALIFORNIA	CU: 12235 EA: 071631	BRIDGE No. 55-1096G
		Sheet 29 of 30

Revisions made to this Log of Test Borings from the original 1966 Log of Test Borings are the addition of the following table and notes:

To accompany plans dated 2-1-10

REGISTERED PROFESSIONAL ENGINEER
Eric Brown
No. GE-2806
Exp. 06/30/10
GEOTECHNICAL
STATE OF CALIFORNIA

Boring	Station	Offset from "C-2" Line

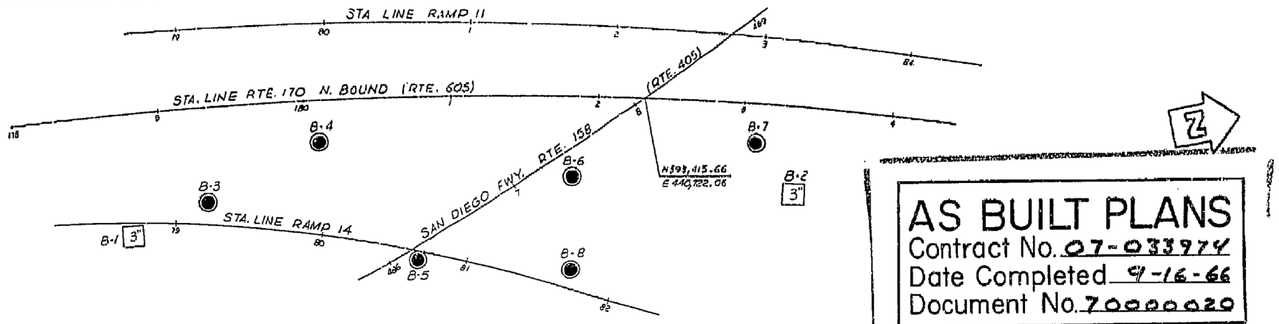

AS BUILT PLANS
Contract No. 07-033974
Date Completed 9-16-66
Document No. 70000020

PLAN
Scale: 1"=50'

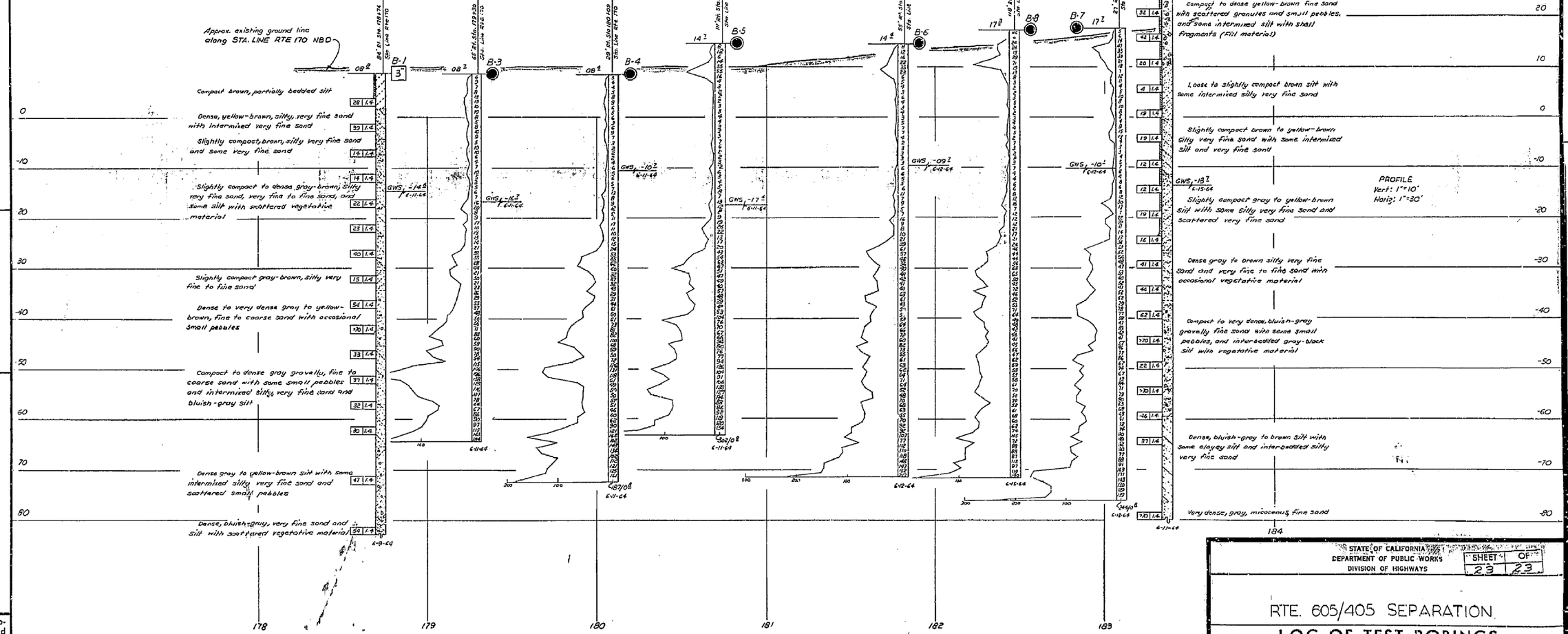

" ...MATION ON ACTUAL FOUNDATION CONDITIONS ENCOUNTERED IS ON FILE IN BRIDGE GEOLOGY SECTION.

LEGEND OF BORING OPERATIONS

Penetrometer; 2½" Cone Penetrometer; Sampler Boring (Dry); Rotary Boring (Wet); Auger Boring (Dry); Jet Boring; Core Boring; Test Pit

Penetration Boring; Rotary Boring; 1" Soil Tube

LEGEND OF EARTH MATERIALS

Gravel; Sand; Silt; Clay; Sandy Clay or Clayey Sand; Sandy Silt or Silty Sand; Silty Clay or Clayey Silt; Peat and Organic Matter; Fill Material; Igneous Rock; Sedimentary Rock; Metamorphic Rock

CLASSIFICATION OF MATERIAL BASED ON STANDARD GRADE SIZE LIMITS

Diagram showing the basis for estimated percentages of clay, silt, and sand in the mixtures to be used in the description of class names. If gravel is present in appreciable amounts the term "gravelly" may be added to the class name, e.g. "gravelly clay", "gravelly silt", "gravelly sand". The terms "coarse", "medium" and "fine" when used to describe sand, are based on the sieve sizes to standard grade size limits.

NOTE: Classification of earth material as shown on this sheet is based upon field inspection and is not to be construed to imply mechanical analysis.

FIELD STUDY	Sr. D.B. Crawford	6-15-64
DRAWN	Sr. R.E. Ryan	7-29-64
CHECKED	Sr. K. Tocchino	7-7-65

Approval Recommended by C.E. Hirschfeld
Engineering Geologist

BRIDGE DEPARTMENT
ENGINEERING GEOLOGY SECTION

STATE OF CALIFORNIA
DEPARTMENT OF PUBLIC WORKS
DIVISION OF HIGHWAYS

SHEET 23 OF 23

RTE. 605/405 SEPARATION

LOG OF TEST BORINGS

SCALE AS Noted | BRIDGE 55-412 R/OR | FILE | DRAWING 55412-31

FILENAME => 55-1096g-z-ltb06.tif

Disregard prints bearing earlier numbers → PREL. DRAWING No. PR- 1/11/65

161

FED. ROAD DIV. NO.	STATE	F. A. PROJECT NO.	SHEET NO.	TOTAL SHEETS
7	CALIF			

DIST.	COUNTY	ROUTE	SECTION	SHEET NO.	TOTAL SHEETS
VII	ORA	170	A	208	258

Chief Engineer — Date Approved: April 20, 1964

B.M. # 483-A-62 Elev. 9.83

Found 2 inch iron pipe and standard brass cap with fence post marker, 450 ft right of 483+05 San Diego Fwy., 8 ft. west of 6 ft. block wall and power pole 1285406-E

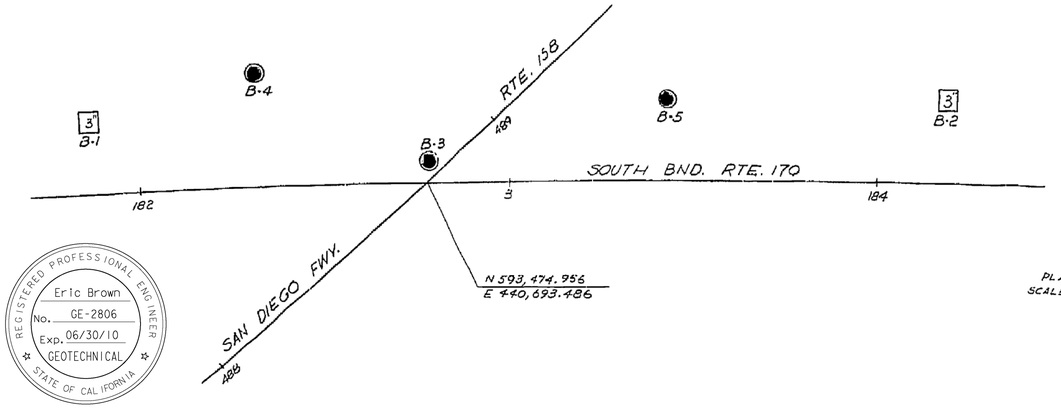

PLAN
SCALE: 1" = 20'

REGISTERED PROFESSIONAL ENGINEER — Eric Brown — No. GE-2806 — Exp. 06/30/10 — GEOTECHNICAL — STATE OF CALIFORNIA

DIVISION OF ENGINEERING SERVICES - GEOTECHNICAL SERVICES					
As-Built Log of Test Borings sheet is considered an informational document only. As such, the State of California registration seal with signature, license number and registration certificate expiration date confirm that this is a true and accurate copy of the original document. This drawing is available and presented only for the convenience of any bidder, contractor or other interested party.					
DIST.	COUNTY	ROUTE	KILOMETER POST-TOTAL PROJECT	Sheet No.	Total sheets
12	Ora	22,405, 605	R0.3/R0.9,22.3/24.0,3.0/R1.6	1540	1929
REGISTERED CIVIL ENGINEER			07/27/09 DATE		

LOG OF TEST BORINGS NO. 7

NOTE: A COPY OF THIS LOG OF TEST BORINGS IS AVAILABLE AT OFFICE OF STRUCTURE MAINTENANCE AND INVESTIGATIONS, SACRAMENTO, CALIFORNIA

CU: 12235
EA: 071631

BRIDGE No.	
55-1096G	
Sheet	of
30	30

Revisions made to this Log of Test Borings from the original 1966 Log of Test Borings are the addition of the following table and notes:

To accompany plans dated 2-1-10

Boring	Station	Offset from "C-2" Line

AS BUILT PLANS
Contract No. 07-033914
Date Completed
Document No. 70001891

INFORMATION ON ACTUAL FOUNDATION CONDITIONS ENCOUNTERED IS ON FILE IN BRIDGE GEOLOGY SECTION

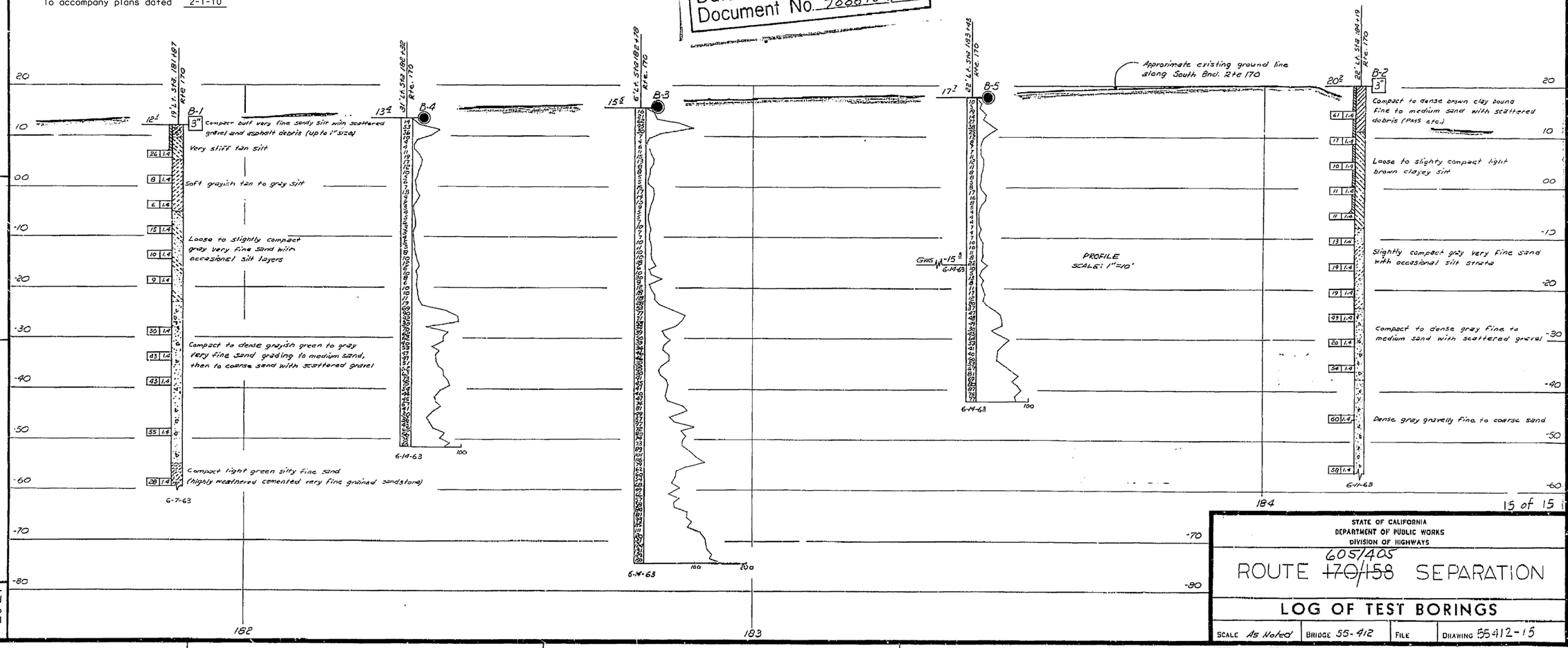

15 of 15

LEGEND OF OPERATIONS

- Penetrometer
- 2½" Cone Penetrometer
- Sampler Boring (Dry)
- Rotary Boring (Wet)
- Auger Boring (Dry)
- Jet Boring
- Core Boring
- Test Pit

Penetration Boring — Rotary Boring — 1" Soil Tube

LEGEND OF EARTH MATERIALS

- Gravel
- Sand
- Silt
- Clay
- Sandy Clay or Clayey Sand
- Silty Clay or Clayey Silt
- Peat & Organic Matter
- Fill Material
- Igneous Rock
- Sedimentary Rock
- Metamorphic Rock

CLASSIFICATION OF MATERIAL BASED ON STANDARD GRADE SIZE LIMITS

Diagram showing the basis for estimates of grade size distribution used in determining classification of earth materials. If gravel is present in appreciable amounts the term "gravelly" may be added to the class name, viz., "gravelly silty clay". The terms "coarse", "medium", and "fine" when used to describe sand, silt and gravel, refer to standard grade size limits.

NOTE: Classification of earth material as shown on this sheet is based upon field inspection and is not to be construed to imply mechanical analysis.

FIELD STUDY By: E.D. McCoy 6-14-63
DRAWN By: R.L. Rodgers 6-26-63
CHECKED By: K. Tocchino 6-25-63
Approval Recommended by: L.F. Nielsen Engineering Geologist

BRIDGE DEPARTMENT
ENGINEERING GEOLOGY SECTION

208

STATE OF CALIFORNIA
DEPARTMENT OF PUBLIC WORKS
DIVISION OF HIGHWAYS

ROUTE ~~170/158~~ 605/405 SEPARATION

LOG OF TEST BORINGS

SCALE	BRIDGE	FILE	DRAWING
As Noted	55-412		55412-15

FILENAME => 55-1096g-z-ltb07.tif

Disregard prints bearing earlier numbers → PREL. DRAWING No. PR-

DIST	COUNTY	ROUTE	POST MILES TOTAL PROJECT	SHEET No	TOTAL SHEETS
12	Ora	22,405, 605	R0.3/R0.9, 22.3/24.0,3.0/R1.6	1541	1929

Khaled Allam 07-27-09
REGISTERED CIVIL ENGINEER DATE

2-1-10
PLANS APPROVAL DATE

REGISTERED PROFESSIONAL ENGINEER Khaled Allam No. 67110 Exp. 09-30-10 CIVIL STATE OF CALIFORNIA

The State of California or its officers or agents shall not be responsible for the accuracy or completeness of electronic copies of this plan sheet.

OCTA
550 SOUTH MAIN STREET
ORANGE, CA 92863

PBS&J
625 THE CITY DRIVE SOUTH, SUITE 200
ORANGE, CA 92868

LEGEND

1. Paint "Bridge No. 55-1097G" and year constructed
2. Paint "E22-N605/405 Separation"
3. Paint "E22-N605/405 Separation" and Bent No.
8. Conc Slope paving
11. Conc Barrier (Type 736 Mod)
14. Conc Barrier (Type 60R), see "Road Plans"
15. Conc Barrier (Type 60), see "Road Plans"
18. Structure Approach Type N(30S)
29. Remove Exist Bridge (Br No. 55-0412G), See "E22-N405/405 Separation (Replace)" Plans
30. Remove Exist Bridge (Br. No. 55-0412R)
31. Temporary Railing (Type K), See "Road Plans"
32. Crash Cushion, See "Road Plans"
33. Metal Beam Guard Rail, See "Road Plans"
36. Deck Drain Type D-2
54. Bridge Lighting Type 21, see "Lighting Plans"
75. 2-2" Type 1 Electrical Conduits, see "Lighting Plans"

Bridge Removal, Location E
Point of Minimum Vertical Clearance
Existing Structure
New Structure
Bridge Lighting, see "Lighting Plans"

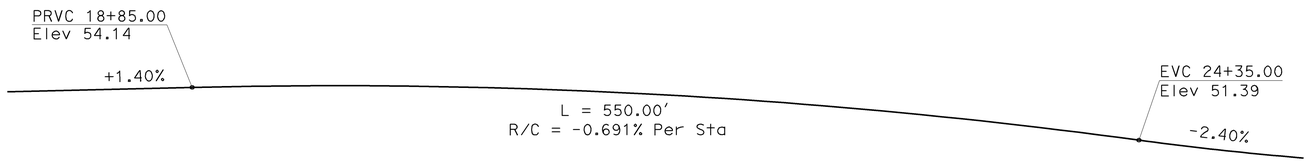

PROFILE GRADE
No Scale

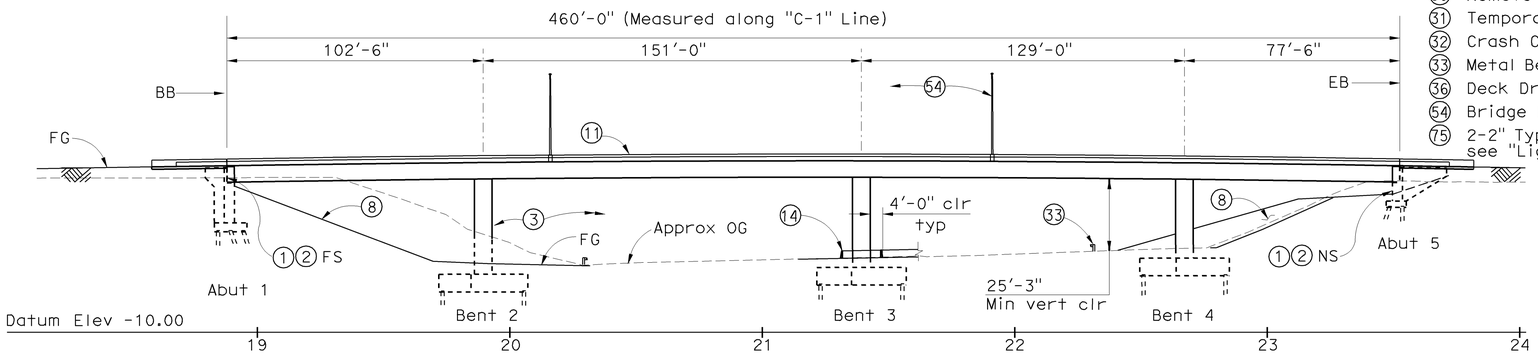

CURVE DATA

NO.	R	Δ	T	L
G	2200.00'	50°59'22"	1049.10'	1957.86'
H	2000.00'	30°02'39"	536.72'	1048.74'
I	1560.00'	29°50'08"	415.60'	812.34'
J	2400.00'	33°19'34"	718.35'	1395.96'

DEVELOPED ELEVATION
1" = 30'

NOTES
1. For pile data table, see "Foundation Plan" sheet
2. All piles not shown
3. Exist structure not shown on Elevation for clarity
4. See "Index to Plans" sheet for Index to Plans & General Notes

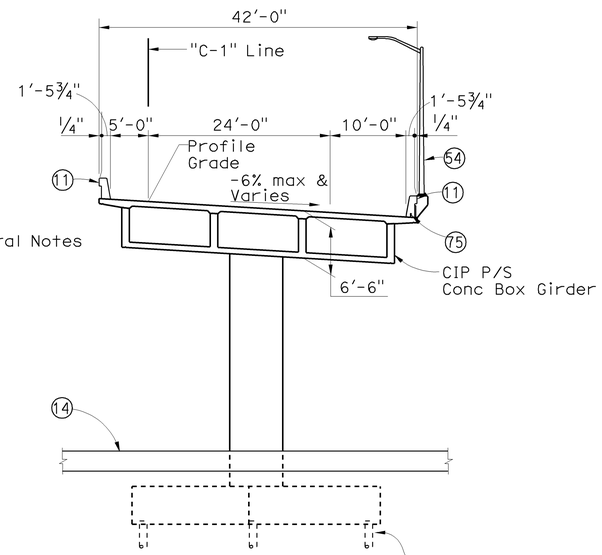

TYPICAL SECTION
1" = 10'

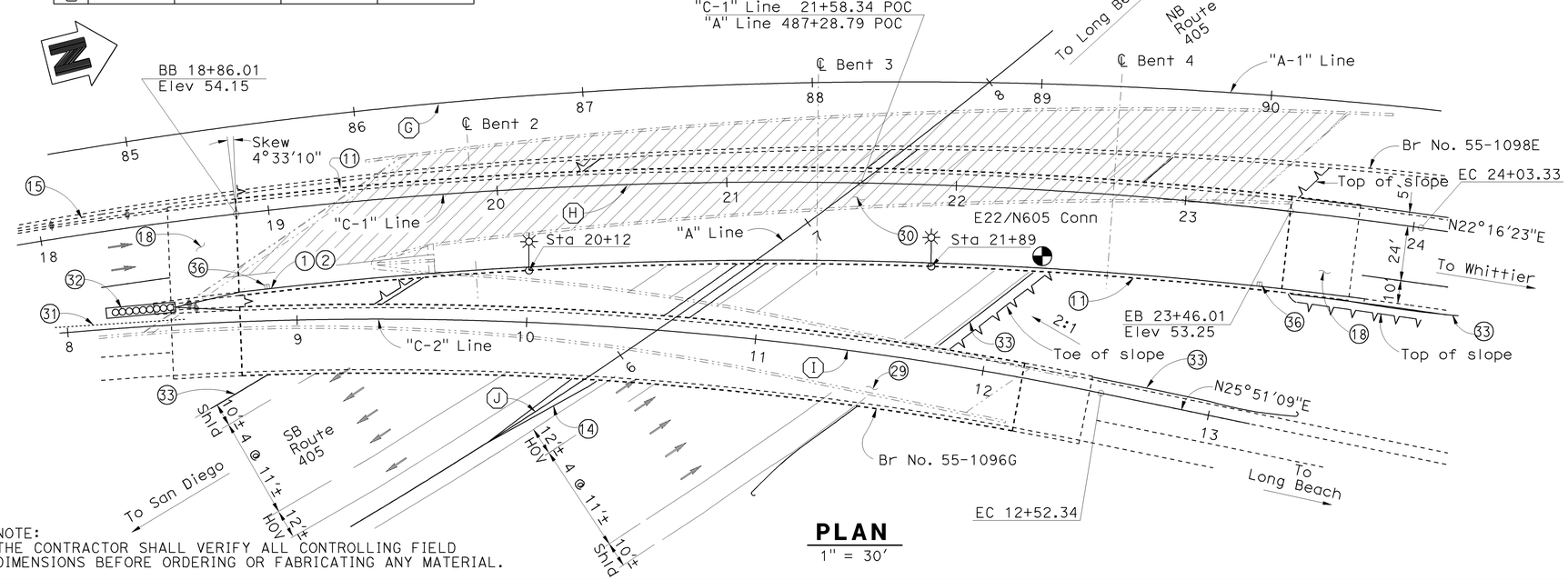

PLAN
1" = 30'

NOTE:
THE CONTRACTOR SHALL VERIFY ALL CONTROLLING FIELD DIMENSIONS BEFORE ORDERING OR FABRICATING ANY MATERIAL.

E22-N605/405 SEPARATION (REPLACE) BR NO 55-1097G

QUANTITIES

BRIDGE REMOVAL, LOCATION E	LUMP	SUM
STRUCTURE EXCAVATION (BRIDGE)	1,950	CY
STRUCTURE BACKFILL (BRIDGE)	1,120	CY
FURNISH PILING (CLASS 200) (ALTERNATIVE W)	6,484	LF
DRIVE PILE (CLASS 200) (ALTERNATIVE W)	124	EA
FURNISH PILING (CLASS 200) (ALTERNATIVE X)	2,325	LF
DRIVE PILE (CLASS 200)(ALTERNATIVE X)	35	EA
PRESTRESSING CAST-IN-PLACE CONCRETE	LUMP	SUM
STRUCTURAL CONCRETE, BRIDGE FOOTING	542	CY
STRUCTURAL CONCRETE, BRIDGE	1,900	CY
STRUCTURAL CONCRETE, APPROACH SLAB (TYPE N)	93	CY
FRACTURED RIB TEXTURE	320	SQFT
JOINT SEAL ASSEMBLY (MR 2½")	42	LF
JOINT SEAL ASSEMBLY (MR 3")	42	LF
BAR REINFORCING STEEL (BRIDGE)	692,900	LB
HEADED BAR REINFORCEMENT	2,050	EA
SLOPE PAVING (CONCRETE)(RIVER COBBLE)	79	CY
BRIDGE DECK DRAINAGE SYSTEM	840	LB
CONCRETE BARRIER (TYPE 736 MODIFIED)	1,040	LF

Sudhakar Vatti
DESIGN OVERSIGHT Sudhakar Vatti
8-10-09
SIGN OFF DATE

	BY	CHECKED
DESIGN	K. Allam/Y. Deng	P. Morel
DETAILS	N. Shu	P. Morel
QUANTITIES	V. Nong	L. Khaleghi

LOAD AND RESISTANCE FACTOR DESIGN (LRFD) — LIVE LOADING: HL-93 W/ "LOW BOY" AND PERMIT DESIGN VEHICLE
LAYOUT — A. Moubayed — K. Allam
SPECIFICATIONS — E. Tyk — PLANS AND SPECS COMPARED P. Morel

PREPARED FOR THE STATE OF CALIFORNIA DEPARTMENT OF TRANSPORTATION

Alaedin Moubayed
PROJECT ENGINEER

BRIDGE NO. 55-1097G
POST MILES R0.39

E22-N605/405 SEPARATION (REPLACE)
GENERAL PLAN

DESIGN GENERAL PLAN SHEET (ENGLISH) (REV.2/25/05)

ORIGINAL SCALE IN INCHES FOR REDUCED PLANS 0 1 2 3

CU 12235
EA 071631

DISREGARD PRINTS BEARING EARLIER REVISION DATES
REVISION DATES (PRELIMINARY STAGE ONLY) 02/06/08 06/02/08 09/11/08 04/06/09 07/27/09

SHEET 1 OF 31

FILE => 55-1097g-a-gp01.dgn

USERNAME => trlenard DATE PLOTTED => 03-FEB-2010 TIME PLOTTED => 05:29

DIST	COUNTY	ROUTE	POST MILES TOTAL PROJECT	SHEET No	TOTAL SHEETS
12	Ora	22,405, 605	R0.3/R0.9, 22.3/24.0,3.0/R1.6	1542	1929

Khaled Allam 07-27-09
REGISTERED CIVIL ENGINEER DATE

2-1-10
PLANS APPROVAL DATE

REGISTERED PROFESSIONAL ENGINEER Khaled Allam No. 67110 Exp. 09-30-10 CIVIL STATE OF CALIFORNIA

The State of California or its officers or agents shall not be responsible for the accuracy or completeness of electronic copies of this plan sheet.

OCTA
550 SOUTH MAIN STREET
ORANGE, CA 92863

PBS&J
625 THE CITY DRIVE SOUTH, SUITE 200
ORANGE, CA 92868

STANDARD PLANS DATED MAY 2006

	A10A	Acronyms and Abbreviations (Sheet 1 of 2)
	A10B	Acronyms and Abbreviations (Sheet 2 of 2)
	A10C	Symbols (Sheet 1 of 2)
	A10D	Symbols (Sheet 2 of 2)
	A62C	Limits of Payment for Excavation and Backfill Bridge
	A62B	Limits of Payment for Excavation and Backfill - Bridge Surcharge and Wall
	A74	Survey Monuments
	D99B	Edge Drain Outlet and Vent Details
	B0-1	Bridge Details
	B0-3	Bridge Details
	B0-5	Bridge Details
	B0-13	Bridge Details
RSP	B2-8	Pile Details Class 200
RSP	B7-1	Box Girder Details
	B7-6	Deck Drains Type D-1 and D-2
	B7-8	Deck Drainage Details
	B7-10	Utility Opening Box Girder
	B8-5	Cast-in-Place Prestressed Girder Details
	B11-56	Concrete Barrier Type 736

INDEX TO PLANS

SHEET NO.	TITLE
1	General Plan
2	Index to Plans
3	Deck Contours
4	Bridge Removal Plan
5	Foundation Plan
6	Abutment 1 Layout
7	Abutment 5 Layout
8	Abutment Details No. 1
9	Abutment Details No. 2
10	Abutment Details No. 3
11	Abutment Details No. 4
12	Bent Layout
13	Bent Details No. 1
14	Bent Details No. 2
15	Typical Section
16	Girder Layout
17	Girder Reinforcement Details No. 1
18	Girder Reinforcement Details No. 2
19	Architectural Details No. 1
20	Architectural Details No. 2
21	Joint Seal Assembly (Maximun Movement Rating = 4")
22	Structure Approach Type N(30S)
23	Structure Approach Drainage Details
24	Slope Paving
25	Log of Test Borings No. 1
26	Log of Test Borings No. 2
27	Log of Test Borings No. 3
28	Log of Test Borings No. 4
29	Log of Test Borings No. 5
30	Log of Test Borings No. 6 (As Built)
31	Log of Test Borings No. 7 (As Built)

PLAN SYMBOLS

Standard Plan Sheet No.

Detail No.

Section Identification

GENERAL NOTES
LOAD AND RESISTANCE FACTOR DESIGN

DESIGN: AASHTO LRFD Bridge Design Specifications, 3rd edition with Interims through 2006 and the Caltrans Amendments v3.06.01; except that earth retaining systems, bridge barrier and structure approach slabs are designed using Bridge Design Specifications (1996 AASHTO w/ Revisions by Caltrans).

SEISMIC DESIGN: CALTRANS SEISMIC DESIGN CRITERIA (SDC), Version 1.4 dated June 2006.

DEAD LOAD: Includes 35 psf for future wearing surface

LIVE LOADING: HL93 and permit design load.

SEISMIC LOADING: Site Specific ARS as Shown

Modified SDC ARS Curve for Soil Profile D
(M=7.25± 0.25)
Includes modifications for distance to fault.
(Peak Rock Acceleration = 0.6g)

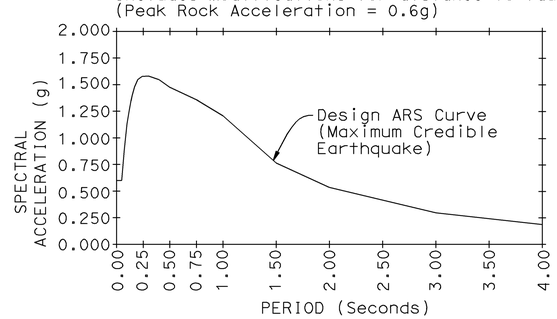

CONCRETE: f_y = 60 ksi
f'_c = 3.6 ksi
n = 8
See "prestressing notes" on "Girder Layout" sheet

STRUCTURAL STEEL: f_y = ASTM A709 Grade 36
Class 200 Alt "W" Piles: ASTM A252 Grade 3

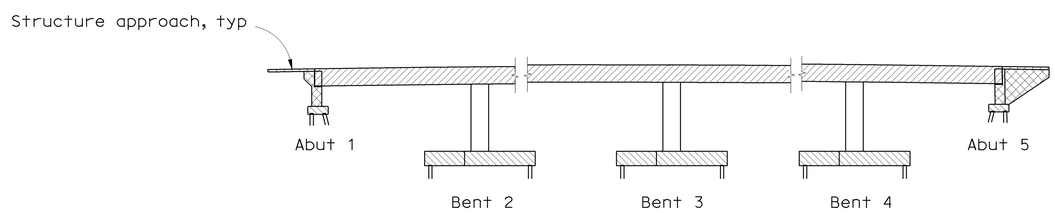

LEGEND

- Structural Concrete, Bridge (f'c = 4.0 ksi @ 28 days)
- Structural Concrete, Bridge
- Structural Concrete, Bridge (f'c = 4.0 ksi @ 28 days)
- Structural Concrete, Bridge Footing
- Structural Concrete, Approach Slab

CONCRETE STRENGTH AND TYPE LIMITS

No Scale

Sudhakar Vatti
DESIGN OVERSIGHT Sudhakar Vatti
8-10-09
SIGN OFF DATE

	BY	CHECKED
DESIGN	K. Allam/Y. Deng	P. Morel
DETAILS	N. Shu	P. Morel
QUANTITIES	V. Nong	L. Khaleghi

PREPARED FOR THE STATE OF CALIFORNIA DEPARTMENT OF TRANSPORTATION

Alaedin Moubayed
PROJECT ENGINEER

BRIDGE NO. 55-1097G
POST MILE R0.39

E22-N605/405 SEPARATION (REPLACE)
INDEX TO PLANS

DESIGN DETAIL SHEET (ENGLISH) (REV. 2/25/05)

ORIGINAL SCALE IN INCHES FOR REDUCED PLANS 0 1 2 3

CU 12235
EA 071631

DISREGARD PRINTS BEARING EARLIER REVISION DATES

REVISION DATES (PRELIMINARY STAGE ONLY) 02/18/08 06/02/08 09/17/08 04/06/09 07/27/09

SHEET 2 OF 31

FILE => 55-1097g-a-itp.dgn

USERNAME => trlenard DATE PLOTTED => 03-FEB-2010 TIME PLOTTED => 06:29

DIST	COUNTY	ROUTE	POST MILES TOTAL PROJECT	SHEET No	TOTAL SHEETS
12	Ora	22,405, 605	R0.3/R0.9 22.3/24.0,3.0/R1.6	1543	1929

Khaled Allam 07-27-09
REGISTERED CIVIL ENGINEER DATE

2-1-10
PLANS APPROVAL DATE

REGISTERED PROFESSIONAL ENGINEER Khaled Allam No. 67110 Exp. 09-30-10 CIVIL STATE OF CALIFORNIA

The State of California or its officers or agents shall not be responsible for the accuracy or completeness of electronic copies of this plan sheet.

OCTA
550 SOUTH MAIN STREET
ORANGE, CA 92863

PBS&J
625 THE CITY DRIVE SOUTH, SUITE 200
ORANGE, CA 92868

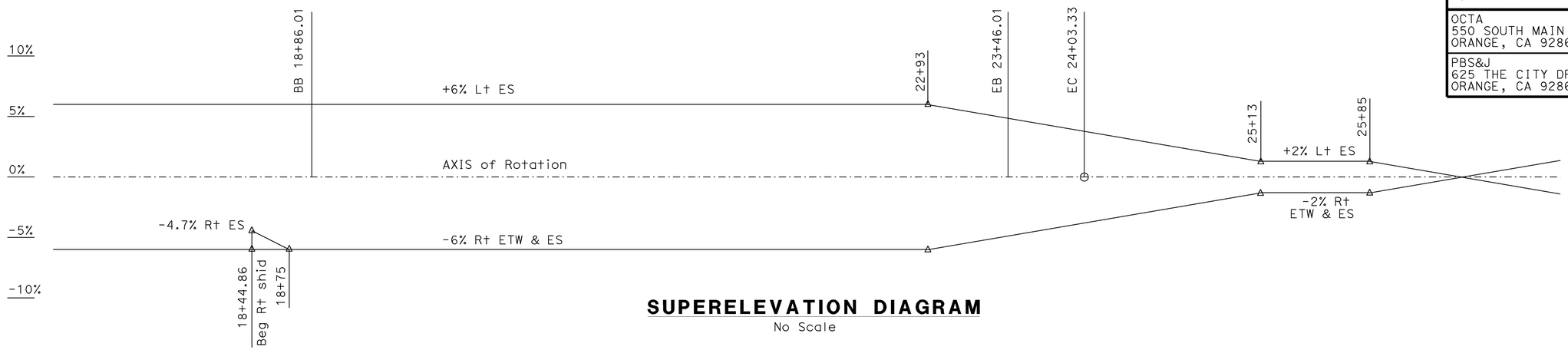

SUPERELEVATION DIAGRAM

No Scale

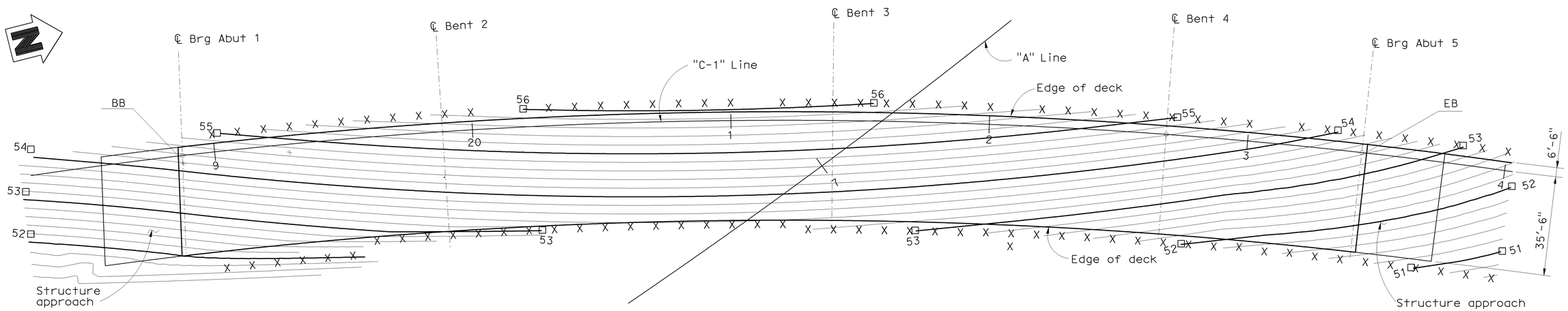

PLAN

1" = 20'

LEGEND

X Denotes 10' intervals along "C-1" Line
□ Denotes even foot contours.

NOTES

1. Contour interval is 0.20'.
2. Contours do not include camber.

Sudhakar Vatti
DESIGN OVERSIGHT Sudhakar Vatti
8-10-09
SIGN OFF DATE

	BY	CHECKED
DESIGN	K. Allam/Y. Deng	P. Morel
DETAILS	N. Shu	P. Morel
QUANTITIES	V. Nong	L. Khaleghi

PREPARED FOR THE STATE OF CALIFORNIA DEPARTMENT OF TRANSPORTATION

Alaedin Moubayed
PROJECT ENGINEER

BRIDGE NO. 55-1097G
POST MILE R0.39

E22-N605/405 SEPARATION (REPLACE)
DECK CONTOURS

DESIGN DETAIL SHEET (ENGLISH) (REV. 2/25/05)

ORIGINAL SCALE IN INCHES FOR REDUCED PLANS 0 1 2 3

CU 12235
EA 071631

DISREGARD PRINTS BEARING EARLIER REVISION DATES

REVISION DATES (PRELIMINARY STAGE ONLY) 02/18/08 06/20/08 09/17/08 04/06/09 07/27/09

SHEET 3 OF 31

FILE => 55-1097g-d-dc01.dgn

USERNAME => trlenard DATE PLOTTED => 03-FEB-2010 TIME PLOTTED => 05:29

DIST	COUNTY	ROUTE	POST MILES TOTAL PROJECT	SHEET No	TOTAL SHEETS
12	Ora	22,405, 605	R0.3/R0.9, 22.3/24.0,3.0/R1.6	1544	1929

Khaled Allam 07-27-09
REGISTERED CIVIL ENGINEER DATE

2-1-10
PLANS APPROVAL DATE

REGISTERED PROFESSIONAL ENGINEER Khaled Allam No. 67110 Exp. 09-30-10 CIVIL STATE OF CALIFORNIA

The State of California or its officers or agents shall not be responsible for the accuracy or completeness of electronic copies of this plan sheet.

OCTA
550 SOUTH MAIN STREET
ORANGE, CA 92863

PBS&J
625 THE CITY DRIVE SOUTH, SUITE 200
ORANGE, CA 92868

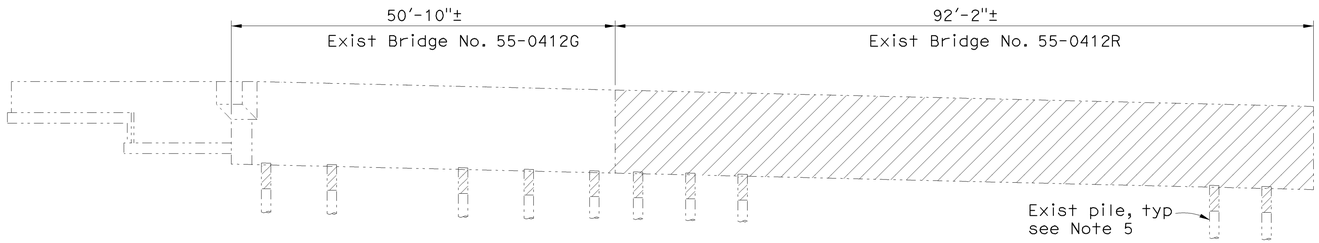

ABUTMENT 1 ELEVATION
1" = 10'

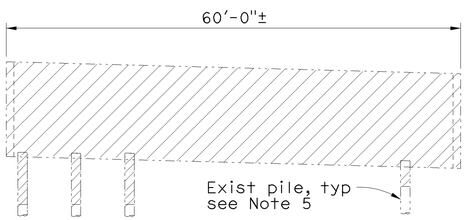

ABUTMENT 5 ELEVATION
1" = 10'

EXISTING PILING REMOVAL LIMITS

Existing Bridge Locations:	Abut 1	Abut 5	Bent 2	Bent 3	Bent 4
Exist Pile Removal Elevation:	22.30	34.10*	3.20	6.20	6.20

* Existing Piles in conflict with 405-605 HOV Connector Abutment 16 shall be removed to Elevation 18.00.

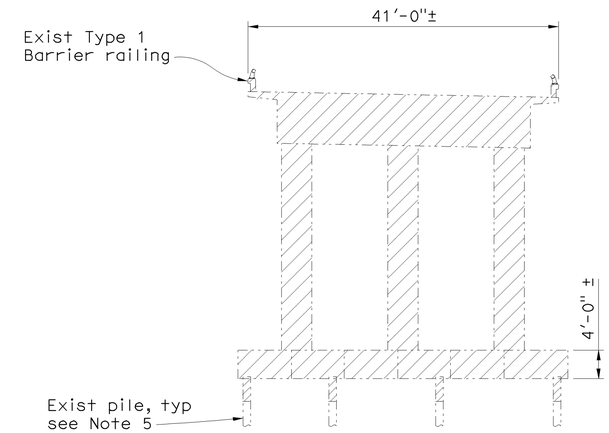

TYPICAL SECTION
1" = 10'

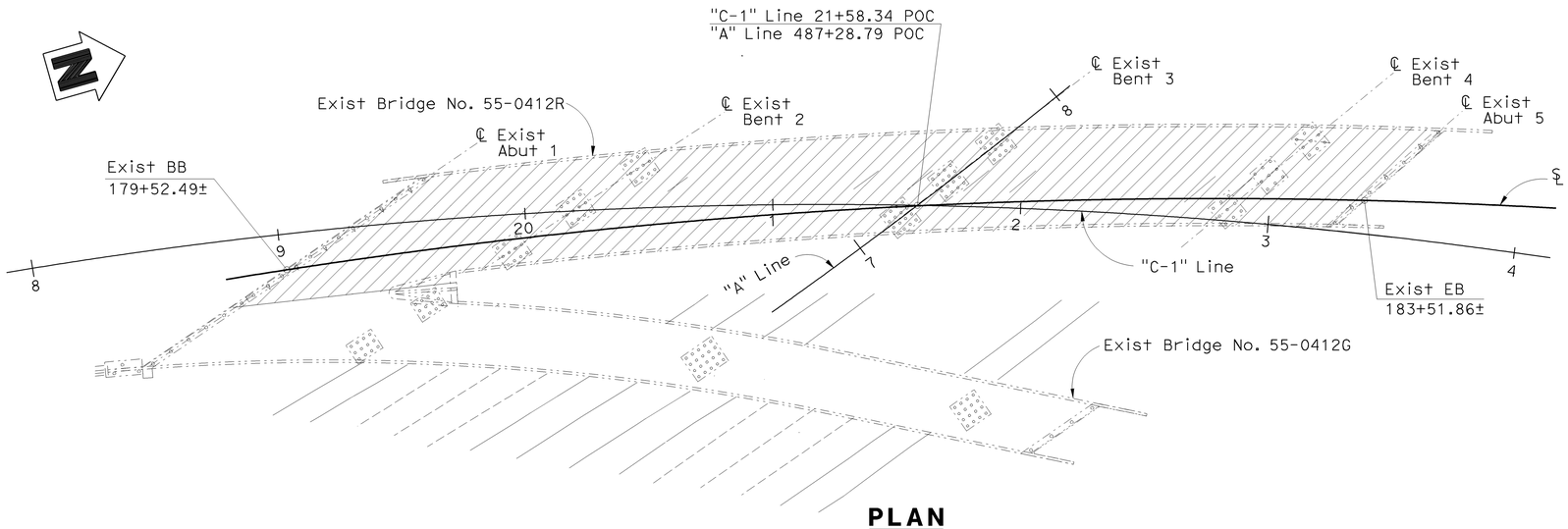

PLAN
1" = 30'

LEGEND

Bridge Removal, Location E

Exist Structure

NOTES

1. Exist Abut 1 shown.
2. Exist Bent 3 shown.
3. All piles not shown.
4. For dimensions, details and information not shown, see As-Built plans.
5. For existing piles removal, see "Existing Piling Removal Limits" table.

NOTE:
THE CONTRACTOR SHALL VERIFY ALL CONTROLLING FIELD DIMENSIONS BEFORE ORDERING OR FABRICATING ANY MATERIAL.

Sudhakar Vatti
DESIGN OVERSIGHT Sudhakar Vatti
8-10-09
SIGN OFF DATE

	BY	CHECKED
DESIGN	K. Allam/Y. Deng	P. Morel
DETAILS	N. Shu	P. Morel
QUANTITIES	V. Nong	L. Khaleghi

PREPARED FOR THE STATE OF CALIFORNIA DEPARTMENT OF TRANSPORTATION

Alaedin Moubayed
PROJECT ENGINEER

BRIDGE NO. 55-1097G
POST MILE R0.39

E22-N605/405 SEPARATION (REPLACE)
BRIDGE REMOVAL PLAN

DESIGN DETAIL SHEET (ENGLISH) (REV. 2/25/05)

ORIGINAL SCALE IN INCHES FOR REDUCED PLANS 0 1 2 3

CU 12235
EA 071631

DISREGARD PRINTS BEARING EARLIER REVISION DATES

REVISION DATES (PRELIMINARY STAGE ONLY) 02/08/08 06/06/08 09/17/08 04/06/09 07/27/09

SHEET 4 OF 31

FILE => 55-1097g-d-rem01.dgn

USERNAME => trlenard DATE PLOTTED => 03-FEB-2010 TIME PLOTTED => 05:29

DIST	COUNTY	ROUTE	POST MILES TOTAL PROJECT	SHEET No	TOTAL SHEETS
12	Ora	22,405, 605	R0.3/R0.9, 22.3/24.0,3.0/R1.6	1545	1929

Khaled Allam 07-27-09
REGISTERED CIVIL ENGINEER DATE

2-1-10
PLANS APPROVAL DATE

REGISTERED PROFESSIONAL ENGINEER Khaled Allam No. 67110 Exp. 09-30-10 CIVIL STATE OF CALIFORNIA

The State of California or its officers or agents shall not be responsible for the accuracy or completeness of electronic copies of this plan sheet.

OCTA
550 SOUTH MAIN STREET
ORANGE, CA 92863

PBS&J
625 THE CITY DRIVE SOUTH, SUITE 200
ORANGE, CA 92868

PILE DATA TABLE

Location	Pile Type	Nominal Resistance		Design Tip Elevation (ft)	Specified Tip Elevation (ft)	Nominal Driving Resistance (kips)
		Compression (kips)	Tension (kips)			
Abut 1	Class 200 (Alt "X")	340	0	-38(a), -32(c) -6(d)	-38	340
Bent 2	Class 200 (Alt "W")	340	180	-46(a), -40(b) -32(c), -24(d)	-46	340
Bent 3	Class 200 (Alt "W")	330	180	-45(a), -40(b) -28(c), -21(d)	-45	330
Bent 4	Class 200 (Alt "W")	320	170	-44(a), -38(b) -28(c), -22(d)	-44	320
Abut 5	Class 200 (Alt "X")	300	0	-30(a), -28(c) +7(d)	-30	300

Notes:
(1) Design tip elevations are controlled by the following demands: (a) Compression, (b) Tension, (c)Settlement, and (d) Lateral Loads.
(2) The specified tip elevation shall not be raised above the design tip elevations for tension, settlement, and lateral load.

BASIS OF COORDINATES

Bearings and coordinates as shown hereon are in terms of the California Cordinate System of 1983 (Epoch 1991.35), Zone 6; based locally upon the following County of Orange Control Stations as published by the County of Orange

Name	Northing (ft)	Easting (ft)
3756	2,230,831.57	6,007,513.47
3898R1	2,236,670.48	6,003,468.80

NOTES

1. All piles not shown.
2. Locations of existing structure foundations are approximate.
3. For 405/605 Hov Conn & E22-N405/405 Separation footing, see "405/605 HOV Conn" & "E22-N405/405 Separation (Replace)" plans, respectively.
4. For curve data, see "General Plan" sheet

BENCHMARKS

Monument: 1A-144-04

Described by OCS 2005 - Found 3¾" OCS aluminum benchmark disk stamped "1A-144-04", set in the southwesterly corner of a 4.4 ft by 4.4 ft concrete catch basin. Monument is located in the northeasterly corner of the intersection of Seal Beach Boulevard and St. Cloud Drive, 44 ft easterly of the centerline of Seal Beach Boulevard and 58 ft northerly of the centerline of St. Cloud Dr. Monument is set level with the sidewalk.

Elevation: 15.370 feet

Monument: 1A-123-70

Described by OCS 2002 - Found 3¾" OCS aluminum benchmark disk stamped "1A-123-70", set in a concrete channel wall. Monument is located 0.6 miles northerly along Seal Beach Boulevard from its intersection with Westminister Avenue, 65 ft. easterly from the centerline of Seal Beach Boulevard and 1 ft. northeasterly of the south end of a concrete headwall. Monument is down 1.5 ft from the top of the headwall.

Elevation: 11.631 feet

LEGEND

- XX.XX — Denotes bottom of footing elevation
- XX.XX± — Denotes bottom of existing footing elevation
- Bridge removal, Location E
- Denotes 16" dia pipe pile
- Denotes vertical pile
- Denotes battered pile (1:3)
- Denotes exist pile
- Existing structure
- New structure

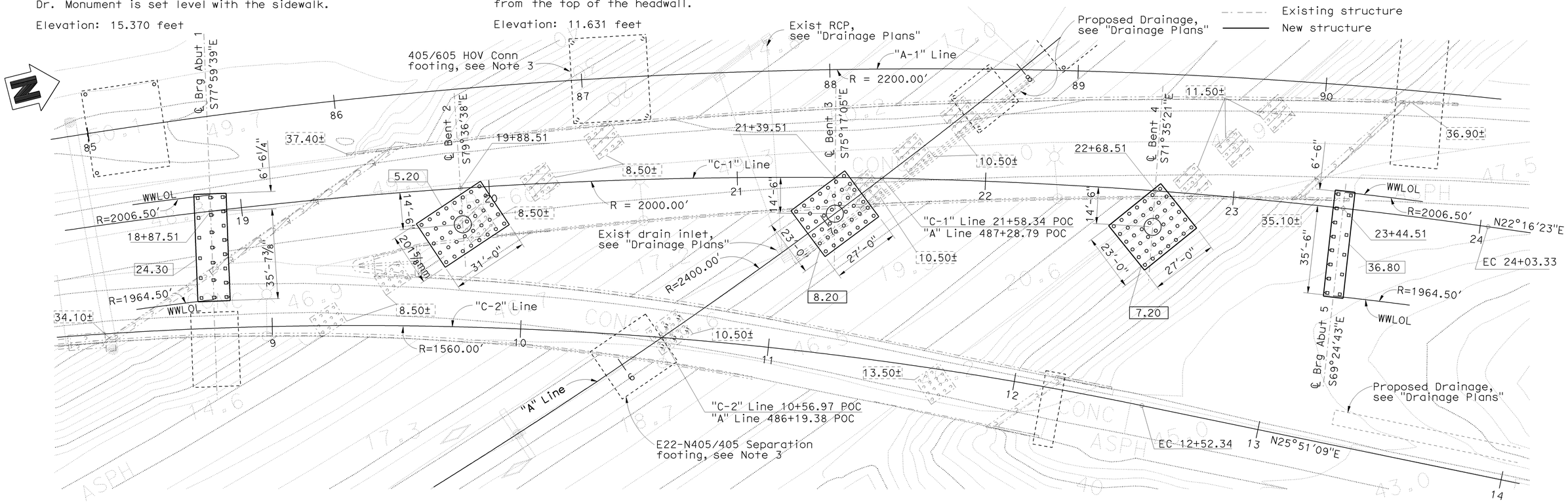

PLAN

1" = 20'

NOTE:
THE CONTRACTOR SHALL VERIFY ALL CONTROLLING FIELD DIMENSIONS BEFORE ORDERING OR FABRICATING ANY MATERIAL.

GEOTECHNICAL PROFESSIONAL 07-27-09 APPROVAL DATE

Sudhakar Vatti
DESIGN OVERSIGHT Sudhakar Vatti
8-10-09
SIGN OFF DATE

SCALE:	VERT.DATUM NAVD88	HORZ.DATUM CCS83	
PHOTOGRAMMETRY AS OF: 12/07		ALIGNMENT TIES	
SURVEYED	BY CALTRANS	DRAFTED	BY AE, Inc
FIELD CHECKED	BY AE, Inc	CHECKED	BY AE, Inc

DESIGN	BY K. Allam/Y. Deng	CHECKED	P. Morel
DETAILS	BY N. Shu	CHECKED	P. Morel
QUANTITIES	BY V. Nong	CHECKED	L. Khaleghi

PREPARED FOR THE STATE OF CALIFORNIA DEPARTMENT OF TRANSPORTATION

Alaedin Moubayed
PROJECT ENGINEER

BRIDGE NO. 55-1097G
POST MILE R0.39

E22-N605/405 SEPARATION (REPLACE)
FOUNDATION PLAN

FOUNDATION PLAN SHEET (ENGLISH) (REV. 2-25-05)

ORIGINAL SCALE IN INCHES FOR REDUCED PLANS 0 1 2 3

CU 12235
EA 071631

DISREGARD PRINTS BEARING EARLIER REVISION DATES

REVISION DATES (PRELIMINARY STAGE ONLY) 02/08/08 03/07/08 03/27/08 04/08/09 07/27/09

SHEET 5 OF 31

FILE => 55-1097g-e-fdp101.dgn

USERNAME => trlenard DATE PLOTTED => 03-FEB-2010 TIME PLOTTED => 05:29

DIST	COUNTY	ROUTE	POST MILES TOTAL PROJECT	SHEET No	TOTAL SHEETS
12	Ora	22,405, 605	R0.3/R0.9, 22.3/24.0,3.0/R1.6	1546	1929

Khaled Allam 07-27-09
REGISTERED CIVIL ENGINEER DATE

2-1-10
PLANS APPROVAL DATE

REGISTERED PROFESSIONAL ENGINEER Khaled Allam No. 67110 Exp. 09-30-10 CIVIL STATE OF CALIFORNIA

The State of California or its officers or agents shall not be responsible for the accuracy or completeness of electronic copies of this plan sheet.

OCTA
550 SOUTH MAIN STREET
ORANGE, CA 92863

PBS&J
625 THE CITY DRIVE SOUTH, SUITE 200
ORANGE, CA 92868

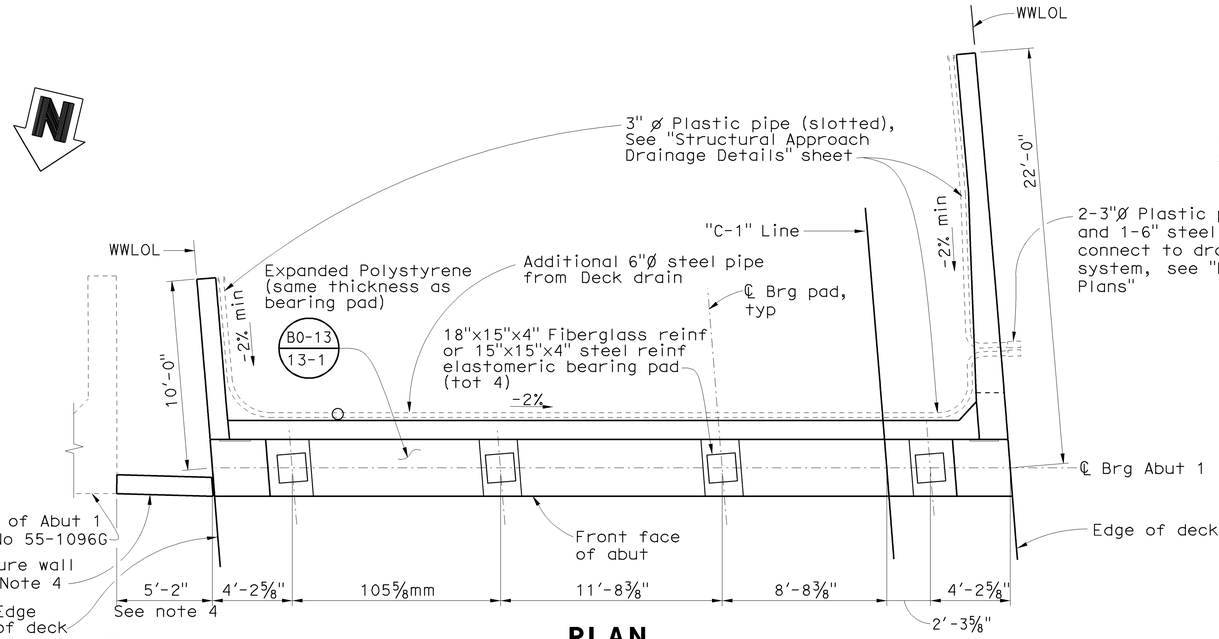

PLAN
¼" = 1'-0"

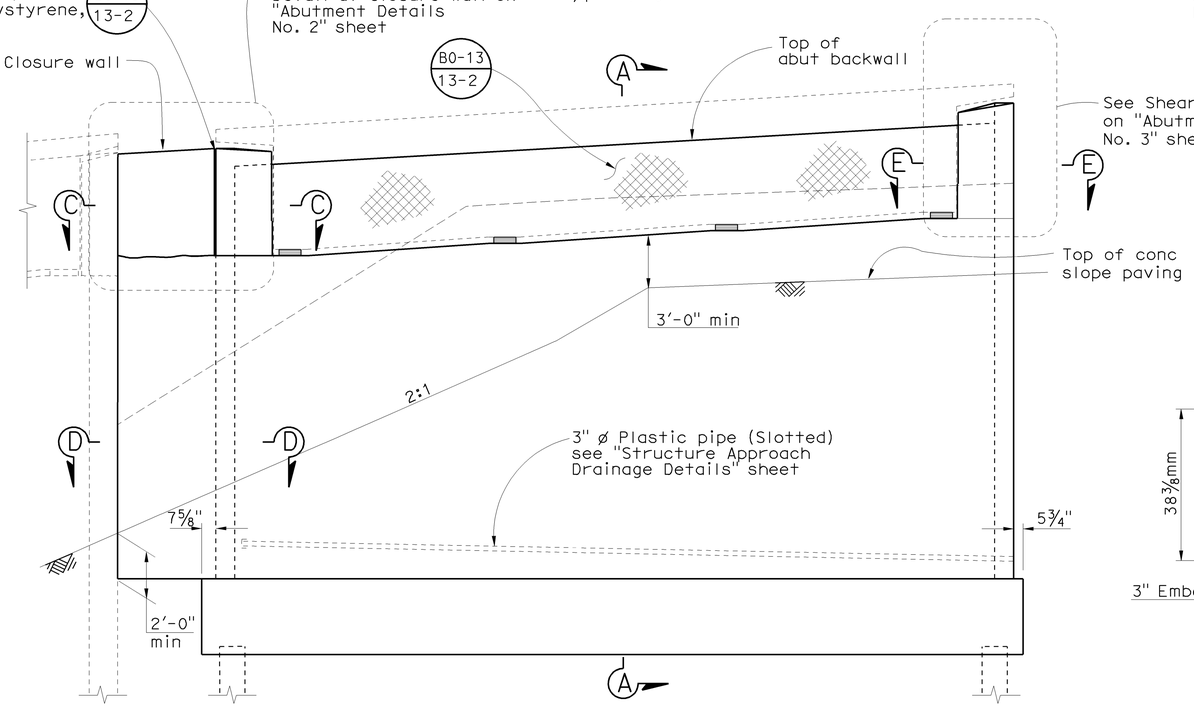

ELEVATION
¼" = 1'-0"

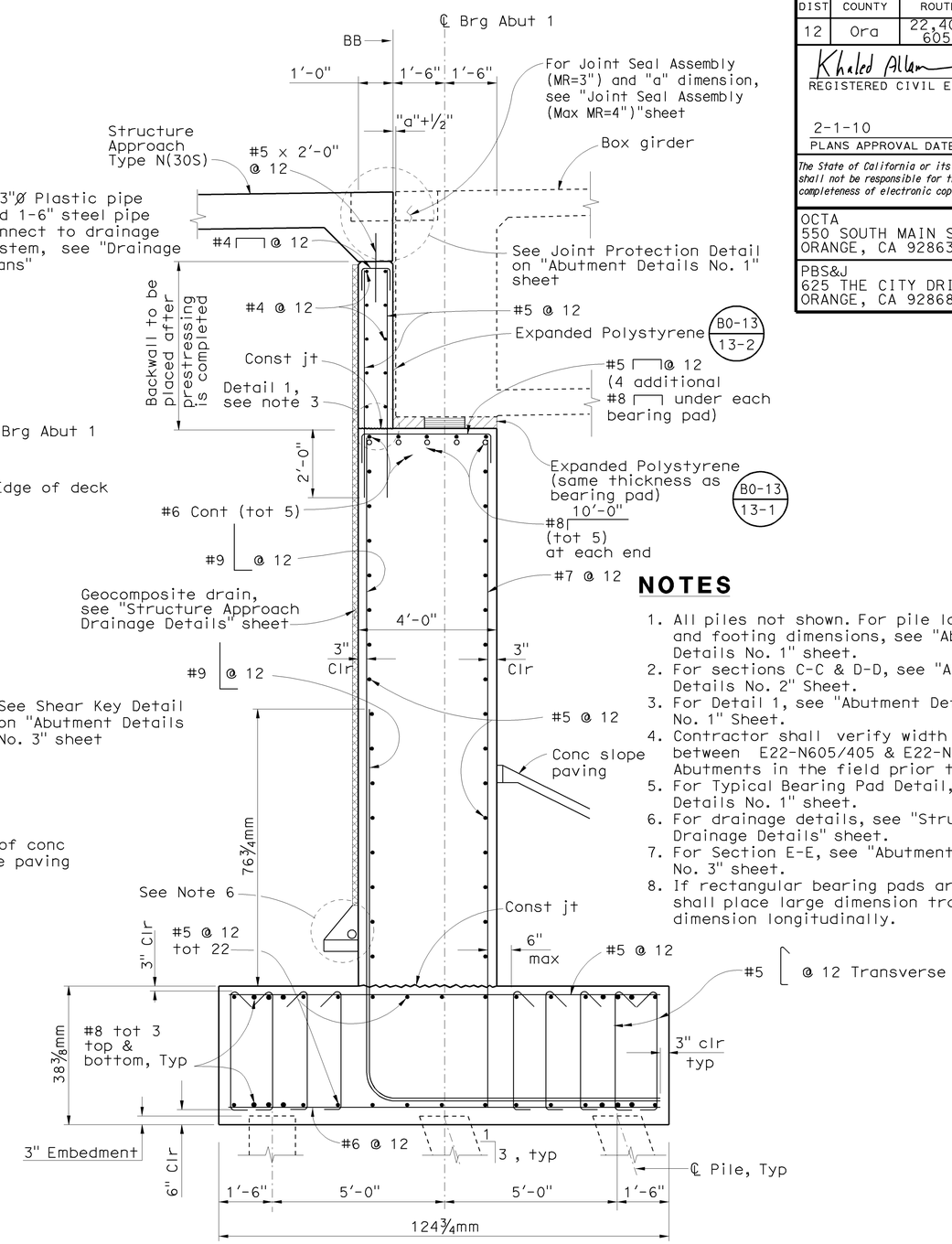

SECTION A-A
½" = 1'-0"

NOTES

1. All piles not shown. For pile locations and footing dimensions, see "Abutment Details No. 1" sheet.
2. For sections C-C & D-D, see "Abutment Details No. 2" Sheet.
3. For Detail 1, see "Abutment Details No. 1" Sheet.
4. Contractor shall verify width of closure wall between E22-N605/405 & E22-N405/405 Abutments in the field prior to construction.
5. For Typical Bearing Pad Detail, see "Abutment Details No. 1" sheet.
6. For drainage details, see "Structure Approach Drainage Details" sheet.
7. For Section E-E, see "Abutment Details No. 3" sheet.
8. If rectangular bearing pads are selected, Contractor shall place large dimension transversely and smaller dimension longitudinally.

NOTE:
THE CONTRACTOR SHALL VERIFY ALL CONTROLLING FIELD DIMENSIONS BEFORE ORDERING OR FABRICATING ANY MATERIAL.

Sudhakar Vatti
DESIGN OVERSIGHT Sudhakar Vatti
8-10-09
SIGN OFF DATE

	BY	CHECKED
DESIGN	K. Allam/Y. Deng	P. Morel
DETAILS	N. Shu	P. Morel
QUANTITIES	V. Nong	L. Khaleghi

PREPARED FOR THE STATE OF CALIFORNIA DEPARTMENT OF TRANSPORTATION

Alaedin Moubayed
PROJECT ENGINEER

BRIDGE NO. 55-1097G
POST MILE R0.39

E22-N605/405 SEPARATION (REPLACE)
ABUTMENT 1 LAYOUT

DESIGN DETAIL SHEET (ENGLISH) (REV. 2/25/05)

ORIGINAL SCALE IN INCHES FOR REDUCED PLANS 0 1 2 3

CU 12235
EA 071631

DISREGARD PRINTS BEARING EARLIER REVISION DATES

REVISION DATES (PRELIMINARY STAGE ONLY) 02/28/08 06/06/08 09/17/08 04/06/09 07/27/09

SHEET 6 OF 31

FILE => 55-1097g-f-ab1o01.dgn

USERNAME => friehard DATE PLOTTED => 03-FEB-2010 TIME PLOTTED => 05:29

DIST	COUNTY	ROUTE	POST MILES TOTAL PROJECT	SHEET No	TOTAL SHEETS
12	Ora	22,405, 605	R0.3/R0.9, 22.3/24.0,3.0/R1.6	1547	1929

Khaled Allam 07-27-09
REGISTERED CIVIL ENGINEER DATE

2-1-10
PLANS APPROVAL DATE

REGISTERED PROFESSIONAL ENGINEER Khaled Allam No. 67110 Exp. 09-30-10 CIVIL STATE OF CALIFORNIA

The State of California or its officers or agents shall not be responsible for the accuracy or completeness of electronic copies of this plan sheet.

OCTA
550 SOUTH MAIN STREET
ORANGE, CA 92863

PBS&J
625 THE CITY DRIVE SOUTH, SUITE 200
ORANGE, CA 92868

NOTES

1. All piles are not shown. For pile location and footing dimensions, see "Abutment Details No. 1" sheet.
2. For Detail 1 sheet, see "Abutment Details No. 1" sheet.
3. For Typical Bearing Pad Detail, see "Abutment Details No. 1" sheet
4. If rectangular bearing pads are selected, Contractor shall place large dimension transversely and small dimension longitudinally.

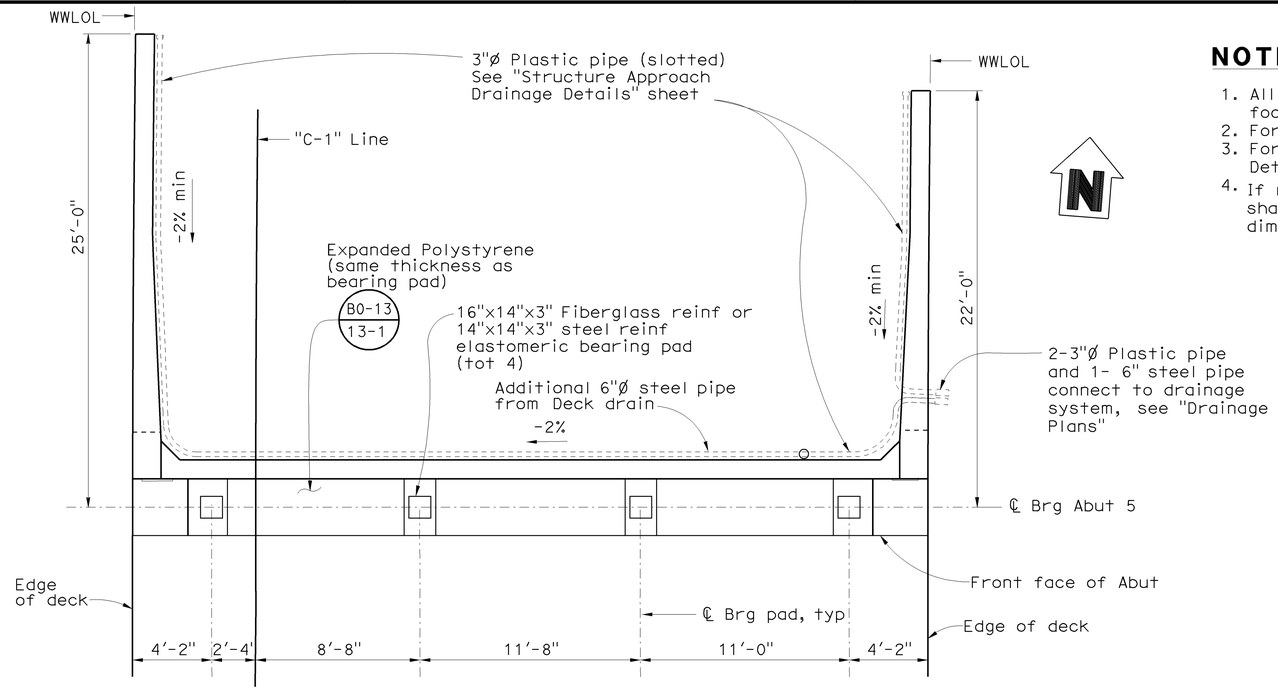

PLAN
1/4" = 1'-0"

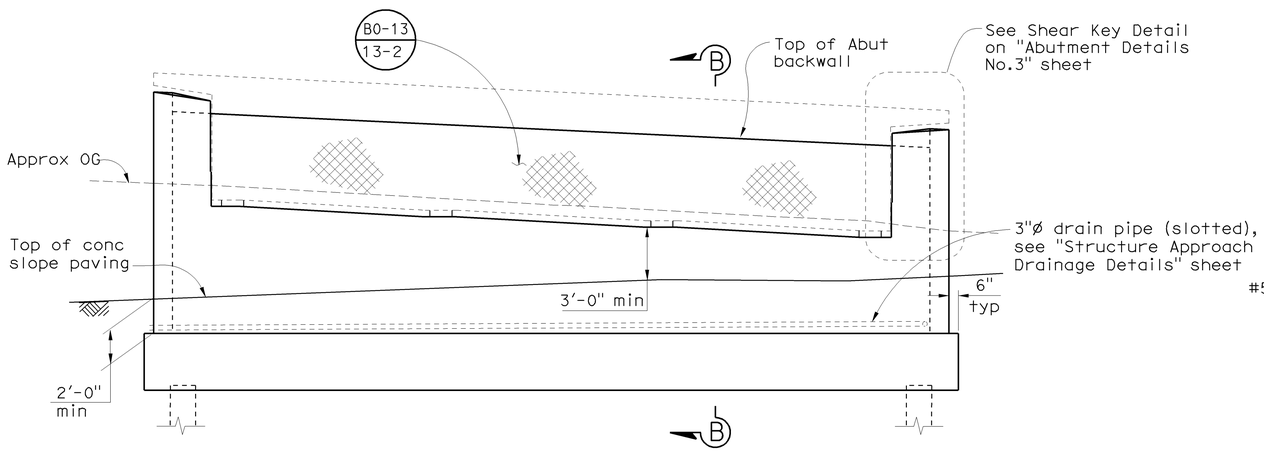

ELEVATION
1/4" = 1'-0"

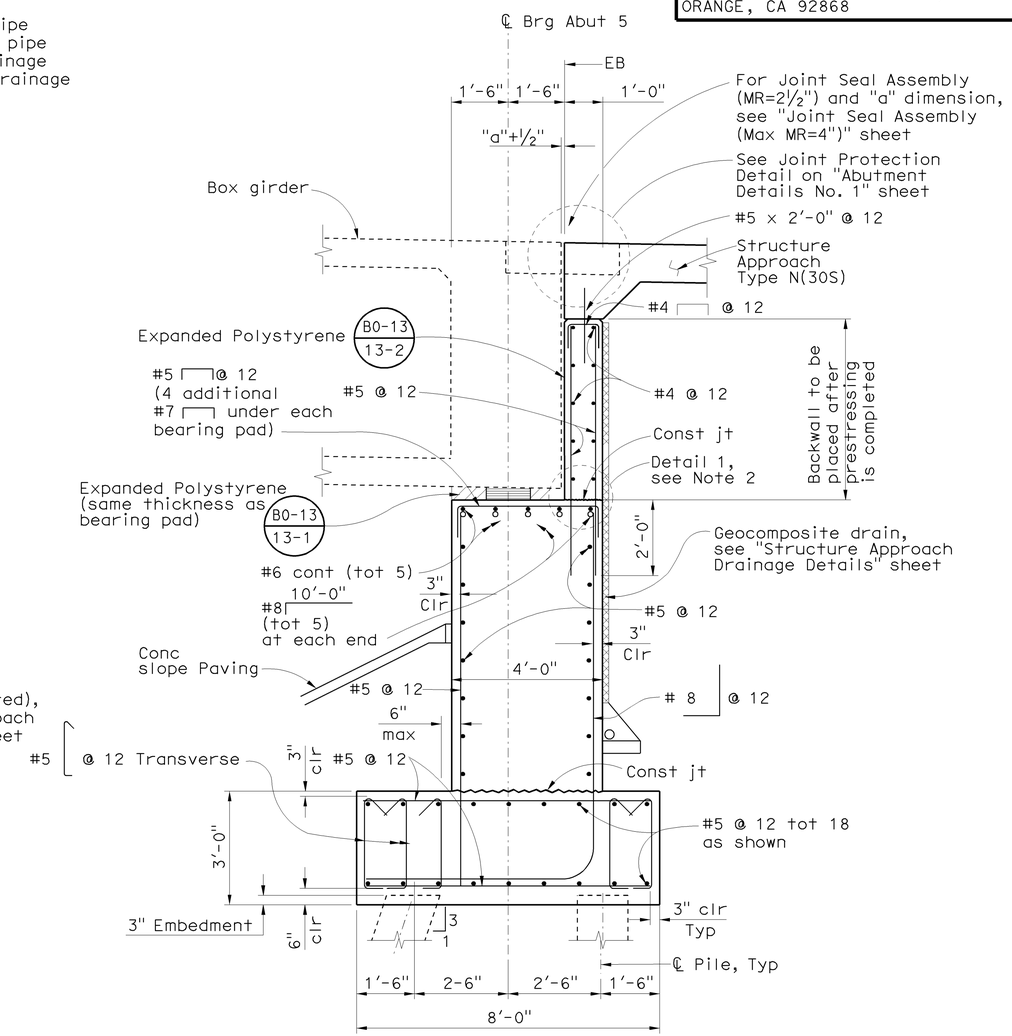

SECTION B-B
1/2" = 1'-0"

Sudhakar Vatti
DESIGN OVERSIGHT Sudhakar Vatti
8-10-09
SIGN OFF DATE

	BY	CHECKED
DESIGN	E. Cheung/ V. Nong	P. Morel
DETAILS	N. Shu	P. Morel
QUANTITIES	V. Nong	L. Khaleghi

PREPARED FOR THE STATE OF CALIFORNIA DEPARTMENT OF TRANSPORTATION

Alaedin Moubayed
PROJECT ENGINEER

BRIDGE NO. 55-1097G
POST MILE R0.39

E22-N605/405 SEPARATION (REPLACE)
ABUTMENT 5 LAYOUT

DESIGN DETAIL SHEET (ENGLISH) (REV. 2/25/05)

ORIGINAL SCALE IN INCHES FOR REDUCED PLANS 0 1 2 3

CU 12235
EA 071631

DISREGARD PRINTS BEARING EARLIER REVISION DATES
REVISION DATES (PRELIMINARY STAGE ONLY) 02/18/08 06/20/08 09/17/08 04/06/09 07/27/09

SHEET 7 OF 31

FILE => 55-1097g-f-ab1o05.dgn

USERNAME => trlenard DATE PLOTTED => 03-FEB-2010 TIME PLOTTED => 05:29

DIST	COUNTY	ROUTE	POST MILES TOTAL PROJECT	SHEET No	TOTAL SHEETS
12	Ora	22,405, 605	R0.3/R0.9, 22.3/24.0,3.0/R1.6	1548	1929

Khaled Allam 07-27-09
REGISTERED CIVIL ENGINEER DATE

2-1-10
PLANS APPROVAL DATE

REGISTERED PROFESSIONAL ENGINEER Khaled Allam No. 67110 Exp. 09-30-10 CIVIL STATE OF CALIFORNIA

The State of California or its officers or agents shall not be responsible for the accuracy or completeness of electronic copies of this plan sheet.

OCTA
550 SOUTH MAIN STREET
ORANGE, CA 92863

PBS&J
625 THE CITY DRIVE SOUTH, SUITE 200
ORANGE, CA 92868

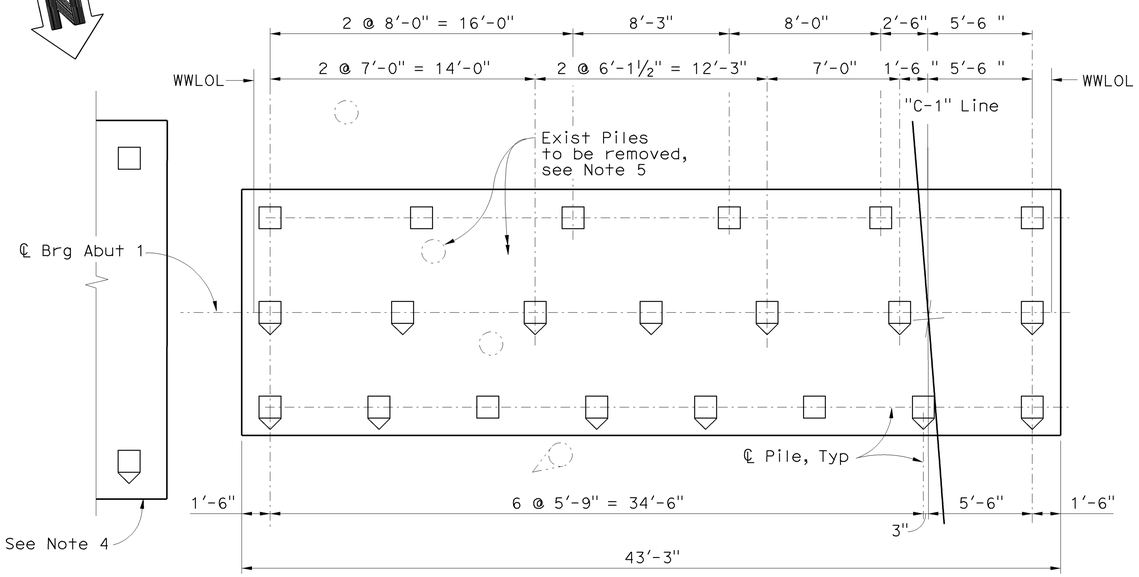

ABUTMENT 1 PILE LAYOUT

¼" = 1'-0"

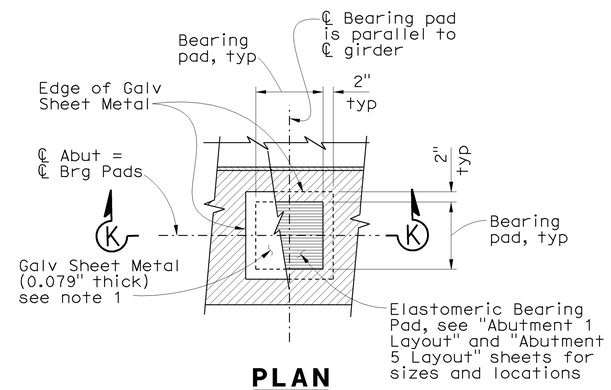

PLAN

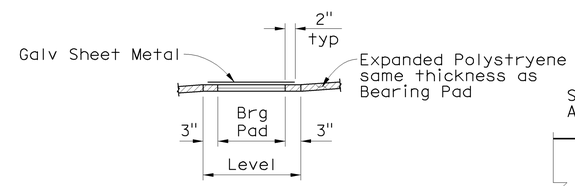

SECTION K-K

TYPICAL BEARING PAD DETAIL

No Scale

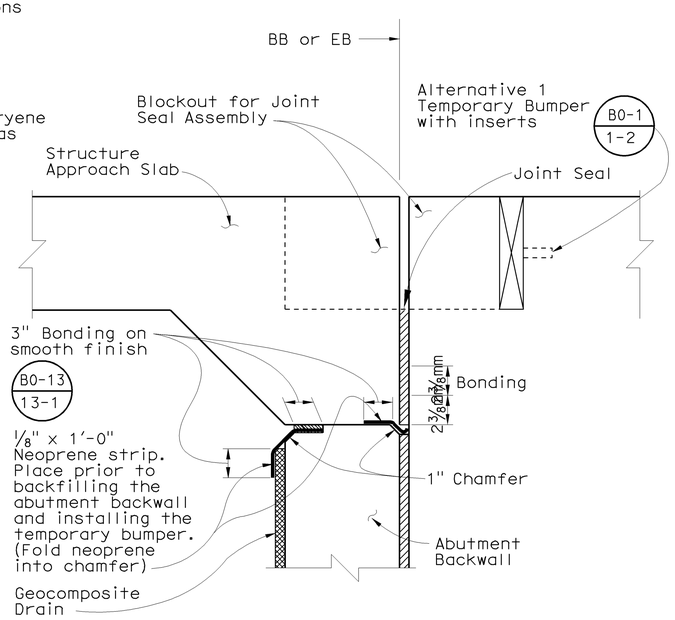

JOINT PROTECTION DETAIL

No Scale

LEGEND

- Denotes vertical pile
- Denotes battered pile (1:3)
- Denotes exist pile

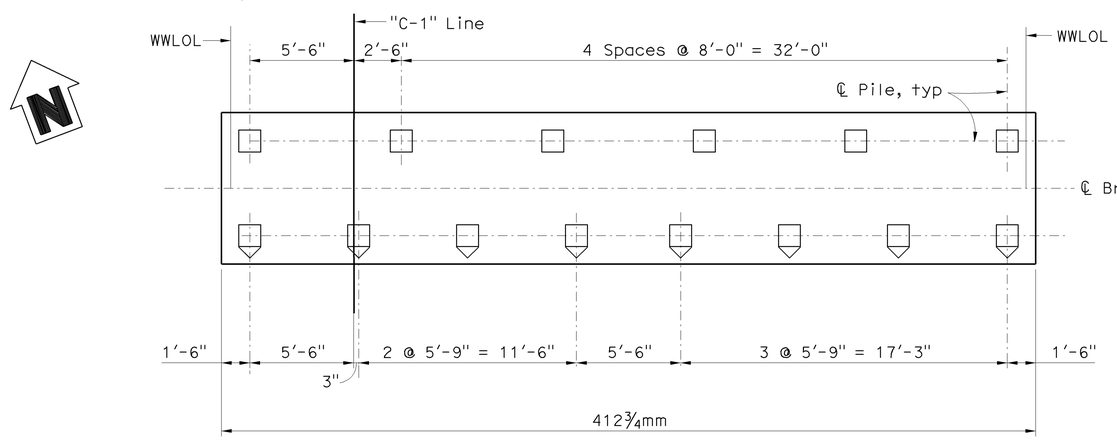

ABUTMENT 5 PILE LAYOUT

¼" = 1'-0"

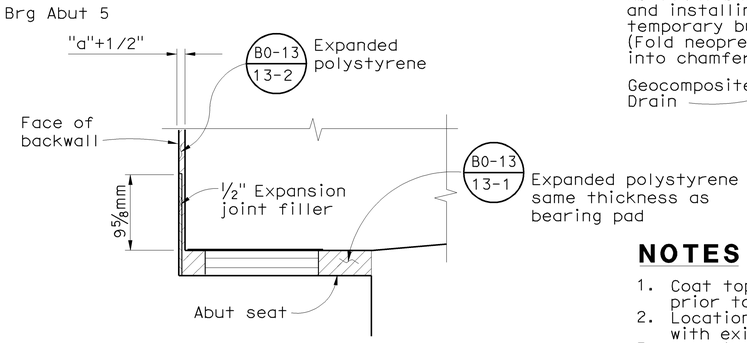

DETAIL 1

1" = 1'-0"

NOTES

1. Coat top of Bearing Pad with silicone grease prior to placing sheet metal.
2. Location of piling may be adjusted to avoid conflicts with existing pile, as permitted by the Engineer.
3. Location of existing piling and foundation is approximate.
4. For details, see "E22-N405/405 Separation (Replace)" plans.
5. For limits of pile removal, see "Bridge Removal Plan" sheet.

NOTE:
THE CONTRACTOR SHALL VERIFY ALL CONTROLLING FIELD DIMENSIONS BEFORE ORDERING OR FABRICATING ANY MATERIAL.

Sudhakar Vatti
DESIGN OVERSIGHT Sudhakar Vatti
8-10-09
SIGN OFF DATE

	BY	CHECKED
DESIGN	K. Allam/Y. Deng	P. Morel
DETAILS	N. Shu	P. Morel
QUANTITIES	V. Nong	L. Khaleghi

PREPARED FOR THE STATE OF CALIFORNIA DEPARTMENT OF TRANSPORTATION

Alaedin Moubayed
PROJECT ENGINEER

BRIDGE NO. 55-1097G
POST MILE R0.39

E22-N605/405 SEPARATION (REPLACE)
ABUTMENT DETAILS NO. 1

DESIGN DETAIL SHEET (ENGLISH) (REV. 2/25/05)

ORIGINAL SCALE IN INCHES FOR REDUCED PLANS 0 1 2 3

CU 12235
EA 071631

DISREGARD PRINTS BEARING EARLIER REVISION DATES

REVISION DATES (PRELIMINARY STAGE ONLY) 02/18/08 06/02/08 09/17/08 04/06/09 07/27/09

SHEET 8 OF 31

FILE => 55-1097g-f-adt01.dgn

USERNAME => trlenard DATE PLOTTED => 03-FEB-2010 TIME PLOTTED => 05:29

DIST	COUNTY	ROUTE	POST MILES TOTAL PROJECT	SHEET No	TOTAL SHEETS
12	Ora	22,405, 605	R0.3/R0.9, 22.3/24.0,3.0/R1.6	1549	1929

Khaled Allam 07-27-09
REGISTERED CIVIL ENGINEER DATE

2-1-10
PLANS APPROVAL DATE

REGISTERED PROFESSIONAL ENGINEER Khaled Allam No. 67110 Exp. 09-30-10 CIVIL STATE OF CALIFORNIA

The State of California or its officers or agents shall not be responsible for the accuracy or completeness of electronic copies of this plan sheet.

OCTA
550 SOUTH MAIN STREET
ORANGE, CA 92863

PBS&J
625 THE CITY DRIVE SOUTH, SUITE 200
ORANGE, CA 92868

NOTES:

1. For details not shown, see Section A-A on "Abutment 1 Layout" sheet.
2. Mandatory joint surface to be smooth finished and lined with 15 pound construction paper.
3. Vertical shear key reinforcement (#8 bars) to be galvanized.
4. Shear key and wingwall reinforcement to be discontinuous as shown.

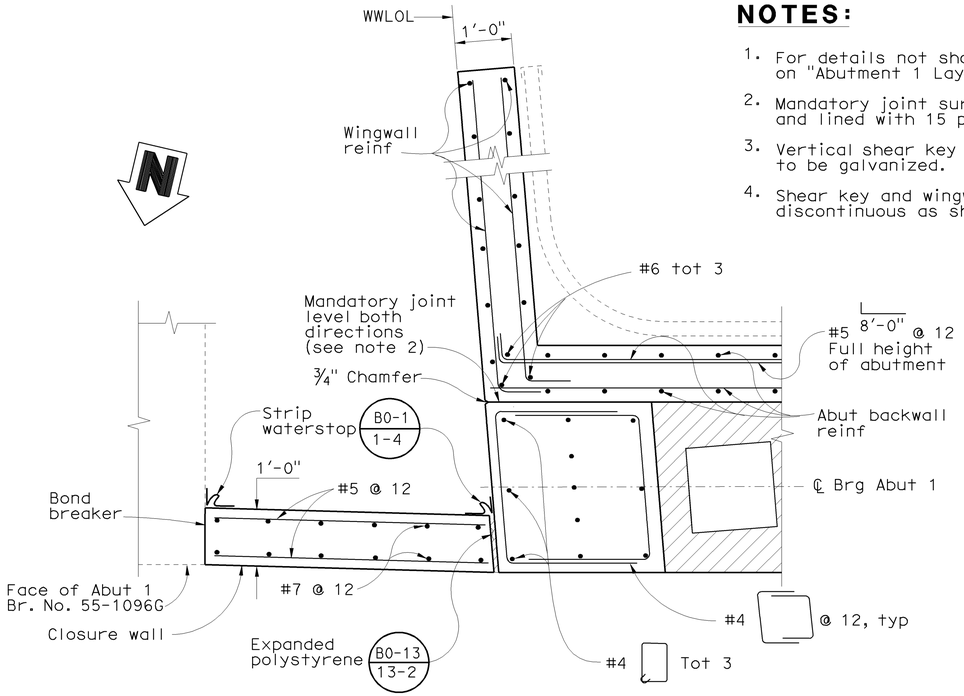

SECTION C-C
3/4" = 1'-0"

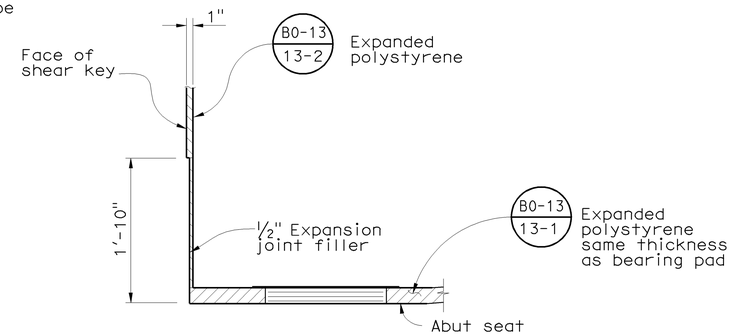

DETAIL 2
No Scale

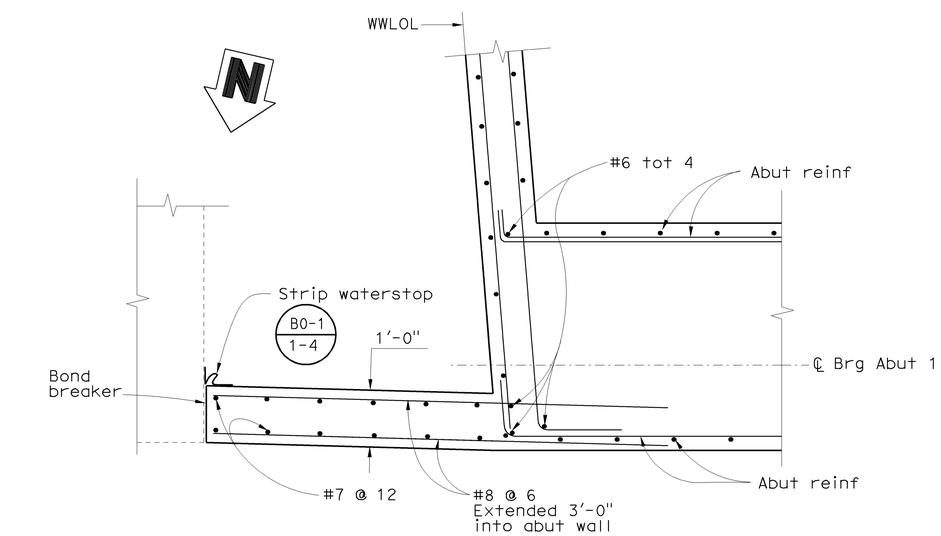

SECTION D-D
3/4" = 1'-0"

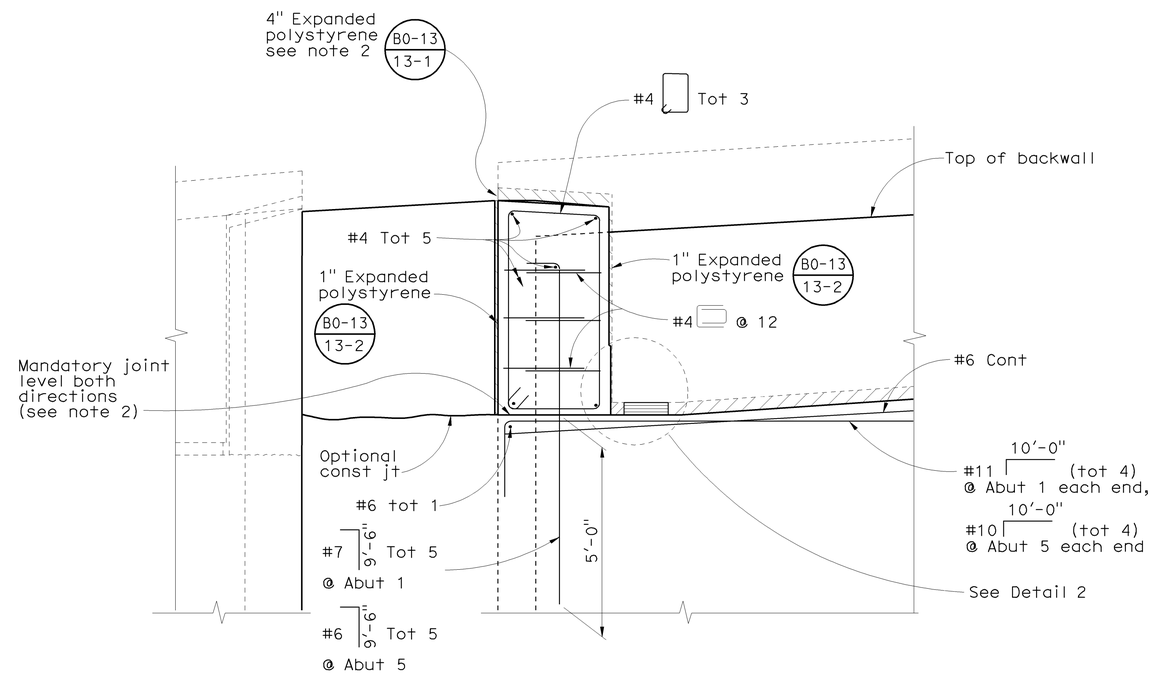

ABUTMENT SHEAR KEY DETAIL AT CLOSURE WALL
1/2" = 1'-0"

NOTE:
THE CONTRACTOR SHALL VERIFY ALL CONTROLLING FIELD DIMENSIONS BEFORE ORDERING OR FABRICATING ANY MATERIAL.

Sudhakar Vatti
DESIGN OVERSIGHT Sudhakar Vatti
8-10-09
SIGN OFF DATE

	BY	CHECKED
DESIGN	E. Cheung / V. Nong	P. Morel
DETAILS	N. Shu	P. Morel
QUANTITIES	V. Nong	L. Khaleghi

PREPARED FOR THE STATE OF CALIFORNIA DEPARTMENT OF TRANSPORTATION

Alaedin Moubayed
PROJECT ENGINEER

BRIDGE NO. 55-1097G
POST MILE R0.39

E22-N605/405 SEPARATION (REPLACE)
ABUTMENT DETAILS NO. 2

DESIGN DETAIL SHEET (ENGLISH) (REV. 2/25/05)

ORIGINAL SCALE IN INCHES FOR REDUCED PLANS 0 1 2 3

CU 12235
EA 071631

DISREGARD PRINTS BEARING EARLIER REVISION DATES
REVISION DATES (PRELIMINARY STAGE ONLY) 02/18/08 05/02/08 09/27/08 04/06/09 07/27/09

SHEET 9 OF 31

FILE => 55-1097g-f-adt02.dgn

USERNAME => trlenard DATE PLOTTED => 03-FEB-2010 TIME PLOTTED => 05:29

DIST	COUNTY	ROUTE	POST MILES TOTAL PROJECT	SHEET No	TOTAL SHEETS
12	Ora	22,405, 605	R0.3/R0.9, 22.3/24.0,3.0/R1.6	1550	1929

Khaled Allam 07-27-09
REGISTERED CIVIL ENGINEER DATE

2-1-10
PLANS APPROVAL DATE

REGISTERED PROFESSIONAL ENGINEER Khaled Allam No. 67110 Exp. 09-30-10 CIVIL STATE OF CALIFORNIA

The State of California or its officers or agents shall not be responsible for the accuracy or completeness of electronic copies of this plan sheet.

OCTA
550 SOUTH MAIN STREET
ORANGE, CA 92863

PBS&J
625 THE CITY DRIVE SOUTH, SUITE 200
ORANGE, CA 92868

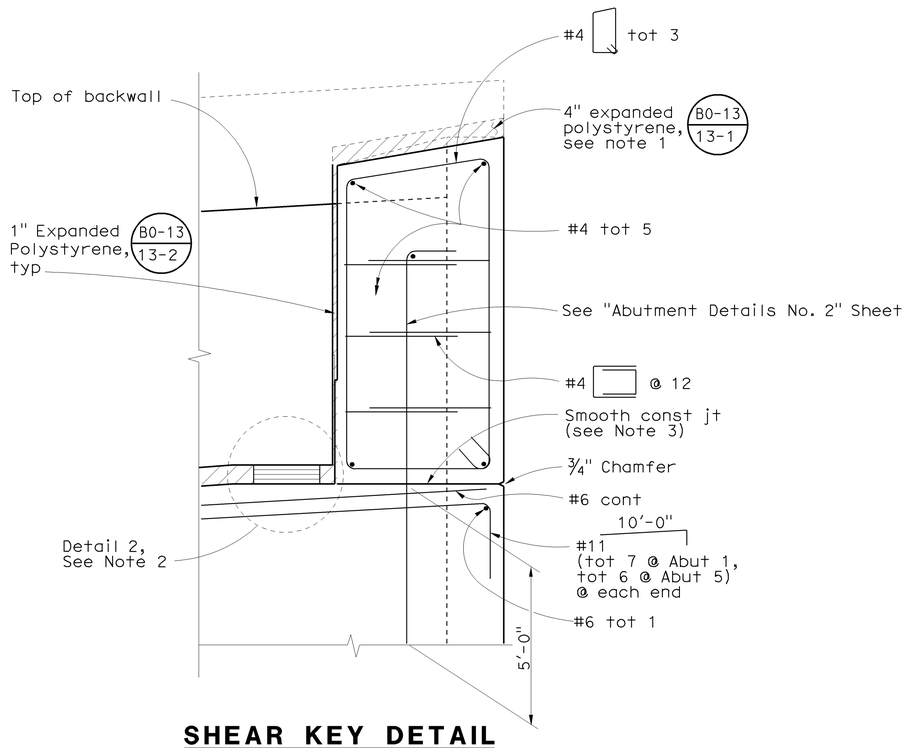

SHEAR KEY DETAIL
½" = 1'-0"

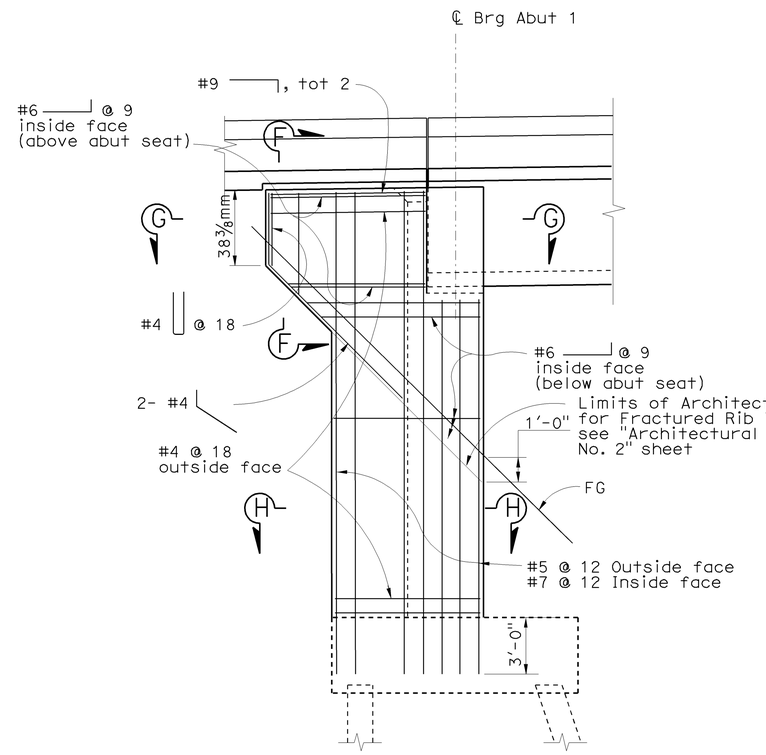

ABUTMENT 1 EAST WING WALL ELEVATION
⅜" = 1'-0"

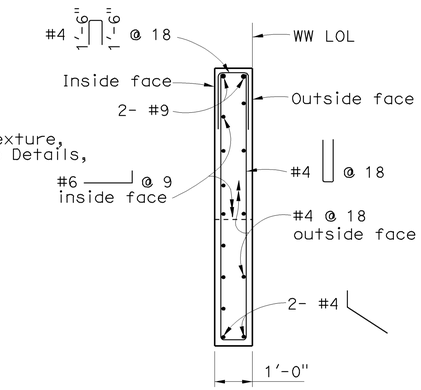

SECTION F-F
½" = 1'-0"

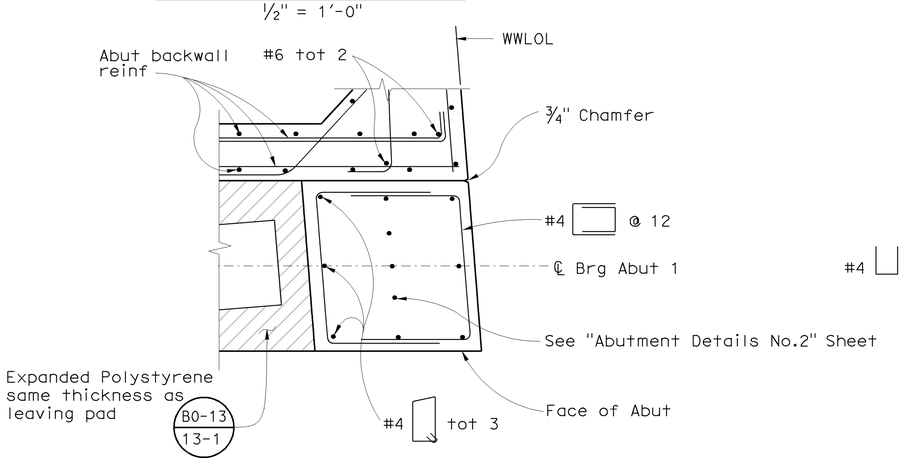

SECTION E-E
½" = 1'-0"

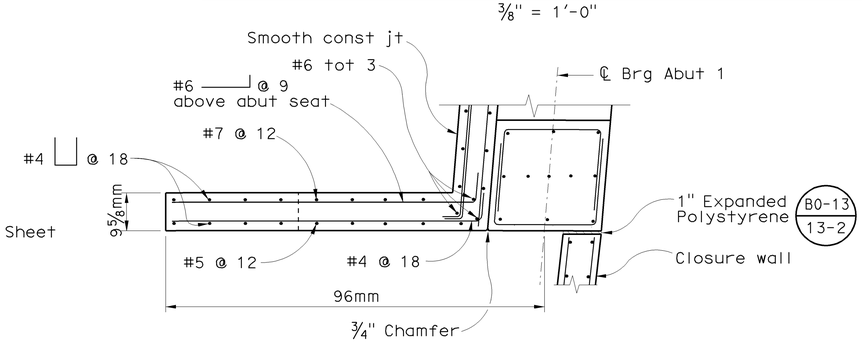

SECTION G-G
½" = 1'-0"

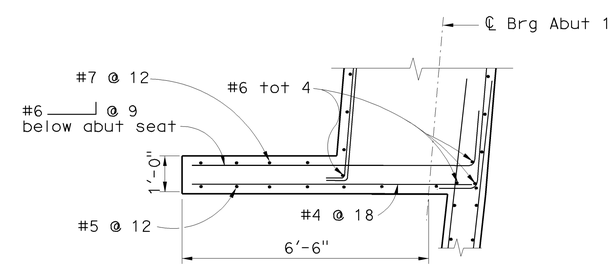

SECTION H-H
½" = 1'-0"

NOTES

1. Outer 6" expanded polystyrene to be removed after construction.
2. For Detail 2, see "Abutment Details No. 2" sheet.
3. For additional notes, see "Abutment Details No. 2" sheet.

Sudhakar Vatti
DESIGN OVERSIGHT Sudhakar Vatti
8-10-09
SIGN OFF DATE

	BY	CHECKED
DESIGN	K. Allam/Y. Deng	P. Morel
DETAILS	N. Shu	P. Morel
QUANTITIES	V. Nong	L. Khaleghi

PREPARED FOR THE STATE OF CALIFORNIA DEPARTMENT OF TRANSPORTATION

Alaedin Moubayed
PROJECT ENGINEER

BRIDGE NO. 55-1097G
POST MILE R0.39

E22-N605/405 SEPARATION (REPLACE)
ABUTMENT DETAILS NO. 3

DESIGN DETAIL SHEET (ENGLISH) (REV. 2/25/05)

ORIGINAL SCALE IN INCHES FOR REDUCED PLANS 0 1 2 3

CU 12235
EA 071631

DISREGARD PRINTS BEARING EARLIER REVISION DATES

REVISION DATES (PRELIMINARY STAGE ONLY) 02/18/08 04/28/08 03/17/08 04/06/09 07/27/09

SHEET 10 OF 31

FILE => 55-1097g-f-adt03.dgn

USERNAME => trlemard DATE PLOTTED => 03-FEB-2010 TIME PLOTTED => 05:30

DIST	COUNTY	ROUTE	POST MILES TOTAL PROJECT	SHEET No	TOTAL SHEETS
12	Ora	22,405, 605	R0.3/R0.9 22.3/24.0,3.0/R1.6	1551	1929

Khaled Allam 07-27-09
REGISTERED CIVIL ENGINEER DATE

2-1-10
PLANS APPROVAL DATE

REGISTERED PROFESSIONAL ENGINEER Khaled Allam No. 67110 Exp. 09-30-10 CIVIL STATE OF CALIFORNIA

The State of California or its officers or agents shall not be responsible for the accuracy or completeness of electronic copies of this plan sheet.

OCTA
550 SOUTH MAIN STREET
ORANGE, CA 92863

PBS&J
625 THE CITY DRIVE SOUTH, SUITE 200
ORANGE, CA 92868

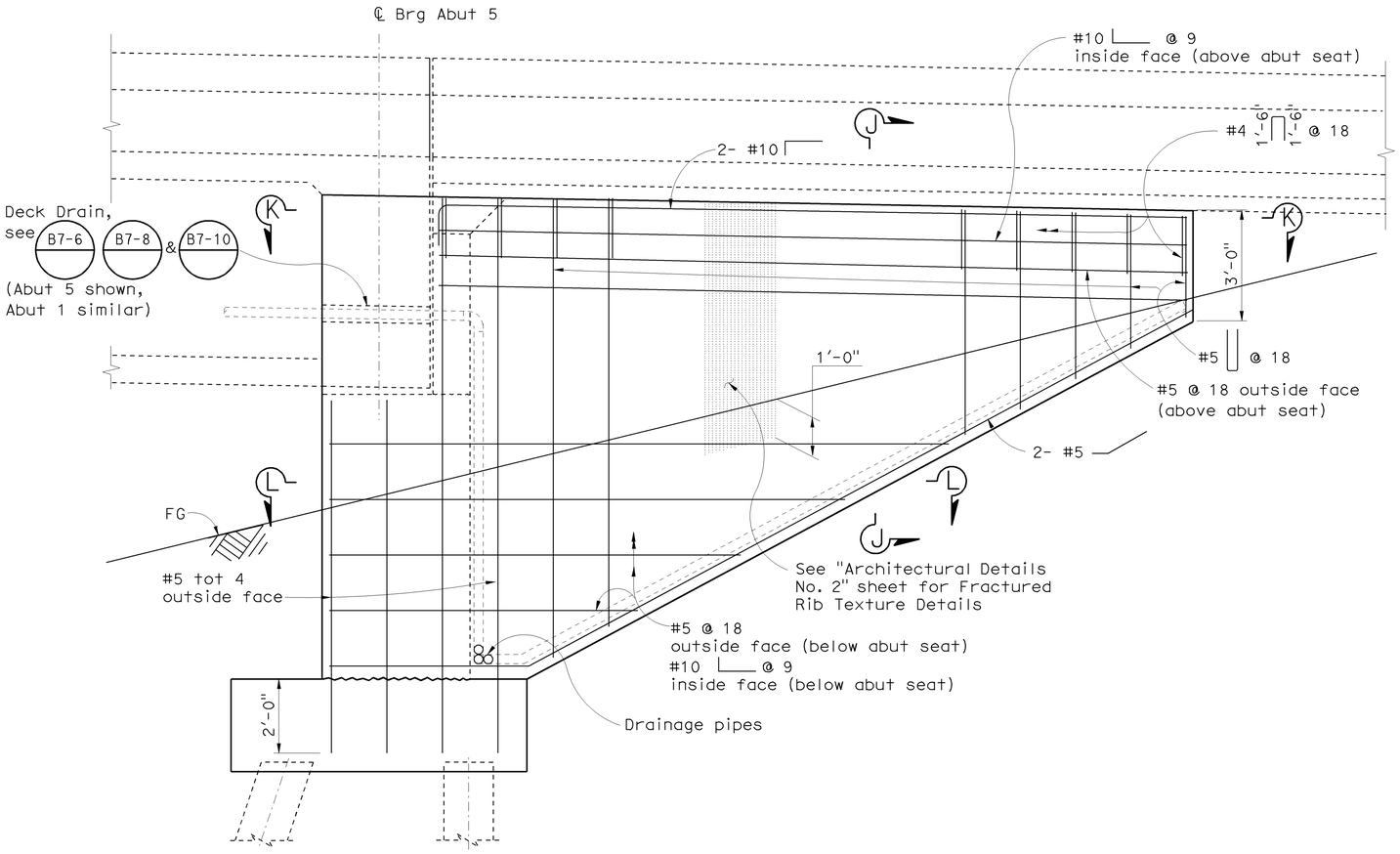

ABUTMENT 5 EAST WINGWALL ELEVATION
½" = 1'-0"

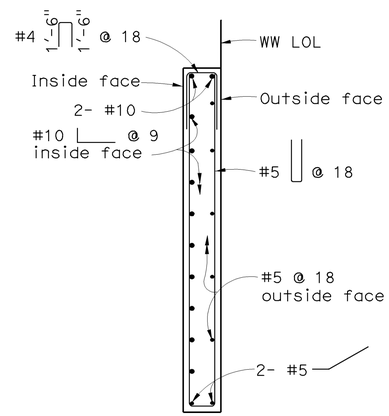

SECTION J-J
½" = 1'-0"

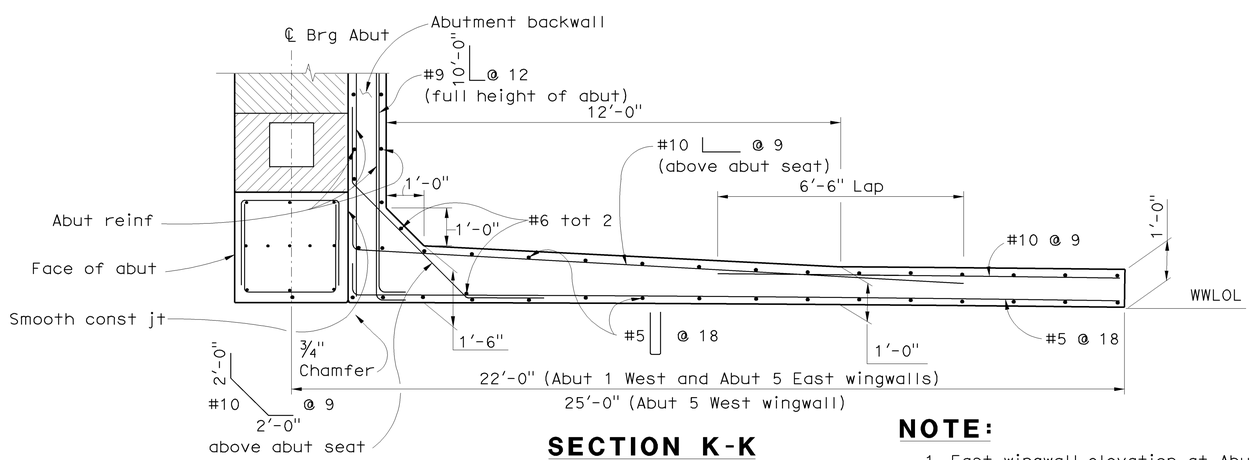

SECTION K-K
½" = 1'-0"

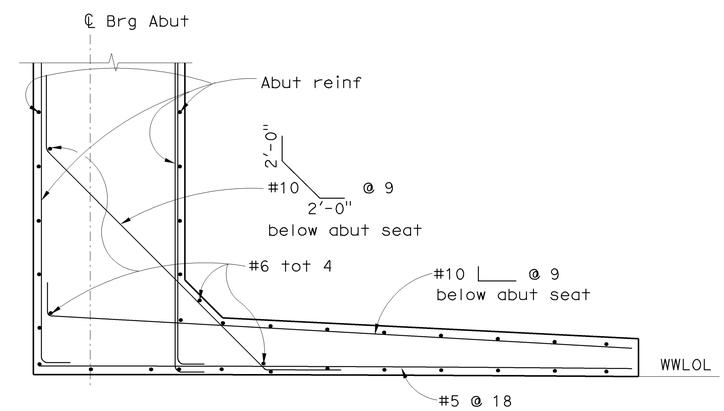

SECTION L-L
½" = 1'-0"

NOTE:

1. East wingwall elevation at Abut 5 shown, west wingwall elevation at Abut 1 and Abut 5 similar.

Sudhakar Vatti
DESIGN OVERSIGHT Sudhakar Vatti
8-10-09
SIGN OFF DATE

	BY	CHECKED
DESIGN	K. Allam/Y. Deng	P. Morel
DETAILS	N. Shu	P. Morel
QUANTITIES	V. Nong	L. Khaleghi

PREPARED FOR THE STATE OF CALIFORNIA DEPARTMENT OF TRANSPORTATION

Alaedin Moubayed
PROJECT ENGINEER

BRIDGE NO. 55-1097G
POST MILE R0.39

E22-N605/405 SEPARATION (REPLACE)
ABUTMENT DETAILS NO. 4

DESIGN DETAIL SHEET (ENGLISH) (REV. 2/25/05)

ORIGINAL SCALE IN INCHES FOR REDUCED PLANS 0 1 2 3

CU 12235
EA 071631

DISREGARD PRINTS BEARING EARLIER REVISION DATES

REVISION DATES (PRELIMINARY STAGE ONLY) 02/18/08 05/27/08 09/17/08 04/06/09 07/27/09

SHEET 11 OF 31

FILE => 55-1097g-f-adt04.dgn

USERNAME => trlenard DATE PLOTTED => 03-FEB-2010 TIME PLOTTED => 05:30

DIST	COUNTY	ROUTE	POST MILES TOTAL PROJECT	SHEET No	TOTAL SHEETS
12	Ora	22,405, 605	R0.3/R0.9, 22.3/24.0,3.0/R1.6	1552	1929

Khaled Allam 07-27-09
REGISTERED CIVIL ENGINEER DATE

2-1-10
PLANS APPROVAL DATE

REGISTERED PROFESSIONAL ENGINEER Khaled Allam No. 67110 Exp. 09-30-10 CIVIL STATE OF CALIFORNIA

The State of California or its officers or agents shall not be responsible for the accuracy or completeness of electronic copies of this plan sheet.

OCTA
550 SOUTH MAIN STREET
ORANGE, CA 92863

PBS&J
625 THE CITY DRIVE SOUTH, SUITE 200
ORANGE, CA 92868

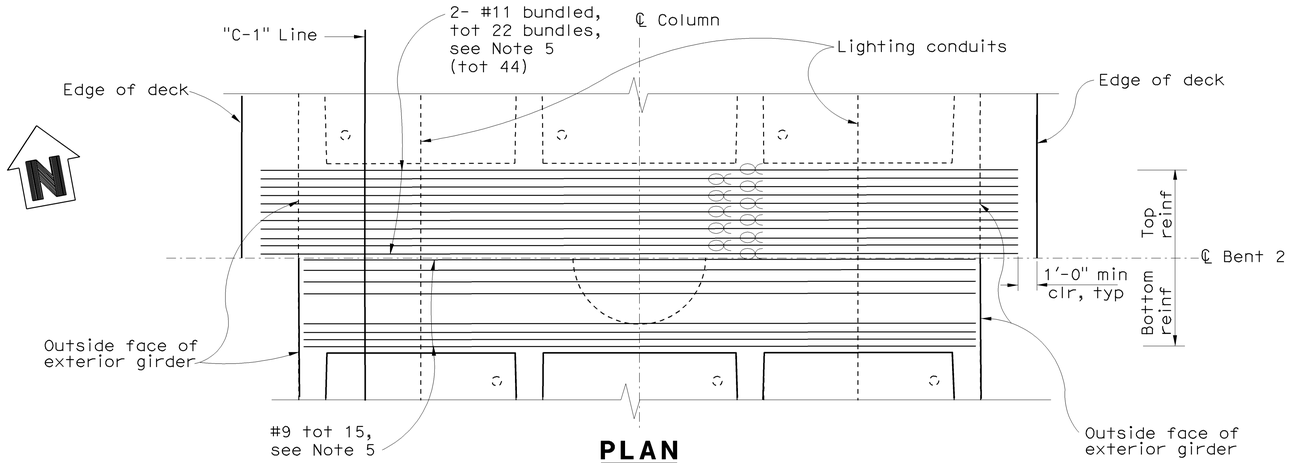

PLAN
1/4" = 1'-0"

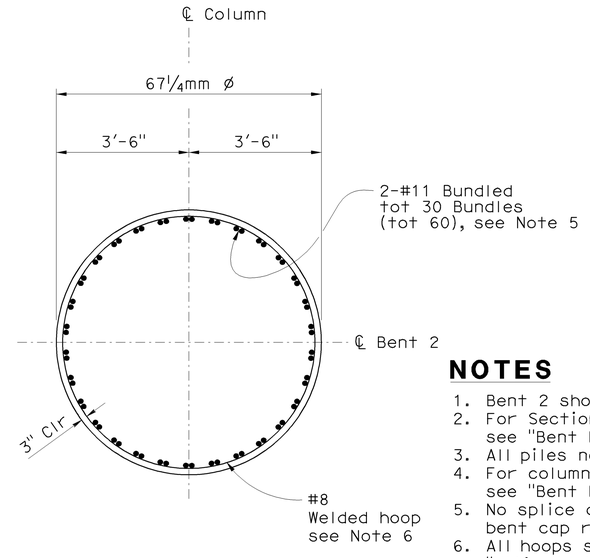

SECTION A-A
1/4" = 1'-0"

NOTES

1. Bent 2 shown, Bents 3 & 4 similar.
2. For Sections B-B and C-C, see "Bent Details No. 2" sheet.
3. All piles not shown.
4. For column footing reinf and pile layout, see "Bent Details No. 1" sheet.
5. No splice allowed in main column and main bent cap reinforcement.
6. All hoops shall be butt welded continuous & meet "Ultimate butt splice" requirements.
7. Place stirrups normal to and space along ℄ Bents.

LEGEND

Denotes bundled bars.

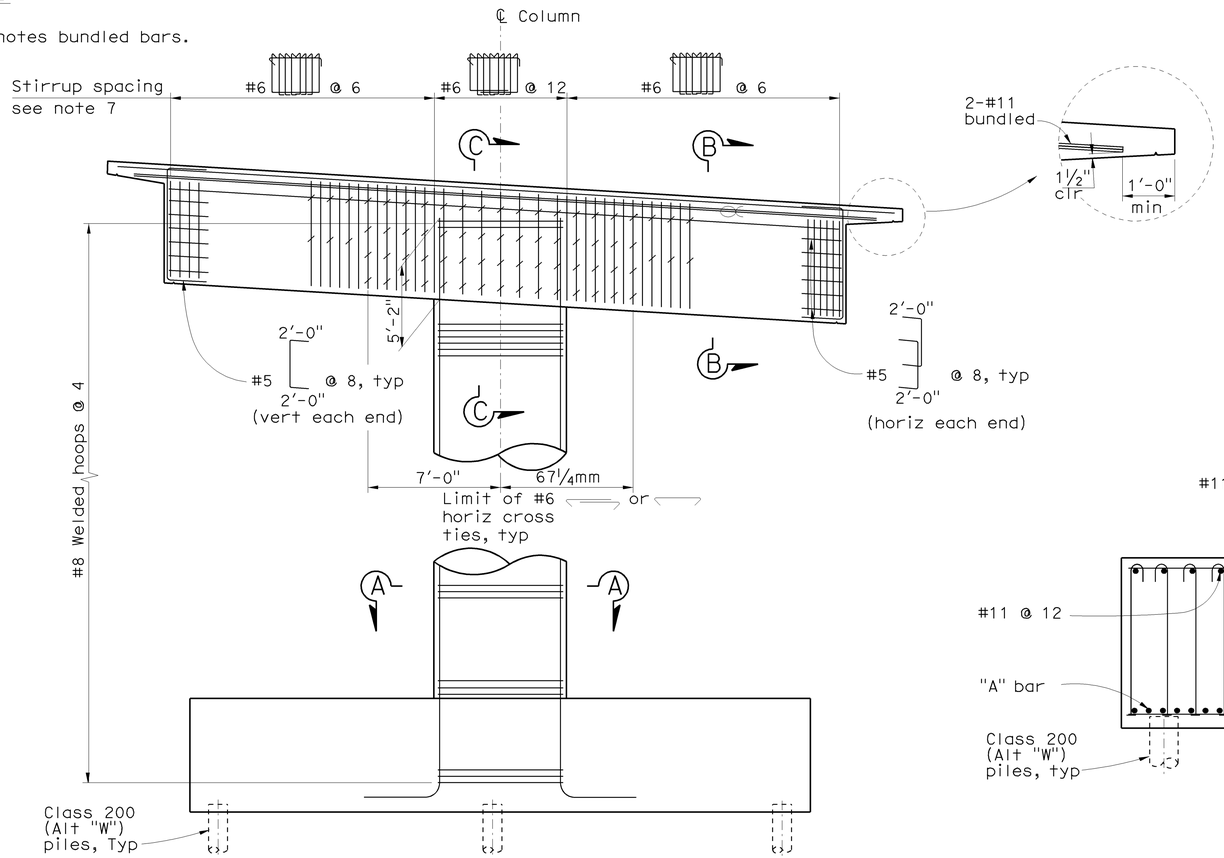

ELEVATION
1/4" = 1'-0"

LEGEND

Denotes bundled bars

Denotes headed bar reinforcement

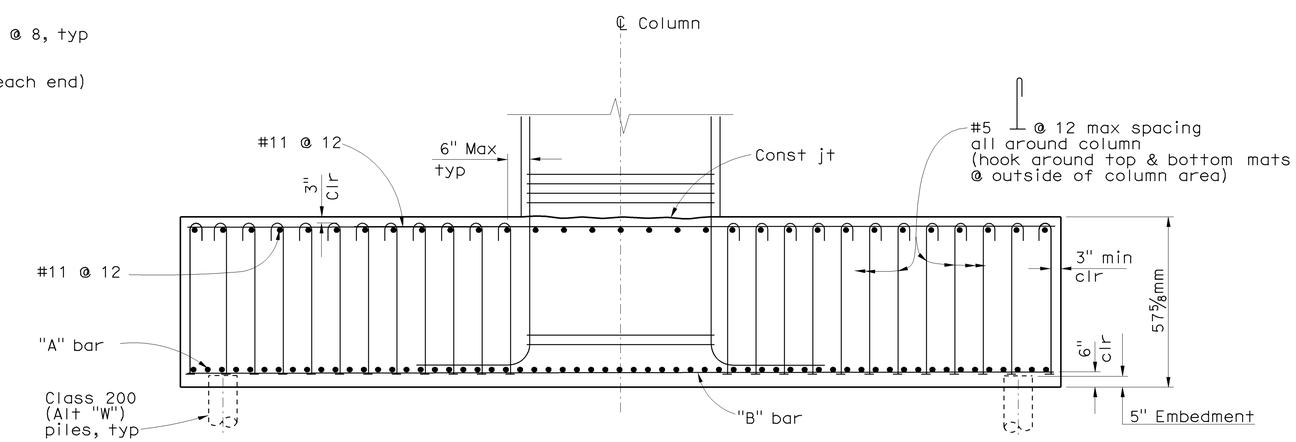

FOOTING ELEVATION
3/8" = 1'-0"

Sudhakar Vatti
DESIGN OVERSIGHT Sudhakar Vatti
8-10-09
SIGN OFF DATE

	BY	CHECKED	
DESIGN	K. Allam/Y. Deng	P. Morel	
DETAILS	N. Shu	P. Morel	
QUANTITIES	V. Nong	L. Khaleghi	

PREPARED FOR THE STATE OF CALIFORNIA DEPARTMENT OF TRANSPORTATION

Alaedin Moubayed
PROJECT ENGINEER

BRIDGE NO. 55-1097G
POST MILE R0.39

E22-N605/405 SEPARATION (REPLACE)
BENT LAYOUT

DESIGN DETAIL SHEET (ENGLISH) (REV. 2/25/05)

ORIGINAL SCALE IN INCHES FOR REDUCED PLANS 0 1 2 3

CU 12235
EA 071631

DISREGARD PRINTS BEARING EARLIER REVISION DATES

REVISION DATES (PRELIMINARY STAGE ONLY) 02/18/08 06/02/08 09/17/08 04/06/09 07/27/09

SHEET 12 OF 31

FILE => 55-1097g-h-b01.dgn

USERNAME => trlenard DATE PLOTTED => 03-FEB-2010 TIME PLOTTED => 06:30

DIST	COUNTY	ROUTE	POST MILES TOTAL PROJECT	SHEET No	TOTAL SHEETS
12	Ora	22,405, 605	R0.3/R0.9 22.3/24.0,3.0/R1.6	1553	1929

Khaled Allam 07-27-09
REGISTERED CIVIL ENGINEER DATE

2-1-10
PLANS APPROVAL DATE

REGISTERED PROFESSIONAL ENGINEER Khaled Allam No. 67110 Exp. 09-30-10 CIVIL STATE OF CALIFORNIA

The State of California or its officers or agents shall not be responsible for the accuracy or completeness of electronic copies of this plan sheet.

OCTA
550 SOUTH MAIN STREET
ORANGE, CA 92863

PBS&J
625 THE CITY DRIVE SOUTH, SUITE 200
ORANGE, CA 92868

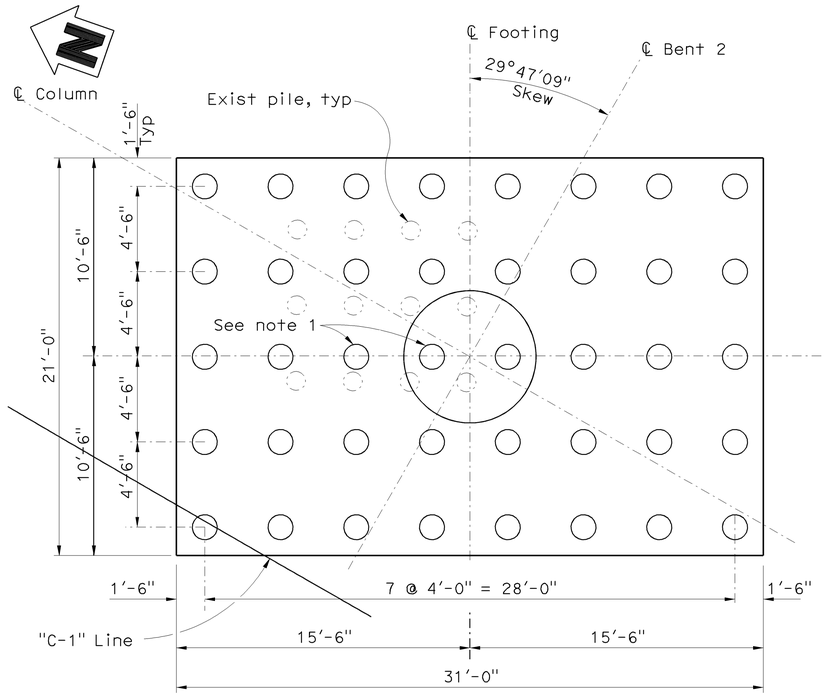

PILE LAYOUT - BENT 2

1/4" = 1'-0"

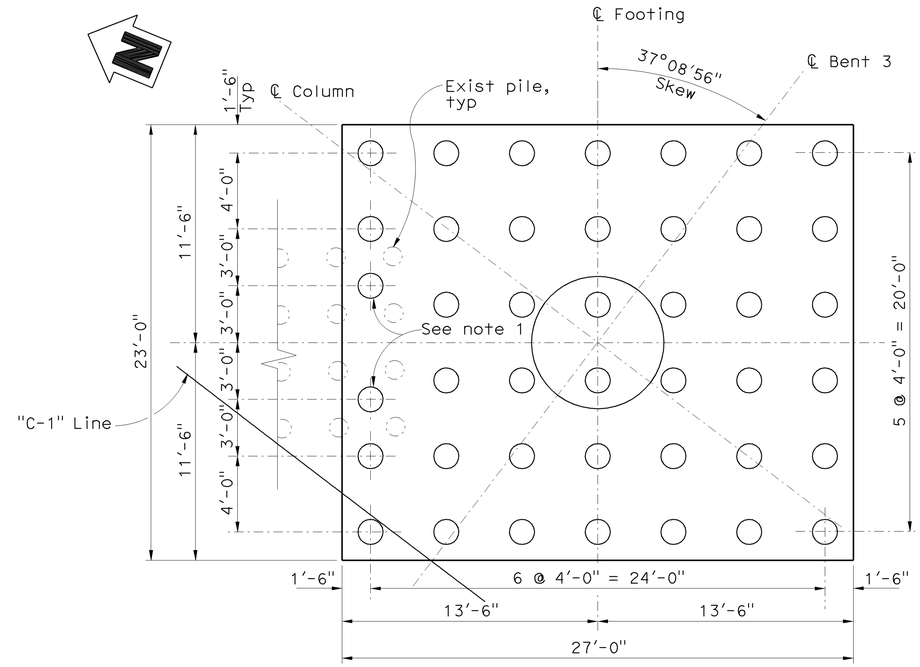

PILE LAYOUT - BENT 3

1/4" = 1'-0"

LEGEND

Denotes Class 200 (Alt "W") pile

Denotes exist pile

NOTE

1. Location of piles may be adjusted to avoid conflict with existing pile, as permitted by the Engineer.

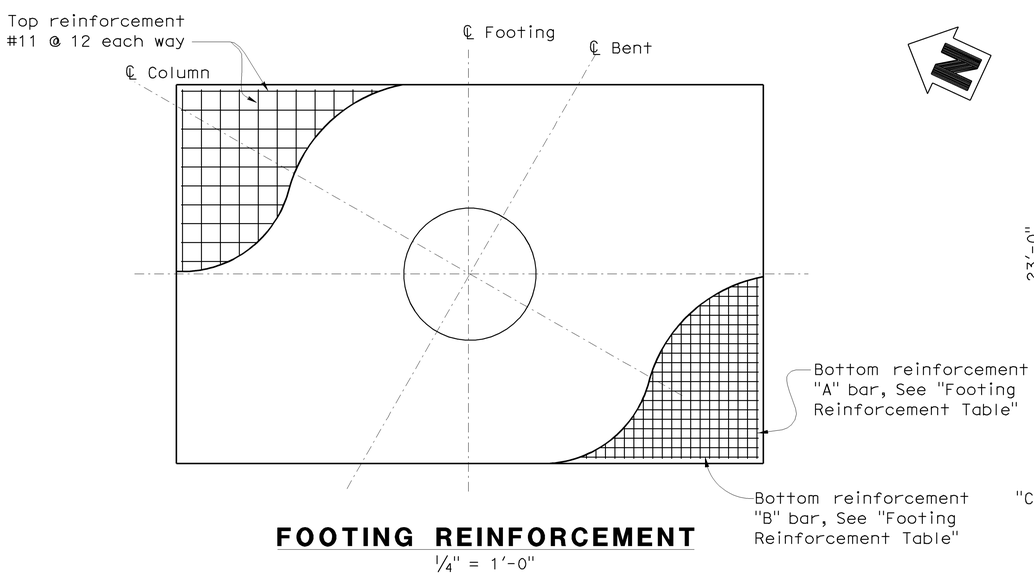

FOOTING REINFORCEMENT

1/4" = 1'-0"

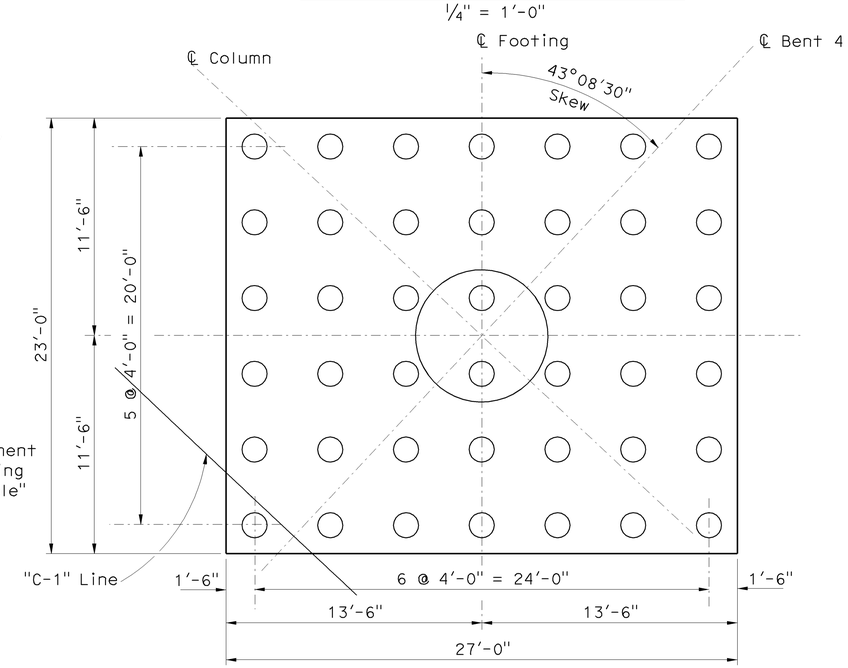

PILE LAYOUT - BENT 4

1/4" = 1'-0"

FOOTING REINFORCEMENT TABLE		
BENT	"A" Bar	"B" Bar
2	#11 @ 6	#11 @ 6
3	#10 @ 6	#10 @ 6
4	#10 @ 6	#10 @ 6

NOTE:
THE CONTRACTOR SHALL VERIFY ALL CONTROLLING FIELD DIMENSIONS BEFORE ORDERING OR FABRICATING ANY MATERIAL.

Sudhakar Vatti
DESIGN OVERSIGHT Sudhakar Vatti
8-10-09
SIGN OFF DATE

	BY	CHECKED
DESIGN	K. Allam/Y. Deng	P. Morel
DETAILS	N. Shu	P. Morel
QUANTITIES	V. Nong	L. Khaleghi

PREPARED FOR THE STATE OF CALIFORNIA DEPARTMENT OF TRANSPORTATION

Alaedin Moubayed
PROJECT ENGINEER

BRIDGE NO. 55-1097G
POST MILE R0.39

E22-N605/405 SEPARATION (REPLACE)
BENT DETAILS NO. 1

DESIGN DETAIL SHEET (ENGLISH) (REV. 2/25/05)

ORIGINAL SCALE IN INCHES FOR REDUCED PLANS 0 1 2 3

CU 12235
EA 071631

DISREGARD PRINTS BEARING EARLIER REVISION DATES

REVISION DATES (PRELIMINARY STAGE ONLY) 02/18/08 03/07/08 03/27/08 04/08/09 07/27/09

SHEET 13 OF 31

FILE => 55-1097g-h-bdt01.dgn

USERNAME => trienard DATE PLOTTED => 03-FEB-2010 TIME PLOTTED => 05:30

DIST	COUNTY	ROUTE	POST MILES TOTAL PROJECT	SHEET No	TOTAL SHEETS
12	Ora	22,405, 605	R0.3/R0.9 22.3/24.0,3.0/R1.6	1554	1929

Khaled Allam 07-27-09
REGISTERED CIVIL ENGINEER DATE

2-1-10
PLANS APPROVAL DATE

REGISTERED PROFESSIONAL ENGINEER Khaled Allam No. 67110 Exp. 09-30-10 CIVIL STATE OF CALIFORNIA

The State of California or its officers or agents shall not be responsible for the accuracy or completeness of electronic copies of this plan sheet.

OCTA
550 SOUTH MAIN STREET
ORANGE, CA 92863

PBS&J
625 THE CITY DRIVE SOUTH, SUITE 200
ORANGE, CA 92868

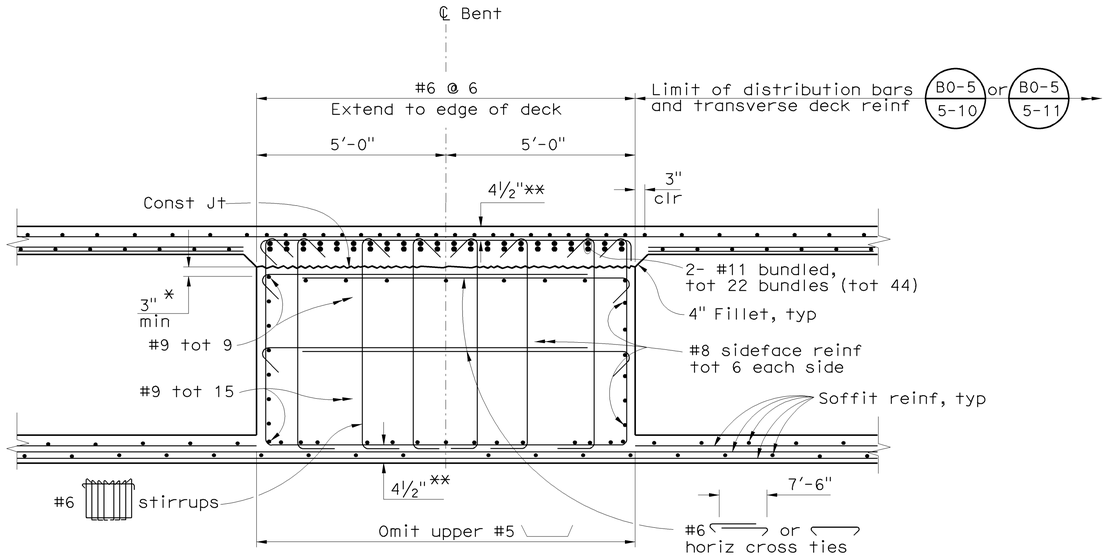

SECTION B-B

½" = 1'-0"

LEGEND

* Reinf may be lowered to clear prestressing ducts

** Clearance to main cap reinf

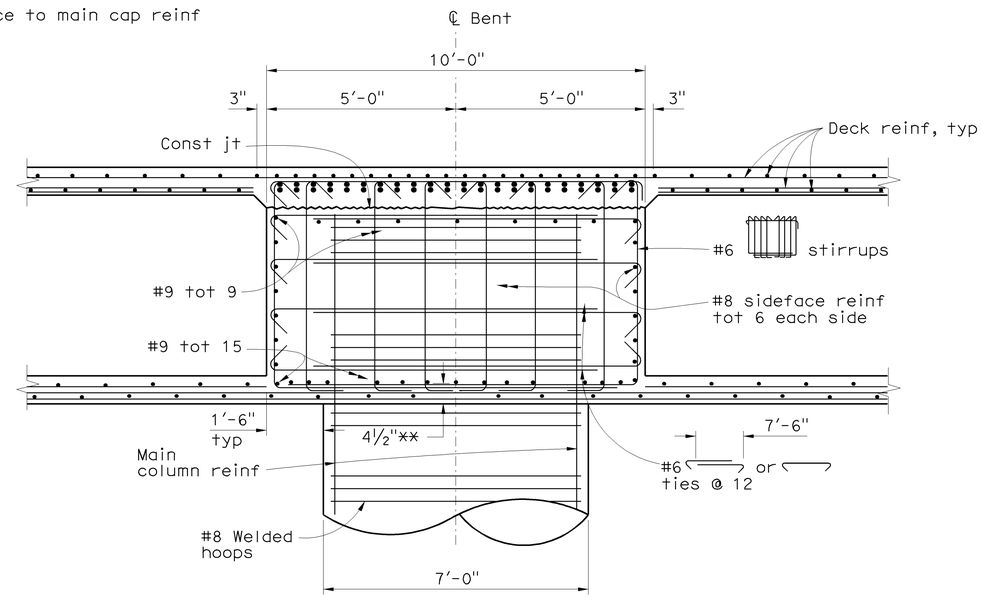

For information not shown, see Section B-B

SECTION C-C

½" = 1'-0"

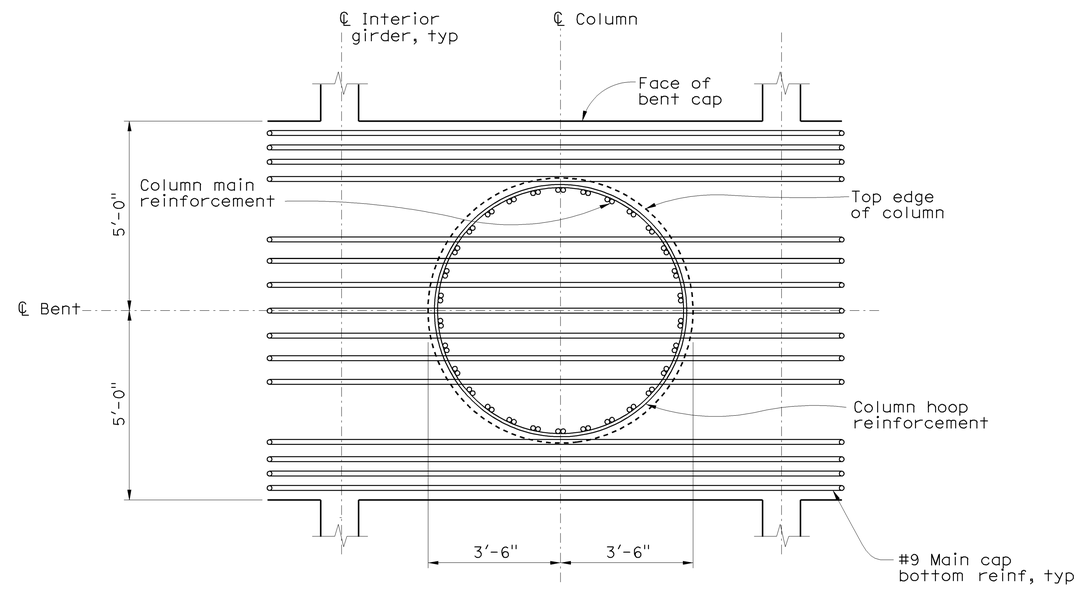

MAIN CAP BOTTOM REINFORCEMENT LAYOUT

½" = 1'-0"

NOTES

1. Bent 2 shown, Bents 3 & 4 similar.
2. For #6 stirrups spacing, see Elevation on "Bent Layout" sheet.
3. See "Bent Layout" sheet for more reinf information.

Sudhakar Vatti
DESIGN OVERSIGHT Sudhakar Vatti
8-10-09
SIGN OFF DATE

	BY	CHECKED
DESIGN	K. Allam/Y. Deng	P. Morel
DETAILS	N. Shu	P. Morel
QUANTITIES	V. Nong	L. Khaleghi

PREPARED FOR THE STATE OF CALIFORNIA DEPARTMENT OF TRANSPORTATION

Alaedin Moubayed
PROJECT ENGINEER

BRIDGE NO. 55-1097G
POST MILE R0.39

E22-N605/405 SEPARATION (REPLACE)
BENT DETAILS NO. 2

DESIGN DETAIL SHEET (ENGLISH) (REV. 2/25/05)

ORIGINAL SCALE IN INCHES FOR REDUCED PLANS 0 1 2 3

CU 12235
EA 071631

DISREGARD PRINTS BEARING EARLIER REVISION DATES

REVISION DATES (PRELIMINARY STAGE ONLY) 02/15/08 06/06/08 09/17/08 09/06/09 07/27/09

SHEET 14 OF 31

FILE => 55-1097g-h-bdt02.dgn

USERNAME => rtrenord DATE PLOTTED => 03-FEB-2010 TIME PLOTTED => 05:30

DIST	COUNTY	ROUTE	POST MILES TOTAL PROJECT	SHEET No	TOTAL SHEETS
12	Ora	22,405, 605	R0.3/R0.9 22.3/24.0,3.0/R1.6	1555	1929

Khaled Allam 07-27-09
REGISTERED CIVIL ENGINEER DATE

2-1-10
PLANS APPROVAL DATE

REGISTERED PROFESSIONAL ENGINEER Khaled Allam No. 67110 Exp. 09-30-10 CIVIL STATE OF CALIFORNIA

The State of California or its officers or agents shall not be responsible for the accuracy or completeness of electronic copies of this plan sheet.

OCTA
550 SOUTH MAIN STREET
ORANGE, CA 92863

PBS&J
625 THE CITY DRIVE SOUTH, SUITE 200
ORANGE, CA 92868

NOTES

1. For stirrups placement and prestressing information See "Girder Layout" sheet.
2. Service butt splices should not be permitted between 0.0 L to 0.2L and 0.8L to 1.0L for each span (L is span length)

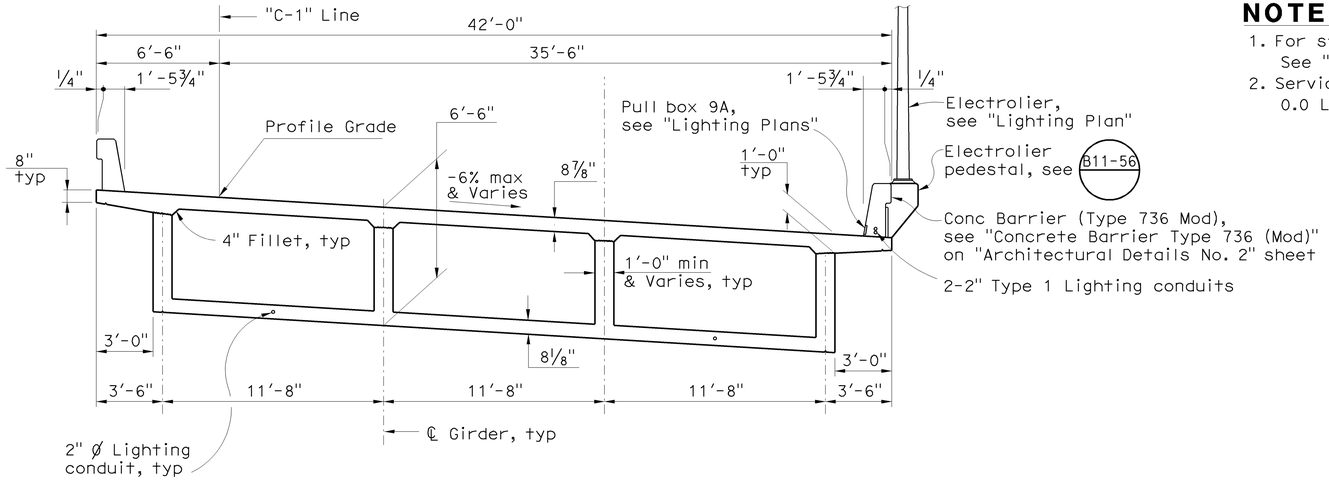

TYPICAL SECTION

1/4" = 1'-0"

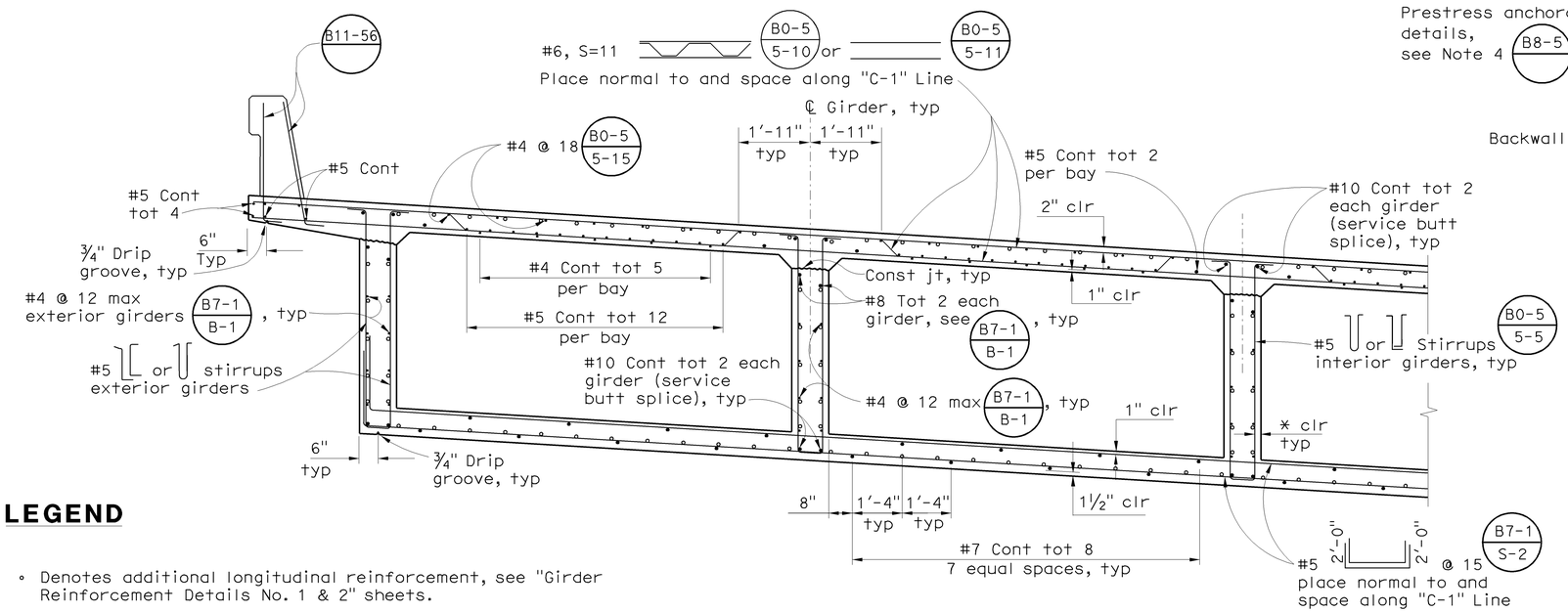

PART TYPICAL SECTION B7-1 B8-5 B0-5

1/2" = 1'-0"

**: See "Girder Reinforcement Details No. 1" for "No-Splice Zone" for service butt splices.

LEGEND

∘ Denotes additional longitudinal reinforcement, see "Girder Reinforcement Details No. 1 & 2" sheets.

* 2 1/2" min and 4" max clear to stirrup (except 1" min clr near anchorage), see B8-5

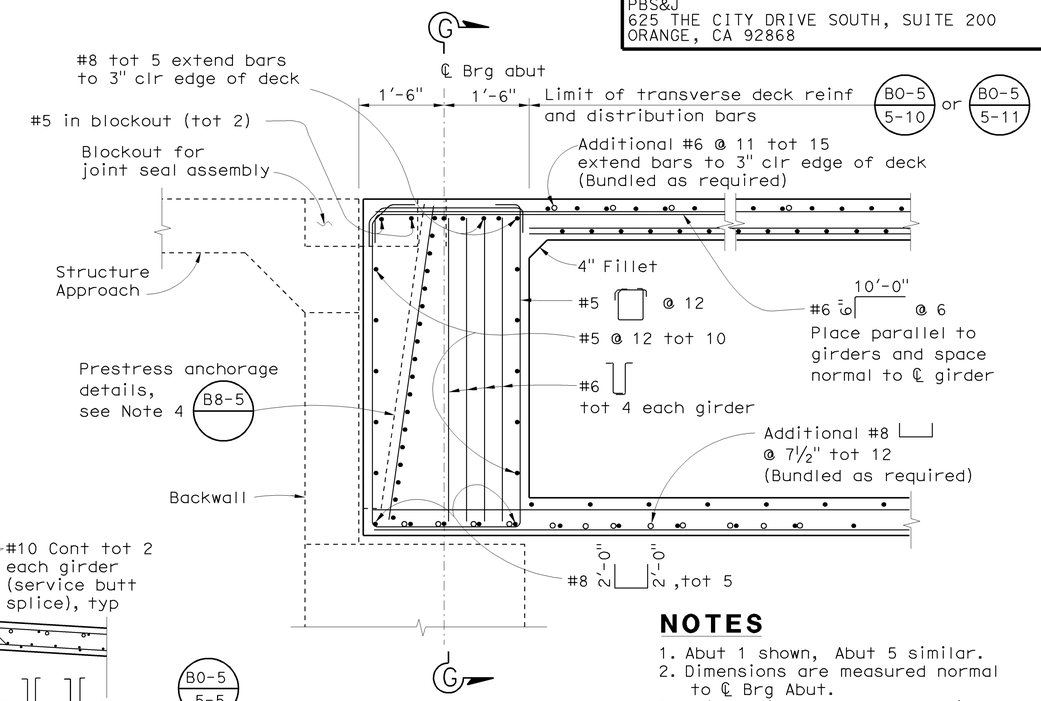

END DIAPHRAGM DETAIL

3/4" = 1'-0"

NOTES

1. Abut 1 shown, Abut 5 similar.
2. Dimensions are measured normal to ℄ Brg Abut.
3. Reinforcing bars may be adjusted as necessary to accommodate installation of the joint seal assembly blockout as directed by the Engineer.
4. Bottom of blockout shall be located at or above the top surface of the bottom slab.

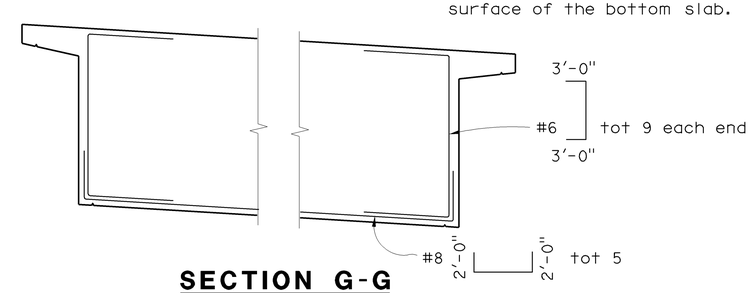

SECTION G-G

3/8" = 1'-0"

Sudhakar Vatti
DESIGN OVERSIGHT Sudhakar Vatti
8-10-09
SIGN OFF DATE

	BY	CHECKED
DESIGN	K. Allam/Y. Deng	P. Morel
DETAILS	N. Shu	P. Morel
QUANTITIES	V. Nong	L. Khaleghi

PREPARED FOR THE STATE OF CALIFORNIA DEPARTMENT OF TRANSPORTATION

Alaedin Moubayed
PROJECT ENGINEER

BRIDGE NO. 55-1097G
POST MILE R0.39

E22-N605/405 SEPARATION (REPLACE)
TYPICAL SECTION

DESIGN DETAIL SHEET (ENGLISH) (REV. 2/25/05)

ORIGINAL SCALE IN INCHES FOR REDUCED PLANS 0 1 2 3

CU 12235
EA 071631

DISREGARD PRINTS BEARING EARLIER REVISION DATES

REVISION DATES (PRELIMINARY STAGE ONLY) 02/18/08 04/28/08 03/17/08 04/06/09 07/27/09

SHEET 15 OF 31

FILE => 55-1097g-k-ts01.dgn

USERNAME => trienard DATE PLOTTED => 03-FEB-2010 TIME PLOTTED => 05:30

DIST	COUNTY	ROUTE	POST MILES TOTAL PROJECT	SHEET No	TOTAL SHEETS
12	Ora	22,405, 605	R0.3/R0.9, 22.3/24.0,3.0/R1.6	1556	1929

Khaled Allam 07-27-09
REGISTERED CIVIL ENGINEER DATE

2-1-10
PLANS APPROVAL DATE

REGISTERED PROFESSIONAL ENGINEER Khaled Allam No. 67110 Exp. 09-30-10 CIVIL STATE OF CALIFORNIA

The State of California or its officers or agents shall not be responsible for the accuracy or completeness of electronic copies of this plan sheet.

OCTA
550 SOUTH MAIN STREET
ORANGE, CA 92863

PBS&J
625 THE CITY DRIVE SOUTH, SUITE 200
ORANGE, CA 92868

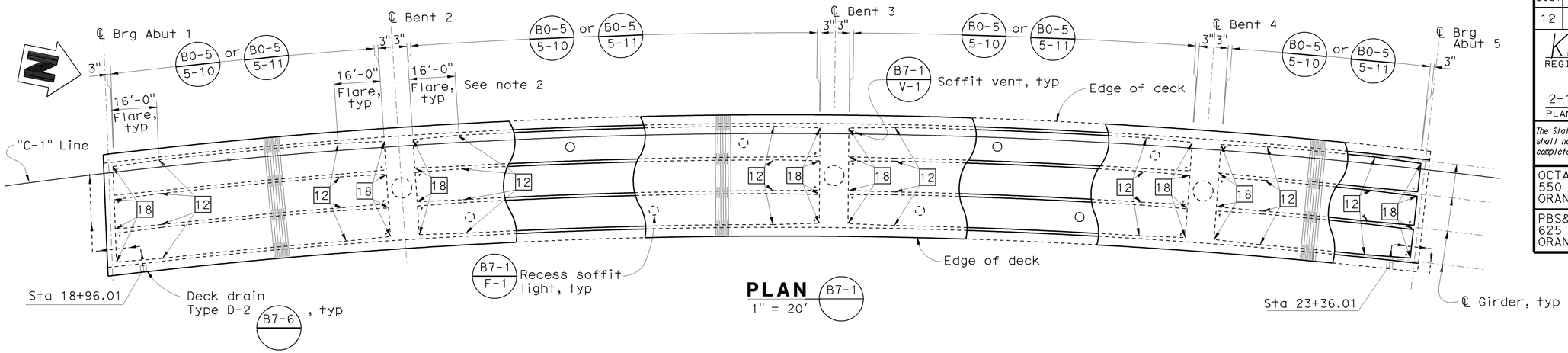

PLAN B7-1
1" = 20'

LEGEND

⊠ Indicates theorical point of no movement for stressing

☐ Indicates girder stem width in inch, see B7-1 / S-3

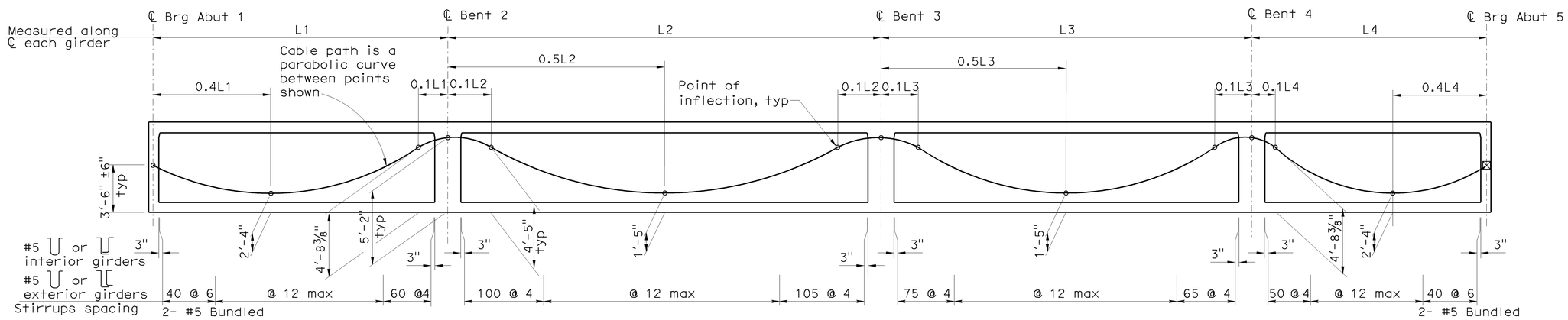

LONGITUDINAL SECTION B8-5
No Scale

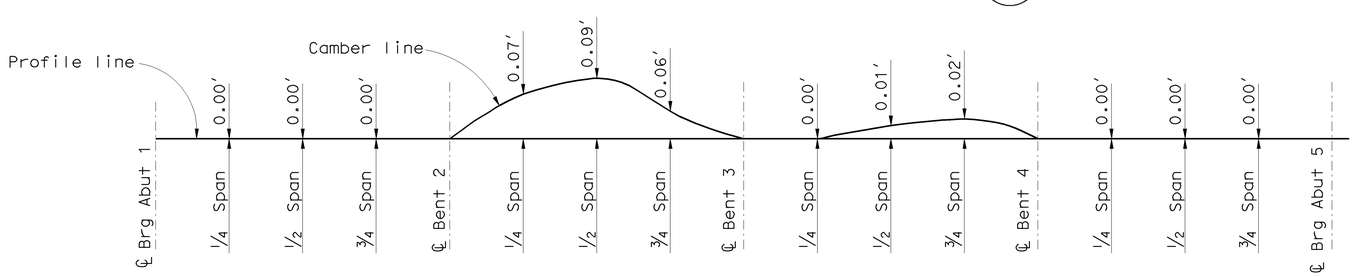

CAMBER DIAGRAM
No Scale

NOTES

1. Camber does not include allowance for falsework settlement.
2. Girder flare length is measured along ℄ of each girder.
3. For soffit light locations, see "Road Plans".
4. Min duct clearance shall be 1½".

PRESTRESSING NOTES

270 ksi Low Relaxation Strands:	
Pjack	= 7,800 kips
Anchor Set	= ⅜ inch
Total Number of Girders	= 4
Friction curvature coefficient	$\mu = 15 \times 10^{-2}$(1/rad)
Friction wobble coefficient	$K = 20 \times 10^{-5}$(1/ft)
Distribution of prestress force (Pjack) between girders shall not exceed the ratio of 3:2.	
Maximum final force variation between girders shall not exceed 725 kips.	
Concrete: f'_c = 4000 psi @ 28 days f'_{ci} = 3600 psi @ time of stressing	
Contractor shall submit elongation calculations based on inital stress at ⊠ = 0.713 times jacking stress	
One end stressing shall be performed from Abutment 1	

Sudhakar Vatti
DESIGN OVERSIGHT Sudhakar Vatti
8-10-09
SIGN OFF DATE

	BY	CHECKED
DESIGN	K. Allam/Y. Deng	P. Morel
DETAILS	N. Shu	P. Morel
QUANTITIES	V. Nong	L. Khaleghi

PREPARED FOR THE STATE OF CALIFORNIA DEPARTMENT OF TRANSPORTATION

Alaedin Moubayed
PROJECT ENGINEER

BRIDGE NO. 55-1097G
POST MILE R0.39

E22-N605/405 SEPARATION (REPLACE)
GIRDER LAYOUT

DESIGN DETAIL SHEET (ENGLISH) (REV. 2/25/05)

ORIGINAL SCALE IN INCHES FOR REDUCED PLANS 0 1 2 3

CU 12235
EA 071631

DISREGARD PRINTS BEARING EARLIER REVISION DATES

REVISION DATES (PRELIMINARY STAGE ONLY) 02/08/08 03/28/08 03/27/08 04/06/09 07/27/09

SHEET 16 OF 31

FILE => 55-1097g-l-glo01.dgn

USERNAME => trlenard DATE PLOTTED => 03-FEB-2010 TIME PLOTTED => 05:30

DIST	COUNTY	ROUTE	POST MILES TOTAL PROJECT	SHEET No	TOTAL SHEETS
12	Ora	22,405, 605	R0.3/R0.9 22.3/24.0,3.0/R1.6	1557	1929

Khaled Allam 07-27-09
REGISTERED CIVIL ENGINEER DATE

2-1-10
PLANS APPROVAL DATE

REGISTERED PROFESSIONAL ENGINEER Khaled Allam No. 67110 Exp. 09-30-10 CIVIL STATE OF CALIFORNIA

The State of California or its officers or agents shall not be responsible for the accuracy or completeness of electronic copies of this plan sheet.

OCTA
550 SOUTH MAIN STREET
ORANGE, CA 92863

PBS&J
625 THE CITY DRIVE SOUTH, SUITE 200
ORANGE, CA 92868

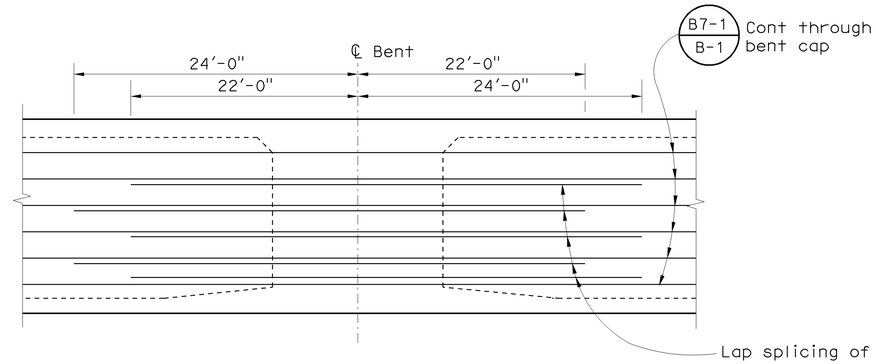

ADDITIONAL GIRDER STEM REINFORCEMENT

No Scale

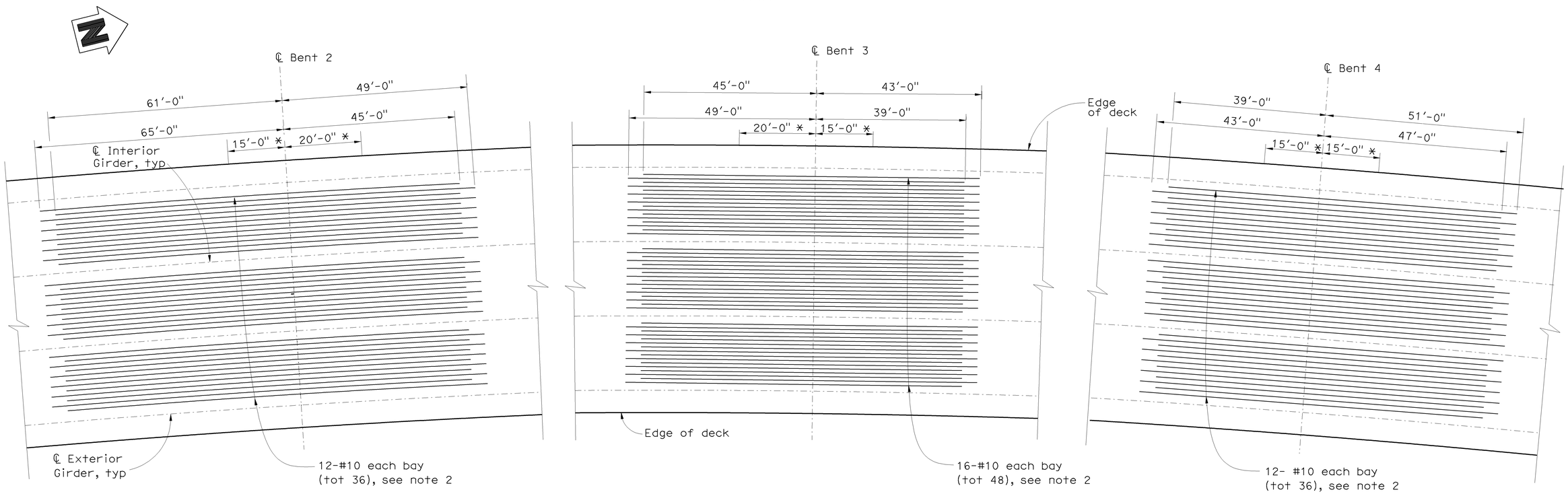

TOP GIRDER REINFORCEMENT

No Scale

(* - No splices zone)

NOTES

1. All dimensions measured along centerline girders.
2. Splicing shall conform to the requirements of "Service Butt Splice".

Sudhakar Vatti
DESIGN OVERSIGHT Sudhakar Vatti
8-10-09
SIGN OFF DATE

	BY	CHECKED
DESIGN	K. Allam/Y. Deng	P. Morel
DETAILS	N. Shu	P. Morel
QUANTITIES	V. Nong	L. Khaleghi

PREPARED FOR THE STATE OF CALIFORNIA DEPARTMENT OF TRANSPORTATION

Alaedin Moubayed
PROJECT ENGINEER

BRIDGE NO. 55-1097G
POST MILE R0.39

E22-N605/405 SEPARATION (REPLACE)
GIRDER REINFORCEMENT DETAILS NO. 1

DESIGN DETAIL SHEET (ENGLISH) (REV. 2/25/05)

ORIGINAL SCALE IN INCHES FOR REDUCED PLANS 0 1 2 3

CU 12235
EA 071631

DISREGARD PRINTS BEARING EARLIER REVISION DATES

REVISION DATES (PRELIMINARY STAGE ONLY) 02/08/08 06/20/08 09/27/08 04/06/09 07/27/09

SHEET 17 OF 31

FILE => 55-1097g-o-grf01.dgn

USERNAME => trlenard DATE PLOTTED => 03-FEB-2010 TIME PLOTTED => 05:30

DIST	COUNTY	ROUTE	POST MILES TOTAL PROJECT	SHEET No	TOTAL SHEETS
12	Ora	22,405, 605	R0.3/R0.9, 22.3/24.0,3.0/R1.6	1558	1929

Khaled Allam 07-27-09
REGISTERED CIVIL ENGINEER DATE

2-1-10
PLANS APPROVAL DATE

REGISTERED PROFESSIONAL ENGINEER
Khaled Allam
No. 67110
Exp. 09-30-10
CIVIL
STATE OF CALIFORNIA

The State of California or its officers or agents shall not be responsible for the accuracy or completeness of electronic copies of this plan sheet.

OCTA
550 SOUTH MAIN STREET
ORANGE, CA 92863

PBS&J
625 THE CITY DRIVE SOUTH, SUITE 200
ORANGE, CA 92868

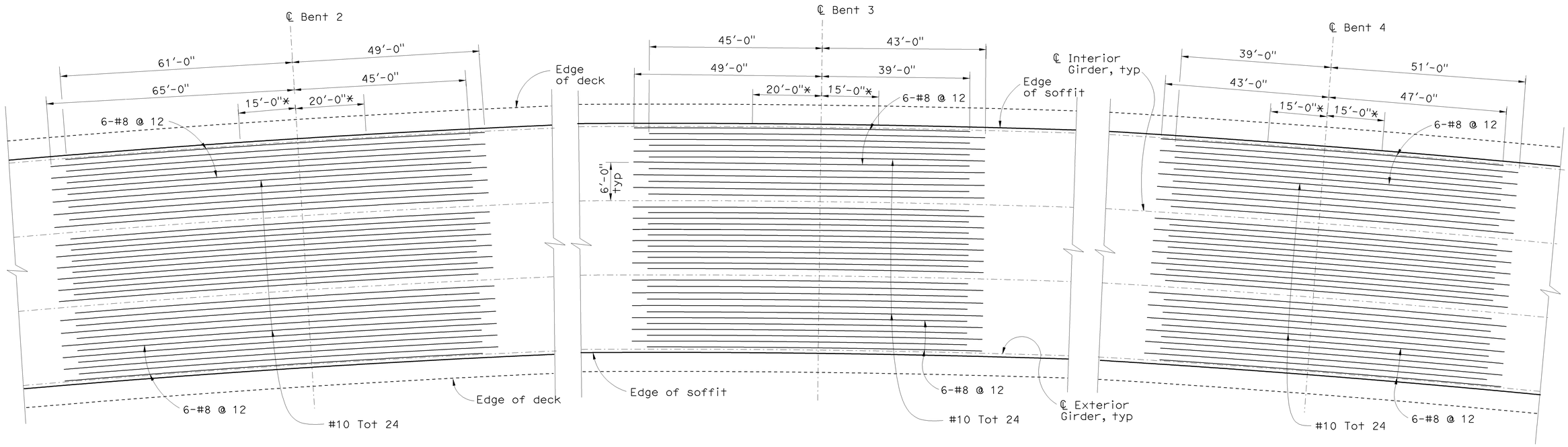

BOTTOM GIRDER REINFORCEMENT

No Scale

(* - No splice zone)

NOTES

1. All dimensions measured along centerline girders.
2. Splicing shall conform to the requirements of "Service Butt Splice".

Sudhakar Vatti
DESIGN OVERSIGHT Sudhakar Vatti
8-10-09
SIGN OFF DATE

DESIGN DETAIL SHEET (ENGLISH) (REV. 2/25/05)

	BY	CHECKED
DESIGN	K. Allam/Y. Deng	P. Morel
DETAILS	N. Shu	P. Morel
QUANTITIES	V. Nong	L. Khaleghi

ORIGINAL SCALE IN INCHES FOR REDUCED PLANS 0 1 2 3

PREPARED FOR THE STATE OF CALIFORNIA DEPARTMENT OF TRANSPORTATION

Alaedin Moubayed
PROJECT ENGINEER

CU 12235
EA 071631

BRIDGE NO. 55-1097G
POST MILE R0.39

E22-N605/405 SEPARATION (REPLACE)
GIRDER REINFORCEMENT DETAILS NO. 2

DISREGARD PRINTS BEARING EARLIER REVISION DATES
REVISION DATES (PRELIMINARY STAGE ONLY) 02/18/08 06/02/08 09/17/08 04/06/09 07/27/09

SHEET 18 OF 31

FILE => 55-1097g-o-grf02.dgn

USERNAME => trlenard DATE PLOTTED => 03-FEB-2010 TIME PLOTTED => 06:30

DIST	COUNTY	ROUTE	POST MILES TOTAL PROJECT	SHEET No	TOTAL SHEETS
12	Ora	22, 405, 605	R0.3/R0.9, 22.3/24.0,3.0/R1.6	1559	1929

LICENSED LANDSCAPE ARCHITECT

2-1-10
PLANS APPROVAL DATE

LICENSED LANDSCAPE ARCHITECT
CATHY L. JOHNSON
NO. 4545
01-31-10
Renewal Date
07-27-09
Date
STATE OF CALIFORNIA

The State of California or its officers or agents shall not be responsible for the accuracy or completeness of electronic copies of this plan sheet.

OCTA
550 SOUTH MAIN STREET
ORANGE, CA 92863

RBF CONSULTING
14725 ALTON PARKWAY
IRVINE, CA 92618

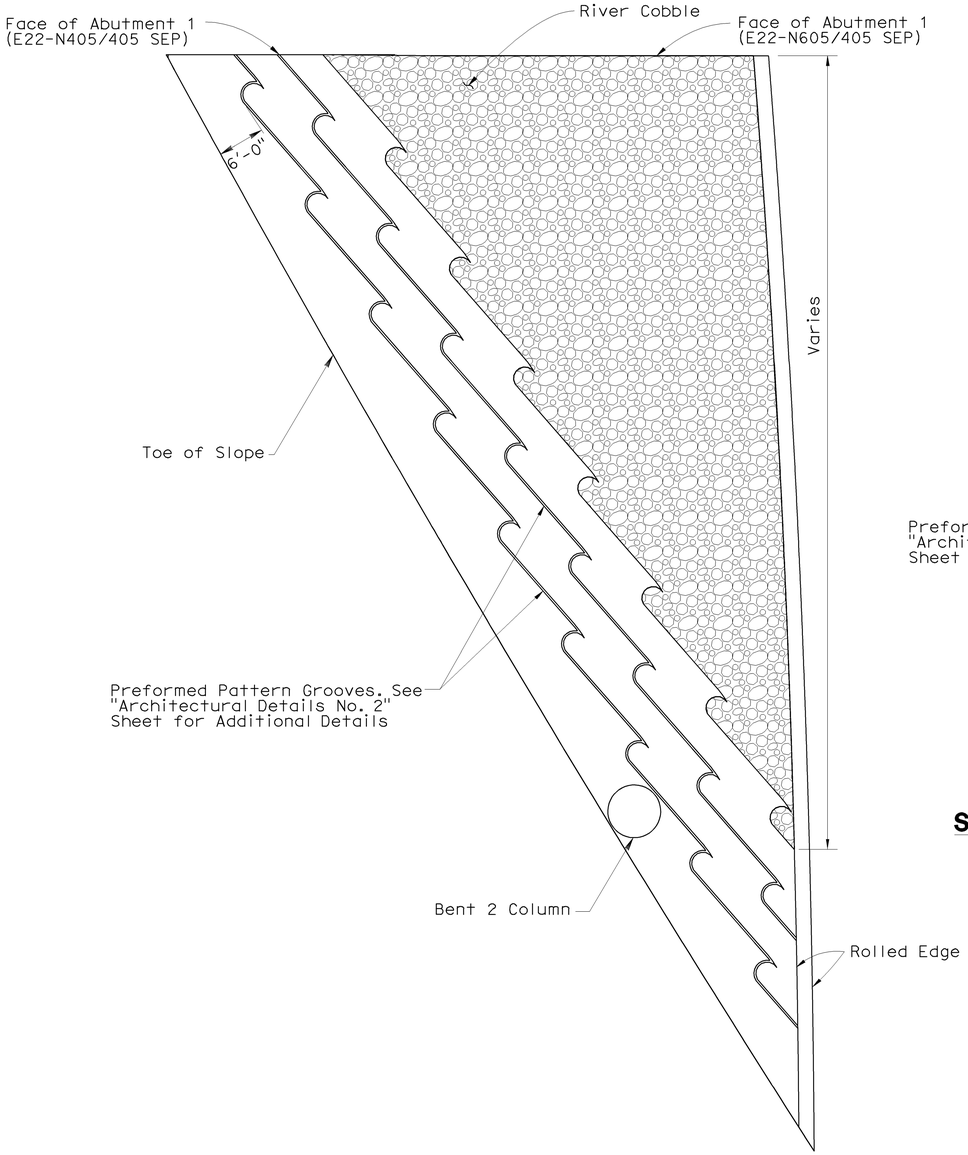

SLOPE PAVING ARCHITECTURAL TEXTURE LAYOUT - ABUTMENT 1

No Scale

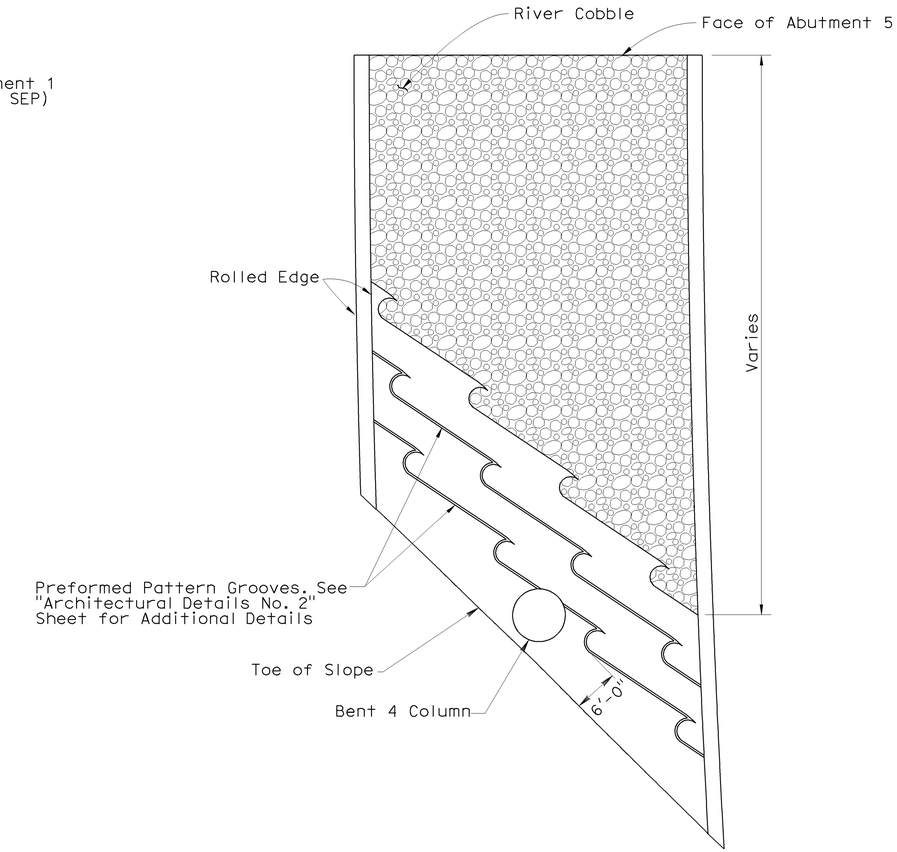

SLOPE PAVING ARCHITECTURAL TEXTURE LAYOUT - ABUTMENT 5

No Scale

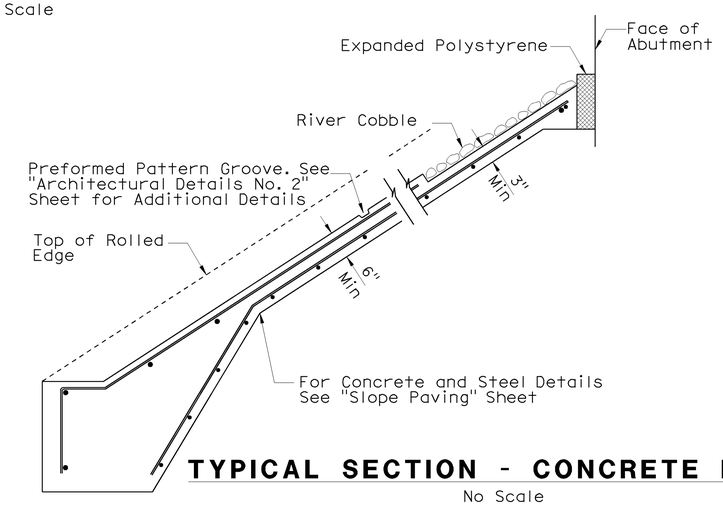

TYPICAL SECTION - CONCRETE PAVING

No Scale

Sudhakar Vatti
DESIGN OVERSIGHT Sudhakar Vatti
8-10-09
SIGN OFF DATE

	BY	CHECKED
DESIGN	C. JOHNSON	A. SU
DETAILS	R. KELCHER	A. SU
QUANTITIES	V. NONG	K. ALLAM

PREPARED FOR THE
STATE OF CALIFORNIA
DEPARTMENT OF TRANSPORTATION

A. MOUBAYED
PROJECT ENGINEER

BRIDGE NO. 55-1097G
POST MILE R0.39

E22-N605/405 SEPARATION (REPLACE)
ARCHITECTURAL DETAILS NO. 1

DESIGN DETAIL SHEET (ENGLISH) (REV. 2/25/05)

ORIGINAL SCALE IN INCHES FOR REDUCED PLANS 0 1 2 3

CU 12235
EA 071631

DISREGARD PRINTS BEARING EARLIER REVISION DATES
REVISION DATES (PRELIMINARY STAGE ONLY) 04/06/09 07/27/09

SHEET 19 OF 31

FILE => 55-1097g-s-arch01.dgn

USERNAME => friehard DATE PLOTTED => 03-FEB-2010 TIME PLOTTED => 05:30

DIST	COUNTY	ROUTE	POST MILES TOTAL PROJECT	SHEET No	TOTAL SHEETS
12	Ora	22, 405, 605	R0.3/R0.9 22.3/24.0,3.0/R1.6	1560	1929

LICENSED LANDSCAPE ARCHITECT

2-1-10
PLANS APPROVAL DATE

LICENSED LANDSCAPE ARCHITECT
CATHY L. JOHNSON
NO. 4545
01-31-10
Renewal Date
07-27-09
Date
STATE OF CALIFORNIA

The State of California or its officers or agents shall not be responsible for the accuracy or completeness of electronic copies of this plan sheet.

OCTA
550 SOUTH MAIN STREET
ORANGE, CA 92863

RBF CONSULTING
14725 ALTON PARKWAY
IRVINE, CA 92618

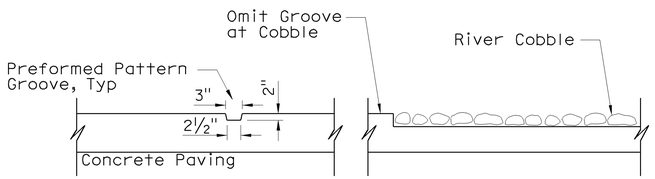

TYPICAL SECTION - PATTERN DETAIL

No Scale

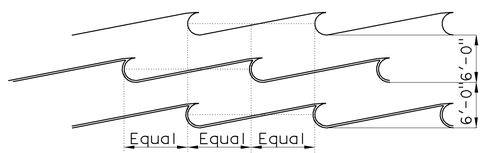

DETAIL

No Scale

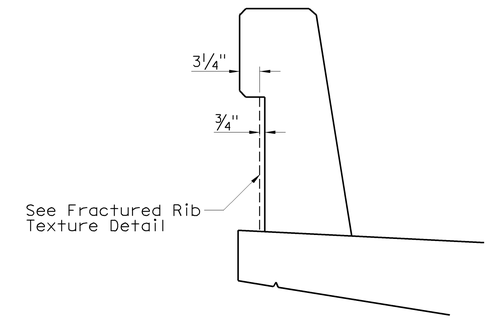

CONCRETE BARRIER (TYPE 736 MOD)

SCALE: 1"=1'-0"

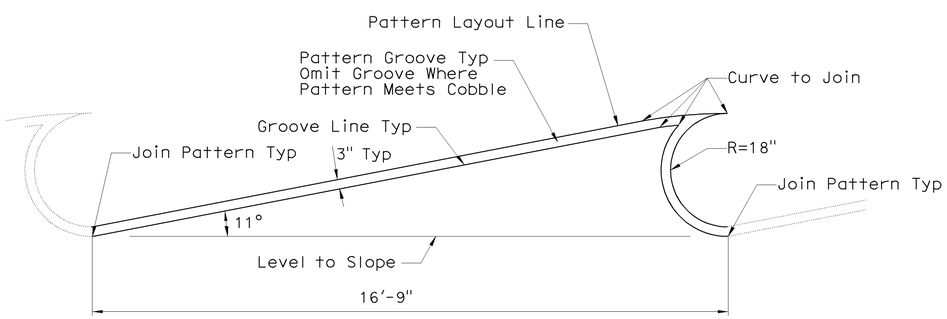

SLOPE PAVING PATTERN DETAIL

No Scale

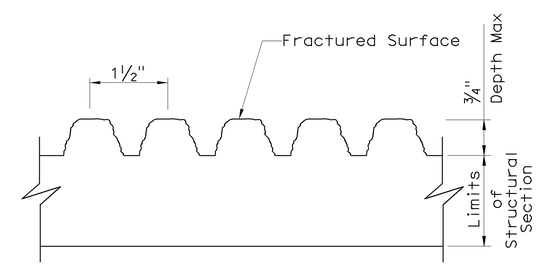

FRACTURED RIB TEXTURE

No Scale

Sudhakar Vatti
DESIGN OVERSIGHT Sudhakar Vatti
8-10-09
SIGN OFF DATE

DESIGN DETAIL SHEET (ENGLISH) (REV. 2/25/05)

	BY	CHECKED
DESIGN	C. JOHNSON	A. SU
DETAILS	R. KELCHER	A. SU
QUANTITIES	V. NONG	K. ALLAM

ORIGINAL SCALE IN INCHES FOR REDUCED PLANS 0 1 2 3

PREPARED FOR THE
STATE OF CALIFORNIA
DEPARTMENT OF TRANSPORTATION

A. MOUBAYED
PROJECT ENGINEER

CU 12235
EA 071631

BRIDGE NO. 55-1097G
POST MILE R0.39

E22-N605/405 SEPARATION (REPLACE)
ARCHITECTURAL DETAILS NO. 2

DISREGARD PRINTS BEARING EARLIER REVISION DATES
REVISION DATES (PRELIMINARY STAGE ONLY) 04/06/09 07/21/09

SHEET 20 OF 31

FILE => 55-1097g-s-arch02.dgn

USERNAME => trienard DATE PLOTTED => 03-FEB-2010 TIME PLOTTED => 05:30

DIST	COUNTY	ROUTE	POST MILES TOTAL PROJECT	SHEET No	TOTAL SHEETS
12	Ora	22,405, 605	R0.3/R0.9, 22.3/24.0,3.0/R1.6	1561	1929

Khaled Allam 07-27-09
REGISTERED CIVIL ENGINEER DATE

2-1-10
PLANS APPROVAL DATE

REGISTERED PROFESSIONAL ENGINEER Khaled Allam No. 67110 Exp. 09-30-09 CIVIL STATE OF CALIFORNIA

The State of California or its officers or agents shall not be responsible for the accuracy or completeness of electronic copies of this plan sheet.

OCTA
550 SOUTH MAIN STREET
ORANGE, CA 92863

PBS&J
625 THE CITY DRIVE SOUTH, SUITE 200
ORANGE, CA 92868

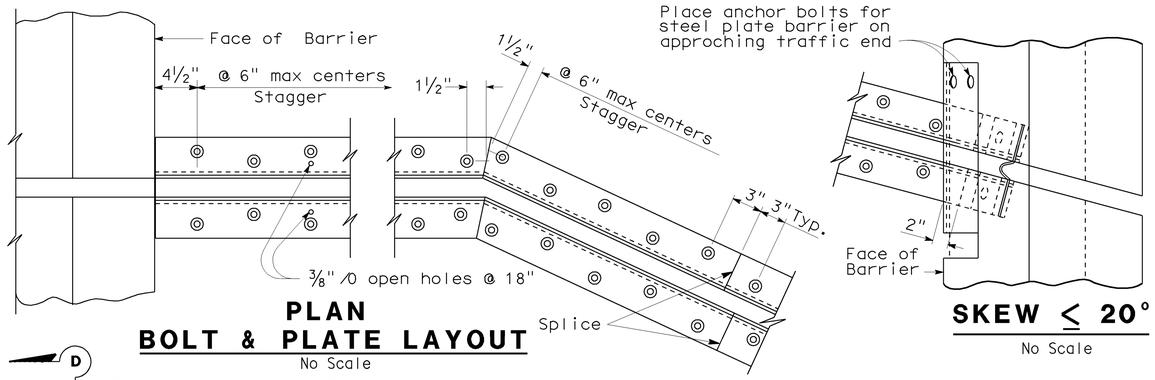

PLAN
BOLT & PLATE LAYOUT
No Scale

SKEW ≤ 20°
No Scale

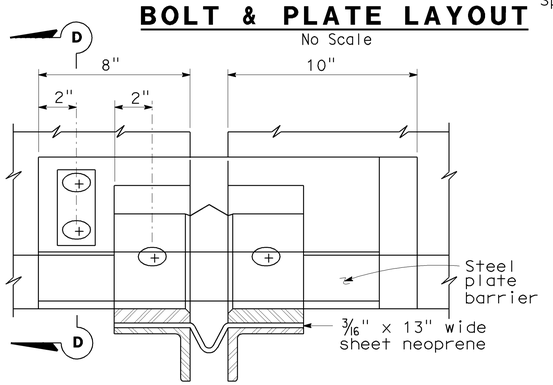

VIEW B-B
No Scale

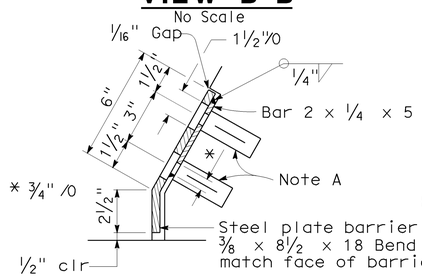

SECTION D-D
No Scale

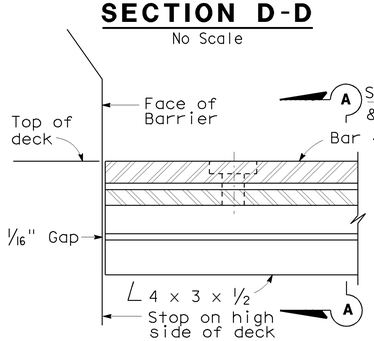

HIGH SIDE BARRIER DETAIL
No Scale

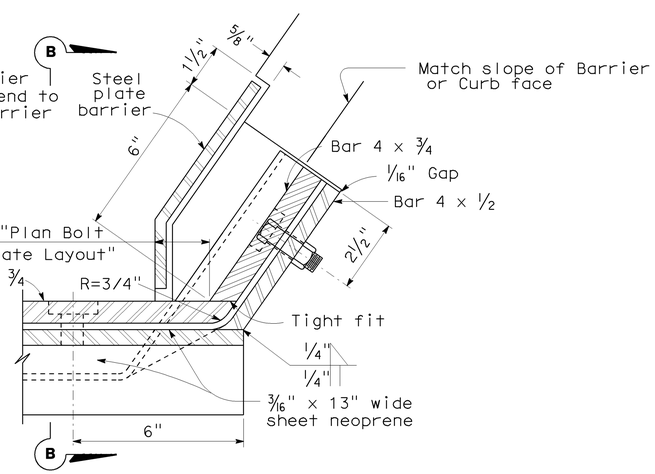

LOW SIDE BARRIER DETAIL
No Scale (See Note B)

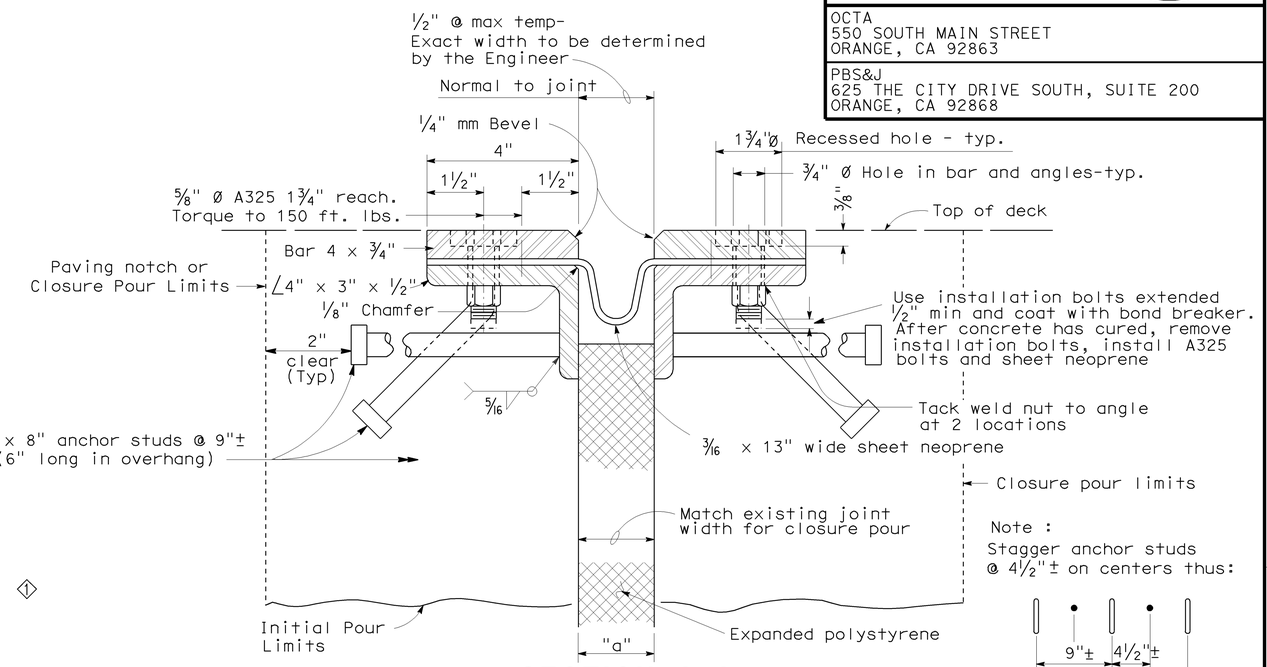

Note :
Stagger anchor studs @ 4½"± on centers thus:

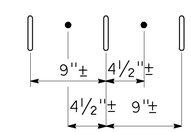

SECTION A-A
No Scale

Joint Information			"a" Dimensions		
Location	Movement Rating (MR)	Skew	Winter	Spring & Fall	Summer
Abut 1	3"	4°33'10"	1⅜"	1⅛"	¾"
Abut 2	2½"	0°0'0"	1⅛"	⅞"	⅝"

NOTES:

Full penetration butt welds may be substituted for fillet welds on all anchor studs.

Alternate types of anchor studs may be permitted subject to the approval by the Engineer.

Joint seal assembly to be used in conjunction with closure pour. (See other sheets for limits). Closure pour shall not be placed until final deck surface is within the tolerances specified.

Use joint at crown of roadway, at any change in traverse slope in deck and at changes in horizontal direction. Place other joints at or near lanes. All metal parts to be painted or galvanized after fabrication.

Sheet neoprene shall be fabricated in one continuous piece or joints shall be vulcanized. Neoprene shall be fabricated to bend around corners. 1" holes in neoprene sheets shall be drilled or punched so that the neoprene is not distorted at the time of installation.

NOTE A

Insert assembly or expansion anchorage for ⅝" x 1¾" A325 bolt.

NOTE B

Use the sidewalk Detail at all sidewalk joints. Use the Barrier Detail at both sides if the roadway is crowned or if the difference in elevation between the ends of the seal is 0.5' or less.

NO SCALE

STANDARD DRAWING

FILE NO. xs8-010e

APPROVED BY T. DELIS (RESPONSIBLE TECHNICAL SPECIALIST)
APPROVAL DATE 5-8-08

RELEASED BY ROBERTO LACALLE (RESPONSIBLE OFFICE CHIEF)
RELEASE DATE 5-8-08

1 Deleted Details

STATE OF CALIFORNIA
DEPARTMENT OF TRANSPORTATION

DIVISION OF ENGINEERING SERVICES

CU 12235
EA 071631

BRIDGE NO.
BRIDGE NO.
POST MILE R0.39

E22-N605/405 SEPARATION (REPLACE)
JOINT SEAL ASSEMBLY (MAXIMUM MOVEMENT RATING = 4")

DS OSD 2147A (ENGLISH STANDARD DRAWING "XS" BORDER REV. 01/11/08)

ORIGINAL SCALE IN INCHES FOR REDUCED PLANS 0 1 2 3

DISREGARD PRINTS BEARING EARLIER REVISION DATES

REVISION DATES (PRELIMINARY STAGE ONLY): 02/18/08 06/02/08 09/17/08 01/28/09 04/06/09 07/21/09

SHEET 21 OF 31

FILE => 55-1097g-q-jntdt.dgn USERNAME => trlenard

DATE PLOTTED => 03-FEB-2010 TIME PLOTTED => 06:58

55-1097g-q-jntdt.dgn

RELEASED 11-4-97

DIST.	COUNTY	ROUTE	POST MILES TOTAL PROJECT	SHEET NO.	TOTAL SHEETS
12	Ora	22, 405, 605	R0.3/R0.9, 22.3/24.0,3.0/R1.6	1562	1929

Khaled Allam 07-27-09
REGISTERED ENGINEER - CIVIL

2-1-10
PLANS APPROVAL DATE

REGISTERED PROFESSIONAL ENGINEER Khaled Allam No. 67110 Exp. 09-30-10 CIVIL STATE OF CALIFORNIA

The State of California or its officers or agents shall not be responsible for the accuracy or completeness of electronic copies of this plan sheet.

OCTA
550 SOUTH MAIN STREET
ORANGE, CA 92863

PBS&J
625 THE CITY DRIVE SOUTH, SUITE 200
ORANGE, CA 92868

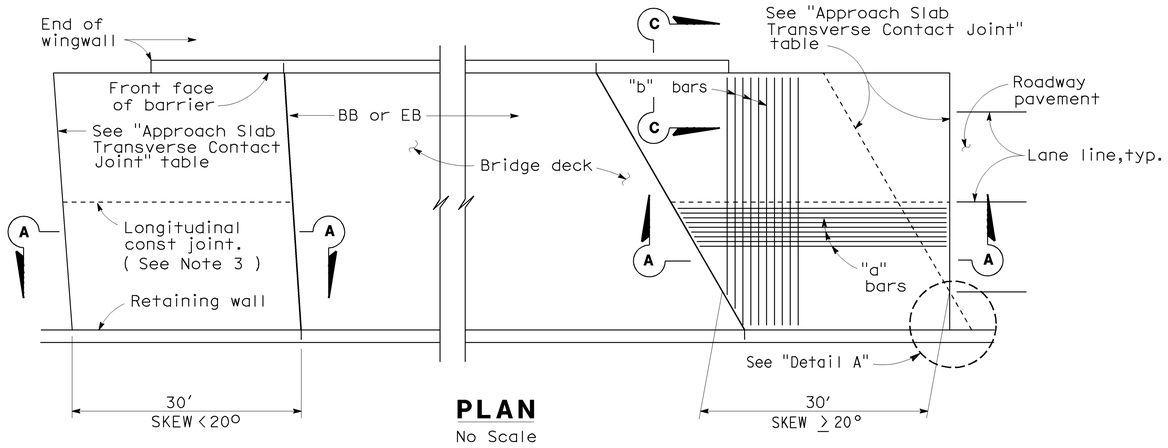

PLAN
No Scale

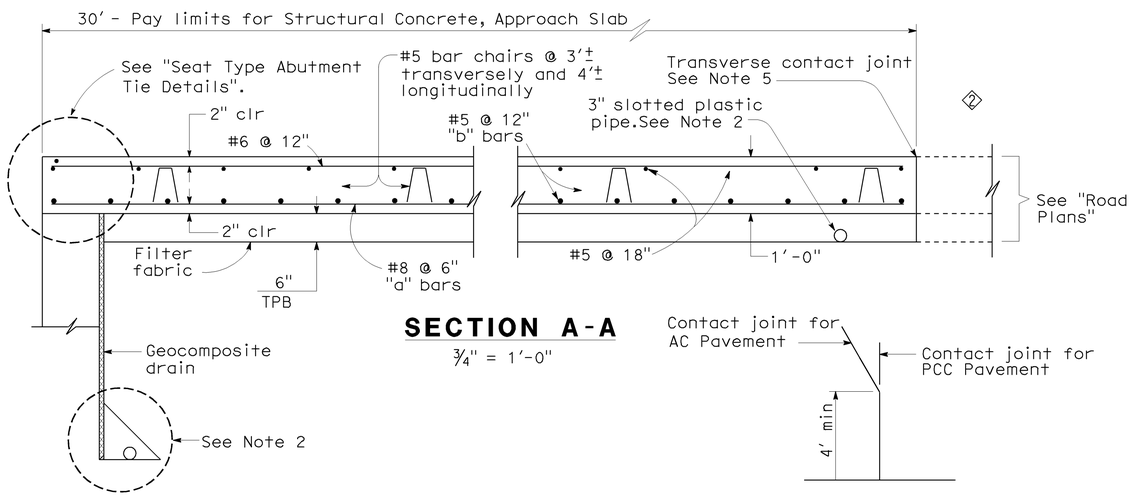

SECTION A-A
¾" = 1′-0"

DETAIL A
No Scale

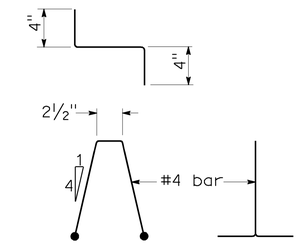

BAR CHAIR DETAIL
1½" = 1′-0"

APPROACH SLAB TRANSVERSE CONTACT JOINT		
APPROACH SKEW	WITH AC ROADWAY PAVEMENT	WITH PCC ROADWAY PAVEMENT
< 20°	Parallel to face of paving notch	Parallel to face of paving notch
20°- 45°	Parallel to face of P N use (Detail A)	Stagger lines 24′ to 36′ apart.
> 45°	Parallel to face of P N use (Detail A)	Stagger at each lane line.

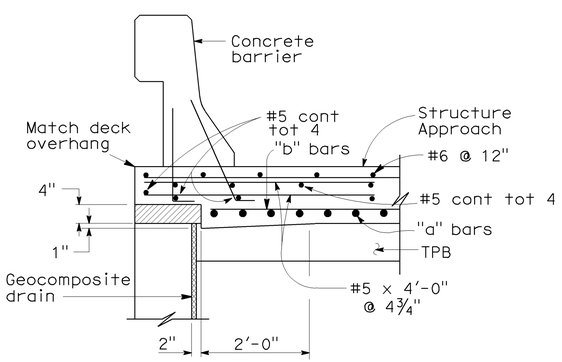

TYPE E-1

SECTION C-C
¾" = 1′-0"
(Type E-1 to be used,unless otherwise shown on plans)

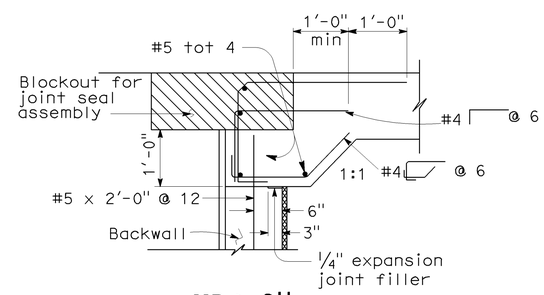

MR > 2"

SEAT TYPE ABUTMENT TIE DETAILS (SEE NOTE 1)
¾" = 1′-0"

NOTES:

1. For details not shown, see "Bridge Plans".
2. For drainage details,see "Structure Approach Drainage Details" sheet.
3. Longitudinal construction joints,when permitted by the Engineer, shall be located on lane lines.
4. End angle or plate at beginning of barrier transition, end of wingwall or end of structure approach as applicable.
5. For transverse contact joint with new PCC paving, refer to Standard Plan P10.
6. At the contractor's option, approach slab transverse reinforcement may be placed parallel to paving notch. Spacing of transverse reinforcement is measured along ℄ roadway.

Expanded polystyrene, remove outer 6" after construction.

STANDARD DRAWING

FILE NO. XS 22-18	DESIGN	BY M. TRAFFALIS	CHECKED E. THORKILDSEN	APPROVAL RECOMMENDED BY
DESIGN DATE Revised	DETAILS	BY R. YEE	CHECKED E. THORKILDSEN	DESIGN SUPERVISOR
	SUBMITTED BY M. HA			

1 Deleted Details
2 Modified Details

STATE OF CALIFORNIA
DEPARTMENT OF TRANSPORTATION

DIVISION OF STRUCTURES
STRUCTURE DESIGN

BRIDGE NO. 55-1097G
POST MILE R0.39

E22-N605/405 SEPARATION (REPLACE)
STRUCTURE APPROACH TYPE N(30S)

DS OSD 2147A (CADD 4/89)

ORIGINAL SCALE IN INCHES FOR REDUCED PLANS 0 1 2 3

CU 12235
EA 071631

DISREGARD PRINTS BEARING EARLIER REVISION DATES

REVISION DATES (PRELIMINARY STAGE ONLY) 09/17/08 04/06/09 07/27/09

SHEET 22 OF 31

FILE => 55-1097g-s-sa01.dgn

XS22I8.DGN VI=I

USERNAME => trlenard DATE PLOTTED => 03-FEB-2010 TIME PLOTTED => 06:58

DIST	COUNTY	ROUTE	POST MILES TOTAL PROJECT	SHEET No	TOTAL SHEETS
12	Ora	22,405, 605	R0.3/R0.9, 22.3/24.0,3.0/R1.6	1563	1929

Khaled Allam 07-27-09
REGISTERED CIVIL ENGINEER DATE

2-1-10
PLANS APPROVAL DATE

REGISTERED PROFESSIONAL ENGINEER Khaled Allam No. 67110 Exp. 09-30-10 CIVIL STATE OF CALIFORNIA

The State of California or its officers or agents shall not be responsible for the accuracy or completeness of electronic copies of this plan sheet.

OCTA
550 SOUTH MAIN STREET
ORANGE, CA 92863

PBS&J
625 THE CITY DRIVE SOUTH, SUITE 200
ORANGE, CA 92868

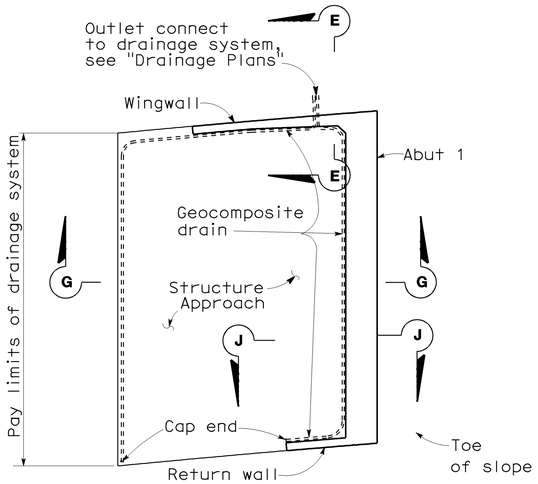

PLAN
No Scale

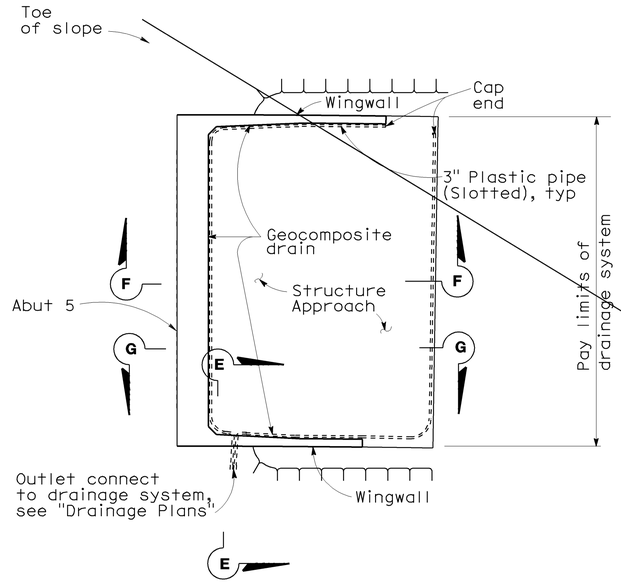

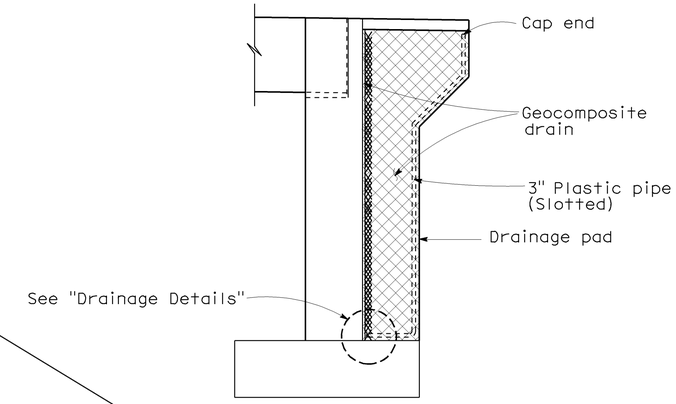

CANTILEVER WINGWALL
SECTION J-J
No Scale

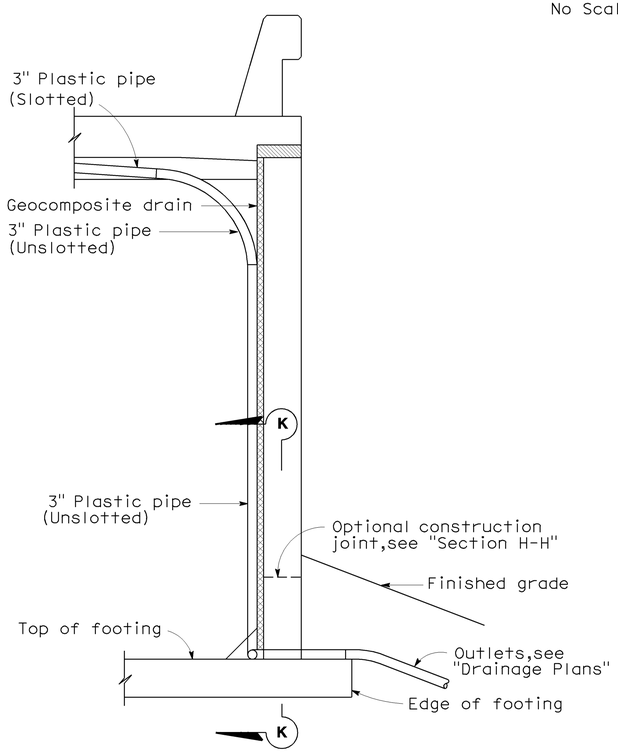

SECTION E-E
No Scale

NOTE: Bends and junctions in 3" plastic pipe are 2'-6" radius min.

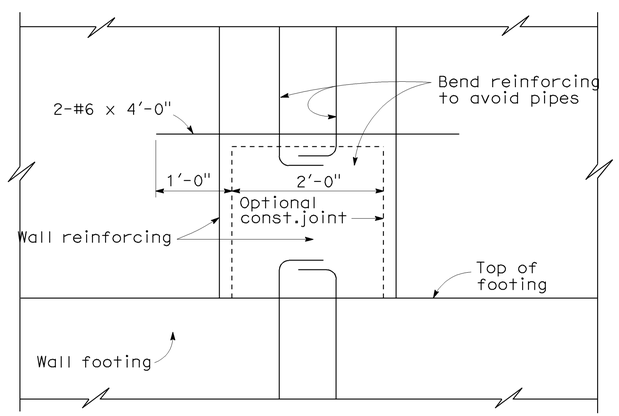

SECTION K-K
No Scale

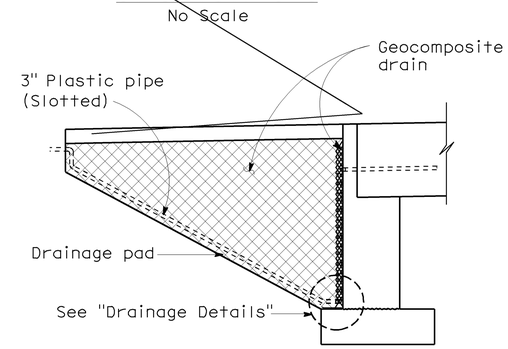

CANTILEVER WINGWALL
SECTION G-G
No Scale

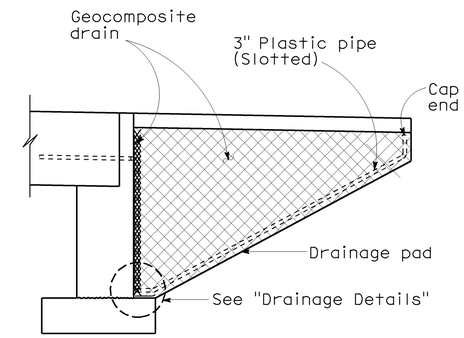

CANTILEVER WINGWALL
SECTION F-F
No Scale

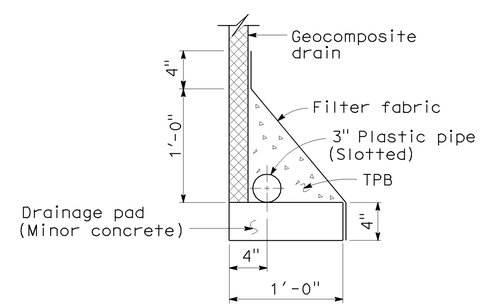

WITHOUT FOOTING

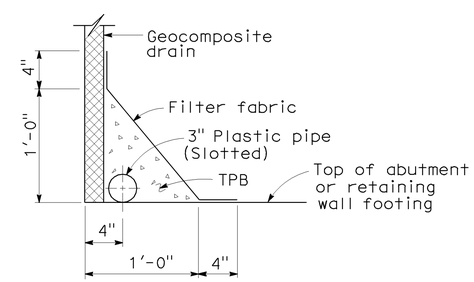

WITH FOOTING

DRAINAGE DETAILS
No Scale

Sudhakar Vatti
DESIGN OVERSIGHT Sudhakar Vatti
8-10-09
SIGN OFF DATE

	BY	CHECKED
DESIGN	K. Allam/Y. Deng	P. Morel
DETAILS	N. Shu	P. Morel
QUANTITIES	V. Nong	L. Khaleghi

PREPARED FOR THE STATE OF CALIFORNIA DEPARTMENT OF TRANSPORTATION

Alaedin Moubayed
PROJECT ENGINEER

BRIDGE NO. 55-1097G
POST MILE R0.39

E22-N605/405 SEPARATION (REPLACE)
STRUCTURE APPROACH DRAINAGE DETAILS

DESIGN DETAIL SHEET (ENGLISH) (REV. 2/25/05)

ORIGINAL SCALE IN INCHES FOR REDUCED PLANS 0 1 2 3

CU 12235
EA 071631

DISREGARD PRINTS BEARING EARLIER REVISION DATES
REVISION DATES (PRELIMINARY STAGE ONLY) 02/18/08 06/02/08 09/17/08 04/06/09 07/27/09

SHEET 23 OF 31

FILE => 55-1097g-s-sadd.dgn

USERNAME => trlenard DATE PLOTTED => 03-FEB-2010 TIME PLOTTED => 06:59

DIST.	COUNTY	ROUTE	POST MILES TOTAL PROJECT	SHEET NO.	TOTAL SHEETS
12	Ora	22, 405, 605	R0.3/R0.9, 22.3/24.0, 3.0/R1.6	1564	1929

Khaled Allam 07-27-09
REGISTERED ENGINEER - CIVIL

2-1-10
PLANS APPROVAL DATE

REGISTERED PROFESSIONAL ENGINEER Khaled Allam No. 67110 Exp. 09-30-10 CIVIL STATE OF CALIFORNIA

The State of California or its officers or agents shall not be responsible for the accuracy or completeness of electronic copies of this plan sheet.

ORANGE COUNTY TRANSPORTATION AUTHORITY
550 SOUTH MAIN STREET, P.O. BOX 14184
ORANGE, CA 92863-1584

PBS&J
625 The City Drive South, Suite 200
Orange, CA 92868-4946

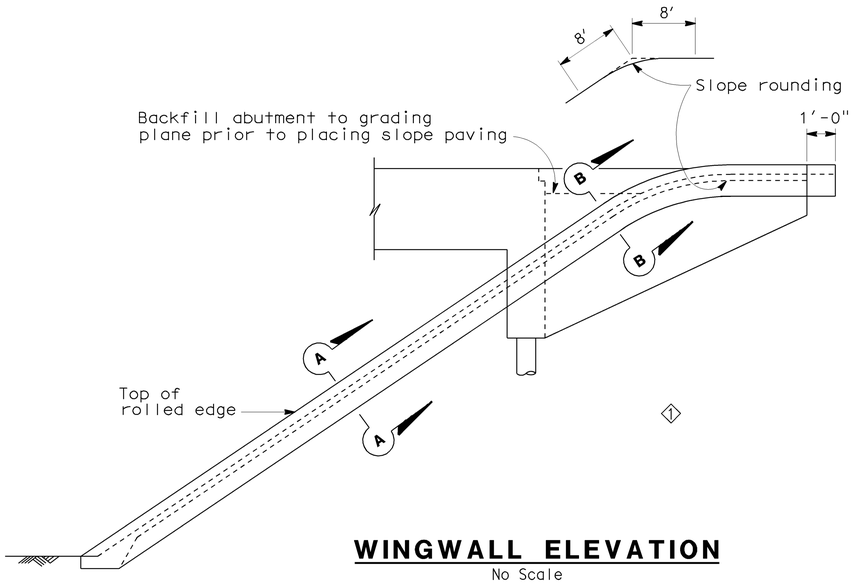

WINGWALL ELEVATION
No Scale

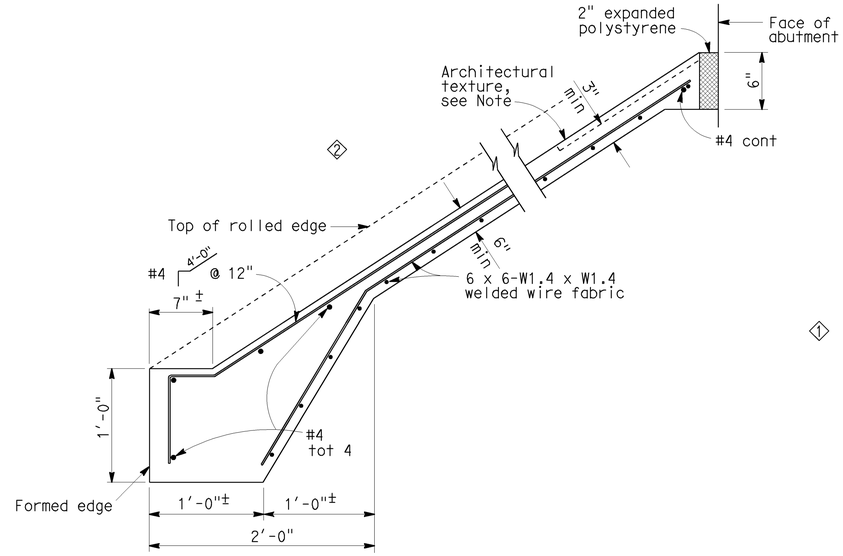

TYPICAL SECTION - CONCRETE PAVING
No Scale

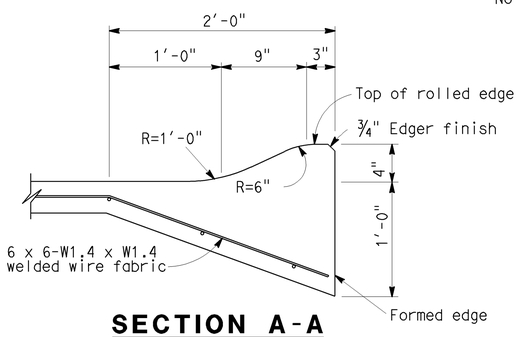

SECTION A-A
No Scale

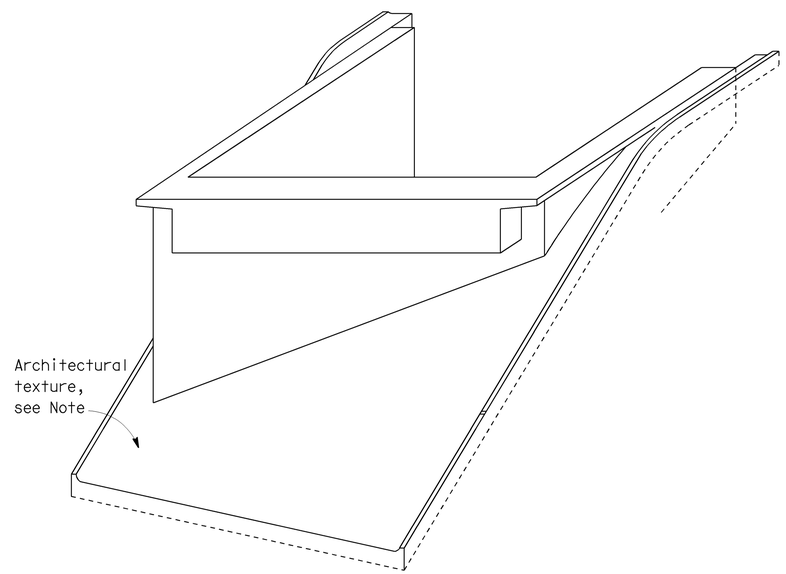

PICTORIAL VIEW OF TYPICAL INSTALLATION
No Scale

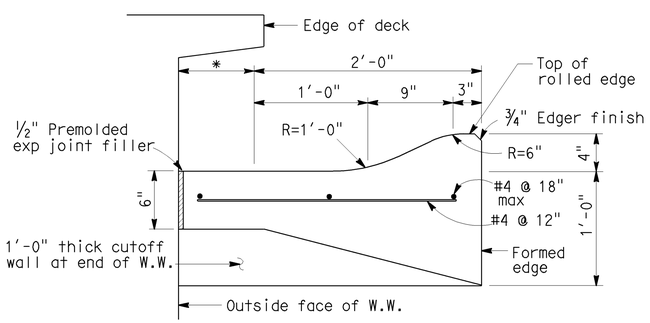

SECTION B-B
No Scale

*This dimension becomes zero when edge of deck is at outside face of W.W.

NOTE
See "Architectural Details No. 1 & 2" sheet for Architectural texture details.

SPECIAL DETAILS

1 Deleted Details
2 Modified Details

STANDARD DRAWING

RELEASE DATE	Revised	DESIGN	BY M. TRAFFALIS	CHECKED E. THORKILDSEN	RELEASED BY
FILE NO.	xs4-210	DETAILS	BY R. YEE	CHECKED E. THORKILDSEN	
		SUBMITTED	BY M. HA	DRAWING DATE 4/98	OFFICE CHIEF

STATE OF CALIFORNIA
DEPARTMENT OF TRANSPORTATION

DIVISION OF ENGINEERING SERVICES

BRIDGE NO. 55-1097G
KILOMETER POST R0.39

E22-N605/405 SEPARATION (REPLACE)
SLOPE PAVING

DS OSD 2147A (METRIC) (REV. 2/25/97)

ORIGINAL SCALE IN INCHES FOR REDUCED PLANS 0 1 2 3

CU 12235
EA 071631

DISREGARD PRINTS BEARING EARLIER REVISION DATES

REVISION DATES (PRELIMINARY STAGE ONLY) 09/17/08 04/06/09 07/27/09

SHEET 24 OF 31

FILE => 55-1097g-s-slp.dgn

55-1097g-s-slp.dgn

DATE PLOTTED => 03-FEB-2010 TIME PLOTTED => 06:59

REFERENCE: CALTRANS SOIL & ROCK LOGGING, CLASSIFICATION, AND PRESENTATION MANUAL (JUNE 2007)

DIST	COUNTY	ROUTE	POST MILES TOTAL PROJECT	SHEET No	TOTAL SHEETS
12	Ora	22,405, 605	R0.3/R0.9, 22.3/24.0,3.0/R1.6	1565	1929

REGISTERED CIVIL ENGINEER 07/27/09 DATE

2-1-10
PLANS APPROVAL DATE

REGISTERED PROFESSIONAL ENGINEER Eric Brown No. GE-2806 Exp. 06/30/10 GEOTECHNICAL STATE OF CALIFORNIA

The State of California or its officers or agents shall not be responsible for the accuracy or completeness of electronic copies of this plan sheet.

OCTA
550 SOUTH MAIN STREET
ORANGE, CA 92863

EARTH MECHANICS, INC.
17660, NEWHOPE STREET, SUITE E
FOUNTAIN VALLEY, CA 92708

CEMENTATION

Description	Criteria
Weak	Crumbles or breaks with handling or little finger pressure.
Moderate	Crumbles or breaks with considerable finger pressure.
Strong	Will not crumble or break with finger pressure.

CONSISTENCY OF COHESIVE SOILS

Description	Unconfined Compressive Strength (tsf)	Pocket Penetrometer Measurement (tsf)	Torvane Measurement (tsf)	Field Approximation
Very Soft	< 0.25	< 0.25	< 0.12	Easily penetrated several inches by fist
Soft	0.25 to 0.50	0.25 to 0.50	0.12 to 0.25	Easily penetrated several inches by thumb
Medium Stiff	0.50 to 1.0	0.50 to 1.0	0.25 to 0.50	Penetrated several inches by thumb with moderate effort
Stiff	1 to 2	1 to 2	0.50 to 1.0	Readily indented by thumb but penetrated only with great effort
Very Stiff	2 to 4	2 to 4	1.0 to 2.0	Readily indented by thumbnail
Hard	> 4.0	> 4.0	> 2.0	Indented by thumbnail with difficulty

BOREHOLE IDENTIFICATION

Symbol	Hole Type	Description
Size	A	Auger Boring
Size	R P	Rotary drilled boring Rotary percussion boring (air)
Size	R	Rotary drilled diamond core
Size	HD HA	Hand driven (1-inch soil tube) Hand Auger
●	D	Dynamic Cone Penetration Boring
▲	CPT	Cone Penetration Test (ASTM D 5778-95)
□	O	Other

Note: Size in inches.

PLASTICITY OF FINE-GRAINED SOILS

Description	Criteria
Nonplastic	A 1/8-inch thread cannot be rolled at any water content.
Low	The thread can barely be rolled and the lump cannot be formed when drier than the plastic limit.
Medium	The thread is easy to roll and not much time is required to reach the plastic limit. The thread cannot be rerolled after reaching the plastic limit. The lump crumbles when drier than the plastic limit.
High	It takes considerable time rolling and kneading to reach the plastic limit. The thread can be rerolled several times after reaching the plastic limit. The lump can be formed without crumbling when drier than the plastic limit.

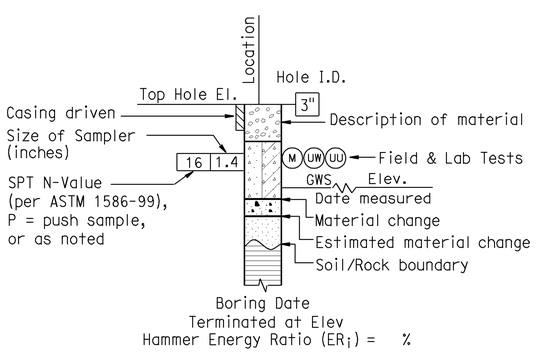

ROTARY BORING

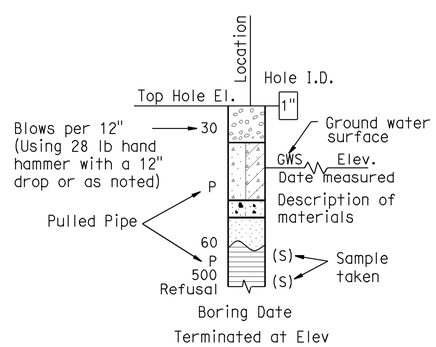

HAND BORING

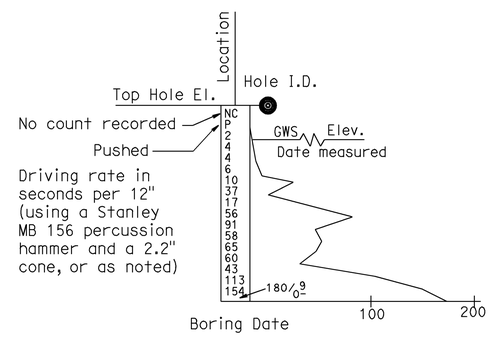

DYNAMIC CONE PENETRATION BORING

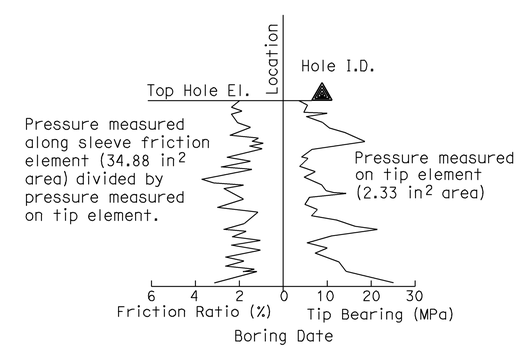

CONE PENETRATION TEST (CPT) SOUNDING

Sudhakar Vatti
DESIGN OVERSIGHT Sudhakar Vatti
8-10-09
SIGN OFF DATE

DRAWN BY: E.Brown
CHECKED BY: G.J.Gunaranjan

FIELD INVESTIGATION BY:
R.Jie

PREPARED FOR THE STATE OF CALIFORNIA DEPARTMENT OF TRANSPORTATION

E.Brown
PROJECT ENGINEER

BRIDGE NO. 55-1097G
POST MILE R0.39

E22-N605/405 SEPARATION (REPLACE)
LOG OF TEST BORINGS NO. 1

OSF CIVIL LOG OF TEST BORINGS SHEET (ENGLISH) (REV. 2-25-05)

ORIGINAL SCALE IN INCHES FOR REDUCED PLANS 0 1 2 3

CU 12235
EA 071631

DISREGARD PRINTS BEARING EARLIER REVISION DATES
REVISION DATES (PRELIMINARY STAGE ONLY) 08/28/08 03/25/09 04/06/09 07/21/09

SHEET 25 OF 31

FILE => 55-1097g-z-ltb01.dgn

USERNAME = friehard DATE PLOTTED => 03-FEB-2010 TIME PLOTTED => 06:53

REFERENCE: CALTRANS SOIL & ROCK LOGGING, CLASSIFICATION, AND PRESENTATION MANUAL (JUNE 2007)

DIST	COUNTY	ROUTE	POST MILES TOTAL PROJECT	SHEET No	TOTAL SHEETS
12	Ora	22,405, 605	R0.3/R0.9, 22.3/24.0,3.0/R1.6	1566	1929

REGISTERED CIVIL ENGINEER 07/27/09 DATE

2-1-10
PLANS APPROVAL DATE

REGISTERED PROFESSIONAL ENGINEER Eric Brown No. GE-2806 Exp. 06/30/10 GEOTECHNICAL STATE OF CALIFORNIA

The State of California or its officers or agents shall not be responsible for the accuracy or completeness of electronic copies of this plan sheet.

OCTA
550 SOUTH MAIN STREET
ORANGE, CA 92863

EARTH MECHANICS, INC.
17660, NEWHOPE STREET, SUITE E
FOUNTAIN VALLEY, CA 92708

GROUP SYMBOLS AND NAMES

Graphic/Symbol	Group Names
GW	Well-graded GRAVEL Well-graded GRAVEL with SAND
GP	Poorly graded GRAVEL Poorly graded GRAVEL with SAND
GW-GM	Well-graded GRAVEL with SILT Well-graded GRAVEL with SILT and SAND
GW-GC	Well-graded GRAVEL with CLAY (or SILTY CLAY) Well-graded GRAVEL with CLAY and SAND (or SILTY CLAY and SAND)
GP-GM	Poorly graded GRAVEL with SILT Poorly graded GRAVEL with SILT and SAND
GP-GC	Poorly graded GRAVEL with CLAY (or SILTY CLAY) Poorly graded GRAVEL with CLAY and SAND (or SILTY CLAY and SAND)
GM	SILTY GRAVEL SILTY GRAVEL with SAND
GC	CLAYEY GRAVEL CLAYEY GRAVEL with SAND
GC-GM	SILTY, CLAYEY GRAVEL SILTY, CLAYEY GRAVEL with SAND
SW	Well-graded SAND Well-graded SAND with GRAVEL
SP	Poorly graded SAND Poorly graded SAND with GRAVEL
SW-SM	Well-graded SAND with SILT Well-graded SAND with SILT and GRAVEL
SW-SC	Well-graded SAND with CLAY (or SILTY CLAY) Well-graded SAND with CLAY and GRAVEL (or SILTY CLAY and GRAVEL)
SP-SM	Poorly graded SAND with SILT Poorly graded SAND with SILT and GRAVEL
SP-SC	Poorly graded SAND with CLAY (or SILTY CLAY) Poorly graded SAND with CLAY and GRAVEL (or SILTY CLAY and GRAVEL)
SM	SILTY SAND SILTY SAND with GRAVEL
SC	CLAYEY SAND CLAYEY SAND with GRAVEL
SC-SM	SILTY, CLAYEY SAND SILTY, CLAYEY SAND with GRAVEL
PT	PEAT
	COBBLES COBBLES and BOULDERS BOULDERS

Graphic/Symbol	Group Names
CL	Lean CLAY Lean CLAY with SAND Lean CLAY with GRAVEL SANDY lean CLAY SANDY lean CLAY with GRAVEL GRAVELLY lean CLAY GRAVELLY lean CLAY with SAND
CL-ML	SILTY CLAY SILTY CLAY with SAND SILTY CLAY with GRAVEL SANDY SILTY CLAY SANDY SILTY CLAY with GRAVEL GRAVELLY SILTY CLAY GRAVELLY SILTY CLAY with SAND
ML	SILT SILT with SAND SILT with GRAVEL SANDY SILT SANDY SILT with GRAVEL GRAVELLY SILT GRAVELLY SILT with SAND
OL	ORGANIC lean CLAY ORGANIC lean CLAY with SAND ORGANIC lean CLAY with GRAVEL SANDY ORGANIC lean CLAY SANDY ORGANIC lean CLAY with GRAVEL GRAVELLY ORGANIC lean CLAY GRAVELLY ORGANIC lean CLAY with SAND
OL	ORGANIC SILT ORGANIC SILT with SAND ORGANIC SILT with GRAVEL SANDY ORGANIC SILT SANDY ORGANIC SILT with GRAVEL GRAVELLY ORGANIC SILT GRAVELLY ORGANIC SILT with SAND
CH	Fat CLAY Fat CLAY with SAND Fat CLAY with GRAVEL SANDY fat CLAY SANDY fat CLAY with GRAVEL GRAVELLY fat CLAY GRAVELLY fat CLAY with SAND
MH	Elastic SILT Elastic SILT with SAND Elastic SILT with GRAVEL SANDY elastic SILT SANDY elastic SILT with GRAVEL GRAVELLY elastic SILT GRAVELLY elastic SILT with SAND
OH	ORGANIC fat CLAY ORGANIC fat CLAY with SAND ORGANIC fat CLAY with GRAVEL SANDY ORGANIC fat CLAY SANDY ORGANIC fat CLAY with GRAVEL GRAVELLY ORGANIC fat CLAY GRAVELLY ORGANIC fat CLAY with SAND
OH	ORGANIC elastic SILT ORGANIC elastic SILT with SAND ORGANIC elastic SILT with GRAVEL SANDY ORGANIC elastic SILT SANDY ORGANIC elastic SILT with GRAVEL GRAVELLY ORGANIC elastic SILT GRAVELLY ORGANIC elastic SILT with SAND
OL/OH	ORGANIC SOIL ORGANIC SOIL with SAND ORGANIC SOIL with GRAVEL SANDY ORGANIC SOIL SANDY ORGANIC SOIL with GRAVEL GRAVELLY ORGANIC SOIL GRAVELLY ORGANIC SOIL with SAND

FIELD AND LABORATORY TESTING

- (C) Consolidation (ASTM D 2435)
- (CL) Collapse Potential (ASTM D 5333)
- (CP) Compaction Curve (CTM 216)
- (CR) Corrosivity Testing (CTM 643, CTM 422, CTM 417)
- (CU) Consolidated Undrained Triaxial (ASTM D 4767)
- (DS) Direct Shear (ASTM D 3080)
- (EI) Expansion Index (ASTM D 4829)
- (M) Moisture Content (ASTM D 2216)
- (OC) Organic Content-% (ASTM D 2974)
- (P) Permeability (CTM 220)
- (PA) Particle Size Analysis (ASTM D 422)
- (PI) Plasticity Index (AASHTO T 90) Liquid Limit (AASHTO T 89)
- (PL) Point Load Index (ASTM D 5731)
- (PM) Pressure Meter
- (PP) Pocket Penetrometer
- (R) R-Value (CTM 301)
- (SE) Sand Equivalent (CTM 217)
- (SG) Specific Gravity (AASHTO T 100)
- (SL) Shrinkage Limit (ASTM D 427)
- (SW) Swell Potential (ASTM D 4546)
- (TV) Pocket Torvane
- (UC) Unconfined Compression-Soil (ASTM D 2166) Unconfined Compression-Rock (ASTM D 2938)
- (UU) Unconsolidated Undrained Triaxial (ASTM D 2850)
- (UW) Unit Weight (ASTM D 4767)
- (VS) Vane Shear (AASHTO T 223)

APPARENT DENSITY OF COHESIONLESS SOILS

Description	SPT N_{60} (Blows / 12 inches)
Very loose	0 - 4
Loose	5 - 10
Medium Dense	11 - 30
Dense	31 - 50
Very Dense	> 50

MOISTURE

Description	Criteria
Dry	Absence of moisture, dusty, dry to the touch
Moist	Damp but no visible water
Wet	Visible free water, usually soil is below water table

PERCENT OR PROPORTION OF SOILS

Description	Criteria
Trace	Particles are present but estimated to be less than 5%
Few	5 to 10%
Little	15 to 25%
Some	30 to 45%
Mostly	50 to 100%

PARTICLE SIZE

Description		Size
Boulder		> 12"
Cobble		3" to 12"
Gravel	Coarse	3/4" to 3"
	Fine	No. 4 to 3/4"
Sand	Coarse	No. 10 to No. 4
	Medium	No. 40 to No. 10
	Fine	No. 200 to No. 40

Sudhakar Vatti
DESIGN OVERSIGHT Sudhakar Vatti
8-10-09
SIGN OFF DATE

DRAWN BY: E.Brown
CHECKED BY: G.J.Gunaranjan

FIELD INVESTIGATION BY:
R.Jie

PREPARED FOR THE STATE OF CALIFORNIA DEPARTMENT OF TRANSPORTATION

E.Brown
PROJECT ENGINEER

BRIDGE NO. 55-1097G
POST MILE R0.39

E22-N605/405 SEPARATION (REPLACE)
LOG OF TEST BORINGS NO. 2

OSF CIVIL LOG OF TEST BORINGS SHEET (ENGLISH) (REV. 2-25-05)

ORIGINAL SCALE IN INCHES FOR REDUCED PLANS 0 1 2 3

CU 12235
EA 071631

DISREGARD PRINTS BEARING EARLIER REVISION DATES

REVISION DATES (PRELIMINARY STAGE ONLY) 08/29/08 03/23/09 04/06/09 07/21/09

SHEET 26 OF 31

FILE => 55-1097g-z-lltb02.dgn

USERNAME => trlenard DATE PLOTTED => 03-FEB-2010 TIME PLOTTED => 06:59

DIST	COUNTY	ROUTE	POST MILES TOTAL PROJECT	SHEET No	TOTAL SHEETS
12	Ora	22,405, 605	R0.3/R0.9, 22.3/24.0,3.0/R1.6	1567	1929

REGISTERED CIVIL ENGINEER 07/27/09 DATE

2-1-10
PLANS APPROVAL DATE

REGISTERED PROFESSIONAL ENGINEER Eric Brown No. GE-2806 Exp. 06/30/10 GEOTECHNICAL STATE OF CALIFORNIA

The State of California or its officers or agents shall not be responsible for the accuracy or completeness of electronic copies of this plan sheet.

OCTA
550 SOUTH MAIN STREET
ORANGE, CA 92863

EARTH MECHANICS, INC
17660 NEWHOPE STREET, SUITE E
FOUNTAIN VALLEY, CA 92708

BENCHMARKS:

Monument: 1A-144-04

Described by OCS 2005 - Found 3.75" OCS aluminum benchmark disk stamped "1A-144-04", set in the southwesterly corner of a 4.4 ft by 4.4 ft concrete catch basin. Monument is located in the northeasterly corner of the intersection of Seal Beach Boulevard and St. Cloud Drive, 44 ft easterly of the centerline of Seal Beach Boulevard and 58 ft northerly of the centerline of St. Cloud Dr. Monument is set level with the sidewalk.
Elevation: 15.37 feet

NOTES:

(1) This LOTB sheet (Boring Record) was prepared in accordance with the Caltrans Soil and Rock Classification Logging, Classification and Presentation Manual (June 2007).
(2) 2.4" samples were taken using a California Modified Sampler.
(3) A rope and cat-head hammer system consisting of a hammer weight of 140 lbs falling a distance of 30" was used to advance the drive sampler.

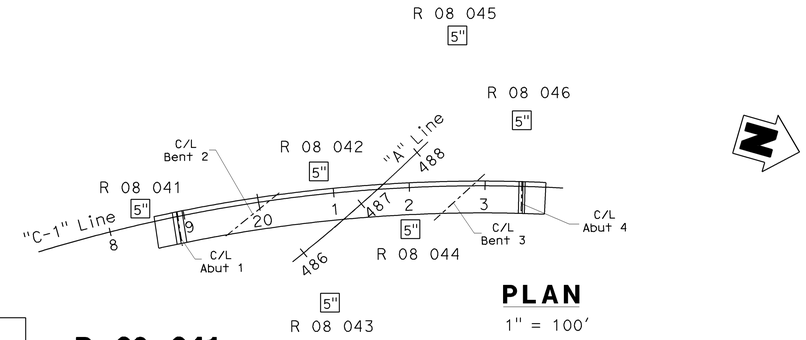

PLAN
1" = 100'

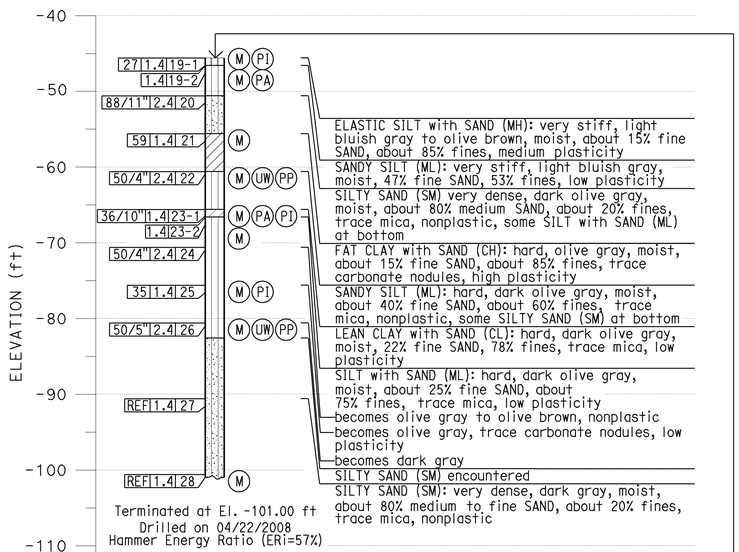

PROFILE
VERTICAL 1" = 10'
HORIZONTAL 1" = 20'

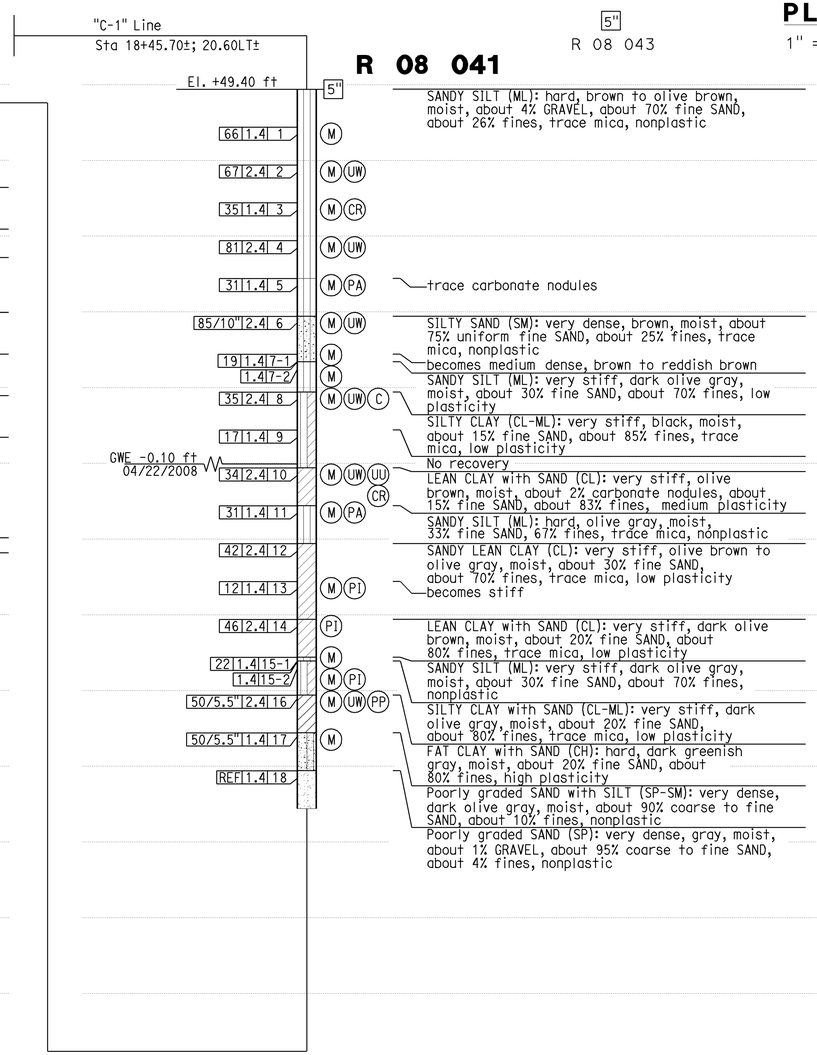

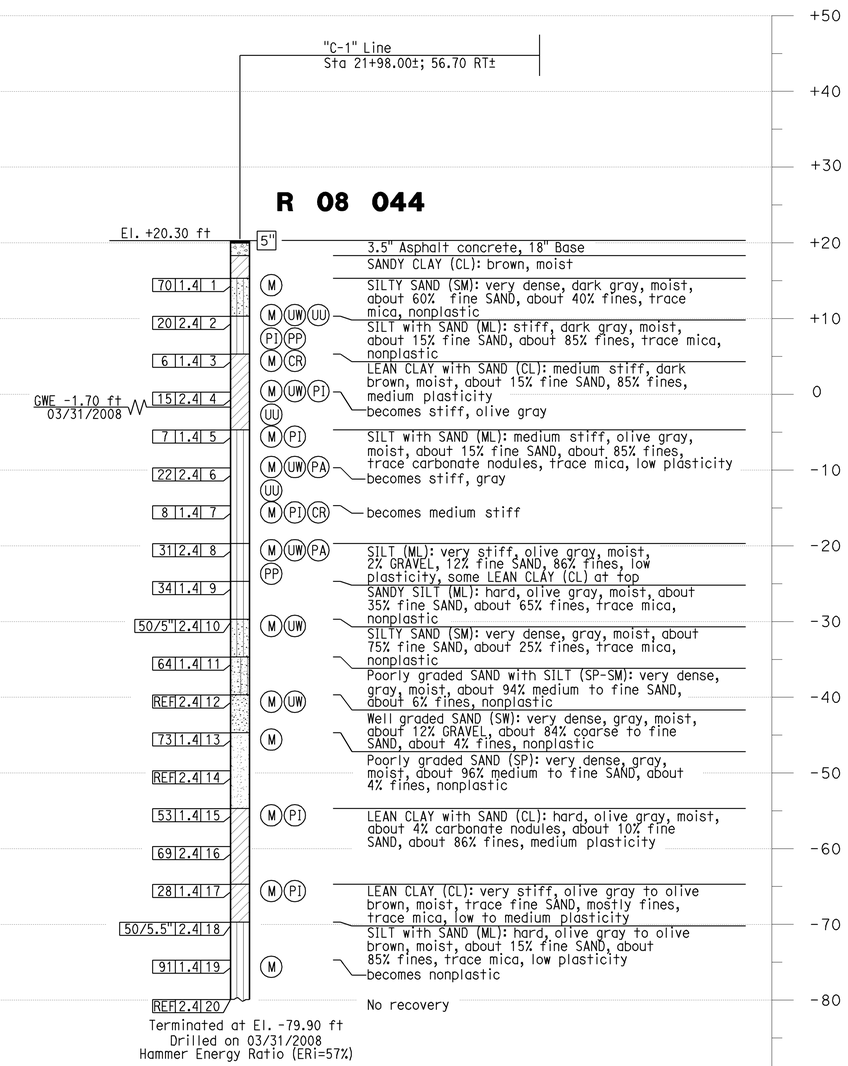

Sudhakar Vatti
DESIGN OVERSIGHT Sudhakar Vatti
8-10-09
SIGN OFF DATE

DRAWN BY: E.Brown
CHECKED BY: G.J.Gunaranjan

FIELD INVESTIGATION BY: R.Jie

PREPARED FOR THE STATE OF CALIFORNIA DEPARTMENT OF TRANSPORTATION

E.Brown
PROJECT ENGINEER

BRIDGE NO. 55-1097G
POST MILE R0.39

E22-N605/405 SEPARATION (REPLACE)
LOG OF TEST BORINGS NO. 3

OSF CIVIL LOG OF TEST BORINGS SHEET (ENGLISH) (REV. 2-25-05)

ORIGINAL SCALE IN INCHES FOR REDUCED PLANS 0 1 2 3

CU 12235
EA 071631

DISREGARD PRINTS BEARING EARLIER REVISION DATES
REVISION DATES (PRELIMINARY STAGE ONLY) 08/29/08 03/23/09 04/06/09 07/21/09

SHEET 27 OF 31

FILE => 55-1097g-z-ltb03.dgn

USERNAME => trlenard DATE PLOTTED => 03-FEB-2010 TIME PLOTTED => 06:59

BENCHMARKS:

Monument: 1A-144-04

Described by OCS 2005 - Found 3.75" OCS aluminum benchmark disk stamped "1A-144-04", set in the southwesterly corner of a 4.4 ft by 4.4 ft concrete catch basin. Monument is located in the northeasterly corner of the intersection of Seal Beach Boulevard and St. Cloud Drive, 44 ft easterly of the centerline of Seal Beach Boulevard and 58 ft northerly of the centerline of St. Cloud Dr. Monument is set level with the sidewalk.
Elevation: 15.37 feet

NOTES:

(1) This LOTB sheet (Boring Record) was prepared in accordance with the Caltrans Soil and Rock Classification Logging, Classification and Presentation Manual (June 2007).

(2) 2.4" samples were taken using a California Modified Sampler.

(3) A rope and cat-head hammer system consisting of a hammer weight of 140 lbs falling a distance of 30" was used to advance the drive sampler.

DIST	COUNTY	ROUTE	POST MILES TOTAL PROJECT	SHEET No	TOTAL SHEETS
12	Ora	22,405, 605	R0.3/R0.9, 22.3/24.0,3.0/R1.6	1568	1929

REGISTERED CIVIL ENGINEER 07/27/09 DATE

2-1-10
PLANS APPROVAL DATE

REGISTERED PROFESSIONAL ENGINEER Eric Brown No. GE-2806 Exp. 06/30/10 GEOTECHNICAL STATE OF CALIFORNIA

The State of California or its officers or agents shall not be responsible for the accuracy or completeness of electronic copies of this plan sheet.

OCTA
550 SOUTH MAIN STREET
ORANGE, CA 92863

EARTH MECHANICS, INC
17660 NEWHOPE STREET, SUITE E
FOUNTAIN VALLEY, CA 92708

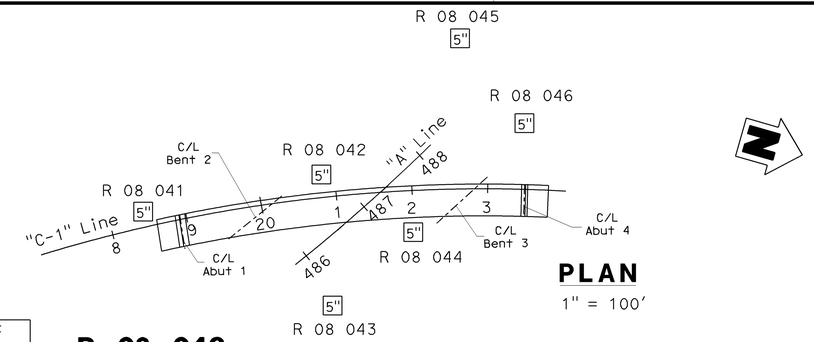

PLAN

1" = 100'

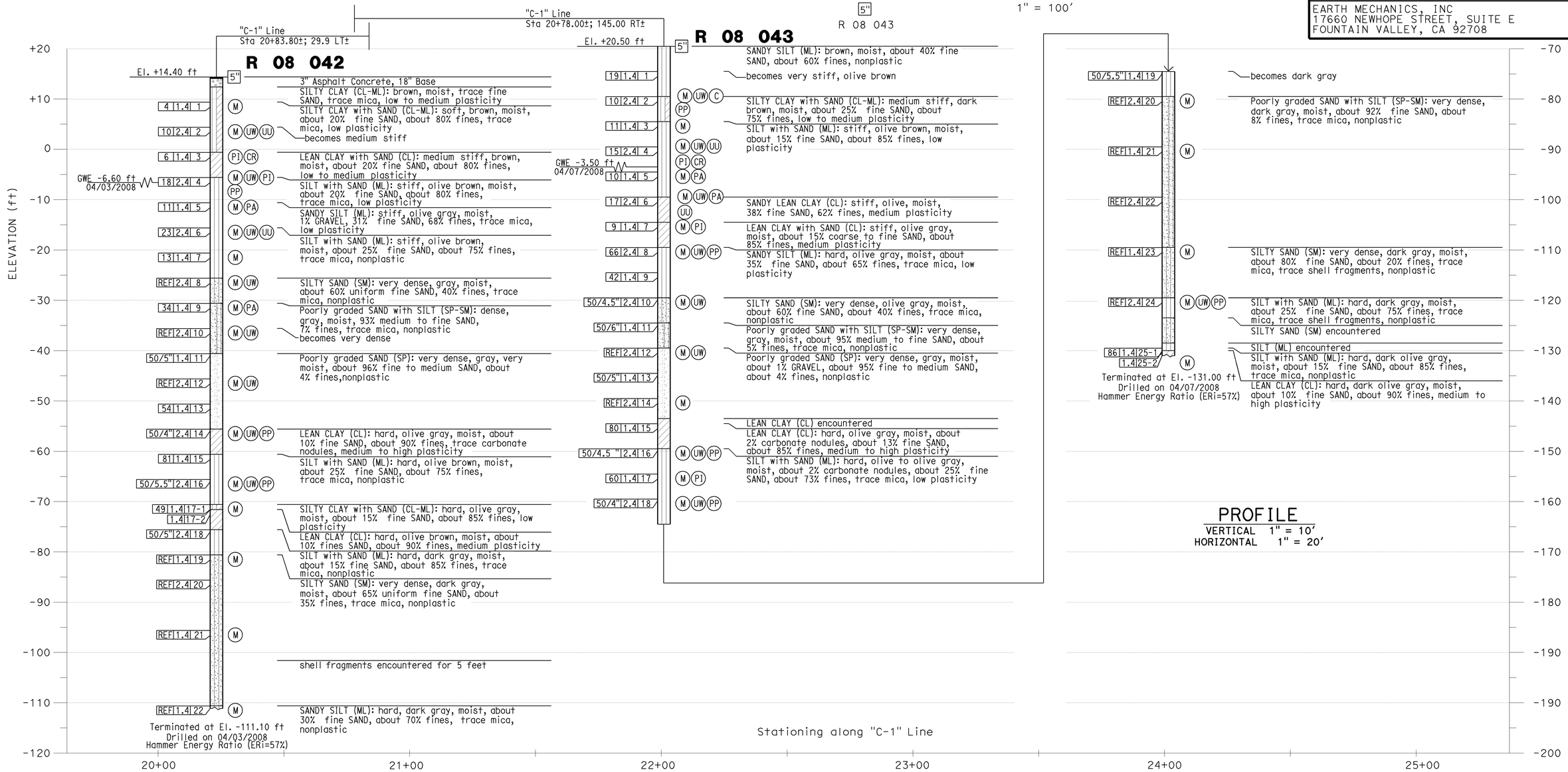

PROFILE

VERTICAL 1" = 10'
HORIZONTAL 1" = 20'

Sudhakar Vatti — DESIGN OVERSIGHT Sudhakar Vatti; 8-10-09 SIGN OFF DATE	DRAWN BY: E.Brown; CHECKED BY: G.J.Gunaranjan	FIELD INVESTIGATION BY: R.Jie	PREPARED FOR THE STATE OF CALIFORNIA DEPARTMENT OF TRANSPORTATION
E.Brown PROJECT ENGINEER	BRIDGE NO. 55-1097G; POST MILE R0.39	E22-N605/405 SEPARATION (REPLACE)	LOG OF TEST BORINGS NO. 4

OSF CIVIL LOG OF TEST BORINGS SHEET (ENGLISH) (REV. 2-25-05)

ORIGINAL SCALE IN INCHES FOR REDUCED PLANS 0 1 2 3

CU 12235
EA 071631

DISREGARD PRINTS BEARING EARLIER REVISION DATES — REVISION DATES (PRELIMINARY STAGE ONLY) 08/29/08 03/23/09 04/06/09 07/27/09

SHEET 28 OF 31

FILE => 55-1097g-z-ltb04.dgn

USERNAME => rtrenord DATE PLOTTED => 03-FEB-2010 TIME PLOTTED => 06:59

DIST	COUNTY	ROUTE	POST MILES TOTAL PROJECT	SHEET No	TOTAL SHEETS
12	Ora	22,405, 605	R0.3/R0.9, 22.3/24.0,3.0/R1.6	1569	1929

REGISTERED CIVIL ENGINEER 07/27/09 DATE

2-1-10
PLANS APPROVAL DATE

REGISTERED PROFESSIONAL ENGINEER Eric Brown No. GE-2806 Exp. 06/30/10 GEOTECHNICAL STATE OF CALIFORNIA

The State of California or its officers or agents shall not be responsible for the accuracy or completeness of electronic copies of this plan sheet.

OCTA
550 SOUTH MAIN STREET
ORANGE, CA 92863

EARTH MECHANICS, INC
17660 NEWHOPE STREET, SUITE E
FOUNTAIN VALLEY, CA 92708

BENCHMARKS:
Monument: 1A-144-04
Described by OCS 2005 - Found 3.75" OCS aluminum benchmark disk stamped "1A-144-04", set in the southwesterly corner of a 4.4 ft by 4.4 ft concrete catch basin. Monument is located in the northeasterly corner of the intersection of Seal Beach Boulevard and St. Cloud Drive, 44 ft easterly of the centerline of Seal Beach Boulevard and 58 ft northerly of the centerline of St. Cloud Dr. Monument is set level with the sidewalk.
Elevation: 15.37 feet

NOTES:
(1) This LOTB sheet (Boring Record) was prepared in accordance with the Caltrans Soil and Rock Classification Logging, Classification and Presentation Manual (June 2007).
(2) 2.4" samples were taken using a California Modified Sampler.
(3) A rope and cat-head hammer system consisting of a hammer weight of 140 lbs falling a distance of 30" was used to advance the drive sampler.

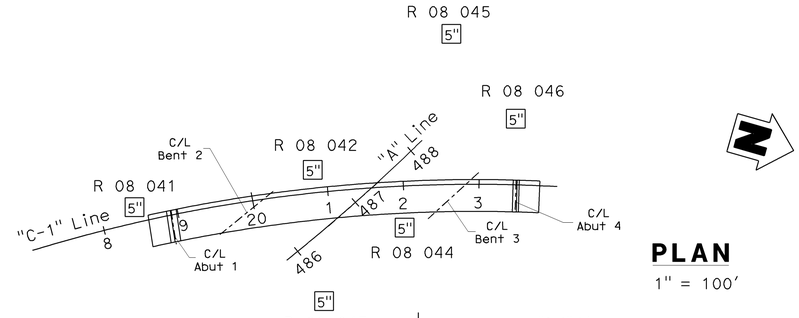

PLAN
1" = 100'

R 08 045

"C-1" Line
Sta 22+66.30±; 198.30 LT±

El. +15.80 ft

GWE -2.20 ft 04/02/2008

Blows	Dry Density	Moisture	Sample	Symbols	Description
					3" Asphalt concrete, 18" Base
4	1.4	1		M PI	LEAN CLAY with SAND (CL): brown, moist, little fine SAND, mostly fines, medium plasticity
13	2.4	2		M UW UU	SANDY SILT (ML): soft, brown, moist, about 30% fine SAND, about 70% fines, trace mica, low plasticity
5	1.4	3		M CR	LEAN CLAY with SAND (CL): medium stiff, olive brown, moist, about 15% fine SAND, about 85% fines, low to medium plasticity
12	2.4	4		M UW PI UU	LEAN CLAY (CL): medium stiff, olive brown, moist, about 10% fine SAND, about 90% fines, medium plasticity
13	1.4	5		M PA PI	LEAN CLAY with SAND (CL): medium stiff, olive brown, moist, about 2% carbonate nodules, 13% fine SAND, 85% fines, low to medium plasticity
31	2.4	6		M UW PA PP	SANDY SILT (ML): stiff, olive brown, moist, 32% fine SAND, 68% fines, trace mica, nonplastic
21	1.4	7		M PI CR	SILT with SAND (ML): very stiff, dark olive brown, moist, 2% GRAVEL, 21% fine SAND, 77% fines, trace mica, nonplastic
54	2.4	8		M UW PA PP	LEAN CLAY with SAND (CL): very stiff, dark olive brown, moist, about 15% fine SAND, about 85% fines, trace mica, trace carbonate nodules, low plasticity
11	1.4	9		M PI	SILTY SAND (SM): dense, gray, moist, 59% fine SAND, 41% fines, trace mica, nonplastic
50/2.5"	2.4	10-1		M UW	SILT with SAND (ML): stiff, gray, moist, about 15% fine SAND, about 85% fines, trace mica, nonplastic
	2.4	10-2			
50/5.5"	1.4	11			LEAN CLAY (CL): hard, olive brown, moist, about 10% fines SAND, about 90% fines, trace carbonate nodules, medium plasticity
REF	2.4	12		M UW	Poorly graded SAND with SILT (SP-SM): very dense, gray, moist, about 94% fine to coarse SAND, about 6% fines, nonplastic
61	1.4	13-1		M	Poorly graded SAND (SP): very dense, gray, very moist, about 96% fine to medium SAND, about 4% fines, nonplastic
	1.4	13-2		M	
50/5"	2..4	14			trace coarse SAND, trace GRAVEL
46	1.4	15		M PI	LEAN CLAY with SAND (CL): hard, gray, moist, about 15% fine SAND, about 85% fines, medium plasticity
85	2.4	16		M UW PP	FAT CLAY (CH): hard, dark olive gray, moist, trace carbonate nodules, high plasticity
54	1.4	17		M	SILT (ML): hard, olive gray, moist, about 10% fine SAND, about 90% fines, trace carbonate nodules, low plasticity becomes olive brown
50/5"	2.4	18		M UW PP	SILT with SAND (ML): hard, olive brown, moist, about 25% fine SAND, about 75% fines, trace mica, nonplastic
REF	1.4	19			SANDY SILT (ML): hard, dark gray, very moist, about 40% fine SAND, about 60% fines, trace mica, nonplastic
REF	2.4	20			SILTY SAND (SM): very dense, dark gray, moist, about 85% fine SAND, about 15% fines, trace mica, nonplastic becomes gray, trace medium SAND
REF	1.4	21		M	
88/11.5"	1.4	22-1		M	trace shell fragments
	1.4	22-2			ORGANIC CLAY (OL): hard, brown, moist
	1.4	22-3		M	SANDY SILT (ML): hard, gray, very moist, about 30% fine SAND, about 70% fines, trace mica, trace shell fragments, nonplastic

Terminated at El. -110.70 ft
Drilled on 04/02/2008
Hammer Energy Ratio (ERi=57%)

R 08 046

"C-1" Line
Sta 23+45.60±; 85.60 LT±

El. +21.60 ft

GWE -2.90 ft 04/01/2008

Blows	Dry Density	Moisture	Sample	Symbols	Description
					3" Asphalt Concrete, 18" Base
60	1.4	1			SANDY LEAN CLAY (CL): brown, moist, some fine SAND, mostly fines, medium plasticity
44	2.4	2		M UW PP	SILTY SAND (SM): very dense, brownish gray to very dark brown, moist, about 80% fine SAND, about 20% fines, trace mica, nonplastic, hard material encountered at the tip of the sampler
7	1.4	3			SANDY SILT (ML): very stiff, very dark grayish brown, moist, about 40% fine SAND, about 60% fines, trace mica, nonplastic
21	2.4	4		M UW C UU	LEAN CLAY with SAND (CL): medium stiff, olive gray to gray, moist, about 15% fine SAND, about 85% fines, medium plasticity
8	1.4	5		M PI CR	becomes stiff, olive gray to olive brown, trace carbonate nodules, trace mica
				M UW C	becomes medium stiff
21	2.4	6		PP	becomes stiff, low plasticity
13	1.4	7		M PA PI	becomes medium plasticity
37	2.4	8		M UW UU	
43	1.4	9		M	SILT with SAND (ML): hard, olive gray, moist, about 25% fine SAND, about 75% fines, trace mica, nonplastic
50/5"	2.4	10		M UW	SILTY SAND (SM): very dense, gray, moist, about 80% fine SAND, about 20% fines, trace mica, nonplastic
50/5.5"	1.4	11		M	
REF	2.4	12			Poorly graded SAND with SILT (SP-SM): very dense, gray, moist, about 3% GRAVEL, 92% coarse to fine SAND, about 5% fines, nonplastic
50/5.5"	1.4	13		M	SILTY SAND (SM): very dense, gray, moist, about 80% fine SAND, 20% fines, trace mica, nonplastic
50/5.5"	2.4	14		M UW	Poorly graded SAND with SILT (SP-SM): very dense, gray, moist, about 94% medium to fine SAND, about 6% fines, nonplastic
REF	1.4	15		M	
50/5"	2.4	16		M UW PP	SANDY SILT (ML): hard, olive gray, moist, about 40% fine SAND, about 60% fines, trace mica, trace carbonate nodules, nonplastic
65	1.4	17		M PI	SILT with SAND (ML): hard, olive gray to olive brown, moist, about 2% carbonate nodules, about 25% fine SAND, about 73% fines, trace mica, nonplastic
50/4"	2.4	18		M UW PP	

Terminated at El. -69.30 ft
Drilled on 04/01/2008
Hammer Energy Ratio (ERi=57%)

ELEVATION (ft): +20, +10, 0, -10, -20, -30, -40, -50, -60, -70, -80, -90, -100, -110, -120

Stationing along "C-1" Line: 21+00, 22+00, 23+00, 24+00, 25+00, 26+00

PROFILE
VERTICAL 1" = 10'
HORIZONTAL 1" = 20'

Sudhakar Vatti
DESIGN OVERSIGHT Sudhakar Vatti
8-10-09
SIGN OFF DATE

DRAWN BY: E.Brown
CHECKED BY: G.J.Gunaranjan

FIELD INVESTIGATION BY: R.Jie

PREPARED FOR THE STATE OF CALIFORNIA DEPARTMENT OF TRANSPORTATION

E.Brown
PROJECT ENGINEER

BRIDGE NO. 55-1097G
POST MILE R0.39

E22-N605/405 SEPARATION (REPLACE)
LOG OF TEST BORINGS NO. 5

OSF CIVIL LOG OF TEST BORINGS SHEET (ENGLISH) (REV. 2-25-05)

ORIGINAL SCALE IN INCHES FOR REDUCED PLANS 0 1 2 3

CU 12235
EA 071631

DISREGARD PRINTS BEARING EARLIER REVISION DATES
REVISION DATES (PRELIMINARY STAGE ONLY) 08/29/08 03/25/09 04/06/09 07/27/09

SHEET 29 OF 31

FILE => 55-1097g-z-ltb05.dgn

USERNAME => trlenard DATE PLOTTED => 03-FEB-2010 TIME PLOTTED => 06:59

(Old-VII-C-1.170-A)

FED. ROAD DIV. NO.	STATE	F. A. PROJECT No.	SHEET No.	TOTAL SHEETS
7	CALIF.			

DIST.	COUNTY	ROUTE	SECTION	SHEET No.	TOTAL SHEETS
07	Ora	605		16	161

BRIDGE ENGINEER — CIVIL ENGINEER—GEOTECH SECT.

DATE APPROVED March 22, 1965

TBM Elev. 14.20

Sta 182 + 32.94 POC NBD
Sta 488 + 10.80 ℄ RTE 158

BM # 483-A-62 Elev. 9.83

Fd 2" I.P. and standard brass cap with fence post marker, 450' right of Sta. 483+00 San Diego Fwy., 8' west of 6' block wall and power pole 1285406-E

DIVISION OF ENGINEERING SERVICES - GEOTECHNICAL SERVICES					
As-Built Log of Test Borings sheet is considered an informational document only. As such, the State of California registration seal with signature, license number and registration certificate expiration date confirm that this is a true and accurate copy of the original document. This drawing is available and presented only for the convenience of any bidder, contractor or other interested party.					
DIST.	COUNTY	ROUTE	KILOMETER POST-TOTAL PROJECT	Sheet No.	Total Sheets
12	Ora	22,405, 605	R0.3/R0.9,22.3/24.0,3.0/R1.6	1570	1929
REGISTERED CIVIL ENGINEER			DATE 07/27/09		

LOG OF TEST BORINGS NO. 6

NOTE: A COPY OF THIS LOG OF TEST BORINGS IS AVAILABLE AT OFFICE OF STRUCTURE MAINTENANCE AND INVESTIGATIONS, SACRAMENTO, CALIFORNIA	CU: 12235 EA: 071631	BRIDGE No. 55-1097G
		Sheet 30 of 31

Revisions made to this Log of Test Borings from the original 1966 Log of Test Borings are the addition of the following table and notes:

To accompany plans dated 2-1-10

REGISTERED PROFESSIONAL ENGINEER — Eric Brown — No. GE-2806 — Exp. 06/30/10 — GEOTECHNICAL — STATE OF CALIFORNIA

Boring	Station	Offset from "C-1" Line

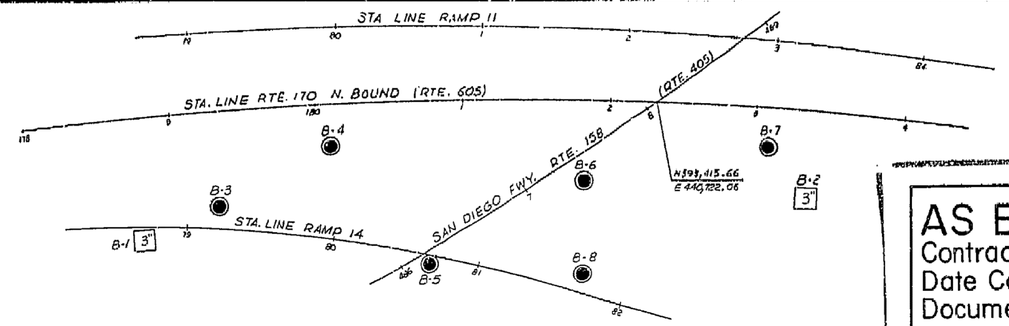

AS BUILT PLANS
Contract No. 07-033974
Date Completed 9-16-66
Document No. 70000020

PLAN
Scale: 1"=50'

INFORMATION ON ACTUAL FOUNDATION CONDITIONS ENCOUNTERED IS ON FILE IN BRIDGE GEOLOGY SECTION.

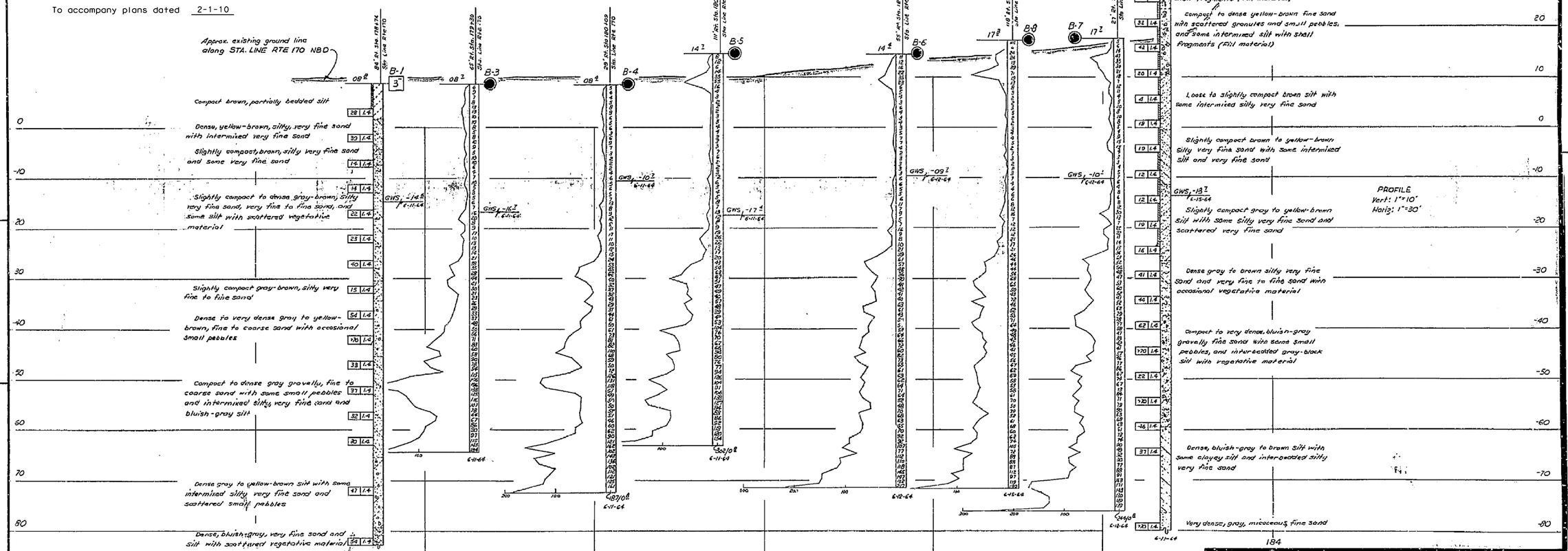

LEGEND OF BORING OPERATIONS

Penetrometer — 2½" Cone Penetrometer — Sampler Boring (Dry) — Rotary Boring (Wet) — Auger Boring (Dry) — Jet Boring — Core Boring — Test Pit

Penetration Boring — Rotary Boring — 1" Soil Tube

LEGEND OF EARTH MATERIALS

Gravel — Sand — Silt — Clay — Sandy Clay or Clayey Sand — Sandy Silt or Silty Sand — Silty Clay or Clayey Silt — Peat and Organic Matter — Fill Material — Igneous Rock — Sedimentary Rock — Metamorphic Rock

CLASSIFICATION OF MATERIAL BASED ON STANDARD GRADE SITE LIMITS

Diagram showing the basis for estimates of grade site distinctions (see in section) of situation of class names. If gravel is present in appreciable quantities (10% or more) the class name, viz. "Gravelly Sand". The terms "Coarse", "Medium" and "Fine" are used to describe the sand, and silt and gravel, refer to standard grade size limits.

NOTE: Classification of earth material as shown on this sheet is based upon field inspection and is not to be construed to imply mechanical analysis.

FIELD STUDY	By D.B. Crawford	6-15-64
DRAWN	By E.E. Ryan	7-29-64
CHECKED	By K. Tocchino	7-21-64

Approval Recommended by: C.C. Marshall — Engineering Geologist

BRIDGE DEPARTMENT
ENGINEERING GEOLOGY SECTION

STATE OF CALIFORNIA
DEPARTMENT OF PUBLIC WORKS
DIVISION OF HIGHWAYS

SHEET 23 OF 23

RTE. 605/405 SEPARATION

LOG OF TEST BORINGS

SCALE AS Noted | BRIDGE 55-412 R/OR | FILE | DRAWING 55412-31

FILENAME => 55-1097g-z-ltb06.tif

Disregard prints bearing earlier numbers → PREL. DRAWING No. PR- 1/1/65

FED. ROAD DIV. NO.	STATE	F. A. PROJECT NO.	SHEET NO.	TOTAL SHEETS
7	CALIF			

DIST.	COUNTY	ROUTE	SECTION	SHEET NO.	TOTAL SHEETS
VII	ORA	170	A	208	250

DATE APPROVED April 20, 1964

B.M. # 483-A-62 Elev. 9.83

Found 2 inch iron pipe and Standard Brass cap with fence post marker, 450 ft right of 483+05 San Diego Fwy., 8 ft. west of 6 ft. block wall and power pole 1285406-E

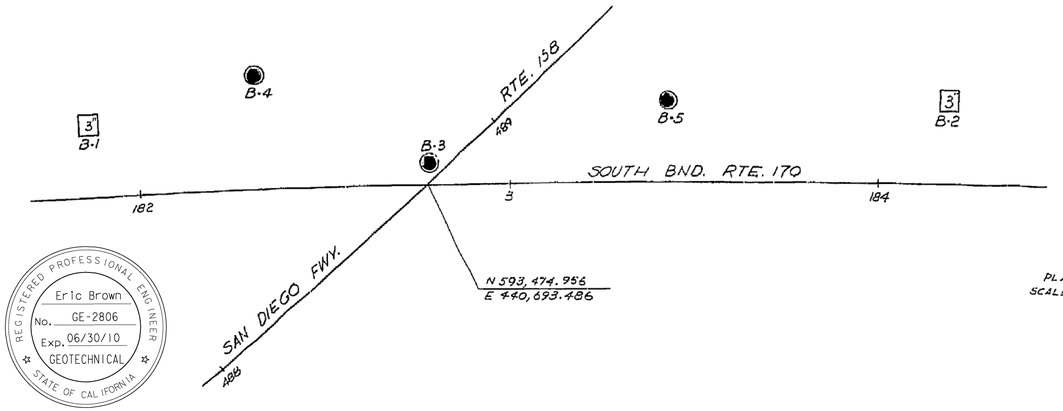

PLAN
SCALE: 1" = 20'

DIVISION OF ENGINEERING SERVICES - GEOTECHNICAL SERVICES					
As-Built Log of Test Borings sheet is considered an informational document only. As such, the State of California registration seal with signature, license number and registration certificate expiration date confirm that this is a true and accurate copy of the original document. This drawing is available and presented only for the convenience of any bidder, contractor or other interested party.					
DIST.	COUNTY	ROUTE	KILOMETER POST-TOTAL PROJECT	Sheet No.	Total Sheets
12	Ora	22, 405, 605	R0.3/R0.9, 22.3/24.0, 3.0/R1.6	1571	1929
REGISTERED CIVIL ENGINEER			07/27/09 DATE		

REGISTERED PROFESSIONAL ENGINEER
Eric Brown
No. GE-2806
Exp. 06/30/10
GEOTECHNICAL
STATE OF CALIFORNIA

LOG OF TEST BORINGS NO. 7

NOTE: A COPY OF THIS LOG OF TEST BORINGS IS AVAILABLE AT OFFICE OF STRUCTURE MAINTENANCE AND INVESTIGATIONS, SACRAMENTO, CALIFORNIA

CU: 12235
EA: 071631

BRIDGE No. 55-1097G

Sheet	of
31	31

Revisions made to this Log of Test Borings from the original 1966 Log of Test Borings are the addition of the following table and notes:

Boring	Station	Offset from "C-1" Line

To accompany plans dated 2-1-10

AS BUILT PLANS
Contract No. 07-033914
Date Completed
Document No. 7000189L

INFORMATION ON ACTUAL FOUNDATION CONDITIONS ENCOUNTERED IN FILE IN BRIDGE GEOLOGY SECTION

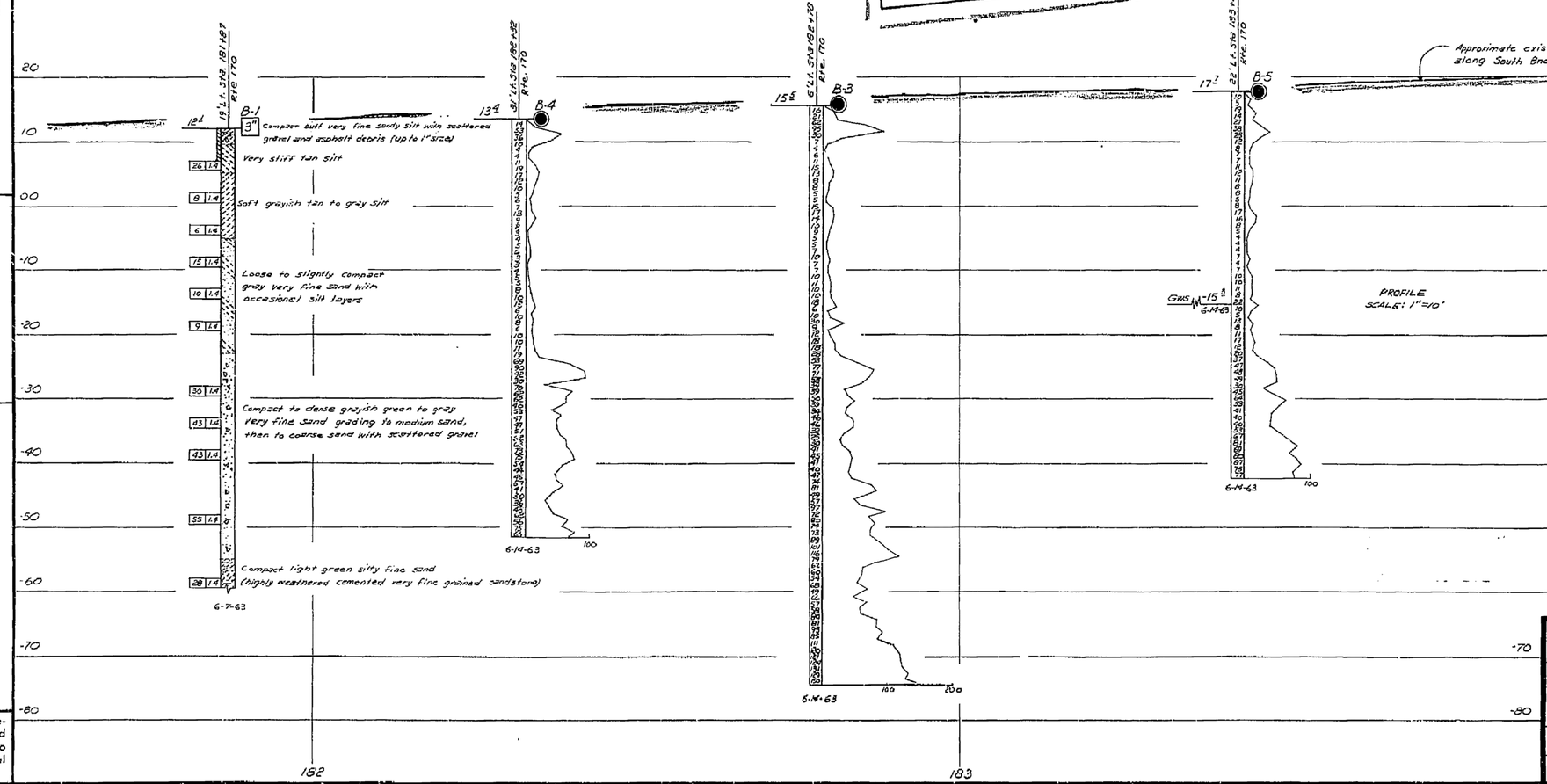

LEGEND OF BORING OPERATIONS

PENETROMETER
2½" CONE PENETROMETER
SAMPLER BORING (DRY)
ROTARY BORING (WET)
AUGER BORING (DRY)
JET BORING
CORE BORING
TEST PIT

PENETRATION BORING
ROTARY BORING
1" SOIL TUBE

LEGEND OF EARTH MATERIALS

GRAVEL
SAND
SILT
CLAY
SILTY CLAY OR CLAYEY SILT
SANDY CLAY OR CLAYEY SAND
SANDY SILT OR SILTY SAND
PEAT AND/OR ORGANIC MATTER
FILL MATERIAL
IGNEOUS ROCK
SEDIMENTARY ROCK
METAMORPHIC ROCK

CLASSIFICATION OF MATERIAL BASED ON STANDARD GRADE SIZE LIMITS

DIAGRAM SHOWING THE BASIS FOR ESTIMATES OF GRADE SIZE DISTRIBUTION USED IN DETERMINING SOIL CLASSIFICATIONS.

IF GRAVEL IS PRESENT IN APPRECIABLE AMOUNTS THE TERM "GRAVELLY" MAY BE ADDED TO THE CLASS NAME, VIZ. "GRAVELLY SILT", "GRAVELLY CLAY", "COARSE", "MEDIUM", AND "FINE" WHEN USED TO DESCRIBE SAND, SILT AND GRAVEL SEPER TO STANDARD GRADE SIZE LIMITS.

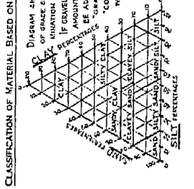

NOTE: Classification of earth material as shown on this sheet is based upon field inspection and is not to be construed to imply mechanical analysis.

FIELD STUDY	by	E.D. McCordy 6-14-63
DRAWN	by	K.T. Ryan 6-20-63
CHECKED	by	R. Pachino 6-25-63

Approval Recommended by: [signature] Engineering Geologist

BRIDGE DEPARTMENT
ENGINEERING GEOLOGY SECTION

STATE OF CALIFORNIA
DEPARTMENT OF PUBLIC WORKS
DIVISION OF HIGHWAYS

ROUTE ~~170/158~~ 605/405 SEPARATION

LOG OF TEST BORINGS

SCALE As Noted	BRIDGE 55-412	FILE	DRAWING 55412-15

208

15 of 15

FILENAME => 55-1097g-z-ltb07.tif

Disregard prints bearing earlier numbers → PREL. DRAWING No. PR-

DIST	COUNTY	ROUTE	POST MILES TOTAL PROJECT	SHEET No	TOTAL SHEETS
12	Ora	22,405, 605	R0.3/R0.9, 22.3/24.0,3.0/R1.6	1572	1929

REGISTERED CIVIL ENGINEER — DATE 07-27-09

2-1-10
PLANS APPROVAL DATE

REGISTERED PROFESSIONAL ENGINEER — Paul A. Morel — No. C 68491 — Exp. 9-30-09 — CIVIL — STATE OF CALIFORNIA

The State of California or its officers or agents shall not be responsible for the accuracy or completeness of electronic copies of this plan sheet.

OCTA
550 SOUTH MAIN STREET
ORANGE, CA 92863

PBS&J
625 The City Drive South, Suite 200
Orange, CA 92868

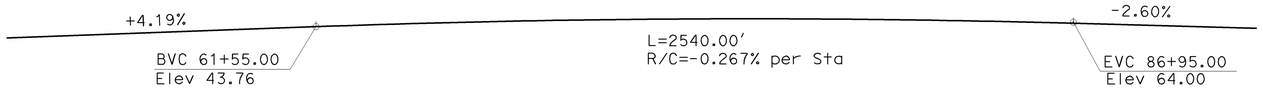

PROFILE GRADE
No Scale

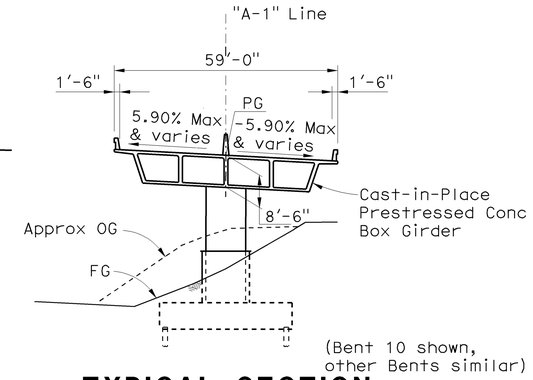

TYPICAL SECTION
1" = 20'

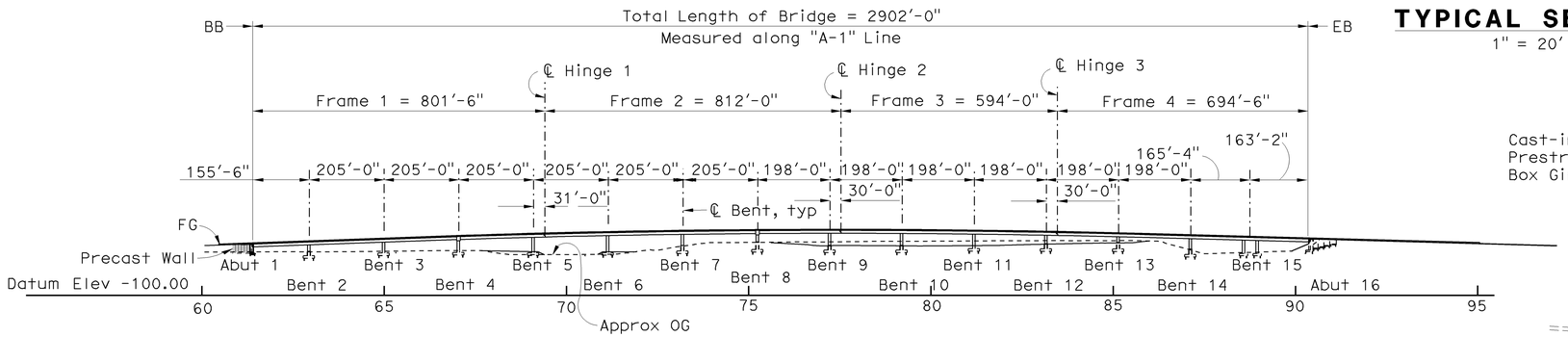

DEVELOPED ELEVATION
1" = 200'

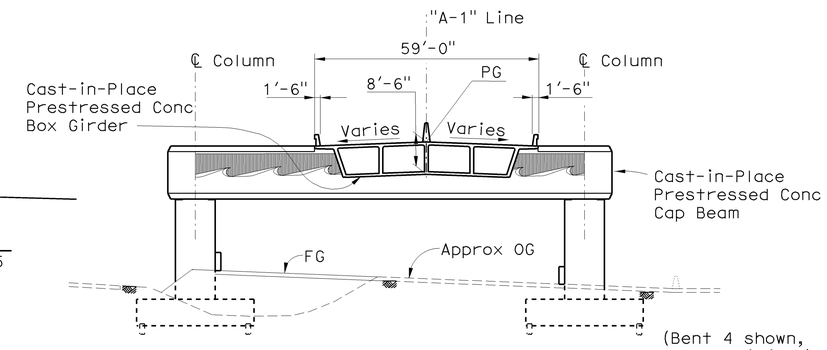

TYPICAL SECTION (OUTRIGGER BENT)
1" = 20'

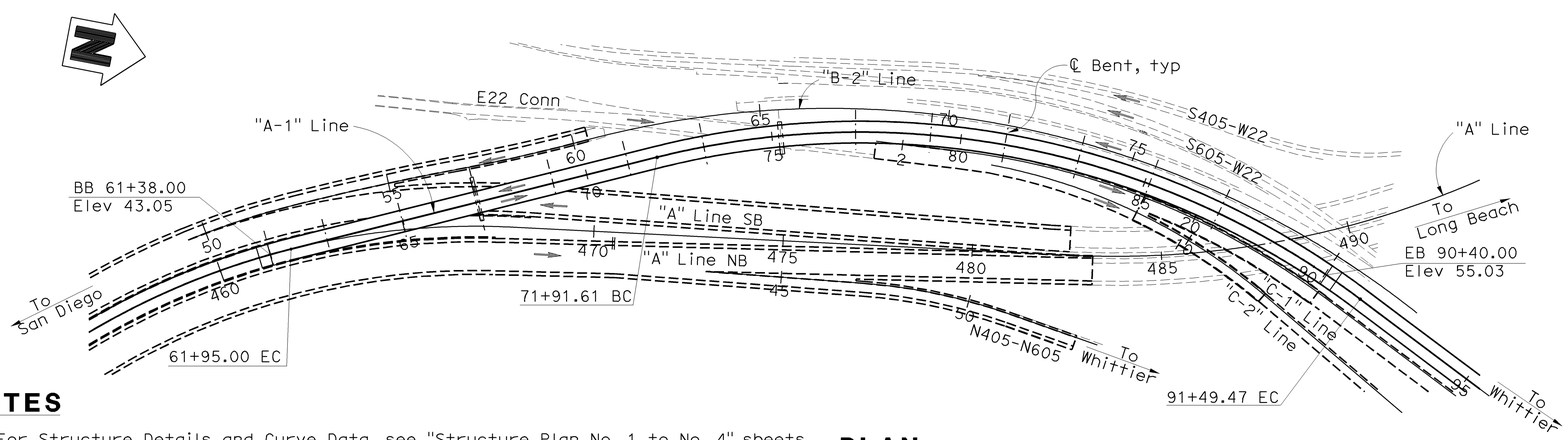

PLAN
1" = 200'

NOTES

1. For Structure Details and Curve Data, see "Structure Plan No. 1 to No. 4" sheets.
2. For Typical Sections, see "Structure Sections No. 1 & No. 2" sheets.
3. For Pile Data Table, see "Foundation Plan No. 1" sheet.

405/605 HOV CONNECTOR — BR NO 55-1098E

QUANTITIES

STRUCTURE EXCAVATION (BRIDGE)	13,250	CY
STRUCTURE EXCAVATION (RETAINING WALL)	530	CY
STRUCTURE BACKFILL (BRIDGE)	7,870	CY
STRUCTURE BACKFILL (RETAINING WALL)	605	CY
FURNISH PILING (CLASS 200) (ALTERNATIVE W)	57,176	LF
DRIVE PILE (CLASS 200) (ALTERNATIVE W)	976	EA
FURNISH PILING (CLASS 200) (ALTERNATIVE X)	5,718	LF
DRIVE PILE (CLASS 200)(ALTERNATIVE X)	114	EA
PRESTRESSING CAST-IN-PLACE CONCRETE	LUMP	SUM
STRUCTURAL CONCRETE, BRIDGE FOOTING	4,282	CY
STRUCTURAL CONCRETE, BRIDGE	17,410	CY
STRUCTURAL CONCRETE, RETAINING WALL	147	CY
STRUCTURAL CONCRETE, APPROACH SLAB (TYPE N)	132	CY
FRACTURED RIB TEXTURE	805	SQFT
PTFE BEARING	10	EA
PTFE SPHERICAL BEARING	15	EA
JOINT SEAL ASSEMBLY (MR 5½")	59	LF
JOINT SEAL ASSEMBLY (MR 6")	59	LF
JOINT SEAL ASSEMBLY (MR 6½")	59	LF
JOINT SEAL ASSEMBLY (MR 10½")	59	LF
JOINT SEAL ASSEMBLY (MR 13")	59	LF
BAR REINFORCING STEEL (BRIDGE)	6,055,000	LB
BAR REINFORCING STEEL (RETAINING WALL)	25,200	LB
HEADED BAR REINFORCEMENT	25,000	EA
12" WELDED STEEL PIPE CASING (BRIDGE)	162	LF
SLOPE PAVING (CONCRETE)(RIVER COBBLE)	39	CY
ISOLATION CASING	49,700	LB
MISCELLANEOUS METAL (RESTRAINER - CABLE TYPE)	2,525	LB
MISCELLANEOUS METAL (BRIDGE)	2,220	LB
BRIDGE DECK DRAINAGE SYSTEM	26,700	LB
CONCRETE BARRIER (TYPE 60GA)	2,962	LF
CONCRETE BARRIER (TYPE 736 MODIFIED)	5,966	LF

Sudhakar Vatti
DESIGN OVERSIGHT — Sudhakar Vatti
8-10-09
SIGN OFF DATE

	BY	CHECKED			
DESIGN	P. Morel/A. Moubayed	J. Holombo/S. Megally	LOAD AND RESISTANCE FACTOR DESIGN (LRFD)	LIVE LOADING: HL-93 W/ "LOW BOY" AND PERMIT DESIGN VEHICLE	
DETAILS	N. Shu	J. Holombo	LAYOUT	A. Moubayed	P. Morel
QUANTITIES	V. Nong	L. Khaleghi	SPECIFICATIONS	E. Tyk	PLANS AND SPECS COMPARED P. Morel

PREPARED FOR THE STATE OF CALIFORNIA DEPARTMENT OF TRANSPORTATION

Alaedin Moubayed
PROJECT ENGINEER

BRIDGE NO. 55-1098E
POST MILES 24.02

405/605 HOV CONNECTOR
GENERAL PLAN

DESIGN GENERAL PLAN SHEET (ENGLISH) (REV. 2/25/05)

ORIGINAL SCALE IN INCHES FOR REDUCED PLANS 0 1 2 3

CU 12235
EA 071631

DISREGARD PRINTS BEARING EARLIER REVISION DATES

REVISION DATES (PRELIMINARY STAGE ONLY) 02/18/08 06/02/08 09/29/08 10/18/08 03/20/09 04/06/09 07/27/09

SHEET 1 OF 87

FILE => 55-1098e-a-gp01.dgn

USERNAME => trlenard DATE PLOTTED => 03-FEB-2010 TIME PLOTTED => 07:48

DIST	COUNTY	ROUTE	POST MILES TOTAL PROJECT	SHEET No	TOTAL SHEETS
12	Ora	22,405, 605	R0.3/R0.9, 22.3/24.0,3.0/R1.6	1573	1929

REGISTERED CIVIL ENGINEER 07-27-09 DATE

2-1-10
PLANS APPROVAL DATE

REGISTERED PROFESSIONAL ENGINEER Paul A. Morel No. C 68491 Exp. 9-30-09 CIVIL STATE OF CALIFORNIA

The State of California or its officers or agents shall not be responsible for the accuracy or completeness of electronic copies of this plan sheet.

OCTA
550 SOUTH MAIN STREET
ORANGE, CA 92863

PBS&J
625 THE CITY DRIVE SOUTH, SUITE 200
ORANGE, CA 92868

STANDARD PLANS DATED MAY 2006

	A10A	Acronyms and Abbreviations (Sheet 1 of 2)
	A10B	Acronyms and Abbreviations (Sheet 2 of 2)
	A10C	Symbols (Sheet 1 of 2)
	A10D	Symbols (Sheet 2 of 2)
	A62B	Limits of Payment for Excavation and Backfill Bridge Surcharge and Wall
	A62C	Limits of Payment for Excavation and Backfill Bridge
	A74	Survey Monuments
	A76D	Concrete Barrier Type 60G
	B0-1	Bridge Details
	B0-3	Bridge Details
	B0-5	Bridge Details
	B0-13	Bridge Details
	B2-8	Pile Details Class 200
RSP	B3-1	Retaining Wall Type 1 H=4′ through 30′
	B3-8	Retaining Wall Details No. 1
	B7-1	Box Girder Details
	B7-6	Deck Drain Types D-1 and D-2
	B7-7	Deck Drain Type D-3
	B7-8	Deck Drainage Details
	B7-10	Utility Opening - Box Girder
	B8-5	Cast-in-Place Prestressed Girder Details
	B11-56	Concrete Barrier Type 736
	B14-5	Water Supply Line (Details)
	D99B	Edge Drain Outlet and Vent Details

GENERAL NOTES
LOAD AND RESISTANCE FACTOR DESIGN

DESIGN: AASHTO LRFD Bridge Design Specifications, 3rd edition with Interims through 2006 and the Caltrans Amendments v3.06.01; except that earth retaining systems, bridge barrier and structure approach slabs are designed using Bridge Design Specifications ('96 AASHTO w/ Revisions by Caltrans).

SEISMIC DESIGN: CALTRANS SEISMIC DESIGN CRITERIA (SDC), Version 1.4 dated June 2006.

DEAD LOAD: Includes 35 psf for future wearing surface

LIVE LOADING: HL93 and permit design load.

SEISMIC LOADING: Site Specific ARS as Shown

Modified SDC ARS Curve for Soil Profile D (M=7.25 ±0.25) Includes modifications for distance to fault (Peak Rock Acceleration = 0.6g)

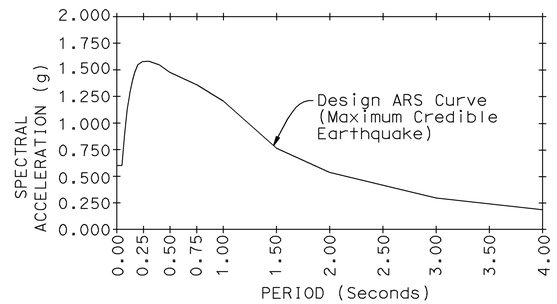

CONCRETE: f_y = 60 ksi
f'_c = 3.6 ksi (min)
n = 8 (max)
See "Prestressing Notes" on "Girder Layout" sheets

STRUCTURAL STEEL: f_y = ASTM A709 Grade 50
Class 200 Alt "W" Piles: ASTM A252 Grade 3
Restrainer Cables: ASTM A603 f_y = 176.1 ksi
High Strength Rods: ASTM A722 Type II f_y = 120 ksi

INDEX TO PLANS

SHEET NO.	TITLE
1	General Plan
2	Index to Plans
3	Structure Plan No. 1
4	Structure Plan No. 2
5	Structure Plan No. 3
6	Structure Plan No. 4
7	Structure Sections No. 1
8	Structure Sections No. 2
9	Deck Contours No. 1
10	Deck Contours No. 2
11	Foundation Plan No. 1
12	Foundation Plan No. 2
13	Foundation Plan No. 3
14	Foundation Plan No. 4
15	Abutment 1 Layout
16	Abutment 16 Layout
17	Abutment Details No. 1
18	Abutment Details No. 2
19	Abutment Details No. 3
20	Abutment Details No. 4
21	Abutment Details No. 5
22	Abutment Details No. 6
23	Bents 2, 3, 5 to 7 and 9 to 14 Layout
24	Bent Details No. 1
25	Bent Details No. 2
26	Bent Details No. 3
27	Bent 4 Layout
28	Bent 4 Details No. 1
29	Bent 4 Details No. 2
30	Bent 8 Layout
31	Bent 8 Details No. 1
32	Bent 8 Details No. 2
33	Bent 15 Layout
34	Bent 15 Details No. 1
35	Bent 15 Details No. 2
36	Bent 15 Details No. 3
37	Column Isolation Details
38	Typical Section
39	Girder Layout No. 1
40	Girder Layout No. 2
41	Girder Layout No. 3
42	Girder Layout No. 4
43	Girder Layout No. 5
44	Girder Layout No. 6
45	Girder Layout No. 7
46	Camber Diagrams
47	Bottom Girder Reinforcement
48	Top Girder Reinforcement No. 1
49	Top Girder Reinforcement No. 2
50	Top & Bottom Slab Reinforcement
51	Hinge Details No. 1
52	Hinge Details No. 2
53	Hinge Details No. 3

INDEX TO PLANS (CONT)

SHEET NO.	TITLE
54	PTFE/Elastomeric Bearing Details
55	PTFE/Spherical Bearing Details No. 1
56	PTFE/Spherical Bearing Details No. 2
57	Joint Seal - Hinge Details - MR > 4"
58	Joint Seal - Abutment Details - MR > 4"
59	Deck Drainage Layout No. 1
60	Deck Drainage Layout No. 2
61	Deck Drainage Details
62	Structure Approach Type N(30S)
63	Structure Approach Drainage Details
64	Restrainer Unit - Type 2
65	Restrainer Unit - Type 2 Details
66	Slope Paving
67	Architectural Details No. 1
68	Architectural Details No. 2
69	Architectural Details No. 3
70	Log of Test Borings No. 1
71	Log of Test Borings No. 2
72	Log of Test Borings No. 3
73	Log of Test Borings No. 4
74	Log of Test Borings No. 5
75	Log of Test Borings No. 6
76	Log of Test Borings No. 7
77	Log of Test Borings No. 8
78	Log of Test Borings No. 9
79	Log of Test Borings No. 10
80	Log of Test Borings No. 11
81	Log of Test Borings No. 12
82	Log of Test Borings No. 13
83	Log of Test Borings No. 14
84	Log of Test Borings No. 15
85	Log of Test Borings No. 16
86	Log of Test Borings No. 17
87	Log of Test Borings No. 18

PLAN SYMBOLS

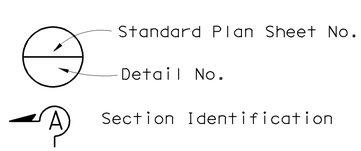

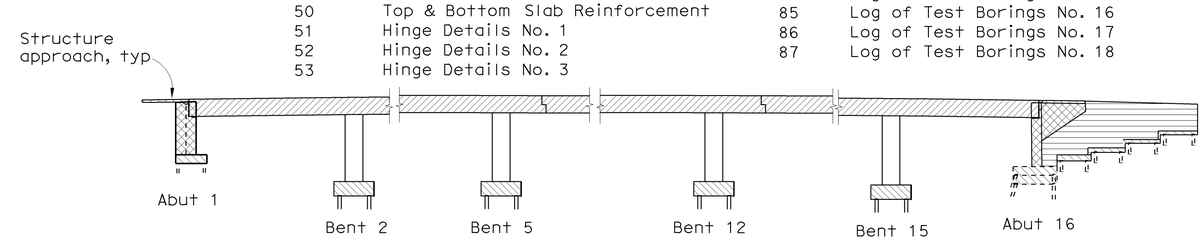

LEGEND

- Structural Concrete, Bridge (f'c = 4.0 ksi @ 28 days)
- Structural Concrete, Bridge
- Structural Concrete, Bridge (f'c = 5.0 ksi @ 28 days)
- Structural Concrete, Bridge Footing
- Structural Concrete, Approach Slab
- Structural Concrete, Retaining Wall

CONCRETE STRENGTH AND TYPE LIMITS

No Scale

Sudhakar Vatti
DESIGN OVERSIGHT Sudhakar Vatti
8-10-09
SIGN OFF DATE

	BY	CHECKED
DESIGN	P. Morel	J. Holombo/S. Megally
DETAILS	N. Shu	J. Holombo
QUANTITIES	V. Nong	L. Khaleghi

PREPARED FOR THE STATE OF CALIFORNIA DEPARTMENT OF TRANSPORTATION

Alaedin Moubayed
PROJECT ENGINEER

BRIDGE NO. 55-1098E
POST MILE 24.02

405/605 HOV CONNECTOR
INDEX TO PLANS

DESIGN DETAIL SHEET (ENGLISH) (REV. 2/25/05)

ORIGINAL SCALE IN INCHES FOR REDUCED PLANS 0 1 2 3

CU 12235
EA 071631

DISREGARD PRINTS BEARING EARLIER REVISION DATES

REVISION DATES (PRELIMINARY STAGE ONLY) 02/18/08 06/02/08 09/29/08 10/15/08 03/20/09 04/06/09 07/27/09

SHEET 2 OF 87

FILE => 55-1098e-a-itp.dgn

USERNAME => trienard DATE PLOTTED => 03-FEB-2010 TIME PLOTTED => 07:48

DIST	COUNTY	ROUTE	POST MILES TOTAL PROJECT	SHEET No	TOTAL SHEETS
12	Ora	22,405, 605	R0.3/R0.9, 22.3/24.0,3.0/R1.6	1574	1929

REGISTERED CIVIL ENGINEER 07-27-09 DATE

2-1-10
PLANS APPROVAL DATE

REGISTERED PROFESSIONAL ENGINEER Paul A. Morel No. C 68491 Exp. 9-30-09 CIVIL STATE OF CALIFORNIA

The State of California or its officers or agents shall not be responsible for the accuracy or completeness of electronic copies of this plan sheet.

OCTA
550 SOUTH MAIN STREET
ORANGE, CA 92863

PBS&J
625 THE CITY DRIVE SOUTH, SUITE 200
ORANGE, CA 92868

LEGEND

1. Paint "Bridge No. 55-1098E" and year constructed
2. Paint "405/605 HOV Connector"
3. Paint Bent Number
4. Precast Wall, see Note 3
8. Paint Hinge Number
11. Conc Barrier Type 736 (Mod)
14. Conc Barrier Type 60GA
18. Structure Approach Type N(30S)
19. Column Isolation Casing
33. Metal Beam Guard Rail, see "Road Plans"
34. Conc Barrier Type 60R, see "Road Plans"
35. Conc Barrier Type 60, see "Road Plans"
36. Deck Drain
37. Conc Barrier Type 60D, see "Road Plans"
38. Conc Barrier Type 60G, see "Road Plans"

Point of Minimum Vertical Clearance
Existing Structure
New Structure

NOTES

1. For typical sections , see "Structure Sections No. 1 & No. 2" sheets.
2. For Pile Data Table, see "Foundation Plan No. 1" sheet
3. For RW No. 456 & No. 457, see "Structure Plans"

CURVE DATA

NO.	R	Δ	T	L
A	2000.00′	38°31′53"	699.05′	1345.00′
B	2000.00′	77°01′04"	1591.38′	2688.42′
C	2105.00′	8°09′06"	150.00′	299.49′
D	7075.00′	3°31′27"	217.65′	435.16′
E	4500.00′	4°23′58"	172.85′	345.53′

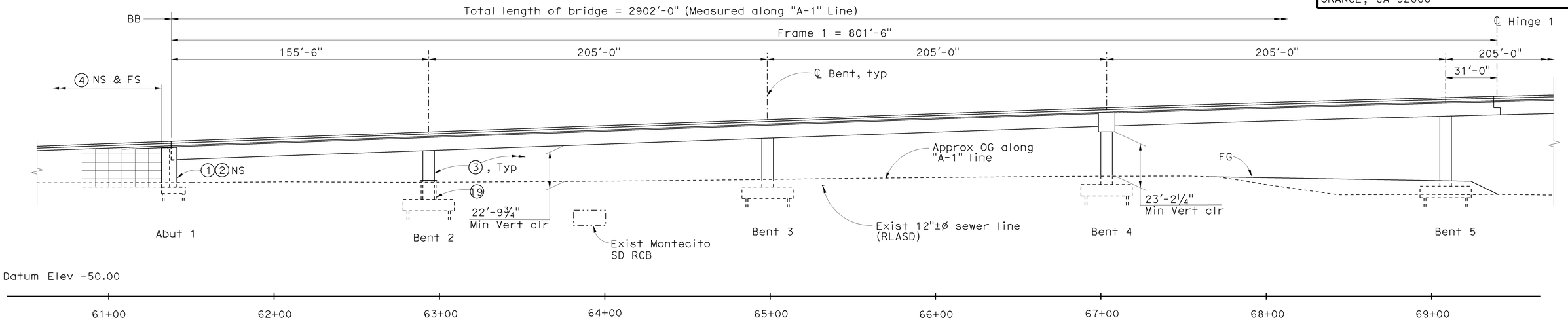

DEVELOPED ELEVATION

1" = 30′

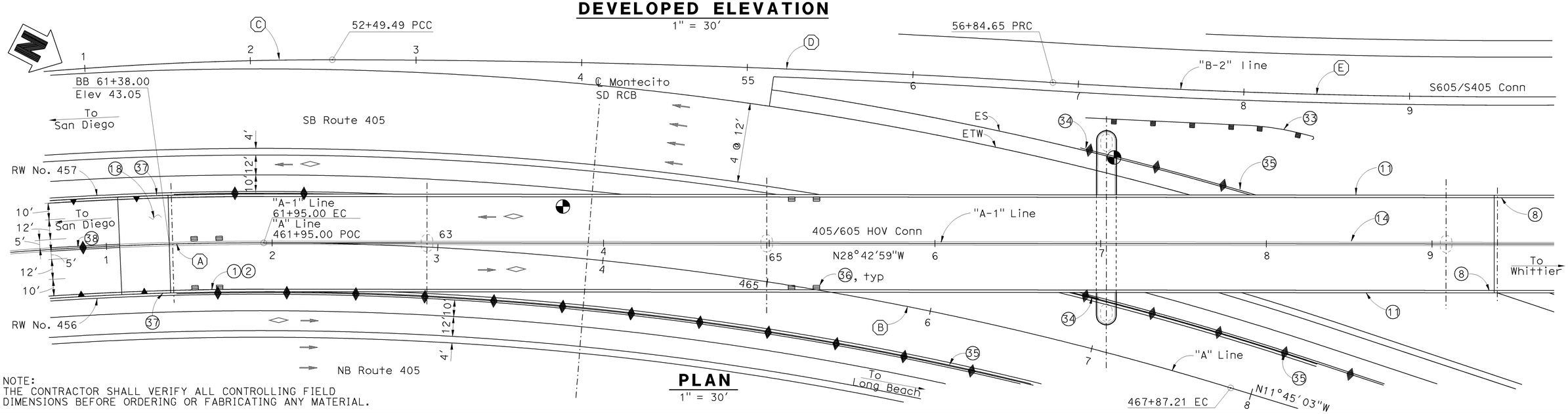

PLAN

1" = 30′

NOTE:
THE CONTRACTOR SHALL VERIFY ALL CONTROLLING FIELD DIMENSIONS BEFORE ORDERING OR FABRICATING ANY MATERIAL.

Sudhakar Vatti
DESIGN OVERSIGHT Sudhakar Vatti
8-10-09
SIGN OFF DATE

DESIGN DETAIL SHEET (ENGLISH) (REV. 2/25/05)

	BY	CHECKED
DESIGN	P. Morel	J. Holombo/S. Megally
DETAILS	N. Shu	J. Holombo
QUANTITIES	V. Nong	L. Khaleghi

ORIGINAL SCALE IN INCHES FOR REDUCED PLANS 0 1 2 3

PREPARED FOR THE STATE OF CALIFORNIA DEPARTMENT OF TRANSPORTATION

Alaedin Moubayed
PROJECT ENGINEER

CU 12235
EA 071631

BRIDGE NO. 55-1098E
POST MILE 24.02

405/605 HOV CONNECTOR
STRUCTURE PLAN NO. 1

DISREGARD PRINTS BEARING EARLIER REVISION DATES

REVISION DATES (PRELIMINARY STAGE ONLY) 02/18/08 06/02/08 09/29/08 10/18/08 03/20/09 04/06/09 07/27/09

SHEET 3 OF 87

USERNAME => trienard DATE PLOTTED => 03-FEB-2010 TIME PLOTTED => 07:48

FILE => 55-1098e-a-sp01.dgn

DIST	COUNTY	ROUTE	POST MILES TOTAL PROJECT	SHEET No	TOTAL SHEETS
12	Ora	22,405, 605	R0.3/R0.9, 22.3/24.0,3.0/R1.6	1575	1929

REGISTERED CIVIL ENGINEER 07-27-09 DATE

2-1-10
PLANS APPROVAL DATE

REGISTERED PROFESSIONAL ENGINEER Paul A. Morel No. C 68491 Exp. 9-30-09 CIVIL STATE OF CALIFORNIA

The State of California or its officers or agents shall not be responsible for the accuracy or completeness of electronic copies of this plan sheet.

OCTA
550 SOUTH MAIN STREET
ORANGE, CA 92863

PBS&J
625 THE CITY DRIVE SOUTH, SUITE 200
ORANGE, CA 92868

LEGEND

- (3) Paint Bent Number
- (8) Paint Hinge Number
- (11) Conc Barrier Type 736 (Mod)
- (14) Conc Barrier Type 60GA
- (19) Column Isolation Casing
- (23) Exist Sign Structure to be Removed, see "Road Plans"
- (33) Metal Beam Guard Rail, see "Road Plans"
- (34) Conc Barrier Type 60R, see "Road Plans"
- (35) Conc Barrier Type 60, see "Road Plans"
- (36) Deck Drain
- Point of Minimum Vertical Clearance
- Existing Structure
- New Structure

NOTES

1. For typical sections, see "Structure Sections No. 1 & No. 2 " sheets
2. For Pile Data Table, see "Foundation Plan No. 1" sheet

CURVE DATA

NO.	R	Δ	T	L
(E)	4500.00′	4°23′58"	172.85′	345.53′
(F)	2500.00′	53°20′52"	1255.94′	2327.73′
(G)	2200.00′	50°59′22"	1049.10′	1957.86′

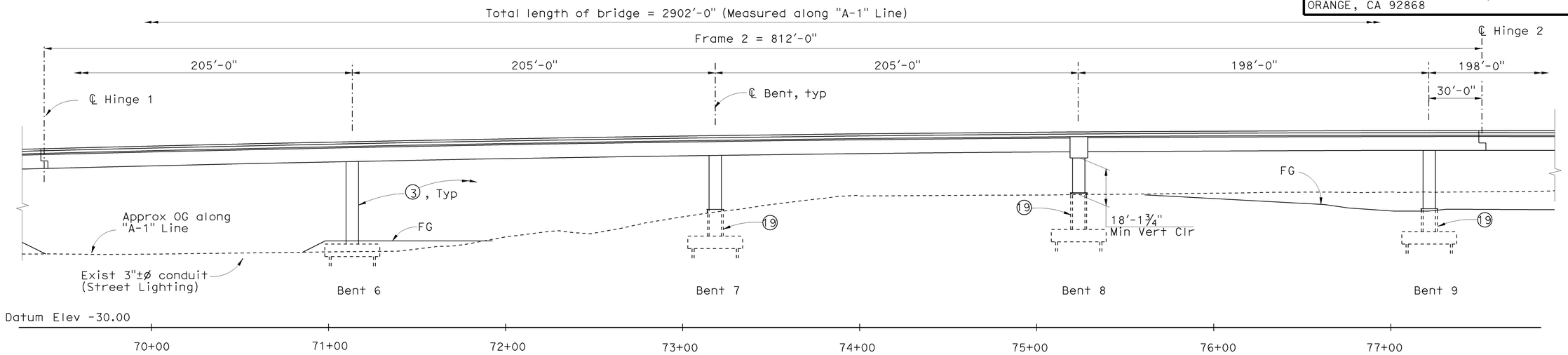

DEVELOPED ELEVATION

1" = 30′

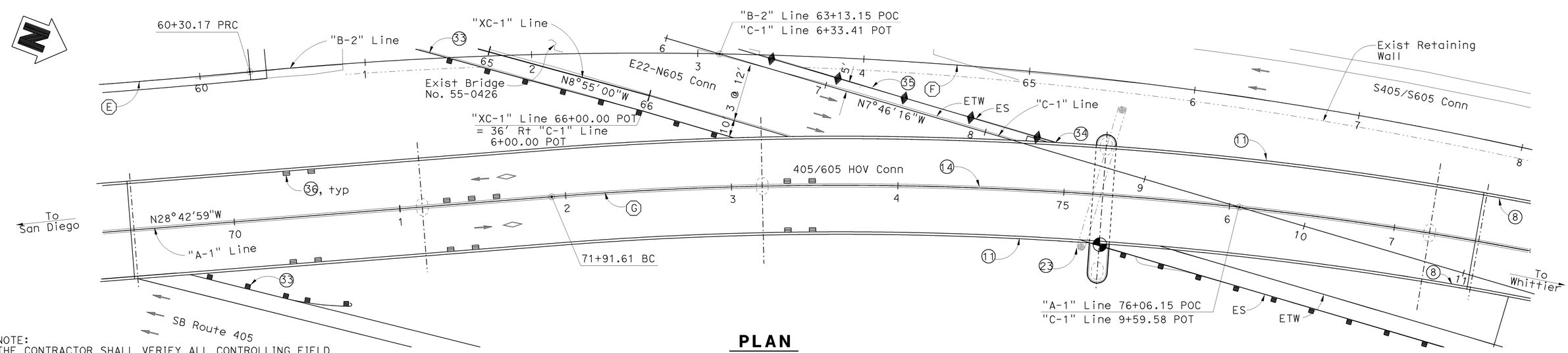

PLAN

1" = 30′

NOTE:
THE CONTRACTOR SHALL VERIFY ALL CONTROLLING FIELD DIMENSIONS BEFORE ORDERING OR FABRICATING ANY MATERIAL.

Sudhakar Vatti
DESIGN OVERSIGHT Sudhakar Vatti
8-10-09
SIGN OFF DATE

	BY	CHECKED
DESIGN	P. Morel	J. Holombo/S. Megally
DETAILS	N. Shu	J. Holombo
QUANTITIES	V. Nong	L. Khaleghi

PREPARED FOR THE STATE OF CALIFORNIA DEPARTMENT OF TRANSPORTATION

Alaedin Moubayed
PROJECT ENGINEER

BRIDGE NO. 55-1098E
POST MILE 24.02

405/605 HOV CONNECTOR
STRUCTURE PLAN NO. 2

DESIGN DETAIL SHEET (ENGLISH) (REV. 2/25/05)

ORIGINAL SCALE IN INCHES FOR REDUCED PLANS 0 1 2 3

CU 12235
EA 071631

DISREGARD PRINTS BEARING EARLIER REVISION DATES

REVISION DATES (PRELIMINARY STAGE ONLY) 02/08/08 03/07/08 09/29/08 10/15/08 03/26/09 04/06/09 07/27/09

SHEET 4 OF 87

FILE => 55-1098e-a-sp02.dgn

USERNAME => trlenard DATE PLOTTED => 03-FEB-2010 TIME PLOTTED => 07:48

DIST	COUNTY	ROUTE	POST MILES TOTAL PROJECT	SHEET No	TOTAL SHEETS
12	Ora	22,405, 605	R0.3/R0.9, 22.3/24.0,3.0/R1.6	1576	1929

REGISTERED CIVIL ENGINEER — DATE 07-27-09

2-1-10
PLANS APPROVAL DATE

REGISTERED PROFESSIONAL ENGINEER — Paul A. Morel — No. C 68491 — Exp. 9-30-09 — CIVIL — STATE OF CALIFORNIA

The State of California or its officers or agents shall not be responsible for the accuracy or completeness of electronic copies of this plan sheet.

OCTA
550 SOUTH MAIN STREET
ORANGE, CA 92863

PBS&J
625 THE CITY DRIVE SOUTH, SUITE 200
ORANGE, CA 92868

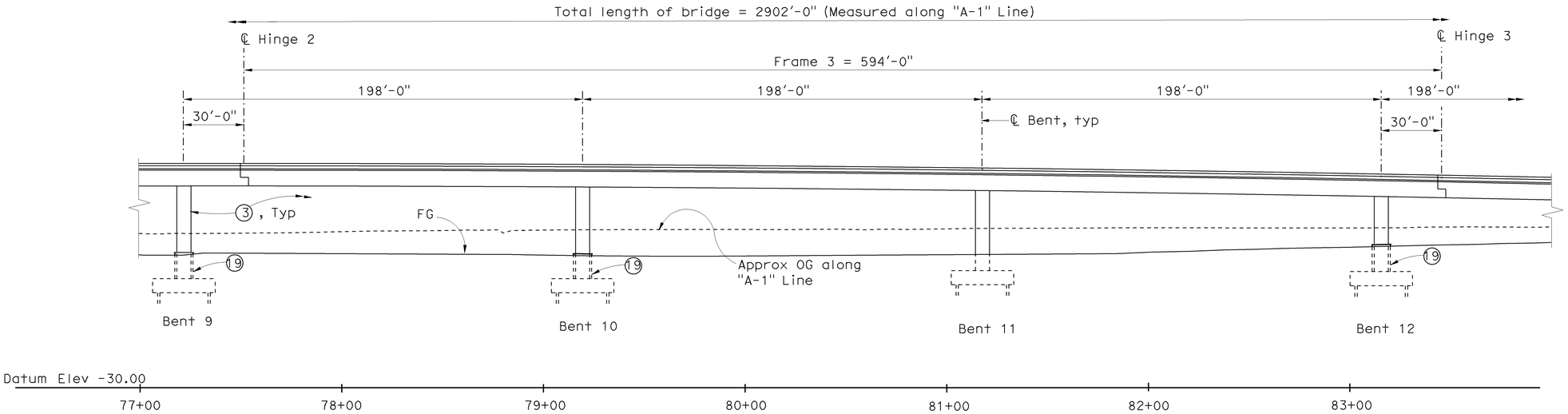

DEVELOPED ELEVATION

1" = 30'

CURVE DATA

NO.	R	Δ	T	L
F	2500.00'	53°20'52"	1255.94'	2327.73'
G	2200.00'	50°59'22"	1049.10'	1957.86'
H	2000.00'	30°02'39"	536.72'	1048.74'
I	1560.00'	29°50'08"	415.60'	812.34'

LEGEND

- 3 Paint Bent Number
- 8 Paint Hinge Number
- 11 Conc Barrier Type 736 (Mod)
- 14 Conc Barrier Type 60GA
- 19 Column Isolation Casing
- 33 Metal Beam Guard Rail, see "Road Plans"
- 36 Deck Drain
- Existing Structure
- New Structure

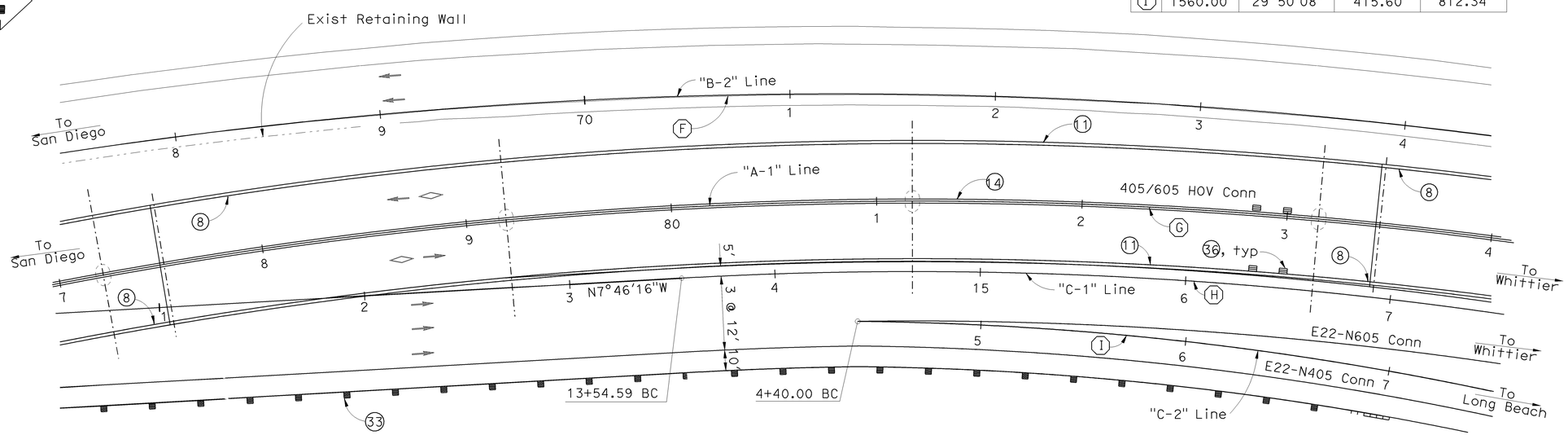

PLAN

1" = 30'

NOTES

1. For typical sections , see "Structure Sections No. 1 & No. 2" sheets
2. For Pile Data Table, see "Foundation Plan No. 1" sheet

NOTE:
THE CONTRACTOR SHALL VERIFY ALL CONTROLLING FIELD DIMENSIONS BEFORE ORDERING OR FABRICATING ANY MATERIAL.

Sudhakar Vatti
DESIGN OVERSIGHT — Sudhakar Vatti
8-10-09
SIGN OFF DATE

	BY	CHECKED
DESIGN	P. Morel	J. Holombo/S. Megally
DETAILS	N. Shu	J. Holombo
QUANTITIES	V. Nong	L. Khaleghi

PREPARED FOR THE STATE OF CALIFORNIA DEPARTMENT OF TRANSPORTATION

Alaedin Moubayed
PROJECT ENGINEER

BRIDGE NO. 55-1098E
POST MILE 24.02

405/605 HOV CONNECTOR
STRUCTURE PLAN NO. 3

DESIGN DETAIL SHEET (ENGLISH) (REV. 2/25/05)

ORIGINAL SCALE IN INCHES FOR REDUCED PLANS 0 1 2 3

CU 12235
EA 071631

DISREGARD PRINTS BEARING EARLIER REVISION DATES
REVISION DATES (PRELIMINARY STAGE ONLY) 02/18/08 06/02/08 09/29/08 10/13/08 03/26/09 04/06/09 07/27/09

SHEET 5 OF 87

FILE => 55-1098e-a-sp03.dgn

USERNAME => rtrenford DATE PLOTTED => 03-FEB-2010 TIME PLOTTED => 07:48

DIST	COUNTY	ROUTE	POST MILES TOTAL PROJECT	SHEET No	TOTAL SHEETS
12	Ora	22, 405, 605	R0.3/R0.9, 22.3/24.0,3.0/R1.6	1577	1929

REGISTERED CIVIL ENGINEER 07-27-09 DATE

2-1-10
PLANS APPROVAL DATE

The State of California or its officers or agents shall not be responsible for the accuracy or completeness of electronic copies of this plan sheet.

REGISTERED PROFESSIONAL ENGINEER Paul A. Morel No. C 68491 Exp. 9-30-09 CIVIL STATE OF CALIFORNIA

OCTA
550 SOUTH MAIN STREET
ORANGE, CA 92863

PBS&J
625 THE CITY DRIVE SOUTH, SUITE 200
ORANGE, CA 92868

LEGEND

1. Paint "Bridge No. 55-1098E" and year constructed
2. Paint "405/605 HOV Connector"
3. Paint Bent Number
8. Paint Hinge Number
11. Conc Barrier Type 736 (Mod)
14. Conc Barrier Type 60GA
18. Structure Approach Type N(30S)
19. Column Isolation Casing
29. Remove Existing Bridge No. 55-0412R
30. Remove Existing Bridge No. 55-0412G
32. Conc Slope Paving
33. Metal Beam Guard Rail, see "Road Plans"
34. Conc Barrier Type 60R, see "Road Plans"
35. Conc Barrier Type 60, see "Road Plans"
36. Deck Drain
38. Conc Barrier Type 60G, see "Road Plans"

Point of Minimum Vertical Clearance
Bridge Removal, see Note 3
Existing Structure
New Structure

NOTES

1. For typical sections, see "Structure Sections No. 1 & No. 2" sheets
2. For Pile Data Table, see "Foundation Plan No. 1" sheet
3. For Bridge Removal, see "E22-N405/405 Separation (Replace)" and "E22-N605/405 Separation (Replace)" plans

CURVE DATA

NO.	R	Δ	T	L
F	2500.00′	53°20′52"	1255.94′	2327.73′
G	2200.00′	50°59′22"	1049.10′	1957.86′
H	2000.00′	30°02′39"	536.72′	1048.74′
I	1560.00′	29°50′08"	415.60′	812.34′
J	2400.00′	33°19′34"	718.35′	1395.96′

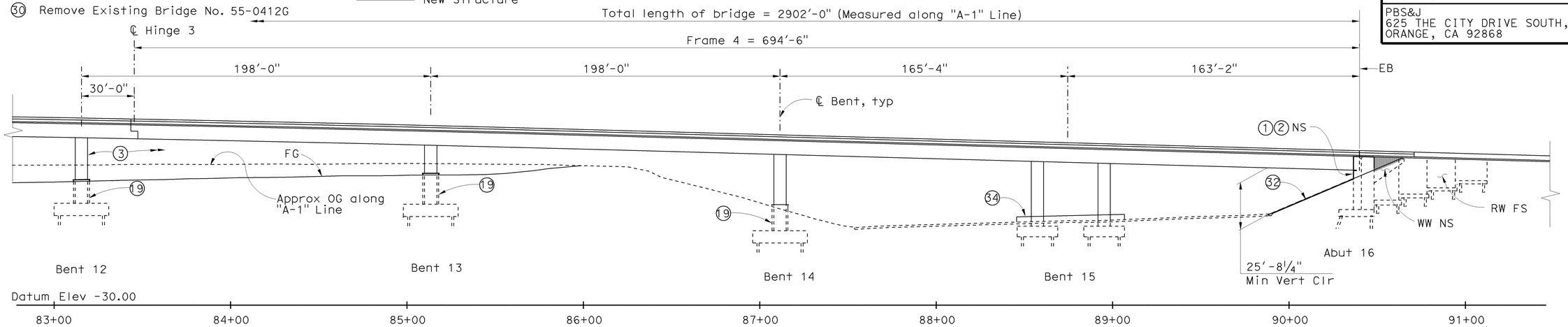

DEVELOPED ELEVATION

1" = 30′

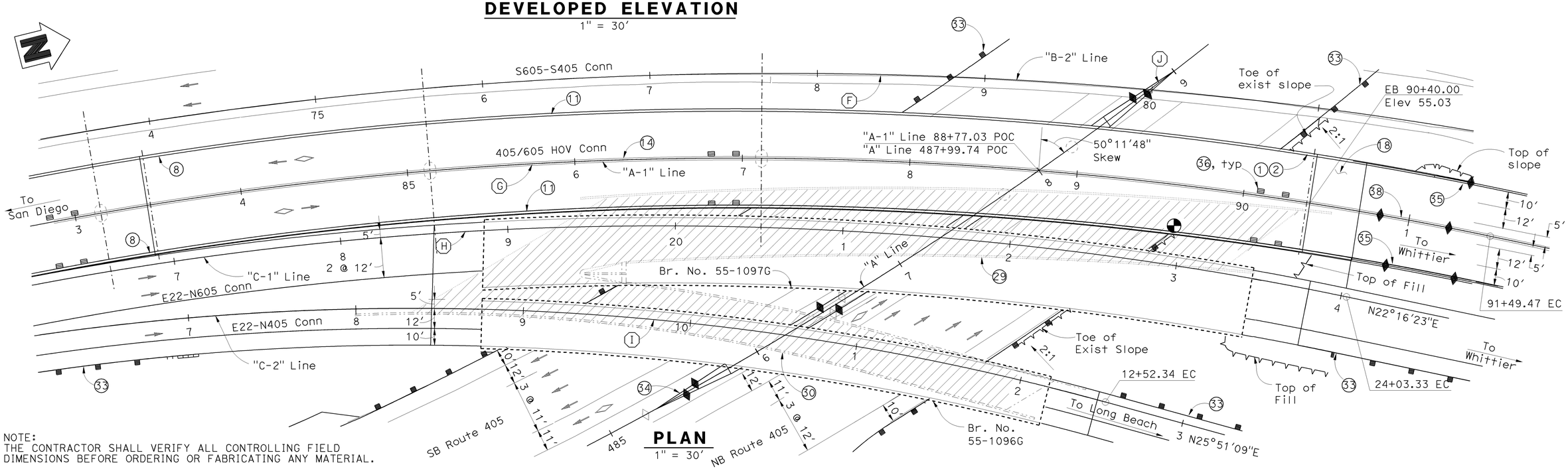

PLAN

1" = 30′

NOTE:
THE CONTRACTOR SHALL VERIFY ALL CONTROLLING FIELD DIMENSIONS BEFORE ORDERING OR FABRICATING ANY MATERIAL.

Sudhakar Vatti
DESIGN OVERSIGHT Sudhakar Vatti
8-10-09
SIGN OFF DATE

	BY	CHECKED
DESIGN	P. Morel	J. Holombo/S. Megally
DETAILS	N. Shu	J. Holombo
QUANTITIES	V. Nong	L. Khaleghi

PREPARED FOR THE STATE OF CALIFORNIA DEPARTMENT OF TRANSPORTATION

Alaedin Moubayed
PROJECT ENGINEER

BRIDGE NO. 55-1098E
POST MILE 24.02

405/605 HOV CONNECTOR
STRUCTURE PLAN NO. 4

DESIGN DETAIL SHEET (ENGLISH) (REV. 2/25/05)

ORIGINAL SCALE IN INCHES FOR REDUCED PLANS 0 1 2 3

CU 12235
EA 071631

DISREGARD PRINTS BEARING EARLIER REVISION DATES

REVISION DATES (PRELIMINARY STAGE ONLY) 02/18/08 06/02/08 09/29/08 10/18/08 03/26/09 04/06/09 07/27/09

SHEET 6 OF 87

FILE => 55-1098e-a-sp04.dgn

USERNAME => rtrenord DATE PLOTTED => 03-FEB-2010 TIME PLOTTED => 07:48

DIST	COUNTY	ROUTE	POST MILES TOTAL PROJECT	SHEET No	TOTAL SHEETS
12	Ora	22,405, 605	R0.3/R0.9, 22.3/24.0,3.0/R1.6	1578	1929

REGISTERED CIVIL ENGINEER 07-27-09 DATE

2-1-10
PLANS APPROVAL DATE

REGISTERED PROFESSIONAL ENGINEER Paul A. Morel No. C 68491 Exp. 9-30-09 CIVIL STATE OF CALIFORNIA

The State of California or its officers or agents shall not be responsible for the accuracy or completeness of electronic copies of this plan sheet.

OCTA
550 SOUTH MAIN STREET
ORANGE, CA 92863

PBS&J
625 THE CITY DRIVE SOUTH, SUITE 200
ORANGE, CA 92868

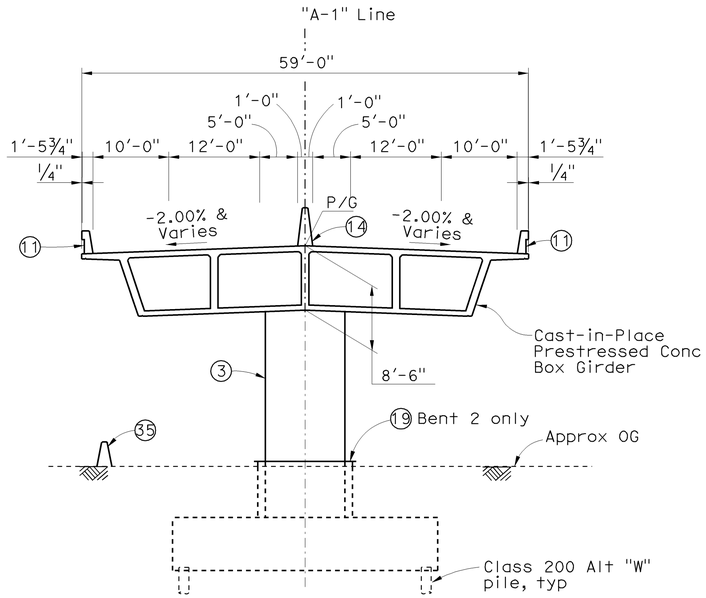

BENTS 2, 3, 5, AND 6

1" = 10'

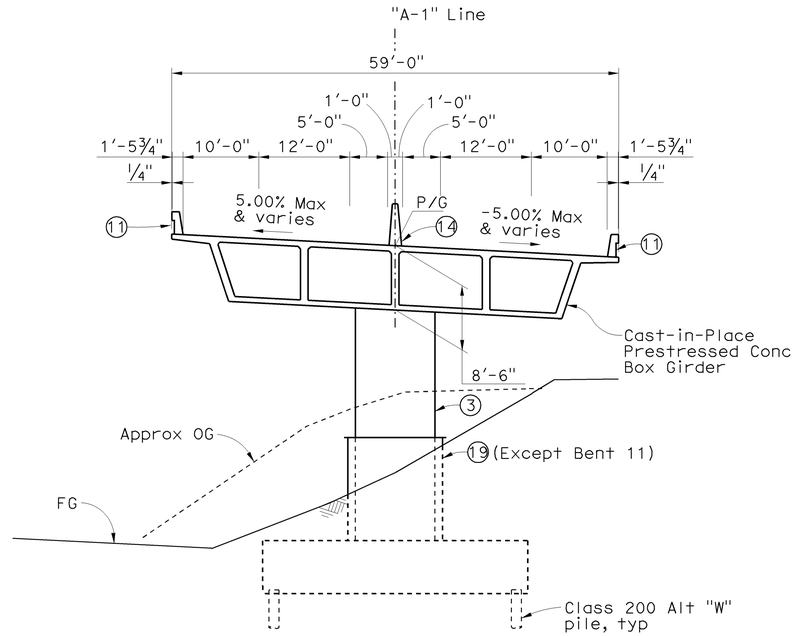

BENTS 7 AND 9 TO 14

1" = 10'

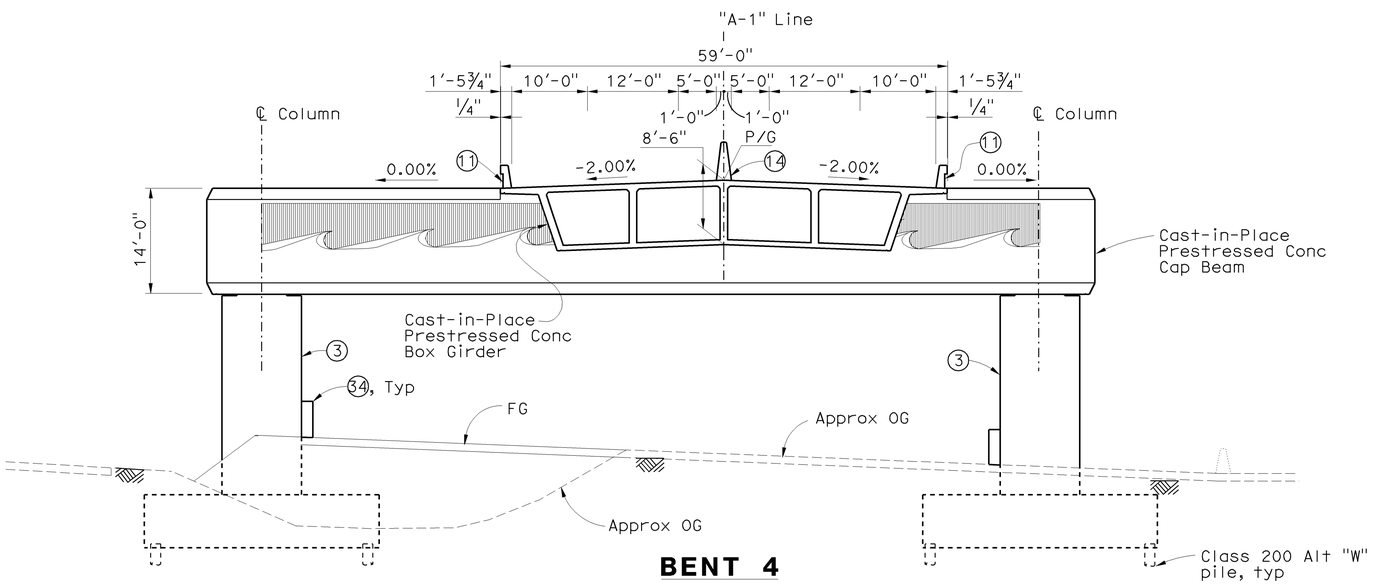

BENT 4

1" = 10'

LEGEND

- 3 Paint Bent Number
- 11 Conc Barrier Type 736 (Mod)
- 14 Conc Barrier Type 60GA
- 19 Column Isolation Casing
- 34 Conc Barrier Type 60R, see "Road Plans"
- 35 Conc Barrier Type 60, see "Road Plans"

NOTES

1. All piles not shown
2. For Plan & Elev, See "Structure Plan No. 1 to No. 4" sheets

Sudhakar Vatti
DESIGN OVERSIGHT Sudhakar Vatti
8-10-09
SIGN OFF DATE

	BY	CHECKED
DESIGN	P. Morel	J. Holombo/S. Megally
DETAILS	N. Shu	J. Holombo
QUANTITIES	V. Nong	L. Khaleghi

PREPARED FOR THE STATE OF CALIFORNIA DEPARTMENT OF TRANSPORTATION

Alaedin Moubayed
PROJECT ENGINEER

BRIDGE NO. 55-1098E
POST MILE 24.02

405/605 HOV CONNECTOR
STRUCTURE SECTIONS NO. 1

DESIGN DETAIL SHEET (ENGLISH) (REV. 2/25/05)

ORIGINAL SCALE IN INCHES FOR REDUCED PLANS 0 1 2 3

CU 12235
EA 071631

DISREGARD PRINTS BEARING EARLIER REVISION DATES

REVISION DATES (PRELIMINARY STAGE ONLY) 02/14/08 06/02/08 09/29/08 10/15/08 03/26/09 04/06/09 07/27/09

SHEET 7 OF 87

FILE => 55-1098e-a-ss01.dgn

USERNAME => friehard DATE PLOTTED => 03-FEB-2010 TIME PLOTTED => 07:48

DIST	COUNTY	ROUTE	POST MILES TOTAL PROJECT	SHEET No	TOTAL SHEETS
12	Ora	22,405, 605	R0.3/R0.9, 22.3/24.0,3.0/R1.6	1579	1929

REGISTERED CIVIL ENGINEER 07-27-09 DATE

2-1-10
PLANS APPROVAL DATE

REGISTERED PROFESSIONAL ENGINEER Paul A. Morel No. C 68491 Exp. 9-30-09 CIVIL STATE OF CALIFORNIA

The State of California or its officers or agents shall not be responsible for the accuracy or completeness of electronic copies of this plan sheet.

OCTA
550 SOUTH MAIN STREET
ORANGE, CA 92863

PBS&J
625 THE CITY DRIVE SOUTH, SUITE 200
ORANGE, CA 92868

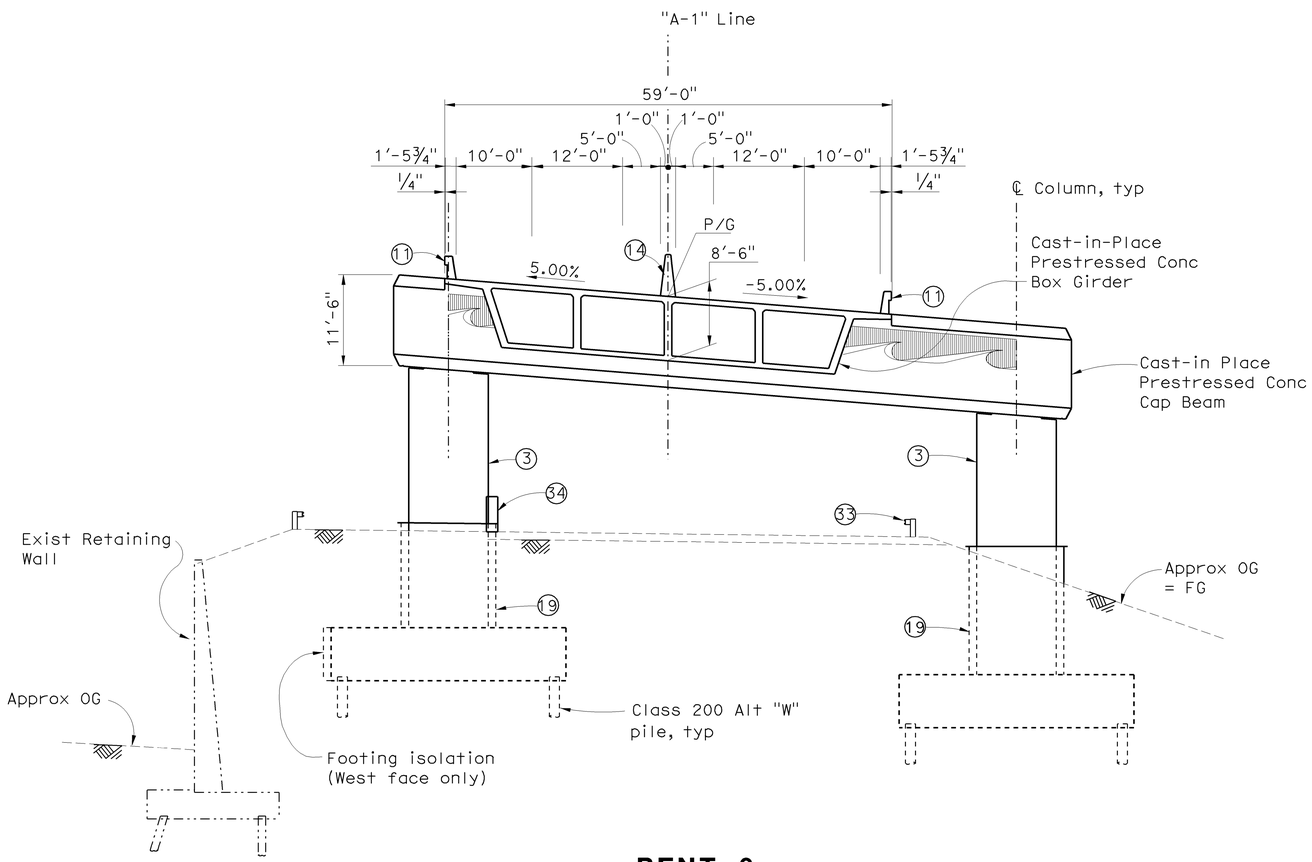

BENT 8
1" = 10'

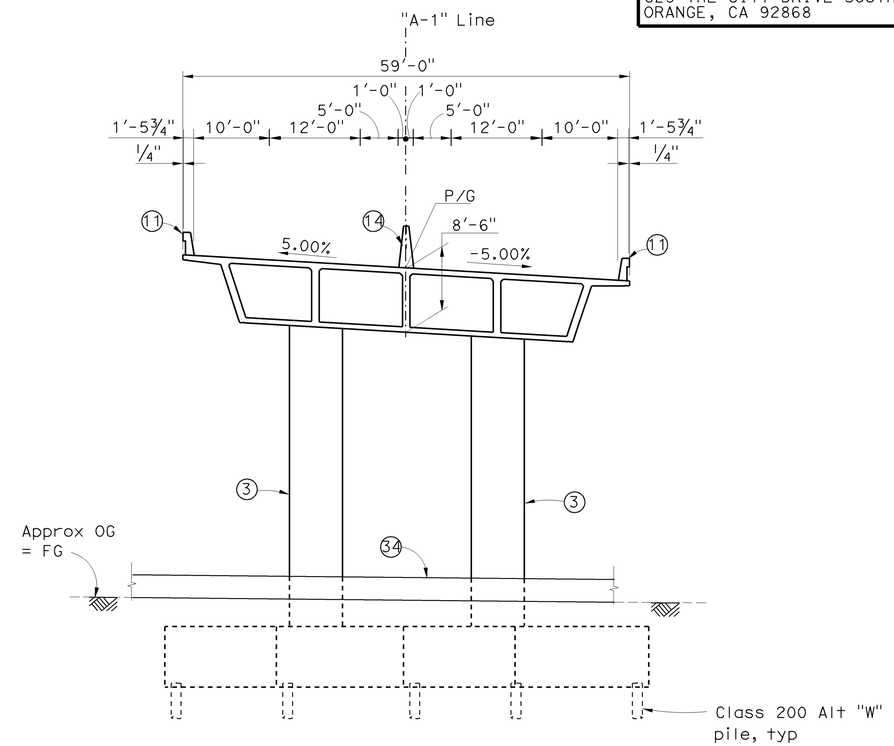

BENT 15
1" = 10'

LEGEND

- (3) Paint Bent Number
- (11) Conc Barrier Type 736 (Mod)
- (14) Conc Barrier Type 60GA
- (19) Column Isolation Casing
- (33) Metal Beam Guard Rail, see "Road Plans"
- (34) Conc Barrier Type 60R, see "Road Plans"
- Existing Structure
- New Structure

NOTES

1. All piles not shown
2. For dimensions not shown, see "Structure Sections No. 1" sheet

NOTE:
THE CONTRACTOR SHALL VERIFY ALL CONTROLLING FIELD DIMENSIONS BEFORE ORDERING OR FABRICATING ANY MATERIAL.

Sudhakar Vatti
DESIGN OVERSIGHT Sudhakar Vatti
8-10-09
SIGN OFF DATE

	BY	CHECKED
DESIGN	P. Morel	J. Holombo/S. Megally
DETAILS	N. Shu	J. Holombo
QUANTITIES	V. Nong	L. Khaleghi

PREPARED FOR THE STATE OF CALIFORNIA DEPARTMENT OF TRANSPORTATION

Alaedin Moubayed
PROJECT ENGINEER

BRIDGE NO. 55-1098E
POST MILE 24.02

405/605 HOV CONNECTOR
STRUCTURE SECTIONS NO. 2

DESIGN DETAIL SHEET (ENGLISH) (REV. 2/25/05)

ORIGINAL SCALE IN INCHES FOR REDUCED PLANS 0 1 2 3

CU 12235
EA 071631

DISREGARD PRINTS BEARING EARLIER REVISION DATES

REVISION DATES (PRELIMINARY STAGE ONLY) 02/18/08 06/02/08 09/29/08 10/14/08 03/20/09 04/06/09 07/27/09

SHEET 8 OF 87

FILE => 55-1098e-a-ss02.dgn

USERNAME => trlenard DATE PLOTTED => 03-FEB-2010 TIME PLOTTED => 07:48

DIST	COUNTY	ROUTE	POST MILES TOTAL PROJECT	SHEET No	TOTAL SHEETS
12	Ora	22,405, 605	R0.3/R0.9, 22.3/24.0,3.0/R1.6	1580	1929

REGISTERED CIVIL ENGINEER 07-27-09 DATE

2-1-10
PLANS APPROVAL DATE

REGISTERED PROFESSIONAL ENGINEER Paul A. Morel No. C 68491 Exp. 9-30-09 CIVIL STATE OF CALIFORNIA

The State of California or its officers or agents shall not be responsible for the accuracy or completeness of electronic copies of this plan sheet.

OCTA
550 SOUTH MAIN STREET
ORANGE, CA 92863

PBS&J
625 THE CITY DRIVE SOUTH, SUITE 200
ORANGE, CA 92868

NOTES

1. Contour interval is 0.20′.
2. Contours do not include camber.
3. For Superelevation Diagram, see "Deck Contours No. 2" sheet.

LEGEND

X - Denotes 10′ intervals along "A-1 Line"

□ - Indicates even foot contours.

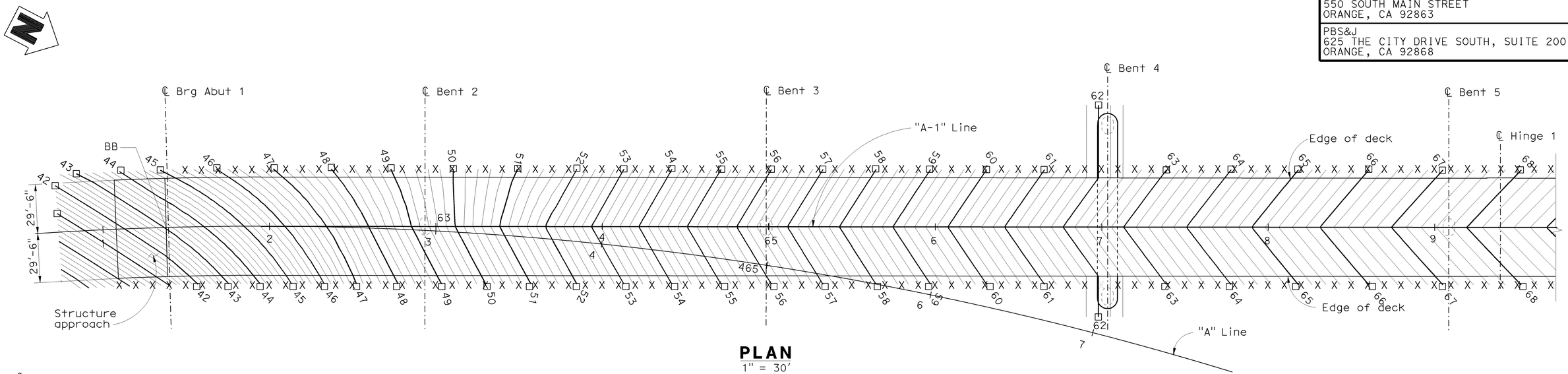

PLAN
1" = 30′

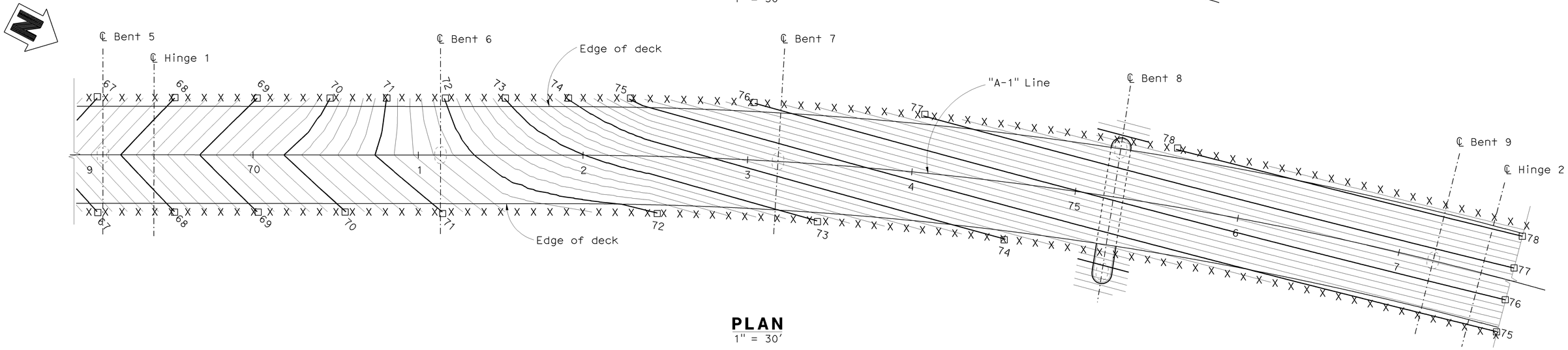

PLAN
1" = 30′

Sudhakar Vatti
DESIGN OVERSIGHT Sudhakar Vatti
8-10-09
SIGN OFF DATE

DESIGN DETAIL SHEET (ENGLISH) (REV. 2/25/05)

	BY	CHECKED
DESIGN	P. Morel	J. Holombo/S. Megally
DETAILS	N. Shu	J. Holombo
QUANTITIES	V. Nong	L. Khaleghi

ORIGINAL SCALE IN INCHES FOR REDUCED PLANS 0 1 2 3

PREPARED FOR THE STATE OF CALIFORNIA DEPARTMENT OF TRANSPORTATION

Alaedin Moubayed
PROJECT ENGINEER

CU 12235
EA 071631

BRIDGE NO. 55-1098E
POST MILE 24.02

405/605 HOV CONNECTOR
DECK CONTOURS NO. 1

DISREGARD PRINTS BEARING EARLIER REVISION DATES

REVISION DATES (PRELIMINARY STAGE ONLY) 02/14/08 06/02/08 09/29/08 10/15/08 03/26/09 04/06/09 07/27/09

SHEET 9 OF 87

FILE => 55-1098e-d-dc01.dgn

USERNAME => trrenard DATE PLOTTED => 03-FEB-2010 TIME PLOTTED => 07:48

DIST	COUNTY	ROUTE	POST MILES TOTAL PROJECT	SHEET No	TOTAL SHEETS
12	Ora	22,405, 605	R0.3/R0.9, 22.3/24.0,3.0/R1.6	1581	1929

REGISTERED CIVIL ENGINEER 07-27-09 DATE

2-1-10
PLANS APPROVAL DATE

REGISTERED PROFESSIONAL ENGINEER Paul A. Morel No. C 68491 Exp. 9-30-09 CIVIL STATE OF CALIFORNIA

The State of California or its officers or agents shall not be responsible for the accuracy or completeness of electronic copies of this plan sheet.

OCTA
550 SOUTH MAIN STREET
ORANGE, CA 92863

PBS&J
625 THE CITY DRIVE SOUTH, SUITE 200
ORANGE, CA 92868

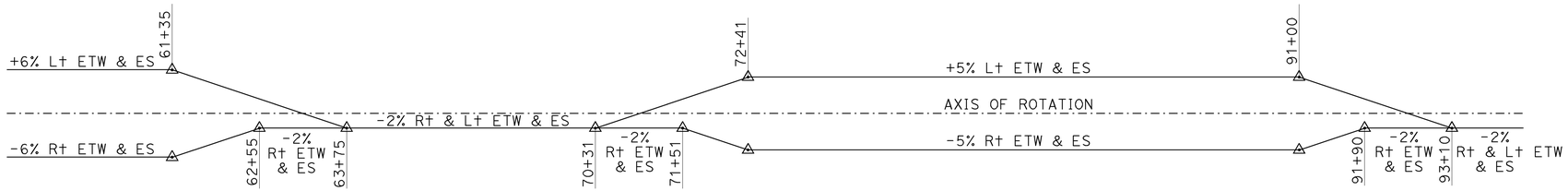

SUPERELEVATION DIAGRAM
No Scale

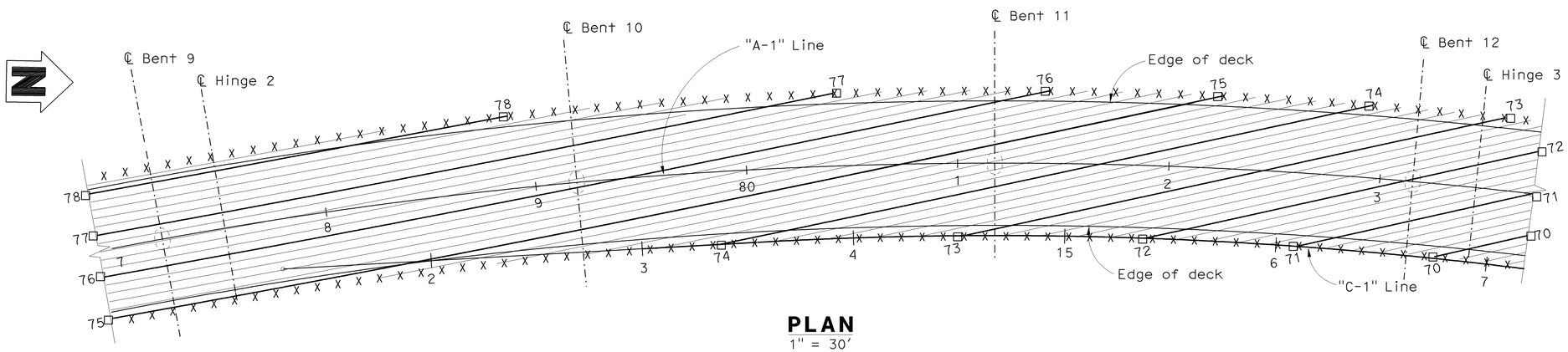

PLAN
1" = 30'

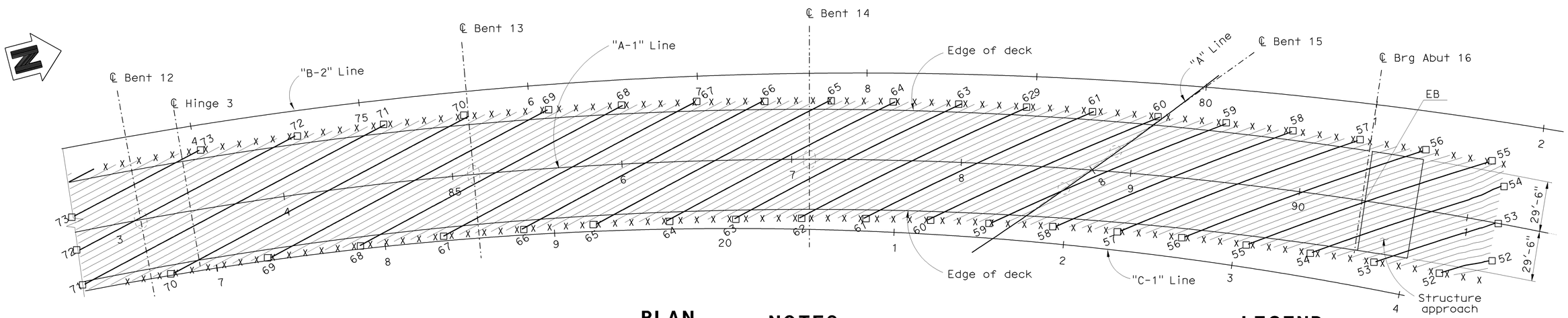

PLAN
1" = 30'

NOTES

1. Contour interval is 0.20'.
2. Contours do not include camber.

LEGEND

X - Denotes 10' intervals along "A-1 Line"

□ - Indicates even foot contours.

Sudhakar Vatti
DESIGN OVERSIGHT Sudhakar Vatti
8-10-09
SIGN OFF DATE

	BY	CHECKED
DESIGN	P. Morel	J. Holombo/S. Megally
DETAILS	N. Shu	J. Holombo
QUANTITIES	V. Nong	L. Khaleghi

PREPARED FOR THE STATE OF CALIFORNIA DEPARTMENT OF TRANSPORTATION

Alaedin Moubayed
PROJECT ENGINEER

BRIDGE NO. 55-1098E
POST MILE 24.02

405/605 HOV CONNECTOR
DECK CONTOURS NO. 2

DESIGN DETAIL SHEET (ENGLISH) (REV. 2/25/05)

ORIGINAL SCALE IN INCHES FOR REDUCED PLANS 0 1 2 3

CU 12235
EA 071631

DISREGARD PRINTS BEARING EARLIER REVISION DATES

REVISION DATES (PRELIMINARY STAGE ONLY): 02/18/08 06/02/08 09/29/08 10/13/08 03/20/09 04/06/09 07/27/09

SHEET 10 OF 87

FILE => 55-1098e-d-dc02.dgn

USERNAME => friehard DATE PLOTTED => 03-FEB-2010 TIME PLOTTED => 07:48

DIST	COUNTY	ROUTE	POST MILES TOTAL PROJECT	SHEET No	TOTAL SHEETS
12	Ora	22,405, 605	R0.3/R0.9, 22.3/24.0,3.0/R1.6	1582	1929

REGISTERED CIVIL ENGINEER 07-27-09 DATE

2-1-10
PLANS APPROVAL DATE

The State of California or its officers or agents shall not be responsible for the accuracy or completeness of electronic copies of this plan sheet.

REGISTERED PROFESSIONAL ENGINEER Paul A. Morel No. C 68491 Exp. 09-30-09 CIVIL STATE OF CALIFORNIA

OCTA
550 SOUTH MAIN STREET
ORANGE, CA 92863

PBS&J
625 The City Drive South, Suite 200
Orange, CA 92868

PILE DATA TABLE

Locations	Pile Type	Nominal Resistance		Design Tip Elevation (ft)	Specified Tip Elevation (ft)	Nominal Driving Resistance (kips)
		Compression (kips)	Tension (kips)			
Abut 1	Class 200, Alt "X"	250	0	-28 (a), -22 (c) & -18 (d)	-28	250
Bent 2	Class 200, Alt "W"	380	150	-51 (a), -36 (b), -20 (c) & -28 (d)	-51	380
Bent 3	Class 200, Alt "W"	370	160	-46 (a), -32 (b), -20 (c) & -21 (d)	-46	370
Bent 4 West	Class 200, Alt "W"	360	190	-48 (a), -38 (b), -25 (c) & -20 (d)	-48	360
Bent 4 East	Class 200, Alt "W"	380	190	-48 (a), -38 (b), -25 (c) & -19 (d)	-48	380
Bent 5	Class 200, Alt "W"	380	170	-48 (a), -34 (b), -25 (c) & -20 (d)	-48	380
Bent 6	Class 200, Alt "W"	380	160	-45 (a), -30 (b), -26 (c) & -20 (d)	-45	380
Bent 7	Class 200, Alt "W"	380	80	-38 (a), -5 (b), -18 (c) & -15 (d)	-38	380
Bent 8 West	Class 200, Alt "W"	360	120	-29 (a), -6 (b), -23 (c) & -5 (d)	-29	360
Bent 8 East	Class 200, Alt "W"	350	170	-34 (a), -17 (b), -23 (c) & -11 (d)	-34	350
Bent 9	Class 200, Alt "W"	390	60	-43 (a), +2 (b), -23 (c) & -13 (d)	-43	390
Bent 10	Class 200, Alt "W"	380	130	-50 (a), -12 (b), -36 (c) & -13 (d)	-50	380
Bent 11	Class 200, Alt "W"	370	120	-46 (a), -8 (b), -22 (c) & -9 (d)	-46	370
Bent 12	Class 200, Alt "W"	380	60	-46 (a), +8 (b), -22 (c) & -10 (d)	-46	380
Bent 13	Class 200, Alt "W"	360	60	-37 (a), +8 (b), -33 (c) & -10 (d)	-37	360
Bent 14	Class 200, Alt "W"	370	130	-52 (a), -30 (b), -23 (c) & -25 (d)	-52	370
Bent 15 West	Class 200, Alt "W"	320	40	-52 (a), -3 (b), -23 (c) & -22 (d)	-52	320
Bent 15 East	Class 200, Alt "W"	300	60	-52 (a), -9 (b), -23 (c) & -22 (d)	-52	300
Abut 16 West	Class 200, Alt "X"	260	0	-33 (a), -27 (c) & -14 (d)	-33	260
Abut 16 East	Class 200, Alt "X"	260	0	-31 (a), -27 (c) & -10 (d)	-31	260
Abut 16 RW	Class 200, Alt "X"	280	0	-31 (a), -27 (c) & -3.5 (d)	-31	280

NOTES

1. Design tip elevations are controlled by the following demands: (a) Compression, (b) Tension, (c) Settlement and (d) Lateral Load.
2. The specified tip elevation shall not be raised above the design tip elevations for tension, lateral load, and settlement.
3. All piles not shown.

BASIS OF COORDINATES

Bearings and coordinates as shown hereon are in terms of the California Coordinate System of 1983 (Epoch 1991.35), Zone 6; based locally upon the following County of Orange Control Stations as published by the County of Orange

Name	Northing (ft)	Easting (ft)
3756	2,230,831.57	6,007,513.47
3898R1	2,236,670.48	6,003,468.80

BENCHMARKS

Monument: 1A-144-04

Described by OCS 2005 - Found 3¾" OCS aluminum benchmark disk stamped "1A-144-04", set in the southwesterly corner of a 4.4 ft by 4.4 ft concrete catch basin. Monument is located in the northeasterly corner of the intersection of Seal Beach Boulevard and St. Cloud Drive, 44 ft easterly of the centerline of Seal Beach Boulevard and 58 ft northerly of the centerline of St. Cloud Dr. Monument is set level with the sidewalk.

Elevation: 15.370 feet

Monument: 1A-123-70

Described by OCS 2002 - Found 3¾" OCS aluminum benchmark disk stamped "1A-123-70", set in a concrete channel wall. Monument is located in 0.6 miles northerly along Seal Beach Boulevard from its intersection with Westminister Avenue, 65 ft easterly from the centerline of Seal Beach Boulevard and 1 ft northeasterly of the south end of a concrete headwall. Monument is down 1.5 ft from the top of the headwall.

Elevation: 11.631 feet

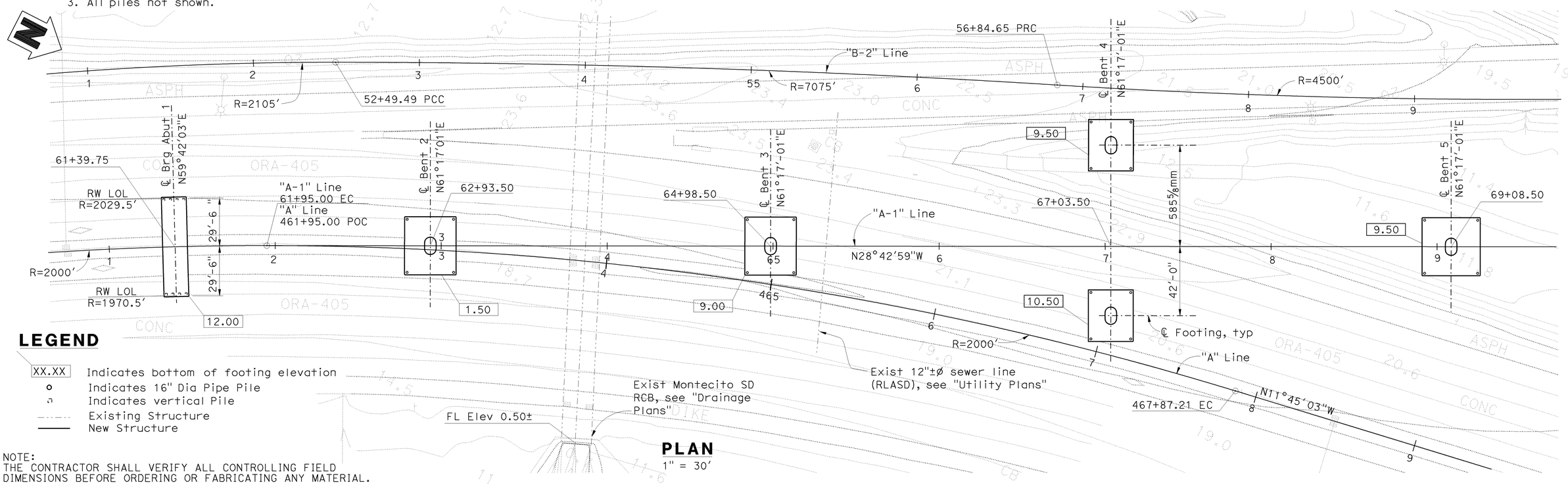

LEGEND

XX.XX	Indicates bottom of footing elevation
o	Indicates 16" Dia Pipe Pile
	Indicates vertical Pile
	Existing Structure
	New Structure

NOTE:
THE CONTRACTOR SHALL VERIFY ALL CONTROLLING FIELD DIMENSIONS BEFORE ORDERING OR FABRICATING ANY MATERIAL.

PLAN
1" = 30'

GEOTECHNICAL PROFESSIONAL APPROVAL DATE 07-27-09

Sudhakar Vatti
DESIGN OVERSIGHT Sudhakar Vatti
8-10-09
SIGN OFF DATE

SCALE:	VERT DATUM NAVD88	HORIZ DATUM CCS83	
PHOTOGRAMMETRY AS OF: 12/07		ALIGNMENT TIES	
SURVEYED	BY CALTRANS	DRAFTED	BY AE, Inc
FIELD CHECKED	BY AE, Inc	CHECKED	BY AE, Inc

DESIGN	BY P. Morel/A. Moubayed	CHECKED J. Holombo/S. Megally
DETAILS	BY N. Shu	CHECKED J. Holombo
QUANTITIES	BY V. Nong	CHECKED L. Khaleghi

PREPARED FOR THE STATE OF CALIFORNIA DEPARTMENT OF TRANSPORTATION

Alaedin Moubayed
PROJECT ENGINEER

BRIDGE NO. 55-1098E
POST MILE 24.02

405/605 HOV CONNECTOR
FOUNDATION PLAN NO. 1

FOUNDATION PLAN SHEET (ENGLISH) (REV. 2-25-05)

ORIGINAL SCALE IN INCHES FOR REDUCED PLANS 0 1 2 3

CU 12235
EA 071631

DISREGARD PRINTS BEARING EARLIER REVISION DATES

REVISION DATES (PRELIMINARY STAGE ONLY) 02/14/08 06/27/08 09/29/08 10/15/08 03/26/09 04/06/09 07/27/09

SHEET 11 OF 87

FILE => 55-1098e-e-fdp101.dgn

USERNAME => friehard DATE PLOTTED => 03-FEB-2010 TIME PLOTTED => 07:48

DIST	COUNTY	ROUTE	POST MILES TOTAL PROJECT	SHEET No	TOTAL SHEETS
12	Ora	22,405, 605	R0.3/R0.9, 22.3/24.0,3.0/R1.6	1583	1929

REGISTERED CIVIL ENGINEER 07-27-09 DATE

2-1-10
PLANS APPROVAL DATE

REGISTERED PROFESSIONAL ENGINEER Paul A. Morel No. C 68491 Exp. 09-30-09 CIVIL STATE OF CALIFORNIA

The State of California or its officers or agents shall not be responsible for the accuracy or completeness of electronic copies of this plan sheet.

OCTA
550 SOUTH MAIN STREET
ORANGE, CA 92863

PBS&J
625 The City Drive South, Suite 200
Orange, CA 92868

NOTES

1. All piles not shown.
2. Locations of existing structure foundations are approximate.

LEGEND

- XX.XX — Indicates bottom of footing elevation
- XX.XX± — Indicates bottom of exist footing elevation
- ○ — Indicates 16" Dia Pipe Pile
- Existing Structure
- New Structure

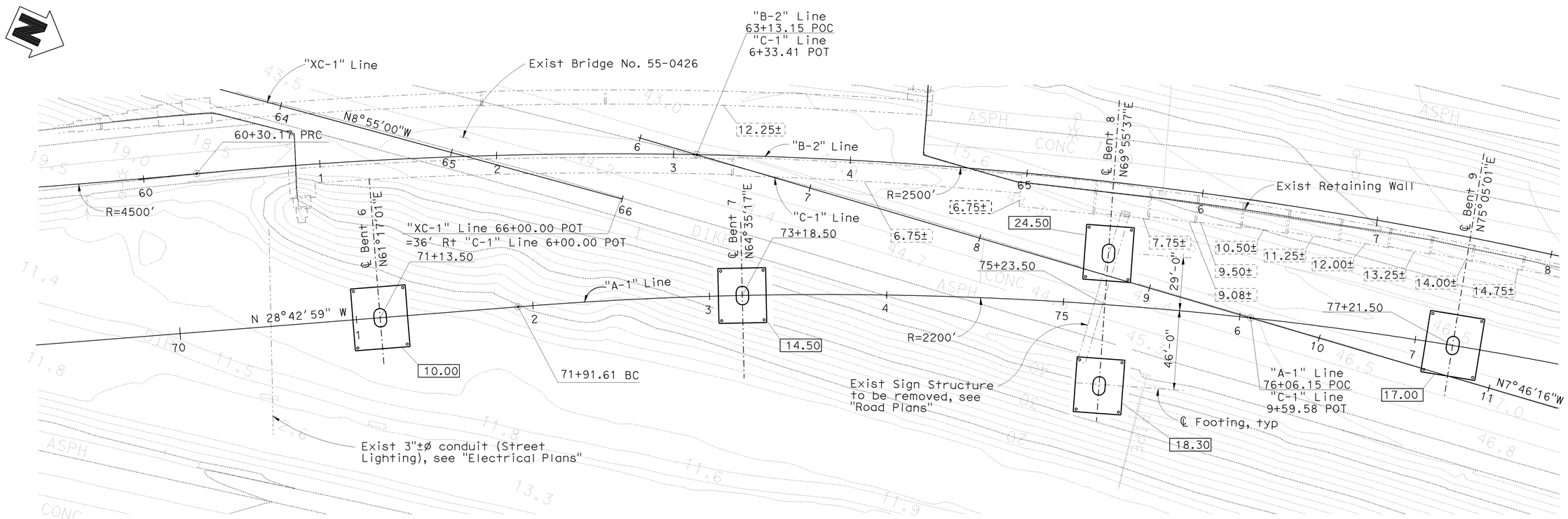

PLAN

1" = 30'

NOTE:
THE CONTRACTOR SHALL VERIFY ALL CONTROLLING FIELD DIMENSIONS BEFORE ORDERING OR FABRICATING ANY MATERIAL.

GEOTECHNICAL PROFESSIONAL APPROVAL DATE 07-27-09

Sudhakar Vatti
DESIGN OVERSIGHT Sudhakar Vatti
8-10-09
SIGN OFF DATE

SCALE:	VERT DATUM NAVD88	HORIZ DATUM CCS83			
PHOTOGRAMMETRY AS OF: 12/07		ALIGNMENT TIES			
SURVEYED	BY CALTRANS	DRAFTED	BY AE, Inc		
FIELD CHECKED	BY AE, Inc	CHECKED	BY AE, Inc		

DESIGN	BY P. Morel/A. Moubayed	CHECKED J. Holombo/S. Megally	
DETAILS	BY N. Shu	CHECKED J. Holombo	
QUANTITIES	BY V. Nong	CHECKED L. Khaleghi	

PREPARED FOR THE STATE OF CALIFORNIA DEPARTMENT OF TRANSPORTATION

Alaedin Moubayed
PROJECT ENGINEER

CU 12235
EA 071631

BRIDGE NO. 55-1098E
POST MILE 24.02

405/605 HOV CONNECTOR
FOUNDATION PLAN NO. 2

FOUNDATION PLAN SHEET (ENGLISH) (REV. 2-25-05)

ORIGINAL SCALE IN INCHES FOR REDUCED PLANS 0 1 2 3

DISREGARD PRINTS BEARING EARLIER REVISION DATES → REVISION DATES (PRELIMINARY STAGE ONLY) 02/14/08 06/27/08 09/22/08 10/13/08 03/26/09 04/06/09 07/27/09

SHEET 12 OF 87

FILE => 55-1098e-e-fdpl02.dgn

USERNAME => rfrenord DATE PLOTTED => 03-FEB-2010 TIME PLOTTED => 07:48

DIST	COUNTY	ROUTE	POST MILES TOTAL PROJECT	SHEET No	TOTAL SHEETS
12	Ora	22,405, 605	R0.3/R0.9, 22.3/24.0,3.0/R1.6	1584	1929

REGISTERED CIVIL ENGINEER 07-27-09 DATE

2-1-10
PLANS APPROVAL DATE

REGISTERED PROFESSIONAL ENGINEER Paul A. Morel No. C 68491 Exp. 09-30-09 CIVIL STATE OF CALIFORNIA

The State of California or its officers or agents shall not be responsible for the accuracy or completeness of electronic copies of this plan sheet.

OCTA
550 SOUTH MAIN STREET
ORANGE, CA 92863

PBS&J
625 The City Drive South, Suite 200
Orange, CA 92868

NOTES

1. All piles not shown
2. Locations of existing structure foundations are approximate.

LEGEND

XX.XX Indicates bottom of footing elevation

XX.XX± Indicates bottom of exist footing elevation

Indicates 16" Dia Pipe Pile

Existing Structure

New Structure

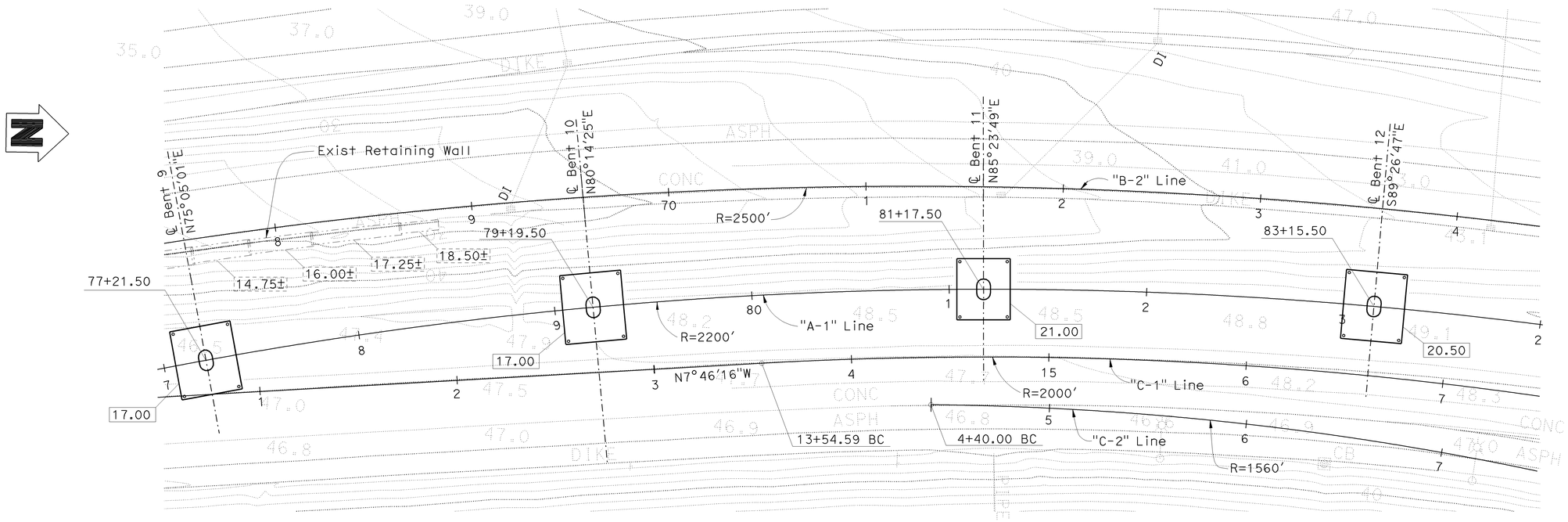

PLAN

1" = 30'

NOTE:
THE CONTRACTOR SHALL VERIFY ALL CONTROLLING FIELD DIMENSIONS BEFORE ORDERING OR FABRICATING ANY MATERIAL.

GEOTECHNICAL PROFESSIONAL APPROVAL DATE 07-27-09

Sudhakar Vatti
DESIGN OVERSIGHT Sudhakar Vatti
8-10-09
SIGN OFF DATE

SCALE:	VERT DATUM NAVD88	HORIZ DATUM CCS83	
PHOTOGRAMMETRY AS OF: 12/07		ALIGNMENT TIES	
SURVEYED	BY CALTRANS	DRAFTED	BY AE, Inc
FIELD CHECKED	BY AE, Inc	CHECKED	BY AE, Inc

DESIGN	BY P. Morel/A. Moubayed	CHECKED	J. Holombo/S. Megally
DETAILS	BY N. Shu	CHECKED	J. Holombo
QUANTITIES	BY V. Nong	CHECKED	L. Khaleghi

PREPARED FOR THE STATE OF CALIFORNIA DEPARTMENT OF TRANSPORTATION

Alaedin Moubayed
PROJECT ENGINEER

BRIDGE NO. 55-1098E
POST MILE 24.02

405/605 HOV CONNECTOR
FOUNDATION PLAN NO. 3

FOUNDATION PLAN SHEET (ENGLISH) (REV. 2-25-05)

ORIGINAL SCALE IN INCHES FOR REDUCED PLANS 0 1 2 3

CU 12235
EA 071631

DISREGARD PRINTS BEARING EARLIER REVISION DATES

REVISION DATES (PRELIMINARY STAGE ONLY) 02/18/08 06/27/08 09/22/08 10/15/08 03/20/09 04/06/09 07/27/09

SHEET 13 OF 87

FILE => 55-1098e-e-fdp103.dgn

USERNAME => frlenard DATE PLOTTED => 03-FEB-2010 TIME PLOTTED => 07:49

DIST	COUNTY	ROUTE	POST MILES TOTAL PROJECT	SHEET No	TOTAL SHEETS
12	Ora	22,405, 605	R0.3/R0.9, 22.3/24.0,3.0/R1.6	1585	1929

REGISTERED CIVIL ENGINEER 07-27-09 DATE

2-1-10
PLANS APPROVAL DATE

REGISTERED PROFESSIONAL ENGINEER Paul A. Morel No. C 68491 Exp. 09-30-09 CIVIL STATE OF CALIFORNIA

The State of California or its officers or agents shall not be responsible for the accuracy or completeness of electronic copies of this plan sheet.

OCTA
550 SOUTH MAIN STREET
ORANGE, CA 92863

PBS&J
625 The City Drive South, Suite 200
Orange, CA 92868

NOTES

1. All piles not shown
2. Locations of existing structure foundations are approximate.
3. See "E22-N405/405 Separation (Replace)" & "E22-N605/405 Separation (Replace)" plans for E22-N405/405 Separation & E22-N605/405 Separation footings, existing structure and piling removal limits.

LEGEND

- XX.XX — Indicates bottom of footing elevation
- XX.XX± — Indicates bottom of exist footing elevation
- Indicates 16" Dia Pipe Pile
- Indicates vertical Pile
- Indicates battered Pile (1:3)
- Existing Structure
- New Structure
- Bridge Removal, see Note 3

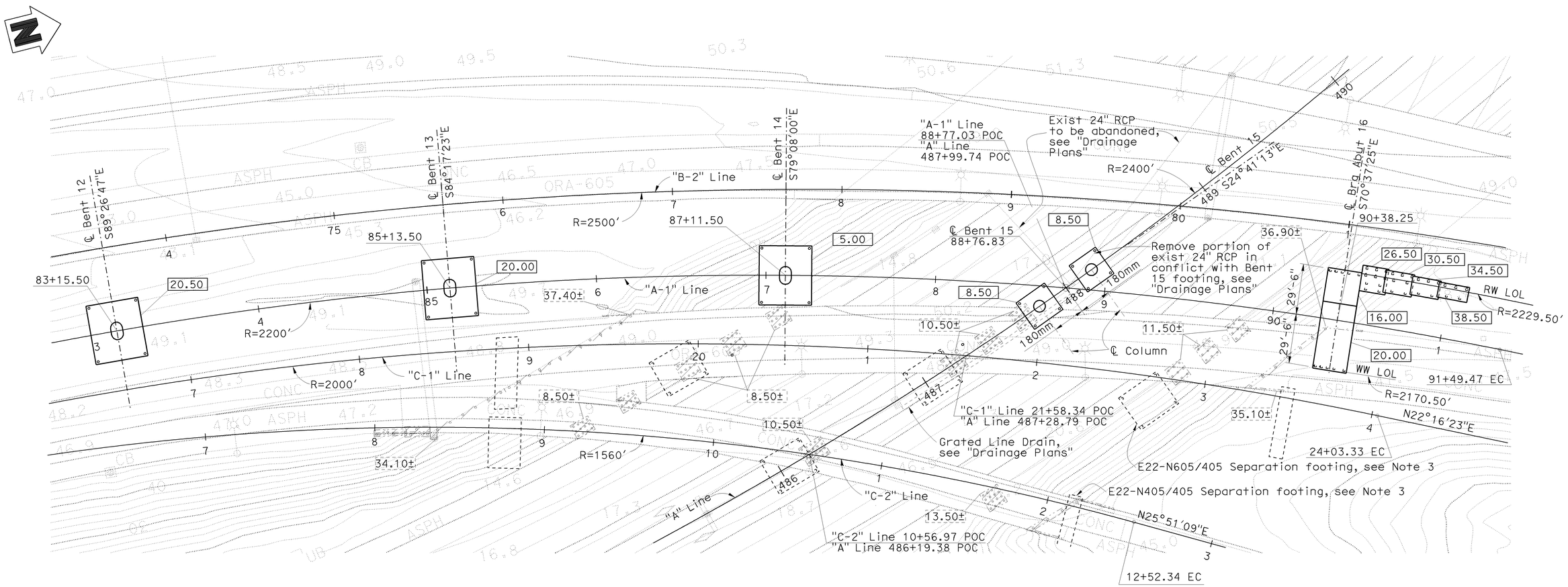

PLAN

1" = 30'

NOTE:
THE CONTRACTOR SHALL VERIFY ALL CONTROLLING FIELD DIMENSIONS BEFORE ORDERING OR FABRICATING ANY MATERIAL.

GEOTECHNICAL PROFESSIONAL APPROVAL DATE 07-27-09

Sudhakar Vatti
DESIGN OVERSIGHT Sudhakar Vatti
8-10-09
SIGN OFF DATE

SCALE:	VERT DATUM NAVD88	HORIZ DATUM CCS83
PHOTOGRAMMETRY AS OF: 12/07	ALIGNMENT TIES	
SURVEYED BY CALTRANS	DRAFTED BY AE, Inc	
FIELD CHECKED BY AE, Inc	CHECKED BY AE, Inc	

DESIGN	BY P. Morel/A. Moubayed	CHECKED J. Holombo/S. Megally
DETAILS	BY N. Shu	CHECKED J. Holombo
QUANTITIES	BY V. Nong	CHECKED L. Khaleghi

PREPARED FOR THE STATE OF CALIFORNIA DEPARTMENT OF TRANSPORTATION

Alaedin Moubayed
PROJECT ENGINEER

BRIDGE NO. 55-1098E
POST MILE 24.02

405/605 HOV CONNECTOR
FOUNDATION PLAN NO. 4

FOUNDATION PLAN SHEET (ENGLISH) (REV. 2-25-05)

ORIGINAL SCALE IN INCHES FOR REDUCED PLANS 0 1 2 3

CU 12235
EA 071631

DISREGARD PRINTS BEARING EARLIER REVISION DATES

REVISION DATES (PRELIMINARY STAGE ONLY) 02/14/08 06/27/08 09/29/08 10/14/08 03/26/09 04/06/09 07/27/09

SHEET 14 OF 87

FILE => 55-1098e-e-fdp104.dgn

USERNAME => trlenard DATE PLOTTED => 03-FEB-2010 TIME PLOTTED => 07:49

DIST	COUNTY	ROUTE	POST MILES TOTAL PROJECT	SHEET No	TOTAL SHEETS
12	Ora	22,405, 605	R0.3/R0.9, 22.3/24.0,3.0/R1.6	1586	1929

REGISTERED CIVIL ENGINEER 07-27-09 DATE

2-1-10
PLANS APPROVAL DATE

The State of California or its officers or agents shall not be responsible for the accuracy or completeness of electronic copies of this plan sheet.

REGISTERED PROFESSIONAL ENGINEER Paul A. Morel No. C 68491 Exp. 9-30-09 CIVIL STATE OF CALIFORNIA

OCTA
550 SOUTH MAIN STREET
ORANGE, CA 92863

PBS&J
625 THE CITY DRIVE SOUTH, SUITE 200
ORANGE, CA 92868

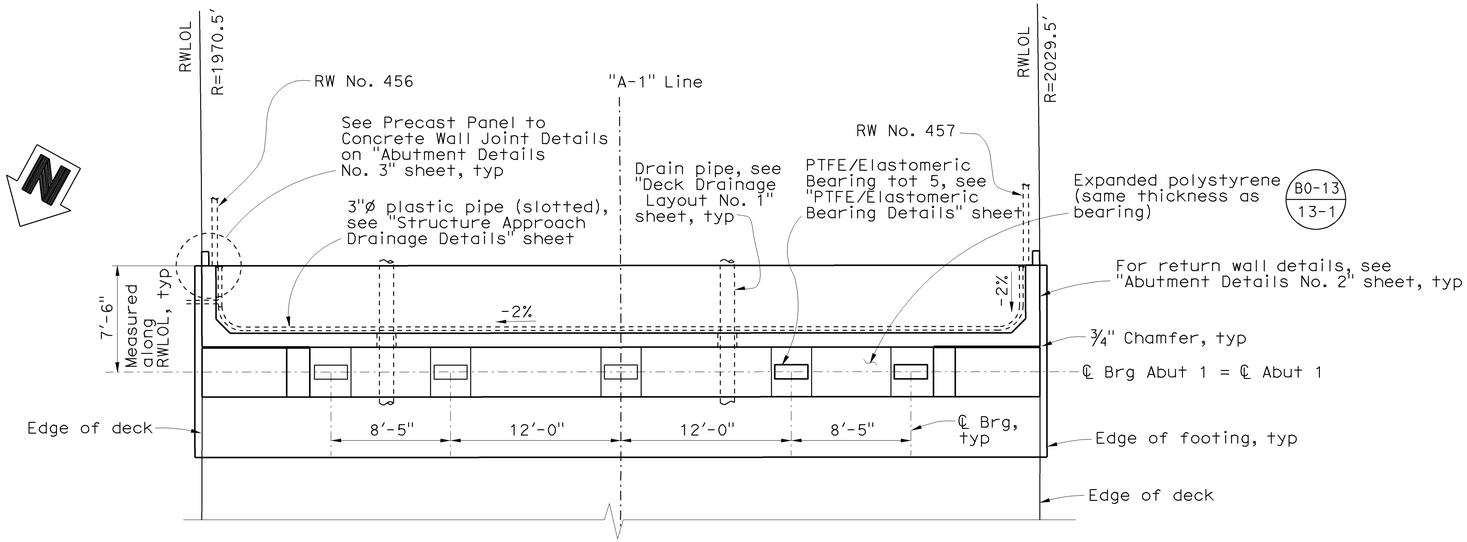

PLAN

3/16"= 1'-0"

NOTES

1. Conc barriers not shown
2. All piles not shown.
3. For Section A-A, see "Abutment Details No. 1" sheet
4. See "Architectural Details No. 1" sheet for Architectural texture details.

LEGEND

- Denotes vertical pile
- Denotes bundled bars
- Denotes Headed bar reinforcement

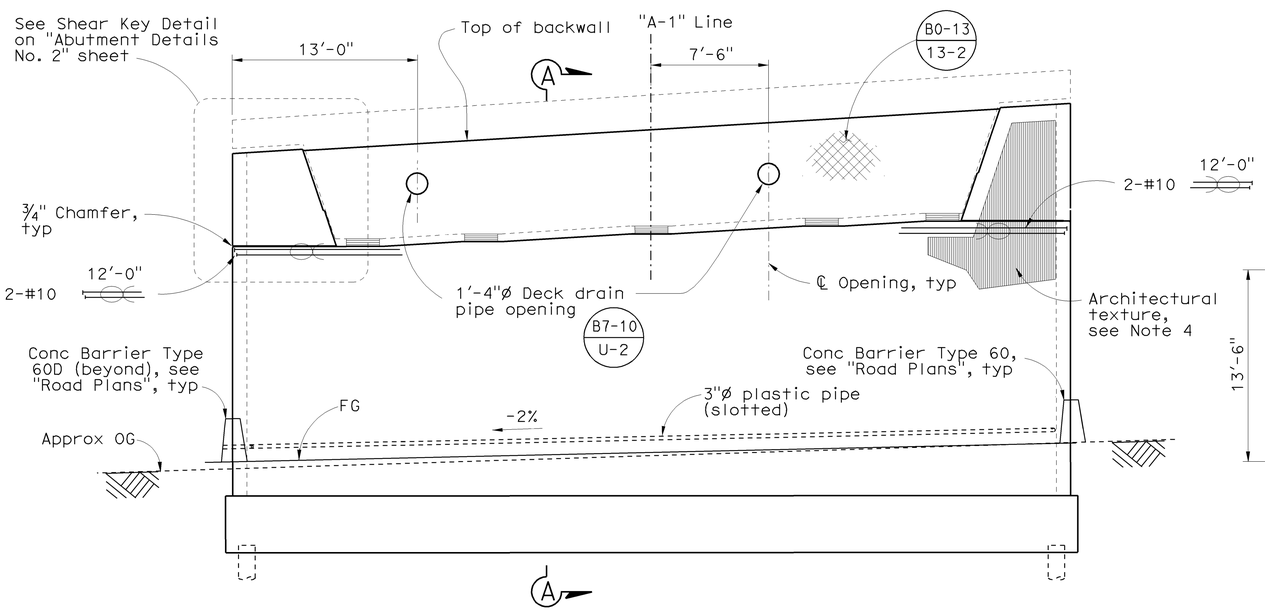

ELEVATION

3/16" = 1'-0"

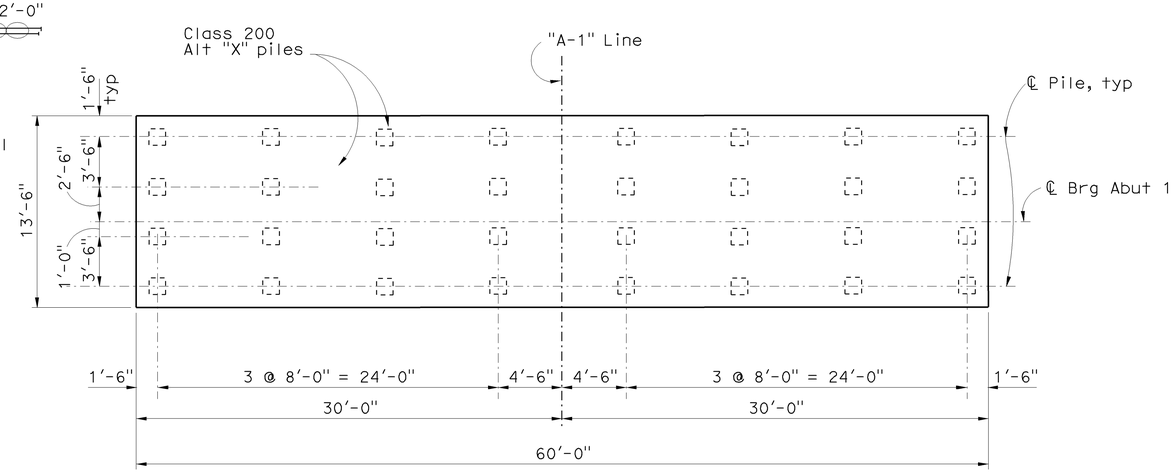

PILE LAYOUT

3/16"= 1'-0"

Sudhakar Vatti
DESIGN OVERSIGHT Sudhakar Vatti
8-10-09
SIGN OFF DATE

	BY	CHECKED
DESIGN	P. Morel	J. Holombo/S. Megally
DETAILS	N. Shu	J. Holombo
QUANTITIES	V. Nong	L. Khaleghi

PREPARED FOR THE STATE OF CALIFORNIA DEPARTMENT OF TRANSPORTATION

Alaedin Moubayed
PROJECT ENGINEER

BRIDGE NO. 55-1098E
POST MILE 24.02

405/605 HOV CONNECTOR
ABUTMENT 1 LAYOUT

DESIGN DETAIL SHEET (ENGLISH) (REV. 2/25/05)

ORIGINAL SCALE IN INCHES FOR REDUCED PLANS 0 1 2 3

CU 12235
EA 071631

DISREGARD PRINTS BEARING EARLIER REVISION DATES

REVISION DATES (PRELIMINARY STAGE ONLY) 02/18/08 06/02/08 09/29/08 10/13/08 03/26/09 04/06/09 07/27/09

SHEET 15 OF 87

FILE => 55-1098e-f-ab1o01.dgn

USERNAME => rtrenord DATE PLOTTED => 03-FEB-2010 TIME PLOTTED => 07:49

DIST	COUNTY	ROUTE	POST MILES TOTAL PROJECT	SHEET No	TOTAL SHEETS
12	Ora	22,405, 605	R0.3/R0.9, 22.3/24.0,3.0/R1.6	1587	1929

REGISTERED CIVIL ENGINEER 07-27-09 DATE

2-1-10
PLANS APPROVAL DATE

The State of California or its officers or agents shall not be responsible for the accuracy or completeness of electronic copies of this plan sheet.

REGISTERED PROFESSIONAL ENGINEER Paul A. Morel No. C 68491 Exp. 9-30-09 CIVIL STATE OF CALIFORNIA

OCTA
550 SOUTH MAIN STREET
ORANGE, CA 92863

PBS&J
625 THE CITY DRIVE SOUTH, SUITE 200
ORANGE, CA 92868

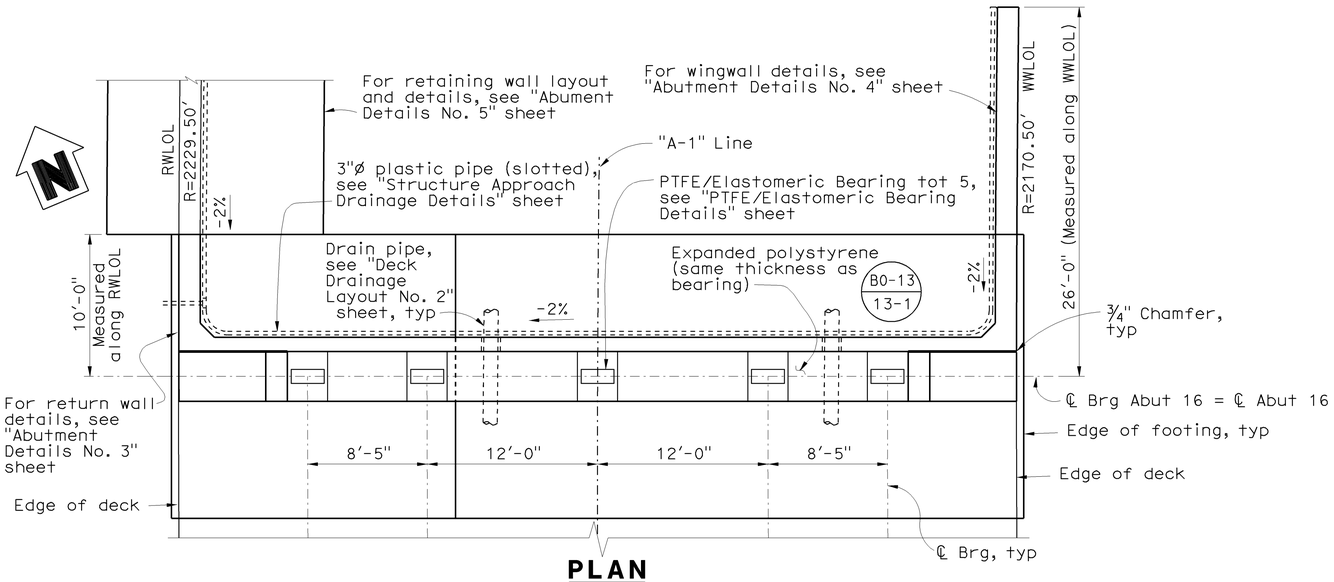

PLAN

3/16" = 1'-0"

NOTES

1. Conc barriers not shown
2. All piles not shown.
3. For Section B-B, see "Abutment Details No. 1" sheet
4. Section C-C similar to Section B-B
5. For Bridge Removal, see "E22-N605/405 Separation (Replace)" plans
6. Location of piles may be adjusted to avoid conflict with existing piles, as permitted by the Engineer.
7. Locations of existing piling and abutment are approximate.

LEGEND

- Denotes vertical pile
- Denotes battered pile (1:3)
- Denotes existing vertical pile
- Denotes existing battered pile
- Existing Structure
- New Structure
- Bridge Removal, see Note 5
- Denotes bundled bars
- Denotes Headed bar reinforcement

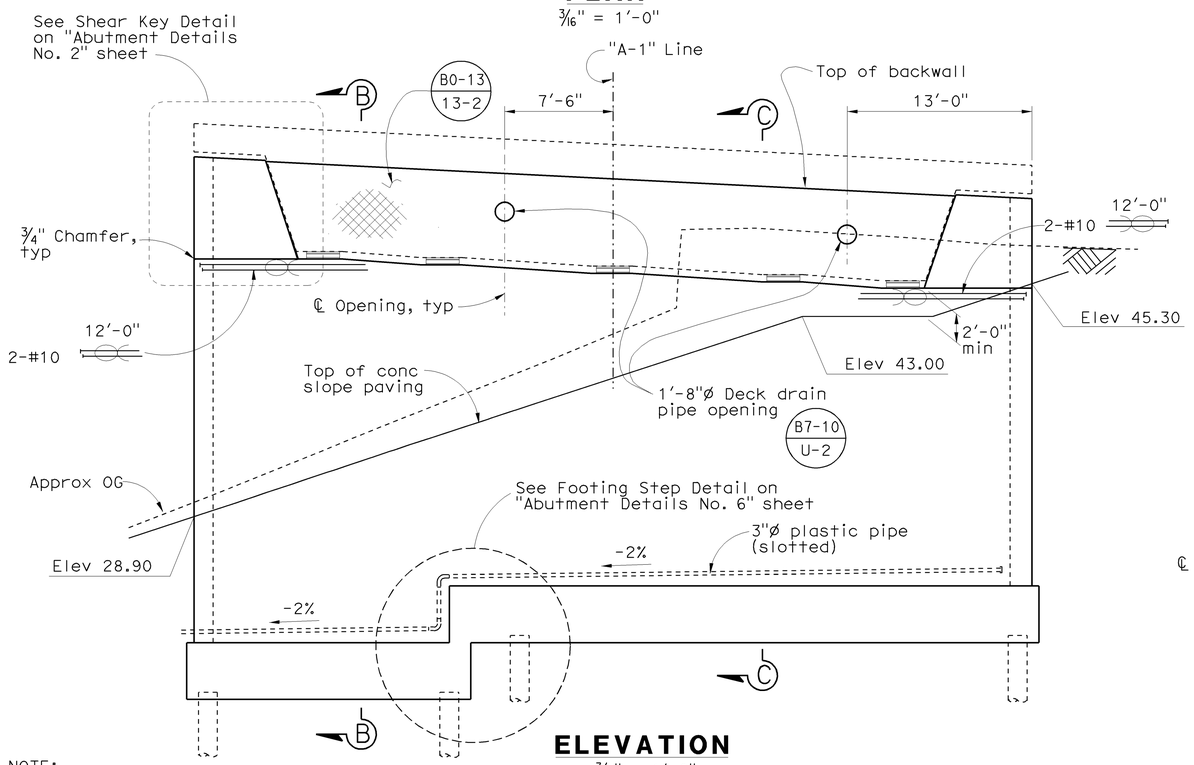

ELEVATION

3/16" = 1'-0"

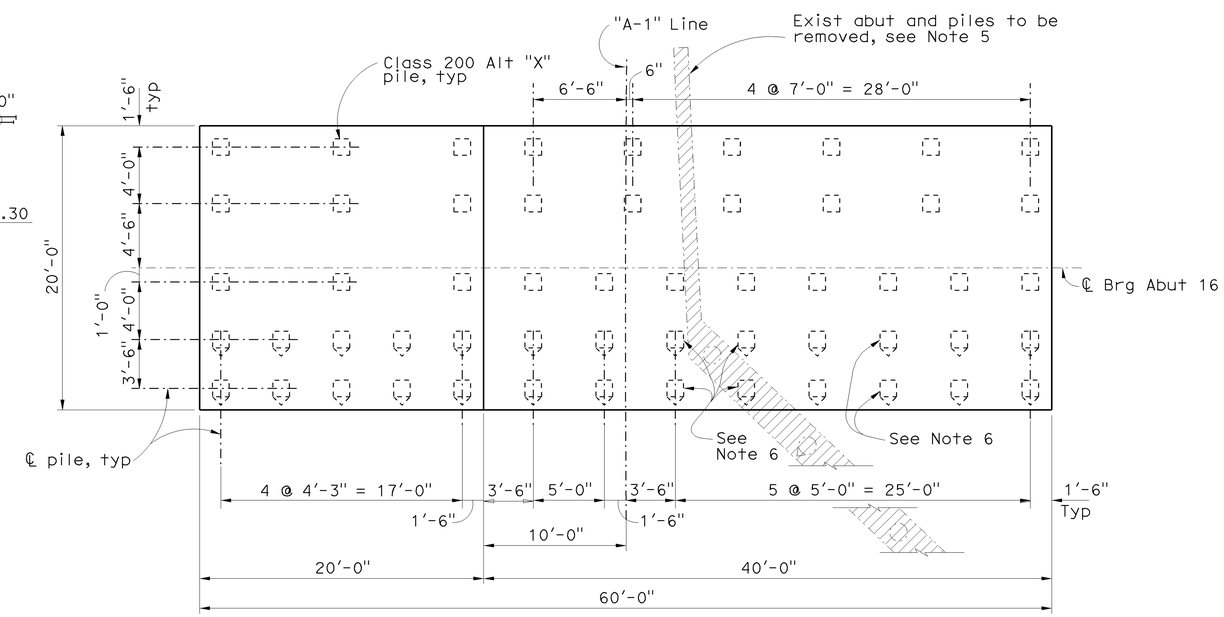

PILE LAYOUT

3/16" = 1'-0"

NOTE:
THE CONTRACTOR SHALL VERIFY ALL CONTROLLING FIELD DIMENSIONS BEFORE ORDERING OR FABRICATING ANY MATERIAL.

Sudhakar Vatti
DESIGN OVERSIGHT Sudhakar Vatti
8-10-09
SIGN OFF DATE

	BY	CHECKED
DESIGN	P. Morel	J. Holombo/S. Megally
DETAILS	N. Shu	J. Holombo
QUANTITIES	V. Nong	L. Khaleghi

PREPARED FOR THE STATE OF CALIFORNIA DEPARTMENT OF TRANSPORTATION

Alaedin Moubayed
PROJECT ENGINEER

BRIDGE NO. 55-1098E
POST MILE 24.02

405/605 HOV CONNECTOR
ABUTMENT 16 LAYOUT

DESIGN DETAIL SHEET (ENGLISH) (REV. 2/25/05)

ORIGINAL SCALE IN INCHES FOR REDUCED PLANS 0 1 2 3

CU 12235
EA 071631

DISREGARD PRINTS BEARING EARLIER REVISION DATES

REVISION DATES (PRELIMINARY STAGE ONLY) 02/15/08 06/02/08 09/29/08 10/15/08 03/20/09 04/06/09 07/27/09

SHEET 16 OF 87

FILE => 55-1098e-f-ab1o02.dgn

USERNAME => friehard DATE PLOTTED => 03-FEB-2010 TIME PLOTTED => 07:43

DIST	COUNTY	ROUTE	POST MILES TOTAL PROJECT	SHEET No	TOTAL SHEETS
12	Ora	22,405, 605	R0.3/R0.9, 22.3/24.0,3.0/R1.6	1588	1929

REGISTERED CIVIL ENGINEER 07-27-09 DATE

2-1-10
PLANS APPROVAL DATE

The State of California or its officers or agents shall not be responsible for the accuracy or completeness of electronic copies of this plan sheet.

REGISTERED PROFESSIONAL ENGINEER Paul A. Morel No. C 68491 Exp. 9-30-09 CIVIL STATE OF CALIFORNIA

OCTA
550 SOUTH MAIN STREET
ORANGE, CA 92863

PBS&J
625 THE CITY DRIVE SOUTH, SUITE 200
ORANGE, CA 92868

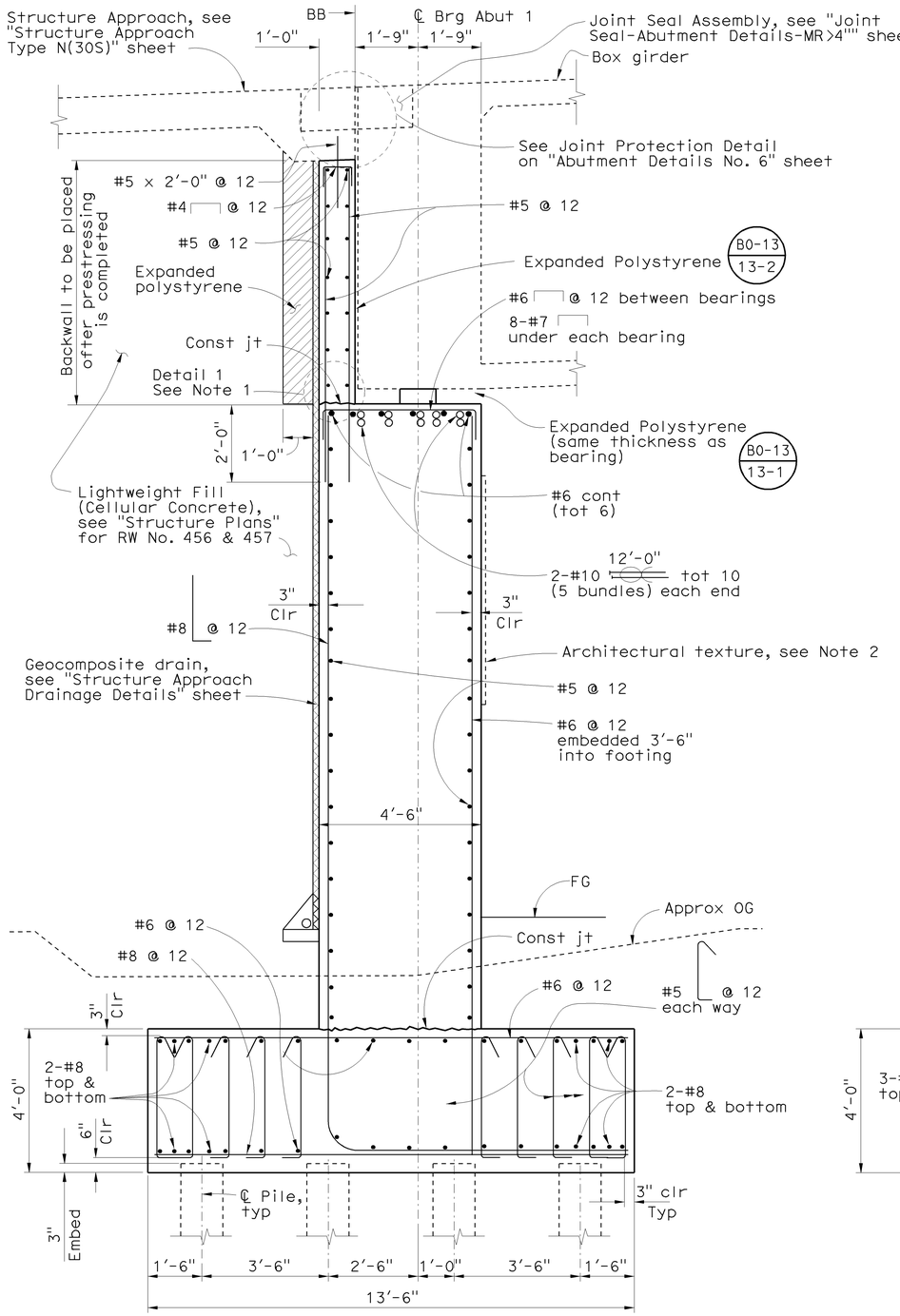

SECTION A-A

½" = 1'-0"

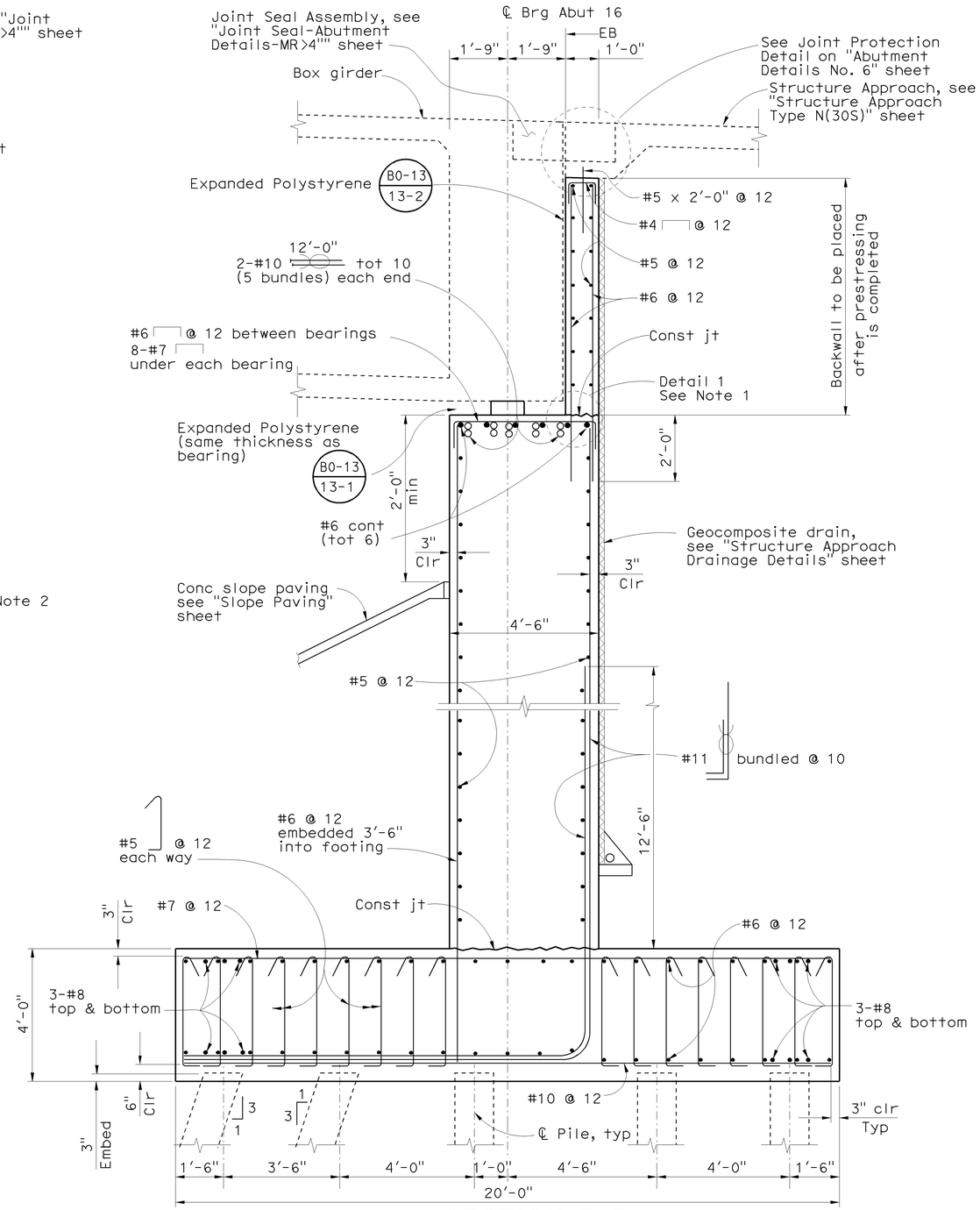

SECTION B-B

½" = 1'-0"

NOTES

1. For Detail 1, see "Abutment Details No. 6" sheet
2. See "Architectural Details No. 1" sheet for Architectural texture details

LEGEND

Denotes bundled bars

Denotes Headed bar reinforcement

Sudhakar Vatti
DESIGN OVERSIGHT Sudhakar Vatti
8-10-09
SIGN OFF DATE

DESIGN DETAIL SHEET (ENGLISH) (REV. 2/25/05)

	BY	CHECKED
DESIGN	P. Morel	J. Holombo/S. Megally
DETAILS	N. Shu	J. Holombo
QUANTITIES	V. Nong	L. Khaleghi

ORIGINAL SCALE IN INCHES FOR REDUCED PLANS 0 1 2 3

PREPARED FOR THE STATE OF CALIFORNIA DEPARTMENT OF TRANSPORTATION

Alaedin Moubayed
PROJECT ENGINEER

CU 12235
EA 071631

BRIDGE NO. 55-1098E
POST MILE 24.02

405/605 HOV CONNECTOR
ABUTMENT DETAILS NO. 1

DISREGARD PRINTS BEARING EARLIER REVISION DATES

REVISION DATES (PRELIMINARY STAGE ONLY) 02/18/08 06/02/08 09/29/08 10/13/08 03/20/09 04/06/09 07/27/09

SHEET 17 OF 87

FILE => 55-1098e-f-adt01.dgn

USERNAME => Trienhard DATE PLOTTED => 03-FEB-2010 TIME PLOTTED => 07:49

DIST	COUNTY	ROUTE	POST MILES TOTAL PROJECT	SHEET No	TOTAL SHEETS
12	Ora	22,405, 605	R0.3/R0.9, 22.3/24.0,3.0/R1.6	1589	1929

REGISTERED CIVIL ENGINEER — DATE 07-27-09

2-1-10
PLANS APPROVAL DATE

REGISTERED PROFESSIONAL ENGINEER — Paul A. Morel — No. C 68491 — Exp. 9-30-09 — CIVIL — STATE OF CALIFORNIA

The State of California or its officers or agents shall not be responsible for the accuracy or completeness of electronic copies of this plan sheet.

OCTA
550 SOUTH MAIN STREET
ORANGE, CA 92863

PBS&J
625 THE CITY DRIVE SOUTH, SUITE 200
ORANGE, CA 92868

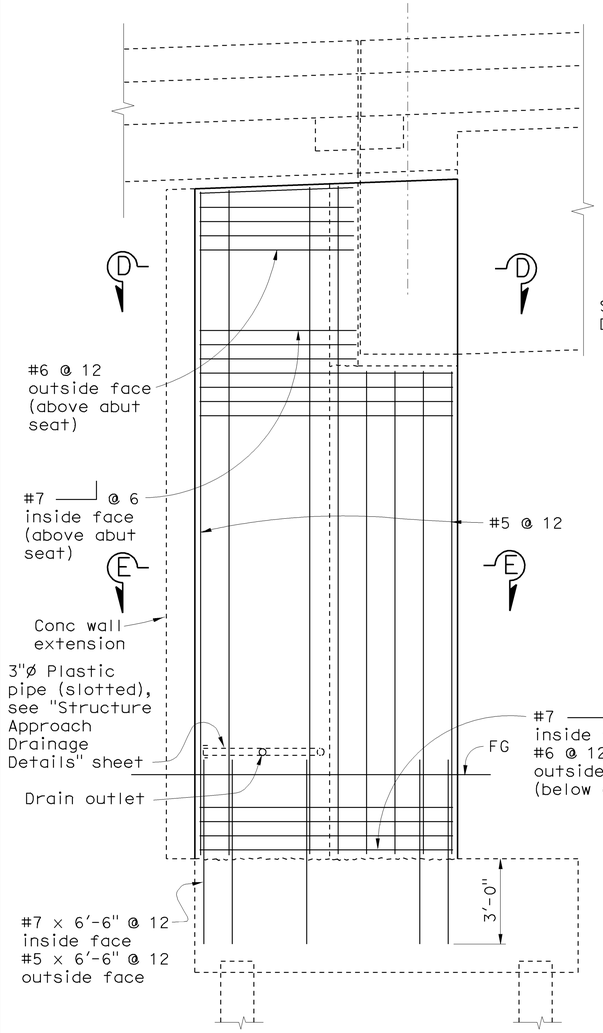

ABUTMENT 1 RETURN WALL ELEVATION

3/8" = 1'-0"

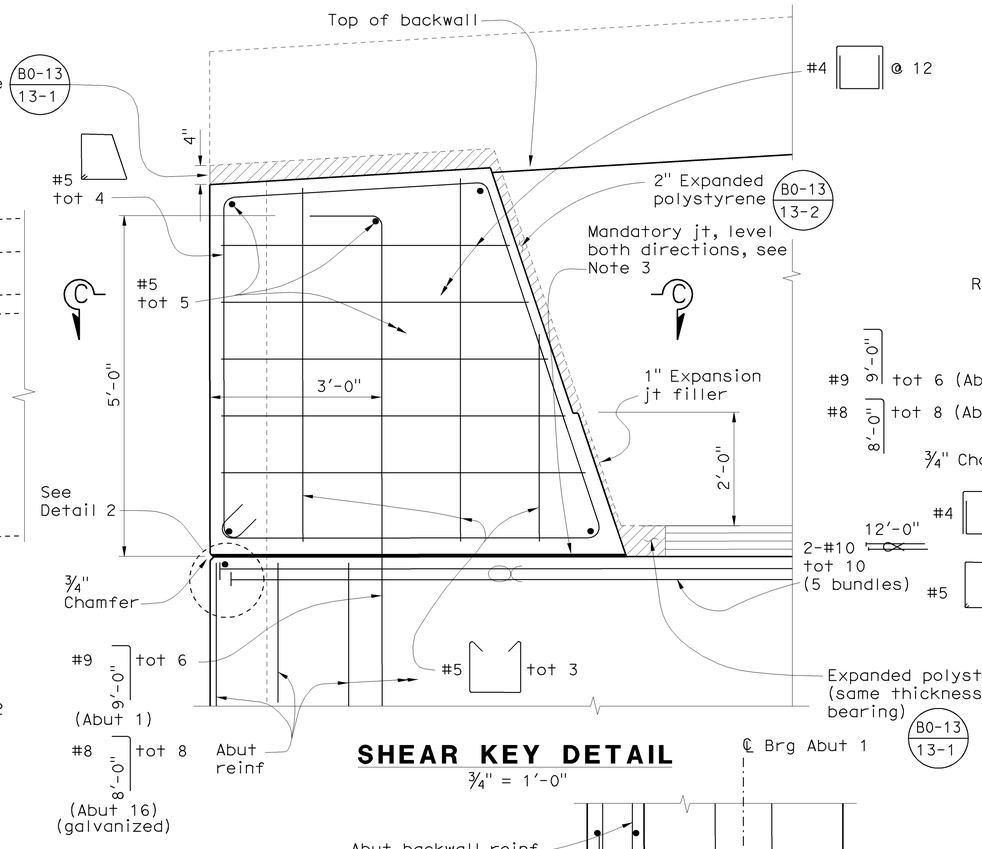

SHEAR KEY DETAIL

3/4" = 1'-0"

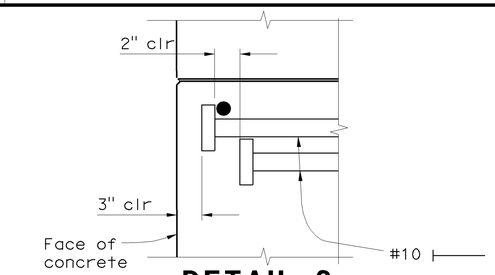

DETAIL 2

No Scale

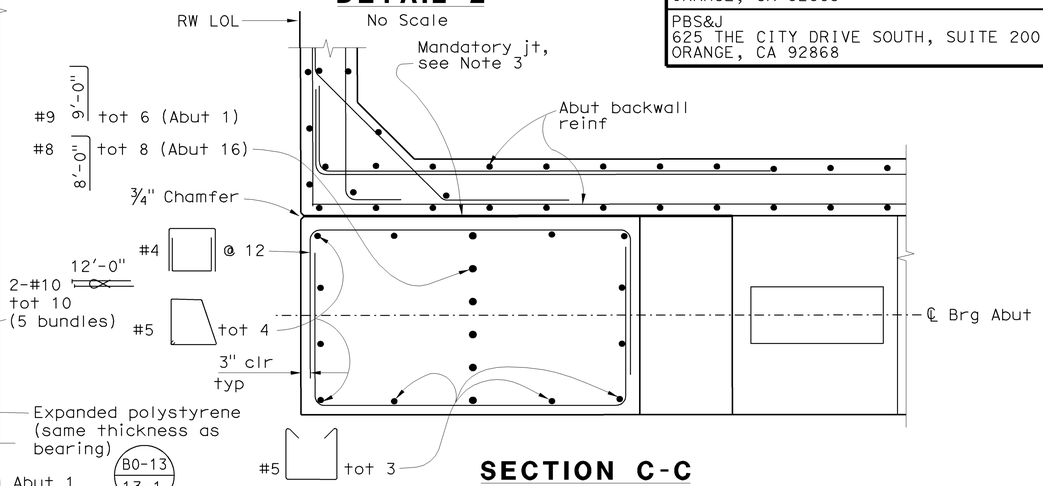

SECTION C-C

3/4"= 1'-0"

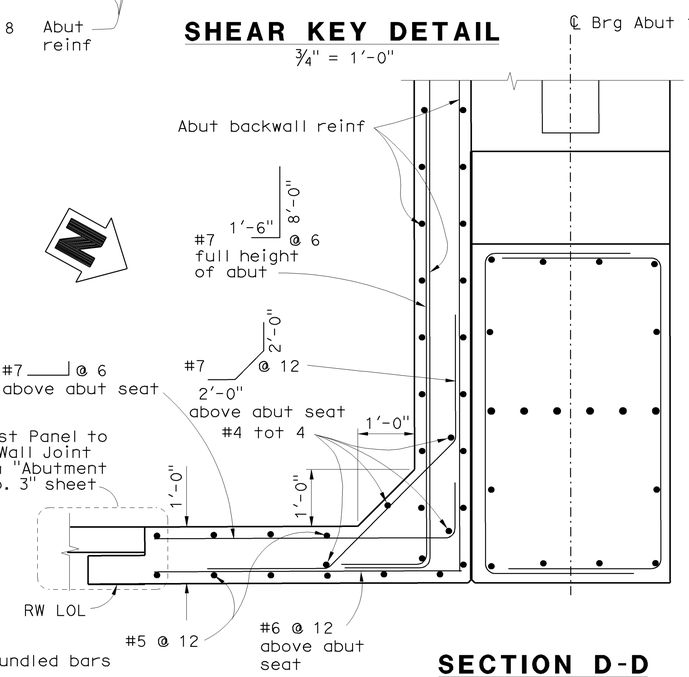

SECTION D-D

3/4"= 1'-0"

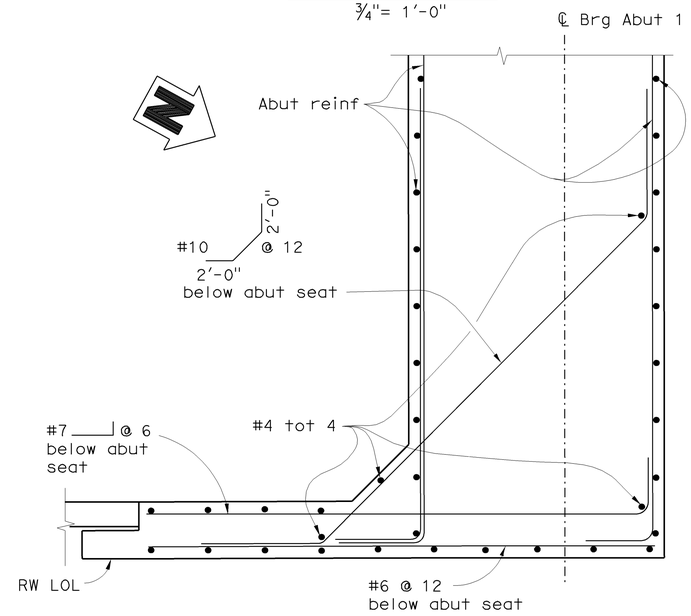

SECTION E-E

3/4"= 1'-0"

For information not shown, see Section D-D

NOTES

1. Abutment 1 East return wall shown, West return wall is similar.
2. All piles not shown.
3. Mandatory joint surface to be smooth finished and lined with 15 pound construction paper.
4. Outer 6" of expanded polystyrene to be removed after construction.

LEGEND

Denotes bundled bars

Denotes Headed bar reinforcement

Sudhakar Vatti
DESIGN OVERSIGHT — Sudhakar Vatti
8-10-09
SIGN OFF DATE

	BY	CHECKED
DESIGN	P. Morel	J. Holombo/S. Megally
DETAILS	N. Shu	J. Holombo
QUANTITIES	V. Nong	L. Khaleghi

PREPARED FOR THE STATE OF CALIFORNIA DEPARTMENT OF TRANSPORTATION

Alaedin Moubayed
PROJECT ENGINEER

BRIDGE NO. 55-1098E
POST MILE 24.02

405/605 HOV CONNECTOR
ABUTMENT DETAILS NO. 2

DESIGN DETAIL SHEET (ENGLISH) (REV. 2/25/05)

ORIGINAL SCALE IN INCHES FOR REDUCED PLANS 0 1 2 3

CU 12235
EA 071631

DISREGARD PRINTS BEARING EARLIER REVISION DATES

REVISION DATES (PRELIMINARY STAGE ONLY): 02/15/08 06/02/08 09/29/08 10/15/08 03/20/09 04/06/09 07/27/09

SHEET 18 OF 87

FILE => 55-1098e-f-adt02.dgn

USERNAME => friehard DATE PLOTTED => 03-FEB-2010 TIME PLOTTED => 07:43

DIST	COUNTY	ROUTE	POST MILES TOTAL PROJECT	SHEET No	TOTAL SHEETS
12	Ora	22,405, 605	R0.3/R0.9, 22.3/24.0,3.0/R1.6	1590	1929

REGISTERED CIVIL ENGINEER 07-27-09 DATE

2-1-10
PLANS APPROVAL DATE

REGISTERED PROFESSIONAL ENGINEER Paul A. Morel No. C 68491 Exp. 9-30-09 CIVIL STATE OF CALIFORNIA

The State of California or its officers or agents shall not be responsible for the accuracy or completeness of electronic copies of this plan sheet.

OCTA
550 SOUTH MAIN STREET
ORANGE, CA 92863

PBS&J
625 THE CITY DRIVE SOUTH, SUITE 200
ORANGE, CA 92868

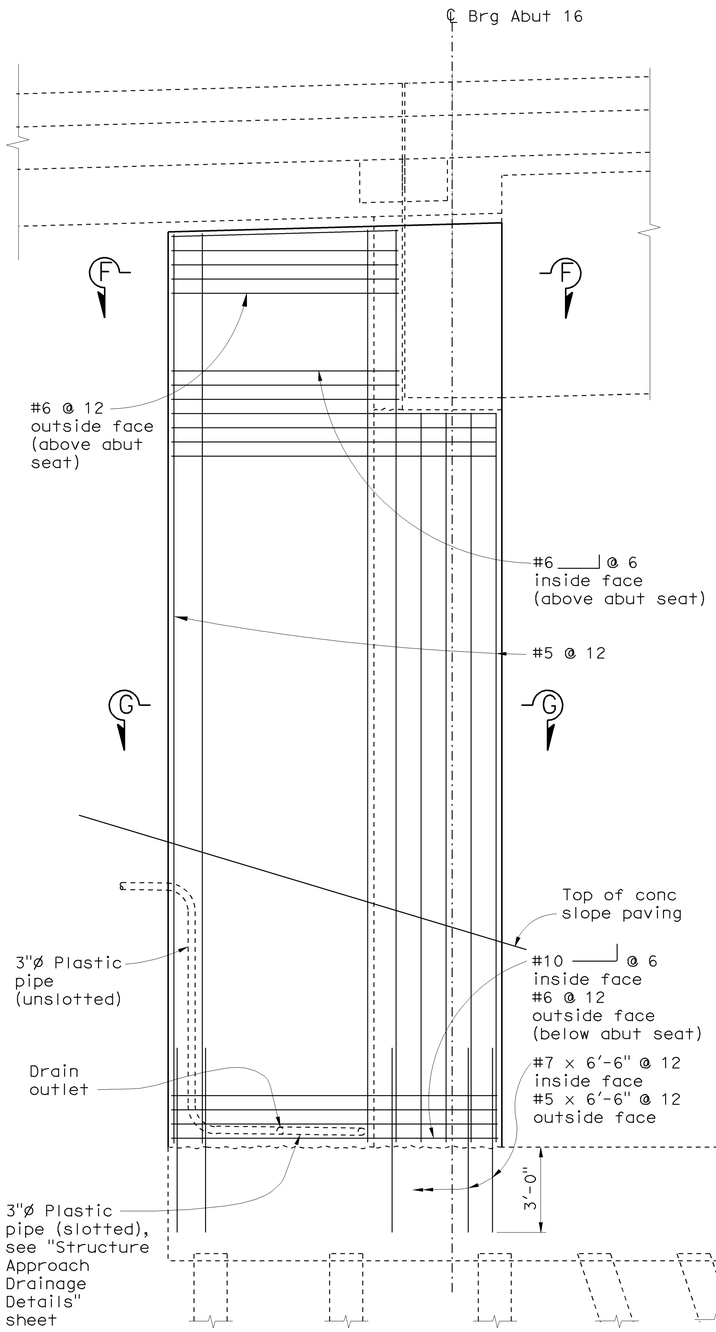

ABUTMENT 16 RETURN WALL ELEVATION

3/8"= 1'-0"

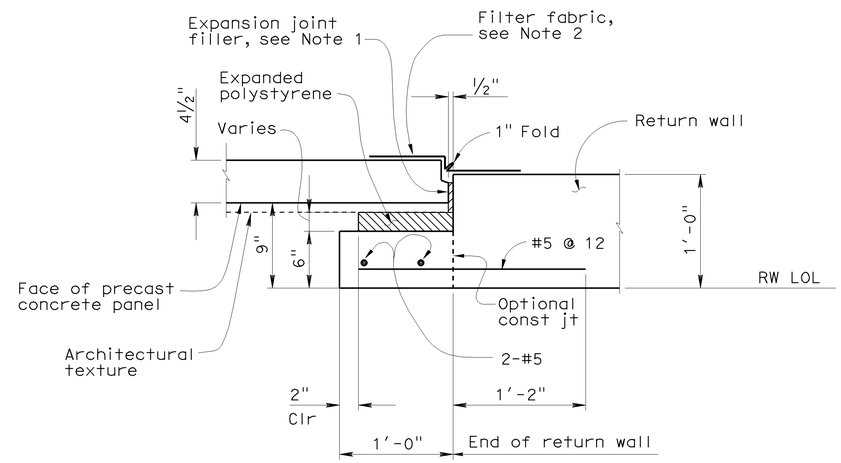

PRECAST PANEL TO CONCRETE WALL JOINT DETAILS

No Scale

NOTES:

1. Expansion joint filler shall be bonded to the return wall.
2. Bond a strip of filter fabric, 1'-6" wide, to back of precast concrete panels and the adjacent concrete wall for entire length of vertical joint.

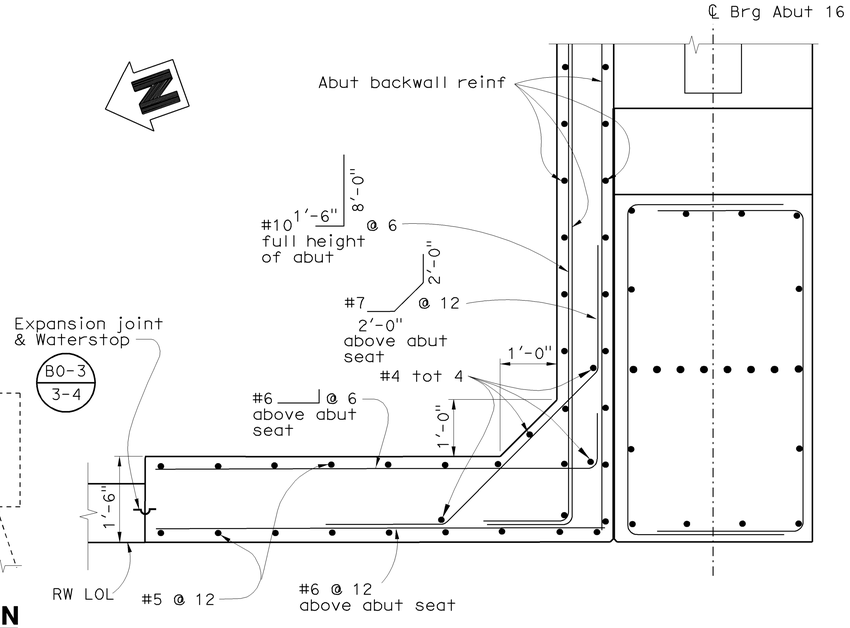

SECTION F-F

3/4"= 1'-0"

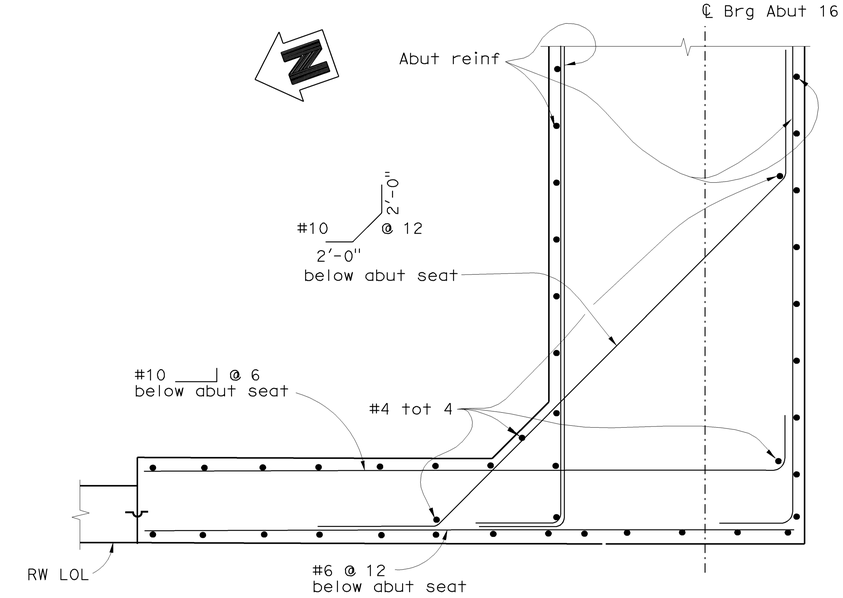

For information not shown, see Section F-F.

SECTION G-G

3/4"= 1'-0"

Sudhakar Vatti
DESIGN OVERSIGHT Sudhakar Vatti
8-10-09
SIGN OFF DATE

	BY	CHECKED
DESIGN	P. Morel	J. Holombo/S. Megally
DETAILS	N. Shu	J. Holombo
QUANTITIES	V. Nong	L. Khaleghi

PREPARED FOR THE STATE OF CALIFORNIA DEPARTMENT OF TRANSPORTATION

Alaedin Moubayed
PROJECT ENGINEER

BRIDGE NO. 55-1098E
POST MILE 24.02

405/605 HOV CONNECTOR
ABUTMENT DETAILS NO. 3

DESIGN DETAIL SHEET (ENGLISH) (REV. 2/25/05)

ORIGINAL SCALE IN INCHES FOR REDUCED PLANS 0 1 2 3

CU 12235
EA 071631

DISREGARD PRINTS BEARING EARLIER REVISION DATES

REVISION DATES (PRELIMINARY STAGE ONLY) 02/14/08 06/02/08 09/29/08 10/15/08 03/28/09 04/06/09 07/27/09

SHEET 19 OF 87

FILE => 55-1098e-f-adt03.dgn

USERNAME => friehard DATE PLOTTED => 03-FEB-2010 TIME PLOTTED => 07:49

DIST	COUNTY	ROUTE	POST MILES TOTAL PROJECT	SHEET No	TOTAL SHEETS
12	Ora	22,405, 605	R0.3/R0.9, 22.3/24.0,3.0/R1.6	1591	1929

REGISTERED CIVIL ENGINEER — DATE 07-27-09

2-1-10
PLANS APPROVAL DATE

REGISTERED PROFESSIONAL ENGINEER — Paul A. Morel — No. C 68491 — Exp. 9-30-09 — CIVIL — STATE OF CALIFORNIA

The State of California or its officers or agents shall not be responsible for the accuracy or completeness of electronic copies of this plan sheet.

OCTA
550 SOUTH MAIN STREET
ORANGE, CA 92863

PBS&J
625 THE CITY DRIVE SOUTH, SUITE 200
ORANGE, CA 92868

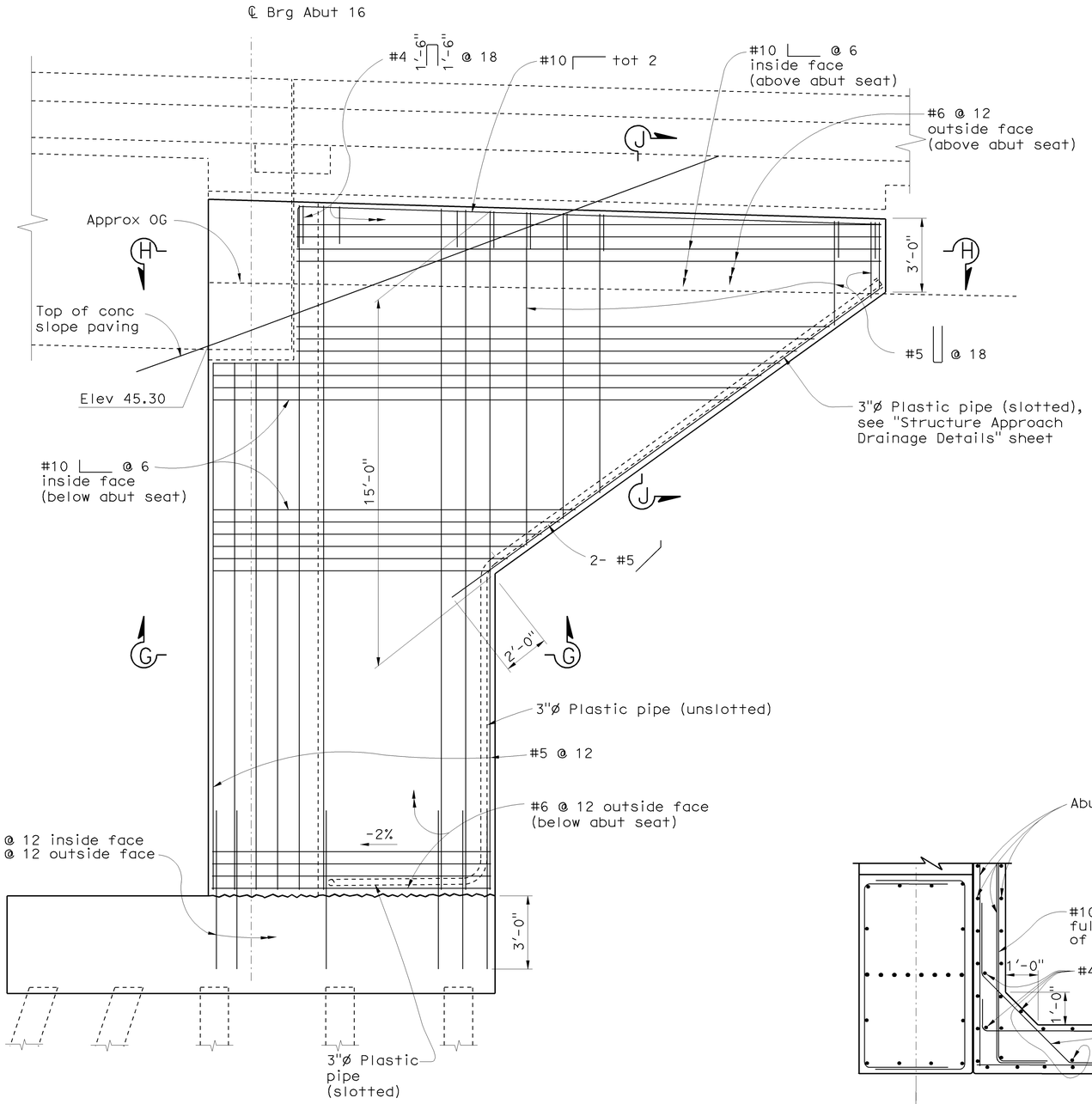

ABUTMENT 16 WINGWALL ELEVATION

3/8" = 1'-0"

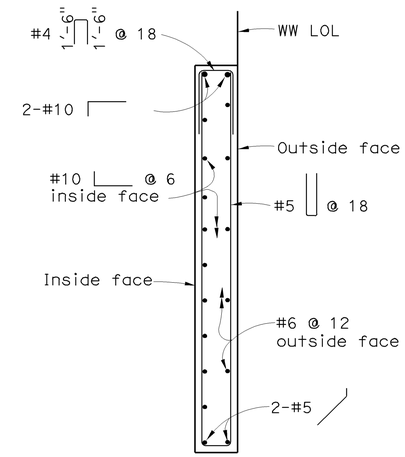

SECTION J-J

3/8" = 1'-0"

NOTES

1. For Section G-G, see "Abutment Details No. 3" sheet
2. See "Architectural Details No. 2" sheet for Fractured Rib Texture detail.

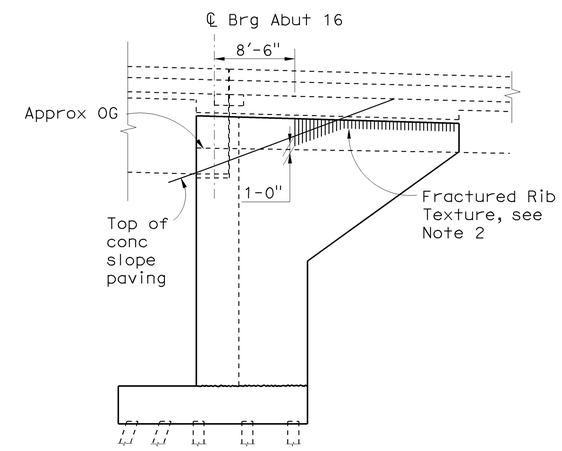

ABUTMENT 16 WINGWALL ARCHITECTURAL TEXTURE

1/8" = 1'-0"

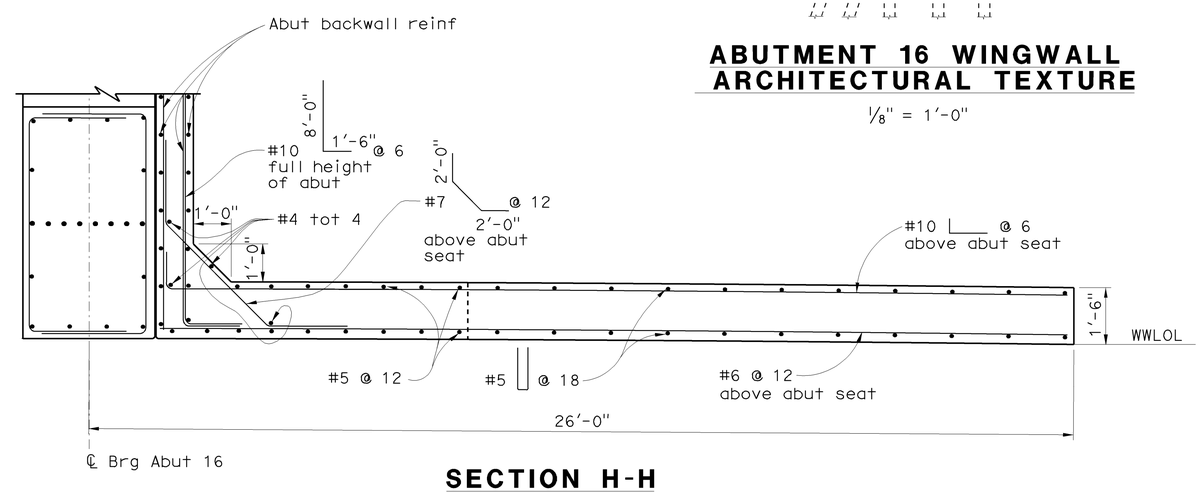

SECTION H-H

1/2" = 1'-0"

Sudhakar Vatti
DESIGN OVERSIGHT — Sudhakar Vatti
8-10-09
SIGN OFF DATE

	BY	CHECKED
DESIGN	P. Morel	J. Holombo/S. Megally
DETAILS	N. Shu	J. Holombo
QUANTITIES	V. Nong	L. Khaleghi

PREPARED FOR THE STATE OF CALIFORNIA DEPARTMENT OF TRANSPORTATION

Alaedin Moubayed
PROJECT ENGINEER

BRIDGE NO. 55-1098E
POST MILE 24.02

405/605 HOV CONNECTOR
ABUTMENT DETAILS NO. 4

DESIGN DETAIL SHEET (ENGLISH) (REV. 2/25/05)

ORIGINAL SCALE IN INCHES FOR REDUCED PLANS 0 1 2 3

CU 12235
EA 071631

DISREGARD PRINTS BEARING EARLIER REVISION DATES

REVISION DATES (PRELIMINARY STAGE ONLY): 02/14/08 06/02/08 09/29/08 10/15/08 03/26/09 04/06/09 07/27/09

SHEET 20 OF 87

FILE => 55-1098e-f-adt04.dgn

USERNAME => trlehard DATE PLOTTED => 03-FEB-2010 TIME PLOTTED => 07:49

DIST	COUNTY	ROUTE	POST MILES TOTAL PROJECT	SHEET No	TOTAL SHEETS
12	Ora	22,405, 605	R0.3/R0.9, 22.3/24.0,3.0/R1.6	1592	1929

REGISTERED CIVIL ENGINEER 07-27-09 DATE

2-1-10
PLANS APPROVAL DATE

REGISTERED PROFESSIONAL ENGINEER Paul A. Morel No. C 68491 Exp. 9-30-09 CIVIL STATE OF CALIFORNIA

The State of California or its officers or agents shall not be responsible for the accuracy or completeness of electronic copies of this plan sheet.

OCTA
550 SOUTH MAIN STREET
ORANGE, CA 92863

PBS&J
625 THE CITY DRIVE SOUTH, SUITE 200
ORANGE, CA 92868

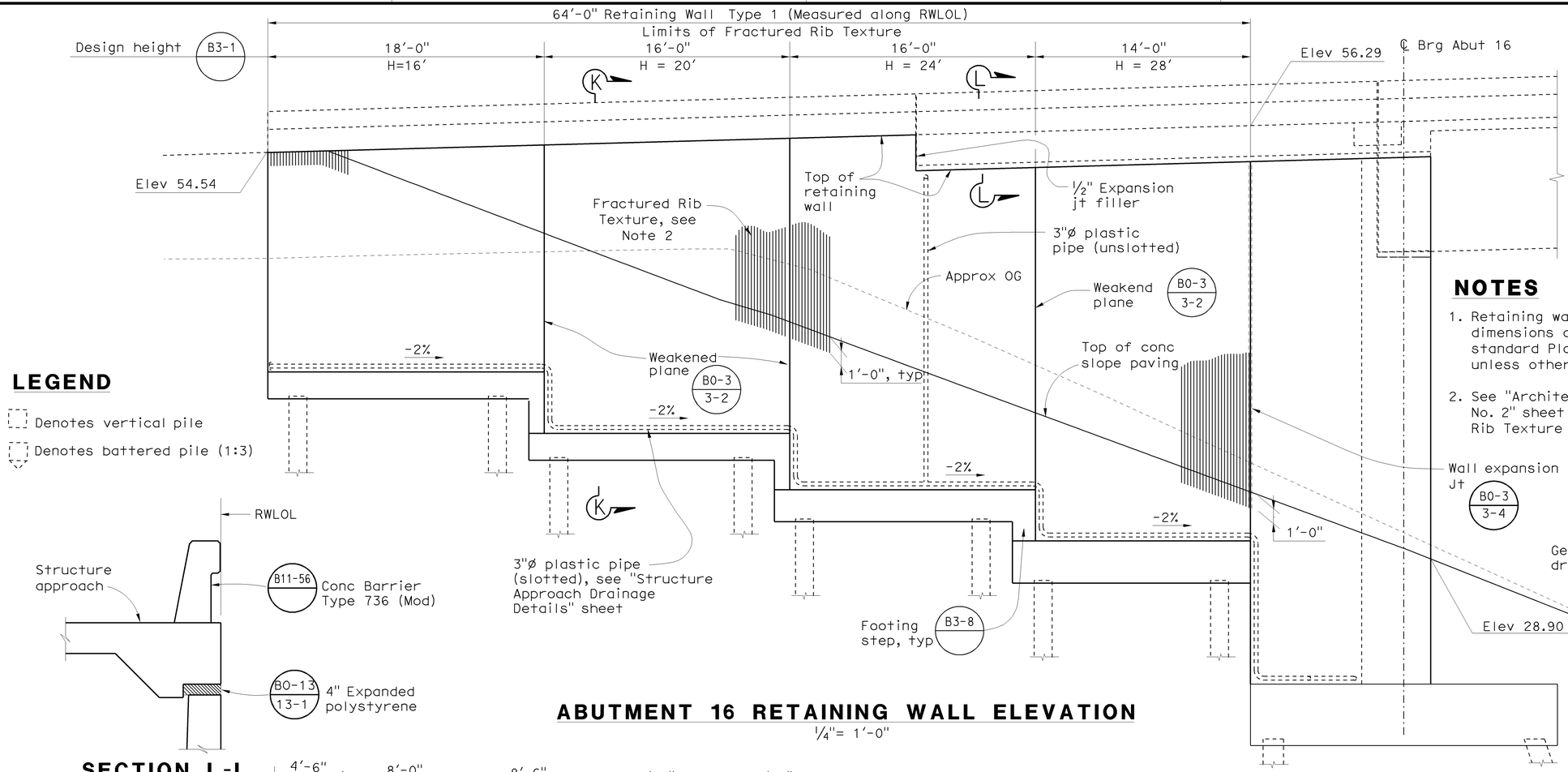

ABUTMENT 16 RETAINING WALL ELEVATION

¼"= 1'-0"

LEGEND

Denotes vertical pile

Denotes battered pile (1:3)

NOTES

1. Retaining wall reinf and dimensions are per standard Plan B3-1, unless otherwise shown
2. See "Architectural Details No. 2" sheet for Fractured Rib Texture detail

SECTION L-L

½" = 1'-0"

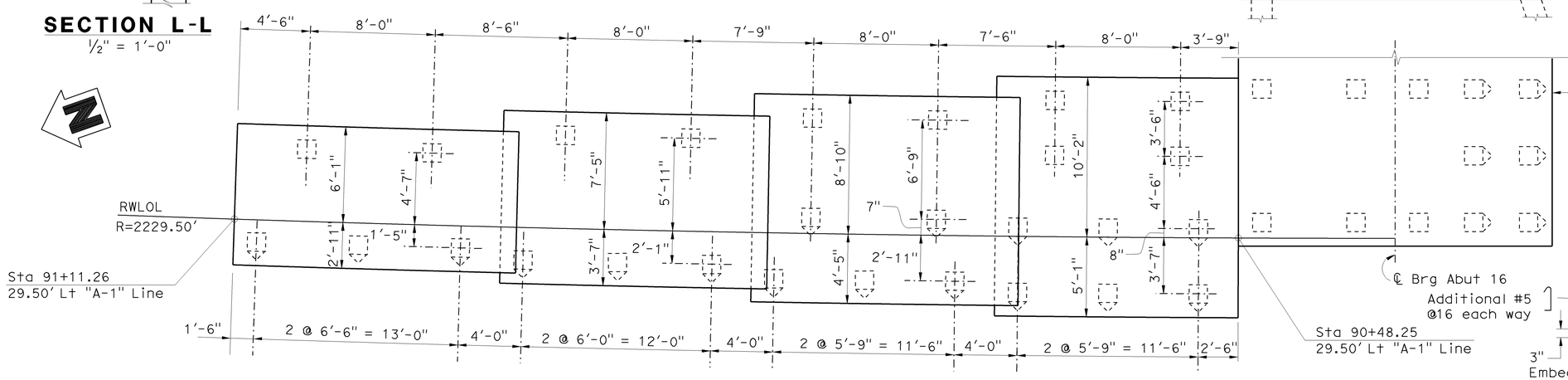

ABUTMENT 16 RETAINING WALL PLAN

¼"= 1'-0"

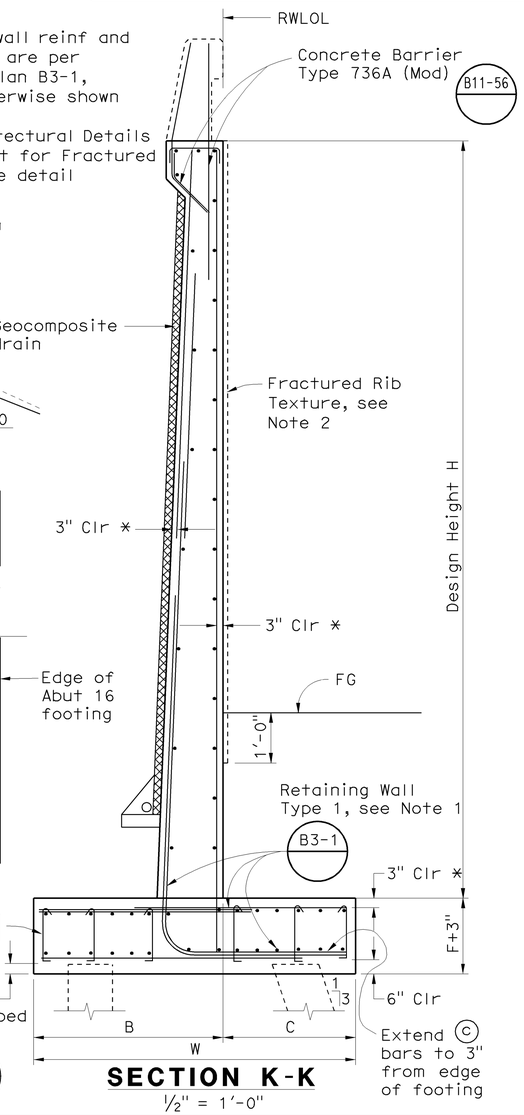

* Clearance supersedes the clearance shown on B3-1

SECTION K-K

½" = 1'-0"

Sudhakar Vatti
DESIGN OVERSIGHT Sudhakar Vatti
8-10-09
SIGN OFF DATE

	BY	CHECKED
DESIGN	P. Morel	J. Holombo/S. Megally
DETAILS	N. Shu	J. Holombo
QUANTITIES	V. Nong	L. Khaleghi

PREPARED FOR THE STATE OF CALIFORNIA DEPARTMENT OF TRANSPORTATION

Alaedin Moubayed
PROJECT ENGINEER

BRIDGE NO. 55-1098E
POST MILE 24.02

405/605 HOV CONNECTOR
ABUTMENT DETAILS NO. 5

DESIGN DETAIL SHEET (ENGLISH) (REV. 2/25/05)

ORIGINAL SCALE IN INCHES FOR REDUCED PLANS 0 1 2 3

CU 12235
EA 071631

DISREGARD PRINTS BEARING EARLIER REVISION DATES

REVISION DATES (PRELIMINARY STAGE ONLY) 02/14/08 06/02/08 09/29/08 10/14/08 03/20/09 04/06/09 07/27/09

SHEET 21 OF 87

FILE => 55-1098e-f-adt05.dgn

USERNAME => trlenard DATE PLOTTED => 03-FEB-2010 TIME PLOTTED => 07:49

DIST	COUNTY	ROUTE	POST MILES TOTAL PROJECT	SHEET No	TOTAL SHEETS
12	Ora	22,405, 605	R0.3/R0.9, 22.3/24.0,3.0/R1.6	1593	1929

REGISTERED CIVIL ENGINEER — DATE 07-27-09

2-1-10
PLANS APPROVAL DATE

REGISTERED PROFESSIONAL ENGINEER — Paul A. Morel — No. C 68491 — Exp. 9-30-09 — CIVIL — STATE OF CALIFORNIA

The State of California or its officers or agents shall not be responsible for the accuracy or completeness of electronic copies of this plan sheet.

OCTA
550 SOUTH MAIN STREET
ORANGE, CA 92863

PBS&J
625 THE CITY DRIVE SOUTH, SUITE 200
ORANGE, CA 92868

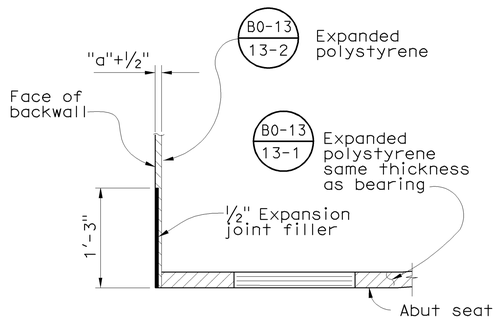

DETAIL 1
No Scale

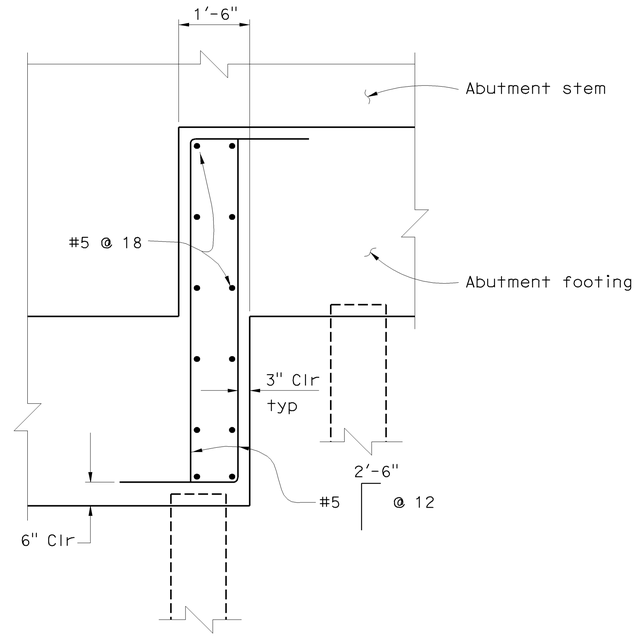

FOOTING STEP DETAIL
No Scale

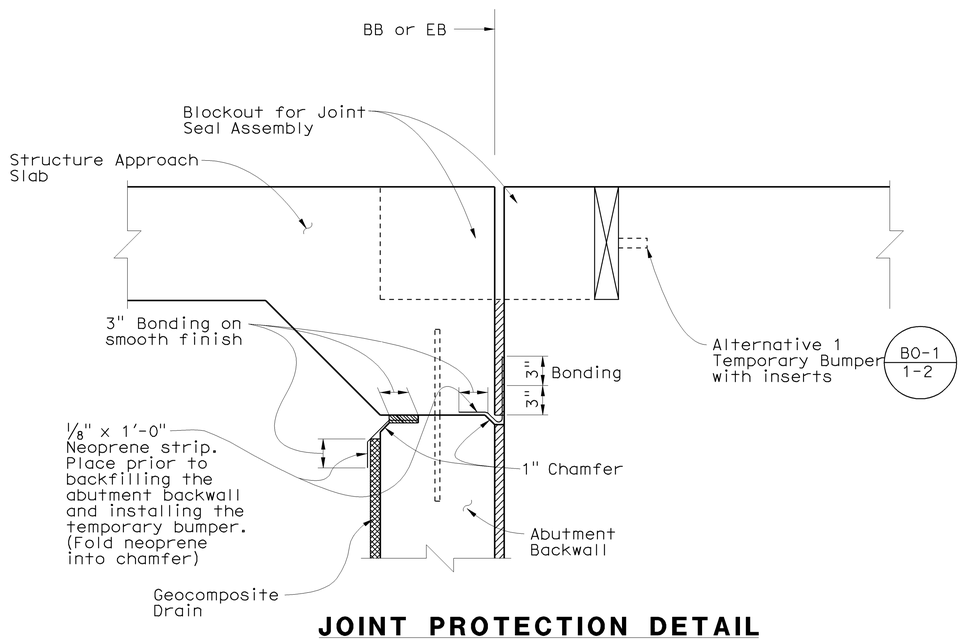

JOINT PROTECTION DETAIL
No Scale

NOTE
For dimension "a", see "Joint Seal-Abutment Details Movement Rating Greater than 4"" sheet

Sudhakar Vatti
DESIGN OVERSIGHT — Sudhakar Vatti
8-10-09
SIGN OFF DATE

	BY	CHECKED
DESIGN	P. Morel	J. Holombo/S. Megally
DETAILS	N. Shu	J. Holombo
QUANTITIES	V. Nong	L. Khaleghi

PREPARED FOR THE STATE OF CALIFORNIA DEPARTMENT OF TRANSPORTATION

Alaedin Moubayed
PROJECT ENGINEER

BRIDGE NO. 55-1098E
POST MILE 24.02

405/605 HOV CONNECTOR
ABUTMENT DETAILS NO. 6

DESIGN DETAIL SHEET (ENGLISH) (REV. 2/25/05)

ORIGINAL SCALE IN INCHES FOR REDUCED PLANS 0 1 2 3

CU 12235
EA 071631

DISREGARD PRINTS BEARING EARLIER REVISION DATES → 02/28/08 09/26/08 09/29/08 10/15/08 03/26/09 04/06/09 07/27/09

REVISION DATES (PRELIMINARY STAGE ONLY)

SHEET 22 OF 87

FILE => 55-1098e-f-adt06.dgn

USERNAME => trlenard DATE PLOTTED => 03-FEB-2010 TIME PLOTTED => 07:49

DIST	COUNTY	ROUTE	POST MILES TOTAL PROJECT	SHEET No	TOTAL SHEETS
12	Ora	22,405, 605	R0.3/R0.9, 22.3/24.0,3.0/R1.6	1594	1929

REGISTERED CIVIL ENGINEER 07-27-09 DATE

2-1-10
PLANS APPROVAL DATE

REGISTERED PROFESSIONAL ENGINEER Paul A. Morel No. C 68491 Exp. 9-30-09 CIVIL STATE OF CALIFORNIA

The State of California or its officers or agents shall not be responsible for the accuracy or completeness of electronic copies of this plan sheet.

OCTA
550 SOUTH MAIN STREET
ORANGE, CA 92863

PBS&J
625 THE CITY DRIVE SOUTH, SUITE 200
ORANGE, CA 92868

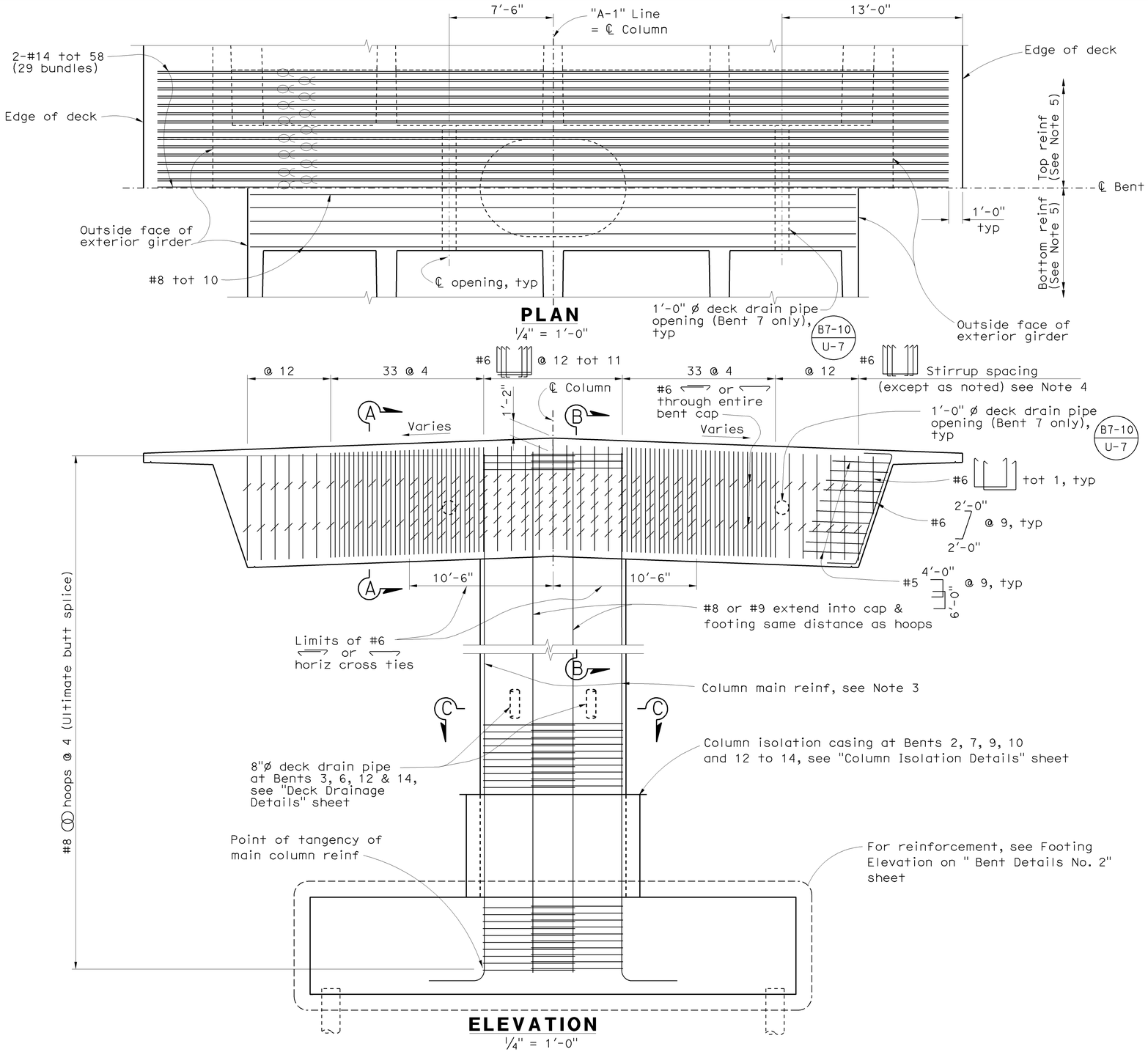

NOTES

1. Bent 2 shown, other bents similar unless otherwise noted.
2. For Sections A-A, B-B & C-C, see "Bent Details No. 1" sheet.
3. No splices allowed in column main reinforcement.
4. Place stirrup reinf normal to and space along ℄ Bent.
5. No splices allowed in bent cap main reinforcement.
6. Concrete barriers not shown.
7. All piles not shown.

LEGEND

Denotes bundled bars.

Sudhakar Vatti
DESIGN OVERSIGHT Sudhakar Vatti
8-10-09
SIGN OFF DATE

	BY	CHECKED
DESIGN	P. Morel	J. Holombo/S. Megally
DETAILS	N. Shu	J. Holombo
QUANTITIES	V. Nong	L. Khaleghi

PREPARED FOR THE STATE OF CALIFORNIA DEPARTMENT OF TRANSPORTATION

Alaedin Moubayed
PROJECT ENGINEER

BRIDGE NO. 55-1098E
POST MILE 24.02

405/605 HOV CONNECTOR
BENTS 2, 3, 5 TO 7 AND 9 TO 14 LAYOUT

DESIGN DETAIL SHEET (ENGLISH) (REV. 2/25/05)

ORIGINAL SCALE IN INCHES FOR REDUCED PLANS 0 1 2 3

CU 12235
EA 071631

DISREGARD PRINTS BEARING EARLIER REVISION DATES

REVISION DATES (PRELIMINARY STAGE ONLY) 02/18/08 06/02/08 09/29/08 10/13/08 03/20/09 04/06/09 07/27/09

SHEET 23 OF 87

FILE => 55-1098e-h-b011o.dgn

USERNAME => friehard DATE PLOTTED => 03-FEB-2010 TIME PLOTTED => 07:50

DIST	COUNTY	ROUTE	POST MILES TOTAL PROJECT	SHEET No	TOTAL SHEETS
12	Ora	22,405, 605	R0.3/R0.9, 22.3/24.0,3.0/R1.6	1595	1929

REGISTERED CIVIL ENGINEER — DATE 07-27-09

2-1-10
PLANS APPROVAL DATE

REGISTERED PROFESSIONAL ENGINEER — Paul A. Morel No. C 68491 Exp. 9-30-09 CIVIL — STATE OF CALIFORNIA

The State of California or its officers or agents shall not be responsible for the accuracy or completeness of electronic copies of this plan sheet.

OCTA
550 SOUTH MAIN STREET
ORANGE, CA 92863

PBS&J
625 THE CITY DRIVE SOUTH, SUITE 200
ORANGE, CA 92868

NOTES

1. Extend into cap & footing same distance as hoops.
2. Bars may be cut 1'-9" max at top to clear prestressing ducts
3. Place reinforcement to clear prestressing ducts.
4. For limits of cross tie reinforcement, see Elevation on "Bents 2, 3, 5 to 7 and 9 to 14 Layout" sheet.
5. For Column Drain Pipe Outlet and Column Reinforcement at Drain Outlet, see "Bent Details No. 3" sheet

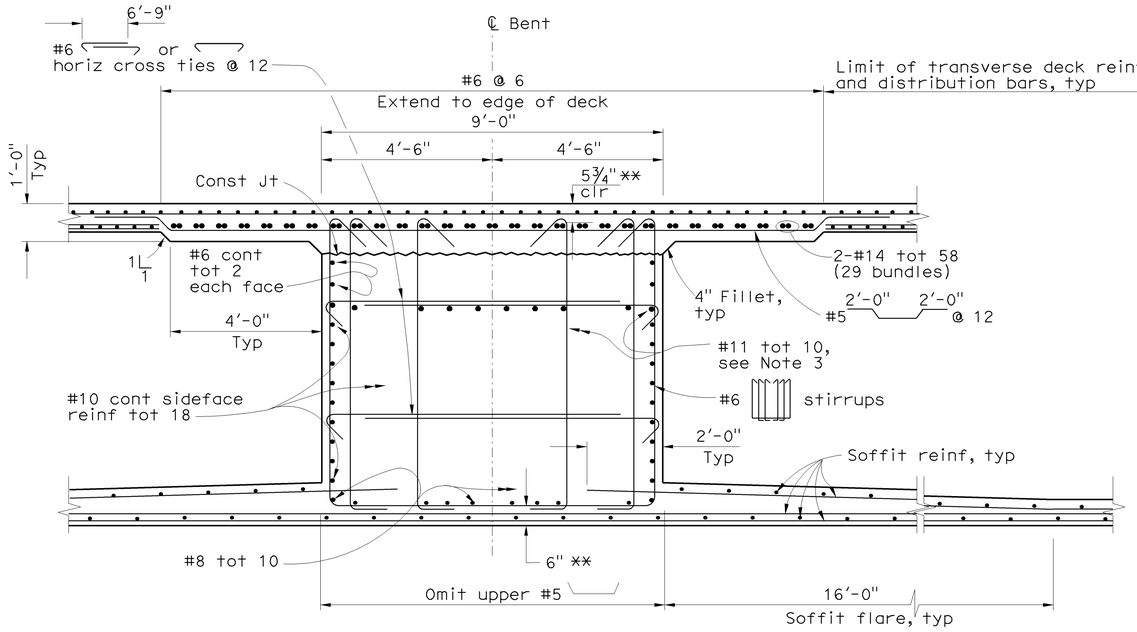

SECTION A-A

½" = 1'-0"

** Clearance to cap main reinf

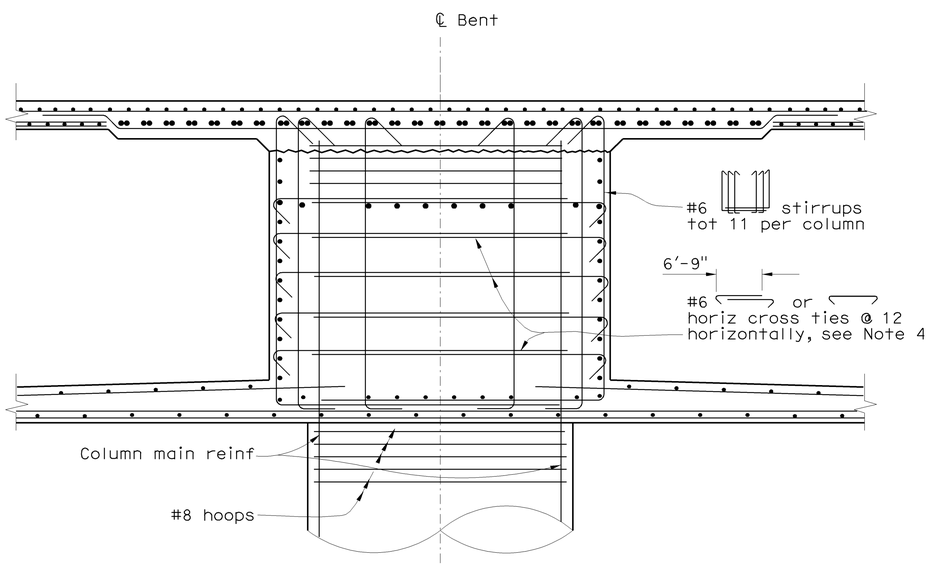

For information not shown, see Section A-A

SECTION B-B

½" = 1'-0"

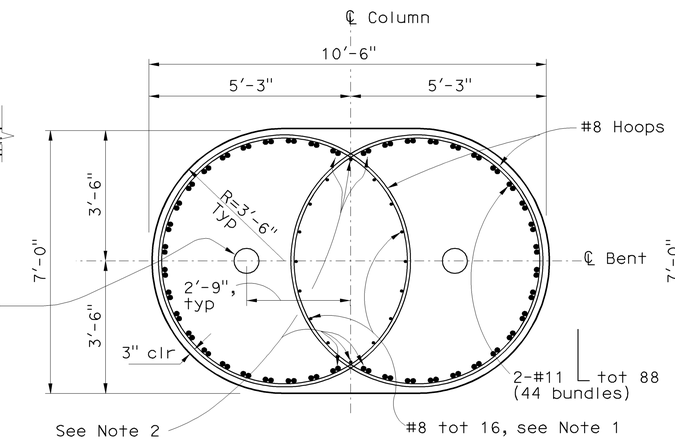

BENTS 2, 3, 10 TO 12 & 14

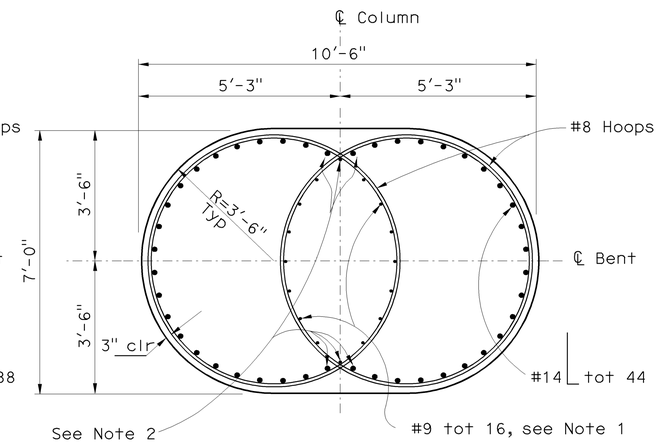

BENTS 4, 7 & 8

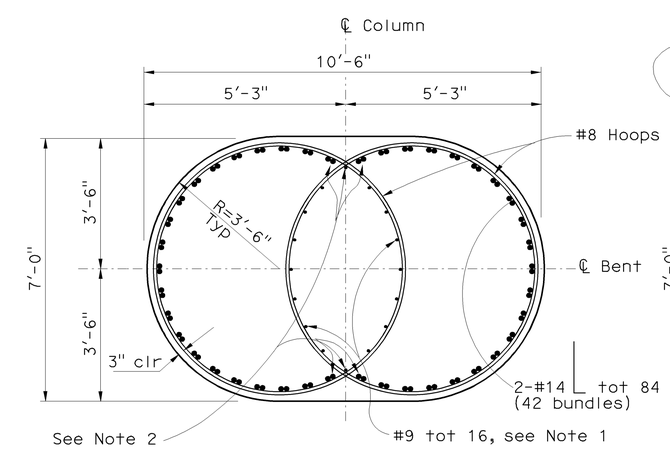

BENT 5

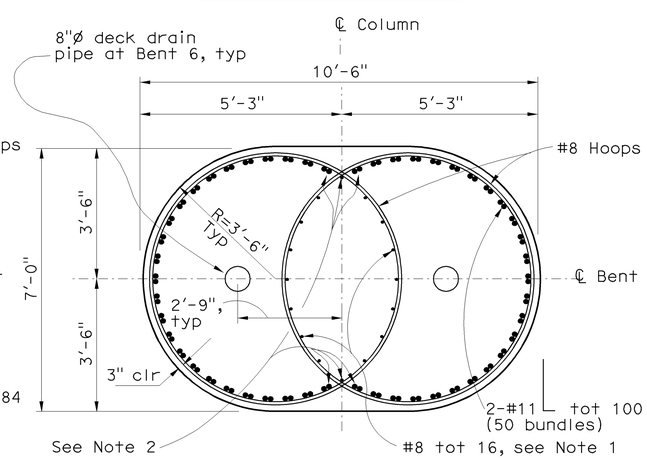

BENTS 6, 9 & 13

SECTION C-C

½" = 1'-0"

Sudhakar Vatti
DESIGN OVERSIGHT — Sudhakar Vatti
8-10-09
SIGN OFF DATE

DESIGN	BY P. Morel	CHECKED J. Holombo/S. Megally	
DETAILS	BY N. Shu	CHECKED J. Holombo	
QUANTITIES	BY V. Nong	CHECKED L. Khaleghi	

PREPARED FOR THE STATE OF CALIFORNIA DEPARTMENT OF TRANSPORTATION

Alaedin Moubayed
PROJECT ENGINEER

BRIDGE NO. 55-1098E
POST MILE 24.02

405/605 HOV CONNECTOR
BENT DETAILS NO. 1

DESIGN DETAIL SHEET (ENGLISH) (REV. 2/25/05)

ORIGINAL SCALE IN INCHES FOR REDUCED PLANS 0 1 2 3

CU 12235
EA 071631

DISREGARD PRINTS BEARING EARLIER REVISION DATES

REVISION DATES (PRELIMINARY STAGE ONLY): 02/18/08 06/02/08 09/29/08 10/15/08 03/20/09 04/06/09 07/27/09

SHEET 24 OF 87

FILE => 55-1098e-h-b01dt01.dgn

USERNAME => trlehard DATE PLOTTED => 03-FEB-2010 TIME PLOTTED => 07:50

DIST	COUNTY	ROUTE	POST MILES TOTAL PROJECT	SHEET No	TOTAL SHEETS
12	Ora	22,405, 605	R0.3/R0.9, 22.3/24.0,3.0/R1.6	1596	1929

REGISTERED CIVIL ENGINEER — DATE 07-27-09

2-1-10
PLANS APPROVAL DATE

REGISTERED PROFESSIONAL ENGINEER — Paul A. Morel — No. C 68491 — Exp. 9-30-09 — CIVIL — STATE OF CALIFORNIA

The State of California or its officers or agents shall not be responsible for the accuracy or completeness of electronic copies of this plan sheet.

OCTA
550 SOUTH MAIN STREET
ORANGE, CA 92863

PBS&J
625 THE CITY DRIVE SOUTH, SUITE 200
ORANGE, CA 92868

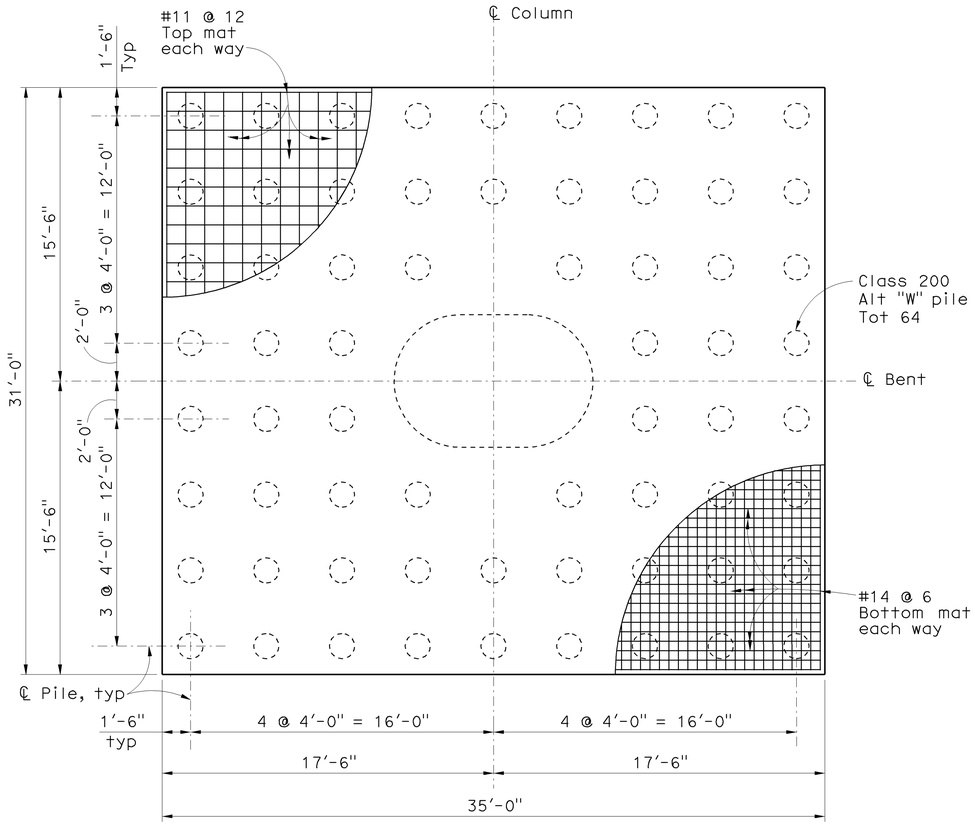

BENTS 2, 3, 6, 9, 10, 13 & 14

FOOTING PLAN

1/4" = 1'-0"

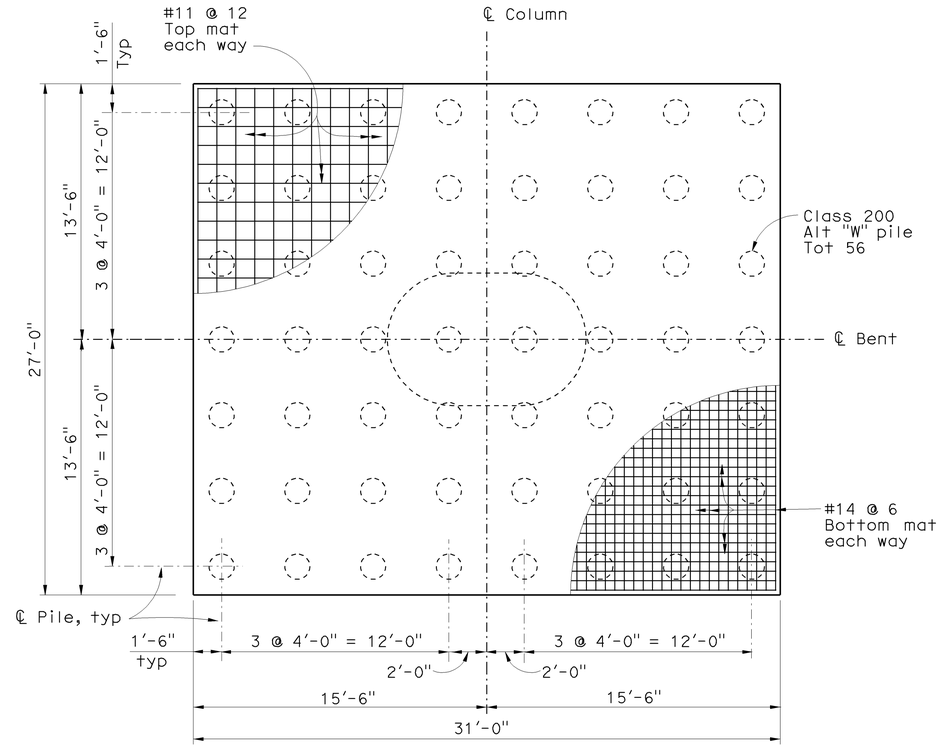

BENTS 4, 7, 8 & 11

FOOTING PLAN

1/4" = 1'-0"

FOOTING DEPTH TABLE

Bent No.	"H"
2	7'-0"
3	7'-0"
4	6'-6"
5	7'-6"
6	7'-0"
7	6'-6"
8	6'-6"
9	7'-0"
10	7'-0"
11	6'-6"
12	7'-0"
13	7'-0"
14	7'-0"

LEGEND

Denotes Class 200 Alt "W" pile

Denotes Headed bar reinforcement

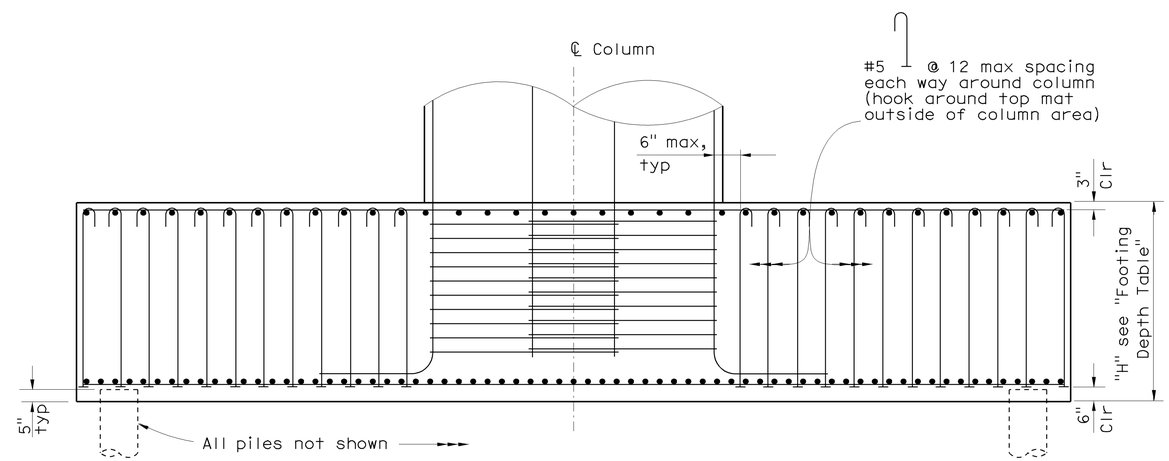

FOOTING ELEVATION

3/8" = 1'-0"

Sudhakar Vatti
DESIGN OVERSIGHT — Sudhakar Vatti
8-10-09
SIGN OFF DATE

DESIGN DETAIL SHEET (ENGLISH) (REV. 2/25/05)

	BY	CHECKED
DESIGN	P. Morel	J. Holombo/S. Megally
DETAILS	N. Shu	J. Holombo
QUANTITIES	V. Nong	L. Khaleghi

ORIGINAL SCALE IN INCHES FOR REDUCED PLANS 0 1 2 3

PREPARED FOR THE STATE OF CALIFORNIA DEPARTMENT OF TRANSPORTATION

Alaedin Moubayed
PROJECT ENGINEER

CU 12235
EA 071631

BRIDGE NO. 55-1098E
POST MILE 24.02

405/605 HOV CONNECTOR

BENT DETAILS NO. 2

DISREGARD PRINTS BEARING EARLIER REVISION DATES

REVISION DATES (PRELIMINARY STAGE ONLY): 02/15/08 06/02/08 09/29/08 10/15/08 03/20/09 04/06/09 07/27/09

SHEET 25 OF 87

FILE => 55-1098e-h-b01dt02.dgn

USERNAME => trlemard DATE PLOTTED => 03-FEB-2010 TIME PLOTTED => 07:50

DIST	COUNTY	ROUTE	POST MILES TOTAL PROJECT	SHEET No	TOTAL SHEETS
12	Ora	22,405, 605	R0.3/R0.9, 22.3/24.0,3.0/R1.6	1597	1929

REGISTERED CIVIL ENGINEER — DATE 07-27-09

2-1-10
PLANS APPROVAL DATE

REGISTERED PROFESSIONAL ENGINEER — Paul A. Morel — No. C 68491 — Exp. 9-30-09 — CIVIL — STATE OF CALIFORNIA

The State of California or its officers or agents shall not be responsible for the accuracy or completeness of electronic copies of this plan sheet.

OCTA
550 SOUTH MAIN STREET
ORANGE, CA 92863

PBS&J
625 THE CITY DRIVE SOUTH, SUITE 200
ORANGE, CA 92868

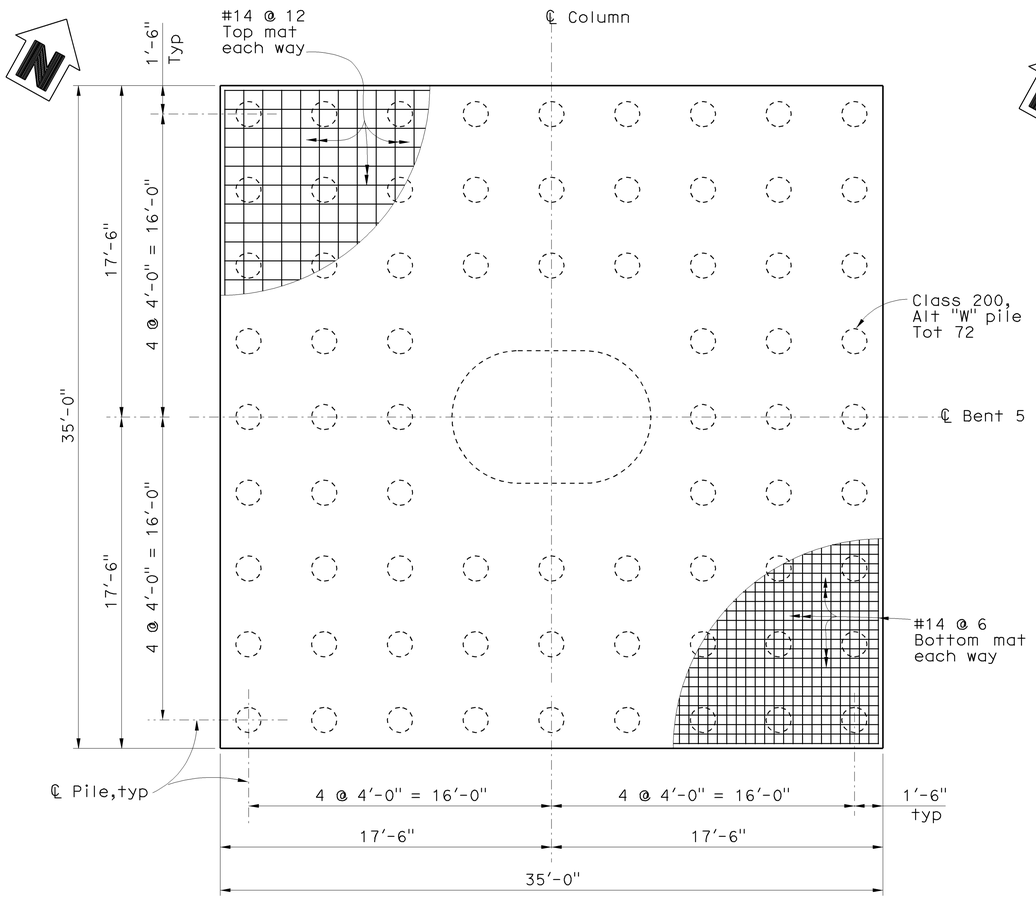

BENT 5

FOOTING PLAN

1/4" = 1'-0"

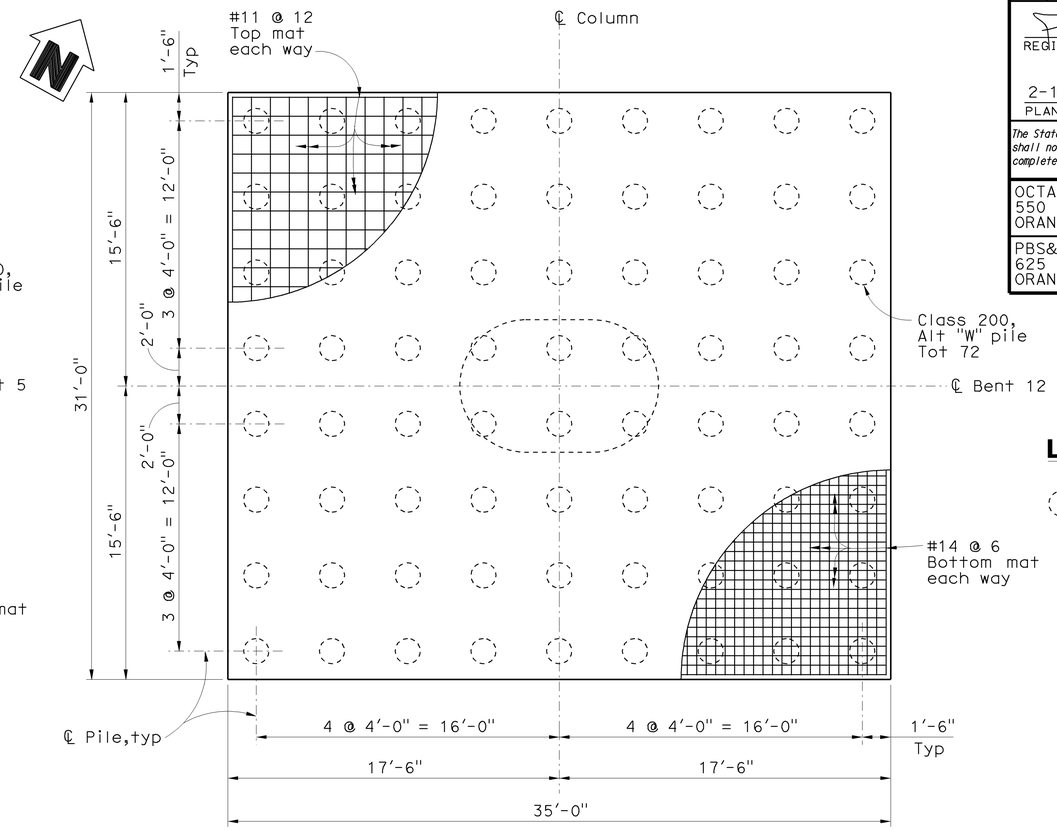

BENT 12

FOOTING PLAN

1/4" = 1'-0"

LEGEND

Denotes Class 200 Alt "W" pile

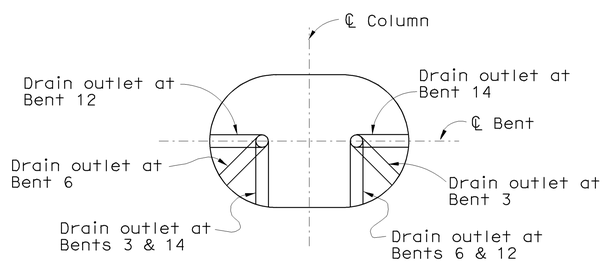

COLUMN DRAIN PIPE OUTLET

No scale

Looking ahead station

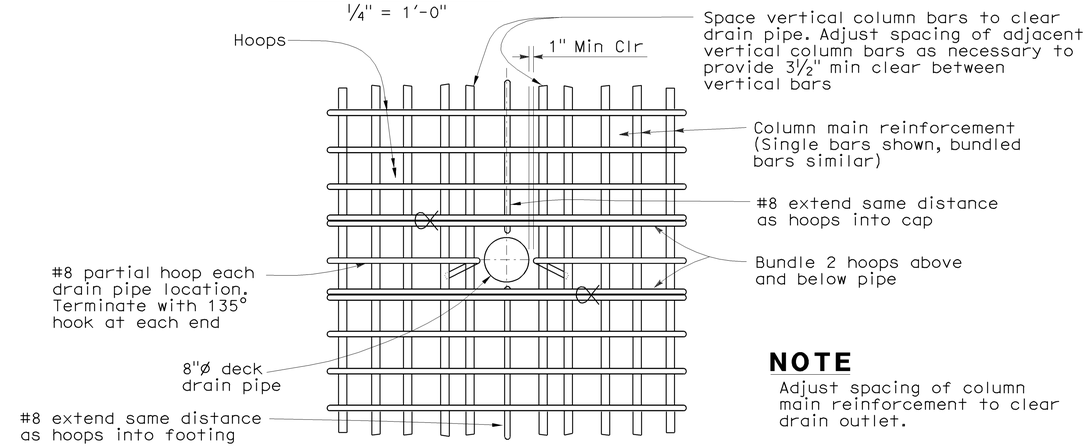

COLUMN REINFORCEMENT AT DRAIN OUTLET

No scale

NOTE

Adjust spacing of column main reinforcement to clear drain outlet.

Sudhakar Vatti
DESIGN OVERSIGHT — Sudhakar Vatti
8-10-09
SIGN OFF DATE

	BY	CHECKED
DESIGN	P. Morel	J. Holombo/S. Megally
DETAILS	N. Shu	J. Holombo
QUANTITIES	V. Nong	L. Khaleghi

PREPARED FOR THE STATE OF CALIFORNIA DEPARTMENT OF TRANSPORTATION

Alaedin Moubayed
PROJECT ENGINEER

BRIDGE NO. 55-1098E
POST MILE 24.02

405/605 HOV CONNECTOR
BENT DETAILS NO. 3

DESIGN DETAIL SHEET (ENGLISH) (REV. 2/25/05)

ORIGINAL SCALE IN INCHES FOR REDUCED PLANS 0 1 2 3

CU 12235
EA 071631

DISREGARD PRINTS BEARING EARLIER REVISION DATES

REVISION DATES (PRELIMINARY STAGE ONLY) 02/14/08 06/02/08 09/29/08 10/15/08 03/26/09 04/06/09 07/27/09

SHEET 26 OF 87

FILE => 55-1098e-h-b01dt03.dgn

USERNAME => friehard DATE PLOTTED => 03-FEB-2010 TIME PLOTTED => 07:50

DIST	COUNTY	ROUTE	POST MILES TOTAL PROJECT	SHEET No	TOTAL SHEETS
12	Ora	22,405, 605	R0.3/R0.9, 22.3/24.0,3.0/R1.6	1598	1929

REGISTERED CIVIL ENGINEER — DATE 07-27-09

2-1-10
PLANS APPROVAL DATE

REGISTERED PROFESSIONAL ENGINEER — Paul A. Morel — No. C 68491 — Exp. 9-30-09 — CIVIL — STATE OF CALIFORNIA

The State of California or its officers or agents shall not be responsible for the accuracy or completeness of electronic copies of this plan sheet.

OCTA
550 SOUTH MAIN STREET
ORANGE, CA 92863

PBS&J
625 THE CITY DRIVE SOUTH, SUITE 200
ORANGE, CA 92868

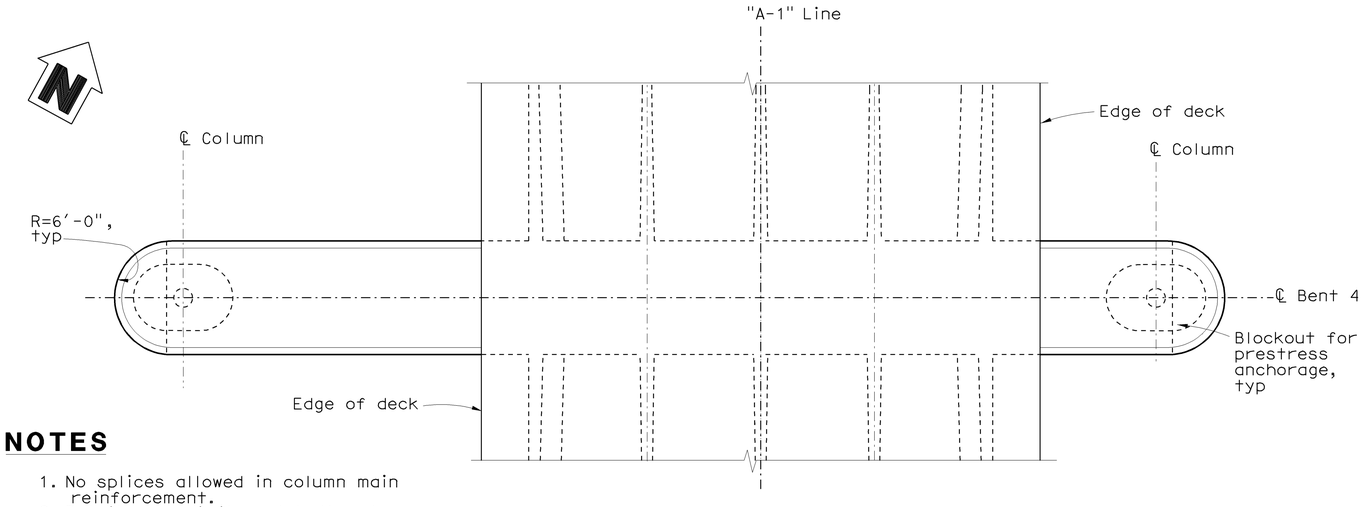

PLAN

1/8" = 1'-0"

NOTES

1. No splices allowed in column main reinforcement.
2. Details are similar at both columns.
3. For Section C-C, see "Bent Details No. 1" sheet.
4. Concrete barriers not shown.
5. All piles not shown.
6. For Sections D-D, E-E, F-F & G-G, see "Bent 4 Details No 1" sheet.
7. See "Architectural Details No. 2" sheet for Architectural texture details

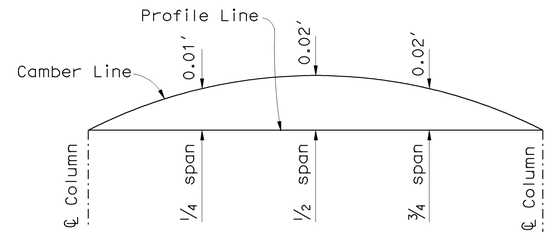

OUTRIGGER CAMBER DIAGRAM

No Scale

Camber values shown do not include allowance for falsework settlement

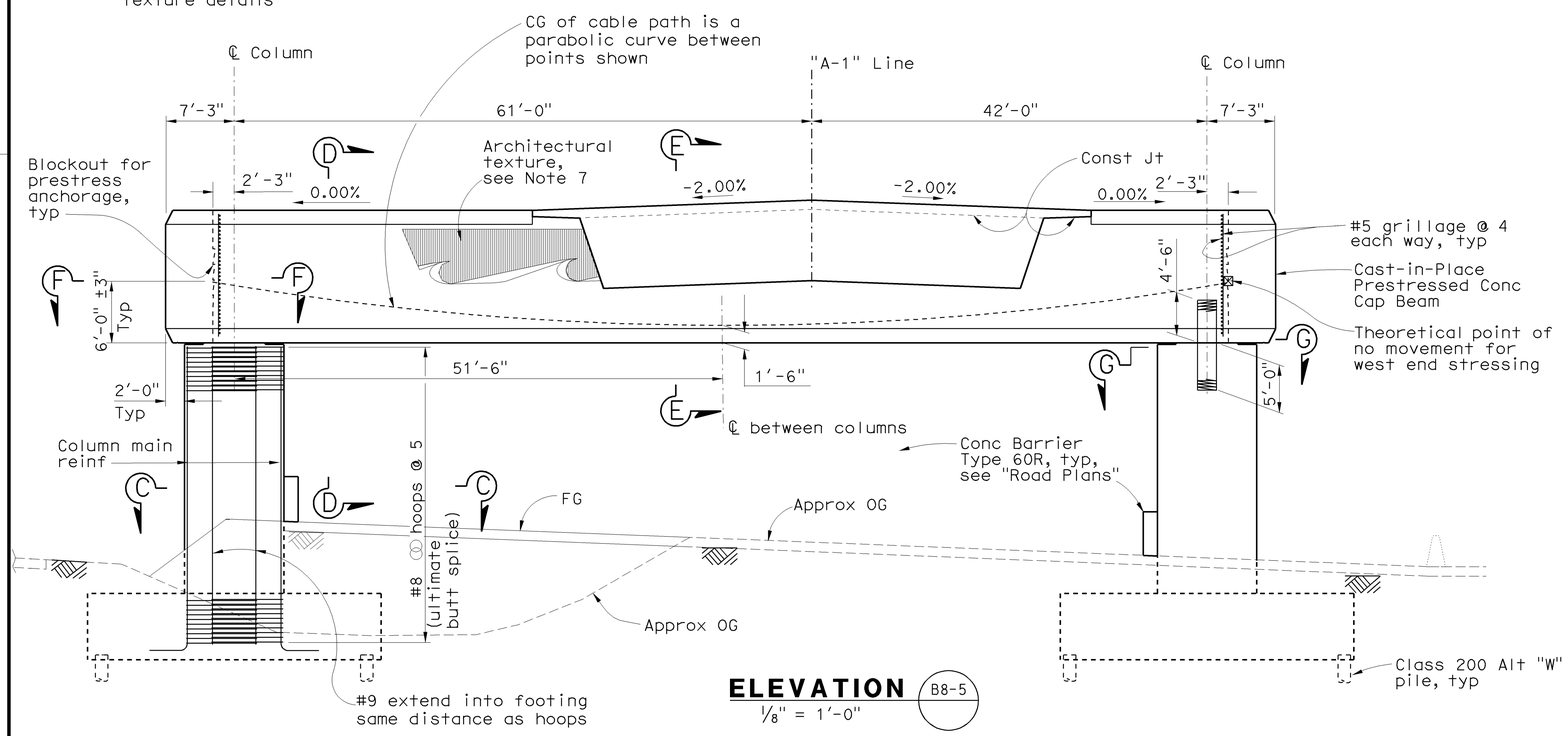

ELEVATION

B8-5

1/8" = 1'-0"

PRESTRESSING NOTES

270 Ksi Low Relaxation Strand:

P_{jack} = 18,800 Kips

Anchor Set = 3/8 inch

Distribution of prestress force (Pjack) shall be symmetrical about ℄ Bent 4

Concrete: f'c = 5,000 Psi @ 28 days

f'ci = 4,000 psi @ time of stressing

Contractor shall submit elongation calculations based on initial stress at

☒ = 0.931 times jacking stress.

One end stressing shall be performed from west end
Design is based on friction curvature coefficient
μ = 0.15 and friction wobble coefficient k= 0.0002/ft
The prestressing duct diameter shall not exceed 4 1/2"

Prestressing Sequence:

Stressing shall not take place until the deck has been placed and reached required strength

Pjack to be applied in stages:

Stage 1: Stress outrigger cap to 50% of Pjack = 9,400 Kips

Stage 2: Stress Frame 1 girders to 50% of Pjack = 9,850 Kips

Stage 3: Stress outrigger cap to 100% of Pjack = 18,800 Kips

Stage 4: Stress Frame 1 girders to 100% of Pjack = 19,700 Kips

At no time during stressing operations shall more than 1/6 of the total outrigger prestressing force be applied eccentrically about the center line of the bent.

No removal of falsework is allowed until all stressing and grouting is complete.

For girder prestressing, See "Girder Layout" sheets

Sudhakar Vatti
DESIGN OVERSIGHT — Sudhakar Vatti
8-10-09
SIGN OFF DATE

	BY	CHECKED
DESIGN	P. Morel	J. Holombo/S. Megally
DETAILS	N. Shu	J. Holombo
QUANTITIES	V. Nong	L. Khaleghi

PREPARED FOR THE STATE OF CALIFORNIA DEPARTMENT OF TRANSPORTATION

Alaedin Moubayed
PROJECT ENGINEER

BRIDGE NO. 55-1098E
POST MILE 24.02

405/605 HOV CONNECTOR
BENT 4 LAYOUT

DESIGN DETAIL SHEET (ENGLISH) (REV. 2/25/05)

ORIGINAL SCALE IN INCHES FOR REDUCED PLANS 0 1 2 3

CU 12235
EA 071631

DISREGARD PRINTS BEARING EARLIER REVISION DATES → 02/16/06 09/20/06 03/29/08 10/15/08 03/26/09 04/06/09 07/27/09

REVISION DATES (PRELIMINARY STAGE ONLY)

SHEET 27 OF 87

FILE => 55-1098e-h-b041o.dgn

USERNAME => trienard DATE PLOTTED => 03-FEB-2010 TIME PLOTTED => 07:50

DIST	COUNTY	ROUTE	POST MILES TOTAL PROJECT	SHEET No	TOTAL SHEETS
12	Ora	22,405, 605	R0.3/R0.9, 22.3/24.0,3.0/R1.6	1599	1929

REGISTERED CIVIL ENGINEER 07-27-09 DATE

2-1-10
PLANS APPROVAL DATE

REGISTERED PROFESSIONAL ENGINEER Paul A. Morel No. C 68491 Exp. 9-30-09 CIVIL STATE OF CALIFORNIA

The State of California or its officers or agents shall not be responsible for the accuracy or completeness of electronic copies of this plan sheet.

OCTA
550 SOUTH MAIN STREET
ORANGE, CA 92863

PBS&J
625 THE CITY DRIVE SOUTH, SUITE 200
ORANGE, CA 92868

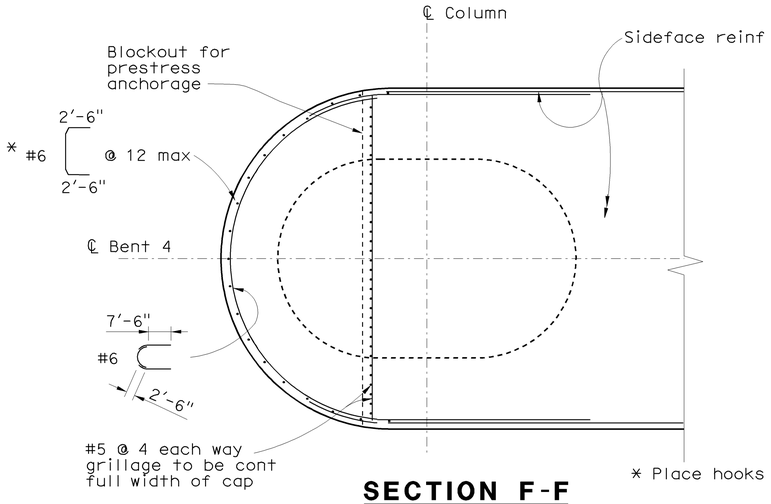

SECTION F-F
3/8" = 1'-0"

* Place hooks radial to bent cap

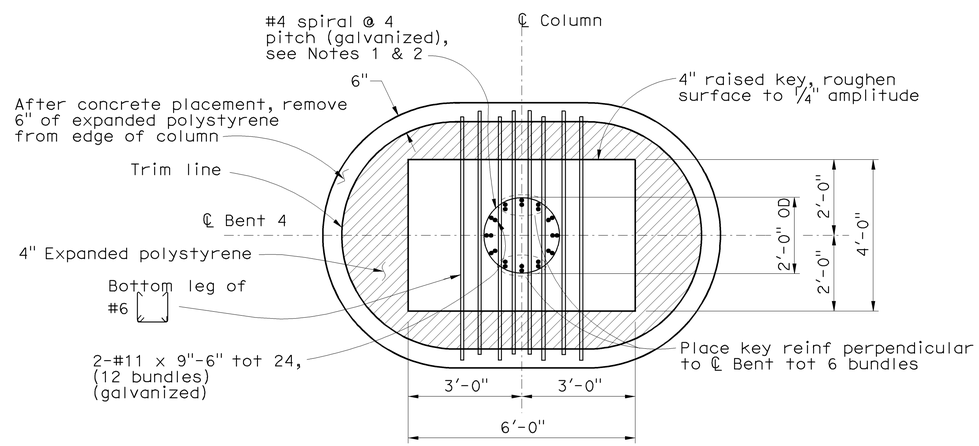

SECTION G-G
3/8" = 1'-0"

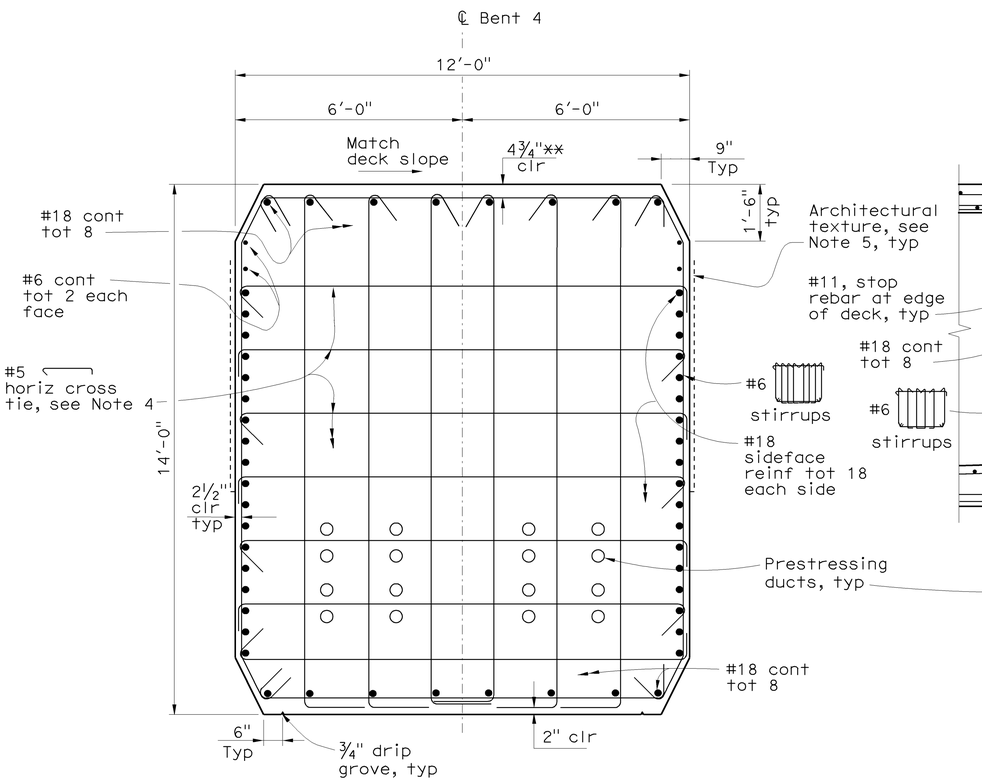

SECTION D-D
1/2" = 1'-0"

** Clearance to cap main reinf

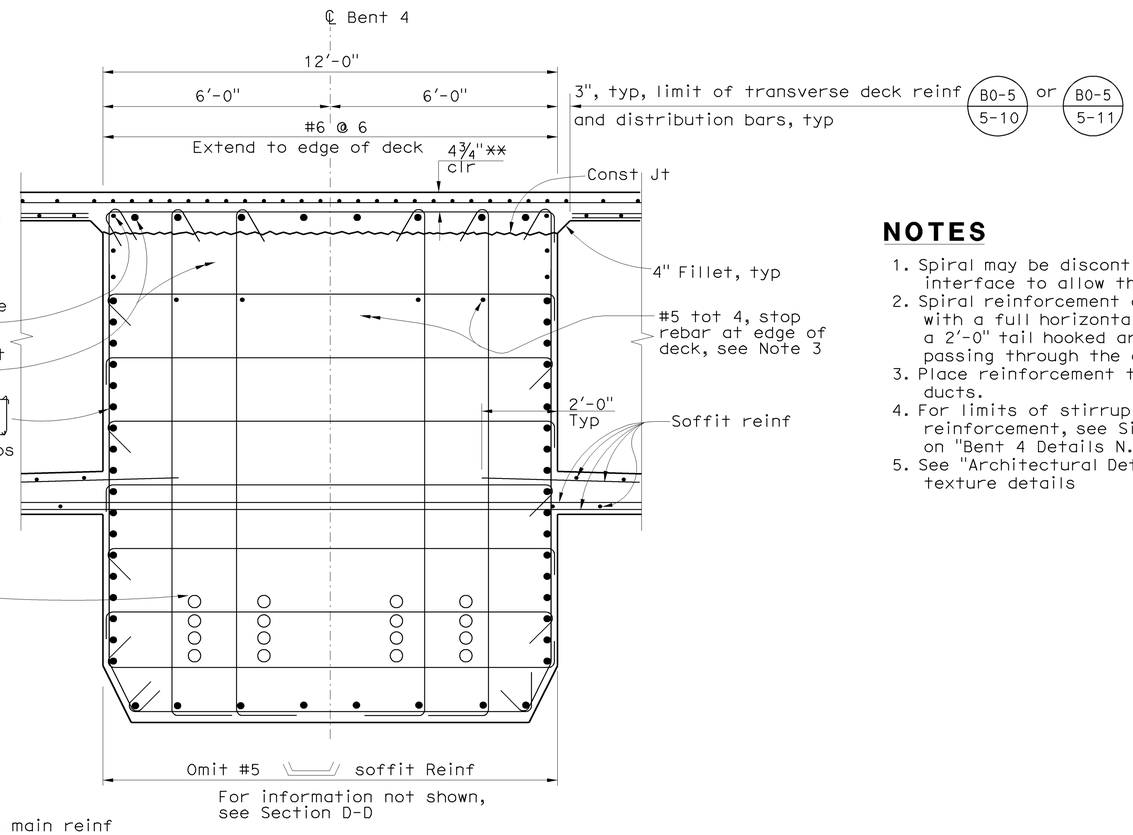

SECTION E-E
1/2" = 1'-0"

NOTES

1. Spiral may be discontinuous at the column/cap interface to allow the placing of cap reinforcement.
2. Spiral reinforcement at ends shall be terminated with a full horizontal turn around the rebar cage and a 2'-0" tail hooked around a longitudinal bar and passing through the core of the rebar cage.
3. Place reinforcement to clear longitudinal prestressing ducts.
4. For limits of stirrup and horizontal cross tie reinforcement, see Sideface Reinforcement Layout on "Bent 4 Details N. 2" sheet
5. See "Architectural Details No. 2" sheet for Architectural texture details

Sudhakar Vatti
DESIGN OVERSIGHT Sudhakar Vatti
8-10-09
SIGN OFF DATE

	BY	CHECKED
DESIGN	P. Morel	J. Holombo/S. Megally
DETAILS	N. Shu	J. Holombo
QUANTITIES	V. Nong	L. Khaleghi

PREPARED FOR THE STATE OF CALIFORNIA DEPARTMENT OF TRANSPORTATION

Alaedin Moubayed
PROJECT ENGINEER

BRIDGE NO. 55-1098E
POST MILE 24.02

405/605 HOV CONNECTOR
BENT 4 DETAILS NO. 1

DESIGN DETAIL SHEET (ENGLISH) (REV. 2/25/05)

ORIGINAL SCALE IN INCHES FOR REDUCED PLANS 0 1 2 3

CU 12235
EA 071631

DISREGARD PRINTS BEARING EARLIER REVISION DATES
REVISION DATES (PRELIMINARY STAGE ONLY) 02/18/08 06/20/08 09/29/08 10/14/08 03/20/09 04/20/09 07/27/09

SHEET 28 OF 87

FILE => 55-1098e-h-b04dt01.dgn

USERNAME => trlenard DATE PLOTTED => 03-FEB-2010 TIME PLOTTED => 07:50

DIST	COUNTY	ROUTE	POST MILES TOTAL PROJECT	SHEET No	TOTAL SHEETS
12	Ora	22,405, 605	R0.3/R0.9, 22.3/24.0,3.0/R1.6	1600	1929

REGISTERED CIVIL ENGINEER 07-27-09 DATE

2-1-10
PLANS APPROVAL DATE

REGISTERED PROFESSIONAL ENGINEER Paul A. Morel No. C 68491 Exp. 9-30-09 CIVIL STATE OF CALIFORNIA

The State of California or its officers or agents shall not be responsible for the accuracy or completeness of electronic copies of this plan sheet.

OCTA
550 SOUTH MAIN STREET
ORANGE, CA 92863

PBS&J
625 THE CITY DRIVE SOUTH, SUITE 200
ORANGE, CA 92868

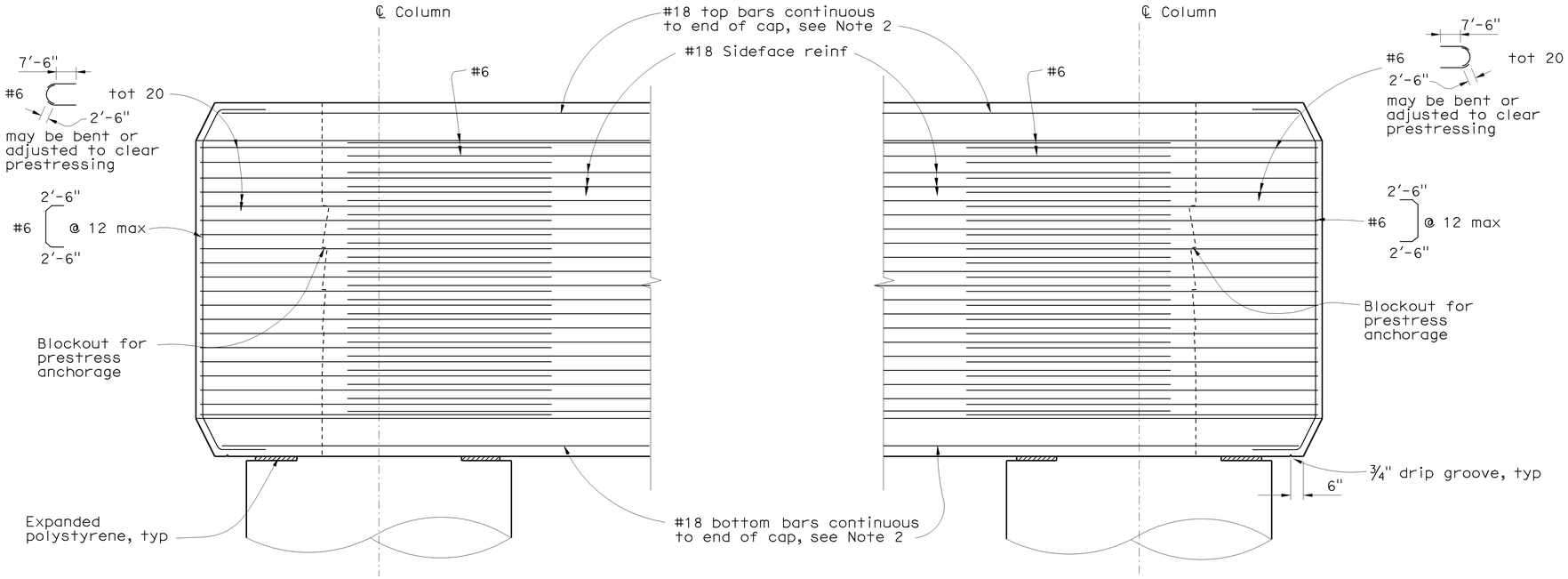

PART ELEVATION

3/8" = 1'-0"

NOTES

1. No splices allowed.
2. Splices shall conform to the requirements of "Service Butt Splice". Bars shall be spliced within 15'-0" from "A-1" Line.

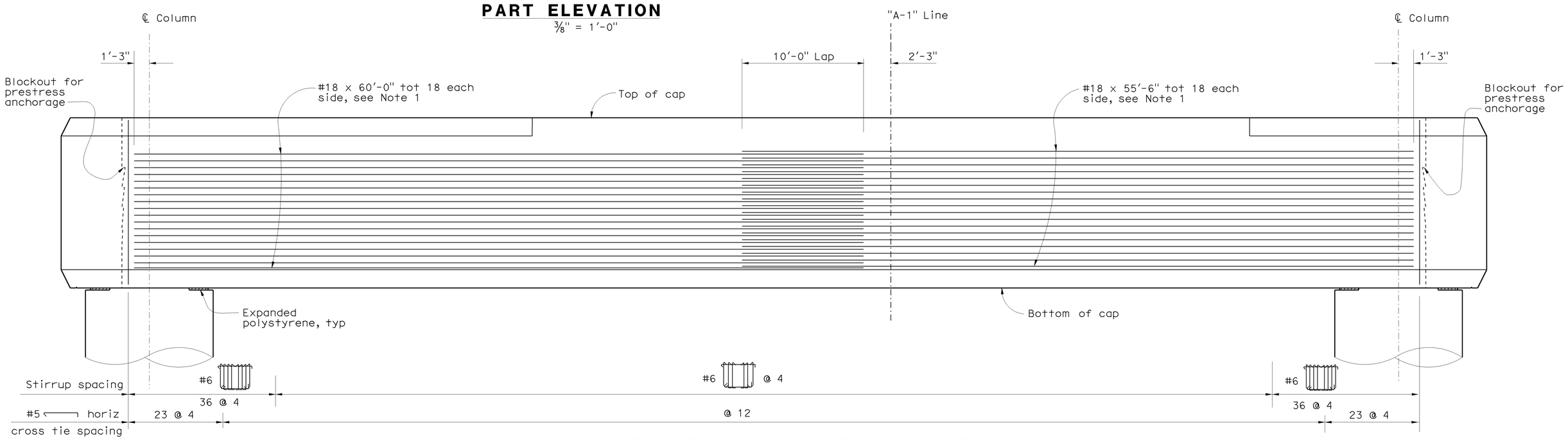

SIDEFACE REINFORCEMENT LAYOUT

1/4" = 1'-0"

Sudhakar Vatti
DESIGN OVERSIGHT Sudhakar Vatti
8-10-09
SIGN OFF DATE

	BY	CHECKED
DESIGN	P. Morel	J. Holombo/S. Megally
DETAILS	N. Shu	J. Holombo
QUANTITIES	V. Nong	L. Khaleghi

PREPARED FOR THE STATE OF CALIFORNIA DEPARTMENT OF TRANSPORTATION

Alaedin Moubayed
PROJECT ENGINEER

BRIDGE NO. 55-1098E
POST MILE 24.02

405/605 HOV CONNECTOR
BENT 4 DETAILS NO. 2

DESIGN DETAIL SHEET (ENGLISH) (REV. 2/25/05)

ORIGINAL SCALE IN INCHES FOR REDUCED PLANS 0 1 2 3

CU 12235
EA 071631

DISREGARD PRINTS BEARING EARLIER REVISION DATES

REVISION DATES (PRELIMINARY STAGE ONLY) 02/18/08 06/20/08 09/29/08 10/15/08 03/20/09 04/06/09 07/27/09

SHEET 29 OF 87

FILE => 55-1098e-h-b04dt02.dgn

USERNAME => trienard DATE PLOTTED => 03-FEB-2010 TIME PLOTTED => 07:50