Dist	COUNTY	ROUTE	POST MILES TOTAL PROJECT	SHEET No.	TOTAL SHEETS
12	Ora	22,405	R0.7/R2.9, 20.4/22.3	2	1006

REGISTERED CIVIL ENGINEER 05/18/09 DATE

9-21-09
PLANS APPROVAL DATE

REGISTERED PROFESSIONAL ENGINEER KANOGPORN S. TIBERI No. 61254 Exp. 6/30/11 CIVIL STATE OF CALIFORNIA

THE STATE OF CALIFORNIA OR ITS OFFICERS OR AGENTS SHALL NOT BE RESPONSIBLE FOR THE ACCURACY OR COMPLETENESS OF SCANNED COPIES OF THIS PLAN SHEET.

PARSONS
2201 DUPONT DRIVE
SUITE 200
IRVINE, CA 92612

ORANGE COUNTY
TRANSPORTATION AUTHORITY
550 SOUTH MAIN STREET
ORANGE, CA 92863

NOTES:

1. DIMENSIONS OF THE PAVEMENT STRUCTURES (STRUCTURAL SECTIONS) ARE SUBJECT TO TOLERANCES SPECIFIED IN THE STANDARD SPECIFICATIONS.
2. SUPERELEVATION AS SHOWN OR AS DIRECTED BY THE ENGINEER.
3. FOR TYPES AND LOCATIONS OF CONCRETE BARRIER, MBGR AND HMA DIKES, SEE LAYOUT PLANS.
4. ALL DIMENSIONS ARE TO FLOWLINE OF CURB UNLESS OTHERWISE NOTED.
5. OVEREXCAVATE 2 FEET BELOW STRUCTURAL SECTION No.'S 1 THROUGH 8 EXCEPT FOR THE FOLLOWING:
   - 0 FEET BELOW STRUCTURAL SECTION No. 1 AT BOLSA CHICA CHANNEL, "SB405" Sta 317+48 TO 317+98
6. OVEREXCAVATE 5 FEET MINIMUM BELOW ORIGINAL GROUND FOR STRUCTURAL SECTION No.'S 3 AND 4 AT "E" Sta 3307+53.87 TO 3312+53.04, SEE SHEET C-57.
7. FOR LIMITS OF OVEREXCAVATION, SEE CONTOUR GRADING PLANS.
8. FOR LIMITS OF LIGHTWEIGHT FILL (CELLULAR CONCRETE), SEE CONSTRUCTION DETAILS AND STRUCTURE PLANS.

BRIDGE LIMITS:

405-22 HOV Conn Sep - "H" Sta 1312+90.00 BB TO 1324+00.00 EB
S405-E22 Conn Sep - "E" Sta 3311+80.35 BB TO 3319+39.35 EB
BOLSA CHICA ROAD OC - "VV" Sta 40+84.23 BB TO 44+40.23 EB

ABBREVIATIONS:

HOV HIGH OCCUPANCY VEHICLE
MVP MAINTENANCE VEHICLE PULLOUT

DESIGN DESIGNATION - ROUTE 405

ADT (2008)	390,000	D	55%
ADT (2048)	474,000	T	3%
DHV	15,700	V	70 MPH
ESAL	92,940,800	TI(40)	15.0

DESIGN DESIGNATION - ROUTE 22

ADT (2008)	147,200	D	55%
ADT (2048)	209,000	T	2%
DHV	6,500	V	70 MPH
ESAL	12,714,000	TI(40)	12.0

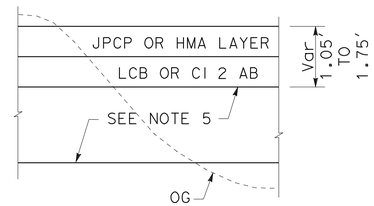

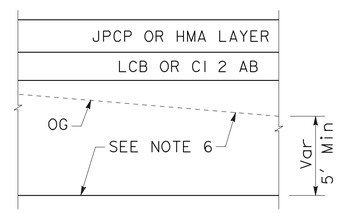

OVEREXCAVATION

EXISTING STRUCTURAL SECTIONS

A: 0.75' PCC, 0.40' LCB, 0.35' AB, 0.50' AS
B: 0.67' PCC, 0.33' CTB, 0.33' AB, 0.67' AS
C: 0.75' PCC, 0.33' CTB, 0.33' AB, 0.59' AS
D: 0.25' AC, 0.50' AB, 1.25' AS
E: 0.83' PCC, 0.67' SLURRY
F: 0.70' PCC, 0.40' CTB, 0.90' AB
G: 0.35' AC, 0.55' AB, 1.10' AS
H: 0.33' AC, 0.50' CTB, 0.33' AB, 0.84' AS
I: 0.33' AC, 0.67' CTB, 0.33' AB, 0.67' AS
J: 0.33' AC, 0.50' AB, 1.17' AS

STRUCTURAL SECTIONS

1: 1.00' JPCP, 0.50' LCB
2: 0.50' HMA (TYPE A), 0.80' CI 2 AB
3: 0.85' JPCP, 0.40' LCB
4: 0.40' HMA (TYPE A), 0.65' CI 2 AB
5: 0.75' JPCP, 0.40' LCB
6: 0.60' HMA (TYPE A), 1.15' CI 2 AB
7: 0.85' Conc ~~(RAPID STRENGTH)~~ (RAPID STRENGTH-RAMP TERMINI), 0.40' LCB RAPID SETTING
8: 0.50' HMA (TYPE A), 0.90' CI 2 AB
9: 0.15' TO 4.40' HMA (TYPE A)
10: MAINTENANCE VEHICLE PULLOUT, 0.35' HMA (TYPE A), 0.50' CI 2 AB
11: 1.00' HMA (TYPE A)
12: 0.50' HMA (TYPE A), 0.50' TO 0.80' CI 2 AB
13: COLD PLANE AC Pvmt, 0.15' TO 0.50' HMA (TYPE A)

2

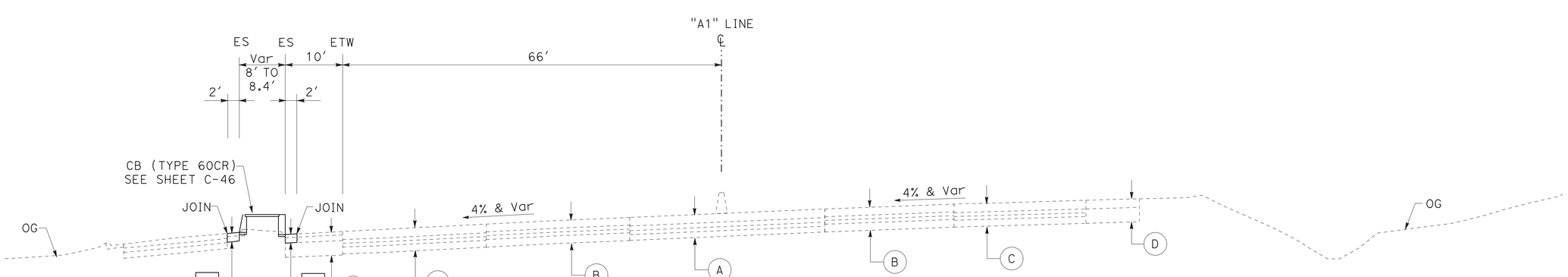

SOUTHBOUND
"A1" Sta 304+94 TO 306+25

ROUTE 405

2 **REVISED PER ADDENDUM No. 2 DATED APRIL 1, 2010**

TYPICAL CROSS SECTIONS

NO SCALE

X-1

STATE OF CALIFORNIA - DEPARTMENT OF TRANSPORTATION
Caltrans

CONSULTANT FUNCTIONAL SUPERVISOR: CARLOS A. CADENA
CALCULATED-DESIGNED BY: VICKIE L. KRAMAN
CHECKED BY: KANOGPORN S. TIBERI
REVISED BY: ANH VU
DATE REVISED: 08/12/09

LAST REVISION 05-18-09
DATE PLOTTED => 29-MAR-2010
TIME PLOTTED => 11:31

Dist	COUNTY	ROUTE	POST MILES TOTAL PROJECT	SHEET No.	TOTAL SHEETS
12	Ora	22,405	R0.7/R2.9, 20.4/22.3	147	1006

REGISTERED CIVIL ENGINEER 05/18/09 DATE

9-21-09
PLANS APPROVAL DATE

REGISTERED PROFESSIONAL ENGINEER VICKIE L. KRAMAN No. 38846 Exp. 3/31/11 CIVIL STATE OF CALIFORNIA

THE STATE OF CALIFORNIA OR ITS OFFICERS OR AGENTS SHALL NOT BE RESPONSIBLE FOR THE ACCURACY OR COMPLETENESS OF SCANNED COPIES OF THIS PLAN SHEET.

PARSONS
2201 DUPONT DRIVE
SUITE 200
IRVINE, CA 92612

ORANGE COUNTY
TRANSPORTATION AUTHORITY
550 SOUTH MAIN STREET
ORANGE, CA 92863

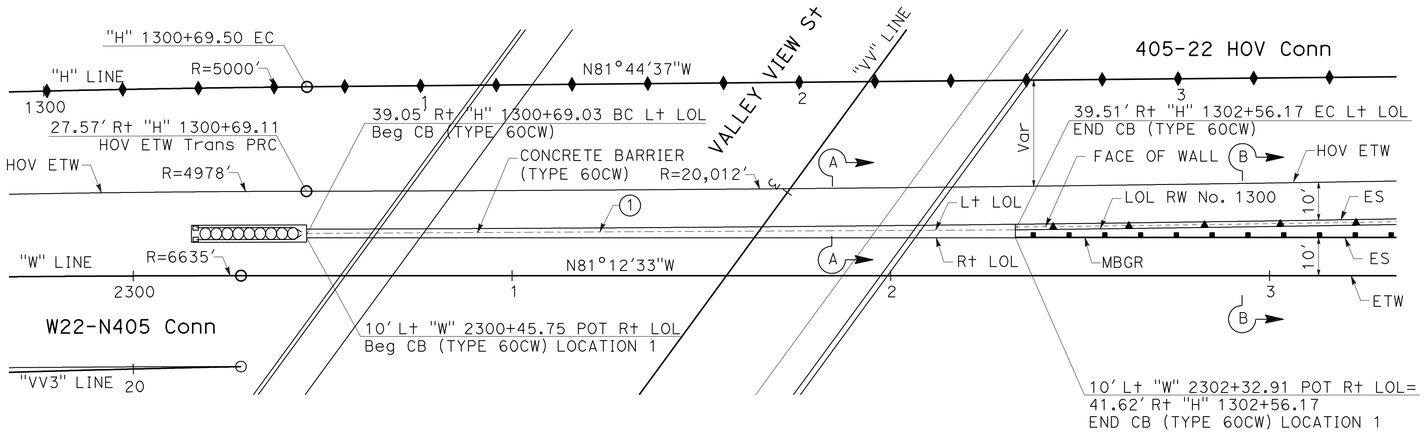

PLAN

SCALE: 1" = 20'

CURVE DATA

No	R		T	L
1	20023.48'	0°32'08"	93.58'	187.16'

TRANSITION AT PRECAST WALL

Loc No.	SHEET No.	WALL No.	Beg STATION	OFFSET
1	L-3	1300	"H" 1300+69.03	39.05' Rt

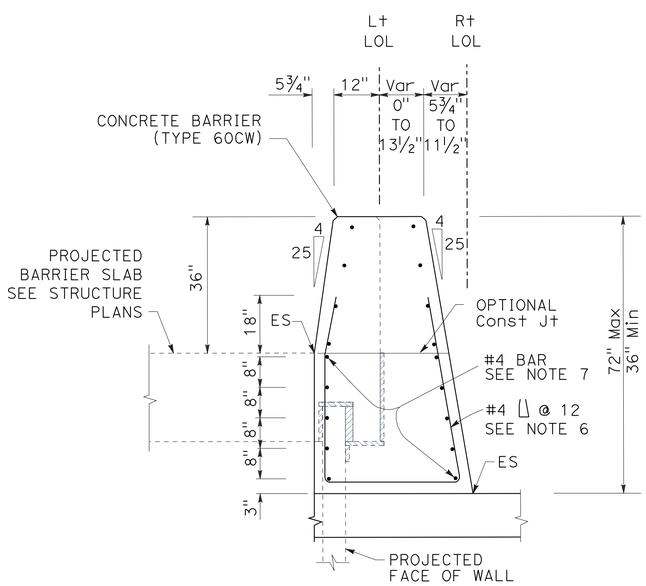

SECTION A-A

NO SCALE

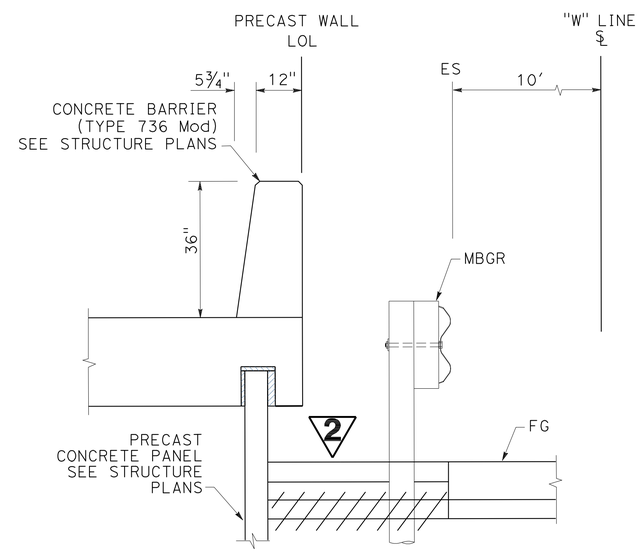

SECTION B-B

NO SCALE

NOTES:

1. SEE REVISED STANDARD PLAN A76A FOR DETAILS OF CONCRETE BARRIER TYPE 60 AND TYPE 60C NOT SHOWN.
2. EXPANSION JOINTS IN CONCRETE BARRIER SHALL BE LOCATED AT ALL DECK, PAVEMENT AND PRINCIPAL WALL JOINTS. EXPANSION JOINT FILLER MATERIAL SHALL BE THE SAME SIZE AS JOINT OR ½" MINIMUM.
3. BARRIER DELINEATION TO BE USED WHEN REQUIRED BY THE SPECIAL PROVISIONS.
4. SPACING OF BARRIER MARKERS TO MATCH SPACING OF RAISED PAVEMENT MARKERS ON THE ADJACENT MEDIAN EDGELINE PAVEMENT DELINEATION.
5. REINFORCING STEEL SHALL EXTEND CONTINUOUS THROUGH CONSTRUCTION JOINTS.
6. REINFORCING STIRRUP NOT REQUIRED FOR ROADWAY OFFSETS LESS THAN 12".
7. FOR ROADWAY SURFACES OFFSET GREATER THAN 1½" TO 3", NO REBARS REQUIRED. FOR ROADWAY SURFACES OFFSET GREATER THAN 3" TO 8", USE TWO #4 REBARS AT 3" ABOVE THE LOWER ROADWAY SURFACE. FOR ROADWAY SURFACES OFFSET GREATER THAN 8" TO 12", USE TWO #4 REBARS AT 3" ABOVE THE LOWER ROADWAY SURFACE AND TWO #4 REBARS AT 8" ABOVE THE LOWER ROADWAY SURFACE. FOR ROADWAY SURFACES OFFSET GREATER THAN 12" TO 36", USE TWO #4 REBARS AT 3" ABOVE THE LOWER ROADWAY SURFACE AND TWO #4 REBARS AT EVERY 8" INCREMENT VERTICAL SPACING ABOVE THE FIRST TWO #4 REBARS.

CONSTRUCTION DETAILS

CONCRETE BARRIER (TYPE 60CW) TRANSITION AT PRECAST WALL No. 1300

SCALE AS SHOWN

C-49

2 REVISED PER ADDENDUM No. 2 DATED APRIL 1, 2010

STATE OF CALIFORNIA - DEPARTMENT OF TRANSPORTATION
Caltrans

CONSULTANT FUNCTIONAL SUPERVISOR: CARLOS A. CADENA
CALCULATED-DESIGNED BY: KANOGPORN S. TIBERI
CHECKED BY: VICKIE L. KRAMAN
REVISED BY
DATE REVISED

LAST REVISION 05-18-09
DATE PLOTTED => 29-MAR-2010
TIME PLOTTED => 11:31

Dist	COUNTY	ROUTE	POST MILES TOTAL PROJECT	SHEET No.	TOTAL SHEETS
12	Ora	22,405	R0.7/R2.9, 20.4/22.3	157	1006

Richard S. Bottcher 09/21/09
REGISTERED CIVIL ENGINEER DATE

9-21-09
PLANS APPROVAL DATE

REGISTERED PROFESSIONAL ENGINEER RICHARD S. BOTTCHER No. 47080 Exp. 12/01/09 CIVIL STATE OF CALIFORNIA

THE STATE OF CALIFORNIA OR ITS OFFICERS OR AGENTS SHALL NOT BE RESPONSIBLE FOR THE ACCURACY OR COMPLETENESS OF SCANNED COPIES OF THIS PLAN SHEET.

PARSONS
2201 DUPONT DRIVE
SUITE 200
IRVINE, CA 92612

ORANGE COUNTY
TRANSPORTATION AUTHORITY
550 SOUTH MAIN STREET
ORANGE, CA 92863

NOTES

FOR COMPLETE RIGHT OF WAY AND ACCURATE ACCESS DATA, SEE RIGHT OF WAY RECORD MAPS AT DISTRICT OFFICE.

PLACEMENT OF TEMPORARY CONSTRUCTION ENTRANCES AND CONCRETE WASHOUT AREAS ARE APPROXIMATE, ONLY ORIENTATION WILL DEPEND ON FIELD CONDITIONS.

LEGEND

- xx——xx——TSF· TEMPORARY SILT FENCE
- TEMPORARY DRAINAGE INLET PROTECTION
- ////////////// TFR· TEMPORARY FIBER ROLL
- TEMPORARY CHECK DAM
- TEMPORARY CONSTRUCTION ENTRANCE
- 2 ~~TEMPORARY CONCRETE WASHOUT FACILITY~~

ABBREVIATIONS

C	CUT
F	FILL
C|F	CUT / FILL LIMIT
HOV	HIGH OCCUPANCY VEHICLE

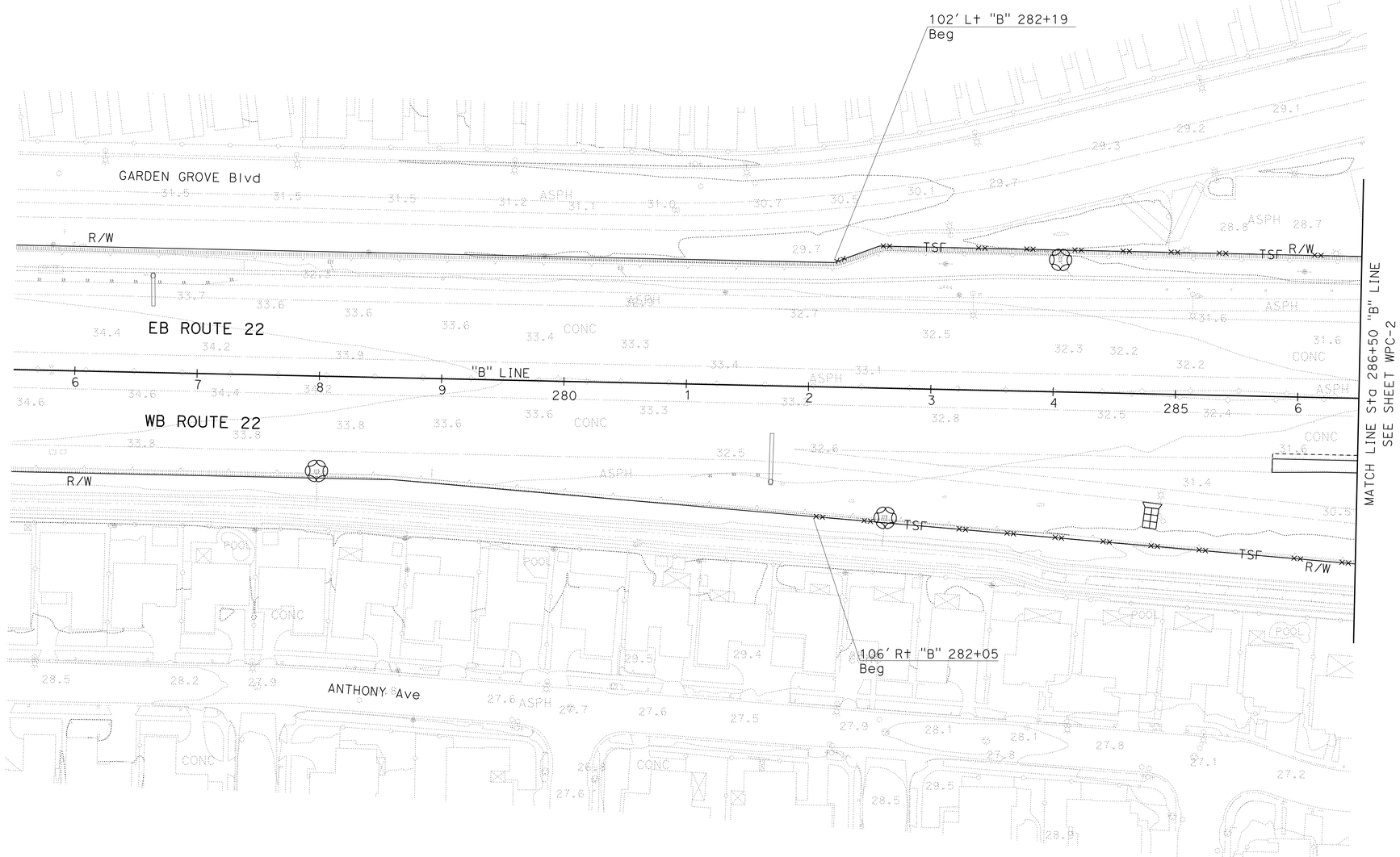

2 **REVISED PER ADDENDUM No. 2 DATED APRIL 1, 2010**

TEMPORARY WATER POLLUTION CONTROL PLAN

SCALE: 1"=50'

WPC-1

THIS PLAN ACCURATE FOR TEMPORARY WATER POLLUTION CONTROL WORK ONLY.

STATE OF CALIFORNIA - DEPARTMENT OF TRANSPORTATION
Caltrans

CONSULTANT FUNCTIONAL SUPERVISOR: CARLOS A. CADENA
CALCULATED-DESIGNED BY: MARIE SANTOS
CHECKED BY: RICHARD BOTTCHER
REVISED BY
DATE REVISED

LAST REVISION 05-18-09
DATE PLOTTED => 29-MAR-2010
TIME PLOTTED => 11:31

Dist	COUNTY	ROUTE	POST MILES TOTAL PROJECT	SHEET No.	TOTAL SHEETS
12	Ora	22,405	R0.7/R2.9, 20.4/22.3	158	1006

REGISTERED CIVIL ENGINEER 09/21/09 DATE

9-21-09
PLANS APPROVAL DATE

REGISTERED PROFESSIONAL ENGINEER RICHARD S. BOTTCHER No. 47080 Exp. 12/01/09 CIVIL STATE OF CALIFORNIA

THE STATE OF CALIFORNIA OR ITS OFFICERS OR AGENTS SHALL NOT BE RESPONSIBLE FOR THE ACCURACY OR COMPLETENESS OF SCANNED COPIES OF THIS PLAN SHEET.

PARSONS
2201 DUPONT DRIVE
SUITE 200
IRVINE, CA 92612

ORANGE COUNTY
TRANSPORTATION AUTHORITY
550 SOUTH MAIN STREET
ORANGE, CA 92863

NOTE: FOR COMPLETE RIGHT OF WAY AND ACCURATE ACCESS DATA, SEE RIGHT OF WAY RECORD MAPS AT DISTRICT OFFICE.

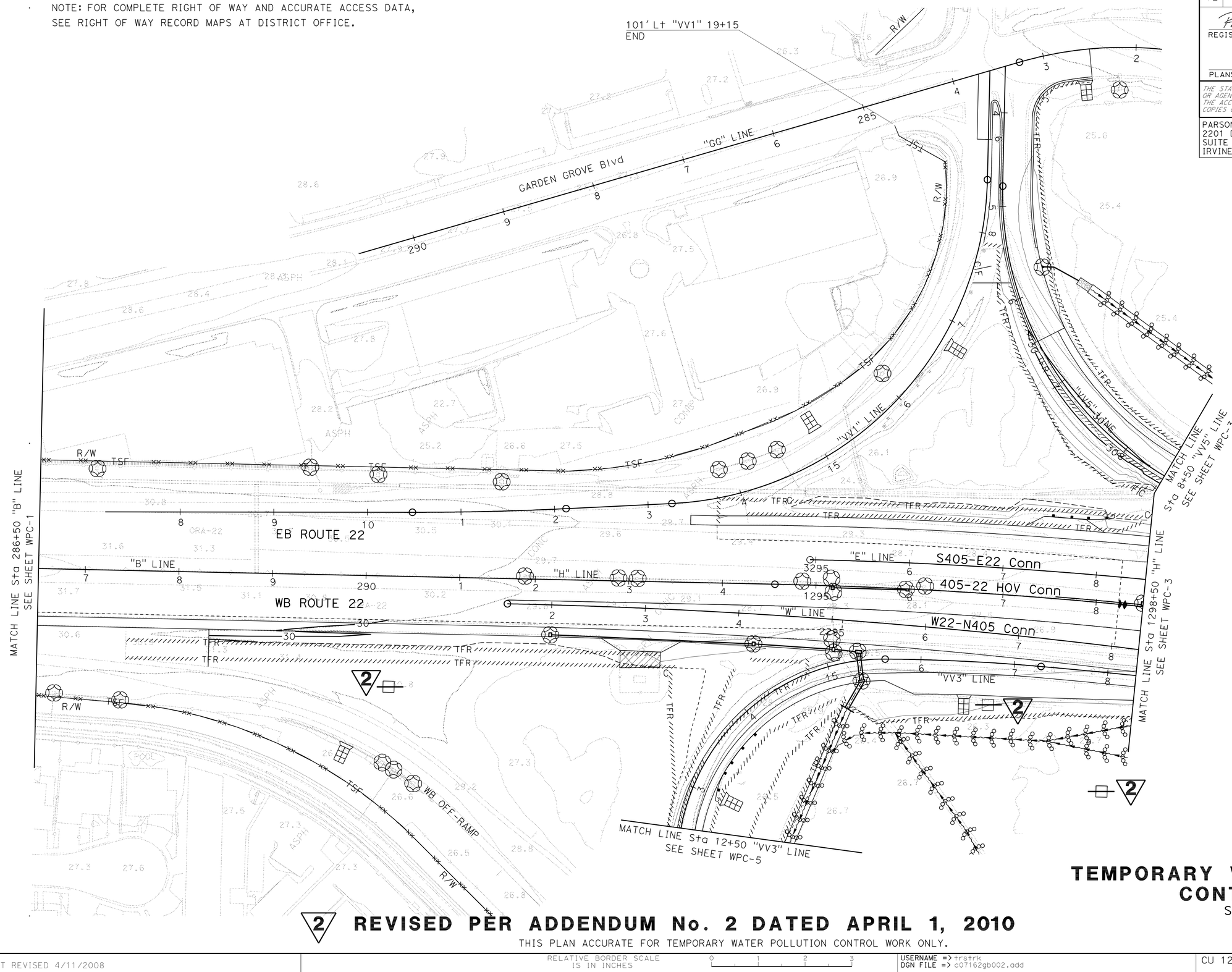

TEMPORARY WATER POLLUTION CONTROL PLAN

SCALE: 1"=50'

WPC-2

2 **REVISED PER ADDENDUM No. 2 DATED APRIL 1, 2010**

THIS PLAN ACCURATE FOR TEMPORARY WATER POLLUTION CONTROL WORK ONLY.

STATE OF CALIFORNIA - DEPARTMENT OF TRANSPORTATION
Caltrans

CONSULTANT FUNCTIONAL SUPERVISOR: CARLOS A. CADENA

CALCULATED-DESIGNED BY: MARIE SANTOS
CHECKED BY: RICHARD BOTTCHER

REVISED BY
DATE REVISED

LAST REVISION 05-18-09
DATE PLOTTED => 29-MAR-2010
TIME PLOTTED => 11:32

NOTE: FOR COMPLETE RIGHT OF WAY AND ACCURATE ACCESS DATA, SEE RIGHT OF WAY RECORD MAPS AT DISTRICT OFFICE.

Dist	COUNTY	ROUTE	POST MILES TOTAL PROJECT	SHEET No.	TOTAL SHEETS
12	Ora	22,405	R0.7/R2.9, 20.4/22.3	159	1006

Richard S. Bottcher 09/21/09
REGISTERED CIVIL ENGINEER DATE

9-21-09
PLANS APPROVAL DATE

REGISTERED PROFESSIONAL ENGINEER RICHARD S. BOTTCHER No. 47080 Exp. 12/01/09 CIVIL STATE OF CALIFORNIA

THE STATE OF CALIFORNIA OR ITS OFFICERS OR AGENTS SHALL NOT BE RESPONSIBLE FOR THE ACCURACY OR COMPLETENESS OF SCANNED COPIES OF THIS PLAN SHEET.

PARSONS
2201 DUPONT DRIVE
SUITE 200
IRVINE, CA 92612

ORANGE COUNTY
TRANSPORTATION AUTHORITY
550 SOUTH MAIN STREET
ORANGE, CA 92863

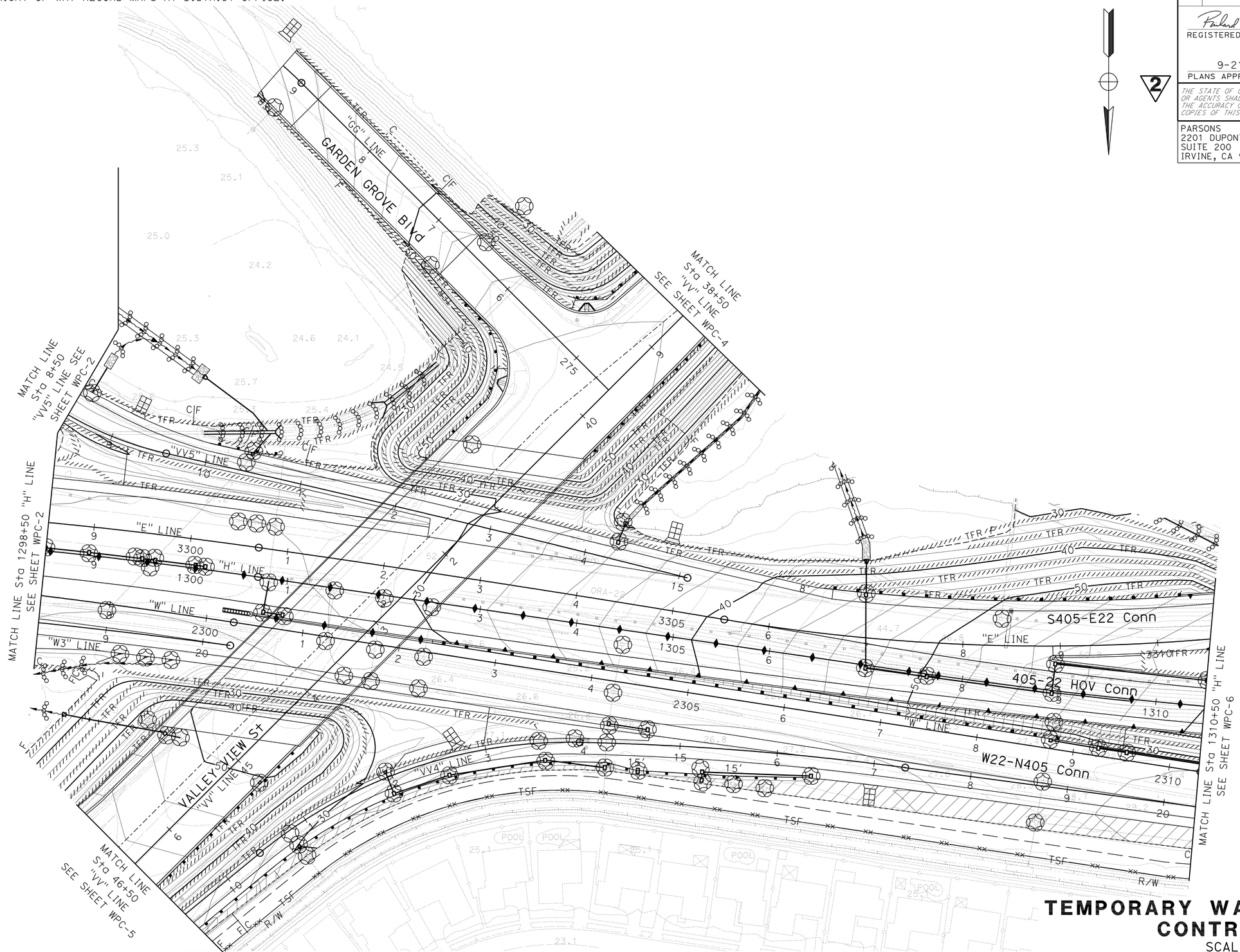

TEMPORARY WATER POLLUTION CONTROL PLAN

SCALE: 1"=50'

2 REVISED PER ADDENDUM No. 2 DATED APRIL 1, 2010

THIS PLAN ACCURATE FOR TEMPORARY WATER POLLUTION CONTROL WORK ONLY.

WPC-3

STATE OF CALIFORNIA - DEPARTMENT OF TRANSPORTATION

Caltrans

CONSULTANT FUNCTIONAL SUPERVISOR: CARLOS A. CADENA

CALCULATED-DESIGNED BY: MARIE SANTOS

CHECKED BY: RICHARD BOTTCHER

REVISED BY

DATE REVISED

LAST REVISION 05-18-09

DATE PLOTTED => 29-MAR-2010
TIME PLOTTED => 11:32

BORDER LAST REVISED 4/11/2008

RELATIVE BORDER SCALE IS IN INCHES 0 1 2 3

USERNAME => trstrk
DGN FILE => c07162gb003.add

CU 12235

EA 071621

NOTE: FOR COMPLETE RIGHT OF WAY AND ACCURATE ACCESS DATA, SEE RIGHT OF WAY RECORD MAPS AT DISTRICT OFFICE.

Dist	COUNTY	ROUTE	POST MILES TOTAL PROJECT	SHEET No.	TOTAL SHEETS
12	Ora	22,405	R0.7/R2.9, 20.4/22.3	160	1006

REGISTERED CIVIL ENGINEER 09/21/09 DATE

9-21-09
PLANS APPROVAL DATE

REGISTERED PROFESSIONAL ENGINEER RICHARD S. BOTTCHER No. 47080 Exp. 12/01/09 CIVIL STATE OF CALIFORNIA

THE STATE OF CALIFORNIA OR ITS OFFICERS OR AGENTS SHALL NOT BE RESPONSIBLE FOR THE ACCURACY OR COMPLETENESS OF SCANNED COPIES OF THIS PLAN SHEET.

PARSONS
2201 DUPONT DRIVE
SUITE 200
IRVINE, CA 92612

ORANGE COUNTY
TRANSPORTATION AUTHORITY
550 SOUTH MAIN STREET
ORANGE, CA 92863

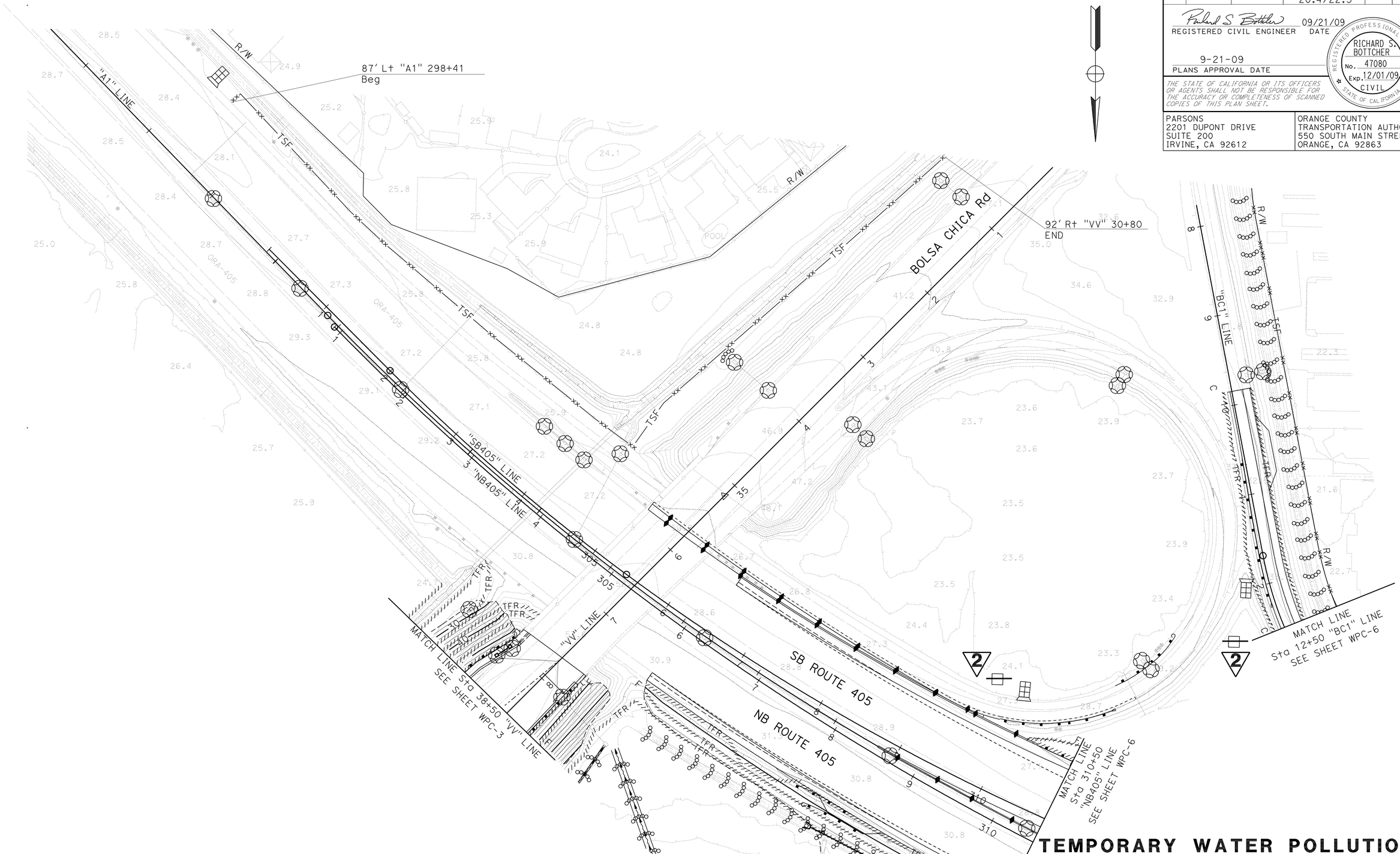

TEMPORARY WATER POLLUTION CONTROL PLAN

SCALE: 1"=50'

WPC-4

2 REVISED PER ADDENDUM No. 2 DATED APRIL 1, 2010

THIS PLAN ACCURATE FOR TEMPORARY WATER POLLUTION CONTROL WORK ONLY.

STATE OF CALIFORNIA - DEPARTMENT OF TRANSPORTATION

Caltrans

CONSULTANT FUNCTIONAL SUPERVISOR: CARLOS A. CADENA

CALCULATED-DESIGNED BY: MARIE SANTOS

CHECKED BY: RICHARD BOTTCHER

REVISED BY

DATE REVISED

LAST REVISION 05-18-09

DATE PLOTTED => 29-MAR-2010
TIME PLOTTED => 11:32

NOTE: FOR COMPLETE RIGHT OF WAY AND ACCURATE ACCESS DATA, SEE RIGHT OF WAY RECORD MAPS AT DISTRICT OFFICE.

Dist	COUNTY	ROUTE	POST MILES TOTAL PROJECT	SHEET No.	TOTAL SHEETS
12	Ora	22,405	R0.7/R2.9, 20.4/22.3	161	1006

REGISTERED CIVIL ENGINEER 09/21/09 DATE

9-21-09
PLANS APPROVAL DATE

REGISTERED PROFESSIONAL ENGINEER RICHARD S. BOTTCHER No. 47080 Exp. 12/01/09 CIVIL STATE OF CALIFORNIA

THE STATE OF CALIFORNIA OR ITS OFFICERS OR AGENTS SHALL NOT BE RESPONSIBLE FOR THE ACCURACY OR COMPLETENESS OF SCANNED COPIES OF THIS PLAN SHEET.

PARSONS
2201 DUPONT DRIVE
SUITE 200
IRVINE, CA 92612

ORANGE COUNTY
TRANSPORTATION AUTHORITY
550 SOUTH MAIN STREET
ORANGE, CA 92863

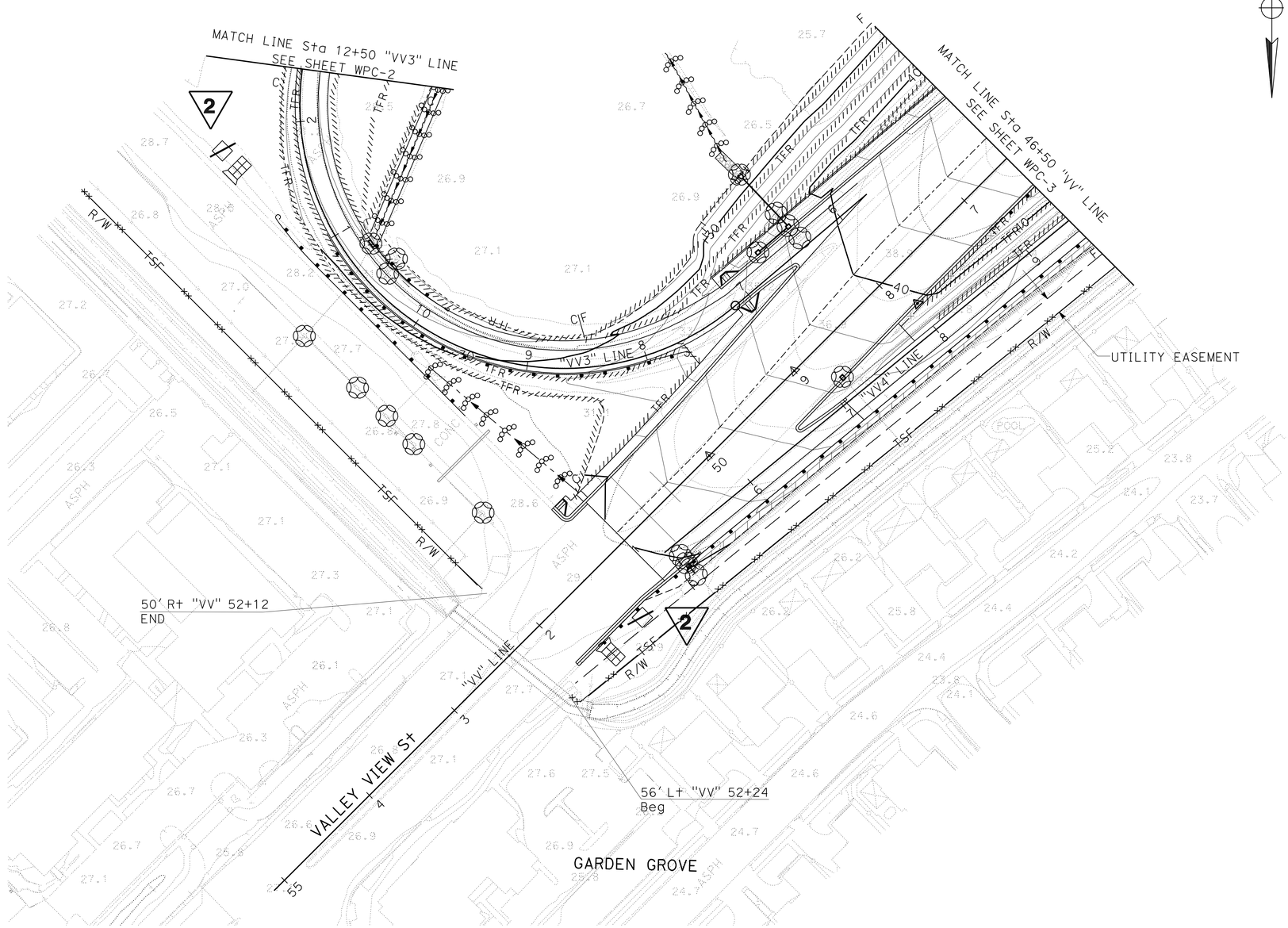

2 REVISED PER ADDENDUM NO. 2 DATED APRIL 1, 2010

TEMPORARY WATER POLLUTION CONTROL PLAN

SCALE: 1"=50'

WPC-5

THIS PLAN ACCURATE FOR TEMPORARY WATER POLLUTION CONTROL WORK ONLY.

STATE OF CALIFORNIA - DEPARTMENT OF TRANSPORTATION
Caltrans

CONSULTANT FUNCTIONAL SUPERVISOR: CARLOS A. CADENA
CALCULATED-DESIGNED BY: MARIE SANTOS
CHECKED BY: RICHARD BOTTCHER
REVISED BY
DATE REVISED

LAST REVISION 05-18-09
DATE PLOTTED => 29-MAR-2010
TIME PLOTTED => 10:09

NOTE: FOR COMPLETE RIGHT OF WAY AND ACCURATE ACCESS DATA, SEE RIGHT OF WAY RECORD MAPS AT DISTRICT OFFICE.

Dist	COUNTY	ROUTE	POST MILES TOTAL PROJECT	SHEET No.	TOTAL SHEETS
12	Ora	22,405	R0.7/R2.9, 20.4/22.3	162	1006

REGISTERED CIVIL ENGINEER 09/21/09 DATE

9-21-09
PLANS APPROVAL DATE

REGISTERED PROFESSIONAL ENGINEER RICHARD S. BOTTCHER No. 47080 Exp. 12/01/09 CIVIL STATE OF CALIFORNIA

THE STATE OF CALIFORNIA OR ITS OFFICERS OR AGENTS SHALL NOT BE RESPONSIBLE FOR THE ACCURACY OR COMPLETENESS OF SCANNED COPIES OF THIS PLAN SHEET.

PARSONS
2201 DUPONT DRIVE
SUITE 200
IRVINE, CA 92612

ORANGE COUNTY
TRANSPORTATION AUTHORITY
550 SOUTH MAIN STREET
ORANGE, CA 92863

2

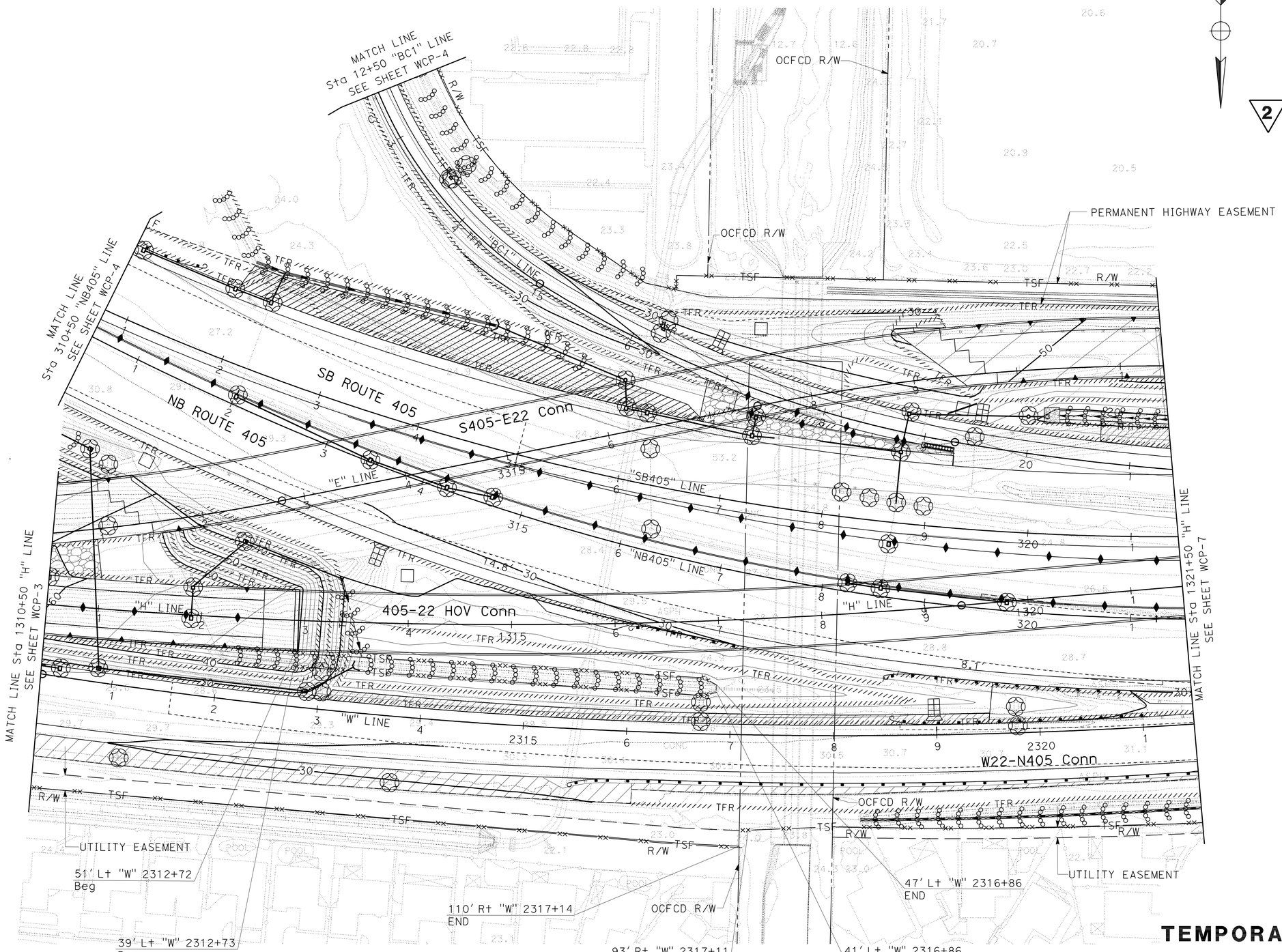

2 **REVISED PER ADDENDUM NO. 2 DATED APRIL 1, 2010**

THIS PLAN ACCURATE FOR TEMPORARY WATER POLLUTION CONTROL WORK ONLY.

TEMPORARY WATER POLLUTION CONTROL PLAN

SCALE: 1"=50'

WPC-6

STATE OF CALIFORNIA - DEPARTMENT OF TRANSPORTATION
Caltrans

CONSULTANT FUNCTIONAL SUPERVISOR: CARLOS A. CADENA
CALCULATED-DESIGNED BY: MARIE SANTOS
CHECKED BY: RICHARD BOTTCHER
REVISED BY
DATE REVISED

LAST REVISION 05-18-09
DATE PLOTTED => 29-MAR-2010
TIME PLOTTED => 10:09

NOTE: FOR COMPLETE RIGHT OF WAY AND ACCURATE ACCESS DATA, SEE RIGHT OF WAY RECORD MAPS AT DISTRICT OFFICE.

Dist	COUNTY	ROUTE	POST MILES TOTAL PROJECT	SHEET No.	TOTAL SHEETS
12	Ora	22,405	R0.7/R2.9, 20.4/22.3	163	1006

Richard S. Bottcher 09/21/09
REGISTERED CIVIL ENGINEER DATE

9-21-09
PLANS APPROVAL DATE

REGISTERED PROFESSIONAL ENGINEER RICHARD S. BOTTCHER No. 47080 Exp. 12/01/09 CIVIL STATE OF CALIFORNIA

THE STATE OF CALIFORNIA OR ITS OFFICERS OR AGENTS SHALL NOT BE RESPONSIBLE FOR THE ACCURACY OR COMPLETENESS OF SCANNED COPIES OF THIS PLAN SHEET.

PARSONS
2201 DUPONT DRIVE
SUITE 200
IRVINE, CA 92612

ORANGE COUNTY
TRANSPORTATION AUTHORITY
550 SOUTH MAIN STREET
ORANGE, CA 92863

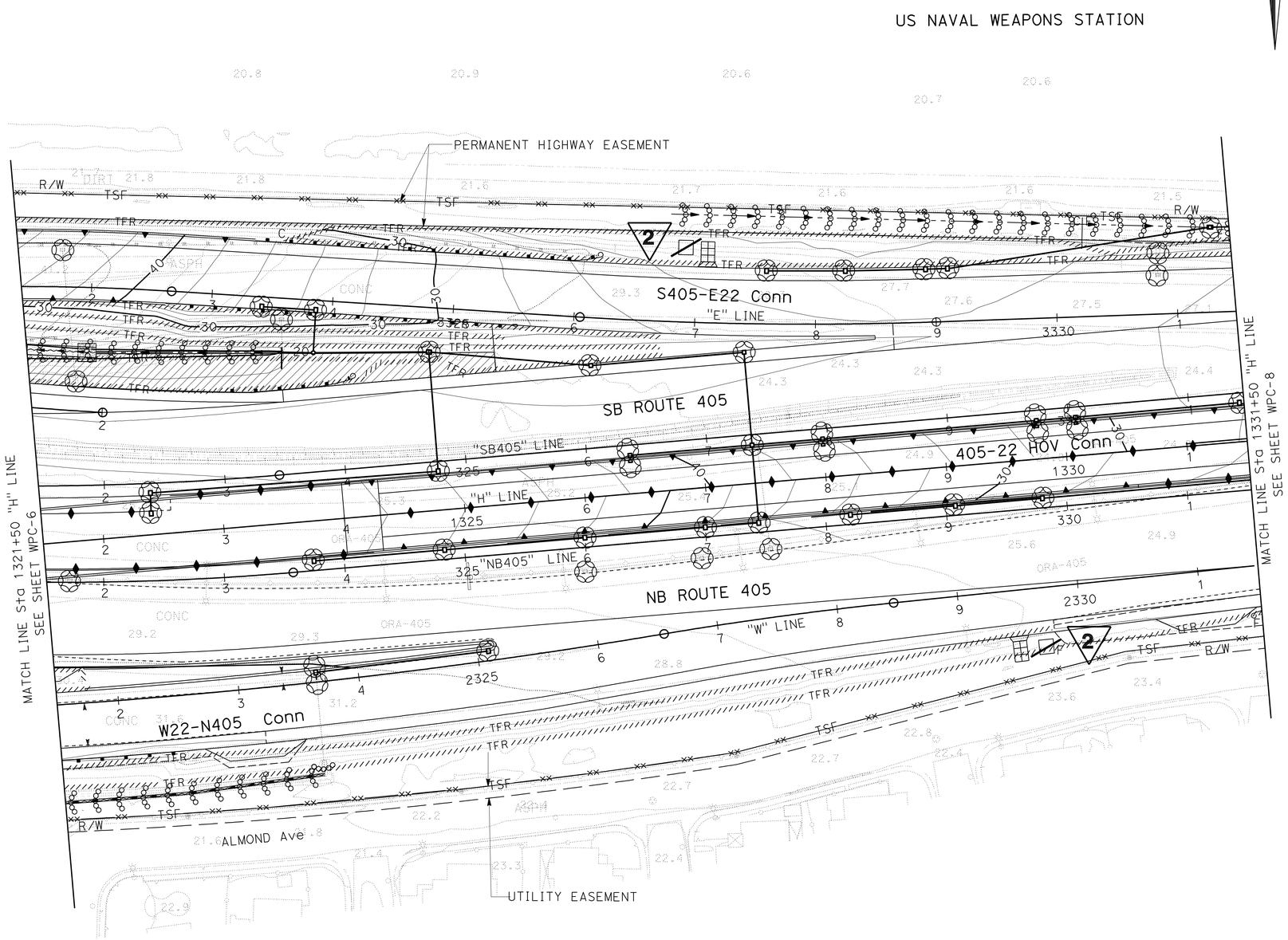

2 REVISED PER ADDENDUM NO. 2 DATED APRIL 1, 2010

THIS PLAN ACCURATE FOR TEMPORARY WATER POLLUTION CONTROL WORK ONLY.

TEMPORARY WATER POLLUTION CONTROL PLAN

SCALE: 1"=50'

WPC-7

STATE OF CALIFORNIA - DEPARTMENT OF TRANSPORTATION
Caltrans

CONSULTANT FUNCTIONAL SUPERVISOR: CARLOS A. CADENA
CALCULATED-DESIGNED BY: MARIE SANTOS
CHECKED BY: RICHARD BOTTCHER
REVISED BY
DATE REVISED

LAST REVISION 05-18-09
DATE PLOTTED => 29-MAR-2010
TIME PLOTTED => 10:09

Dist	COUNTY	ROUTE	POST MILES TOTAL PROJECT	SHEET No.	TOTAL SHEETS
12	Ora	22,405	R0.7/R2.9, 20.4/22.3	169	1006

Richard S. Bottcher 09/21/09
REGISTERED CIVIL ENGINEER DATE

9-21-09
PLANS APPROVAL DATE

REGISTERED PROFESSIONAL ENGINEER
RICHARD S. BOTTCHER
No. 47080
Exp. 12/01/09
CIVIL
STATE OF CALIFORNIA

THE STATE OF CALIFORNIA OR ITS OFFICERS OR AGENTS SHALL NOT BE RESPONSIBLE FOR THE ACCURACY OR COMPLETENESS OF SCANNED COPIES OF THIS PLAN SHEET.

PARSONS
2201 DUPONT DRIVE
SUITE 200
IRVINE, CA 92612

ORANGE COUNTY
TRANSPORTATION AUTHORITY
550 SOUTH MAIN STREET
ORANGE, CA 92863

NOTE: FOR COMPLETE RIGHT OF WAY AND ACCURATE ACCESS DATA, SEE RIGHT OF WAY RECORD MAPS AT DISTRICT OFFICE.

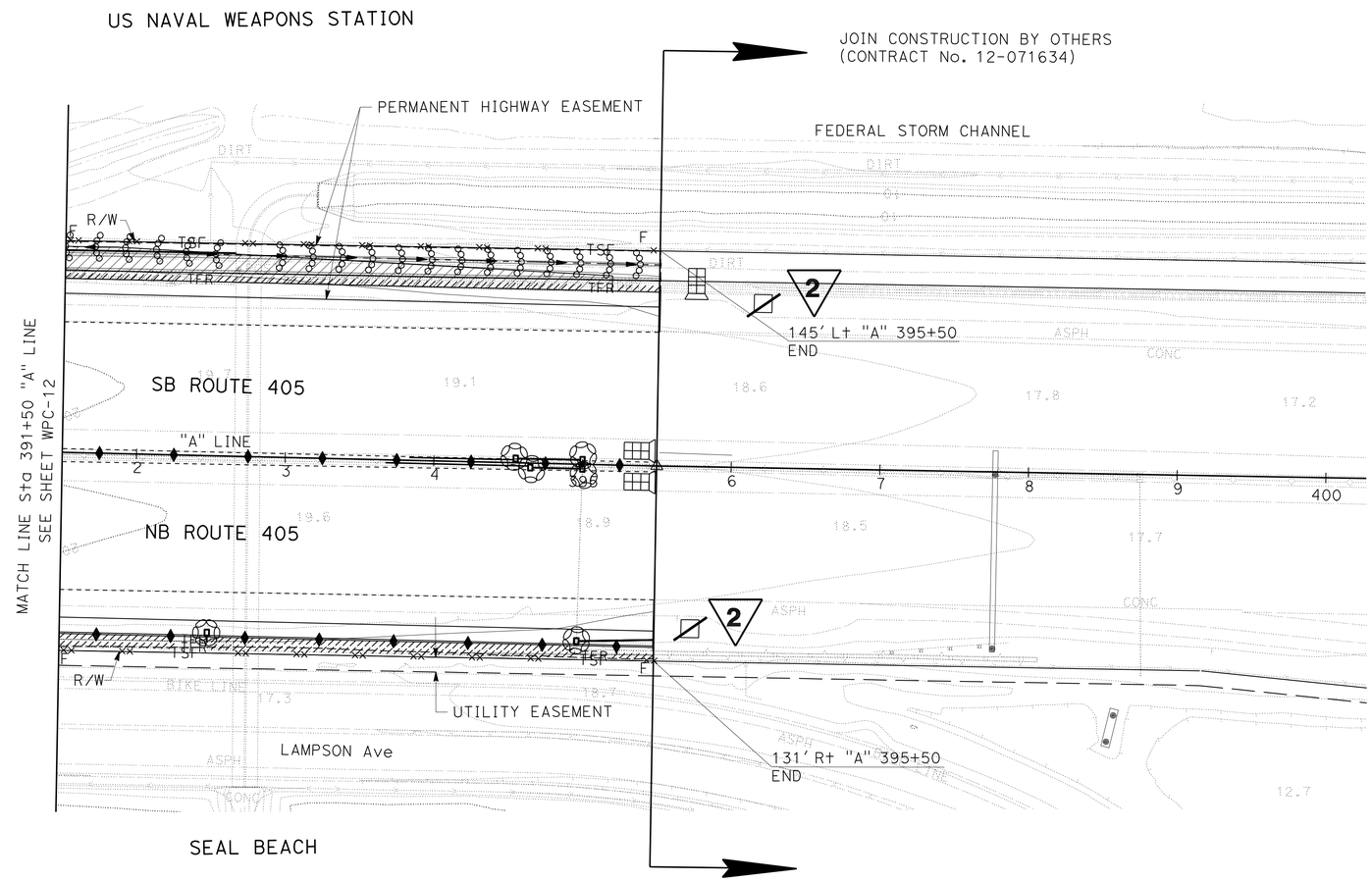

TEMPORARY WATER POLLUTION CONTROL PLAN

SCALE: 1"=50'

WPC-13

2 REVISED PER ADDENDUM NO. 2 DATED APRIL 1, 2010

THIS PLAN ACCURATE FOR TEMPORARY WATER POLLUTION CONTROL WORK ONLY.

STATE OF CALIFORNIA - DEPARTMENT OF TRANSPORTATION
Caltrans

CONSULTANT FUNCTIONAL SUPERVISOR: CARLOS A. CADENA
CALCULATED-DESIGNED BY: MARIE SANTOS
CHECKED BY: RICHARD BOTTCHER
REVISED BY
DATE REVISED

LAST REVISION 05-18-09
DATE PLOTTED => 29-MAR-2010
TIME PLOTTED => 10:09

Dist	COUNTY	ROUTE	POST MILES TOTAL PROJECT	SHEET No.	TOTAL SHEETS
12	Ora	22,405	R0.7/R2.9, 20.4/22.3	170	1006

Richard S. Bottcher 09/21/09
REGISTERED CIVIL ENGINEER DATE

9-21-09
PLANS APPROVAL DATE

REGISTERED PROFESSIONAL ENGINEER RICHARD S. BOTTCHER No. 47080 Exp. 12/01/09 CIVIL STATE OF CALIFORNIA

THE STATE OF CALIFORNIA OR ITS OFFICERS OR AGENTS SHALL NOT BE RESPONSIBLE FOR THE ACCURACY OR COMPLETENESS OF SCANNED COPIES OF THIS PLAN SHEET.

PARSONS
2201 DUPONT DRIVE
SUITE 200
IRVINE, CA 92612

ORANGE COUNTY
TRANSPORTATION AUTHORITY
550 SOUTH MAIN STREET
ORANGE, CA 92863

TEMPORARY WATER POLLUTION CONTROL

PER WPC PLAN

2

SHEET	TEMPORARY SILT FENCE (LF)	TEMPORARY FIBER ROLL (LF)	TEMPORARY DRAINAGE INLET PROTECTION (EA)	TEMPORARY CONSTRUCTION ENTRANCE (EA)	TEMPORARY CONCRETE WASHOUT ~~FACILITY~~ BIN (EA)	TEMPORARY CHECK DAM (LF)
WPC-1	880		5	1		
WPC-2	1,780	4,660	25	6	10 ~~3~~	460
WPC-3	1,050	12,430	77	5	12 ~~8~~	350
WPC-4	1,540	3,010	25	3	7 ~~2~~	540
WPC-5	1,060	3,550	20	2	7 ~~2~~	180
WPC-6	2,770	10,910	43	4	7 ~~4~~	900
WPC-7	2,010	5,970	45	2	10 ~~2~~	450
WPC-8	2,410	3,270	31	2		690
WPC-9	2,400	3,610	30			510
WPC-10	2,400	3,620	26	2		530
WPC-11	2,400	3,610	38	2		510
WPC-12	2,400	3,610	27	2		520
WPC-13	800	1,150	9	3	7 ~~2~~	190
TOTALS:	23,900	59,400	401	34	60 ~~20~~	5,830

BY STAGE (N)

2

STAGE *	TEMPORARY SILT FENCE (LF)	TEMPORARY FIBER ROLL (LF)	TEMPORARY DRAINAGE INLET PROTECTION (EA)	TEMPORARY CONSTRUCTION ENTRANCE (EA)	TEMPORARY CONCRETE WASHOUT ~~FACILITY~~ BIN (EA)	TEMPORARY CHECK DAM (LF)
1A	3,107	7,722	52	4	6 ~~2~~	758
1B	6,214	15,444	104	10	13 ~~5~~	1,516
2A						
2B	3,107	7,722	52	4	7 ~~2~~	758
2C						
3A	6,214	15,444	106	10	13 ~~5~~	1,516
3B						
3C	3,107	7,722	53	4	7 ~~2~~	757
4A	717	1,782	12	2	7 ~~2~~	175
4B	717	1,782	11	**	7 ~~2~~	175
4C	717	1,782	11	**	**	175
TOTALS:	23,900	59,400	401	34	60 ~~20~~	5,830

(N) NOT SEPARATE PAY ITEMS, FOR INFORMATION ONLY

* STAGE CONSTRUCTION QUANTITIES ARE APPROXIMATE. SEE SHEETS SC-1 TO SC-3 AND SCD1 TO SCD19

** BMP FROM PREVIOUS STAGE REMAINS

2 REVISED PER ADDENDUM NO. 2 DATED APRIL 1, 2010

TEMPORARY WATER POLLUTION CONTROL QUANTITIES

WPCQ-1

STATE OF CALIFORNIA - DEPARTMENT OF TRANSPORTATION
Caltrans

CONSULTANT FUNCTIONAL SUPERVISOR: CARLOS A. CADENA
CALCULATED-DESIGNED BY: MARIE SANTOS
CHECKED BY: RICHARD BOTTCHER
REVISED BY: P. G.
DATE REVISED: 08/26/09

LAST REVISION: 05-18-09
DATE PLOTTED => 29-MAR-2010
TIME PLOTTED => 10:09

Dist	COUNTY	ROUTE	POST MILES TOTAL PROJECT	SHEET No.	TOTAL SHEETS
12	Ora	22,405	R0.7/R2.9, 20.4/22.3	228	1006

REGISTERED CIVIL ENGINEER 5/18/09 DATE

9-21-09
PLANS APPROVAL DATE

REGISTERED PROFESSIONAL ENGINEER BRADLEY M. LOSEY No. C65140 Exp. 9/30/11 CIVIL STATE OF CALIFORNIA

THE STATE OF CALIFORNIA OR ITS OFFICERS OR AGENTS SHALL NOT BE RESPONSIBLE FOR THE ACCURACY OR COMPLETENESS OF SCANNED COPIES OF THIS PLAN SHEET.

RBF CONSULTING
14725 ALTON PKWY
IRVINE, CA 92618

ORANGE COUNTY
TRANSPORTATION AUTHORITY
550 SOUTH MAIN STREET
ORANGE, CA 92863

LEGEND AND ABBREVIATIONS:

GCP, G1, G2, Mod G3, GT3, GT4, GD1, OS - INLET TYPES
D - DOWNDRAIN JOINT TYPE
S - STANDARD JOINT TYPE
P - POSITIVE JOINT TYPE
Conn - CONNECTION
DIP - DUCTILE IRON PIPE
GLD - GRATED LINE DRAIN
PPC - PLASTIC PIPE CULVERT
(N) - NOT A SEPARATE PAY ITEM, FOR INFORMATION ONLY.

NOTE:
FOR ADDITIONAL QUANTITIES, SEE SUMMARY OF QUANTITIES.

ALTERNATIVE PIPE CULVERTS

DESIGNATION SIZE	DESIGNATION TYPE	ALLOWABLE PIPE MATERIAL	
18" AP	A	RCP	PPC
18" AP	B	RCP	CIPCP
24" AP	N/A	RCP	PPC
30" AP	N/A	RCP	PPC
36" AP	N/A	RCP	PPC

DRAINAGE QUANTITIES

2

MINOR Conc (MINOR Str)	MINOR Conc (Bkf)	SAND Bkf	CLASS 1 Conc (BOX Culv)	BAR Reinf STEEL (BOX Culv)	FRAMES, GRATES, & COVERS (N) MH F & C	24-12	36 R	PLATE	Misc IRON & STEEL	REMOVE Culv	REMOVE Conc (CHANNEL)	REMOVE INLET	REMOVE HW	REMOVE Conc APRON	Abn Culv	Abn INLET	CAP INLET	Adj INLET	8" DIP	18" AP	24" AP	30" AP	36" AP	24" RCP	30" RCP	GLD	36" PC Conc PIPE INLET	HMA	HMA (Misc AREA)	18" Alt FES	24" Alt FES	30" Alt FES	RSP FABRIC	RSP (FACING, METHOD B)	DITCH Exc	Conc DITCH LINING	(N) HEIGHT OF INLET	(N) "JOINT TYPE"	(N) Max COVER	DESCRIPTION	STATION	DRAINAGE UNIT	DRAINAGE SYSTEM No.	DRAINAGE PLAN Sht No.
CY	CY	CY	CY	LB	EA	EA	EA	EA	LB	LF	CY	EA	CY	EA	LF	EA	EA	EA	LF	LF	LF	LF	LF	LF	LF	LF	LF	TON	SQYD	EA	EA	EA	SQYD	CY	CY	CY	FT		FT					
													1.2																											REMOVE HEADWALL	19.40 R+ "VV3"15+27.16	a	1	D-2
										45																													5	REMOVE 24" RCP		b		
												1																												REMOVE DI	25.95 R+"W"2295+03.14	c		
2.40						2			652																												2.4			GT3 INLET	23.00 R+ "VV3"10+76.70	d		D-5
																																	60.6	26.7						RSP	26.60 R+ "VV3"10+79.22	e		
																																			210					BIO-SWALE		f		
3.84																																								TYPE B WW	48.69 R+ "VV3"15+10.12	g		D-2
			7.4	1565																																			1.3	4' X 0.75' RCB		h		
1.73						2			652																												1.3			GT3 INLET	23.00 R+ "VV3"15+34.05	i		
			6.6	1387																																			2.5	4' X 0.75' RCB		j		
2.29						2			652																												3.3			GT4 INLET	34.00 R+"W"2295+30.83	k		
	9.8																				22.4																	S	1.3	24" AP		l		
1.44						2			580																												3.2			GD1 INLET	34.00 R+"W"2295+03.75	m		
	2.8																				6.1																	S	1.2	24" AP		n		
																																								Conc COLLAR	23.93 R+"W"2295+03.06	o		
1.47						2			580																												3.3			GD1 INLET	1.50 R+"H"1295+17.96	p		
	9.8																			76.9																		S	1.8	18" AP TYPE A		q		
0.95						1			326																												2.8			G1 INLET	1.50 R+"H"1295+97.85	r		
																																			6					SWALE		a	2	D-3
																																	21.7	8.0						RSP	62.03 L+"VV5"8+62.23	b		
																												1.8	11.1											OSD	32.00 L+"VV5"8+60.73	c		
												1																												REMOVE DI	2.10 L+"H"1299+61.94	a	3	D-3
										16																												5	REMOVE 18" RCP		b		
												1																												REMOVE DI	2.45 L+"H"1299+42.31	c		
		0.6													4.8																									Abn 24" RCP		d		
																1																								Abn DI	1.34 R+"H"1299+58.54	e		
		7.4													63.3																									Abn 24" RCP		f		
																1																								Abn DI	7.58 R+"W"2298+98.38	g		
										19																												5	REMOVE 24" RCP		h		
3.34																																								JS No. 3	43.55 L+"VV5"10+58.66	i		
																					27.1																	S	4.0	24" AP		j		
1.57						1			326																												5.8			G1 INLET	20.00 L+"VV5"10+45.38	k		
																	1																							CAP INLET	13.10 L+"VV5"10+42.29	l		
1.79						1			326																												4.9			G2 INLET	1.50 L+"H"1299+62.69	m		
																					10.2																	S	2.8	24" AP		n		
1.89						2			580																												4.7			GD1 INLET	1.50 L+"H"1299+49.45	o		
																					52.0																	S	2.6	24" AP		p		
22.71	22.3	8.0	14.0	2952		15			4674	80		3	1.2		68.1	2	1			76.9	117.9							1.8	11.1				82.3	34.7	216					SHEET TOTAL				

2 REVISED PER ADDENDUM NO. 2 DATED APRIL 1, 2010

DRAINAGE QUANTITIES

DQ-1

STATE OF CALIFORNIA - DEPARTMENT OF TRANSPORTATION
Caltrans

CONSULTANT FUNCTIONAL SUPERVISOR: CARLOS A. CADENA
CALCULATED-DESIGNED BY: BARBARA VEALEY
CHECKED BY: BRAD LOSEY
REVISED BY: BML
DATE REVISED: 8-19-09

LAST REVISION 05-18-09
DATE PLOTTED => 30-MAR-2010
TIME PLOTTED => 11:42

Dist	COUNTY	ROUTE	POST MILES TOTAL PROJECT	SHEET No.	TOTAL SHEETS
12	Ora	22,405	R0.7/R2.9, 20.4/22.3	229	1006

REGISTERED CIVIL ENGINEER 5/18/09 DATE

9-21-09
PLANS APPROVAL DATE

REGISTERED PROFESSIONAL ENGINEER BRADLEY M. LOSEY No. C65140 Exp. 9/30/11 CIVIL STATE OF CALIFORNIA

THE STATE OF CALIFORNIA OR ITS OFFICERS OR AGENTS SHALL NOT BE RESPONSIBLE FOR THE ACCURACY OR COMPLETENESS OF SCANNED COPIES OF THIS PLAN SHEET.

RBF CONSULTING
14725 ALTON PKWY
IRVINE, CA 92618

ORANGE COUNTY
TRANSPORTATION AUTHORITY
550 SOUTH MAIN STREET
ORANGE, CA 92863

2

DRAINAGE QUANTITIES

MINOR Conc (MINOR Str)	MINOR Conc (Bkf)	SAND Bkf	CLASS 1 Conc (BOX Culv)	BAR Reinf STEEL (BOX Culv)	FRAMES, GRATES, & COVERS (N) MH F & C	24-12	36 R	PLATE	Misc IRON & STEEL	REMOVE Culv	REMOVE Conc (CHANNEL)	REMOVE INLET	REMOVE HW	REMOVE Conc APRON	Abn Culv	Abn INLET	CAP INLET	Adj INLET	8" DIP	18" AP	24" AP	30" AP	36" AP	24" RCP	30" RCP	GLD	36" PC Conc PIPE INLET	HMA	HMA (Misc AREA)	18" AIt FES	24" AIt FES	30" AIt FES	RSP FABRIC	RSP (FACING, METHOD B)	DITCH Exc	Conc DITCH LINING	(N) HEIGHT OF INLET	(N) "JOINT TYPE"	(N) Max COVER	DESCRIPTION	STATION	DRAINAGE UNIT	DRAINAGE SYSTEM No.	DRAINAGE PLAN Sht No.
CY	CY	CY	CY	LB	EA	EA	EA	EA	LB	LF	CY	EA	CY	EA	LF	EA	EA	EA	LF	LF	LF	LF	LF	LF	LF	LF	LF	TON	SQYD	EA	EA	EA	SQYD	CY	CY	CY	FT		FT					
1.72						1			326																												4.6			G2 INLET	1.50 Lt"H"1298+94.46	q	3	D-3
																				41.9																		S	2.6	18" AP TYPE A		r		
1.68						2			580																												4.0			GD1 INLET	1.50 Lt"H"1298+49.63	s		
																										92.0														GLD		t		
																					39.9																	S	2.8	24" AP		a	4	D-3
1.74						1			326																												4.7			G2 INLET	1.50 Lt"H"1300+04.43	b		
																				7.2																		S	2.7	18" AP TYPE A		c		
1.74						2			580																												4.2			GD1 INLET	1.50 Lt"H"1300+14.55	d		
											19																													REMOVE PCC CHANNEL	29.3 Lt"VV5"9+91 TO 46.2 Lt"VV5"10+63	a	5	D-3
													1.2																											REMOVE HW	29.27 Lt"VV5"9+91.54	b		
8.83																																								TYPE B WW	46.15 Lt"VV5"10+63.02	c		
			20.0	3533																																		3.3	3'x3' RCB		d		
			0.2	200																																			RCB TO RCB Conn	29.27 Lt"VV5"9+91.54	e		
																																			86					SWALE		a	6	D-3
																												0.8	5.3											OSD	22.00 Rt"VV3"19+44.64	b		
													1.2	1																										REMOVE APRON & HW	92.70 Rt"VV"45+35.63	a	7	D-3
										34																												4	REMOVE 24" RCP		b		
												1																											REMOVE DI	60.21 Rt"VV"45+25.29	c		
												1																											REMOVE DI	32.86 Lt"VV"45+00.25	d		
																																			24					SWALE		e		
																															1									24" FES	160.88 Rt"VV"45+94.17	f		
																					25.6																	S	3.5	24" AP		g		
																																								Conc COLLAR	137.35 Rt"VV"45+77.83	h		
																					78.4																	P	6.7	24" AP		i		
2.56							1		174																												7.2			OS INLET	71.17 Rt"VV"45+33.48	j		
																					15.2																	S	5.2	24" AP		k		
																																								Conc COLLAR	58.32 Rt"VV"45+25.46	l		
3.03						1			326																												9.8			G1 INLET	32.83 Lt"VV"45+00.25	m		
										16																													5	REMOVE 24" RCP		a	8	D-3
												1																											REMOVE DI	25.76 Lt"E"3300+64.81	b		
										16																												5	REMOVE 24" RCP		c		
												1																											REMOVE DI	25.46 Lt"E"3300+45.69	d		
																	1																							CAP INLET	25.98 Lt"E"3300+83.89	e		
21.31			20.2	3733	7		1		2312	66	19	4	2.4	1			1			49.1	159.1					92.0		0.8	5.3		1				110					SHEET TOTAL				

2 REVISED PER ADDENDUM NO. 2 DATED APRIL 1, 2010

DRAINAGE QUANTITIES

DQ-2

STATE OF CALIFORNIA - DEPARTMENT OF TRANSPORTATION
Caltrans

CONSULTANT FUNCTIONAL SUPERVISOR: CARLOS A. CADENA
CALCULATED-DESIGNED BY: BARBARA VEALEY
CHECKED BY: BRAD LOSEY
REVISED BY: BML
DATE REVISED: 8-19-09

LAST REVISION 05-18-09 | DATE PLOTTED => 29-MAR-2010 | TIME PLOTTED => 10:09

Dist	COUNTY	ROUTE	POST MILES TOTAL PROJECT	SHEET No.	TOTAL SHEETS
12	Ora	22,405	R0.7/R2.9, 20.4/22.3	230	1006

REGISTERED CIVIL ENGINEER 5/18/09 DATE

9-21-09
PLANS APPROVAL DATE

REGISTERED PROFESSIONAL ENGINEER BRADLEY M. LOSEY No. C65140 Exp. 9/30/11 CIVIL STATE OF CALIFORNIA

THE STATE OF CALIFORNIA OR ITS OFFICERS OR AGENTS SHALL NOT BE RESPONSIBLE FOR THE ACCURACY OR COMPLETENESS OF SCANNED COPIES OF THIS PLAN SHEET.

RBF CONSULTING
14725 ALTON PKWY
IRVINE, CA 92618

ORANGE COUNTY
TRANSPORTATION AUTHORITY
550 SOUTH MAIN STREET
ORANGE, CA 92863

2

DRAINAGE QUANTITIES

MINOR Conc (MINOR Str)	MINOR Conc (Bkf)	SAND Bkf	CLASS 1 Conc (BOX Culv)	BAR Reinf STEEL (BOX Culv)	FRAMES, GRATES, & COVERS (N) MH F & C	24-12	36 R	PLATE	Misc IRON & STEEL	REMOVE Culv	REMOVE Conc (CHANNEL)	REMOVE INLET	REMOVE HW	REMOVE Conc APRON	Abn Culv	Abn INLET	CAP INLET	Adj INLET	8" DIP	18" AP	24" AP	30" AP	36" AP	24" RCP	30" RCP	GLD	36" PC Conc PIPE INLET	HMA	HMA (Misc AREA)	18" AIt FES	24" AIt FES	30" AIt FES	RSP FABRIC	RSP (FACING, METHOD B)	DITCH Exc	Conc DITCH LINING	(N) HEIGHT OF INLET	(N) "JOINT TYPE"	(N) Max COVER	DESCRIPTION	STATION	DRAINAGE UNIT	DRAINAGE SYSTEM No.	DRAINAGE PLAN Sht No.
CY	CY	CY	CY	LB	EA	EA	EA	EA	LB	LF	CY	EA	CY	EA	LF	EA	EA	EA	LF	LF	LF	LF	LF	LF	LF	LF	LF	TON	SQYD	EA	EA	EA	SQYD	CY	CY	CY	FT		FT					
												1																												REMOVE DI	2.53 R+"H"1300+81.20	f	8	D-3
		7.5													64.8																										Abn 24" RCP		g		
																1																									Abn DI	2.11 R+"H"1301+49.65	h		
		5.9													50.7																										Abn 24" RCP		i		
												1																												REMOVE DI	6.14 R+"W"2301+24.34	j		
		5.5													47.6																										Abn 24" RCP		k		
																1																									Abn DI	3.18 R+"H"1302+00.62	l		
		5.9													50.7																										Abn 24" RCP		m		
												1																												REMOVE DI	6.73 R+"W"2301+75.31	n		
										24																												5		REMOVE 24" RCP		o		
												1																												REMOVE DI	36.47 R+"W"2301+75.65	p		
										30																												5		REMOVE 24" RCP		q		
												1																												REMOVE DI	37.87 R+"W"2301+48.45	r		
										48																												5		REMOVE 24" RCP		s		
												1																												REMOVE DI	39.11 R+"W"2302+26.58	t		
		5.5													47.6																										Abn 24" RCP		u		
																1																									Abn DI	4.31 R+"H"1302+51.64	v		
		5.9													50.7																										Abn 24" RCP		w		
												1																												REMOVE DI	7.38 R+"W"2302+26.25	x		
																																									Conc COLLAR	2.53 R+"H"1300+81.20	y		
																				31.1																		S	4.6	24" AP		z		
2.00						1			326																												5.7			G2 INLET	37.64 R+"H"1300+80.02	aa		
																				17.0																		S	3.8	24" AP		bb		
2.21						2			580																												5.8			GD1 INLET	37.77 R+"H"1301+00.02	cc		
3.34																																									JS No. 3	45.70 L+"VV5"10+54.77	a	9	D-3
																				23.8																		S	3.2	24" AP		b		
																																									Conc COLLAR	59.93 L+"VV5"10+36.28	c		
																				63.4																		S	3.2	24" AP		d		
																															1										24" FES	85.73 L+"VV5"9+78.68	e		
																																	30.0	12.0							RSP	85.32 L+"VV5"9+79.59	f		
																																			136						BIO-SWALE		g		
																																	21.7	8.0							RSP	65.40 L+"VV5"6+02.94	h		D-2
																												3.3	20.6												OSD	32.00 L+"VV5"5+73.30	i		
																	1																								CAP INLET	30.74 R+"VV4"10+79.59	a	10	D-3
										19																												5		REMOVE 18" RCP		b		
												1																												REMOVE DI	8.29 R+"VV4"10+78.88	c		
7.55		36.2				3			906	120		8			312.0	3	1			135.3								3.3	20.6		1		51.7	20.0	136					SHEET TOTAL				

2 REVISED PER ADDENDUM NO. 2 DATED APRIL 1, 2010

DRAINAGE QUANTITIES

DQ-3

STATE OF CALIFORNIA - DEPARTMENT OF TRANSPORTATION
Caltrans

CONSULTANT FUNCTIONAL SUPERVISOR: CARLOS A. CADENA

CALCULATED-DESIGNED BY: BARBARA VEALEY
CHECKED BY: BRAD LOSEY

REVISED BY: BML
DATE REVISED: 8-19-09

LAST REVISION 05-18-09 | DATE PLOTTED => 29-MAR-2010 | TIME PLOTTED => 10:09

Dist	COUNTY	ROUTE	POST MILES TOTAL PROJECT	SHEET No.	TOTAL SHEETS
12	Ora	22,405	R0.7/R2.9, 20.4/22.3	231	1006

REGISTERED CIVIL ENGINEER 5/18/09 DATE

9-21-09
PLANS APPROVAL DATE

REGISTERED PROFESSIONAL ENGINEER BRADLEY M. LOSEY No. C65140 Exp. 9/30/11 CIVIL STATE OF CALIFORNIA

THE STATE OF CALIFORNIA OR ITS OFFICERS OR AGENTS SHALL NOT BE RESPONSIBLE FOR THE ACCURACY OR COMPLETENESS OF SCANNED COPIES OF THIS PLAN SHEET.

RBF CONSULTING
14725 ALTON PKWY
IRVINE, CA 92618

ORANGE COUNTY
TRANSPORTATION AUTHORITY
550 SOUTH MAIN STREET
ORANGE, CA 92863

DRAINAGE QUANTITIES

2

MINOR Conc (MINOR Str)	MINOR Conc (Bkf)	SAND Bkf	CLASS 1 Conc (BOX Culv)	BAR Reinf STEEL (BOX Culv)	FRAMES, GRATES, & COVERS (N) MH F & C	24-12	36 R	PLATE	Misc IRON & STEEL	REMOVE Culv	REMOVE Conc (CHANNEL)	REMOVE INLET	REMOVE HW	REMOVE Conc APRON	Abn Culv	Abn INLET	CAP INLET	Adj INLET	8" DIP	18" AP	24" AP	30" AP	36" AP	24" RCP	30" RCP	GLD	36" PC Conc PIPE INLET	HMA	HMA (Misc AREA)	18" AIt FES	24" AIt FES	30" AIt FES	RSP FABRIC	RSP (FACING, METHOD B)	DITCH Exc	Conc DITCH LINING	(N) HEIGHT OF INLET	(N) "JOINT TYPE"	(N) Max COVER	DESCRIPTION	STATION	DRAINAGE UNIT	DRAINAGE SYSTEM No.	DRAINAGE PLAN Sht No.
CY	CY	CY	CY	LB	EA	EA	EA	EA	LB	LF	CY	EA	CY	EA	LF	EA	EA	EA	LF	LF	LF	LF	LF	LF	LF	LF	LF	TON	SQYD	EA	EA	EA	SQYD	CY	CY	CY	FT		FT					
1.32						1			326																												4.2			G1 INLET	20.00 Rt"VV4"10+79.28	d	10	
														1																											REMOVE APRON	116.11 Rt"VV"41+04.20	a	11	D-3
										56																												5	REMOVE 18" RCP		b		
												1																											REMOVE DI	60.15 Rt"VV"41+00.65	c		
																		1																							ADJUST INLET	40.00 Lt"GG"276+73.56	a	12	D-3
																		1																							ADJUST INLET	20.00 Rt"GG"276+50.13	a	13	D-3
												1																												REMOVE DI	27.20 Rt"VV4"14+23.38	a	14	D-3
										32																												5	REMOVE 24" RCP		b		
												1																											REMOVE DI	2.92 Lt"VV4"13+89.94	c		
										31																												5	REMOVE 24" RCP		d		
												1																											REMOVE DI	1.71 Lt"VV4"13+54.78	e		
																	1																						CAP INLET	3.45 Lt"VV4"14+24.30	f		
		5.4													46.3																								Abn 24" RCP		g		
																1																							Abn INLET	12.32 Rt"W"2304+24.29	h		
		5.5													47.0																								Abn 24" RCP		i		
												1																											REMOVE DI	39.85 Lt"W"2304+26.02	j		
1.31						1			326																												3.0			G2 INLET	27.00 Rt"VV4"14+57.76	k		
1.58						2			580																												3.7			GD1 INLET	27.20 Rt"VV4"14+23.39	l		
	26.6																				58.5																	S	1.9	24" AP		m		
1.41						2			580																												3.1			GD1 INLET	20.00 Rt"VV4"13+60.65	n		
	43.8																				96.4																	S	2.1	24" AP		o		
1.65						2			580																												3.9			GD1 INLET	20.00 Rt"VV4"12+57.35	p		
	21.9																				57.0																	S	2.7	24" AP		q		
1.77						2			580																												4.3			GD1 INLET	20.00 Rt"VV4"11+95.00	r		
																					21.1																	P	2.9	24" AP		s		
1.17						1			326																												4.0			G1 INLET	7.00 Lt"VV4"11+95.00	t		
												1																												REMOVE DI	35.29 Rt"VV4"15+23.90	a	15	D-3
1.39						2			580																												3.0			GD1 INLET	35.37 Rt"VV4"15+23.90	b		
	2.0																				4.0																	S	1.2	24" AP		c		
1.28						2			580																												2.7			GD1 INLET	27.37 Rt"VV4"15+24.35	d		
	49.4																				108.7																	S	1.1	24" AP		e		
1.41						2			580																												3.1			GD1 INLET	22.00 Rt"VV4"16+36.74	f		
14.30	143.7	10.9				17			5038	119		6		1	93.3	1	1	2			345.7																			SHEET TOTAL				

2 REVISED PER ADDENDUM NO. 2 DATED APRIL 1, 2010

DRAINAGE QUANTITIES

DQ-4

STATE OF CALIFORNIA - DEPARTMENT OF TRANSPORTATION
Caltrans

CONSULTANT FUNCTIONAL SUPERVISOR: CARLOS A. CADENA
CALCULATED-DESIGNED BY: BARBARA VEALEY
CHECKED BY: BRAD LOSEY
REVISED BY: BML
DATE REVISED: 8-19-09

LAST REVISION 05-18-09 | DATE PLOTTED => 29-MAR-2010 | TIME PLOTTED => 10:09

Dist	COUNTY	ROUTE	POST MILES TOTAL PROJECT	SHEET No.	TOTAL SHEETS
12	Ora	22,405	R0.7/R2.9, 20.4/22.3	232	1006

REGISTERED CIVIL ENGINEER 5/18/09 DATE

9-21-09
PLANS APPROVAL DATE

REGISTERED PROFESSIONAL ENGINEER BRADLEY M. LOSEY No. C65140 Exp. 9/30/11 CIVIL STATE OF CALIFORNIA

THE STATE OF CALIFORNIA OR ITS OFFICERS OR AGENTS SHALL NOT BE RESPONSIBLE FOR THE ACCURACY OR COMPLETENESS OF SCANNED COPIES OF THIS PLAN SHEET.

RBF CONSULTING
14725 ALTON PKWY
IRVINE, CA 92618

ORANGE COUNTY
TRANSPORTATION AUTHORITY
550 SOUTH MAIN STREET
ORANGE, CA 92863

DRAINAGE QUANTITIES

2

MINOR Conc (MINOR Str)	MINOR Conc (Bkf)	SAND Bkf	CLASS 1 Conc (BOX Culv)	BAR Reinf STEEL (BOX Culv)	FRAMES, GRATES, & COVERS (N) MH F & C	24-12	36 R	PLATE	Misc IRON & STEEL	REMOVE Culv	REMOVE Conc (CHANNEL)	REMOVE INLET	REMOVE HW	REMOVE Conc APRON	Abn Culv	Abn INLET	CAP INLET	Adj INLET	8" DIP	18" AP	24" AP	30" AP	36" AP	24" RCP	30" RCP	GLD	36" PC Conc PIPE INLET	HMA	HMA (Misc AREA)	18" Alt FES	24" Alt FES	30" Alt FES	RSP FABRIC	RSP (FACING, METHOD B)	DITCH Exc	Conc DITCH LINING	(N) HEIGHT OF INLET	(N) "JOINT TYPE"	(N) Max COVER	DESCRIPTION	STATION	DRAINAGE UNIT	DRAINAGE SYSTEM No.	DRAINAGE PLAN Sht No.
CY	CY	CY	CY	LB	EA	EA	EA	EA	LB	LF	CY	EA	CY	EA	LF	EA	EA	EA	LF	LF	LF	LF	LF	LF	LF	LF	LF	TON	SQYD	EA	EA	EA	SQYD	CY	CY	CY	FT		FT					
													0.9	1																										REMOVE APRON & HW	21.86 Lt"W"2319+77.46	a	16	D-6
										13																												5	REMOVE 18" RCP		b		
												1																											REMOVE DI	8.43 Lt "W"2319+77.51	c		
												1																												REMOVE DI	21.20 Lt"VV5"14+30.62	a	17	D-3
										16																												5	REMOVE 18" RCP		b		
													0.9	1																										REMOVE APRON & HW	37.23 Lt"VV5"14+30.48	c		
																																		65						BIO-SWALE		d		
																																25.0	6.7							RSP	40.45 Lt"VV5"14+33.85	e		
																														1										18" FES	40.45 Lt"VV5"14+33.85	f		
																				20.7																		S	3.1	18" AP TYPE A		g		
1.62						2			580																												3.8			GD1 INLET	20.00 Lt"VV5"14+30.78	h		
																																		22						BIO-SWALE		a	18	D-3
																																25.0	6.7							RSP	80.00 Lt"E"3306+93.22	b		
																															1									24" FES	80.00 Lt"E"3306+93.22	c		
																					34.3																	S	2.5	24" AP		d		
1.83						2			580																												4.5			GD1 INLET	46.00 Lt"E"3306+96.31	e		
																					71.8																	S	3.3	24" AP		f		
1.86						2			580																												4.6			GD1 INLET	1.50 Rt"H"1306+99.98	g		
																					60.5																	S	2.6	24" AP		h		
																										39.4														GLD		i		
1.86						2			580																												4.6			GD1 INLET	1.50 Rt"H"1307+63.39	j		
																										6.6														GLD		k		
																					126.5																	S	3.4	24" AP		l		
2.21						2			580																												5.8			GD1 INLET	1.50 Rt"H"1308+92.72	m		
																										78.7														GLD		n		
	3.5																				27.0																	S	3.3	24" AP		o		
1.77						2			580																												4.3			GD1 INLET	29.48 Lt"H"1308+92.93	p		
																										68.9														GLD		q		
	43.3																				153.5																	S	2.8	24" AP		r		
1.92						2			580																												4.8			GD1 INLET	28.48 Lt"H"1310+50.21	s		
													0.9	1																										REMOVE APRON & HW	80.36 Lt"E"3308+44.53	a	19	D-3
										52																												5	REMOVE 18" RCP		b		
												1																											REMOVE DI	28.60 Lt"E"3308+38.76	c		
																	1																							CAP INLET	35.22 Rt"W"2308+74.28	a	20	D-3
13.08	46.8					14			4060	81		3	2.7	3			1			20.7	473.6					193.6				1	1		50.0	13.3	87					SHEET TOTAL				

DRAINAGE QUANTITIES

2 REVISED PER ADDENDUM NO. 2 DATED APRIL 1, 2010

DQ-5

BARBARA VEALEY | BRAD LOSEY | CALCULATED-DESIGNED BY | CHECKED BY | CONSULTANT FUNCTIONAL SUPERVISOR | CARLOS A. CADENA | REVISED BY BML | DATE REVISED 6-15-09

STATE OF CALIFORNIA - DEPARTMENT OF TRANSPORTATION

Caltrans

LAST REVISION 05-18-09 | DATE PLOTTED => 30-MAR-2010 | TIME PLOTTED => 11:42

Dist	COUNTY	ROUTE	POST MILES TOTAL PROJECT	SHEET No.	TOTAL SHEETS
12	Ora	22,405	R0.7/R2.9, 20.4/22.3	233	1006

REGISTERED CIVIL ENGINEER 5/18/09 DATE

9-21-09
PLANS APPROVAL DATE

REGISTERED PROFESSIONAL ENGINEER BRADLEY M. LOSEY No. C65140 Exp. 9/30/11 CIVIL STATE OF CALIFORNIA

THE STATE OF CALIFORNIA OR ITS OFFICERS OR AGENTS SHALL NOT BE RESPONSIBLE FOR THE ACCURACY OR COMPLETENESS OF SCANNED COPIES OF THIS PLAN SHEET.

RBF CONSULTING
14725 ALTON PKWY
IRVINE, CA 92618

ORANGE COUNTY
TRANSPORTATION AUTHORITY
550 SOUTH MAIN STREET
ORANGE, CA 92863

DRAINAGE QUANTITIES

2

MINOR Conc (MINOR Str)	MINOR Conc (Bkf)	SAND Bkf	CLASS 1 Conc (BOX Culv)	BAR Reinf STEEL (BOX Culv)	FRAMES, GRATES, & COVERS (N) MH F & C	24-12	36 R	PLATE	Misc IRON & STEEL	REMOVE Culv	REMOVE Conc (CHANNEL)	REMOVE INLET	REMOVE HW	REMOVE Conc APRON	Abn Culv	Abn INLET	CAP INLET	Adj INLET	8" DIP	18" AP	24" AP	30" AP	36" AP	24" RCP	30" RCP	GLD	36" PC Conc PIPE INLET	HMA	HMA (Misc AREA)	18" AIt FES	24" AIt FES	30" AIt FES	RSP FABRIC	RSP (FACING, METHOD B)	DITCH Exc	Conc DITCH LINING	(N) HEIGHT OF INLET	(N) "JOINT TYPE"	(N) Max COVER	DESCRIPTION	STATION	DRAINAGE UNIT	DRAINAGE SYSTEM No.	DRAINAGE PLAN Sht No.
CY	CY	CY	CY	LB	EA	EA	EA	EA	LB	LF	CY	EA	CY	EA	LF	EA	EA	EA	LF	LF	LF	LF	LF	LF	LF	LF	LF	TON	SQYD	EA	EA	EA	SQYD	CY	CY	CY	FT		FT					
										18																												5	REMOVE 24" RCP		b	20	D-3
												1																													REMOVE DI	27.91 Lt"W"2308+76.15	c		
1.64						1			326																												4.3				G2 INLET	10.00 Lt"W"2308+75.52	d		
	21.2																				46.6																	S	2.4	24" AP		e		
1.80						2			580																												4.4				GD1 INLET	10.00 Lt"W"2309+25.08	f		
	12.0																				26.5																	S	2.3	24" AP		g		
																										26.0															GLD		h		
1.77						2			580																												4.3				GD1 INLET	10.00 Lt"W"2309+54.58	i		
																										78.0															GLD		j		
	29.3																			90.5																		S	2.3	18" AP TYPE A		k		
1.62						2			580																												3.8				GD1 INLET	10.00 Lt"W"2310+48.14	l		D-6
1.88						2			580																												4.7				GD1 INLET	46.00 Rt"W"2304+24.62	a	21	D-3
																				37.4																		S	3.0	18" AP TYPE A		b		
1.79						2			580																												4.4				GD1 INLET	46.00 Rt"W"2304+64.04	c		
										33																													5	REMOVE 18" RCP		a	22	D-4
												1																												REMOVE DI	47.25 Rt"VV"37+99.81	b		
1.38							1		174																												2.9				OS INLET	47.34 Rt"VV"38+00.63	c		
	4.5																			14.0																		S	2.2	18" AP TYPE B		d		
1.22							1		174																												2.3				OS INLET	51.27 Rt"VV"38+17.58	e		
																		1																							ADJUST INLET	30.57 Lt"VV"38+00.42	a	23	D-4
													1.2																												REMOVE HW		a	24	D-3
											18																													REMOVE PCC CHANNEL	143.4 Rt"VV"40+67 TO 151.9 Rt"VV"41+34	b		
			0.2	200																																				RCB TO RCB Conn	143.36 Rt"VV"40+67.36	c		
			23.6	3936																																				4' X 4' RCB		d		
16.88																																								TYPE B WW	151.89 Rt"VV"41+34.44	e		
												1																												REMOVE DI	8.96 Lt"NB405"308+67.62	a	25	D-4
										165																														REMOVE 18" SCSP		b		
												1																												REMOVE DI	11.15 Lt"NB405"310+37.03	c		
										160																														REMOVE 18" SCSP		d		
												1																												REMOVE DI	13.46 Lt"NB405"312+03.35	e		D-6
										201																														REMOVE 18" SCSP		f		
29.98	67.0		23.8	4136		11		2	3574	577	18	5	1.2					1		141.9	73.1					104.0														SHEET TOTAL				

2 REVISED PER ADDENDUM No. 2 DATED APRIL 1, 2010

DRAINAGE QUANTITIES

DQ-6

BARBARA VEALEY — BRAD LOSEY — REVISED BY BML — DATE REVISED 6-15-09 — CALCULATED-DESIGNED BY — CHECKED BY — CONSULTANT FUNCTIONAL SUPERVISOR CARLOS A. CADENA

STATE OF CALIFORNIA - DEPARTMENT OF TRANSPORTATION Caltrans

LAST REVISION 05-18-09 — DATE PLOTTED => 29-MAR-2010 — TIME PLOTTED => 11:10

Dist	COUNTY	ROUTE	POST MILES TOTAL PROJECT	SHEET No.	TOTAL SHEETS
12	Ora	22,405	R0.7/R2.9, 20.4/22.3	234	1006

REGISTERED CIVIL ENGINEER 5/18/09 DATE

9-21-09
PLANS APPROVAL DATE

REGISTERED PROFESSIONAL ENGINEER BRADLEY M. LOSEY No. C65140 Exp. 9/30/11 CIVIL STATE OF CALIFORNIA

THE STATE OF CALIFORNIA OR ITS OFFICERS OR AGENTS SHALL NOT BE RESPONSIBLE FOR THE ACCURACY OR COMPLETENESS OF SCANNED COPIES OF THIS PLAN SHEET.

RBF CONSULTING
14725 ALTON PKWY
IRVINE, CA 92618

ORANGE COUNTY
TRANSPORTATION AUTHORITY
550 SOUTH MAIN STREET
ORANGE, CA 92863

DRAINAGE QUANTITIES

2

MINOR Conc (MINOR Str)	MINOR Conc (Bkf)	SAND Bkf	CLASS 1 Conc (BOX Culv)	BAR Reinf STEEL (BOX Culv)	FRAMES, GRATES, & COVERS (N) MH F & C	24-12	36 R	PLATE	Misc IRON & STEEL	REMOVE Culv	REMOVE Conc (CHANNEL)	REMOVE INLET	REMOVE HW	REMOVE Conc APRON	Abn Culv	Abn INLET	CAP INLET	Adj INLET	8" DIP	18" AP	24" AP	30" AP	36" AP	24" RCP	30" RCP	GLD	36" PC Conc PIPE INLET	HMA	HMA (Misc AREA)	18" AIt FES	24" AIt FES	30" AIt FES	RSP FABRIC	RSP (FACING, METHOD B)	DITCH Exc	Conc DITCH LINING	(N) HEIGHT OF INLET	(N) "JOINT TYPE"	(N) Max COVER	DESCRIPTION	STATION	DRAINAGE UNIT	DRAINAGE SYSTEM No.	DRAINAGE PLAN Sht No.
CY	CY	CY	CY	LB	EA	EA	EA	EA	LB	LF	CY	EA	CY	EA	LF	EA	EA	EA	LF	LF	LF	LF	LF	LF	LF	LF	LF	TON	SQYD	EA	EA	EA	SQYD	CY	CY	CY	FT		FT					
												1																												REMOVE DI	17.42 L+"NB405"314+07.52	g	25	D-6
										146																														REMOVE 18" SCSP		h		
											53																														REMOVE PCC DITCH	105.5R+"NB405"308+33 TO 87.4R+"NB405"311+36	a	26	D-4/6
										200			2.4																										36	REMOVE 24" RCP & HW	87.4R+"NB405"311+36 TO 49.6L+"W"2311+95	b		D-6
											22																														REMOVE PCC DITCH	49.6 L+"W"2311+95 TO 45.4 L+"W"2313+30	a	27	D-6
1.90																																									HW & WW	43.84 L+"W"2313+31.16	b		
																					50.9																	S	10.0	24" AP		c		
0.58					1				435																												11.3			MH No. 1	16.29 L+"W"2312+85.79	d		
																					193.5																	S	10.2	24" AP		e		
0.58					1				435																												9.7			MH No. 1	13.55 L+"W"2310+84.78	f		
																					208.5																	S	39.5	24" AP		g		
0.58					1				435																												11.7			MH No. 1	97.77 R+"NB405"310+96.59	h		
																					270.7																	S	9.6	24" AP		i		
3.36																																									HW & WW	105.53 R+"NB405"308+32.53	j		D-4
													0.9	1																											REMOVE APRON & HW	25.72 R+"VV3"10+48.27	a	28	D-5
										5																												5	REMOVE 18" RCP		b		
												1																												REMOVE INLET	20.37 R+"VV3"10+48.27	c		
										10																													5	REMOVE 18" RCP		a	29	D-5
												1																												REMOVE DI	47.00 L+"VV"50+76.55	b		
																																									CONCRETE COLLAR	60.31 L+"VV"50+77.65	c		
	1.9																			5.5																		P	2.8	18" AP TYPE B		d		
1.72								1	174																												4.1			OS INLET	51.52 L+"VV"50+76.91	e		
												1																													REMOVE DI	32.07 L+"VV"48+75.48	a	30	D-5
1.68						2			580																												4.0			GD1 INLET	34.57 L+"VV"48+75.61	b		
												1																													REMOVE DI	10.03 R+"VV3"6+37.26	a	31	D-5
										24																												5	REMOVE 18" RCP		b		
													0.9	1																										REMOVE APRON & HW	33.96 R+"VV3"6+38.81	c		
																																			43					SWALE		d		
																																	36.1	13.3						RSP	80.00 R+"VV3"6+41.11	e		
																															1									24" FES	81.00 R+"VV3"6+41.21	f		
																					57.6																	S	7.1	24" AP		g		
2.77								1	174																												7.9			OS INLET	20.00 R+"VV3"6+38.00	h		
																				29.7																		S	6.0	18" AP TYPE A		i		
13.17	1.9				3	2		2	2233	385	76	5	4.2	2						35.2	781.2									1		36.1	13.3	43					SHEET TOTAL				

2 REVISED PER ADDENDUM No. 2 DATED APRIL 1, 2010

DRAINAGE QUANTITIES

DQ-7

BARBARA VEALEY | REVISED BY | BML
BRAD LOSEY | DATE REVISED | 8-19-09
CALCULATED-DESIGNED BY
CHECKED BY
CONSULTANT FUNCTIONAL SUPERVISOR
CARLOS A. CADENA

STATE OF CALIFORNIA - DEPARTMENT OF TRANSPORTATION
Caltrans

LAST REVISION 05-18-09 | DATE PLOTTED => 29-MAR-2010 | TIME PLOTTED => 11:10

Dist	COUNTY	ROUTE	POST MILES TOTAL PROJECT	SHEET No.	TOTAL SHEETS
12	Ora	22,405	R0.7/R2.9, 20.4/22.3	235	1006

REGISTERED CIVIL ENGINEER 5/18/09 DATE

9-21-09
PLANS APPROVAL DATE

REGISTERED PROFESSIONAL ENGINEER BRADLEY M. LOSEY No. C65140 Exp. 9/30/11 CIVIL STATE OF CALIFORNIA

THE STATE OF CALIFORNIA OR ITS OFFICERS OR AGENTS SHALL NOT BE RESPONSIBLE FOR THE ACCURACY OR COMPLETENESS OF SCANNED COPIES OF THIS PLAN SHEET.

RBF CONSULTING
14725 ALTON PKWY
IRVINE, CA 92618

ORANGE COUNTY
TRANSPORTATION AUTHORITY
550 SOUTH MAIN STREET
ORANGE, CA 92863

DRAINAGE QUANTITIES

2

MINOR Conc (MINOR Str) CY	MINOR Conc (Bkf) CY	SAND Bkf CY	CLASS 1 Conc (BOX Culv) CY	BAR Reinf STEEL (BOX Culv) LB	FRAMES, GRATES, & COVERS (N) MH F & C EA	24-12 EA	36 R EA	PLATE EA	Misc IRON & STEEL LB	REMOVE Culv LF	REMOVE Conc (CHANNEL) CY	REMOVE INLET EA	REMOVE HW CY	REMOVE Conc APRON EA	Abn Culv LF	Abn INLET EA	CAP INLET EA	Adj INLET EA	8" DIP LF	18" AP LF	24" AP LF	30" AP LF	36" AP LF	24" RCP LF	30" RCP LF	GLD LF	36" PC Conc PIPE INLET LF	HMA TON	HMA (Misc AREA) SQYD	18" Alt FES EA	24" Alt FES EA	30" Alt FES EA	RSP FABRIC SQYD	RSP (FACING, METHOD B) CY	DITCH Exc CY	Conc DITCH LINING CY	(N) HEIGHT OF INLET FT	(N) "JOINT TYPE"	(N) Max COVER FT	DESCRIPTION	STATION	DRAINAGE UNIT	DRAINAGE SYSTEM No.	DRAINAGE PLAN Sht No.
2.03								1	174																												5.2			OS INLET	20.00 R+"VV3"6+71.21	j	31	D-5
													0.9	1																											REMOVE APRON & HW	50.00 L+"E"3311+14.04	a	32	D-6
										48																													5	REMOVE 18" RCP		b		
												1																												REMOVE DI	2.58 L+"E"3311+07.67	c		
																																									Conc COLLAR	14.81 L+"NB405"312+01.38	a	33	D-6
	2.2																				5.3																	S	2.1	24" AP		b		
1.77						2			580																												4.3			GD1 INLET	9.50 L+"NB405"312+01.47	c		
	63.9																				140.5																	S	2.1	24" AP		d		
1.59						2			580																												3.7			GD1 INLET	3.88 L+"NB405"313+45.05	e		
	34.4																				75.7																	S	1.7	24" AP		f		
1.50						2			580																												3.4			GD1 INLET	4.81 L+"NB405"314+23.84	g		
	13.5																			41.8																		S	1.7	18" AP TYPE A		h		
1.30						2			580																												2.7			GD1 INLET	9.50 L+"NB405"314+68.44	i		
																																								PIPE TO DITCH Conn	99.76 L+"SB405"312+27.15	a	34	D-6
	13.5																				29.8																	S	2.2	24" AP		b		
1.74						2			580																												4.2			GD1 INLET	70.00 L+"SB405"312+24.60	c		
	11.6																				33.9																	S	2.3	24" AP		d		
1.89						2			580																												5.2			GD1 INLET	70.00 L+"SB405"311+86.64	e		
																				93.4																		S	2.5	18" AP TYPE A		f		
1.83						2			580																												4.0			GD1 INLET	70.00 L+"SB405"310+87.53	g		
																																			3	7.6				TYPE A DITCH		a	35	D-6
1.20																																								HW	41.42 L+"H"1313+35.46	b		
																					97.4																	S	6.0	24" AP		c		
0.58					1				435																												5.6			MH No. 1	74.12 L+"H"1312+38.38	d		
																					70.5																	D	3.5	24" AP		e		
2.01						2			580																												5.1			GD1 INLET	28.05 L+"H"1311+90.17	f		
																				26.6																		S	3.3	18" AP TYPE A		g		
1.86						2			580																												4.6			GD1 INLET	1.50 R+"H"1311+90.11	h		
													0.9	1																										REMOVE APRON & HW	30.00 L+"W"2313+00.95	a	36	D-6
										12																													5	REMOVE 18" RCP		b		
												1																												REMOVE DI	17.76 L+"W"2313+01.24	c		
										48																													10	REMOVE 24" RCP		a	37	D-6
19.30	139.1				1	18		1	5829	108		2	1.8	2						161.8	453.1														3	7.6				SHEET TOTAL				

2 REVISED PER ADDENDUM No. 2 DATED APRIL 1, 2010

DRAINAGE QUANTITIES

DQ-8

STATE OF CALIFORNIA - DEPARTMENT OF TRANSPORTATION
Caltrans

CONSULTANT FUNCTIONAL SUPERVISOR: CARLOS A. CADENA
CALCULATED-DESIGNED BY: BARBARA VEALEY
CHECKED BY: BRAD LOSEY
REVISED BY: BML
DATE REVISED: 8-19-09

LAST REVISION 05-18-09
DATE PLOTTED => 29-MAR-2010
TIME PLOTTED => 11:10

Dist	COUNTY	ROUTE	POST MILES TOTAL PROJECT	SHEET No.	TOTAL SHEETS
12	Ora	22,405	R0.7/R2.9, 20.4/22.3	236	1006

REGISTERED CIVIL ENGINEER 5/18/09 DATE

9-21-09
PLANS APPROVAL DATE

REGISTERED PROFESSIONAL ENGINEER BRADLEY M. LOSEY No. C65140 Exp. 9/30/11 CIVIL STATE OF CALIFORNIA

THE STATE OF CALIFORNIA OR ITS OFFICERS OR AGENTS SHALL NOT BE RESPONSIBLE FOR THE ACCURACY OR COMPLETENESS OF SCANNED COPIES OF THIS PLAN SHEET.

RBF CONSULTING
14725 ALTON PKWY
IRVINE, CA 92618

ORANGE COUNTY
TRANSPORTATION AUTHORITY
550 SOUTH MAIN STREET
ORANGE, CA 92863

DRAINAGE QUANTITIES

2

MINOR Conc (MINOR Str)	MINOR Conc (Bkf)	SAND Bkf	CLASS 1 Conc (BOX Culv)	BAR Reinf STEEL (BOX Culv)	FRAMES, GRATES, & COVERS (N) MH F & C	24-12	36 R	PLATE	Misc IRON & STEEL	REMOVE Culv	REMOVE Conc (CHANNEL)	REMOVE INLET	REMOVE HW	REMOVE Conc APRON	Abn Culv	Abn INLET	CAP INLET	Adj INLET	8" DIP	18" AP	24" AP	30" AP	36" AP	24" RCP	30" RCP	GLD	36" PC Conc PIPE INLET	HMA	HMA (Misc AREA)	18" AIt FES	24" AIt FES	30" AIt FES	RSP FABRIC	RSP (FACING, METHOD B)	DITCH Exc	Conc DITCH LINING	(N) HEIGHT OF INLET	(N) "JOINT TYPE"	(N) Max COVER	DESCRIPTION	STATION	DRAINAGE UNIT	DRAINAGE SYSTEM No.	DRAINAGE PLAN Sht No.
CY	CY	CY	CY	LB	EA	EA	EA	EA	LB	LF	CY	EA	CY	EA	LF	EA	EA	EA	LF	LF	LF	LF	LF	LF	LF	LF	LF	TON	SQYD	EA	EA	EA	SQYD	CY	CY	CY	FT		FT					
																																								Conc COLLAR	66.15 L+"SB405"317+43.47	b	37	D-6
																								20.6														P	8.1		24" RCP		c		
2.43						2			580																												6.5				GD1 INLET	66.85 L+"SB405"317+21.10	d		
																								100.8														S	4.6		24" RCP		e		
1.89						2			580																												4.7				GD1 INLET	70.00 L+"SB405"316+14.53	f		
																					17.9																	S	2.6		24" AP		g		
1.83						2			580																												4.5				GD1 INLET	70.00 L+"SB405"315+93.00	h		
																					23.9																	S	2.4		24" AP		i		
0.70							1		236																		3.8										3.3				GCP INLET	94.50 L+"SB405"315+86.29	j		
																					132.3																	S	1.4		24" AP		k		
5.28																																									HW & WW	115.0 L+"SB405"314+48.23	l		
																																			90	32.5					TYPE B DITCH		m		
											22																														REMOVE PCC DITCH	99.5 L+"SB405"311+97 TO 59.9 L+"SB405"317+00	a	38	D-6
		3.3													28.7																										Abn 24" RCP		b		
																1																									Abn DI	35.37 L+"SB405"316+24.66	c		
		8.8													75.6																										Abn 24" RCP		d		
												1																													REMOVE DI	42.47 R+"SB405"316+40.81	e		
												1																													REMOVE DI	26.27 L+"BC1"16+22.94	a	39	D-6
																																									Conc COLLAR	26.27 L+"BC1"16+22.94	b		
																				6.4																		S	3.4		18" AP TYPE A		c		
1.17						1			326																												4.3				G1 INLET	20.00 L+"BC1"16+24.24	d		
													0.9	1																											REMOVE APRON & HW	26.89 L+"W"2316+71.20	a	40	D-6
										15																													5	REMOVE 18" RCP		b		
												1																													REMOVE DI	12.39 L+"W"2316+71.04	c		
																					48.9																	S	5.2		24" AP		a	41	D-6
																																									Conc COLLAR	18.23 L+"SB405"318+70.27	b		
1.71						2			580																												4.1				GD1 INLET	19.84 R+"SB405"318+67.34	c		
																																									Conc COLLAR	16.04 L+"NB405"318+56.47	d		
																					6.3																	S	2.6		24" AP		e		
1.92						2			580																												4.8				GD1 INLET	9.50 L+"NB405"318+56.11	f		
																				29.5																		S	2.6		18" AP TYPE A		g		
1.76						2			580																												4.3				GD1 INLET	9.50 L+"NB405"318+23.57	h		
18.68		12.1				13	1		4042	15	22	3	0.9	1	104.3	1				35.9	229.3			121.4			3.8								90	32.5				SHEET TOTAL				

2 **REVISED PER ADDENDUM No. 2 DATED APRIL 1, 2010**

DRAINAGE QUANTITIES

DQ-9

BARBARA VEALEY — REVISED BY — BML
BRAD LOSEY — DATE REVISED — 8-19-09
CALCULATED-DESIGNED BY
CHECKED BY
CONSULTANT FUNCTIONAL SUPERVISOR — CARLOS A. CADENA

STATE OF CALIFORNIA - DEPARTMENT OF TRANSPORTATION
Caltrans

LAST REVISION 05-18-09 | DATE PLOTTED => 29-MAR-2010 | TIME PLOTTED => 11:11

Dist	COUNTY	ROUTE	POST MILES TOTAL PROJECT	SHEET No.	TOTAL SHEETS
12	Ora	22,405	R0.7/R2.9, 20.4/22.3	238	1006

REGISTERED CIVIL ENGINEER 5/18/09 DATE

9-21-09
PLANS APPROVAL DATE

REGISTERED PROFESSIONAL ENGINEER BRADLEY M. LOSEY No. C65140 Exp. 9/30/11 CIVIL STATE OF CALIFORNIA

THE STATE OF CALIFORNIA OR ITS OFFICERS OR AGENTS SHALL NOT BE RESPONSIBLE FOR THE ACCURACY OR COMPLETENESS OF SCANNED COPIES OF THIS PLAN SHEET.

RBF CONSULTING
14725 ALTON PKWY
IRVINE, CA 92618

ORANGE COUNTY
TRANSPORTATION AUTHORITY
550 SOUTH MAIN STREET
ORANGE, CA 92863

DRAINAGE QUANTITIES

2

MINOR Conc (MINOR Str)	MINOR Conc (Bkf)	SAND Bkf	CLASS 1 Conc (BOX Culv)	BAR Reinf STEEL (BOX Culv)	FRAMES, GRATES, & COVERS (N) MH F & C	24-12	36 R	PLATE	Misc IRON & STEEL	REMOVE Culv	REMOVE Conc (CHANNEL)	REMOVE INLET	REMOVE HW	REMOVE Conc APRON	Abn Culv	Abn INLET	CAP INLET	Adj INLET	8" DIP	18" AP	24" AP	30" AP	36" AP	24" RCP	30" RCP	GLD	36" PC Conc PIPE INLET	HMA	HMA (Misc AREA)	18" Alt FES	24" Alt FES	30" Alt FES	RSP FABRIC	RSP (FACING, METHOD B)	DITCH Exc	Conc DITCH LINING	(N) HEIGHT OF INLET	(N) "JOINT TYPE"	(N) Max COVER	DESCRIPTION	STATION	DRAINAGE UNIT	DRAINAGE SYSTEM No.	DRAINAGE PLAN Sht No.
CY	CY	CY	CY	LB	EA	EA	EA	EA	LB	LF	CY	EA	CY	EA	LF	EA	EA	EA	LF	LF	LF	LF	LF	LF	LF	LF	LF	TON	SQYD	EA	EA	EA	SQYD	CY	CY	CY	FT		FT					
																			9.0																					8" DIP		a	43	D-7
						1			326																												4.2			Mod G3 INLET	27.50 Lt"H"1330+10.00	b		
																					175.0																	S	2.6	24" AP		a	44	D-6
1.81						2			580																												4.4			GD1 INLET	9.50 Lt"NB405"319+79.36	b		
										74																													10	REMOVE 24" RCP		a	45	D-6
												1																												REMOVE JS	37.95 Lt"SB405"318+69.16	b		
										50																													5	REMOVE 24" RCP		c		
												1																												REMOVE JS	37.07 Lt"SB405"319+42.65	d		
										66																													5	REMOVE 24" RCP		e		
										49																													5	REMOVE 24" RCP		f		
												1																												REMOVE DI	88.88 Lt"SB405"319+42.39	g		
										24																													5	REMOVE 24" RCP		h		
												1																												REMOVE DI	22.82 Lt"SB405"318+70.53	i		
										23																													5	REMOVE 24" RCP		j		
												1																												REMOVE DI	22.60 Lt"SB405"318+43.59	k		
										14																													5	REMOVE 24" RCP		l		
												1																												REMOVE DI	24.04 Lt"SB405"318+16.18	m		
										23																													5	REMOVE 24" RCP		n		
												1																												REMOVE DI	19.00 Lt"SB405"318+97.15	o		
												1																												REMOVE DI	16.04 Lt"NB405"318+56.47	p		
										245																														REMOVE GLD		q		
										311																													5	REMOVE 18" RCP		r		
										311																														REMOVE GLD		s		
												1																												REMOVE DI	2.29 Lt"NB405"321+72.10	t		D-7
										229																														REMOVE GLD		u		
										187																														REMOVE GLD		v		
												1																												REMOVE DI	18.52 Rt"NB405"325+97.92	w		
										94																													5	REMOVE 18" RCP		x		
												1																												REMOVE DI	15.88 Rt"NB405"326+94.87	y		
										54																													5	REMOVE 18" RCP		z		
												1																												REMOVE DI	13.16 Rt"NB405"327+52.08	aa		
										99																													5	REMOVE 18" RCP		bb		
1.81						3			906	1851		12							9.0		175.0																			SHEET TOTAL				

2 **REVISED PER ADDENDUM No. 2 DATED APRIL 1, 2010**

DRAINAGE QUANTITIES

DQ-11

BARBARA VEALEY | REVISED BY | BML
BRAD LOSEY | DATE REVISED | 6-15-09
CALCULATED-DESIGNED BY
CHECKED BY
CONSULTANT FUNCTIONAL SUPERVISOR
CARLOS A. CADENA

STATE OF CALIFORNIA - DEPARTMENT OF TRANSPORTATION
Caltrans

LAST REVISION 05-18-09 | DATE PLOTTED => 29-MAR-2010 | TIME PLOTTED => 11:11

Dist	COUNTY	ROUTE	POST MILES TOTAL PROJECT	SHEET No.	TOTAL SHEETS
12	Ora	22,405	R0.7/R2.9, 20.4/22.3	239	1006

REGISTERED CIVIL ENGINEER 5/18/09 DATE

9-21-09
PLANS APPROVAL DATE

REGISTERED PROFESSIONAL ENGINEER BRADLEY M. LOSEY No. C65140 Exp. 9/30/11 CIVIL STATE OF CALIFORNIA

THE STATE OF CALIFORNIA OR ITS OFFICERS OR AGENTS SHALL NOT BE RESPONSIBLE FOR THE ACCURACY OR COMPLETENESS OF SCANNED COPIES OF THIS PLAN SHEET.

RBF CONSULTING
14725 ALTON PKWY
IRVINE, CA 92618

ORANGE COUNTY
TRANSPORTATION AUTHORITY
550 SOUTH MAIN STREET
ORANGE, CA 92863

DRAINAGE QUANTITIES

2

MINOR Conc (MINOR Str)	MINOR Conc (Bkf)	SAND Bkf	CLASS 1 Conc (BOX Culv)	BAR Reinf STEEL (BOX Culv)	FRAMES, GRATES, & COVERS (N) MH F & C	24-12	36 R	PLATE	Misc IRON & STEEL	REMOVE Culv	REMOVE Conc (CHANNEL)	REMOVE INLET	REMOVE HW	REMOVE Conc APRON	Abn Culv	Abn INLET	CAP INLET	Adj INLET	8" DIP	18" AP	24" AP	30" AP	36" AP	24" RCP	30" RCP	GLD	36" PC Conc PIPE INLET	HMA	HMA (Misc AREA)	18" Alt FES	24" Alt FES	30" Alt FES	RSP FABRIC	RSP (FACING, METHOD B)	DITCH Exc	Conc DITCH LINING	(N) HEIGHT OF INLET	(N) "JOINT TYPE"	(N) Max COVER	DESCRIPTION	STATION	DRAINAGE UNIT	DRAINAGE SYSTEM No.	DRAINAGE PLAN Sht No.
CY	CY	CY	CY	LB	EA	EA	EA	EA	LB	LF	CY	EA	CY	EA	LF	EA	EA	EA	LF	LF	LF	LF	LF	LF	LF	LF	LF	TON	SQYD	EA	EA	EA	SQYD	CY	CY	CY	FT		FT					
																				98.5																		S	2.7	18" AP TYPE A		a	46	D-7
1.49						1			326																												3.7			G2 INLET	9.50 R+"SB405"326+35.64	b		
																			20.3																					8" DIP		c		
						1			326																												1.3			Mod G3 INLET	27.50 L+"H"1326+39.90	d		
											87																														REMOVE PCC DITCH	80.3 R+"W"2318+27 TO 79.5 R+"W"2323+69	a	47	D-7
												1																													REMOVE DI	3.59 L+"W"2323+64.95	b		
																																	8.2	1.7							RSP	81.49 R+"W"2318+25.78	c		D-6
																																			35						BIO-SWALE		d		
																																	11.1	2.7							RSP	79.45 R+"W"2323+57.41	e		D-7
																																									Conc COLLAR	1.99 L+"W"2323+64.95	f		
																					4.0																	S	2.6	24" AP		g		
1.79						2			580																												4.4			GD1 INLET	10.00 L+"W"2323+64.94	h		
																					141.0																	S	2.3	24" AP		i		
1.80						2			580																												3.2			GD1 INLET	10.00 L+"W"2325+09.15	j		
													1.2	1																										REMOVE APRON & HW	74.50 R+"E"3321+88.13	a	48	D-7
										105																													5	REMOVE 24" RCP		b		
												1																												REMOVE DI	32.00 L+"E"3321+75.51	c		
													0.9	1																											REMOVE APRON & HW	40.31 R+"E"3323+60.67	a	49	D-7
										22																													5	REMOVE 18" RCP		b		
												1																												REMOVE DI	18.12 R+"E"3323+58.44	c		
																					32.8																	P	4.0	24" AP		a	50	D-7
2.04						2			580																												6.1			GD1 INLET	10.00 R+"E"3323+86.34	b		
																				41.8																		S	4.1	18" AP TYPE A		c		
1.77						2			580																												4.3			GD1 INLET	10.00 R+"E"3323+41.62	d		
5.01																																									JS No. 3	136.61 L+"A"392+63.88	a	51	D-13
																							236.6												8			S	2.8	36" AP		b		
1.37							1		236																		0.7										4.2			Mod MH No. 2	135.40 L+"A"390+24.92	c		D-12
																							285.1												8			S	2.0	36" AP		d		
1.37							1		236																		1.5										5.0			Mod MH No. 2	137.44 L+"A"387+35.17	e		
																							145.2												8			S	2.0	36" AP		f		
1.37							1		236																		0.9										4.4			Mod MH No. 2	135.47 L+"A"385+85.33	g		
																							49.8												8			S	3.7	36" AP		h		
1.37							1		236																		3.6										7.1			Mod MH No. 2	129.11 L+"A"385+31.29	i		
																							31.3												8			S	4.5	36" AP		j		
1.37							1		236																		1.3										4.8			Mod MH No. 2	136.45 L+"A"384+96.15	k		
20.76						10	5		4152	127	87	3	2.1	2					20.3	140.3	177.8		748.0				7.9						19.3	4.3	75					SHEET TOTAL				

2 REVISED PER ADDENDUM No. 2 DATED APRIL 1, 2010

DRAINAGE QUANTITIES

DQ-12

BARBARA VEALEY | BRAD LOSEY | REVISED BY BML | DATE REVISED 8-19-09 | CALCULATED-DESIGNED BY | CHECKED BY | CONSULTANT FUNCTIONAL SUPERVISOR CARLOS A. CADENA

STATE OF CALIFORNIA - DEPARTMENT OF TRANSPORTATION Caltrans

LAST REVISION 05-18-09 | DATE PLOTTED => 29-MAR-2010 | TIME PLOTTED => 11:11

Dist	COUNTY	ROUTE	POST MILES TOTAL PROJECT	SHEET No.	TOTAL SHEETS
12	Ora	22,405	R0.7/R2.9, 20.4/22.3	242	1006

REGISTERED CIVIL ENGINEER 5/18/09 DATE

9-21-09
PLANS APPROVAL DATE

REGISTERED PROFESSIONAL ENGINEER BRADLEY M. LOSEY No. C65140 Exp. 9/30/11 CIVIL STATE OF CALIFORNIA

THE STATE OF CALIFORNIA OR ITS OFFICERS OR AGENTS SHALL NOT BE RESPONSIBLE FOR THE ACCURACY OR COMPLETENESS OF SCANNED COPIES OF THIS PLAN SHEET.

RBF CONSULTING
14725 ALTON PKWY
IRVINE, CA 92618

ORANGE COUNTY
TRANSPORTATION AUTHORITY
550 SOUTH MAIN STREET
ORANGE, CA 92863

DRAINAGE QUANTITIES

2

MINOR Conc (MINOR Str)	MINOR Conc (Bkf)	SAND Bkf	CLASS 1 Conc (BOX Culv)	BAR Reinf STEEL (BOX Culv)	FRAMES, GRATES, & COVERS (N) MH F & C	24-12	36 R	PLATE	Misc IRON & STEEL	REMOVE Culv	REMOVE Conc (CHANNEL)	REMOVE INLET	REMOVE HW	REMOVE Conc APRON	Abn Culv	Abn INLET	CAP INLET	Adj INLET	8" DIP	18" AP	24" AP	30" AP	36" AP	24" RCP	30" RCP	GLD	36" PC Conc PIPE INLET	HMA	HMA (Misc AREA)	18" AIt FES	24" AIt FES	30" AIt FES	RSP FABRIC	RSP (FACING, METHOD B)	DITCH Exc	Conc DITCH LINING	(N) HEIGHT OF INLET	(N) "JOINT TYPE"	(N) Max COVER	DESCRIPTION	STATION	DRAINAGE UNIT	DRAINAGE SYSTEM No.	DRAINAGE PLAN Sht No.
CY	CY	CY	CY	LB	EA	EA	EA	EA	LB	LF	CY	EA	CY	EA	LF	EA	EA	EA	LF	LF	LF	LF	LF	LF	LF	LF	LF	TON	SQYD	EA	EA	EA	SQYD	CY	CY	CY	FT		FT					
	79.3																				174.5																	S	2.3	24" AP		c	54	D-7
1.64						1			326																												4.3			G2 INLET	9.50 R+"SB405"329+73.19	d		
	13.4																				29.5																	S	2.2	24" AP		e		
1.62						1			326																												4.2			G2 INLET	9.50 R+"SB405"330+05.72	f		
	60.6																				133.3																	S	2.1	24" AP		g		
1.95						2			580																												4.1			GD1 INLET	9.50 R+"SB405"331+42.02	h		
																										82.0														GLD		i		
																			15.3																				2.4	8" DIP		a	55	D-7
						1			326																												1.3			Mod G3 INLET	27.50 L+"H"1328+00.00	b		
												1																													REMOVE DI	9.11 L+"NB405"332+02.07	a	56	D-8
										23																												5	REMOVE 18" RCP		b		
																																								Conc COLLAR	4.21 R+"NB405"332+04.93	c		
																				11.1																		S	3.3	18" AP TYPE A		d		
1.75						1			326																												4.7			G2 INLET	9.50 L+"NB405"332+02.06	e		
	73.3																				219.0																	S	2.7	24" AP		f		
1.71						2			580																												4.1			GD1 INLET	9.50 L+"NB405"329+80.05	g		D-7
																										65.6														GLD		h		
	31.5																				69.2																	S	2.0	24" AP		i		
1.65						2			580																												3.9			GD1 INLET	9.50 L+"NB405"329+07.83	j		
																										68.9														GLD		k		
	32.7																			84.2																		S	1.9	18" AP TYPE A		l		
1.37						2			580																												3.0			GD1 INLET	9.50 L+"NB405"328+20.63	m		
																										29.5														GLD		n		
										265																														REMOVE GLD	9.7R+"NB405"328+26 TO 8.7L+"NB405"332+00	a	57	D-7/8
																			9.8																				2.4	8" DIP		a	58	D-7
						1			326																												1.3			Mod G3 INLET	27.50 L+"H"1329+77.39	b		
												1																													REMOVE DI	33.48 L+"E"3330+84.70	a	59	D-7
										12																												5	REMOVE 18" RCP		b		
													0.9	1																										REMOVE APRON & HW	45.80 L+"E"3330+85.20	c		
																					3.5																	S	2.7	24" AP		a	60	D-8
1.96						2			580																												4.9			GD1 INLET	27.50 R+"H"1331+98.93	b		
																										25.0														GLD		c		
13.66	290.8					15			4530	300		2	0.9	1					25.1	95.3	629.0					271.0														SHEET TOTAL				

2 **REVISED PER ADDENDUM No. 2 DATED APRIL 1, 2010**

DRAINAGE QUANTITIES

DQ-15

STATE OF CALIFORNIA - DEPARTMENT OF TRANSPORTATION
Caltrans

CONSULTANT FUNCTIONAL SUPERVISOR: CARLOS A. CADENA

CALCULATED-DESIGNED BY: BARBARA VEALEY
CHECKED BY: BRAD LOSEY

REVISED BY: BML
DATE REVISED: 6-15-09

LAST REVISION 05-18-09 | DATE PLOTTED => 29-MAR-2010 | TIME PLOTTED => 11:11

Dist	COUNTY	ROUTE	POST MILES TOTAL PROJECT	SHEET No.	TOTAL SHEETS
12	Ora	22,405	R0.7/R2.9, 20.4/22.3	243	1006

REGISTERED CIVIL ENGINEER 5/18/09 DATE

9-21-09
PLANS APPROVAL DATE

REGISTERED PROFESSIONAL ENGINEER BRADLEY M. LOSEY No. C65140 Exp. 9/30/11 CIVIL STATE OF CALIFORNIA

THE STATE OF CALIFORNIA OR ITS OFFICERS OR AGENTS SHALL NOT BE RESPONSIBLE FOR THE ACCURACY OR COMPLETENESS OF SCANNED COPIES OF THIS PLAN SHEET.

RBF CONSULTING
14725 ALTON PKWY
IRVINE, CA 92618

ORANGE COUNTY
TRANSPORTATION AUTHORITY
550 SOUTH MAIN STREET
ORANGE, CA 92863

DRAINAGE QUANTITIES

2

MINOR Conc (MINOR Str)	MINOR Conc (Bkf)	SAND Bkf	CLASS 1 Conc (BOX Culv)	BAR Reinf STEEL (BOX Culv)	FRAMES, GRATES, & COVERS (N) MH F & C	24-12	36 R	PLATE	Misc IRON & STEEL	REMOVE Culv	REMOVE Conc (CHANNEL)	REMOVE INLET	REMOVE HW	REMOVE Conc APRON	Abn Culv	Abn INLET	CAP INLET	Adj INLET	8" DIP	18" AP	24" AP	30" AP	36" AP	24" RCP	30" RCP	GLD	36" PC Conc PIPE INLET	HMA	HMA (Misc AREA)	18" Alt FES	24" Alt FES	30" Alt FES	RSP FABRIC	RSP (FACING, METHOD B)	DITCH Exc	Conc DITCH LINING	(N) HEIGHT OF INLET	(N) "JOINT TYPE"	(N) Max COVER	DESCRIPTION	STATION	DRAINAGE UNIT	DRAINAGE SYSTEM No.	DRAINAGE PLAN Sht No.
CY	CY	CY	CY	LB	EA	EA	EA	EA	LB	LF	CY	EA	CY	EA	LF	EA	EA	EA	LF	LF	LF	LF	LF	LF	LF	LF	LF	TON	SQYD	EA	EA	EA	SQYD	CY	CY	CY	FT		FT					
																					25.0																	S	4.4	24" AP		d	60	D-8
2.36						2			580																												6.3			GD1 INLET	1.50 Lt"H"1331+98.73	e		
																										98.4														GLD		f		
										391																														REMOVE 18" SCSP	3.5 R+"H"1338+74 TO 14.0 R+"H"1334+82	a	61	D-8
												1																												REMOVE DI	21.50 Lt"NB405"334+82.21	b		
										264																														REMOVE GLD	11.8 Lt"NB405"332+17 TO 20.0 Lt"NB405"334+80	c		
												1																												REMOVE DI	4.58 R+"H"1338+75.30	a	62	D-8
																																								Conc COLLAR	4.58 R+"H"1338+75.30	b		
																					6.1																	S	2.1	24" AP		c		
1.65						2			580																												3.9			GD1 INLET	1.50 Lt"H"1338+75.27	d		
																										32.8														GLD		e		
	87.4																				192.3																	S	2.0	24" AP		f		
1.70						2			580																												4.1			GD1 INLET	1.50 Lt"H"1336+80.01	g		
																										59.1														GLD		h		
	32.5																				71.5																	S	2.0	24" AP		i		
1.61						2			580																												3.8			GD1 INLET	1.50 Lt"H"1336+05.54	j		
																										62.3														GLD		k		
	32.7																				72.0																	S	1.7	24" AP		l		
1.55						2			580																												3.5			GD1 INLET	1.50 Lt"H"1335+30.55	m		
																										59.1														GLD		n		
	32.8																				72.2																	S	1.5	24" AP		o		
1.49						2			580																												3.3			GD1 INLET	1.50 Lt"H"1334+55.43	p		
																										95.1														GLD		q		
	58.7																				129.1																	S	1.6	24" AP		r		
1.53						2			580																												3.5			GD1 INLET	1.50 Lt"H"1333+23.37	s		
																										19.7														GLD		t		
	12.3																				27.1																	S	1.9	24" AP		a	63	D-8
1.65						2			580																												3.9			GD1 INLET	9.36 R+"SB405"334+52.68	b		
	13.6																			41.9																		S	1.9	18" AP TYPE A		c		
1.40						2			580																												3.1			GD1 INLET	9.35 R+"SB405"334+97.73	d		
												1																												REMOVE DI	63.56 Lt"SB405"338+74.59	a	64	D-8
										9																												5	REMOVE 18" RCP		b		
													0.9	1																										REMOVE APRON & HW	72.63 Lt"SB405"338+74.32	c		
14.94	270.0					18			5220	664		3	0.9	1						41.9	595.3					426.5														SHEET TOTAL				

2 REVISED PER ADDENDUM No. 2 DATED APRIL 1, 2010

DRAINAGE QUANTITIES

DQ-16

BARBARA VEALEY | REVISED BY | BML
BRAD LOSEY | DATE REVISED | 8-19-09
CALCULATED-DESIGNED BY
CHECKED BY
CONSULTANT FUNCTIONAL SUPERVISOR
CARLOS A. CADENA
STATE OF CALIFORNIA - DEPARTMENT OF TRANSPORTATION
Caltrans

LAST REVISION 05-18-09 | DATE PLOTTED => 29-MAR-2010 | TIME PLOTTED => 11:11

Dist	COUNTY	ROUTE	POST MILES TOTAL PROJECT	SHEET No.	TOTAL SHEETS
12	Ora	22,405	R0.7/R2.9, 20.4/22.3	244	1006

REGISTERED CIVIL ENGINEER 5/18/09 DATE

9-21-09
PLANS APPROVAL DATE

REGISTERED PROFESSIONAL ENGINEER BRADLEY M. LOSEY No. C65140 Exp. 9/30/11 CIVIL STATE OF CALIFORNIA

THE STATE OF CALIFORNIA OR ITS OFFICERS OR AGENTS SHALL NOT BE RESPONSIBLE FOR THE ACCURACY OR COMPLETENESS OF SCANNED COPIES OF THIS PLAN SHEET.

RBF CONSULTING
14725 ALTON PKWY
IRVINE, CA 92618

ORANGE COUNTY
TRANSPORTATION AUTHORITY
550 SOUTH MAIN STREET
ORANGE, CA 92863

DRAINAGE QUANTITIES

2

MINOR Conc (MINOR Str)	MINOR Conc (Bkf)	SAND Bkf	CLASS 1 Conc (BOX Culv)	BAR Reinf STEEL (BOX Culv)	FRAMES, GRATES, & COVERS (N) MH F & C	24-12	36 R	PLATE	Misc IRON & STEEL	REMOVE Culv	REMOVE Conc (CHANNEL)	REMOVE INLET	REMOVE HW	REMOVE Conc APRON	Abn Culv	Abn INLET	CAP INLET	Adj INLET	8" DIP	18" AP	24" AP	30" AP	36" AP	24" RCP	30" RCP	GLD	36" PC Conc PIPE INLET	HMA	HMA (Misc AREA)	18" Alt FES	24" Alt FES	30" Alt FES	RSP FABRIC	RSP (FACING, METHOD B)	DITCH Exc	Conc DITCH LINING	(N) HEIGHT OF INLET	(N) "JOINT TYPE"	(N) Max COVER	DESCRIPTION	STATION	DRAINAGE UNIT	DRAINAGE SYSTEM No.	DRAINAGE PLAN Sht No.
CY	CY	CY	CY	LB	EA	EA	EA	EA	LB	LF	CY	EA	CY	EA	LF	EA	EA	EA	LF	LF	LF	LF	LF	LF	LF	LF	LF	TON	SQYD	EA	EA	EA	SQYD	CY	CY	CY	FT		FT					
										694																														REMOVE GLD	4.4 R+"H"1338+93 TO 8.7 R+"A"342+98	a	65	D-8
												1																													REMOVE DI	8.60 R+"A"342+99.86	a	66	D-8
										2																												2.5	REMOVE 24" RCP		b		
												1																													REMOVE DI	6.17 R+"A"342+99.78	c		
																																									Conc COLLAR	10.73 R+"A"342+99.88	d		
	2.4																				5.2																	S	1.8	24" AP		e		
1.58						2			580																												3.7			GD1 INLET	1.50 R+"A"342+99.76	f		
																										9.8														GLD		g		
	1.4																				3.0																	S	1.8	24" AP		h		
1.63						2			580																												3.8			GD1 INLET	1.50 L+"A"342+99.79	i		
																										49.2														GLD		j		
	95.1																				209.2																	S	1.7	24" AP		k		
1.46						2			580																												3.3			GD1 INLET	1.67 L+"H"1340+87.61	l		
																										32.8														GLD		m		
										805																														REMOVE GLD	5.9 R+"A"343+04 TO 8.8 R+"A"347+07	a	67	D-8/9
												1																												REMOVE DI	8.58 R+"A"347+08.79	a	68	D-9
										2																												2.5	REMOVE 24" RCP		b		
												1																												REMOVE DI	6.42 R+"A"347+08.78	c		
																																								Conc COLLAR	10.71 R+"A"347+08.82	d		
	2.4																				5.2																	S	2.4	24" AP		e		
1.78						2			580																												4.3			GD1 INLET	1.50 R+"A"347+08.74	f		
	1.4																				3.0																	S	2.5	24" AP		g		
1.83						2			580																												4.5			GD1 INLET	1.50 L+"A"347+08.75	h		
	60.0																				132.0																	S	2.4	24" AP		i		
1.70						2			580																												4.1			GD1 INLET	1.50 L+"A"345+73.71	j		
																										82.0														GLD		k		
	60.0																				132.1																	S	2.2	24" AP		a	69	D-9
1.66						2			580																												3.9			GD1 INLET	1.50 R+"A"345+73.64	b		
	50.3																				110.7																	S	1.9	24" AP		c		
1.61						2			580																												3.8			GD1 INLET	1.50 R+"A"344+59.89	d		
										1375																														REMOVE GLD	6.3 R+"A"347+13 TO 8.9 R+"A"354+00	a	70	D-9
13.24	272.9					16			4640	2879		4									600.4					173.8														SHEET TOTAL				

2 REVISED PER ADDENDUM No. 2 DATED APRIL 1, 2010

DRAINAGE QUANTITIES

DQ-17

STATE OF CALIFORNIA - DEPARTMENT OF TRANSPORTATION
Caltrans

CONSULTANT FUNCTIONAL SUPERVISOR: CARLOS A. CADENA
CALCULATED-DESIGNED BY: BARBARA VEALEY
CHECKED BY: BRAD LOSEY
REVISED BY: BML
DATE REVISED: 8-19-09

LAST REVISION 05-18-09
DATE PLOTTED => 29-MAR-2010
TIME PLOTTED => 11:11

Dist	COUNTY	ROUTE	POST MILES TOTAL PROJECT	SHEET No.	TOTAL SHEETS
12	Ora	22,405	R0.7/R2.9, 20.4/22.3	245	1006

REGISTERED CIVIL ENGINEER 5/18/09 DATE

9-21-09
PLANS APPROVAL DATE

REGISTERED PROFESSIONAL ENGINEER BRADLEY M. LOSEY No. C65140 Exp. 9/30/11 CIVIL STATE OF CALIFORNIA

THE STATE OF CALIFORNIA OR ITS OFFICERS OR AGENTS SHALL NOT BE RESPONSIBLE FOR THE ACCURACY OR COMPLETENESS OF SCANNED COPIES OF THIS PLAN SHEET.

RBF CONSULTING
14725 ALTON PKWY
IRVINE, CA 92618

ORANGE COUNTY
TRANSPORTATION AUTHORITY
550 SOUTH MAIN STREET
ORANGE, CA 92863

DRAINAGE QUANTITIES

2

MINOR Conc (MINOR Str)	MINOR Conc (Bkf)	SAND Bkf	CLASS 1 Conc (BOX Culv)	BAR Reinf STEEL (BOX Culv)	FRAMES, GRATES, & COVERS (N) MH F & C	24-12	36 R	PLATE	Misc IRON & STEEL	REMOVE Culv	REMOVE Conc (CHANNEL)	REMOVE INLET	REMOVE HW	REMOVE Conc APRON	Abn Culv	Abn INLET	CAP INLET	Adj INLET	8" DIP	18" AP	24" AP	30" AP	36" AP	24" RCP	30" RCP	GLD	36" PC Conc PIPE INLET	HMA	HMA (Misc AREA)	18" AIt FES	24" AIt FES	30" AIt FES	RSP FABRIC	RSP (FACING, METHOD B)	DITCH Exc	Conc DITCH LINING	(N) HEIGHT OF INLET	(N) "JOINT TYPE"	(N) Max COVER	DESCRIPTION	STATION	DRAINAGE UNIT	DRAINAGE SYSTEM No.	DRAINAGE PLAN Sht No.
CY	CY	CY	CY	LB	EA	EA	EA	EA	LB	LF	CY	EA	CY	EA	LF	EA	EA	EA	LF	LF	LF	LF	LF	LF	LF	LF	LF	TON	SQYD	EA	EA	EA	SQYD	CY	CY	CY	FT		FT					
												1																												REMOVE DI	8.62 Rt"A"351+28.99	a	71	D-9
										2																													2.5	REMOVE 24" RCP		b		
												1																												REMOVE DI	6.40 Rt"A"351+29.02	c		
																																								Conc COLLAR	10.75 Rt"A"351+29.01	d		
	3.0																				6.6																	S	1.5	24" AP		e		
1.52						2			580																												3.5			GD1 INLET	1.50 Rt"A"351+25.03	f		
	1.4																				3.0																	S	1.8	24" AP		g		
1.61						2			580																												3.8			GD1 INLET	1.50 Lt"A"351+25.04	h		
	60.0																				126.2																	S	1.5	24" AP		i		
																										98.4														GLD		j		
1.56						2			580																												3.6			GD1 INLET	1.50 Lt"A"349+95.80	k		
																										75.5														GLD		l		
	57.4																				126.3																	S	1.6	24" AP		a	72	D-9
																										98.4														GLD		b		
1.43						2			580																												3.2			GD1 INLET	1.50 Rt"A"349+95.76	c		
	20.8																			64.2																		S	1.5	18" AP TYPE A		d		
1.36						2			580																												2.9			GD1 INLET	1.50 Rt"A"349+28.54	e		
																										36.1														GLD		f		
																										98.4														GLD		a	73	D-9
	56.2																				123.6																	S	1.3	24" AP		b		
1.55						2			580																												3.6			GD1 INLET	1.50 Lt"A"352+51.67	c		
																										98.4														GLD		a	74	D-9
	56.2																				123.7																	S	1.4	24" AP		b		
1.47						2			580																												3.3			GD1 INLET	1.50 Rt"A"352+51.74	c		
												1																												REMOVE DI	8.57 Rt"A"354+00.00	a	75	D-9
										2																													2.5	REMOVE 24" RCP		b		
												1																												REMOVE DI	6.40 Rt"A"354+00.00	c		
																																								Conc COLLAR	10.70 Rt"A"354+00.00	d		
	2.4																				5.2																	S	2.0	24" AP		e		
1.66						2			580																												3.9			GD1 INLET	1.50 Rt"A"354+00.05	f		
	1.0																			3.0																		S	2.2	18" AP TYPE A		g		
1.59						2			580																												3.7			GD1 INLET	1.50 Lt"A"354+00.00	h		
																										95.1														GLD		i		
13.75	258.3				18			5220	4		4									67.2	514.6					600.3														SHEET TOTAL				

2 **REVISED PER ADDENDUM No. 2 DATED APRIL 1, 2010**

DRAINAGE QUANTITIES

DQ-18

STATE OF CALIFORNIA - DEPARTMENT OF TRANSPORTATION
Caltrans

CONSULTANT FUNCTIONAL SUPERVISOR: CARLOS A. CADENA
CALCULATED-DESIGNED BY: BARBARA VEALEY
CHECKED BY: BRAD LOSEY
REVISED BY: BML
DATE REVISED: 8-19-09

LAST REVISION 05-18-09
DATE PLOTTED => 29-MAR-2010
TIME PLOTTED => 11:11

Dist	COUNTY	ROUTE	POST MILES TOTAL PROJECT	SHEET No.	TOTAL SHEETS
12	Ora	22,405	R0.7/R2.9, 20.4/22.3	246	1006

REGISTERED CIVIL ENGINEER 5/18/09 DATE

9-21-09
PLANS APPROVAL DATE

REGISTERED PROFESSIONAL ENGINEER BRADLEY M. LOSEY No. C65140 Exp. 9/30/11 CIVIL STATE OF CALIFORNIA

THE STATE OF CALIFORNIA OR ITS OFFICERS OR AGENTS SHALL NOT BE RESPONSIBLE FOR THE ACCURACY OR COMPLETENESS OF SCANNED COPIES OF THIS PLAN SHEET.

RBF CONSULTING
14725 ALTON PKWY
IRVINE, CA 92618

ORANGE COUNTY
TRANSPORTATION AUTHORITY
550 SOUTH MAIN STREET
ORANGE, CA 92863

DRAINAGE QUANTITIES

2

MINOR Conc (MINOR Str)	MINOR Conc (Bkf)	SAND Bkf	CLASS 1 Conc (BOX Culv)	BAR Reinf STEEL (BOX Culv)	FRAMES, GRATES, & COVERS (N) MH F & C	24-12	36 R	PLATE	Misc IRON & STEEL	REMOVE Culv	REMOVE Conc (CHANNEL)	REMOVE INLET	REMOVE HW	REMOVE Conc APRON	Abn Culv	Abn INLET	CAP INLET	Adj INLET	8" DIP	18" AP	24" AP	30" AP	36" AP	24" RCP	30" RCP	GLD	36" PC Conc PIPE INLET	HMA	HMA (Misc AREA)	18" Alt FES	24" Alt FES	30" Alt FES	RSP FABRIC	RSP (FACING, METHOD B)	DITCH Exc	Conc DITCH LINING	(N) HEIGHT OF INLET	(N) "JOINT TYPE"	(N) Max COVER	DESCRIPTION	STATION	DRAINAGE UNIT	DRAINAGE SYSTEM No.	DRAINAGE PLAN Sht No.
CY	CY	CY	CY	LB	EA	EA	EA	EA	LB	LF	CY	EA	CY	EA	LF	EA	EA	EA	LF	LF	LF	LF	LF	LF	LF	LF	LF	TON	SQYD	EA	EA	EA	SQYD	CY	CY	CY	FT		FT					
	15.2																			46.9																		S	2.0	18" AP TYPE A		a	76	D-9
1.48						2			580																												3.3			GD1 INLET	1.50 R+"A"354+49.97	b		
																										42.7														GLD		c		
												1																												REMOVE DI	92.61 L+"A"354+99.54	a	77	D-9
										9																												5	REMOVE 24" RCP		b		
													1.2	1																									REMOVE APRON & HW	102.10 L+"A"354+99.43	c		
										586																														REMOVE GLD	6.0 R+"A"354+00 TO 8.8 R+"A"356+95	a	78	D-9/10
												1																												REMOVE DI	8.53 R+"A"356+98.32	a	79	D-10
										2																												2.5	REMOVE 24" RCP		b		
												1																												REMOVE DI	6.38 R+"A"356+98.25	c		
																																								Conc COLLAR	10.66 R+"A"356+98.34	d		
	2.4																				5.2																	S	1.8	24" AP		e		
1.57						2			580																												3.6			GD1 INLET	1.50 R+"A"356+98.33	f		
	1.0																			3.0																		S	1.9	18" AP TYPE A		g		
1.50						2			580																												3.4			GD1 INLET	1.50 L+"A"356+98.40	h		
																										85.3														GLD		i		
	16.8																			51.8																		S	1.6	18" AP TYPE A		a	80	D-10
1.39						2			580																												3.0			GD1 INLET	1.50 R+"A"357+53.08	b		
																										85.3														GLD		c		
2.11						2			580																												5.5			GD1 INLET	121.00 R+"A"357+00.70	a	81	D-10
	21.0																				46.3																	S	2.4	24" AP		b		
1.76						2			580																												4.3			GD1 INLET	121.00 R+"A"357+50.00	c		
	92.0																				202.4																	S	2.3	24" AP		d		
1.71						2			580																												4.1			GD1 INLET	121.00 R+"A"359+55.43	e		
												1																												REMOVE DI	92.72 L+"A"358+49.98	a	82	D-10
										9																												5	REMOVE 24" RCP		b		
													1.2	1																									REMOVE APRON & HW	101.26 L+"A"358+49.79	c		
										774																														REMOVE GLD	5.7 R+"A"357+00 TO 8.8 R+"A"360+87	a	83	D-10
11.54	148.4					14			4060	1380		4	2.4	2						101.7	253.9					213.3														SHEET TOTAL				

2 **REVISED PER ADDENDUM No. 2 DATED APRIL 1, 2010**

DRAINAGE QUANTITIES

DQ-19

STATE OF CALIFORNIA - DEPARTMENT OF TRANSPORTATION
Caltrans

CONSULTANT FUNCTIONAL SUPERVISOR: CARLOS A. CADENA
CALCULATED-DESIGNED BY: BARBARA VEALEY
CHECKED BY: BRAD LOSEY
REVISED BY: BML
DATE REVISED: 8-19-09

LAST REVISION 05-18-09 | DATE PLOTTED => 29-MAR-2010 | TIME PLOTTED => 11:11

Dist	COUNTY	ROUTE	POST MILES TOTAL PROJECT	SHEET No.	TOTAL SHEETS
12	Ora	22,405	R0.7/R2.9, 20.4/22.3	247	1006

REGISTERED CIVIL ENGINEER 5/18/09 DATE

9-21-09
PLANS APPROVAL DATE

REGISTERED PROFESSIONAL ENGINEER BRADLEY M. LOSEY No. C65140 Exp. 9/30/11 CIVIL STATE OF CALIFORNIA

THE STATE OF CALIFORNIA OR ITS OFFICERS OR AGENTS SHALL NOT BE RESPONSIBLE FOR THE ACCURACY OR COMPLETENESS OF SCANNED COPIES OF THIS PLAN SHEET.

RBF CONSULTING
14725 ALTON PKWY
IRVINE, CA 92618

ORANGE COUNTY
TRANSPORTATION AUTHORITY
550 SOUTH MAIN STREET
ORANGE, CA 92863

DRAINAGE QUANTITIES

2

MINOR Conc (MINOR Str)	MINOR Conc (Bkf)	SAND Bkf	CLASS 1 Conc (BOX Culv)	BAR Reinf STEEL (BOX Culv)	FRAMES, GRATES, & COVERS (N) MH F & C	24-12	36 R	PLATE	Misc IRON & STEEL	REMOVE Culv	REMOVE Conc (CHANNEL)	REMOVE INLET	REMOVE HW	REMOVE Conc APRON	Abn Culv	Abn INLET	CAP INLET	Adj INLET	8" DIP	18" AP	24" AP	30" AP	36" AP	24" RCP	30" RCP	GLD	36" PC Conc PIPE INLET	HMA	HMA (Misc AREA)	18" AIt FES	24" AIt FES	30" AIt FES	RSP FABRIC	RSP (FACING, METHOD B)	DITCH Exc	Conc DITCH LINING	(N) HEIGHT OF INLET	(N) "JOINT TYPE"	(N) Max COVER	DESCRIPTION	STATION	DRAINAGE UNIT	DRAINAGE SYSTEM No.	DRAINAGE PLAN Sht No.
CY	CY	CY	CY	LB	EA	EA	EA	EA	LB	LF	CY	EA	CY	EA	LF	EA	EA	EA	LF	LF	LF	LF	LF	LF	LF	LF	LF	TON	SQYD	EA	EA	EA	SQYD	CY	CY	CY	FT		FT					
										642																														REMOVE GLD	6.2 Rt"A"361+02 TO 9.0 Rt"A"364+23	a	84	D-10
												1																													REMOVE DI	8.62 Rt"A"364+24.49	a	85	D-10
										2																												2.5	REMOVE 24" RCP		b		
												1																													REMOVE DI	6.38 Rt"A"364+24.46	c		
																																									Conc COLLAR	10.75 Rt"A"364+24.51	d		
	2.4																				5.3																	S	2.0	24" AP		e		
1.63						2			580																												3.8			GD1 INLET	1.50 Rt"A"364+24.43	f		
	1.0																			3.0																		S	2.1	18" AP TYPE A		g		
1.55						2			580																												3.6			GD1 INLET	1.50 Lt"A"364+24.47	h		
	46.8																				102.9																	S	1.8	24" AP		a	86	D-10
1.53						2			580																												3.5			GD1 INLET	1.50 Rt"A"363+18.53	b		
																										85.3														GLD		c		
1.74						2			580																												4.2			GD1 INLET	121.00 Rt"A"364+24.43	a	87	D-10
																				46.4																		S	2.8	18" AP TYPE A		b		
1.74						2			580																												4.2			GD1 INLET	121.00 Rt"A"363+75.00	c		
										590																														REMOVE GLD	6.1 Rt"A"364+28 TO 8.7 Rt"A"367+23	a	88	D-10
1.75						2			580																												4.2			GD1 INLET	121.00 Rt"A"367+25.29	a	89	D-10
																					114.2																	S	2.3	24" AP		b		D-10
1.72						2			580																												4.1			GD1 INLET	121.00 Rt"A"366+08.09	c		
												1																													REMOVE DI	8.51 Rt"A"367+24.81	a	90	D-10
										2																												2.5	REMOVE 24" RCP		b		
												1																													REMOVE DI	6.39 Rt"A"367+24.82	c		
																																									Conc COLLAR	10.64 Rt"A"367+24.84	d		
	2.3																				5.1																	S	1.9	24" AP		e		
1.60						2			580																												3.7			GD1 INLET	1.50 Rt"A"367+24.77	f		
																										85.3														GLD		g		
	1.0																			3.0																		S	2.0	18" AP TYPE A		h		
1.55						2			580																												3.6			GD1 INLET	1.50 Lt"A"367+24.77	i		
																										32.8														GLD		j		
										590																														REMOVE GLD	5.8 Rt"A"367+29 TO 8.9 Rt"A"370+24	a	91	D-10/11
14.81	53.4					18			5220	1825		4								52.4	227.5					203.4														SHEET TOTAL				

2 REVISED PER ADDENDUM No. 2 DATED APRIL 1, 2010

DRAINAGE QUANTITIES

DQ-20

STATE OF CALIFORNIA - DEPARTMENT OF TRANSPORTATION
Caltrans

CONSULTANT FUNCTIONAL SUPERVISOR: CARLOS A. CADENA
CALCULATED-DESIGNED BY: BARBARA VEALEY
CHECKED BY: BRAD LOSEY
REVISED BY: BML
DATE REVISED: 8-19-09

LAST REVISION 05-18-09
DATE PLOTTED => 29-MAR-2010
TIME PLOTTED => 10:49

Dist	COUNTY	ROUTE	POST MILES TOTAL PROJECT	SHEET No.	TOTAL SHEETS
12	Ora	22,405	R0.7/R2.9, 20.4/22.3	248	1006

REGISTERED CIVIL ENGINEER 5/18/09 DATE

9-21-09
PLANS APPROVAL DATE

REGISTERED PROFESSIONAL ENGINEER BRADLEY M. LOSEY No. C65140 Exp. 9/30/11 CIVIL STATE OF CALIFORNIA

THE STATE OF CALIFORNIA OR ITS OFFICERS OR AGENTS SHALL NOT BE RESPONSIBLE FOR THE ACCURACY OR COMPLETENESS OF SCANNED COPIES OF THIS PLAN SHEET.

RBF CONSULTING
14725 ALTON PKWY
IRVINE, CA 92618

ORANGE COUNTY
TRANSPORTATION AUTHORITY
550 SOUTH MAIN STREET
ORANGE, CA 92863

DRAINAGE QUANTITIES

2

MINOR Conc (MINOR Str)	MINOR Conc (Bkf)	SAND Bkf	CLASS 1 Conc (BOX Culv)	BAR Reinf STEEL (BOX Culv)	FRAMES, GRATES, & COVERS (N) MH F & C	24-12	36 R	PLATE	Misc IRON & STEEL	REMOVE Culv	REMOVE Conc (CHANNEL)	REMOVE INLET	REMOVE HW	REMOVE Conc APRON	Abn Culv	Abn INLET	CAP INLET	Adj INLET	8" DIP	18" AP	24" AP	30" AP	36" AP	24" RCP	30" RCP	GLD	36" PC Conc PIPE INLET	HMA	HMA (Misc AREA)	18" Alt FES	24" Alt FES	30" Alt FES	RSP FABRIC	RSP (FACING, METHOD B)	DITCH Exc	Conc DITCH LINING	(N) HEIGHT OF INLET	(N) "JOINT TYPE"	(N) Max COVER	DESCRIPTION	STATION	DRAINAGE UNIT	DRAINAGE SYSTEM No.	DRAINAGE PLAN Sht No.
CY	CY	CY	CY	LB	EA	EA	EA	EA	LB	LF	CY	EA	CY	EA	LF	EA	EA	EA	LF	LF	LF	LF	LF	LF	LF	LF	LF	TON	SQYD	EA	EA	EA	SQYD	CY	CY	CY	FT		FT					
1.75						2			580																												4.2			GD1 INLET	121.00 R+"A"370+24.87	a	92	D-11
																					122.0																	S	2.4	24" AP		b		
1.72						2			580																												4.1			GD1 INLET	121.00 R+"A"368+99.86	c		
												1																												REMOVE DI	8.54 R+"A"370+25.01	a	93	D-11
										2																												2.5	REMOVE 24" RCP		b		
												1																												REMOVE DI	6.33 R+"A"370+25.03	c		
																																								Conc COLLAR	10.67 R+"A"370+25.03	d		
	2.4																				5.2																	S	2.0	24" AP		e		
1.63						2			580																												3.8			GD1 INLET	1.50 R+"A"370+25.08	f		
																										95.1														GLD		g		D-11
	1.0																			3.0																		S	2.1	18" AP TYPE A		h		
1.55						2			580																												3.6			GD1 INLET	1.50 L+"A"370+25.08	i		
																										62.3														GLD		j		
										590																														REMOVE GLD	5.8 R+"A"370+29 TO 9.0 R+"A"373+24	a	94	D-11
1.75						2			580																												4.2			GD1 INLET	121.00 R+"A"373+25.82	a	95	D-11
																				97.3																		S	2.8	18" AP TYPE A		b		
1.72						2			580																												4.1			GD1 INLET	121.00 R+"A"372+25.55	c		
												1																												REMOVE DI	8.64 R+"A"373+25.24	a	96	D-11
										2																												2.5	REMOVE 24" RCP		b		
												1																												REMOVE DI	6.49 R+"A"373+25.23	c		
																																								Conc COLLAR	10.77 R+"A"373+25.27	d		
	2.4																				5.3																	S	1.9	24" AP		e		
1.59						2			580																												3.7			GD1 INLET	1.50 R+"A"373+25.29	f		
	1.0																			3.0																		S	2.0	18" AP TYPE A		g		
1.46						2			580																												3.2			GD1 INLET	1.50 L+"A"373+25.29	h		
																										36.1														GLD		i		
	7.7																			23.8																		S	1.7	18" AP TYPE A		a	97	D-11
1.42						2			580																												3.1			GD1 INLET	1.50 R+"A"372+98.50	b		
																										91.9														GLD		c		
										588																														REMOVE GLD	6.0 R+"A"373+29 TO 9.0 R+"A"376+23	a	98	D-11
2.28						2			580																												6.0			GD1 INLET	121.00 R+"A"376+27.14	a	99	D-11
																				94.1																		S	2.9	18" AP TYPE A		b		
16.87	14.4					20			5800	1182		4								221.2	132.5					285.4														SHEET TOTAL				

DRAINAGE QUANTITIES

2 REVISED PER ADDENDUM No. 2 DATED APRIL 1, 2010

DQ-21

BARBARA VEALEY — BRAD LOSEY — REVISED BY BML — DATE REVISED 8-19-09 — CALCULATED-DESIGNED BY — CHECKED BY — CONSULTANT FUNCTIONAL SUPERVISOR CARLOS A. CADENA

STATE OF CALIFORNIA - DEPARTMENT OF TRANSPORTATION Caltrans

LAST REVISION 05-18-09 DATE PLOTTED => 29-MAR-2010 TIME PLOTTED => 10:49

Dist	COUNTY	ROUTE	POST MILES TOTAL PROJECT	SHEET No.	TOTAL SHEETS
12	Ora	22,405	R0.7/R2.9, 20.4/22.3	249	1006

REGISTERED CIVIL ENGINEER 5/18/09 DATE

9-21-09
PLANS APPROVAL DATE

REGISTERED PROFESSIONAL ENGINEER BRADLEY M. LOSEY No. C65140 Exp. 9/30/11 CIVIL STATE OF CALIFORNIA

THE STATE OF CALIFORNIA OR ITS OFFICERS OR AGENTS SHALL NOT BE RESPONSIBLE FOR THE ACCURACY OR COMPLETENESS OF SCANNED COPIES OF THIS PLAN SHEET.

RBF CONSULTING
14725 ALTON PKWY
IRVINE, CA 92618

ORANGE COUNTY
TRANSPORTATION AUTHORITY
550 SOUTH MAIN STREET
ORANGE, CA 92863

DRAINAGE QUANTITIES

2

MINOR Conc (MINOR Str)	MINOR Conc (Bkf)	SAND Bkf	CLASS 1 Conc (BOX Culv)	BAR Reinf STEEL (BOX Culv)	FRAMES, GRATES, & COVERS (N) MH F & C	24-12	36 R	PLATE	Misc IRON & STEEL	REMOVE Culv	REMOVE Conc (CHANNEL)	REMOVE INLET	REMOVE HW	REMOVE Conc APRON	Abn Culv	Abn INLET	CAP INLET	Adj INLET	8" DIP	18" AP	24" AP	30" AP	36" AP	24" RCP	30" RCP	GLD	36" PC Conc PIPE INLET	HMA	HMA (Misc AREA)	18" Alt FES	24" Alt FES	30" Alt FES	RSP FABRIC	RSP (FACING, METHOD B)	DITCH Exc	Conc DITCH LINING	(N) HEIGHT OF INLET	(N) "JOINT TYPE"	(N) Max COVER	DESCRIPTION	STATION	DRAINAGE UNIT	DRAINAGE SYSTEM No.	DRAINAGE PLAN Sht No.
CY	CY	CY	CY	LB	EA	EA	EA	EA	LB	LF	CY	EA	CY	EA	LF	EA	EA	EA	LF	LF	LF	LF	LF	LF	LF	LF	LF	TON	SQYD	EA	EA	EA	SQYD	CY	CY	CY	FT		FT					
1.74						2			580																												4.2			GD1 INLET	121.00 R+"A"375+30.00	c	99	D-11
												1																													REMOVE DI	8.57 R+"A"376+24.79	a	100	D-11
										2																												2.5	REMOVE 18" RCP		b		
												1																												REMOVE DI	6.42 R+"A"376+24.81	c		
																																								Conc COLLAR	10.70 R+"A"376+24.82	d		
	1.7																			5.2																		S	2.4	18" AP TYPE A		e		
1.60						2			580																												3.7			GD1 INLET	1.50 R+"A"376+24.80	f		
	1.0																			3.0																		S	2.3	18" AP TYPE A		g		
1.64						2			580																												3.9			GD1 INLET	1.50 L+"A"376+24.80	h		
																										26.2														GLD		i		
	15.2																			46.8																		S	2.1	18" AP TYPE A		a	101	D-11
1.54						2			580																												3.5			GD1 INLET	1.50 R+"A"375+74.99	b		
																										9.8														GLD		c		
										608																														REMOVE GLD	5.9 R+"A"376+28 TO 9.0 R+"A"379+27	a	102	D-11
2.18						2			580																												5.7			GD1 INLET	121.00 R+"A"379+29.40	a	103	D-11
	80.2																				176.4																	S	2.3	24" AP		b		
1.69						2			580																												4.0			GD1 INLET	121.00 R+"A"377+50.00	c		
												1																												REMOVE DI	8.58 R+"A"379+28.87	a	104	D-11
										3																												2.5	REMOVE 24" RCP		b		
												1																												REMOVE DI	6.00 R+"A"379+28.99	c		
																																								Conc COLLAR	10.71 R+"A"379+28.90	d		
	3.0																				6.5																	S	1.9	24" AP		e		
1.59						2			580																												3.7			GD1 INLET	1.50 R+"A"379+24.95	f		
	1.4																				3.0																	S	1.9	24" AP		g		
1.64						2			580																												3.9			GD1 INLET	1.50 L+"A"379+24.95	h		
	59.9																				131.7																	S	1.8	24" AP		i		
																										98.4														GLD		j		
1.50						2			580																												3.4			GD1 INLET	1.50 L+"A"377+90.29	k		
	34.7																			107.0																		S	1.7	18" AP TYPE A		a	105	D-11
																										98.4														GLD		b		
1.36						2			580																												2.9			GD1 INLET	1.50 R+"A"378+14.99	c		
16.49	196.8					20			5800	613		4								162.0	317.6					232.8														SHEET TOTAL				

DRAINAGE QUANTITIES

2 REVISED PER ADDENDUM No. 2 DATED APRIL 1, 2010

DQ-22

STATE OF CALIFORNIA - DEPARTMENT OF TRANSPORTATION
Caltrans

CONSULTANT FUNCTIONAL SUPERVISOR: CARLOS A. CADENA
CALCULATED-DESIGNED BY: BARBARA VEALEY
CHECKED BY: BRAD LOSEY
REVISED BY: BML
DATE REVISED: 8-19-09

LAST REVISION 05-18-09 DATE PLOTTED => 29-MAR-2010 TIME PLOTTED => 10:49

Dist	COUNTY	ROUTE	POST MILES TOTAL PROJECT	SHEET No.	TOTAL SHEETS
12	Ora	22,405	R0.7/R2.9, 20.4/22.3	250	1006

REGISTERED CIVIL ENGINEER 5/18/09 DATE

9-21-09
PLANS APPROVAL DATE

REGISTERED PROFESSIONAL ENGINEER BRADLEY M. LOSEY No. C65140 Exp. 9/30/11 CIVIL STATE OF CALIFORNIA

THE STATE OF CALIFORNIA OR ITS OFFICERS OR AGENTS SHALL NOT BE RESPONSIBLE FOR THE ACCURACY OR COMPLETENESS OF SCANNED COPIES OF THIS PLAN SHEET.

RBF CONSULTING
14725 ALTON PKWY
IRVINE, CA 92618

ORANGE COUNTY
TRANSPORTATION AUTHORITY
550 SOUTH MAIN STREET
ORANGE, CA 92863

DRAINAGE QUANTITIES

2

MINOR Conc (MINOR Str)	MINOR Conc (Bkf)	SAND Bkf	CLASS 1 Conc (BOX Culv)	BAR Reinf STEEL (BOX Culv)	FRAMES, GRATES, & COVERS (N) MH F & C	24-12	36 R	PLATE	Misc IRON & STEEL	REMOVE Culv	REMOVE Conc (CHANNEL)	REMOVE INLET	REMOVE HW	REMOVE Conc APRON	Abn Culv	Abn INLET	CAP INLET	Adj INLET	8" DIP	18" AP	24" AP	30" AP	36" AP	24" RCP	30" RCP	GLD	36" PC Conc PIPE INLET	HMA	HMA (Misc AREA)	18" Alt FES	24" Alt FES	30" Alt FES	RSP FABRIC	RSP (FACING, METHOD B)	DITCH Exc	Conc DITCH LINING	(N) HEIGHT OF INLET	(N) "JOINT TYPE"	(N) Max COVER	DESCRIPTION	STATION	DRAINAGE UNIT	DRAINAGE SYSTEM No.	DRAINAGE PLAN Sht No.
CY	CY	CY	CY	LB	EA	EA	EA	EA	LB	LF	CY	EA	CY	EA	LF	EA	EA	EA	LF	LF	LF	LF	LF	LF	LF	LF	LF	TON	SQYD	EA	EA	EA	SQYD	CY	CY	CY	FT		FT					
																										98.4															GLD		a	106	D-11/12
	66.8																				147.0																	S	1.9	24" AP		b		
1.49						2			580																												3.4			GD1 INLET	1.50 L+"A"380+74.93	c		
																										98.4															GLD		a	107	D-11/12
	66.8																				147.0																	S	1.6	24" AP		b		
1.44						2			580																												3.2			GD1 INLET	1.50 R+"A"380+74.95	c		D-12
																										98.4															GLD		d		
										732																														REMOVE GLD	5.5 R+"A"379+31 TO 8.7 R+"A"382+96	a	108	D-11/12
										4																													5	REMOVE 24" RCP		a	109	D-12
2.40						2			580																												6.4			GD1 INLET	121.00 R+"A"383+03.16	b		
	71.3																				156.9																	S	1.6	24" AP		a	110	D-12
1.49						2			580																												3.3			GD1 INLET	1.50 R+"A"384+59.97	b		
																										98.4															GLD		c		
												1																													REMOVE DI	8.26 R+"A"383+00.11	a	111	D-12
										2																												2.5	REMOVE 24" RCP		b		
												1																												REMOVE DI	6.25 R+"A"383+00.20	c		
																																									Conc COLLAR	10.39 R+"A"383+00.15	d		
	2.2																				4.9																	S	1.9	24" AP		e		
1.59						2			580																												3.7			GD1 INLET	1.50 R+"A"383+00.06	f		
	1.4																				3.0																	S	2.0	24" AP		g		
1.65						2			580																												3.9			GD1 INLET	1.50 L+"A"383+00.06	h		
	58.9																				129.6																	S	1.9	24" AP		i		
1.59						2			580																												3.7			GD1 INLET	1.50 L+"A"384+32.69	j		
										1579																														REMOVE GLD	5.8 R+"A"383+02 TO 3.9 R+"A"390+98	a	112	D-12
												1																												REMOVE DI	3.58 R+"A"390+99.71	a	113	D-12
										2																												2.5	REMOVE 24" RCP		b		
												1																												REMOVE DI	1.30 R+"A"390+99.67	c		
																																									Conc COLLAR	5.70 R+"A"390+99.74	d		
	0.1																				0.2																	S	1.7	24" AP		e		
1.57						2			580																												3.6			GD1 INLET	1.50 R+"A"390+99.69	f		
13.21	267.6					16			4640	2319		4									588.6					393.6														SHEET TOTAL				

DRAINAGE QUANTITIES

2 REVISED PER ADDENDUM No. 2 DATED APRIL 1, 2010

DQ-23

STATE OF CALIFORNIA - DEPARTMENT OF TRANSPORTATION
Caltrans

CONSULTANT FUNCTIONAL SUPERVISOR: CARLOS A. CADENA

CALCULATED-DESIGNED BY: BARBARA VEALEY
CHECKED BY: BRAD LOSEY

REVISED BY: BML
DATE REVISED: 8-19-09

LAST REVISION 05-18-09
DATE PLOTTED => 29-MAR-2010
TIME PLOTTED => 10:50

Dist	COUNTY	ROUTE	POST MILES TOTAL PROJECT	SHEET No.	TOTAL SHEETS
12	Ora	22,405	R0.7/R2.9, 20.4/22.3	251	1006

REGISTERED CIVIL ENGINEER 5/18/09 DATE

9-21-09
PLANS APPROVAL DATE

REGISTERED PROFESSIONAL ENGINEER BRADLEY M. LOSEY No. C65140 Exp. 9/30/11 CIVIL STATE OF CALIFORNIA

THE STATE OF CALIFORNIA OR ITS OFFICERS OR AGENTS SHALL NOT BE RESPONSIBLE FOR THE ACCURACY OR COMPLETENESS OF SCANNED COPIES OF THIS PLAN SHEET.

RBF CONSULTING
14725 ALTON PKWY
IRVINE, CA 92618

ORANGE COUNTY
TRANSPORTATION AUTHORITY
550 SOUTH MAIN STREET
ORANGE, CA 92863

DRAINAGE QUANTITIES

2

MINOR Conc (MINOR Str)	MINOR Conc (Bkf)	SAND Bkf	CLASS 1 Conc (BOX Culv)	BAR Reinf STEEL (BOX Culv)	FRAMES, GRATES, & COVERS (N) MH F & C	24-12	36 R	PLATE	Misc IRON & STEEL	REMOVE Culv	REMOVE Conc (CHANNEL)	REMOVE INLET	REMOVE HW	REMOVE Conc APRON	Abn Culv	Abn INLET	CAP INLET	Adj INLET	8" DIP	18" AP	24" AP	30" AP	36" AP	24" RCP	30" RCP	GLD	36" PC Conc PIPE INLET	HMA	HMA (Misc AREA)	18" Alt FES	24" Alt FES	30" Alt FES	RSP FABRIC	RSP (FACING, METHOD B)	DITCH Exc	Conc DITCH LINING	(N) HEIGHT OF INLET	(N) "JOINT TYPE"	(N) Max COVER	DESCRIPTION	STATION	DRAINAGE UNIT	DRAINAGE SYSTEM No.	DRAINAGE PLAN Sht No.
CY	CY	CY	CY	LB	EA	EA	EA	EA	LB	LF	CY	EA	CY	EA	LF	EA	EA	EA	LF	LF	LF	LF	LF	LF	LF	LF	LF	TON	SQYD	EA	EA	EA	SQYD	CY	CY	CY	FT		FT					
																										75.5															GLD		g	113	D-12
	1.0																			3.0																		S	1.6	18" AP TYPE A		h		
1.43						2			580																												3.2			GD1 INLET	1.50 L+"A"390+99.69	i		
																										45.9															GLD		j		
										790																														REMOVE GLD	0.8 R+"A"391+03 TO 1.9 R+"A"394+98	a	114	D-12/13
3.34																																								JS No. 3	125.39 R+"A"392+50.00	a	115	D-13
																				4.4																		S	3.6	18" AP TYPE A		b		
1.99						2			580																												5.1			GD1 INLET	121.00 R+"A"392+50.00	c		
	10.4																			32.0																		S	2.0	18" AP TYPE A		a	116	D-13
1.52						2			580																												3.4			GD1 INLET	1.50 R+"A"394+64.98	b		
																										95.1															GLD		c		
												1																												REMOVE DI	1.37 R+"A"394+99.93	a	117	D-13
										2																												2.5	REMOVE 24" RCP		b		
												1																												REMOVE DI	0.77 L+"A"394+99.97	c		
1.66						2			580																												3.9			GD1 INLET	1.50 R+"A"394+99.99	d		
	1.4																				3.0																	S	1.9	24" AP		e		
1.64						2			580																												3.9			GD1 INLET	1.50 L+"A"394+99.95	f		
	13.6																			42.0																		S	1.9	18" AP TYPE A		g		
1.50						2			580																												3.4			GD1 INLET	1.50 L+"A"394+54.98	h		
																										68.9															GLD		i		
											240																														REMOVE PCC DITCH	125.9R+"A"394+99 TO 125.9 R+"A"395+50	a	118	D-13
																					50.0																	S	2.6	24" AP		b		D-13
1.79						2			580																												4.4			GD1 INLET	121.00 R+"A"394+98.60	c		
	36.7																				80.8																	S	1.2	24" AP		a	119	D-2
1.45						2			580																												3.2			GD1 INLET	34.00 R+"W"2294+17.82	b		
	97.5																				214.5																	S	1.3	24" AP		c		
1.46						2			580																												3.3			GD1 INLET	34.00 R+"W"2291+99.28	d		
																												1.6	9.9											OSD	22.00 R+"VV3"19+18.25	a	120	D-3
																																		5						SWALE		a	121	D-3
																												0.7	4.4											OSD	22.00 R+"VV3"19+71.03	b		
17.79	160.5					18			5220	792	240	2								81.4	348.3					285.4		2.3	14.3						5					SHEET TOTAL				

DRAINAGE QUANTITIES

2 REVISED PER ADDENDUM No. 2 DATED APRIL 1, 2010

DQ-24

STATE OF CALIFORNIA - DEPARTMENT OF TRANSPORTATION
Caltrans

CONSULTANT FUNCTIONAL SUPERVISOR: CARLOS A. CADENA
CALCULATED-DESIGNED BY: BARBARA VEALEY
CHECKED BY: BRAD LOSEY
REVISED BY: BML
DATE REVISED: 6-15-09

LAST REVISION 05-18-09
DATE PLOTTED => 29-MAR-2010
TIME PLOTTED => 10:50

Dist	COUNTY	ROUTE	POST MILES TOTAL PROJECT	SHEET No.	TOTAL SHEETS
12	Ora	22,405	R0.7/R2.9, 20.4/22.3	252	1006

REGISTERED CIVIL ENGINEER 5/18/09 DATE

9-21-09
PLANS APPROVAL DATE

REGISTERED PROFESSIONAL ENGINEER BRADLEY M. LOSEY No. C65140 Exp. 9/30/11 CIVIL STATE OF CALIFORNIA

THE STATE OF CALIFORNIA OR ITS OFFICERS OR AGENTS SHALL NOT BE RESPONSIBLE FOR THE ACCURACY OR COMPLETENESS OF SCANNED COPIES OF THIS PLAN SHEET.

RBF CONSULTING
14725 ALTON PKWY
IRVINE, CA 92618

ORANGE COUNTY
TRANSPORTATION AUTHORITY
550 SOUTH MAIN STREET
ORANGE, CA 92863

DRAINAGE QUANTITIES

2

MINOR Conc (MINOR Str)	MINOR Conc (Bkf)	SAND Bkf	CLASS 1 Conc (BOX Culv)	BAR Reinf STEEL (BOX Culv)	FRAMES, GRATES, & COVERS (N) MH F & C	24-12	36 R	PLATE	Misc IRON & STEEL	REMOVE Culv	REMOVE Conc (CHANNEL)	REMOVE INLET	REMOVE HW	REMOVE Conc APRON	Abn Culv	Abn INLET	CAP INLET	Adj INLET	8" DIP	18" AP	24" AP	30" AP	36" AP	24" RCP	30" RCP	GLD	36" PC Conc PIPE INLET	HMA	HMA (Misc AREA)	18" Alt FES	24" Alt FES	30" Alt FES	RSP FABRIC	RSP (FACING, METHOD B)	DITCH Exc	Conc DITCH LINING	(N) HEIGHT OF INLET	(N) "JOINT TYPE"	(N) Max COVER	DESCRIPTION	STATION	DRAINAGE UNIT	DRAINAGE SYSTEM No.	DRAINAGE PLAN Sht No.
CY	CY	CY	CY	LB	EA	EA	EA	EA	LB	LF	CY	EA	CY	EA	LF	EA	EA	EA	LF	LF	LF	LF	LF	LF	LF	LF	LF	TON	SQYD	EA	EA	EA	SQYD	CY	CY	CY	FT		FT					
	13.8																				30.4																	S	2.3	24" AP		a	122	D-11
1.73						2			580																												4.2			GD1 INLET	121.00 R+"A"379+62.77	b		D-12
	89.8																				197.5																	S	2.1	24" AP		c		
1.62						2			580																												3.8			GD1 INLET	121.00 R+"A"381+63.24	d		
											7																													REMOVE PCC DITCH	131.00 R+"A"385+00 TO 128.2 R+"A"390+02	a	123	D-12
			0.2	200																																				RCB TO RCB Conn	128.21 R+"A"390+02.00	b		
			1.1	175																																			3.0	4'X3' RCB		c		
0.58					1				435																												6.1			MH No. 3	128.28 R+"A"389+97.00	d		
			75.9	12200																																			3.1	4'X3' RCB		e		
0.58					1				435																												6.0			MH No. 3	129.61 R+"A"387+50.00	f		
			77.3	12430																																			3.0	4'X3' RCB		g		
			0.2	150																																				OPEN Chnl TO RCB Conn	131.00 R+"A"385+00.00	h		
										17																													5	REMOVE 18" RCP		a	124	D-6
												1																												REMOVE DI	18.96 L+"BC1"13+60.95	b		
																				15.7																		S	4.7	18" AP TYPE A		c		
1.35						1			326																												4.8			G1 INLET	20.00 L+"BC1"13+60.91	d		
												1																													REMOVE INLET	47.62 R+"VV"51+09.66	a	125	D-5
1.58																																									SIDEWALK CULVERT	47.00 R+"VV"50+98.77	b		
0.95						1			326																												2.8			G1 INLET	119.70 R+"H"1338+75.05	a	126	D-8
1.13						1			326																												3.8			G1 INLET	121.00 R+"A"343+02.25	a	127	D-8
1.21						1			326																												4.2			G1 INLET	121.00 R+"A"347+08.87	a	128	D-9
1.21						1			326																												4.2			G1 INLET	121.00 R+"A"351+31.39	a	129	D-9
1.28						1			326																												4.5			G1 INLET	121.00 R+"A"354+02.37	a	130	D-9
																												0.8	5.1											OSD	121.00 R+"A"355+53.89	a	131	D-10
											82																													REMOVE PCC DITCH	133.2 R+"A"358+04 TO 133.0 R+"A"359+00	a	132	D-10
			0.2	150																																				OPEN Chnl TO RCB Conn	133.07 R+"A"359+00.04	b		
			29.7	4780																																			3.0	4'X3' RCB		c		
			0.2	150																																				OPEN Chnl TO RCB Conn	133.26 R+"A"358+04.42	d		
13.22	103.6		184.6	30235	2	10			3986	17	88	2								15.7	227.8							0.8	5.1											SHEET TOTAL				

DRAINAGE QUANTITIES

2 REVISED PER ADDENDUM No. 2 DATED APRIL 1, 2010

DQ-25

BARBARA VEALEY — REVISED BY — BML
BRAD LOSEY — DATE REVISED — 8-19-09
CALCULATED-DESIGNED BY
CHECKED BY
CONSULTANT FUNCTIONAL SUPERVISOR — CARLOS A. CADENA

STATE OF CALIFORNIA - DEPARTMENT OF TRANSPORTATION
Caltrans

LAST REVISION 05-18-09
DATE PLOTTED => 29-MAR-2010
TIME PLOTTED => 10:50

Dist	COUNTY	ROUTE	POST MILES TOTAL PROJECT	SHEET No.	TOTAL SHEETS
12	Ora	22,405	R0.7/R2.9, 20.4/22.3	253	1006

REGISTERED CIVIL ENGINEER 5/18/09 DATE

9-21-09
PLANS APPROVAL DATE

REGISTERED PROFESSIONAL ENGINEER BRADLEY M. LOSEY No. C65140 Exp. 9/30/11 CIVIL STATE OF CALIFORNIA

THE STATE OF CALIFORNIA OR ITS OFFICERS OR AGENTS SHALL NOT BE RESPONSIBLE FOR THE ACCURACY OR COMPLETENESS OF SCANNED COPIES OF THIS PLAN SHEET.

RBF CONSULTING
14725 ALTON PKWY
IRVINE, CA 92618

ORANGE COUNTY
TRANSPORTATION AUTHORITY
550 SOUTH MAIN STREET
ORANGE, CA 92863

DRAINAGE QUANTITIES

2

MINOR Conc (MINOR Str)	MINOR Conc (Bkf)	SAND Bkf	CLASS 1 Conc (BOX Culv)	BAR Reinf STEEL (BOX Culv)	FRAMES, GRATES, & COVERS (N) MH F & C	24-12	36 R	PLATE	Misc IRON & STEEL	REMOVE Culv	REMOVE Conc (CHANNEL)	REMOVE INLET	REMOVE HW	REMOVE Conc APRON	Abn Culv	Abn INLET	CAP INLET	Adj INLET	8" DIP	18" AP	24" AP	30" AP	36" AP	24" RCP	30" RCP	GLD	36" PC Conc PIPE INLET	HMA	HMA (Misc AREA)	18" AIt FES	24" AIt FES	30" AIt FES	RSP FABRIC	RSP (FACING, METHOD B)	DITCH Exc	Conc DITCH LINING	(N) HEIGHT OF INLET	(N) "JOINT TYPE"	(N) Max COVER	DESCRIPTION	STATION	DRAINAGE UNIT	DRAINAGE SYSTEM No.	DRAINAGE PLAN Sht No.
CY	CY	CY	CY	LB	EA	EA	EA	EA	LB	LF	CY	EA	CY	EA	LF	EA	EA	EA	LF	LF	LF	LF	LF	LF	LF	LF	LF	TON	SQYD	EA	EA	EA	SQYD	CY	CY	CY	FT		FT					
											21																													REMOVE PCC DITCH	132.9 Rt"A"377+00 TO 133.2 Rt"A"372+75	a	133	D-11
			0.2	150																																					OPEN Chnl TO RCB Conn	132.91 Rt"A"376+99.92	b		
			132.1	21235																																			2.9	4'X3' RCB		c		
3.34																																									JS No. 3	130.96 Rt"A"376+27.40	d		
3.34																																									JS No. 3	131.08 Rt"A"373+25.84	e	133	D-11
			0.2	25																																					OPEN Chnl TO RCB Conn	133.19 Rt"A"372+75.24	f		
1.85						1			326																												7.1			G1 INLET	121.00 Rt"A"391+02.88	a	134	D-12
										45																													5	REMOVE 24" RCP		a	135	D-13
											21																													REMOVE DITCH	70.2 Lt"E"3328+68 TO 115.4 Lt"A"392+25	b		D-7-13
												1																													REMOVE DI	88.77 Rt"NB405"332+26.48	a	136	D-8
1.75						2			580																												4.2			GD1 INLET	97.09 Rt"NB405"332+27.13	b		
																			6.2																			S	2.7	18" AP TYPE A		c		
0.78																																									Conc COLLAR	86.74 Rt"NB405"332+26.35	d		
																			14.0																			S	4.5	18" AP TYPE B		a	137	D-6
1.83						2			580																												4.5			GD1 INLET	84.82 Lt"SB405"317+21.97	b		
																			9.6																			S	4.3	18" AP TYPE A		a	138	D-11
1.04							1		236																		4.6										4.1			GCP INLET	135.17 Lt"A"369+59.28	b		
13.93			132.4	21410		5	1		1722	45	43	1							29.8								4.6													SHEET TOTAL				
435.17	2707.4	67.2	375.1	62,466	7	331	37	6	110,215	15,547	663	92	20.7	16	577.6	7	5	3	54.4	1712.5	8766.0	165.7	6233.3	121.4	78.0	3645.6	78.4	8.9	56.4	1	4	1	325.5	120.7	1075	60.7				GRAND TOTAL				

DRAINAGE QUANTITIES

2 REVISED PER ADDENDUM No. 2 DATED APRIL 1, 2010

DQ-26

STATE OF CALIFORNIA - DEPARTMENT OF TRANSPORTATION
Caltrans

CONSULTANT FUNCTIONAL SUPERVISOR: CARLOS A. CADENA
CALCULATED-DESIGNED BY: BARBARA VEALEY
CHECKED BY: BRAD LOSEY
REVISED BY: BML
DATE REVISED: 8-19-09

LAST REVISION 05-18-09
DATE PLOTTED => 29-MAR-2010
TIME PLOTTED => 10:50

Dist	COUNTY	ROUTE	POST MILES TOTAL PROJECT	SHEET No.	TOTAL SHEETS
12	Ora	22,405	R0.7/R2.9, 20.4/22.3	269	1006

REGISTERED CIVIL ENGINEER 05/18/09 DATE

9-21-09
PLANS APPROVAL DATE

REGISTERED PROFESSIONAL ENGINEER RAYMOND S. ONG No. 67162 Exp. 9/30/10 CIVIL STATE OF CALIFORNIA

THE STATE OF CALIFORNIA OR ITS OFFICERS OR AGENTS SHALL NOT BE RESPONSIBLE FOR THE ACCURACY OR COMPLETENESS OF SCANNED COPIES OF THIS PLAN SHEET.

PARSONS
2201 DUPONT DRIVE
SUITE 200
IRVINE, CA 92612

ORANGE COUNTY
TRANSPORTATION AUTHORITY
550 SOUTH MAIN STREET
ORANGE, CA 92863

2

FABRICATION NOTES:

1. VECTOR FILES FOR LOGOS TO BE SUPPLIED TO THE SIGN MANUFACTURER UPON REQUEST.
2. FOR DETAILS NOT SHOWN, SEE STANDARD PLANS.
3. COMPLY WITH ASTM TYPE II RETRORELFECTIVE SHEETING (OR HIGHER GRADE) FOR ALL COLORS EXCEPT BLACK.
4. LEGEND AND ARTWORK MAY BE TRANSPARENT FILM, INK OR APPLIED DECALS.
5. OVERLAY ENTIRE SIGN FACE WITH PREMIUM GRADE GRAFFITI FILM.
6. COMPLY WITH RETROREFLECTIVE SHEETING MANUFACTURER'S RECOMMENDATIONS FOR TRANSPARENT FILM, INK, APPLIED DECALS AND GRAFFITI FILM.
7. THE BORDER OF SIGN AND DETAIL C SHALL BE BLUE (NON-REFLECTIVE).
8. EXCEPT AS OTHERWISE SHOWN, THE LEGEND OF SIGN SHALL BE BLACK ON A WHITE BACKGROUND (NON-REFLECTIVE).

CONSTRUCTION PROJECT INFORMATION SIGN

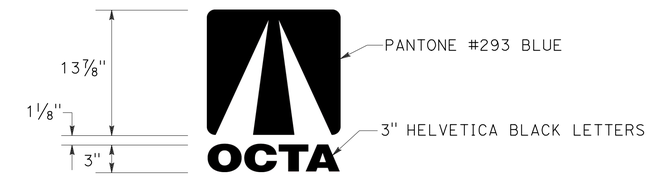

DETAIL D

DETAIL C

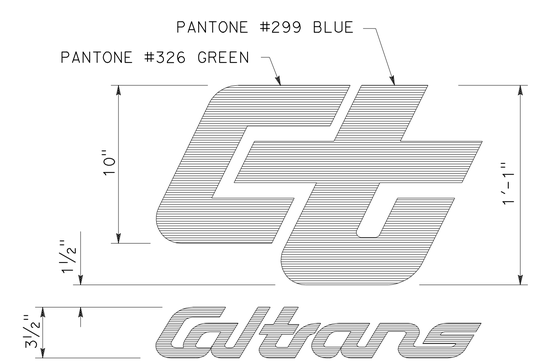

DETAIL B

COLORS:

BORDER - BLUE
LEGEND - BLACK, WHITE, AND ORANGE
BACKGROUND - WHITE
CT LOGO - GREEN (PANTONE #326) AND BLUE (PANTONE #299)
FHWA LOGO - BLUE AND BLACK
OCTA LOGO - BLUE

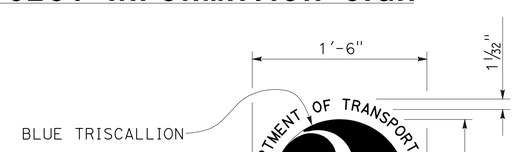

DETAIL A

2 **REVISED PER ADDENDUM No. 2 DATED APRIL 1, 2010**

THIS PLAN ACCURATE FOR CONSTRUCTION AREA SIGN WORK ONLY.

CONSTRUCTION AREA SIGNS
NO SCALE

CS-2

LUNG C. LAW	REVISED BY	RO
RAYMOND S. ONG	DATE REVISED	8/31/09
CALCULATED-DESIGNED BY		
CHECKED BY		
CONSULTANT FUNCTIONAL SUPERVISOR		
CARLOS A. CADENA		

STATE OF CALIFORNIA - DEPARTMENT OF TRANSPORTATION
Caltrans

LAST REVISION 05-18-09 | DATE PLOTTED => 29-MAR-2010 | TIME PLOTTED => 10:50

NOTE: FOR COMPLETE RIGHT OF WAY AND ACCURATE ACCESS DATA, SEE RIGHT OF WAY RECORD MAPS AT DISTRICT OFFICE.

CONSTRUCTION NOTES THIS SHEET:

1. TEMPORARY PAVEMENT SHALL BE PLACED IN AN OVERNIGHT LANE CLOSURE AND RAMP CLOSURE AND SHALL BE OPENED TO TRAFFIC AT THE END OF THE WORK PERIOD.
2. Temp Pvmt DETAILS, SEE SHEET SCD-2.

CURVE DATA

No.	R	DELTA	T	L
8	4461.42′	3°22′51"	131.67′	263.26′

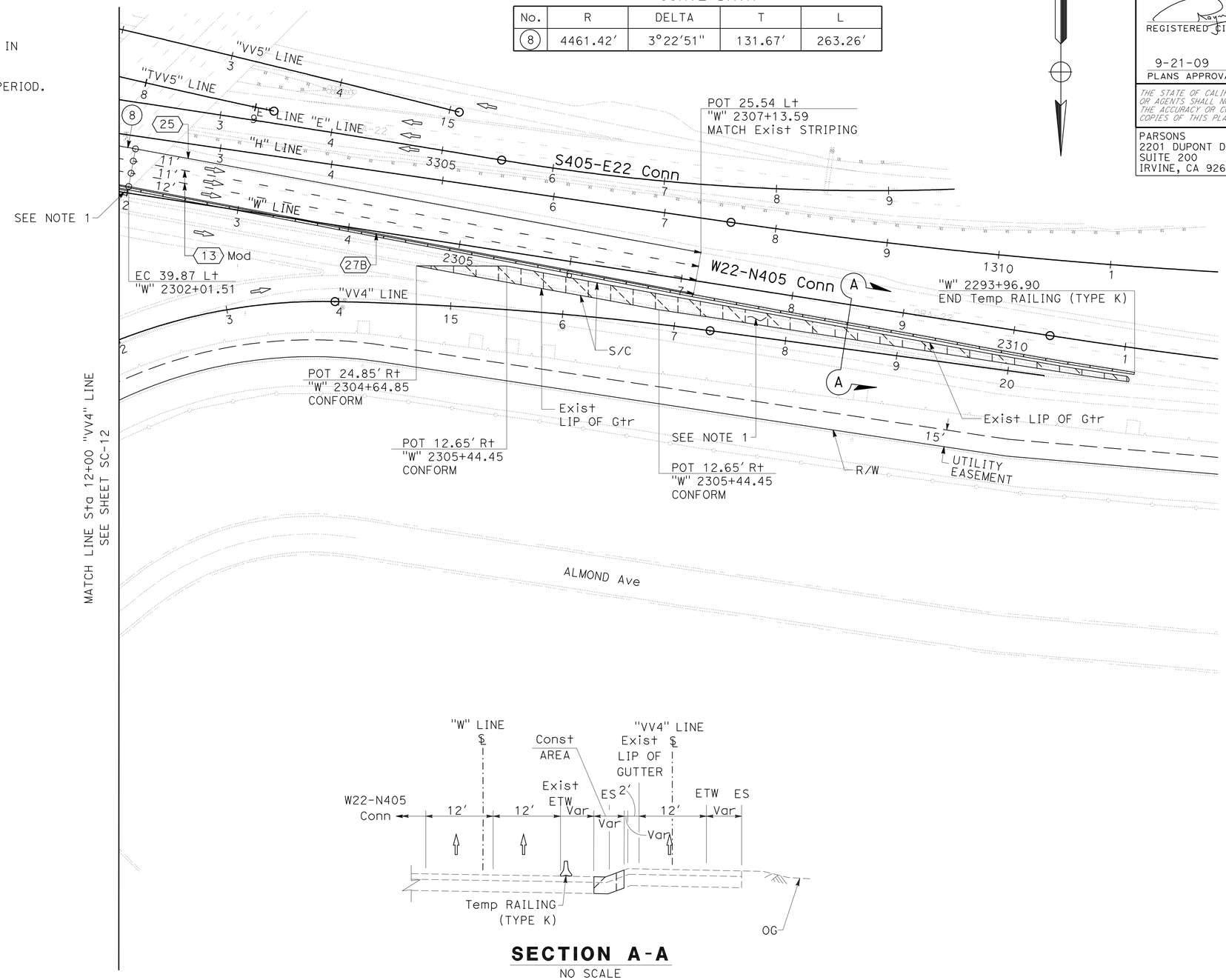

SECTION A-A
NO SCALE

Dist	COUNTY	ROUTE	POST MILES TOTAL PROJECT	SHEET No.	TOTAL SHEETS
12	Ora	22,405	R0.7/R2.9, 20.4/22.3	283	1006

REGISTERED CIVIL ENGINEER 05/18/09 DATE

9-21-09
PLANS APPROVAL DATE

REGISTERED PROFESSIONAL ENGINEER RAYMOND S. ONG No. 67162 Exp. 9/30/10 CIVIL STATE OF CALIFORNIA

THE STATE OF CALIFORNIA OR ITS OFFICERS OR AGENTS SHALL NOT BE RESPONSIBLE FOR THE ACCURACY OR COMPLETENESS OF SCANNED COPIES OF THIS PLAN SHEET.

PARSONS
2201 DUPONT DRIVE
SUITE 200
IRVINE, CA 92612

ORANGE COUNTY
TRANSPORTATION AUTHORITY
550 SOUTH MAIN STREET
ORANGE, CA 92863

STAGE CONSTRUCTION AND TRAFFIC HANDLING PLAN

(STAGE 1A)
SCALE: 1"=50′

SC-13

THIS PLAN ACCURATE FOR STAGE CONSTRUCTION AND TRAFFIC HANDLING WORK ONLY.

STATE OF CALIFORNIA - DEPARTMENT OF TRANSPORTATION
Caltrans
CONSULTANT FUNCTIONAL SUPERVISOR: CARLOS A. CADENA
CALCULATED-DESIGNED BY: LUNG C. LAW
CHECKED BY: RAYMOND S. ONG
REVISED BY
DATE REVISED

LAST REVISION 05-18-09
DATE PLOTTED => 30-MAR-2010
TIME PLOTTED => 09:44

Dist	COUNTY	ROUTE	POST MILES TOTAL PROJECT	SHEET No.	TOTAL SHEETS
12	Ora	22,405	R0.7/R2.9, 20.4/22.3	290	1006

REGISTERED CIVIL ENGINEER 05/18/09 DATE

9-21-09
PLANS APPROVAL DATE

REGISTERED PROFESSIONAL ENGINEER RAYMOND S. ONG No. 67162 Exp. 9/30/10 CIVIL STATE OF CALIFORNIA

THE STATE OF CALIFORNIA OR ITS OFFICERS OR AGENTS SHALL NOT BE RESPONSIBLE FOR THE ACCURACY OR COMPLETENESS OF SCANNED COPIES OF THIS PLAN SHEET.

PARSONS
2201 DUPONT DRIVE
SUITE 200
IRVINE, CA 92612

ORANGE COUNTY
TRANSPORTATION AUTHORITY
550 SOUTH MAIN STREET
ORANGE, CA 92863

NOTE:
FOR COMPLETE RIGHT OF WAY AND ACCURATE ACCESS DATA, SEE RIGHT OF WAY RECORD MAPS AT DISTRICT OFFICE.

SECTION A-A
NO SCALE

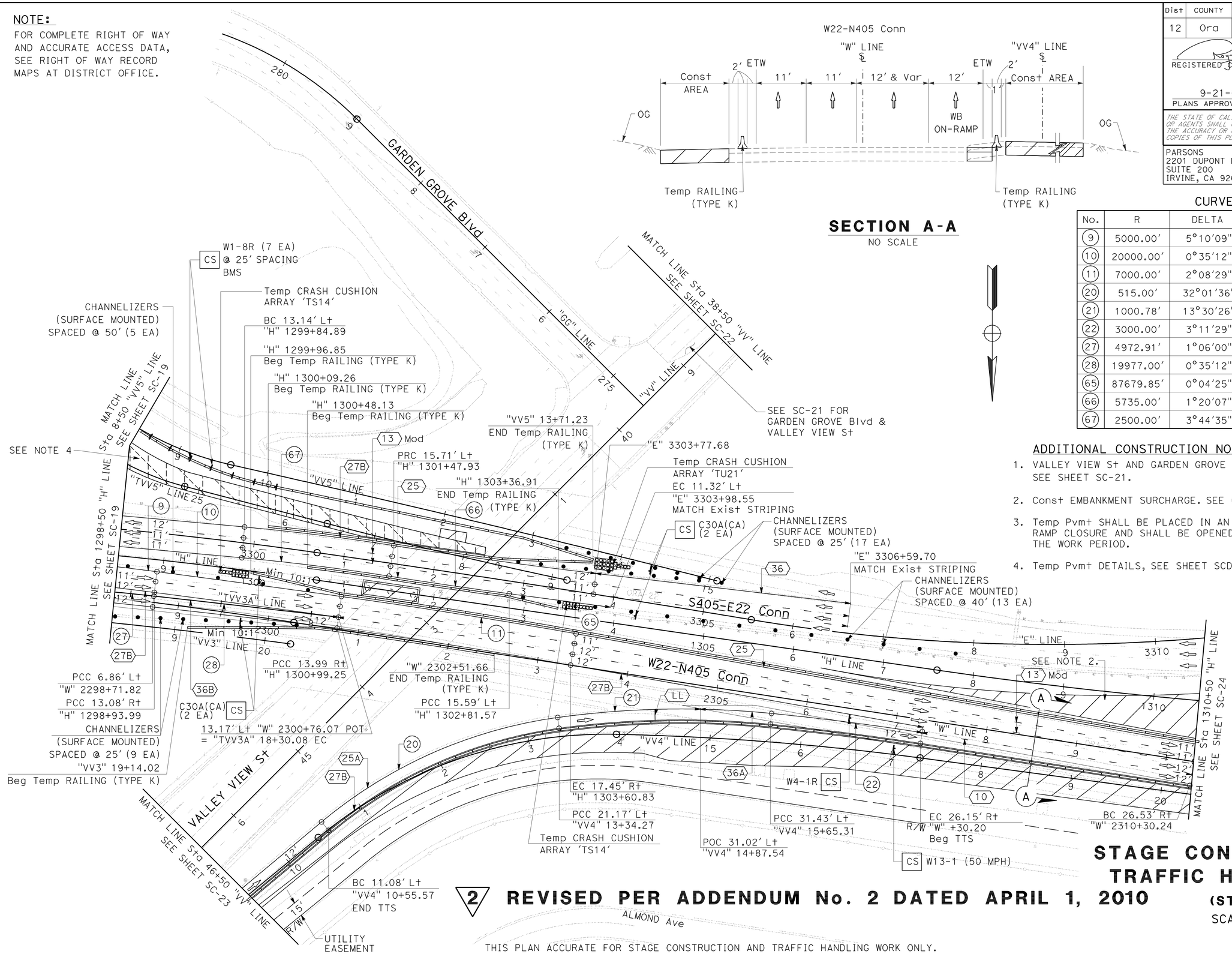

CURVE DATA

No.	R	DELTA	T	L
9	5000.00'	5°10'09"	225.70'	451.09'
10	20000.00'	0°35'12"	102.39'	204.78'
11	7000.00'	2°08'29"	130.82'	261.62'
20	515.00'	32°01'36"	147.80'	287.87'
21	1000.78'	13°30'26"	118.51'	235.93'
22	3000.00'	3°11'29"	83.57'	167.10'
27	4972.91'	1°06'00"	47.74'	95.48'
28	19977.00'	0°35'12"	102.28'	204.57'
65	87679.85'	0°04'25"	56.29'	112.57'
66	5735.00'	1°20'07"	66.83'	133.65'
67	2500.00'	3°44'35"	81.69'	163.32'

ADDITIONAL CONSTRUCTION NOTES THIS SHEET:

1. VALLEY VIEW St AND GARDEN GROVE Blvd NOT SHOWN FOR CLARITY, SEE SHEET SC-21.
2. Const EMBANKMENT SURCHARGE. SEE CONSTRUCTION DETAILS ~~(C-54)~~. 2
3. Temp Pvmt SHALL BE PLACED IN AN OVERNIGHT LANE CLOSURE AND RAMP CLOSURE AND SHALL BE OPENED TO TRAFFIC AT THE END OF THE WORK PERIOD.
4. Temp Pvmt DETAILS, SEE SHEET SCD-8.

2 **REVISED PER ADDENDUM No. 2 DATED APRIL 1, 2010**

THIS PLAN ACCURATE FOR STAGE CONSTRUCTION AND TRAFFIC HANDLING WORK ONLY.

STAGE CONSTRUCTION AND TRAFFIC HANDLING PLAN
(STAGE 1B)
SCALE: 1"=50'

SC-20

STATE OF CALIFORNIA - DEPARTMENT OF TRANSPORTATION
Caltrans
CONSULTANT FUNCTIONAL SUPERVISOR: CARLOS A. CADENA
CALCULATED-DESIGNED BY: LUNG C. LAW
CHECKED BY: RAYMOND S. ONG
REVISED BY
DATE REVISED

LAST REVISION 05-18-09
DATE PLOTTED => 29-MAR-2010
TIME PLOTTED => 10:50

NOTE:
FOR COMPLETE RIGHT OF WAY AND ACCURATE ACCESS DATA,
SEE RIGHT OF WAY RECORD MAPS AT DISTRICT OFFICE.

Dist	COUNTY	ROUTE	POST MILES TOTAL PROJECT	SHEET No.	TOTAL SHEETS
12	Ora	22,405	R0.7/R2.9, 20.4/22.3	294	1006

REGISTERED CIVIL ENGINEER 05/18/09 DATE

9-21-09
PLANS APPROVAL DATE

REGISTERED PROFESSIONAL ENGINEER RAYMOND S. ONG No. 67162 Exp. 9/30/10 CIVIL STATE OF CALIFORNIA

THE STATE OF CALIFORNIA OR ITS OFFICERS OR AGENTS SHALL NOT BE RESPONSIBLE FOR THE ACCURACY OR COMPLETENESS OF SCANNED COPIES OF THIS PLAN SHEET.

PARSONS
2201 DUPONT DRIVE
SUITE 200
IRVINE, CA 92612

ORANGE COUNTY
TRANSPORTATION AUTHORITY
550 SOUTH MAIN STREET
ORANGE, CA 92863

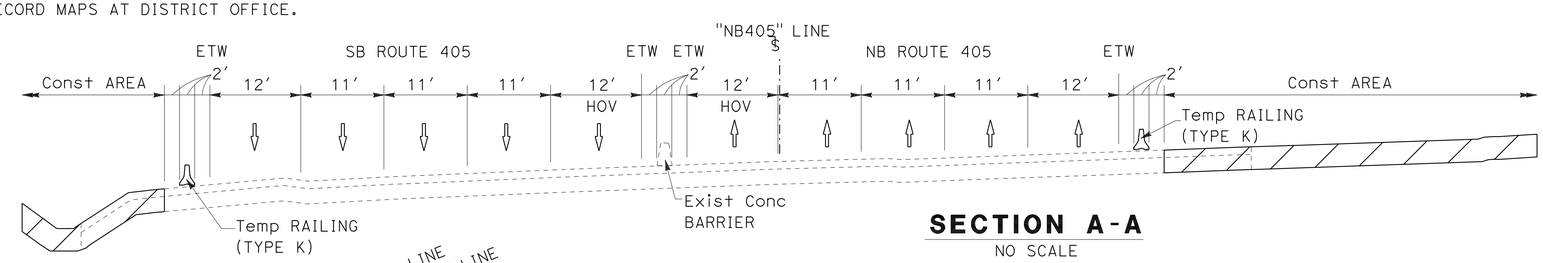

SECTION A-A

NO SCALE

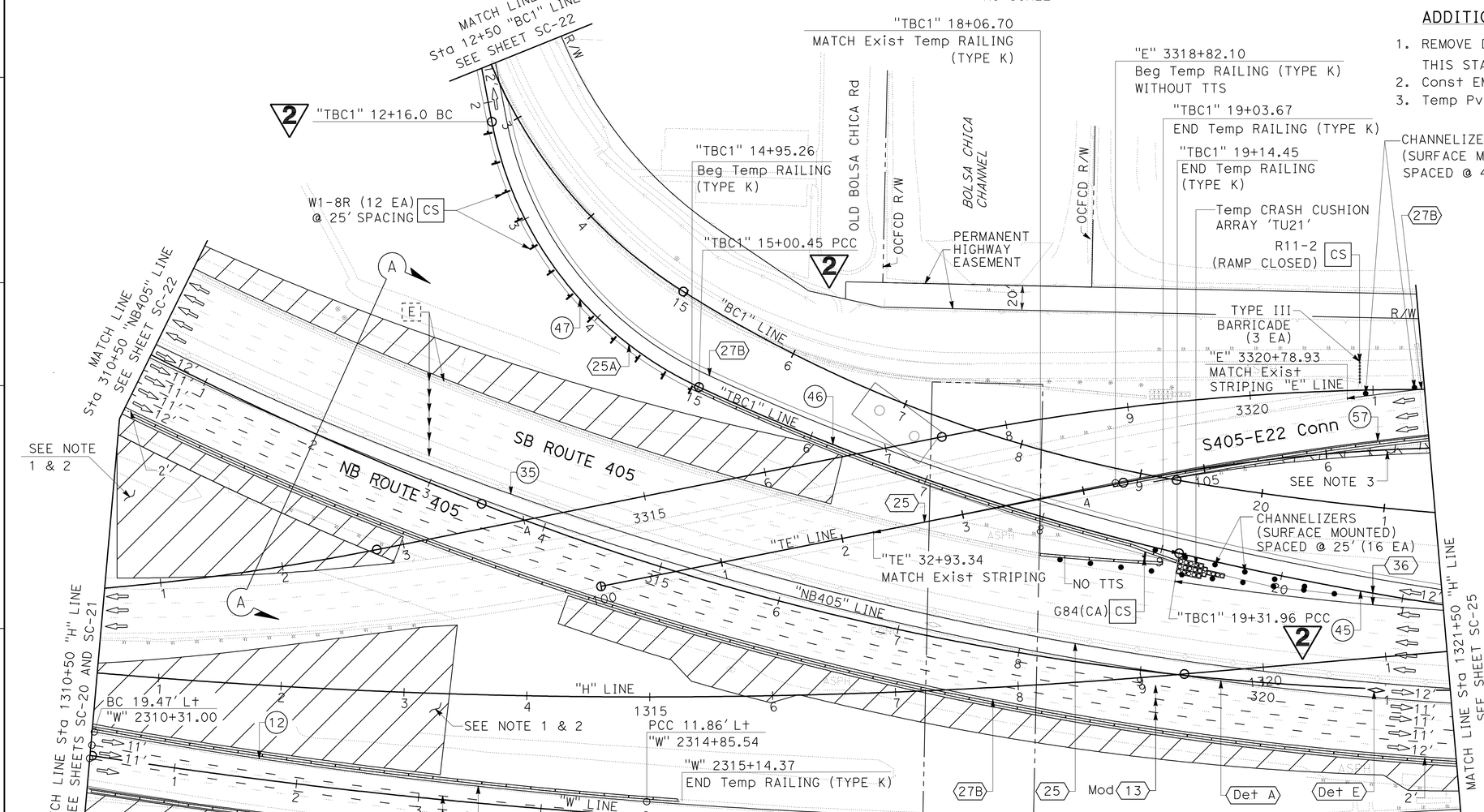

ADDITIONAL CONSTRUCTION NOTES THIS SHEET:

1. REMOVE DRAINAGE SYSTEM (26) AND Const DRAINAGE SYSTEM (27) THIS STAGE, SEE DRAINAGE PLANS.
2. Const EMBANKMENT SURCHARGE. SEE CONSTRUCTION DETAILS ~~(C-54)~~.
3. Temp Pvmt DETAILS, SEE SHEET SCD-10.

2

CURVE DATA

No.	R	DELTA	T	L
12	4500.00′	5°46′15"	226.81′	453.24′
13	5019.95′	10°44′23"	471.87′	940.97′
35	2803.00′	53°43′17"	1419.63′	2628.14′
45	2740.00′	5°40′59"	136.00′	271.77′
46	2054.35′	11°33′03"	207.78′	414.16′
47	300.00′	54°18′56"	153.90′	284.40′
57	2901.00′	12°30′52"	318.08′	633.63′

STAGE CONSTRUCTION AND TRAFFIC HANDLING PLAN

(STAGE 1B)

SCALE: 1"=50′

SC-24

2 **REVISED PER ADDENDUM No. 2 DATED APRIL 1, 2010**

THIS PLAN ACCURATE FOR STAGE CONSTRUCTION AND TRAFFIC HANDLING WORK ONLY.

STATE OF CALIFORNIA - DEPARTMENT OF TRANSPORTATION
Caltrans

CONSULTANT FUNCTIONAL SUPERVISOR: CARLOS A. CADENA
CALCULATED-DESIGNED BY: LUNG C. LAW
CHECKED BY: RAYMOND S. ONG
REVISED BY / DATE REVISED

LAST REVISION 05-18-09 DATE PLOTTED => 29-MAR-2010 TIME PLOTTED => 10:39

Dist	COUNTY	ROUTE	POST MILES TOTAL PROJECT	SHEET No.	TOTAL SHEETS
12	Ora	22,405	R0.7/R2.9, 20.4/22.3	368	1006

REGISTERED CIVIL ENGINEER 05/18/09 DATE

9-21-09
PLANS APPROVAL DATE

REGISTERED PROFESSIONAL ENGINEER RAYMOND S. ONG No. 67162 Exp. 9/30/10 CIVIL STATE OF CALIFORNIA

THE STATE OF CALIFORNIA OR ITS OFFICERS OR AGENTS SHALL NOT BE RESPONSIBLE FOR THE ACCURACY OR COMPLETENESS OF SCANNED COPIES OF THIS PLAN SHEET.

PARSONS
2201 DUPONT DRIVE
SUITE 200
IRVINE, CA 92612

ORANGE COUNTY
TRANSPORTATION AUTHORITY
550 SOUTH MAIN STREET
ORANGE, CA 92863

NOTES:

1. WHERE Temp RAILING (TYPE K) IS PLACED ON CURVES AND RADII THAT ARE TOO SEVERE TO CONNECT PANELS WITH BOLTED JOINTS, THE RAILING TO BE ANCHORED AT THE BASE WITH #8 X 10" DOWEL. SEE SECTION A-A THIS SHEET.
2. ALL 3 1/2 " GAPS AT REMOVABLE PANELS ARE TO BE ANCHORED AT THE BASE WITH #8 X 10" DOWEL OR 1" Ø PIN EACH SIDE OF JOINT. SEE SECTION A-A THIS SHEET.

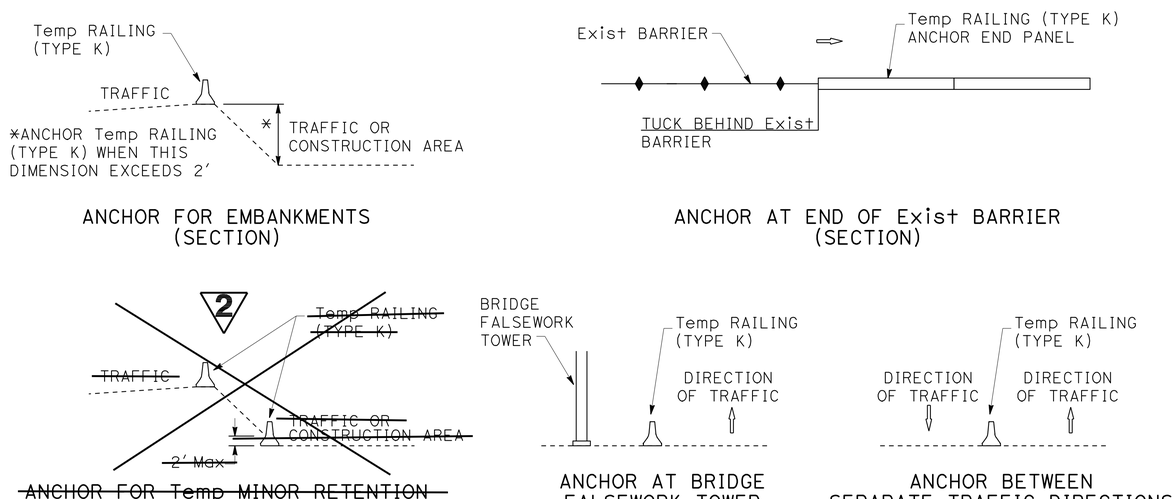

Temp RAILING (TYPE K) ANCHORING CONDITIONS

NO SCALE

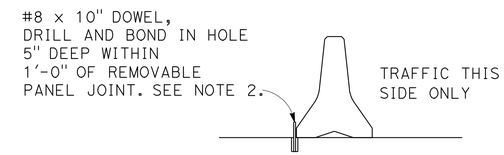

SECTION A-A *

* SECTION A-A IS FOR CONCRETE PAVEMENT. ALTERNATIVE DETAIL, 1" Ø PINS 2'-0" LONG DRIVEN IN AC OR FIRM SOIL PERMITTED, MINIMUM 1'-6" DEEP.

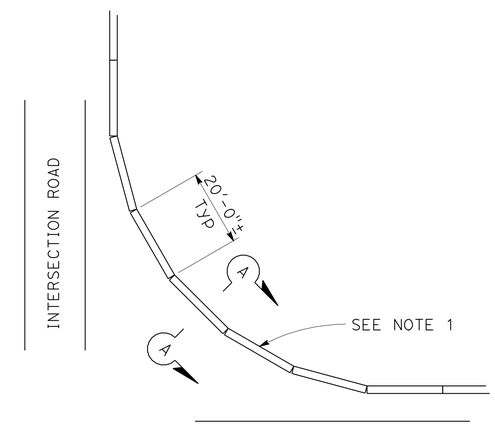

CURVED LAYOUT

2 **REVISED PER ADDENDUM No. 2 DATED APRIL 1, 2010**

STAGE CONSTRUCTION DETAILS

NO SCALE

SCD-13

THIS PLAN ACCURATE FOR STAGE CONSTRUCTION WORK ONLY.

STATE OF CALIFORNIA - DEPARTMENT OF TRANSPORTATION
Caltrans
CONSULTANT FUNCTIONAL SUPERVISOR: CARLOS A. CADENA
CALCULATED-DESIGNED BY: RAYMOND S. ONG
CHECKED BY
REVISED BY: LUNG C. LAW
DATE REVISED

LAST REVISION 05-18-09 | DATE PLOTTED => 29-MAR-2010 | TIME PLOTTED => 10:39

Dist	COUNTY	ROUTE	POST MILES TOTAL PROJECT	SHEET No.	TOTAL SHEETS
12	Ora	22,405	R0.7/R2.9, 20.4/22.3	375	1006

REGISTERED CIVIL ENGINEER 05/18/09 DATE

9-21-09
PLANS APPROVAL DATE

REGISTERED PROFESSIONAL ENGINEER LUNG C. LAW No. 68647 Exp. 9/30/11 CIVIL STATE OF CALIFORNIA

THE STATE OF CALIFORNIA OR ITS OFFICERS OR AGENTS SHALL NOT BE RESPONSIBLE FOR THE ACCURACY OR COMPLETENESS OF SCANNED COPIES OF THIS PLAN SHEET.

PARSONS
2201 DUPONT DRIVE
SUITE 200
IRVINE, CA 92612

ORANGE COUNTY
TRANSPORTATION AUTHORITY
550 SOUTH MAIN STREET
ORANGE, CA 92863

TEMPORARY PAVEMENT DELINEATION QUANTITIES

STAGE	SHEET No. (SC-)	LOCATION ▽2		TEMPORARY TRAFFIC STRIPE (PAINT) 4" BROKEN WHITE 9, 13 (Mod), 14 (Mod) & 40	4" SOLID WHITE 4" WHITE, 27B, A, C, & D	4" SOLID YELLOW 25 & 25A	4" DOUBLE SOLID YELLOW 22, 29, A, C, & D	8" BROKEN WHITE 37 & B	8" SOLID WHITE 36, 36A, 36B, 38, 38A & 38B	PAVEMENT MARKER NON-REFLECTIVE A	RETROREFLECTIVE C	RETROREFLECTIVE D	RETROREFLECTIVE G	RETROREFLECTIVE H	TEMPORARY PAVEMENT MARKING (PAINT) ARROWS	SYMBOLS	WORDS	CROSSWALK & LIMIT LINE	TYPE III BARRICADE	CHANNELIZER (SURFACE MOUNTED)	TEMPORARY CRASH CUSHION MODULE		TEMPORARY RAILING (TYPE K)	TEMPORARY TRAFFIC SCREEN
		STATION LINE	STATION	LF						EA					SQFT				EA	EA	EA	ARRAY TYPE	LF	LF
1A	12	"B"	281+92.12-286+50.00	1,896	949	948				158			41	21						6	14	TS14	797	
	13	"B"/"H"	286+50.00-1298+50.00	1,048	521	527				87			23	12									920	
	14	"A1"/"NB405"	296+92.96-310+50.00	4,046	1,967	970	966			362			90	104									565	
		"BC1"	9+95.75-12+50.00		253	255								12									255	
	15	"NB405"/"H"	310+50.00-1321+50.00	3,224	2,149	1,093	1,087			269			68	116									1,060	
		"BC1"/"E"	12+50.00-3319+16.00		482	496								22						7	14	TS14	637	
	16	"H"/"NB405"	1321+50.00-327+82.81	1,888	1,259	632	631			157			40	69						11	14	TS14	375	
1B	17	"B"	198+30.01-221+00.00	3,162		1,105				264			67	24	126					22				
	18	"B"	221+00.00-286+50.00	458	244	6,547			214	38			20	137						131				
	19	"VV5"	4+67.58-8+50.00																				379	379
		"H"	1293+59.28-1298+50.00	982	492	490				82			21	11										
		"B" / "H"	286+50.00-1298+50.00	1,178	1,178	1,179				98			26	26						23				
		"VV3"/ "H"	12+50.00-1298+50.00		516	258			273				12	12				12		9				
	20	"VV5"	8+50.00-13+71.23																		21	TU21	523	523
		"H"/"E"	1300+09.26-3303+75	1,613	525	545			282	134			47	12						30			651	651
		"H"	1298+50.00-1310+50.00	2,158	1,149	1,202			248	180			57	26						14	28	TS14	1,396	1,396
		"VV" / "H"	46+50.00-1310+50.00		1,093	559			246	38			18	24				12					1,094	413
	21	"VV"	38+50.00-46+50.00	1,055	1,975		780		197			60	26		60			173	2				1,460	
		"GG"	275+28.61-280+76.20	1,139	1,022		698		198			48	34		90			32		11	11	TS11	460	
	22	"BC1"	9+95.73-12+50.00		255	257								12										
		"A1"/ "NB405"	296+92.96-310+50.00	4,122	2,749	1,362	1,367			344			87	145						11	14	TS14	654	654
		"VV"	35+56.86-38+50.00	587	293		293		77			26	17		15					18	11	TS11	112	
		"NB405" / "BC1	302+84.00-9+79.70		1,140	1,179								50						12			721	
	23	"VV4" / "VV"	5+17.81-46+50.00		426	261			140				7	12						10	14	TS14	301	301
		"VV" / "TVV3"	10+00.00-12+37.22	1,175	793		821		193			35	30		42			34	2	23	11	TS11	310	
		"VV"	46+50.00-52+15.70		239	249								11						18			673	
	24	"BC1" /"H"	12+50.00-1321+50.00		947	743			439				19	32						16	21	TU21	515	415
		"E"	3316+76.45-3321+46.20		63	459								11					3	2			258	
		"NB405"/"H"	310+50.00-1321+50.00	3,344	2,230	1,096	1,103			279			71	118		11							1,128	1,128
		"W"	2310+27.23-2321+49.15	2,240	1,123	1,116				187			48	24									1,606	1,606
	25	"E"	3321+45.20-3331+49.11		592	1,004								22						15			1,004	1,004
		"H"	1321+50.00-1331+50.00	2,306	1,775	771	770		105	192			54	83		11	22							
		"H"	1321+50.00-1331+50.00	3,261	1,749	1,002	1,002			272			69	107		11	62						113	113
		"W"	2321+49.15-2328+95.45	1,199	1,001	170			576	100			51	5						10			570	242
	26	"E" / "A"	3331+49.11-343+50.00	797	1,179	376			401	66			35	9						7	21	TU21	998	998
		"H" / "A"	1331+50.00-343+50.00	3,740	1,575	1,199	1,200	131	700	312	16		101	128		11	40			10				
		"H" / "A"	1331+50.00-343+50.00	5,968	2,387	1,199	1,197			497			125	128									1,190	350
	27	"A"	343+50.00-355+50.00	4,800	2,400	1,200	1,200	1,200		400	42		102	128									1,200	1,200
		"A"	343+50.00-355+50.00	6,000	2,350	1,200	1,150			500			130	124									1,200	1,200
	28	"A"	355+50.00-367+50.00	4,800	2,400	1,200	1,200	1,200		400	40		103	128		11	45						1,200	1,200
		"A"	355+50.00-367+50.00	6,000	1,200	1,200				500			178	26		66	186						1,200	1,200
	29	"A"	367+50.00-379+50.00	5,849	2,325	1,200	1,125	151		487	21		115	122		11	17						1,200	1,200
		"A"	367+50.00-379+50.00	6,000	1,200	1,200				500			178	26									1,200	1,200
	30	"A"	379+50.00-392+50.00	6,501	1,300	1,300				542			193	28									1,300	1,300
		"A"	379+50.00-392+50.00	6,498	1,299	1,300				542			193	28		11							1,299	1,299
	31	"A" / "A1"	392+50.00-405+25.00	6,375	975	1,275				531	16		174	28		44	124			11			486	486
		"A" / "A1"	392+50.00-405+24.96	6,375	968	1,275			512	531			211	28		11	62						330	330
SUB-TOTAL				111,784	52,707	41,599	16,590	2,682	4,801	9,049	135	169	2,881	2,191	333	198	558	263	7	427	194		31,340	20,788
SHEET TOTAL				230,163						14,425					1,352				7	427	194		31,340	20,788

NOTE:
* - SUMMARIZED IN TEMPORARY PAVEMENT DELINEATION TABLE (SHEET SCQ-4)

▽2 REVISED PER ADDENDUM NO. 2 DATED APRIL 1, 2010

STAGE CONSTRUCTION QUANTITIES

SCQ-1

STATE OF CALIFORNIA - DEPARTMENT OF TRANSPORTATION
Caltrans

CONSULTANT FUNCTIONAL SUPERVISOR: CARLOS A. CADENA
CALCULATED-DESIGNED BY: LUNG C. LAW
CHECKED BY: RAYMOND S. ONG
REVISED BY: LCL
DATE REVISED: 8/13/09

LAST REVISION 05-18-09
DATE PLOTTED => 30-MAR-2010
TIME PLOTTED => 11:42

Dist	COUNTY	ROUTE	POST MILES TOTAL PROJECT	SHEET No.	TOTAL SHEETS
12	Ora	22,405	R0.7/R2.9, 20.4/22.3	377	1006

REGISTERED CIVIL ENGINEER 05/18/09 DATE

9-21-09
PLANS APPROVAL DATE

REGISTERED PROFESSIONAL ENGINEER LUNG C. LAW No. 68647 Exp. 9/30/11 CIVIL STATE OF CALIFORNIA

THE STATE OF CALIFORNIA OR ITS OFFICERS OR AGENTS SHALL NOT BE RESPONSIBLE FOR THE ACCURACY OR COMPLETENESS OF SCANNED COPIES OF THIS PLAN SHEET.

PARSONS
2201 DUPONT DRIVE
SUITE 200
IRVINE, CA 92612

ORANGE COUNTY
TRANSPORTATION AUTHORITY
550 SOUTH MAIN STREET
ORANGE, CA 92863

TEMPORARY PAVEMENT DELINEATION QUANTITIES, Cont

STAGE	SHEET No. (SC-)	LOCATION ▽2 STATION LINE	STATION	TEMPORARY TRAFFIC STRIPE (PAINT) 4" BROKEN WHITE 9, 13 (Mod), 14 (Mod) & 40	4" SOLID WHITE 4" WHITE, 27B, A, C, & D	4" SOLID YELLOW 25 & 25A	4" DOUBLE SOLID YELLOW 22, 29, A, C, & D	8" BROKEN WHITE 37 & B	8" SOLID WHITE 36, 36A, 36B, 38, 38A & 38B	PAVEMENT MARKER NON-REFLECTIVE A	RETROREFLECTIVE C	RETROREFLECTIVE D	RETROREFLECTIVE G	RETROREFLECTIVE H	TEMPORARY PAVEMENT MARKING (PAINT) ARROWS	SYMBOLS	WORDS	CROSSWALK & LIMIT LINE	TYPE III BARRICADE	CHANNELIZER (SURFACE MOUNTED)	TEMPORARY CRASH CUSHION MODULE	ARRAY TYPE	TEMPORARY RAILING (TYPE K)	TEMPORARY TRAFFIC SCREEN
				LF						EA					SQFT				EA	EA	EA		LF	LF
3A	50	"H"	1298+50.00-1310+50.00	1,200	929	1,200			270	100			38	26						12			1,382	1,382
		"H"	1298+50.00-1310+50.00	1,202	1,202	1,202				100			26	26									1,202	1,202
		"GG"	275+22.32-280+75.97																					
		"VV"	38+50.00-46+50.00	301	163	13	150					7	7	2							11	TS11	587	
		"VV" / "H"	46+50.00-1310+50.00		646				263	38			19					12						
		"VV5"	8+50.00-14+21.23		373	102			271				12	5						13	21	TU21	179	179
		"H"	1298+50.00-1310+50.00		818	1,202								51									1,202	1,202
	51	"VV"	31+50.00-38+50.00																					
		"NB405"	309+05.23-310+50.00	430	286	144	144			36			10	18										
		"BC1"	10+80.56-12+50.00																				169	
	52	"VV"	46+50.00-52+00.00	970	568		420					19	16					33					341	
		"VV"	46+50.00-51+00.00																					
		"VV" / "VV3"	46+50.00-12+37.22		708	743								32				22		30	11	TS11	1,254	621
		"VV"	47+50.00																		11	TU11		
	53	"BC1" / "H"	12+50.00-20+69.18		542	280			264				12	13						5			948	
		"W"	2310+32.66-2321+49.65		923	594			328				15	26									704	123
		"NB405"	310+50.00-321+51.67	3,210	1,873	1,088	1,082		264	267			80	116						15			741	363
		"E"	3310+56.75-3321+40.93	1,083	1,081	1,085				90			24	24						24			54	54
		"W"	2310+28.67-2321+49.19	1,321	1,122	1,117				110			29	24									665	665
	54	"NB405"	325+84.64-331+53+07	2,335	1,134	569	568			195			50	62		11	22							
		"NB405"	321+51.67-331+53.07	3,007	2,005	1,002	1,002			251			64	107		11	22						1,010	509
		"E"	3321+40.93-3331+47+95	1,007	1,007	1,007				84			22	22						1			966	966
		"W"	2321+47.19-2328+33.44	784	687	94			590	65			43	3										
	55	"NB405" / "A"	331+53.07-346+00.00	7,207	2,882	1,446	1,445			601			151	154									1,052	1,052
		"NB405" / "A"	331+53.07-346+00.00	4,358	2,567	1,449	1,450		338	363			107	154		11	40			15	21	TU21	739	739
		"E" / "A"	3331+47.95-346+00.00	1,463	1,464	1,123			339	122			47	24						13			749	749
	56	"A"	346+00.00-349+34.81	1,674	670	335	335			140			36	49										
		"A"	346+00.00-359+59.76	4,223	2,657	1,360	1,360	998	362	352	46		96	145										
		"A"	346+00.00-346+61.72	62	62				62	5			6											
3C	58	"B"	281+92.12-286+50.00	458	261	458			197	38			20	11						9				
	59	"B"/"H"	286+50.00-1298+50.00	1,177	1,176	1,178				98			26	26						23			199	199
		"VV3"/"H"	12+50.00-1298+50.00		555	259			318				14	12				15					284	
	60	"VV"	45+00.00-46+50.00																	9				
		"H"	1298+50.00-1310+50.00	2,206	1,203	1,202				221			54	26									1,202	1,202
		"VV4"	13+86.18-16+76.26		288				290				13											
		"H" / "VV3"	1298+50.00-20+28.45		198				198				9											
	61	"NB405"	307+38.82-310+50.00	951	634	312	314			79			21	36						9				
		"NB405"	308+60.95-310+50.00																				183	
		"BC1"	9+84.80-12+50.00																					
	62	"VV"/"VV3"	46+50.00-12+50.00		53	56								3						24	11	TS11	478	
		"VV"	46+50.00-50+83.52																					
	63	"NB405"/"H"	310+50.00-1321+50.00	3,359	2,240	1,102	1,108			280			71	118		11				9	14	TS14	791	791
		"BC1" / "H"	12+50.00-1321+50.00		637	644								28										
		"NB405"/"H"	310+50.00-1321+50.00	2,602	1,734	882	877			217			55	94									1,498	438
		"W"	2310+30.92-2321+49.3	2,247	1,126	1,120				187			48	24									359	127
	64	"H"	1321+50.00-1331+50.00	3,572	1,744	1,001	1,001			298			75	107		11	62							
		"H"	1321+50.00-1331+50.00		1,002	1,002								43										
		"H"/"NB405"	1321+50.00-326+46.82	1,482	988	495	495			123			32	55						8			277	
		"W"/"H"	2321+50.00-1331+50.00	885	1,001	168			573	74			44	5										
	65	"H" / "NB405"	1331+50.00-333+85.83	1,795	718	259	359			150			38	38										
		"H"	1331+50.00-1339+36.31		794	368			272				12	9										
		"H"	1335+13.83-1337+83.19						271				12											
	66	"A"/"A1"	370+00.00-405+24.96	17,624	3,220	3,525		3,525	419	1,469			387	74		22	62							
		"A"/"A1"	370+00.00-405+75.01	17,877	3,261	3,575		3,575	20	1,490			375	75		44	124							
SUB-TOTAL				92,072	49,202	34,761	12,110	8,098	5,909	7,643	46	26	2,216	1,867		121	332	82		219	100		19,215	12,563
SHEET TOTAL				202,152						11,798					535					219	100		19,215	12,563

NOTE:
* - SUMMARIZED IN TEMPORARY PAVEMENT DELINEATION TABLE (SHEET SCQ-4)

2 REVISED PER ADDENDUM NO. 2 DATED APRIL 1, 2010

STAGE CONSTRUCTION QUANTITIES

SCQ-3

STATE OF CALIFORNIA - DEPARTMENT OF TRANSPORTATION
Caltrans

CONSULTANT FUNCTIONAL SUPERVISOR: CARLOS A. CADENA
CALCULATED-DESIGNED BY: LUNG C. LAW
CHECKED BY: RAYMOND S. ONG
REVISED BY: LCL
DATE REVISED: 8/13/09

LAST REVISION DATE PLOTTED => 29-MAR-2010
05-18-09 TIME PLOTTED => 12:16

Dist	COUNTY	ROUTE	POST MILES TOTAL PROJECT	SHEET No.	TOTAL SHEETS
12	Ora	22,405	R0.7/R2.9, 20.4/22.3	382	1006

REGISTERED CIVIL ENGINEER 05/18/09 DATE

9-21-09
PLANS APPROVAL DATE

REGISTERED PROFESSIONAL ENGINEER RAYMOND S. ONG No. 67162 Exp. 9/30/10 CIVIL STATE OF CALIFORNIA

THE STATE OF CALIFORNIA OR ITS OFFICERS OR AGENTS SHALL NOT BE RESPONSIBLE FOR THE ACCURACY OR COMPLETENESS OF SCANNED COPIES OF THIS PLAN SHEET.

PARSONS
2201 DUPONT DRIVE
SUITE 200
IRVINE, CA 92612

ORANGE COUNTY
TRANSPORTATION AUTHORITY
550 SOUTH MAIN STREET
ORANGE, CA 92863

2

NOTES

1. SEE STAGE CONSTRUCTION PLANS FOR SIGNS NOT SHOWN.
2. EXACT LOCATION OF SIGNS TO BE DETERMINED BY THE ENGINEER.
3. EXACT MESSAGE TO BE DISPLAYED ON PCMS WILL BE DETERMINED BY THE ENGINEER.
4. SIGNS SHALL BE LOCATED APPROXIMATELY 100' AWAY FROM THE INTERSECTION.

LEGEND

- PORTABLE SIGN
- DIRECTION OF TRAFFIC
- TRAFFIC CLOSURE

DETOUR STAGES

1. STAGE 3 PHASE A
2. STAGE 3 PHASE C
3. STAGE 4 PHASE A

DETOUR ROUTE

WB ROUTE 22 LOOP ON-RAMP:
1. NORTH ON VALLEY VIEW St
2. WEST ON LAMPSON Ave
3. SOUTH ON SEAL BEACH Blvd
4. USE ROUTE 405 NORTH ON-RAMP

WB ROUTE 22:
1. NORTH ON VALLEY VIEW St
2. WEST ON LAMPSON Ave
3. SOUTH ON SEAL BEACH Blvd
4. USE ROUTE 405 NORTH ON-RAMP

DURING THE FREEWAY, CONNECTOR AND RAMP CLOSURES, THE PCMS SHOULD READ AS FOLLOW:

1ST FRAME	2ND FRAME	PCMS
WB RTE 22 CLOSED	USE VALLEY VIEW EXIT	1
WB RTE 22 RAMP CLOSED	USE LAMPSON AVE	2

CONSTRUCTION AREA SIGNS (DETOUR) STATIONARY MOUNTED

SIGN No.	SIGN CODE	NUMBER OF POST & SIZE	No. OF SIGNS
A	W20-2	1 - 4" x 6"	4
B	M4-8a	1 - 4" x 6"	1
C	SEE THD-1 FOR DETAILS	1 - 4" x 6"	6
D	SEE THD-1 FOR DETAILS	1 - 4" x 6"	10
E	SEE THD-1 FOR DETAILS	1 - 4" x 6"	3
NT	SEE THD-1 FOR DETAILS	2 - 6" x 6"	5
PCMS			5

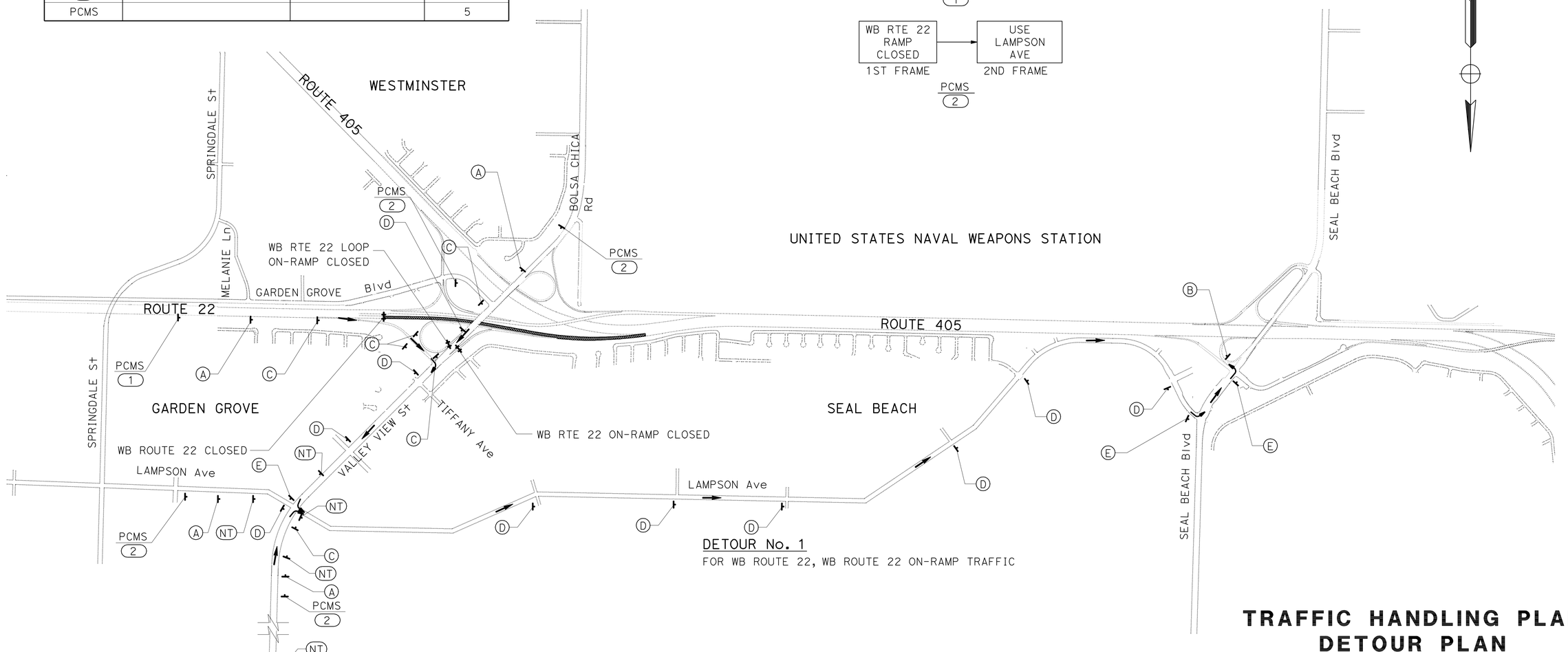

DETOUR No. 1
FOR WB ROUTE 22, WB ROUTE 22 ON-RAMP TRAFFIC

2 **REVISED PER ADDENDUM NO. 2 DATED APRIL 1, 2010**

THIS PLAN ACCURATE FOR TRAFFIC HANDLING WORK ONLY.

TRAFFIC HANDLING PLAN
DETOUR PLAN
(WB ROUTE 22 CLOSURE FROM BOLSA CHICA Rd OFF-RAMP TO NB ROUTE 405)

NO SCALE

TH-1

STATE OF CALIFORNIA - DEPARTMENT OF TRANSPORTATION
Caltrans

CONSULTANT FUNCTIONAL SUPERVISOR: CARLOS A. CADENA
CALCULATED-DESIGNED BY: HUI LIU
CHECKED BY: RAYMOND S. ONG
REVISED BY
DATE REVISED

LAST REVISION 05-18-09
DATE PLOTTED => 29-MAR-2010
TIME PLOTTED => 10:29

Dist	COUNTY	ROUTE	POST MILES TOTAL PROJECT	SHEET No.	TOTAL SHEETS
12	Ora	22,405	R0.7/R2.9, 20.4/22.3	383	1006

2

REGISTERED CIVIL ENGINEER 05/18/09 DATE

9-21-09
PLANS APPROVAL DATE

REGISTERED PROFESSIONAL ENGINEER RAYMOND S. ONG No. 67162 Exp. 9/30/10 CIVIL STATE OF CALIFORNIA

THE STATE OF CALIFORNIA OR ITS OFFICERS OR AGENTS SHALL NOT BE RESPONSIBLE FOR THE ACCURACY OR COMPLETENESS OF SCANNED COPIES OF THIS PLAN SHEET.

PARSONS
2201 DUPONT DRIVE
SUITE 200
IRVINE, CA 92612

ORANGE COUNTY
TRANSPORTATION AUTHORITY
550 SOUTH MAIN STREET
ORANGE, CA 92863

CONSTRUCTION AREA SIGNS (DETOUR) STATIONARY MOUNTED

SIGN No.	SIGN CODE	NUMBER OF POST & SIZE	No. OF SIGNS
A	W20-2	1 - 4" x 6"	5
B	M4-8a	1 - 4" x 6"	1
F	SEE THD-1 FOR DETAILS	1 - 4" x 6"	10
G	SEE THD-1 FOR DETAILS	1 - 4" x 6"	17
H	SEE THD-1 FOR DETAILS	1 - 4" x 6"	4
PCMS			5

DETOUR ROUTE

FOR EB ROUTE 22:

1. EXIT AT SEAL BEACH Blvd
2. SOUTH ON SEAL BEACH Blvd
3. EAST ON WESTMINSTER Ave
4. NORTH ON BOLSA CHICA Rd
5. EAST ON GARDEN GROVE Blvd
6. USE ROUTE 22 EAST ON-RAMP

DETOUR STAGES

1. STAGE 1 PHASE B
2. STAGE 2 PHASE B
3. STAGE 2 PHASE C
4. STAGE 3 PHASE A
5. STAGE 4 PHASE A

DURING THE FREEWAY, CONNECTOR AND RAMP CLOSURES, THE PCMS SHOULD READ AS FOLLOW:

1ST FRAME	2ND FRAME	PCMS
EB RTE 22 CLOSED	USE SEAL BEACH EXIT	1
EB RTE 22 CLOSED	USE SPRINGDALE EXIT	3
EB RTE 22 CLOSED	USE WESTMINSTER AVE	2

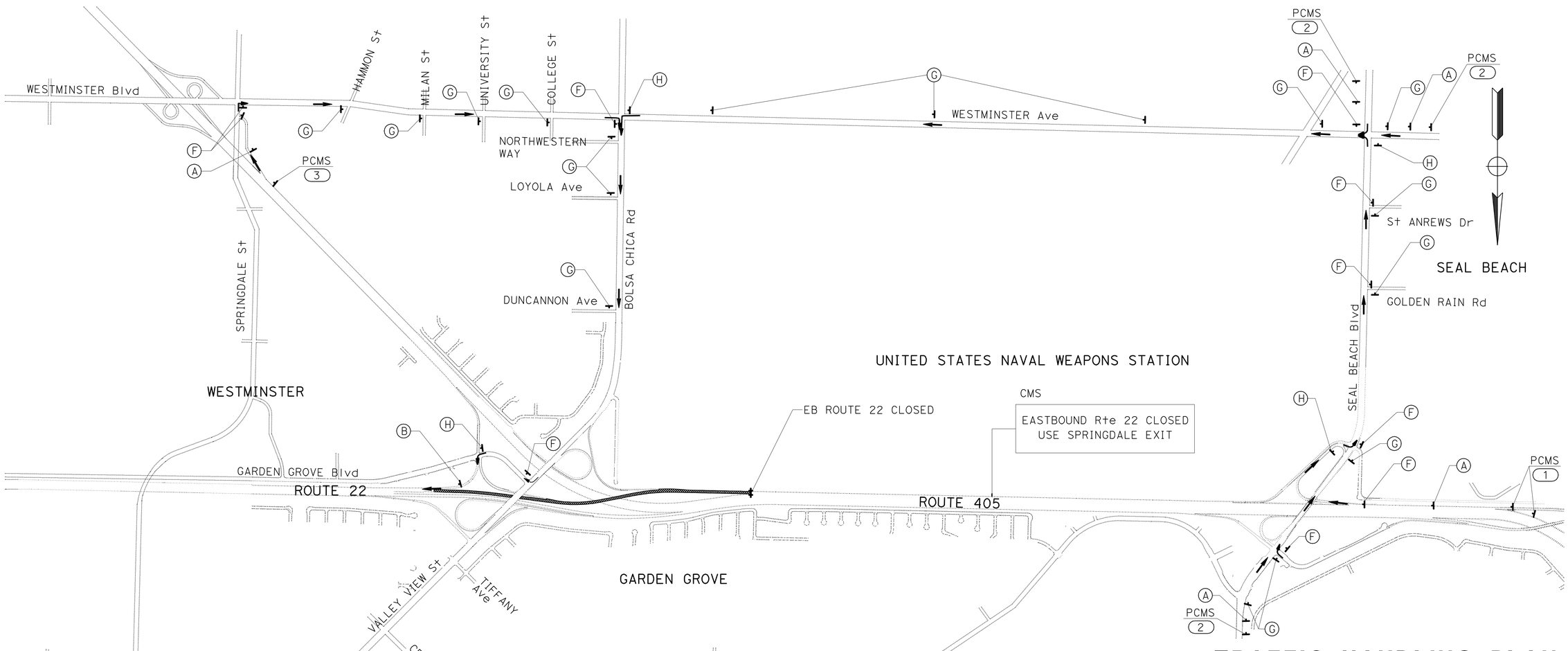

DETOUR No. 2
FOR EB ROUTE 22 TRAFFIC

2 REVISED PER ADDENDUM NO. 2 DATED APRIL 1, 2010

THIS PLAN ACCURATE FOR TRAFFIC HANDLING WORK ONLY.

TRAFFIC HANDLING PLAN DETOUR PLAN

(EB RTE 22 CLOSURE FROM SB RTE 405 TO GARDEN GROVE Blvd ON-RAMP)

NO SCALE

TH-2

STATE OF CALIFORNIA - DEPARTMENT OF TRANSPORTATION
Caltrans

CONSULTANT FUNCTIONAL SUPERVISOR: CARLOS A. CADENA
CALCULATED-DESIGNED BY: RAYMOND S. ONG
CHECKED BY: HUI LIU
REVISED BY
DATE REVISED

LAST REVISION 05-18-09
DATE PLOTTED => 29-MAR-2010
TIME PLOTTED => 10:29

Dist	COUNTY	ROUTE	POST MILES TOTAL PROJECT	SHEET No.	TOTAL SHEETS
12	Ora	22,405	R0.7/R2.9, 20.4/22.3	384	1006

2

REGISTERED CIVIL ENGINEER 05/18/09 DATE

9-21-09
PLANS APPROVAL DATE

REGISTERED PROFESSIONAL ENGINEER RAYMOND S. ONG No. 67162 Exp. 9/30/10 CIVIL STATE OF CALIFORNIA

THE STATE OF CALIFORNIA OR ITS OFFICERS OR AGENTS SHALL NOT BE RESPONSIBLE FOR THE ACCURACY OR COMPLETENESS OF SCANNED COPIES OF THIS PLAN SHEET.

PARSONS
2201 DUPONT DRIVE
SUITE 200
IRVINE, CA 92612

ORANGE COUNTY
TRANSPORTATION AUTHORITY
550 SOUTH MAIN STREET
ORANGE, CA 92863

CONSTRUCTION AREA SIGNS (DETOUR) STATIONARY MOUNTED

SIGN No.	SIGN CODE	NUMBER OF POST & SIZE	No. OF SIGNS
A	W20-2	1 - 4" x 6"	4
B	M4-8a	1 - 4" x 6"	2
I	SEE THD-1 FOR DETAILS	1 - 4" x 6"	1
J	SEE THD-1 FOR DETAILS	1 - 4" x 6"	10
K	SEE THD-1 FOR DETAILS	1 - 4" x 6"	3
P	SEE THD-1 FOR DETAILS	1 - 4" x 6"	8
Q	SEE THD-1 FOR DETAILS	1 - 4" x 6"	14
R	SEE THD-1 FOR DETAILS	1 - 4" x 6"	11
BC	SEE THD-1 FOR DETAILS	1 - 4" x 6"	2
PCMS			4

DETOUR ROUTE

FROM NB ROUTE 405 OFF-RAMP:
1. EXIT AT WESTMINSTER Ave
2. WEST ON WESTMINSTER Ave
3. NORTH ON SPRINGDALE St
4. WEST ON LAMPSON Ave
5. NORTH OR SOUTH ON VALLEY VIEW St

FROM SB BOLSA CHICA Rd TO VALLEY VIEW St:
1. SOUTH ON BOLSA CHICA Rd
2. EAST ON WESTMINSTER Ave
3. NORTH ON SPRINGDALE St
4. WEST ON LAMPSON Ave
5. NORTH OR SOUTH ON VALLEY VIEW St

FROM SB BOLSA CHICA Rd TO NB ROUTE 405:
1. SOUTH ON BOLSA CHICA Rd
2. EAST ON WESTMINSTER Ave
3. USE ROUTE 405 NORTH ON-RAMP

DETOUR STAGES

1. STAGE 1 PHASE B
2. STAGE 2 PHASE B

DURING THE FREEWAY, CONNECTOR AND RAMP CLOSURES, THE PCMS SHOULD READ AS FOLLOW:

1ST FRAME	2ND FRAME
BOLSA CHICA CLOSED AT RTE 22	USE WESTMINSTER EXIT

PCMS 1

1ST FRAME	2ND FRAME
BOLSA CHICA CLOSED AT RTE 22	USE SPRINGDALE

PCMS 2

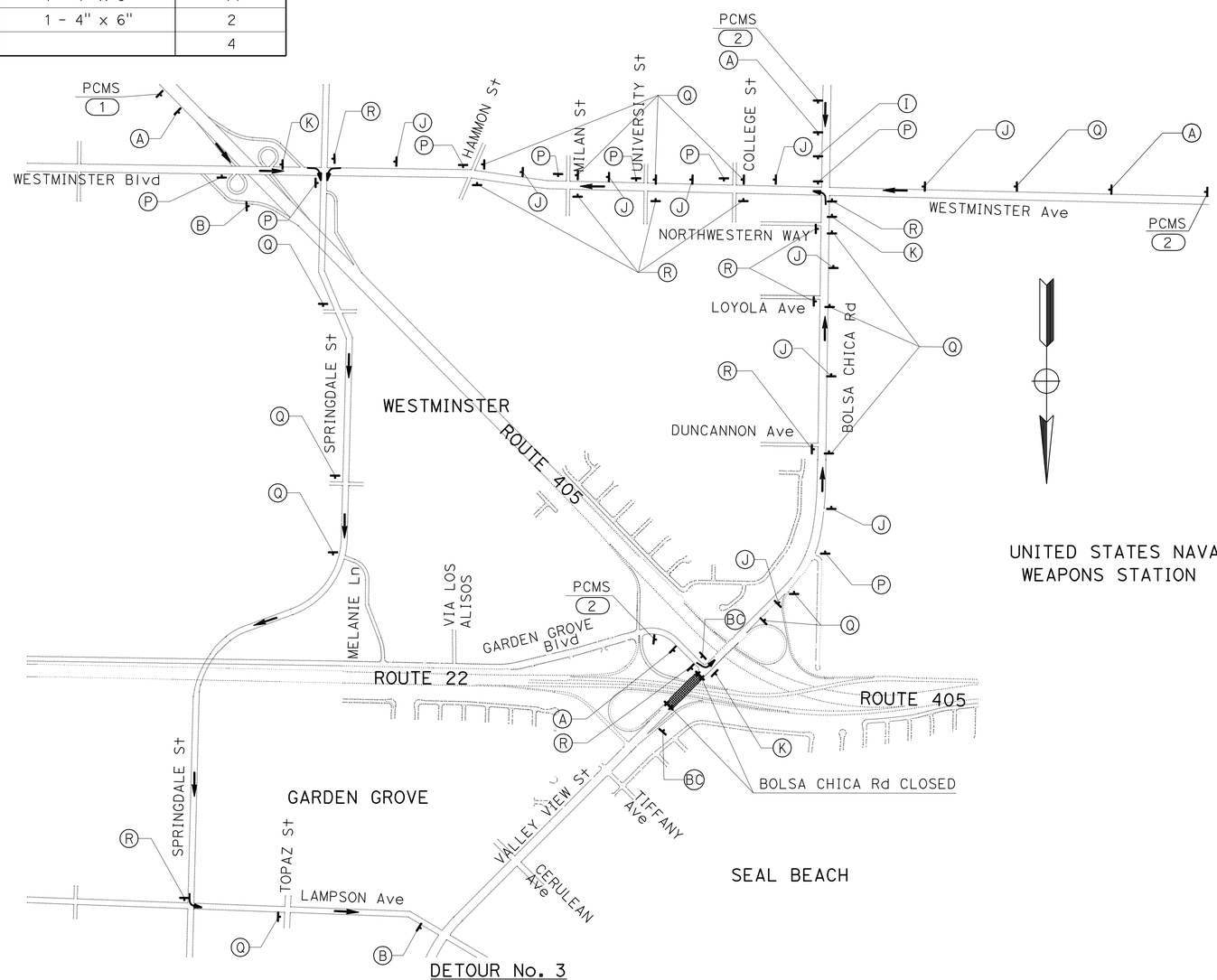

DETOUR No. 3
FOR NB BOLSA CHICA Rd TRAFFIC & NB ROUTE 405 TRAFFIC

2 **REVISED PER ADDENDUM NO. 2 DATED APRIL 1, 2010**

THIS PLAN ACCURATE FOR TRAFFIC HANDLING WORK ONLY.

TRAFFIC HANDLING PLAN DETOUR PLAN

(BOLSA CHICA Rd CLOSURE FROM GARDEN GROVE Blvd TO ROUTE 22 BOLSA CHICA Rd OFF-RAMP)

NO SCALE **TH-3**

STATE OF CALIFORNIA - DEPARTMENT OF TRANSPORTATION
Caltrans

CONSULTANT FUNCTIONAL SUPERVISOR: CARLOS A. CADENA
CALCULATED-DESIGNED BY: HUI LIU
CHECKED BY: RAYMOND S. ONG
REVISED BY
DATE REVISED

LAST REVISION 05-18-09
DATE PLOTTED => 29-MAR-2010
TIME PLOTTED => 10:29

Dist	COUNTY	ROUTE	POST MILES TOTAL PROJECT	SHEET No.	TOTAL SHEETS
12	Ora	22,405	R0.7/R2.9, 20.4/22.3	385	1006

2

REGISTERED CIVIL ENGINEER 05/18/09 DATE

9-21-09
PLANS APPROVAL DATE

REGISTERED PROFESSIONAL ENGINEER RAYMOND S. ONG No. 67162 Exp. 9/30/10 CIVIL STATE OF CALIFORNIA

THE STATE OF CALIFORNIA OR ITS OFFICERS OR AGENTS SHALL NOT BE RESPONSIBLE FOR THE ACCURACY OR COMPLETENESS OF SCANNED COPIES OF THIS PLAN SHEET.

PARSONS
2201 DUPONT DRIVE
SUITE 200
IRVINE, CA 92612

ORANGE COUNTY
TRANSPORTATION AUTHORITY
550 SOUTH MAIN STREET
ORANGE, CA 92863

CONSTRUCTION AREA SIGNS (DETOUR) STATIONARY MOUNTED

SIGN No.	SIGN CODE	NUMBER OF POST & SIZE	No. OF SIGNS
A	W20-2	1 - 4" x 6"	4
B	M4-8a	1 - 4" x 6"	3
F	SEE THD-1 FOR DETAILS	1 - 4" x 6"	2
G	SEE THD-1 FOR DETAILS	1 - 4" x 6"	5
H	SEE THD-1 FOR DETAILS	1 - 4" x 6"	2
L-S	SEE THD-1 FOR DETAILS	1 - 4" x 6"	5
M-T	SEE THD-1 FOR DETAILS	1 - 4" x 6"	8
N-U	SEE THD-1 FOR DETAILS	1 - 4" x 6"	5
N	SEE THD-1 FOR DETAILS	1 - 4" x 6"	1
S	SEE THD-1 FOR DETAILS	1 - 4" x 6"	2
T	SEE THD-1 FOR DETAILS	1 - 4" x 6"	8
U	SEE THD-1 FOR DETAILS	1 - 4" x 6"	3
BC	SEE THD-1 FOR DETAILS	1 - 4" x 6"	2
PCMS			4

DETOUR ROUTE

FOR SB ROUTE 405 ON-RAMP:
1. NORTH ON VALLEY VIEW St
2. EAST ON LAMPSON Ave
3. SOUTH ON SPRINGDALE St
4. USE ROUTE 405 SOUTH ON-RAMP

FOR SB BOLSA CHICA RD TRAFFIC:
1. NORTH ON VALLEY VIEW St
2. EAST ON LAMPSON Ave
3. SOUTH ON SPRINGDALE St
4. WEST ON WESTMINSTER Ave
5. NORTH OR SOUTH ON BOLSA CHICA Rd

FROM WB ROUTE 22 TO BOLSA CHICA Rd:
1. EXIT AT GOLDENWEST St/KNOTT St
2. WEST ON GARDEN GROVE Blvd
3. SOUTH ON GOLDENWEST St
4. WEST ON WESTMINSTER Ave
5. NORTH OR SOUTH ON BOLSA CHICA Rd

FOR EB ROUTE 22 ON-RAMP:
1. EAST ON LAMPSON Ave
2. SOUTH ON KNOTT St
3. EAST ON GARDEN GROVE Blvd
4. USE ROUTE 22 EAST ON-RAMP

DETOUR STAGES

1. STAGE 1 PHASE B
2. STAGE 2 PHASE B

DURING THE FREEWAY, CONNECTOR AND RAMP CLOSURES, THE PCMS SHOULD READ AS FOLLOW:

BOLSA CHICA CLOSED AT RTE 22 (1ST FRAME) → USE SPRINGDALE St (2ND FRAME) — PCMS 1

BOLSA CHICA CLOSED AT RTE 22 (1ST FRAME) → USE GOLDENWEST EXIT (2ND FRAME) — PCMS 2

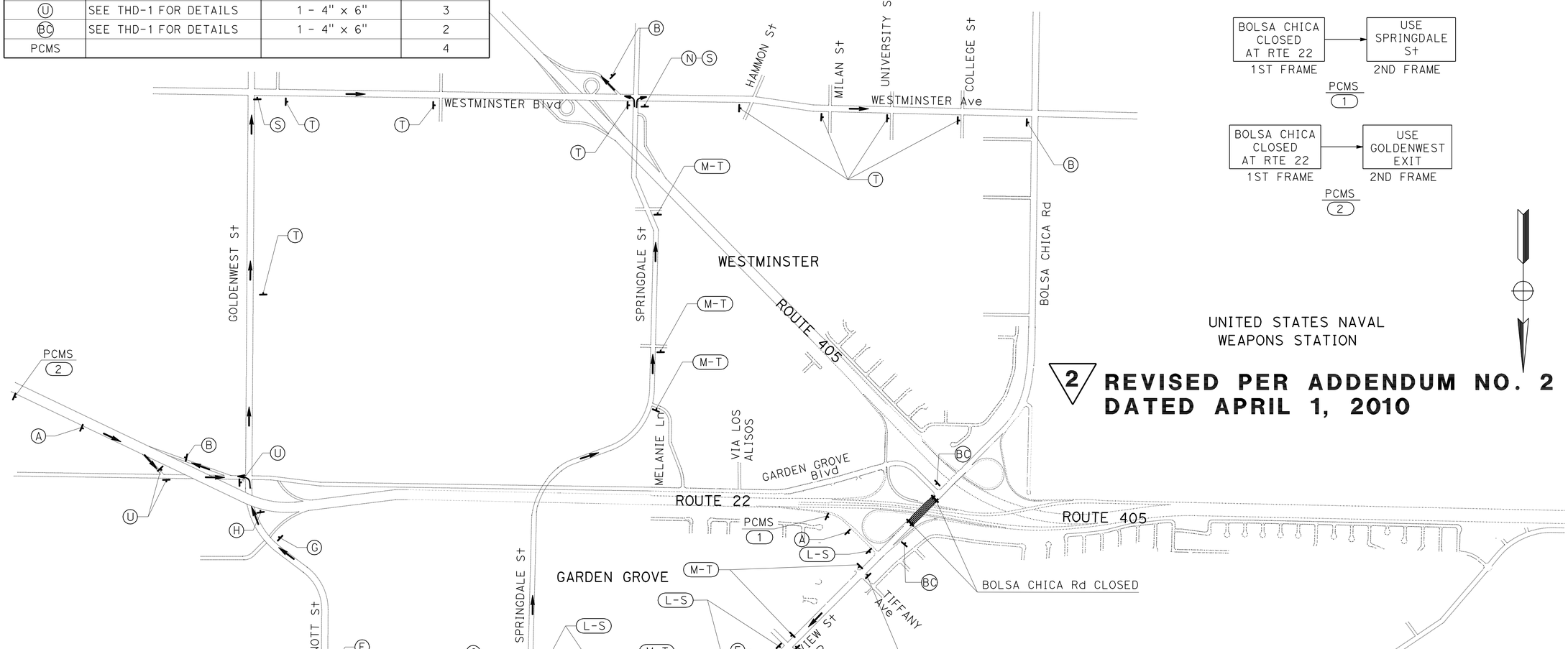

2 **REVISED PER ADDENDUM NO. 2 DATED APRIL 1, 2010**

DETOUR No. 4

FOR SB ROUTE 405 ON-RAMP, EB ROUTE 22 ON-RAMP AND SB BOLSA CHICA Rd TRAFFIC

THIS PLAN ACCURATE FOR TRAFFIC HANDLING WORK ONLY.

TRAFFIC HANDLING PLAN DETOUR PLAN

(BOLSA CHICA Rd CLOSURE FROM GARDEN GROVE Blvd TO VALLEY VIEW St OFF-RAMP)

NO SCALE

TH-4

STATE OF CALIFORNIA - DEPARTMENT OF TRANSPORTATION
Caltrans

CONSULTANT FUNCTIONAL SUPERVISOR: CARLOS A. CADENA
CALCULATED-DESIGNED BY: HUI LIU
CHECKED BY: RAYMOND S. ONG
REVISED BY
DATE REVISED

LAST REVISION 05-18-09 DATE PLOTTED => 29-MAR-2010 TIME PLOTTED => 10:29

Dist	COUNTY	ROUTE	POST MILES TOTAL PROJECT	SHEET No.	TOTAL SHEETS
12	Ora	22, 405	R0.7/R2.9 20.4/22.3	391	1006

2

REGISTERED CIVIL ENGINEER 05/18/09 DATE

9-21-09
PLANS APPROVAL DATE

REGISTERED PROFESSIONAL ENGINEER RAYMOND S. ONG No. 67162 Exp. 9/30/10 CIVIL STATE OF CALIFORNIA

THE STATE OF CALIFORNIA OR ITS OFFICERS OR AGENTS SHALL NOT BE RESPONSIBLE FOR THE ACCURACY OR COMPLETENESS OF SCANNED COPIES OF THIS PLAN SHEET.

PARSONS
2201 DUPONT DRIVE
SUITE 200
IRVINE, CA 92612

ORANGE COUNTY
TRANSPORTATION AUTHORITY
550 SOUTH MAIN STREET
ORANGE, CA 92863

CONSTRUCTION AREA SIGNS (DETOUR) STATIONARY MOUNTED

SIGN No.	SIGN CODE	NUMBER OF POST & SIZE	No. OF SIGNS
A	W20-2	1 - 4" x 6"	4
B	M4-8a	1 - 4" x 6"	3
F	SEE THD-1 FOR DETAILS	1 - 4" x 6"	2
G	SEE THD-1 FOR DETAILS	1 - 4" x 6"	5
H	SEE THD-1 FOR DETAILS	1 - 4" x 6"	2
L-S	SEE THD-1 FOR DETAILS	1 - 4" x 6"	5
M-T	SEE THD-1 FOR DETAILS	1 - 4" x 6"	8
N-U	SEE THD-1 FOR DETAILS	1 - 4" x 6"	4
N	SEE THD-1 FOR DETAILS	1 - 4" x 6"	1
S	SEE THD-1 FOR DETAILS	1 - 4" x 6"	2
T	SEE THD-1 FOR DETAILS	1 - 4" x 6"	8
U	SEE THD-1 FOR DETAILS	1 - 4" x 6"	3
BC	SEE THD-1 FOR DETAILS	1 - 4" x 6"	3
PCMS			4

DETOUR ROUTE

TO BOLSA CHICA Rd:
1. NORTH ON VALLEY VIEW St
2. EAST ON LAMPSON Ave
3. SOUTH ON SPRINGDALE St
4. WEST ON WESTMINSTER Ave
5. SOUTH ON BOLSA CHICA Rd

FROM WB ROUTE 22 TO BOLSA CHICA Rd:
1. EXIT AT GODELNWEST St/KNOTT St
2. WEST ON GARDEN GROVE Blvd
3. SOUTH ON GOLDENWEST St
4. WEST ON WESTMINSTER Ave
5. NORTH OR SOUTH ON BOLSA CHICA Rd

FOR SB ROUTE 405 ON-RAMP:
1. NORTH ON VALLEY VIEW St
2. EAST ON LAMPSON Ave
3. SOUTH ON SPRINGDALE St
4. USE ROUTE 405 SOUTH ON-RAMP

FOR EB ROUTE 22 ON-RAMP:
1. EAST ON LAMPSON Ave
2. SOUTH ON KNOTT St
3. EAST ON GARDEN GROVE Blvd
4. USE ROUTE 22 EAST ON-RAMP

DETOUR STAGES

1. STAGE 2 PHASE A

DURING THE FREEWAY, CONNECTOR AND RAMP CLOSURES, THE PCMS SHOULD READ AS FOLLOW:

1ST FRAME	2ND FRAME
BOLSA CHICA CLOSED AT RTE 22	USE SPRINGDALE St

PCMS 1

1ST FRAME	2ND FRAME
BOLSA CHICA CLOSED AT RTE 22	USE GOLDENWEST EXIT

PCMS 2

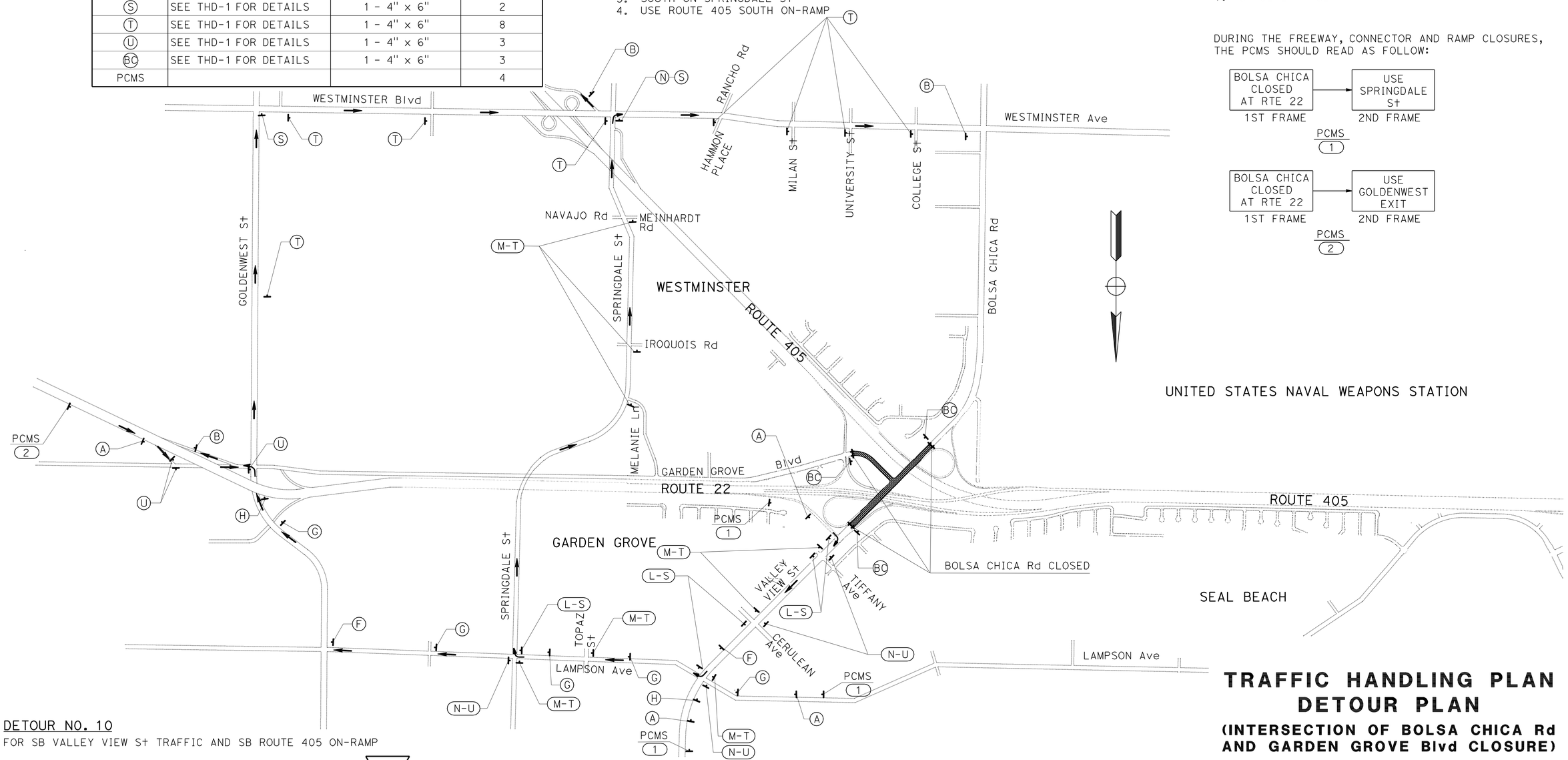

DETOUR NO. 10
FOR SB VALLEY VIEW St TRAFFIC AND SB ROUTE 405 ON-RAMP

2 REVISED PER ADDENDUM NO. 2 DATED APRIL 1, 2010

THIS PLAN ACCURATE FOR TRAFFIC HANDLING WORK ONLY.

TRAFFIC HANDLING PLAN DETOUR PLAN

(INTERSECTION OF BOLSA CHICA Rd AND GARDEN GROVE Blvd CLOSURE)

NO SCALE

TH-10

STATE OF CALIFORNIA - DEPARTMENT OF TRANSPORTATION
Caltrans

CONSULTANT FUNCTIONAL SUPERVISOR: CARLOS A. CADENA
CALCULATED-DESIGNED BY: HUI LIU
CHECKED BY: RAYMOND S. ONG
REVISED BY
DATE REVISED

LAST REVISION 05-18-09
DATE PLOTTED => 29-MAR-2010
TIME PLOTTED => 10:29

Dist	COUNTY	ROUTE	POST MILES TOTAL PROJECT	SHEET No.	TOTAL SHEETS
12	Ora	22, 405	R0.7/R2.9, 20.4/22.3	392	1006

REGISTERED CIVIL ENGINEER 05/18/09 DATE

9-21-09
PLANS APPROVAL DATE

REGISTERED PROFESSIONAL ENGINEER RAYMOND S. ONG No. 67162 Exp. 9/30/10 CIVIL STATE OF CALIFORNIA

THE STATE OF CALIFORNIA OR ITS OFFICERS OR AGENTS SHALL NOT BE RESPONSIBLE FOR THE ACCURACY OR COMPLETENESS OF SCANNED COPIES OF THIS PLAN SHEET.

PARSONS
2201 DUPONT DRIVE
SUITE 200
IRVINE, CA 92612

ORANGE COUNTY
TRANSPORTATION AUTHORITY
550 SOUTH MAIN STREET
ORANGE, CA 92863

CONSTRUCTION AREA SIGNS (DETOUR) STATIONARY MOUNTED

2

SIGN No.	SIGN CODE	NUMBER OF POST & SIZE	No. OF SIGNS
A	W20-2	1 - 4" x 6"	1
B	M4-8a	1 - 4" x 6"	1
S	SEE THD-1 FOR DETAILS	1 - 4" x 6"	2
~~Y~~	~~SEE THD-1 FOR DETAILS~~	~~1 - 4" x 6"~~	~~1~~
PCMS			1

DETOUR ROUTE

TO BOLSA CHICA Rd:
1. EXIT AT VALLEY VIEW St
2. WEST ON GARDEN GROVE Blvd
3. SOUTH ON BOLSA CHICA Rd

DETOUR ROUTE

1. STAGE 1 PHASE B
2. STAGE 2 PHASE B
3. STAGE 3 PHASE A
4. STAGE 3 PHASE B
5. STAGE 3 PHASE C
6. STAGE 4 PHASE A
7. STAGE 4 PHASE B
8. STAGE 4 PHASE C

DURING THE FREEWAY, CONNECTOR AND RAMP CLOSURES, THE PCMS SHOULD READ AS FOLLOW:

BOLSA CHICA OFF RAMP CLOSED	→	USE VALLEY VIEW EXIT
1ST FRAME		2ND FRAME

PCMS 1

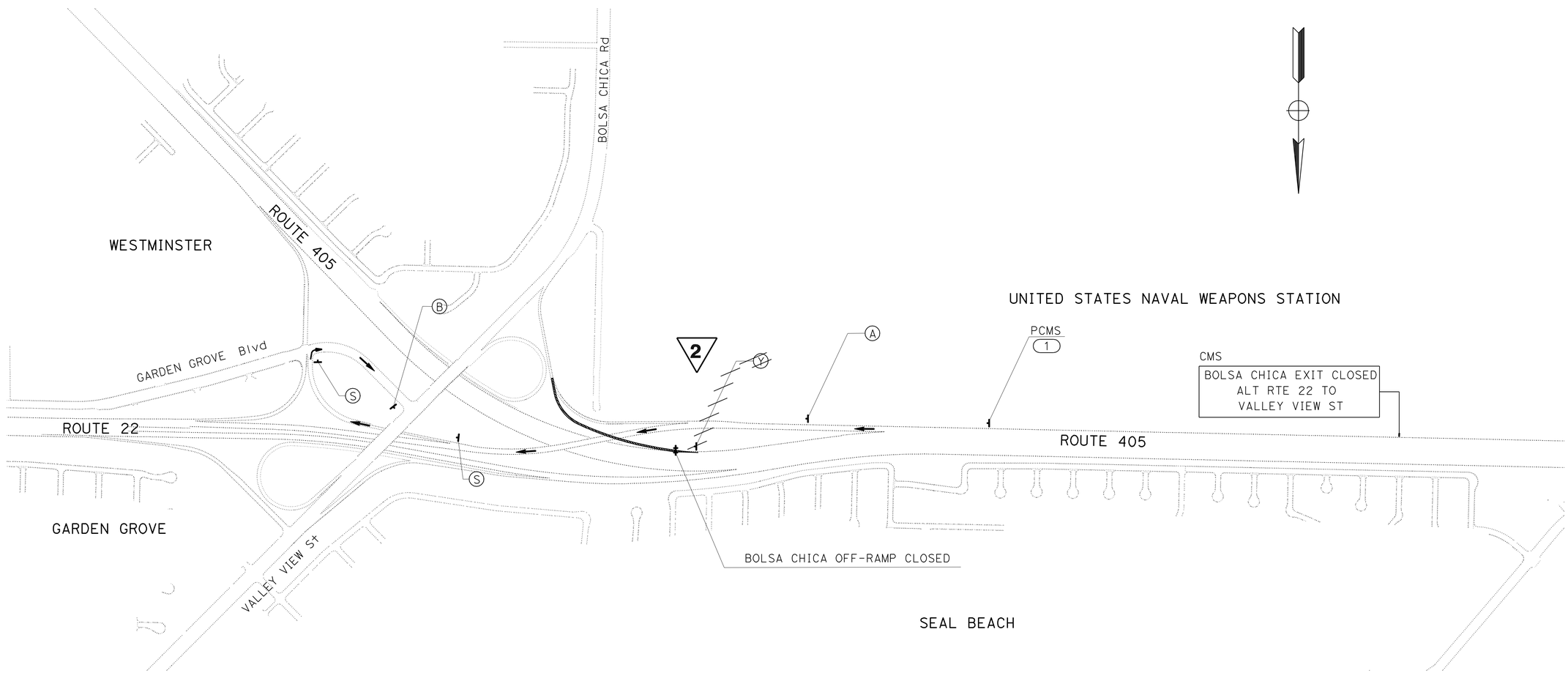

2 **REVISED PER ADDENDUM NO. 2 DATED APRIL 1, 2010**

DETOUR No. 11
FOR BOLSA CHICA OFF-RAMP TRAFFIC

THIS PLAN ACCURATE FOR TRAFFIC HANDLING WORK ONLY.

TRAFFIC HANDLING PLAN DETOUR PLAN

(BOLSA CHICA OFF-RAMP CLOSURE)

NO SCALE **TH-11**

STATE OF CALIFORNIA - DEPARTMENT OF TRANSPORTATION
Caltrans

CONSULTANT FUNCTIONAL SUPERVISOR: CARLOS A. CADENA
CALCULATED-DESIGNED BY: HUI LIU
CHECKED BY: RAYMOND S. ONG
REVISED BY
DATE REVISED

LAST REVISION 05-18-09
DATE PLOTTED => 29-MAR-2010
TIME PLOTTED => 12:01

Dist	COUNTY	ROUTE	POST MILES TOTAL PROJECT	SHEET No.	TOTAL SHEETS
12	Ora	22, 405	R0.7/R2.9, 20.4/22.3	395	1006

2

REGISTERED CIVIL ENGINEER 05/18/09 DATE

9-21-09
PLANS APPROVAL DATE

REGISTERED PROFESSIONAL ENGINEER RAYMOND S. ONG No. 67162 Exp. 9/30/10 CIVIL STATE OF CALIFORNIA

THE STATE OF CALIFORNIA OR ITS OFFICERS OR AGENTS SHALL NOT BE RESPONSIBLE FOR THE ACCURACY OR COMPLETENESS OF SCANNED COPIES OF THIS PLAN SHEET.

PARSONS
2201 DUPONT DRIVE
SUITE 200
IRVINE, CA 92612

ORANGE COUNTY
TRANSPORTATION AUTHORITY
550 SOUTH MAIN STREET
ORANGE, CA 92863

CONSTRUCTION AREA SIGNS (DETOUR) STATIONARY MOUNTED

SIGN No.	SIGN CODE	NUMBER OF POST & SIZE	No. OF SIGNS
A	W20-2	1 - 4" x 6"	1
B	M4-8a	1 - 4" x 6"	1
P	SEE THD-1 FOR DETAILS	1 - 4" x 6"	2
Q	SEE THD-1 FOR DETAILS	1 - 4" x 6"	6
PCMS			1

DETOUR ROUTE

FOR VALLEY VIEW OFF-RAMP:
1. EXIT AT GOLDENWEST St
2. WEST ON GARDEN GROVE Blvd

DETOUR STAGES

1. STAGE 2 PHASE B
2. STAGE 2 PHASE C
3. STAGE 3 PHASE A
4. STAGE 4 PHASE A

DURING THE FREEWAY, CONNECTOR AND RAMP CLOSURES, THE PCMS SHOULD READ AS FOLLOW:

VALLEY VIEW EXIT CLOSED	→	USE GOLDENWEST EXIT
1ST FRAME		2ND FRAME

PCMS 1

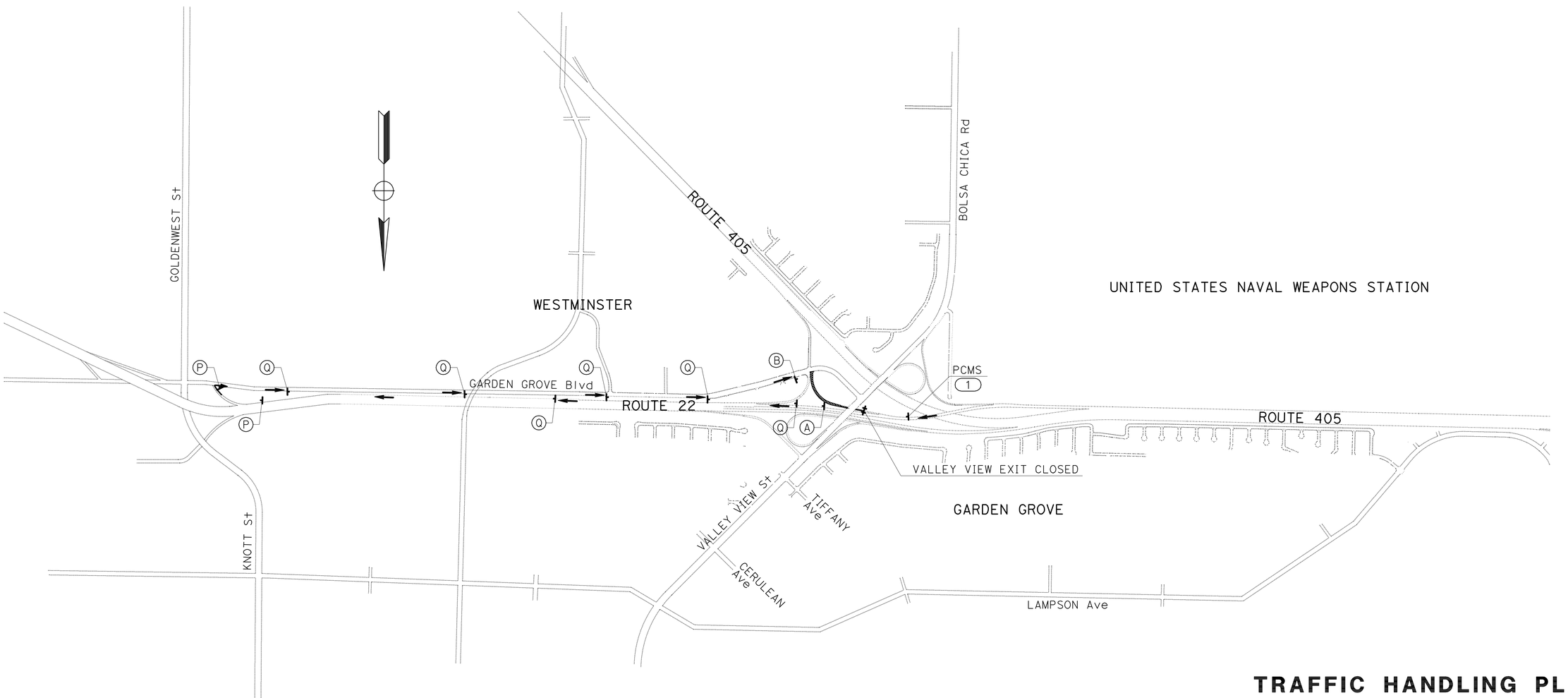

DETOUR No. 14
FOR EB ROUTE 22 OFF-RAMP TRAFFIC

2 **REVISED PER ADDENDUM NO. 2 DATED APRIL 1, 2010**

THIS PLAN ACCURATE FOR TRAFFIC HANDLING WORK ONLY.

TRAFFIC HANDLING PLAN DETOUR PLAN

(VALLEY VIEW St OFF-RAMP CLOSURE)

NO SCALE **TH-14**

STATE OF CALIFORNIA - DEPARTMENT OF TRANSPORTATION
Caltrans

CONSULTANT FUNCTIONAL SUPERVISOR: CARLOS A. CADENA
CALCULATED-DESIGNED BY: HUI LIU
CHECKED BY: RAYMOND S. ONG
REVISED BY
DATE REVISED

LAST REVISION 05-18-09
DATE PLOTTED => 29-MAR-2010
TIME PLOTTED => 10:29

Dist	COUNTY	ROUTE	POST MILES TOTAL PROJECT	SHEET No.	TOTAL SHEETS
12	Ora	22, 405	R0.7/R2.9, 20.4/22.3	396	1006

REGISTERED CIVIL ENGINEER 05/18/09 DATE

9-21-09
PLANS APPROVAL DATE

REGISTERED PROFESSIONAL ENGINEER RAYMOND S. ONG No. 67162 Exp. 9/30/10 CIVIL STATE OF CALIFORNIA

THE STATE OF CALIFORNIA OR ITS OFFICERS OR AGENTS SHALL NOT BE RESPONSIBLE FOR THE ACCURACY OR COMPLETENESS OF SCANNED COPIES OF THIS PLAN SHEET.

PARSONS
2201 DUPONT DRIVE
SUITE 200
IRVINE, CA 92612

ORANGE COUNTY
TRANSPORTATION AUTHORITY
550 SOUTH MAIN STREET
ORANGE, CA 92863

2

CONSTRUCTION AREA SIGNS (DETOUR) STATIONARY MOUNTED

SIGN No.	SIGN CODE	NUMBER OF POST & SIZE	No. OF SIGNS
A	W20-2	1 - 4" x 6"	2
B	M4-8a	1 - 4" x 6"	1
C	SEE THD-1 FOR DETAILS	1 - 4" x 6"	4
D	SEE THD-1 FOR DETAILS	1 - 4" x 6"	8
E	SEE THD-1 FOR DETAILS	1 - 4" x 6"	6
NT	SEE THD-1 FOR DETAILS	2 - 6" x 6"	5
PCMS			2

DETOUR ROUTE

FOR WB ROUTE 22 ON-RAMP:
1. SOUTH ON VALLEY VIEW St
2. WEST ON LAMPSON AVE
3. SOUTH ON SEAL BEACH Blvd
4. USE ROUTE 405 NORTH ON-RAMP

DETOUR STAGES

1. STAGE 1 PHASE B
2. STAGE 2 PHASE A
3. STAGE 2 PHASE B
4. STAGE 3 PHASE A
5. STAGE 3 PHASE C
6. STAGE 4 PHASE A

DURING THE FREEWAY, CONNECTOR AND RAMP CLOSURES, THE PCMS SHOULD READ AS FOLLOW:

1ST FRAME	2ND FRAME
WB RTE 22 RAMP CLOSED	USE LAMPSON AVE

PCMS 1

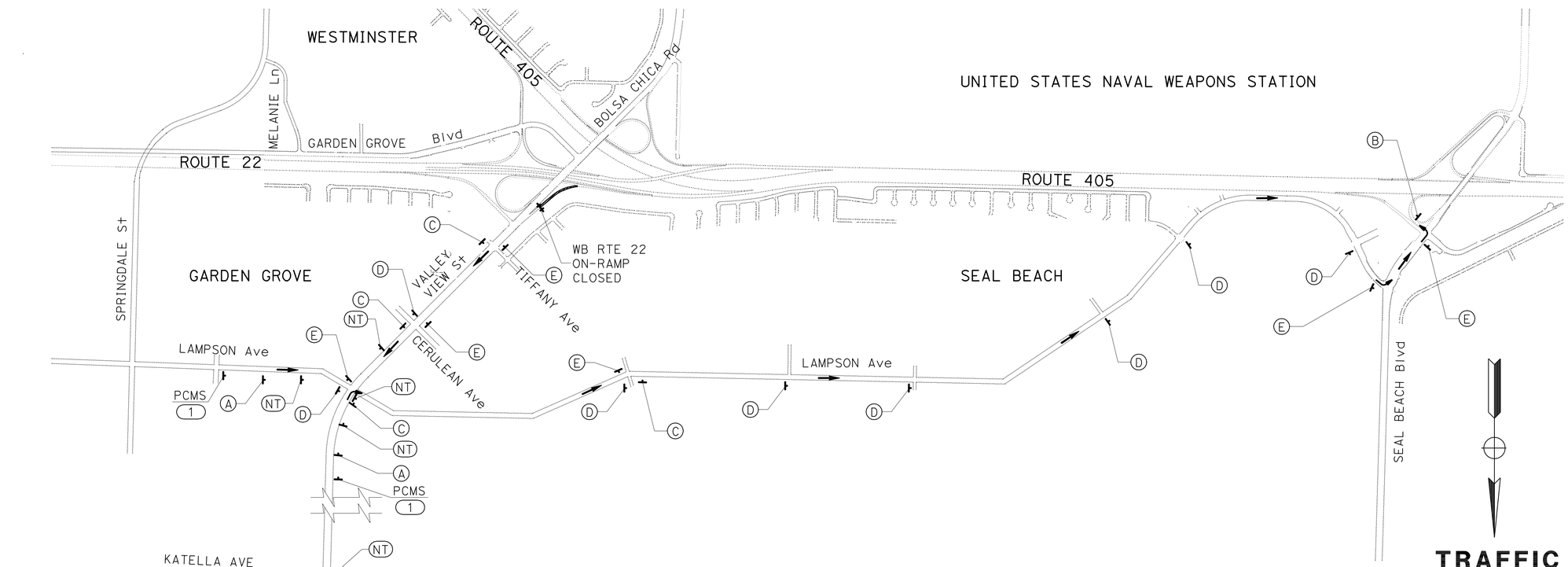

2 REVISED PER ADDENDUM NO. 2 DATED APRIL 1, 2010

DETOUR No. 15

FOR WB ROUTE 22 ON-RAMP TRAFFIC

THIS PLAN ACCURATE FOR TRAFFIC HANDLING WORK ONLY.

TRAFFIC HANDLING PLAN DETOUR PLAN

(WB ROUTE 22 ON-RAMP CLOSURE)

NO SCALE **TH-15**

STATE OF CALIFORNIA - DEPARTMENT OF TRANSPORTATION
Caltrans

CONSULTANT FUNCTIONAL SUPERVISOR: CARLOS A. CADENA

CALCULATED-DESIGNED BY: HUI LIU
CHECKED BY: RAYMOND S. ONG

REVISED BY / DATE REVISED

LAST REVISION 05-18-09
DATE PLOTTED => 29-MAR-2010
TIME PLOTTED => 10:30

Dist	COUNTY	ROUTE	POST MILES TOTAL PROJECT	SHEET No.	TOTAL SHEETS
12	Ora	22, 405	R0.7/R2.9, 20.4/22.3	397	1006

REGISTERED CIVIL ENGINEER 05/18/09 DATE

9-21-09
PLANS APPROVAL DATE

REGISTERED PROFESSIONAL ENGINEER RAYMOND S. ONG No. 67162 Exp. 9/30/10 CIVIL STATE OF CALIFORNIA

THE STATE OF CALIFORNIA OR ITS OFFICERS OR AGENTS SHALL NOT BE RESPONSIBLE FOR THE ACCURACY OR COMPLETENESS OF SCANNED COPIES OF THIS PLAN SHEET.

PARSONS
2201 DUPONT DRIVE
SUITE 200
IRVINE, CA 92612

ORANGE COUNTY
TRANSPORTATION AUTHORITY
550 SOUTH MAIN STREET
ORANGE, CA 92863

CONSTRUCTION AREA SIGNS (DETOUR) STATIONARY MOUNTED

SIGN No.	SIGN CODE	NUMBER OF POST & SIZE	No. OF SIGNS
A	W20-2	1 - 4" x 6"	2
B	M4-8a	1 - 4" x 6"	1
D	SEE THD-1 FOR DETAILS	1 - 4" x 6"	9
E	SEE THD-1 FOR DETAILS	1 - 4" x 6"	3
~~Y~~ NT	SEE THD-1 FOR DETAILS	~~2 - 6" x 6"~~ ~~1 - 4" x 6"~~	~~1~~ 2
PCMS			1

2

DETOUR ROUTE

FOR ROUTE 22 LOOP ON-RAMP:
1. NORTH ON VALLEY VIEW St
2. WEST ON LAMPSON AVE
3. SOUTH ON SEAL BEACH Blvd
4. USE ROUTE 405 NORTH ON-RAMP

DETOUR STAGES

1. STAGE 1 PHASE B
2. STAGE 2 PHASE B
3. STAGE 3 PHASE A
4. STAGE 3 PHASE C
5. STAGE 4 PHASE A

DURING THE FREEWAY, CONNECTOR AND RAMP CLOSURES, THE PCMS SHOULD READ AS FOLLOW:

WB RTE 22 RAMP CLOSED	→	USE LAMPSON AVE
1ST FRAME		2ND FRAME

PCMS 1

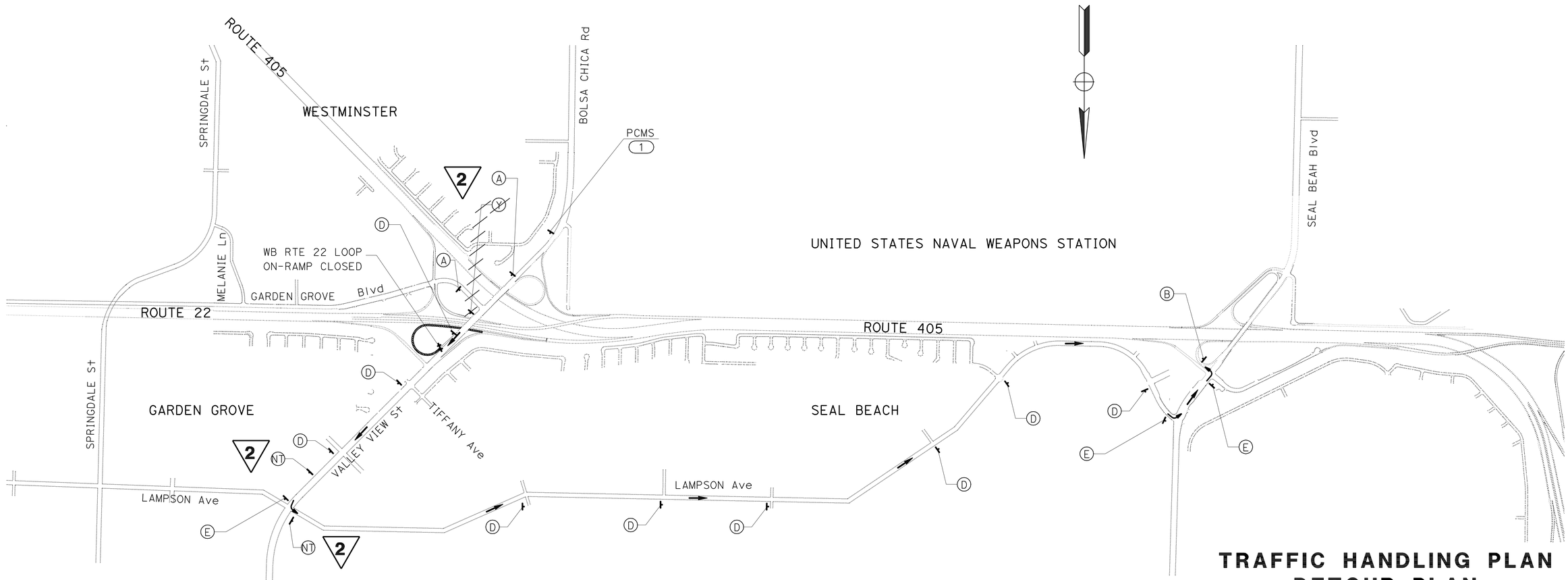

2 REVISED PER ADDENDUM NO. 2 DATED APRIL 1, 2010

DETOUR No. 16

FOR WB ROUTE ON-RAMP 22 TRAFFIC

THIS PLAN ACCURATE FOR TRAFFIC HANDLING WORK ONLY.

TRAFFIC HANDLING PLAN DETOUR PLAN

(WB ROUTE 22 LOOP ON-RAMP CLOSURE)

NO SCALE **TH-16**

STATE OF CALIFORNIA - DEPARTMENT OF TRANSPORTATION
Caltrans

CONSULTANT FUNCTIONAL SUPERVISOR: CARLOS A. CADENA
CALCULATED-DESIGNED BY: HUI LIU
CHECKED BY: RAYMOND S. ONG
REVISED BY
DATE REVISED

LAST REVISION 05-18-09
DATE PLOTTED => 29-MAR-2010
TIME PLOTTED => 12:01

Dist	COUNTY	ROUTE	POST MILES TOTAL PROJECT	SHEET No.	TOTAL SHEETS
12	Ora	22, 405	R0.7/R2.9, 20.4/22.3	400	1006

REGISTERED CIVIL ENGINEER 05/18/09 DATE

9-21-09
PLANS APPROVAL DATE

REGISTERED PROFESSIONAL ENGINEER RAYMOND S. ONG No. 67162 Exp. 9/30/10 CIVIL STATE OF CALIFORNIA

THE STATE OF CALIFORNIA OR ITS OFFICERS OR AGENTS SHALL NOT BE RESPONSIBLE FOR THE ACCURACY OR COMPLETENESS OF SCANNED COPIES OF THIS PLAN SHEET.

PARSONS
2201 DUPONT DRIVE
SUITE 200
IRVINE, CA 92612

ORANGE COUNTY
TRANSPORTATION AUTHORITY
550 SOUTH MAIN STREET
ORANGE, CA 92863

2

W20-2
48" X 48"

(A)

M4-8a
24" X 18"

(B)

M4-10 (R†)
48" X 18"

G28-2 (CA)
24" X 25"

M3-4
26" X 12"

(C)

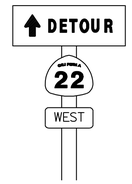

SC3 (CA)
36" X 12"

G28-2 (CA)
24" X 25"

M3-4
26" X 12"

(D)

M4-10 (L†)
48" X 18"

G28-2 (CA)
24" X 25"

M3-4
26" X 12"

(E)

M4-10 (R†)
48" X 18"

G28-2 (CA)
24" X 25"

M3-2
26" X 12"

(F)

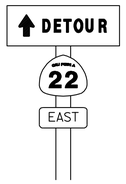

SC3 (CA)
36" X 12"

G28-2 (CA)
24" X 25"

M3-2
26" X 12"

(G)

M4-10 (L†)
48" X 18"

G28-2 (CA)
24" X 25"

M3-2
26" X 12"

(H)

M4-10 (R†)
48" X 18"

G27-2 (CA)
30" X 25"

M3-1
26" X 12"

(I)

SC3 (CA)
36" X 12"

G27-2 (CA)
30" X 25"

M3-1
26" X 12"

(J)

M4-10 (L†)
48" X 18"

G27-2 (CA)
30" X 25"

M3-1
26" X 12"

(K)

M4-10 (R†)
48" X 18"

G27-2 (CA)
30" X 25"

M3-3
26" X 12"

(L)

M4-10 (L†)
48" X 18"

G27-2 (CA)
30" X 25"

M3-3
26" X 12"

(N)

30" X 66"
6D
BLACK/ORANGE

(O)

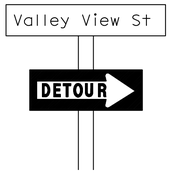

D3-2
102" X 24"

M4-10 (R†)
48" X 18"

(P)

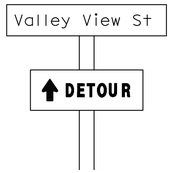

D3-2
102" X 24"

SC-3
36" X 12"

(Q)

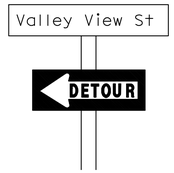

D3-2
102" X 24"

M4-10 (L†)
48" X 18"

(R)

D3-2
96" X 24"

M4-10 (R†)
48" X 18"

(S)

D3-2
96" X 24"

SC-3
36" X 12"

(T)

D3-2
96" X 24"

M4-10 (L†)
48" X 18"

(U)

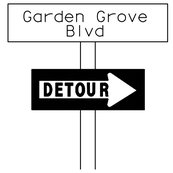

D3-2
90" X 24"

M4-10 (R†)
48" X 18"

(V)

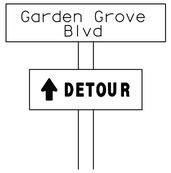

D3-2
90" X 24"

SC-3
36" X 12"

(W)

D3-2
90" X 24"

M4-10 (L†)
48" X 18"

(X)

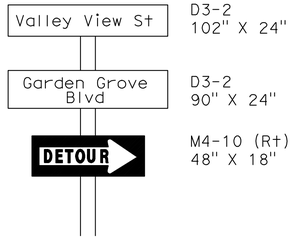

D3-2
102" X 24"

D3-2
90" X 24"

M4-10 (R†)
48" X 18"

(P-V)

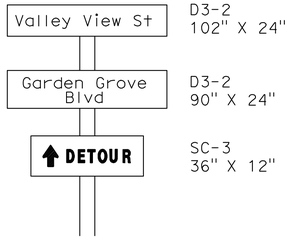

D3-2
102" X 24"

D3-2
90" X 24"

SC-3
36" X 12"

(Q-W)

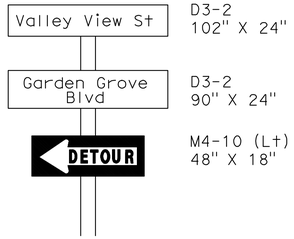

D3-2
102" X 24"

D3-2
90" X 24"

M4-10 (L†)
48" X 18"

(R-X)

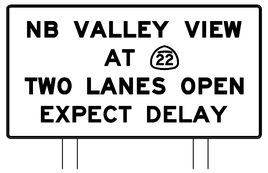

126" X 66"
8 EM
BLACK/ORANGE

VV

138" X 54"
8 EM
BLACK/RED/ORANGE

NT

90" X 68"
BLACK/ORANGE

BC

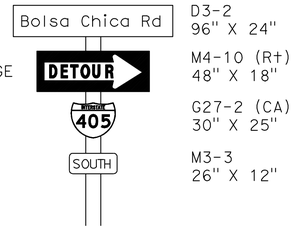

D3-2
96" X 24"

M4-10 (R†)
48" X 18"

G27-2 (CA)
30" X 25"

M3-3
26" X 12"

(L-S)

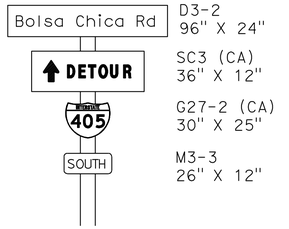

D3-2
96" X 24"

SC3 (CA)
36" X 12"

G27-2 (CA)
30" X 25"

M3-3
26" X 12"

(M-T)

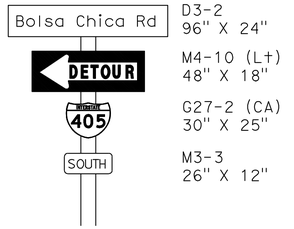

D3-2
96" X 24"

M4-10 (L†)
48" X 18"

G27-2 (CA)
30" X 25"

M3-3
26" X 12"

(N-U)

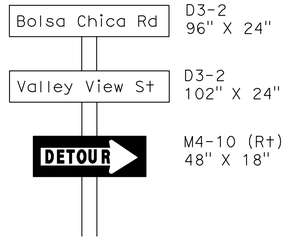

D3-2
96" X 24"

D3-2
102" X 24"

M4-10 (R†)
48" X 18"

(S-P)

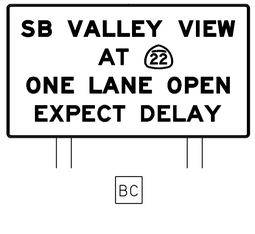

120" X 66"
8 EM
BLACK/ORANGE

BC

TRAFFIC HANDLING DETAILS

2 **REVISED PER ADDENDUM NO. 2 DATED APRIL 1, 2010**

THIS PLAN ACCURATE FOR TRAFFIC HANDLING WORK ONLY.

NO SCALE **THD-1**

STATE OF CALIFORNIA - DEPARTMENT OF TRANSPORTATION
Caltrans

CONSULTANT FUNCTIONAL SUPERVISOR: CARLOS A. CADENA
CALCULATED-DESIGNED BY: HUI LIU
CHECKED BY: RAYMOND S. ONG
REVISED BY
DATE REVISED

LAST REVISION 05-18-09
DATE PLOTTED => 29-MAR-2010
TIME PLOTTED => 10:30

Dist	COUNTY	ROUTE	POST MILES TOTAL PROJECT	SHEET No.	TOTAL SHEETS
12	Ora	22, 405	R0.7/R2.9, 20.4/22.3	401	1006

REGISTERED CIVIL ENGINEER 05/18/09 DATE

9-21-09
PLANS APPROVAL DATE

REGISTERED PROFESSIONAL ENGINEER
RAYMOND S. ONG
No. 67162
Exp. 9/30/10
CIVIL
STATE OF CALIFORNIA

THE STATE OF CALIFORNIA OR ITS OFFICERS OR AGENTS SHALL NOT BE RESPONSIBLE FOR THE ACCURACY OR COMPLETENESS OF SCANNED COPIES OF THIS PLAN SHEET.

PARSONS
2201 DUPONT DRIVE
SUITE 200
IRVINE, CA 92612

ORANGE COUNTY
TRANSPORTATION AUTHORITY
550 SOUTH MAIN STREET
ORANGE, CA 92863

PORTABLE CHANGEABLE MESSAGE SIGN 2

SHEET No.	PCMS (EA)
TH-1	5
TH-2	~~5~~ 6
TH-3	4
TH-4	4
TH-5	4
TH-6	2
TH-7	1
TH-8	2
TH-9	2
TH-10	4
TH-11	1
TH-12	1
TH-13	1
TH-14	~~4~~ 1
TH-15	2
TH-16	1
TH-17	2

2 REVISED PER ADDENDUM NO. 2 DATED APRIL 1, 2010

TRAFFIC HANDLING QUANTITIES

THQ-1

STATE OF CALIFORNIA - DEPARTMENT OF TRANSPORTATION
Caltrans

CONSULTANT FUNCTIONAL SUPERVISOR: CARLOS A. CADENA

CALCULATED-DESIGNED BY: HUI LIU
CHECKED BY: RAYMOND S. ONG

REVISED BY
DATE REVISED

LAST REVISION 05-18-09
DATE PLOTTED => 29-MAR-2010
TIME PLOTTED => 12:01

Dist	COUNTY	ROUTE	POST MILES TOTAL PROJECT	SHEET No.	TOTAL SHEETS
12	Ora	22,405	R0.7/R2.9, 20.4/22.3	479	1006

REGISTERED CIVIL ENGINEER 05/18/09 DATE

9-21-09
PLANS APPROVAL DATE

REGISTERED PROFESSIONAL ENGINEER ALEXANDER ZUPANSKI No. 59351 Exp. 06/30/11 CIVIL STATE OF CALIFORNIA

THE STATE OF CALIFORNIA OR ITS OFFICERS OR AGENTS SHALL NOT BE RESPONSIBLE FOR THE ACCURACY OR COMPLETENESS OF SCANNED COPIES OF THIS PLAN SHEET.

FPL AND ASSOCIATES, INC.
10 CORPORATE PARK
SUITE 310
IRVINE, CA 92606

ORANGE COUNTY
TRANSPORTATION AUTHORITY
550 SOUTH MAIN STREET
ORANGE, CA 92863

2 OVERHEAD SIGNS

SHEET No.	SIGN No.	SIGN CODE: PANEL No.	SIGN CODE	LOCATION: STATION	LOCATION: DIRECTION	LOCATION: ROUTE	POST TYPE	60" CIDH Conc PILE (SIGN FOUNDATION) LF	SIGN STRUCTURE (TRUSS) FURNISH LB	SIGN STRUCTURE (TRUSS) INSTALL LB	REMOVE SIGN STRUCTURE EA	FURNISH LAMINATED PANEL SIGN (1"-TYPE A) SQFT	PANEL MATERIAL SUMMARY (N): HORIZONTAL PANEL SIZE IN	VERTICAL PANEL SIZE IN	PANEL TYPE: LAMINATED TYPE A	PANEL TYPE: FORMED WITHOUT RSPF	PANEL TYPE: FORMED WITH RSPF	PANEL: SINGLE-FACED	PANEL: DOUBLE-FACED	BACKGROUND: SHEETING COLOR	BACKGROUND: RETROFLECTIVE ASTM TYPE	LEGEND: SHEETING COLOR	LEGEND: RETROFLECTIVE ASTM TYPE	GRAFFITI: STANDARD	GRAFFITI: PREMIUM	REMARKS
S-1	11	2	G85-11(CA)(Mod)	281+70.68 "B"	FWBT	SR-22						240.00	288	120	X			X		GREEN	III	WHITE	IV		X	EXISTING OH SIGN-REPLACE PANEL 2
S-3	31	1	G85-11(CA)	3306+61.31 "E"	FEBT	SR-22	VIII	25.00	20,860	20,860		220.00	264	120	X			X		GREEN	III	WHITE	IV		X	
S-3	32				FEBT	SR-22					1															REMOVE EXISTING CANTILEVER SIGN
S-4	41	1	G23-1(CA)	310+65 "SB405"	FSBT	I-405	VII	23.00	16,550	16,550		220.00	264	120	X			X		GREEN	III	WHITE	IV		X	
S-6	61				FEBT	SR-22					1															REMOVE EXISTING BRIDGE SIGN
S-7	71				FSBT	I-405					1															REMOVE EXISTING BRIDGE SIGN
S-7	72	1	G83-5(CA)	323+13.54 "SB405"	FSBT	I-405	VIII	25.00	22,360	22,360		200.00	240	120	X			X		GREEN	III	WHITE	IV		X	
		2	G85-11(CA)									150.00	180	120	X			X		GREEN	III	WHITE	IV		X	
S-8	81				FSBT	I-405					1															REMOVE EXISTING SIGN BRIDGE
S-8	82	1	G24-5(CA)(Mod)	332+97.28 "SB405"	FSBT	I-405	VI-S	**55.66**	61,880	61,880		440.00	528	120	X			X		GREEN	III	WHITE	IV		X	
		2	G85-3(CA)(Mod)									280.00	336	120	X			X		GREEN	III	WHITE	IV		X	
		3	G83-5(CA)									220.00	264	120	X			X		GREEN	III	WHITE	IV		X	
S-8	83	1	G85-9(CA)(Mod)	1340+23 "H"	FSBT	I-405	IX	25.00	27,010	27,010		220.00	264	120	X			X		GREEN	III	WHITE	IV		X	SINGLE POST BACK TO BACK SIGN
		2	G23-5(CA)		FNBT	I-405						240.00	288	120	X			X		GREEN	III	WHITE	IV		X	
S-10	101				FSBT	I-405					1															REMOVE EXISTING SIGN BRIDGE
S-10	103	1	G83-3(CA)(Mod)	359+75 "A"	FSBT	I-405	VI-S	**55.66**	62,770	62,770		240.00	288	120	X			X		GREEN	III	WHITE	IV		X	
		2	G24-5(CA)(Mod)									390.00	468	120	X			X		GREEN	III	WHITE	IV		X	
		3	G24-5(CA)(Mod)									270.00	324	120	X			X		GREEN	III	WHITE	IV		X	
		4	G86-13(CA)(Mod)									220.00	264	120	X			X		GREEN	III	WHITE	IV		X	
S-10	104	1	R87-1(CA)(Mod)	356+15 "A"	FNBT	I-405	VII	23.00	18,280	18,280		166.67	240	100	X			X		WHITE	IV	BLACK			X	HOV LANE ASSIGNMENT SIGN
S-11	111				FSBT	I-405					1															REMOVE EXISTING SIGN BRIDGE
S-11	112				FSBT	I-405					1															REMOVE EXISTING CMS SIGN
S-11	113		CMS	369+75 "A"	FSBT	I-405		22.00	13,970	13,970																INSTALL CMS SIGN
S-11	114				FNBT	I-405					1															REMOVE EXISTING CMS SIGN
S-11	115		CMS	376+77 "A"	FNBT	I-405		22.00	14,690	14,690																INSTALL CMS SIGN
S-12	121	1	G86-10(CA)(Mod)	385+25 "A"	FSBT	I-405	VI-S	**55.66**	61,060	61,060		155.89	204	110	X			X		GREEN	III	WHITE	IV		X	
		2	G83-5(CA)(Mod)									284.27	372	110	X			X		GREEN	III	WHITE	IV		X	
S-14	143	1	R87-1(CA)	245+50 "B"	FWBT	SR-22	VI	22.00	14,430	14,430		133.28	192	100	X			X		WHITE	IV	BLACK			X	HOV LANE ASSIGNMENT SIGN
S-15	151				FEBT	SR-22					1															REMOVE EXISTING CANTILEVER SIGN
S-15	152	1	G83-2(CA)(Mod)	257+60 "B"	FWBT	SR-22	VIII	25.00	24,510	24,510		160.00	192	120	X			X		GREEN	III	WHITE	IV		X	
		2	R87-1(CA)		FEBT							133.28	192	100	X			X		WHITE	IV	BLACK			X	
S-15	153	1	G24-5(CA)(Mod)	255+00 "B"	FWBT	SR-22	VI	22.00	13,300	13,300		210.00	252	120	X			X		GREEN	III	WHITE	IV		X	LANE ASSIGNMENT SIGN
S-16	161	1	G83-3(CA)(Mod)	270+80 "B"	FWBT	SR-22	VII	23.00	16,380	16,380		160.00	192	120	X			X		GREEN	III	WHITE	IV		X	
							TOTAL	**423.98**	388,050	388,050	9	4,953														

(N) NOT A SEPARATE PAY ITEM. FOR INFORMATION ONLY.

2 REVISED PER ADDENDUM NO. 2 DATED APRIL 1, 2010

OVERHEAD SIGN QUANTITIES SQ-11

STATE OF CALIFORNIA - DEPARTMENT OF TRANSPORTATION
Caltrans

CONSULTANT FUNCTIONAL SUPERVISOR: CARLOS A. CADENA
CALCULATED-DESIGNED BY: EDDIE TANG
CHECKED BY: ALEXANDER ZUPANSKI
REVISED BY: EVT
DATE REVISED: 8/24/09

LAST REVISION 05-18-09 DATE PLOTTED => 29-MAR-2010 TIME PLOTTED => 12:01

PAVEMENT STRUCTURAL SECTIONS

SHEET No.	DESCRIPTION	STATION	STRUCTURAL SECTION	HOT MIX ASPHALT	JOINTED PLAIN CONCRETE PAVEMENT	CONCRETE PAVEMENT (RAPID STRENGTH CONCRETE-RAMP TERMINI)	CLASS 2 AGGREGATE BASE	LEAN CONCRETE BASE	LEAN CONCRETE BASE RAPID SETTING	COLD PLANE ASPHALT CONCRETE PAVEMENT	TACK COAT	SEAL PAVEMENT JOINT	SEAL LONGITUDINAL ISOLATION JOINT
			No.	TON	CY	CY	CY	CY	CY	SQYD	TON	LF	LF
L-1	WB ROUTE 22	"B" 285+80.45 TO "B" 286+50.00	3		10			5				23	70
	WB ROUTE 22	"B" 285+80.45 TO "B" 286+50.00	4	22			17				0.1		
L-2	WB ROUTE 22	"B" 286+50.00 TO "W" 2298+28.89	3		425			200				3,170	1,689
	WB ROUTE 22	"B" 286+50.00 TO "W" 2295+11.24	4	258			207				0.2		
	EB ROUTE 22	"H" 1293+93.39 TO "E" 3298+52.96	3		283			133					
	EB ROUTE 22	"H" 1293+64.69 TO "E" 3298+52.96	4	147			118				0.1		
	"VV3" LINE	"VV3" 12+50.00 TO "VV3" 18+30.28	6	882			835				0.9		
	"VV5" LINE	"VV5" 3+74.13 TO "VV5" 6+50.00	7			271			**127**				
	GARDEN GROVE Blvd	"GG" 282+50.00 TO "GG" 283+71.72	13	84						497	0.2		
	"VV5" LINE	"VV5" 6+50.00 TO "VV5" 8+50.00	6	311			294				0.3		
	MVP LOCATION 1	"W" 2292+54.30	10	20			14				0.1		
	MVP LOCATION 2	"E" 3298+05	10	20			14				0.1		
L-3	W22-N405 Conn	"W" 2298+28.89 TO "W" 2310+30.52	3		1,619			762				21,857	
	W22-N405 Conn	"W" 2300+45.75 TO "W" 2310+30.52	4	311			249				0.3		
	W22-N405 Conn	"W" 2300+28.45 TO "W" 2304+67.78	4	132			106				0.1		
	S405-E22 Conn	"E" 3298+52.96 TO "E" 3310+54.21	3		1,570			739					
	S405-E22 Conn	"E" 3298+52.96 TO "E" 3302+40.00	4	117			94				0.1		
	S405-E22 Conn	"E" 3306+61.31 TO "E" 3310+54.21	4	118			94				0.1		
	S405-E22 Conn	"E" 3308+92.55 TO "H" 3310+54.21	4	49			39				0.1		
	405-22 HOV Conn	"H" 1300+69.50 TO "H" 1310+50.00	5		1,594			850					
	"VV3" LINE	"VV3" 18+30.28 TO "VV3" 20+28.45	6	219			207				0.2		
	"VV4" LINE	"VV4" 9+43.17 TO "VV4" 20+31.61	6	1,350			1,277				1.4		
	"VV5" LINE	"VV5" 8+50.00 TO "E" 3306+61.31	6	940			890				1.0		
	VALLEY VIEW St	"VV" 38+50.00 TO "VV" 41+07.37	8	370			329				0.2		
	VALLEY VIEW St	"VV" 38+50.00 TO "VV" 41+07.37	9	2,589							1.7		
	VALLEY VIEW St	"VV" 44+45.69 TO "VV" 46+50.00	8	594			528				0.4		
	VALLEY VIEW St	"VV" 45+37.50 TO "VV" 46+50.00	9	141							0.2		
	GARDEN GROVE Blvd	"GG" 275+50.00 TO "GG" 278+00.00	8	15			14				0.1		
	GARDEN GROVE Blvd	"GG" 275+50.00 TO "GG" 278+00.00	9	1,764							1.4		
	GARDEN GROVE Blvd	"GG" 278+00.00 TO "GG" 279+25.00	13	130						771	0.4		
	MVP LOCATION 3	"VV4" 12+00.00	10	21			15				0.1		
L-4	NB ROUTE 405	"NB405" 306+00.00 TO "NB405" 310+50.00	1		75			38				326	880
	NB ROUTE 405	"NB405" 306+00.00 TO "NB405" 310+50.00	2	148			117				0.1		
	SB ROUTE 405	"SB405" 306+50.00 TO "SB405" 310+77.00	1		87			43					
	SB ROUTE 405	"SB405" 306+50.00 TO "SB405" 310+77.00	2	140			111				0.1		
	"BC1" LINE	"BC1" 9+84.80 TO "BC1" 12+50.00	6	277			262				0.3		
	VALLEY VIEW St	"VV" 37+64.21 TO "VV" 38+00.00	13	38						222	0.1		
	VALLEY VIEW St	"VV" 37+77.40 TO "VV" 38+50.00	8	39			35				0.1		
	VALLEY VIEW St	"VV" 38+00.00 TO "VV" 38+50.00	9	156							0.1		
	MVP LOCATION 4	"NB405" 308+21.00	10	20			14				0.1		
	MVP LOCATION 5	"BC1" 11+00.00	10	20			14				0.1		
L-5	"VV3" LINE	"VV3" 6+55.07 TO "VV3"12+50.00	6	677			641				0.7		
	"VV4" LINE	"VV4" 6+53.00 TO "VV4" 9+43.17	6	314			297				0.3		
	VALLEY VIEW St	"VV" 46+50.00 TO "VV" 50+25.00	8	784			697				0.5		
	VALLEY VIEW St	"VV" 46+50.00 TO "VV" 50+00.00	9	1,317							0.9		
	VALLEY VIEW St	"VV" 50+00.00 TO "VV" 51+00.00	13	165						976	0.4		
	VALLEY VIEW St	"VV4" 6+53.00 TO "VV" 51+00.00	6	51			48				0.1		
	VALLEY VIEW St	"VV" 51+00.00 TO "VV" 52+00.00	11	15							0.1		
	VALLEY VIEW St	"VV" 50+25.00 TO "VV" 51+20.75	11	17							0.1		
		SUBTOTAL SHEET 1		14,782	5,663	271	7,577	**2,770**	**127**	2,466	13.9	25,376	2,639

2 **REVISED PER ADDENDUM NO. 2 DATED APRIL 1, 2010**

SUMMARY OF QUANTITIES

Q-1

Dist	COUNTY	ROUTE	POST MILES TOTAL PROJECT	SHEET No.	TOTAL SHEETS
12	Ora	22,405	R0.7/R2.9, 20.4/22.3	480	1006

Kanogporn S Tiberi 05/18/09
REGISTERED CIVIL ENGINEER DATE

9-21-09
PLANS APPROVAL DATE

REGISTERED PROFESSIONAL ENGINEER KANOGPORN S. TIBERI No. 61254 Exp. 6/30/11 CIVIL STATE OF CALIFORNIA

2

THE STATE OF CALIFORNIA OR ITS OFFICERS OR AGENTS SHALL NOT BE RESPONSIBLE FOR THE ACCURACY OR COMPLETENESS OF SCANNED COPIES OF THIS PLAN SHEET.

PARSONS
2201 DUPONT DRIVE
SUITE 200
IRVINE, CA 92612

ORANGE COUNTY
TRANSPORTATION AUTHORITY
550 SOUTH MAIN STREET
ORANGE, CA 92863

REVISED BY: ANH VU — DATE REVISED: 07/16/09
VICKIE L. KRAMAN — KANOGPORN S. TIBERI
CALCULATED-DESIGNED BY — CHECKED BY
CONSULTANT FUNCTIONAL SUPERVISOR: CARLOS A. CADENA
STATE OF CALIFORNIA - DEPARTMENT OF TRANSPORTATION
Caltrans

LAST REVISION 05-18-09 | DATE PLOTTED => 30-MAR-2010 | TIME PLOTTED => 11:42

Dist	COUNTY	ROUTE	POST MILES TOTAL PROJECT	SHEET No.	TOTAL SHEETS
12	Ora	22,405	R0.7/R2.9, 20.4/22.3	481	1006

Kanogporn S Tiberi 05/18/09
REGISTERED CIVIL ENGINEER DATE

9-21-09
PLANS APPROVAL DATE

REGISTERED PROFESSIONAL ENGINEER KANOGPORN S. TIBERI No. 61254 Exp. 6/30/11 CIVIL STATE OF CALIFORNIA

THE STATE OF CALIFORNIA OR ITS OFFICERS OR AGENTS SHALL NOT BE RESPONSIBLE FOR THE ACCURACY OR COMPLETENESS OF SCANNED COPIES OF THIS PLAN SHEET.

PARSONS
2201 DUPONT DRIVE
SUITE 200
IRVINE, CA 92612

ORANGE COUNTY
TRANSPORTATION AUTHORITY
550 SOUTH MAIN STREET
ORANGE, CA 92863

PAVEMENT STRUCTURAL SECTIONS

SHEET No.	DESCRIPTION	STATION	STRUCTURAL SECTION No.	HOT MIX ASPHALT TON	JOINTED PLAIN CONCRETE PAVEMENT CY	CONCRETE PAVEMENT (RAPID STRENGTH CONCRETE-RAMP TERMINI) CY	CLASS 2 AGGREGATE BASE CY	LEAN CONCRETE BASE CY	LEAN CONCRETE BASE RAPID SETTING CY	COLD PLANE ASPHALT CONCRETE PAVEMENT SQYD	TACK COAT TON	SEAL PAVEMENT JOINT LF	SEAL LONGITUDINAL ISOLATION JOINT LF
L-6	NB ROUTE 405	"NB405" 310+50.00 TO "NB405" 321+32.00	1		450			225				13,523	2,425
	NB ROUTE 405	"NB405" 310+50.00 TO "NB405" 321+51.81	2	420			332				0.3		
	NB ROUTE 405	"NB405" 319+54.00 TO "NB405" 321+51.81	1		50			25					
	SB ROUTE 405	"SB405" 310+77.00 TO "SB405" 317+48.00	1		970			485					
	SB ROUTE 405	"SB405" 317+48.00 TO "SB405" 317+98.00	1		112			56					
	SB ROUTE 405	"SB405" 317+98.00 TO "SB405" 321+45.55	1		1,034			517					
	SB ROUTE 405	"SB405" 310+77.00 TO "SB405" 317+48.00	2	244			193				0.2		
	SB ROUTE 405	"SB405" 317+48.00 TO "SB405" 317+98.00	12	15			12				0.1		
	SB ROUTE 405	"SB405" 317+98.00 TO "SB405" 319+22.48	2	49			39				0.1		
	W22-N405 Conn	"W" 2310+30.52 TO "W" 2321+49.05	3		397			187					
	W22-N405 Conn	"W" 2310+30.52 TO "W" 2311+58.00	4	38			31				0.1		
	W22-N405 Conn	"W" 2310+30.52 TO "W" 2316+32.27	6	435			411				0.4		
	W22-N405 Conn	"W" 2316+32.27 TO "W" 2321+49.05	4	150			120				0.1		
	W22-N405 Conn	"W" 2318+64.50 TO "W" 2321+49.05	4	55			44				0.1		
	S405-E22 Conn	"E" 3310+54.21 TO "E" 3311+38.28	3		77			36					
	S405-E22 Conn	"E" 3310+54.21 TO "E" 3311+02.03	4	12			10				0.1		
	S405-E22 Conn	"E" 3310+54.21 TO "E" 3311+50.52	4	29			23				0.1		
	S405-E22 Conn	"E" 3319+30.18 TO "E" 3321+41.96	3		258			121					
	405-22 HOV Conn	"H" 1310+50.00 TO "H" 1312+60.00	5		283			151					
	"BC1" LINE	"BC1" 12+50.00 TO "BC1" 21+40.79	6	1,090			1,031				1.1		
	MVP LOCATION 6	"NB405" 315+30.00	10	28			19				0.1		
	MVP LOCATION 7	"NB405" 321+00.00	10	20			14				0.1		
L-7	NB ROUTE 405	"NB405" 321+51.81 TO "NB405" 331+53.07	1		863			431				24,210	1,289
	NB ROUTE 405	"NB405" 321+51.81 TO "NB405" 325+14.28	2	41			32				0.1		
	SB ROUTE 405	"SB405" 321+45.55 TO "SB405" 331+45.76	1		2,697			1,349					
	SB ROUTE 405	"SB405" 323+53.83 TO "SB405" 328+46.20	2	185			146				0.1		
	W22-N405 Conn	"W" 2321+49.05 TO "W" 2325+11.31	4	71			57				0.1		
	W22-N405 Conn	"W" 2321+49.05 TO "W" 2323+18.40	3		21			10					
	W22-N405 Conn	"W" 2321+49.05 TO "W" 2323+18.40	4	34			27				0.1		
	W22-N405 Conn	"W" 2329+77.00 TO "NB405" 331+53.07	1		26			13					
	W22-N405 Conn	"W" 2329+77.00 TO "NB405" 331+53.07	2	55			44				0.1		
	S405-E22 Conn	"E" 3321+41.96 TO "E" 3331+48.12	3		1,323			622					
	S405-E22 Conn	"E" 3323+33.03 TO "E" 3331+48.12	4	243			195				0.2		
	S405-E22 Conn	"E" 3322+61.90 TO "E" 3328+49.34	4	176			141				0.1		
	405-22 HOV Conn	"H" 1324+30.00 TO "H" 1331+50.00	5		895			478					
	"BC1" LINE	"BC1" 21+40.79 TO "SB405" 323+53.83	6	155			147				0.2		
	MVP LOCATION 8	"W" 2322+67.80	10	20			14				0.1		
	MVP LOCATION 9	"W" 2330+61.00	10	20			14				0.1		
L-8	NB ROUTE 405	"NB405" 331+53.07TO "A" 343+50.00	1		581			291				18,036	3,862
	NB ROUTE 405	"NB405" 331+53.07 TO "NB405" 336+62.66	1		558			279					
	NB ROUTE 405	"NB405" 331+53.07 TO "A" 343+50.00	2	445			352				0.3		
	SB ROUTE 405	"SB405" 331+45.76 TO "SB405" 336+61.14	1		1,929			965					
	SB ROUTE 405	"SB405" 336+61.14 TO "A" 343+50.00	1		699			349					
	SB ROUTE 405	"SB405" 332+97.28 TO "A" 343+50.00	2	250			198				0.2		
	S405-E22 Conn	"E" 3331+48.12 TO "E" 3333+00.13	3		191			90					
	S405-E22 Conn	"E" 3331+48.12 TO "E" 3333+00.13	4	46			37				0.1		
	405-22 HOV Conn	"H" 1331+50.00 TO "H" 1335+03.07	5		335			179					
	ROUTE 405 MEDIAN	"H" 1336+60.86 TO "A" 343+50.00	1		339			170					
	MVP LOCATION 10	"E" 3332+42.80	10	21			15				0.1		
		SUBTOTAL SHEET 2		4,347	14,088		3,698	7,029			4.8	55,769	7,576

SUMMARY OF QUANTITIES

2 REVISED PER ADDENDUM NO. 2 DATED APRIL 1, 2010

Q-2

STATE OF CALIFORNIA - DEPARTMENT OF TRANSPORTATION
Caltrans

CONSULTANT FUNCTIONAL SUPERVISOR: CARLOS A. CADENA
CALCULATED-DESIGNED BY: VICKIE L. KRAMAN
CHECKED BY: KANOGPORN S. TIBERI
REVISED BY: ANH VU
DATE REVISED: 07/16/09

LAST REVISION 05-18-09
DATE PLOTTED => 30-MAR-2010
TIME PLOTTED => 11:42

Dist	COUNTY	ROUTE	POST MILES TOTAL PROJECT	SHEET No.	TOTAL SHEETS
12	Ora	22,405	R0.7/R2.9, 20.4/22.3	482	1006

Kanogporn S Tiberi 05/18/09
REGISTERED CIVIL ENGINEER DATE

9-21-09
PLANS APPROVAL DATE

REGISTERED PROFESSIONAL ENGINEER KANOGPORN S. TIBERI No. 61254 Exp. 6/30/11 CIVIL STATE OF CALIFORNIA

THE STATE OF CALIFORNIA OR ITS OFFICERS OR AGENTS SHALL NOT BE RESPONSIBLE FOR THE ACCURACY OR COMPLETENESS OF SCANNED COPIES OF THIS PLAN SHEET.

PARSONS
2201 DUPONT DRIVE
SUITE 200
IRVINE, CA 92612

ORANGE COUNTY
TRANSPORTATION AUTHORITY
550 SOUTH MAIN STREET
ORANGE, CA 92863

2

PAVEMENT STRUCTURAL SECTIONS

SHEET No.	DESCRIPTION	STATION	STRUCTURAL SECTION	HOT MIX ASPHALT	JOINTED PLAIN CONCRETE PAVEMENT	CONCRETE PAVEMENT (RAPID STRENGTH CONCRETE-RAMP TERMINI)	CLASS 2 AGGREGATE BASE	LEAN CONCRETE BASE	LEAN CONCRETE BASE RAPID SETTING	COLD PLANE ASPHALT CONCRETE PAVEMENT	TACK COAT	SEAL PAVEMENT JOINT	SEAL LONGITUDINAL ISOLATION JOINT
			No.	TON	CY	CY	CY	CY	CY	SQYD	TON	LF	LF
L-9	NB ROUTE 405	"A" 343+50.00 TO "A" 355+50.00	1		600			300				5,822	4,800
	NB ROUTE 405	"A" 343+50.00 TO "A" 355+50.00	2	450			356				0.3		
	SB ROUTE 405	"A" 343+50.00 TO "A" 355+50.00	1		1,089			544					
	SB ROUTE 405	"A" 343+50.00 TO "A" 355+50.00	2	450			356				0.3		
	ROUTE 405 MEDIAN	"A" 343+50.00 TO "A" 355+50.00	1		622			311					
L-10	NB ROUTE 405	"A" 355+50.00 TO "A" 367+50.00	1		600			300				5,822	4,800
	NB ROUTE 405	"A" 355+50.00 TO "A" 367+50.00	2	450			356				0.3		
	SB ROUTE 405	"A" 355+50.00 TO "A" 367+50.00	1		1,089			544					
	SB ROUTE 405	"A" 355+50.00 TO "A" 367+50.00	2	450			356				0.3		
	ROUTE 405 MEDIAN	"A" 355+50.00 TO "A" 367+50.00	1		622			311					
	MVP LOCATION 11	"A" 358+09.50	10	20			14				0.1		
L-11	NB ROUTE 405	"A" 367+50.00 TO "A 379+50.00	1		600			300				5,822	4,800
	NB ROUTE 405	"A" 367+50.00 TO "A 379+50.00	2	450			356				0.3		
	SB ROUTE 405	"A" 367+50.00 TO "A 379+50.00	1		1,089			544					
	SB ROUTE 405	"A" 367+50.00 TO "A 379+50.00	2	450			356				0.3		
	ROUTE 405 MEDIAN	"A" 367+50.00 TO "A 379+50.00	1		622			311					
	MVP LOCATION 12	"A" 370+45.00	10	17			12				0.1		
	MVP LOCATION 13	"A" 373+35.00	10	29			20				0.1		
	MVP LOCATION 14	"A" 375+82.00	10	20			14				0.1		
L-12	NB ROUTE 405	"A" 379+50.00 TO "A" 391+50.00	1		688			344				6,121	4,800
	NB ROUTE 405	"A" 379+50.00 TO "A" 391+50.00	2	450			356				0.3		
	SB ROUTE 405	"A" 379+50.00 TO "A" 391+50.00	1		1,001			500					
	SB ROUTE 405	"A" 379+50.00 TO "A" 391+50.00	2	450			356				0.3		
	ROUTE 405 MEDIAN	"A" 379+50.00 TO "A" 391+50.00	1		534			267					
L-13	NB ROUTE 405	"A" 391+50.00 TO "A" 395+50.02	1		294			147				2,153	1,600
	NB ROUTE 405	"A" 391+50.00 TO "A" 395+50.02	2	150			119				0.1		
	SB ROUTE 405	"A" 391+50.00 TO "A" 395+50.02	1		269			134					
	SB ROUTE 405	"A" 391+50.00 TO "A" 395+50.02	2	150			119				0.1		
	ROUTE 405 MEDIAN	"A" 391+50.00 TO "A" 395+50.02	1		113			57					
SUBTOTAL SHEET 3				3,986	9,832		3,146	4,914			3.0	25,740	20,800
SUBTOTAL SHEET 1				14,782	5,663	271	7,577	**2770**	**127**	2,466	13.9	25,376	2,639
SUBTOTAL SHEET 2				4,347	14,088		3,698	7,029			4.8	55,769	7,576
SUBTOTAL FROM HMA DIKE				222									
SUBTOTAL FROM HMA UNDER DIKE				142									
SUBTOTAL FROM HMA (Misc AREA)				897									
SUBTOTAL FROM STAGE CONSTRUCTION QUANTITIES				257			1,774						
TOTAL				24,633	29,583	271	16,195	**14,713**	**127**	2,466	21.7	106,885	31,015

2 **REVISED PER ADDENDUM NO. 2 DATED APRIL 1, 2010**

SUMMARY OF QUANTITIES

Q-3

STATE OF CALIFORNIA - DEPARTMENT OF TRANSPORTATION
Caltrans

CONSULTANT FUNCTIONAL SUPERVISOR: CARLOS A. CADENA
CALCULATED-DESIGNED BY: VICKIE L. KRAMAN
CHECKED BY: KANOGPORN S. TIBERI
REVISED BY: ANH VU
DATE REVISED: 07/16/09

LAST REVISION 05-18-09 | DATE PLOTTED => 30-MAR-2010 | TIME PLOTTED => 11:42

DIST	COUNTY	ROUTE	POST MILES TOTAL PROJECT	SHEET No	TOTAL SHEETS
12	Ora	22,405	R0.7/R2.9, 20.4/22.3	752	1006

REGISTERED CIVIL ENGINEER 05/18/09 DATE

9-21-09
PLANS APPROVAL DATE

REGISTERED PROFESSIONAL ENGINEER S. Dulor No. C62232 Exp. 09/30/11 CIVIL STATE OF CALIFORNIA

The State of California or its officers or agents shall not be responsible for the accuracy or completeness of electronic copies of this plan sheet.

PARSONS 2201 DUPONT DRIVE SUITE 200 IRVINE, CA 92612

OCTA 550 SOUTH MAIN STREET ORANGE, CA 92863

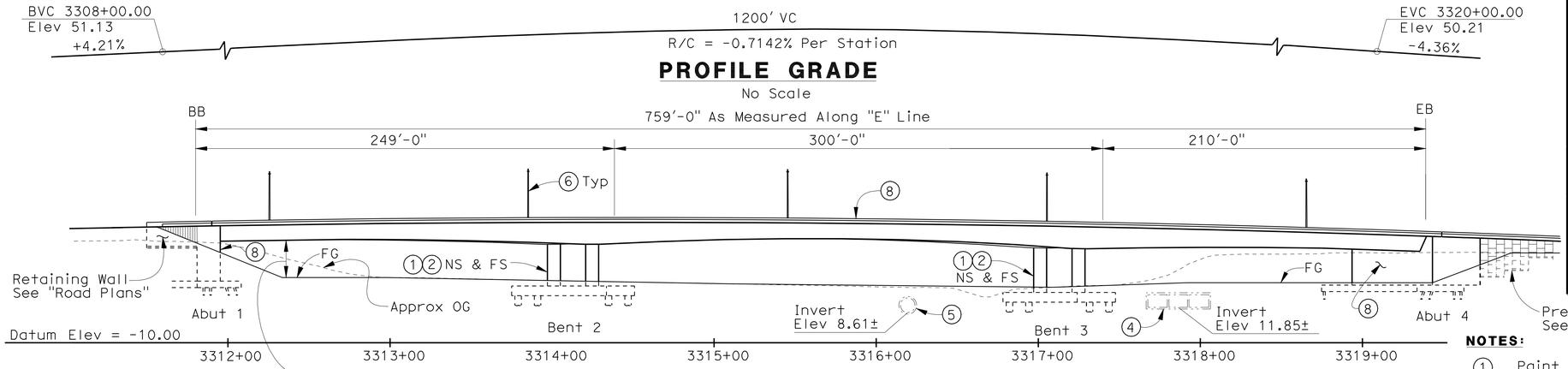

PROFILE GRADE

No Scale

ELEVATION

1" = 40'

NOTES:

1. For Typical Section, see "General Plan No. 2" sheet.
2. For Curve Data and Foundation Pile Data Table, see "Foundation Plan" sheet.

CURVE DATA (1)
R = 2000'
Δ = 20°44'55"
L = 724.26'
T = 366.14'

CURVE DATA (2)
R = 2000'
Δ = 14°53'17"
L = 519.70'
T = 261.32'

CURVE DATA (3)
R = 2500'
Δ = 41°18'07"
L = 1802.14'
T = 942.23'

CURVE DATA (4)
R = 2960'
Δ = 24°16'57"
L = 1254.48'
T = 636.80'

CURVE DATA (5)
R = 2200'
Δ = 26°20'20"
L = 1011.34'
T = 514.77'

CURVE DATA (6)
R = 1100'
Δ = 22°31'24"
L = 432.42'
T = 219.04'

NOTES:

1. Paint "S405-E22 Connector Separation"
2. Paint "Bridge No. 55-1101F"
3. Structure Approach Type N(30S)
4. Bolsa Chica Ditch Exist Triple 12'± x 10'± RC Box Culvert to remain and be protected during construction (Br. No. 55-0334)
5. Exist Garden Grove Storm Channel 9'-0" Ø Pipe RC Pipe Culvert to Remain
6. Electrolier, See "Road Plans"
7. Deck Drain, See "Drainage Details" sheet
8. Architectural Treatment

LEGEND:

- Exist Structure
- Right of Way Line
- Stage 1 Removal - See "Bridge Removal Details" sheet
- Stage 2 Removal - See "Bridge Removal Details" sheet
- Indicates Minimum Vertical Clearance
- Indicates Minimum Vertical Clearance 16'-11" (Future I-405 Widening)
- Indicates Minimum Vertical Clearance 17'-1"± (Existing)
- PW Indicates Precast Wall

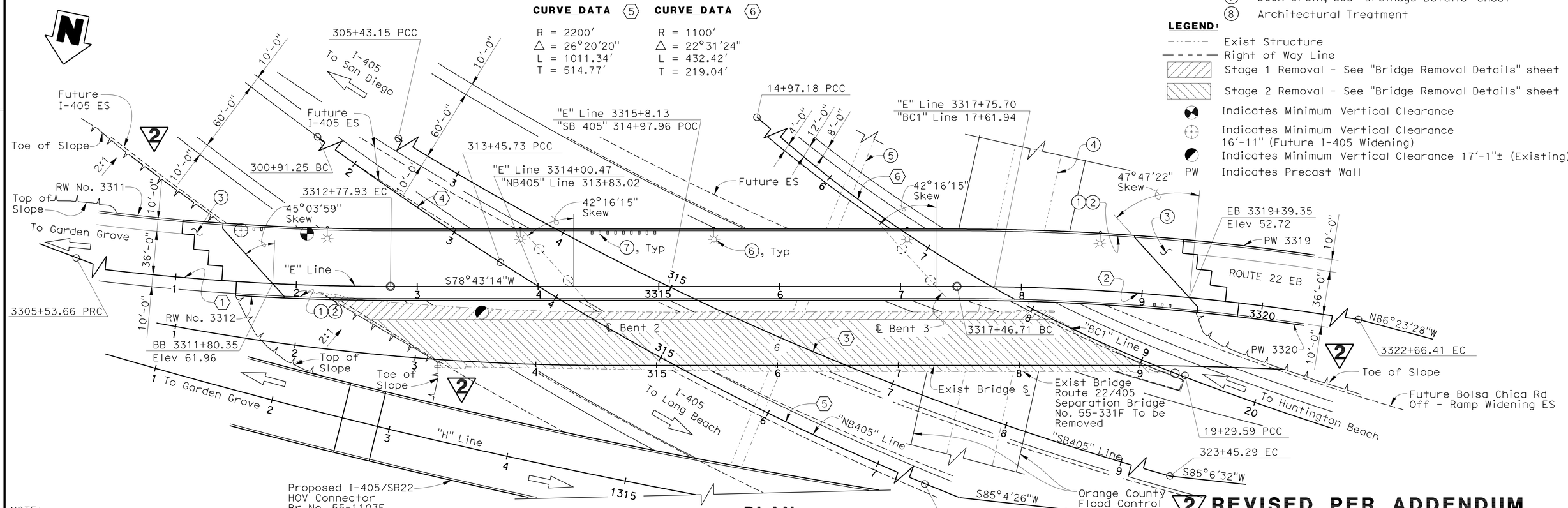

PLAN

1" = 40'

NOTE:
The Contractor shall verify all controlling field dimensions before ordering or fabricating any material

2 REVISED PER ADDENDUM No. 2 DATED APRIL 1, 2010

DESIGN OVERSIGHT Sudhakar Vatti	DESIGN	BY S. Dulor	CHECKED M. Sarraf	LRFD DESIGN	LIVE LOADING: HL-93 AND "LOW-BOY" AND PERMIT DESIGN LOAD
5-19-09 SIGN OFF DATE	DETAILS	BY P. Johnson	CHECKED M. Sarraf	LAYOUT	BY P. Johnson / CHECKED M. Sarraf
	QUANTITIES	BY H. Okolo	CHECKED Y. Matsuo	SPECIFICATIONS	BY G. Matesic / PLANS AND SPECS COMPARED S. Dulor

PREPARED FOR THE STATE OF CALIFORNIA DEPARTMENT OF TRANSPORTATION

MOHSEN MOHSENI
PROJECT ENGINEER

CU 12235
EA 071621

BRIDGE NO. 55-1101F
POST MILES 20.75

S405-E22 CONNECTOR SEPARATION
GENERAL PLAN NO. 1

DISREGARD PRINTS BEARING EARLIER REVISION DATES → 04/28/08 10/27/08 02/23/09 05/18/09

SHEET 1 OF 34

DESIGN GENERAL PLAN SHEET (ENGLISH) (REV. 2/25/05)

ORIGINAL SCALE IN INCHES FOR REDUCED PLANS 0 1 2 3

FILE => 55-1101f-a-gp01.add

USERNAME => trmmguye DATE PLOTTED => 29-MAR-2010 TIME PLOTTED => 12:42

DIST	COUNTY	ROUTE	POST MILES TOTAL PROJECT	SHEET No	TOTAL SHEETS
12	Ora	22,405	R0.7/R2.9, 20.4/22.3	754	1006

REGISTERED CIVIL ENGINEER 05/18/09 DATE

9-21-09
PLANS APPROVAL DATE

REGISTERED PROFESSIONAL ENGINEER S. Dulor No. C62232 Exp. 09/30/11 CIVIL STATE OF CALIFORNIA

The State of California or its officers or agents shall not be responsible for the accuracy or completeness of electronic copies of this plan sheet.

PARSONS 2201 DUPONT DRIVE SUITE 200 IRVINE, CA 92612

OCTA 550 SOUTH MAIN STREET ORANGE, CA 92863

GENERAL NOTES: LOAD AND RESISTANCE FACTOR DESIGN

Design:
AASHTO LRFD Bridge Design Specifications, 3rd Edition with Interims through 2006 and the Caltrans Amendments v3.06.01; except that earth retaining systems, bridge barrier and structure approach slabs are designed using Bridge Design Specifications (96 AASHTO w/Revisions by Caltrans).

Dead Load:
Includes 35 psf for future wearing surface.

Live Loading:
HL-93 with "Low Boy" and Permit Design Load.

Seismic Design:
Caltrans Seismic Design Criteria (SDC), Version 1.4, June 2006.

Seismic Loading:
Soil Profile D
Magnitude group (7.25+/-0.25)
Peak Rock Acceleration = 0.5g
with Modification for Near Fault Effects

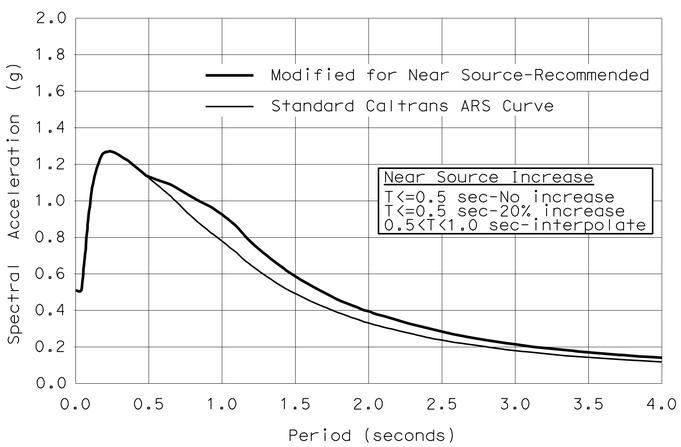

REINFORCED CONCRETE: f_y = 60 ksi
f'_c = 3600 psi Unless Otherwise Noted
n = 8

PRESTRESSED CONCRETE: See "Prestressing Notes" on "Girder Details" Sheet.

STRUCTURAL STEEL: Steel Pipe Piles: ASTM A-252, Grade 3

INDEX TO PLANS

SHEET NO.	TITLE
1.	GENERAL PLAN NO. 1
2.	GENERAL PLAN NO. 2
3.	INDEX TO PLANS
4.	DECK/SOFFIT CONTOURS
5.	FOUNDATION PLAN
6.	ABUTMENT 1 LAYOUT
7.	ABUTMENT 4 LAYOUT
8.	ABUTMENT DETAILS NO. 1
9.	ABUTMENT DETAILS NO. 2
10.	ABUTMENT DETAILS NO. 3
11.	TYPICAL BENT LAYOUT
12.	BENT DETAILS NO. 1
13.	BENT DETAILS NO. 2
14.	48" DIA CISS PILE DETAILS
15.	TYPICAL SECTION
16.	GIRDER LAYOUT
17.	GIRDER HAUNCH GEOMETRY
18.	GIRDER DETAILS
19.	ADDITIONAL GIRDER REINFORCEMENT
20.	JOINT SEAL ASSEMBLY (MOVEMENT RATING GREATER THAN 4")
21.	DECK DRAIN TYPE D-2 MODIFIED
22.	DRAINAGE DETAILS
23.	STRUCTURE APPROACH DRAINAGE DETAILS
24.	STRUCTURE APPROACH TYPE N(30S)
25.	BRIDGE REMOVAL DETAILS
26.	ABUTMENT ARCHITECTURAL DETAILS NO. 1
27.	ABUTMENT ARCHITECTURAL DETAILS NO. 2
28.	LOG OF TEST BORINGS 1 OF 6
29.	LOG OF TEST BORINGS 2 OF 6
30.	LOG OF TEST BORINGS 3 OF 6
31.	LOG OF TEST BORINGS 4 OF 6
32.	LOG OF TEST BORINGS 5 OF 6
33.	LOG OF TEST BORINGS 6 OF 6
34.	AS-BUILT LOG OF TEST BORINGS

STANDARD PLANS DATED MAY 2006 with errata No. 1 Through 10

A10A	ACRONYMS AND ABBREVIATIONS (1 OF 2)
A10B	ACRONYMS AND ABBREVIATIONS (2 OF 2)
A10C	SYMBOLS (SHEET 1 OF 2)
A10D	SYMBOLS (SHEET 2 OF 2)
A62B	LIMITS OF PAYMENT FOR EXCAVATION AND BACKFILL-BRIDGE SURCHARGE AND WALL
A62C	LIMITS OF PAYMENT FOR EXCAVATION AND BACKFILL-BRIDGE
B0-1	BRIDGE DETAILS
B0-3	BRIDGE DETAILS
B0-5	BRIDGE DETAILS
B0-13	BRIDGE DETAILS
RSP B2-8	PILE DETAILS- -CLASS 200
B7-1	BOX GIRDER DETAILS
B7-6	DECK DRAINS TYPES D-1 AND D-2
B7-8	DECK DRAINAGE DETAILS
B7-10	UTILITY OPENING BOX GIRDER
B7-11	UTILITY DETAILS
B8-5	CAST-IN-PLACE PRESTRESSED GIRDER DETAILS
B11-56	CONCRETE BARRIER TYPE 736
D99B	EDGE DRAIN OUTLET AND VENT DETAILS
RSP ES-6A	ELECTRICAL SYSTEMS (LIGHTING STANDARD TYPES 15 AND 21)

LEGEND:

2
- Low Expansive Material EI<50 and SE>20
- Structure Excavation (Bridge)
- Structure Backfill (Bridge)
- Roadway Excavation (see "Road Plans")
- Lightweight Fill (Cellular Concrete) (See "Road Plans" for Limits)

PLAN SYMBOLS

Standard Plan Sheet NO.
Detail NO.
A Section Identification

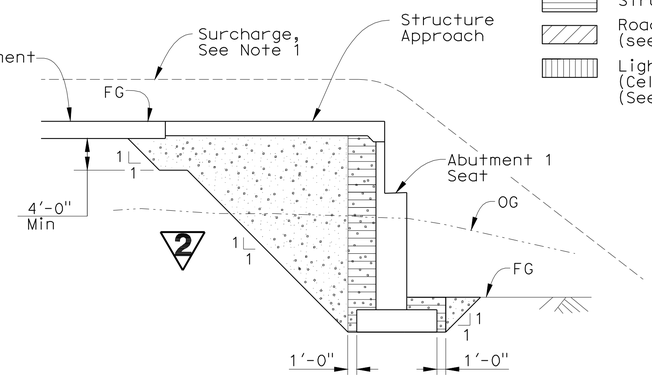

LIMITS OF EXPANSIVE SOIL EXCLUSION ZONE IN BRIDGE EMBANKMENT

A62C

No Scale

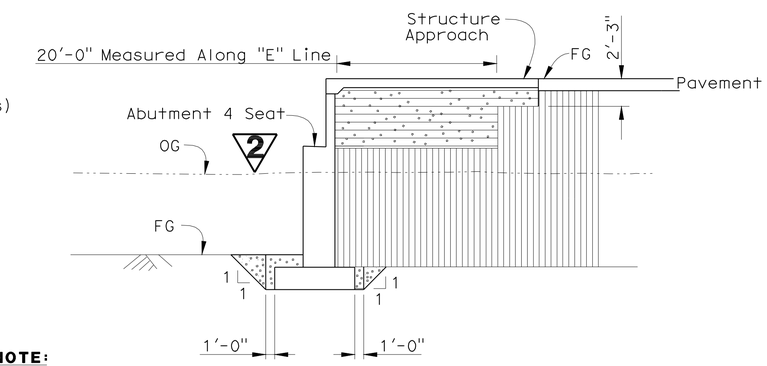

NOTE:

1. At Abutment 1, a surcharge shall be placed before construction of the Retaining Walls. New Abutments (including piles) shall not be placed before the proper settlement period has passed and surcharge material is removed. See "Road Plans" for surcharge height. Settlements shall be monitored during fill placement and waiting period.

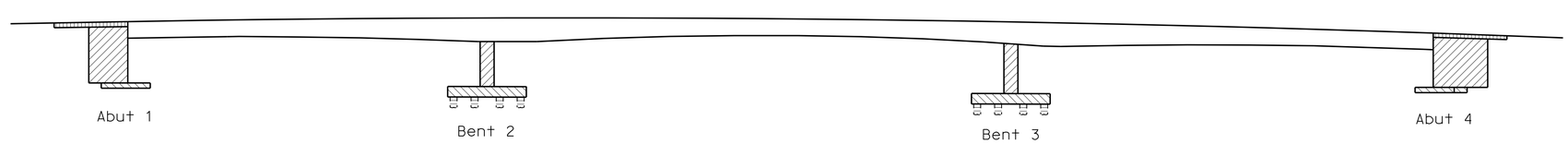

CONCRETE STRENGTH AND TYPE LIMITS

No Scale

LEGEND:

- Structural Concrete, Bridge (f'c = 5500 psi @ 28 days)
- Structural Concrete, Bridge (f'c = 4000 psi @ 28 days)
- Structural Concrete, Bridge Footing (f'c = 3600 psi @ 28 days)
- Structural Concrete, Approach Slab (f'c = 3600 psi @ 28 days)
- Structural Concrete, CISS Piles (f'c = 4000 psi @ 28 days)

2 REVISED PER ADDENDUM No. 2 DATED APRIL 1, 2010

NOTE:
The Contractor shall verify all controlling field dimensions before ordering or fabricating any material

Sudhakar Vatti
DESIGN OVERSIGHT Sudhakar Vatti
5-19-09
SIGN OFF DATE

	BY	CHECKED
DESIGN	S. Dulor	M. Sarraf
DETAILS	A. Segura	M. Sarraf
QUANTITIES	H. Okolo	Y. Matsuo

PREPARED FOR THE STATE OF CALIFORNIA DEPARTMENT OF TRANSPORTATION

MOHSEN MOHSENI
PROJECT ENGINEER

BRIDGE NO. 55-1101F
POST MILE 20.75

S405-E22 CONNECTOR SEPARATION
INDEX TO PLANS

DESIGN DETAIL SHEET (ENGLISH) (REV. 2/25/05)

ORIGINAL SCALE IN INCHES FOR REDUCED PLANS 0 1 2 3

CU 12235
EA 071621

DISREGARD PRINTS BEARING EARLIER REVISION DATES
REVISION DATES (PRELIMINARY STAGE ONLY) 10/27/08 2/23/09 05/18/09

SHEET 3 OF 34

FILE => 55-1101f-a-itp.add

USERNAME => frmnguye DATE PLOTTED => 29-MAR-2010 TIME PLOTTED => 12:43

DIST	COUNTY	ROUTE	POST MILES TOTAL PROJECT	SHEET No	TOTAL
12	Ora	22.405	R0.7/R2.9, 20.4/22.3	756	1006

REGISTERED CIVIL ENGINEER 05/18/09 DATE

9-21-09
PLANS APPROVAL DATE

REGISTERED PROFESSIONAL ENGINEER S. Dulor No. C62232 Exp. 09/30/11 CIVIL STATE OF CALIFORNIA

The State of California or its officers or agents shall not be responsible for the accuracy or completeness of electronic copies of this plan sheet.

PARSONS 2201 DUPONT DRIVE SUITE 200 IRVINE, CA 92612

OCTA 550 SOUTH MAIN STREET ORANGE, CA 92863

UTILITIES

1. Exist Bolsa Chica Ditch Triple 12'± x 10'± RC Box Culvert
2. Exist Garden Grove Storm Channel Pipe RC Pipe Culvert
3. 12KV & 120V OH Electrical Line (SCE) to be abandoned by others. Remove as required for construction of foundation.
4. 20" Sewer (Abandoned)
5. 16" HP GAs (SCG) to be protected in place
6. 14" HP Gas (LBGO) to be protected in place
7. 12" Water (City of Seal Beach)

CURVE DATA (1)
R = 2000'
Δ = 20°44'55"
L = 724.26'
T = 366.14'

CURVE DATA (2)
R = 2000'
Δ = 14°53'17"
L = 519.70'
T = 261.32'

CURVE DATA (3)
R = 2500'
Δ = 41°18'07"
L = 1802.14'
T = 942.23'

CURVE DATA (4)
R = 2960'
Δ = 24°16'57"
L = 1254.48'
T = 636.80'

CURVE DATA (5)
R = 2200'
Δ = 26°20'20"
L = 1011.34'
T = 514.77'

CURVE DATA (6)
R = 1100'
Δ = 22°31'24"
L = 432.42'
T = 219.04'

2

DATUM STATEMENT: Horizontal control datum is based on the California state plane coordinate system, zone VI. 1983 North American datum, 1991.35 EPOCH, Orange County Adjustment (Full descriptions for each control station can be obtained from Orange County Geomatics Office)

BENCHMARKS: Vertical control is the Orange County Surveyor benchmark 1A-144-04. Set in the Southwesterly corner of a 4.4ft by 4.4 ft concrete catch basin. Monument is located in the northeasterly corner of the intersection of Seal Beach Blvd. and St. Cloud Drive, 44 ft easterly of the centerline of Seal Beach Blvd. and 58 ft notherly of the centerline of St. Cloud Dr. monument is set level with the sidewalk. Benchmark elevation is 15.370.

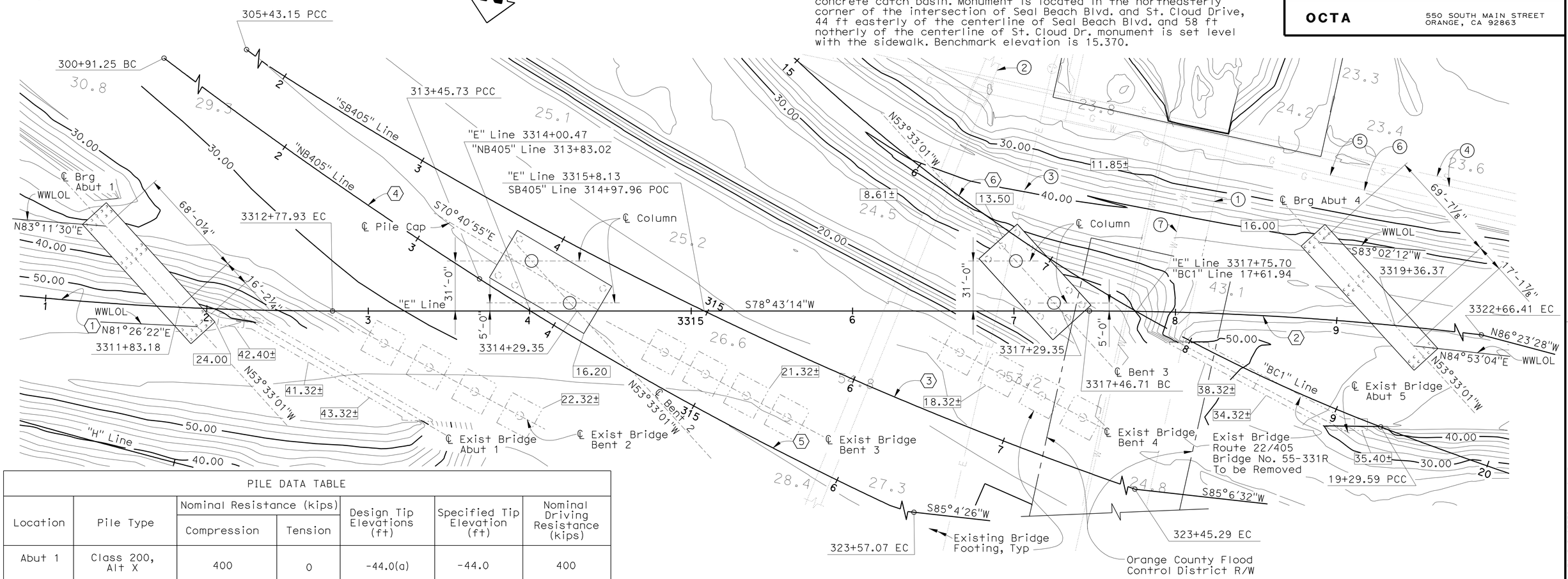

PLAN
1" = 30'

2 REVISED PER ADDENDUM No. 2 DATED APRIL 1, 2010

PILE DATA TABLE						
Location	Pile Type	Nominal Resistance (kips)		Design Tip Elevations (ft)	Specified Tip Elevation (ft)	Nominal Driving Resistance (kips)
		Compression	Tension			
Abut 1	Class 200, Alt X	400	0	-44.0(a)	-44.0	400
Bent 2	CISS NPS48 x 0.75"	1800	900	-83.8(a), -69(b), -40(d)	-83.8	1800
Bent 3	CISS NPS48 x 0.75"	1800	900	-86.5(a), -72(b), -42(d)	-86.5	1800
Abut 4	Class 200, Alt X	400	0	-49.0(a)	-49.0	400

Notes:
1. Design Tip Elevations for Abutments are controlled by: (a) Compression, (c) Settlement, (d) Lateral Load. Settlement for Piles driven to the Nominal Capacity is less than 1 inch.
2. Design Tip Elevations for Bents are controlled by: (a) Compression, (b) Tension, (C) Settlement, (d) Lateral Load. Settlement for Piles driven to the Nominal Capacity is less than 1 inch.

NOTE:
The Contractor shall verify all controlling field dimensions before ordering or fabricating any material

NOTES:
1. Contours shown represent existing approximate ground.
2. All piles not shown.
3. PDA Test Piles shall be at least 10'-0" longer than lengths based upon specified tip elevations. For location, see "Abutment Layout" sheets and "Bent Details No. 1" sheet.

LEGEND:
- Exist Structure
- 48" Ø Cast-in-Steel Shell
- 14" Class 200 PCPS Piles, Alt "X"
- XX.XX Indicates Bottom of Footing Elevation

GEOTECHNICAL PROFESSIONAL Curt Shuyler 02/05/09 APPROVAL DATE

Sudhakar Vatti
DESIGN OVERSIGHT Sudhakar Vatti
5-19-09
SIGN OFF DATE

SCALE: 1'=30'	VERT.DATUM NAV 1988	HORZ.DATUM NAD 1983	
PHOTOGRAMMETRY AS OF: 01/08	ALIGNMENT TIES		
SURVEYED	BY PSOMAS	DRAFTED	BY PSOMAS
FIELD CHECKED	BY PSOMAS	CHECKED	BY PSOMAS

DESIGN	BY S. Dulor	CHECKED M. Sarraf	
DETAILS	BY P. Johnson	CHECKED M. Sarraf	
QUANTITIES	BY H. Okolo	CHECKED Y. Matsuo	

PREPARED FOR THE STATE OF CALIFORNIA DEPARTMENT OF TRANSPORTATION

MOHSEN MOHSENI
PROJECT ENGINEER

BRIDGE NO. 55-1101F
POST MILE 20.75

S405-E22 CONNECTOR SEPARATION
FOUNDATION PLAN

FOUNDATION PLAN SHEET (ENGLISH) (REV. 2-25-05)

ORIGINAL SCALE IN INCHES FOR REDUCED PLANS 0 1 2 3

CU 12235
EA 071621

DISREGARD PRINTS BEARING EARLIER REVISION DATES

REVISION DATES (PRELIMINARY STAGE ONLY) 04/28/08 10/27/08 2/23/09 05/18/09

SHEET 5 OF 34

FILE => 55-1101F-e-fdp101.add

USERNAME => trmmguye DATE PLOTTED => 29-MAR-2010 TIME PLOTTED => 12:43

DIST	COUNTY	ROUTE	POST MILES TOTAL PROJECT	SHEET No	TOTAL SHEETS
12	Ora	22,405	R0.7/R2.9, 20.4/22.3	774	1006

REGISTERED CIVIL ENGINEER 05/18/09 DATE

9-21-09
PLANS APPROVAL DATE

REGISTERED PROFESSIONAL ENGINEER S. Dulor No. C62232 Exp. 09/30/11 CIVIL STATE OF CALIFORNIA

The State of California or its officers or agents shall not be responsible for the accuracy or completeness of electronic copies of this plan sheet.

PARSONS 2201 DUPONT DRIVE SUITE 200 IRVINE, CA 92612

OCTA 550 SOUTH MAIN STREET ORANGE, CA 92863

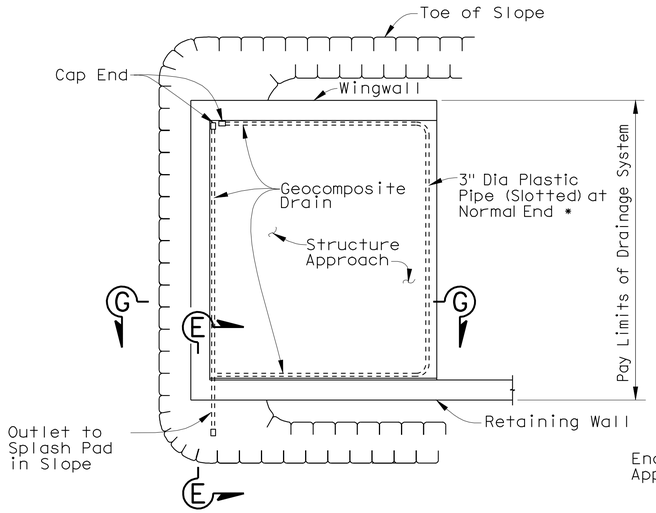

TYPICAL PLAN

(Skew not shown)

* For pipe layout at staggered end, see "Detail B"

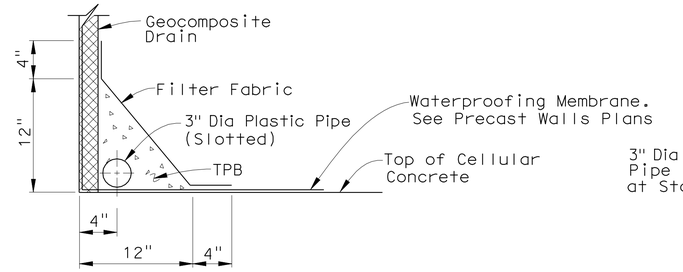

WITH FOOTING

DRAINAGE DETAILS 2

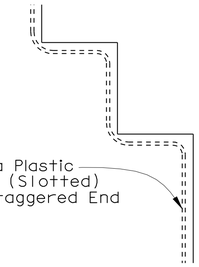

DETAIL B

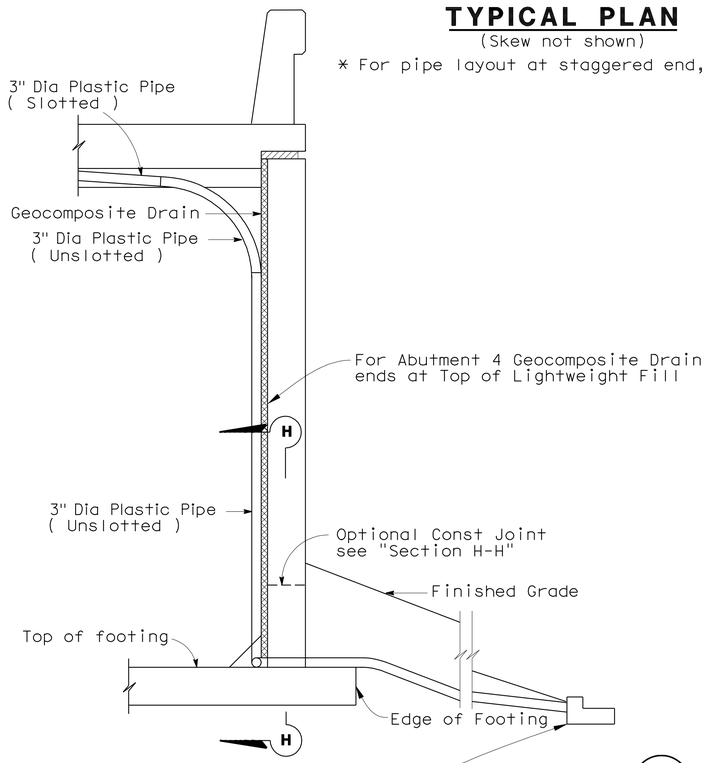

SECTION E-E

NOTE: Bends and junctions in 3" Dia plastic pipe are 2'-6" radius min.

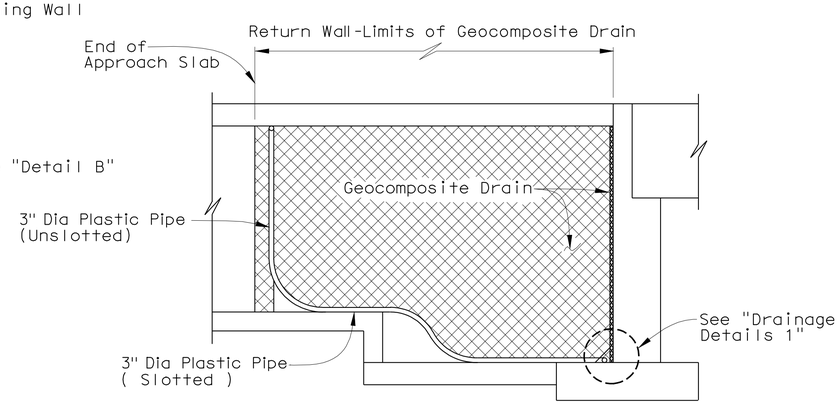

RETAINING WALLS WINGWALL WITH SOIL FILL AT ABUT 1

SECTION G-G

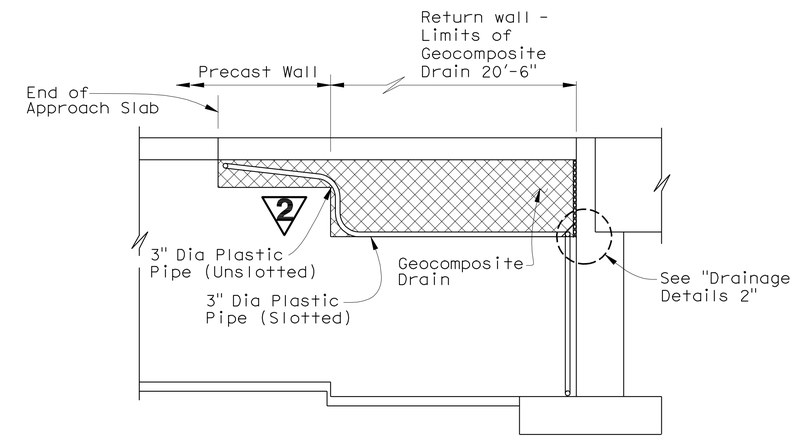

PRECAST WALLS WITH LIGHTWEIGHT FILL AT ABUT 4

SECTION G-G

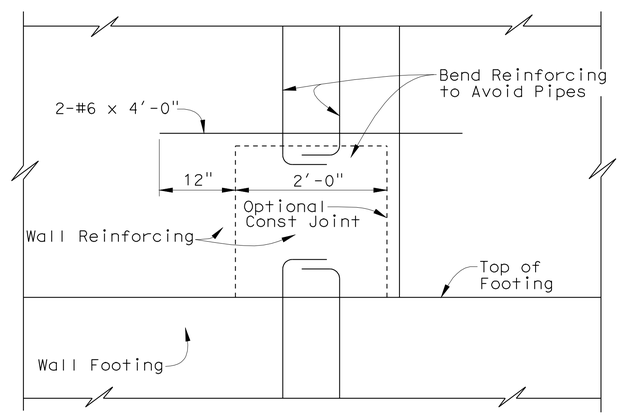

SECTION H-H

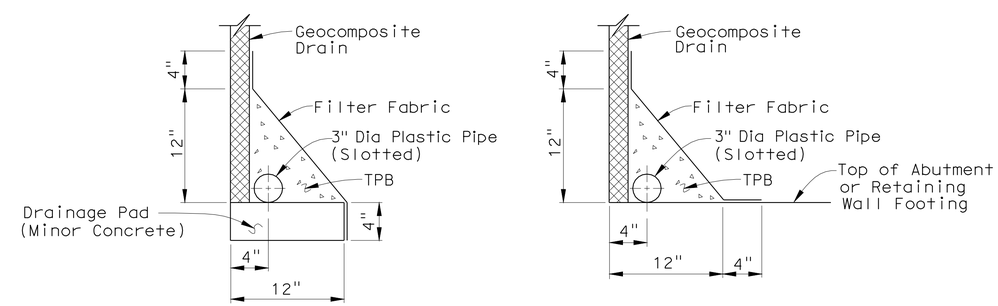

WITHOUT FOOTING **WITH FOOTING**

DRAINAGE DETAILS 1

NOTE:
The Contractor shall verify all controlling field dimensions before ordering or fabricating any material

2 REVISED PER ADDENDUM No. 2 DATED APRIL 1, 2010

NO SCALE

Sudhakar Vatti
DESIGN OVERSIGHT Sudhakar Vatti
5-19-09
SIGN OFF DATE

	BY	CHECKED
DESIGN	S. Dulor	M. Sarraf
DETAILS	P. Johnson	M. Sarraf
QUANTITIES	H. Okolo	Y. Matsuo

PREPARED FOR THE STATE OF CALIFORNIA DEPARTMENT OF TRANSPORTATION

MOHSEN MOHSENI
PROJECT ENGINEER

BRIDGE NO. 55-1101F
POST MILE 20.75

S405-E22 CONNECTOR SEPARATION

STRUCTURE APPROACH DRAINAGE DETAILS

DESIGN DETAIL SHEET (ENGLISH) (REV. 2/25/05)

ORIGINAL SCALE IN INCHES FOR REDUCED PLANS 0 1 2 3

CU 12235
EA 071621

DISREGARD PRINTS BEARING EARLIER REVISION DATES

REVISION DATES (PRELIMINARY STAGE ONLY) 10/27/08 2/23/09 05/18/09

SHEET 23 OF 34

FILE => 55-1101f-s-sadd.add

USERNAME => frmmgaye DATE PLOTTED => 29-MAR-2010 TIME PLOTTED => 12:43

DATUM STATEMENT: Horizontal control datum is based on the California state plane coordinate system, zone VI. 1983 North American datum, 1991.35 EPOCH, Orange County Adjustment (Full descriptions for each control station can be obtained from Orange County Geomatics Office)

BENCHMARKS: Vertical control is the Orange County Surveyor benchmark 1A-144-04. Set in the Southwesterly corner of a 4.4ft by 4.4 ft concrete catch basin. Monument is located in the northeasterly corner of the intersection of Seal Beach Blvd. and St. Cloud Drive, 44 ft easterly of the centerline of Seal Beach Blvd. and 58 ft notherly of the centerline of St. Cloud Dr. monument is set level with the sidewalk. Benchmark elevation is 15.370.

NOTES

1. Contours shown represent existing ground.
2. For "Pile Data Table" see Foundation Details sheet.
3. All piles not shown.
4. Existing bridge footing and piles which interfere with the bridge foundations and roadway sections to be removed. Cut existing piles 2′ Min below bottom of proposed footings at these locations.
5. The types and locations of all utilities are provided for information only. The Contractor shall verify all existing utilities and notify utility agencies prior to any removal, relocation or new construction. See "Road Plans" for utility details not shown.
6. For Curve Data see "General Plan" sheet.
7. For PDA Test Pile locations, see "Abutment Pile Layouts" and "Bent Details No. 3" sheets.

DIST	COUNTY	ROUTE	POST MILES TOTAL PROJECT	SHEET No	TOTAL
12	Ora	22,405	R0.7/R2.9, 20.4/22.3	789	1006

REGISTERED CIVIL ENGINEER 5/18/09 DATE

9-21-09
PLANS APPROVAL DATE

REGISTERED PROFESSIONAL ENGINEER MOHSEN MOHSENI No. C45999 Exp. 12/31/10 CIVIL STATE OF CALIFORNIA

The State of California or its officers or agents shall not be responsible for the accuracy or completeness of electronic copies of this plan sheet.

2

PARSONS 2201 DUPONT DRIVE SUITE 200 IRVINE, CA 92612

OCTA 550 SOUTH MAIN STREET ORANGE, CA 92863

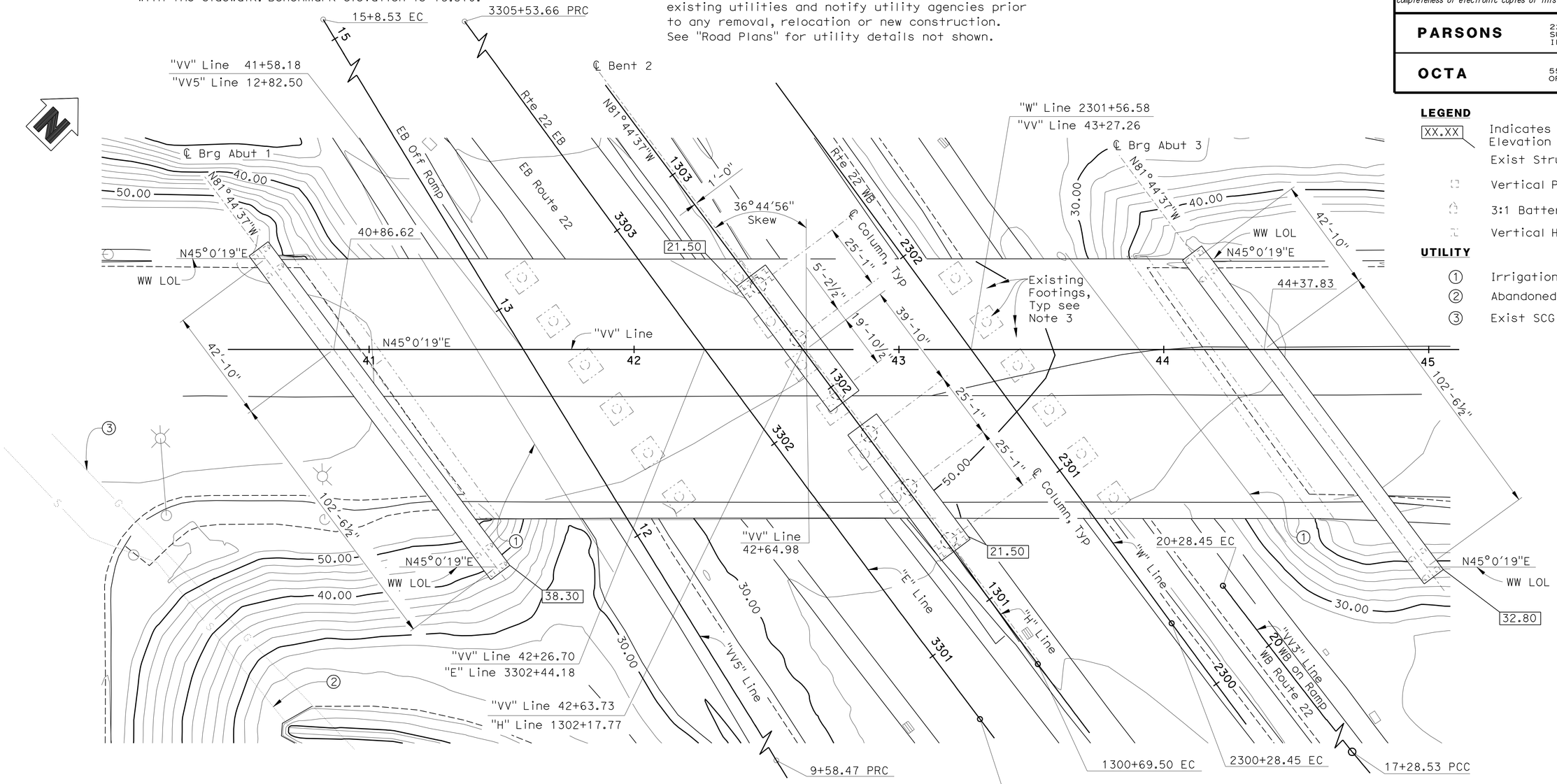

LEGEND

XX.XX Indicates Bottom of Footing Elevation

Exist Structure

Vertical PS Conc Pile

3:1 Battered PS Conc Pile

Vertical HP Steel Pile

UTILITY

1. Irrigation Crossover
2. Abandoned Sewer
3. Exist SCG 16" HP Gas

2 **REVISED PER ADDENDUM No. 2 DATED APRIL 1, 2010**

PLAN
1" = 20′

NOTE:
The Contractor shall verify all controlling field dimensions before ordering or fabricating any material

GEOTECHNICAL PROFESSIONAL APPROVAL DATE 2/23/09

Sudhakar Vatti DESIGN OVERSIGHT Sudhakar Vatti 5-19-09 SIGN OFF DATE	SCALE: 1′=20′	VERT.DATUM NAV 1988	HORZ.DATUM NAD 1983	DESIGN BY S. Mullangi	CHECKED G. Sarah	PREPARED FOR THE STATE OF CALIFORNIA DEPARTMENT OF TRANSPORTATION	BRIDGE NO. 55-1102
	PHOTOGRAMMETRY AS OF: 01/08	ALIGNMENT TIES X		DETAILS BY P. Johnson	CHECKED G. Sarah	MOHSEN MOHSENI PROJECT ENGINEER	POST MILE 0.92
	SURVEYED BY PSOMAS	DRAFTED BY PSOMAS		QUANTITIES BY T. Howell	CHECKED M. Martin		
	FIELD CHECKED BY PSOMAS	CHECKED BY PSOMAS					

BOLSA CHICA ROAD OC
FOUNDATION PLAN

FOUNDATION PLAN SHEET (ENGLISH) (REV. 2-25-05)

ORIGINAL SCALE IN INCHES FOR REDUCED PLANS 0 1 2 3

CU 12235
EA 071621

DISREGARD PRINTS BEARING EARLIER REVISION DATES

REVISION DATES (PRELIMINARY STAGE ONLY) 4/28/08 10/27/08 2/23/09 05/18/09

SHEET 4 OF 34

FILE => 55-1102rl-e-fdp101.add

USERNAME => frmnguye DATE PLOTTED => 29-MAR-2010 TIME PLOTTED => 12:43

DIST	COUNTY	ROUTE	POST MILES TOTAL PROJECT	SHEET No	TOTAL SHEETS
12	Ora	22,405	R0.7/R2.9, 20.4/22.3	800	1006

REGISTERED CIVIL ENGINEER 5/18/09 DATE

9-21-09
PLANS APPROVAL DATE

The State of California or its officers or agents shall not be responsible for the accuracy or completeness of electronic copies of this plan sheet.

REGISTERED PROFESSIONAL ENGINEER MOHSEN MOHSENI No. C45999 Exp. 12/31/10 CIVIL STATE OF CALIFORNIA

PARSONS 2201 DUPONT DRIVE SUITE 200 IRVINE, CA 92612

OCTA 550 SOUTH MAIN STREET ORANGE, CA 92863

NOTES:

1. Reinforcement may be Bent or Lowered to Clear P/S Ducts.

LEGEND:

Indicates Bundled Bars.

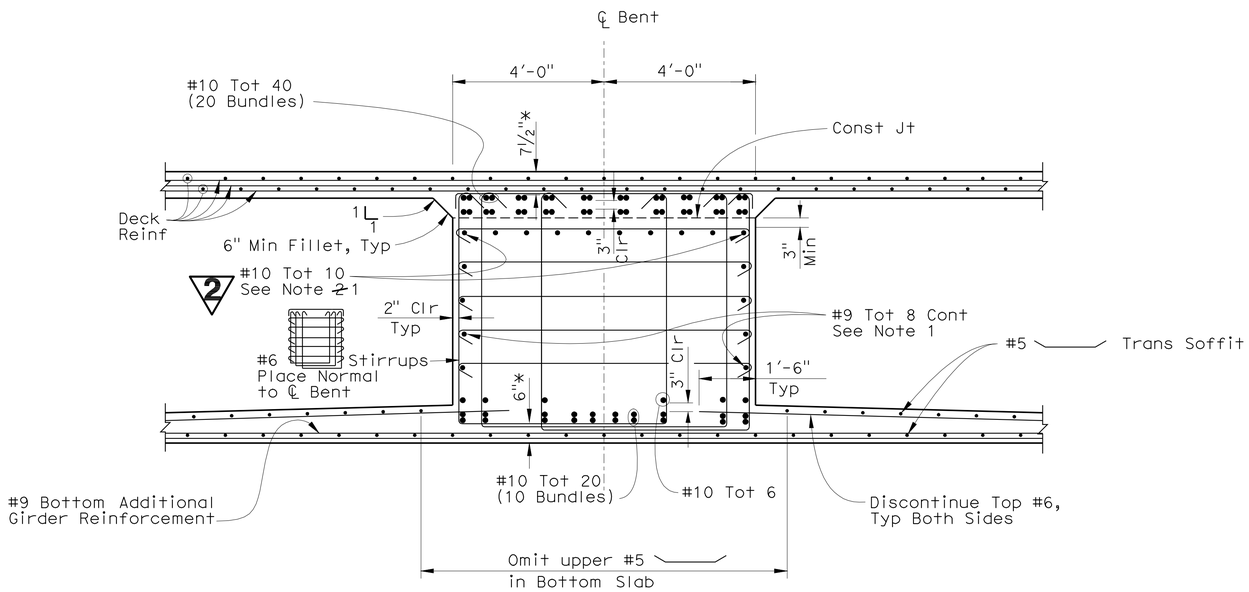

Note:
* Clearance to Main Cap Reinforcement

SECTION A-A AWAY FROM COLUMN

½" = 1'- 0"

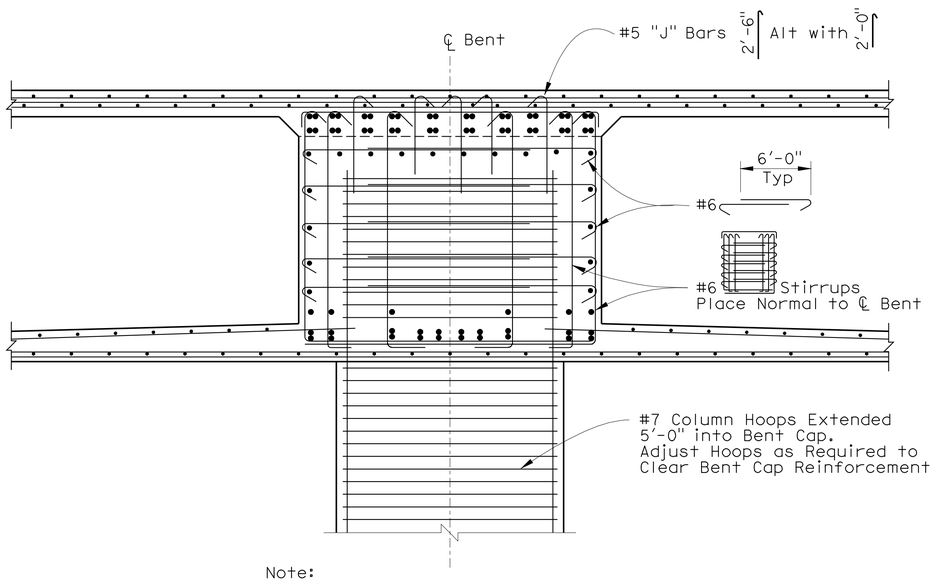

Note:
For details not shown, see Section A-A

SECTION B-B AT COLUMN

½" = 1'- 0"

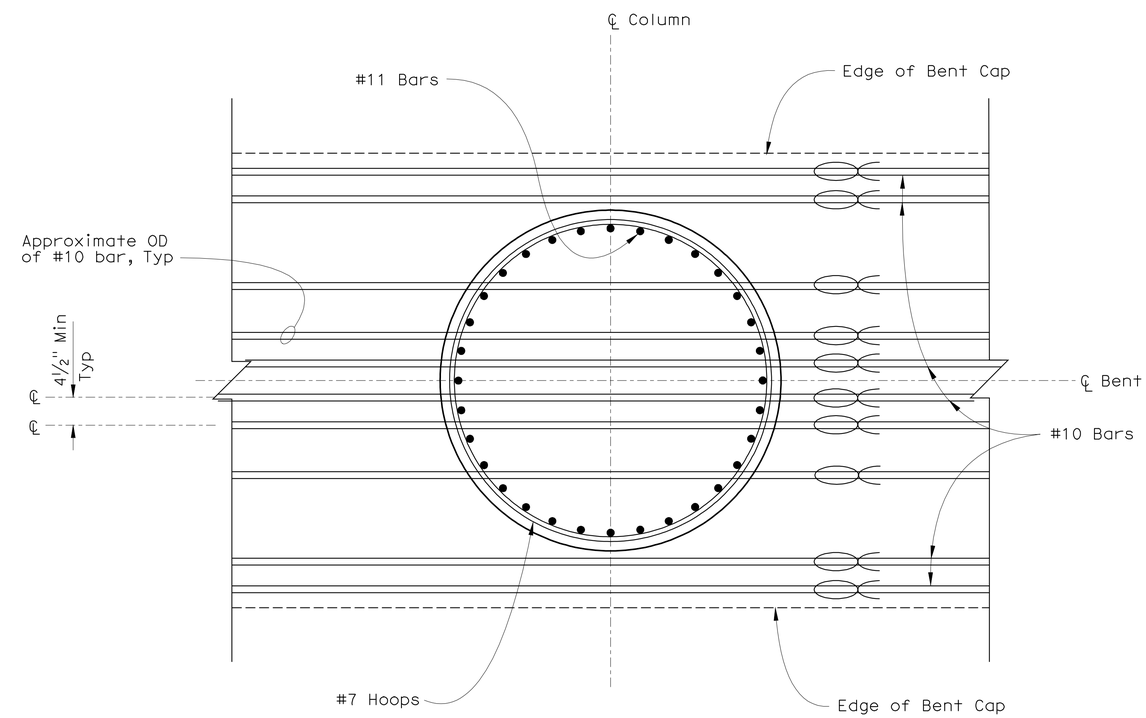

REBAR PLACEMENT DETAIL PLAN (Bottom)

¾" = 1'- 0"

NOTE:
The Contractor shall verify all controlling field dimensions before ordering or fabricating any material

2 REVISED PER ADDENDUM No. 2 DATED APRIL 1, 2010

Sudhakar Vatti
DESIGN OVERSIGHT Sudhakar Vatti
5-19-09
SIGN OFF DATE

	BY	CHECKED
DESIGN	S. Mullangi	G. Sarah
DETAILS	P. Johnson	G. Sarah
QUANTITIES	T. Howell	M. Martin

PREPARED FOR THE STATE OF CALIFORNIA DEPARTMENT OF TRANSPORTATION

MOHSEN MOHSENI
PROJECT ENGINEER

BRIDGE NO. 55-1102
POST MILE 0.92

BOLSA CHICA ROAD OC
BENT DETAILS NO. 1

DESIGN DETAIL SHEET (ENGLISH) (REV. 2/25/05)

ORIGINAL SCALE IN INCHES FOR REDUCED PLANS 0 1 2 3

CU 12235
EA 071621

DISREGARD PRINTS BEARING EARLIER REVISION DATES

REVISION DATES (PRELIMINARY STAGE ONLY) 10/27/08 2/27/09 05/18/09

SHEET 15 OF 34

FILE => 55-1102rl-h-b01dt01.add

USERNAME => trmmgoye DATE PLOTTED => 29-MAR-2010 TIME PLOTTED => 12:43

DIST	COUNTY	ROUTE	POST MILES TOTAL PROJECT	SHEET No	TOTAL SHEETS
12	Ora	22,405	R0.7/R2.9, 20.4/22.3	808	1006

REGISTERED CIVIL ENGINEER 5/18/09 DATE

9-21-09
PLANS APPROVAL DATE

The State of California or its officers or agents shall not be responsible for the accuracy or completeness of electronic copies of this plan sheet.

REGISTERED PROFESSIONAL ENGINEER MOHSEN MOHSENI No. C45999 Exp. 12/31/10 CIVIL STATE OF CALIFORNIA

PARSONS 2201 DUPONT DRIVE SUITE 200 IRVINE, CA 92612

OCTA 550 SOUTH MAIN STREET ORANGE, CA 92863

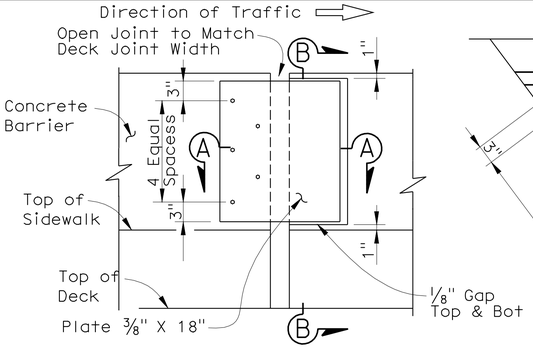

ELEVATION
No Scale

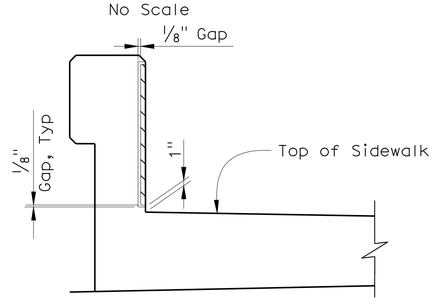

CONCRETE BARRIER COVER PLATE SECTION B-B
No Scale

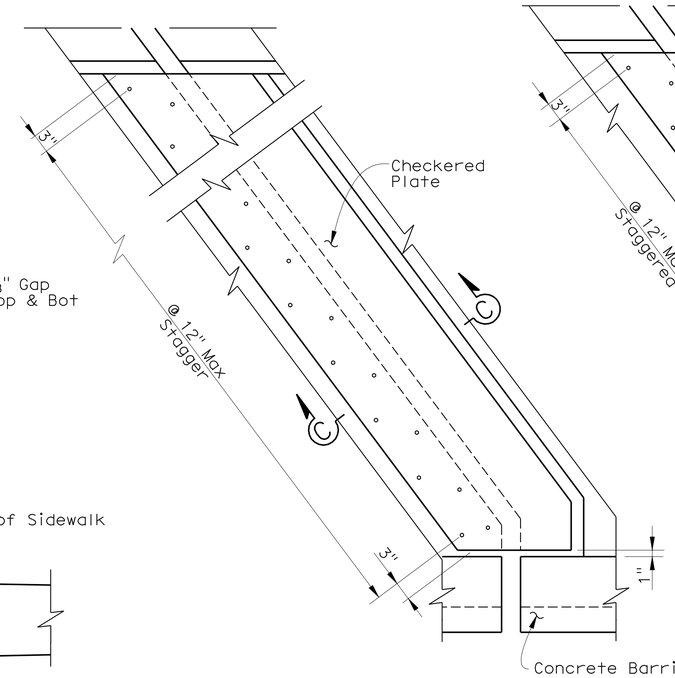

ABUTMENT 1

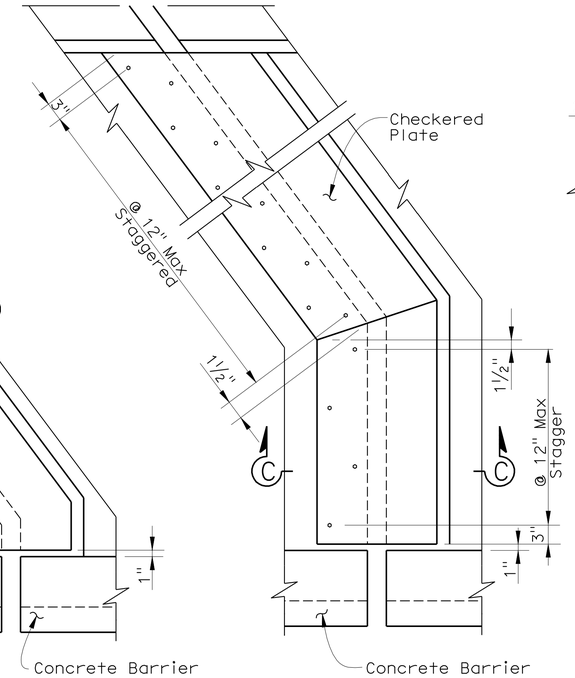

ABUTMENT 3

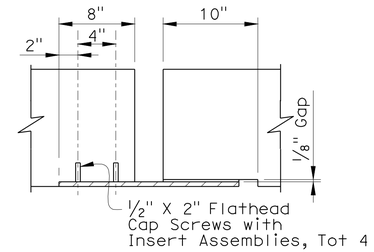

SECTION A-A

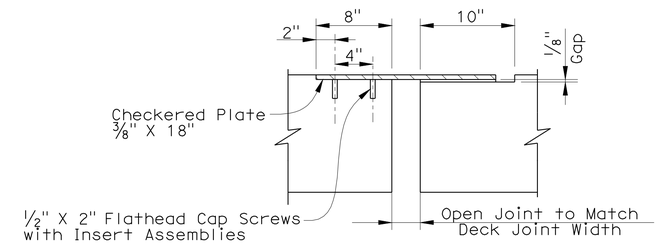

SECTION C-C

SIDEWALK EXPANSION JOINT ARMOR
No Scale

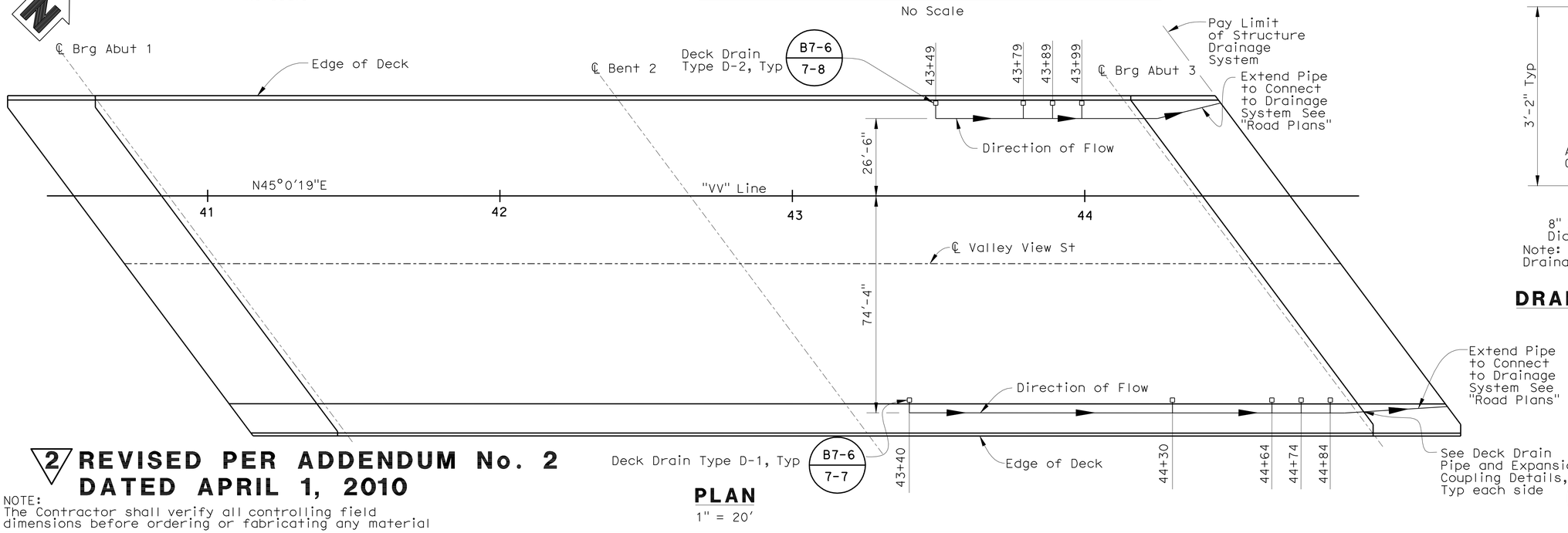

PLAN
1" = 20'

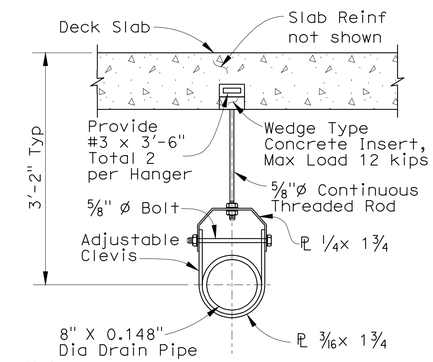

Note:
Drainage pipe support to be galvanized.

DRAINAGE PIPE SUPPORT
No Scale

2 **REVISED PER ADDENDUM No. 2 DATED APRIL 1, 2010**

NOTE:
The Contractor shall verify all controlling field dimensions before ordering or fabricating any material

DESIGN OVERSIGHT Sudhakar Vatti 5-19-09 SIGN OFF DATE	DESIGN	BY S. Mullangi	CHECKED G. Sarah
	DETAILS	BY P. Johnson	CHECKED G. Sarah
	QUANTITIES	BY T. Howell	CHECKED M. Martin

PREPARED FOR THE STATE OF CALIFORNIA DEPARTMENT OF TRANSPORTATION

MOHSEN MOHSENI
PROJECT ENGINEER

BRIDGE NO. 55-1102
POST MILE 0.92

BOLSA CHICA ROAD OC
DRAINAGE DETAILS

DESIGN DETAIL SHEET (ENGLISH) (REV. 2/25/05)

ORIGINAL SCALE IN INCHES FOR REDUCED PLANS 0 1 2 3

CU 12235
EA 071621

DISREGARD PRINTS BEARING EARLIER REVISION DATES

REVISION DATES (PRELIMINARY STAGE ONLY) 10/27/08 2/23/09 05/18/09

SHEET 23 OF 34

FILE => 55-1102rl-r-ddet01.add

USERNAME => trmnguye DATE PLOTTED => 29-MAR-2010 TIME PLOTTED => 12:47

DIST	COUNTY	ROUTE	POST MILES TOTAL PROJECT	SHEET No	TOTAL SHEETS
12	Ora	22,405	R0.7/R2.9, 20.4/22.3	820	1006

S Uthayakumar 5/18/09
REGISTERED CIVIL ENGINEER DATE

9-21-09
PLANS APPROVAL DATE

REGISTERED PROFESSIONAL ENGINEER UTHAYA SANDIRASEGARAM No. C61444 Exp. 06/30/11 CIVIL STATE OF CALIFORNIA

The State of California or its officers or agents shall not be responsible for the accuracy or completeness of electronic copies of this plan sheet.

PARSONS 2201 DUPONT DRIVE SUITE 200 IRVINE, CA 92612

OCTA 550 SOUTH MAIN STREET ORANGE, CA 92863

2

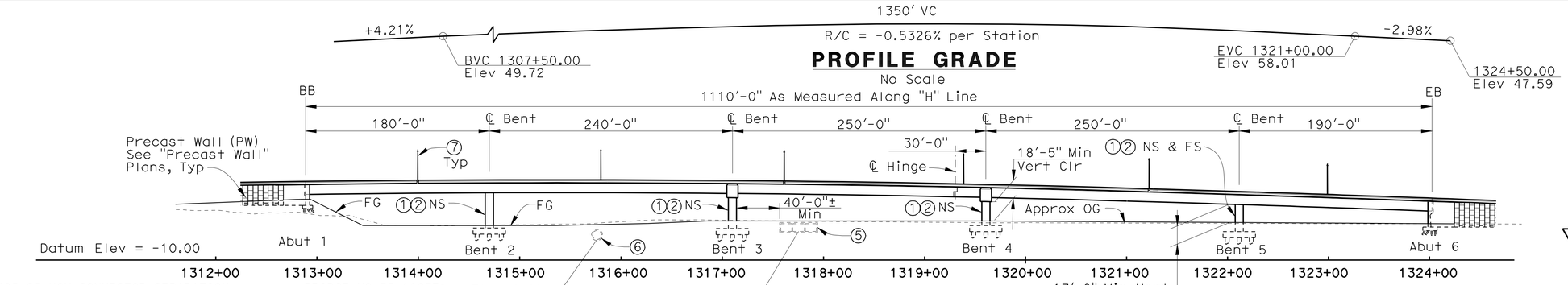

ELEVATION

1" = 60'

QUANTITIES

STRUCTURE EXCAVATION (BRIDGE)	4,100	CY
STRUCTURE BACKFILL (BRIDGE)	2,594	CY
FURNISH PILING (CLASS 200)(ALTERNATIVE X)	4,015	LF
DRIVE PILE (CLASS 200) (ALTERNATIVE X)	55	EA
FURNISH 48" CAST-IN-STEEL SHELL CONCRETE PILING	6,461	LF
DRIVE 48" CAST-IN-STEEL SHELL CONCRETE PILE	72	EA
PRESTRESSING CAST-IN-PLACE CONCRETE	LUMP	SUM
STRUCTURAL CONCRETE, BRIDGE FOOTING	2,138	CY
STRUCTURAL CONCRETE, BRIDGE	7,621	CY
STRUCTURAL CONCRETE, APPROACH SLAB(TYPE N)	140	CY
ARCHITECTURAL TREATMENT	2,508	SQFT
PTFE BEARING	15	EA
JOINT SEAL ASSEMBLY (MR 6")	119	LF
JOINT SEAL ASSEMBLY (MR 9")	60	LF
BAR REINFORCING STEEL (BRIDGE)	3,093,883	LB
MISCELLANEOUS METAL (RESTRAINER - CABLE TYPE)	12,672	LB
MISCELLANEOUS METAL (BRIDGE)	651	LB
BRIDGE DECK DRAINAGE SYSTEM	44,175	LB
CONCRETE BARRIER (TYPE 60A)	1,170	LF
CONCRETE BARRIER (TYPE 736 MODIFIED)	2,340	LF

LEGEND:

- Point of Minimum Vertical Clearance
- Point of Minimum Vertical Clearance (Future I-405 Widening)
- Denotes Existing Structure
- Denotes Electrolier, see "Electrical Plans"
- PW Precast Wall

NOTES:

1. Paint "405-22 HOV Connector Separation"
2. Paint "Bridge No. 55-1103E"
3. Structure Approach Type N(30S)
4. Concrete Barrier Type 60A
5. Exist Bolsa Chica Channel (Triple 12'± x 10'± RC Box Culvert), Br No. 55-0334
6. Exist Garden Grove Storm Channel RC Pipe (9' dia)
7. Electrolier, see "Road Plans"
8. Deck drain, See "Drainage Details" sheet

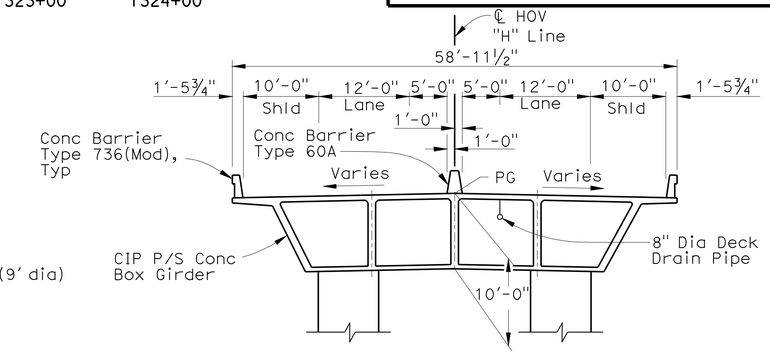

TYPICAL SECTION

1" = 10'-0"

Note: See "Structure Plan No. 4" Sheet

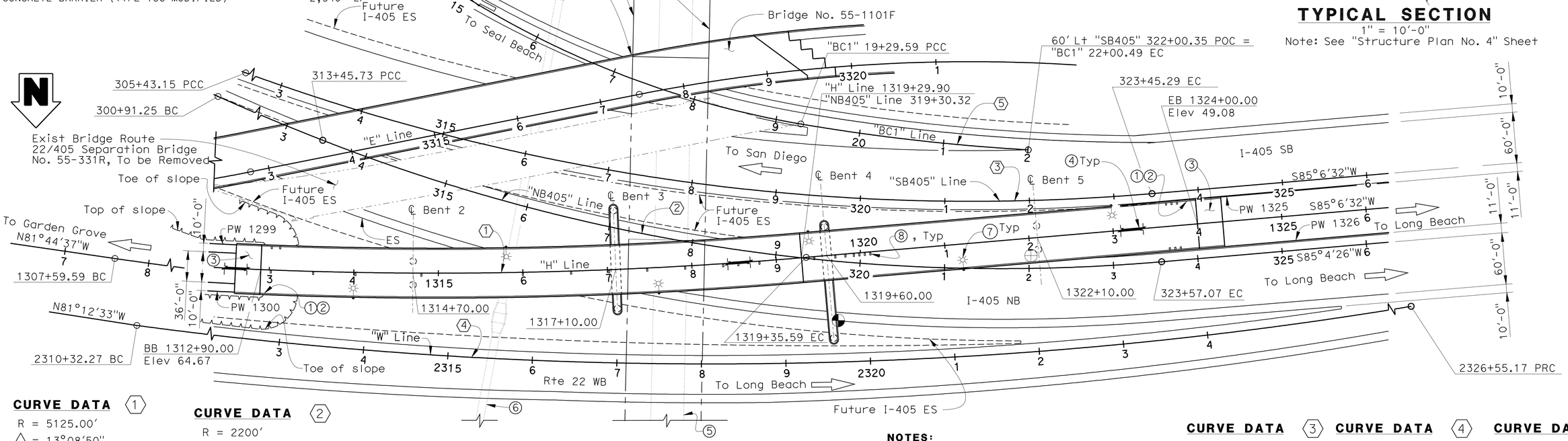

PLAN

1" = 60'

CURVE DATA ①
R = 5125.00'
△ = 13°08'50"
L = 1176.01'
T = 590.60'

CURVE DATA ②
R = 2200'
△ = 26°20'20"
L = 1011.34'
T = 514.77'

NOTES:

1. For General Notes & Index to Plans, see "General Notes & Index to Plans" sheet.
2. For Pile Data Table, see "Foundation Plan No. 2" sheet.

CURVE DATA ③
R = 2500'
△ = 41°18'07"
L = 1802.14'
T = 942.23'

CURVE DATA ④
R = 5075'
△ = 18°19'20"
L = 1622.90'
T = 818.44'

CURVE DATA ⑤
R = 2440'
△ = 06°21'41"
L = 270.90'
T = 135.59'

2 **REVISED PER ADDENDUM No. 2 DATED APRIL 1, 2010**

Sudhakar Vatti
DESIGN OVERSIGHT Sudhakar Vatti
5-19-09
SIGN OFF DATE

	BY	CHECKED	LOAD FACTOR DESIGN	LIVE LOADING: HL-93 AND "LOW-BOY" AND PERMIT DESIGN LOAD	
DESIGN	BY	CHECKED S. Dulor			
DETAILS	BY	CHECKED S. Dulor	LAYOUT	BY P. Johnson	CHECKED S. Dulor
QUANTITIES	BY	CHECKED Y. Matsuo	SPECIFICATIONS	BY G. Matesic	PLANS AND SPECS COMPARED M. Mohseni

PREPARED FOR THE STATE OF CALIFORNIA DEPARTMENT OF TRANSPORTATION

MOHSEN MOHSENI
PROJECT ENGINEER

CU 12235
EA 071621

BRIDGE NO. 55-1103E
POST MILES 20.66

405-22 HOV CONNECTOR SEPARATION
GENERAL PLAN

DISREGARD PRINTS BEARING EARLIER REVISION DATES

REVISION DATES (PRELIMINARY STAGE ONLY) 4/28/08 10/27/08 2/23/09 05/18/09

SHEET 1 OF 55

DESIGN GENERAL PLAN SHEET (ENGLISH) (REV. 2/25/05)

ORIGINAL SCALE IN INCHES FOR REDUCED PLANS 0 1 2 3

FILE => 55-1103Erl-a-gp01.add

USERNAME => s135318 DATE PLOTTED => 29-MAR-2010 TIME PLOTTED => 12:43

DIST	COUNTY	ROUTE	POST MILES TOTAL PROJECT	SHEET No	TOTAL SHEETS
12	Ora	22,405	R0.7/R2.9, 20.4/22.3	821	1006

S Uthayakumar 5/18/09
REGISTERED CIVIL ENGINEER DATE

9-21-09
PLANS APPROVAL DATE

The State of California or its officers or agents shall not be responsible for the accuracy or completeness of electronic copies of this plan sheet.

REGISTERED PROFESSIONAL ENGINEER UTHAYA SANDIRASEGARAM No. C61444 Exp. 06/30/11 CIVIL STATE OF CALIFORNIA

PARSONS 2201 DUPONT DRIVE SUITE 200 IRVINE, CA 92612

OCTA 550 SOUTH MAIN STREET ORANGE, CA 92863

GENERAL NOTES: LOAD AND RESISTANCE FACTOR DESIGN

Design:

AASHTO LRFD Bridge Design Specifications, 3rd Edition with Interims Through 2006 and the Caltrans Amendments v3.06.01; Except that Earth Retaining Systems, Bridge Barrier and Structure Approach Slabs are Designed Using Bridge Design Specifications ('96 AASHTO w/ Revisions by Caltrans).

Dead Load:
Includes 35 psf for future wearing surface.

Live Loading:
HL-93 with 'Low-Boy' and Permit Design Vehicle

Seismic Design:
Caltrans Seismic Design Criteria (SDC), Version 1.4, June 2006

Seismic Loading:
SDC ARS Curve for Soil Profile D (M = 7.25± 0.25)
(Peak Rock Acceleration = 0.5g)
with Modification for Near Fault Effects

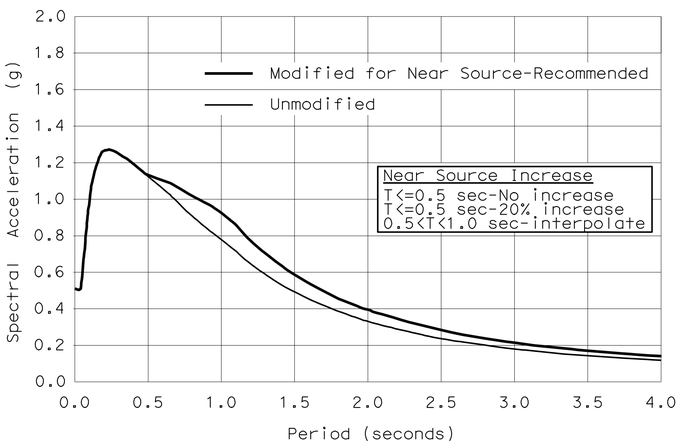

REINFORCED CONCRETE: f_y = 60 ksi
f'_c = 3.6 ksi Unless Otherwise Noted
n = 8

PRESTRESSED CONCRETE: See "Prestressing Notes" on "Girder Layout No. 1" Sheet.

INDEX TO PLANS

SHEET NO.	TITLE
1.	GENERAL PLAN
2.	GENERAL NOTES & INDEX TO PLANS
3.	STRUCTURE PLAN NO. 1
4.	STRUCTURE PLAN NO. 2
5.	STRUCTURE PLAN NO. 3
6.	STRUCTURE PLAN NO. 4
7.	DECK CONTOURS
8.	FOUNDATION PLAN NO. 1
9.	FOUNDATION PLAN NO. 2
10.	ABUTMENT 1 LAYOUT
11.	ABUTMENT 6 LAYOUT
12.	ABUTMENT DETAILS NO. 1
13.	ABUTMENT DETAILS NO. 2
14.	ABUTMENT DETAILS NO. 3
15.	ABUTMENT PILE LAYOUT
16.	ABUTMENT BEARING DETAILS
17.	BENT 2 LAYOUT
18.	BENT 3 LAYOUT
19.	BENT 4 LAYOUT
20.	BENT 5 LAYOUT
21.	BENT DETAILS NO. 1
22.	BENT DETAILS NO. 2
23.	BENT FOOTING DETAIL NO. 1
24.	BENT FOOTING DETAIL NO. 2
25.	TYPICAL SECTION
26.	GIRDER LAYOUT NO. 1
27.	GIRDER LAYOUT NO. 2
28.	GIRDER LAYOUT NO. 3
29.	GIRDER DETAILS
30.	CAMBER DIAGRAM
31.	HINGE DETAILS NO. 1
32.	HINGE DETAILS NO. 2
33.	HINGE BEARING DETAILS
34.	ADDITIONAL GIRDER REINFORCEMENT
35.	48" CISS PILE DETAILS
36.	JOINT SEAL ASSEMBLY DETAILS AT ABUTMENT (MOVEMENT RATING GREATER THAN 4")
37.	JOINT SEAL ASSEMBLY DETAILS AT HINGE (MOVEMENT RATING GREATER THAN 4")
38.	DECK DRAINAGE DETAILS
39.	DECK DRAIN TYPE D-1 MODIFIED
40.	DECK DRAIN TYPE D-2 MODIFIED
41.	STRUCTURE APPROACH DRAINAGE DETAILS
42.	STRUCTURE APPROACH TYPE N(30S)
43.	CABLE RESTRAINER UNIT - TYPE 2
44.	CABLE RESTRAINER UNIT - TYPE 2 DETAILS
45.	ARCHITECTURAL DETAILS
46.	ABUTMENT 6 ARCHITECTURAL DETAILS
47.	OUTRIGGER BENT ARCHITECTURAL DETAILS NO. 1
48.	OUTRIGGER BENT ARCHITECTURAL DETAILS NO. 2
49.	LOG OF TEST BORINGS 1 OF 7
50.	LOG OF TEST BORINGS 2 OF 7
51.	LOG OF TEST BORINGS 3 OF 7
52.	LOG OF TEST BORINGS 4 OF 7
53.	LOG OF TEST BORINGS 5 OF 7
54.	LOG OF TEST BORINGS 6 OF 7
55.	LOG OF TEST BORINGS 7 OF 7

STANDARD PLANS DATED MAY 2006 (With Errata No. 1 through 10)

	A10A	ACRONYMS AND ABBREVIATIONS (Sheet 1 OF 2)
	A10B	ACRONYMS AND ABBREVIATIONS (Sheet 2 OF 2)
	A10C	SYMBOLS (SHEET 1 OF 2)
	A10D	SYMBOLS (SHEET 2 OF 2)
	A62B	LIMITS OF PAYMENT FOR EXCAVATION AND BACKFILL- BRIDGE SURCHARGE AND WALL
	A62C	LIMITS OF PAYMENT FOR EXCAVATION AND BACKFILL- BRIDGE
RSP	A76A	CONCRETE BARRIER TYPE 60
	B0-1	BRIDGE DETAILS
	B0-3	BRIDGE DETAILS
	B0-5	BRIDGE DETAILS
	B0-13	BRIDGE DETAILS
RSP	B2-8	PILE DETAILS - CLASS 200
	B2-9	LOAD TESTS PILE DETAILS (1)
	B2-10	LOAD TESTS PILE DETAILS (2)
	B2-11	LOAD TESTS PILE DETAILS (3)
	B7-1	BOX GIRDER DETAILS
	B7-6	DECK DRAINS TYPES D-1 AND D-2
	B7-8	DECK DRAINAGE DETAILS
	B7-10	UTILITY OPENING BOX GIRDER
	B7-11	UTILITY DETAILS
	B8-5	CAST-IN-PLACE PRESTRESSED GIRDER DETAILS
	B11-56	CONCRETE BARRIER TYPE 736
	D99B	EDGE DRAIN OUTLET AND VENT DETAILS
RSP	ES-6A	ELECTRICAL SYSTEMS (LIGHTING STANDARD, TYPES 15 AND 21)

LEGEND:

- 2 Low Expansive Material EI<50 and SE>20
- Structure Excavation (Bridge)
- Structure Backfill (Bridge)
- Roadway Excavation or Embankment (see "Road Plans")
- Lightweight Fill (Cellular Concrete) (See "Retaining Wall" Plans for Limits)

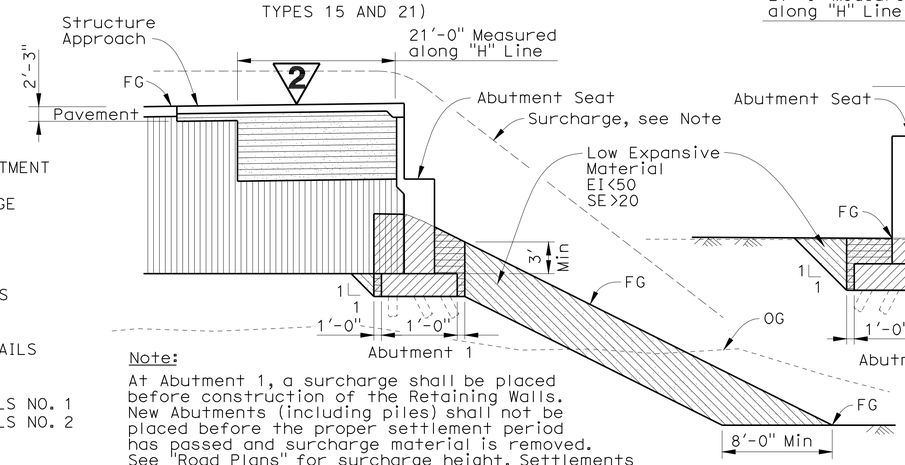

Note:
At Abutment 1, a surcharge shall be placed before construction of the Retaining Walls. New Abutments (including piles) shall not be placed before the proper settlement period has passed and surcharge material is removed. See "Road Plans" for surcharge height. Settlements shall be monitored during fill replacement and waiting period.

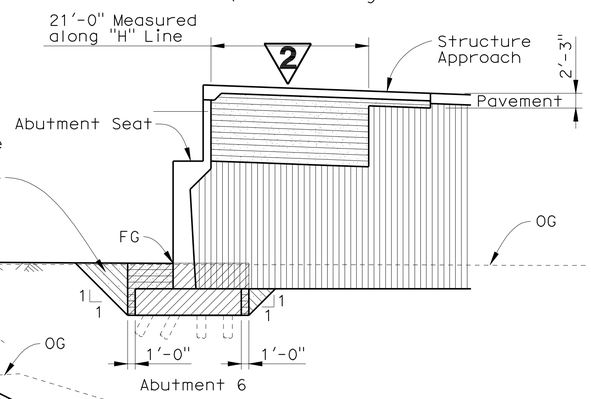

LIMITS OF EXPANSIVE SOIL EXCLUSION ZONE IN BRIDGE EMBANKMENT

A62C

No Scale

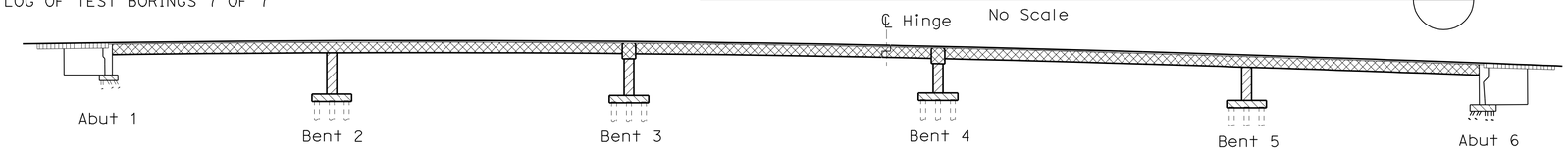

CONCRETE STRENGTH AND TYPE LIMITS

No Scale

LEGEND:

- Structural Concrete, Bridge (f'c = 4.0 ksi @ 28 days)
- Structural Concrete, Bridge (f'c Per Prestressing Notes on "Girder Layout No. 1" sheet)
- Structural Concrete, Bridge (f'c = 4.0 ksi @ 28 days)
- Structural Concrete, Bridge Footing (f'c = 4.0 Ksi @ 28 days)
- Structural Concrete, Approach Slab (f'c = 3.6 Ksi @ 28 days)

PLAN SYMBOL:

Standard Plan Sheet NO.

Detail NO.

2 **REVISED PER ADDENDUM No. 2 DATED APRIL 1, 2010**

Sudhakar Vatti
DESIGN OVERSIGHT Sudhakar Vatti
5-19-09
SIGN OFF DATE

	BY	CHECKED
DESIGN	U. Sandirasegaram	S. Dulor
DETAILS	E. Abapo	S. Dulor
QUANTITIES	J. Le	Y. Matsuo

PREPARED FOR THE STATE OF CALIFORNIA DEPARTMENT OF TRANSPORTATION

MOHSEN MOHSENI
PROJECT ENGINEER

BRIDGE NO. 55-1103E
POST MILE 20.66

405-22 HOV CONNECTOR SEPARATION

GENERAL NOTES & INDEX TO PLANS

DESIGN DETAIL SHEET (ENGLISH) (REV. 2/25/05)

ORIGINAL SCALE IN INCHES FOR REDUCED PLANS 0 1 2 3

CU 12235
EA 071621

DISREGARD PRINTS BEARING EARLIER REVISION DATES

REVISION DATES (PRELIMINARY STAGE ONLY) 10/27/08 2/23/09 05/18/09

SHEET 2 OF 55

FILE => 55-1103erl-a-itp.add

USERNAME => trmikes1 DATE PLOTTED => 30-MAR-2010 TIME PLOTTED => 11:41

DIST	COUNTY	ROUTE	POST MILES TOTAL PROJECT	SHEET No	TOTAL SHEETS
12	Ora	22,405	R0.7/R2.9, 20.4/22.3	826	1006

S Uthayakumar 5/18/09
REGISTERED CIVIL ENGINEER DATE

9-21-09
PLANS APPROVAL DATE

The State of California or its officers or agents shall not be responsible for the accuracy or completeness of electronic copies of this plan sheet.

REGISTERED PROFESSIONAL ENGINEER UTHAYA SANDIRASEGARAM No. C61444 Exp. 06/30/11 CIVIL STATE OF CALIFORNIA

PARSONS 2201 DUPONT DRIVE SUITE 200 IRVINE, CA 92612

OCTA 550 SOUTH MAIN STREET ORANGE, CA 92863

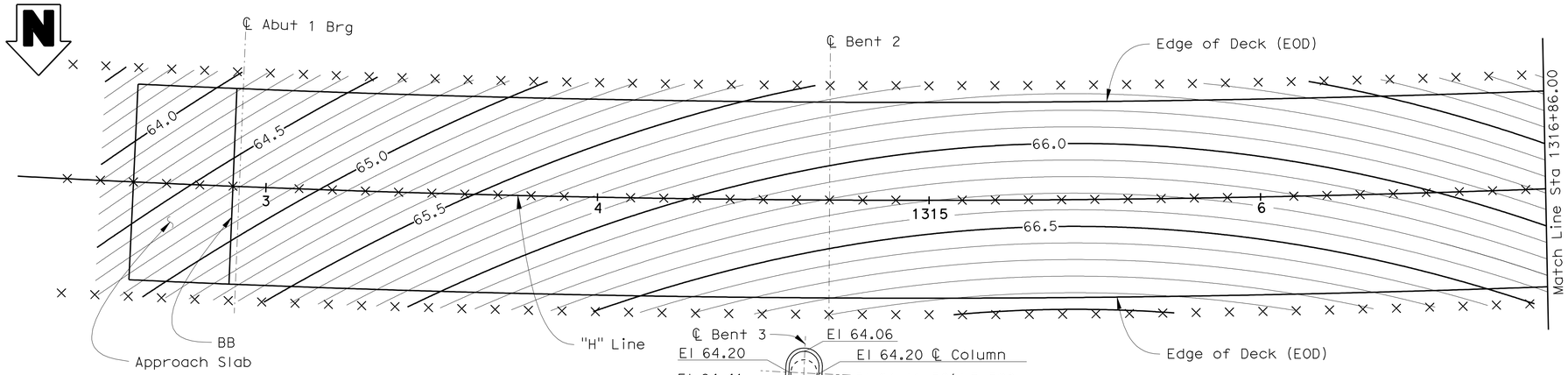

NOTES:

1. Contours do not include camber or falsework settlement.
2. Contour interval is 0.1'.
3. X = 10' intervals along station line.

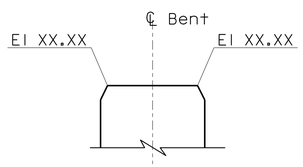

OUTRIGGER CAP SECTION

1/8" = 1'-0"

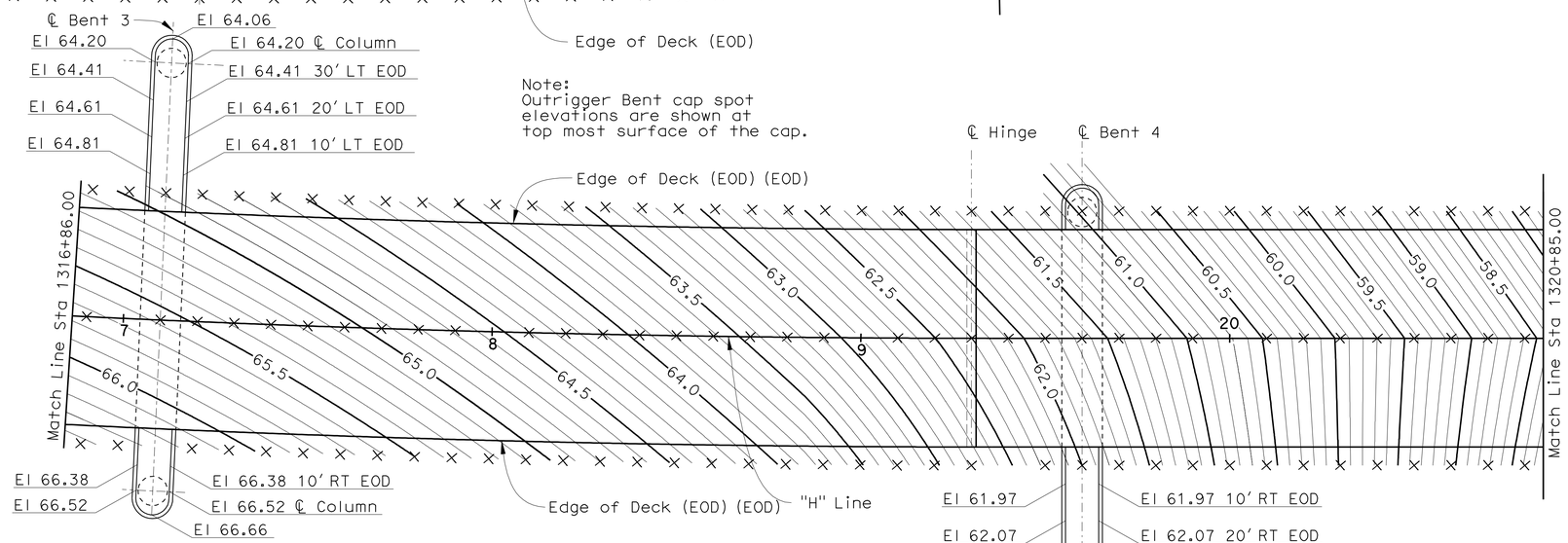

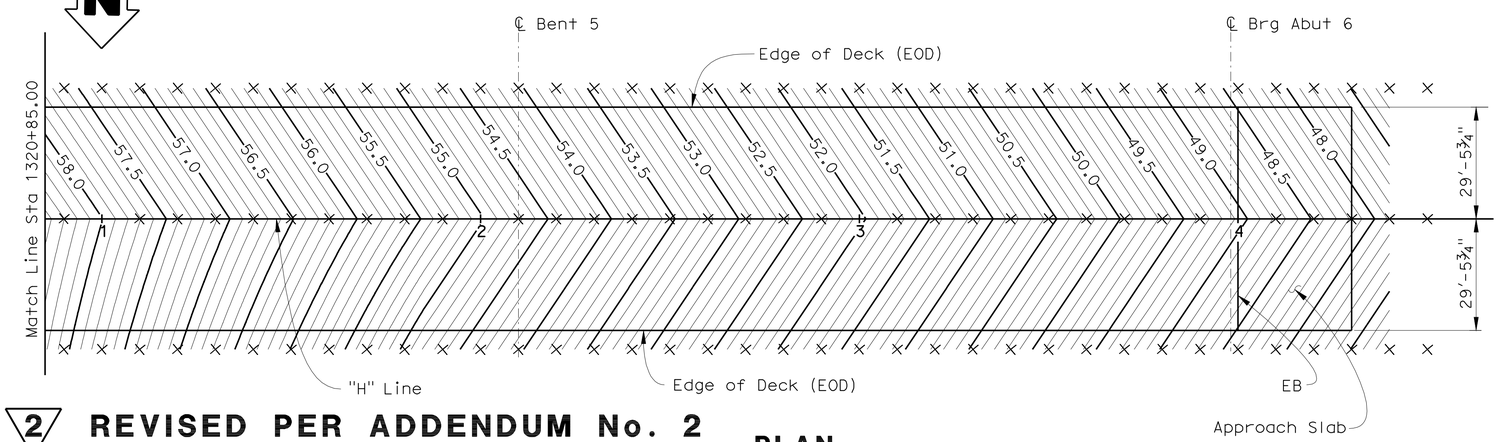

PLAN

1" = 20'-0"

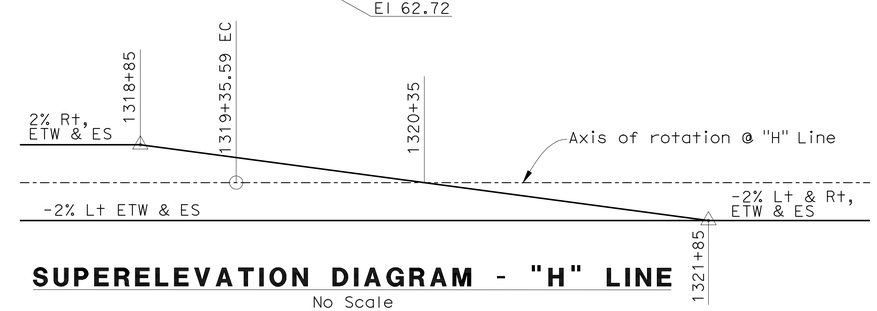

SUPERELEVATION DIAGRAM - "H" LINE

No Scale

2 REVISED PER ADDENDUM No. 2 DATED APRIL 1, 2010

Sudhakar Vatti
DESIGN OVERSIGHT Sudhakar Vatti
5-19-09
SIGN OFF DATE

	BY	CHECKED
DESIGN	U. Sandirasegaram	S. Dulor
DETAILS	E. Abapo	S. Dulor
QUANTITIES	J. Le	Y. Matsuo

PREPARED FOR THE STATE OF CALIFORNIA DEPARTMENT OF TRANSPORTATION

MOHSEN MOHSENI
PROJECT ENGINEER

BRIDGE NO. 55-1103E
POST MILE 20.66

405-22 HOV CONNECTOR SEPARATION
DECK CONTOURS

DESIGN DETAIL SHEET (ENGLISH) (REV. 2/25/05)

ORIGINAL SCALE IN INCHES FOR REDUCED PLANS 0 1 2 3

CU 12235
EA 071621

DISREGARD PRINTS BEARING EARLIER REVISION DATES

REVISION DATES (PRELIMINARY STAGE ONLY) 10/23/08 2/23/09 05/18/09

SHEET 7 OF 55

FILE => 55-1103Erl-d-dc01.add

USERNAME => s6135318 DATE PLOTTED => 29-MAR-2010 TIME PLOTTED => 12:44

DIST	COUNTY	ROUTE	POST MILES TOTAL PROJECT	SHEET No	TOTAL SHEETS
12	Ora	22,405	R0.7/R2.9, 20.4/22.3	829	1006

S Uthayakumar 5/18/09
REGISTERED CIVIL ENGINEER DATE

9-21-09
PLANS APPROVAL DATE

REGISTERED PROFESSIONAL ENGINEER UTHAYA SANDIRASEGARAM No. C61444 Exp. 06/30/11 CIVIL STATE OF CALIFORNIA

The State of California or its officers or agents shall not be responsible for the accuracy or completeness of electronic copies of this plan sheet.

PARSONS 2201 DUPONT DRIVE SUITE 200 IRVINE, CA 92612

OCTA 550 SOUTH MAIN STREET ORANGE, CA 92863

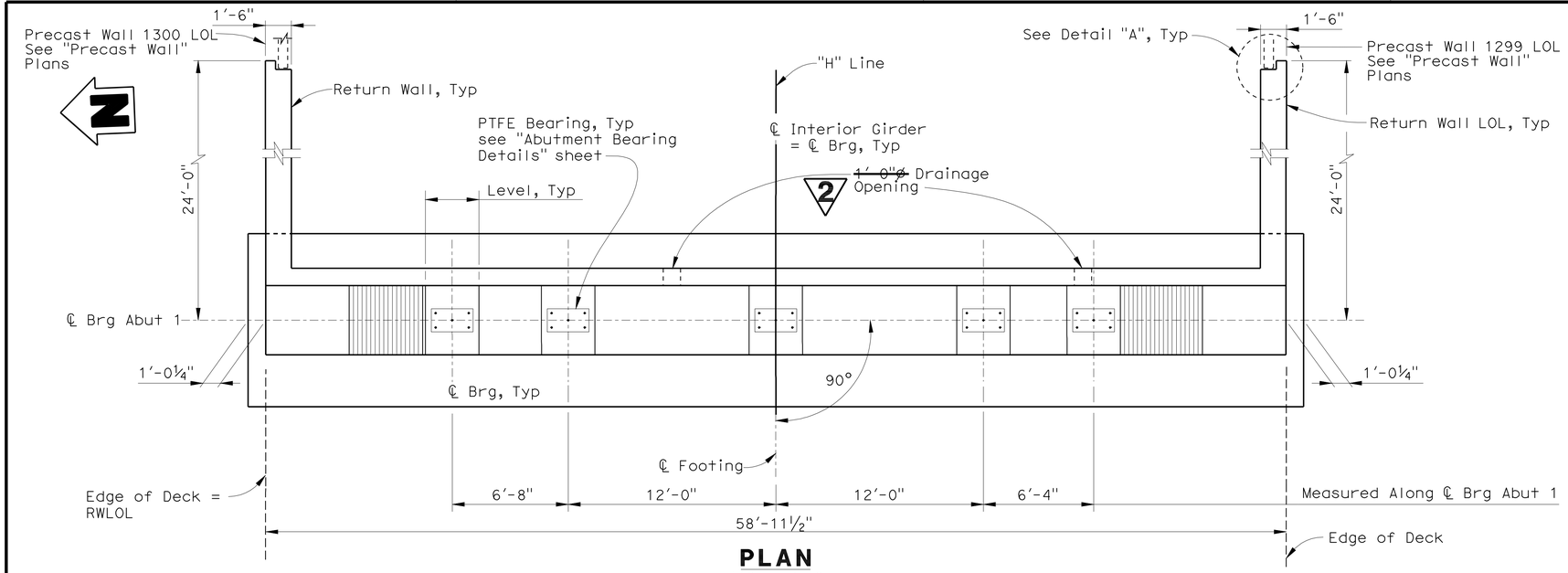

PLAN
¼" = 1'-0"

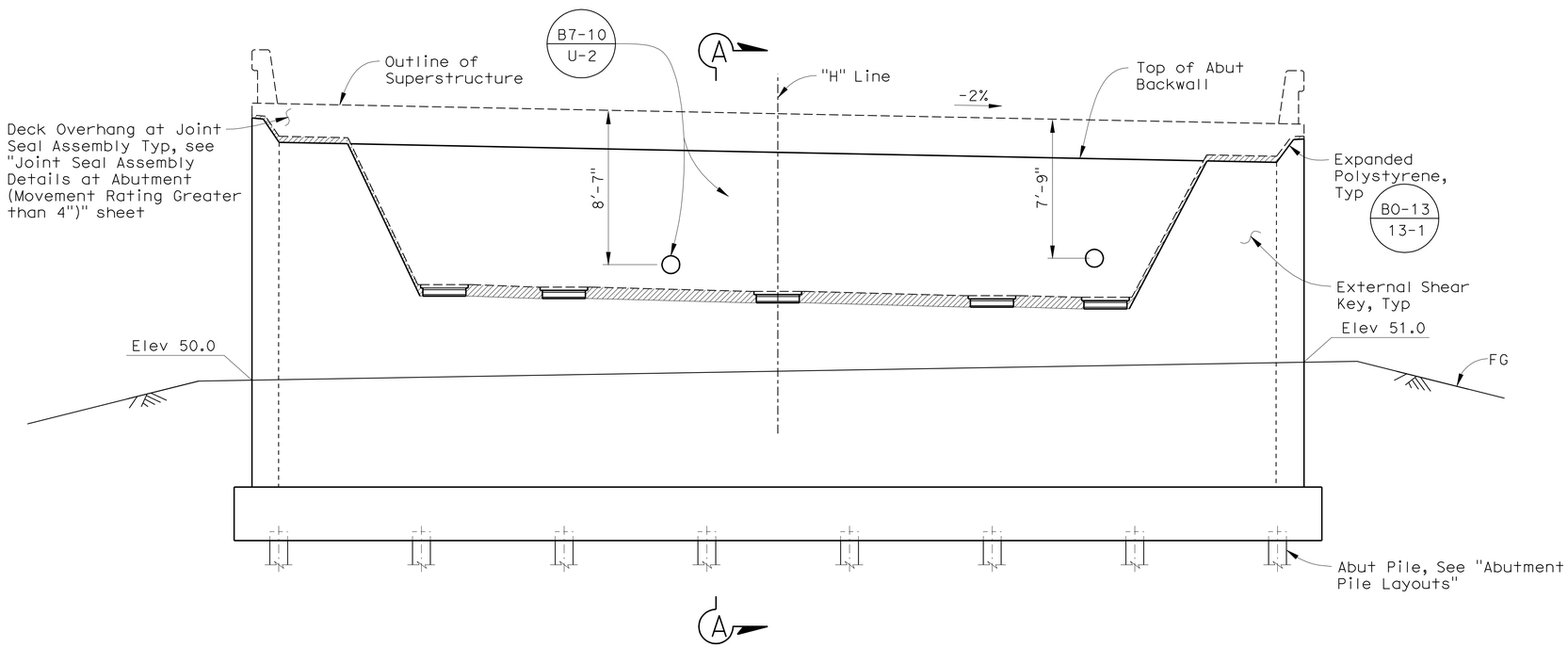

ELEVATION
¼" = 1'-0"

NOTES:

1. For Section A-A, see "Abutment Details No. 1" sheet.
2. For Drainage Details, see "Deck Drainage Details" and "Structure Approach Drainage Details" sheets.
3. For PTFE Bearing Details, see "Abutment Bearing Details" sheet.
4. For Pile Layout, see "Abutment Pile Layouts" sheet.
5. For Return Wall Details, see "Abutment Details No. 3" sheet.
6. Bond a strip of filter fabric, 1'-6" wide, to back of the adjacent concrete return wall and precast concrete wall panels for entire length of vertical joint.

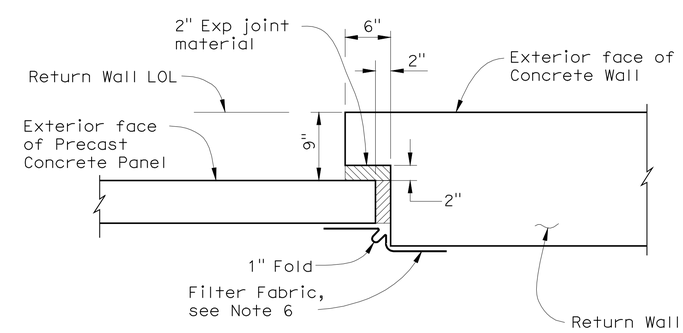

DETAIL "A"
No Scale

2 REVISED PER ADDENDUM No. 2 DATED APRIL 1, 2010

Sudhakar Vatti
DESIGN OVERSIGHT Sudhakar Vatti
5-19-09
SIGN OFF DATE

	BY	CHECKED
DESIGN	U. Sandirasegaram	S. Dulor
DETAILS	E. Abapo	S. Dulor
QUANTITIES	J. Le	Y. Matsuo

PREPARED FOR THE STATE OF CALIFORNIA DEPARTMENT OF TRANSPORTATION

MOHSEN MOHSENI
PROJECT ENGINEER

BRIDGE NO. 55-1103E
POST MILE 20.66

405-22 HOV CONNECTOR SEPARATION
ABUTMENT 1 LAYOUT

DESIGN DETAIL SHEET (ENGLISH) (REV. 2/25/05)

ORIGINAL SCALE IN INCHES FOR REDUCED PLANS 0 1 2 3

CU 12235
EA 071621

DISREGARD PRINTS BEARING EARLIER REVISION DATES

REVISION DATES (PRELIMINARY STAGE ONLY) 10/27/08 2/23/09 05/18/09

SHEET 10 OF 55

FILE => 55-1103er1-f-a01_1o01.add

USERNAME => s135318 DATE PLOTTED => 29-MAR-2010 TIME PLOTTED => 12:44

DIST	COUNTY	ROUTE	POST MILES TOTAL PROJECT	SHEET No	TOTAL SHEETS
12	Ora	22,405	R0.7/R2.9, 20.4/22.3	830	1006

S Uthayakumar 5/18/09
REGISTERED CIVIL ENGINEER DATE

9-21-09
PLANS APPROVAL DATE

The State of California or its officers or agents shall not be responsible for the accuracy or completeness of electronic copies of this plan sheet.

REGISTERED PROFESSIONAL ENGINEER UTHAYA SANDIRASEGARAM No. C61444 Exp. 06/30/11 CIVIL STATE OF CALIFORNIA

PARSONS 2201 DUPONT DRIVE SUITE 200 IRVINE, CA 92612

OCTA 550 SOUTH MAIN STREET ORANGE, CA 92863

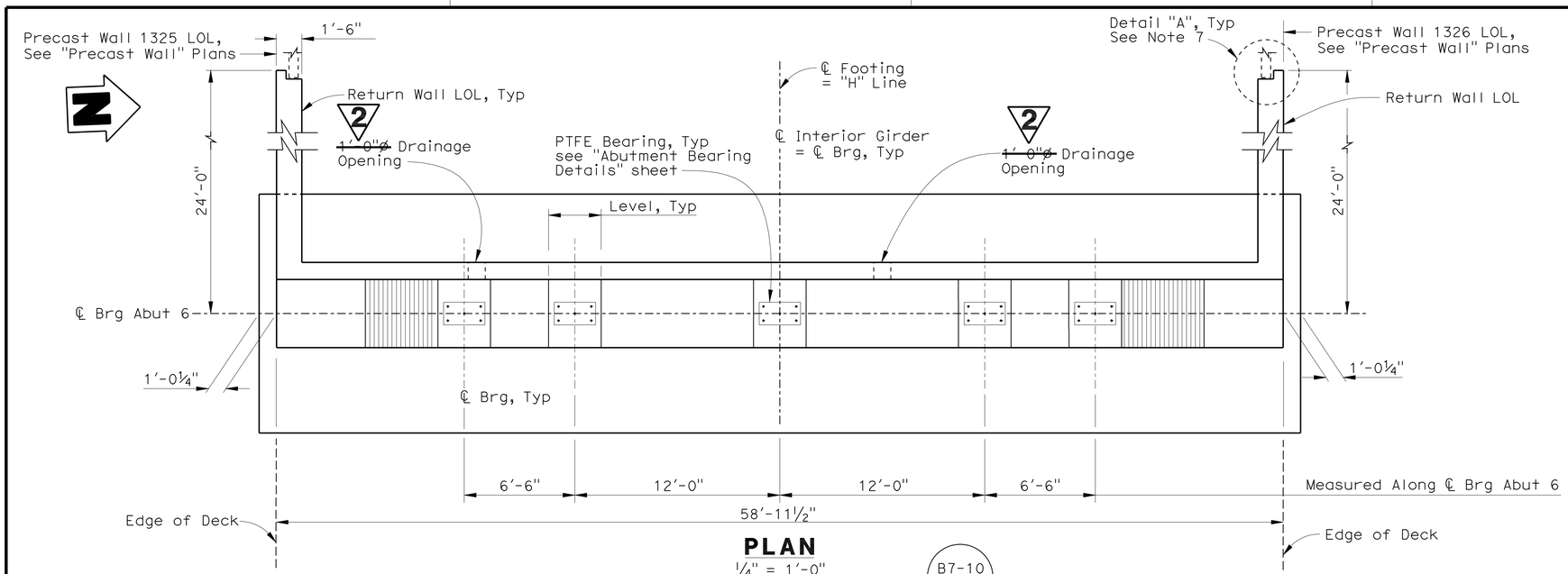

PLAN
¼" = 1'-0"

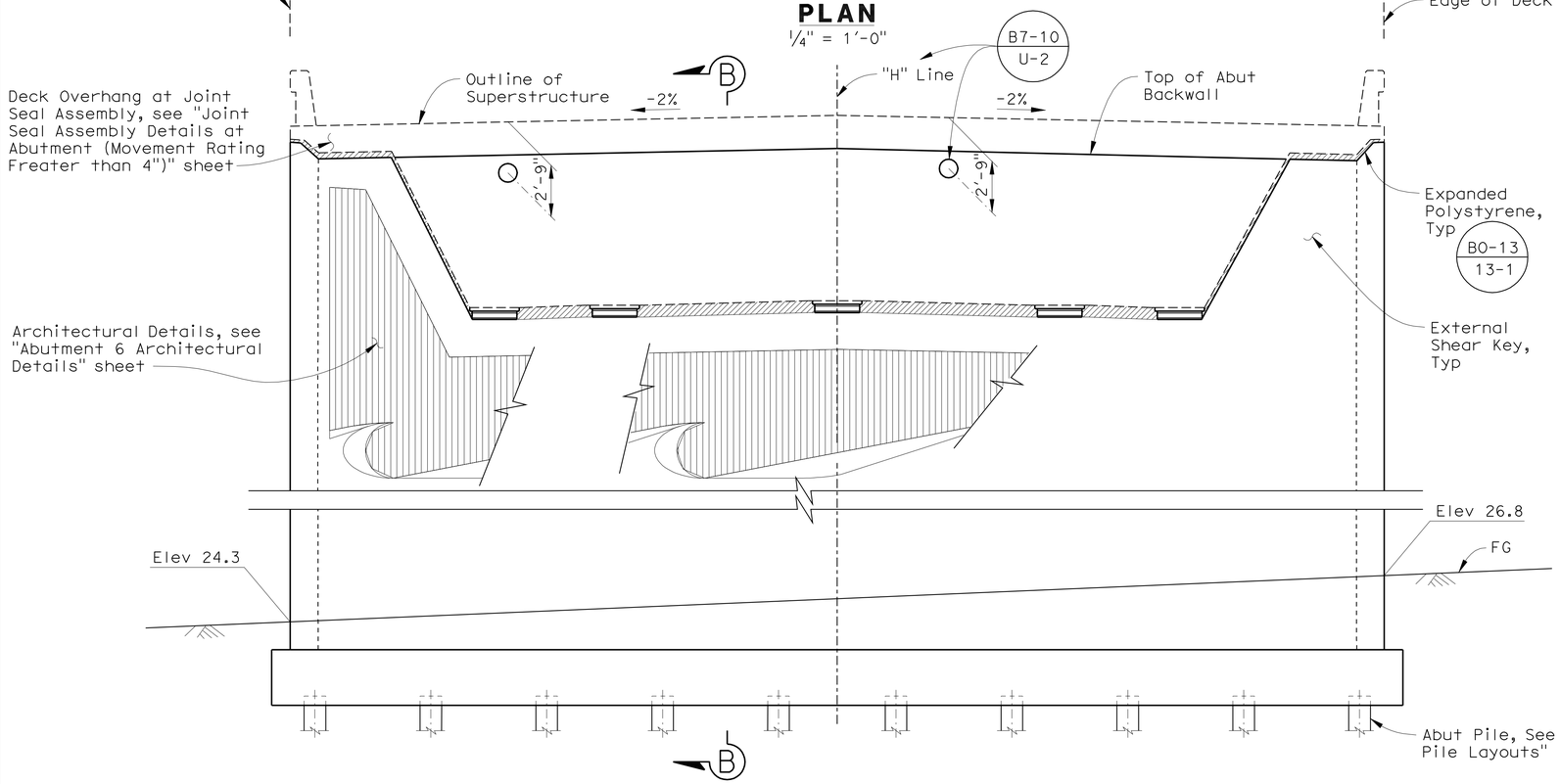

ELEVATION
¼" = 1'-0"

NOTES:

1. For Section B-B, see "Abutment Details No. 1" sheet.
2. For Drainage Details, see "Deck Drainage Details" and "Structure Approach Drainage Details" sheet.
3. For PTFE Bearing Details, see "Abutment Bearing Details" sheet.
4. For Pile Layout, see "Abutment Pile Layouts" sheet.
5. For Return Wall Details, see "Abutment Details No. 3" sheet.
6. Bond a strip of filter fabric, 1'-6" wide, to back of the adjacent concrete return wall and precast concrete wall panels for entire length of vertical joint.
7. For Detail A, see "Abutment 1 Layout" sheet.

2 **REVISED PER ADDENDUM No. 2 DATED APRIL 1, 2010**

Sudhakar Vatti
DESIGN OVERSIGHT Sudhakar Vatti
5-19-09
SIGN OFF DATE

	BY	CHECKED
DESIGN	U. Sandirasegaram	S. Dulor
DETAILS	E. Abapo	S. Dulor
QUANTITIES	J. Le	Y. Matsuo

PREPARED FOR THE STATE OF CALIFORNIA DEPARTMENT OF TRANSPORTATION

MOHSEN MOHSENI
PROJECT ENGINEER

BRIDGE NO. 55-1103E
POST MILE 20.66

405-22 HOV CONNECTOR SEPARATION
ABUTMENT 6 LAYOUT

DESIGN DETAIL SHEET (ENGLISH) (REV. 2/25/05)

ORIGINAL SCALE IN INCHES FOR REDUCED PLANS 0 1 2 3

CU 12235
EA 071621

DISREGARD PRINTS BEARING EARLIER REVISION DATES

REVISION DATES (PRELIMINARY STAGE ONLY) 10/27/08 2/23/09 05/18/09

SHEET 11 OF 55

FILE => 55-1103erl-f-a06_lo02.add

USERNAME => s135318 DATE PLOTTED => 29-MAR-2010 TIME PLOTTED => 12:44

DIST	COUNTY	ROUTE	POST MILES TOTAL PROJECT	SHEET No	TOTAL SHEETS
12	Ora	22,405	R0.7/R2.9, 20.4/22.3	845	1006

S Uthayakumar 5/18/09
REGISTERED CIVIL ENGINEER DATE

9-21-09
PLANS APPROVAL DATE

The State of California or its officers or agents shall not be responsible for the accuracy or completeness of electronic copies of this plan sheet.

REGISTERED PROFESSIONAL ENGINEER UTHAYA SANDIRASEGARAM No. C61444 Exp. 06/30/11 CIVIL STATE OF CALIFORNIA

PARSONS 2201 DUPONT DRIVE SUITE 200 IRVINE, CA 92612

OCTA 550 SOUTH MAIN STREET ORANGE, CA 92863

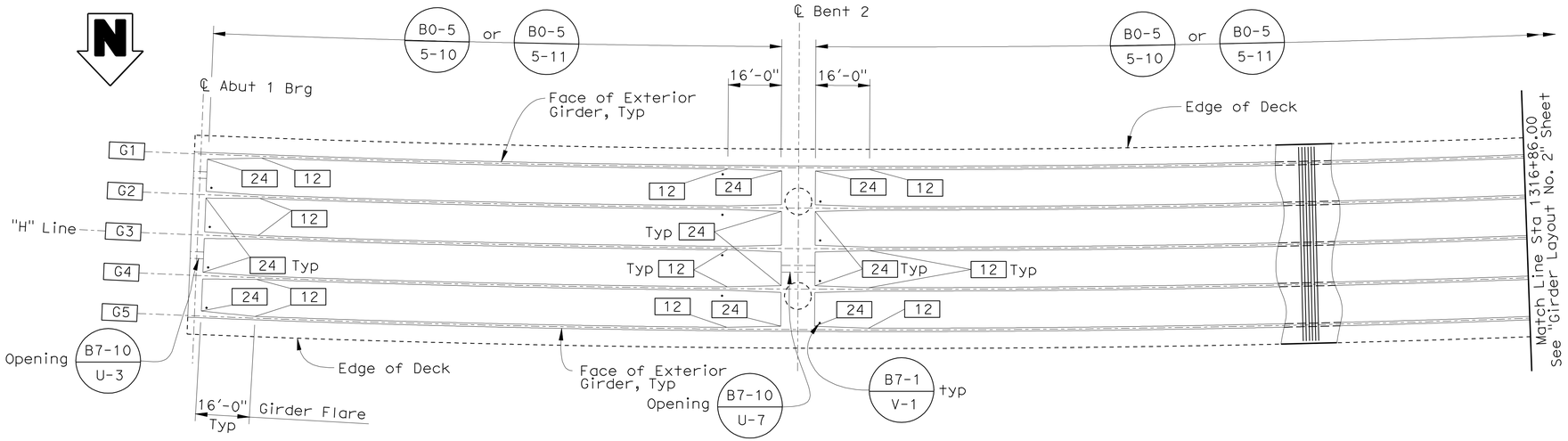

GIRDER LAYOUT

1" = 20'

Frame	A	B	Stressing End
Frame 1	29 100	0.710	Abut 1
Frame 2	26 100	0.772	Abut 6

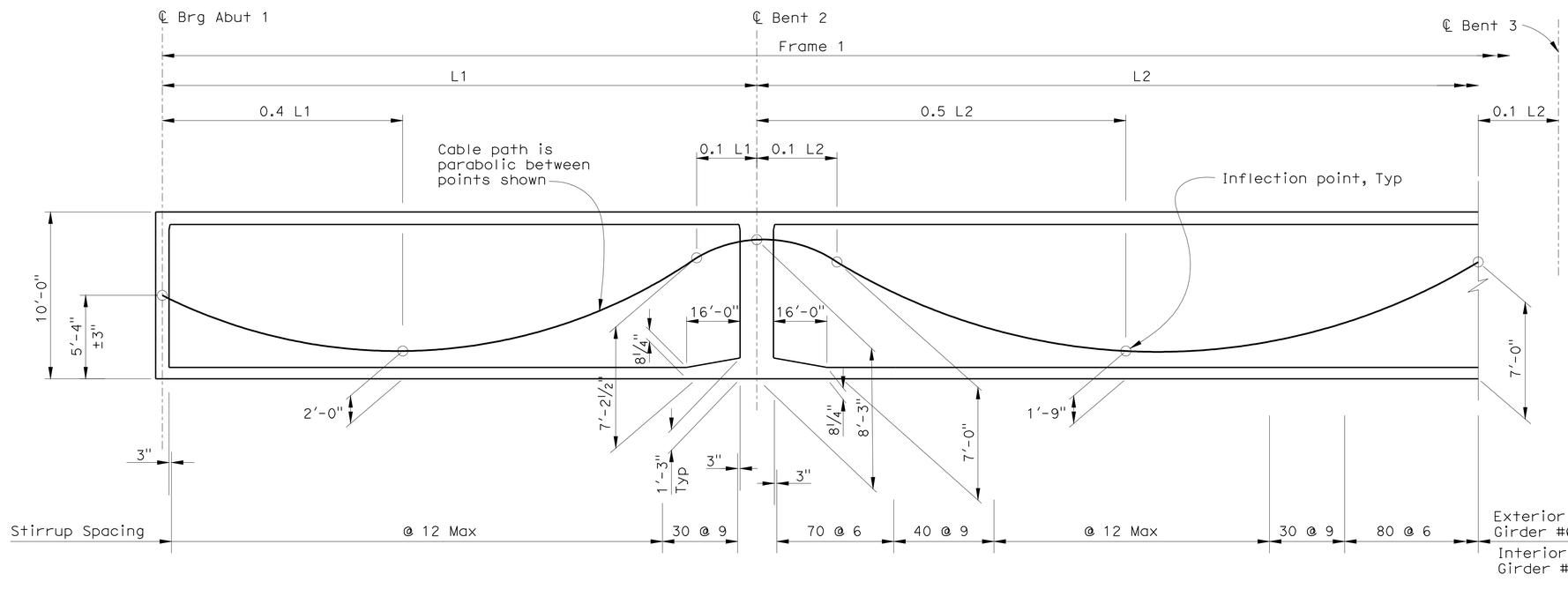

LONGITUDINAL SECTION

No Scale

B8-5

PRESTRESSING NOTES:

270 ksi Low Relaxation Strand:

P_{jack} = "A" kips/Total Frame

Anchor Set = 3/8 inch

Total number of Girders = 5

Friction curvature coefficient Frame 1 μ = 0.20 (1/rad)
Frame 2 μ = 0.15 (1/rad)

Friction wobble coefficient K = 0.0002 (1/ft)

2

Distribution of prestress force (Pjack) between girders shall not exceed the ratio of 3:2.

Maximum final force variation between girders shall not exceed 725 kips.

Concrete: f'_c = 5.5 ksi @ 28 days

f'_{ci} = 5.0 ksi @ time of stressing

Contractor shall submit elongation calculations based on initial stress at ☒ = "B" times jacking stress.

NOTE:

For Camber Diagram, See "Camber Diagram" sheet.

LEGEND:

12 Indicates Minimum Girder width in Inches

2 **REVISED PER ADDENDUM No. 2 DATED APRIL 1, 2010**

Sudhakar Vatti
DESIGN OVERSIGHT Sudhakar Vatti
5-19-09
SIGN OFF DATE

DESIGN DETAIL SHEET (ENGLISH) (REV. 2/25/05)

	BY	CHECKED
DESIGN	U. Sandirasegaram	S. Dulor
DETAILS	E. Abapo	S. Dulor
QUANTITIES	J. Le	Y. Matsuo

ORIGINAL SCALE IN INCHES FOR REDUCED PLANS 0 1 2 3

PREPARED FOR THE STATE OF CALIFORNIA DEPARTMENT OF TRANSPORTATION

MOHSEN MOHSENI
PROJECT ENGINEER

CU 12235
EA 071621

BRIDGE NO. 55-1103E
POST MILE 20.66

405-22 HOV CONNECTOR SEPARATION

GIRDER LAYOUT No. 1

DISREGARD PRINTS BEARING EARLIER REVISION DATES

REVISION DATES (PRELIMINARY STAGE ONLY) 10/27/08 2/23/09 05/18/09

SHEET 26 OF 55

FILE => 55-1103erl-l-g_lo01.add

USERNAME => rtrim DATE PLOTTED => 29-MAR-2010 TIME PLOTTED => 13:04

DIST	COUNTY	ROUTE	POST MILES TOTAL PROJECT	SHEET No	TOTAL SHEETS
12	Ora	22,405	R0.7/R2.9, 20.4/22.3	849	1006

S Uthayakumar 5/18/09
REGISTERED CIVIL ENGINEER DATE

9-21-09
PLANS APPROVAL DATE

REGISTERED PROFESSIONAL ENGINEER UTHAYA SANDIRASEGARAM No. C61444 Exp. 06/30/11 CIVIL STATE OF CALIFORNIA

The State of California or its officers or agents shall not be responsible for the accuracy or completeness of electronic copies of this plan sheet.

PARSONS 2201 DUPONT DRIVE SUITE 200 IRVINE, CA 92612

OCTA 550 SOUTH MAIN STREET ORANGE, CA 92863

	Hinge	
*	Camber "A"	Camber "B"
30 Days	0.09	-0.05
60 Days	0.10	-0.09
90 Days	0.10	-0.13
120 Days	0.10	-0.15
180 Days	0.10	-0.15
240 Days	0.10	-0.16
360 Days	0.10	-0.17
720 Days	0.10	-0.18

TIME DEPENDENT CAMBER VALUES

* Elapsed time in days measured from prestressing short hinge side until Closure & Load Transfer.

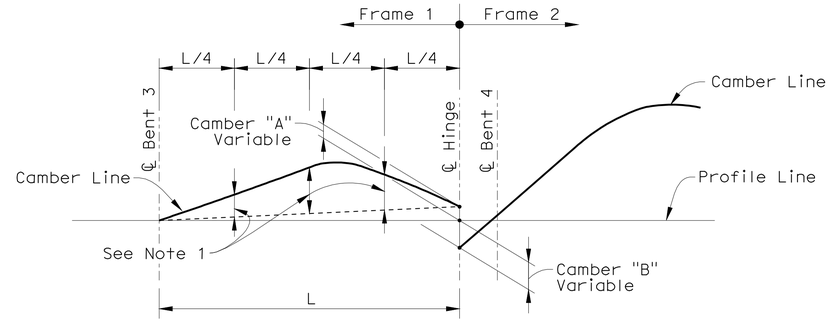

TYPICAL HINGE CAMBER

NOTE:

1. Adjusted camber values taken from camber diagram and adjustment "A".

2

For Camber Adjustment based on period of time between prestressing Frame 2 and load transfer from Frame 1, see "TYPICAL HINGE CAMBER" and "TIME DEPENDENT CAMBER VALUES"

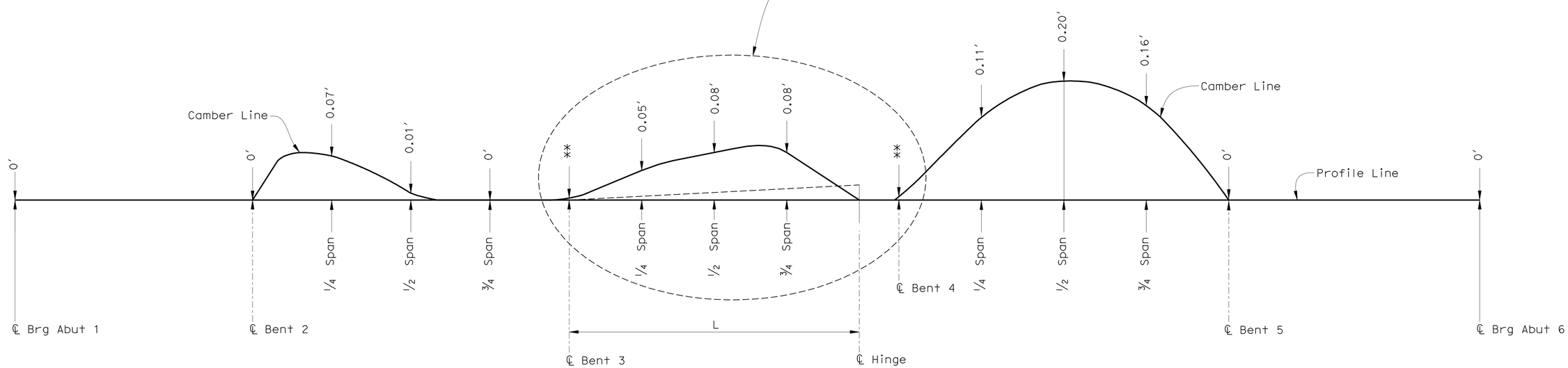

CAMBER DIAGRAM

No Scale

(Values do not Include Allowance for Falsework Settlement)

** See "Bent 3 Layout" and "Bent 4 Layout" sheets for Outrigger Bents Camber Diagrams

2 **REVISED PER ADDENDUM No. 2 DATED APRIL 1, 2010**

Sudhakar Vatti
DESIGN OVERSIGHT Sudhakar Vatti
5-19-09
SIGN OFF DATE

	BY	CHECKED
DESIGN	U. Sandirasegaram	S. Dulor
DETAILS	E. Abapo	S. Dulor
QUANTITIES	J. Le	Y. Matsuo

PREPARED FOR THE STATE OF CALIFORNIA DEPARTMENT OF TRANSPORTATION

MOHSEN MOHSENI
PROJECT ENGINEER

BRIDGE NO. 55-1103E
POST MILE 20.66

405-22 HOV CONNECTOR SEPARATION
CAMBER DIAGRAM

DESIGN DETAIL SHEET (ENGLISH) (REV. 2/25/05)

ORIGINAL SCALE IN INCHES FOR REDUCED PLANS 0 1 2 3

CU 12235
EA 071621

DISREGARD PRINTS BEARING EARLIER REVISION DATES

REVISION DATES (PRELIMINARY STAGE ONLY) 10/27/08 2/23/09 05/18/09

SHEET 30 OF 55

FILE => 55-1103Er1-m-cam.add

USERNAME => trrilm DATE PLOTTED => 29-MAR-2010 TIME PLOTTED => 13:04

DIST	COUNTY	ROUTE	POST MILES TOTAL PROJECT	SHEET No	TOTAL SHEETS
12	Ora	22,405	R0.7/R2.9, 20.4/22.3	865	1006

LICENSED LANDSCAPE ARCHITECT

9-21-09
PLANS APPROVAL DATE

LICENSED LANDSCAPE ARCHITECT
CATHY L. JOHNSON
NO. 4545
Expiration Date
01-31-10
Renewal Date
05-18-09
Date
STATE OF CALIFORNIA

The State of California or its officers or agents shall not be responsible for the accuracy or completeness of electronic copies of this plan sheet.

RBF CONSULTING
14725 ALTON PARKWAY
IRVINE, CA 92618

OCTA
550 SOUTH MAIN STREET
ORANGE, CA 92863

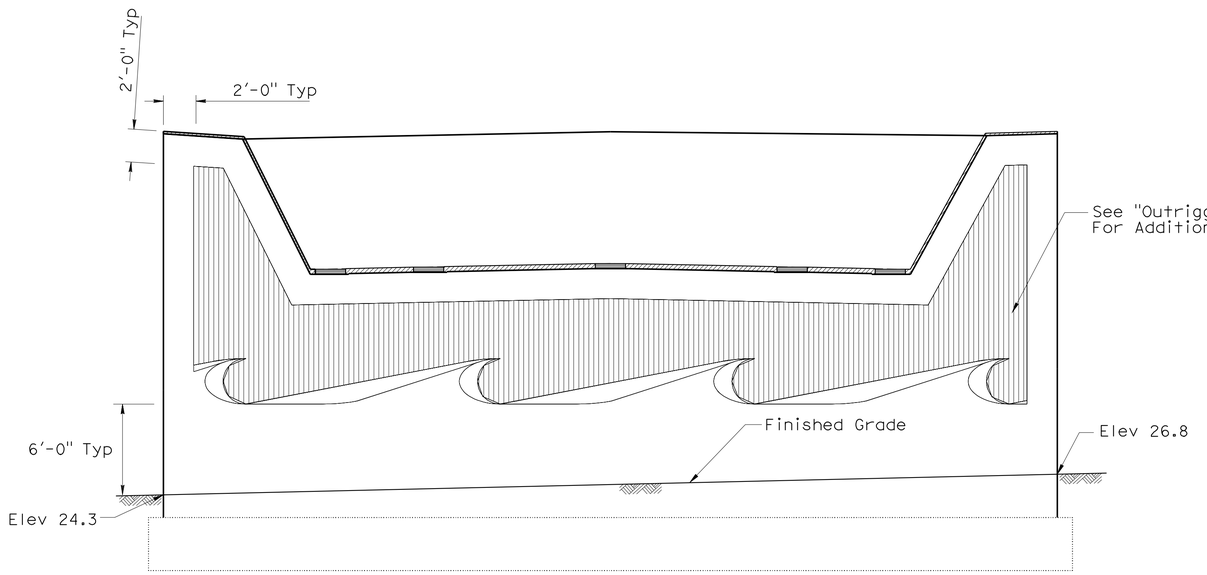

I-405/SR22 HOV CONNECTOR - ARCHITECTURAL TREATMENT

ABUTMENT 6 ELEVATION 2

1/4" = 1'-0"

NOTE:
The contractor shall verify all controlling field dimensions before ordering or fabricating any material.

2 **REVISED PER ADDENDUM No. 2 DATED APRIL 1, 2010**

Sudhakar Vatti
DESIGN OVERSIGHT Sudhakar Vatti
5-19-09
SIGN OFF DATE

	BY	CHECKED
DESIGN	C. JOHNSON	A. SU
DETAILS	R. KELCHER	A. SU
QUANTITIES	H. OKOLO	

PREPARED FOR THE
STATE OF CALIFORNIA
DEPARTMENT OF TRANSPORTATION

B. LOSEY
PROJECT ENGINEER

BRIDGE NO. 55-1103E
POST MILE 20.66

405-22 HOV CONNECTOR SEPARATION

ABUTMENT 6 ARCHITECTURAL DETAILS

DESIGN DETAIL SHEET (ENGLISH) (REV. 2/25/05)

ORIGINAL SCALE IN INCHES FOR REDUCED PLANS 0 1 2 3

CU 12235
EA 071621

DISREGARD PRINTS BEARING EARLIER REVISION DATES

REVISION DATES (PRELIMINARY STAGE ONLY) 09/26/08 02/27/09 05/18/09

SHEET 46 OF 55

FILE => 55-1103Er1-v-brdt02.add

USERNAME => trilm DATE PLOTTED => 29-MAR-2010 TIME PLOTTED => 13:04

DIST	COUNTY	ROUTE	POST MILES TOTAL PROJECT	SHEET No	TOTAL SHEETS
12	Ora	22,405	R0.7/R2.9, 20.4/22.3	866	1006

LICENSED LANDSCAPE ARCHITECT

9-21-09
PLANS APPROVAL DATE

LICENSED LANDSCAPE ARCHITECT CATHY L. JOHNSON NO. 4545 Expiration Date 01-31-10 Renewal Date 05-18-09 Date STATE OF CALIFORNIA

The State of California or its officers or agents shall not be responsible for the accuracy or completeness of electronic copies of this plan sheet.

RBF CONSULTING
14725 ALTON PARKWAY
IRVINE, CA 92618

OCTA
550 SOUTH MAIN STREET
ORANGE, CA 92863

2

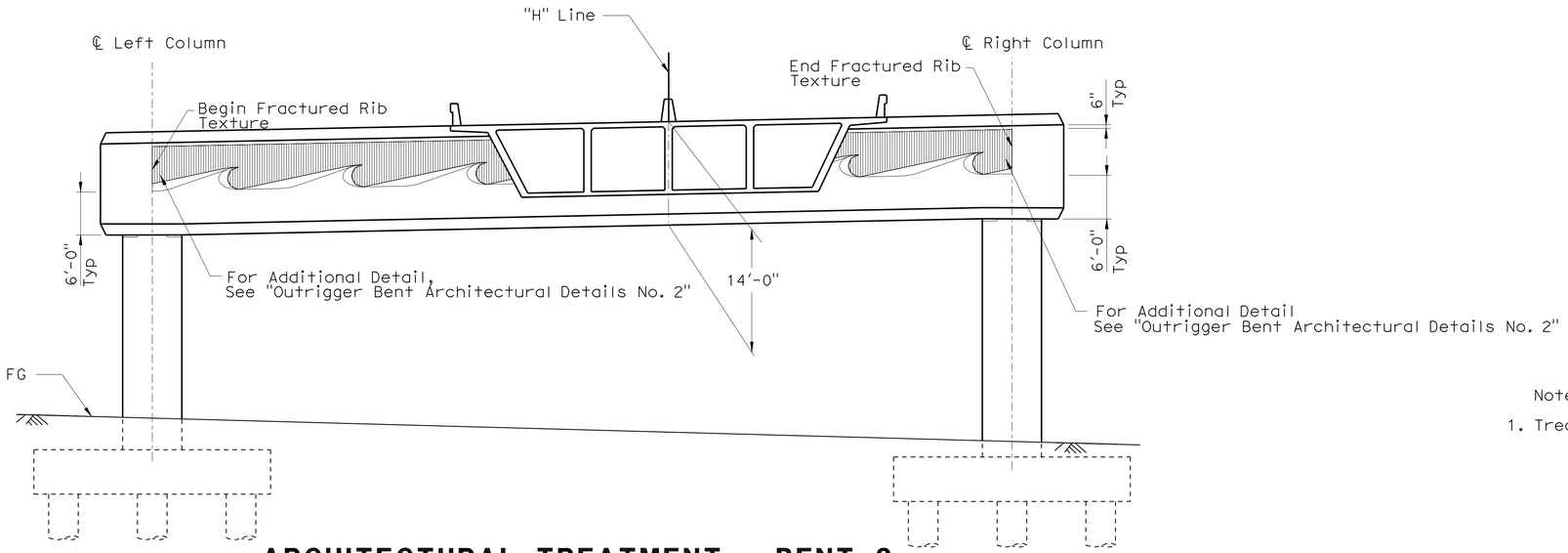

ARCHITECTURAL TREATMENT - BENT 3

1" = 10'

Note:

1. Treatment Shall Be Applied On Both Sides Of Structure

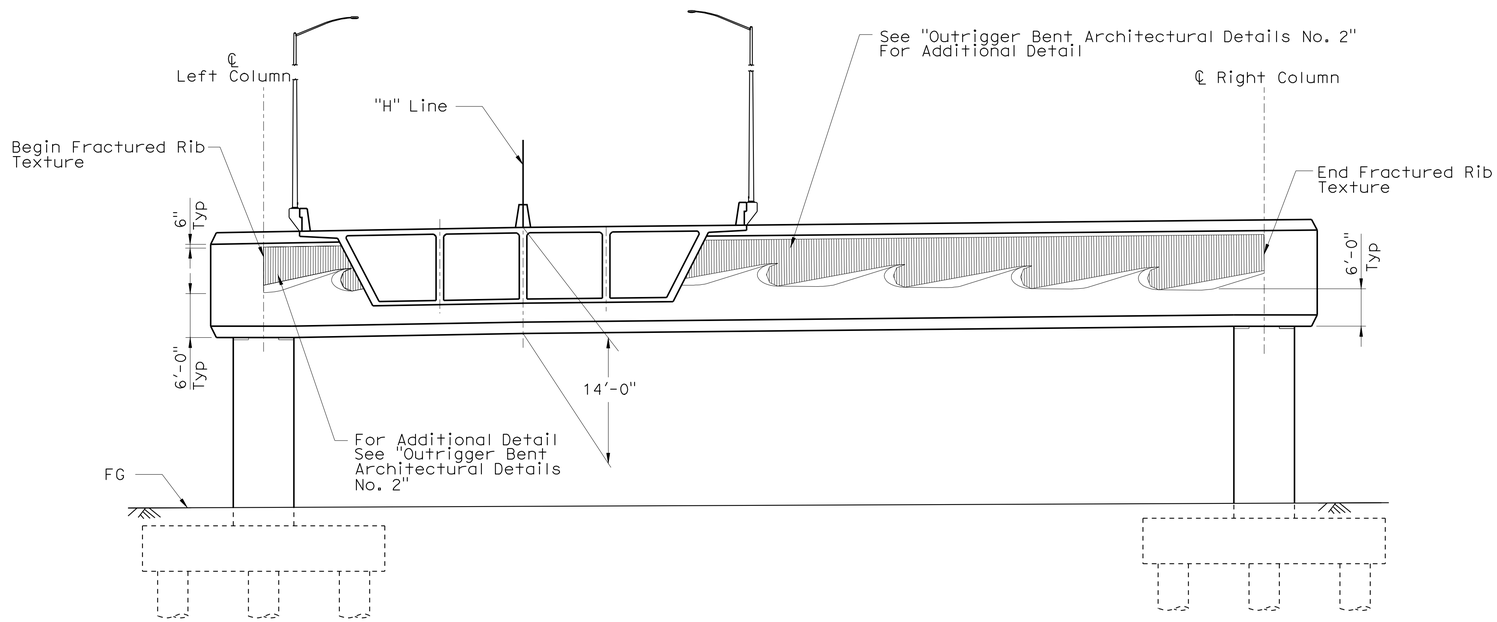

ARCHITECTURAL TREATMENT - BENT 4

1" = 10'

NOTE:
The contractor shall verify all controlling field dimensions before ordering or fabricating any material.

2 **REVISED PER ADDENDUM No. 2 DATED APRIL 1, 2010**

Sudhakar Vatti
DESIGN OVERSIGHT Sudhakar Vatti
5-19-09
SIGN OFF DATE

	BY	CHECKED
DESIGN	C. JOHNSON	A. SU
DETAILS	R. KELCHER	A. SU
QUANTITIES	H. OKOLO	

PREPARED FOR THE STATE OF CALIFORNIA DEPARTMENT OF TRANSPORTATION

B. LOSEY
PROJECT ENGINEER

BRIDGE NO. 55-1103E
POST MILE 20.66

405-22 HOV CONNECTOR SEPARATION

OUTRIGGER BENT ARCHITECTURAL DETAILS NO. 1

DESIGN DETAIL SHEET (ENGLISH) (REV. 2/25/05)

ORIGINAL SCALE IN INCHES FOR REDUCED PLANS 0 1 2 3

CU 12235
EA 071621

DISREGARD PRINTS BEARING EARLIER REVISION DATES

REVISION DATES (PRELIMINARY STAGE ONLY) 09/25/08 02/23/09 05/18/09

SHEET 47 OF 55

FILE => 55-1103Er1-v-brdt03.add

USERNAME => trrlim DATE PLOTTED => 29-MAR-2010 TIME PLOTTED => 13:04

DIST	COUNTY	ROUTE	POST MILES TOTAL PROJECT	SHEET No	TOTAL SHEETS
12	Ora	22,405	R0.7/R2.9, 20.4/22.3	867	1006

LICENSED LANDSCAPE ARCHITECT

9-21-09
PLANS APPROVAL DATE

The State of California or its officers or agents shall not be responsible for the accuracy or completeness of electronic copies of this plan sheet.

LICENSED LANDSCAPE ARCHITECT
CATHY L. JOHNSON
NO. 4545
Expiration Date
01-31-10
Renewal Date
05-18-09
Date
STATE OF CALIFORNIA

RBF CONSULTING
14725 ALTON PARKWAY
IRVINE, CA 92618

OCTA
550 SOUTH MAIN STREET
ORANGE, CA 92863

2

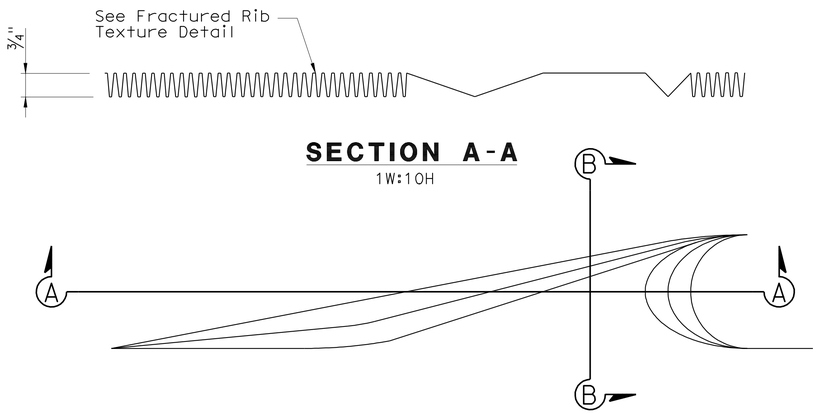

SECTION A-A
1W:10H

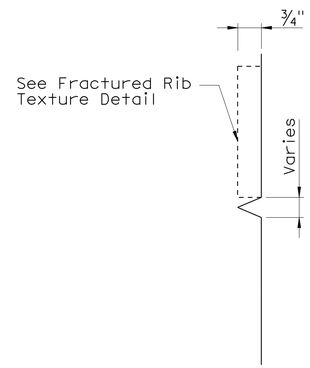

SECTION B-B
10W:1H

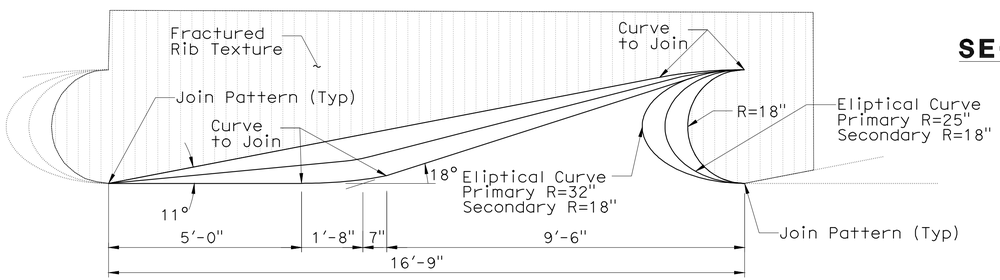

ELEVATION
NO SCALE

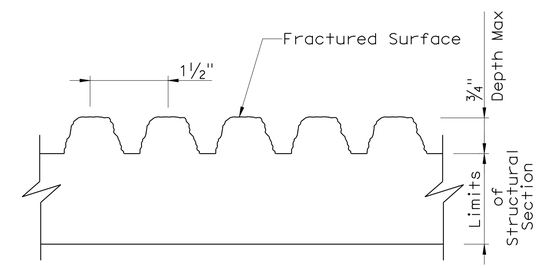

FRACTURED RIB TEXTURE
NO SCALE

NOTE:
The contractor shall verify all controlling field dimensions before ordering or fabricating any material.

2 **REVISED PER ADDENDUM No. 2 DATED APRIL 1, 2010**

Sudhakar Vatti
DESIGN OVERSIGHT Sudhakar Vatti
5-19-09
SIGN OFF DATE

	BY	CHECKED
DESIGN	C. JOHNSON	A. SU
DETAILS	R. KELCHER	A. SU
QUANTITIES	H. OKOLO	

PREPARED FOR THE
STATE OF CALIFORNIA
DEPARTMENT OF TRANSPORTATION

B. LOSEY
PROJECT ENGINEER

BRIDGE NO. 55-1103E
POST MILE 20.66

405-22 HOV CONNECTOR SEPARATION
OUTRIGGER BENT ARCHITECTURAL DETAILS NO. 2

DESIGN DETAIL SHEET (ENGLISH) (REV. 2/25/05)

ORIGINAL SCALE IN INCHES FOR REDUCED PLANS 0 1 2 3

CU 12235
EA 071621

DISREGARD PRINTS BEARING EARLIER REVISION DATES
REVISION DATES (PRELIMINARY STAGE ONLY) 09/26/08 02/25/09 05/18/09

SHEET 48 OF 55

FILE => 55-1103Erl-v-brdt04.add

USERNAME => trlim DATE PLOTTED => 29-MAR-2010 TIME PLOTTED => 13:04

DIST	COUNTY	ROUTE	POST MILES TOTAL PROJECT	SHEET No	TOTAL SHEETS
12	Ora	22,405	R0.7/R2.9, 20.4/22.3	875	1006

REGISTERED CIVIL ENGINEER 5/18/09 DATE

9-21-09
PLANS APPROVAL DATE

The State of California or its officers or agents shall not be responsible for the accuracy or completeness of electronic copies of this plan sheet.

REGISTERED PROFESSIONAL ENGINEER MOHSEN MOHSENI No. C45999 Exp. 12/31/10 CIVIL STATE OF CALIFORNIA

PARSONS 2201 DUPONT DRIVE SUITE 200 IRVINE, CA 92612

OCTA 550 SOUTH MAIN STREET ORANGE, CA 92863

INDEX TO PLANS

SHEET NO.	TITLE
1	INDEX TO PLANS
2	GENERAL PLAN No.1
3	GENERAL PLAN No.2
4	GENERAL PLAN No.3
5	PRECAST WALL DETAILS No. 1
6	PRECAST WALL DETAILS No. 2
7	PRECAST WALL DETAILS No. 3
8	PRECAST WALL DETAILS No. 4
9	PRECAST WALL DETAILS No. 5
10	PRECAST WALL DETAILS No. 6
11	PRECAST WALL DETAILS No. 7
12	PRECAST WALL DETAILS No. 8
13	RW 3320 ARCHITECTURAL PANEL LAYOUT
14	ARCHITECTURAL PANEL DETAILS No. 1
15	ARCHITECTURAL PANEL DETAILS No. 2
16	LOG OF TEST BORINGS 1 OF 5
17	LOG OF TEST BORINGS 2 OF 5
18	LOG OF TEST BORINGS 3 OF 5
19	LOG OF TEST BORINGS 4 OF 5
20	LOG OF TEST BORINGS 5 OF 5

STANDARD PLANS DATED MAY 2006

With Errata No.1 through 9

A10A	ACRONYMS AND ABBREVIATIONS (Sheet 1 of 2)
A10B	ACRONYMS AND ABBREVIATIONS (Sheet 2 of 2)
A10C	SYMBOLS (Sheet 1 of 2)
A10D	SYMBOLS (Sheet 2 of 2)
B11-56	CONCRETE BARRIER TYPE 736

GENERAL WALL NOTES

1. All Precast Concrete Panels, except Top Panels and Single Panels, are 5'-0" (Nominal Length) and 5'-0" (Nominal Height) per full size panel dimensions shown in "Precast Wall Details" sheets. Half Panels are 2'-6" nominal height.

2. Top Panels vary in height from 3'-9" to 8'-9" (Nominal) maximum. Top Panels are placed directly above intermediate panels. Where Top Panels exceed 5'-0" in height, a ½" horizontal groove shall be incorporated into the Architectural Treatment section of the Panel. Top Panels shall be 5'-0" long (Nominal).

3. Single Panels vary in height from 3'-9" to 8'-9" maximum. Single Panels are placed directly above the concrete leveling pad. Single Panels shall not have any other panels above it. Where Single Panels exceed 5'-0" in height, a ½" horizontal groove shall be incorporated into the Architectural Treatment of the Panel. Single Panels shall be 5'-0" long (Nominal).

4. Top Panels and Single Panels shall be cast as shown on the plans, to conform with wall profile.

5. For existing utilities to be abandoned or removed (not shown), and for location of proposed utilities, see "Road Plans".

6. Lightweight Cellular Concrete lifts shall not exceed 2 feet 6 inches in depth. The last lift of the top cellular concrete layer shall not be less than 2 feet. Intermediate lifts of cellular concrete layers shall not be placed less than 24 hours after the placement of the previous lift.

7. Longitudinal construction joints are not allowed. ~~along the top cellular concrete layer.~~ Transverse joints in top cellular concrete layer shall be per details shown on Precast Wall Detail sheets. 2

8. No construction vehicles or machinery shall be operated on the intermediate cellular concrete lifts during construction. No contruction vehicles or machinery shall be operated on the last lift of the top cellular concrete layer until the full specified compresive strength is reached. Top layer shall be placed parallel to the Roadway Cross Slope.

9. Trucks shall be at least 6 feet from the edge of the top layer of the Lightweight Cellular Concrete during construction after the top cellular concrete layer has attained its full strength.

10. For surcharging and foundation preparation see "Road Plans".

11. Lifting inserts for precast concrete panels shall be designed to a lift of minimum 6.50 kips each.

12. Settlement Monitoring will be required.

NOTE:
The Contractor shall verify all controlling field dimensions before ordering or fabricating any material

PLAN SYMBOLS

Standard Plan Sheet No.

Detail No.

A Section Identification

LEGEND

T OR T — Groove; Top Panel

S OR S — Groove; Single Panel

Intermediate or Bottom Panel

Bottom Half Panel

EPDM Ethylene Propylene Diene M-Class Rubber

GENERAL DESIGN NOTES

Design:
Caltrans Bridge Design Specifications - April 2000 (LFD)
(1996 AASHTO with Inerims and Revisions by Caltrans)

Live Loading:
HS20-44 and Alternative and Permit Design Load

Lightweight Cellular Concrete Fill:
f'_c = 125 psi (Minimum concrete compressive Strength in 28 days) Top Layer
f'_c = 60 psi (Minimum concrete compressive Strength in 28 days) Bottom Layers
f'_{ci} = 10 psi (Minumum initial Concrete compressive Strength prior to the next lift) Bottom Layers

Precast Concrete Panels:
f'_c = 4,000 psi (Minimum concrete compressive Strength in 28 days)
f_y = 60 ksi (Yield Strength of Welded Wire Reinforcement)

Threaded Rebar Studs:
f_y = 60 ksi

Reinforced Concrete:
f'_c = 3,600 psi, Except as Noted (Minimum concrete compressive Strength in 28 days)
f_y = 60 ksi (Yield Strength of Reinforcement)

Design Seismic Load:
0.5 Dead Load

Leveling Pad Footing Pressure (Tons per SF):

Allowable	Design
0.75	0.42

2 **REVISED PER ADDENDUM No. 2 DATED APRIL 1, 2010**

Sudhakar Vatti
DESIGN OVERSIGHT Sudhakar Vatti
5-19-09
SIGN OFF DATE

	BY	CHECKED
DESIGN	M. Ruvalcaba	M. Mohseni
DETAILS	N. Morcillo	M. Ruvalcaba
QUANTITIES	M. Ruvalcaba	M. Mohseni

PREPARED FOR THE STATE OF CALIFORNIA DEPARTMENT OF TRANSPORTATION

MOHSEN MOHSENI
PROJECT ENGINEER

BRIDGE NO. 55E0072
POST MILE 20.82

PRECAST WALL No. 3320 WITH LIGHTWEIGHT FILL (CELLULAR CONCRETE)

INDEX TO PLANS

DESIGN DETAIL SHEET (ENGLISH) (REV. 2/25/05)

ORIGINAL SCALE IN INCHES FOR REDUCED PLANS 0 1 2 3

CU 12235
EA 071621

DISREGARD PRINTS BEARING EARLIER REVISION DATES → 10/27/08 2/28/09 5/18/09

SHEET 1 OF 20

FILE => 55-e0072-a-aitp.add

USERNAME => trilim DATE PLOTTED => 29-MAR-2010 TIME PLOTTED => 13:20

DIST	COUNTY	ROUTE	POST MILES TOTAL PROJECT	SHEET No	TOTAL SHEETS
12	Ora	22,405	R0.7/R2.9, 20.4/22.3	879	1006

REGISTERED CIVIL ENGINEER 5/18/09 DATE

9-21-09
PLANS APPROVAL DATE

REGISTERED PROFESSIONAL ENGINEER MOHSEN MOHSENI No. C45999 Exp. 12/31/10 CIVIL STATE OF CALIFORNIA

The State of California or its officers or agents shall not be responsible for the accuracy or completeness of electronic copies of this plan sheet.

PARSONS 2201 DUPONT DRIVE SUITE 200 IRVINE, CA 92612

OCTA 550 SOUTH MAIN STREET ORANGE, CA 92863

2

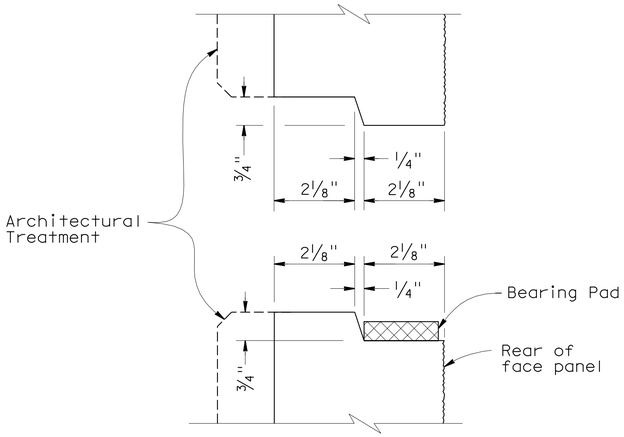

HORIZONTAL JOINT DETAIL

1"=2'-0"

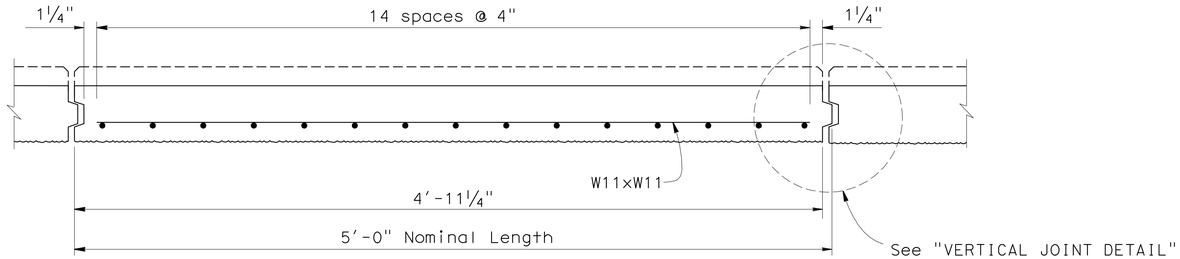

PLAN - FACE PANEL

1/2"=1'-0"

NOTES:

1. Place reinforced elastomeric bearing pads in all of the panel joints between the panels. Place one in each vertical joint where the horizontal joint intersects it. Place two per panel in each horizontal joint.
   1/2" x 1 1/2" x 6" for vertical joints
   1/2" x 2" x 6" for horizontal joints.
2. Top and Single Panels shall be cast as shown on plans, to conform with wall profile.
3. For Architectural Treatment Details, see Architectural Panel sheets.
4. For Insert Load requirement see "Index to Plans" sheet.

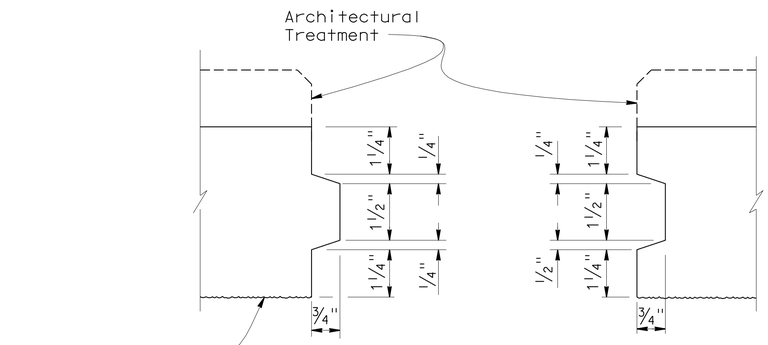

VERTICAL JOINT DETAIL

1"=2'-0"

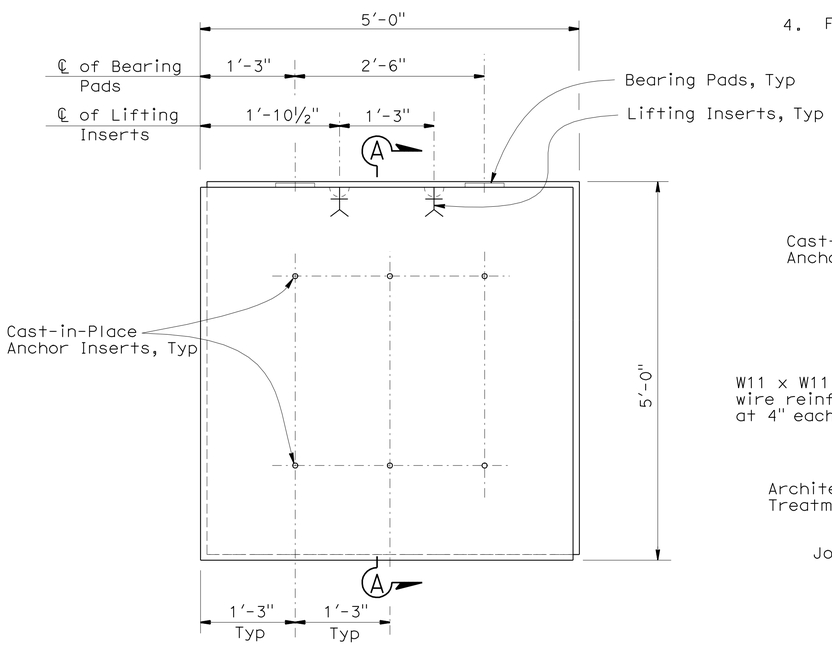

(BACK FACE SHOWN)

INTERMEDIATE PANEL

1" = 1'-0"

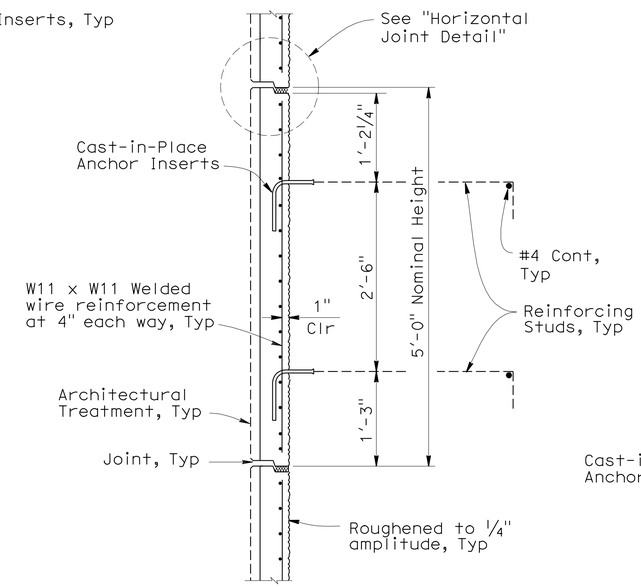

SECTION A-A

1" = 1'-0"

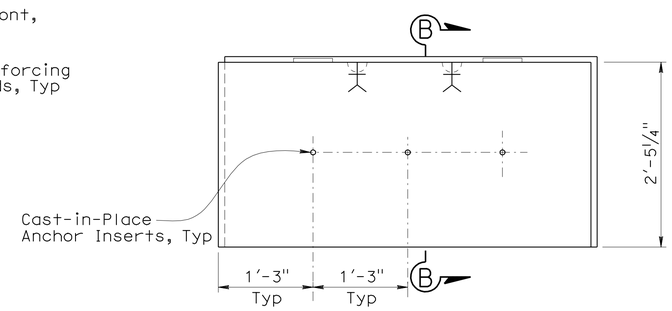

NOTE:
For information not shown see "Intermediate Panel".

(BACK FACE SHOWN)

BOTTOM HALF PANEL

1" = 1'-0"

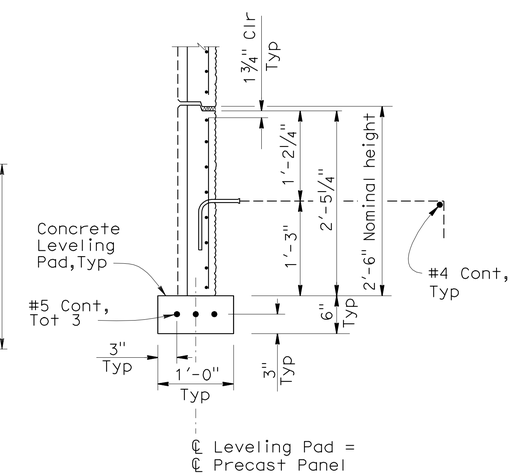

SECTION B-B

1"=1'-0"

NOTE:
The Contractor shall verify all controlling field dimensions before ordering or fabricating any material

2 **REVISED PER ADDENDUM NO. 2 DATED APRIL 1, 2010**

Sudhakar Vatti
DESIGN OVERSIGHT Sudhakar Vatti
5-19-09
SIGN OFF DATE

	BY	CHECKED
DESIGN	M. Ruvalcaba	M. Mohseni
DETAILS	N. Morcillo	M. Ruvalcaba
QUANTITIES	M. Ruvalcaba	M. Mohseni

PREPARED FOR THE STATE OF CALIFORNIA DEPARTMENT OF TRANSPORTATION

MOHSEN MOHSENI
PROJECT ENGINEER

BRIDGE NO. 55E0072
POST MILE 20.82

PRECAST WALL No. 3320 WITH LIGHTWEIGHT FILL (CELLULAR CONCRETE)

PRECAST WALL DETAILS No. 1

DESIGN DETAIL SHEET (ENGLISH) (REV. 2/25/05)

ORIGINAL SCALE IN INCHES FOR REDUCED PLANS 0 1 2 3

CU 12235
EA 071621

DISREGARD PRINTS BEARING EARLIER REVISION DATES

REVISION DATES (PRELIMINARY STAGE ONLY) 10/21/08 2/23/09 5/18/09

SHEET 5 OF 20

FILE => 55-E0072-g-rwdt01.add

USERNAME => trilm DATE PLOTTED => 29-MAR-2010 TIME PLOTTED => 13:20

DIST	COUNTY	ROUTE	POST MILES TOTAL PROJECT	SHEET No	TOTAL SHEETS
12	Ora	22,405	R0.7/R2.9, 20.4/22.3	884	1006

REGISTERED CIVIL ENGINEER 5/18/09 DATE

9-21-09
PLANS APPROVAL DATE

The State of California or its officers or agents shall not be responsible for the accuracy or completeness of electronic copies of this plan sheet.

REGISTERED PROFESSIONAL ENGINEER MOHSEN MOHSENI No. C45999 Exp. 12/31/10 CIVIL STATE OF CALIFORNIA

PARSONS 2201 DUPONT DRIVE SUITE 200 IRVINE, CA 92612

OCTA 550 SOUTH MAIN STREET ORANGE, CA 92863

2

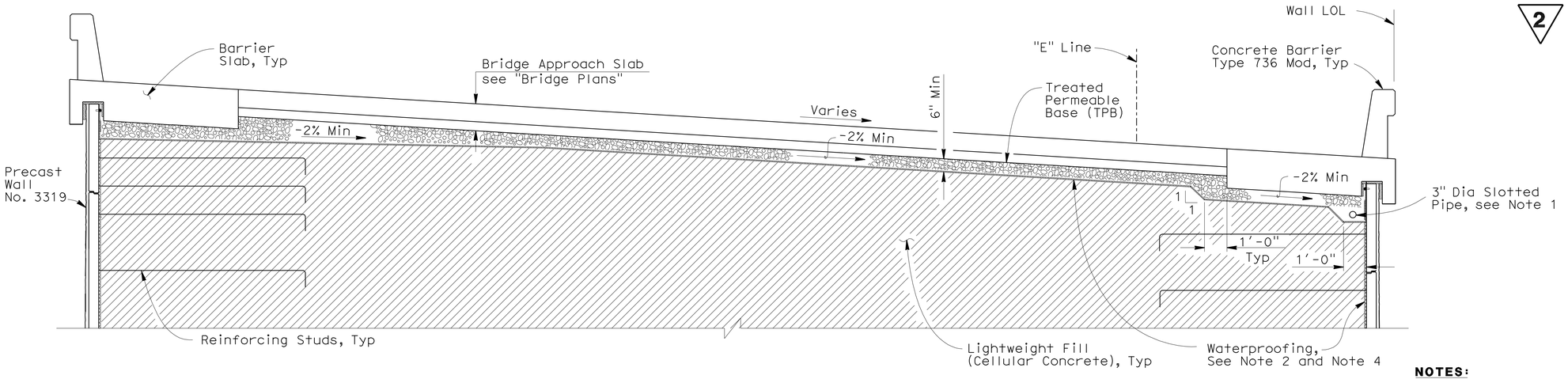

DRAINAGE SECTION AT BARRIER SLAB (STA 10+05.33 TO 12+85)

3/8" = 1'-0"

NOTES:

1. For Drainage Details under Barrier Slab, see "Precast Wall Details No. 7" and "Precast Wall Details No. 8" sheets.
2. For Drainage Details under Approach Slab see "Bridge Plans".
3. For Drainage Details between Sta 10+00 to Sta 10+05.33 see "Precast Wall Details No. 5" sheet.
4. For Waterproofing Details see "Precast Wall Details No. 7" sheet.

LEGEND:

- Limits of Lightweight Fill (Cellular Concrete)
- Limits of Structure Excavation
- Limits of Structure Backfill

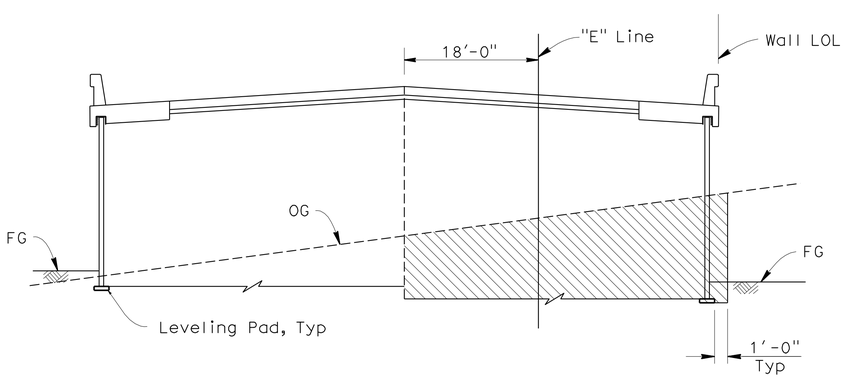

LIMITS OF EXCAVATION

No Scale

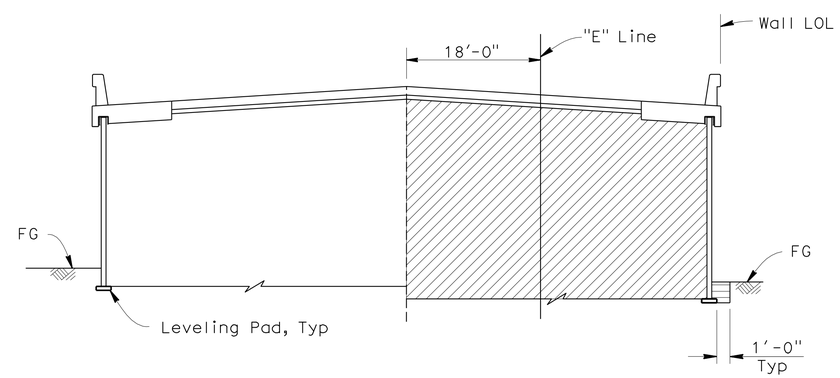

LIMITS OF BACKFILL

No Scale

NOTE:
The Contractor shall verify all controlling field dimensions before ordering or fabricating any material

2 **REVISED PER ADDENDUM NO. 2 DATED APRIL 1, 2010**

Sudhakar Vatti
DESIGN OVERSIGHT Sudhakar Vatti
5-19-09
SIGN OFF DATE

	BY	CHECKED
DESIGN	M. Ruvalcaba	M. Mohseni
DETAILS	N. Morcillo	M. Ruvalcaba
QUANTITIES	M. Ruvalcaba	M. Mohseni

PREPARED FOR THE STATE OF CALIFORNIA DEPARTMENT OF TRANSPORTATION

MOHSEN MOHSENI
PROJECT ENGINEER

BRIDGE NO. 55E0072
POST MILE 20.82

PRECAST WALL No. 3320 WITH LIGHTWEIGHT FILL (CELLULAR CONCRETE)

PRECAST WALL DETAILS No. 6

DESIGN DETAIL SHEET (ENGLISH) (REV. 2/25/05)

ORIGINAL SCALE IN INCHES FOR REDUCED PLANS 0 1 2 3

CU 12235
EA 071621

DISREGARD PRINTS BEARING EARLIER REVISION DATES

REVISION DATES (PRELIMINARY STAGE ONLY) 10/27/08 2/23/09 5/18/09

SHEET 10 OF 20

FILE => 55-E0072-g-rwdt06.add

USERNAME => ttrim DATE PLOTTED => 29-MAR-2010 TIME PLOTTED => 13:20

DIST	COUNTY	ROUTE	POST MILES TOTAL PROJECT	SHEET No	TOTAL SHEETS
12	Ora	22,405	R0.7/R2.9, 20.4/22.3	887	1006

2

LICENSED LANDSCAPE ARCHITECT

9-21-09
PLANS APPROVAL DATE

LICENSED LANDSCAPE ARCHITECT
CATHY L. JOHNSON
NO. 4545
Expiration Date
01-31-10
Renewal Date
05-18-09
Date
STATE OF CALIFORNIA

The State of California or its officers or agents shall not be responsible for the accuracy or completeness of electronic copies of this plan sheet.

RBF CONSULTING
14725 ALTON PARKWAY
IRVINE, CA 92618

OCTA
550 SOUTH MAIN STREET
ORANGE, CA 92863

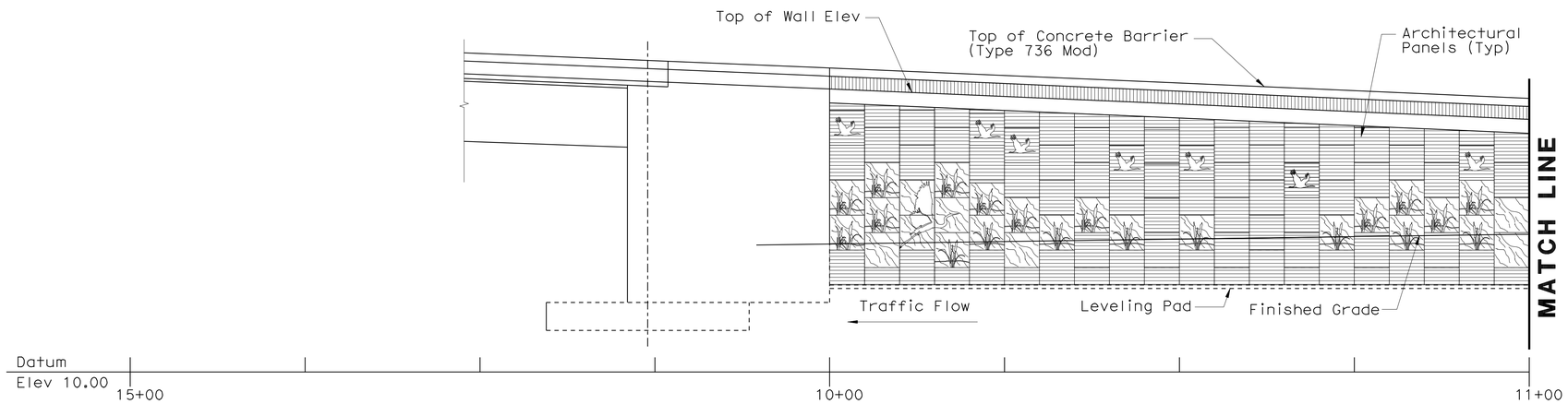

ELEVATION (SEGMENT-1)

1" = 10'

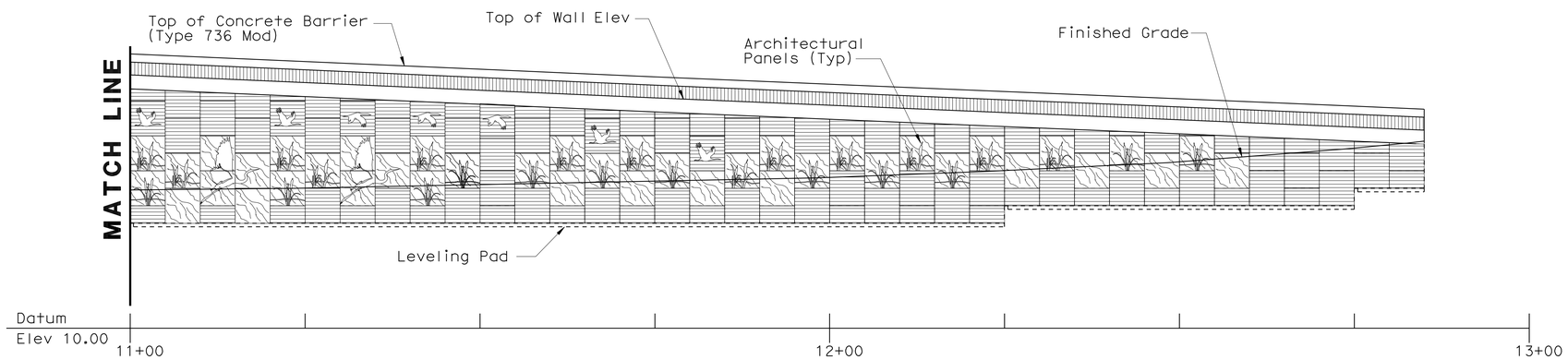

ELEVATION (SEGMENT-2)

1" = 10'

NOTE:
The contractor shall verify all controlling field dimensions before ordering or fabricating any material.

2 **REVISED PER ADDENDUM NO. 2 DATED APRIL 1, 2010**

Sudhakar Vatti
DESIGN OVERSIGHT Sudhakar Vatti
5-19-09
SIGN OFF DATE

DESIGN DETAIL SHEET (ENGLISH) (REV. 2/25/05)

	BY	CHECKED
DESIGN	C. JOHNSON	A. SU
DETAILS	R. KELCHER	A. SU
QUANTITIES	H. OKOLO	

ORIGINAL SCALE IN INCHES FOR REDUCED PLANS 0 1 2 3

PREPARED FOR THE STATE OF CALIFORNIA DEPARTMENT OF TRANSPORTATION

B. LOSEY
PROJECT ENGINEER

CU 12235
EA 071621

BRIDGE NO. 55E0072
POST MILE 20.82-20.88

PRECAST WALL No. 3320 WITH LIGHTWEIGHT FILL (CELLULAR CONCRETE)

RW 3320 ARCHITECTURAL PANEL LAYOUT

DISREGARD PRINTS BEARING EARLIER REVISION DATES

REVISION DATES (PRELIMINARY STAGE ONLY) 09/26/08 02/25/09 05/18/09

SHEET 13 OF 20

FILE => 55-E0072-v-rwdt01.add

USERNAME => trienard DATE PLOTTED => 29-MAR-2010 TIME PLOTTED => 11:22

DIST	COUNTY	ROUTE	POST MILES TOTAL PROJECT	SHEET No	TOTAL SHEETS
12	Ora	22,405	R0.7/R2.9, 20.4/22.3	895	1006

REGISTERED CIVIL ENGINEER 5/18/09 DATE

9-21-09
PLANS APPROVAL DATE

REGISTERED PROFESSIONAL ENGINEER MOHSEN MOHSENI No. C45999 Exp. 12/31/10 CIVIL STATE OF CALIFORNIA

The State of California or its officers or agents shall not be responsible for the accuracy or completeness of electronic copies of this plan sheet.

PARSONS 2201 DUPONT DRIVE SUITE 200 IRVINE, CA 92612

OCTA 550 SOUTH MAIN STREET ORANGE, CA 92863

INDEX TO PLANS

SHEET NO.	TITLE
1	INDEX TO PLANS
2	GENERAL PLAN
3	PRECAST WALL DETAILS No. 1
4	PRECAST WALL DETAILS No. 2
5	PRECAST WALL DETAILS No. 3
6	PRECAST WALL DETAILS No. 4
7	PRECAST WALL DETAILS No. 5
8	PRECAST WALL DETAILS No. 6
9	PRECAST WALL DETAILS No. 7
10	PRECAST WALL DETAILS NO. 8
11	RW 1299 ARCHITECTURAL PANEL LAYOUT AND DETAIL
12	LOG OF TEST BORINGS 1 OF 6
13	LOG OF TEST BORINGS 2 OF 6
14	LOG OF TEST BORINGS 3 OF 6
15	LOG OF TEST BORINGS 4 OF 6
16	LOG OF TEST BORINGS 5 OF 6
17	LOG OF TEST BORINGS 6 OF 6

STANDARD PLANS DATED MAY 2006

With Errata No.1 through 9

A10A	ACRONYMS AND ABBREVIATIONS (Sheet 1 of 2)
A10B	ACRONYMS AND ABBREVIATIONS (Sheet 2 of 2)
A10C	SYMBOLS (Sheet 1 of 2)
A10D	SYMBOLS (Sheet 2 of 2)
A76A	CONCRETE BARRIER TYPE 60
B11-56	CONCRETE BARRIER TYPE 736

GENERAL WALL NOTES

1. All Precast Concrete Panels, except Top Panels and Single Panels, are 5'-0" (Nominal Length) and 5'-0" (Nominal Height) per full size panel dimensions shown in "Precast Wall Details" sheets. Half Panels are 2'-6" nominal height.

2. Top Panels vary in height from 3'-9" to 8'-9" (Nominal) maximum. Top Panels are placed directly above intermediate panels. Where Top Panels exceed 5'-0" in height, a ½" horizontal groove shall be incorporated into the Architectural Treatment section of the Panel. Top Panels shall be 5'-0" long (Nominal).

3. Single Panels vary in height from 3'-9" to 8'-9" maximum. Single Panels are placed directly above the concrete leveling pad. Single Panels shall not have any other panels above it. Where Single Panels exceed 5'-0" in height, a ½" horizontal groove shall be incorporated into the Architectural Treatment of the Panel. Single Panels shall be 5'-0" long (Nominal).

4. Top Panels and Single Panels shall be cast as shown on the plans, to conform with wall profile.

5. For existing utilities to be abandoned or removed (not shown), and for location of proposed utilities, see "Road Plans".

6. Lightweight Cellular Concrete lifts shall not exceed 2 feet 6 inches in depth. The last lift of the top cellular concrete layer shall not be less than 2 feet. Intermediate lifts of cellular concrete layers shall not be placed less than 24 hours after the placement of the previous lift.

7. Longitudinal construction joints are not allowed. ~~along the top cellular concrete layer.~~ Transverse joints in top cellular concrete layer shall be per details shown on Precast Wall Detail sheets. 2

8. No construction vehicles or machinery shall be operated on the intermediate cellular concrete lifts during construction. No contruction vehicles or machinery shall be operated on the last lift of the top cellular concrete layer until the full specified compresive strength is reached. Top layer shall be placed parallel to the Roadway Cross Slope.

9. Trucks shall be at least 6 feet from the edge of the top layer of the Lightweight Cellular Concrete during construction after the top cellular concrete layer has attained its full strength.

10. For surcharging and foundation preparation see "Road Plans".

11. Lifting inserts for precast concrete panels shall be designed to a lift of minimum 6.50 kips each.

12. Settlement Monitoring will be required.

NOTE:
The Contractor shall verify all controlling field dimensions before ordering or fabricating any material

PLAN SYMBOLS

Standard Plan Sheet No.

Detail No.

A — Section Identification

LEGEND

T OR T — Groove — Top Panel

S OR S — Groove — Single Panel

Intermediate or Bottom Panel

Bottom Half Panel

EPDM — Ethylene Propylene Diene M-Class Rubber

GENERAL DESIGN NOTES

Design:
Caltrans Bridge Design Specifications - April 2000 (LFD)
(1996 AASHTO with Inerims and Revisions by Caltrans)

Live Loading:
HS20-44 and Alternative and Permit Design Load

Lightweight Cellular Concrete Fill:
f'_c = 125 psi (Minimum concrete compressive Strength in 28 days) Top Layer
f'_c = 60 psi (Minimum concrete compressive Strength in 28 days) Bottom Layers
f'_{ci} = 10 psi (Minumum initial Concrete compressive Strength prior to the next lift) Bottom Layers

Precast Concrete Panels:
f'_c = 4,000 psi (Minimum concrete compressive Strength in 28 days)
f_y = 60 ksi (Yield Strength of Welded Wire Reinforcement)

Threaded Rebar Studs:
f_y = 60 ksi

Reinforced Concrete:
f'_c = 3,600 psi, Except as Noted (Minimum concrete compressive Strength in 28 days)
f_y = 60 ksi (Yield Strength of Reinforcement)

Design Seismic Load:
0.5 Dead Load

Leveling Pad Footing Pressure (Tons per SF):

Allowable	Design
0.75	0.42

2 **REVISED PER ADDENDUM NO. 2 DATED APRIL 1, 2010**

Sudhakar Vatti
DESIGN OVERSIGHT Sudhakar Vatti
5-19-09
SIGN OFF DATE

	BY	CHECKED
DESIGN	M. Ruvalcaba	M. Mohseni
DETAILS	N. Morcillo	M. Ruvalcaba
QUANTITIES	M. Ruvalcaba	M. Mohseni

PREPARED FOR THE STATE OF CALIFORNIA DEPARTMENT OF TRANSPORTATION

MOHSEN MOHSENI
PROJECT ENGINEER

BRIDGE NO. 55E0073
POST MILE R1.11

PRECAST WALL No. 1299 WITH LIGHTWEIGHT FILL (CELLULAR CONCRETE)

INDEX TO PLANS

DESIGN DETAIL SHEET (ENGLISH) (REV. 2/25/05)

ORIGINAL SCALE IN INCHES FOR REDUCED PLANS 0 1 2 3

CU 12235
EA 071621

DISREGARD PRINTS BEARING EARLIER REVISION DATES

REVISION DATES (PRELIMINARY STAGE ONLY) 10/27/08 2/23/09 5/18/09

SHEET 1 OF 17

FILE => 55-e0073-a-alltp.add

USERNAME => friehard DATE PLOTTED => 29-MAR-2010 TIME PLOTTED => 11:22

DIST	COUNTY	ROUTE	POST MILES TOTAL PROJECT	SHEET No	TOTAL SHEETS
12	Ora	22,405	R0.7/R2.9, 20.4/22.3	897	1006

REGISTERED CIVIL ENGINEER — DATE 5/18/09

9-21-09
PLANS APPROVAL DATE

REGISTERED PROFESSIONAL ENGINEER — MOHSEN MOHSENI — No. C45999 — Exp. 12/31/10 — CIVIL — STATE OF CALIFORNIA

The State of California or its officers or agents shall not be responsible for the accuracy or completeness of electronic copies of this plan sheet.

PARSONS 2201 DUPONT DRIVE, SUITE 200, IRVINE, CA 92612

OCTA 550 SOUTH MAIN STREET, ORANGE, CA 92863

2

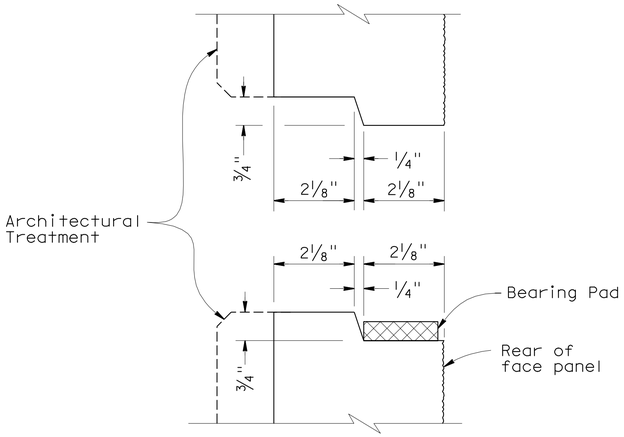

HORIZONTAL JOINT DETAIL
1"=2'-0"

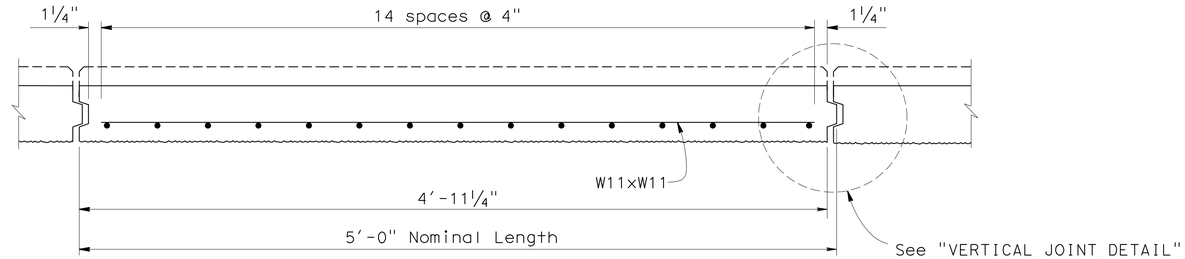

PLAN - FACE PANEL
1/2"=1'-0"

NOTES:

1. Place reinforced elastomeric bearing pads in all of the panel joints between the panels. Place one in each vertical joint where the horizontal joint intersects it. Place two per panel in each horizontal joint.
   1/2" x 1 1/2" x 6" for vertical joints
   1/2" x 2" x 6" for horizontal joints.
2. Top and Single Panels shall be cast as shown on plans, to conform with wall profile.
3. For Architectural Treatment Details, see Architectural Panel sheets.
4. For Insert Load requirement see "Index to Plans" sheet.

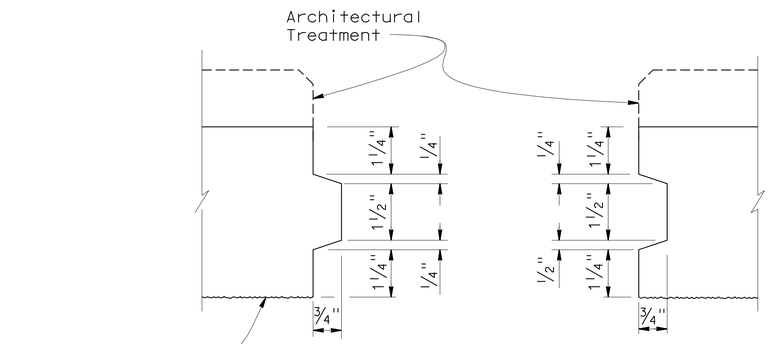

VERTICAL JOINT DETAIL
1"=2'-0"

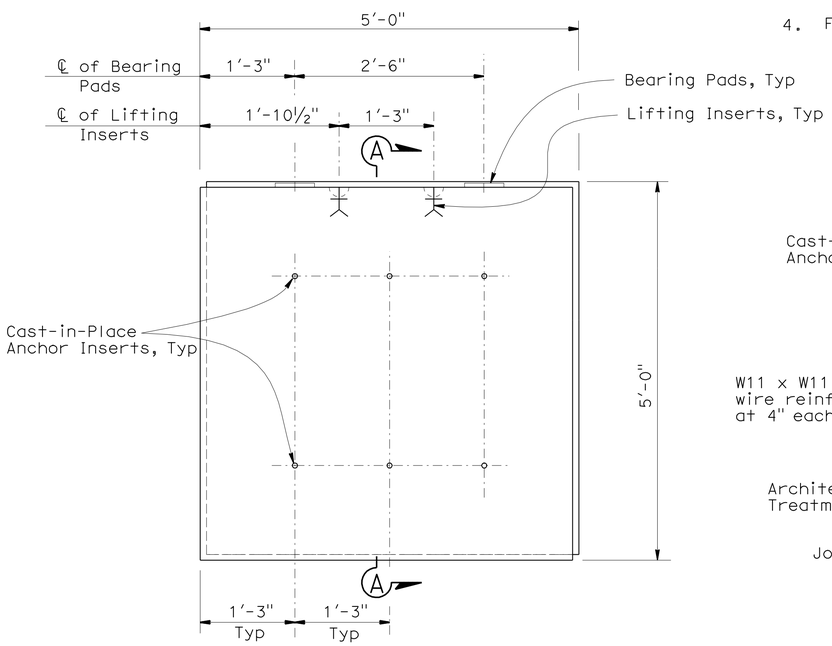

(BACK FACE SHOWN)
INTERMEDIATE PANEL
1" = 1'-0"

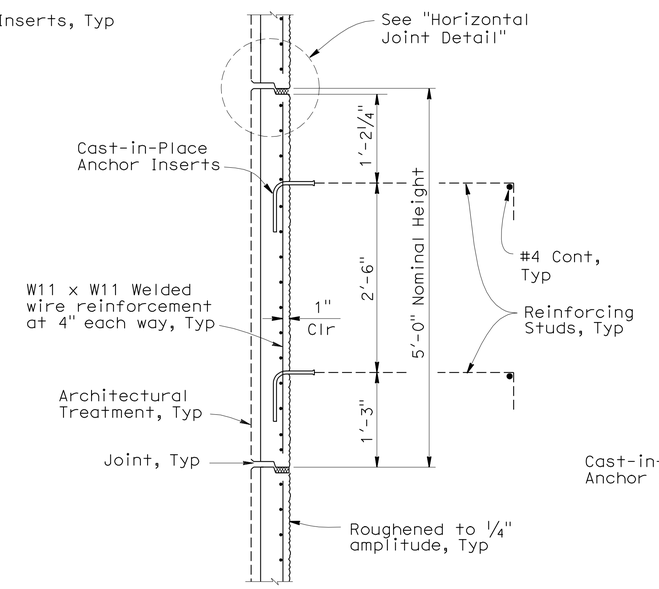

SECTION A-A
1" = 1'-0"

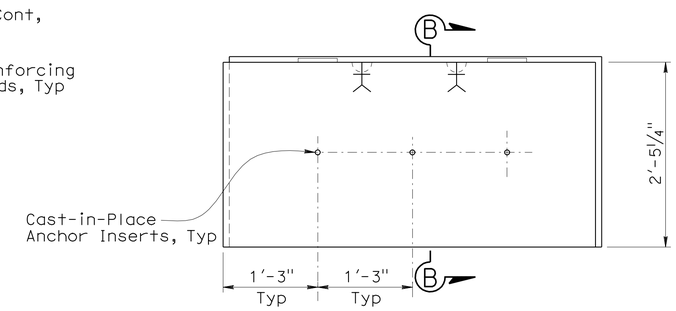

NOTE:
For information not shown see "Intermediate Panel".

(BACK FACE SHOWN)
BOTTOM HALF PANEL
1" = 1'-0"

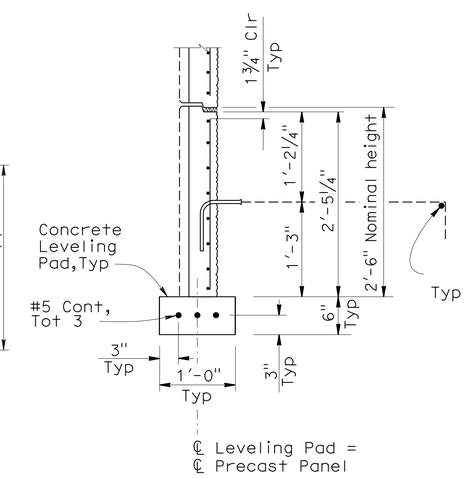

SECTION B-B
1"=1'-0"

NOTE:
The Contractor shall verify all controlling field dimensions before ordering or fabricating any material

2 **REVISED PER ADDENDUM NO. 2 DATED APRIL 1, 2010**

DESIGN OVERSIGHT — Sudhakar Vatti
5-19-09
SIGN OFF DATE

	BY	CHECKED
DESIGN	M. Ruvalcaba	M. Mohseni
DETAILS	N. Morcillo	M. Ruvalcaba
QUANTITIES	M. Ruvalcaba	M. Mohseni

PREPARED FOR THE STATE OF CALIFORNIA DEPARTMENT OF TRANSPORTATION

MOHSEN MOHSENI
PROJECT ENGINEER

BRIDGE NO. 55E0073
POST MILE R1.11

PRECAST WALL No. 1299 WITH LIGHTWEIGHT FILL (CELLULAR CONCRETE)
PRECAST WALL DETAILS No. 1

DESIGN DETAIL SHEET (ENGLISH) (REV. 2/25/05)

ORIGINAL SCALE IN INCHES FOR REDUCED PLANS 0 1 2 3

CU 12235
EA 071621

DISREGARD PRINTS BEARING EARLIER REVISION DATES — REVISION DATES (PRELIMINARY STAGE ONLY) 10/27/08 2/23/09 5/18/09

SHEET 3 OF 17

FILE => 55-E0073-g-rwdt01.add

USERNAME => trlenard DATE PLOTTED => 23-MAR-2010 TIME PLOTTED => 11:22

DIST	COUNTY	ROUTE	POST MILES TOTAL PROJECT	SHEET No	TOTAL SHEETS
12	Ora	22,405	R0.7/R2.9, 20.4/22.3	898	1006

2

REGISTERED CIVIL ENGINEER 5/18/09 DATE

9-21-09
PLANS APPROVAL DATE

REGISTERED PROFESSIONAL ENGINEER MOHSEN MOHSENI No. C45999 Exp. 12/31/10 CIVIL STATE OF CALIFORNIA

The State of California or its officers or agents shall not be responsible for the accuracy or completeness of electronic copies of this plan sheet.

PARSONS 2201 DUPONT DRIVE SUITE 200 IRVINE, CA 92612

OCTA 550 SOUTH MAIN STREET ORANGE, CA 92863

NOTES:

1. For Horizontal and Vertical Joint Details see "Precast Wall Details No. 1" sheet.
2. For Reinforcing Stud End Details, see "Precast Wall Details No. 3" sheet.

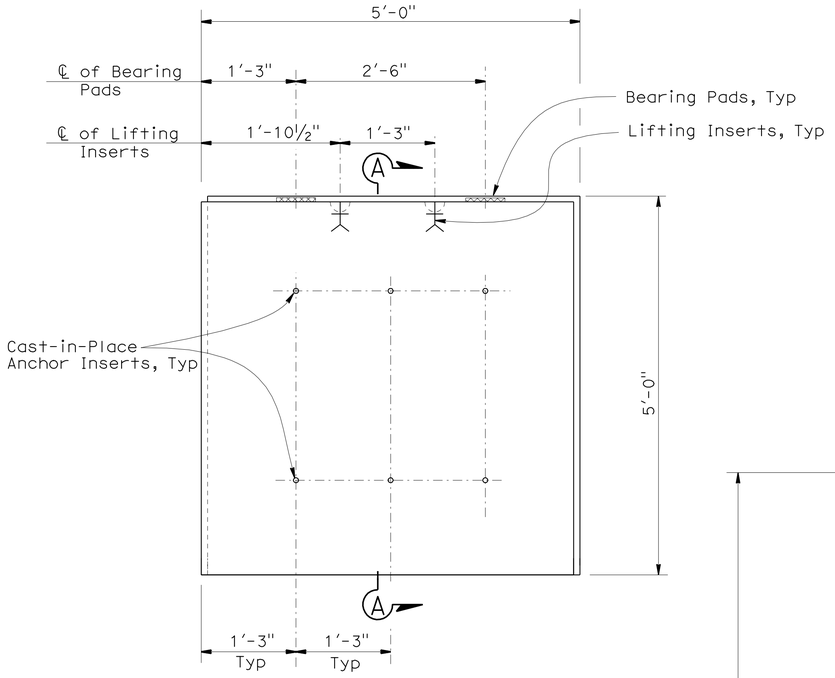

(BACK FACE SHOWN)
BOTTOM PANEL
1" = 1'-0"

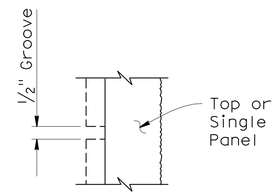

GROOVE DETAIL
No Scale

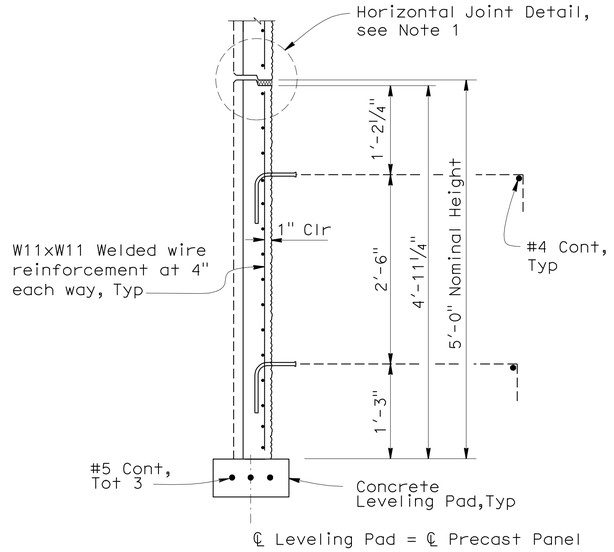

SECTION A-A
1"=1'-0"

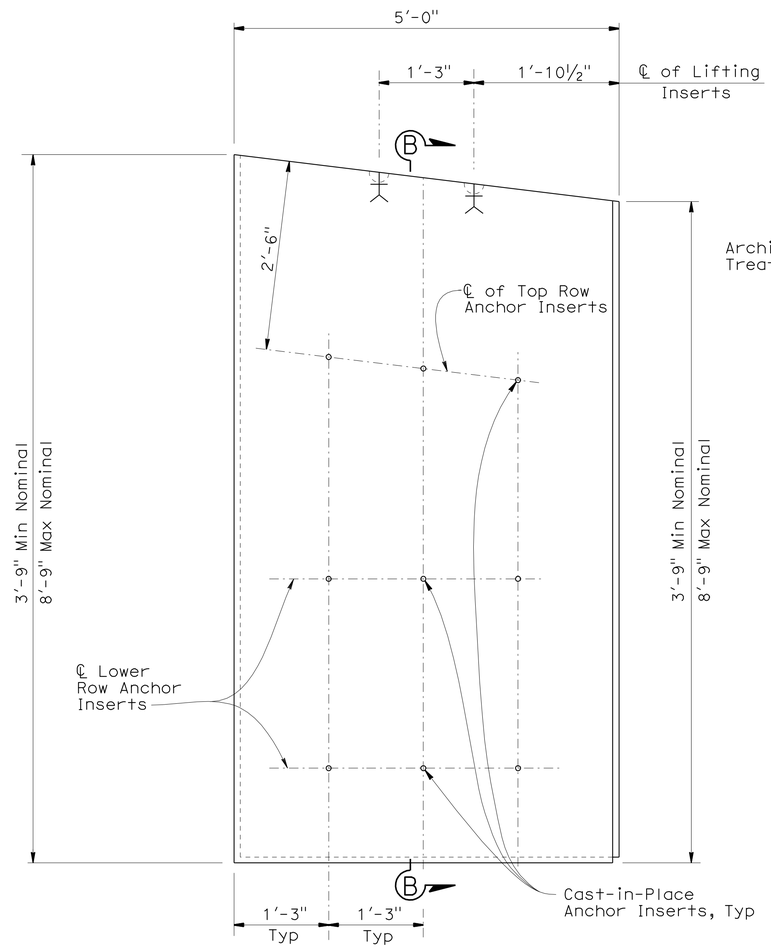

NOTE: Omit Lower Row Cast-in place Anchor Inserts when Top Row Inserts are closer than 6".

(BACK FACE SHOWN)
TOP & SINGLE PANELS
1" = 1'-0"

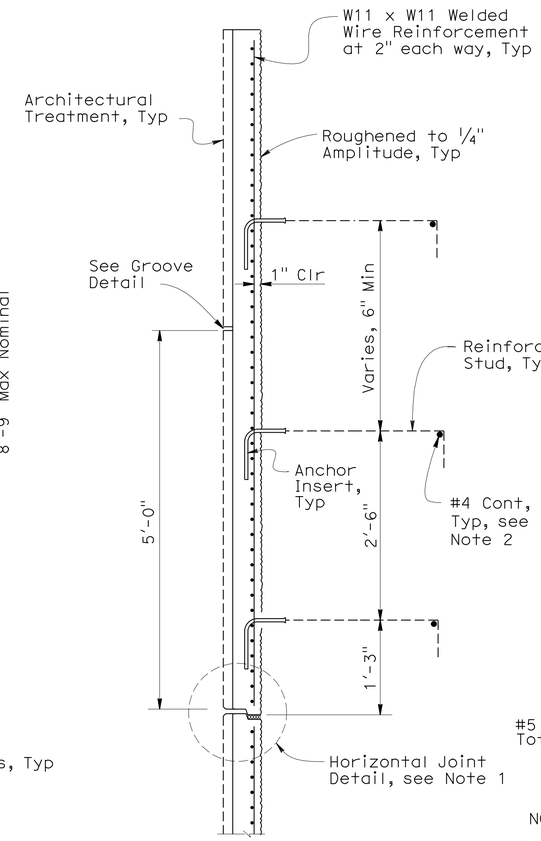

SECTION B-B (TOP PANEL)
1" = 1'-0"

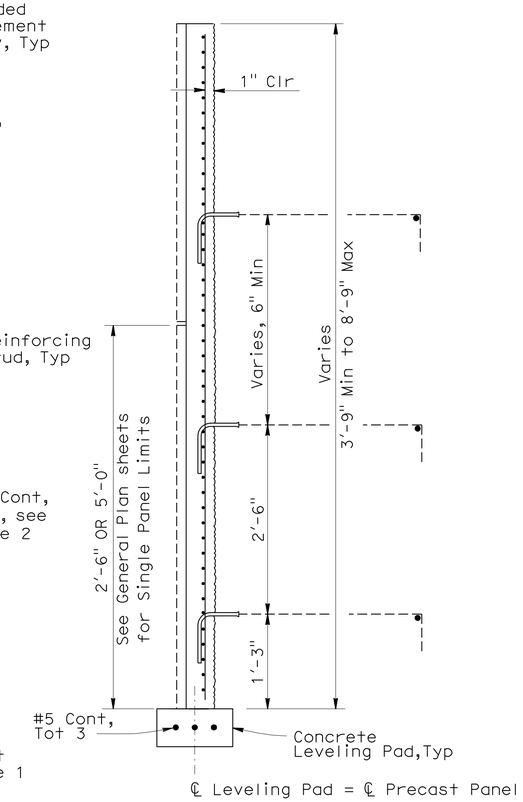

NOTE: For Information not shown see "Section B-B (Top Panel)"

SECTION B-B (SINGLE PANEL)
1" = 1'-0"

NOTE:
The Contractor shall verify all controlling field dimensions before ordering or fabricating any material

2 **REVISED PER ADDENDUM NO. 2 DATED APRIL 1, 2010**

Sudhakar Vatti
DESIGN OVERSIGHT Sudhakar Vatti
5-19-09
SIGN OFF DATE

	BY	CHECKED
DESIGN	M. Ruvalcaba	M. Mohseni
DETAILS	N. Morcillo	M. Ruvalcaba
QUANTITIES	M. Ruvalcaba	M. Mohseni

PREPARED FOR THE STATE OF CALIFORNIA DEPARTMENT OF TRANSPORTATION

MOHSEN MOHSENI
PROJECT ENGINEER

BRIDGE NO. 55E0073
POST MILE R1.11

PRECAST WALL No. 1299 WITH LIGHTWEIGHT FILL (CELLULAR CONCRETE)

PRECAST WALL DETAILS No. 2

DESIGN DETAIL SHEET (ENGLISH) (REV. 2/25/05)

ORIGINAL SCALE IN INCHES FOR REDUCED PLANS 0 1 2 3

CU 12235
EA 071621

DISREGARD PRINTS BEARING EARLIER REVISION DATES

REVISION DATES (PRELIMINARY STAGE ONLY) 10/27/08 2/23/09 5/18/09

SHEET 4 OF 17

FILE => 55-E0073-g-rwdt02.add

USERNAME => friehard DATE PLOTTED => 29-MAR-2010 TIME PLOTTED => 11:22

DIST	COUNTY	ROUTE	POST MILES TOTAL PROJECT	SHEET No	TOTAL SHEETS
12	Ora	22,405	R0.7/R2.9, 20.4/22.3	905	1006

2

LICENSED LANDSCAPE ARCHITECT

9-21-09
PLANS APPROVAL DATE

LICENSED LANDSCAPE ARCHITECT
CATHY L. JOHNSON
NO. 4545
01-31-10
Renewal Date
05-18-09
Date
STATE OF CALIFORNIA

The State of California or its officers or agents shall not be responsible for the accuracy or completeness of electronic copies of this plan sheet.

RBF CONSULTING
14725 ALTON PARKWAY
IRVINE, CA 92618

OCTA
550 SOUTH MAIN STREET
ORANGE, CA 92863

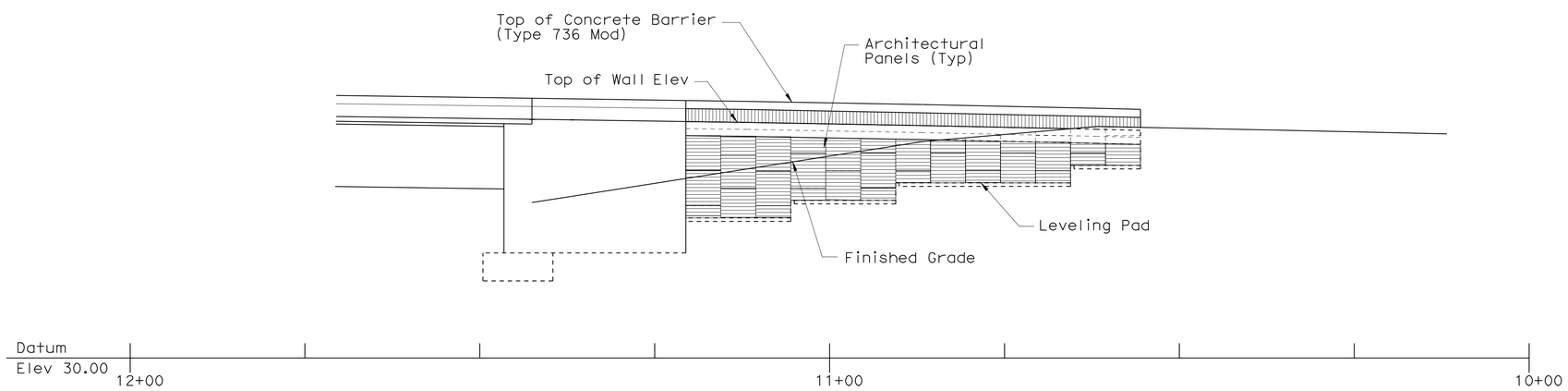

ELEVATION (SEGMENT-1)

1" = 10'

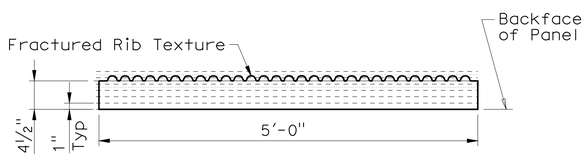

SECTION A-A

1" = 1'-0"

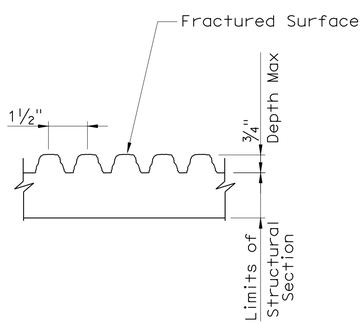

FRACTURED RIB TEXTURE

NO SCALE

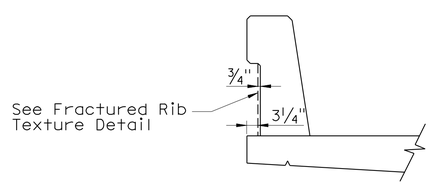

CONCRETE BARRIER TYPE 736 (MODIFIED)

NO SCALE

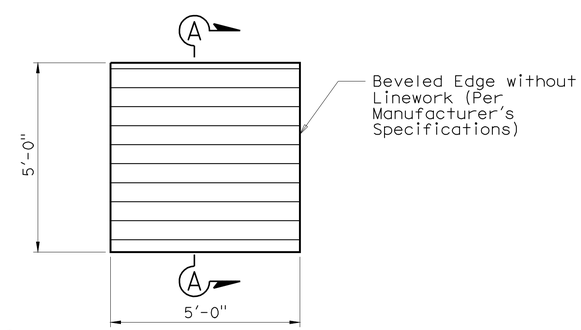

FRACTURED RIB TEXTURE PANEL

½" = 1'-0"

NOTE:
The contractor shall verify all controlling field dimensions before ordering or fabricating any material.

2 **REVISED PER ADDENDUM NO. 2 DATED APRIL 1, 2010**

Sudhakar Vatti
DESIGN OVERSIGHT Sudhakar Vatti
5-18-09
SIGN OFF DATE

	BY	CHECKED
DESIGN	C. JOHNSON	A. SU
DETAILS	R. KELCHER	A. SU
QUANTITIES	H. OKOLO	

PREPARED FOR THE
STATE OF CALIFORNIA
DEPARTMENT OF TRANSPORTATION

B. LOSEY
PROJECT ENGINEER

BRIDGE NO. 55E0073
POST MILE 1.11-1.12

PRECAST WALL No. 1299 WITH LIGHTWEIGHT FILL (CELLULAR CONCRETE)

RW 1299 ARCHITECTURAL PANEL LAYOUT AND DETAIL

DESIGN DETAIL SHEET (ENGLISH) (REV. 2/25/05)

ORIGINAL SCALE IN INCHES FOR REDUCED PLANS 0 1 2 3

CU 12235
EA 071621

DISREGARD PRINTS BEARING EARLIER REVISION DATES

REVISION DATES (PRELIMINARY STAGE ONLY) 10/27/08 02/23/09 05/18/09

SHEET 11 OF 17

FILE => 55-E0073-v-rwdt01.add

USERNAME => trlenard DATE PLOTTED => 29-MAR-2010 TIME PLOTTED => 11:22

DIST	COUNTY	ROUTE	POST MILES TOTAL PROJECT	SHEET No	TOTAL SHEETS
12	Ora	22,405	R0.7/R2.9, 20.4/22.3	912	1006

REGISTERED CIVIL ENGINEER 5/18/09 DATE

9-21-09
PLANS APPROVAL DATE

The State of California or its officers or agents shall not be responsible for the accuracy or completeness of electronic copies of this plan sheet.

REGISTERED PROFESSIONAL ENGINEER MOHSEN MOHSENI No. C45999 Exp. 12/31/10 CIVIL STATE OF CALIFORNIA

PARSONS 2201 DUPONT DRIVE SUITE 200 IRVINE, CA 92612

OCTA 550 SOUTH MAIN STREET ORANGE, CA 92863

INDEX TO PLANS

SHEET NO.	TITLE
1	INDEX TO PLANS
2	GENERAL PLAN No.1
3	GENERAL PLAN No.2
4	GENERAL PLAN No.3
5	GENERAL PLAN No.4
6	GENERAL PLAN No.5
7	GENERAL PLAN No.6
8	PRECAST WALL DETAILS No. 1
9	PRECAST WALL DETAILS No. 2
10	PRECAST WALL DETAILS No. 3
11	PRECAST WALL DETAILS No. 4
12	PRECAST WALL DETAILS No. 5
13	PRECAST WALL DETAILS No. 6
14	PRECAST WALL DETAILS No. 7
15	PRECAST WALL DETAILS No. 8
16	PRECAST WALL DETAILS No. 9
17	RW 1300 ARCHITECTURAL PANEL LAYOUT No. 1
18	RW 1300 ARCHITECTURAL PANEL LAYOUT No. 2
19	ARCHITECTURAL PANEL DETAILS No. 1
20	ARCHITECTURAL PANEL DETAILS No. 2
21	LOG OF TEST BORINGS 1 OF 6
22	LOG OF TEST BORINGS 2 OF 6
23	LOG OF TEST BORINGS 3 OF 6
24	LOG OF TEST BORINGS 4 OF 6
25	LOG OF TEST BORINGS 5 OF 6
26	LOG OF TEST BORINGS 6 OF 6

STANDARD PLANS DATED MAY 2006

With Errata No.1 through 9

A10A	ACRONYMS AND ABBREVIATIONS (Sheet 1 of 2)
A10B	ACRONYMS AND ABBREVIATIONS (Sheet 2 of 2)
A10C	SYMBOLS (Sheet 1 of 2)
A10D	SYMBOLS (Sheet 2 of 2)
A76A	CONCRETE BARRIER TYPE 60
B11-56	CONCRETE BARRIER TYPE 736
ES-6A	ELECTRICAL SYSTEMS (LIGHTING STANDARD TYPES 15 AND 21)
ES-6B	ELECTRICAL SYSTEMS (LIGHTING STANDARD TYPES 15 AND 21 BARRIER RAIL MOUNTED DETAILS)

GENERAL WALL NOTES

1. All Precast Concrete Panels, except Top Panels and Single Panels, are 5'-0" (Nominal Length) and 5'-0" (Nominal Height) per full size panel dimensions shown in "Precast Wall Details" sheets. Half Panels are 2'-6" nominal height.

2. Top Panels vary in height from 3'-9" to 8'-9" (Nominal) maximum. Top Panels are placed directly above intermediate panels. Where Top Panels exceed 5'-0" in height, a ½" horizontal groove shall be incorporated into the Architectural Treatment section of the Panel. Top Panels shall be 5'-0" long (Nominal).

3. Single Panels vary in height from 3'-9" to 8'-9" maximum. Single Panels are placed directly above the concrete leveling pad. Single Panels shall not have any other panels above it. Where Single Panels exceed 5'-0" in height, a ½" horizontal groove shall be incorporated into the Architectural Treatment of the Panel. Single Panels shall be 5'-0" long (Nominal).

4. Top Panels and Single Panels shall be cast as shown on the plans, to conform with wall profile.

5. For existing utilities to be abandoned or removed (not shown), and for location of proposed utilities, see "Road Plans".

6. Lightweight Cellular Concrete lifts shall not exceed 2 feet 6 inches in depth. The last lift of the top cellular concrete layer shall not be less than 2 feet. Intermediate lifts of cellular concrete layers shall not be placed less than 24 hours after the placement of the previous lift.

7. Longitudinal construction joints are not allowed. ~~along the top cellular concrete layer~~. Transverse joints in top cellular concrete layer shall be per details shown on Precast Wall Detail sheets. 2

8. No construction vehicles or machinery shall be operated on the intermediate cellular concrete lifts during construction. No contruction vehicles or machinery shall be operated on the last lift of the top cellular concrete layer until the full specified compresive strength is reached. Top layer shall be placed parallel to the Roadway Cross Slope.

9. Trucks shall be at least 6 feet from the edge of the top layer of the Lightweight Cellular Concrete during construction after the top cellular concrete layer has attained its full strength.

10. For surcharging and foundation preparation see "Road Plans".

11. Lifting inserts for precast concrete panels shall be designed to a lift of minimum 6.50 kips each.

12. Settlement Monitoring will be required.

NOTE:
The Contractor shall verify all controlling field dimensions before ordering or fabricating any material

PLAN SYMBOLS

Standard Plan Sheet No.

Detail No.

A Section Identification

LEGEND

T OR T — Groove — Top Panel

S OR S — Groove — Single Panel

Intermediate or Bottom Panel

Bottom Half Panel

EPDM Ethylene Propylene Diene M-Class Rubber

GENERAL DESIGN NOTES

Design:
Caltrans Bridge Design Specifications - April 2000 (LFD)
(1996 AASHTO with Inerims and Revisions by Caltrans)

Live Loading:
HS20-44 and Alternative and Permit Design Load

Lightweight Cellular Concrete Fill:
f'_c = 125 psi (Minimum concrete compressive Strength in 28 days) Top Layer
f'_c = 60 psi (Minimum concrete compressive Strength in 28 days) Bottom Layers
f'_{ci} = 10 psi (Minumum initial Concrete compressive Strength prior to the next lift) Bottom Layers

Precast Concrete Panels:
f'_c = 4,000 psi (Minimum concrete compressive Strength in 28 days)
f_y = 60 ksi (Yield Strength of Welded Wire Reinforcement)

Threaded Rebar Studs:
f_y = 60 ksi

Reinforced Concrete:
f'_c = 3,600 psi, Except as Noted (Minimum concrete compressive Strength in 28 days)
f_y = 60 ksi (Yield Strength of Reinforcement)

Design Seismic Load:
0.5 Dead Load

Leveling Pad Footing Pressure (Tons per SF):

Allowable	Design
0.75	0.42

2 **REVISED PER ADDENDUM NO. 2 DATED APRIL 1, 2010**

DESIGN OVERSIGHT Sudhakar Vatti
5-19-09
SIGN OFF DATE

	BY	CHECKED
DESIGN	M. Ruvalcaba	M. Mohseni
DETAILS	N. Morcillo	M. Ruvalcaba
QUANTITIES	M. Ruvalcaba	M. Mohseni

PREPARED FOR THE STATE OF CALIFORNIA DEPARTMENT OF TRANSPORTATION

MOHSEN MOHSENI
PROJECT ENGINEER

BRIDGE NO. 55E0074
POST MILE R0.917

PRECAST WALL No. 1300 WITH LIGHTWEIGHT FILL (CELLULAR CONCRETE)
INDEX TO PLANS

DESIGN DETAIL SHEET (ENGLISH) (REV. 2/25/05)

ORIGINAL SCALE IN INCHES FOR REDUCED PLANS 0 1 2 3

CU 12235
EA 071621

DISREGARD PRINTS BEARING EARLIER REVISION DATES

REVISION DATES (PRELIMINARY STAGE ONLY) 10/27/08 2/23/09 5/18/09

SHEET 1 OF 26

FILE => 55-e0074-a-aitp.add

USERNAME => trlenard DATE PLOTTED => 29-MAR-2010 TIME PLOTTED => 11:22

DIST	COUNTY	ROUTE	POST MILES TOTAL PROJECT	SHEET No	TOTAL SHEETS
12	Ora	22,405	R0.7/R2.9, 20.4/22.3	919	1006

2

REGISTERED CIVIL ENGINEER 5/18/09 DATE

9-21-09
PLANS APPROVAL DATE

REGISTERED PROFESSIONAL ENGINEER MOHSEN MOHSENI No. C45999 Exp. 12/31/10 CIVIL STATE OF CALIFORNIA

The State of California or its officers or agents shall not be responsible for the accuracy or completeness of electronic copies of this plan sheet.

PARSONS 2201 DUPONT DRIVE SUITE 200 IRVINE, CA 92612

OCTA 550 SOUTH MAIN STREET ORANGE, CA 92863

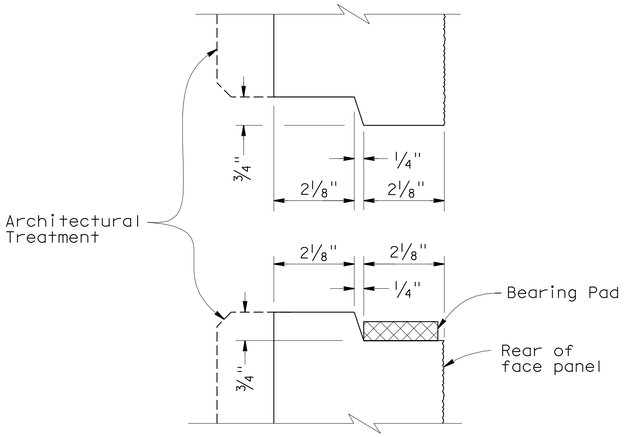

HORIZONTAL JOINT DETAIL

1"=2'-0"

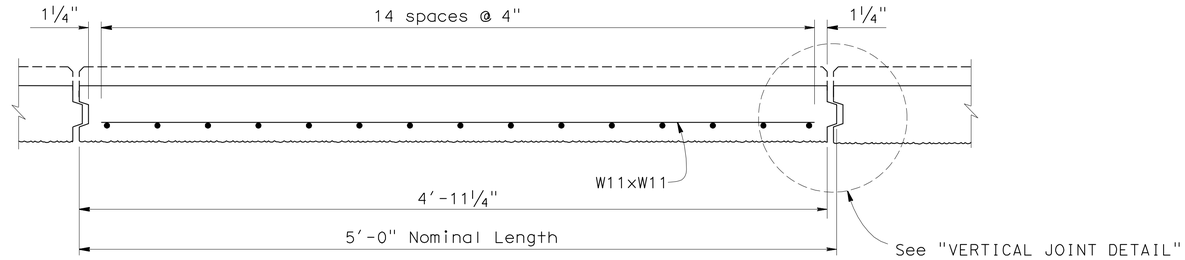

PLAN - FACE PANEL

1/2"=1'-0"

NOTES:

1. Place reinforced elastomeric bearing pads in all of the panel joints between the panels. Place one in each vertical joint where the horizontal joint intersects it. Place two per panel in each horizontal joint.
   1/2" x 1 1/2" x 6" for vertical joints
   1/2" x 2" x 6" for horizontal joints.
2. Top and Single Panels shall be cast as shown on plans, to conform with wall profile.
3. For Architectural Treatment Details, see Architectural Panel sheets.
4. For Insert Load requirement see "Index to Plans" sheet.

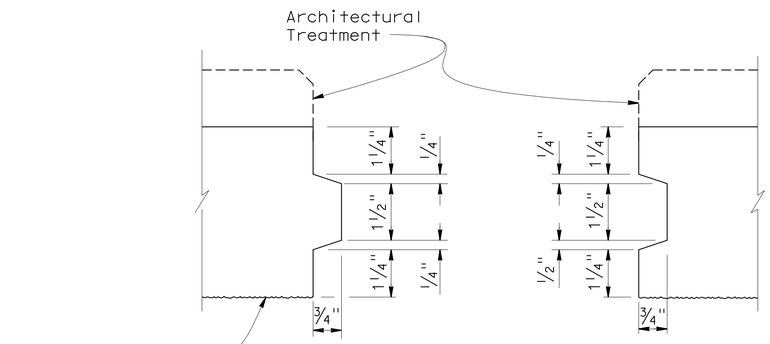

VERTICAL JOINT DETAIL

1"=2'-0"

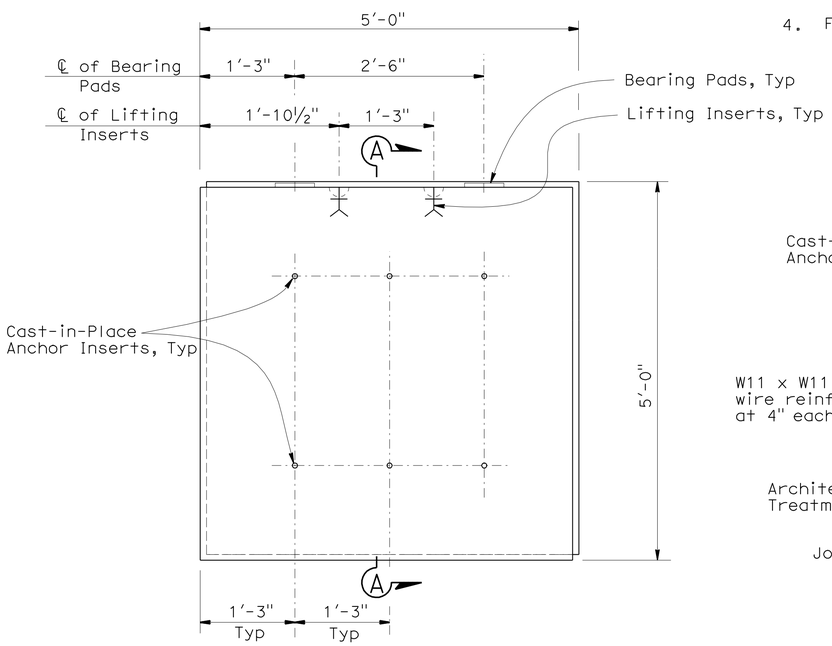

(BACK FACE SHOWN)

INTERMEDIATE PANEL

1" = 1'-0"

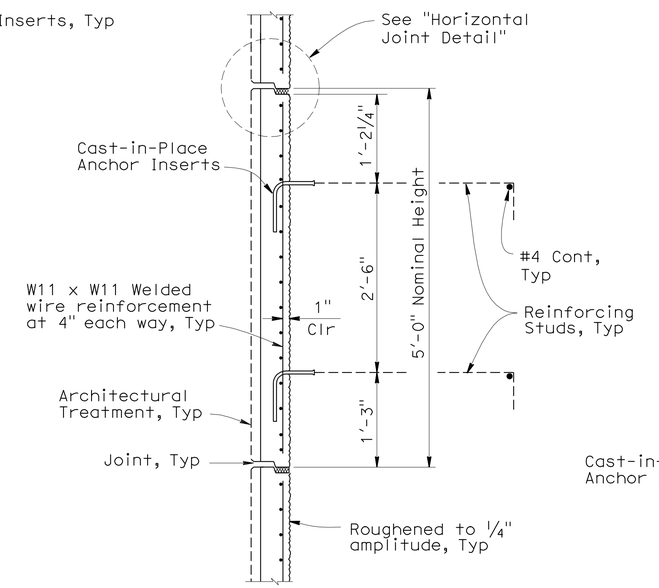

SECTION A-A

1" = 1'-0"

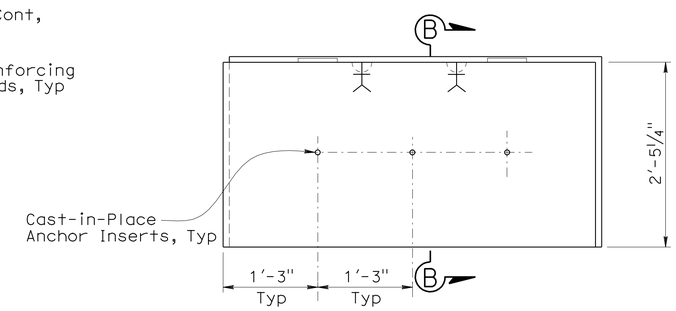

NOTE:
For information not shown see "Intermediate Panel".

(BACK FACE SHOWN)

BOTTOM HALF PANEL

1" = 1'-0"

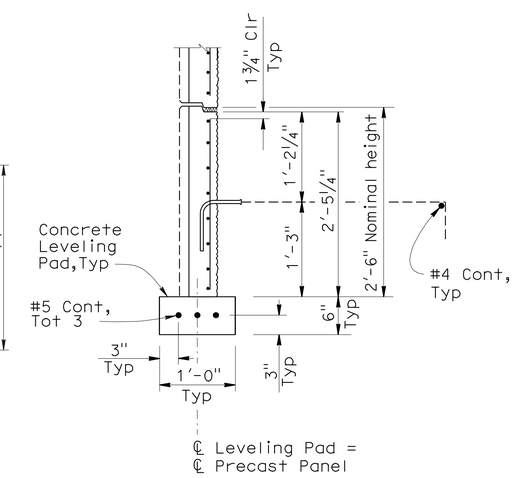

SECTION B-B

1"=1'-0"

NOTE:
The Contractor shall verify all controlling field dimensions before ordering or fabricating any material

2 **REVISED PER ADDENDUM NO. 2 DATED APRIL 1, 2010**

Sudhakar Vatti
DESIGN OVERSIGHT Sudhakar Vatti
5-19-09
SIGN OFF DATE

	BY	CHECKED
DESIGN	M. Ruvalcaba	M. Mohseni
DETAILS	N. Morcillo	M. Ruvalcaba
QUANTITIES	M. Ruvalcaba	M. Mohseni

PREPARED FOR THE STATE OF CALIFORNIA DEPARTMENT OF TRANSPORTATION

MOHSEN MOHSENI
PROJECT ENGINEER

BRIDGE NO. 55E0074
POST MILE R0.917

PRECAST WALL No. 1300 WITH LIGHTWEIGHT FILL (CELLULAR CONCRETE)

PRECAST WALL DETAILS No. 1

DESIGN DETAIL SHEET (ENGLISH) (REV. 2/25/05)

ORIGINAL SCALE IN INCHES FOR REDUCED PLANS 0 1 2 3

CU 12235
EA 071621

DISREGARD PRINTS BEARING EARLIER REVISION DATES

REVISION DATES (PRELIMINARY STAGE ONLY) 10/27/08 2/23/09 5/18/09

SHEET 8 OF 26

FILE => 55-E0074-g-rwdt01.add

USERNAME => trlenard DATE PLOTTED => 23-MAR-2010 TIME PLOTTED => 11:22

DIST	COUNTY	ROUTE	POST MILES TOTAL PROJECT	SHEET No	TOTAL SHEETS
12	Ora	22,405	R0.7/R2.9, 20.4/22.3	925	1006

REGISTERED CIVIL ENGINEER 5/18/09 DATE

9-21-09
PLANS APPROVAL DATE

The State of California or its officers or agents shall not be responsible for the accuracy or completeness of electronic copies of this plan sheet.

REGISTERED PROFESSIONAL ENGINEER MOHSEN MOHSENI No. C45999 Exp. 12/31/10 CIVIL STATE OF CALIFORNIA

PARSONS 2201 DUPONT DRIVE SUITE 200 IRVINE, CA 92612

OCTA 550 SOUTH MAIN STREET ORANGE, CA 92863

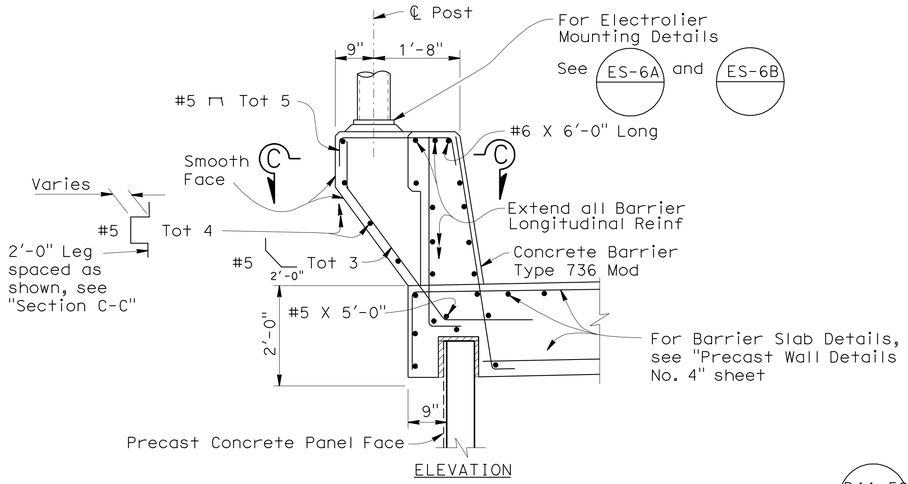

ELEVATION

NOTE: For additional information, see "Revised Standard Plans RSP" B11-56

ELECTROLIER PEDESTAL ON PRECAST WALL

3/4" = 1'-0"

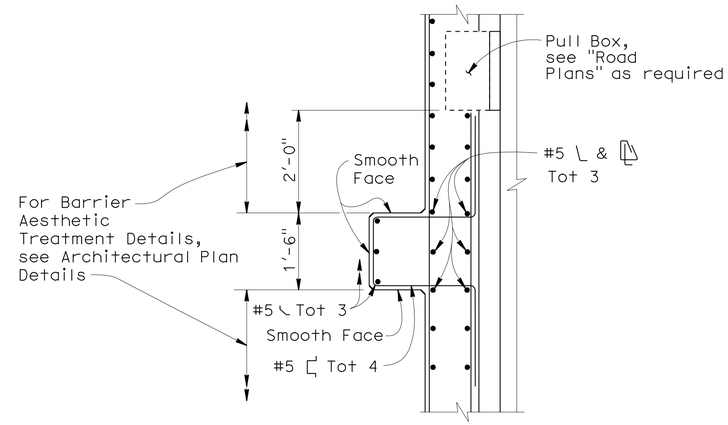

SECTION C-C

No Scale

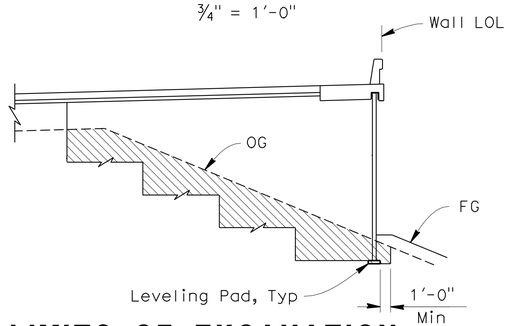

LIMITS OF EXCAVATION STA 10+00 TO 19+50

No Scale

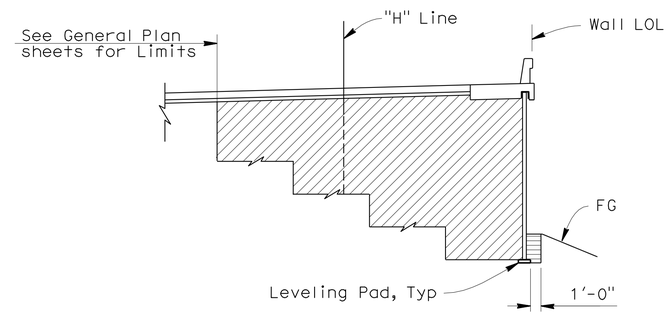

LIMITS OF BACKFILL STA 10+00 TO 19+50

No Scale

LEGEND:

- Limits of Lightweight Fill (Cellular Concrete)
- Limits of Structure Excavation
- Limits of Structure Backfill
- Limits of Roadway Embankment

ABBREVIATIONS:

GP - Grading Plane

SG - Surcharge Grade

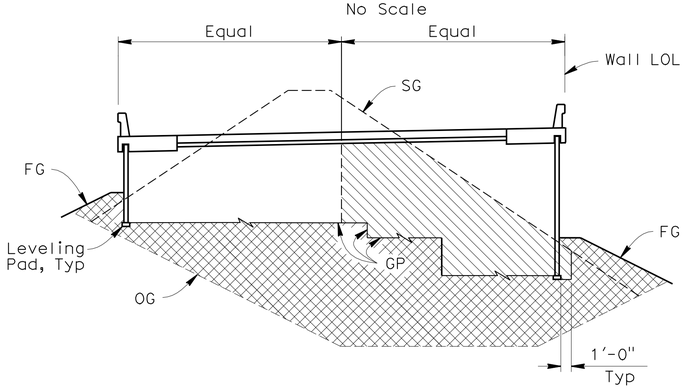

LIMITS OF EXCAVATION STA 19+50 TO 20+15

No Scale

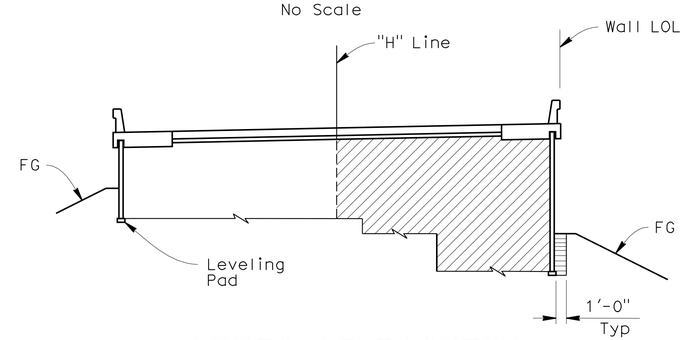

LIMITS OF BACKFILL STA 19+50 TO 20+15

No Scale

NOTE:
The Contractor shall verify all controlling field dimensions before ordering or fabricating any material

2 **REVISED PER ADDENDUM NO. 2 DATED APRIL 1, 2010**

Sudhakar Vatti
DESIGN OVERSIGHT Sudhakar Vatti
5-19-09
SIGN OFF DATE

	BY	CHECKED
DESIGN	M. Ruvalcaba	M. Mohseni
DETAILS	N. Morcillo	M. Ruvalcaba
QUANTITIES	M. Ruvalcaba	M. Mohseni

PREPARED FOR THE STATE OF CALIFORNIA DEPARTMENT OF TRANSPORTATION

MOHSEN MOHSENI
PROJECT ENGINEER

BRIDGE NO. 55E0074
POST MILE R0.917

PRECAST WALL No. 1300 WITH LIGHTWEIGHT FILL (CELLULAR CONCRETE)

PRECAST WALL DETAILS No. 7

DESIGN DETAIL SHEET (ENGLISH) (REV. 2/25/05)

ORIGINAL SCALE IN INCHES FOR REDUCED PLANS 0 1 2 3

CU 12235
EA 071621

DISREGARD PRINTS BEARING EARLIER REVISION DATES

REVISION DATES (PRELIMINARY STAGE ONLY) 10/27/08 2/28/09 5/18/09

SHEET 14 OF 26

FILE => 55-E0074-g-rwdt07.add

USERNAME => trrenard DATE PLOTTED => 29-MAR-2010 TIME PLOTTED => 11:22

DIST	COUNTY	ROUTE	POST MILES TOTAL PROJECT	SHEET No	TOTAL SHEETS
12	Ora	22,405	R0.7/R2.9, 20.4/22.3	928	1006

LICENSED LANDSCAPE ARCHITECT

9-21-09
PLANS APPROVAL DATE

LICENSED LANDSCAPE ARCHITECT
CATHY L. JOHNSON
NO. 4545
Registered
01-31-10
Renewal Date
05-18-09
Date
STATE OF CALIFORNIA

The State of California or its officers or agents shall not be responsible for the accuracy or completeness of electronic copies of this plan sheet.

RBF CONSULTING
14725 ALTON PARKWAY
IRVINE, CA 92618

OCTA
550 SOUTH MAIN STREET
ORANGE, CA 92863

2

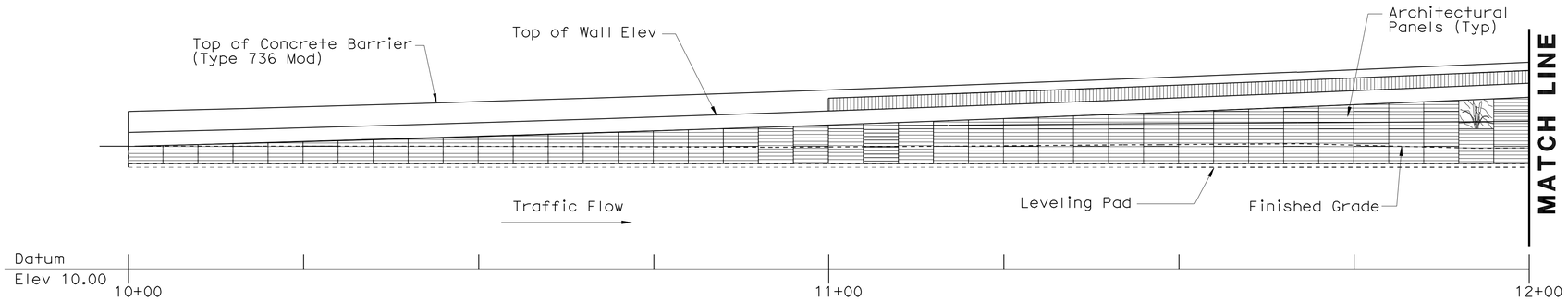

ELEVATION (SEGMENT-1)

1" = 10'

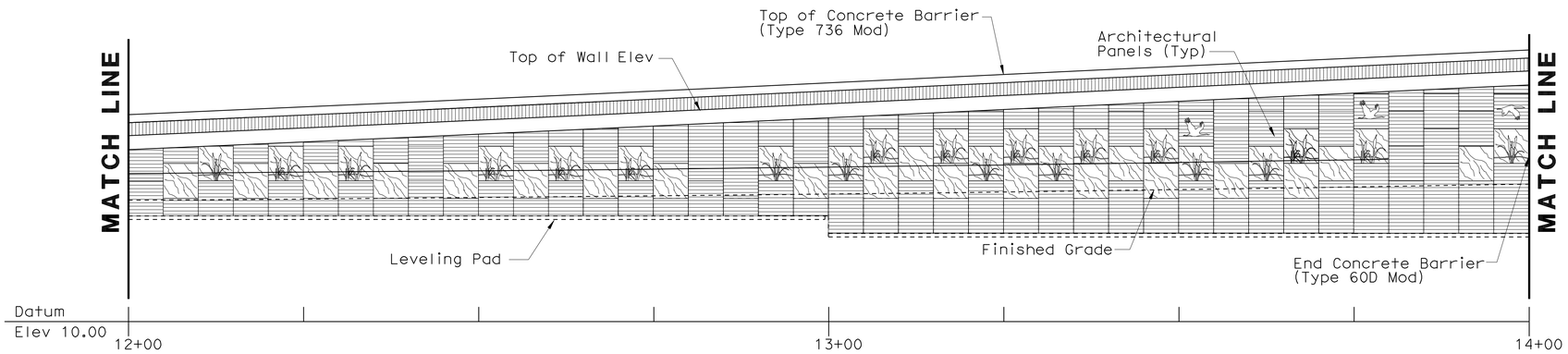

ELEVATION (SEGMENT-2)

1" = 10'

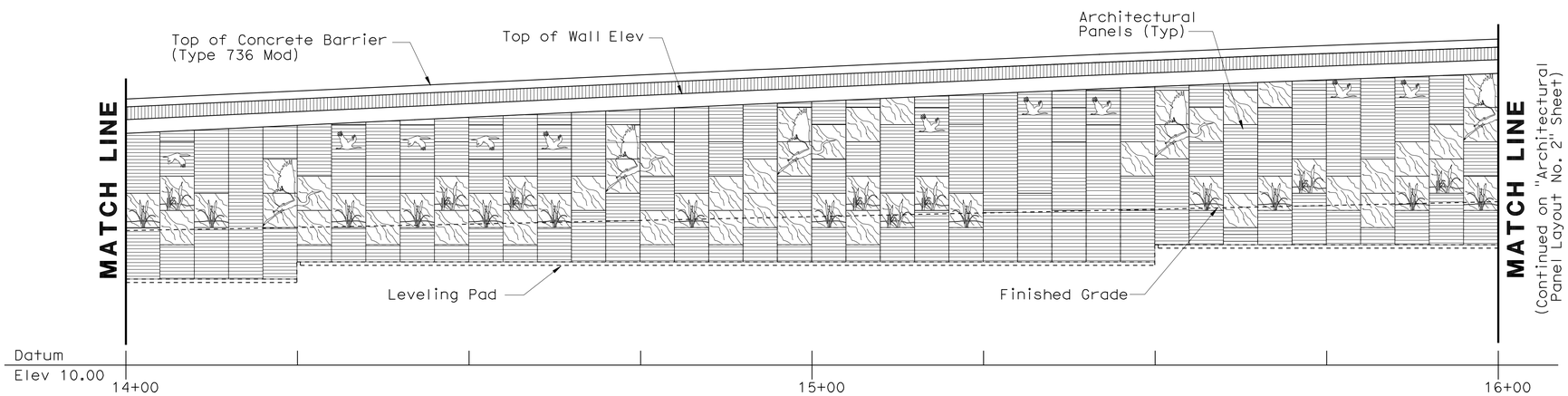

ELEVATION (SEGMENT-3)

1" = 10'

NOTE:
The contractor shall verify all controlling field dimensions before ordering or fabricating any material.

2 **REVISED PER ADDENDUM No. 2 DATED APRIL 1, 2010**

Sudhakar Vatti
DESIGN OVERSIGHT Sudhakar Vatti
5-19-09
SIGN OFF DATE

	BY	CHECKED
DESIGN	C. JOHNSON	A. SU
DETAILS	R. KELCHER	A. SU
QUANTITIES	H. OKOLO	

PREPARED FOR THE STATE OF CALIFORNIA DEPARTMENT OF TRANSPORTATION

B. LOSEY
PROJECT ENGINEER

BRIDGE NO. 55E0074
POST MILE 0.92-1.12

PRECAST WALL No. 1300 WITH LIGHTWEIGHT FILL (CELLULAR CONCRETE)
RW 1300 ARCHITECTURAL PANEL LAYOUT NO. 1

DESIGN DETAIL SHEET (ENGLISH) (REV. 2/25/05)

ORIGINAL SCALE IN INCHES FOR REDUCED PLANS 0 1 2 3

CU 12235
EA 071621

DISREGARD PRINTS BEARING EARLIER REVISION DATES
REVISION DATES (PRELIMINARY STAGE ONLY) 09/26/08 02/23/09 05/18/09

SHEET 17 OF 26

FILE => 55-E0074-v-rwdt01.add

USERNAME => trmikesi DATE PLOTTED => 30-MAR-2010 TIME PLOTTED => 09:41

DIST	COUNTY	ROUTE	POST MILES TOTAL PROJECT	SHEET No	TOTAL SHEETS
12	Ora	22,405	R0.7/R2.9, 20.4/22.3	929	1006

LICENSED LANDSCAPE ARCHITECT

9-21-09
PLANS APPROVAL DATE

The State of California or its officers or agents shall not be responsible for the accuracy or completeness of electronic copies of this plan sheet.

LICENSED LANDSCAPE ARCHITECT
CATHY L. JOHNSON
NO. 4545
Expiration Date
01-31-10
Renewal Date
05-18-09
Date
STATE OF CALIFORNIA

RBF CONSULTING
14725 ALTON PARKWAY
IRVINE, CA 92618

OCTA
550 SOUTH MAIN STREET
ORANGE, CA 92863

2

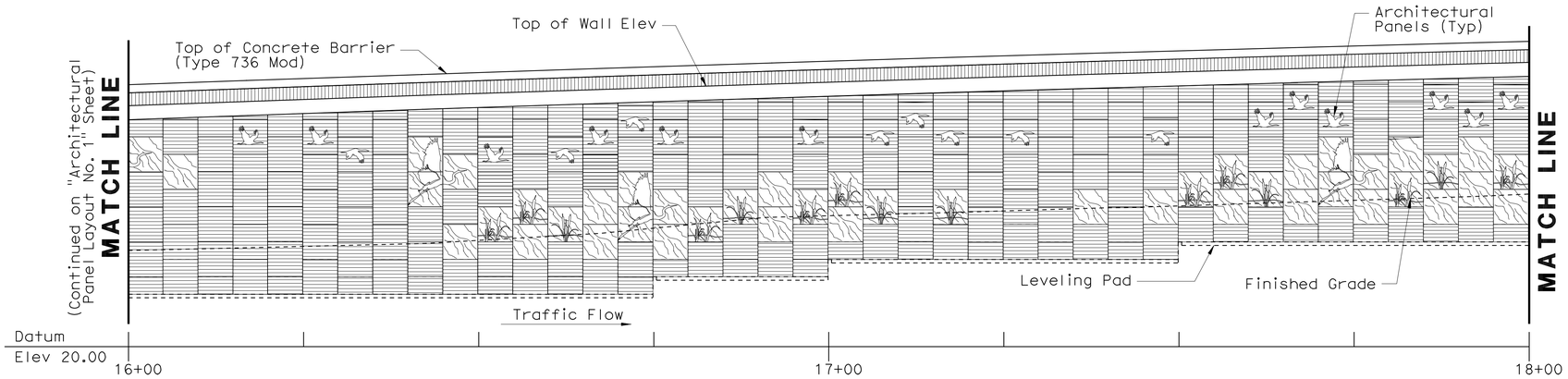

ELEVATION (SEGMENT-4)

1" = 10'

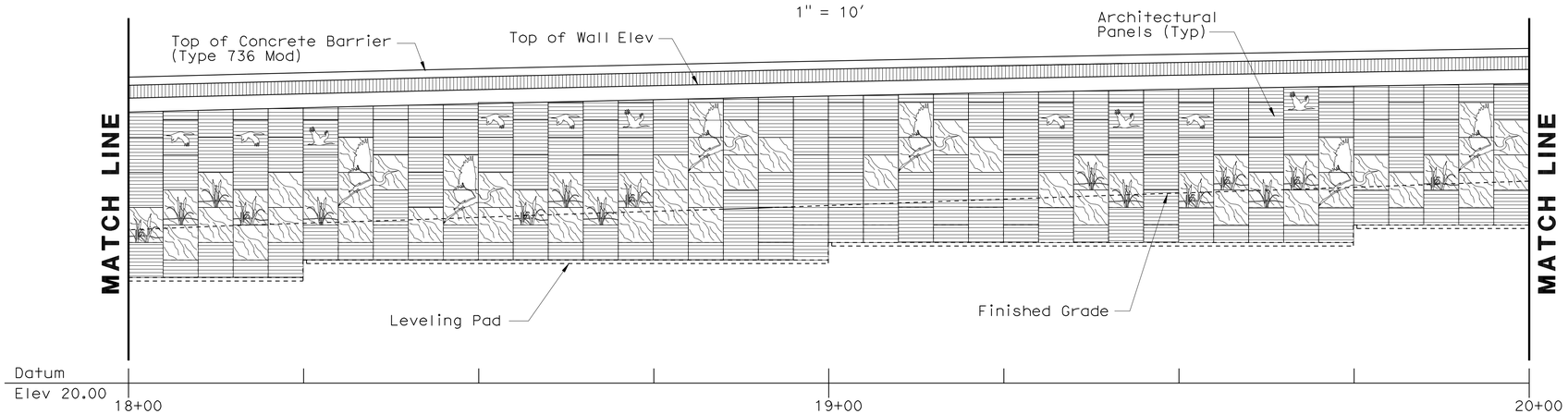

ELEVATION (SEGMENT-5)

1" = 10'

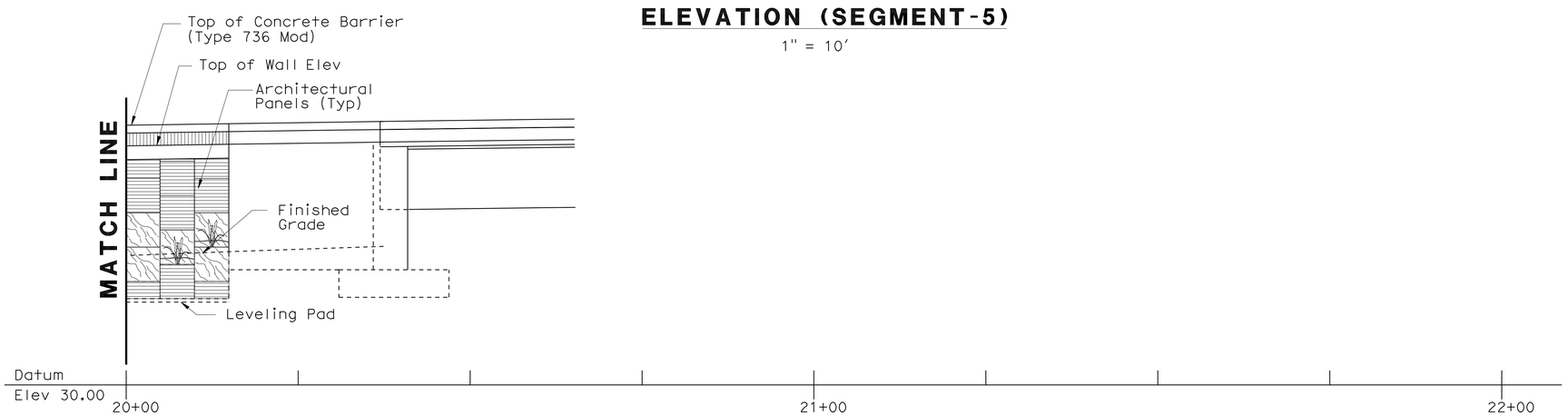

ELEVATION (SEGMENT-6)

1" = 10'

NOTE:
The contractor shall verify all controlling field dimensions before ordering or fabricating any material.

2 **REVISED PER ADDENDUM No. 2 DATED APRIL 1, 2010**

Sudhakar Vatti
DESIGN OVERSIGHT Sudhakar Vatti
5-19-09
SIGN OFF DATE

	BY	CHECKED
DESIGN	C. JOHNSON	A. SU
DETAILS	R. KELCHER	A. SU
QUANTITIES	H. OKOLO	

PREPARED FOR THE STATE OF CALIFORNIA DEPARTMENT OF TRANSPORTATION

B. LOSEY
PROJECT ENGINEER

BRIDGE NO. 55E0074
POST MILE 0.92-1.12

PRECAST WALL No. 1300 WITH LIGHTWEIGHT FILL (CELLULAR CONCRETE)
RW 1300 ARCHITECTURAL PANEL LAYOUT NO. 2

DESIGN DETAIL SHEET (ENGLISH) (REV. 2/25/05)

ORIGINAL SCALE IN INCHES FOR REDUCED PLANS 0 1 2 3

CU 12235
EA 071621

DISREGARD PRINTS BEARING EARLIER REVISION DATES
REVISION DATES (PRELIMINARY STAGE ONLY) 09/26/08 02/23/09 05/18/09

SHEET 18 OF 26

FILE => 55-E0074-v-rwdt02.add

USERNAME => rtmikes1 DATE PLOTTED => 30-MAR-2010 TIME PLOTTED => 09:41

DIST	COUNTY	ROUTE	POST MILES TOTAL PROJECT	SHEET No	TOTAL SHEETS
12	Ora	22,405	R0.7/R2.9, 20.4/22.3	938	1006

REGISTERED CIVIL ENGINEER 5/18/09 DATE

9-21-09
PLANS APPROVAL DATE

The State of California or its officers or agents shall not be responsible for the accuracy or completeness of electronic copies of this plan sheet.

REGISTERED PROFESSIONAL ENGINEER MOHSEN MOHSENI No. C45999 Exp. 12/31/10 CIVIL STATE OF CALIFORNIA

PARSONS 2201 DUPONT DRIVE SUITE 200 IRVINE, CA 92612

OCTA 550 SOUTH MAIN STREET ORANGE, CA 92863

INDEX TO PLANS

SHEET NO.	TITLE
1	INDEX TO PLANS
2	GENERAL PLAN No. 1
3	GENERAL PLAN No. 2
4	GENERAL PLAN No. 3
5	GENERAL PLAN No. 4
6	GENERAL PLAN No. 5
7	PRECAST WALL DETAILS No. 1
8	PRECAST WALL DETAILS No. 2
9	PRECAST WALL DETAILS No. 3
10	PRECAST WALL DETAILS No. 4
11	PRECAST WALL DETAILS No. 5
12	PRECAST WALL DETAILS No. 6
13	PRECAST WALL DETAILS No. 7
14	PRECAST WALL DETAILS NO. 8
15	PRECAST WALL DETAILS NO. 9
16	PRECAST WALL DETAILS NO. 10
17	RW 1325 ARCHITECTURAL PANEL LAYOUT No. 1
18	RW 1325 ARCHITECTURAL PANEL LAYOUT No. 2
19	ARCHITECTURAL PANEL DETAILS No. 1
20	ARCHITECTURAL PANEL DETAILS No. 2
21	LOG OF TEST BORINGS 1 OF 6
22	LOG OF TEST BORINGS 2 OF 6
23	LOG OF TEST BORINGS 3 OF 6
24	LOG OF TEST BORINGS 4 OF 6
25	LOG OF TEST BORINGS 5 OF 6
26	LOG OF TEST BORINGS 6 OF 6

STANDARD PLANS DATED MAY 2006

With Errata No.1 through 9

A10A	ACRONYMS AND ABBREVIATIONS (Sheet 1 of 2)
A10B	ACRONYMS AND ABBREVIATIONS (Sheet 2 of 2)
A10C	SYMBOLS (Sheet 1 of 2)
A10D	SYMBOLS (Sheet 2 of 2)
A76A	CONCRETE BARRIER TYPE 60
B11-56	CONCRETE BARRIER TYPE 736
ES-6A	ELECTRICAL SYSTEMS (LIGHTING STANDARD TYPES 15 AND 21)
ES-6B	ELECTRICAL SYSTEMS (LIGHTING STANDARD TYPES 15 AND 21 BARRIER RAIL MOUNTED DETAILS)

GENERAL WALL NOTES

1. All Precast Concrete Panels, except Top Panels and Single Panels, are 5'-0" (Nominal Length) and 5'-0" (Nominal Height) per full size panel dimensions shown in "Precast Wall Details" sheets. Half Panels are 2'-6" nominal height.

2. Top Panels vary in height from 3'-9" to 8'-9" (Nominal) maximum. Top Panels are placed directly above intermediate panels. Where Top Panels exceed 5'-0" in height, a ½" horizontal groove shall be incorporated into the Architectural Treatment section of the Panel. Top Panels shall be 5'-0" long (Nominal).

3. Single Panels vary in height from 3'-9" to 8'-9" maximum. Single Panels are placed directly above the concrete leveling pad. Single Panels shall not have any other panels above it. Where Single Panels exceed 5'-0" in height, a ½" horizontal groove shall be incorporated into the Architectural Treatment of the Panel. Single Panels shall be 5'-0" long (Nominal).

4. Top Panels and Single Panels shall be cast as shown on the plans, to conform with wall profile.

5. For existing utilities to be abandoned or removed (not shown), and for location of proposed utilities, see "Road Plans".

6. Lightweight Cellular Concrete lifts shall not exceed 2 feet 6 inches in depth. The last lift of the top cellular concrete layer shall not be less than 2 feet. Intermediate lifts of cellular concrete layers shall not be placed less than 24 hours after the placement of the previous lift.

7. Longitudinal construction joints are not allowed. ~~along the top cellular concrete layer.~~ Transverse joints in top cellular concrete layer shall be per details shown on Precast Wall Detail sheets. 2

8. No construction vehicles or machinery shall be operated on the intermediate cellular concrete lifts during construction. No contruction vehicles or machinery shall be operated on the last lift of the top cellular concrete layer until the full specified compresive strength is reached. Top layer shall be placed parallel to the Roadway Cross Slope.

9. Trucks shall be at least 6 feet from the edge of the top layer of the Lightweight Cellular Concrete during construction after the top cellular concrete layer has attained its full strength.

10. For surcharging and foundation preparation see "Road Plans".

11. Lifting inserts for precast concrete panels shall be designed to a lift of minimum 6.50 kips each.

12. Settlement Monitoring will be required.

NOTE:
The Contractor shall verify all controlling field dimensions before ordering or fabricating any material

PLAN SYMBOLS

Standard Plan Sheet No.

Detail No.

A Section Identification

LEGEND

Groove

T OR T Top Panel

Groove

S OR S Single Panel

Intermediate or Bottom Panel

Bottom Half Panel

EPDM Ethylene Propylene Diene M-Class Rubber

GENERAL DESIGN NOTES

Design:
Caltrans Bridge Design Specifications - April 2000 (LFD)
(1996 AASHTO with Inerims and Revisions by Caltrans)

Live Loading:
HS20-44 and Alternative and Permit Design Load

Lightweight Cellular Concrete Fill:
f'_c = 125 psi (Minimum concrete compressive Strength in 28 days) Top Layer
f'_c = 60 psi (Minimum concrete compressive Strength in 28 days) Bottom Layers
f'_{ci} = 10 psi (Minumum initial Concrete compressive Strength prior to the next lift) Bottom Layers

Precast Concrete Panels:
f'_c = 4,000 psi (Minimum concrete compressive Strength in 28 days)
f_y = 60 ksi (Yield Strength of Welded Wire Reinforcement)

Threaded Rebar Studs:
f_y = 60 ksi

Reinforced Concrete:
f'_c = 3,600 psi, Except as Noted (Minimum concrete compressive Strength in 28 days)
f_y = 60 ksi (Yield Strength of Reinforcement)

Design Seismic Load:
0.5 Dead Load

Leveling Pad Footing Pressure (Tons per SF):

Allowable	Design
0.75	0.42

2 **REVISED PER ADDENDUM No. 2 DATED APRIL 1, 2010**

DESIGN OVERSIGHT Sudhakar Vatti
5-19-09
SIGN OFF DATE

	BY	CHECKED
DESIGN	M. Ruvalcaba	M. Mohseni
DETAILS	N. Morcillo	M. Ruvalcaba
QUANTITIES	M. Ruvalcaba	M. Mohseni

PREPARED FOR THE STATE OF CALIFORNIA DEPARTMENT OF TRANSPORTATION

MOHSEN MOHSENI
PROJECT ENGINEER

BRIDGE NO. 55E0075
POST MILE 20.91

PRECAST WALL No. 1325 WITH LIGHTWEIGHT FILL (CELLULAR CONCRETE)

INDEX TO PLANS

DESIGN DETAIL SHEET (ENGLISH) (REV. 2/25/05)

ORIGINAL SCALE IN INCHES FOR REDUCED PLANS 0 1 2 3

CU 12235
EA 071621

DISREGARD PRINTS BEARING EARLIER REVISION DATES

REVISION DATES (PRELIMINARY STAGE ONLY) 10/27/08 2/23/09 5/18/09

SHEET 1 OF 26

FILE => 55-e0075-a-aitp.add

USERNAME => trlim DATE PLOTTED => 29-MAR-2010 TIME PLOTTED => 13:11

DIST	COUNTY	ROUTE	POST MILES TOTAL PROJECT	SHEET No	TOTAL SHEETS
12	Ora	22,405	R0.7/R2.9, 20.4/22.3	944	1006

REGISTERED CIVIL ENGINEER 5/18/09 DATE

9-21-09
PLANS APPROVAL DATE

REGISTERED PROFESSIONAL ENGINEER MOHSEN MOHSENI No. C45999 Exp. 12/31/10 CIVIL STATE OF CALIFORNIA

The State of California or its officers or agents shall not be responsible for the accuracy or completeness of electronic copies of this plan sheet.

PARSONS 2201 DUPONT DRIVE SUITE 200 IRVINE, CA 92612

OCTA 550 SOUTH MAIN STREET ORANGE, CA 92863

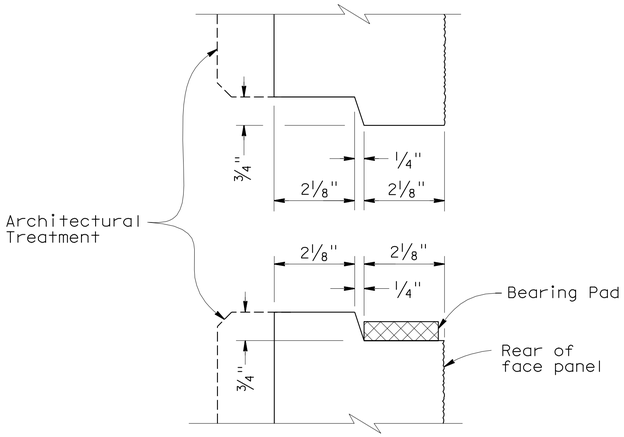

HORIZONTAL JOINT DETAIL

1"=2'-0"

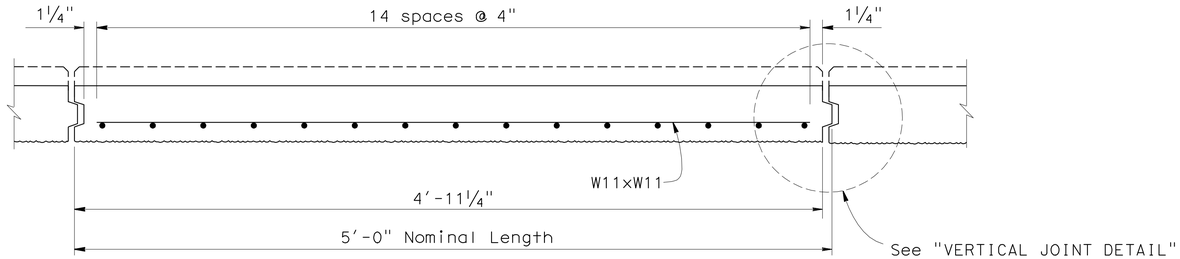

PLAN - FACE PANEL

1/2"=1'-0"

NOTES:

1. Place reinforced elastomeric bearing pads in all of the panel joints between the panels. Place one in each vertical joint where the horizontal joint intersects it. Place two per panel in each horizontal joint.
   1/2" x 1 1/2" x 6" for vertical joints
   1/2" x 2" x 6" for horizontal joints.
2. Top and Single Panels shall be cast as shown on plans, to conform with wall profile.
3. For Architectural Treatment Details, see Architectural Panel sheets.
4. For Insert Load requirement see "Index to Plans" sheet.

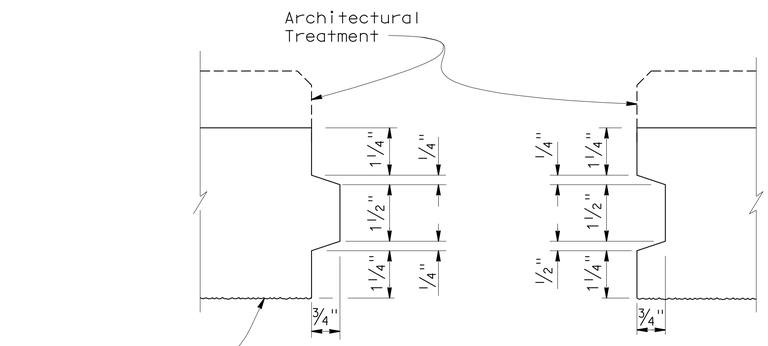

VERTICAL JOINT DETAIL

1"=2'-0"

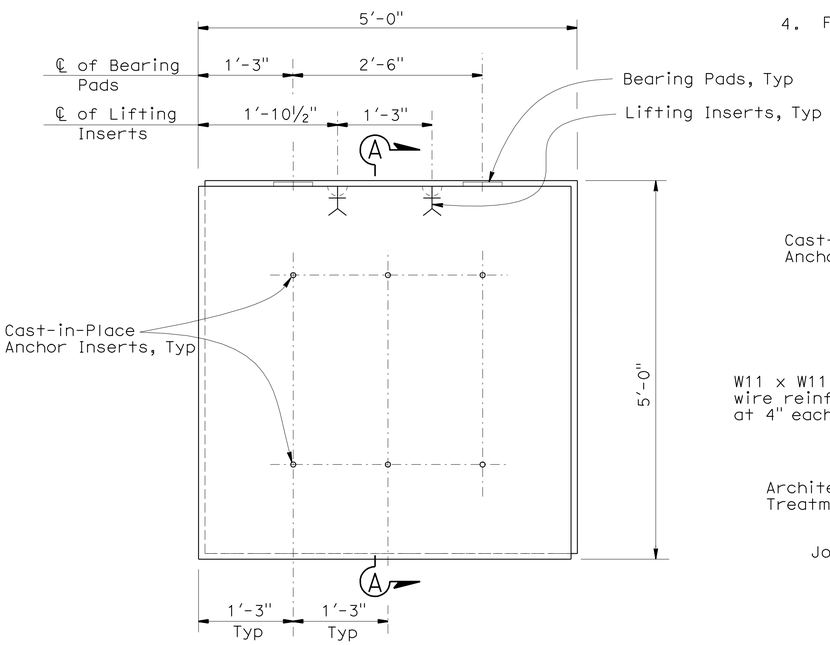

(BACK FACE SHOWN)

INTERMEDIATE PANEL

1" = 1'-0"

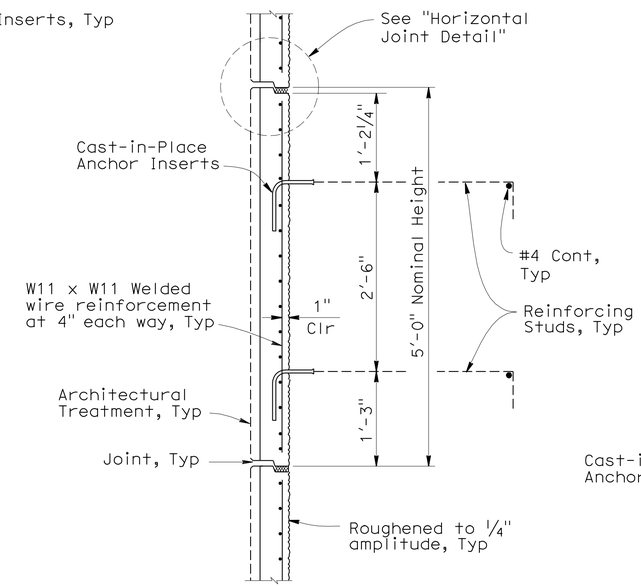

SECTION A-A

1" = 1'-0"

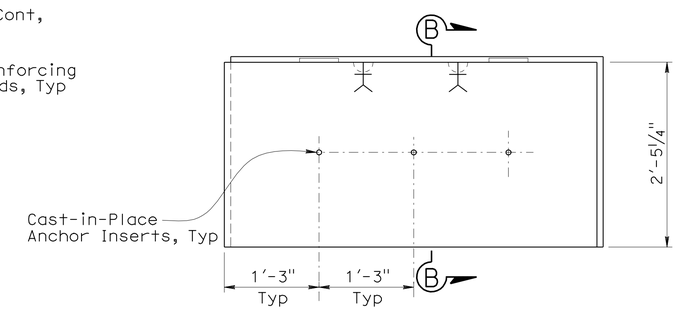

NOTE:
For information not shown see "Intermediate Panel".

(BACK FACE SHOWN)

BOTTOM HALF PANEL

1" = 1'-0"

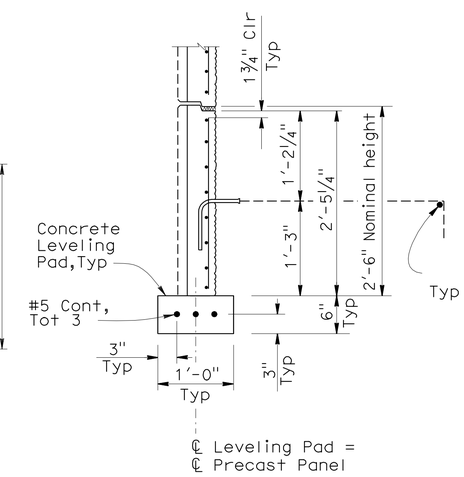

SECTION B-B

1"=1'-0"

NOTE:
The Contractor shall verify all controlling field dimensions before ordering or fabricating any material

2 REVISED PER ADDENDUM No. 2 DATED APRIL 1, 2010

Sudhakar Vatti
DESIGN OVERSIGHT Sudhakar Vatti
5-19-09
SIGN OFF DATE

	BY	CHECKED
DESIGN	M. Ruvalcaba	M. Mohseni
DETAILS	N. Morcillo	M. Ruvalcaba
QUANTITIES	M. Ruvalcaba	M. Mohseni

PREPARED FOR THE STATE OF CALIFORNIA DEPARTMENT OF TRANSPORTATION

MOHSEN MOHSENI
PROJECT ENGINEER

BRIDGE NO. 55E0075
POST MILE 20.91

PRECAST WALL No. 1325 WITH LIGHTWEIGHT FILL (CELLULAR CONCRETE)

PRECAST WALL DETAILS No. 1

DESIGN DETAIL SHEET (ENGLISH) (REV. 2/25/05)

ORIGINAL SCALE IN INCHES FOR REDUCED PLANS 0 1 2 3

CU 12235
EA 071621

DISREGARD PRINTS BEARING EARLIER REVISION DATES

REVISION DATES (PRELIMINARY STAGE ONLY) 10/27/08 2/23/09 5/18/09

SHEET 7 OF 26

FILE => 55-E0075-g-rwdt01.add

USERNAME => trilm DATE PLOTTED => 29-MAR-2010 TIME PLOTTED => 13:12

DIST	COUNTY	ROUTE	POST MILES TOTAL PROJECT	SHEET No	TOTAL SHEETS
12	Ora	22,405	R0.7/R2.9, 20.4/22.3	945	1006

REGISTERED CIVIL ENGINEER 5/18/09 DATE

9-21-09
PLANS APPROVAL DATE

REGISTERED PROFESSIONAL ENGINEER MOHSEN MOHSENI No. C45999 Exp. 12/31/10 CIVIL STATE OF CALIFORNIA

The State of California or its officers or agents shall not be responsible for the accuracy or completeness of electronic copies of this plan sheet.

PARSONS 2201 DUPONT DRIVE SUITE 200 IRVINE, CA 92612

OCTA 550 SOUTH MAIN STREET ORANGE, CA 92863

NOTES:

1. For Horizontal and Vertical Joint Details see "Precast Wall Details No. 1" sheet.
2. For Reinforcing Stud End Details, see "Precast Wall Details No. 3" sheet.

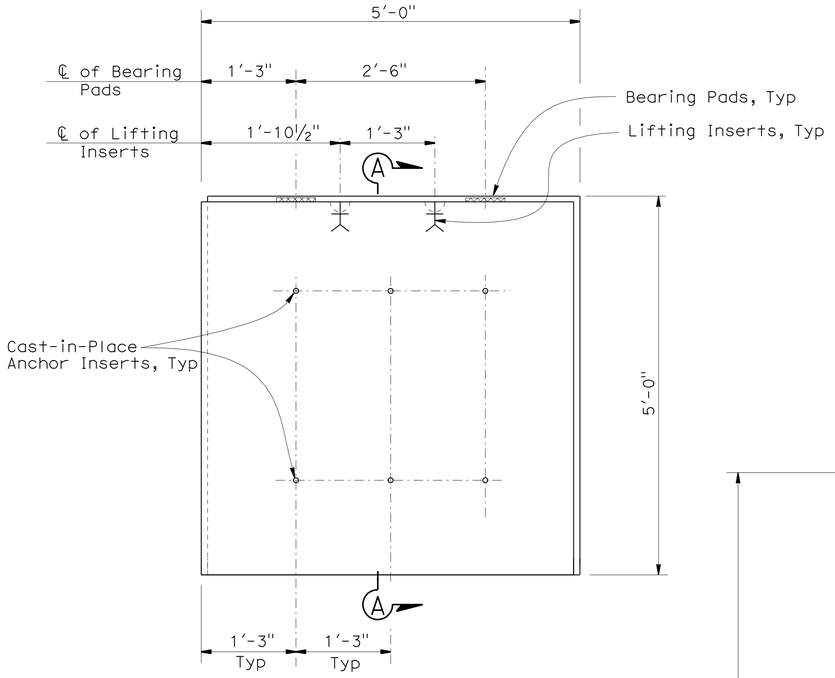

(BACK FACE SHOWN)
BOTTOM PANEL
1" = 1'-0"

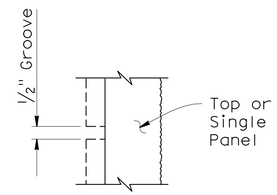

GROOVE DETAIL
No Scale

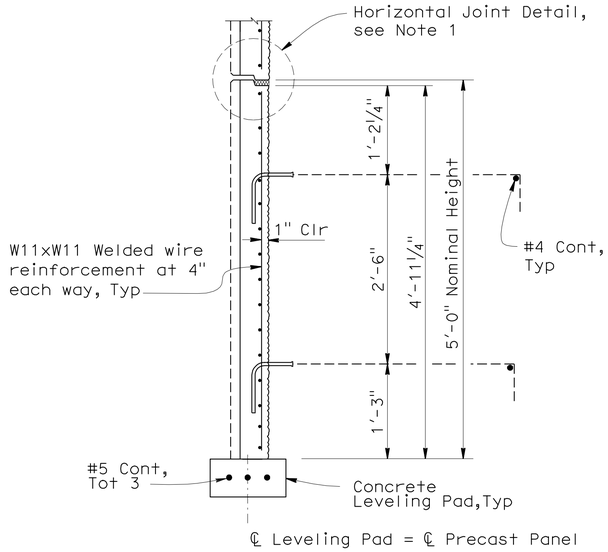

SECTION A-A
1"=1'-0"

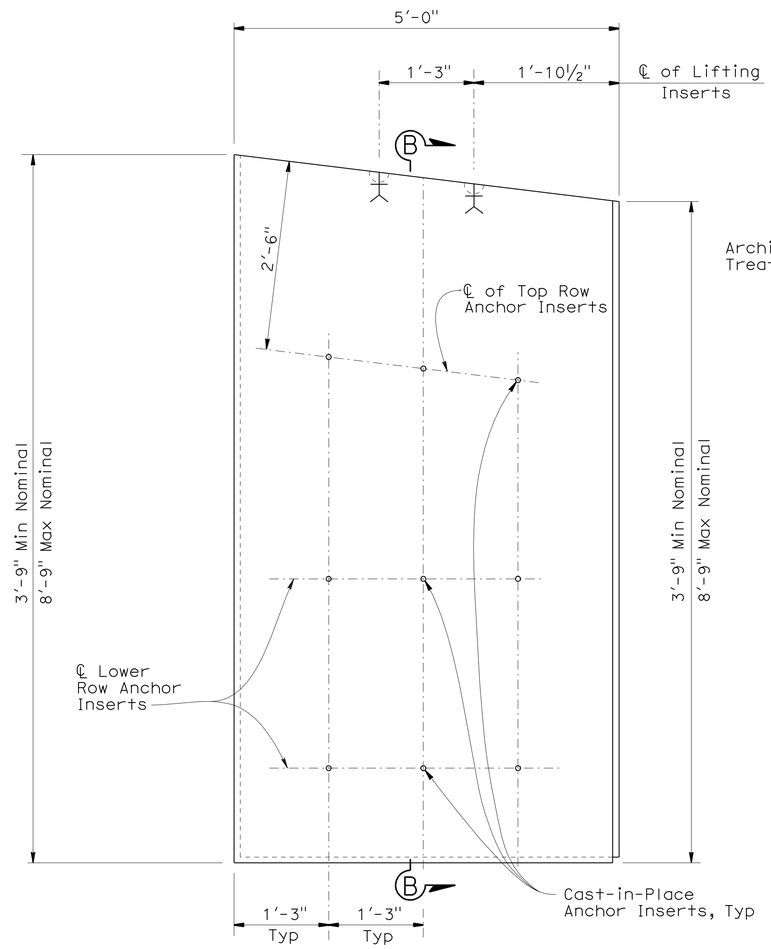

NOTE: Omit Lower Row Cast-in place Anchor Inserts when Top Row Inserts are closer than 6".

(BACK FACE SHOWN)
TOP & SINGLE PANELS
1" = 1'-0"

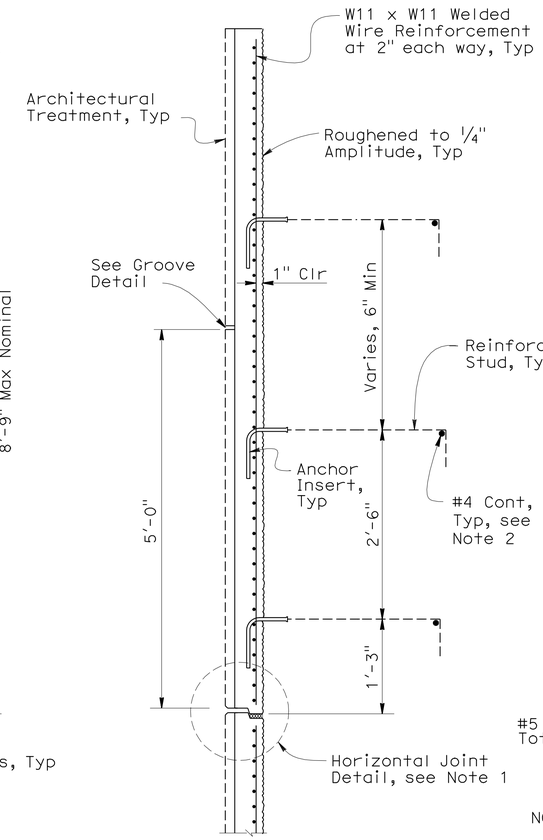

SECTION B-B (TOP PANEL)
1" = 1'-0"

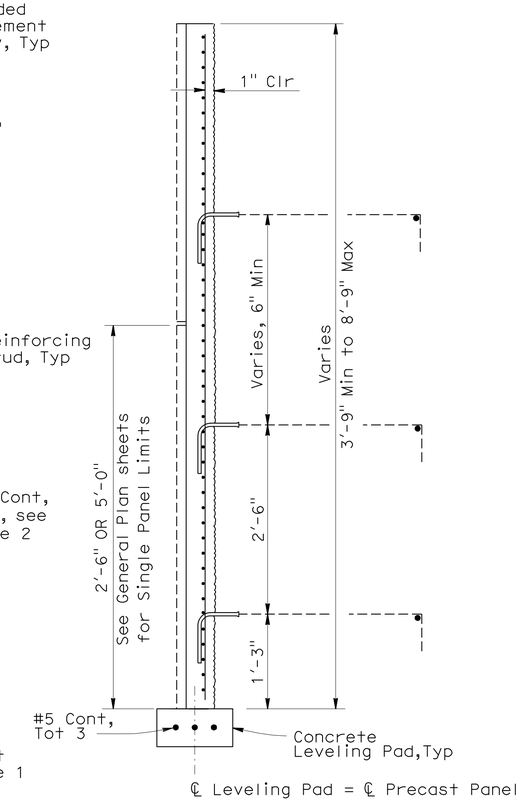

NOTE: For Information not shown see "Section B-B (Top Panel)"

SECTION B-B (SINGLE PANEL)
1" = 1'-0"

NOTE:
The Contractor shall verify all controlling field dimensions before ordering or fabricating any material

2 REVISED PER ADDENDUM No. 2 DATED APRIL 1, 2010

DESIGN OVERSIGHT Sudhakar Vatti
5-19-09
SIGN OFF DATE

	BY	CHECKED
DESIGN	M. Ruvalcaba	M. Mohseni
DETAILS	N. Morcillo	M. Ruvalcaba
QUANTITIES	M. Ruvalcaba	M. Mohseni

PREPARED FOR THE STATE OF CALIFORNIA DEPARTMENT OF TRANSPORTATION

MOHSEN MOHSENI
PROJECT ENGINEER

BRIDGE NO. 55E0075
POST MILE 20.91

PRECAST WALL No. 1325 WITH LIGHTWEIGHT FILL (CELLULAR CONCRETE)

PRECAST WALL DETAILS No. 2

DESIGN DETAIL SHEET (ENGLISH) (REV. 2/25/05)

ORIGINAL SCALE IN INCHES FOR REDUCED PLANS 0 1 2 3

CU 12235
EA 071621

DISREGARD PRINTS BEARING EARLIER REVISION DATES

REVISION DATES (PRELIMINARY STAGE ONLY) 10/27/08 2/23/09 5/18/09

SHEET 8 OF 26

FILE => 55-E0075-g-rwdt02.add

USERNAME => trlim DATE PLOTTED => 29-MAR-2010 TIME PLOTTED => 13:12

DIST	COUNTY	ROUTE	POST MILES TOTAL PROJECT	SHEET No	TOTAL SHEETS
12	Ora	22,405	R0.7/R2.9, 20.4/22.3	949	1006

REGISTERED CIVIL ENGINEER 5/18/09 DATE

9-21-09
PLANS APPROVAL DATE

REGISTERED PROFESSIONAL ENGINEER MOHSEN MOHSENI No. C45999 Exp. 12/31/10 CIVIL STATE OF CALIFORNIA

The State of California or its officers or agents shall not be responsible for the accuracy or completeness of electronic copies of this plan sheet.

PARSONS 2201 DUPONT DRIVE SUITE 200 IRVINE, CA 92612

OCTA 550 SOUTH MAIN STREET ORANGE, CA 92863

2

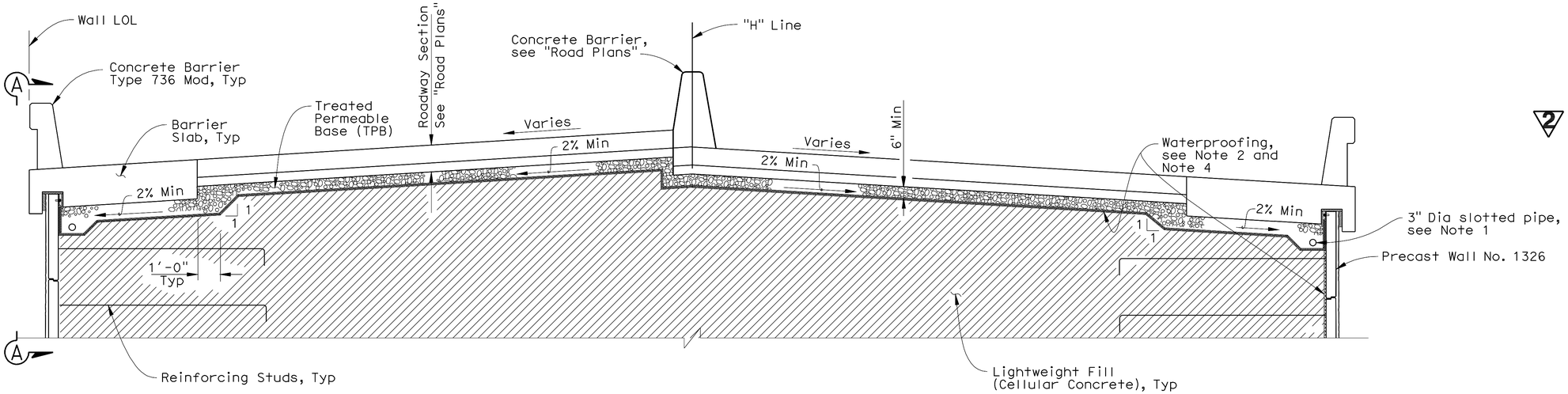

DRAINAGE TYPICAL SECTION AT BARRIER SLAB (Sta 10+08 to 16+35)

3/8" = 1'-0"

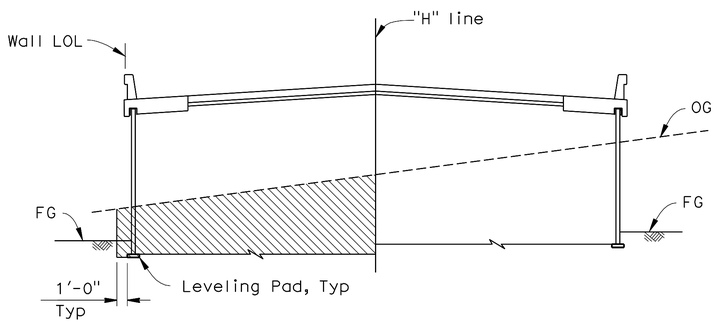

LIMITS OF EXCAVATION STA 10+00 TO 16+35

No Scale

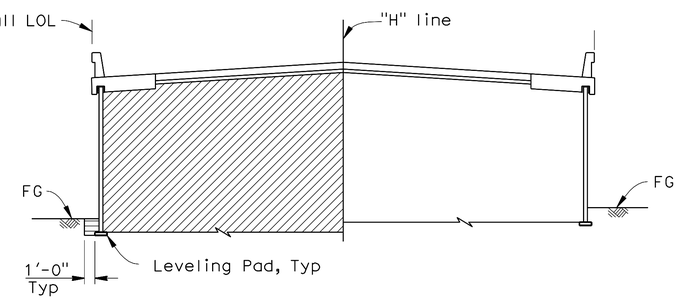

LIMITS OF BACKFILL STA 10+00 TO 16+35

No Scale

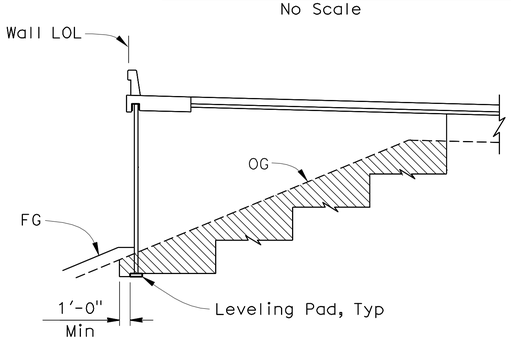

LIMITS OF EXCAVATION STA 16+35 TO 17+50

No Scale

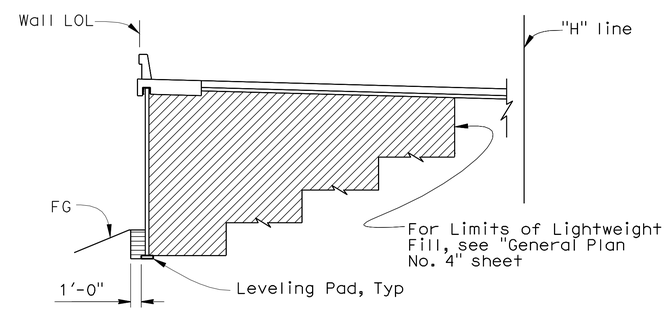

LIMITS OF BACKFILL STA 16+35 TO 17+50

No Scale

LEGEND:

- Limits of Lightweight Fill (Cellular Concrete)
- Limits of Structure Excavation
- Limits of Structure Backfill

NOTES:

1. For Drainage Details under Barrier Slab, see "Precast Wall Details No. 9" and "Precast Wall Details No. 10" sheets.
2. For Drainage Details under Approach Slab, see "Bridge Plans".
3. For Drainage Details between Station 10+00 to 10+08, see "Precast Wall Details No. 5" sheet.
4. For Waterproofing Details, see "Precast Wall Details No. 8" sheet.

NOTE:
The Contractor shall verify all controlling field dimensions before ordering or fabricating any material

2 **REVISED PER ADDENDUM No. 2 DATED APRIL 1, 2010**

Sudhakar Vatti
DESIGN OVERSIGHT Sudhakar Vatti
5-19-09
SIGN OFF DATE

	BY	CHECKED
DESIGN	M. Ruvalcaba	M. Mohseni
DETAILS	N. Morcillo	M. Ruvalcaba
QUANTITIES	M. Ruvalcaba	M. Mohseni

PREPARED FOR THE STATE OF CALIFORNIA DEPARTMENT OF TRANSPORTATION

MOHSEN MOHSENI
PROJECT ENGINEER

BRIDGE NO. 55E0075
POST MILE 20.91

PRECAST WALL No. 1325 WITH LIGHTWEIGHT FILL (CELLULAR CONCRETE)

PRECAST WALL DETAILS No. 6

DESIGN DETAIL SHEET (ENGLISH) (REV. 2/25/05)

ORIGINAL SCALE IN INCHES FOR REDUCED PLANS 0 1 2 3

CU 12235
EA 071621

DISREGARD PRINTS BEARING EARLIER REVISION DATES → REVISION DATES (PRELIMINARY STAGE ONLY) 10/27/08 2/23/09 5/18/09

SHEET 12 OF 26

FILE => 55-E0075-g-rwdt06.add

USERNAME => trilm DATE PLOTTED => 23-MAR-2010 TIME PLOTTED => 13:12

DIST	COUNTY	ROUTE	POST MILES TOTAL PROJECT	SHEET No	TOTAL SHEETS
12	Ora	22,405	R0.7/R2.9, 20.4/22.3	953	1006

REGISTERED CIVIL ENGINEER 5/18/09 DATE

9-21-09
PLANS APPROVAL DATE

The State of California or its officers or agents shall not be responsible for the accuracy or completeness of electronic copies of this plan sheet.

REGISTERED PROFESSIONAL ENGINEER MOHSEN MOHSENI No. C45999 Exp. 12/31/10 CIVIL STATE OF CALIFORNIA

PARSONS 2201 DUPONT DRIVE SUITE 200 IRVINE, CA 92612

OCTA 550 SOUTH MAIN STREET ORANGE, CA 92863

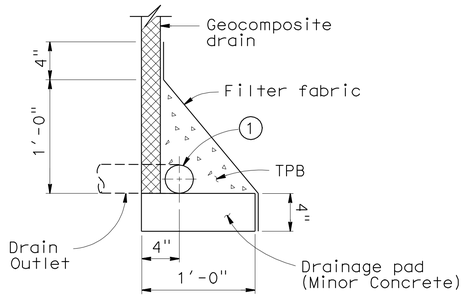

DETAIL 1
No Scale

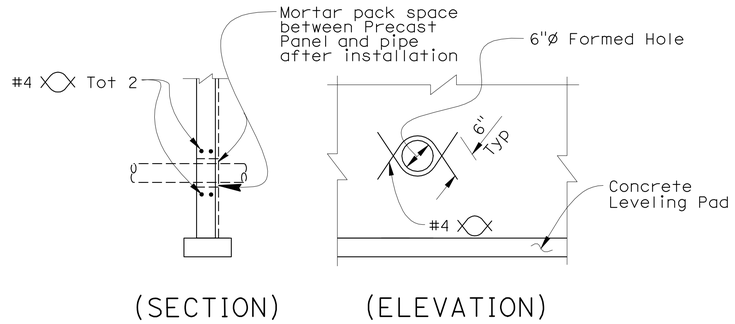

DETAIL 2
No Scale

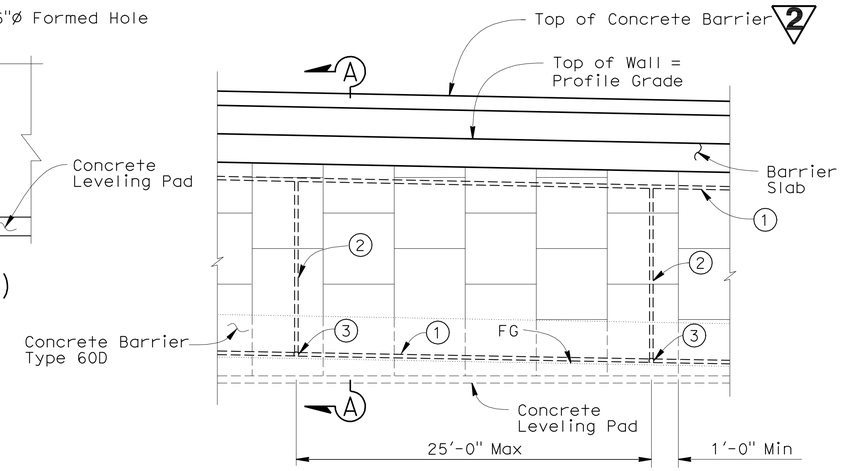

ELEVATION A-A
3/16" = 1'-0"

LEGEND:

1. 3" Plastic pipe (slotted).
2. 3" Plastic pipe and fittings (unslotted).
3. 4" Schedule 80 PVC outlet pipe and fittings (unslotted).
4. 1'-0" wide x 2'-0" filter fabric wrapped around pipe and secured with nylon ties.

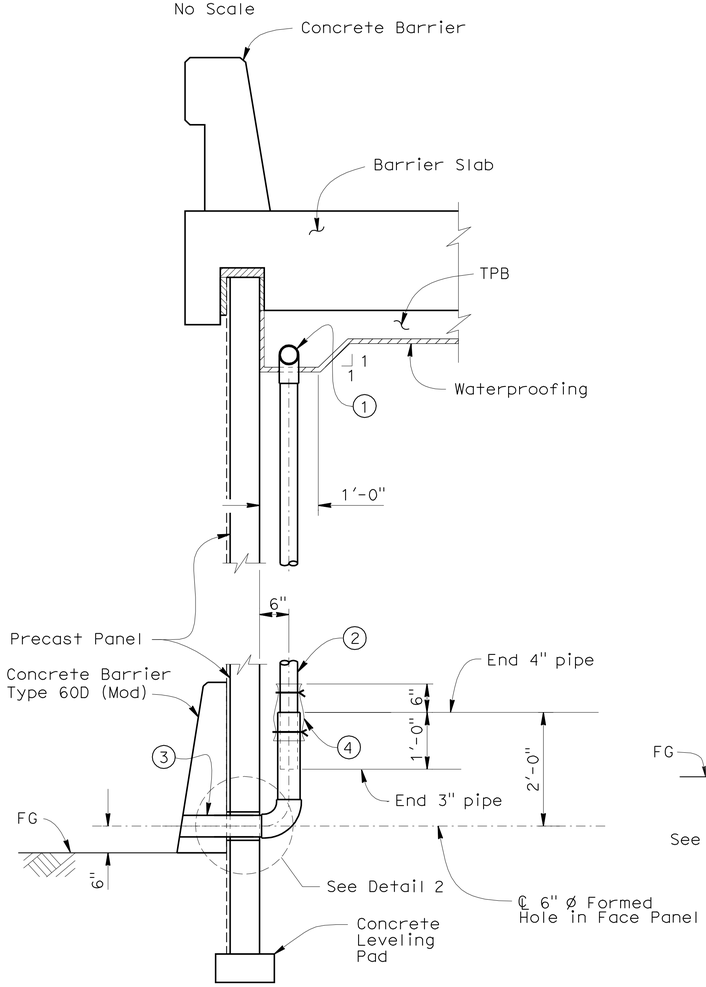

SECTION A-A (Sta 10+00 to 16+35)
3/4" = 1'-0"

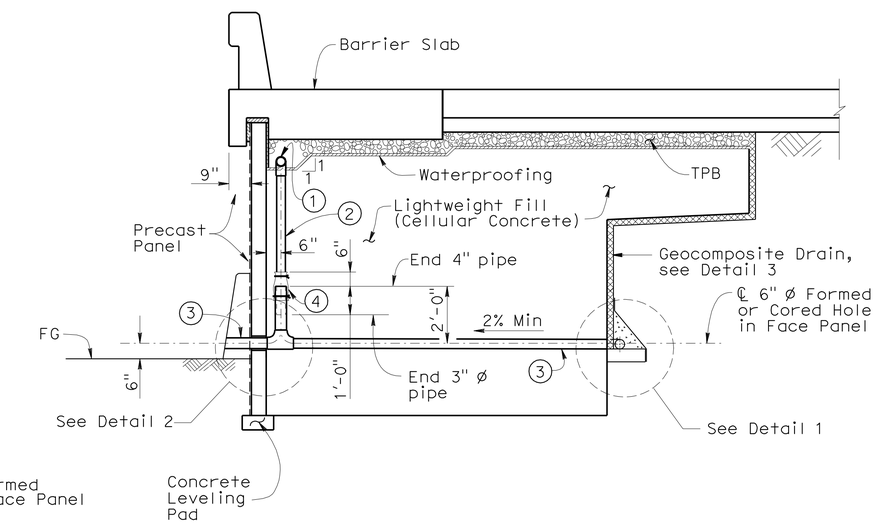

SECTION A-A (Sta 16+35 to 17+50)
No Scale

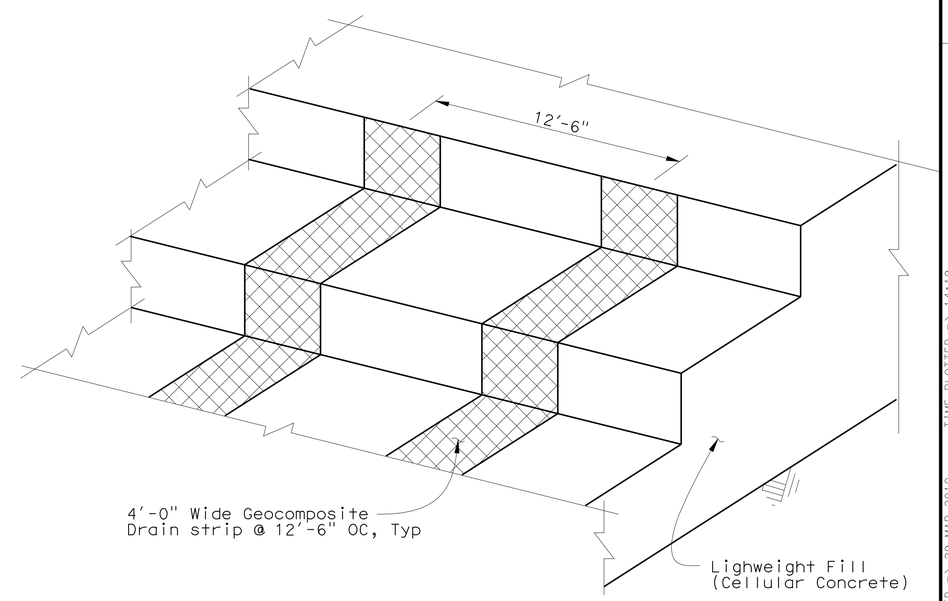

DETAIL 3
No Scale

NOTE:
The Contractor shall verify all controlling field dimensions before ordering or fabricating any material

2 REVISED PER ADDENDUM No. 2 DATED APRIL 1, 2010

Sudhakar Vatti
DESIGN OVERSIGHT Sudhakar Vatti
5-19-09
SIGN OFF DATE

	BY	CHECKED
DESIGN	M. Ruvalcaba	M. Mohseni
DETAILS	N. Morcillo	M. Ruvalcaba
QUANTITIES	M. Ruvalcaba	M. Mohseni

PREPARED FOR THE STATE OF CALIFORNIA DEPARTMENT OF TRANSPORTATION

MOHSEN MOHSENI
PROJECT ENGINEER

BRIDGE NO. 55E0075
POST MILE 20.91

PRECAST WALL No. 1325 WITH LIGHTWEIGHT FILL (CELLULAR CONCRETE)
PRECAST WALL DETAILS No. 10

DESIGN DETAIL SHEET (ENGLISH) (REV. 2/25/05)

ORIGINAL SCALE IN INCHES FOR REDUCED PLANS 0 1 2 3

CU 12235
EA 071621

DISREGARD PRINTS BEARING EARLIER REVISION DATES

REVISION DATES (PRELIMINARY STAGE ONLY) 10/27/08 2/23/09 5/18/09

SHEET 16 OF 26

FILE => 55-e0075-g-rwdt10.add

USERNAME => tripierce DATE PLOTTED => 29-MAR-2010 TIME PLOTTED => 14:19

DIST	COUNTY	ROUTE	POST MILES TOTAL PROJECT	SHEET No	TOTAL SHEETS
12	Ora	22,405	R0.7/R2.9, 20.4/22.3	954	1006

LICENSED LANDSCAPE ARCHITECT

9-21-09
PLANS APPROVAL DATE

LICENSED LANDSCAPE ARCHITECT
CATHY L. JOHNSON
NO. 4545
Registration
01-31-10
Renewal Date
05-18-09
Date
STATE OF CALIFORNIA

The State of California or its officers or agents shall not be responsible for the accuracy or completeness of electronic copies of this plan sheet.

RBF CONSULTING
14725 ALTON PARKWAY
IRVINE, CA 92618

OCTA
550 SOUTH MAIN STREET
ORANGE, CA 92863

2

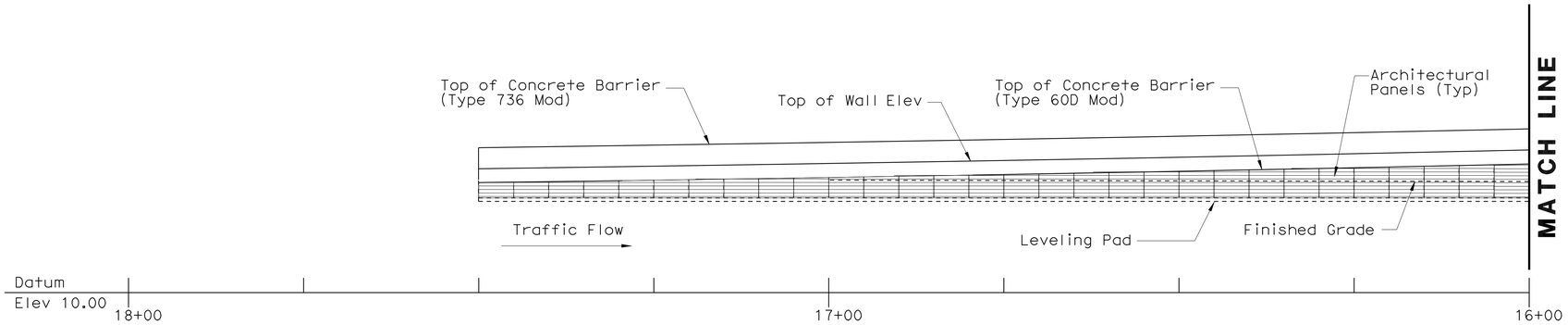

ELEVATION (SEGMENT-1)

1" = 10'

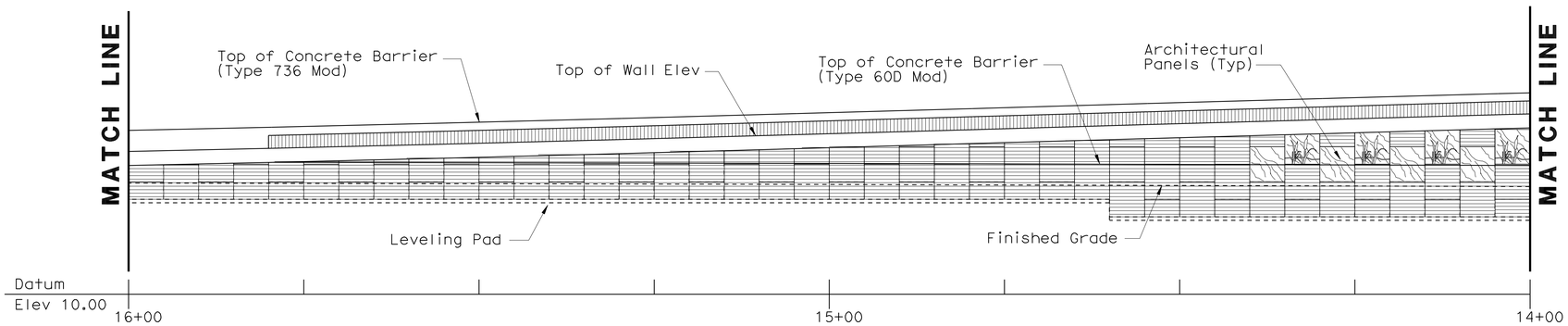

ELEVATION (SEGMENT-2)

1" = 10'

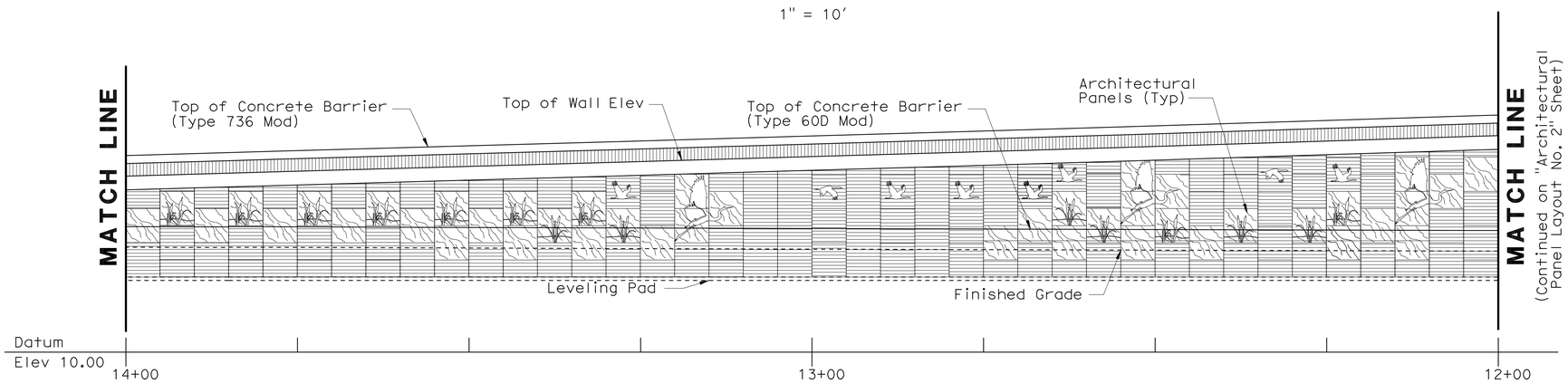

ELEVATION (SEGMENT-3)

1" = 10'

NOTE:
The contractor shall verify all controlling field dimensions before ordering or fabricating any material.

2 **REVISED PER ADDENDUM No. 2 DATED APRIL 1, 2010**

Sudhakar Vatti
DESIGN OVERSIGHT Sudhakar Vatti
5-19-09
SIGN OFF DATE

	BY	CHECKED
DESIGN	C. JOHNSON	A. SU
DETAILS	R. KELCHER	A. SU
QUANTITIES	H. OKOLO	

PREPARED FOR THE STATE OF CALIFORNIA DEPARTMENT OF TRANSPORTATION

B. LOSEY
PROJECT ENGINEER

BRIDGE NO. 55E0075
POST MILE 20.91-21.03

PRECAST WALL No. 1325 WITH LIGHTWEIGHT FILL (CELLULAR CONCRETE)
RW 1325 ARCHITECTURAL PANEL LAYOUT NO. 1

DESIGN DETAIL SHEET (ENGLISH) (REV. 2/25/05)

ORIGINAL SCALE IN INCHES FOR REDUCED PLANS 0 1 2 3

CU 12235
EA 071621

DISREGARD PRINTS BEARING EARLIER REVISION DATES

REVISION DATES (PRELIMINARY STAGE ONLY) 09/26/08 02/25/09 05/18/09

SHEET 17 OF 26

FILE => 55-e0075-V-rwdt01.add

USERNAME => trpierce DATE PLOTTED => 29-MAR-2010 TIME PLOTTED => 14:20

DIST	COUNTY	ROUTE	POST MILES TOTAL PROJECT	SHEET No	TOTAL SHEETS
12	Ora	22,405	R0.7/R2.9, 20.4/22.3	955	1006

LICENSED LANDSCAPE ARCHITECT

9-21-09
PLANS APPROVAL DATE

LICENSED LANDSCAPE ARCHITECT
CATHY L. JOHNSON
NO. 4545
Renewal Date
01-31-10
Renewal Date
05-18-09
Date
STATE OF CALIFORNIA

The State of California or its officers or agents shall not be responsible for the accuracy or completeness of electronic copies of this plan sheet.

RBF CONSULTING
14725 ALTON PARKWAY
IRVINE, CA 92618

OCTA
550 SOUTH MAIN STREET
ORANGE, CA 92863

2

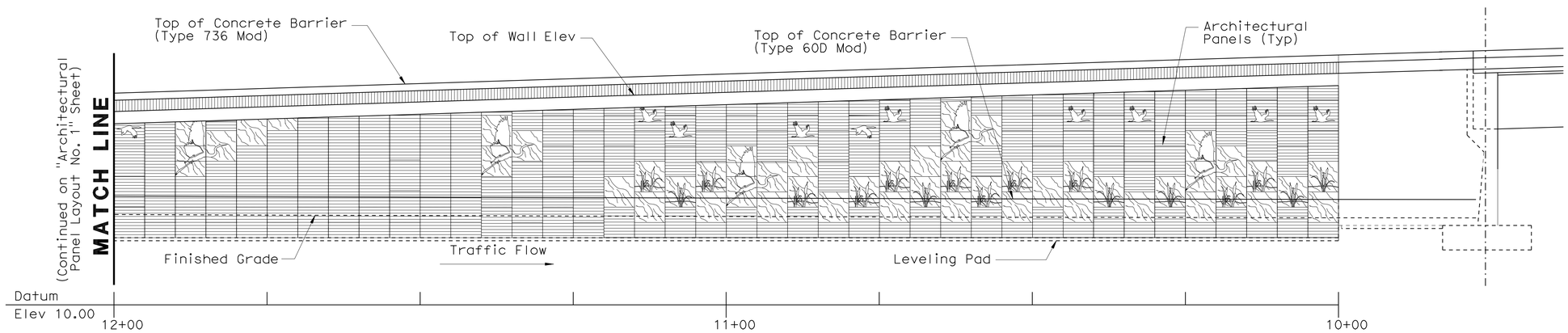

ELEVATION (SEGMENT-4)

1" = 10'

NOTE:
The contractor shall verify all controlling field dimensions before ordering or fabricating any material.

2 **REVISED PER ADDENDUM No. 2 DATED APRIL 1, 2010**

Sudhakar Vatti
DESIGN OVERSIGHT Sudhakar Vatti
5-19-09
SIGN OFF DATE

	BY	CHECKED
DESIGN	C. JOHNSON	A. SU
DETAILS	R. KELCHER	A. SU
QUANTITIES	H. OKOLO	

PREPARED FOR THE STATE OF CALIFORNIA DEPARTMENT OF TRANSPORTATION

B. LOSEY
PROJECT ENGINEER

BRIDGE NO. 55E0075
POST MILE 20.91-21.03

PRECAST WALL No. 1325 WITH LIGHTWEIGHT FILL (CELLULAR CONCRETE)
RW 1325 ARCHITECTURAL PANEL LAYOUT NO. 2

DESIGN DETAIL SHEET (ENGLISH) (REV. 2/25/05)

ORIGINAL SCALE IN INCHES FOR REDUCED PLANS 0 1 2 3

CU 12235
EA 071621

DISREGARD PRINTS BEARING EARLIER REVISION DATES
REVISION DATES (PRELIMINARY STAGE ONLY) 08/26/08 02/23/09 05/18/09

SHEET 18 OF 26

FILE => 55-e0075-V-rwdt02.add

USERNAME => trpierce DATE PLOTTED => 29-MAR-2010 TIME PLOTTED => 14:20

DIST	COUNTY	ROUTE	POST MILES TOTAL PROJECT	SHEET No	TOTAL SHEETS
12	Ora	22,405	R0.7/R2.9, 20.4/22.3	964	1006

REGISTERED CIVIL ENGINEER 5/18/09 DATE

9-21-09
PLANS APPROVAL DATE

The State of California or its officers or agents shall not be responsible for the accuracy or completeness of electronic copies of this plan sheet.

REGISTERED PROFESSIONAL ENGINEER MOHSEN MOHSENI No. C45999 Exp. 12/31/10 CIVIL STATE OF CALIFORNIA

PARSONS 2201 DUPONT DRIVE SUITE 200 IRVINE, CA 92612

OCTA 550 SOUTH MAIN STREET ORANGE, CA 92863

INDEX TO PLANS

SHEET No.	TITLE
1	INDEX TO PLANS
2	GENERAL PLAN No. 1
3	GENERAL PLAN No. 2
4	GENERAL PLAN No. 3
5	PRECAST WALL DETAILS No. 1
6	PRECAST WALL DETAILS No. 2
7	PRECAST WALL DETAILS No. 3
8	PRECAST WALL DETAILS No. 4
9	PRECAST WALL DETAILS No. 5
10	PRECAST WALL DETAILS No. 6
11	PRECAST WALL DETAILS No. 7
12	PRECAST WALL DETAILS No. 8
13	PRECAST WALL DETAILS No. 9
14	RW 1326 ARCHITECTURAL PANEL LAYOUT No. 1
15	RW 1326 ARCHITECTURAL PANEL LAYOUT No. 2
16	ARCHITECTURAL PANEL DETAILS No. 1
17	ARCHITECTURAL PANEL DETAILS No. 2
18	LOG OF TEST BORINGS 1 OF 6
19	LOG OF TEST BORINGS 2 OF 6
20	LOG OF TEST BORINGS 3 OF 6
21	LOG OF TEST BORINGS 4 OF 6
22	LOG OF TEST BORINGS 5 OF 6
23	LOG OF TEST BORINGS 6 OF 6

STANDARD PLANS DATED MAY 2006

With Errata No.1 through 9

A10A	ACRONYMS AND ABBREVIATIONS (Sheet 1 of 2)
A10B	ACRONYMS AND ABBREVIATIONS (Sheet 2 of 2)
A10C	SYMBOLS (Sheet 1 of 2)
A10D	SYMBOLS (Sheet 2 of 2)
B11-56	CONCRETE BARRIER TYPE 736
ES-6A	ELECTRICAL SYSTEMS (LIGHTING STANDARD TYPES 15 AND 21)
ES-6B	ELECTRICAL SYSTEMS (LIGHTING STANDARD TYPES 15 AND 21 BARRIER RAIL MOUNTED DETAILS)

2

GENERAL WALL NOTES

1. All Precast Concrete Panels, except Top Panels and Single Panels, are 5'-0" (Nominal Length) and 5'-0" (Nominal Height) per full size panel dimensions shown in "Precast Wall Details" sheets. Half Panels are 2'-6" nominal height.
2. Top Panels vary in height from 3'-9" to 8'-9" (Nominal) maximum. Top Panels are placed directly above intermediate panels. Where Top Panels exceed 5'-0" in height, a ½" horizontal groove shall be incorporated into the Architectural Treatment section of the Panel. Top Panels shall be 5'-0" long (Nominal).
3. Single Panels vary in height from 3'-9" to 8'-9" maximum. Single Panels are placed directly above the concrete leveling pad. Single Panels shall not have any other panels above it. Where Single Panels exceed 5'-0" in height, a ½" horizontal groove shall be incorporated into the Architectural Treatment of the Panel. Single Panels shall be 5'-0" long (Nominal).
4. Top Panels and Single Panels shall be cast as shown on the plans, to conform with wall profile.
5. For existing utilities to be abandoned or removed (not shown), and for location of proposed utilities, see "Road Plans".
6. Lightweight Cellular Concrete lifts shall not exceed 2 feet 6 inches in depth. The last lift of the top cellular concrete layer shall not be less than 2 feet. Intermediate lifts of cellular concrete layers shall not be placed less than 24 hours after the placement of the previous lift.
7. Longitudinal construction joints are not allowed. ~~along the top cellular concrete layer.~~ Transverse joints in top cellular concrete layer shall be per details shown on Precast Wall Detail sheets.
8. No construction vehicles or machinery shall be operated on the intermediate cellular concrete lifts during construction. No contruction vehicles or machinery shall be operated on the last lift of the top cellular concrete layer until the full specified compresive strength is reached. Top layer shall be placed parallel to the Roadway Cross Slope.
9. Trucks shall be at least 6 feet from the edge of the top layer of the Lightweight Cellular Concrete during construction after the top cellular concrete layer has attained its full strength.
10. For surcharging and foundation preparation see "Road Plans".
11. Lifting inserts for precast concrete panels shall be designed to a lift of minimum 6.50 kips each.
12. Settlement Monitoring will be required.

NOTE:
The Contractor shall verify all controlling field dimensions before ordering or fabricating any material

PLAN SYMBOLS

Standard Plan Sheet No.

Detail No.

A Section Identification

LEGEND

T	OR	T (Groove)	Top Panel
S	OR	S (Groove)	Single Panel
			Intermediate or Bottom Panel
			Bottom Half Panel

EPDM Ethylene Propylene Diene M-Class Rubber

GENERAL DESIGN NOTES

Design:
Caltrans Bridge Design Specifications - April 2000 (LFD)
(1996 AASHTO with Inerims and Revisions by Caltrans)

Live Loading:
HS20-44 and Alternative and Permit Design Load

Lightweight Cellular Concrete Fill:
f'_c = 125 psi (Minimum concrete compressive Strength in 28 days) Top Layer
f'_c = 60 psi (Minimum concrete compressive Strength in 28 days) Bottom Layers
f'_{ci} = 10 psi (Minumum initial Concrete compressive Strength prior to the next lift) Bottom Layers

Precast Concrete Panels:
f'_c = 4,000 psi (Minimum concrete compressive Strength in 28 days)
f_y = 60 ksi (Yield Strength of Welded Wire Reinforcement)

Threaded Rebar Studs:
f_y = 60 ksi

Reinforced Concrete:
f'_c = 3,600 psi, Except as Noted (Minimum concrete compressive Strength in 28 days)
f_y = 60 ksi (Yield Strength of Reinforcement)

Design Seismic Load:
0.5 Dead Load

Leveling Pad Footing Pressure (Tons per SF):

Allowable	Design
0.75	0.42

2 **REVISED PER ADDENDUM No. 2 DATED APRIL 1, 2010**

DESIGN OVERSIGHT Sudhakar Vatti
5-19-09
SIGN OFF DATE

	BY	CHECKED
DESIGN	M. Ruvalcaba	M. Mohseni
DETAILS	N. Morcillo	M. Ruvalcaba
QUANTITIES	M. Ruvalcaba	M. Mohseni

PREPARED FOR THE STATE OF CALIFORNIA DEPARTMENT OF TRANSPORTATION

MOHSEN MOHSENI
PROJECT ENGINEER

BRIDGE NO. 55E0076
POST MILE 20.91

PRECAST WALL No. 1326 WITH LIGHTWEIGHT FILL (CELLULAR CONCRETE)

INDEX TO PLANS

DESIGN DETAIL SHEET (ENGLISH) (REV. 2/25/05)

ORIGINAL SCALE IN INCHES FOR REDUCED PLANS 0 1 2 3

CU 12235
EA 071621

DISREGARD PRINTS BEARING EARLIER REVISION DATES

REVISION DATES (PRELIMINARY STAGE ONLY) 10/27/08 2/23/09 05/18/09

SHEET 1 OF 23

FILE => 55-e0076-a-aitp.add

USERNAME => trpierce DATE PLOTTED => 29-MAR-2010 TIME PLOTTED => 14:20

DIST	COUNTY	ROUTE	POST MILES TOTAL PROJECT	SHEET No	TOTAL SHEETS
12	Ora	22,405	R0.7/R2.9, 20.4/22.3	969	1006

REGISTERED CIVIL ENGINEER 5/18/09 DATE

9-21-09
PLANS APPROVAL DATE

The State of California or its officers or agents shall not be responsible for the accuracy or completeness of electronic copies of this plan sheet.

REGISTERED PROFESSIONAL ENGINEER MOHSEN MOHSENI No. C45999 Exp. 12/31/10 CIVIL STATE OF CALIFORNIA

PARSONS 2201 DUPONT DRIVE SUITE 200 IRVINE, CA 92612

OCTA 550 SOUTH MAIN STREET ORANGE, CA 92863

NOTES:

1. For Horizontal and Vertical Joint Details see "Precast Wall Details No. 1" sheet.
2. For Reinforcing Stud End Details, see "Precast Wall Details No. 3" sheet.

2

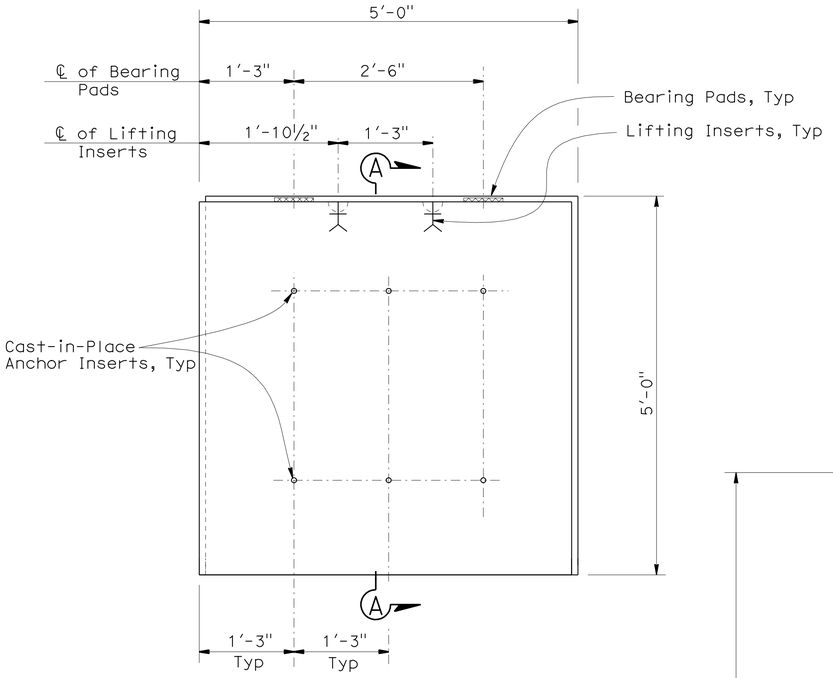

(BACK FACE SHOWN)
BOTTOM PANEL
1" = 1'-0"

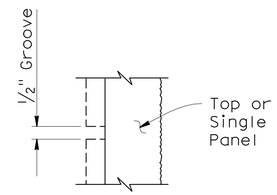

GROOVE DETAIL
No Scale

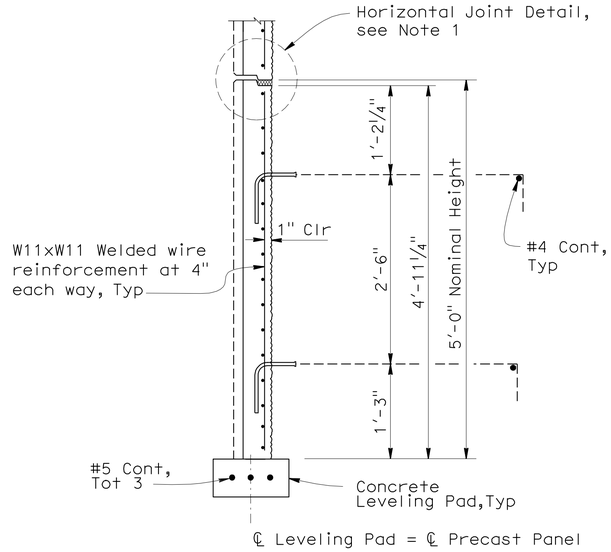

SECTION A-A
1"=1'-0"

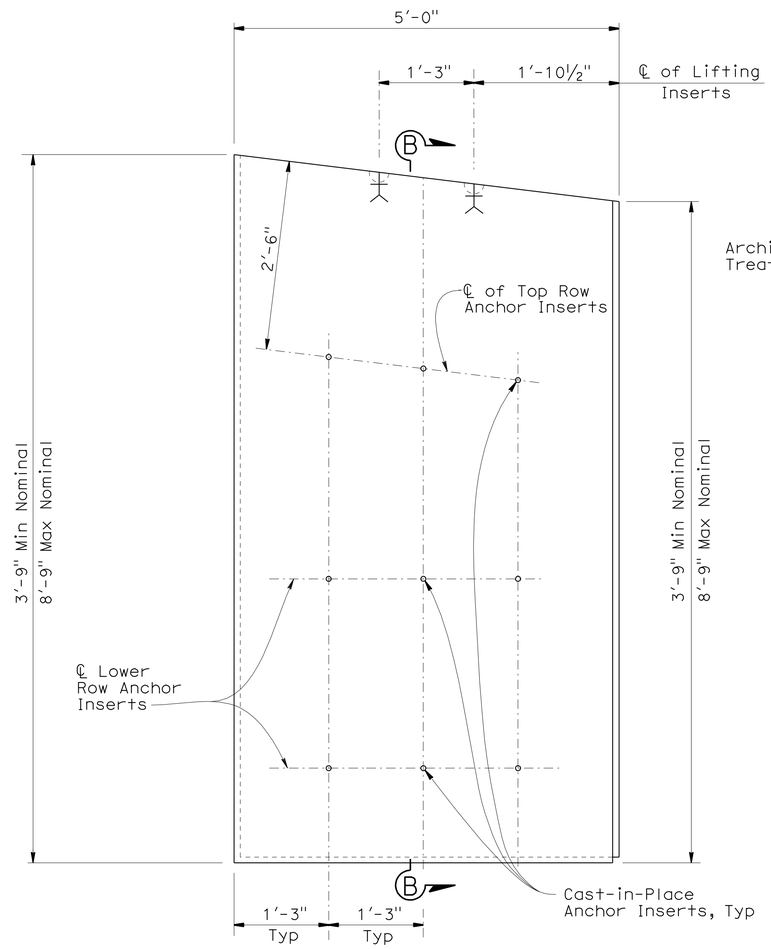

NOTE: Omit Lower Row Cast-in place Anchor Inserts when Top Row Inserts are closer than 6".

(BACK FACE SHOWN)
TOP & SINGLE PANELS
1" = 1'-0"

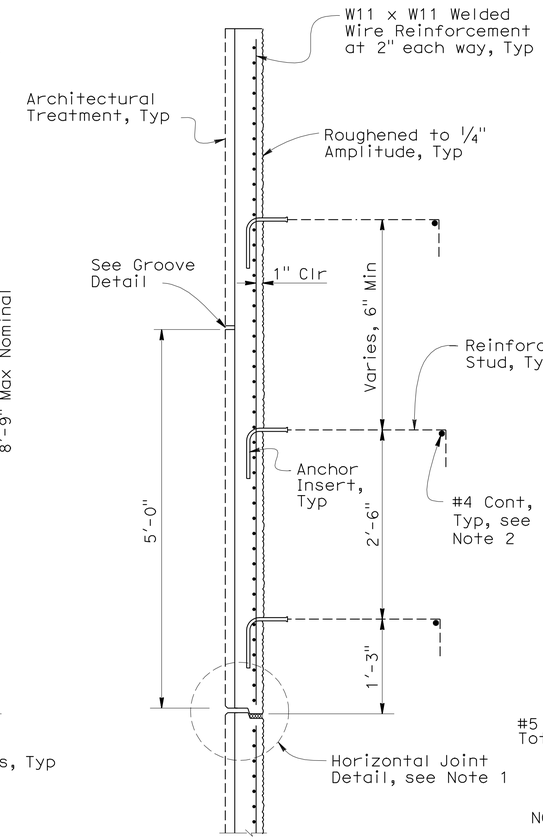

SECTION B-B (TOP PANEL)
1" = 1'-0"

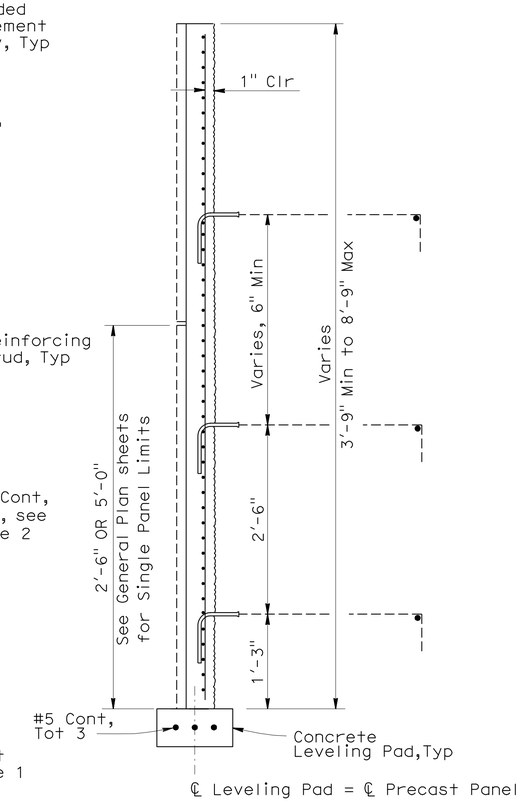

NOTE: For Information not shown see "Section B-B (Top Panel)"

SECTION B-B (SINGLE PANEL)
1" = 1'-0"

NOTE:
The Contractor shall verify all controlling field dimensions before ordering or fabricating any material

2 **REVISED PER ADDENDUM No. 2 DATED APRIL 1, 2010**

Sudhakar Vatti
DESIGN OVERSIGHT Sudhakar Vatti
5-19-09
SIGN OFF DATE

	BY	CHECKED
DESIGN	M. Ruvalcaba	M. Mohseni
DETAILS	N. Morcillo	M. Ruvalcaba
QUANTITIES	M. Ruvalcaba	M. Mohseni

PREPARED FOR THE STATE OF CALIFORNIA DEPARTMENT OF TRANSPORTATION

MOHSEN MOHSENI
PROJECT ENGINEER

BRIDGE NO. 55E0076
POST MILE 20.91

PRECAST WALL No. 1326 WITH LIGHTWEIGHT FILL (CELLULAR CONCRETE)

PRECAST WALL DETAILS No. 2

DESIGN DETAIL SHEET (ENGLISH) (REV. 2/25/05)

ORIGINAL SCALE IN INCHES FOR REDUCED PLANS 0 1 2 3

CU 12235
EA 071621

DISREGARD PRINTS BEARING EARLIER REVISION DATES

REVISION DATES (PRELIMINARY STAGE ONLY) 10/27/08 2/23/09 05/18/09

SHEET 6 OF 23

FILE => 55-E0076-g-rwdt02.add

USERNAME => trpierce DATE PLOTTED => 29-MAR-2010 TIME PLOTTED => 14:20

DIST	COUNTY	ROUTE	POST MILES TOTAL PROJECT	SHEET No	TOTAL SHEETS
12	Ora	22,405	R0.7/R2.9, 20.4/22.3	977	1006

LICENSED LANDSCAPE ARCHITECT

9-21-09
PLANS APPROVAL DATE

The State of California or its officers or agents shall not be responsible for the accuracy or completeness of electronic copies of this plan sheet.

LICENSED LANDSCAPE ARCHITECT
CATHY L. JOHNSON
NO. 4545
Expiration Date
01-31-10
Renewal Date
05-18-09
Date
STATE OF CALIFORNIA

RBF CONSULTING
14725 ALTON PARKWAY
IRVINE, CA 92618

OCTA
550 SOUTH MAIN STREET
ORANGE, CA 92863

2

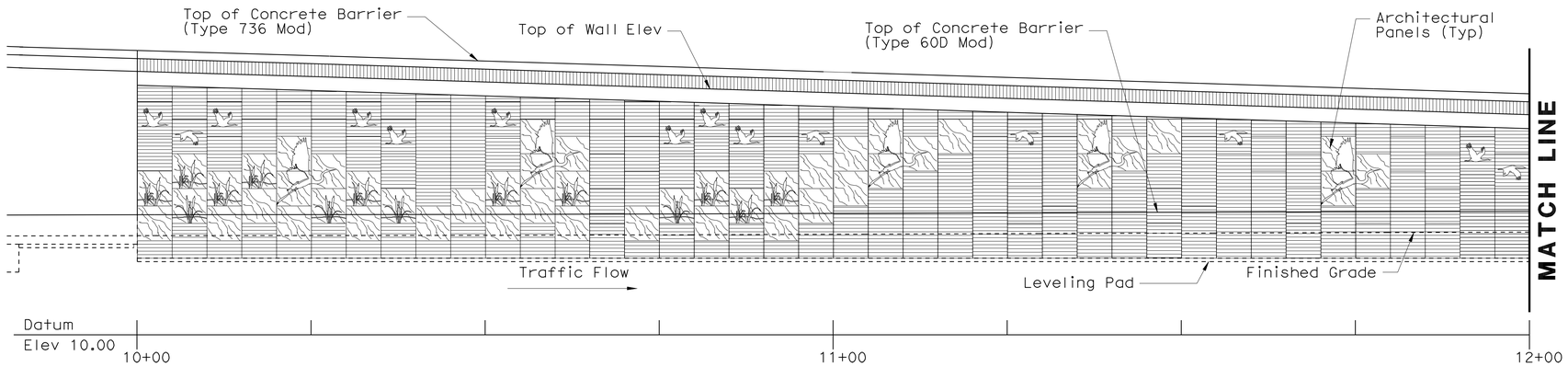

ELEVATION (SEGMENT-1)

1" = 10'

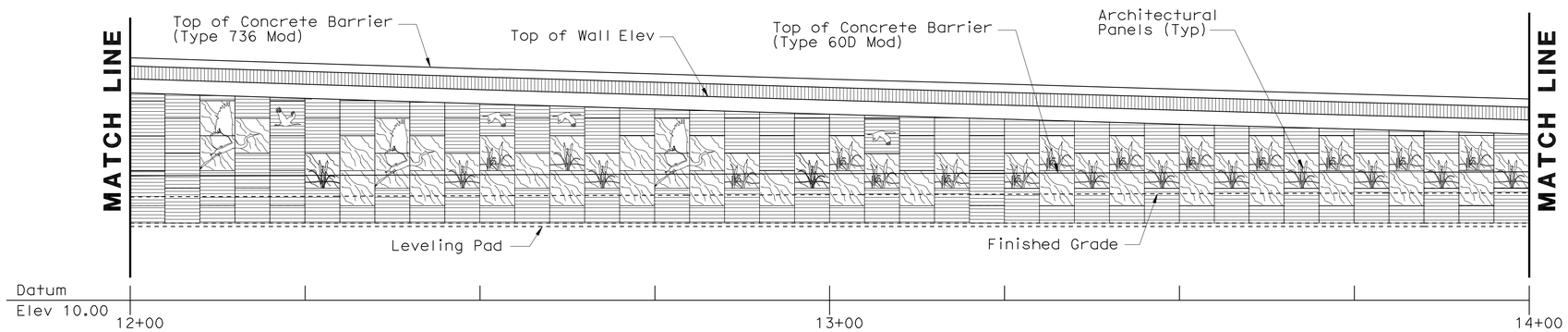

ELEVATION (SEGMENT-2)

1" = 10'

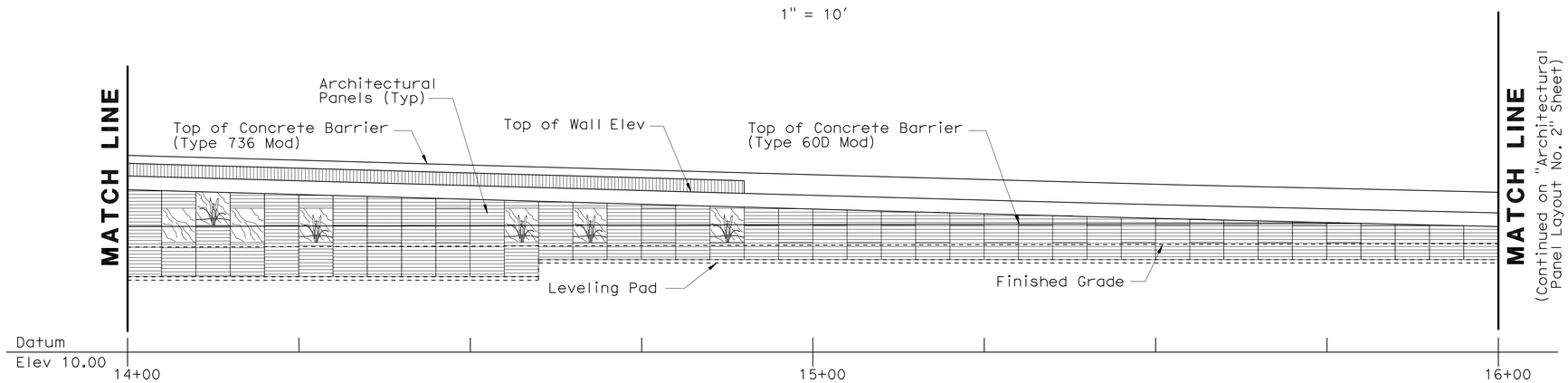

ELEVATION (SEGMENT-3)

1" = 10'

NOTE:
The contractor shall verify all controlling field dimensions before ordering or fabricating any material.

2 **REVISED PER ADDENDUM No. 2 DATED APRIL 1, 2010**

Sudhakar Vatti
DESIGN OVERSIGHT Sudhakar Vatti
5-19-09
SIGN OFF DATE

	BY	CHECKED
DESIGN	C. JOHNSON	A. SU
DETAILS	R. KELCHER	A. SU
QUANTITIES	H. OKOLO	

PREPARED FOR THE
STATE OF CALIFORNIA
DEPARTMENT OF TRANSPORTATION

B. LOSEY
PROJECT ENGINEER

BRIDGE NO. 55E0076
POST MILE 20.91-21.03

PRECAST WALL No. 1326 WITH LIGHTWEIGHT FILL (CELLULAR CONCRETE)
RW 1326 ARCHITECTURAL PANEL LAYOUT NO. 1

DESIGN DETAIL SHEET (ENGLISH) (REV. 2/25/05)

ORIGINAL SCALE IN INCHES FOR REDUCED PLANS 0 1 2 3

CU 12235
EA 071621

DISREGARD PRINTS BEARING EARLIER REVISION DATES

REVISION DATES (PRELIMINARY STAGE ONLY) 09/26/08 02/25/09 05/18/09

SHEET 14 OF 23

FILE => 55-E0076-v-rwdt01.add

USERNAME => trpierce DATE PLOTTED => 29-MAR-2010 TIME PLOTTED => 14:20

DIST	COUNTY	ROUTE	POST MILES TOTAL PROJECT	SHEET No	TOTAL SHEETS
12	Ora	22,405	R0.7/R2.9, 20.4/22.3	978	1006

LICENSED LANDSCAPE ARCHITECT

9-21-09
PLANS APPROVAL DATE

LICENSED LANDSCAPE ARCHITECT
CATHY L. JOHNSON
NO. 4545
Expiration Date
01-31-10
Renewal Date
05-18-09
Date
STATE OF CALIFORNIA

The State of California or its officers or agents shall not be responsible for the accuracy or completeness of electronic copies of this plan sheet.

RBF CONSULTING
14725 ALTON PARKWAY
IRVINE, CA 92618

OCTA
550 SOUTH MAIN STREET
ORANGE, CA 92863

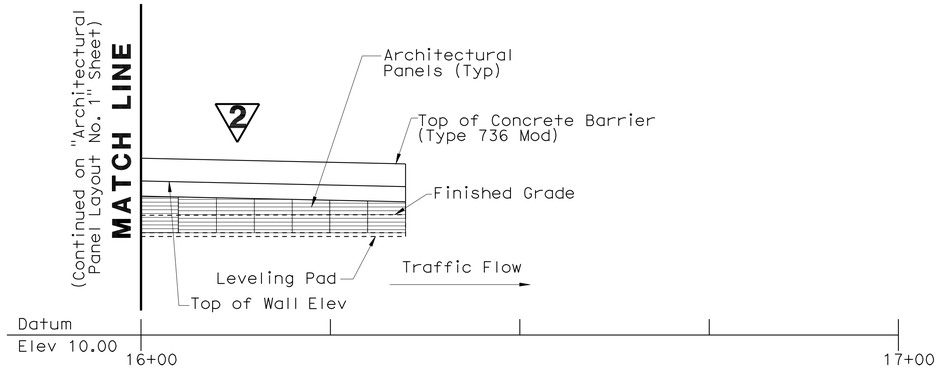

ELEVATION (SEGMENT-4)

1" = 10'

2 REVISED PER ADDENDUM No. 2 DATED APRIL 1, 2010

NOTE:
The contractor shall verify all controlling field dimensions before ordering or fabricating any material.

Sudhakar Vatti
DESIGN OVERSIGHT Sudhakar Vatti
5-19-09
SIGN OFF DATE

	BY	CHECKED
DESIGN	C. JOHNSON	A. SU
DETAILS	R. KELCHER	A. SU
QUANTITIES	H. OKOLO	

PREPARED FOR THE
STATE OF CALIFORNIA
DEPARTMENT OF TRANSPORTATION

B. LOSEY
PROJECT ENGINEER

BRIDGE NO. 55E0076
POST MILE 20.91-21.03

PRECAST WALL No. 1326 WITH LIGHTWEIGHT FILL (CELLULAR CONCRETE)
RW 1326 ARCHITECTURAL PANEL LAYOUT NO. 2

DESIGN DETAIL SHEET (ENGLISH) (REV. 2/25/05)

ORIGINAL SCALE IN INCHES FOR REDUCED PLANS 0 1 2 3

CU 12235
EA 071621

DISREGARD PRINTS BEARING EARLIER REVISION DATES
REVISION DATES (PRELIMINARY STAGE ONLY) 09/28/08 02/13/09 05/18/09

SHEET 15 OF 23

FILE => 55-E0076-v-rwdt02.add

USERNAME => trpierce DATE PLOTTED => 29-MAR-2010 TIME PLOTTED => 14:21

DIST	COUNTY	ROUTE	POST MILES TOTAL PROJECT	SHEET No	TOTAL SHEETS
12	Ora	22,405	R0.7/R2.9, 20.4/22.3	987	1006

REGISTERED CIVIL ENGINEER 5/18/09 DATE

9-21-09
PLANS APPROVAL DATE

REGISTERED PROFESSIONAL ENGINEER MOHSEN MOHSENI No. C45999 Exp. 12/31/10 CIVIL STATE OF CALIFORNIA

The State of California or its officers or agents shall not be responsible for the accuracy or completeness of electronic copies of this plan sheet.

PARSONS 2201 DUPONT DRIVE SUITE 200 IRVINE, CA 92612

OCTA 550 SOUTH MAIN STREET ORANGE, CA 92863

INDEX TO PLANS

SHEET NO.	TITLE
1	INDEX TO PLANS
2	GENERAL PLAN No. 1
3	GENERAL PLAN No. 2
4	GENERAL PLAN No. 3
5	PRECAST WALL DETAILS No. 1
6	PRECAST WALL DETAILS No. 2
7	PRECAST WALL DETAILS No. 3
8	PRECAST WALL DETAILS No. 4
9	PRECAST WALL DETAILS No. 5
10	PRECAST WALL DETAILS No. 6
11	PRECAST WALL DETAILS No. 7
12	PRECAST WALL DETAILS No. 8
13	PRECAST WALL DETAILS No. 9
14	RW 3319 ARCHITECTURAL PANEL LAYOUT
15	ARCHITECTURAL PANEL DETAILS No. 1
16	LOG OF TEST BORINGS 1 OF 5
17	LOG OF TEST BORINGS 2 OF 5
18	LOG OF TEST BORINGS 3 OF 5
19	LOG OF TEST BORINGS 4 OF 5
20	LOG OF TEST BORINGS 5 OF 5

STANDARD PLANS DATED MAY 2006

With Errata No.1 through 9

A10A	ACRONYMS AND ABBREVIATIONS (Sheet 1 of 2)
A10B	ACRONYMS AND ABBREVIATIONS (Sheet 2 of 2)
A10C	SYMBOLS (Sheet 1 of 2)
A10D	SYMBOLS (Sheet 2 of 2)
B11-56	CONCRETE BARRIER TYPE 736
ES-6A	ELECTRICAL SYSTEMS (LIGHTING STANDARD TYPES 15 AND 21)
ES-6B	ELECTRICAL SYSTEMS (LIGHTING STANDARD TYPES 15 AND 21 BARRIER RAIL MOUNTED DETAILS)

GENERAL WALL NOTES

1. All Precast Concrete Panels, except Top Panels and Single Panels, are 5'-0" (Nominal Length) and 5'-0" (Nominal Height) per full size panel dimensions shown in "Precast Wall Details" sheets. Half Panels are 2'-6" nominal height.

2. Top Panels vary in height from 3'-9" to 8'-9" (Nominal) maximum. Top Panels are placed directly above intermediate panels. Where Top Panels exceed 5'-0" in height, a ½" horizontal groove shall be incorporated into the Architectural Treatment section of the Panel. Top Panels shall be 5'-0" long (Nominal).

3. Single Panels vary in height from 3'-9" to 8'-9" maximum. Single Panels are placed directly above the concrete leveling pad. Single Panels shall not have any other panels above it. Where Single Panels exceed 5'-0" in height, a ½" horizontal groove shall be incorporated into the Architectural Treatment of the Panel. Single Panels shall be 5'-0" long (Nominal).

4. Top Panels and Single Panels shall be cast as shown on the plans, to conform with wall profile.

5. For existing utilities to be abandoned or removed (not shown), and for location of proposed utilities, see "Road Plans".

6. Lightweight Cellular Concrete lifts shall not exceed 2 feet 6 inches in depth. The last lift of the top cellular concrete layer shall not be less than 2 feet. Intermediate lifts of cellular concrete layers shall not be placed less than 24 hours after the placement of the previous lift.

7. Longitudinal construction joints are not allowed. ~~along the top cellular concrete layer.~~ Transverse joints in top cellular concrete layer shall be per details shown on Precast Wall Detail sheets. 2

8. No construction vehicles or machinery shall be operated on the intermediate cellular concrete lifts during construction. No contruction vehicles or machinery shall be operated on the last lift of the top cellular concrete layer until the full specified compresive strength is reached. Top layer shall be placed parallel to the Roadway Cross Slope.

9. Trucks shall be at least 6 feet from the edge of the top layer of the Lightweight Cellular Concrete during construction after the top cellular concrete layer has attained its full strength.

10. For surcharging and foundation preparation see "Road Plans".

11. Lifting inserts for precast concrete panels shall be designed to a lift of minimum 6.50 kips each.

12. Settlement Monitoring will be required.

NOTE:
The Contractor shall verify all controlling field dimensions before ordering or fabricating any material

PLAN SYMBOLS

Standard Plan Sheet No.

Detail No.

A Section Identification

LEGEND

T OR T — Groove — Top Panel

S OR S — Groove — Single Panel

Intermediate or Bottom Panel

Bottom Half Panel

EPDM Ethylene Propylene Diene M-Class Rubber

GENERAL DESIGN NOTES

Design:
Caltrans Bridge Design Specifications - April 2000 (LFD)
(1996 AASHTO with Inerims and Revisions by Caltrans)

Live Loading:
HS20-44 and Alternative and Permit Design Load

Lightweight Cellular Concrete Fill:
f'_c = 125 psi (Minimum concrete compressive Strength in 28 days) Top Layer
f'_c = 60 psi (Minimum concrete compressive Strength in 28 days) Bottom Layers
f'_{ci} = 10 psi (Minumum initial Concrete compressive Strength prior to the next lift) Bottom Layers

Precast Concrete Panels:
f'_c = 4,000 psi (Minimum concrete compressive Strength in 28 days)
f_y = 60 ksi (Yield Strength of Welded Wire Reinforcement)

Threaded Rebar Studs:
f_y = 60 ksi

Reinforced Concrete:
f'_c = 3,600 psi, Except as Noted (Minimum concrete compressive Strength in 28 days)
f_y = 60 ksi (Yield Strength of Reinforcement)

Design Seismic Load:
0.5 Dead Load

Leveling Pad Footing Pressure (Tons per SF):

Allowable	Design
0.75	0.42

2 **REVISED PER ADDENDUM No. 2 DATED APRIL 1, 2010**

Sudhakar Vatti
DESIGN OVERSIGHT Sudhakar Vatti
5-19-09
SIGN OFF DATE

	BY	CHECKED
DESIGN	M. Ruvalcaba	M. Mohseni
DETAILS	N. Morcillo	M. Ruvalcaba
QUANTITIES	M. Ruvalcaba	M. Mohseni

PREPARED FOR THE STATE OF CALIFORNIA DEPARTMENT OF TRANSPORTATION

MOHSEN MOHSENI
PROJECT ENGINEER

BRIDGE NO. 55E0077
POST MILE 20.80

PRECAST WALL No. 3319 WITH LIGHTWEIGHT FILL (CELLULAR CONCRETE)

INDEX TO PLANS

DESIGN DETAIL SHEET (ENGLISH) (REV. 2/25/05)

ORIGINAL SCALE IN INCHES FOR REDUCED PLANS 0 1 2 3

CU 12235
EA 071621

DISREGARD PRINTS BEARING EARLIER REVISION DATES

REVISION DATES (PRELIMINARY STAGE ONLY) 10/27/08 2/23/09 5/18/09

SHEET 1 OF 20

FILE => 55-e0077-a-aitp.add

USERNAME => trpierce DATE PLOTTED => 29-MAR-2010 TIME PLOTTED => 14:21

DIST	COUNTY	ROUTE	POST MILES TOTAL PROJECT	SHEET No	TOTAL SHEETS
12	Ora	22,405	R0.7/R2.9, 20.4/22.3	991	1006

REGISTERED CIVIL ENGINEER 5/18/09 DATE

9-21-09
PLANS APPROVAL DATE

The State of California or its officers or agents shall not be responsible for the accuracy or completeness of electronic copies of this plan sheet.

REGISTERED PROFESSIONAL ENGINEER MOHSEN MOHSENI No. C45999 Exp. 12/31/10 CIVIL STATE OF CALIFORNIA

PARSONS 2201 DUPONT DRIVE SUITE 200 IRVINE, CA 92612

OCTA 550 SOUTH MAIN STREET ORANGE, CA 92863

2

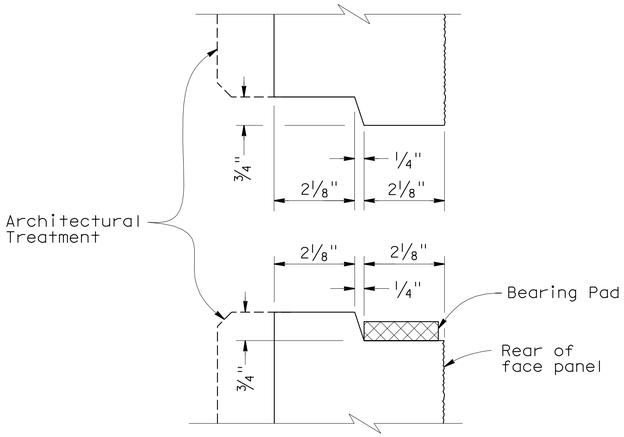

HORIZONTAL JOINT DETAIL

1"=2'-0"

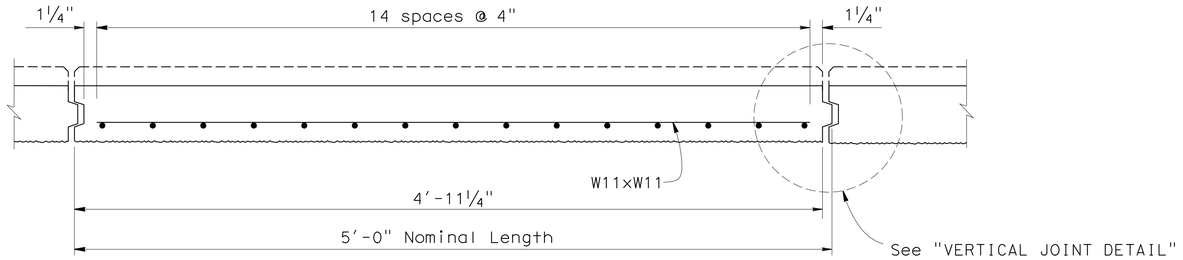

PLAN - FACE PANEL

1/2"=1'-0"

NOTES:

1. Place reinforced elastomeric bearing pads in all of the panel joints between the panels. Place one in each vertical joint where the horizontal joint intersects it. Place two per panel in each horizontal joint.
   1/2" x 1 1/2" x 6" for vertical joints
   1/2" x 2" x 6" for horizontal joints.
2. Top and Single Panels shall be cast as shown on plans, to conform with wall profile.
3. For Architectural Treatment Details, see Architectural Panel sheets.
4. For Insert Load requirement see "Index to Plans" sheet.

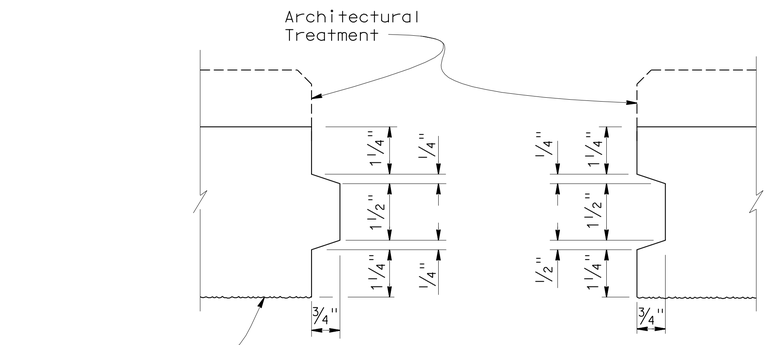

VERTICAL JOINT DETAIL

1"=2'-0"

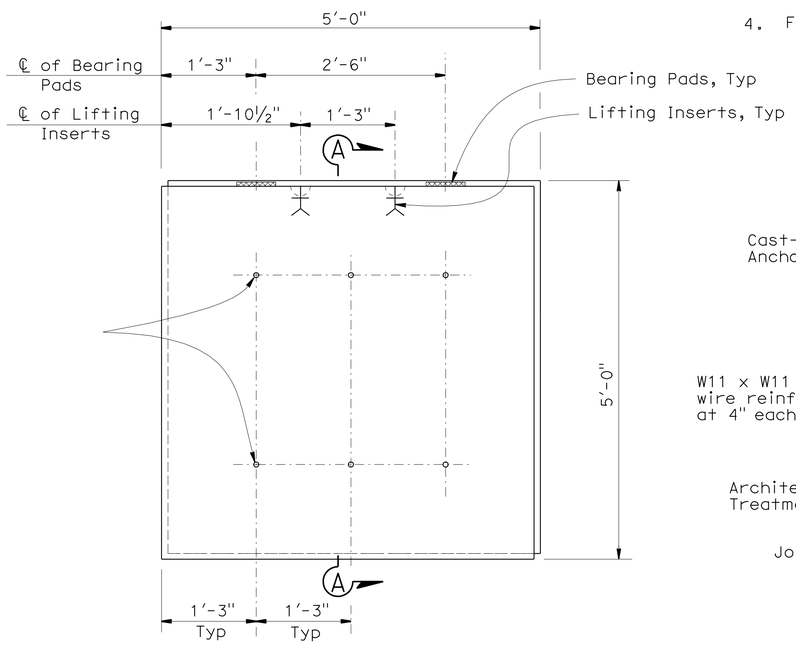

(BACK FACE SHOWN)

INTERMEDIATE PANEL

1" = 1'-0"

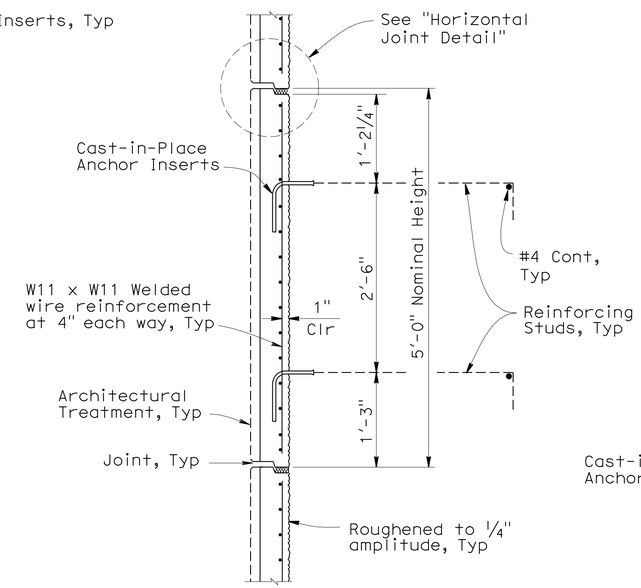

SECTION A-A

1" = 1'-0"

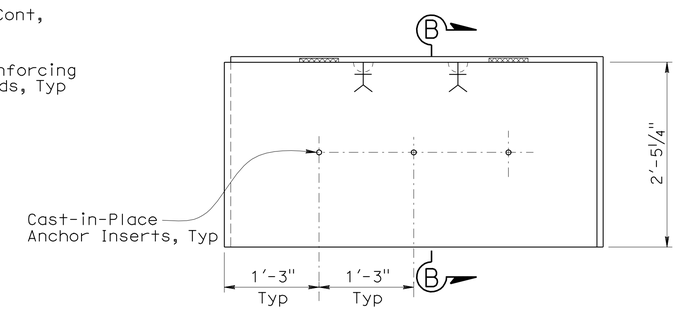

NOTE:
For information not shown see "Intermediate Panel".

(BACK FACE SHOWN)

BOTTOM HALF PANEL

1" = 1'-0"

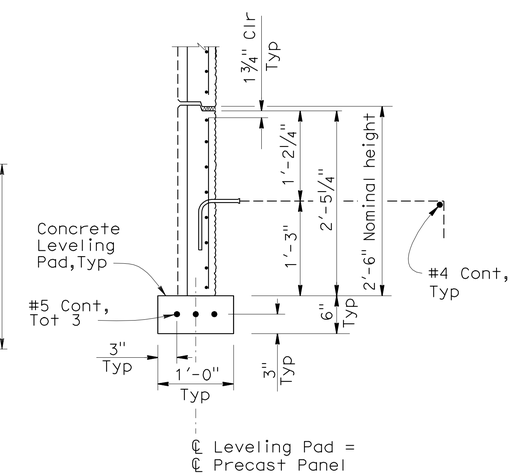

SECTION B-B

1"=1'-0"

NOTE:
The Contractor shall verify all controlling field dimensions before ordering or fabricating any material

2 **REVISED PER ADDENDUM No. 2 DATED APRIL 1, 2010**

Sudhakar Vatti
DESIGN OVERSIGHT Sudhakar Vatti
5-19-09
SIGN OFF DATE

	BY	CHECKED
DESIGN	M. Ruvalcaba	M. Mohseni
DETAILS	N. Morcillo	M. Ruvalcaba
QUANTITIES	M. Ruvalcaba	M. Mohseni

PREPARED FOR THE STATE OF CALIFORNIA DEPARTMENT OF TRANSPORTATION

MOHSEN MOHSENI
PROJECT ENGINEER

BRIDGE NO. 55E0077
POST MILE 20.80

PRECAST WALL No. 3319 WITH LIGHTWEIGHT FILL (CELLULAR CONCRETE)

PRECAST WALL DETAILS No. 1

DESIGN DETAIL SHEET (ENGLISH) (REV. 2/25/05)

ORIGINAL SCALE IN INCHES FOR REDUCED PLANS 0 1 2 3

CU 12235
EA 071621

DISREGARD PRINTS BEARING EARLIER REVISION DATES

REVISION DATES (PRELIMINARY STAGE ONLY) 10/27/08 2/23/09 5/18/09

SHEET 5 OF 20

FILE => 55-E0077-g-rwdt01.add

USERNAME => trstrk DATE PLOTTED => 23-MAR-2010 TIME PLOTTED => 12:27

DIST	COUNTY	ROUTE	POST MILES TOTAL PROJECT	SHEET No	TOTAL SHEETS
12	Ora	22,405	R0.7/R2.9, 20.4/22.3	998	1006

REGISTERED CIVIL ENGINEER 5/18/09 DATE

9-21-09
PLANS APPROVAL DATE

The State of California or its officers or agents shall not be responsible for the accuracy or completeness of electronic copies of this plan sheet.

REGISTERED PROFESSIONAL ENGINEER MOHSEN MOHSENI No. C45999 Exp. 12/31/10 CIVIL STATE OF CALIFORNIA

PARSONS 2201 DUPONT DRIVE SUITE 200 IRVINE, CA 92612

OCTA 550 SOUTH MAIN STREET ORANGE, CA 92863

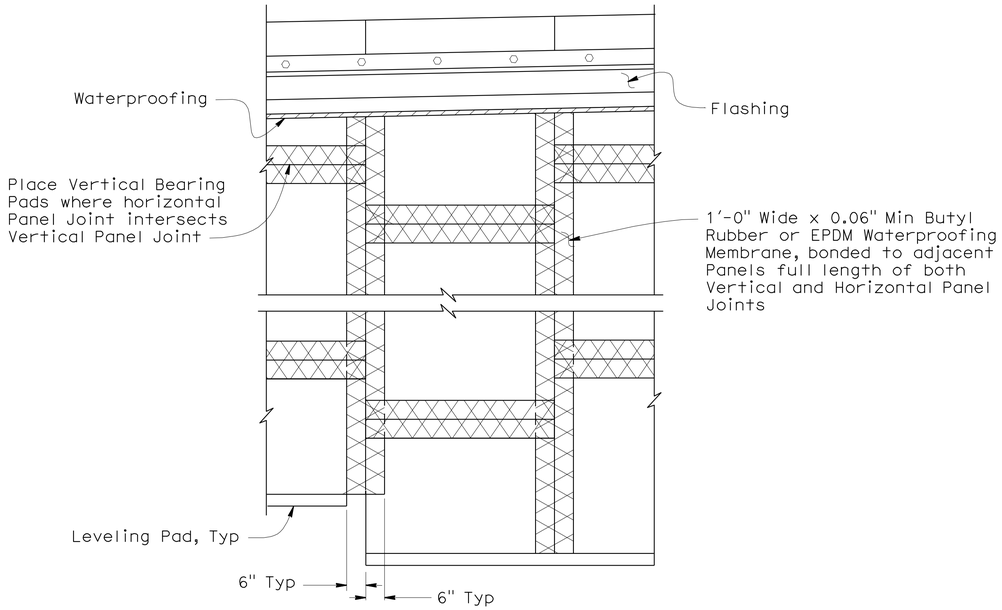

Note: Barrier Slab and Anchor Inserts not shown for clarity

ELEVATION A-A
No Scale

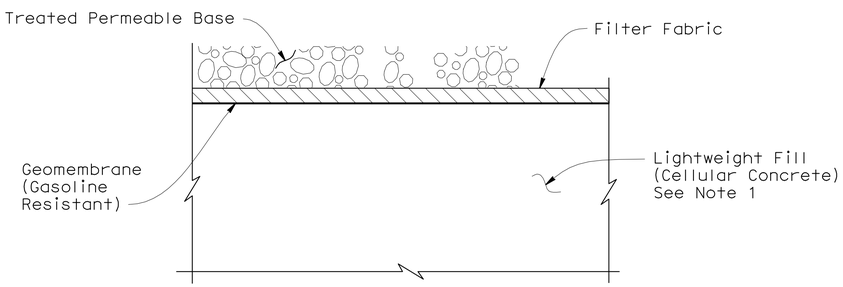

WATERPROOFING
No Scale

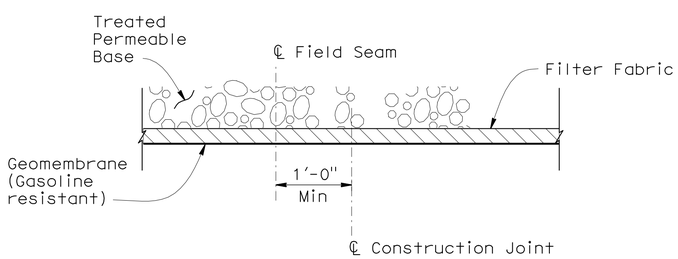

SECTION AT CONTROLLED JOINT
No Scale

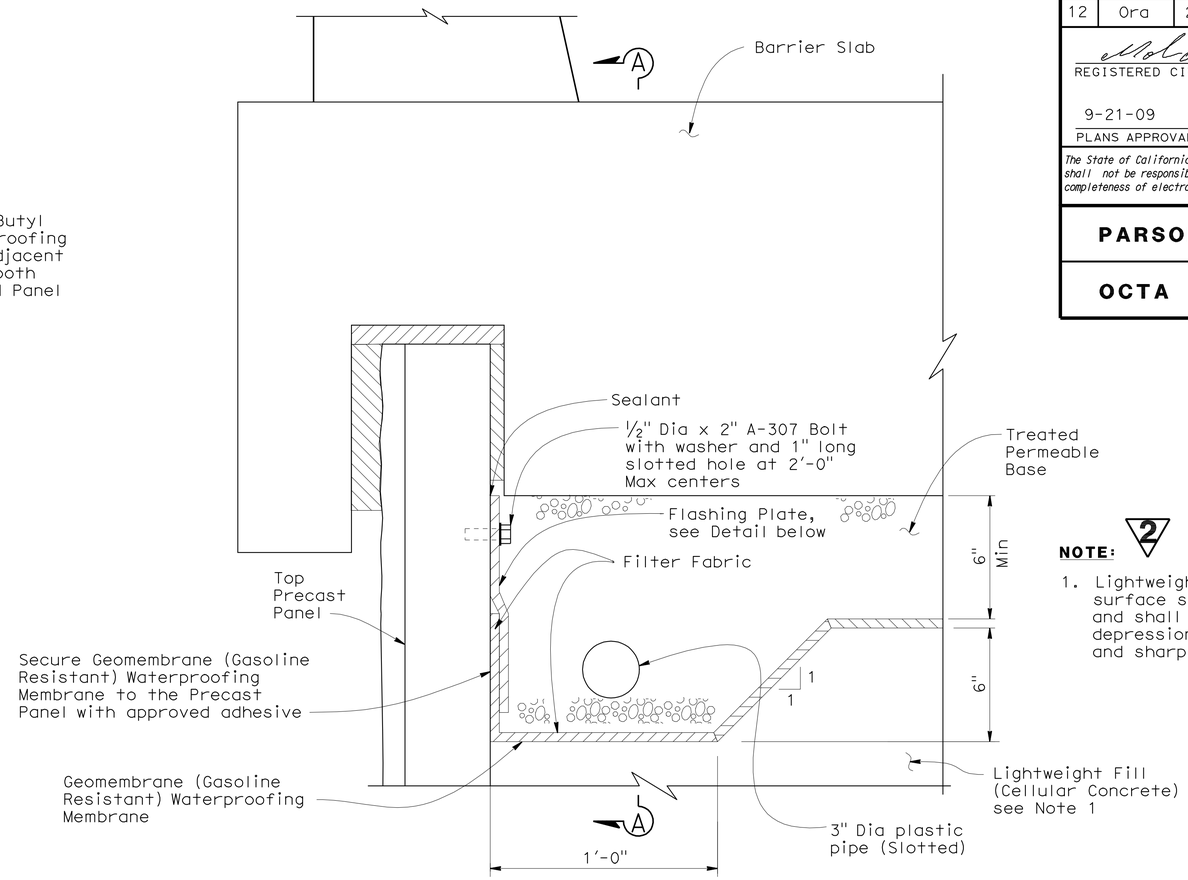

WATER PROOFING AT TOP PRECAST PANEL
No Scale

NOTE: 2

1. Lightweight Fill (Cellular Concrete) surface shall have smooth even finish and shall be clean and free from depressions, ridges, projections and sharp objects.

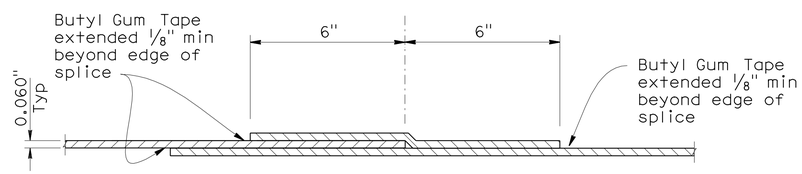

TONGUE AND GROOVE - FIELD SPLICE

BUTYL RUBBER MEMBRANE OR EPDM SPLICE DETAIL
No Scale

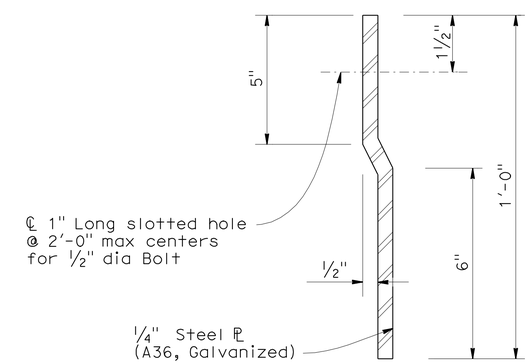

FLASHING DETAIL
No Scale

NOTE:
The Contractor shall verify all controlling field dimensions before ordering or fabricating any material

2 **REVISED PER ADDENDUM No. 2 DATED APRIL 1, 2010**

Sudhakar Vatti
DESIGN OVERSIGHT Sudhakar Vatti
5-19-09
SIGN OFF DATE

	BY	CHECKED
DESIGN	M. Ruvalcaba	M. Mohseni
DETAILS	N. Morcillo	M. Ruvalcaba
QUANTITIES	M. Ruvalcaba	M. Mohseni

PREPARED FOR THE STATE OF CALIFORNIA DEPARTMENT OF TRANSPORTATION

MOHSEN MOHSENI
PROJECT ENGINEER

BRIDGE NO. 55E0077
POST MILE 20.80

PRECAST WALL No. 3319 WITH LIGHTWEIGHT FILL (CELLULAR CONCRETE)
PRECAST WALL DETAILS No. 8

DESIGN DETAIL SHEET (ENGLISH) (REV. 2/25/05)

ORIGINAL SCALE IN INCHES FOR REDUCED PLANS 0 1 2 3

CU 12235
EA 071621

DISREGARD PRINTS BEARING EARLIER REVISION DATES → REVISION DATES (PRELIMINARY STAGE ONLY) 10/27/08 2/23/09 5/18/09

SHEET 12 OF 20

FILE => 55-e0077-g-rwdt08.add

USERNAME => trmikesi DATE PLOTTED => 30-MAR-2010 TIME PLOTTED => 11:41

DIST	COUNTY	ROUTE	POST MILES TOTAL PROJECT	SHEET No	TOTAL SHEETS
12	Ora	22,405	R0.7/R2.9, 20.4/22.3	999	1006

REGISTERED CIVIL ENGINEER 5/18/09 DATE

9-21-09
PLANS APPROVAL DATE

The State of California or its officers or agents shall not be responsible for the accuracy or completeness of electronic copies of this plan sheet.

REGISTERED PROFESSIONAL ENGINEER MOHSEN MOHSENI No. C45999 Exp. 12/31/10 CIVIL STATE OF CALIFORNIA

PARSONS 2201 DUPONT DRIVE SUITE 200 IRVINE, CA 92612

OCTA 550 SOUTH MAIN STREET ORANGE, CA 92863

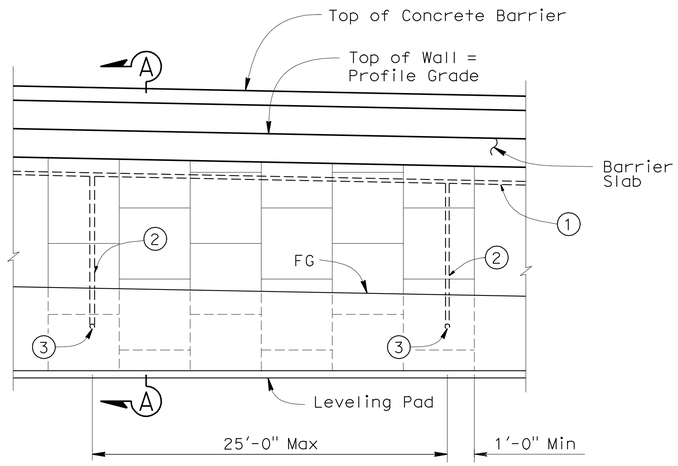

ELEVATION A-A
3/16" = 1'-0"

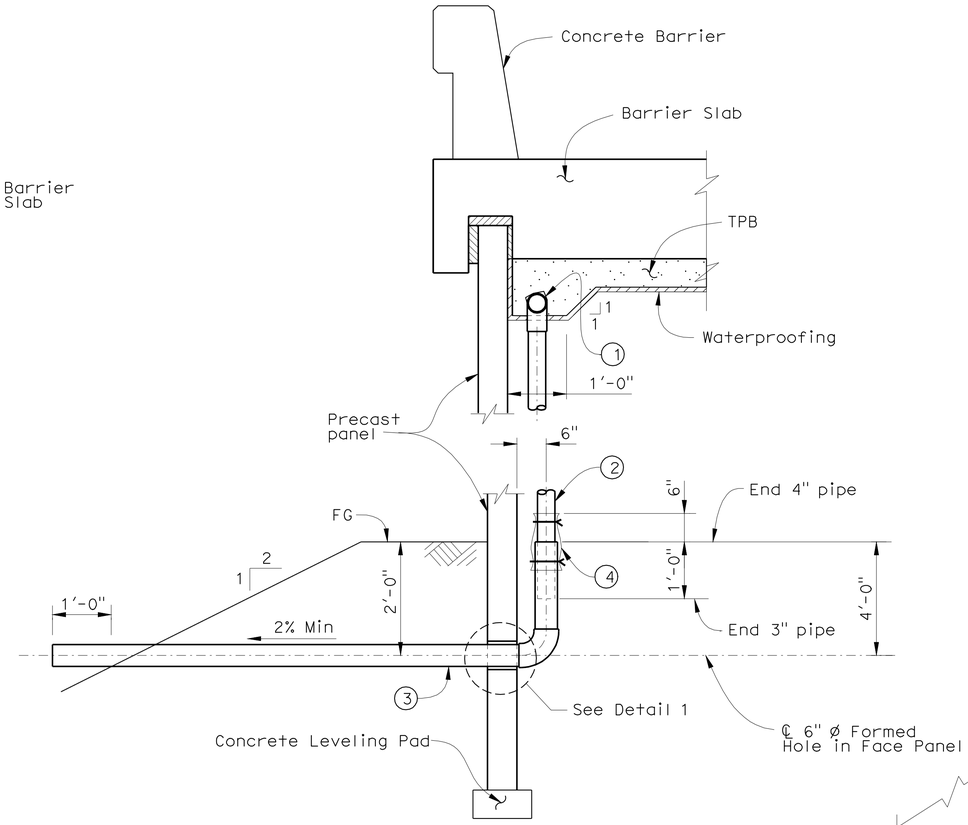

SECTION A-A (STA 10+00 TO 13+75)
3/8" = 1'-0"

LEGEND:

1. 3" Plastic pipe (Slotted)
2. 3" plastic pipe and fittings (unslotted)
3. 4" Sch 80 PVC outlet pipe and fitting (unslotted)
4. 1'-0" wide x 2'-0" filter fabric wrapped around pipe and secured with nylon ties

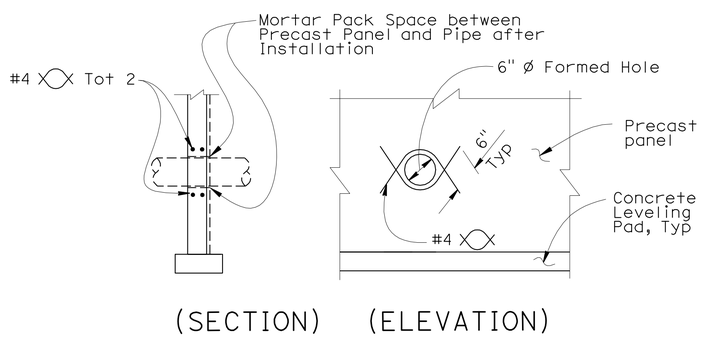

DETAIL 1 2
No Scale

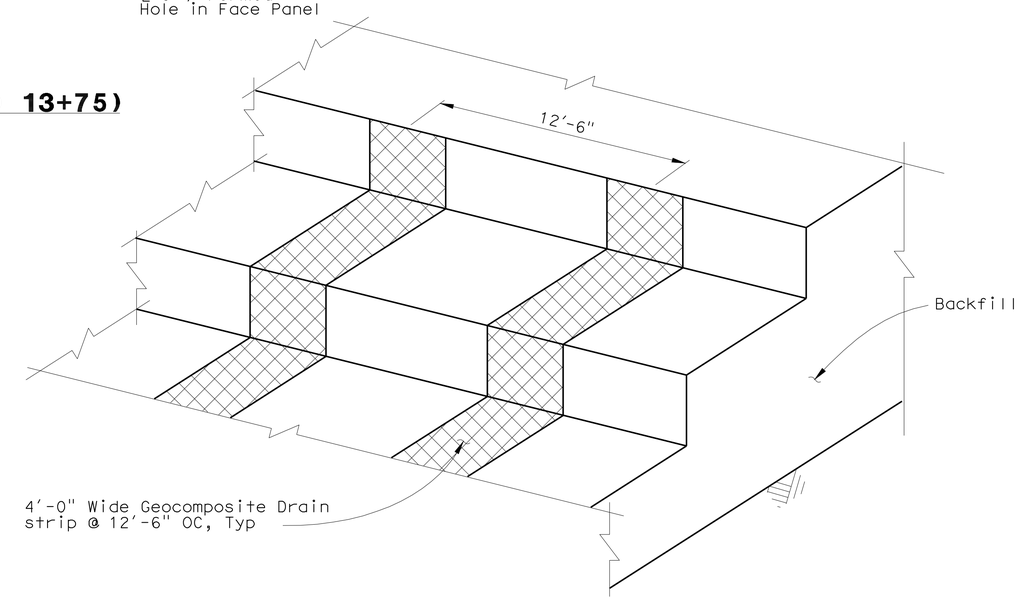

GEOCOMPOSITE DRAIN DETAIL
No Scale

2 REVISED PER ADDENDUM No. 2 DATED APRIL 1, 2010

NOTE:
The Contractor shall verify all controlling field dimensions before ordering or fabricating any material

Sudhakar Vatti
DESIGN OVERSIGHT Sudhakar Vatti
5-19-09
SIGN OFF DATE

	BY	CHECKED
DESIGN	M. Ruvalcaba	M. Mohseni
DETAILS	N. Morcillo	M. Ruvalcaba
QUANTITIES	M. Ruvalcaba	M. Mohseni

PREPARED FOR THE STATE OF CALIFORNIA DEPARTMENT OF TRANSPORTATION

MOHSEN MOHSENI
PROJECT ENGINEER

BRIDGE NO. 55E0077
POST MILE 20.80

PRECAST WALL No. 3319 WITH LIGHTWEIGHT FILL (CELLULAR CONCRETE)

PRECAST WALL DETAILS No. 9

DESIGN DETAIL SHEET (ENGLISH) (REV. 2/25/05)

ORIGINAL SCALE IN INCHES FOR REDUCED PLANS 0 1 2 3

CU 12235
EA 071621

DISREGARD PRINTS BEARING EARLIER REVISION DATES

REVISION DATES (PRELIMINARY STAGE ONLY) 10/27/08 2/23/09 5/18/09

SHEET 13 OF 20

FILE => 55-e0077-g-rwdt09.add

USERNAME => ttstrk DATE PLOTTED => 29-MAR-2010 TIME PLOTTED => 12:28

DIST	COUNTY	ROUTE	POST MILES TOTAL PROJECT	SHEET No	TOTAL SHEETS
12	Ora	22,405	R0.7/R2.9, 20.4/22.3	1000	1006

LICENSED LANDSCAPE ARCHITECT

9-21-09
PLANS APPROVAL DATE

LICENSED LANDSCAPE ARCHITECT
CATHY L. JOHNSON
NO. 4545
Expiration Date
01-31-10
Renewal Date
05-18-09
Date
STATE OF CALIFORNIA

The State of California or its officers or agents shall not be responsible for the accuracy or completeness of electronic copies of this plan sheet.

RBF CONSULTING
14725 ALTON PARKWAY
IRVINE, CA 92618

OCTA
550 SOUTH MAIN STREET
ORANGE, CA 92863

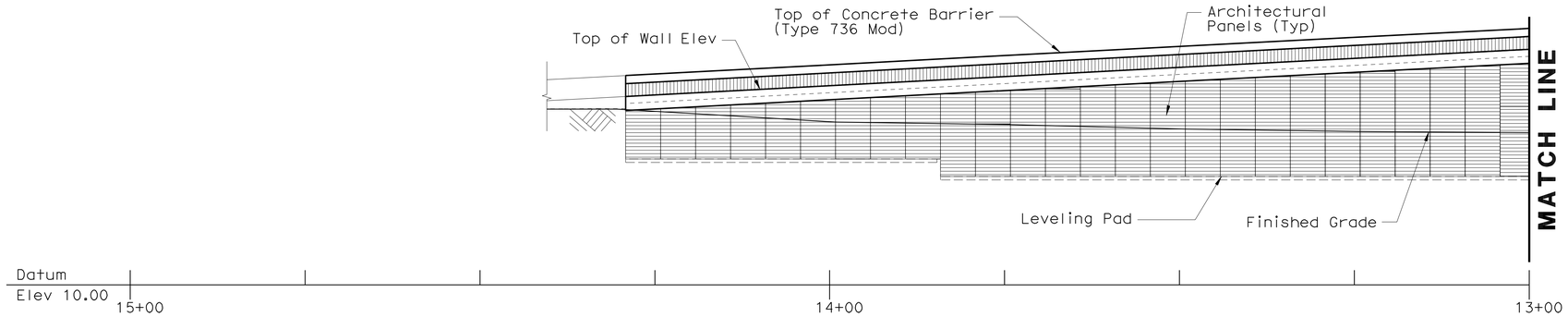

ELEVATION (SEGMENT-1)

1" = 10'

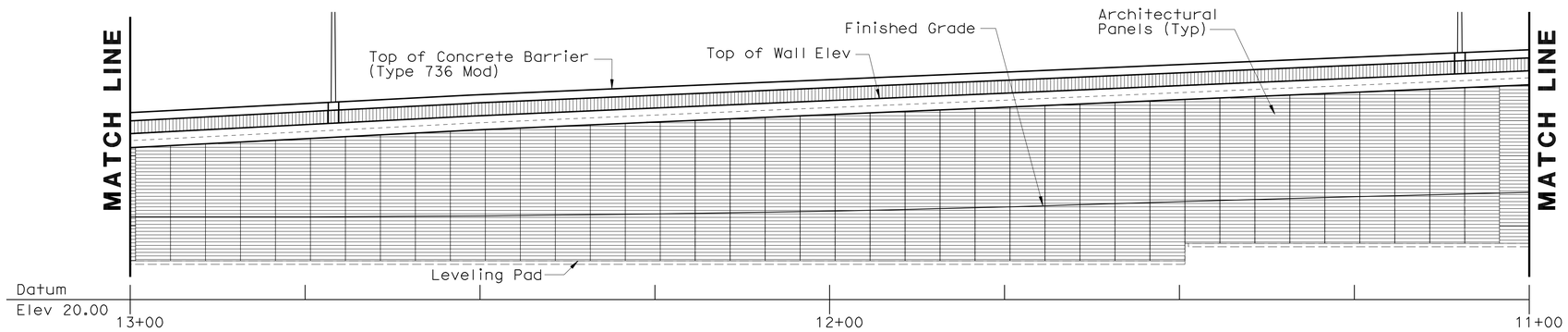

ELEVATION (SEGMENT-2)

1" = 10'

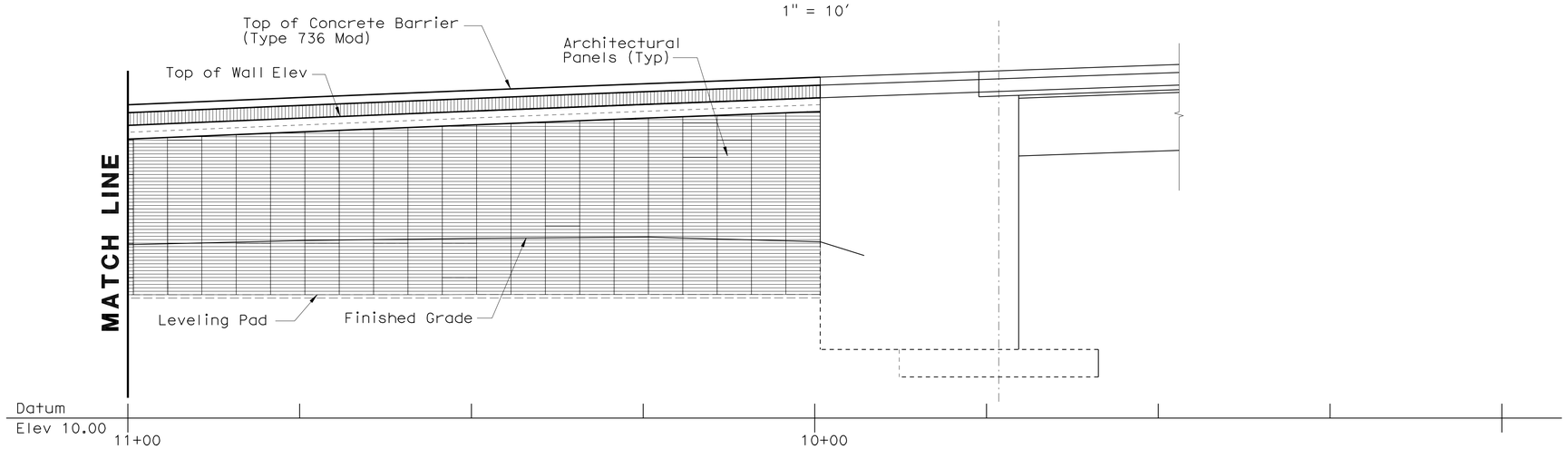

ELEVATION (SEGMENT-3)

1" = 10'

NOTE:
The contractor shall verify all controlling field dimensions before ordering or fabricating any material.

2 REVISED PER ADDENDUM No. 2 DATED APRIL 1, 2010

Sudhakar Vatti
DESIGN OVERSIGHT Sudhakar Vatti
5-19-09
SIGN OFF DATE

	BY	CHECKED
DESIGN	C. JOHNSON	A. SU
DETAILS	R. KELCHER	A. SU
QUANTITIES	H. OKOLO	

PREPARED FOR THE
STATE OF CALIFORNIA
DEPARTMENT OF TRANSPORTATION

B. LOSEY
PROJECT ENGINEER

BRIDGE NO. 55E0077
POST MILE 20.80-20.89

PRECAST WALL No. 3319 WITH LIGHTWEIGHT FILL (CELLULAR CONCRETE)

RW 3319 ARCHITECTURAL PANEL LAYOUT

DESIGN DETAIL SHEET (ENGLISH) (REV. 2/25/05)

ORIGINAL SCALE IN INCHES FOR REDUCED PLANS 0 1 2 3

CU 12235
EA 071621

DISREGARD PRINTS BEARING EARLIER REVISION DATES

REVISION DATES (PRELIMINARY STAGE ONLY) 09/26/08 02/23/09 05/18/09

SHEET 14 OF 20

FILE => 55-E077-v-rwdt01.add

USERNAME => trstrk DATE PLOTTED => 29-MAR-2010 TIME PLOTTED => 12:28