DIST	COUNTY	ROUTE	KILOMETER POST TOTAL PROJECT	SHEET No	TOTAL SHEETS
11	SD	5,805	R49.9/R51.7, 42.6/46.5	701	886

Caltrans Metric

REGISTERED CIVIL ENGINEER 4-28-09 DATE

9-27-10
PLANS APPROVAL DATE

REGISTERED PROFESSIONAL ENGINEER James L. Rucker No. 47796 Exp. 12-31-09 CIVIL STATE OF CALIFORNIA

The State of California or its officers or agents shall not be responsible for the accuracy or completeness of electronic copies of this plan sheet.

SANDAG
401 B STREET,
SAN DIEGO, CA 92101

T.Y. LIN INTERNATIONAL
5030 CAMINO DE LA SIESTA, SUITE 204,
SAN DIEGO, CA 92108

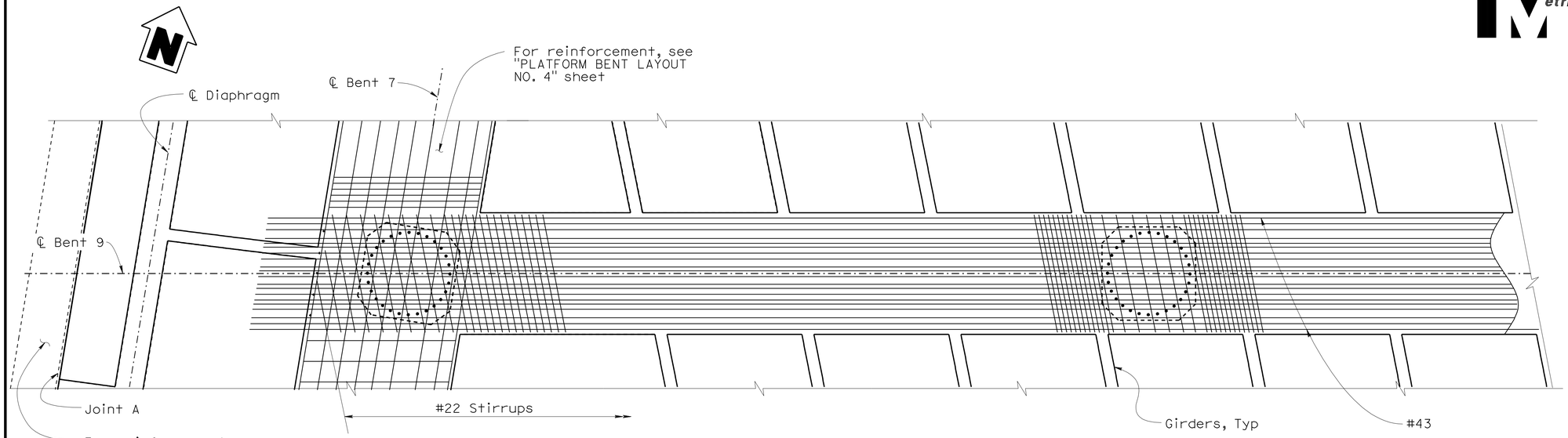

BOTTOM CAP REINFORCEMENT

PLAN
1:50

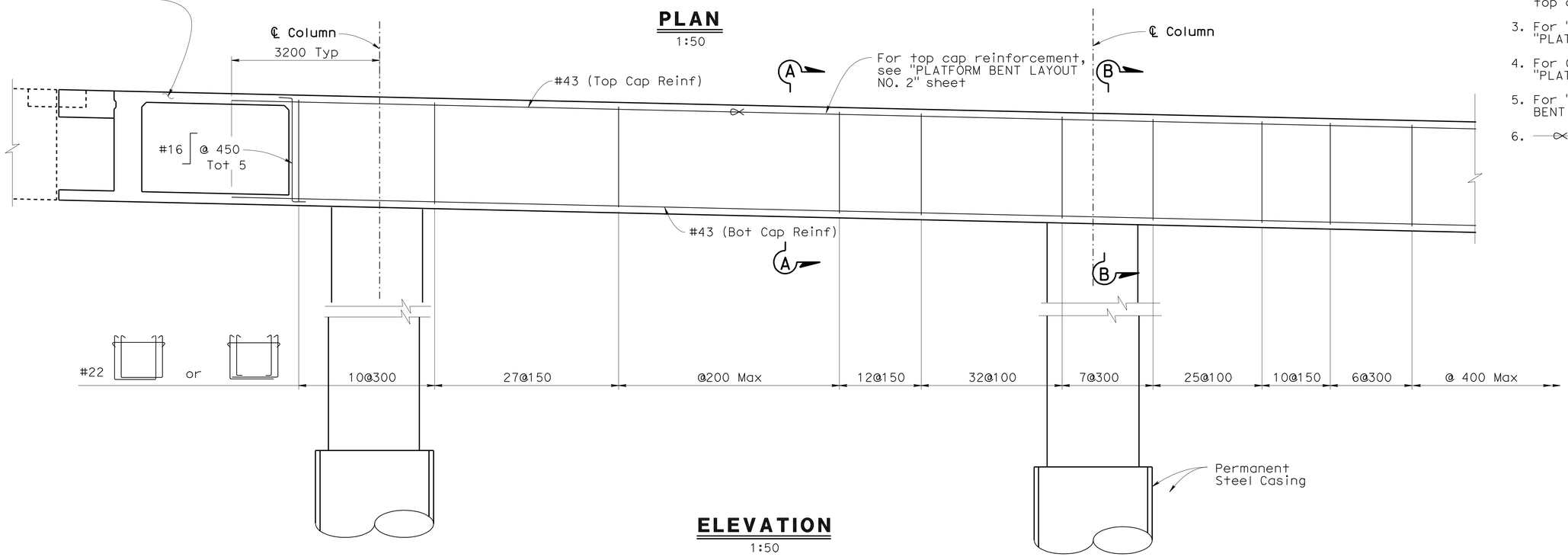

ELEVATION
1:50

NOTES:

1. All bars not shown
2. Only service butt splices allowed in top and bottom cap reinforcement
3. For "SECTION A-A" and "SECTION B-B",see "PLATFORM BENT DETAILS NO.1" sheet
4. For Column and Pile details, see "PLATFORM BENT DETAILS NO.3" sheet.
5. For "STITCH TIE DETAIL", see "PLATFORM BENT DETAILS NO.2" sheet.
6. —⋈— Indicates Vert bundled bars.

ALL DIMENSIONS ARE IN MILLIMETERS UNLESS OTHERWISE SHOWN

CHUNG-YUAN WEN
DESIGN OVERSIGHT
4-28-09
SIGN OFF DATE

DESIGN DETAIL SHEET (METRIC) (REV. 10/27/05)

	BY	CHECKED
DESIGN	Jeremy Lahaye	Chris Hodge
DETAILS	Andy Toledo	Chris Hodge
QUANTITIES	Oscar Colcol	Xiaoyun Wu

PREPARED FOR THE STATE OF CALIFORNIA DEPARTMENT OF TRANSPORTATION

Brett Makley
PROJECT ENGINEER

BRIDGE NO. 57C0786
KILOMETER POST KP43.2

CARROLL CANYON ROAD BRIDGE
PLATFORM BENT LAYOUT NO.1

ORIGINAL SCALE IN MILLIMETERS FOR REDUCED PLANS 0 10 20 30 40 50 60 70 80 90 100

CU 11275
EA 2T0401

DISREGARD PRINTS BEARING EARLIER REVISION DATES

REVISION DATES (PRELIMINARY STAGE ONLY) 9/12/08 12/19/08 3/9/09 4/15/09 4-28-09

SHEET 28 OF 74

FILE => 57-c0786-h-b02_lo01.dgn

USERNAME => trmikesl DATE PLOTTED => 29-SEP-2010 TIME PLOTTED => 11:39

DIST	COUNTY	ROUTE	KILOMETER POST TOTAL PROJECT	SHEET No	TOTAL SHEETS
11	SD	5,805	R49.9/R51.7, 42.6/46.5	702	886

Caltrans Metric

REGISTERED CIVIL ENGINEER 4-28-09 DATE

9-27-10
PLANS APPROVAL DATE

REGISTERED PROFESSIONAL ENGINEER James L. Rucker No. 47796 Exp. 12-31-09 CIVIL STATE OF CALIFORNIA

The State of California or its officers or agents shall not be responsible for the accuracy or completeness of electronic copies of this plan sheet.

SANDAG
401 B STREET,
SAN DIEGO, CA 92101

T.Y. LIN INTERNATIONAL
5030 CAMINO DE LA SIESTA, SUITE 204,
SAN DIEGO, CA 92108

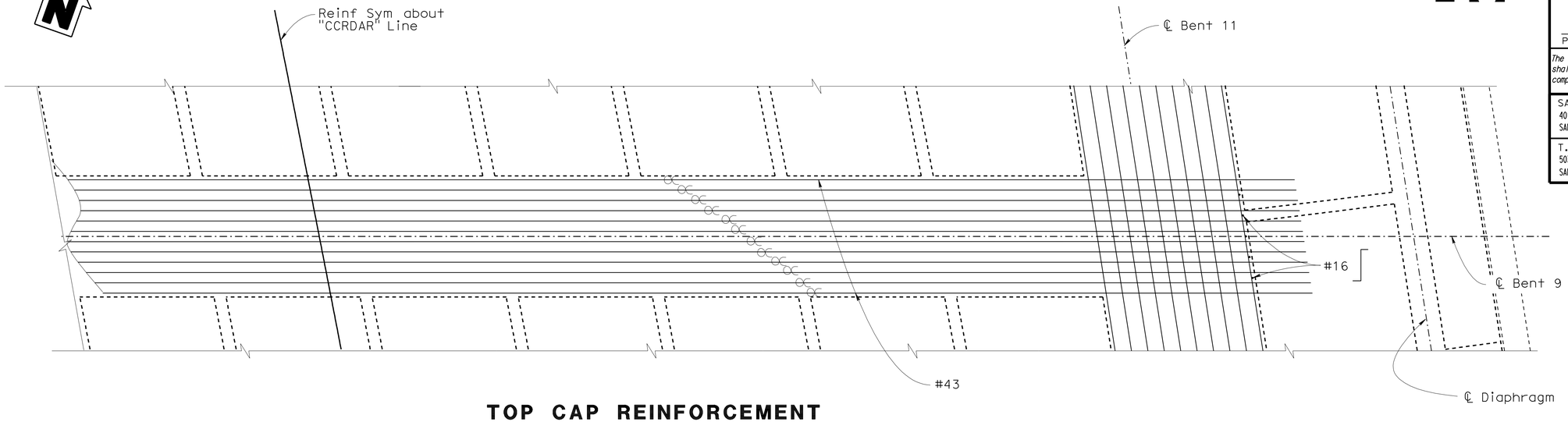

TOP CAP REINFORCEMENT

PLAN
1:50

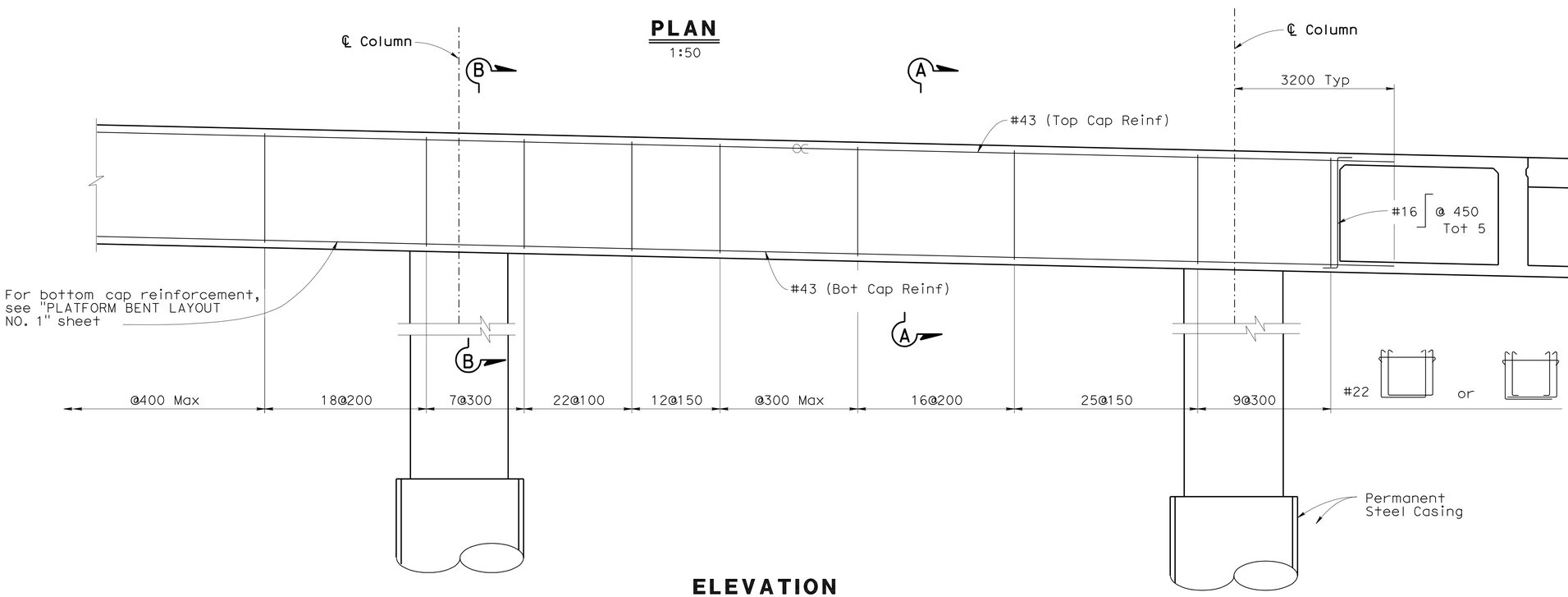

ELEVATION
1:50

NOTES:

1. —℄— - Indicates vert bundled bars
2. All bars not shown
3. Only service butt splices allowed in top and bottom cap reinforcement
4. For "SECTION A-A" and "SECTION B-B", see "PLATFORM BENT DETAILS NO.1" sheet
5. For Column and Pile details, see "PLATFORM BENT DETAILS NO.3" sheet.
6. For "STITCH TIE DETAIL", see "PLATFORM BENT DETAILS NO.2" sheet.

ALL DIMENSIONS ARE IN MILLIMETERS UNLESS OTHERWISE SHOWN

CHUNG-YUAN WEN
DESIGN OVERSIGHT
4-28-09
SIGN OFF DATE

DESIGN	Jeremy Lahaye	CHECKED	Chris Hodge
DETAILS	BY Andy Toledo	CHECKED	Chris Hodge
QUANTITIES	BY Oscar Colcol	CHECKED	Xiaoyun Wu

PREPARED FOR THE STATE OF CALIFORNIA DEPARTMENT OF TRANSPORTATION

Brett Makley
PROJECT ENGINEER

BRIDGE NO. 57C0786
KILOMETER POST KP43.2

CARROLL CANYON ROAD BRIDGE
PLATFORM BENT LAYOUT NO.2

DESIGN DETAIL SHEET (METRIC) (REV. 10/27/05)

ORIGINAL SCALE IN MILLIMETERS FOR REDUCED PLANS 0 10 20 30 40 50 60 70 80 90 100

CU 11275
EA 2T0401

DISREGARD PRINTS BEARING EARLIER REVISION DATES

REVISION DATES (PRELIMINARY STAGE ONLY) ~~9/12/08~~ ~~12/19/08~~ ~~3/9/09~~ 4/28/09

SHEET 29 OF 74

FILE => 57-c0786-h-b02_lo02.dgn

USERNAME => trmikesl DATE PLOTTED => 29-SEP-2010 TIME PLOTTED => 11:39

DIST	COUNTY	ROUTE	KILOMETER POST TOTAL PROJECT	SHEET No	TOTAL SHEETS
11	SD	5,805	R49.9/R51.7, 42.6/46.5	703	886

Caltrans Metric

REGISTERED CIVIL ENGINEER 4-28-09 DATE

9-27-10
PLANS APPROVAL DATE

REGISTERED PROFESSIONAL ENGINEER James L. Rucker No. 47796 Exp. 12-31-09 CIVIL STATE OF CALIFORNIA

The State of California or its officers or agents shall not be responsible for the accuracy or completeness of electronic copies of this plan sheet.

SANDAG
401 B STREET,
SAN DIEGO, CA 92101

T.Y. LIN INTERNATIONAL
5030 CAMINO DE LA SIESTA, SUITE 204,
SAN DIEGO, CA 92108

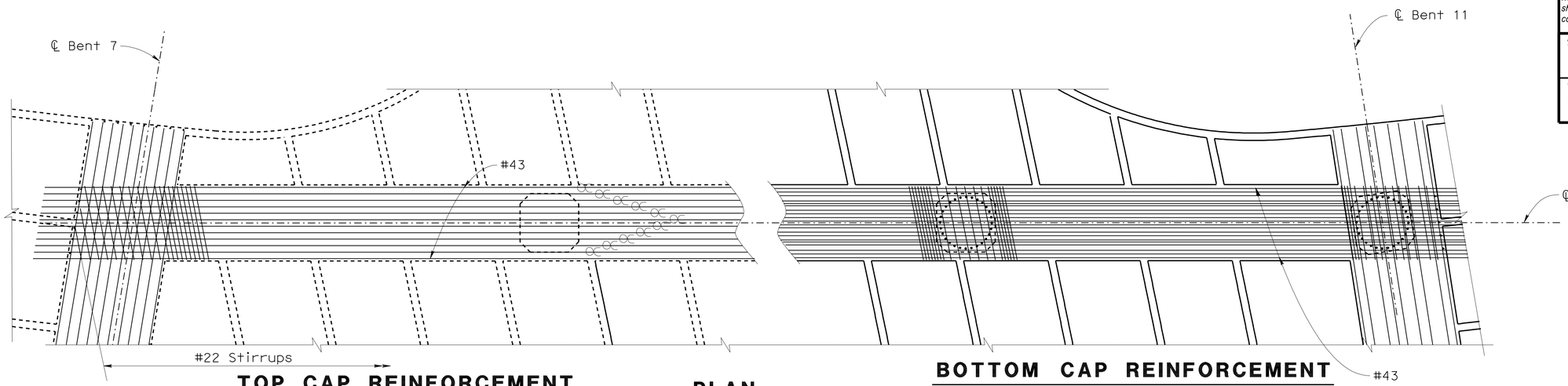

TOP CAP REINFORCEMENT

BOTTOM CAP REINFORCEMENT

PLAN
1:80

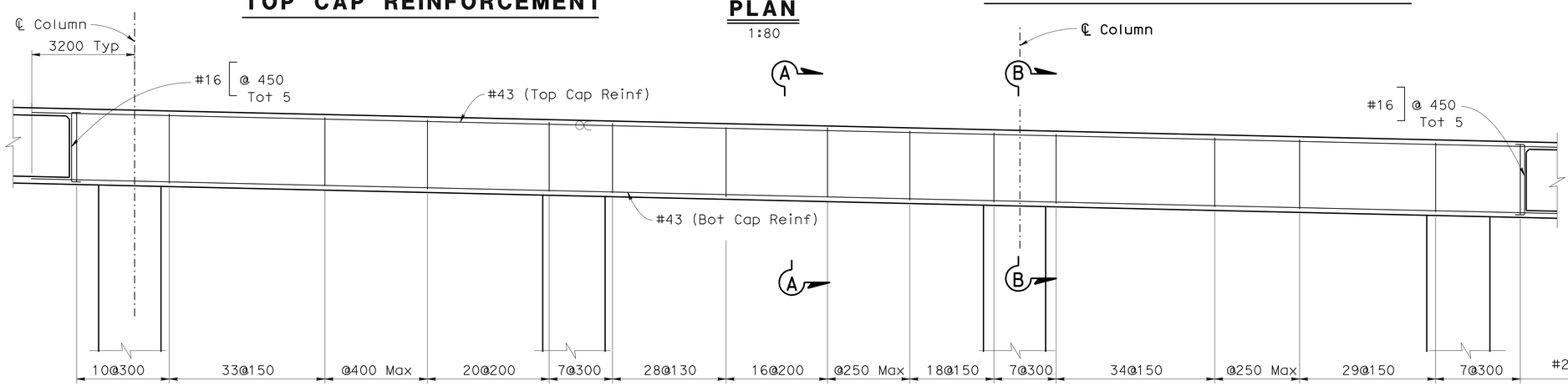

NOTES:

1. —℄— - Indicates vert bundled bars
2. All bars not shown
3. Only service butt splices allowed in top and bottom cap reinforcement
4. For "SECTION A-A" and "SECTION B-B", see "PLATFORM BENT DETAILS NO.1" sheet
5. For Column and Pile details, see "PLATFORM BENT DETAILS NO.3" sheet.
6. For "STITCH TIE DETAIL", see "PLATFORM BENT DETAILS NO.2" sheet.

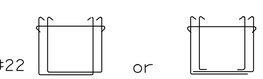

ELEVATION
1:80

ALL DIMENSIONS ARE IN MILLIMETERS UNLESS OTHERWISE SHOWN

CHUNG-YUAN WEN
DESIGN OVERSIGHT
4-28-09
SIGN OFF DATE

DESIGN	Jeremy Lahaye	CHECKED	Chris Hodge
DETAILS	BY Andy Toledo	CHECKED	Chris Hodge
QUANTITIES	BY Oscar Colcol	CHECKED	Xiaoyun Wu

PREPARED FOR THE STATE OF CALIFORNIA DEPARTMENT OF TRANSPORTATION

Brett Makley
PROJECT ENGINEER

BRIDGE NO. 57C0786
KILOMETER POST KP43.2

CARROLL CANYON ROAD BRIDGE
PLATFORM BENT LAYOUT NO.3

DESIGN DETAIL SHEET (METRIC) (REV. 10/27/05)

ORIGINAL SCALE IN MILLIMETERS FOR REDUCED PLANS 0 10 20 30 40 50 60 70 80 90 100

CU 11275
EA 2T0401

DISREGARD PRINTS BEARING EARLIER REVISION DATES

REVISION DATES (PRELIMINARY STAGE ONLY) 9/12/08 12/19/08 3/19/09 4/28/09

SHEET 30 OF 74

FILE => 57-c0786-h-b02_lo03.dgn

USERNAME => trmikes1 DATE PLOTTED => 29-SEP-2010 TIME PLOTTED => 11:33

DIST	COUNTY	ROUTE	KILOMETER POST TOTAL PROJECT	SHEET No	TOTAL SHEETS
11	SD	5,805	R49.9/R51.7, 42.6/46.5	704	886

Caltrans Metric

REGISTERED CIVIL ENGINEER 4-28-09 DATE

9-27-10
PLANS APPROVAL DATE

REGISTERED PROFESSIONAL ENGINEER James L. Rucker No. 47796 Exp. 12-31-09 CIVIL STATE OF CALIFORNIA

The State of California or its officers or agents shall not be responsible for the accuracy or completeness of electronic copies of this plan sheet.

SANDAG
401 B STREET,
SAN DIEGO, CA 92101

T.Y. LIN INTERNATIONAL
5030 CAMINO DE LA SIESTA, SUITE 204,
SAN DIEGO, CA 92108

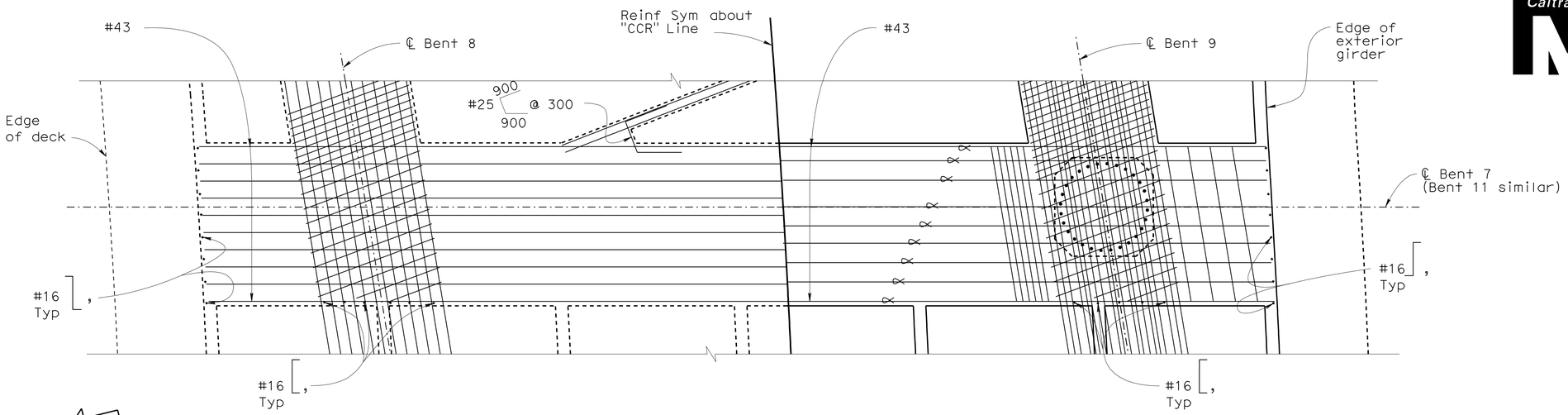

TOP CAP REINFORCEMENT

BOTTOM CAP REINFORCEMENT

PLAN
1:50

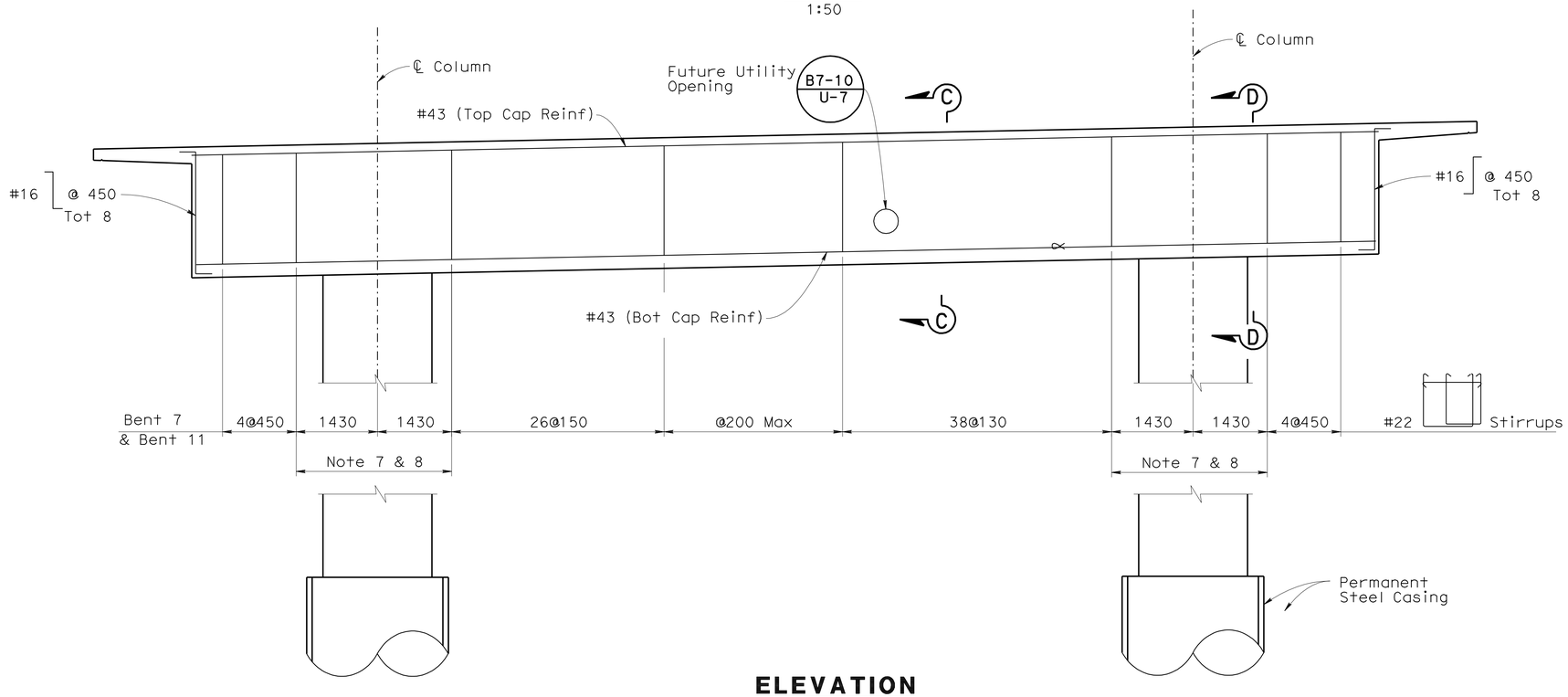

ELEVATION
1:50

NOTES:

1. —— - Indicates Vert bundled bars
2. All bars not shown
3. Only service butt splices allowed in top and bottom cap reinforcement
4. For "SECTION C-C" and "SECTION D-D",see "PLATFORM BENT DETAILS NO.1" sheet
5. For Column and Pile details, see "PLATFORM BENT DETAILS NO.3" sheet
6. For "STITCH TIE DETAIL", see "PLATFORM BENT DETAILS NO.2" sheet.
7. See "PLAN" for direction of stirrups within this area
8. See "PLATFORM BENT LAYOUT NO.1" sheet

ALL DIMENSIONS ARE IN MILLIMETERS UNLESS OTHERWISE SHOWN

CHUNG-YUAN WEN
DESIGN OVERSIGHT
4-28-09
SIGN OFF DATE

DESIGN	Jeremy Lahaye	CHECKED Chris Hodge
DETAILS	BY Andy Toledo	CHECKED Chris Hodge
QUANTITIES	BY Oscar Colcol	CHECKED Xiaoyun Wu

PREPARED FOR THE STATE OF CALIFORNIA DEPARTMENT OF TRANSPORTATION

Brett Makley
PROJECT ENGINEER

BRIDGE NO. 57C0786
KILOMETER POST KP43.2

CARROLL CANYON ROAD BRIDGE
PLATFORM BENT LAYOUT NO.4

DESIGN DETAIL SHEET (METRIC) (REV. 10/27/05)

ORIGINAL SCALE IN MILLIMETERS FOR REDUCED PLANS 0 10 20 30 40 50 60 70 80 90 100

CU 11275
EA 2T0401

DISREGARD PRINTS BEARING EARLIER REVISION DATES

REVISION DATES (PRELIMINARY STAGE ONLY) 9/12/08 12/19/08 3/19/09 4/28/09

SHEET 31 OF 74

FILE => 57-c0786-h-b02_1o04.dgn

USERNAME => trmikesl DATE PLOTTED => 29-SEP-2010 TIME PLOTTED => 11:33

DIST	COUNTY	ROUTE	KILOMETER POST TOTAL PROJECT	SHEET No	TOTAL SHEETS
11	SD	5,805	R49.9/R51.7, 42.6/46.5	705	886

Caltrans Metric

REGISTERED CIVIL ENGINEER 4-28-09 DATE

9-27-10
PLANS APPROVAL DATE

REGISTERED PROFESSIONAL ENGINEER James L. Rucker No. 47796 Exp. 12-31-09 CIVIL STATE OF CALIFORNIA

The State of California or its officers or agents shall not be responsible for the accuracy or completeness of electronic copies of this plan sheet.

SANDAG
401 B STREET,
SAN DIEGO, CA 92101

T.Y. LIN INTERNATIONAL
5030 CAMINO DE LA SIESTA, SUITE 204,
SAN DIEGO, CA 92108

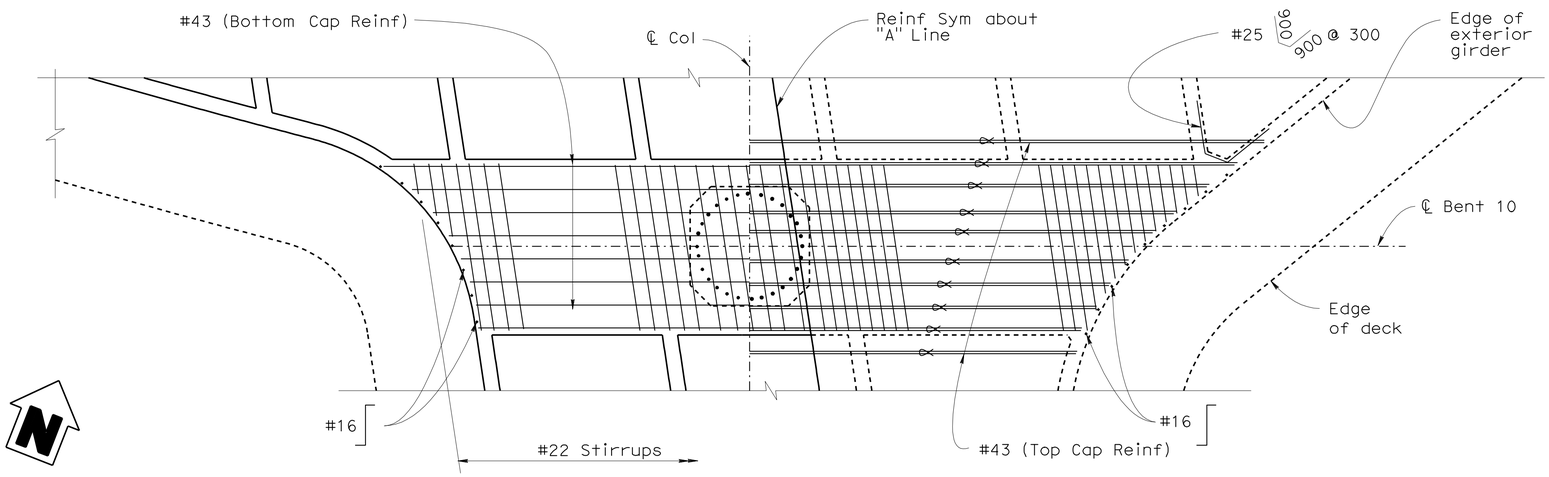

BOTTOM CAP REINFORCEMENT **TOP CAP REINFORCEMENT**

PLAN
1:50

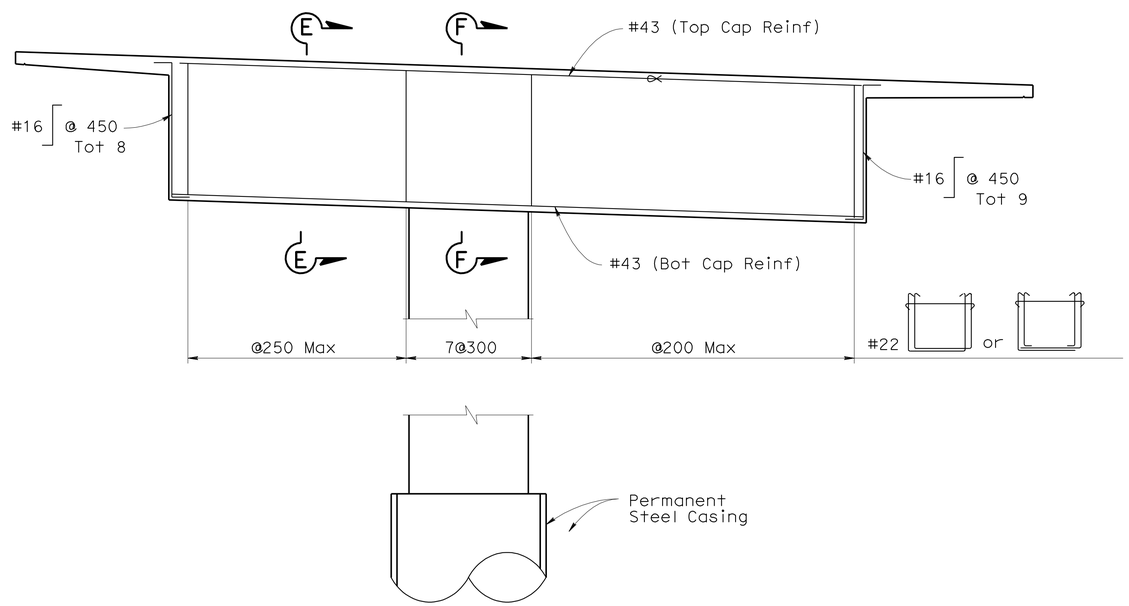

ELEVATION
1:50

NOTES:

1. ═══ - Indicates Horiz bundled bars
2. All bars not shown
3. Only service butt splices allowed in top and bottom cap reinforcement
4. For "SECTION E-E" and "SECTION F-F", see "PLATFORM BENT DETAILS NO.2" sheet
5. For Column and Pile details, see "PLATFORM BENT DETAILS NO.3" sheet.
6. For "STITCH TIE DETAIL", see "PLATFORM BENT DETAILS NO.2" sheet.

ALL DIMENSIONS ARE IN MILLIMETERS UNLESS OTHERWISE SHOWN

CHUNG-YUAN WEN
DESIGN OVERSIGHT
4-28-09
SIGN OFF DATE

	BY	CHECKED
DESIGN	Jeremy Lahaye	Chris Hodge
DETAILS	Andy Toledo	Chris Hodge
QUANTITIES	Oscar Colcol	Xiaoyun Wu

PREPARED FOR THE STATE OF CALIFORNIA DEPARTMENT OF TRANSPORTATION

Brett Makley
PROJECT ENGINEER

BRIDGE NO. 57C0786
KILOMETER POST KP43.2

CARROLL CANYON ROAD BRIDGE
PLATFORM BENT LAYOUT NO.5

DESIGN DETAIL SHEET (METRIC) (REV. 10/27/05)

ORIGINAL SCALE IN MILLIMETERS FOR REDUCED PLANS 0 10 20 30 40 50 60 70 80 90 100

CU 11275
EA 2T0401

DISREGARD PRINTS BEARING EARLIER REVISION DATES

REVISION DATES (PRELIMINARY STAGE ONLY) 9/12/08 12/19/08 3/19/09 4/28/09

SHEET 32 OF 74

FILE => 57-c0786-h-b02_lo05.dgn

USERNAME => trmikest DATE PLOTTED => 29-SEP-2010 TIME PLOTTED => 11:40

DIST	COUNTY	ROUTE	KILOMETER POST TOTAL PROJECT	SHEET No	TOTAL SHEETS
11	SD	5,805	R49.9/R51.7, 42.6/46.5	706	886

Caltrans Metric

REGISTERED CIVIL ENGINEER 4-28-09 DATE

9-27-10
PLANS APPROVAL DATE

The State of California or its officers or agents shall not be responsible for the accuracy or completeness of electronic copies of this plan sheet.

REGISTERED PROFESSIONAL ENGINEER James L. Rucker No. 47796 Exp. 12-31-09 CIVIL STATE OF CALIFORNIA

SANDAG
401 B STREET,
SAN DIEGO, CA 92101

T.Y. LIN INTERNATIONAL
5030 CAMINO DE LA SIESTA, SUITE 204,
SAN DIEGO, CA 92108

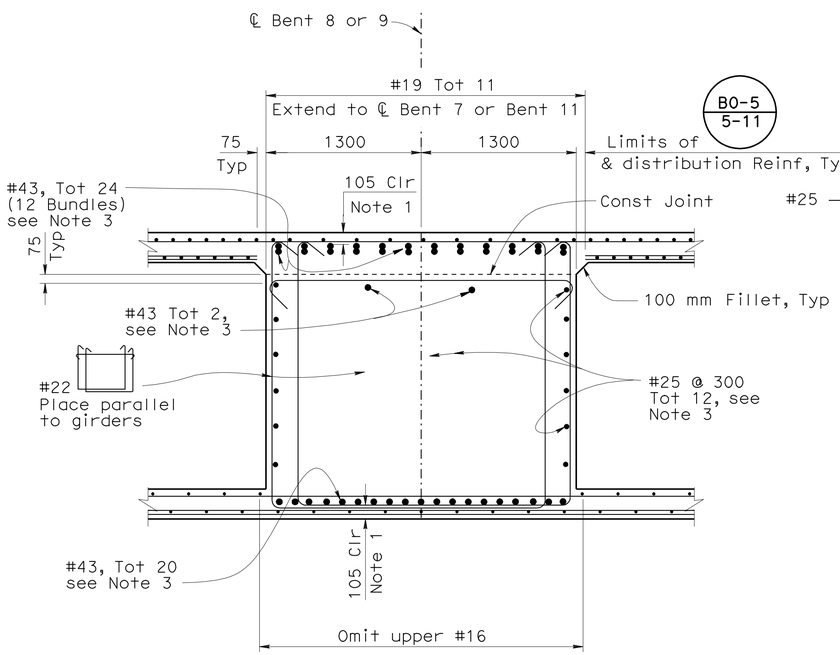

SECTION A-A

1:25

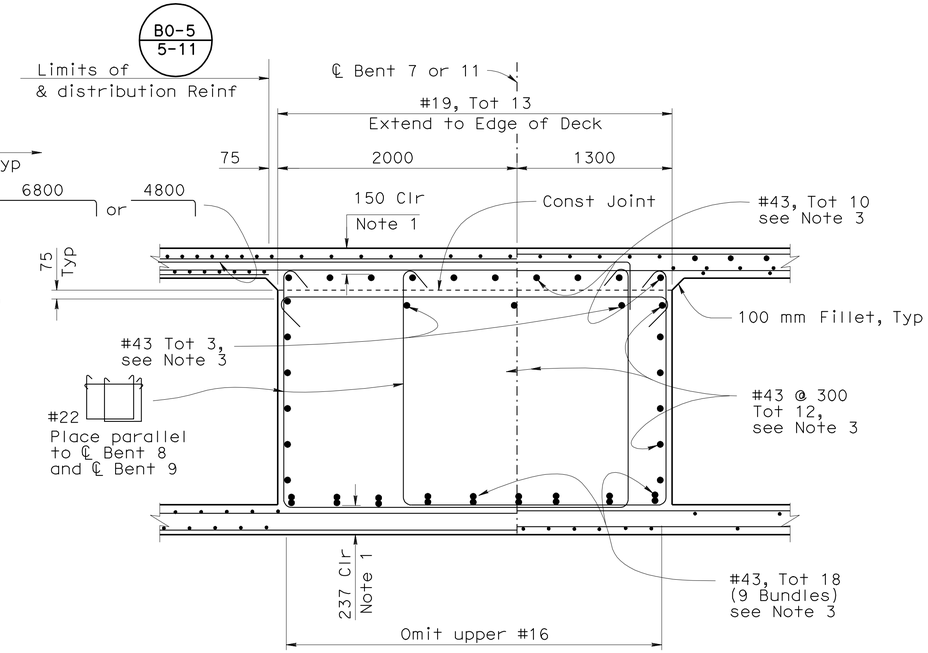

SECTION C-C

1:25

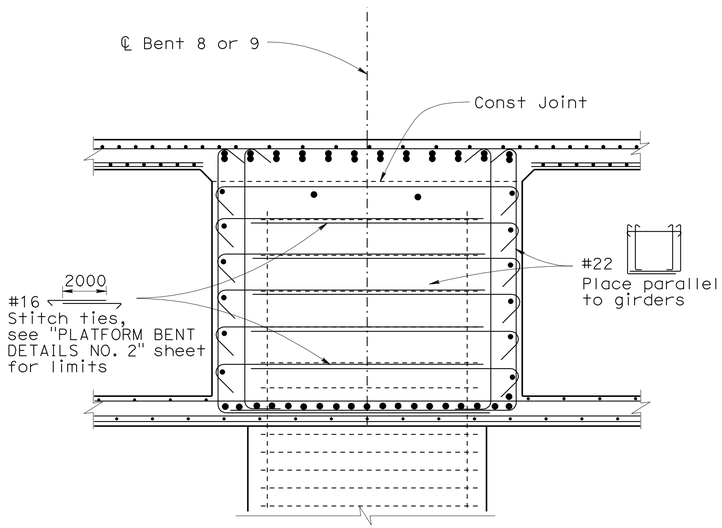

SECTION B-B

1:25

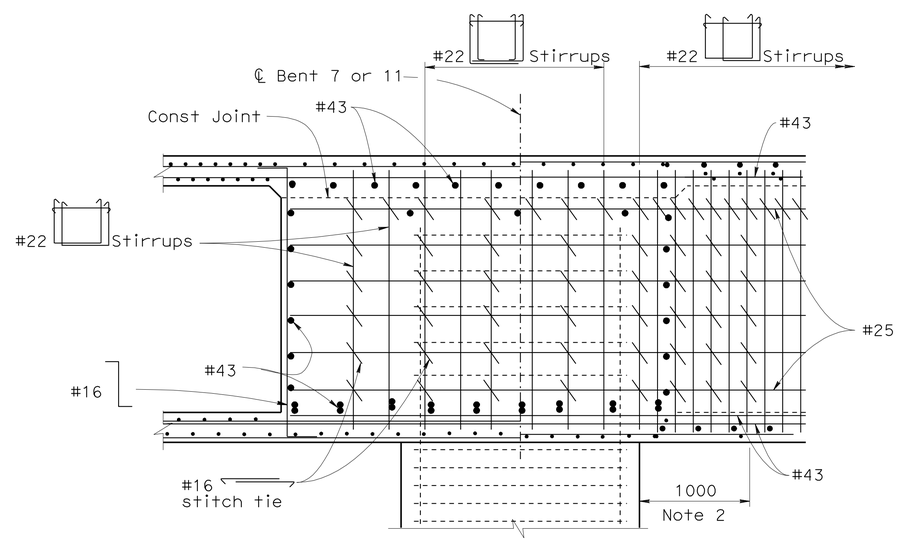

SECTION D-D

1:25

NOTES:

1. Clearance to Main Cap Reinforcement.
2. Limits of #16 ⟵⟶ Stitch Ties
3. Only service butt splices allowed.
4. For locations of "SECTION A-A" and "SECTION B-B", see "PLATFORM BENT LAYOUT NO.1", "PLATFORM BENT LAYOUT NO.2", and "PLATFORM BENT LAYOUT NO.3" sheet
5. For locations of "SECTION C-C" and "SECTION D-D", see "PLATFORM BENT LAYOUT NO.4" sheet

ALL DIMENSIONS ARE IN
MILLIMETERS UNLESS OTHERWISE SHOWN

CHUNG-YUAN WEN
DESIGN OVERSIGHT
4-28-09
SIGN OFF DATE

	BY	CHECKED
DESIGN	Jeremy Lahaye	Chris Hodge
DETAILS	Andy Toledo	Chris Hodge
QUANTITIES	Oscar Colcol	Xiaoyun Wu

PREPARED FOR THE
STATE OF CALIFORNIA
DEPARTMENT OF TRANSPORTATION

Brett Makley
PROJECT ENGINEER

BRIDGE NO. 57C0786
KILOMETER POST KP43.2

CARROLL CANYON ROAD BRIDGE
PLATFORM BENT DETAILS NO.1

DESIGN DETAIL SHEET (METRIC) (REV. 10/27/05)

ORIGINAL SCALE IN MILLIMETERS FOR REDUCED PLANS 0 10 20 30 40 50 60 70 80 90 100

CU 11275
EA 2T0401

DISREGARD PRINTS BEARING EARLIER REVISION DATES

REVISION DATES (PRELIMINARY STAGE ONLY) 9/12/08 12/19/08 3/19/09 4/28/09

SHEET 33 OF 74

FILE => 57-c0786-h-b02dt01.dgn

USERNAME => ttmikes1 DATE PLOTTED => 29-SEP-2010 TIME PLOTTED => 11:40

DIST	COUNTY	ROUTE	KILOMETER POST TOTAL PROJECT	SHEET No	TOTAL SHEETS
11	SD	5,805	R49.9/R51.7, 42.6/46.5	707	886

Caltrans Metric

REGISTERED CIVIL ENGINEER 4-28-09 DATE

9-27-10
PLANS APPROVAL DATE

The State of California or its officers or agents shall not be responsible for the accuracy or completeness of electronic copies of this plan sheet.

REGISTERED PROFESSIONAL ENGINEER
James L. Rucker
No. 47796
Exp. 12-31-09
CIVIL
STATE OF CALIFORNIA

SANDAG
401 B STREET,
SAN DIEGO, CA 92101

T.Y. LIN INTERNATIONAL
5030 CAMINO DE LA SIESTA, SUITE 204,
SAN DIEGO, CA 92108

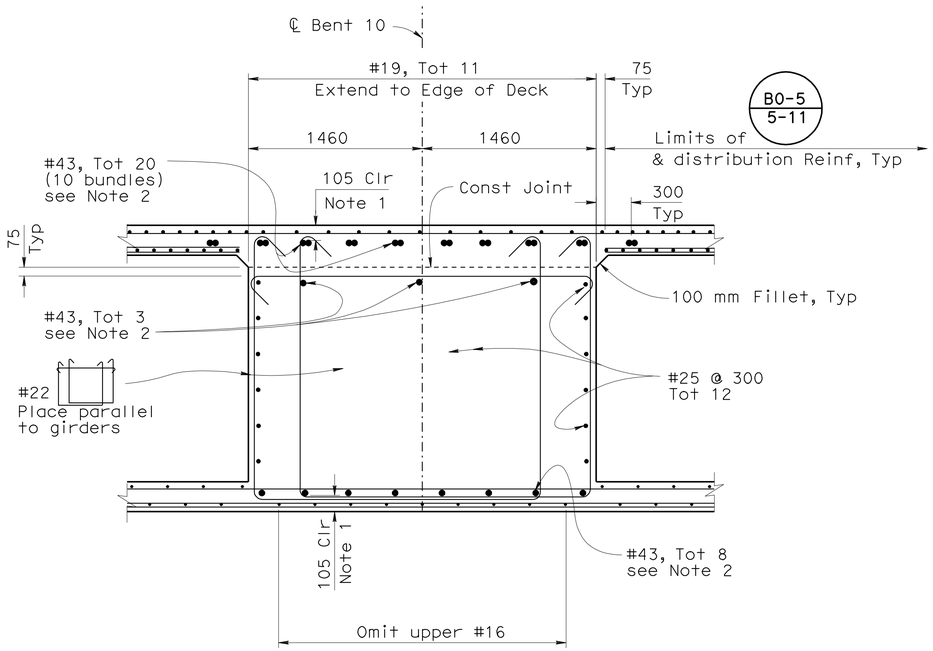

SECTION E-E

1:25

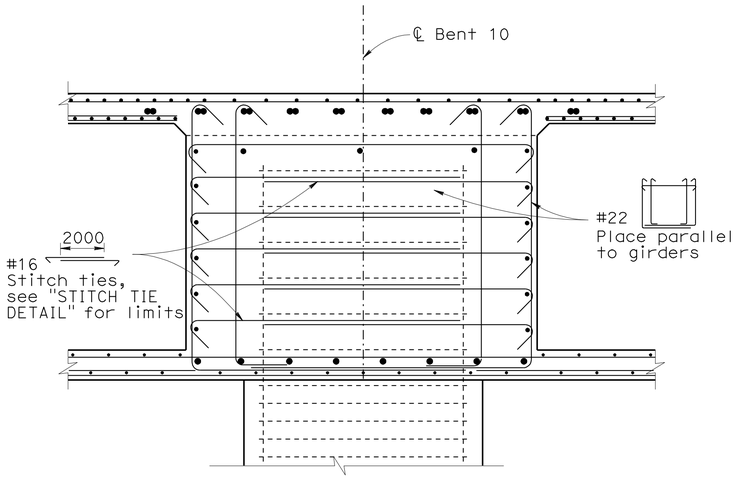

SECTION F-F

1:25

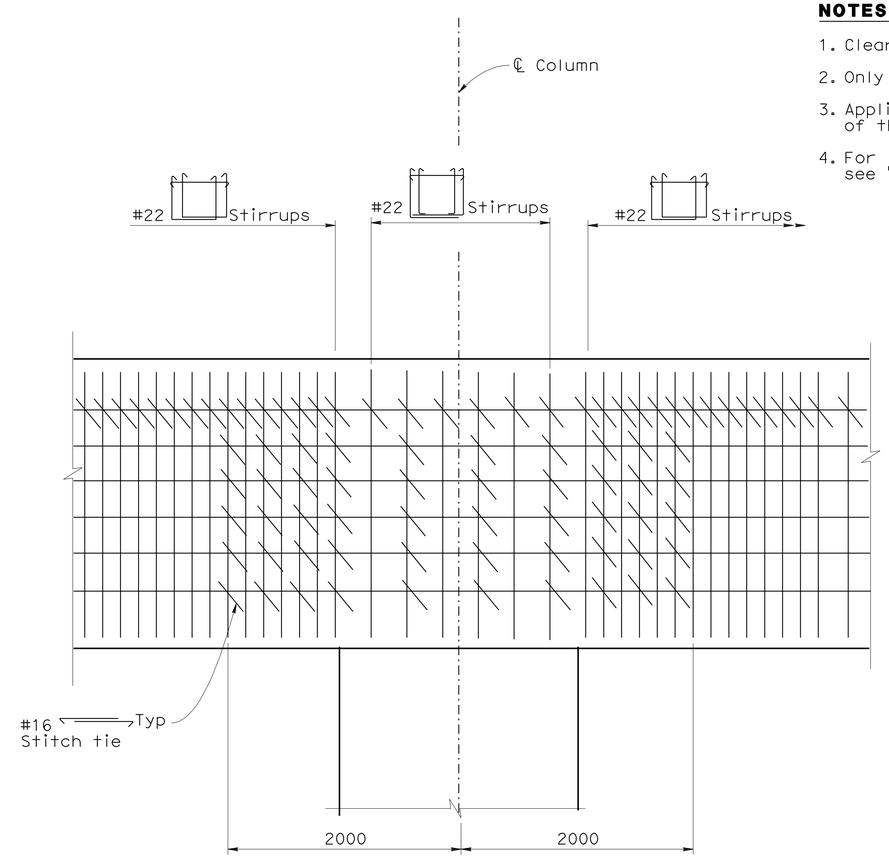

STITCH TIE DETAIL

1:25

See Note 3

NOTES:

1. Clearance to Main Cap Reinforcement.
2. Only service butt splices allowed.
3. Applies to all caps not covered by "SECTION D-D" of the "PLATFORM BENT DETAILS NO.1" sheet.
4. For locations of "SECTION E-E" and "SECTION F-F", see "PLATFORM BENT LAYOUT NO.5" sheet

ALL DIMENSIONS ARE IN
MILLIMETERS UNLESS OTHERWISE SHOWN

CHUNG-YUAN WEN
DESIGN OVERSIGHT
4-28-09
SIGN OFF DATE

	BY	CHECKED
DESIGN	Jeremy Lahaye	Chris Hodge
DETAILS	Andy Toledo	Chris Hodge
QUANTITIES	Oscar Colcol	Xiaoyun Wu

PREPARED FOR THE
STATE OF CALIFORNIA
DEPARTMENT OF TRANSPORTATION

Brett Makley
PROJECT ENGINEER

BRIDGE NO. 57C0786
KILOMETER POST KP43.2

CARROLL CANYON ROAD BRIDGE
PLATFORM BENT DETAILS NO.2

DESIGN DETAIL SHEET (METRIC) (REV. 10/27/05)

ORIGINAL SCALE IN MILLIMETERS FOR REDUCED PLANS 0 10 20 30 40 50 60 70 80 90 100

CU 11275
EA 2T0401

DISREGARD PRINTS BEARING EARLIER REVISION DATES

REVISION DATES (PRELIMINARY STAGE ONLY): 9/12/08 12/19/08 3/13/09 4/28/09

SHEET 34 OF 74

FILE => 57-c0786-h-b02dt02.dgn

USERNAME => rtmikes1 DATE PLOTTED => 29-SEP-2010 TIME PLOTTED => 11:40

DIST	COUNTY	ROUTE	KILOMETER POST TOTAL PROJECT	SHEET No	TOTAL SHEETS
11	SD	5,805	R49.9/R51.7, 42.6/46.5	708	886

Caltrans Metric

REGISTERED CIVIL ENGINEER 4-28-09 DATE

9-27-10
PLANS APPROVAL DATE

The State of California or its officers or agents shall not be responsible for the accuracy or completeness of electronic copies of this plan sheet.

REGISTERED PROFESSIONAL ENGINEER James L. Rucker No. 47796 Exp. 12-31-09 CIVIL STATE OF CALIFORNIA

SANDAG
401 B STREET,
SAN DIEGO, CA 92101

T.Y. LIN INTERNATIONAL
5030 CAMINO DE LA SIESTA, SUITE 204,
SAN DIEGO, CA 92108

NOTES:

1. No splice is allowed in column and pile main reinforcement.
2. Only ultimate butt splice is allowed in column and pile main reinforcement.
3. Only ultimate butt splice is allowed for column and pile hoops.
4. Extend 800 mm into bent cap and stop at top of pile.
5. Stop at bottom of bent cap and on top of pile.

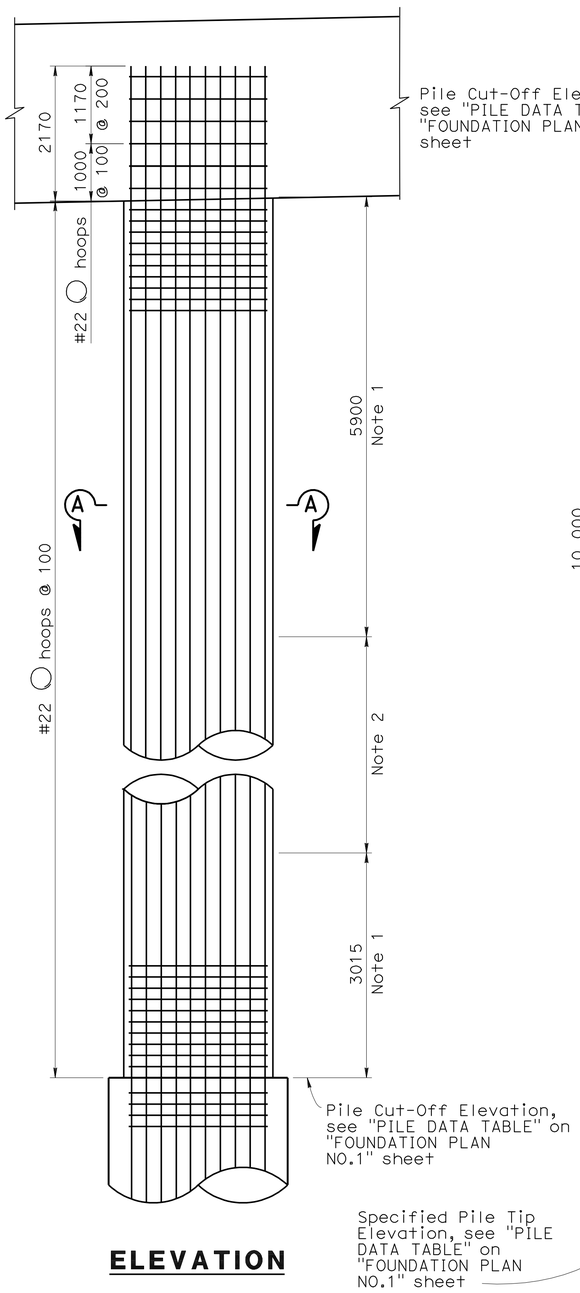

ELEVATION

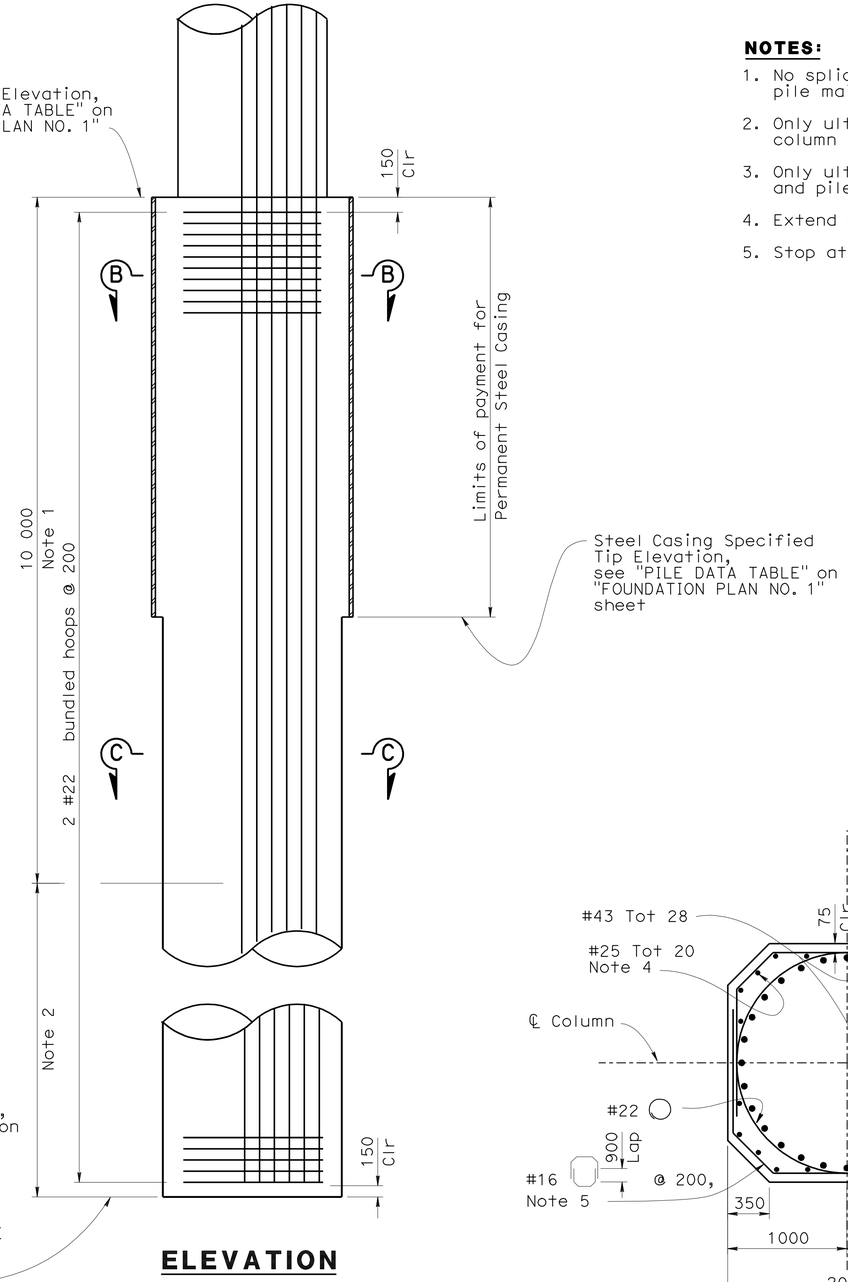

ELEVATION

2400 mm DIA CIDH PILE
1:40

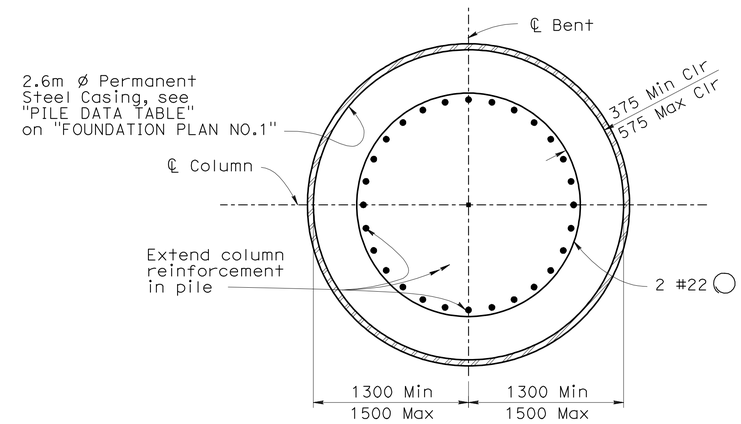

SECTION B-B
1:25

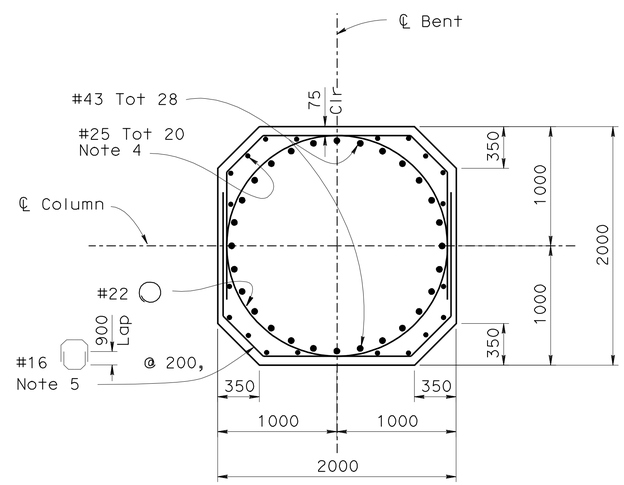

SECTION A-A
1:25

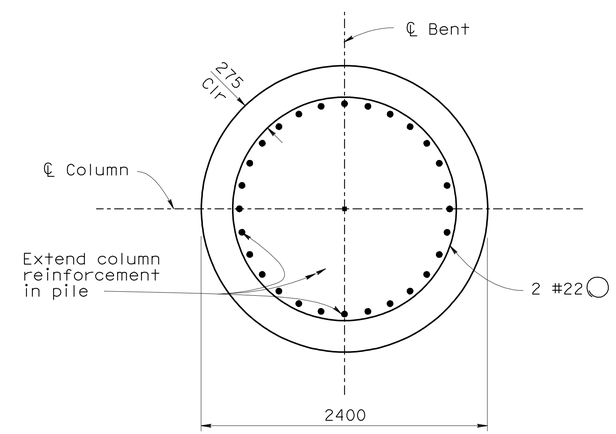

SECTION C-C
1:25

ALL DIMENSIONS ARE IN MILLIMETERS UNLESS OTHERWISE SHOWN

CHUNG-YUAN WEN
DESIGN OVERSIGHT
4-28-09
SIGN OFF DATE

DESIGN	Jeremy Lahaye	CHECKED	Chris Hodge
DETAILS	BY Andy Toledo	CHECKED	Chris Hodge
QUANTITIES	BY Oscar Colcol	CHECKED	Xiaoyun Wu

PREPARED FOR THE STATE OF CALIFORNIA DEPARTMENT OF TRANSPORTATION

Brett Makley
PROJECT ENGINEER

BRIDGE NO. 57C0786
KILOMETER POST KP43.2

CARROLL CANYON ROAD BRIDGE
PLATFORM BENT DETAILS NO.3

DESIGN DETAIL SHEET (METRIC) (REV. 10/27/05)

ORIGINAL SCALE IN MILLIMETERS FOR REDUCED PLANS 0 10 20 30 40 50 60 70 80 90 100

CU 11275
EA 2T0401

DISREGARD PRINTS BEARING EARLIER REVISION DATES

REVISION DATES (PRELIMINARY STAGE ONLY) 9/12/08 12/19/08 3/19/09 4/28/09

SHEET 35 OF 74

FILE => 57-c0786-h-b02dt03.dgn

USERNAME => trmikes! DATE PLOTTED => 29-SEP-2010 TIME PLOTTED => 11:40

DIST	COUNTY	ROUTE	KILOMETER POST TOTAL PROJECT	SHEET No	TOTAL SHEETS
11	SD	5,805	R49.9/R51.7, 42.6/46.5	709	886

REGISTERED CIVIL ENGINEER 4-28-09 DATE

9-27-10
PLANS APPROVAL DATE

The State of California or its officers or agents shall not be responsible for the accuracy or completeness of electronic copies of this plan sheet.

REGISTERED PROFESSIONAL ENGINEER James L. Rucker No. 47796 Exp. 12-31-09 CIVIL STATE OF CALIFORNIA

SANDAG
401 B STREET,
SAN DIEGO, CA 92101

T.Y. LIN INTERNATIONAL
5030 CAMINO DE LA SIESTA, SUITE 204,
SAN DIEGO, CA 92108

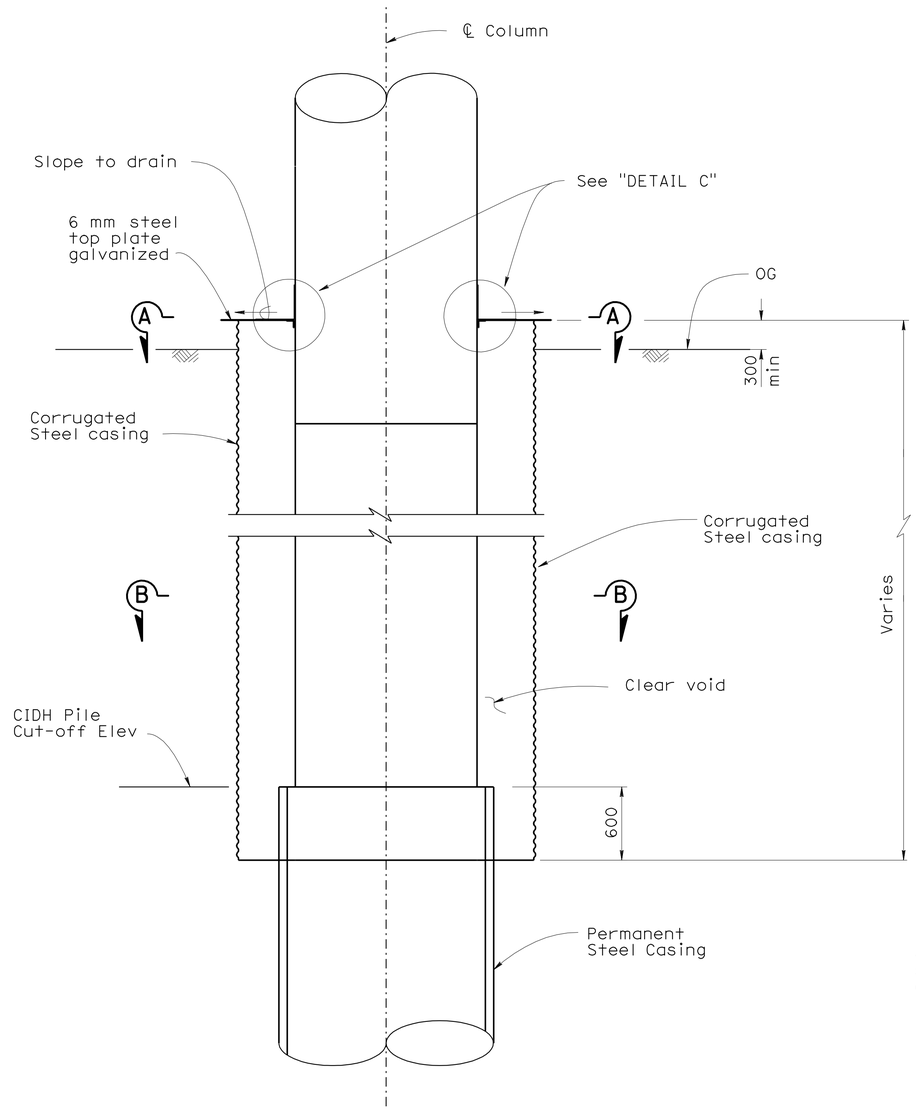

COLUMN ELEVATION

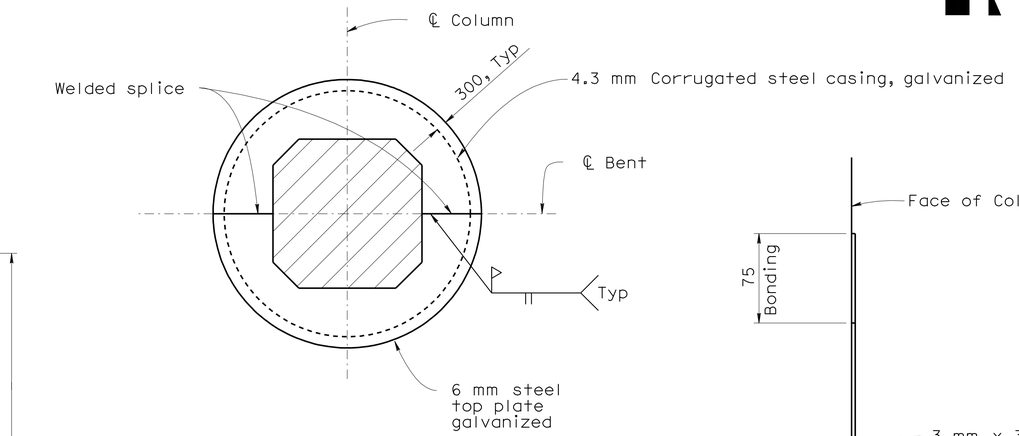

SECTION A-A

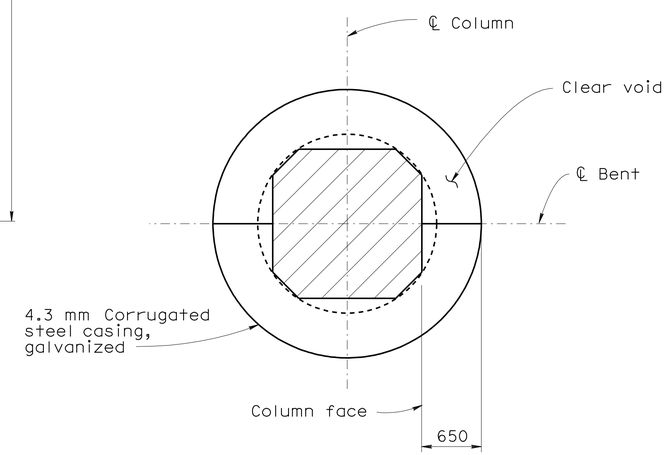

SECTION B-B

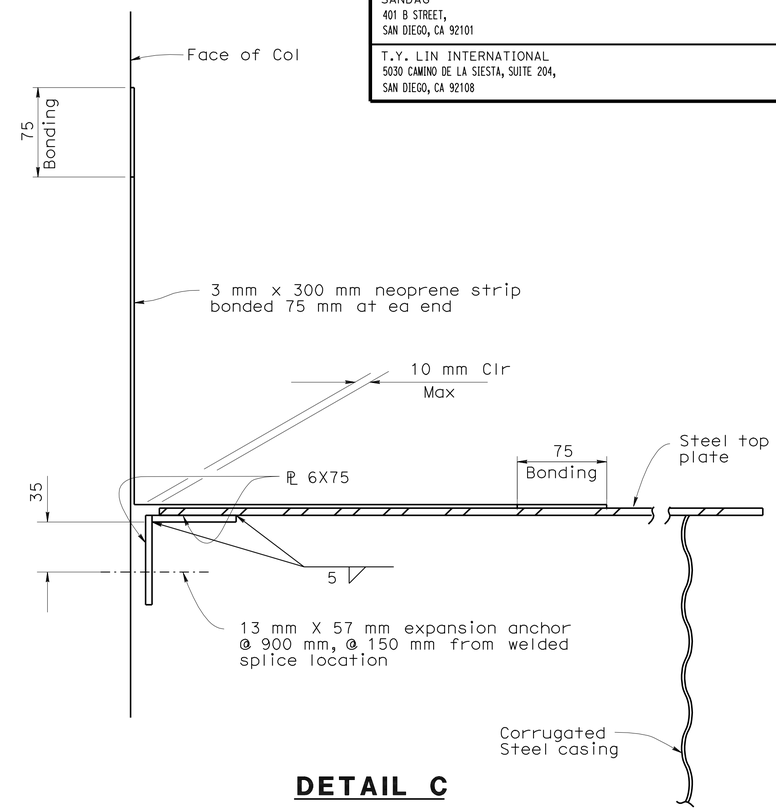

DETAIL C

LEGEND:

- Indicates column

ISOLATION CASING DETAILS

No Scale

CASING LENGTH TABLE

Column	Casing top Elev (m)	Casing bottom Elev (m)	Casing L (m)
B7A	35.8	29.9	5.9
B8A	37.8	29.9	7.9
B8B	39.3	29.9	9.4
B11A	40.3	29.9	10.4

ALL DIMENSIONS ARE IN MILLIMETERS UNLESS OTHERWISE SHOWN

CHUNG-YUAN WEN
DESIGN OVERSIGHT
4-28-09
SIGN OFF DATE

	BY	CHECKED
DESIGN	Roya Golchoobian	Pete Smith
DETAILS	Andy Toledo	Pete Smith
QUANTITIES	Oscar Colcol	Xiaoyun Wu

PREPARED FOR THE STATE OF CALIFORNIA DEPARTMENT OF TRANSPORTATION

Brett Makley
PROJECT ENGINEER

BRIDGE NO. 57C0786
KILOMETER POST KP43.2

CARROLL CANYON ROAD BRIDGE
PLATFORM BENT DETAILS NO.4

DESIGN DETAIL SHEET (METRIC) (REV. 10/27/05)

ORIGINAL SCALE IN MILLIMETERS FOR REDUCED PLANS 0 10 20 30 40 50 60 70 80 90 100

CU 11275
EA 2T0401

DISREGARD PRINTS BEARING EARLIER REVISION DATES

REVISION DATES (PRELIMINARY STAGE ONLY) 9/12/08 12/19/08 3/19/09 4/28/09

SHEET 36 OF 74

FILE => 57-c0786-h-b02dt04.dgn

USERNAME => trmikesl DATE PLOTTED => 29-SEP-2010 TIME PLOTTED => 11:40

DIST	COUNTY	ROUTE	KILOMETER POST TOTAL PROJECT	SHEET No	TOTAL SHEETS
11	SD	5,805	R49.9/R51.7, 42.6/46.5	710	886

REGISTERED CIVIL ENGINEER 4-28-09 DATE

9-27-10
PLANS APPROVAL DATE

REGISTERED PROFESSIONAL ENGINEER James L. Rucker No. 47796 Exp. 12-31-09 CIVIL STATE OF CALIFORNIA

The State of California or its officers or agents shall not be responsible for the accuracy or completeness of electronic copies of this plan sheet.

SANDAG
401 B STREET,
SAN DIEGO, CA 92101

T.Y. LIN INTERNATIONAL
5030 CAMINO DE LA SIESTA, SUITE 204,
SAN DIEGO, CA 92108

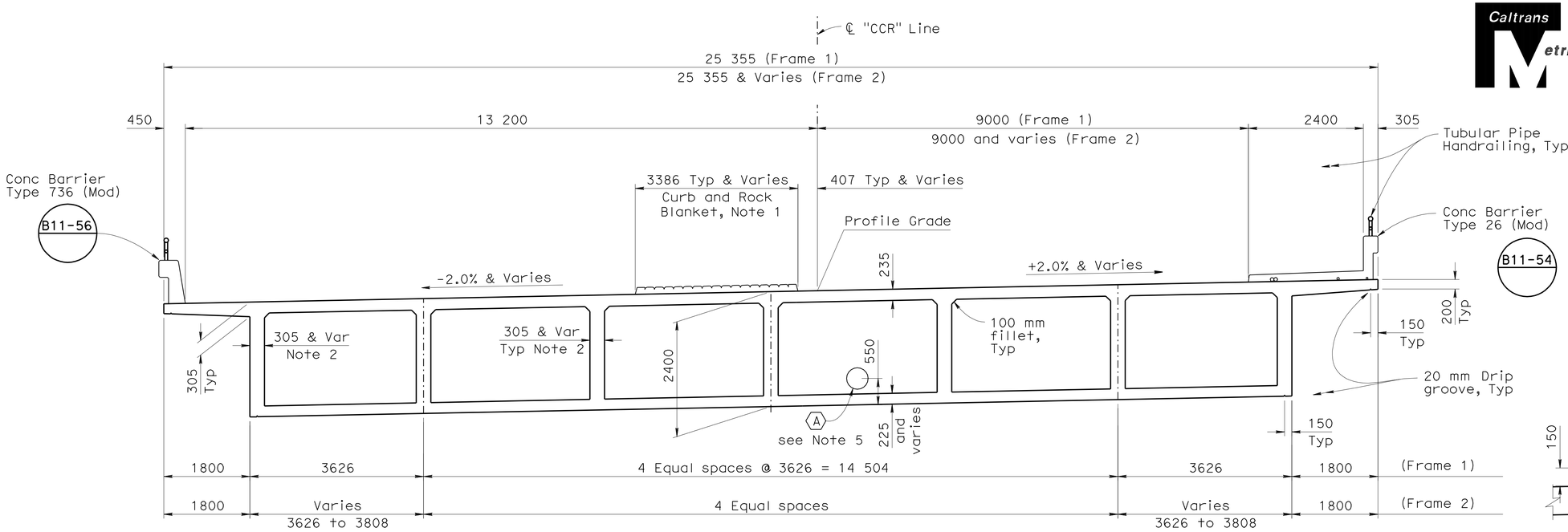

TYPICAL SECTION

1:50

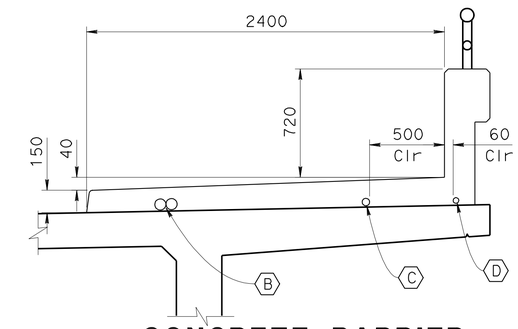

CONCRETE BARRIER TYPE 26 (MOD) DETAIL

1:20

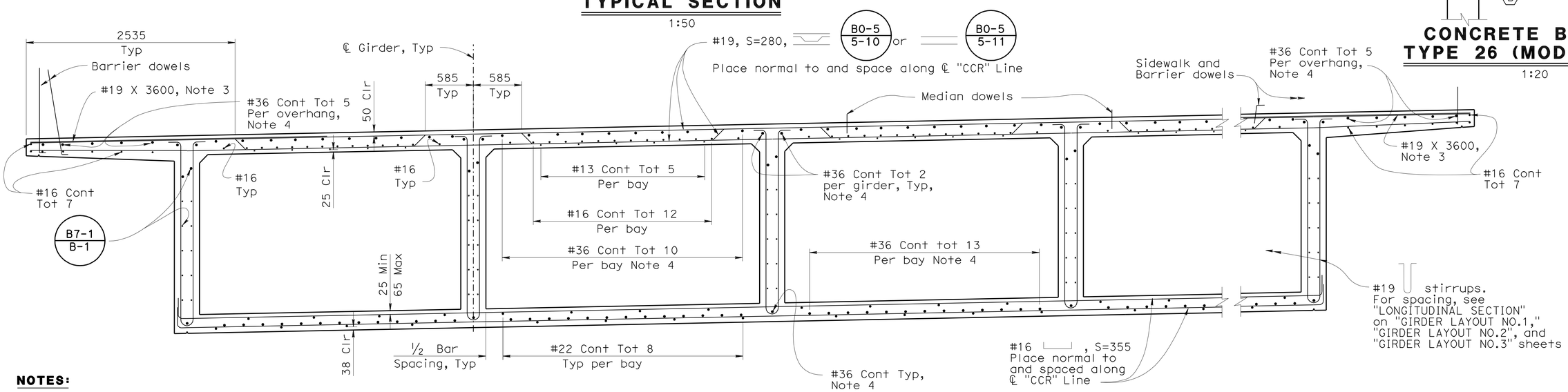

PART TYPICAL SECTION

1:25

B0-5 B7-1 RSP B8-5

NOTES:

1. For limits of Curb and Rock Blanket, see "STRUCTURE PLAN No.1 and No.2" sheets.
2. For girder thickness and girder flare, see "GIRDER LAYOUT" sheets
3. Add #19 X 3600 for a distance of 1500 mm on each side of all deck joints. Bundle with every other top transverse bar
4. Only service butt splice is allowed for #36 bars. No splice is allowed within 6000 mm on either sides of center line span or center line bents.
5. Locate at center of cell
6. See "PART GIRDER SECTION DETAIL FRAMES 1 & 2" on "GIRDER DETAILS NO.1" sheet for additional girder stirrups.

LEGEND:

- (A) 450 mm ø Future utility opening
- (B) 2-75 mm ø Future utility conduits
- (C) 50 mm ø Electrical conduit (Lighting)
- (D) 38 mm ø CNC Conduit

ALL DIMENSIONS ARE IN MILLIMETERS UNLESS OTHERWISE SHOWN

CHUNG-YUAN WEN
DESIGN OVERSIGHT
4-28-09
SIGN OFF DATE

	BY	CHECKED
DESIGN	Roya Golchoobian	Pete Smith
DETAILS	Andy Toledo	Pete Smith
QUANTITIES	Oscar Colcol	Xiaoyun Wu

PREPARED FOR THE STATE OF CALIFORNIA DEPARTMENT OF TRANSPORTATION

Brett Makley
PROJECT ENGINEER

BRIDGE NO. 57C0786
KILOMETER POST KP43.2

CARROLL CANYON ROAD BRIDGE
TYPICAL SECTION

DESIGN DETAIL SHEET (METRIC) (REV. 10/27/05)

ORIGINAL SCALE IN MILLIMETERS FOR REDUCED PLANS 0 10 20 30 40 50 60 70 80 90 100

CU 11275
EA 2T0401

DISREGARD PRINTS BEARING EARLIER REVISION DATES

REVISION DATES (PRELIMINARY STAGE ONLY) 9/12/08 12/19/08 3/19/09 4/28/09

SHEET 37 OF 74

FILE => 57-c0786-k-ts01.dgn

USERNAME => trmikes! DATE PLOTTED => 29-SEP-2010 TIME PLOTTED => 11:41

DIST	COUNTY	ROUTE	KILOMETER POST TOTAL PROJECT	SHEET No	TOTAL SHEETS
11	SD	5,805	R49.9/R51.7, 42.6/46.5	711	886

Caltrans Metric

REGISTERED CIVIL ENGINEER 4-28-09 DATE

9-27-10
PLANS APPROVAL DATE

REGISTERED PROFESSIONAL ENGINEER James L. Rucker No. 47796 Exp. 12-31-09 CIVIL STATE OF CALIFORNIA

The State of California or its officers or agents shall not be responsible for the accuracy or completeness of electronic copies of this plan sheet.

SANDAG
401 B STREET,
SAN DIEGO, CA 92101

T.Y. LIN INTERNATIONAL
5030 CAMINO DE LA SIESTA, SUITE 204,
SAN DIEGO, CA 92108

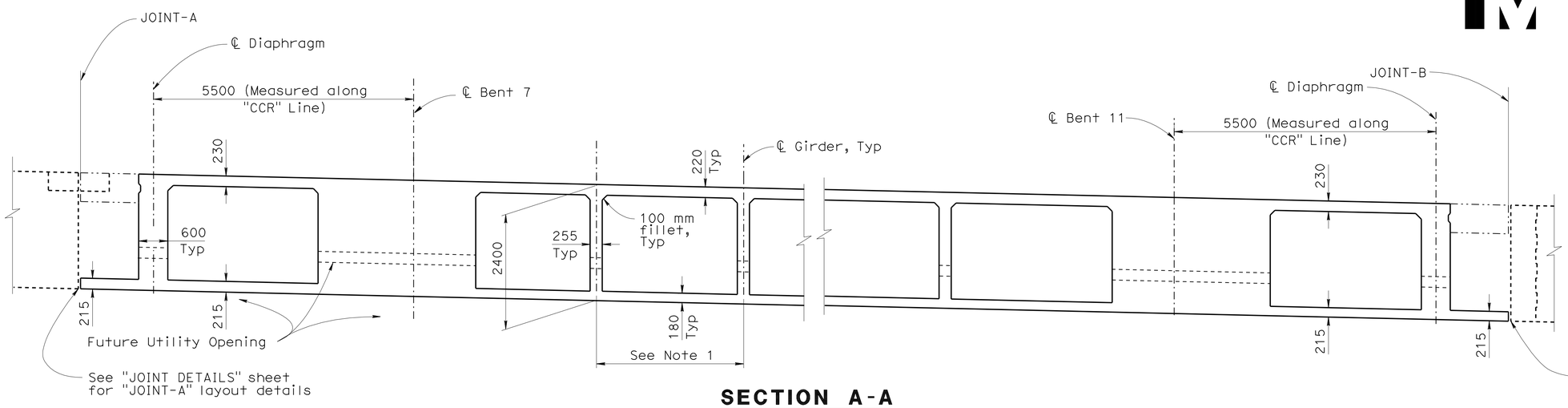

SECTION A-A

1:50

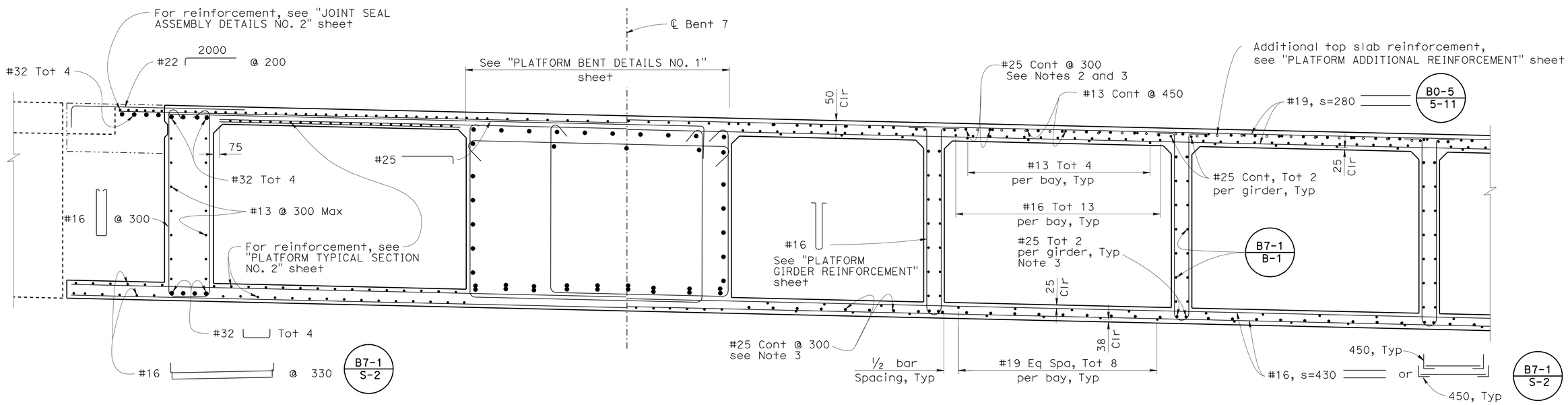

PART SECTION

1:25

NOTES:

1. For location of "SECTION A-A", see "PLATFORM LAYOUT" sheet
2. For girder spacing, see "PLATFORM GIRDER LAYOUT" sheet.
3. For details, see "PLATFORM TOP REINFORCEMENT" sheet
4. Only service butt splice is allowed for #25 bars.

ALL DIMENSIONS ARE IN MILLIMETERS UNLESS OTHERWISE SHOWN

CHUNG-YUAN WEN
DESIGN OVERSIGHT
4-28-09
SIGN OFF DATE

	BY	CHECKED
DESIGN	Jeremy Lahaye	Chris Hodge
DETAILS	Andy Toledo	Chris Hodge
QUANTITIES	Oscar Colcol/I.Martin	Xiaoyun Wu

PREPARED FOR THE STATE OF CALIFORNIA DEPARTMENT OF TRANSPORTATION

Brett Makley
PROJECT ENGINEER

BRIDGE NO. 57C0786
KILOMETER POST KP43.2

CARROLL CANYON ROAD BRIDGE
PLATFORM SECTION NO.1

DESIGN DETAIL SHEET (METRIC) (REV. 10/27/05)

ORIGINAL SCALE IN MILLIMETERS FOR REDUCED PLANS 0 10 20 30 40 50 60 70 80 90 100

CU 11275
EA 2T0401

DISREGARD PRINTS BEARING EARLIER REVISION DATES

REVISION DATES (PRELIMINARY STAGE ONLY) 9/12/08 12/19/08 3/19/09 4/28/09

SHEET 38 OF 74

FILE => 57-c0786-k-ts02.dgn

USERNAME => ttmikes1 DATE PLOTTED => 29-SEP-2010 TIME PLOTTED => 11:41

DIST	COUNTY	ROUTE	KILOMETER POST TOTAL PROJECT	SHEET No	TOTAL SHEETS
11	SD	5,805	R49.9/R51.7, 42.6/46.5	712	886

Caltrans Metric

REGISTERED CIVIL ENGINEER 4-28-09 DATE

9-27-10
PLANS APPROVAL DATE

REGISTERED PROFESSIONAL ENGINEER James L. Rucker No. 47796 Exp. 12-31-09 CIVIL STATE OF CALIFORNIA

The State of California or its officers or agents shall not be responsible for the accuracy or completeness of electronic copies of this plan sheet.

SANDAG
401 B STREET,
SAN DIEGO, CA 92101

T.Y. LIN INTERNATIONAL
5030 CAMINO DE LA SIESTA, SUITE 204,
SAN DIEGO, CA 92108

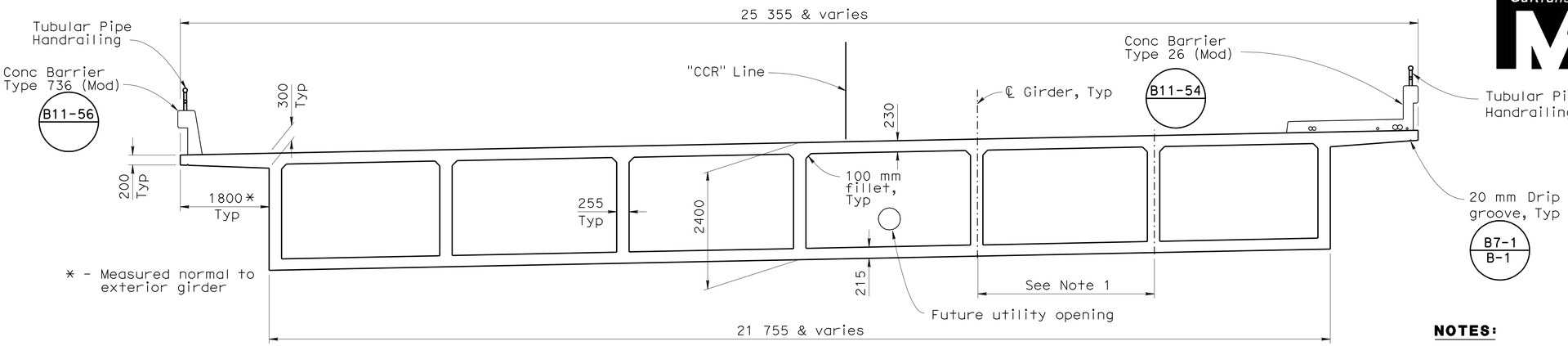

Sta 441+81.331 to 441+84.527 "CCR" Line
Sta 442+34.002 to 442+37.201 "CCR" Line

SECTION B-B

1:50

NOTES:

1. For location of "SECTION B-B", see "PLATFORM LAYOUT" sheet
2. For girder spacing, see "PLATFORM GIRDER LAYOUT" sheet.
3. Longitudinal bars in overhang and exterior girder are continuous.
4. Only service butt splice is allowed for #25 bars.

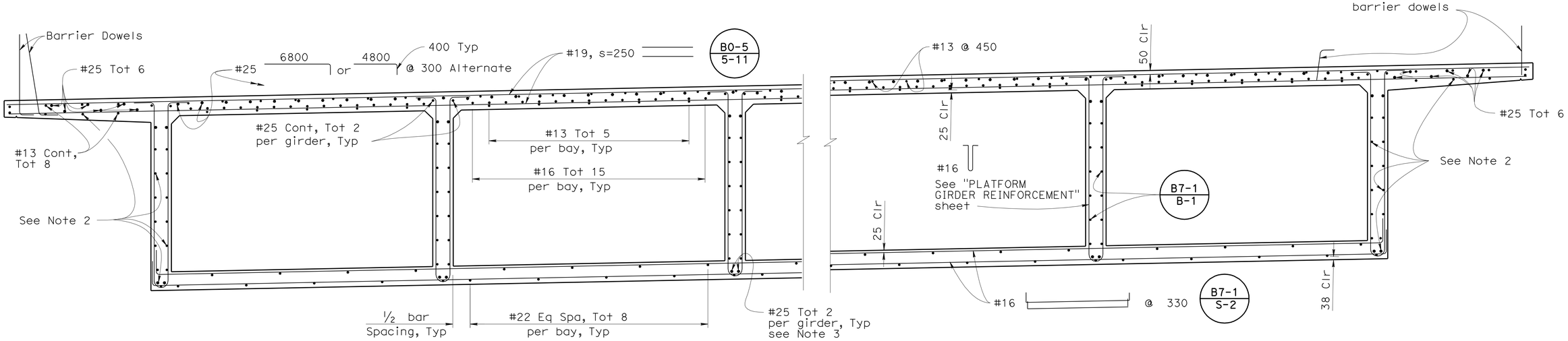

PART SECTION

1:25

ALL DIMENSIONS ARE IN MILLIMETERS UNLESS OTHERWISE SHOWN

CHUNG-YUAN WEN
DESIGN OVERSIGHT
4-28-09
SIGN OFF DATE

DESIGN	Jeremy Lahaye	CHECKED	Chris Hodge
DETAILS	BY Andy Toledo	CHECKED	Chris Hodge
QUANTITIES	BY Oscar Colcol/I.Martin	CHECKED	Xiaoyun Wu

PREPARED FOR THE STATE OF CALIFORNIA DEPARTMENT OF TRANSPORTATION

Brett Makley
PROJECT ENGINEER

BRIDGE NO. 57C0786
KILOMETER POST KP43.2

CARROLL CANYON ROAD BRIDGE
PLATFORM SECTION NO.2

DESIGN DETAIL SHEET (METRIC) (REV. 10/27/05)

ORIGINAL SCALE IN MILLIMETERS FOR REDUCED PLANS 0 10 20 30 40 50 60 70 80 90 100

CU 11275
EA 2T0401

DISREGARD PRINTS BEARING EARLIER REVISION DATES

REVISION DATES (PRELIMINARY STAGE ONLY) 9/12/08 12/19/08 3/9/09 4/28/09

SHEET 39 OF 74

FILE => 57-c0786-k-ts03.dgn

USERNAME => trmikesl DATE PLOTTED => 29-SEP-2010 TIME PLOTTED => 11:41

DIST	COUNTY	ROUTE	KILOMETER POST TOTAL PROJECT	SHEET No	TOTAL SHEETS
11	SD	5,805	R49.9/R51.7, 42.6/46.5	713	886

Caltrans Metric

REGISTERED CIVIL ENGINEER 4-28-09 DATE

9-27-10
PLANS APPROVAL DATE

REGISTERED PROFESSIONAL ENGINEER James L. Rucker No. 47796 Exp. 12-31-09 CIVIL STATE OF CALIFORNIA

The State of California or its officers or agents shall not be responsible for the accuracy or completeness of electronic copies of this plan sheet.

SANDAG
401 B STREET,
SAN DIEGO, CA 92101

T.Y. LIN INTERNATIONAL
5030 CAMINO DE LA SIESTA, SUITE 204,
SAN DIEGO, CA 92108

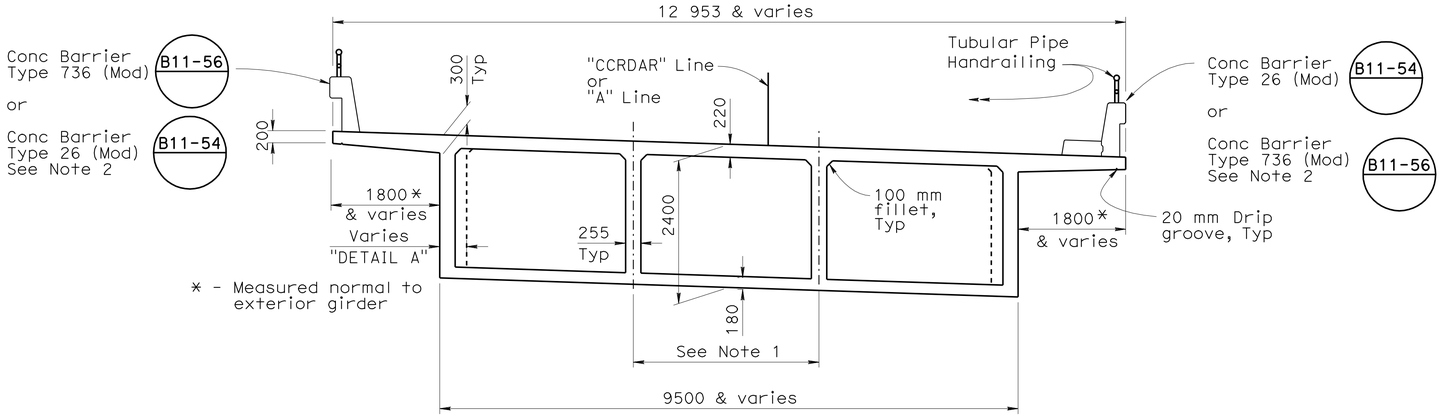

Sta 441+91.284 to 441+94.035 "A" Line
Sta 442+33.989 to 442+43.361 "CCRDAR" Line

SECTION C-C

1:50

NOTES:

1. For girder spacing, see "PLATFORM GIRDER LAYOUT" sheet.
2. For barrier type, see "PLATFORM GIRDER LAYOUT" sheet
3. Longitudinal bars in overhang and exterior girder are continuous.
4. For details, see "PLATFORM TOP REINFORCEMENT" sheet
5. Only service butt splice allowed in #25 bars.
6. For "SECTION C-C" see "PLATFORM LAYOUT" sheet
7. For girder numbers, see "PLATFORM ADDITIONAL REINFORCEMENT" sheet

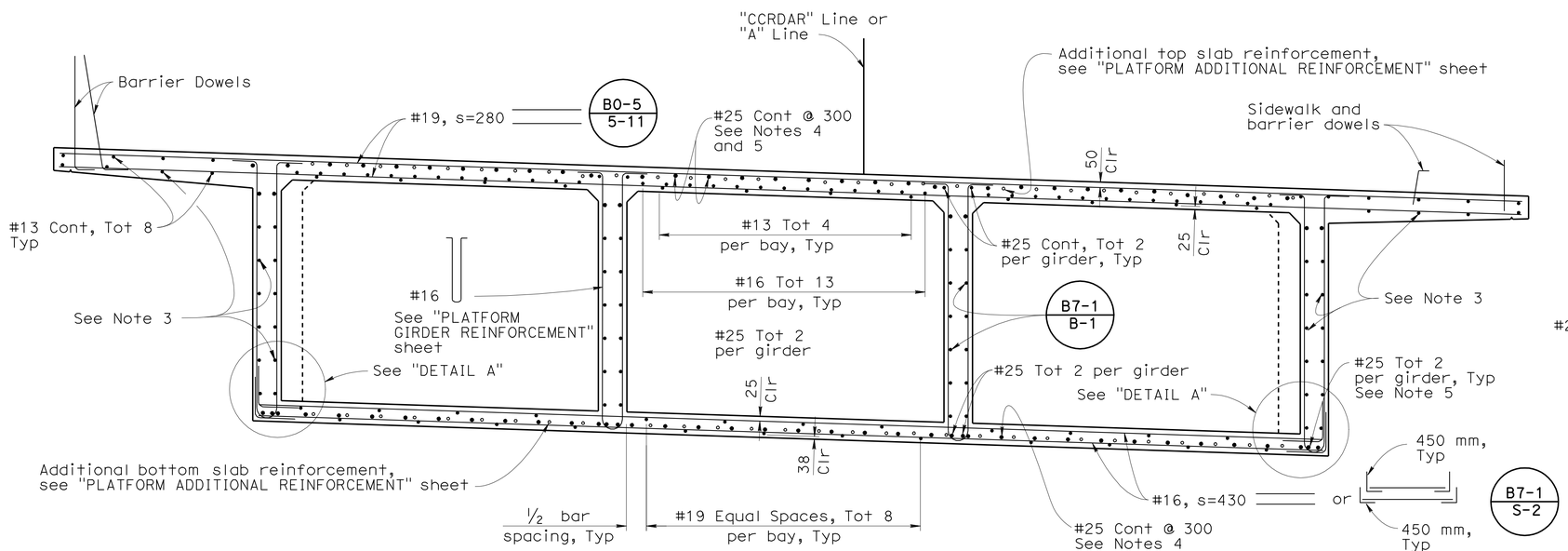

SECTION REINFORCEMENT

1:25

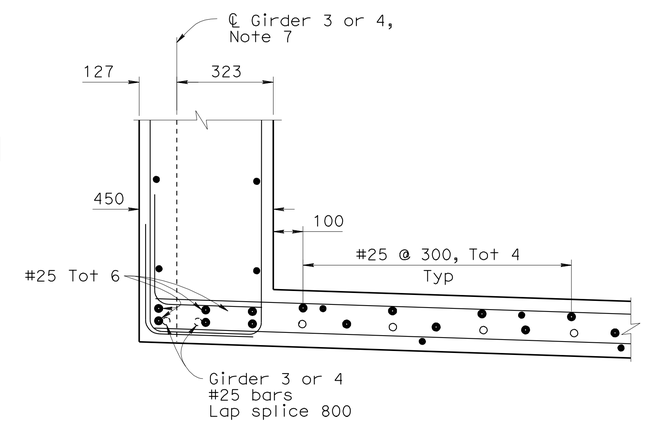

DETAIL A

1:10

Girders 11 and 14 between Bent 8 and DAR Abutment

ALL DIMENSIONS ARE IN MILLIMETERS UNLESS OTHERWISE SHOWN

CHUNG-YUAN WEN
DESIGN OVERSIGHT
4-28-09
SIGN OFF DATE

	BY	CHECKED
DESIGN	Jeremy Lahaye	Chris Hodge
DETAILS	Andy Toledo	Chris Hodge
QUANTITIES	Oscar Colcol/I.Martin	Xiaoyun Wu

PREPARED FOR THE STATE OF CALIFORNIA DEPARTMENT OF TRANSPORTATION

Brett Makley
PROJECT ENGINEER

BRIDGE NO. 57C0786
KILOMETER POST KP43.2

CARROLL CANYON ROAD BRIDGE
PLATFORM SECTION NO.3

DESIGN DETAIL SHEET (METRIC) (REV. 10/27/05)

ORIGINAL SCALE IN MILLIMETERS FOR REDUCED PLANS 0 10 20 30 40 50 60 70 80 90 100

CU 11275
EA 2T0401

DISREGARD PRINTS BEARING EARLIER REVISION DATES

REVISION DATES (PRELIMINARY STAGE ONLY) 9/12/08 12/19/08 3/9/09 4/28/09

SHEET 40 OF 74

FILE => 57-c0786-k-ts04.dgn

USERNAME => trmikes1 DATE PLOTTED => 29-SEP-2010 TIME PLOTTED => 11:41

DIST	COUNTY	ROUTE	KILOMETER POST TOTAL PROJECT	SHEET No	TOTAL SHEETS
11	SD	5,805	R49.9/R51.7, 42.6/46.5	714	886

Caltrans Metric

REGISTERED CIVIL ENGINEER 4-28-09 DATE

9-27-10
PLANS APPROVAL DATE

REGISTERED PROFESSIONAL ENGINEER James L. Rucker No. 47796 Exp. 12-31-09 CIVIL STATE OF CALIFORNIA

The State of California or its officers or agents shall not be responsible for the accuracy or completeness of electronic copies of this plan sheet.

SANDAG
401 B STREET,
SAN DIEGO, CA 92101

T.Y. LIN INTERNATIONAL
5030 CAMINO DE LA SIESTA, SUITE 204,
SAN DIEGO, CA 92108

PRESTRESSING NOTES

1860 MPa Low Relaxation Strand:

P_{jack} = 140,660 kN

Anchor Set = 10 mm

Total Number of Girders = 7

μ = 0.25
k = 0.000656/m

Distribution of prestress force (Pjack) between girders shall not exceed the ratio of 3:2. Maximum final force variation between girders shall not exceed 3200 kN.

Concrete: f'_c = 28 MPa @ 28 days

f'_{ci} = 25 MPa @ time of stressing

Contractor shall submit elongation calculations based on initial stress at

⊠ = 0.732 times jacking stress.

Two end stressing shall be performed for Frame-1.

NOTES:

-Indicates girder stem width in millimeters

-Indicates bottom slab thickness in millimeters

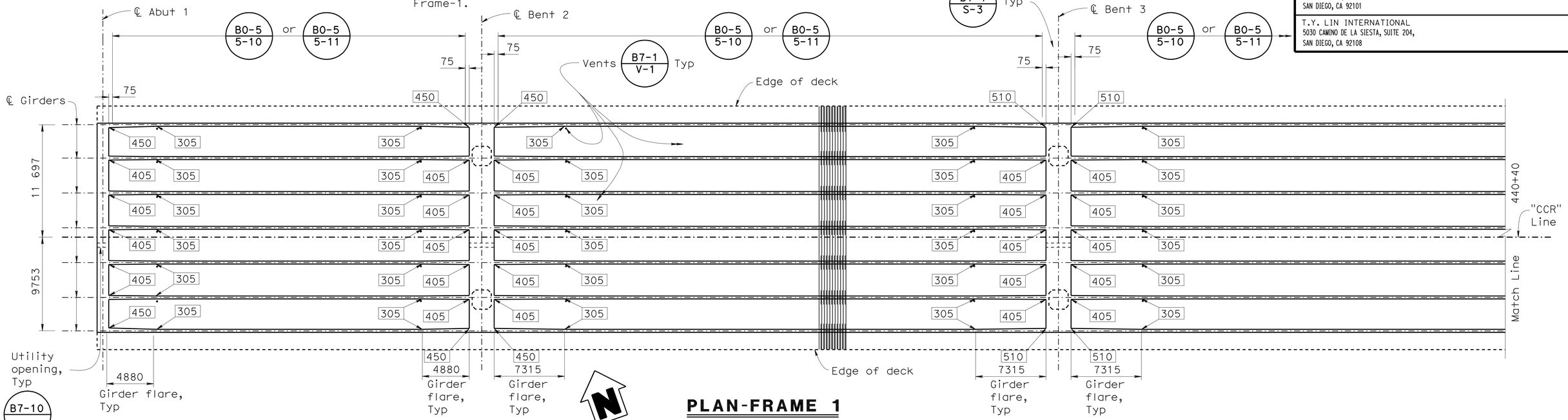

PLAN-FRAME 1

1:200

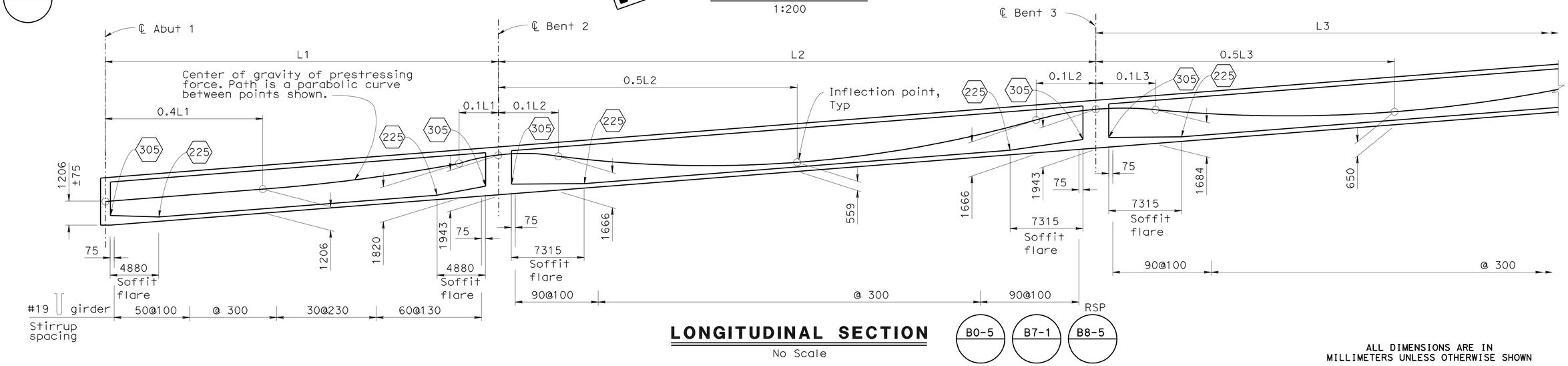

LONGITUDINAL SECTION

No Scale

B0-5 B7-1 B8-5

ALL DIMENSIONS ARE IN MILLIMETERS UNLESS OTHERWISE SHOWN

CHUNG-YUAN WEN
DESIGN OVERSIGHT
4-28-09
SIGN OFF DATE

DESIGN DETAIL SHEET (METRIC) (REV. 10/27/05)

	BY	CHECKED
DESIGN	Roya Golchoobian	Pete Smith
DETAILS	Andy Toledo	Pete Smith
QUANTITIES	Oscar Colcol	Xiaoyun Wu

PREPARED FOR THE STATE OF CALIFORNIA DEPARTMENT OF TRANSPORTATION

Brett Makley
PROJECT ENGINEER

CU 11275
EA 2T0401

BRIDGE NO. 57C0786
KILOMETER POST KP43.2

CARROLL CANYON ROAD BRIDGE
GIRDER LAYOUT NO.1

ORIGINAL SCALE IN MILLIMETERS FOR REDUCED PLANS 0 10 20 30 40 50 60 70 80 90 100

DISREGARD PRINTS BEARING EARLIER REVISION DATES

REVISION DATES (PRELIMINARY STAGE ONLY) 9/12/08 12/19/08 3/19/09 4/28/09

SHEET 41 OF 74

FILE => 57-c0786-1-g_lo01.dgn

USERNAME => trmikest DATE PLOTTED => 29-SEP-2010 TIME PLOTTED => 11:42

DIST	COUNTY	ROUTE	KILOMETER POST TOTAL PROJECT	SHEET No	TOTAL SHEETS
11	SD	5,805	R49.9/R51.7, 42.6/46.5	715	886

REGISTERED CIVIL ENGINEER 4-28-09 DATE

9-27-10
PLANS APPROVAL DATE

REGISTERED PROFESSIONAL ENGINEER James L. Rucker No. 47796 Exp. 12-31-09 CIVIL STATE OF CALIFORNIA

The State of California or its officers or agents shall not be responsible for the accuracy or completeness of electronic copies of this plan sheet.

SANDAG
401 B STREET,
SAN DIEGO, CA 92101

T.Y. LIN INTERNATIONAL
5030 CAMINO DE LA SIESTA, SUITE 204,
SAN DIEGO, CA 92108

Caltrans Metric

NOTES:

1. Locate at Center Of Span

-Indicates girder stem width in millimeters
-Indicates bottom slab thickness in millimeters
-Indicates point of no movement

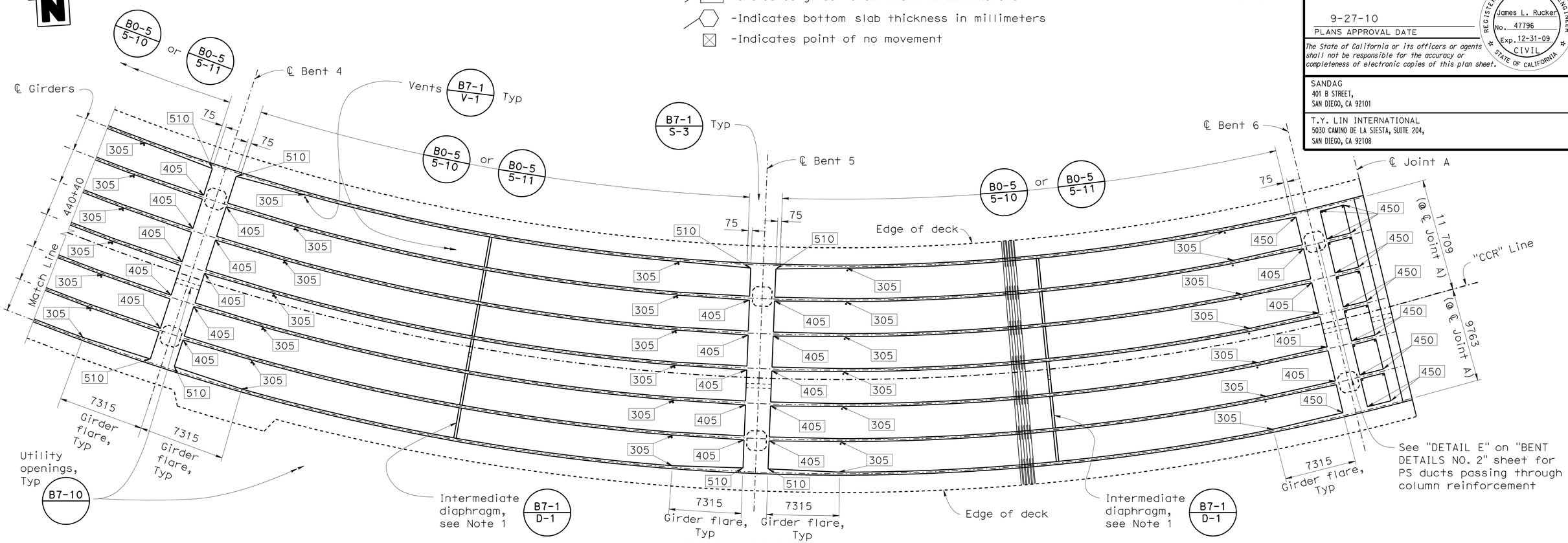

PLAN-FRAME 1

1:200

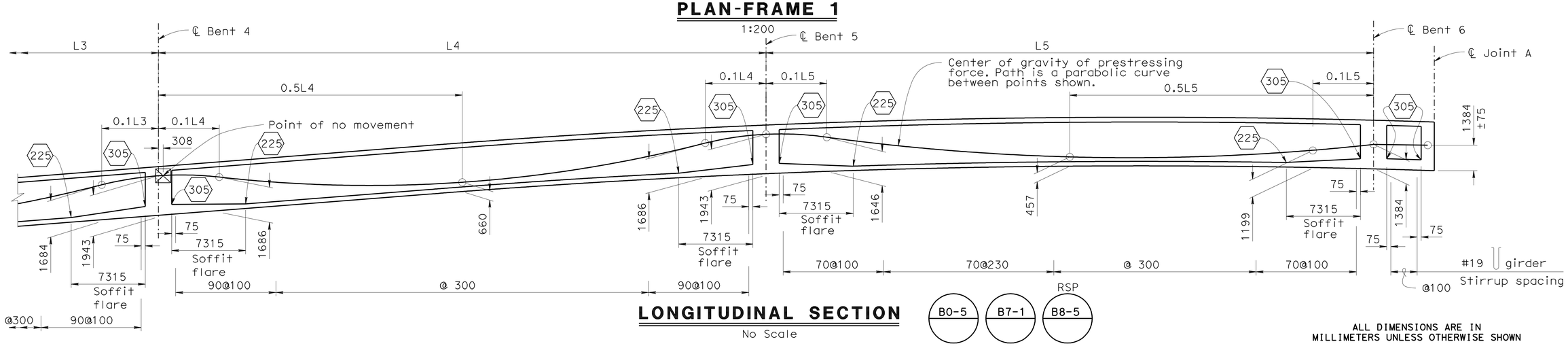

LONGITUDINAL SECTION

No Scale

ALL DIMENSIONS ARE IN MILLIMETERS UNLESS OTHERWISE SHOWN

CHUNG-YUAN WEN DESIGN OVERSIGHT 4-28-09 SIGN OFF DATE	DESIGN	BY Roya Golchoobian	CHECKED Pete Smith	PREPARED FOR THE STATE OF CALIFORNIA DEPARTMENT OF TRANSPORTATION	Brett Makley PROJECT ENGINEER
	DETAILS	BY Andy Toledo	CHECKED Pete Smith		
	QUANTITIES	BY Oscar Colcol	CHECKED Xiaoyun Wu		

BRIDGE NO. 57C0786
KILOMETER POST KP43.2

CARROLL CANYON ROAD BRIDGE
GIRDER LAYOUT NO.2

DESIGN DETAIL SHEET (METRIC) (REV. 10/27/05)

ORIGINAL SCALE IN MILLIMETERS FOR REDUCED PLANS 0 10 20 30 40 50 60 70 80 90 100

CU 11275
EA 2T0401

DISREGARD PRINTS BEARING EARLIER REVISION DATES → 9/12/08 12/19/08 3/19/09 4/28/09

REVISION DATES (PRELIMINARY STAGE ONLY)

SHEET 42 OF 74

FILE => 57-c0786-l-g_lo02.dgn

USERNAME => trmikest DATE PLOTTED => 29-SEP-2010 TIME PLOTTED => 11:42

DIST	COUNTY	ROUTE	KILOMETER POST TOTAL PROJECT	SHEET No	TOTAL SHEETS
11	SD	5,805	R49.9/R51.7, 42.6/46.5	716	886

Caltrans Metric

REGISTERED CIVIL ENGINEER — DATE 4-28-09

9-27-10
PLANS APPROVAL DATE

REGISTERED PROFESSIONAL ENGINEER — James L. Rucker No. 47796 Exp. 12-31-09 CIVIL — STATE OF CALIFORNIA

The State of California or its officers or agents shall not be responsible for the accuracy or completeness of electronic copies of this plan sheet.

SANDAG
401 B STREET,
SAN DIEGO, CA 92101

T.Y. LIN INTERNATIONAL
5030 CAMINO DE LA SIESTA, SUITE 204,
SAN DIEGO, CA 92108

PRESTRESSING NOTES

1860 MPa Low Relaxation Strand:

P_{jack} = 137,620 kN

Anchor Set = 10 mm

Total Number of Girders = 7

μ = 0.15
k = 0.000656/m

Distribution of prestress force (Pjack) between girders shall not exceed the ratio of 3:2. Maximum final force variation between girders shall not exceed 3200 kN.

Concrete: f'_c = 28 MPa @ 28 days

f'_{ci} = 25 MPa @ time of stressing

Contractor shall submit elongation calculations based on initial stress at

⊠ = 0.83 times jacking stress.

One end stressing shall be performed from abutment 15.

NOTES:

1. Locate at Center Of Span
2. See "TRANSVERSE BAR LAYOUT - SPAN 13" on "GIRDER DETAILS NO.2" sheet

-Indicates girder stem width in millimeters

-Indicates bottom slab thickness in millimeters

-Indicates point of no movement

EOD - Edge of deck

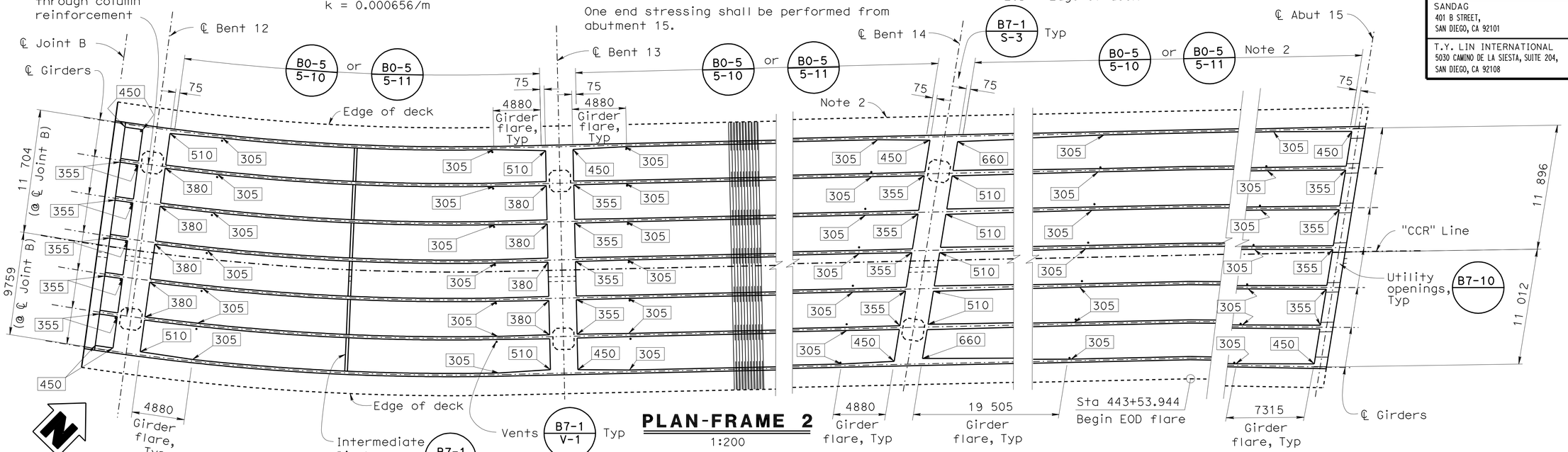

PLAN-FRAME 2

1:200

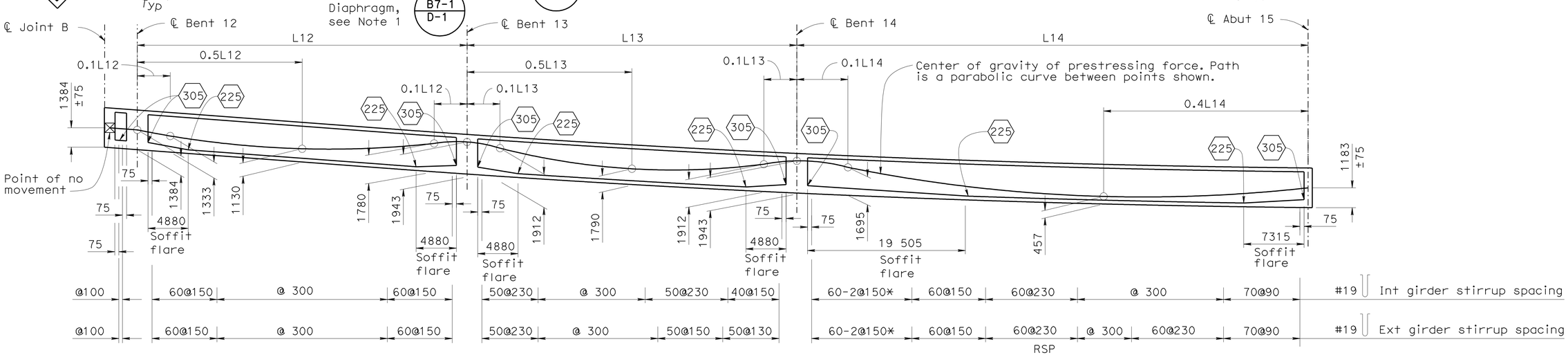

LONGITUDINAL SECTION

No Scale

ALL DIMENSIONS ARE IN MILLIMETERS UNLESS OTHERWISE SHOWN

CHUNG-YUAN WEN
DESIGN OVERSIGHT
4-28-09
SIGN OFF DATE

DESIGN	BY Roya Golchoobian	CHECKED Pete Smith
DETAILS	BY Andy Toledo	CHECKED Pete Smith
QUANTITIES	BY Oscar Colcol	CHECKED Xiaoyun Wu

PREPARED FOR THE STATE OF CALIFORNIA DEPARTMENT OF TRANSPORTATION

Brett Makley
PROJECT ENGINEER

BRIDGE NO. 57C0786
KILOMETER POST KP43.2

CARROLL CANYON ROAD BRIDGE
GIRDER LAYOUT NO.3

DESIGN DETAIL SHEET (METRIC) (REV. 10/27/05)

ORIGINAL SCALE IN MILLIMETERS FOR REDUCED PLANS 0 10 20 30 40 50 60 70 80 90 100

CU 11275
EA 2T0401

DISREGARD PRINTS BEARING EARLIER REVISION DATES

REVISION DATES (PRELIMINARY STAGE ONLY) 9/12/08 12/19/08 3/19/09 4/28/09

SHEET 43 OF 74

FILE => 57-c0786-l-g_lo03.dgn

USERNAME => trmikesl DATE PLOTTED => 29-SEP-2010 TIME PLOTTED => 11:42

DIST	COUNTY	ROUTE	KILOMETER POST TOTAL PROJECT	SHEET No	TOTAL SHEETS
11	SD	5,805	R49.9/R51.7, 42.6/46.5	717	886

REGISTERED CIVIL ENGINEER 4-28-09 DATE

9-27-10
PLANS APPROVAL DATE

REGISTERED PROFESSIONAL ENGINEER James L. Rucker No. 47796 Exp. 12-31-09 CIVIL STATE OF CALIFORNIA

The State of California or its officers or agents shall not be responsible for the accuracy or completeness of electronic copies of this plan sheet.

SANDAG
401 B STREET,
SAN DIEGO, CA 92101

T.Y. LIN INTERNATIONAL
5030 CAMINO DE LA SIESTA, SUITE 204,
SAN DIEGO, CA 92108

Caltrans Metric

NOTES:

1. Only service butt splice is allowed for #36 bars
2. Extend to edge of exterior girder
3. Place parallel to ℄ girders and space normal to ℄ girders
4. Place parallel to ℄ girders and space along ℄ Abut

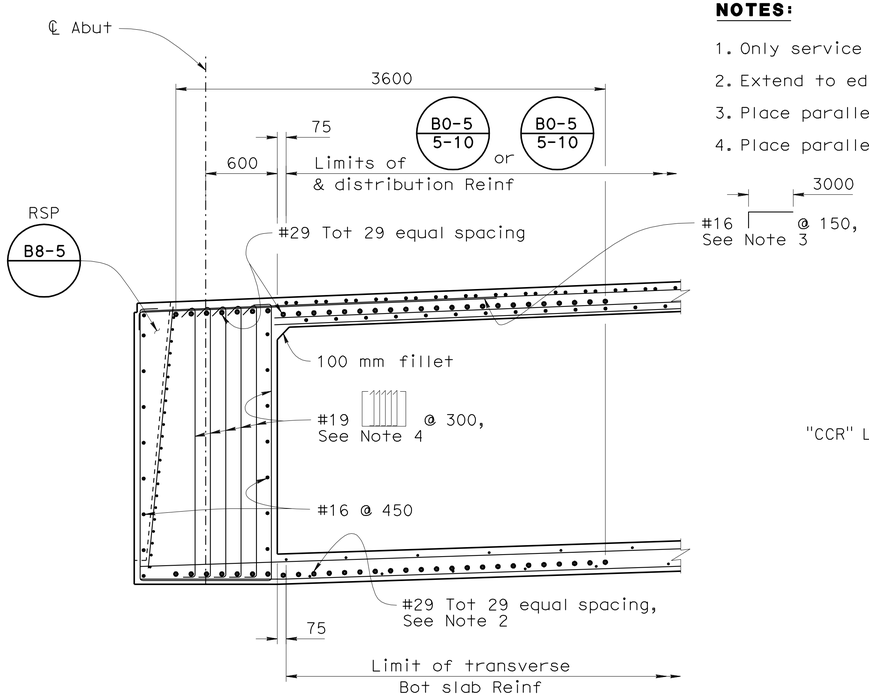

END DIAPHRAGM - ABUTMENTS 1 & 15

1:25

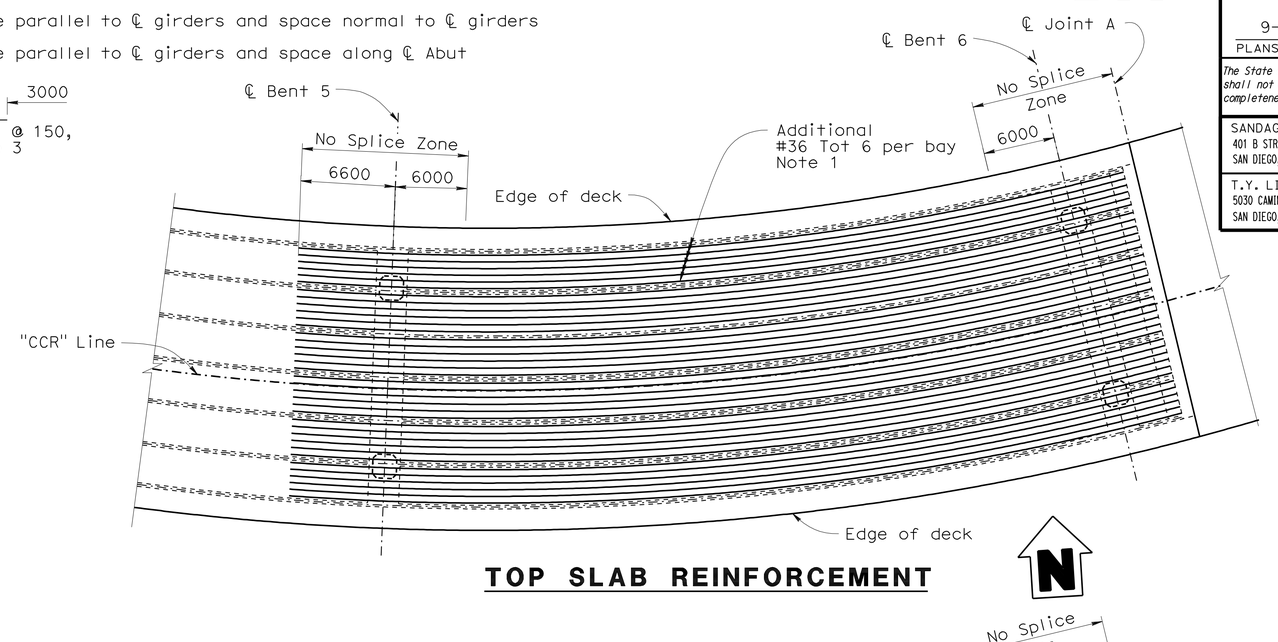

TOP SLAB REINFORCEMENT

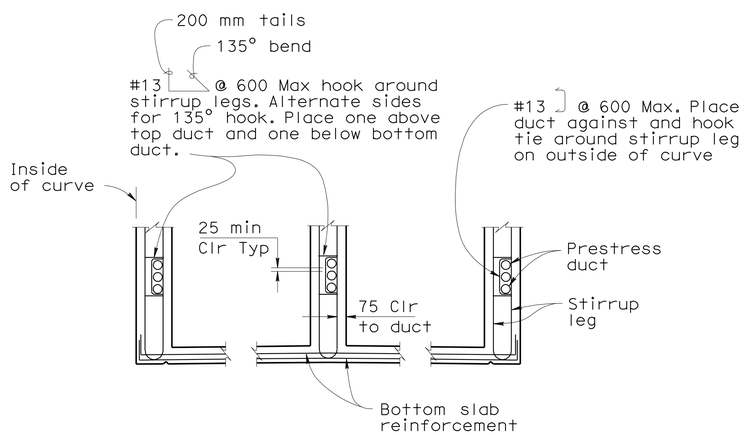

PART GIRDER SECTION DETAIL FRAMES 1 & 2

No Scale

NOTE:

Details shown are for a curve to the left with the section taken looking ahead on station.

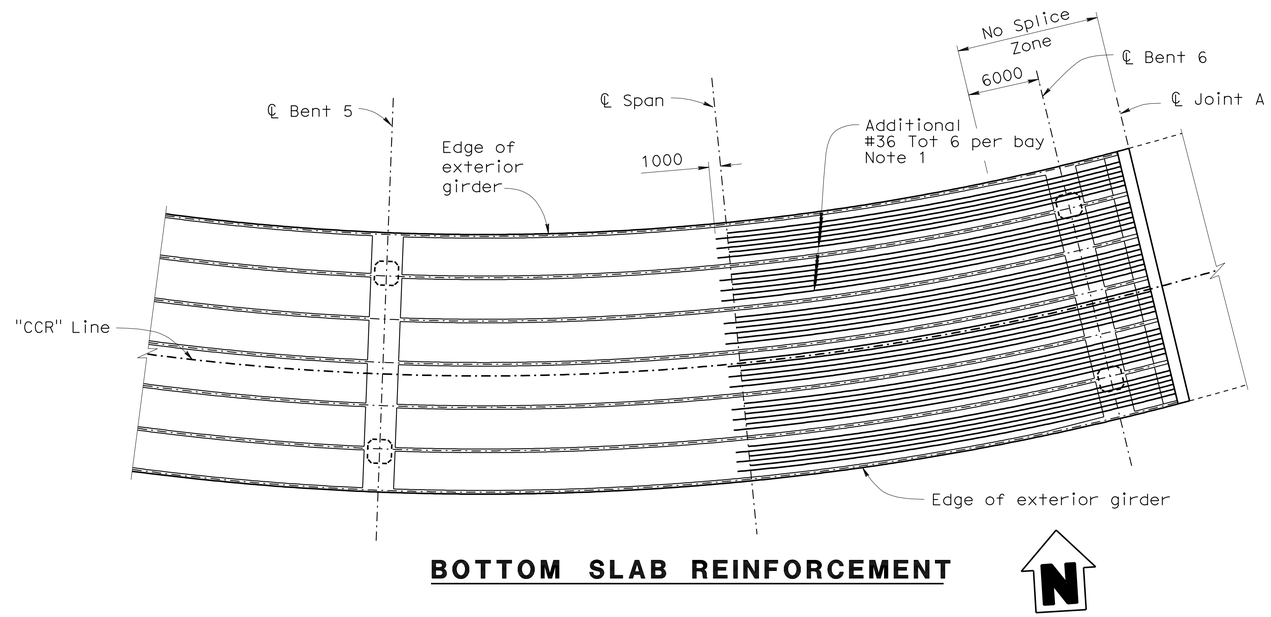

BOTTOM SLAB REINFORCEMENT

ADDITIONAL DECK REINFORCEMENT - FRAME 1

1:250

ALL DIMENSIONS ARE IN MILLIMETERS UNLESS OTHERWISE SHOWN

CHUNG-YUAN WEN
DESIGN OVERSIGHT
4-28-09
SIGN OFF DATE

	BY	CHECKED
DESIGN	Roya Golchoobian	Pete Smith
DETAILS	Andy Toledo	Pete Smith
QUANTITIES	Oscar Colcol	Xiaoyun Wu

PREPARED FOR THE STATE OF CALIFORNIA DEPARTMENT OF TRANSPORTATION

Brett Makley
PROJECT ENGINEER

BRIDGE NO. 57C0786
KILOMETER POST KP43.2

CARROLL CANYON ROAD BRIDGE
GIRDER DETAILS NO.1

DESIGN DETAIL SHEET (METRIC) (REV. 10/27/05)

ORIGINAL SCALE IN MILLIMETERS FOR REDUCED PLANS 0 10 20 30 40 50 60 70 80 90 100

CU 11275
EA 2T0401

DISREGARD PRINTS BEARING EARLIER REVISION DATES

REVISION DATES (PRELIMINARY STAGE ONLY) 9/12/08 12/19/08 3/19/09 4/28/09

SHEET 44 OF 74

FILE => 57-c0786-1-gdt01.dgn

USERNAME => trmikest DATE PLOTTED => 29-SEP-2010 TIME PLOTTED => 11:42

DIST	COUNTY	ROUTE	KILOMETER POST TOTAL PROJECT	SHEET No	TOTAL SHEETS
11	SD	5,805	R49.9/R51.7, 42.6/46.5	718	886

Caltrans Metric

REGISTERED CIVIL ENGINEER 4-28-09 DATE

9-27-10
PLANS APPROVAL DATE

REGISTERED PROFESSIONAL ENGINEER James L. Rucker No. 47796 Exp. 12-31-09 CIVIL STATE OF CALIFORNIA

The State of California or its officers or agents shall not be responsible for the accuracy or completeness of electronic copies of this plan sheet.

SANDAG
401 B STREET,
SAN DIEGO, CA 92101

T.Y. LIN INTERNATIONAL
5030 CAMINO DE LA SIESTA, SUITE 204,
SAN DIEGO, CA 92108

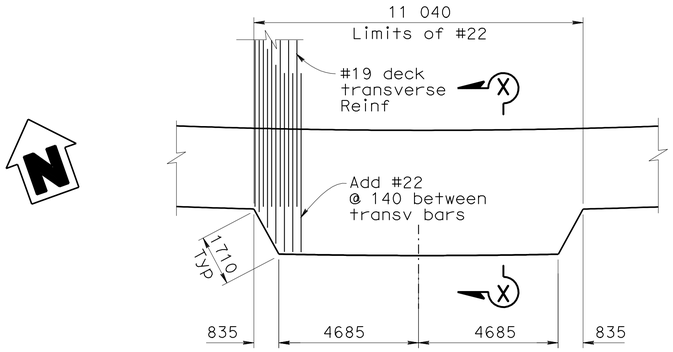

PART PLAN

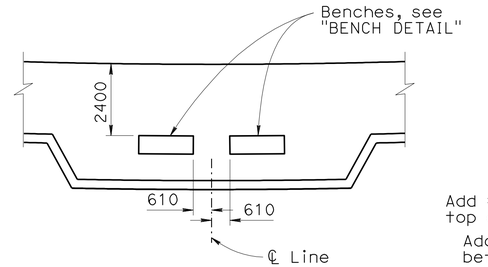

STRUCTURE OVERLOOK

1:100

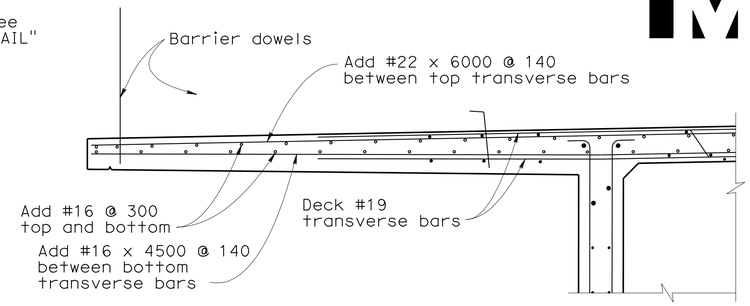

SECTION X-X

1:20

STRUCTURE OVERLOOK STA. 440+60.644

1:100

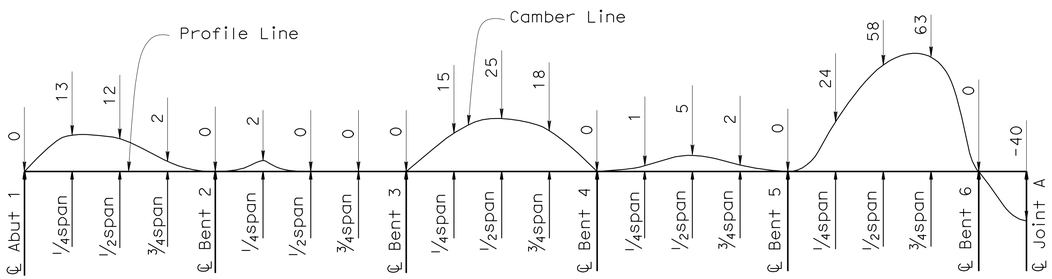

CAMBER DIAGRAM FRAME - 1

No Scale

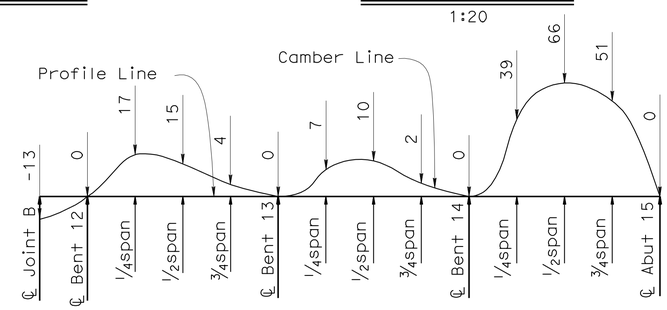

CAMBER DIAGRAM FRAME - 2

No Scale

NOTES:

1. Camber does not include allowance for falsework settlement
2. No camber is required for CIP RC platform.

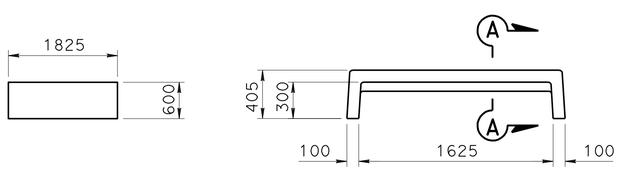

PLAN

ELEVATION

SECTION A-A

BENCH DETAIL

No Scale

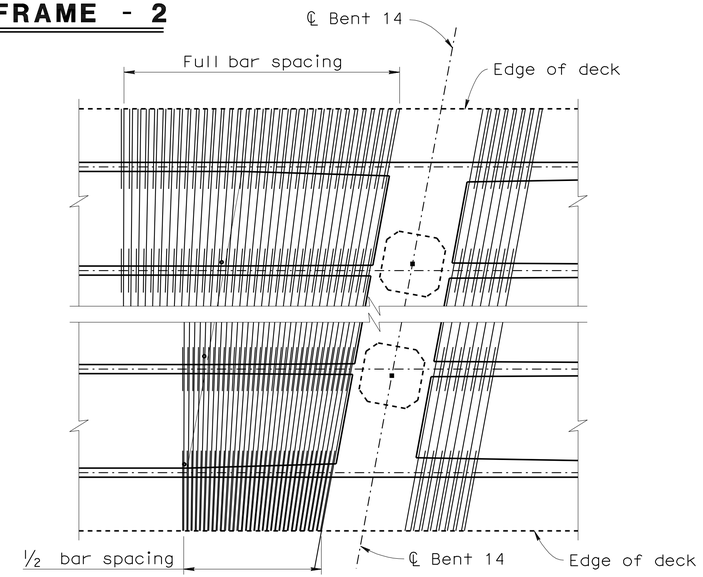

TRANSVERSE BAR LAYOUT - SPAN 13

1:100

ALL DIMENSIONS ARE IN MILLIMETERS UNLESS OTHERWISE SHOWN

CHUNG-YUAN WEN
DESIGN OVERSIGHT
4-28-09
SIGN OFF DATE

	BY	CHECKED
DESIGN	Roya Golchoobian	Pete Smith
DETAILS	Andy Toledo	Pete Smith
QUANTITIES	Oscar Colcol	Xiaoyun Wu

PREPARED FOR THE STATE OF CALIFORNIA DEPARTMENT OF TRANSPORTATION

Brett Makley
PROJECT ENGINEER

BRIDGE NO. 57C0786
KILOMETER POST KP43.2

CARROLL CANYON ROAD BRIDGE
GIRDER DETAILS NO.2

DESIGN DETAIL SHEET (METRIC) (REV. 10/27/05)

ORIGINAL SCALE IN MILLIMETERS FOR REDUCED PLANS 0 10 20 30 40 50 60 70 80 90 100

CU 11275
EA 2T0401

DISREGARD PRINTS BEARING EARLIER REVISION DATES

REVISION DATES (PRELIMINARY STAGE ONLY) 9/12/08 12/19/08 3/9/09 4/28/09

SHEET 45 OF 74

FILE => 57-c0786-1-gdt02.dgn

USERNAME => trmikest DATE PLOTTED => 29-SEP-2010 TIME PLOTTED => 11:43

DIST	COUNTY	ROUTE	KILOMETER POST TOTAL PROJECT	SHEET No	TOTAL SHEETS
11	SD	5,805	R49.9/R51.7, 42.6/46.5	719	886

Caltrans Metric

REGISTERED CIVIL ENGINEER — DATE 4-28-09

9-27-10
PLANS APPROVAL DATE

REGISTERED PROFESSIONAL ENGINEER — James L. Rucker No. 47796 Exp. 12-31-09 CIVIL — STATE OF CALIFORNIA

The State of California or its officers or agents shall not be responsible for the accuracy or completeness of electronic copies of this plan sheet.

SANDAG
401 B STREET,
SAN DIEGO, CA 92101

T.Y. LIN INTERNATIONAL
5030 CAMINO DE LA SIESTA, SUITE 204,
SAN DIEGO, CA 92108

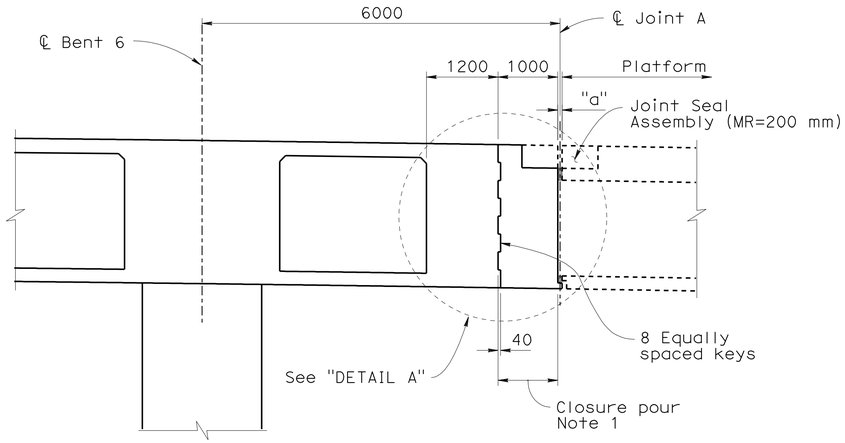

JOINT-A
1:50

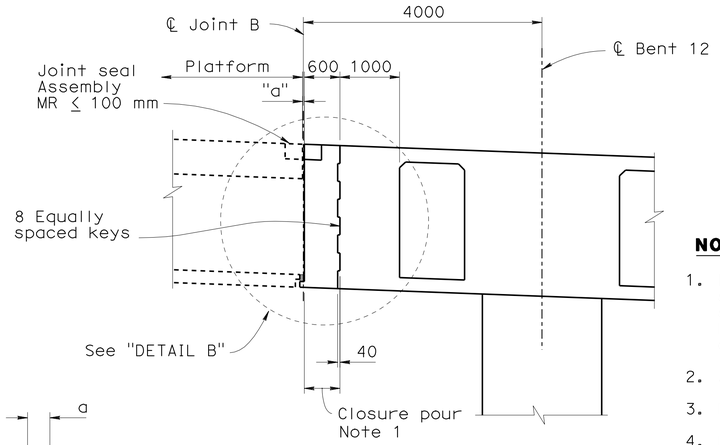

JOINT-B
1:50

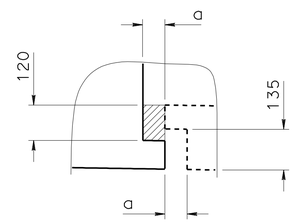

DETAIL C
1:20

NOTES:

1. Place cast-in-place concrete closure pour after stressing is completed. Concrete shall be the same strength as cast-in-place prestressed concrete. Falsework shall remain in place until concrete has attained a strength of at least 25 MPa.
2. Adjust to clear joint seal assembly.
3. Reinforcement shall be placed parallel to ℄ structure.
4. For dimension "a" see "JOINT SEAL ASSEMBLY DETAILS NO.1 MAXIMUM MOVEMENT RATING = 100 MM" and "JOINT SEAL ASSEMBLY DETAILS NO.2 MOVEMENT RATING GREATER THAN 100 MM" sheets
5. For location of "JOINT-A" and "JOINT-B" see, "PLATFORM TYPICAL SECTION NO.1" sheet
6. Extend to edge of deck
7. #19 ⌐ @100 side Reinf not shown for clarity. Add per RSP B8-5

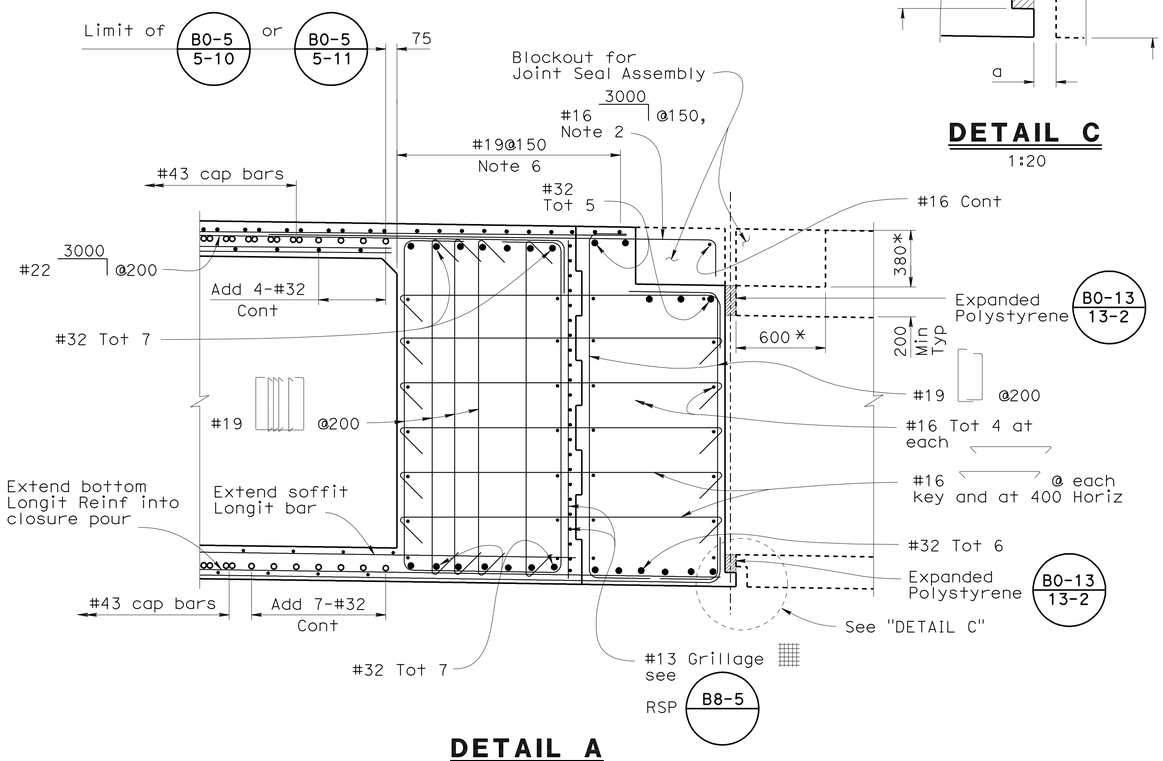

DETAIL A
1:20

See Note 7

* Verify with Joint Seal Manufacturer

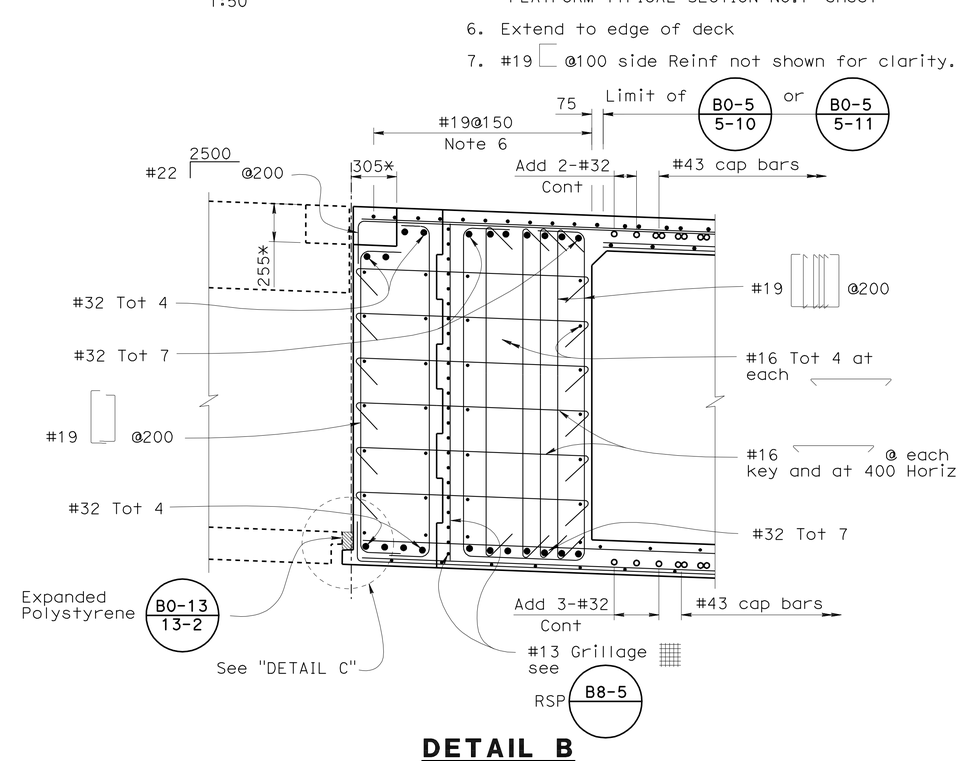

DETAIL B
1:20

See Note 7

ALL DIMENSIONS ARE IN MILLIMETERS UNLESS OTHERWISE SHOWN

CHUNG-YUAN WEN
DESIGN OVERSIGHT
4-28-09
SIGN OFF DATE

	BY	CHECKED
DESIGN	Roya Golchoobian	Pete Smith
DETAILS	Andy Toledo	Pete Smith
QUANTITIES	Oscar Colcol	Xiaoyun Wu

PREPARED FOR THE STATE OF CALIFORNIA DEPARTMENT OF TRANSPORTATION

Brett Makley
PROJECT ENGINEER

BRIDGE NO. 57C0786
KILOMETER POST KP43.2

CARROLL CANYON ROAD BRIDGE
JOINT DETAILS

DESIGN DETAIL SHEET (METRIC) (REV. 10/27/05)

ORIGINAL SCALE IN MILLIMETERS FOR REDUCED PLANS 0 10 20 30 40 50 60 70 80 90 100

CU 11275
EA 2T0401

DISREGARD PRINTS BEARING EARLIER REVISION DATES

REVISION DATES (PRELIMINARY STAGE ONLY): 9/12/08 12/19/08 3/9/09 4/28/09

SHEET 46 OF 74

FILE => 57-c0786-1-gdt03.dgn

USERNAME => trmikesl DATE PLOTTED => 29-SEP-2010 TIME PLOTTED => 11:43

DIST	COUNTY	ROUTE	KILOMETER POST TOTAL PROJECT	SHEET No	TOTAL SHEETS
11	SD	5,805	R49.9/R51.7, 42.6/46.5	720	886

Caltrans Metric

REGISTERED CIVIL ENGINEER 4-28-09 DATE

9-27-10
PLANS APPROVAL DATE

REGISTERED PROFESSIONAL ENGINEER James L. Rucker No. 47796 Exp. 12-31-09 CIVIL STATE OF CALIFORNIA

The State of California or its officers or agents shall not be responsible for the accuracy or completeness of electronic copies of this plan sheet.

SANDAG
401 B STREET,
SAN DIEGO, CA 92101

T.Y. LIN INTERNATIONAL
5030 CAMINO DE LA SIESTA, SUITE 204,
SAN DIEGO, CA 92108

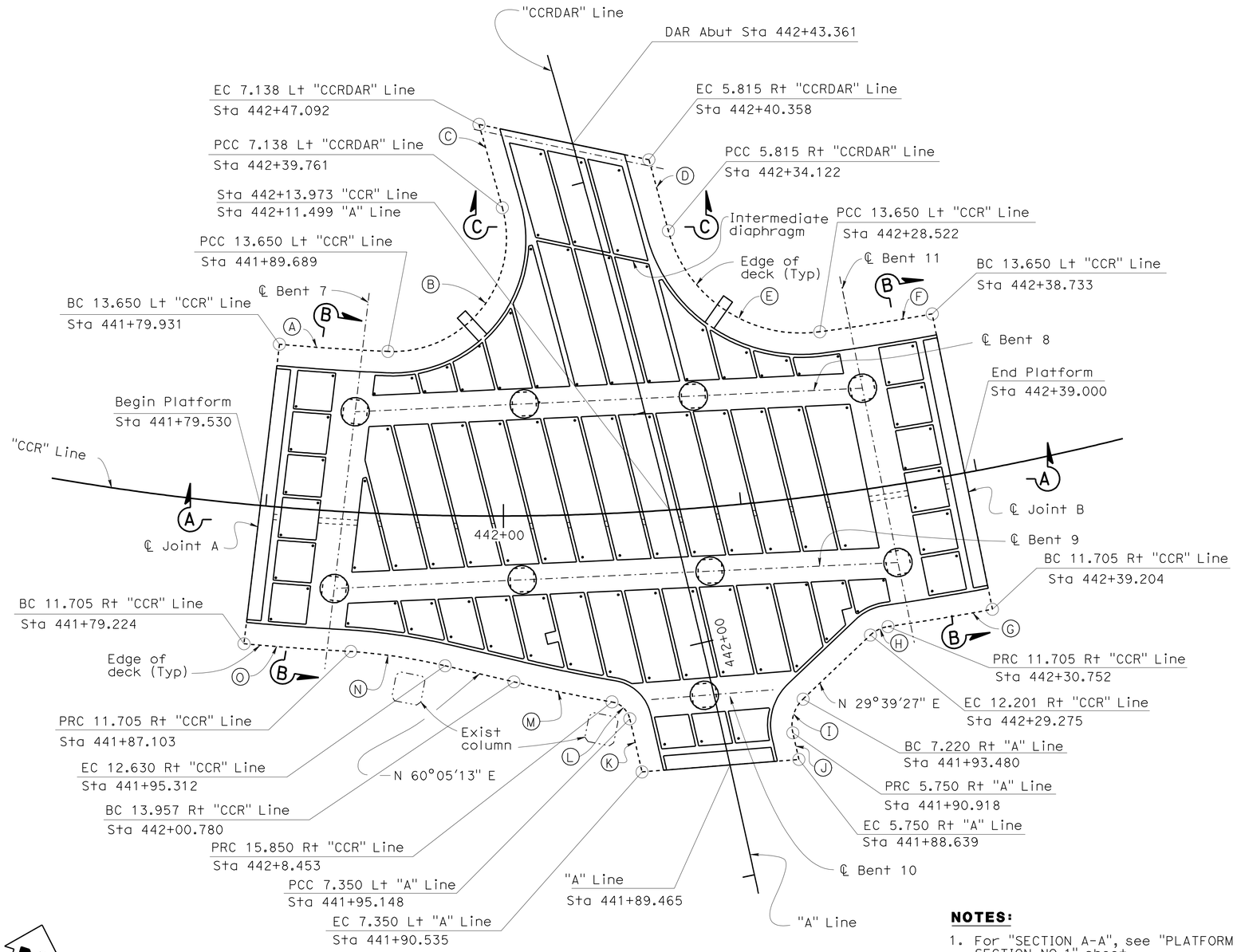

PLAN
1:200

CURVE DATA

No.	R	△	T	L
A	204.350	2°33'52"	4.574	9.147
B	9.550	107°57'57"	13.136	17.996
C	1059.664	0°23'37"	3.572	7.282
D	1072.617	0°20'06"	3.135	6.271
E	11.550	82°37'55"	10.153	16.657
F	204.352	2°41'01"	4.786	9.571
G	229.705	2°13'17"	4.453	8.906
H	2.698	35°6'26"	0.861	1.661
I	3.000	59°16'37"	1.707	3.104
J	1072.551	0°7'21"	1.146	2.292
K	1059.451	0°14'52"	2.290	4.581
L	1.872	66°57'18"	1.238	2.188
M	150.000	3°12'51"	4.208	8.414
N	50.000	10°00'04"	4.375	8.728
O	229.705	2°03'43"	4.169	8.302

NOTES:

1. For "SECTION A-A", see "PLATFORM SECTION NO.1" sheet
2. For "SECTION B-B", see "PLATFORM SECTION NO.2" sheet
3. For "SECTION C-C" see "PLATFORM SECTION NO.3" sheet

ALL DIMENSIONS ARE IN MILLIMETERS UNLESS OTHERWISE SHOWN

CHUNG-YUAN WEN
DESIGN OVERSIGHT
4-28-09
SIGN OFF DATE

	BY	CHECKED
DESIGN	Jeremy Lahaye	Chris Hodge
DETAILS	Tom Fukuhara	Chris Hodge
QUANTITIES	Oscar Colcol/I.Martin	Xiaoyun Wu

PREPARED FOR THE STATE OF CALIFORNIA DEPARTMENT OF TRANSPORTATION

Brett Makley
PROJECT ENGINEER

BRIDGE NO. 57C0786
KILOMETER POST KP43.2

CARROLL CANYON ROAD BRIDGE
PLATFORM LAYOUT

DESIGN DETAIL SHEET (METRIC) (REV. 10/27/05)

ORIGINAL SCALE IN MILLIMETERS FOR REDUCED PLANS 0 10 20 30 40 50 60 70 80 90 100

CU 11275
EA 2T0401

DISREGARD PRINTS BEARING EARLIER REVISION DATES

REVISION DATES (PRELIMINARY STAGE ONLY) 9/12/08 12/19/08 3/19/09 4/28/09

SHEET 47 OF 74

FILE => 57-c0786-1-gdt04.dgn

USERNAME => trmikes1 DATE PLOTTED => 29-SEP-2010 TIME PLOTTED => 11:43

DIST	COUNTY	ROUTE	KILOMETER POST TOTAL PROJECT	SHEET No	TOTAL SHEETS
11	SD	5,805	R49.9/R51.7, 42.6/46.5	721	886

Caltrans Metric

REGISTERED CIVIL ENGINEER — DATE 4-28-09

9-27-10
PLANS APPROVAL DATE

REGISTERED PROFESSIONAL ENGINEER — James L. Rucker No. 47796 Exp. 12-31-09 CIVIL — STATE OF CALIFORNIA

The State of California or its officers or agents shall not be responsible for the accuracy or completeness of electronic copies of this plan sheet.

SANDAG
401 B STREET,
SAN DIEGO, CA 92101

T.Y. LIN INTERNATIONAL
5030 CAMINO DE LA SIESTA, SUITE 204,
SAN DIEGO, CA 92108

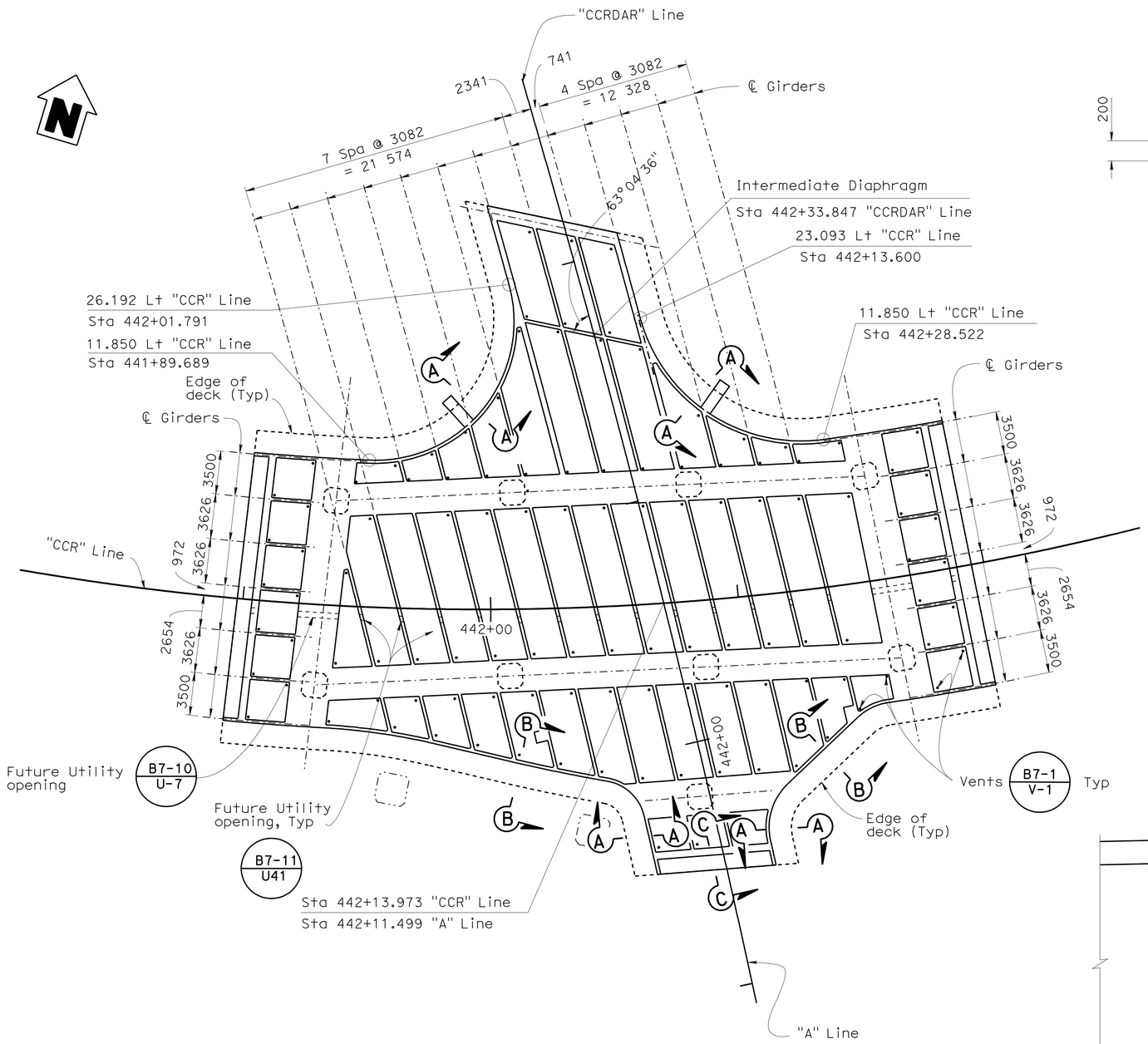

PLAN
1:200

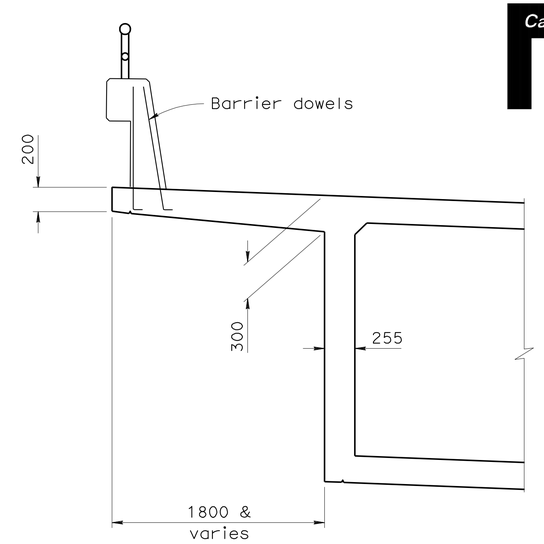

SECTION A-A
1:25

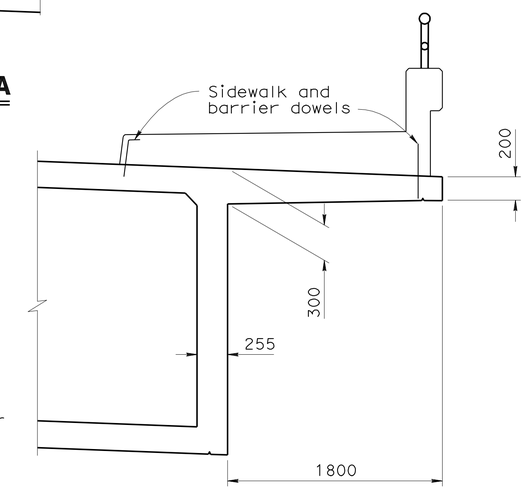

SECTION B-B
1:25

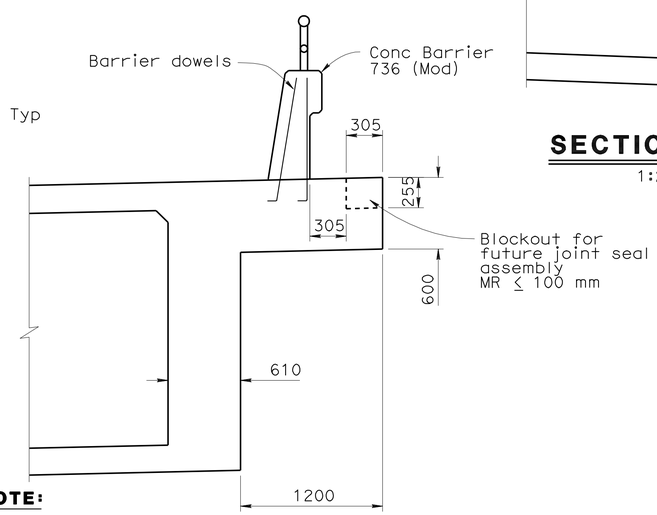

NOTE:
For details not shown, see "PLATFORM TYPICAL SECTION NO.1" sheet, JOINT-A

SECTION C-C
1:25

ALL DIMENSIONS ARE IN MILLIMETERS UNLESS OTHERWISE SHOWN

CHUNG-YUAN WEN
DESIGN OVERSIGHT
4-28-09
SIGN OFF DATE

	BY	CHECKED
DESIGN	Jeremy Lahaye	Chris Hodge
DETAILS	Andy Toledo/T.Fukuhara	Chris Hodge
QUANTITIES	Oscar Colcol/I.Martin	Xiaoyun Wu

PREPARED FOR THE STATE OF CALIFORNIA DEPARTMENT OF TRANSPORTATION

Brett Makley
PROJECT ENGINEER

BRIDGE NO. 57C0786
KILOMETER POST KP43.2

CARROLL CANYON ROAD BRIDGE
PLATFORM GIRDER LAYOUT

DESIGN DETAIL SHEET (METRIC) (REV. 10/27/05)

ORIGINAL SCALE IN MILLIMETERS FOR REDUCED PLANS 0 10 20 30 40 50 60 70 80 90 100

CU 11275
EA 2T0401

DISREGARD PRINTS BEARING EARLIER REVISION DATES
REVISION DATES (PRELIMINARY STAGE ONLY) 9/12/08 12/19/08 3/19/09 4/28/09

SHEET 48 OF 74

FILE => 57-c0786-1-gdt05.dgn

USERNAME => trmikes1 DATE PLOTTED => 29-SEP-2010 TIME PLOTTED => 11:43

DIST	COUNTY	ROUTE	KILOMETER POST TOTAL PROJECT	SHEET No	TOTAL SHEETS
11	SD	5,805	R49.9/R51.7, 42.6/46.5	722	886

REGISTERED CIVIL ENGINEER 4-28-09 DATE

9-27-10
PLANS APPROVAL DATE

REGISTERED PROFESSIONAL ENGINEER James L. Rucker No. 47796 Exp. 12-31-09 CIVIL STATE OF CALIFORNIA

The State of California or its officers or agents shall not be responsible for the accuracy or completeness of electronic copies of this plan sheet.

SANDAG
401 B STREET,
SAN DIEGO, CA 92101

T.Y. LIN INTERNATIONAL
5030 CAMINO DE LA SIESTA, SUITE 204,
SAN DIEGO, CA 92108

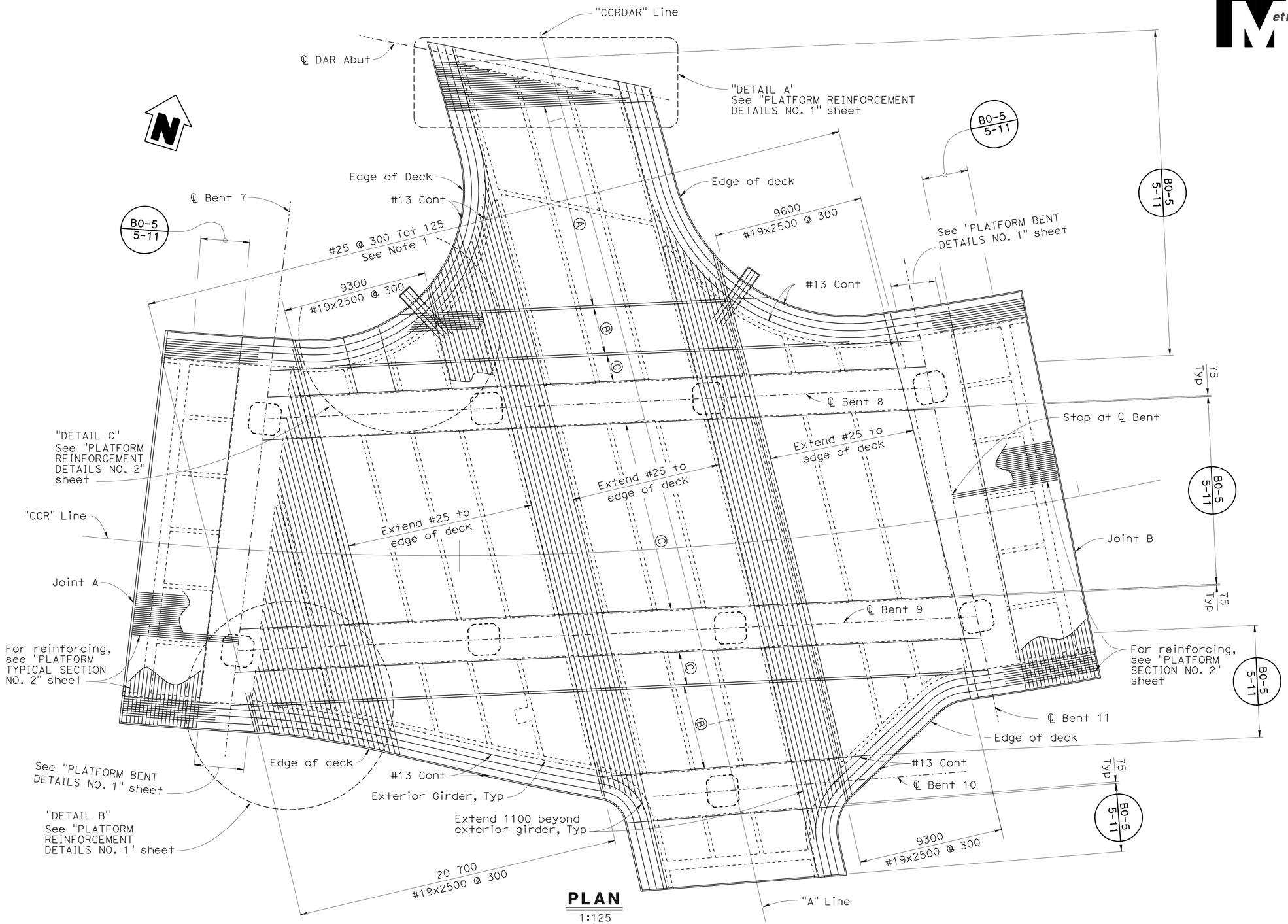

PLAN
1:125

LEGEND

Ⓐ Extend transverse bars to edge of deck

Ⓑ Extend transverse bars 1000 beyond exterior girder

Ⓒ Extend transverse bars to ℄ Bent Applies to bottom slab transverse bars also.

NOTE:

1. Only Service butt splice allowed in #25 bars

ALL DIMENSIONS ARE IN MILLIMETERS UNLESS OTHERWISE SHOWN

CHUNG-YUAN WEN
DESIGN OVERSIGHT
4-28-09
SIGN OFF DATE

	BY	CHECKED
DESIGN	Jeremy Lahaye	Chris Hodge
DETAILS	Tom Fukuhara	Chris Hodge
QUANTITIES	Oscar Colcol/I.Martin	Xiaoyun Wu

PREPARED FOR THE STATE OF CALIFORNIA DEPARTMENT OF TRANSPORTATION

Brett Makley
PROJECT ENGINEER

BRIDGE NO. 57C0786
KILOMETER POST KP43.2

CARROLL CANYON ROAD BRIDGE
PLATFORM TOP REINFORCEMENT

DESIGN DETAIL SHEET (METRIC) (REV. 10/27/05)

ORIGINAL SCALE IN MILLIMETERS FOR REDUCED PLANS 0 10 20 30 40 50 60 70 80 90 100

CU 11275
EA 2T0401

DISREGARD PRINTS BEARING EARLIER REVISION DATES

REVISION DATES (PRELIMINARY STAGE ONLY) 9/12/08 12/19/08 3/19/09 4/28/09

SHEET 49 OF 74

FILE => 57-c0786-o-gr1_top01.dgn

USERNAME => trmikesl DATE PLOTTED => 29-SEP-2010 TIME PLOTTED => 11:44

DIST	COUNTY	ROUTE	KILOMETER POST TOTAL PROJECT	SHEET No	TOTAL SHEETS
11	SD	5,805	R49.9/R51.7, 42.6/46.5	723	886

REGISTERED CIVIL ENGINEER 4-28-09 DATE

9-27-10
PLANS APPROVAL DATE

REGISTERED PROFESSIONAL ENGINEER James L. Rucker No. 47796 Exp. 12-31-09 CIVIL STATE OF CALIFORNIA

The State of California or its officers or agents shall not be responsible for the accuracy or completeness of electronic copies of this plan sheet.

SANDAG
401 B STREET,
SAN DIEGO, CA 92101

T.Y. LIN INTERNATIONAL
5030 CAMINO DE LA SIESTA, SUITE 204,
SAN DIEGO, CA 92108

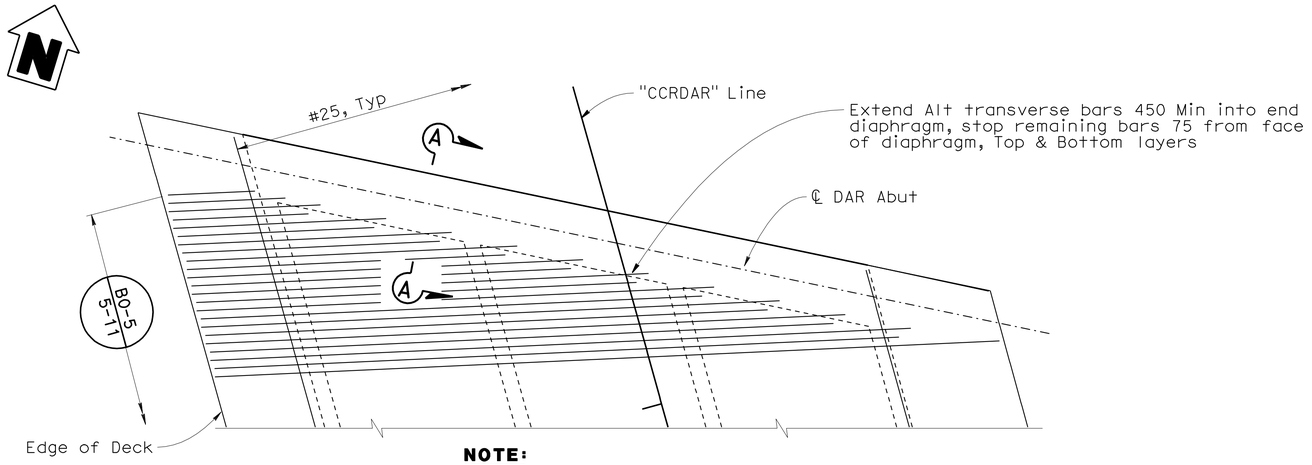

NOTE:
Not all bars are shown

DETAIL A
1:50

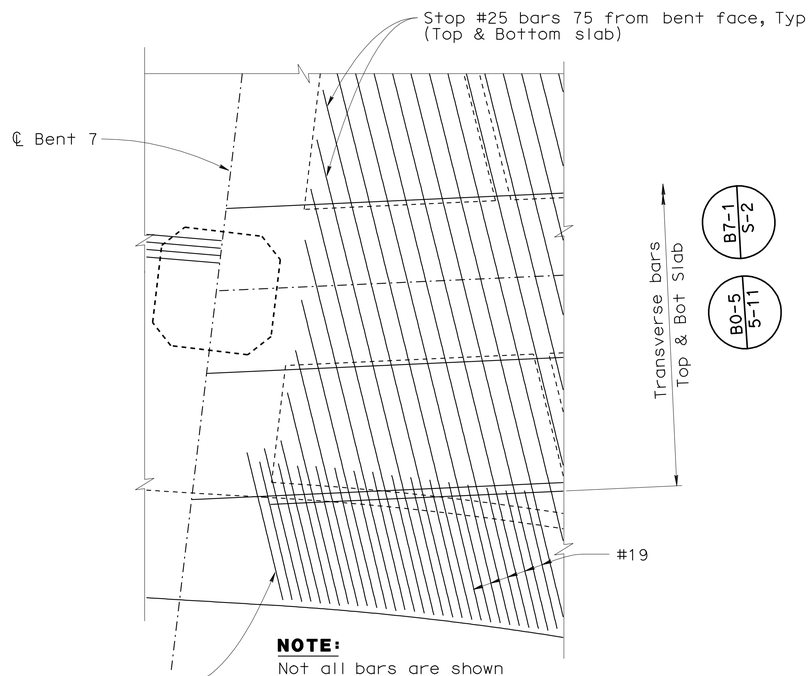

NOTE:
Not all bars are shown

DETAIL B
1:50

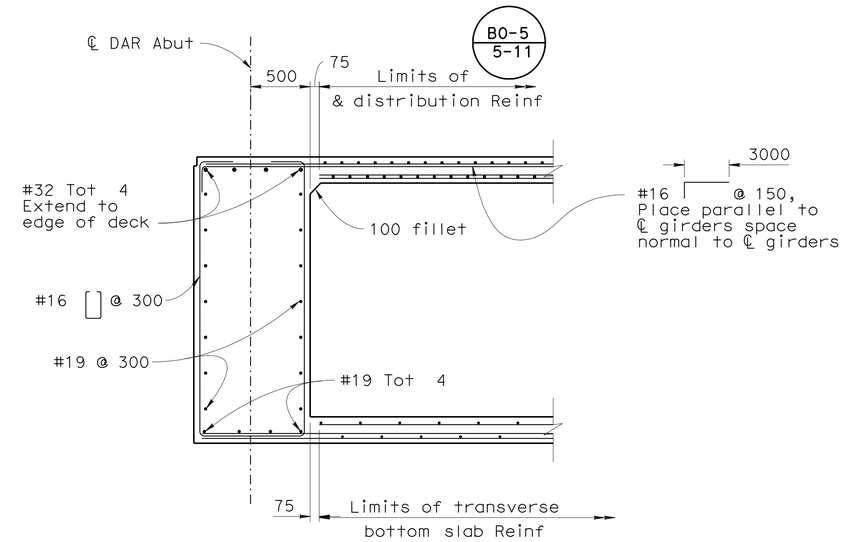

SECTION A-A
1:25

NOTE:

1. For location of "DETAIL A" and "DETAIL B" see, "PLATFORM TOP REINFORCEMENT" sheet

ALL DIMENSIONS ARE IN
MILLIMETERS UNLESS OTHERWISE SHOWN

CHUNG-YUAN WEN
DESIGN OVERSIGHT
4-28-09
SIGN OFF DATE

	BY	CHECKED
DESIGN	Jeremy Lahaye	Chris Hodge
DETAILS	Tom Fukuhara	Chris Hodge
QUANTITIES	Oscar Colcol/I.Martin	Xiaoyun Wu

PREPARED FOR THE
STATE OF CALIFORNIA
DEPARTMENT OF TRANSPORTATION

Brett Makley
PROJECT ENGINEER

BRIDGE NO. 57C0786
KILOMETER POST KP43.2

CARROLL CANYON ROAD BRIDGE
PLATFORM REINFORCEMENT DETAILS NO.1

DESIGN DETAIL SHEET (METRIC) (REV. 10/27/05)

ORIGINAL SCALE IN MILLIMETERS FOR REDUCED PLANS 0 10 20 30 40 50 60 70 80 90 100

CU 11275
EA 2T0401

DISREGARD PRINTS BEARING EARLIER REVISION DATES

REVISION DATES (PRELIMINARY STAGE ONLY) 9/12/08 12/19/08 3/19/09 4/28/09

SHEET 50 OF 74

FILE => 57-c0786-o-gr2_rfdt01.dgn

USERNAME => trmikes1 DATE PLOTTED => 29-SEP-2010 TIME PLOTTED => 11:44

DIST	COUNTY	ROUTE	KILOMETER POST TOTAL PROJECT	SHEET No	TOTAL SHEETS
11	SD	5,805	R49.9/R51.7, 42.6/46.5	724	886

Caltrans Metric

REGISTERED CIVIL ENGINEER 4-28-09 DATE

9-27-10
PLANS APPROVAL DATE

REGISTERED PROFESSIONAL ENGINEER James L. Rucker No. 47796 Exp. 12-31-09 CIVIL STATE OF CALIFORNIA

The State of California or its officers or agents shall not be responsible for the accuracy or completeness of electronic copies of this plan sheet.

SANDAG
401 B STREET,
SAN DIEGO, CA 92101

T.Y. LIN INTERNATIONAL
5030 CAMINO DE LA SIESTA, SUITE 204,
SAN DIEGO, CA 92108

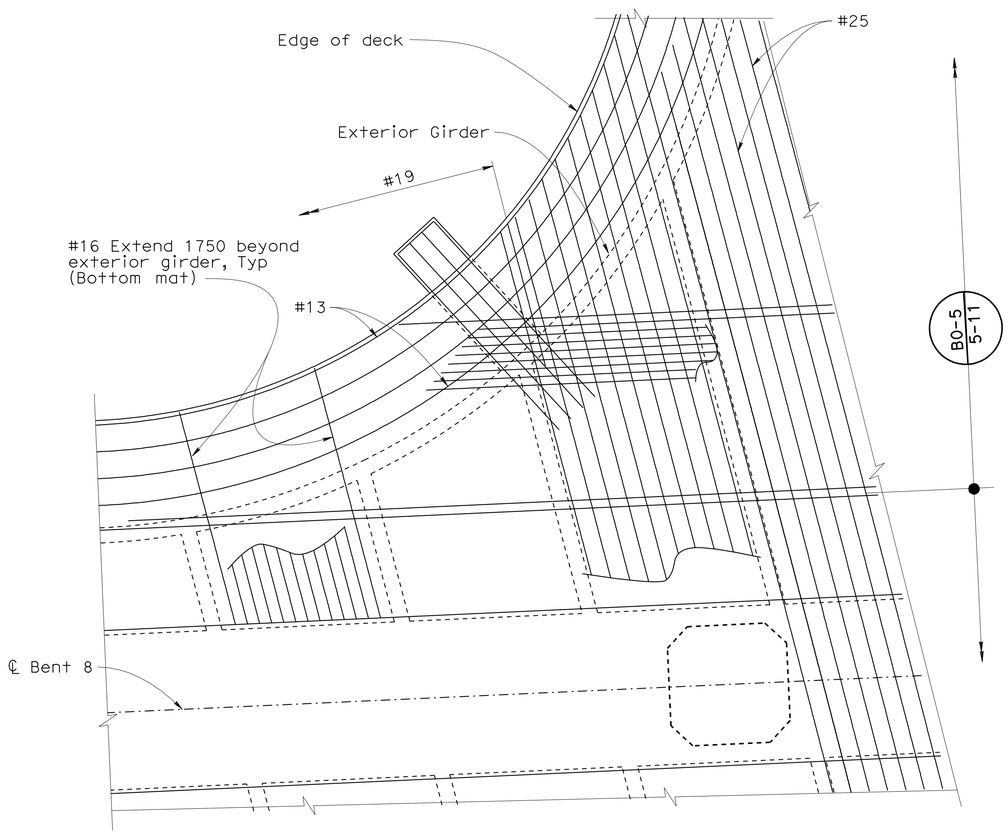

NOTES:

1. Not all bars are shown
2. For location of "DETAIL C" see, "PLATFORM TOP REINFORCEMENT" sheet
3. Typical to all 4 corners

DETAIL C

1:50

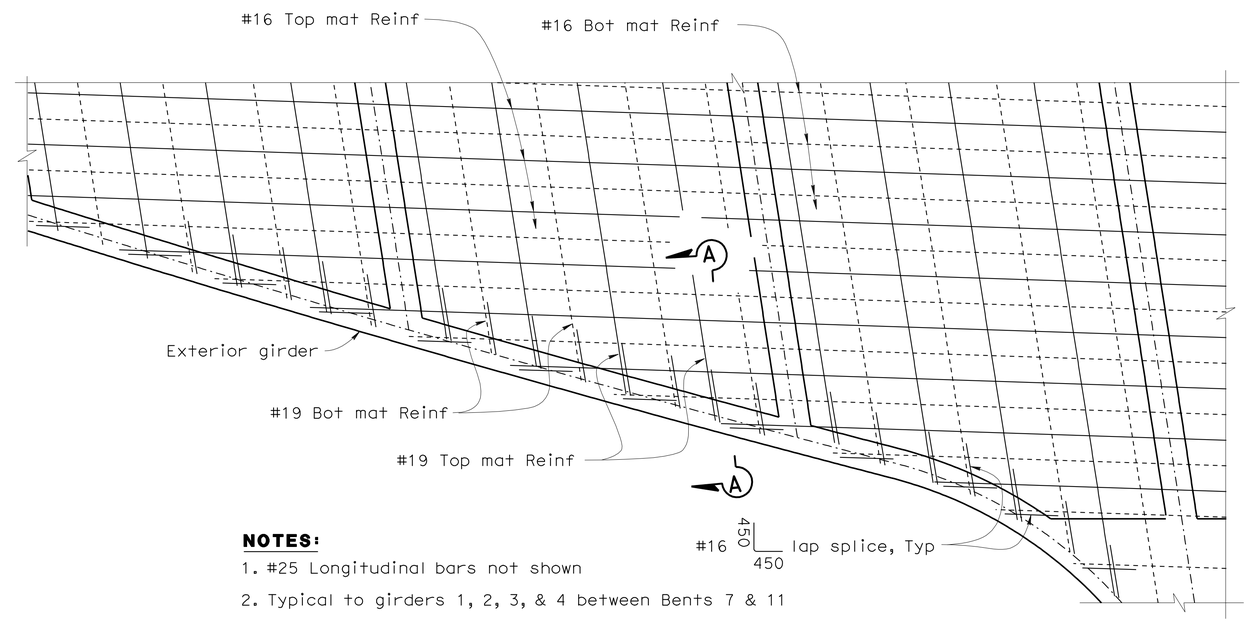

NOTES:

1. #25 Longitudinal bars not shown
2. Typical to girders 1, 2, 3, & 4 between Bents 7 & 11

PART PLAN BOTTOM SLAB

1:50

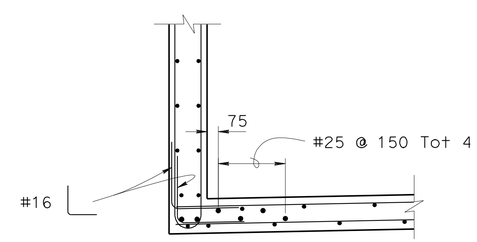

SECTION A-A

1:20

ALL DIMENSIONS ARE IN MILLIMETERS UNLESS OTHERWISE SHOWN

CHUNG-YUAN WEN
DESIGN OVERSIGHT
4-28-09
SIGN OFF DATE

	BY	CHECKED
DESIGN	Jeremy Lahaye	Chris Hodge
DETAILS	Tom Fukuhara	Chris Hodge
QUANTITIES	Oscar Colcol/I.Martin	Xiaoyun Wu

PREPARED FOR THE STATE OF CALIFORNIA DEPARTMENT OF TRANSPORTATION

Brett Makley
PROJECT ENGINEER

BRIDGE NO. 57C0786
KILOMETER POST KP43.2

CARROLL CANYON ROAD BRIDGE
PLATFORM REINFORCEMENT DETAILS NO.2

DESIGN DETAIL SHEET (METRIC) (REV. 10/27/05)

ORIGINAL SCALE IN MILLIMETERS FOR REDUCED PLANS 0 10 20 30 40 50 60 70 80 90 100

CU 11275
EA 2T0401

DISREGARD PRINTS BEARING EARLIER REVISION DATES

REVISION DATES (PRELIMINARY STAGE ONLY) 9/12/08 12/19/08 3/19/09 4/28/09

SHEET 51 OF 74

FILE => 57-c0786-o-gr2_rfdt02.dgn

USERNAME => trmikest DATE PLOTTED => 29-SEP-2010 TIME PLOTTED => 11:44

DIST	COUNTY	ROUTE	KILOMETER POST TOTAL PROJECT	SHEET No	TOTAL SHEETS
11	SD	5,805	R49.9/R51.7, 42.6/46.5	725	886

REGISTERED CIVIL ENGINEER 4-28-09 DATE

9-27-10
PLANS APPROVAL DATE

REGISTERED PROFESSIONAL ENGINEER James L. Rucker No. 47796 Exp. 12-31-09 CIVIL STATE OF CALIFORNIA

The State of California or its officers or agents shall not be responsible for the accuracy or completeness of electronic copies of this plan sheet.

SANDAG
401 B STREET,
SAN DIEGO, CA 92101

T.Y. LIN INTERNATIONAL
5030 CAMINO DE LA SIESTA, SUITE 204,
SAN DIEGO, CA 92108

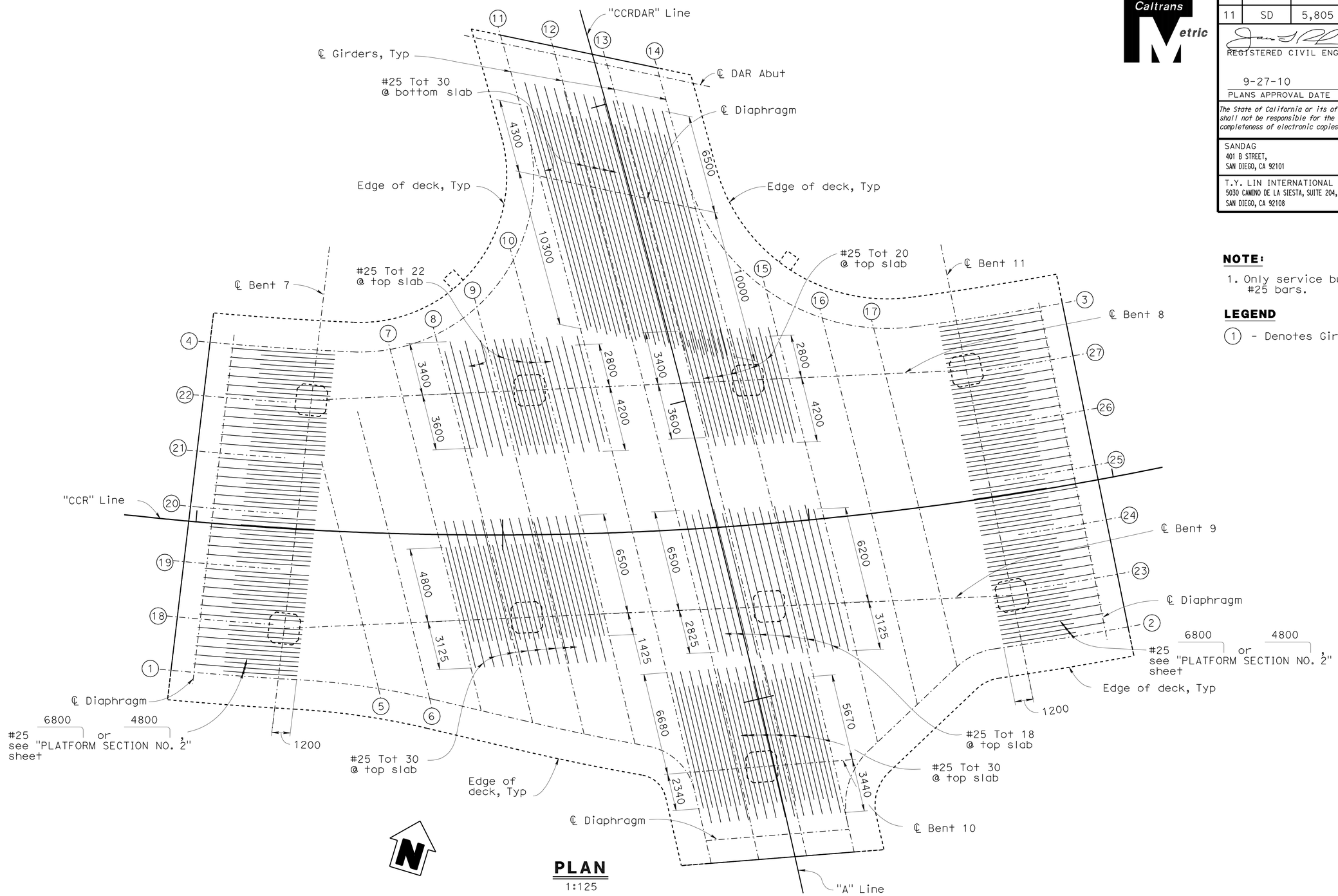

PLAN
1:125

NOTE:

1. Only service butt splice allowed in #25 bars.

LEGEND

(1) - Denotes Girder number

ALL DIMENSIONS ARE IN MILLIMETERS UNLESS OTHERWISE SHOWN

CHUNG-YUAN WEN
DESIGN OVERSIGHT
4-28-09
SIGN OFF DATE

DESIGN DETAIL SHEET (METRIC) (REV. 10/27/05)

	BY	CHECKED
DESIGN	Jeremy Lahaye	Chris Hodge
DETAILS	Tom Fukuhara	Chris Hodge
QUANTITIES	Oscar Colcol/I.Martin	Xiaoyun Wu

ORIGINAL SCALE IN MILLIMETERS FOR REDUCED PLANS 0 10 20 30 40 50 60 70 80 90 100

PREPARED FOR THE STATE OF CALIFORNIA DEPARTMENT OF TRANSPORTATION

Brett Makley
PROJECT ENGINEER

CU 11275
EA 2T0401

BRIDGE NO. 57C0786
KILOMETER POST KP43.2

CARROLL CANYON ROAD BRIDGE
PLATFORM ADDITIONAL REINFORCEMENT

DISREGARD PRINTS BEARING EARLIER REVISION DATES

REVISION DATES (PRELIMINARY STAGE ONLY) 9/12/08 12/19/08 3/9/09 4/28/09

SHEET 52 OF 74

FILE => 57-c0786-o-gr3_rfdt03.dgn

USERNAME => trmikest DATE PLOTTED => 29-SEP-2010 TIME PLOTTED => 11:44

DIST	COUNTY	ROUTE	KILOMETER POST TOTAL PROJECT	SHEET No	TOTAL SHEETS
11	SD	5,805	R49.9/R51.7, 42.6/46.5	726	886

REGISTERED CIVIL ENGINEER — DATE 4-28-09

9-27-10
PLANS APPROVAL DATE

REGISTERED PROFESSIONAL ENGINEER — James L. Rucker — No. 47796 — Exp. 12-31-09 — CIVIL — STATE OF CALIFORNIA

The State of California or its officers or agents shall not be responsible for the accuracy or completeness of electronic copies of this plan sheet.

SANDAG
401 B STREET,
SAN DIEGO, CA 92101

T.Y. LIN INTERNATIONAL
5030 CAMINO DE LA SIESTA, SUITE 204,
SAN DIEGO, CA 92108

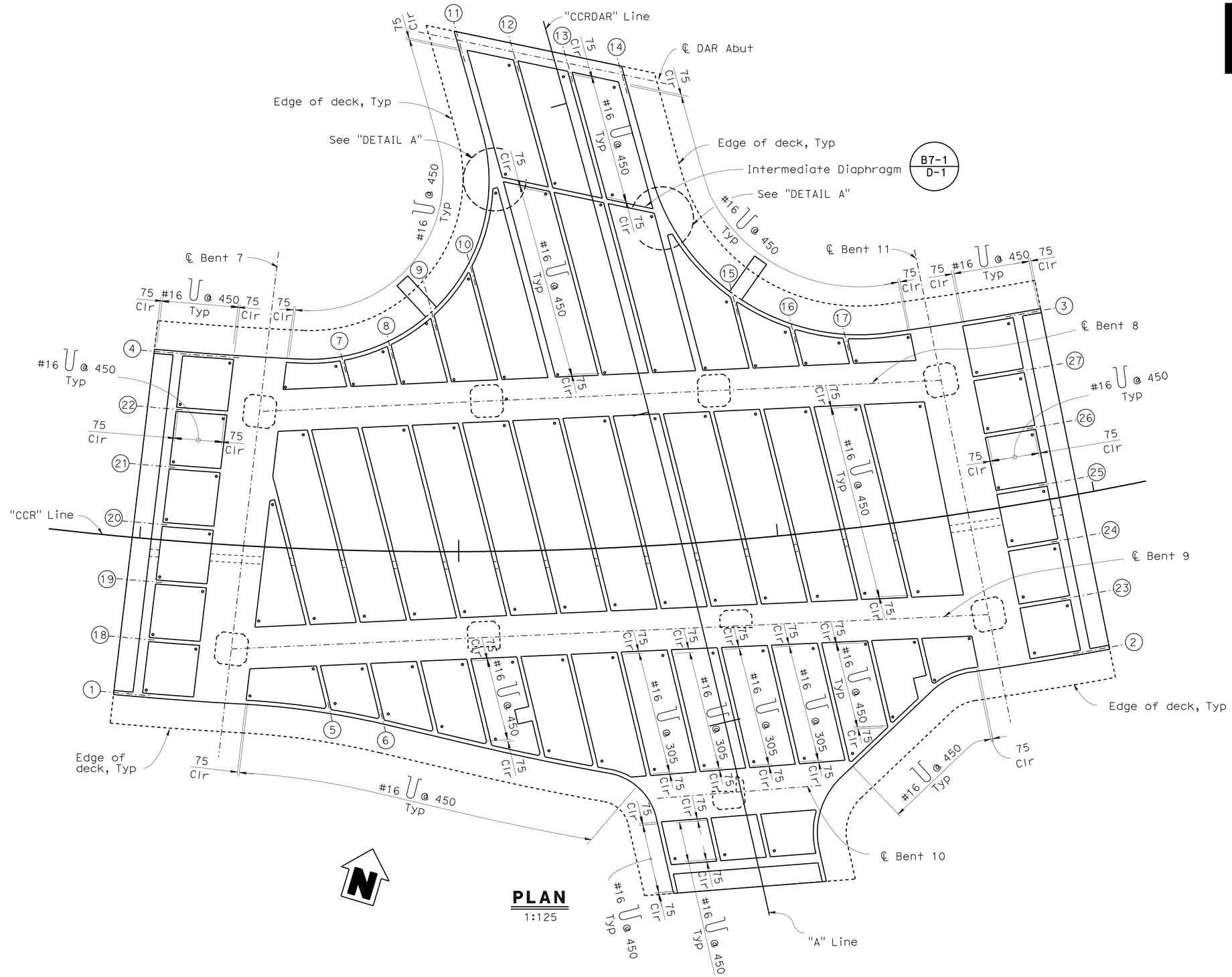

PLAN
1:125

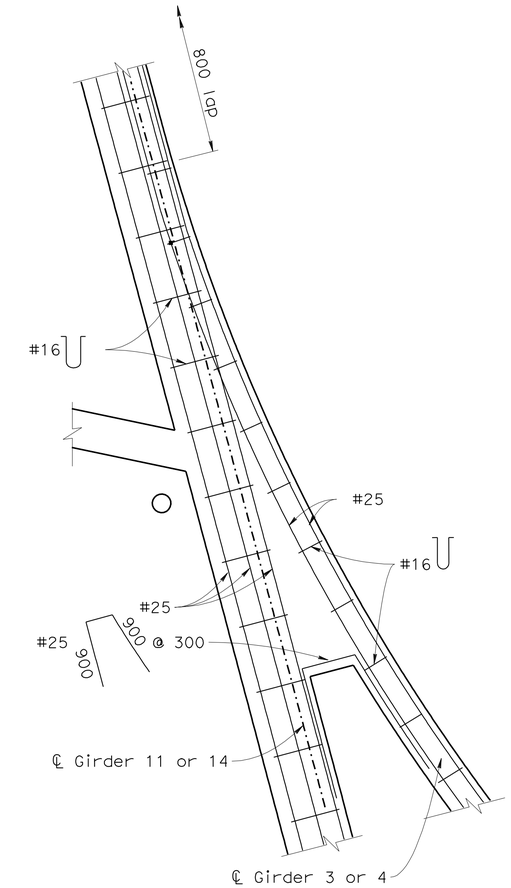

DETAIL A
1:20

ALL DIMENSIONS ARE IN MILLIMETERS UNLESS OTHERWISE SHOWN

CHUNG-YUAN WEN
DESIGN OVERSIGHT
4-28-09
SIGN OFF DATE

	BY	CHECKED
DESIGN	Jeremy Lahaye	Chris Hodge
DETAILS	Andy Toledo/T.Fukuhara	Chris Hodge
QUANTITIES	Oscar Colcol/I.Martin	Xiaoyun Wu

PREPARED FOR THE STATE OF CALIFORNIA DEPARTMENT OF TRANSPORTATION

Brett Makley
PROJECT ENGINEER

BRIDGE NO. 57C0786
KILOMETER POST KP43.2

CARROLL CANYON ROAD BRIDGE
PLATFORM GIRDER REINFORCEMENT

DESIGN DETAIL SHEET (METRIC) (REV. 10/27/05)

ORIGINAL SCALE IN MILLIMETERS FOR REDUCED PLANS 0 10 20 30 40 50 60 70 80 90 100

CU 11275
EA 2T0401

DISREGARD PRINTS BEARING EARLIER REVISION DATES
REVISION DATES (PRELIMINARY STAGE ONLY): ~~9/12/08~~ ~~12/19/08~~ ~~3/19/09~~ 4/28/09

SHEET 53 OF 74

FILE => 57-c0786-o-gr4_gr_reinf.dgn

USERNAME => rtrmikes DATE PLOTTED => 29-SEP-2010 TIME PLOTTED => 11:44

DIST	COUNTY	ROUTE	KILOMETER POST TOTAL PROJECT	SHEET No	TOTAL SHEETS
11	SD	5,805	R49.9/R51.7, 42.6/46.5	727	886

Caltrans Metric

REGISTERED CIVIL ENGINEER — DATE 4-28-09

9-27-10
PLANS APPROVAL DATE

REGISTERED PROFESSIONAL ENGINEER — James L. Rucker No. 47796 Exp. 12-31-09 CIVIL — STATE OF CALIFORNIA

The State of California or its officers or agents shall not be responsible for the accuracy or completeness of electronic copies of this plan sheet.

SANDAG
401 B STREET,
SAN DIEGO, CA 92101

T.Y. LIN INTERNATIONAL
5030 CAMINO DE LA SIESTA, SUITE 204,
SAN DIEGO, CA 92108

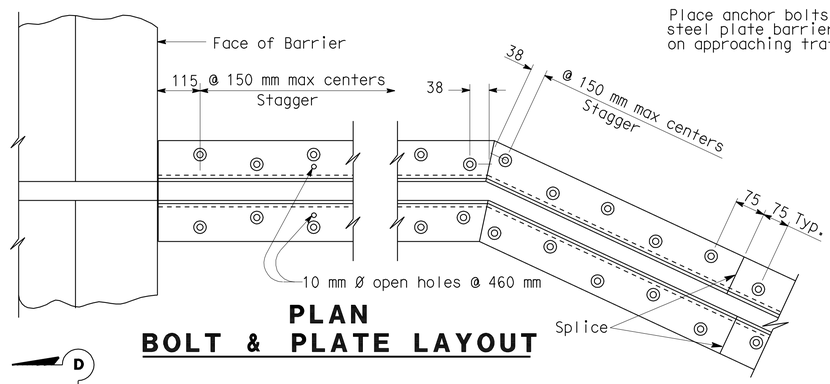

PLAN
BOLT & PLATE LAYOUT

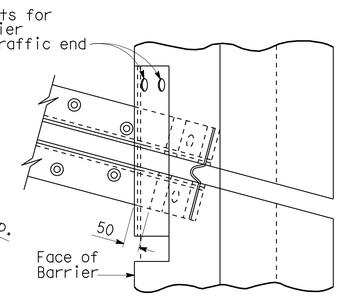

SKEW ≤ 20°

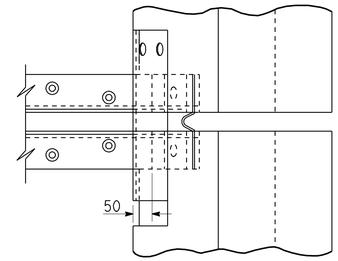

SKEW > 20°

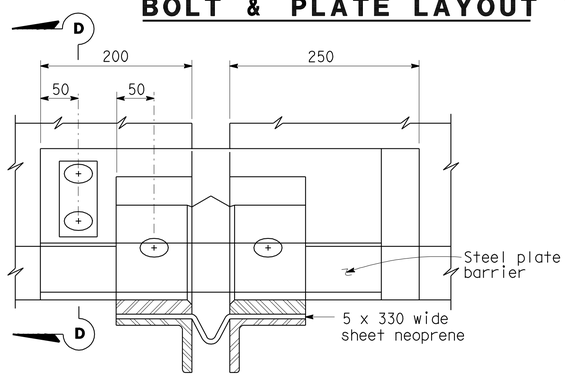

VIEW B-B

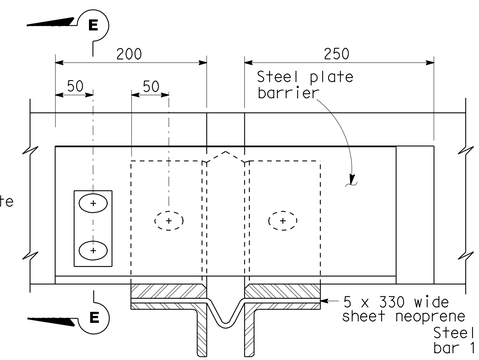

VIEW C-C

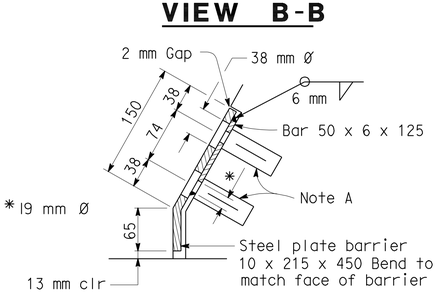

SECTION D-D

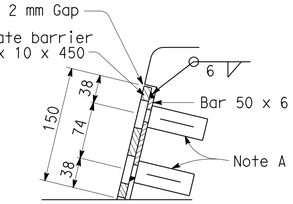

SECTION E-E

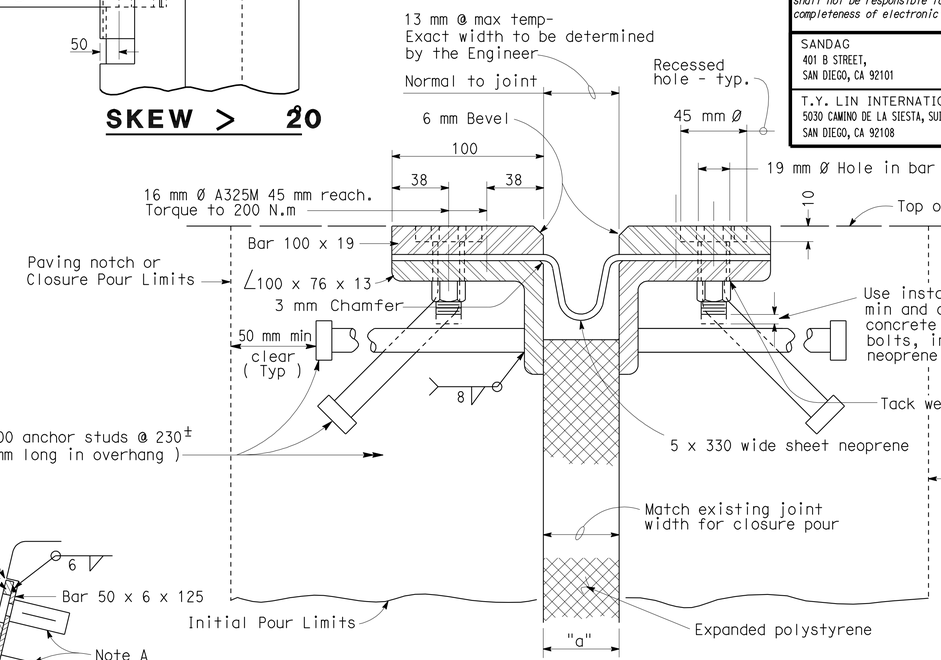

SECTION A-A

Note :
Stagger anchor studs @ 115 mm± on centers thus :

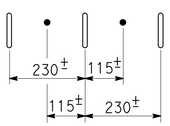

Joint Information			"a" Dimensions		
Location	Movement Rating (MR)	Skew	Winter	Spring & Fall	Summer
Joint B	50	1°03'05"	50	37	25

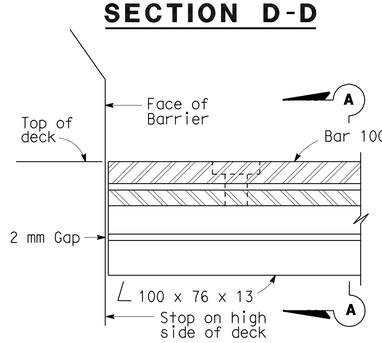

HIGH SIDE BARRIER DETAIL

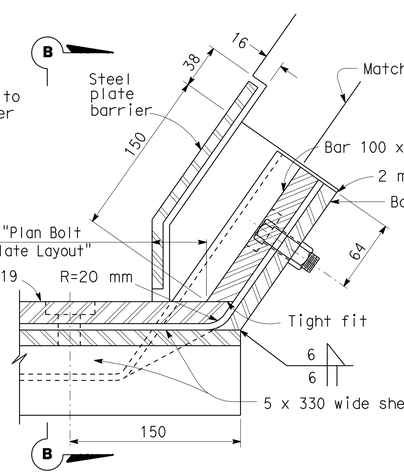

LOW SIDE BARRIER DETAIL
(See Note B)

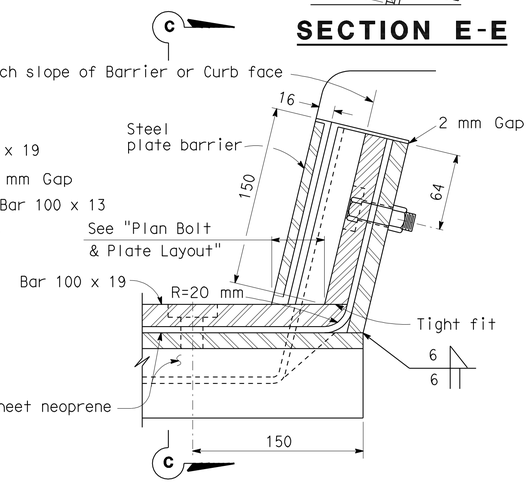

SIDEWALK DETAIL
(See Note B)

NOTES:

Full penetration butt welds may be substituted for fillet welds on all anchor studs.

Alternate types of anchor studs may be permitted subject to the approval by the Engineer.

Joint seal assembly to be used in conjunction with closure pour. (See other sheets for limits). Closure pour shall not be placed until final deck surface is within the tolerance specified.

Use joint at crown of roadway, at any change in transverse slope in deck and at changes in horizontal direction. Place other joints at or near lanes. All metal parts to be painted or galvanized after fabrication.

Sheet neoprene shall be fabricated in one continuous piece or joints shall be vulcanized. Neoprene shall be fabricated to bend around corners. 25 mm holes in neoprene sheets shall be drilled or punched so that the neoprene is not distorted at the time of installation.

NOTE A

Insert assembly or expansion anchorage for 16 x 45 A325M bolt.

NOTE B

Use the Sidewalk Detail at all sidewalk joints. Use the Barrier Detail at both sides if the roadway is crowned or if the difference in elevation between the ends of the seal is 150 mm or less.

NO SCALE

ALL DIMENSIONS ARE IN MILLIMETERS UNLESS OTHERWISE SHOWN

STANDARD DRAWING

RELEASE DATE	4/1/97	DESIGN	BY H. HERR	CHECKED R. LACALLE	RELEASED BY
FILE NO.	xs8-010	DETAILS	BY R. YEE	CHECKED R. LACALLE	
		SUBMITTED	BY C.W. PURKISS	DRAWING DATE 9/93	OFFICE CHIEF

STATE OF CALIFORNIA
DEPARTMENT OF TRANSPORTATION

DIVISION OF ENGINEERING SERVICES

BRIDGE NO. 57C0786
KILOMETER POST KP43.2

CARROLL CANYON ROAD BRIDGE
JOINT SEAL ASSEMBLY DETAILS NO. 1 (MAXIMUM MOVEMENT RATING = 100 MM)

DS OSD 2147A (METRIC) (REV. 2/25/97)

ORIGINAL SCALE IN MILLIMETERS FOR REDUCED PLANS 0 10 20 30 40 50 60 70 80 90 100

DISREGARD PRINTS BEARING EARLIER REVISION DATES

REVISION DATES (PRELIMINARY STAGE ONLY) 9/12/08 12/19/08 3/19/09 4/28/09

SHEET 54 OF 74

FILE => 57-c0786-q-jntdt01.dgn

USERNAME => trmikesl DATE PLOTTED => 29-SEP-2010 TIME PLOTTED => 11:44

DIST	COUNTY	ROUTE	KILOMETER POST TOTAL PROJECT	SHEET No	TOTAL SHEETS
11	SD	5,805	R49.9/R51.7, 42.6/46.5	728	886

REGISTERED CIVIL ENGINEER 4-28-09 DATE

9-27-10
PLANS APPROVAL DATE

REGISTERED PROFESSIONAL ENGINEER James L. Rucker No. 47796 Exp. 12-31-09 CIVIL STATE OF CALIFORNIA

The State of California or its officers or agents shall not be responsible for the accuracy or completeness of electronic copies of this plan sheet.

SANDAG
401 B STREET,
SAN DIEGO, CA 92101

T.Y. LIN INTERNATIONAL
5030 CAMINO DE LA SIESTA, SUITE 204,
SAN DIEGO, CA 92108

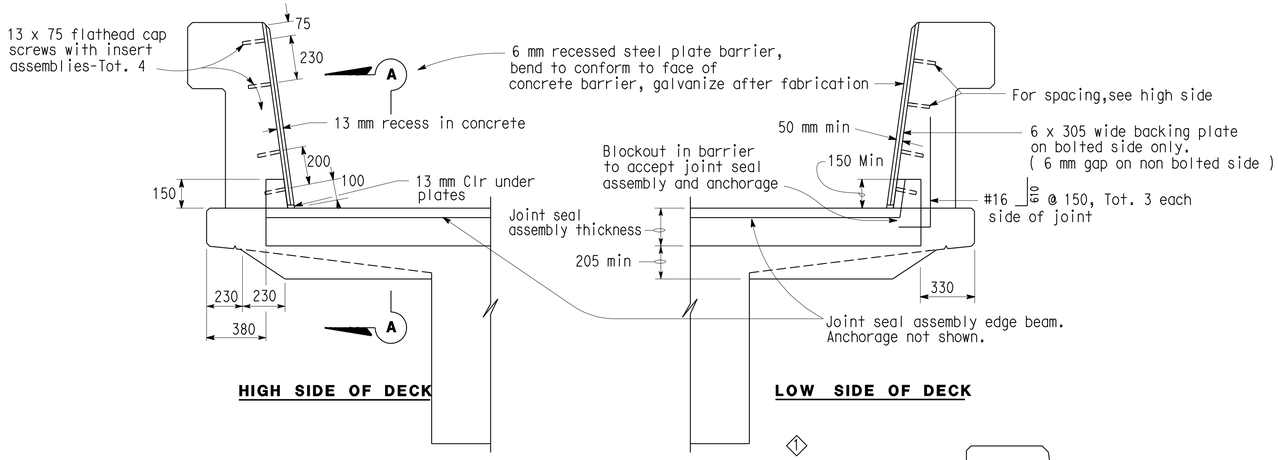

SEAL INSTALLATION

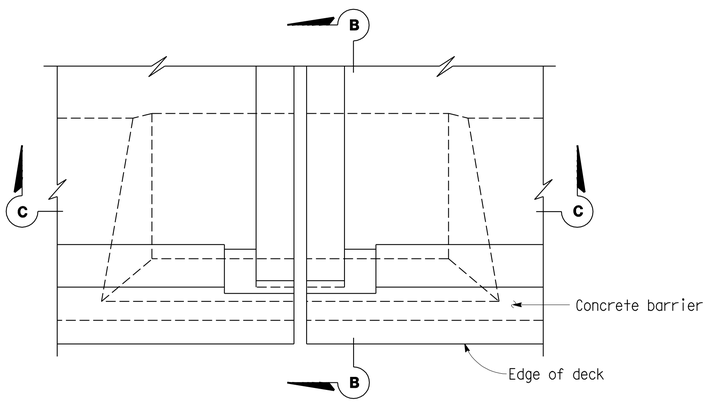

PLAN - DECK JOINT

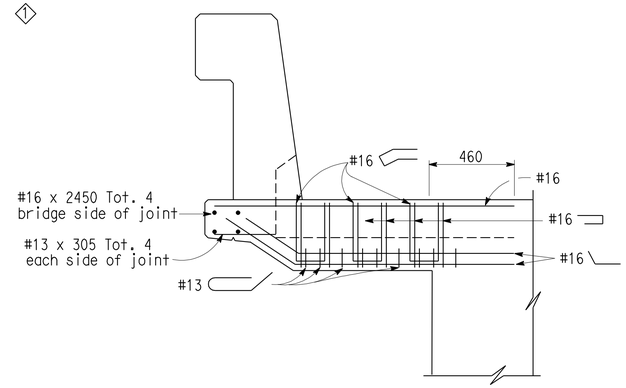

SECTION B-B

Reinf. shown is in addition to slab reinf.

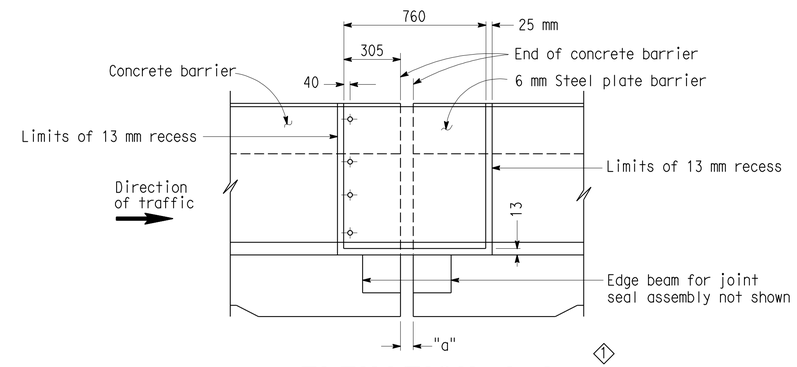

ELEVATION A-A

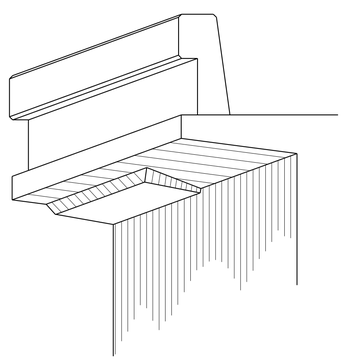

DECK OVERHANG AT ABUTMENT

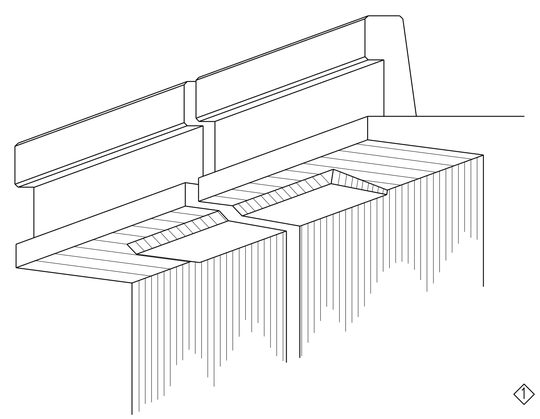

DECK OVERHANG AT JOINT

JOINT INFORMATION		"a" DIMENSIONS			
LOCATION	MOVEMENT RATING (M.R.)	SKEW	WINTER	SPRING & FALL	SUMMER
Abutment-1	125	0°	48	36	24
Abutment-15	125	10.48°	47	35	24
Joint A	200		73	55	37

NOTE:

1. For "SECTION C-C", see "JOINT SEAL ASSEMBLY DETAILS NO.2 MOVEMENT RATING GREATER THAN 100 mm" sheet

SPECIAL DETAILS
NO SCALE

ALL DIMENSIONS ARE IN MILLIMETERS UNLESS OTHERWISE SHOWN

RELEASE DATE	Revised	DESIGN	BY DICK BARLOW	CHECKED R. LACALLE	RELEASED BY
		DETAILS	BY R. YEE	CHECKED R. LACALLE	
FILE NO.	xs8-030	SUBMITTED	BY	DRAWING DATE 4/93	OFFICE CHIEF

1 Revised details

STATE OF CALIFORNIA
DEPARTMENT OF TRANSPORTATION

DIVISION OF ENGINEERING SERVICES

BRIDGE NO. 57C0786
KILOMETER POST KP43.2

CARROLL CANYON ROAD BRIDGE

JOINT SEAL ASSEMBLY DETAILS NO. 2 MOVEMENT RATING GREATER THAN 100 MM

DS OSD 2147A (METRIC) (REV. 2/25/97)

ORIGINAL SCALE IN MILLIMETERS FOR REDUCED PLANS 0 10 20 30 40 50 60 70 80 90 100

DISREGARD PRINTS BEARING EARLIER REVISION DATES

REVISION DATES (PRELIMINARY STAGE ONLY) 9/12/08 12/19/08 3/19/09 4/28/09

SHEET 55 OF 74

FILE => 57-c0786-q-jntdt02.dgn

USERNAME => trmikesl DATE PLOTTED => 29-SEP-2010 TIME PLOTTED => 11:45

DIST	COUNTY	ROUTE	KILOMETER POST TOTAL PROJECT	SHEET No	TOTAL SHEETS
11	SD	5,805	R49.9/R51.7, 42.6/46.5	729	886

Caltrans Metric

REGISTERED CIVIL ENGINEER 4-28-09 DATE

9-27-10
PLANS APPROVAL DATE

REGISTERED PROFESSIONAL ENGINEER James L. Rucker No. 47796 Exp. 12-31-09 CIVIL STATE OF CALIFORNIA

The State of California or its officers or agents shall not be responsible for the accuracy or completeness of electronic copies of this plan sheet.

SANDAG
401 B STREET,
SAN DIEGO, CA 92101

T.Y. LIN INTERNATIONAL
5030 CAMINO DE LA SIESTA, SUITE 204,
SAN DIEGO, CA 92108

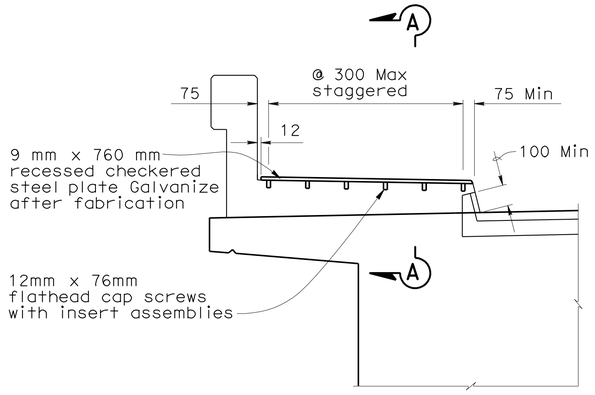

DECK DETAIL
No Scale

NOTE:
High side of deck shown, low side of deck similar except no bend

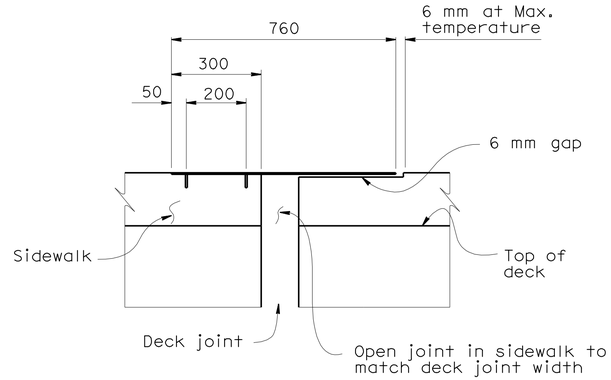

SECTION A-A
No Scale

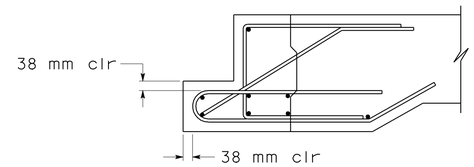

DETAIL D
No Scale

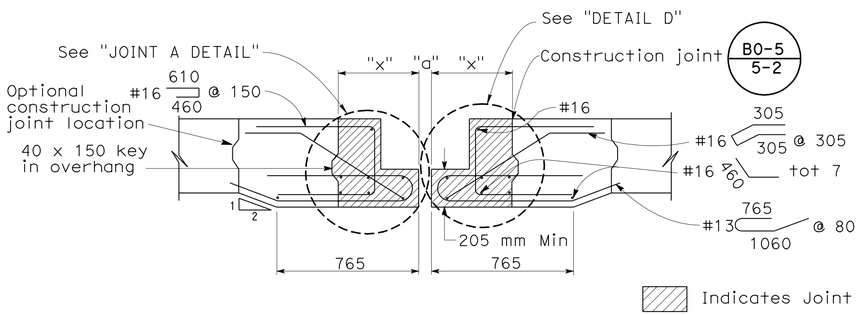

JOINT A OVERHANG

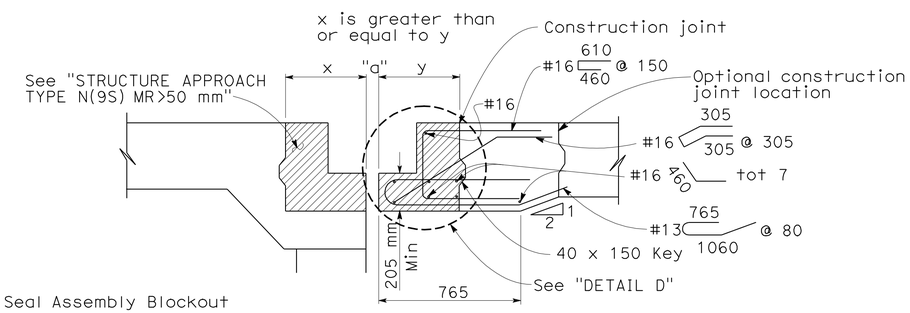

ABUTMENT

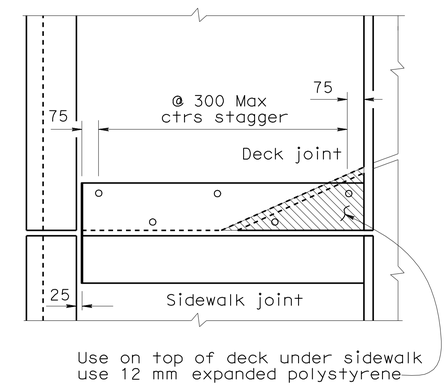

SIDEWALK EXPANSION JOINT ARMOR
No Scale

Note: Adjust bolt spacing to miss utilities in sidewalk.

SECTION C-C
No Scale

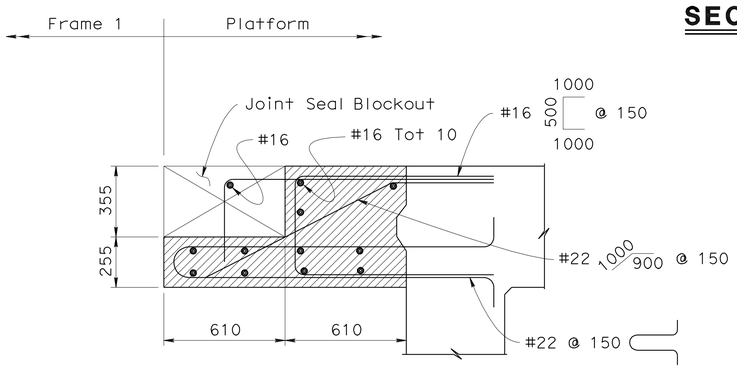

JOINT A DETAIL
No Scale
This detail also applies to stub @ Bent 10

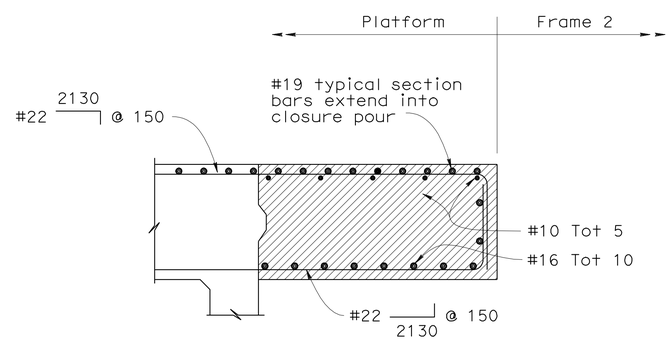

JOINT B DETAIL
No Scale

ALL DIMENSIONS ARE IN
MILLIMETERS UNLESS OTHERWISE SHOWN

CHUNG-YUAN WEN
DESIGN OVERSIGHT
4-15-09
SIGN OFF DATE

	BY	CHECKED
DESIGN	Roya Golchoobian	Pete Smith
DETAILS	Andy Toledo	Pete Smith
QUANTITIES	Oscar Colcol	Xiaoyun Wu

PREPARED FOR THE
STATE OF CALIFORNIA
DEPARTMENT OF TRANSPORTATION

Brett Makley
PROJECT ENGINEER

BRIDGE NO. 57C0786
KILOMETER POST KP43.2

CARROLL CANYON ROAD BRIDGE
JOINT SEAL ASSEMBLY DETAILS NO. 3
MOVEMENT RATING GREATER THAN 100 MM

DESIGN DETAIL SHEET (METRIC) (REV. 10/27/05)

ORIGINAL SCALE IN MILLIMETERS FOR REDUCED PLANS 0 10 20 30 40 50 60 70 80 90 100

CU 11275
EA 2T0401

DISREGARD PRINTS BEARING EARLIER REVISION DATES
REVISION DATES (PRELIMINARY STAGE ONLY) 9/12/08 12/19/08 3/19/09 4/28/09

SHEET 56 OF 74

FILE => 57-c0786-q-jntdt03.dgn

USERNAME => trmikesl DATE PLOTTED => 29-SEP-2010 TIME PLOTTED => 11:45

DIST	COUNTY	ROUTE	KILOMETER POST TOTAL PROJECT	SHEET No	TOTAL SHEETS
11	SD	5,805	R49.9/R51.7, 42.6/46.5	730	886

Caltrans Metric

REGISTERED CIVIL ENGINEER — DATE 4-28-09

9-27-10
PLANS APPROVAL DATE

REGISTERED PROFESSIONAL ENGINEER — James L. Rucker No. 47796 Exp. 12-31-09 CIVIL — STATE OF CALIFORNIA

The State of California or its officers or agents shall not be responsible for the accuracy or completeness of electronic copies of this plan sheet.

SANDAG
401 B STREET,
SAN DIEGO, CA 92101

T.Y. LIN INTERNATIONAL
5030 CAMINO DE LA SIESTA, SUITE 204,
SAN DIEGO, CA 92108

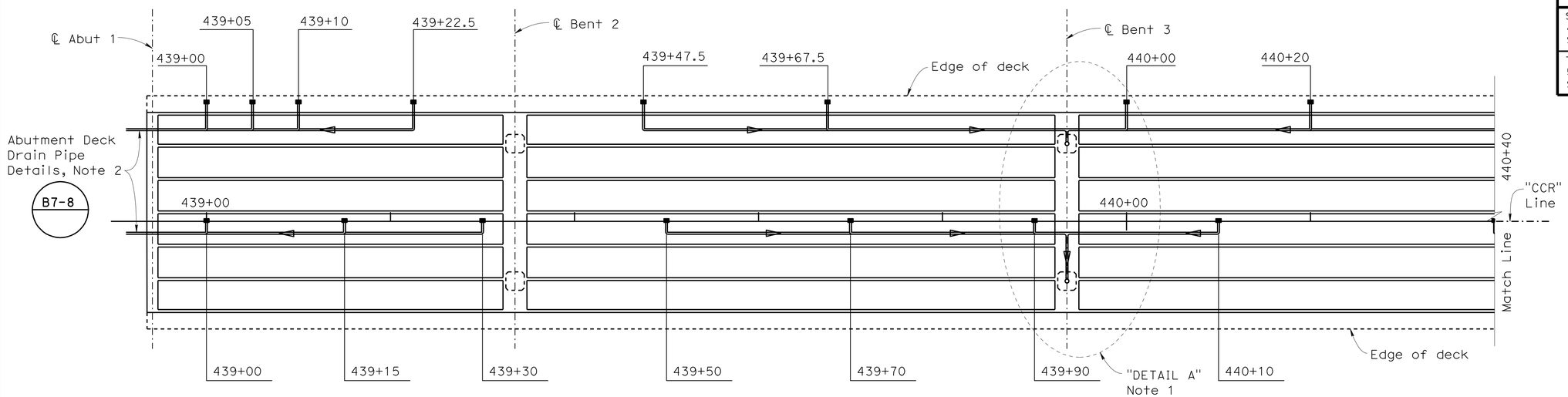

PLAN - FRAME 1

1:250

NOTE:

1. For "DETAIL A", see "DECK DRAINAGE DETAILS" sheet
2. See "ROAD PLANS"

LEGEND

Indicates direction of pipe flow

Indicates deck drain Type D-1 and D-2 (B7-6)

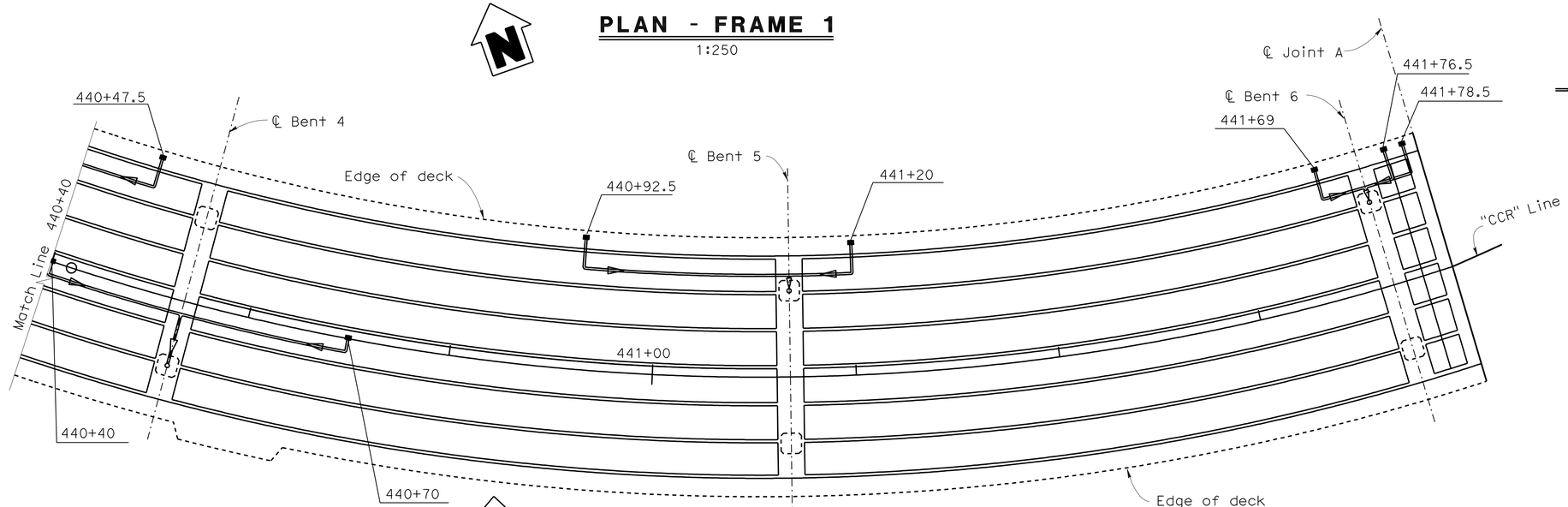

PLAN - FRAME 1

1:250

ALL DIMENSIONS ARE IN MILLIMETERS UNLESS OTHERWISE SHOWN

CHUNG-YUAN WEN
DESIGN OVERSIGHT
4-28-09
SIGN OFF DATE

DESIGN	Brett Makley	CHECKED	Pete Smith
DETAILS	BY Tatyana Gnip	CHECKED	Pete Smith
QUANTITIES	BY Oscar Colcol	CHECKED	Xiaoyun Wu

PREPARED FOR THE STATE OF CALIFORNIA DEPARTMENT OF TRANSPORTATION

Brett Makley
PROJECT ENGINEER

BRIDGE NO. 57C0786
KILOMETER POST KP43.2

CARROLL CANYON ROAD BRIDGE
DECK DRAINAGE LAYOUT NO.1

DESIGN DETAIL SHEET (METRIC) (REV. 10/27/05)

ORIGINAL SCALE IN MILLIMETERS FOR REDUCED PLANS 0 10 20 30 40 50 60 70 80 90 100

CU 11275
EA 2T0401

DISREGARD PRINTS BEARING EARLIER REVISION DATES

REVISION DATES (PRELIMINARY STAGE ONLY): 9/12/08 12/19/08 3/19/09 4/28/09

SHEET 57 OF 74

FILE => 57-c0786-r-ddlo01.dgn

USERNAME => ttmikes1 DATE PLOTTED => 29-SEP-2010 TIME PLOTTED => 11:45

DIST	COUNTY	ROUTE	KILOMETER POST TOTAL PROJECT	SHEET No	TOTAL SHEETS
11	SD	5,805	R49.9/R51.7, 42.6/46.5	731	886

Caltrans Metric

REGISTERED CIVIL ENGINEER — DATE 4-28-09

9-27-10
PLANS APPROVAL DATE

REGISTERED PROFESSIONAL ENGINEER — James L. Rucker No. 47796 Exp. 12-31-09 CIVIL — STATE OF CALIFORNIA

The State of California or its officers or agents shall not be responsible for the accuracy or completeness of electronic copies of this plan sheet.

SANDAG
401 B STREET,
SAN DIEGO, CA 92101

T.Y. LIN INTERNATIONAL
5030 CAMINO DE LA SIESTA, SUITE 204,
SAN DIEGO, CA 92108

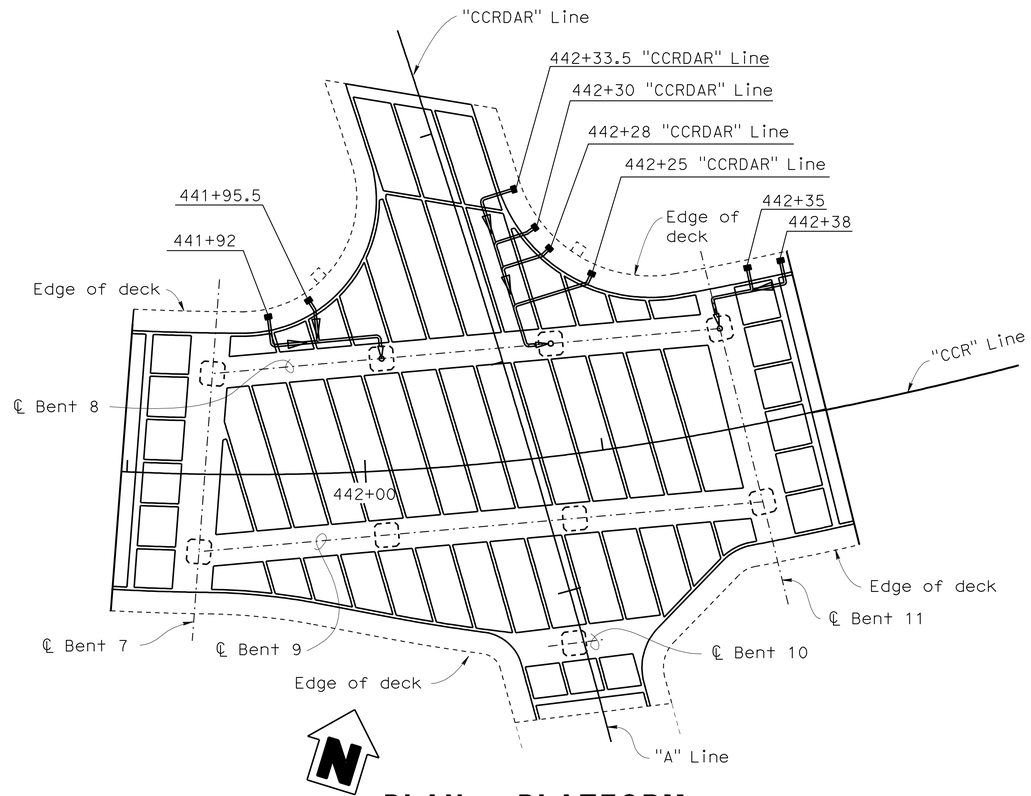

PLAN - PLATFORM

1:250

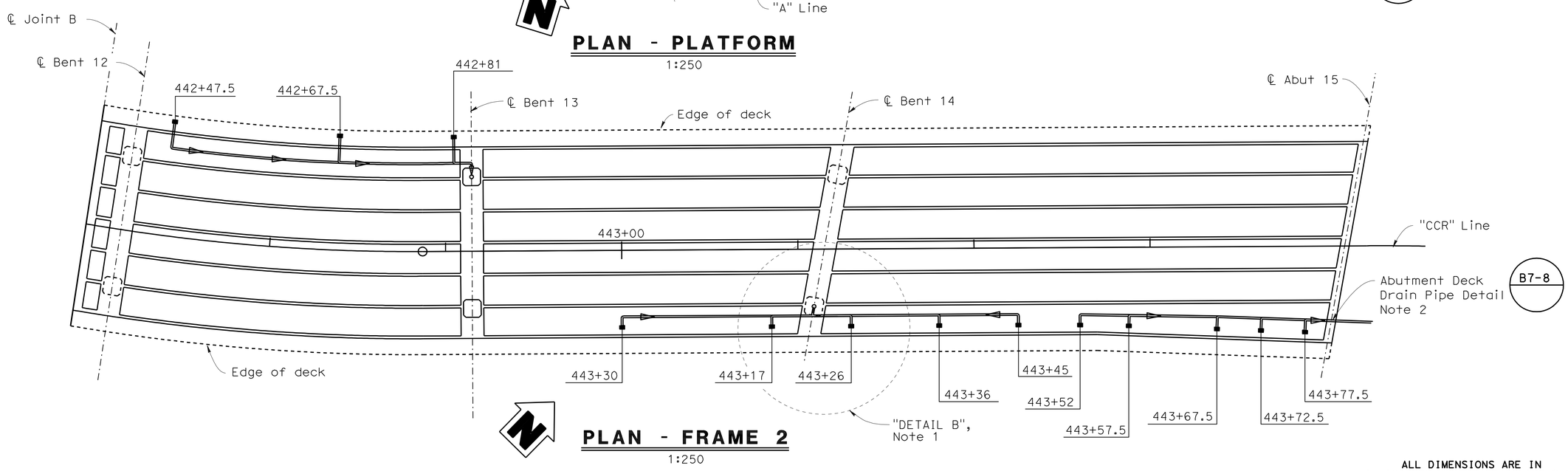

PLAN - FRAME 2

1:250

NOTES:

1. For "DETAIL B", see "DECK DRAINAGE DETAILS" sheet
2. See "ROAD PLANS"
3. Deck Drain stations at platform are based on "CCR" Line unless noted otherwise

LEGEND

Indicates direction of pipe flow

Indicates deck drain Type D-1 and D-2 — B7-6

ALL DIMENSIONS ARE IN MILLIMETERS UNLESS OTHERWISE SHOWN

CHUNG-YUAN WEN
DESIGN OVERSIGHT
4-28-09
SIGN OFF DATE

	BY	CHECKED
DESIGN	Brett Makley	Pete Smith
DETAILS	Tatyana Gnip	Pete Smith
QUANTITIES	Oscar Colcol	Xiaoyun Wu

PREPARED FOR THE STATE OF CALIFORNIA DEPARTMENT OF TRANSPORTATION

Brett Makley
PROJECT ENGINEER

BRIDGE NO. 57C0786
KILOMETER POST KP43.2

CARROLL CANYON ROAD BRIDGE
DECK DRAINAGE LAYOUT NO.2

DESIGN DETAIL SHEET (METRIC) (REV. 10/27/05)

ORIGINAL SCALE IN MILLIMETERS FOR REDUCED PLANS 0 10 20 30 40 50 60 70 80 90 100

CU 11275
EA 2T0401

DISREGARD PRINTS BEARING EARLIER REVISION DATES

REVISION DATES (PRELIMINARY STAGE ONLY): ~~9/12/08~~ ~~12/19/08~~ ~~3/19/09~~ 4/28/09

SHEET 58 OF 74

FILE => 57-c0786-r-ddlo02.dgn

USERNAME => trmikesl DATE PLOTTED => 29-SEP-2010 TIME PLOTTED => 11:45

DIST	COUNTY	ROUTE	KILOMETER POST TOTAL PROJECT	SHEET No	TOTAL SHEETS
11	SD	5,805	R49.9/R51.7, 42.6/46.5	732	886

Caltrans Metric

REGISTERED CIVIL ENGINEER 4-28-09 DATE

9-27-10
PLANS APPROVAL DATE

REGISTERED PROFESSIONAL ENGINEER James L. Rucker No. 47796 Exp. 12-31-09 CIVIL STATE OF CALIFORNIA

The State of California or its officers or agents shall not be responsible for the accuracy or completeness of electronic copies of this plan sheet.

SANDAG
401 B STREET,
SAN DIEGO, CA 92101

T.Y. LIN INTERNATIONAL
5030 CAMINO DE LA SIESTA, SUITE 204,
SAN DIEGO, CA 92108

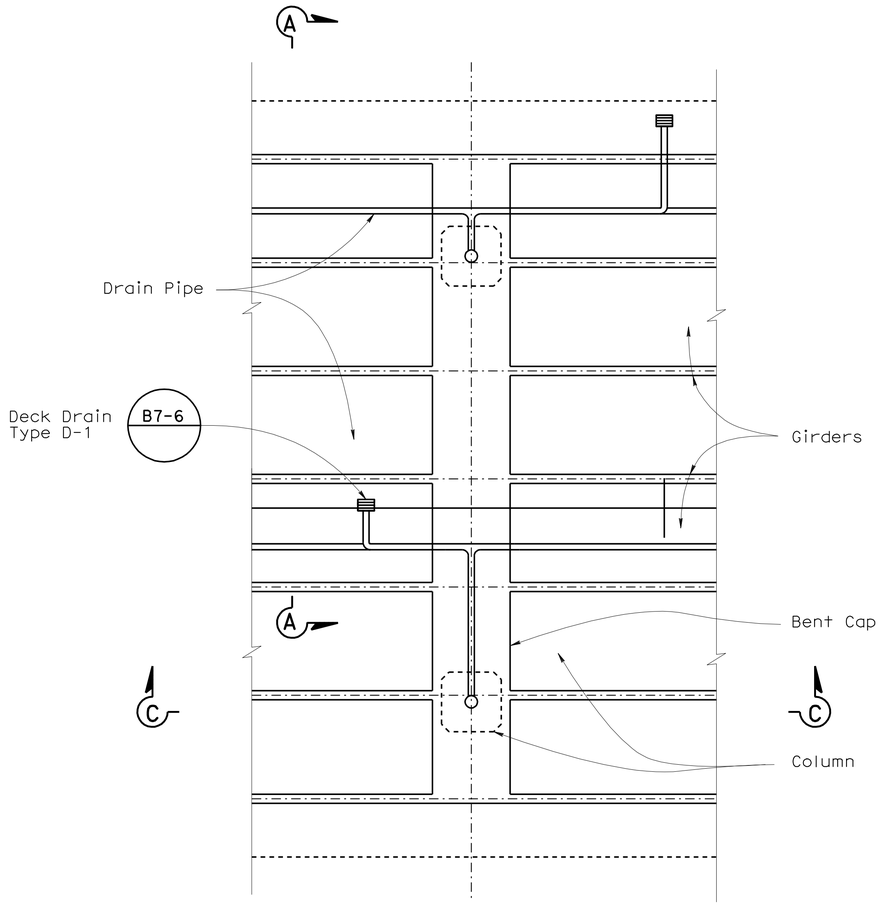

NOTE:

Drainage at Bent 3 shown. Drainage at other Bents similar unless noted otherwise

DETAIL A
No Scale

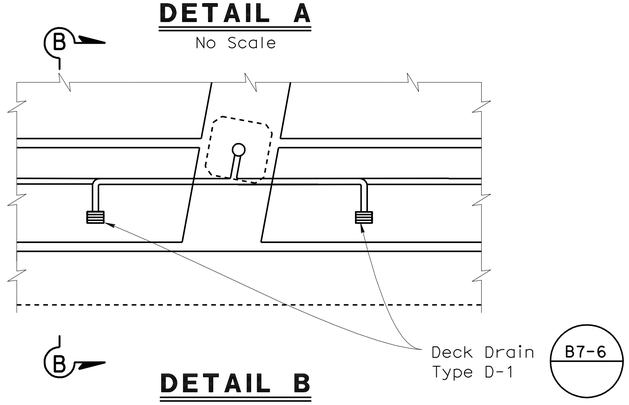

DETAIL B
No Scale

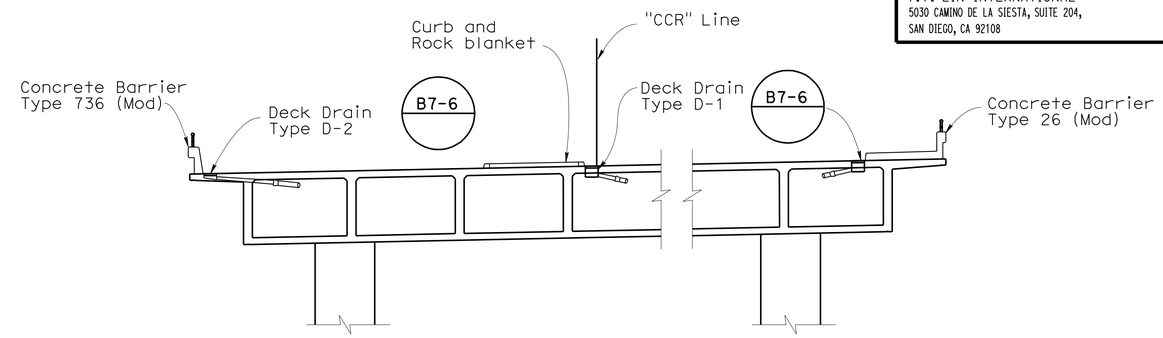

SECTION A-A
No Scale

SECTION B-B
No Scale

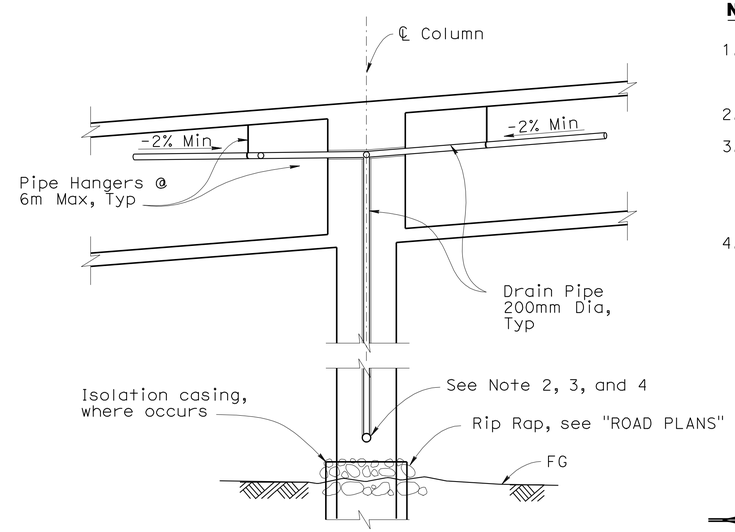

SECTION C-C
1:100

NOTES:

1. For location of "DETAIL A", and "DETAIL B", see "DECK DRAINAGE LAYOUT NO. 1 & NO. 2" sheets
2. For Drain Outlet Details, see B7-6
3. For Column Reinforcement at Drain Outlet, see B7-8
4. All drain outlets shall be located on the southerly side of the columns

LEGEND

Indicates direction of pipe flow

Indicates deck drain Type D-1 and D-2

ALL DIMENSIONS ARE IN MILLIMETERS UNLESS OTHERWISE SHOWN

CHUNG-YUAN WEN
DESIGN OVERSIGHT
4-28-09
SIGN OFF DATE

	BY	CHECKED
DESIGN	Brett Makley	Pete Smith
DETAILS	Tatyana Gnip	Pete Smith
QUANTITIES	Oscar Colcol	Xiaoyun Wu

PREPARED FOR THE STATE OF CALIFORNIA DEPARTMENT OF TRANSPORTATION

Brett Makley
PROJECT ENGINEER

BRIDGE NO. 57C0786
KILOMETER POST KP43.2

CARROLL CANYON ROAD BRIDGE
DECK DRAINAGE DETAILS

DESIGN DETAIL SHEET (METRIC) (REV. 10/27/05)

ORIGINAL SCALE IN MILLIMETERS FOR REDUCED PLANS 0 10 20 30 40 50 60 70 80 90 100

CU 11275
EA 2T0401

DISREGARD PRINTS BEARING EARLIER REVISION DATES

REVISION DATES (PRELIMINARY STAGE ONLY) 9/12/08 12/19/08 3/9/09 4/28/09

SHEET 59 OF 74

FILE => 57-c0786-r-ddlo03.dgn

USERNAME => trmikesl DATE PLOTTED => 29-SEP-2010 TIME PLOTTED => 11:45

DIST	COUNTY	ROUTE	KILOMETER POST TOTAL PROJECT	SHEET No	TOTAL SHEETS
11	SD	5,805	R49.9/R51.7, 42.6/46.5	733	886

REGISTERED CIVIL ENGINEER 4-28-09 DATE

9-27-10
PLANS APPROVAL DATE

REGISTERED PROFESSIONAL ENGINEER James L. Rucker No. 47796 Exp. 12-31-09 CIVIL STATE OF CALIFORNIA

The State of California or its officers or agents shall not be responsible for the accuracy or completeness of electronic copies of this plan sheet.

SANDAG
401 B STREET,
SAN DIEGO, CA 92101

T.Y. LIN INTERNATIONAL
5030 CAMINO DE LA SIESTA, SUITE 204,
SAN DIEGO, CA 92108

Caltrans Metric

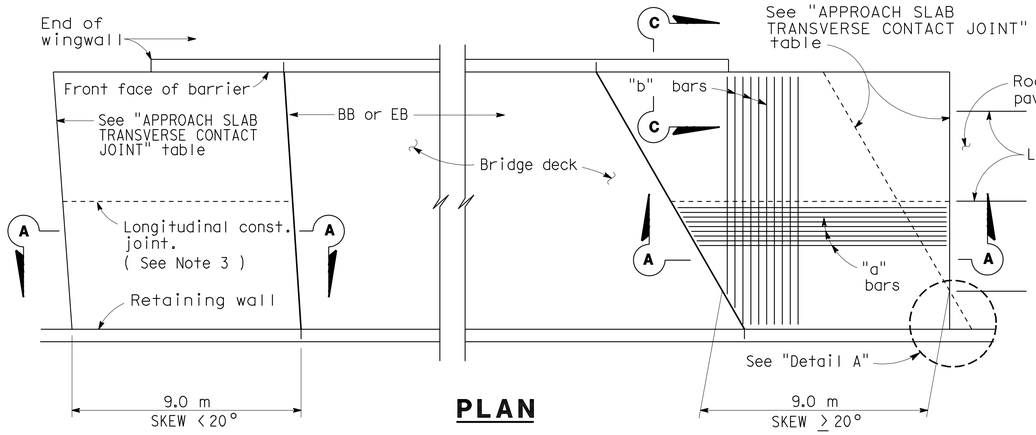

PLAN

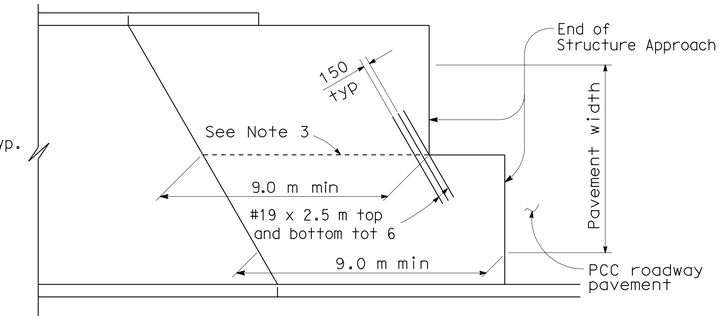

STRUCTURE APPROACH - END STAGGER DETAIL

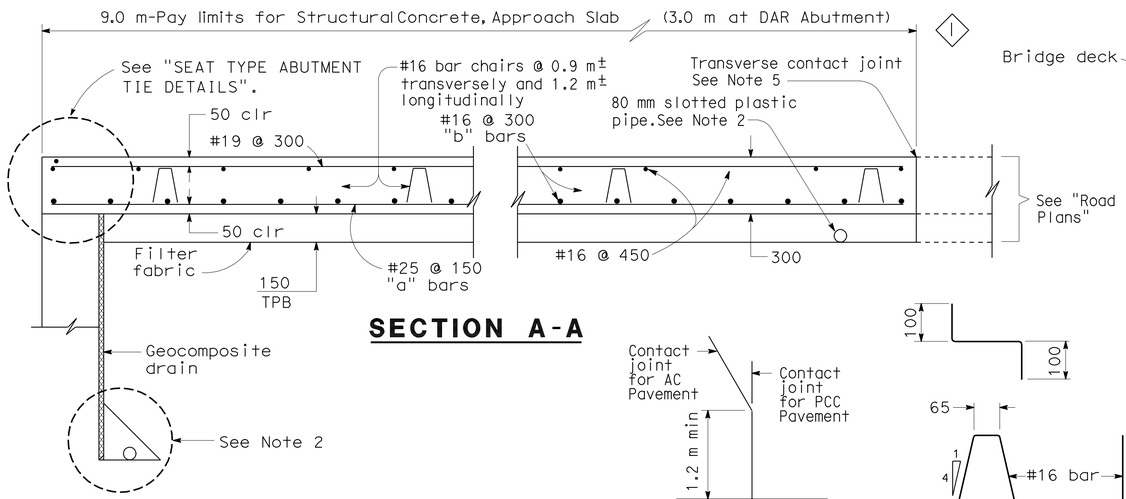

SECTION A-A

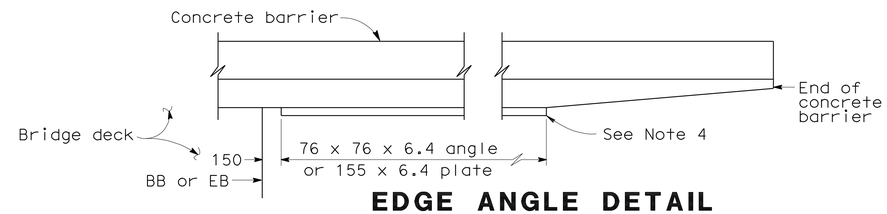

EDGE ANGLE DETAIL

APPROACH SLAB TRANSVERSE CONTACT JOINT		
APPROACH SKEW	WITH AC ROADWAY PAVEMENT	WITH PCC ROADWAY PAVEMENT
< 20°	Parallel to face of paving notch	Parallel to face of paving notch
20°- 45°	Parallel to face of P N use (Detail A)	Stagger lines 7.2 m to 10.8 m apart.
> 45°	Parallel to face of P N use (Detail A)	Stagger at each lane line.

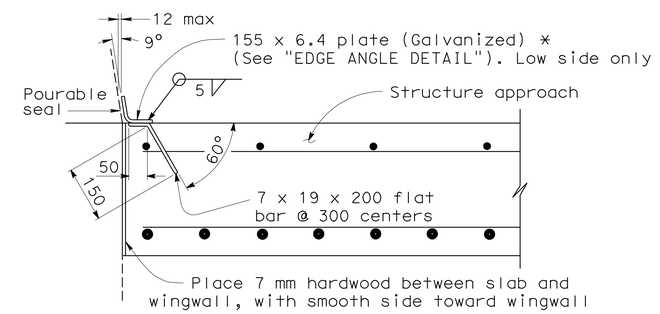

DETAIL B

DETAIL A

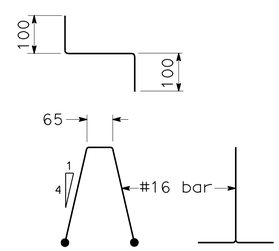

BAR CHAIR DETAIL

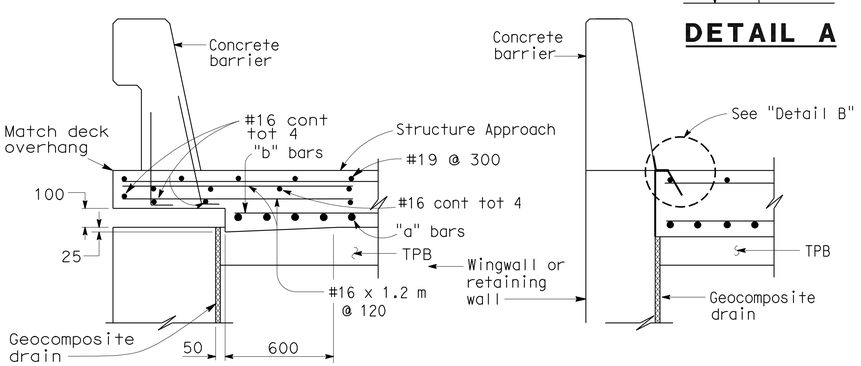

TYPE E-1 ◇2 TYPE E-2

SECTION C-C

(Type E-1 to be used,unless otherwise shown on plans)

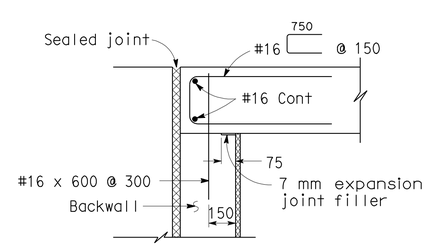

MR ≤ 50 mm

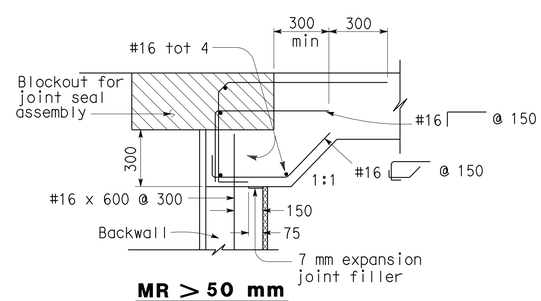

MR > 50 mm

SEAT TYPE ABUTMENT TIE DETAILS

NOTES:

1. For details not shown,see "STRUCTURE PLANS". For MR ≤ 50 mm,adjust bar reinforcement to clear a sawcut for sealed joint,when required.
2. For drainage details,see "STRUCTURE APPROACH DRAINAGE DETAILS" sheet.
3. Longitudinal construction joints,when permitted by the Engineer, shall be located on lane lines.
4. End angle or plate at beginning of barrier transition, end of wingwall or end of structure approach as applicable.
5. For transverse contact joint with new PCC paving, refer to Standard Plan P10.
6. At the contractor's option, approach slab transverse reinforcement may be placed parallel to paving notch. Spacing of transverse reinforcement is measured along ℄ roadway.

Remove all polystyrene.

SPECIAL DETAILS
NO SCALE

ALL DIMENSIONS ARE IN MILLIMETERS UNLESS OTHERWISE SHOWN

STANDARD DRAWING					
RELEASE DATE **Revised**	DESIGN	BY M. TRAFFALIS	CHECKED E. THORKILDSEN	RELEASED BY	
FILE NO. **xs3-120**	DETAILS	BY R. YEE	CHECKED E. THORKILDSEN		
	SUBMITTED	BY M. HA	DRAWING DATE 4/98	OFFICE CHIEF	

1 Length added for DAR Abutment
2 Revised details

STATE OF CALIFORNIA
DEPARTMENT OF TRANSPORTATION

DIVISION OF ENGINEERING SERVICES

BRIDGE NO. 57C0786
KILOMETER POST KP43.2

CARROLL CANYON ROAD BRIDGE

STRUCTURE APPROACH TYPE N(9S)

DS OSD 2147A (METRIC) (REV. 2/25/97)

ORIGINAL SCALE IN MILLIMETERS FOR REDUCED PLANS 0 10 20 30 40 50 60 70 80 90 100

DISREGARD PRINTS BEARING EARLIER REVISION DATES → 9/12/08 12/19/08 3/19/09 4/28/09

SHEET 60 OF 74

FILE => 57-c0786-s-sasd01.dgn

USERNAME => trmikesl DATE PLOTTED => 29-SEP-2010 TIME PLOTTED => 11:45

DIST	COUNTY	ROUTE	KILOMETER POST TOTAL PROJECT	SHEET No	TOTAL SHEETS
11	SD	5,805	R49.9/R51.7, 42.6/46.5	734	886

Caltrans Metric

REGISTERED CIVIL ENGINEER 4-28-09 DATE

9-27-10
PLANS APPROVAL DATE

REGISTERED PROFESSIONAL ENGINEER James L. Rucker No. 47796 Exp. 12-31-09 CIVIL STATE OF CALIFORNIA

The State of California or its officers or agents shall not be responsible for the accuracy or completeness of electronic copies of this plan sheet.

SANDAG
401 B STREET,
SAN DIEGO, CA 92101

T.Y. LIN INTERNATIONAL
5030 CAMINO DE LA SIESTA, SUITE 204,
SAN DIEGO, CA 92108

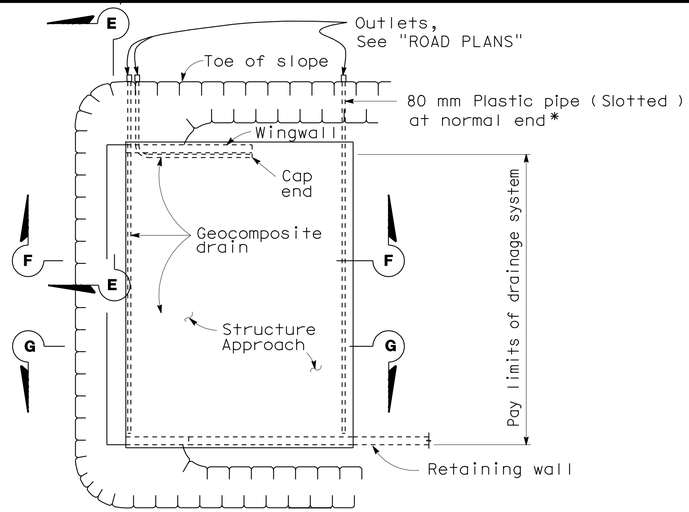

TYPICAL PLAN

*For pipe layout at staggered end, see "DETAIL B".

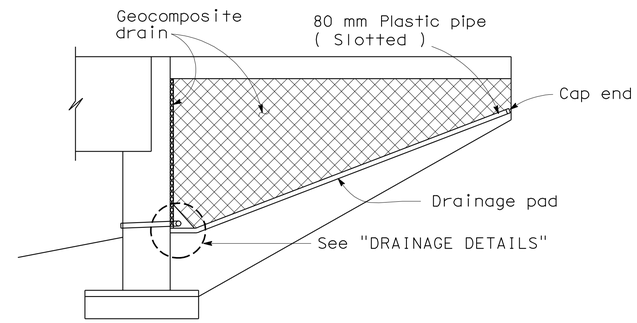

CANTILEVER WINGWALL
SECTION F-F

2

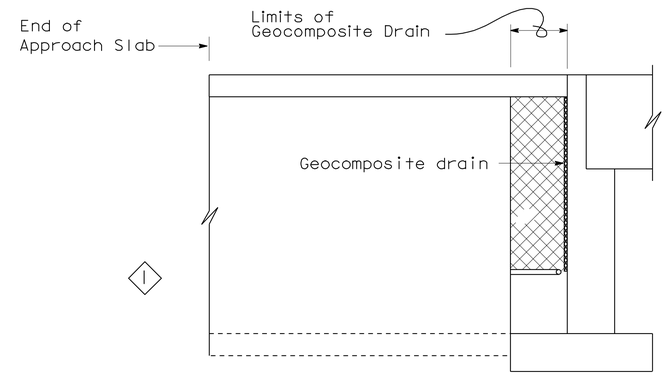

1

MSE WALL
SECTION G-G

Note: See "ROAD PLANS" and "RETAINING WALL PLANS" for drainage details.

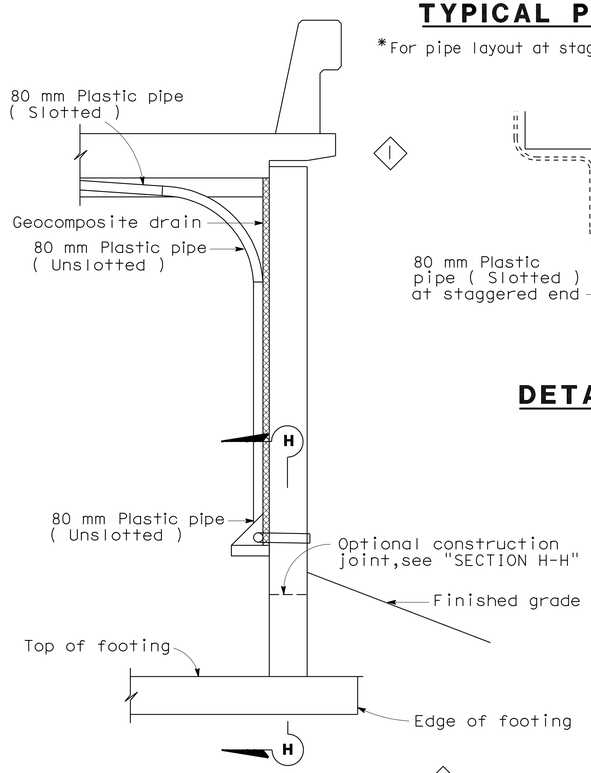

1

SECTION E-E

2

NOTE: Bends and junctions in 80 mm plastic pipe are 750 mm radius min.

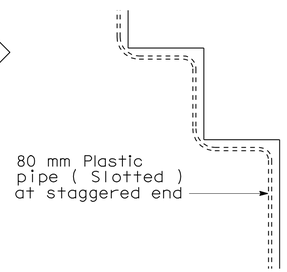

DETAIL B

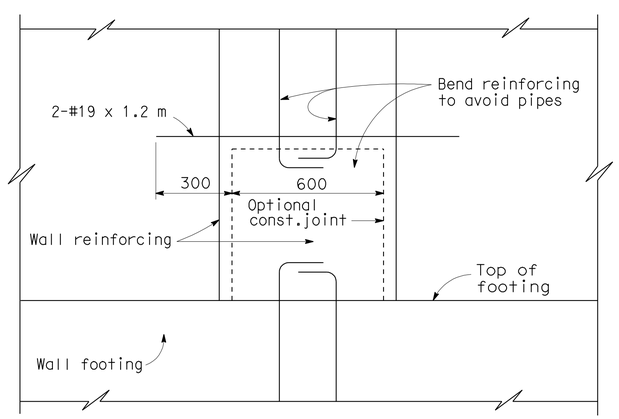

SECTION H-H

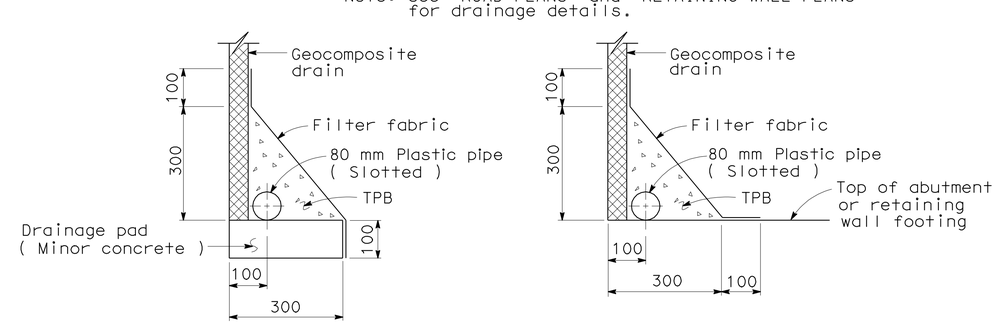

WITHOUT FOOTING
WITH FOOTING
DRAINAGE DETAILS

SPECIAL DETAILS
NO SCALE

ALL DIMENSIONS ARE IN MILLIMETERS UNLESS OTHERWISE SHOWN

STANDARD DRAWING				
FILE NO. XS 22-17	DESIGN	BY M. TRAFFALIS	CHECKED E. THORKILDSEN	APPROVAL RECOMMENDED BY
DRAWING DATE Revised	DETAILS	BY R. YEE	CHECKED E. THORKILDSEN	DESIGN SUPERVISOR
	SUBMITTED BY M. HA			

1 Modified detail
2 Modified outlet location

STATE OF CALIFORNIA
DEPARTMENT OF TRANSPORTATION

DIVISION OF STRUCTURES
STRUCTURE DESIGN

BRIDGE NO. 57C0786
KILOMETER POST KP43.2

CARROLL CANYON ROAD BRIDGE
STRUCTURE APPROACH DRAINAGE DETAILS

DS OSD 2147A (METRIC) (REV. 2/25/97)

ORIGINAL SCALE IN MILLIMETERS FOR REDUCED PLANS 0 10 20 30 40 50 60 70 80 90 100

DISREGARD PRINTS BEARING EARLIER REVISION DATES

REVISION DATES (PRELIMINARY STAGE ONLY) 9/12/08 12/19/08 3/19/09 4/28/09

SHEET 61 OF 74

FILE => 57-c0786-s-sasd02.dgn

USERNAME => trmikesl DATE PLOTTED => 29-SEP-2010 TIME PLOTTED => 11:46

DIST	COUNTY	ROUTE	KILOMETER POST TOTAL PROJECT	SHEET No	TOTAL SHEETS
11	SD	5,805	R49.9/R51.7, 42.6/46.5	735	886

Caltrans Metric

REGISTERED CIVIL ENGINEER — DATE 4-28-09

9-27-10
PLANS APPROVAL DATE

REGISTERED PROFESSIONAL ENGINEER — James L. Rucker No. 47796 Exp. 12-31-09 CIVIL — STATE OF CALIFORNIA

The State of California or its officers or agents shall not be responsible for the accuracy or completeness of electronic copies of this plan sheet.

SANDAG
401 B STREET,
SAN DIEGO, CA 92101

T.Y. LIN INTERNATIONAL
5030 CAMINO DE LA SIESTA, SUITE 204,
SAN DIEGO, CA 92108

NOTES:

1. Post shall be vertical.
2. Top rail tubular pipe shall be continuous over not less than two posts.
3. BLANK
4. For concrete barrier details and reinforcement not shown, see "TUBULAR PIPE HANDRAILING" and "TYPICAL SECTION" sheets.
5. Rails are NPS standard weight A53 grade B Type E Pipes.
6. Scoring detail not shown for clarity
7. For electrolier locations, see "ROAD PLANS"

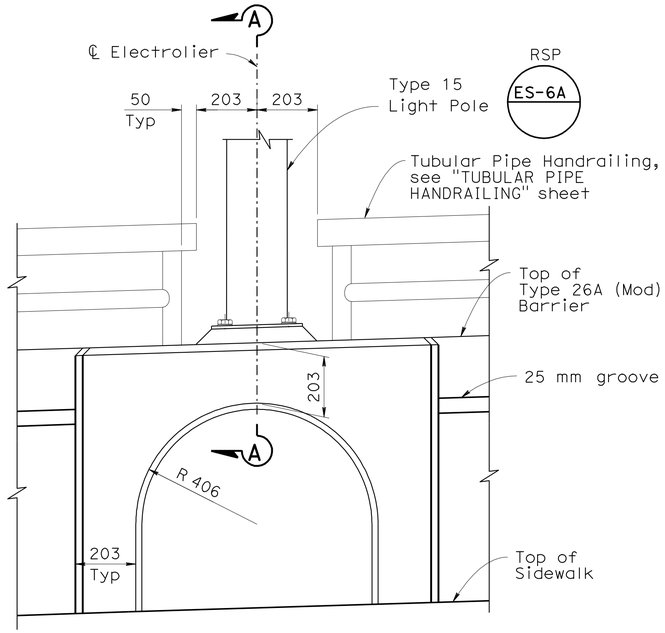

ELEVATION

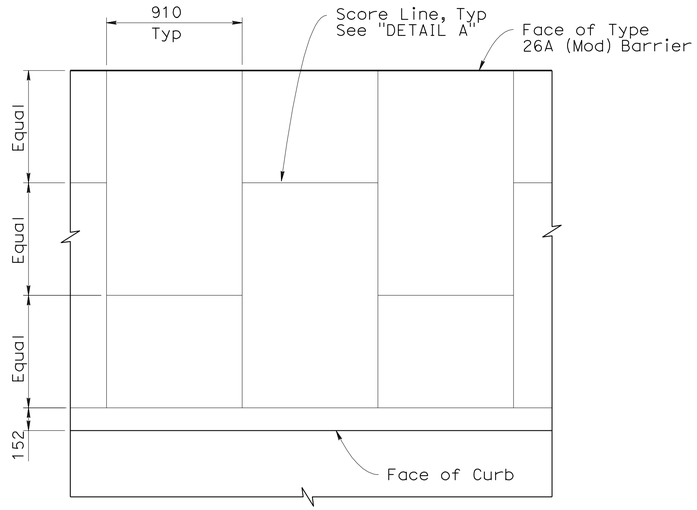

PLAN

1:20

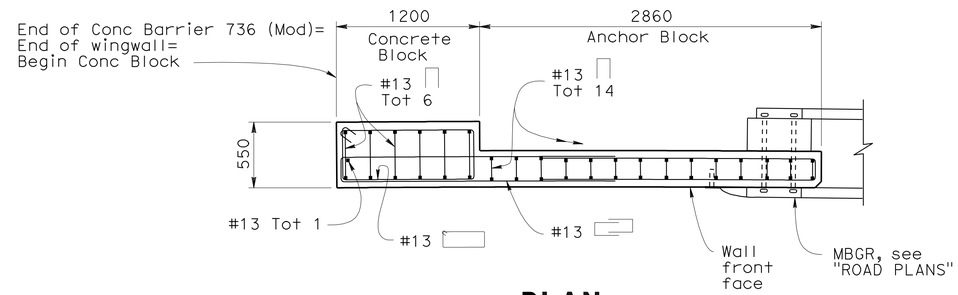

PLAN

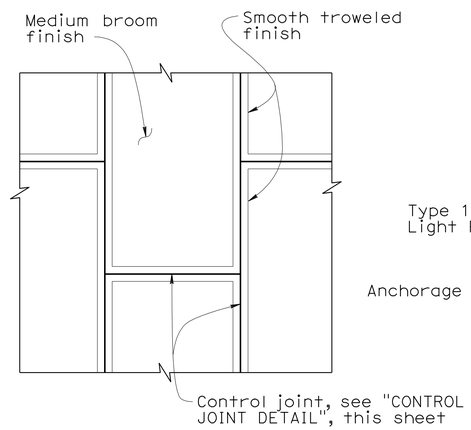

DETAIL A

1:20

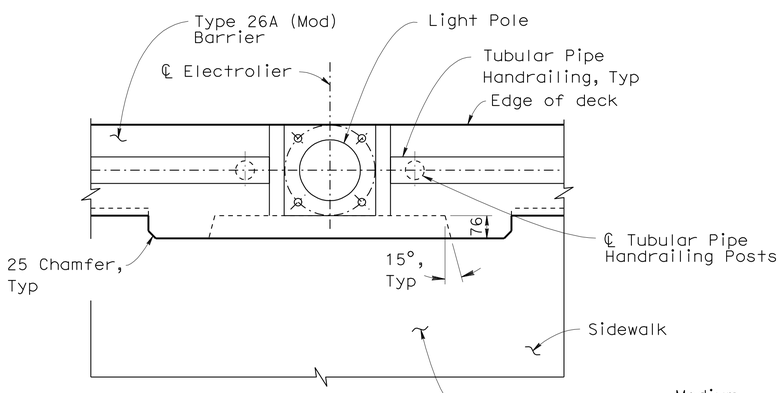

PLAN

ELECTROLIER BASE DETAIL

1:10

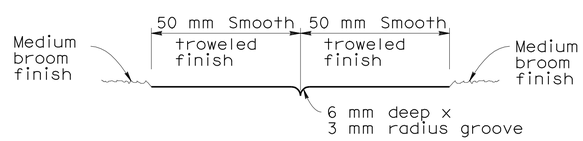

CONTROL JOINT DETAIL

1:1

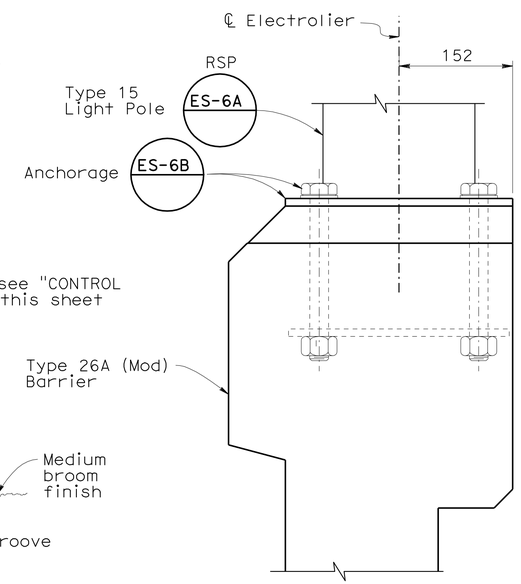

SECTION A-A

1:4

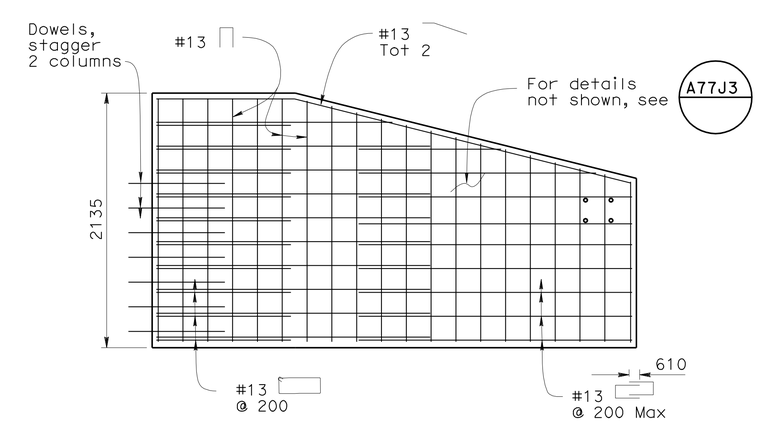

ELEVATION

MBGR not shown for clarity

CONCRETE AND ANCHOR BLOCK CONNECTION

1:25

ALL DIMENSIONS ARE IN MILLIMETERS UNLESS OTHERWISE SHOWN

CHUNG-YUAN WEN
DESIGN OVERSIGHT
4-28-09
SIGN OFF DATE

	BY	CHECKED
DESIGN	Arash Monsefan	Pete Smith
DETAILS	Tatyana Gnip	Pete Smith
QUANTITIES	Oscar Colcol	Xiaoyun Wu

PREPARED FOR THE STATE OF CALIFORNIA DEPARTMENT OF TRANSPORTATION

Brett Makley
PROJECT ENGINEER

BRIDGE NO. 57C0786
KILOMETER POST KP43.2

CARROLL CANYON ROAD BRIDGE
BARRIER DETAILS

DESIGN DETAIL SHEET (METRIC) (REV. 10/27/05)

ORIGINAL SCALE IN MILLIMETERS FOR REDUCED PLANS 0 10 20 30 40 50 60 70 80 90 100

CU 11275
EA 2T0401

DISREGARD PRINTS BEARING EARLIER REVISION DATES

REVISION DATES (PRELIMINARY STAGE ONLY): 9/12/08 12/19/08 3/19/09 4/28/09

SHEET 62 OF 74

FILE => 57-c0786-t-bar01.dgn

USERNAME => ttmikes1 DATE PLOTTED => 29-SEP-2010 TIME PLOTTED => 11:46

DIST	COUNTY	ROUTE	KILOMETER POST TOTAL PROJECT	SHEET No	TOTAL SHEETS
11	SD	5,805	R49.9/R51.7, 42.6/46.5	736	886

REGISTERED CIVIL ENGINEER 4-28-09 DATE

9-27-10
PLANS APPROVAL DATE

REGISTERED PROFESSIONAL ENGINEER James L. Rucker No. 47796 Exp. 12-31-09 CIVIL STATE OF CALIFORNIA

The State of California or its officers or agents shall not be responsible for the accuracy or completeness of electronic copies of this plan sheet.

SANDAG
401 B STREET,
SAN DIEGO, CA 92101

T.Y. LIN INTERNATIONAL
5030 CAMINO DE LA SIESTA, SUITE 204,
SAN DIEGO, CA 92108

Caltrans Metric

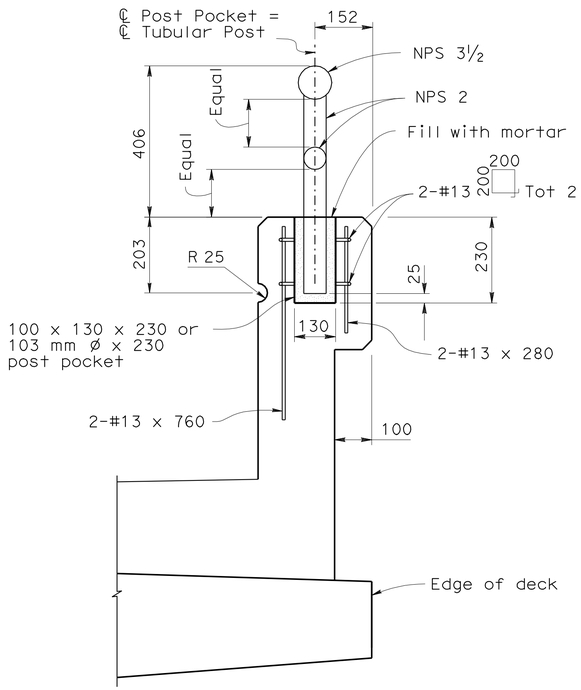

TYPE 26 (MOD)

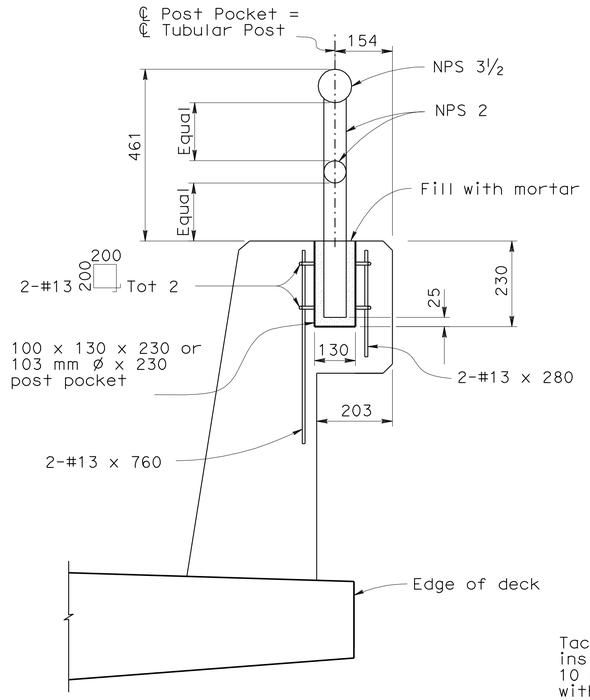

TYPE 736 (MOD)

POST ANCHORAGE DETAILS

No Scale

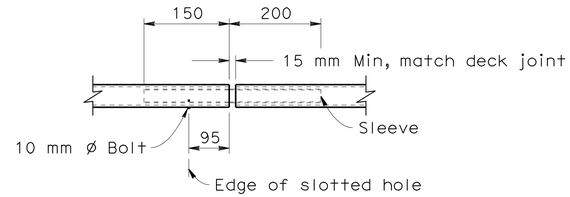

VIEW G-G

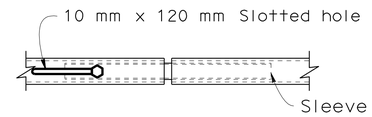

VIEW H-H

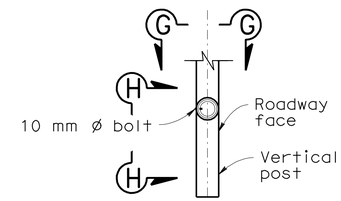

SECTION

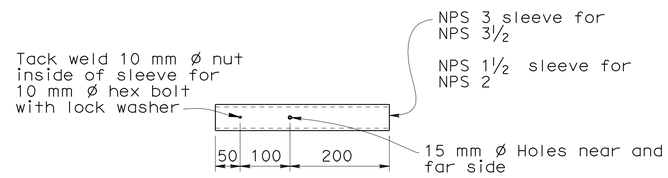

SLEEVE

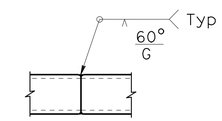

TUBE-WELD SPLICE

TUBULAR PIPE SPLICE DETAILS

No Scale

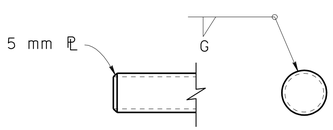

RAIL CAP DETAILS

No Scale

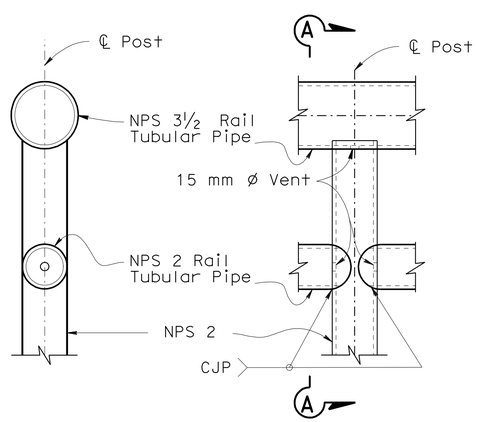

SECTION A-A

1:10

ELEVATION

1:10

For Typ Welded Section

NOTES:

1. Galvanize rail assembly after fabrication.
2. Post shall be vertical.
3. Tubular pipe splices shall be located in the pipes spanning deck or wall joints. Increase joint width in pipes to match expansion joint width and increase sleeve length accordingly.
4. Top rail tubular pipe shall be continuous over not less than two posts.
5. For details and reinforcement not shown see B11-51, B11-54 and B11-56.
6. All tubular pipe posts and rails shall be NPS standard weight A53 grade B Type E Pipes.

ALL DIMENSIONS ARE IN MILLIMETERS UNLESS OTHERWISE SHOWN

CHUNG-YUAN WEN
DESIGN OVERSIGHT
4-28-09
SIGN OFF DATE

	BY	CHECKED
DESIGN	Arash Monsefan	Pete Smith
DETAILS	Tatyana Gnip	Pete Smith
QUANTITIES	Oscar Colcol	Xiaoyun Wu

PREPARED FOR THE STATE OF CALIFORNIA DEPARTMENT OF TRANSPORTATION

Brett Makley
PROJECT ENGINEER

BRIDGE NO. 57C0786
KILOMETER POST KP43.2

CARROLL CANYON ROAD BRIDGE
TUBULAR PIPE HANDRAILING

DESIGN DETAIL SHEET (METRIC) (REV. 10/27/05)

ORIGINAL SCALE IN MILLIMETERS FOR REDUCED PLANS 0 10 20 30 40 50 60 70 80 90 100

CU 11275
EA 2T0401

DISREGARD PRINTS BEARING EARLIER REVISION DATES

REVISION DATES (PRELIMINARY STAGE ONLY) 9/12/08 12/19/08 3/19/09 4/28/09

SHEET 63 OF 74

FILE => 57-c0786-t-bar02.dgn

USERNAME => ttmikes1 DATE PLOTTED => 29-SEP-2010 TIME PLOTTED => 11:46

DIST	COUNTY	ROUTE	KILOMETER POST TOTAL PROJECT	SHEET No	TOTAL SHEETS
11	SD	5,805	R49.9/R51.7, 42.6/46.5	737	886

Caltrans Metric

REGISTERED CIVIL ENGINEER 4-28-09 DATE

9-27-10
PLANS APPROVAL DATE

REGISTERED PROFESSIONAL ENGINEER James L. Rucker No. 47796 Exp. 12-31-09 CIVIL STATE OF CALIFORNIA

The State of California or its officers or agents shall not be responsible for the accuracy or completeness of electronic copies of this plan sheet.

SANDAG
401 B STREET,
SAN DIEGO, CA 92101

T.Y. LIN INTERNATIONAL
5030 CAMINO DE LA SIESTA, SUITE 204,
SAN DIEGO, CA 92108

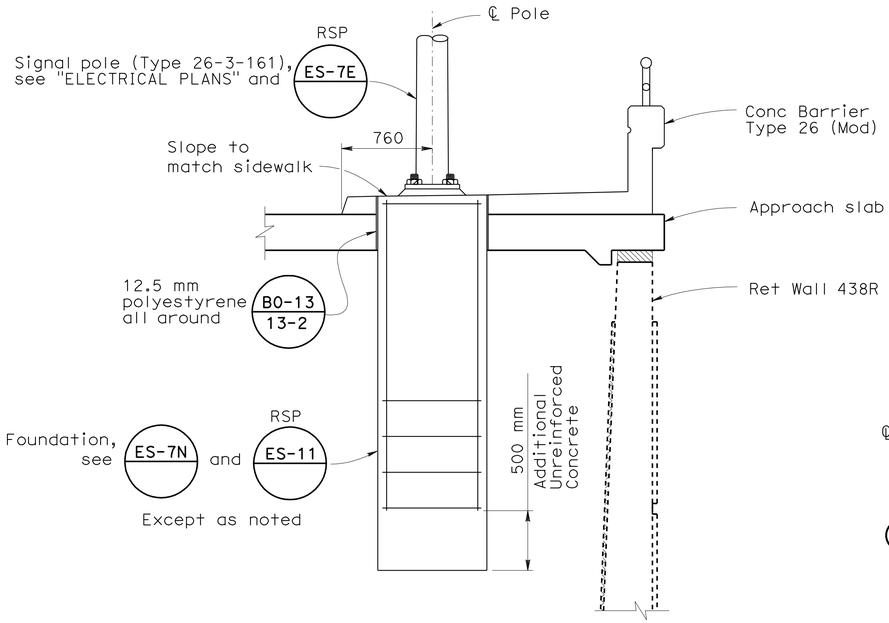

SIGNAL IN APPROACH SLAB (Sta 438+90)

1:25

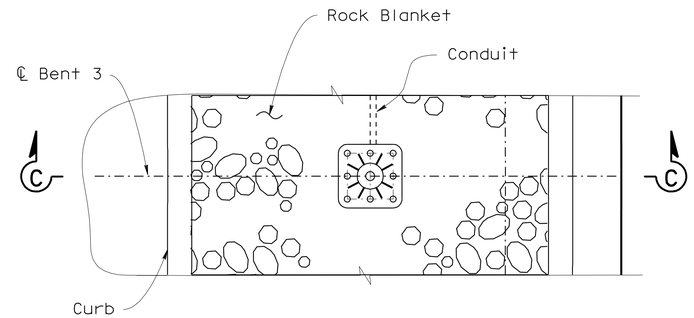

PLAN

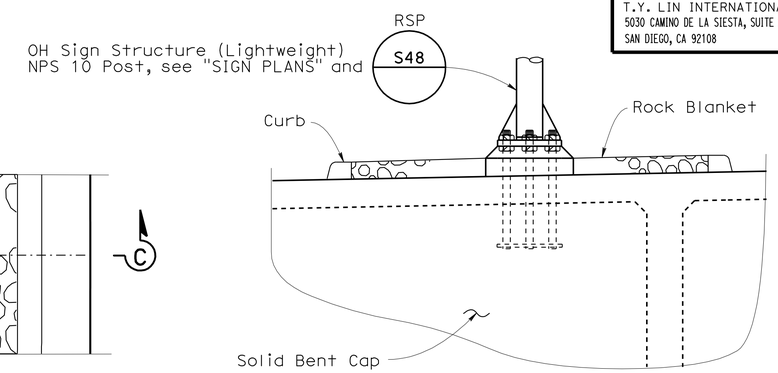

SECTION C-C

NOTES:

1. Install signal foundation after the wall is constructed and backfill is compacted and before approach slab and Concrete Barrier Type 26 (Mod) are constructed
2. Install signal pole after Approach slab and Concrete Barrier Type 26 (Mod) have been constructed

OVERHEAD SIGN 3C

No Scale

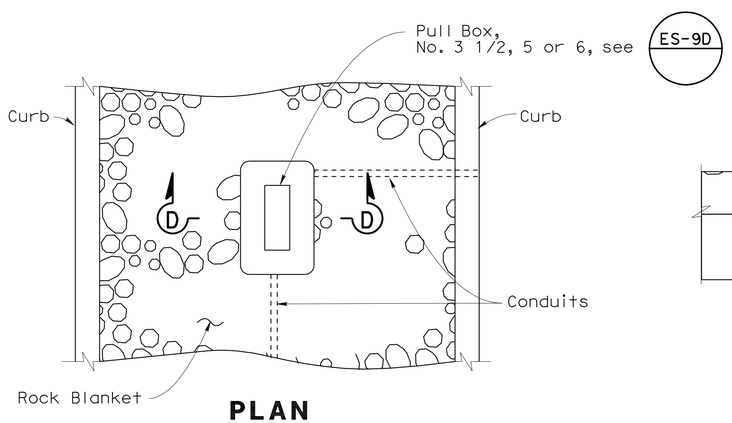

PLAN

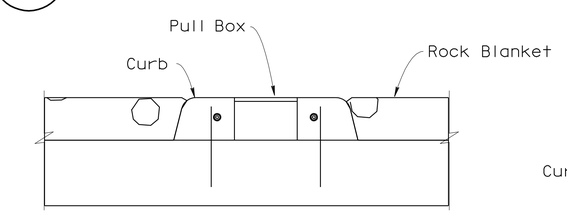

SECTION D-D

PULL BOX DETAILS

No Scale

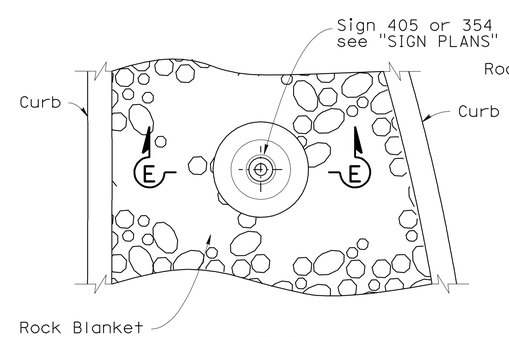

PLAN

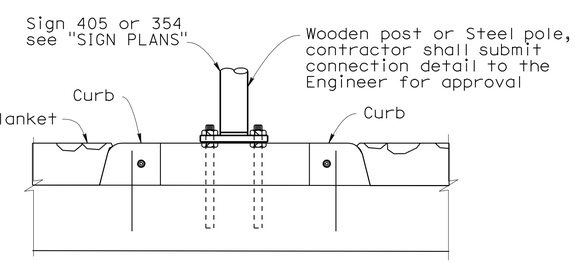

NOTE: Typical connection for Single or Double Post, See "SIGN PLANS"

SECTION E-E

SIGN 405 OR 354

No Scale

ALL DIMENSIONS ARE IN MILLIMETERS UNLESS OTHERWISE SHOWN

CHUNG-YUAN WEN
DESIGN OVERSIGHT
4-28-09
SIGN OFF DATE

	BY	CHECKED
DESIGN	Brett Makley	Arash Monsefan
DETAILS	Andy Toledo	Brett Makley
QUANTITIES	Ivan Martin	Carolina Lopez-Toro

PREPARED FOR THE STATE OF CALIFORNIA DEPARTMENT OF TRANSPORTATION

Brett Makley
PROJECT ENGINEER

BRIDGE NO. 57C0786
KILOMETER POST KP43.2

CARROLL CANYON ROAD BRIDGE
SIGN AND SIGNAL SUPPORT DETAILS NO.1

DESIGN DETAIL SHEET (METRIC) (REV. 10/27/05)

ORIGINAL SCALE IN MILLIMETERS FOR REDUCED PLANS 0 10 20 30 40 50 60 70 80 90 100

CU 11275
EA 2T0401

DISREGARD PRINTS BEARING EARLIER REVISION DATES

REVISION DATES (PRELIMINARY STAGE ONLY) 9/12/08 12/19/08 3/9/09 4/28/09

SHEET 64 OF 74

FILE => 57-c0786-t-sssd01.dgn

USERNAME => trmikest DATE PLOTTED => 29-SEP-2010 TIME PLOTTED => 11:46

DIST	COUNTY	ROUTE	KILOMETER POST TOTAL PROJECT	SHEET No	TOTAL SHEETS
11	SD	5,805	R49.9/R51.7, 42.6/46.5	738	886

REGISTERED CIVIL ENGINEER 4-28-09 DATE

9-27-10
PLANS APPROVAL DATE

REGISTERED PROFESSIONAL ENGINEER James L. Rucker No. 47796 Exp. 12-31-09 CIVIL STATE OF CALIFORNIA

The State of California or its officers or agents shall not be responsible for the accuracy or completeness of electronic copies of this plan sheet.

SANDAG
401 B STREET,
SAN DIEGO, CA 92101

T.Y. LIN INTERNATIONAL
5030 CAMINO DE LA SIESTA, SUITE 204,
SAN DIEGO, CA 92108

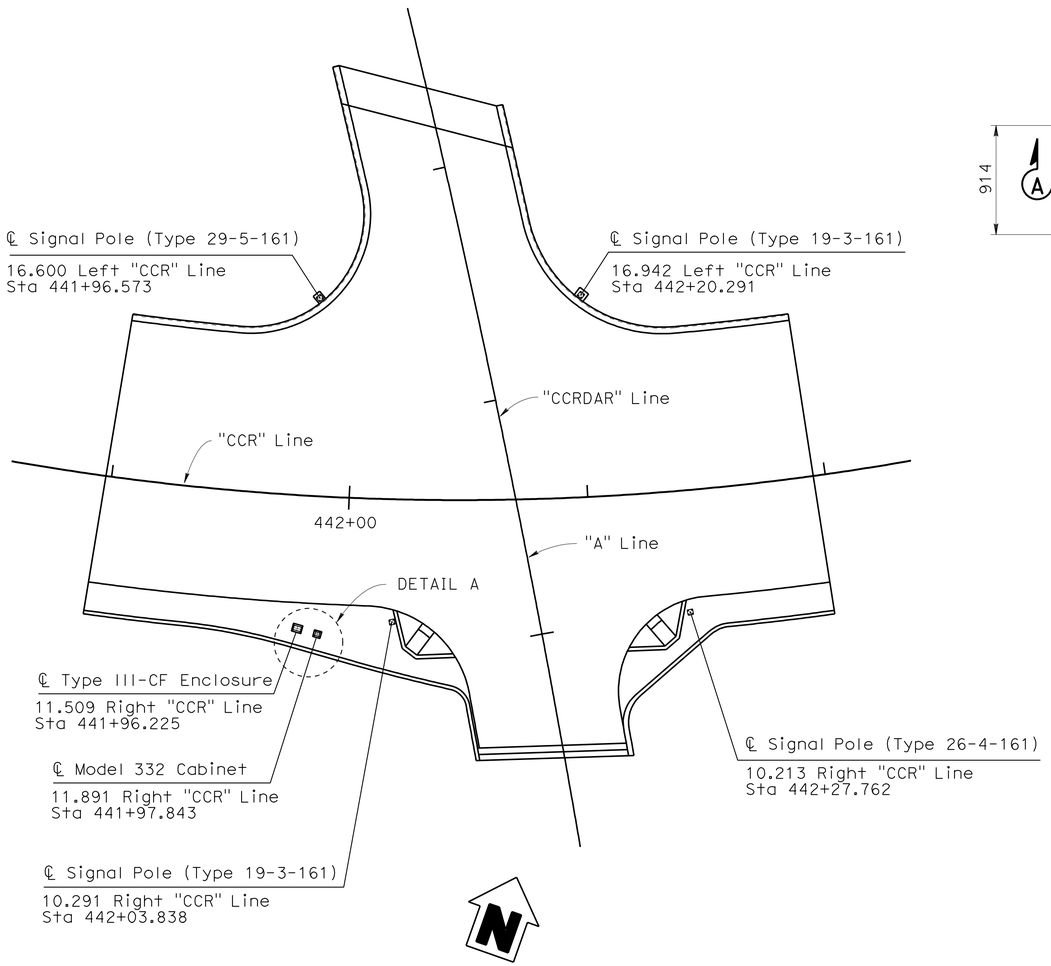

SIGN & SIGNAL LOCATION PLAN

1:250

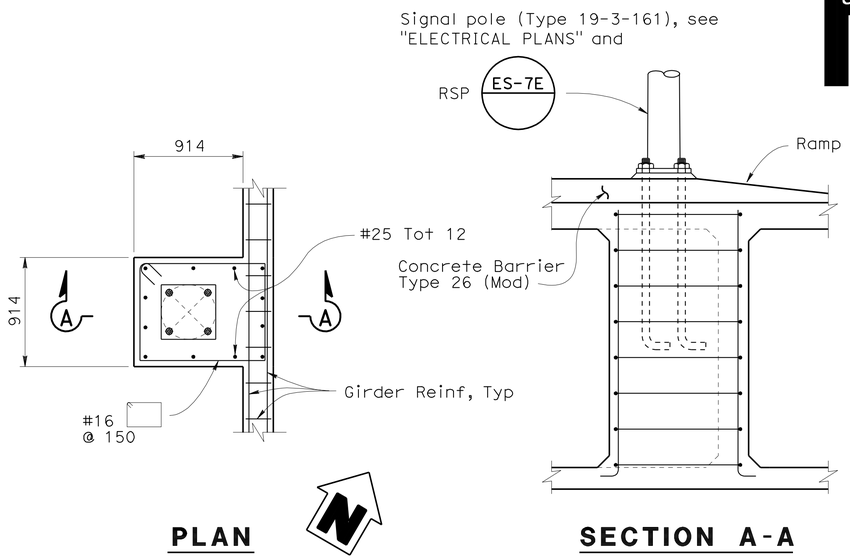

PLAN **SECTION A-A**

SIGNAL POLE (TYPE 19-3-161) ANCHORAGE SOUTHWEST PLATFORM CORNER

1:25

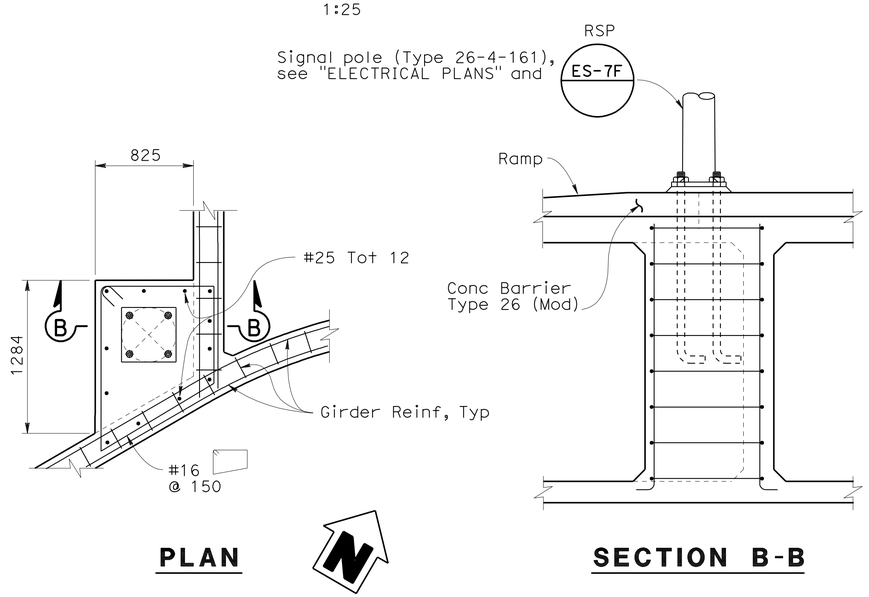

PLAN **SECTION B-B**

SIGNAL POLE (TYPE 26-4-161) ANCHORAGE SOUTHEAST PLATFORM CORNER

1:25

NOTES:

1. For Signal Pole anchorage details, see "SIGN AND SIGNAL SUPPORT DETAILS NO.3" sheet
2. For "DETAIL A", see"SIGN AND SIGNAL SUPPORT DETAILS NO.3" sheet

ALL DIMENSIONS ARE IN MILLIMETERS UNLESS OTHERWISE SHOWN

CHUNG-YUAN WEN
DESIGN OVERSIGHT
4-28-09
SIGN OFF DATE

	BY	CHECKED
DESIGN	Brett Makley	Arash Monsefan
DETAILS	Andy Toledo	Brett Makley
QUANTITIES	Ivan Martin	Carolina Lopez-Toro

PREPARED FOR THE STATE OF CALIFORNIA DEPARTMENT OF TRANSPORTATION

Brett Makley
PROJECT ENGINEER

BRIDGE NO. 57C0786
KILOMETER POST KP43.2

CARROLL CANYON ROAD BRIDGE
SIGN AND SIGNAL SUPPORT DETAILS NO.2

DESIGN DETAIL SHEET (METRIC) (REV. 10/27/05)

ORIGINAL SCALE IN MILLIMETERS FOR REDUCED PLANS 0 10 20 30 40 50 60 70 80 90 100

CU 11275
EA 2T0401

DISREGARD PRINTS BEARING EARLIER REVISION DATES

REVISION DATES (PRELIMINARY STAGE ONLY) 9/12/08 12/19/08 3/19/09 4/28/09

SHEET 65 OF 74

FILE => 57-c0786-t-sssd02.dgn

USERNAME => trmikest DATE PLOTTED => 29-SEP-2010 TIME PLOTTED => 11:46

DIST	COUNTY	ROUTE	KILOMETER POST TOTAL PROJECT	SHEET No	TOTAL SHEETS
11	SD	5,805	R49.9/R51.7, 42.6/46.5	739	886

Caltrans Metric

REGISTERED CIVIL ENGINEER 4-28-09 DATE

9-27-10
PLANS APPROVAL DATE

REGISTERED PROFESSIONAL ENGINEER James L. Rucker No. 47796 Exp. 12-31-09 CIVIL STATE OF CALIFORNIA

The State of California or its officers or agents shall not be responsible for the accuracy or completeness of electronic copies of this plan sheet.

SANDAG
401 B STREET,
SAN DIEGO, CA 92101

T.Y. LIN INTERNATIONAL
5030 CAMINO DE LA SIESTA, SUITE 204,
SAN DIEGO, CA 92108

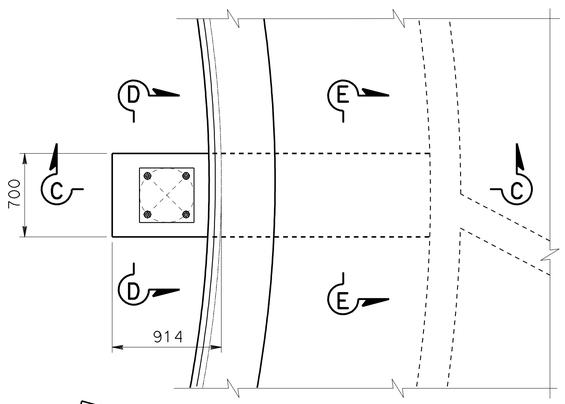

PLAN

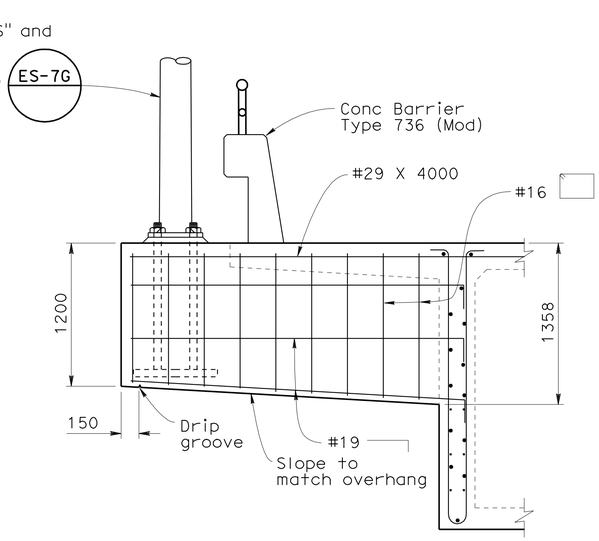

SECTION C-C

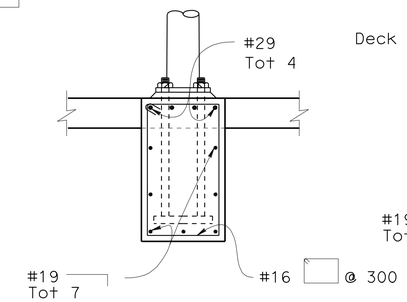

SECTION D-D

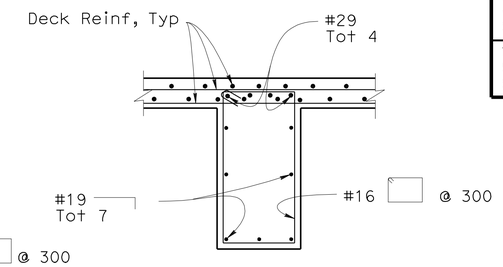

SECTION E-E

NOTE:

Northwest platform corner shown, northeast platform corner similar except for Signal Pole type

SIGNAL POLE ANCHORAGE NORTHWEST PLATFORM CORNER

1:25

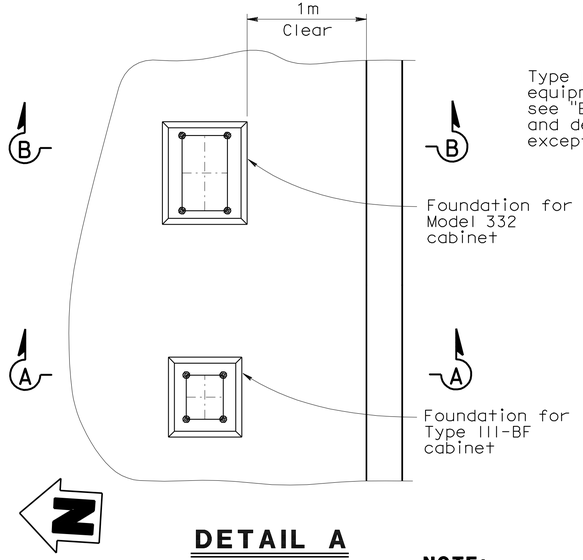

DETAIL A

No Scale

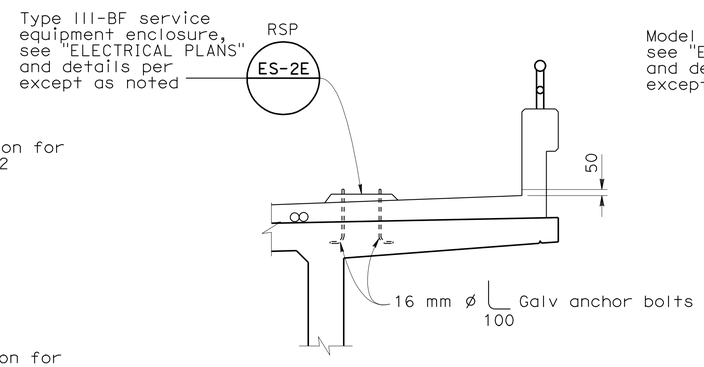

SECTION A-A

No Scale

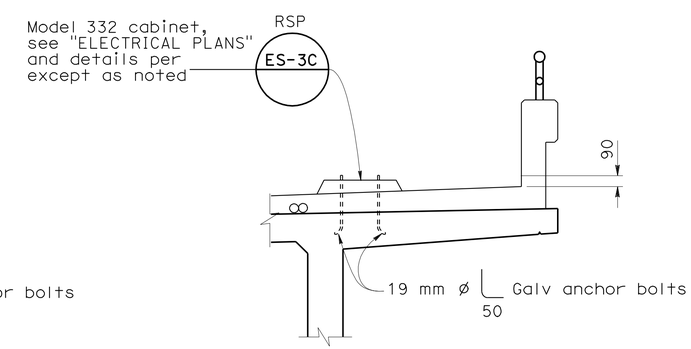

SECTION B-B

No Scale

NOTE:

For location of "DETAIL A", see "SIGN AND SIGNAL SUPPORT DETAILS NO.2" sheet

ALL DIMENSIONS ARE IN MILLIMETERS UNLESS OTHERWISE SHOWN

CHUNG-YUAN WEN
DESIGN OVERSIGHT
4-28-09
SIGN OFF DATE

	BY	CHECKED
DESIGN	Brett Makley	Arash Monsefan
DETAILS	Andy Toledo	Brett Makley
QUANTITIES	Ivan Martin	Carolina Lopez-Toro

PREPARED FOR THE STATE OF CALIFORNIA DEPARTMENT OF TRANSPORTATION

Brett Makley
PROJECT ENGINEER

BRIDGE NO. 57C0786
KILOMETER POST KP43.2

CARROLL CANYON ROAD BRIDGE
SIGN AND SIGNAL SUPPORT DETAILS NO.3

DESIGN DETAIL SHEET (METRIC) (REV. 10/27/05)

ORIGINAL SCALE IN MILLIMETERS FOR REDUCED PLANS 0 10 20 30 40 50 60 70 80 90 100

CU 11275
EA 2T0401

DISREGARD PRINTS BEARING EARLIER REVISION DATES

REVISION DATES (PRELIMINARY STAGE ONLY) 9/12/08 12/19/08 3/19/09 4/28/09

SHEET 66 OF 74

FILE => 57-c0786-t-sssd03.dgn

USERNAME => trmikesl DATE PLOTTED => 29-SEP-2010 TIME PLOTTED => 11:47

DIST	COUNTY	ROUTE	KILOMETER POST TOTAL PROJECT	SHEET No	TOTAL SHEETS
11	SD	5,805	R49.9/R51.7, 42.6/46.5	740	886

REGISTERED CIVIL ENGINEER 4-28-09 DATE

9-27-10
PLANS APPROVAL DATE

The State of California or its officers or agents shall not be responsible for the accuracy or completeness of electronic copies of this plan sheet.

REGISTERED PROFESSIONAL ENGINEER James L. Rucker No. 47796 Exp. 12-31-09 CIVIL STATE OF CALIFORNIA

SANDAG
401 B STREET,
SAN DIEGO, CA 92101

T.Y. LIN INTERNATIONAL
5030 CAMINO DE LA SIESTA, SUITE 204,
SAN DIEGO, CA 92108

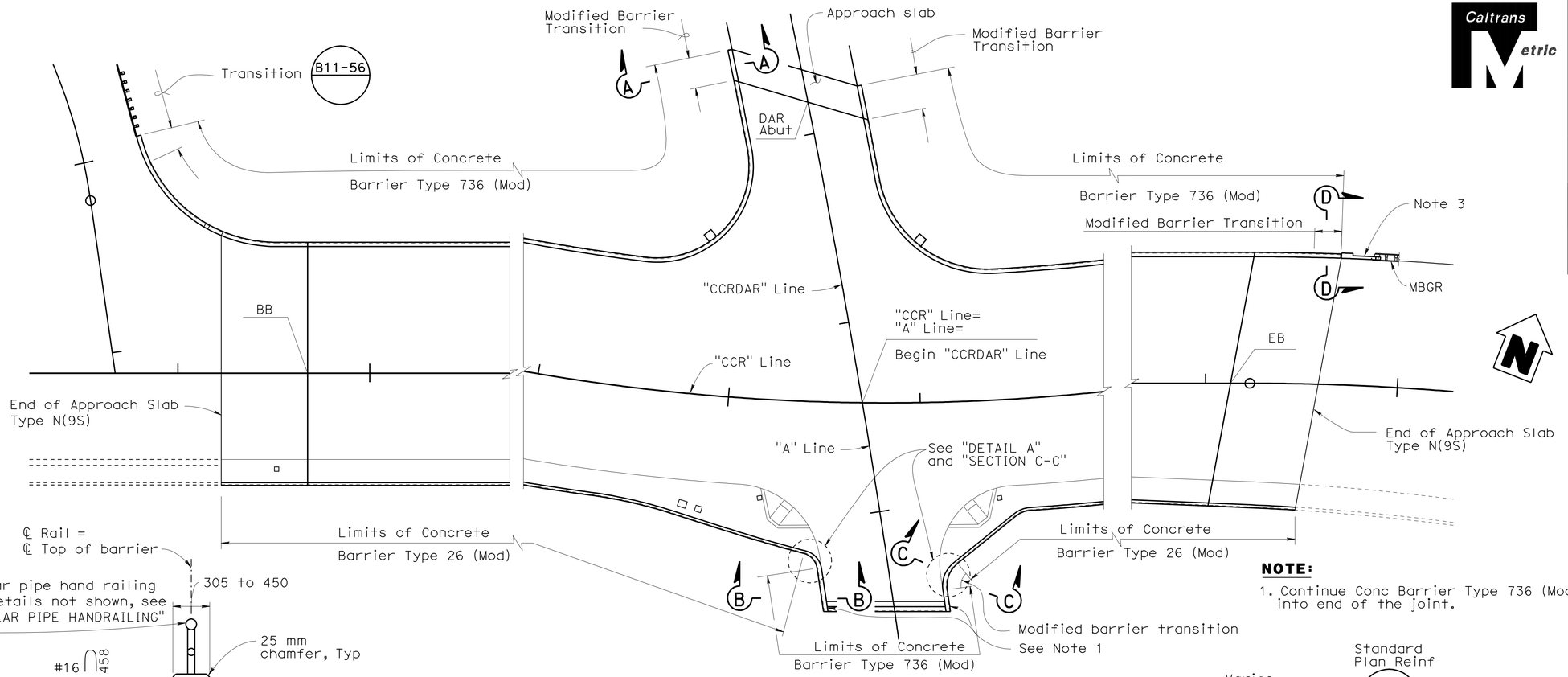

PLAN
1:250

NOTE:

1. Continue Conc Barrier Type 736 (Mod) into end of the joint.

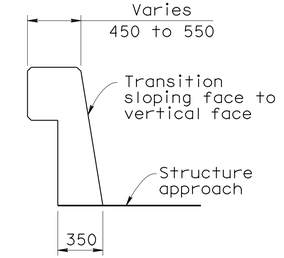

SECTION D-D
1:20

Note: For transition details not shown, see B11-56

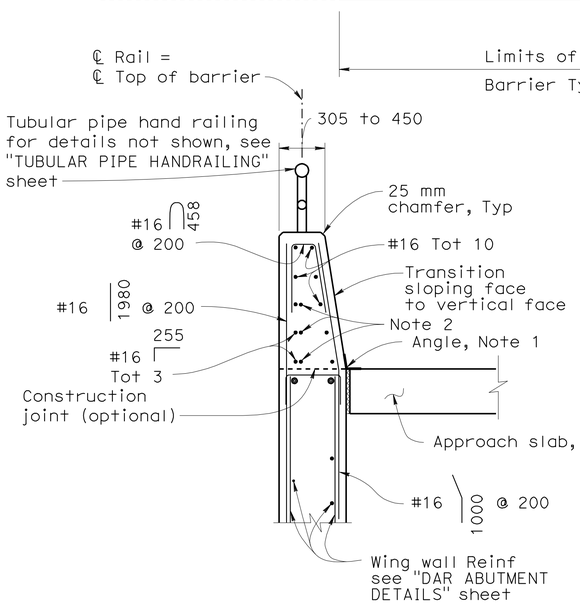

SECTION A-A
1:20

NOTES:

1. See "STRUCTURE APPROACH TYPE N9(S)"
2. Extend backwall Reinf 610mm lapping with #16
3. For details not shown, see B11-56

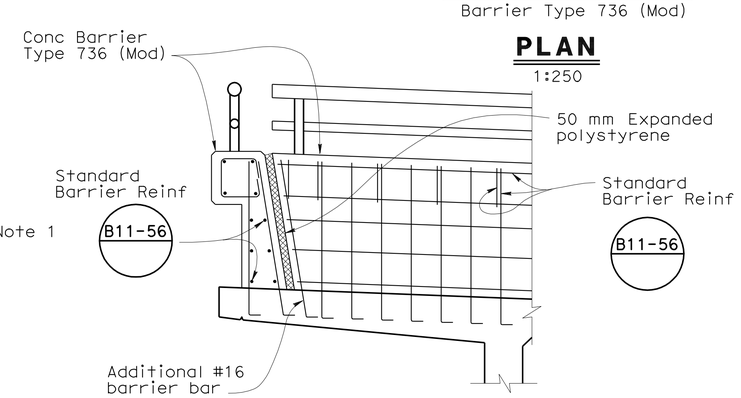

SECTION B-B
1:20

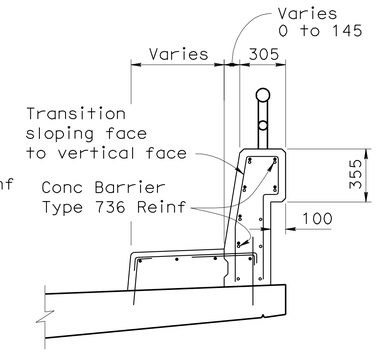

SECTION C-C
1:20

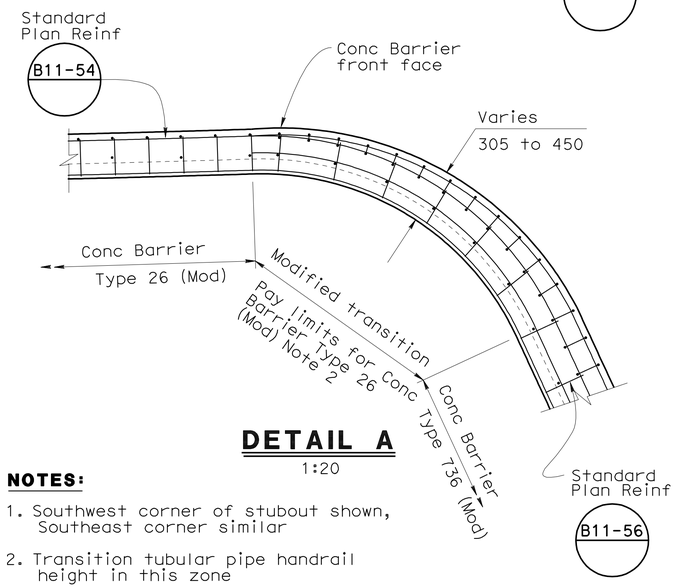

DETAIL A
1:20

NOTES:

1. Southwest corner of stubout shown, Southeast corner similar
2. Transition tubular pipe handrail height in this zone
3. See "CONCRETE AND ANCHOR BLOCK CONNECTION" ON "BARRIER DETAILS" sheet

ALL DIMENSIONS ARE IN MILLIMETERS UNLESS OTHERWISE SHOWN

CHUNG-YUAN WEN
DESIGN OVERSIGHT
4-28-09
SIGN OFF DATE

	BY	CHECKED
DESIGN	Roya Golchoobian	Pete Smith
DETAILS	Andy Toledo	Pete Smith
QUANTITIES	Oscar Colcol	Xiaoyun Wu

PREPARED FOR THE STATE OF CALIFORNIA DEPARTMENT OF TRANSPORTATION

Brett Makley
PROJECT ENGINEER

BRIDGE NO. 57C0786
KILOMETER POST KP43.2

CARROLL CANYON ROAD BRIDGE
BARRIER LIMITS

DESIGN DETAIL SHEET (METRIC) (REV. 10/27/05)

ORIGINAL SCALE IN MILLIMETERS FOR REDUCED PLANS 0 10 20 30 40 50 60 70 80 90 100

CU 11275
EA 2T0401

DISREGARD PRINTS BEARING EARLIER REVISION DATES 9/12/08 12/19/08 3/9/09 4/28/09

REVISION DATES (PRELIMINARY STAGE ONLY)

SHEET 67 OF 74

FILE => 57-c0786-u-brdt.dgn

USERNAME => trmikest DATE PLOTTED => 29-SEP-2010 TIME PLOTTED => 11:47

DIST	COUNTY	ROUTE	POST MILES TOTAL PROJECT	SHEET No	TOTAL SHEETS
11	SD	5,805	R49.9/R51.7, 42.6/46.5	741	886

Erich Neupert 4-23-09
PROFESSIONAL GEOLOGIST

9-27-10
PLANS APPROVAL DATE

PROFESSIONAL GEOLOGIST Erich Neupert No. 8137 Exp. 2-28-10 STATE OF CALIFORNIA

The State of California or its officers or agents shall not be responsible for the accuracy or completeness of electronic copies of this plan sheet.

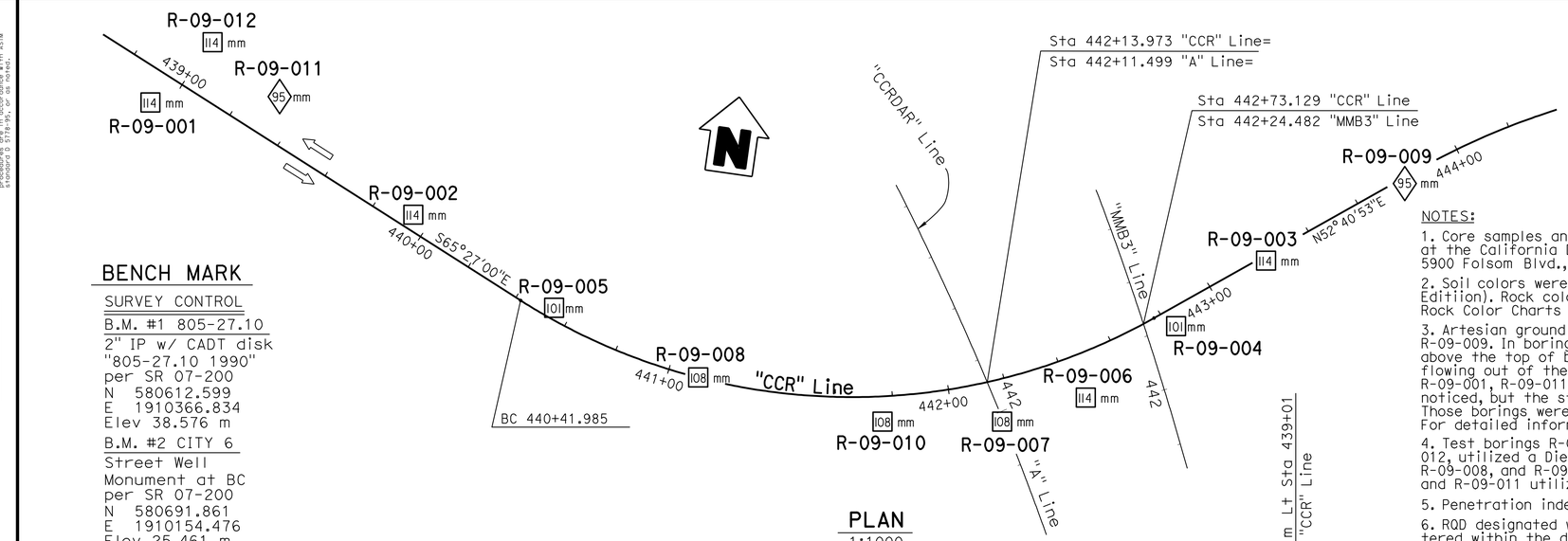

BENCH MARK

SURVEY CONTROL

B.M. #1 805-27.10
2" IP w/ CADT disk
"805-27.10 1990"
per SR 07-200
N 580612.599
E 1910366.834
Elev 38.576 m

B.M. #2 CITY 6
Street Well
Monument at BC
per SR 07-200
N 580691.861
E 1910154.476
Elev 25.461 m

PLAN
1:1000

NOTES:

1. Core samples and laboratory rock strength data are available for viewing at the California Department of Transportation, Transportation Laboratory, 5900 Folsom Blvd., Sacramento, CA 95819.
2. Soil colors were determined by using Munsell Color Charts (1994, Revised Editiion). Rock colors were determined using Geological Soiciety of America Rock Color Charts (1995, 8th Printing).
3. Artesian ground water was measured in three borings: R-09-003, R-09-007, and R-09-009. In borings R-09-003 and R-09-007 the static ground water was measured above the top of boring. In Boring R-09-005 artesian ground water was noticed flowing out of the top of boring. Ground water was not encountered in borings R-09-001, R-09-011 and R-09-012. In all other borings, artesian conditions were noticed, but the static ground water level was not measured in those borings. Those borings were immediately backfilled after completion of drilling operations. For detailed information see the LOTB sheets and Foundation Report.
4. Test borings R-09-001, R-09-002, R-09-003, R-09-006, R-09-009, and R-09-012, utilized a Diedrich automatic hammer. Borings R-09-004, R-09-005, R-09-008, and R-09-010, utilized a CME automatic hammer. Borings R-09-007, and R-09-011 utilized a Boart Longyear automatic hammer.
5. Penetration index value designated as "REF" means sampler refusal.
6. RQD designated with "N/A" (not applicable), infers that the rock encountered within the drilled interval was not sound rock (moderately soft to very soft), therefore RQD was not calculated.

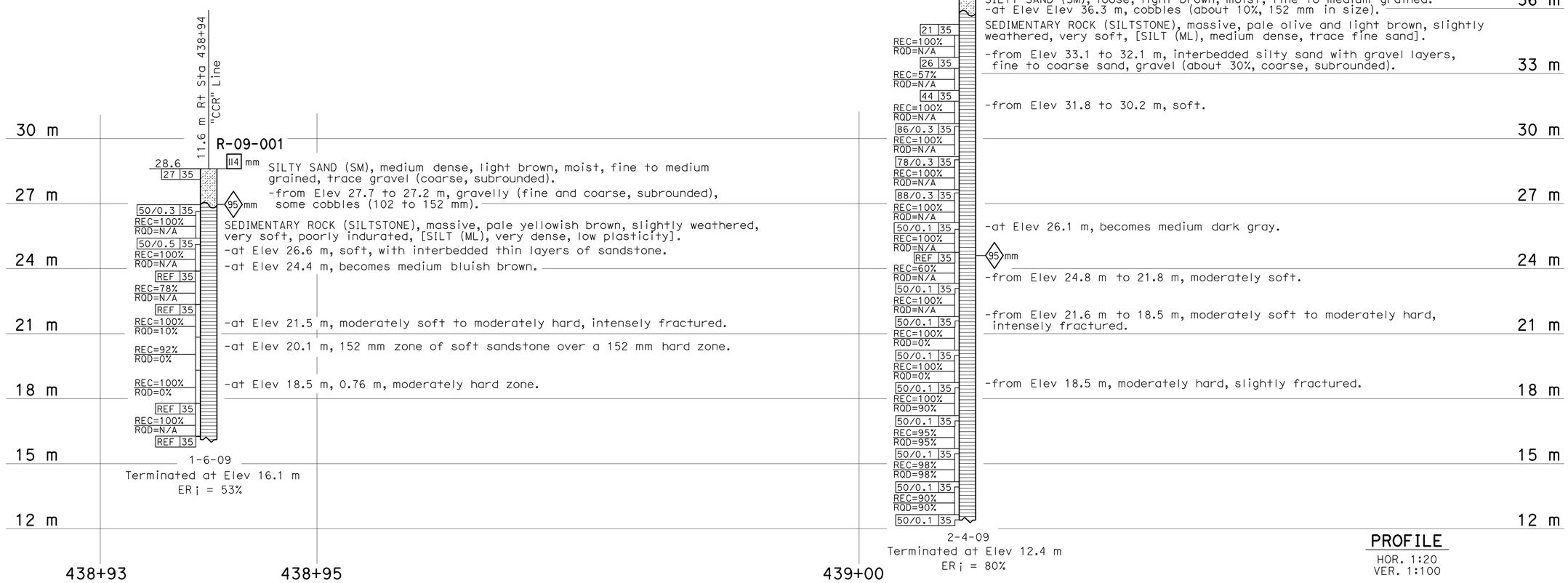

PROFILE
HOR. 1:20
VER. 1:100

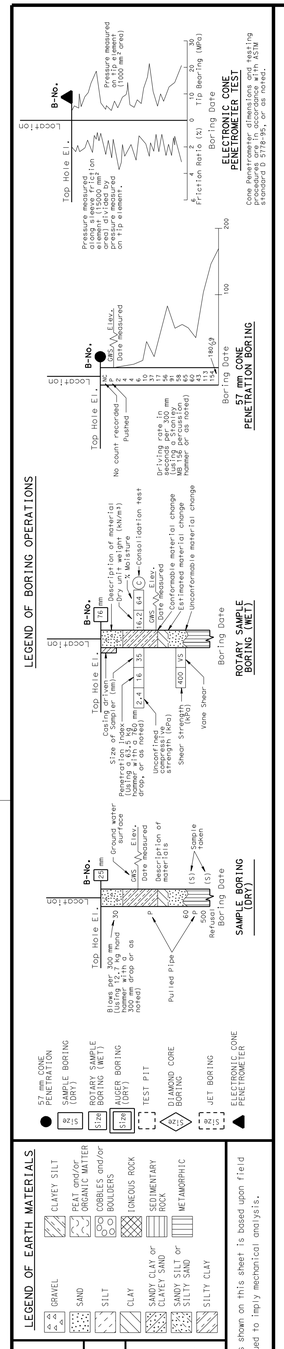

OGS CIVIL LOG OF TEST BORINGS SHEET (METRIC) (REV. 4/04)

Caltrans Metric

ENGINEERING SERVICES	GEOTECHNICAL SERVICES
DRAWN BY	I.G-Remmen, 3/09
CHECKED BY	

FIELD INVESTIGATION BY: F. De Haro

STATE OF CALIFORNIA DEPARTMENT OF TRANSPORTATION

DIVISION OF ENGINEERING SERVICES STRUCTURE DESIGN
DESIGN BRANCH

CU 11
EA 2T0401

BRIDGE NO. 57C-0786
KILOMETER POST

CARROLL CANYON ROAD BRIDGE
LOG OF TEST BORINGS 1 OF 7

ALL DIMENSIONS ARE IN METERS UNLESS OTHERWISE SHOWN

ORIGINAL SCALE IN MILLIMETERS FOR REDUCED PLANS 0 10 20 30 40 50 60 70 80 90 100

DISREGARD PRINTS BEARING EARLIER REVISION DATES

REVISION DATES (PRELIMINARY STAGE ONLY) 04-28-09 04-28-09

SHEET 68 OF 74

FILE => 57-c0786-u-lotb1.dgn

USERNAME => rrmikest DATE PLOTTED => 29-SEP-2010 TIME PLOTTED => 11:47

DIST	COUNTY	ROUTE	POST MILES TOTAL PROJECT	SHEET No	TOTAL SHEETS
11	SD	5,805	R49.9/R51.7, 42.6/46.5	742	886

Erich Neupert 4-23-09
PROFESSIONAL GEOLOGIST

9-27-10
PLANS APPROVAL DATE

PROFESSIONAL GEOLOGIST Erich Neupert No. 8137 Exp. 2-28-10 STATE OF CALIFORNIA

The State of California or its officers or agents shall not be responsible for the accuracy or completeness of electronic copies of this plan sheet.

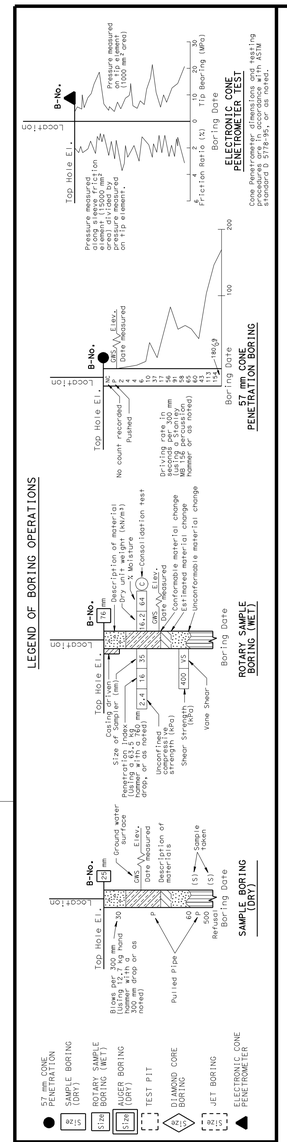

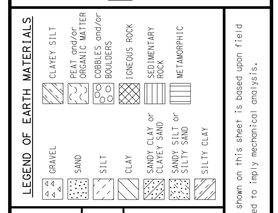

CONSISTENCY CLASSIFICATION FOR SOILS

According to the Standard Penetration Test

SPT N-Value (Blows/0.3m)	Granular	SPT N-Value (Blows/0.3m)	Cohesive
0-4	Very Loose	<2	Very Soft
5-10	Loose	2-4	Soft
11-30	Medium Dense	5-8	Firm
31-50	Dense	9-15	Stiff
>50	Very Dense	16-30	Very stiff
		>30	Hard

NOTE: Classification of earth material as shown on this sheet is based upon field inspection and is not to be construed to imply mechanical analysis.

OGS CIVIL LOG OF TEST BORINGS SHEET (METRIC) (REV. 4/04)

FOR PLAN VIEW, SEE "LOG OF TEST BORINGS" 1 OF 7

R-09-011

14.8 m Lt Sta 439+31.4 "CCR" Line

34.2 — 95 mm

33 m

97 | 35

SILTY SAND with GRAVEL (SM), very dense, reddish brown, moist, with about 20% fine to coarse gravel, very hard, subangular.

-at Elev 32.4 m, with little clay.

28 | 35

30 m

REC=86% RQD=N/A

74 | 35

SEDIMENTARY ROCK (SILTSTONE), massive, light gray to light olive brown, slightly weathered, very soft, moist, poorly indurated, [SILT (ML), very dense, trace of clay and fine sand, nonplastic].

REC=86% RQD=N/A

-at Elev 28.1 m, moderately soft.

74 | 35

27 m

REC=100% RQD=N/A

84/0.3 | 35

REC=86% RQD=46%

-at Elev 26.5 m, 518 mm thick, moderately weathered, moderately hard, moderately fractured zone.

26 | 35

24 m

REC=91% RQD=0%

-at Elev 24.8 m, with 75 mm very hard cobble.

105/0.3 | 35

REC=86% RQD=54%

-at Elev 24.2 m, dark gray, moderately hard to moderately soft, moderately fractured, wet.

58/0.2 | 35

21 m

REC=100% RQD=63%

REF | 35

REC=88% RQD=20%

-at Elev 20.7 m, 110 mm moderately hard zone.

91/0.3 | 35

18 m

REC=100% RQD=N/A

-at Elev 18.3 m, moderately soft, poorly indurated.

120/0.3 | 35

REC=100% RQD=N/A

15 m

REC=100% RQD=N/A

50/0.1 | 35

REC=100% RQD=N/A

12 m

REC=74% RQD=N/A

57/0.2 | 35

REC=68% RQD=N/A

9 m

REC=100% RQD=N/A

REF | 35

REC=89% RQD=0%

-at Elev 8.4 m, 250 mm thick, slightly weathered, hard to very hard zone.

-at Elev 7.1 m, moderately to intensely fractured.

6 m

REC=80% RQD=0%

-at Elev 6.0 m, 75 mm thick, hard to very hard zone.

50/0.1 | 35

REC=71% RQD=N/A

3 m

REC=80% RQD=N/A

50/0.1 | 35

REC=95% RQD=N/A

0 m

REC=70% RQD=N/A

REF | 35

REC=85% RQD=N/A

SEDIMENTARY ROCK (SANDSTONE), massive, dark gray, slightly weathered very soft, poorly indurated, friable, [Poorly graded SAND (SP), very dense, wet.]

-3 m

REC=80% RQD=N/A

-at Elev -2.5 m, 300 mm thick, hard to very hard zone.

REF | 35

REC=60% RQD=30%

-at Elev -5.1 m, becomes hard, moderately to intensely fractured.

-6 m

REC=90% RQD=44%

-at Elev -6.0 m, 175 mm thick, hard to very hard zone.

-at Elev -6.5 m, with about 5% coarse gravel, rounded, very hard.

-9 m

2-4-09
Terminated at Elev -6.4 m
ERi= 74%

R-09-002

4.8 m Lt Sta 439+93.6 "CCR" Line

28.2 — 114 mm

12 | 35

SILT with SAND (ML), medium dense, brown, moist, fine sand, trace clay.

95 mm

SILTY SAND (SM), medium dense, light brown, moist, fine-grained, trace gravel (coarse, subrounded). At Elev 26.8 m, trace cobbles (about 150 mm size).

39 | 35

SILT with SAND (ML), dense, light brown, moist, fine sand.

-at Elev 24.9 m, very dense.

90/0.3 | 35

REC=100% RQD=N/A

SEDIMENTARY ROCK (SILTSTONE), massive, yellowish brown, slightly weathered, soft to very soft, poorly indurated, [SILT (ML), very dense, trace clay and fine sand].

24 m

50/0.1 | 35

REC=100% RQD=N/A

-at Elev 23.5 m, becomes medium bluish gray.

-from Elev 23.1 to 21.6 m, color varies from yellowish brown to bluish gray.

50/0.1 | 35

REC=99% RQD=N/A

-at Elev 21.6 m, becomes bluish gray, moderately soft, poorly indurated, slightly fissile.

21 m

REF | 35

REC=83% RQD=N/A

REF | 35

REC=96% RQD=N/A

18 m

REF | 35

REC=83% RQD=N/A

-at Elev 16.5 m, slight increase in fine sand content.

REF | 35

REC=91% RQD=N/A

15 m

REF | 35

REC=89% RQD=N/A

-at Elev 13.0 m, moderately soft to soft, moderately to poorly indurated.

REF | 35

REC=68% RQD=N/A

12 m

REC=60% RQD=N/A

REF | 35

REC=100% RQD=N/A

9 m

-at Elev 8.7 m, moderately soft.

REF | 35

REC=89% RQD=N/A

REF | 35

REC=100% RQD=N/A

6 m

-from Elev 5.9 to 4.5 m, interbedded layers of sandstone about 6 to 51 mm thick.

-from Elev 4.5 to 2.5 m, sandstone layer, very soft.

REC=80% RQD=N/A

3 m

REF | 35

REC=90% RQD=N/A

-at Elev 2.5 m, 0.4 m siltstone layer, soft.

REC=85% RQD=N/A

0 m

REF | 35

REC=91% RQD=20%

-at Elev -0.2 m, 0.3 m very hard siltstone layer, moderately fractured.

REC=83% RQD=N/A

SEDIMENTARY ROCK (CONGLOMERATE), massive, light gray, slightly weathered, very soft, poorly indurated, [Well graded GRAVEL with SAND (GW), very dense, light gray, fine to coarse, subrounded gravels and cobbles; matrix consists of fine to coarse sand with silt, wet].

-3 m

REC=68% RQD=N/A

-from Elev -3.0 to -3.21 m, sandstone layer, very soft, few cobbles (about 102 to 127 mm).

REF | 35

REC=60% RQD=N/A

-at Elev -5.6 m, few cobbles (about 101 to 152 mm).

-6 m

REC=37% RQD=N/A

REC=97% RQD=N/A

-9 m

REF | 35

1-12-09
Terminated at Elev -8.8 m
ERi= 53%

439+25 439+75 440+25

PROFILE
HOR. 1:200
VER. 1:100

Caltrans Metric

ENGINEERING SERVICES	GEOTECHNICAL SERVICES
DRAWN BY	I.G-Remmen, 3/09
CHECKED BY	

FIELD INVESTIGATION BY: F. De Haro, TM Liao

STATE OF CALIFORNIA DEPARTMENT OF TRANSPORTATION

DIVISION OF ENGINEERING SERVICES STRUCTURE DESIGN DESIGN BRANCH

BRIDGE NO. 57C-0786 KILOMETER POST

CARROLL CANYON ROAD BRIDGE
LOG OF TEST BORINGS 2 OF 7

ALL DIMENSIONS ARE IN METERS UNLESS OTHERWISE SHOWN

ORIGINAL SCALE IN MILLIMETERS FOR REDUCED PLANS 0 10 20 30 40 50 60 70 80 90 100

CU 11
EA 2T0401

DISREGARD PRINTS BEARING EARLIER REVISION DATES

REVISION DATES (PRELIMINARY STAGE ONLY) 04-21-09 04-22-09 04-28-09

SHEET 69 OF 74

FILE => 57-c0786-u-lotb2.dgn

USERNAME => trmikest DATE PLOTTED => 29-SEP-2010 TIME PLOTTED => 11:47

DIST	COUNTY	ROUTE	POST MILES TOTAL PROJECT	SHEET No	TOTAL SHEETS
11	SD	5,805	R49.9/R51.7, 42.6/46.5	743	886

Erich Neupert 4-23-09
PROFESSIONAL GEOLOGIST

9-27-10
PLANS APPROVAL DATE

PROFESSIONAL GEOLOGIST Erich Neupert No. 8137 Exp. 2-28-10 STATE OF CALIFORNIA

The State of California or its officers or agents shall not be responsible for the accuracy or completeness of electronic copies of this plan sheet.

FOR PLAN VIEW, SEE
"LOG OF TEST BORINGS" 1 OF 7

PROFILE
HOR. 1:200
VER. 1:100

LEGEND OF BORING OPERATIONS

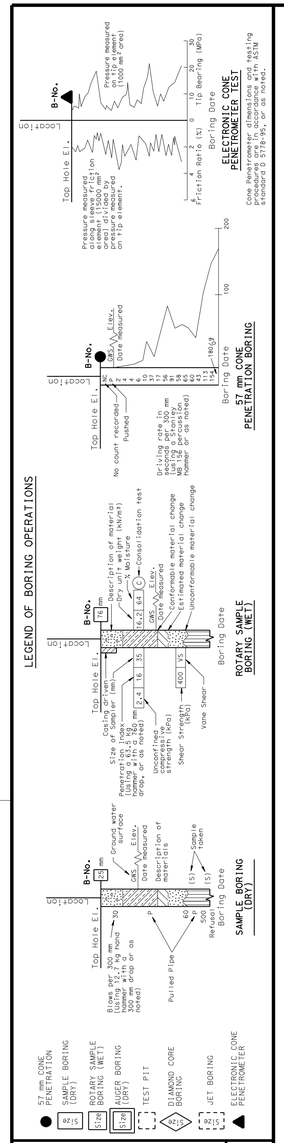

LEGEND OF EARTH MATERIALS

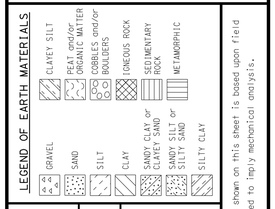

CONSISTENCY CLASSIFICATION FOR SOILS

According to the Standard Penetration Test

SPT N-Value (Blows/0.3m)	Granular	SPT N-Value (Blows/0.3m)	Cohesive
0-4	Very Loose	<2	Very Soft
5-10	Loose	2-4	Soft
11-30	Medium Dense	5-8	Firm
31-50	Dense	9-15	Stiff
>50	Very Dense	16-30	Very stiff
		>30	Hard

NOTE: Classification of earth material as shown on this sheet is based upon field inspection and is not to be construed to imply mechanical analysis.

OGS CIVIL LOG OF TEST BORINGS SHEET (METRIC) (REV. 4/04)

Caltrans Metric

ENGINEERING SERVICES	GEOTECHNICAL SERVICES
DRAWN BY	I.G-Remmen, 3/09
CHECKED BY	

FIELD INVESTIGATION BY: J. Klamecki

STATE OF CALIFORNIA
DEPARTMENT OF TRANSPORTATION

DIVISION OF ENGINEERING SERVICES
STRUCTURE DESIGN
DESIGN BRANCH

BRIDGE NO. 57C-0786
KILOMETER POST

CARROLL CANYON ROAD BRIDGE
LOG OF TEST BORINGS 3 OF 7

ALL DIMENSIONS ARE IN METERS UNLESS OTHERWISE SHOWN

ORIGINAL SCALE IN MILLIMETERS FOR REDUCED PLANS 0 10 20 30 40 50 60 70 80 90 100

CU 11
EA 2T0401

DISREGARD PRINTS BEARING EARLIER REVISION DATES

REVISION DATES (PRELIMINARY STAGE ONLY) 04-24-09 04-26-09 04-28-09

SHEET 70 OF 74

FILE => 57-c0786-u-lotb3.dgn

USERNAME => trmikesl DATE PLOTTED => 29-SEP-2010 TIME PLOTTED => 11:47

DIST	COUNTY	ROUTE	POST MILES TOTAL PROJECT	SHEET No	TOTAL SHEETS
11	SD	5,805	R49.9/R51.7, 42.6/46.5	744	886

Erich Neupert 4-23-09
PROFESSIONAL GEOLOGIST

9-27-10
PLANS APPROVAL DATE

PROFESSIONAL GEOLOGIST Erich Neupert No. 8137 Exp. 2-28-10 STATE OF CALIFORNIA

The State of California or its officers or agents shall not be responsible for the accuracy or completeness of electronic copies of this plan sheet.

FOR PLAN VIEW, SEE
"LOG OF TEST BORINGS" 1 OF 7

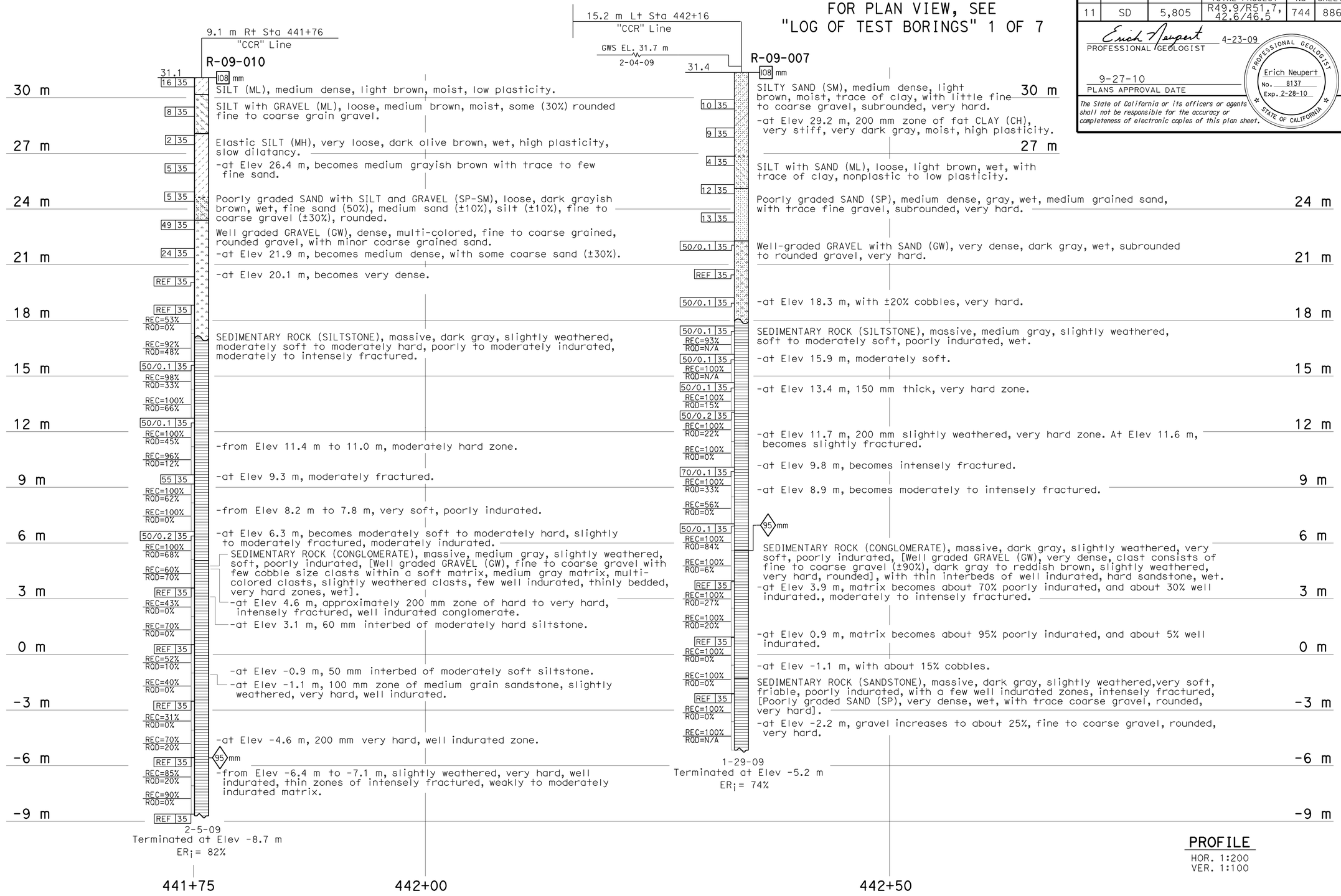

PROFILE
HOR. 1:200
VER. 1:100

LEGEND OF BORING OPERATIONS

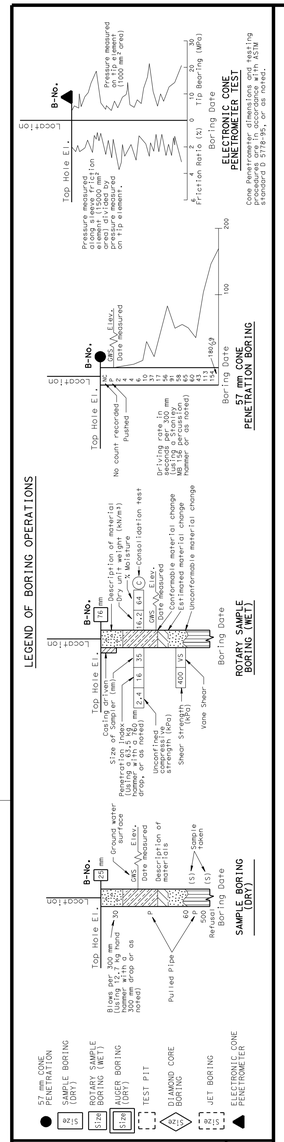

LEGEND OF EARTH MATERIALS

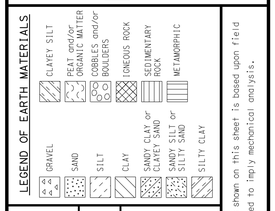

CONSISTENCY CLASSIFICATION FOR SOILS

According to the Standard Penetration Test

SPT N-Value (Blows/0.3m)	Granular	SPT N-Value (Blows/0.3m)	Cohesive
0-4	Very Loose	<2	Very Soft
5-10	Loose	2-4	Soft
11-30	Medium Dense	5-8	Firm
31-50	Dense	9-15	Stiff
>50	Very Dense	16-30	Very stiff
		>30	Hard

NOTE: Classification of earth material as shown on this sheet is based upon field inspection and is not to be construed to imply mechanical analysis.

OGS CIVIL LOG OF TEST BORINGS SHEET (METRIC) (REV. 4/04)

Caltrans Metric

ENGINEERING SERVICES	GEOTECHNICAL SERVICES
DRAWN BY	I.G-Remmen, 3/09
CHECKED BY	

FIELD INVESTIGATION BY: J. Klamecki, TM Liao

STATE OF CALIFORNIA DEPARTMENT OF TRANSPORTATION

DIVISION OF ENGINEERING SERVICES STRUCTURE DESIGN
DESIGN BRANCH

BRIDGE NO. 57C-0786
KILOMETER POST

CARROLL CANYON ROAD BRIDGE
LOG OF TEST BORINGS 4 OF 7

ALL DIMENSIONS ARE IN METERS UNLESS OTHERWISE SHOWN

ORIGINAL SCALE IN MILLIMETERS FOR REDUCED PLANS 0 10 20 30 40 50 60 70 80 90 100

CU 11
EA 2T0401

DISREGARD PRINTS BEARING EARLIER REVISION DATES

REVISION DATES (PRELIMINARY STAGE ONLY) 04-21-09 04-22-09 04-23-09

SHEET 71 OF 74

FILE => 57-c0786-u-lotb4.dgn

USERNAME => trmikes1 DATE PLOTTED => 29-SEP-2010 TIME PLOTTED => 11:48

DIST	COUNTY	ROUTE	POST MILES TOTAL PROJECT	SHEET No	TOTAL SHEETS
11	SD	5,805	R49.9/R51.7, 42.6/46.5	745	886

Erich Neupert 4-23-09
PROFESSIONAL GEOLOGIST

9-27-10
PLANS APPROVAL DATE

PROFESSIONAL GEOLOGIST Erich Neupert No. 8137 Exp. 2-28-10 STATE OF CALIFORNIA

The State of California or its officers or agents shall not be responsible for the accuracy or completeness of electronic copies of this plan sheet.

FOR PLAN VIEW, SEE
"LOG OF TEST BORINGS" 1 OF 10

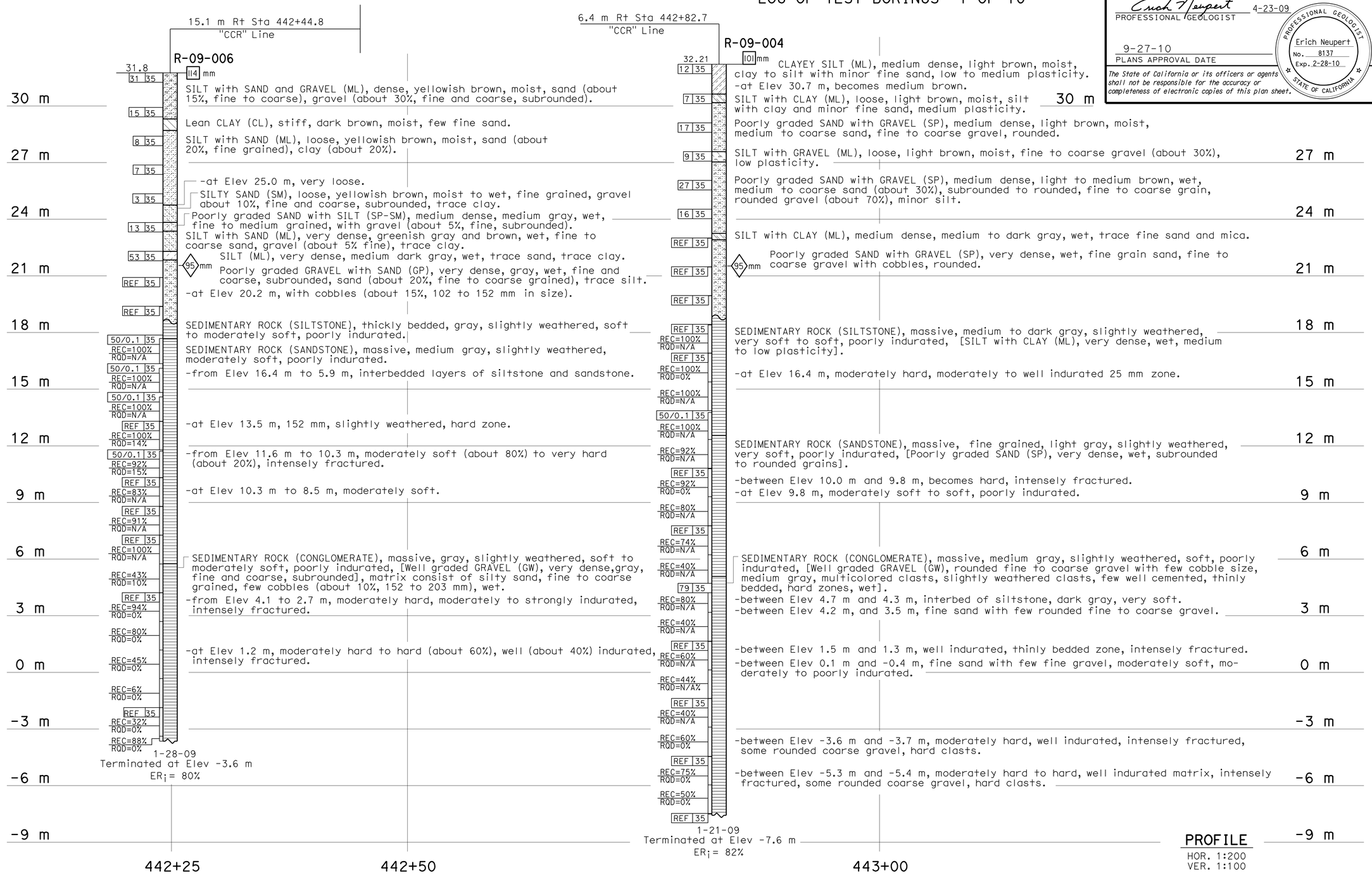

LEGEND OF BORING OPERATIONS

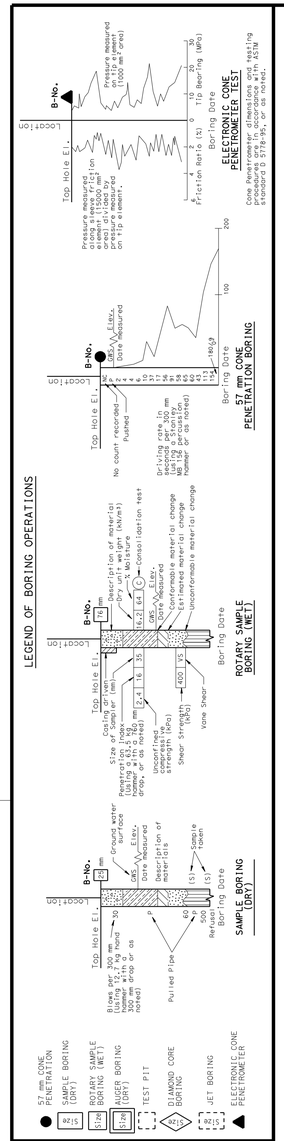

LEGEND OF EARTH MATERIALS

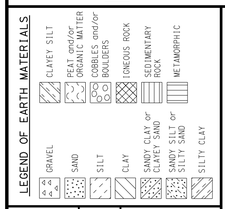

CONSISTENCY CLASSIFICATION FOR SOILS

According to the Standard Penetration Test

SPT N-Value (Blows/0.3m)	Granular	SPT N-Value (Blows/0.3m)	Cohesive
0-4	Very Loose	<2	Very Soft
5-10	Loose	2-4	Soft
11-30	Medium Dense	5-8	Firm
31-50	Dense	9-15	Stiff
>50	Very Dense	16-30	Very stiff
		>30	Hard

NOTE: Classification of earth material as shown on this sheet is based upon field inspection and is not to be construed to imply mechanical analysis.

OGS CIVIL LOG OF TEST BORINGS SHEET (METRIC) (REV. 4/04)

Caltrans Metric

ENGINEERING SERVICES	GEOTECHNICAL SERVICES
DRAWN BY	I.G-Remmen, 3/09
CHECKED BY	

FIELD INVESTIGATION BY:
F. De Haro, J. Klamecki

STATE OF CALIFORNIA
DEPARTMENT OF TRANSPORTATION

DIVISION OF ENGINEERING SERVICES
STRUCTURE DESIGN
DESIGN BRANCH

BRIDGE NO. 57C-0786
KILOMETER POST

CARROLL CANYON ROAD BRIDGE
LOG OF TEST BORINGS 5 OF 7

ALL DIMENSIONS ARE IN METERS UNLESS OTHERWISE SHOWN

ORIGINAL SCALE IN MILLIMETERS FOR REDUCED PLANS 0 10 20 30 40 50 60 70 80 90 100

CU 11
EA 2T0401

DISREGARD PRINTS BEARING EARLIER REVISION DATES

REVISION DATES (PRELIMINARY STAGE ONLY) 04-22-09 04-28-09

SHEET 72 OF 74

FILE => 57-c0786-u-lotb5.dgn

USERNAME => trmikest DATE PLOTTED => 29-SEP-2010 TIME PLOTTED => 11:48

DIST	COUNTY	ROUTE	POST MILES TOTAL PROJECT	SHEET No	TOTAL SHEETS
11	SD	5,805	R49.9/R51.7, 42.6/46.5	746	886

Erich Neupert 4-23-09
PROFESSIONAL GEOLOGIST

9-27-10
PLANS APPROVAL DATE

The State of California or its officers or agents shall not be responsible for the accuracy or completeness of electronic copies of this plan sheet.

PROFESSIONAL GEOLOGIST Erich Neupert No. 8137 Exp. 2-28-10 STATE OF CALIFORNIA

R-09-003

GWS EL. 32.3 m
1-28-09

1.8 m Rt Sta 443+21.8
"CCR" Line

31.8

114 mm

SILTY SAND (SM), loose, light brown, fine to medium grained, moist.

-from Elev 29.5 m to 28.5 m, medium dense, gravelly (fine and coarse, subrounded).
-at Elev 28.5 m, no gravel, loose.

-at Elev 26.9 m, becomes yellowish brown, fine grained.

95 mm

Poorly graded SAND with SILT and GRAVEL (SP-SM), loose to medium dense, yellowish brown, wet, fine to coarse grained, silt (about 10%), gravel (about 30%, fine and coarse, subrounded).

-few cobbles (±102 to 152 mm size), at Elev 24.8 m.

SILTY SAND (SM), very dense, light gray, wet, fine to medium grained.

Poorly graded SAND with SILT and GRAVEL (SP-SM), very dense, gray, wet, fine to coarse sand, about 10% silt, gravel (about 30%, fine and coarse, subrounded), trace cobbles (about 102 to 152 mm).

Poorly graded GRAVEL with SAND (GP), very dense, gray, fine and coarse, wet, sand (about 30%, fine to coarse grained), cobbles (about 10%, 102 to 152 mm).

SEDIMENTARY ROCK (SILTSTONE), thickly bedded, medium dark gray, slightly weathered, soft, poorly indurated, thin layered.

-from Elev 16.5 m to 15.0 m, interbedded with layers of sandstone, soft.

SEDIMENTARY ROCK (SANDSTONE), massive, medium gray, slightly weathered, soft, poorly indurated.

-from Elev 13.8 m to 12.3 m, moderately hard, intensely to moderately fractured.
-at Elev 12.3 m, 305 mm very hard zone.
-at Elev 12.0 m, becomes very soft, poorly indurated.

-at Elev 7.9 m, 229 mm, very hard zone, intensely fractured.

SEDIMENTARY ROCK (CONGLOMERATE), massive, gray, slightly weathered, soft, poorly indurated, [Well graded GRAVEL with SAND (GW), very dense, gray, fine and coarse, subrounded]. Matrix consists of silty sand, fine to coarse, wet.

-at Elev 5.7 m, 229 mm, well indurated, intensely fractured zone, with cobbles (about 102 to 152 mm in size).

-from 2.8 m to 1.3 m, isolated moderately hard, moderately indurated zones, intensely fractured, with cobbles (about 20%, 102 to 152 mm in size).
-from 1.3 m to -6.1 m, with some cobbles (about 40%, 102 to 152 mm).

-at Elev -1.4 m, 229 mm cobble.

-at Elev -2.0 m, moderately hard to moderately soft, intensely fractured.

-from Elev -4.6 m to -6.1 m, isolated will indurated, moderately hard to hard zones, intensely fractured.

SEDIMENTARY ROCK (SANDSTONE), thickly bedded, medium dark gray, slightly weathered, very soft to soft, poorly indurated, [SILTY SAND (SM), very dense, fine grained].

-at Elev -9.2 m, 127 mm cobble.

SEDIMENTARY ROCK (CONGLOMERATE), thickly bedded, gray, slightly weathered, soft, poorly indurated, [Well graded GRAVEL with SAND (GW), very dense, gray, fine and coarse, subrounded]. Matrix consists of silty sand, fine to coarse.

1-21-09
Terminate at Elev -11.4 m
ER¡= 80%

Elev	Blows	REC	RQD
	5 35		
	15 35		
	5 35		
	7 35		
	23 35		
	50/0.1 35		
	97/0.2 35		
	REF 35		
	REF 35		
	REC=63% RQD=N/A		
	50/0.1 35		
	REC=48% RQD=N/A		
	REF 35		
	REC=85% RQD=N/A		
	50/0.1 35		
	REC=42% RQD=N/A		
	50/0.1 35		
	REC=17% RQD=0%		
	REC=0% RQD=N/A		
	REC=93% RQD=N/A		
	50/0.1 35		
	REC=92% RQD=0%		
	50/0.1 35		
	REC=46% RQD=N/A		
	REF 35		
	REC=44% RQD=0%		
	REF 35		
	REC=20% RQD=N/A		
	REC=40% RQD=0%		
	REC=40% RQD=N/A		
	REF 35		
	REC=27% RQD=15%		
	REF 35		
	REC=37% RQD=0%		
	REC=43% RQD=0%		
	REC=50% RQD=0%		
	REF 35		
	REC=65% RQD=N/A		
	REC=88% RQD=N/A		
	REF 35		
	REC=42% RQD=N/A		
	REC=69% RQD=N/A		
	REF 35		

R-09-009

2.1 m Rt Sta 443+77.9
"CCR" Line

31.7

95 mm

GWS EL. 31.1 m
2-04-09

SILTY SAND with GRAVEL (SM), medium dense, light brown, moist, fine to coarse grained, gravel (about 20%), mostly coarse, subangular.

SILTY SAND (SM), very dense, yellowish brown, moist, fine to medium grained.

SILT (ML), very dense, grayish brown, wet, trace clay.

Poorly graded GRAVEL with SAND (GP), very dense, gray, wet, coarse, subrounded, fine to coarse sand, silt (about 5%).

SEDIMENTARY ROCK (SANDSTONE), medium dark gray, slightly weathered, moderately soft, poorly indurated.

-from Elev 23.5 m to 22.9 m, siltstone layer, slightly weathered, moderately soft to moderately hard, intensely fractured.

-at Elev 19.1 m, moderately soft to moderately hard, poorly to moderately well indurated, intensely fractured.

SEDIMENTARY ROCK (CONGLOMERATE), thickly bedded, gray, slightly weathered, soft, poorly indurated, [Well graded GRAVEL with SAND (GW), very dense, gray, moist, fine and coarse, subrounded, sand (about 15%, fine and coarse), silt (about 5%), cobbles (about 10%, 102-152 mm)].

SEDIMENTARY ROCK (SANDSTONE), thickly bedded, medium dark gray, slightly weathered, very soft poorly indurated.

-at Elev 11.7 m, trace gravel (coarse, subrounded).

1-29-09
Terminated at Elev 11.7 m
ER¡= 80%

Elev	Blows	REC	RQD
	23 35		
	23 35		
	42 35		
	64 35		
	REF 35		
	REC=71% RQD=N/A		
	50/0.1 35		
	REC=100% RQD=0%		
	50/0.1 35		
	REC=100% RQD=N/A		
	50/0.1 35		
	REC=94% RQD=0%		
	50/0.1 35		
	REC=93% RQD=0%		
	50/0.1 35		
	REC=98% RQD=0%		
	50/0.1 35		
	REC=48% RQD=N/A		
	REF 35		
	REC=86% RQD=N/A		
	50/0.1 35		
	REC=19% RQD=N/A		
	REF 35		

FOR PLAN VIEW, SEE
"LOG OF TEST BORINGS" 1 OF 7

30 m, 27 m, 24 m, 21 m, 18 m, 15 m, 12 m, 9 m, 6 m, 3 m, 0 m, -3 m, -6 m, -9 m, -12 m

443+20 443+50 443+75 444+00

PROFILE
HOR. 1:200
VER. 1:100

LEGEND OF BORING OPERATIONS

ELECTRONIC CONE PENETROMETER TEST — Cone Penetrometer dimensions and testing conforms to Geotechnical Test Method California 376 standard D 5778-95, or as noted.

57 mm CONE PENETRATION BORING

ROTARY SAMPLE BORING (WET)

SAMPLE BORING (DRY)

LEGEND OF EARTH MATERIALS: GRAVEL, SAND, SILT, CLAY, SANDY CLAY or CLAYEY SAND, SANDY SILT or SILTY SAND, SILTY CLAY, CLAYEY SILT, PEAT and/or ORGANIC MATTER, COBBLES and/or BOULDERS, IGNEOUS ROCK, SEDIMENTARY ROCK, METAMORPHIC

CONSISTENCY CLASSIFICATION FOR SOILS — According to the Standard Penetration Test

SPT N-Value (Blows/0.3m)	Granular	SPT N-Value (Blows/0.3m)	Cohesive
0-4	Very Loose	<2	Very Soft
5-10	Loose	2-4	Soft
11-30	Medium Dense	5-8	Firm
31-50	Dense	9-15	Stiff
>50	Very Dense	16-30	Very stiff
		>30	Hard

NOTE: Classification of earth material as shown on this sheet is based upon field inspection and is not to be construed to imply mechanical analysis.

OGS CIVIL LOG OF TEST BORINGS SHEET (METRIC) (REV. 4/04)

Caltrans Metric

ENGINEERING SERVICES	GEOTECHNICAL SERVICES
DRAWN BY	I.G-Remmen, 3/09
CHECKED BY	

FIELD INVESTIGATION BY: F. De Haro

STATE OF CALIFORNIA DEPARTMENT OF TRANSPORTATION

DIVISION OF ENGINEERING SERVICES STRUCTURE DESIGN — DESIGN BRANCH

BRIDGE NO. 57C-0786
KILOMETER POST

CARROLL CANYON ROAD BRIDGE
LOG OF TEST BORINGS 6 OF 7

ALL DIMENSIONS ARE IN METERS UNLESS OTHERWISE SHOWN

ORIGINAL SCALE IN MILLIMETERS FOR REDUCED PLANS 0 10 20 30 40 50 60 70 80 90 100

CU 11
EA 2T0401

DISREGARD PRINTS BEARING EARLIER REVISION DATES

REVISION DATES (PRELIMINARY STAGE ONLY): 04-22-09 04-28-09

SHEET 73 OF 74

FILE => 57-c0786-u-lotb6.dgn

USERNAME => trmikest DATE PLOTTED => 29-SEP-2010 TIME PLOTTED => 11:48

DIST	COUNTY	ROUTE	POST MILES TOTAL PROJECT	SHEET No	TOTAL SHEETS
11	SD	5,805	R49.9/R51.7, 42.6/46.5	747	886

Erich Neupert 4-23-09
PROFESSIONAL GEOLOGIST

9-27-10
PLANS APPROVAL DATE

PROFESSIONAL GEOLOGIST Erich Neupert No. 8137 Exp. 2-28-10 STATE OF CALIFORNIA

The State of California or its officers or agents shall not be responsible for the accuracy or completeness of electronic copies of this plan sheet.

WEATHERING DESCRIPTORS

Modified from United States Bureau of Reclamation, Engineering Geology Field Manual.

Descriptors		Diagnostic features					General characteristics § (strength, excavation, etc.)
		Chemical weathering-Discoloration and/or oxidation		Mechanical weathering-Grain boundary conditions (disaggregation) primarily for granitics and some coarse-grained sediments	Texture and solutioning		
Alphanumeric descriptor	Descriptive term	Body of rock	Fracture surfaces †		Texture	Solutioning	
W1	Fresh	No discoloration, not oxidized.	No discoloration or oxidation.	No separation, intact (tight).	No change.	No solutioning.	Hammer rings when crystalline rocks are struck. Almost always rock excavation except for naturally weak or weakly cemented rocks such as siltstones or shales.
W2	Slightly weathered to fresh °						
W3	Slightly weathered	Discoloration or oxidation is limited to surface of, or short distance from, fractures; some feldspar crystals are dull.	Minor to complete discoloration or oxidation of most surfaces.	No visible separation, intact (tight).	Preserved.	Minor leaching of some soluble minerals may be noted.	Hammer rings when crystalline rocks are struck. Body of rock not weakened. With few exceptions, such as siltstones or shales, classified as rock excavation.
W4	Moderately to slightly weathered °						
W5	Moderately weathered	Discoloration or oxidation extends from fractures usually throughout; Fe-Mg minerals are "rusty," feldspar crystals are "cloudy."	All fracture surfaces are discolored or oxidized.	Partial separation of boundaries visible.	Generally preserved.	Soluble minerals may be mostly leached.	Hammer does not ring when rock is struck. Body of rock is slightly weakened. Depending on fracturing, usually is rock excavation except in naturally weak rocks such as siltstones or shales.
W6	Intensely to moderately weathered°						
W7	Intensely weathered	Discoloration or oxidation throughout; all feldspars and Fe-Mg minerals are altered to clay to some extent; or chemical alteration produces in-situ disaggregation, see grain boundary conditions.	All fracture surfaces are discolored or oxidized, surfaces friable.	Partial separation, rock is friable; in semiarid conditions granitics are disaggregated.	Texture altered by chemical disintegration (hydration, argillation).	Leaching of soluble minerals may be complete.	Dull sound when struck with hammer, usually can be broken with moderate to heavy manual pressure or by light hammer blow without reference to planes of weakness such as incipient or hairline fractures, or veinlets. Rock is significantly weakened. Usually common excavation.
W8	Very intensely weathered						
W9	Decomposed	Discolored or oxidized throughout, but resistant minerals such as quartz may be unaltered; all feldspars and Fe-Mg minerals are completely altered to clay.		Complete separation of grain boundaries (disaggregated).	Resembles a soil, partial or complete remnant rock structure may be preserved; leaching of soluble minerals usually complete.		Can be granulated by hand. Always common excavation. Resistant minerals such as quartz may be present as "stringers" or "dikes."

Note: This chart and its horizontal categories are more readily applied to rocks with feldspars and mafic minerals. Weathering in various sedimentary rocks, particularly limestones and poorly indurated sediments, will not always fit the categories established. This chart and weathering categories may have to be modified for particular site conditions or alteration such as hydrothermal effects; however, the basic framework and similar descriptors are to be used.

° Combination descriptors are permissible where equal distribution of both weathering characteristics are present over significant intervals or where characteristics present are "in between" the diagnostic feature. However, dual descriptors should not be used where significant, identifiable zones can be delineated. When given as a range only two adjacent terms may be combined. "Decomposed to slightly weathered," or "moderately weathered to fresh" are not acceptable.

† Does not include directional weathering along shears or faults and their associated features. For example, a shear zone that carried weathering to great depths into a fresh rock mass would not require the rock mass to be classified as weathered.

§ These are generalizations and should not be used as diagnostic features for weathering or excavation classification. These characteristics vary to a large extent based on naturally weak materials or cementation and type of excavation

ROCK QUALITY DESIGNATION (RQD) & PERCENT RECOVERY (REC) LOGGING

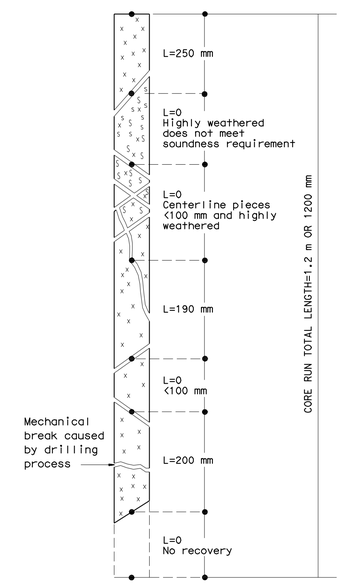

RQD (ROCK QUALITY DESIGNATION)	DESCRIPTION OF ROCK QUALITY
0 - 25%	VERY POOR
25 - 50%	POOR
50 - 75%	FAIR
75 - 90%	GOOD
90 - 100%	EXCELLENT

REC = Percent Core Recovery

$$REC = \frac{\sum \text{Length of all core pieces}}{\text{Total core run length}}$$

$$RQD = \frac{\sum \text{Length of sound core pieces} \geq 100 \text{ mm}}{\text{Total core run length}}$$

$$RQD = \frac{250+190+200}{1200} \times 100\%$$

RQD = 53% (fair)

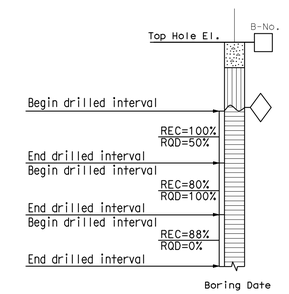

(No Scale)
After Deere & Deere, 1989

FRACTURE DENSITY

Modified from United States Bureau of Reclamation, Engineering Geology Field Manual.

FRACTURE DENSITY- Based on the spacing of all natural fractures in an exposure or core recovery lengths in boreholes; excludes mechanical breaks, shears, and shear zones; however, shear-disturbed zones (fracturing outside the shear) are included. Descriptors for fracture density apply to all rock exposures such as tunnel walls, dozer trenches, outcrops, or foundation cut slopes and inverts, as well as boreholes. Descriptive criteria presented below are based on borehole cores where lengths are measured along the core axis, for other exposures the criteria is distance measured between fractures (size of blocks).

UNFRACTURED (FD0): No fractures.

VERY SLIGHTLY FRACTURED (FD1): Core recovered mostly in lengths greater than 1 m.

SLIGHTLY TO VERY SLIGHTLY FRACTURED (FD2)*

SLIGHTLY FRACTURED (FD3): Core recovered mostly in lengths from 300 to 1000 mm, with few scattered lengths less than 300 mm or greater than 1000 mm.

MODERATELY TO SLIGHTLY FRACTURED (FD4)*

MODERATELY FRACTURED (FD5): Core recovered mostly in 100 to 300 mm lengths with most lengths about 200 mm.

INTENSELY TO MODERATELY FRACTURED (FD6)*

INTENSELY FRACTURED (FD7): Lengths average from 30 to 100 mm with scattered fragmented intervals. Core recovered mostly in lengths less than 100 mm.

VERY INTENSELY TO INTENSELY FRACTURED (FD8)*

VERY INTENSELY FRACTURED (FD9): Core recovered mostly as chips and fragments with a few scattered short core lengths.

* Combinations of fracture densities (e.g. very intensely to intensely fractured, or moderately to slightly fractured) are used where equal distribution of both fracture density characteristics are present over a significant interval or exposure, or where characteristics are "in between" the descriptor definitions.

ROCK HARDNESS DESCRIPTORS

Alphanumeric Descriptor	Descriptor	Criteria
H1	Extremely hard	Core, fragment, or exposure cannot be scratched with knife or sharp pick; can only be chipped with repeated heavy hammer blows.
H2	Very hard	Cannot be scratched with knife of sharp pick. Core or fragment breaks with repeated heavy hammer blows.
H3	Hard	Can be scratched with knife or sharp pick with difficulty (heavy pressure). Heavy hammer blow required to break specimen.
H4	Moderately hard	Can be scratched with knife or sharp pick with light or moderate pressure. Core or fragment breaks with moderate hammer blow.
H5	Moderately soft	Can be grooved 2 mm deep by knife or sharp pick with moderate or heavy pressure. Core or fragment breaks with light hammer blow or heavy manual pressure.
H6	Soft	Can be grooved or gouged easily by knife or sharp pick with light pressure, can be scratched with fingernail. Breaks with light to moderate manual pressure.
H7	Very soft	Can be readily indented, grooved or gouged with fingernail, or carved with a knife. Breaks with light manual pressure.

Any bedrock unit softer than H7, very soft, is to be described using ASTM D-2488 consistency descriptors.

Note: Although "sharp pick" is included in these definitions, descriptions of ability to be scratched, grooved or gouged by a knife is the preferred criteria.

Modified from United States Bureau of Reclamation, Engineering Geology Field Manual.

BEDDING, FOLIATION, OR FLOW TEXTURE DESCRIPTORS

Descriptors	Thickness / Spacing
Massive	Greater than 3 m
Very thickly (bedded, foliated, or banded)	1 to 3 m
Thickly	300 mm to 1 m
Moderately	100 to 300 mm
Thinly	30 to 100 mm
Very thinly	10 to 30 mm
Laminated (intensely foliated or banded)	Less than 10 mm

Modified from United States Bureau of Reclamation, Engineering Geology Field Manual.

Caltrans Metric

ENGINEERING SERVICES	GEOTECHNICAL SERVICES
PREPARED BY	I. G-Remmen
CHECKED BY	

OGS CIVIL LOG OF TEST BORINGS SHEET (METRIC) (REV. 8/05)

ORIGINAL SCALE IN MILLIMETERS FOR REDUCED PLANS 0 10 20 30 40 50 60 70 80 90 100

STATE OF CALIFORNIA
DEPARTMENT OF TRANSPORTATION

DIVISION OF ENGINEERING SERVICES
STRUCTURE DESIGN
DESIGN BRANCH

CU 11
EA 2T0401

BRIDGE NO. 57C-0786
KILOMETER POST

CARROLL CANYON ROAD BRIDGE
LOG OF TEST BORINGS 7 OF 7

DISREGARD PRINTS BEARING EARLIER REVISION DATES → 04-28-09

REVISION DATES

SHEET 74 OF 74

FILE => 57-c0786-u-lotb7.dgn

USERNAME => trmikest DATE PLOTTED => 29-SEP-2010 TIME PLOTTED => 11:49

DIST	COUNTY	ROUTE	KILOMETER POST TOTAL PROJECT	SHEET No	TOTAL SHEETS
11	SD	5,805	R49.9/R51.7, 42.6/46.5	748	886

REGISTERED CIVIL ENGINEER 4-28-09 DATE

9-27-10
PLANS APPROVAL DATE

The State of California or its officers or agents shall not be responsible for the accuracy or completeness of electronic copies of this plan sheet.

REGISTERED PROFESSIONAL ENGINEER James L. Rucker No. 47796 Exp. 12-31-09 CIVIL STATE OF CALIFORNIA

SANDAG
401 B STREET,
SAN DIEGO, CA 92101

T.Y. LIN INTERNATIONAL
5030 CAMINO DE LA SIESTA, SUITE 204,
SAN DIEGO, CA 92108

Caltrans Metric

PROFILE GRADE

No Scale

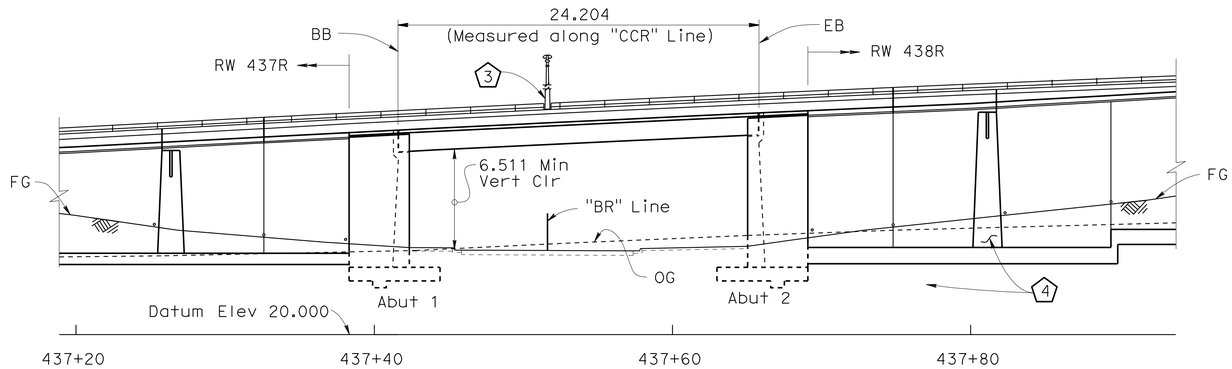

DEVELOPED ELEVATION

1:200

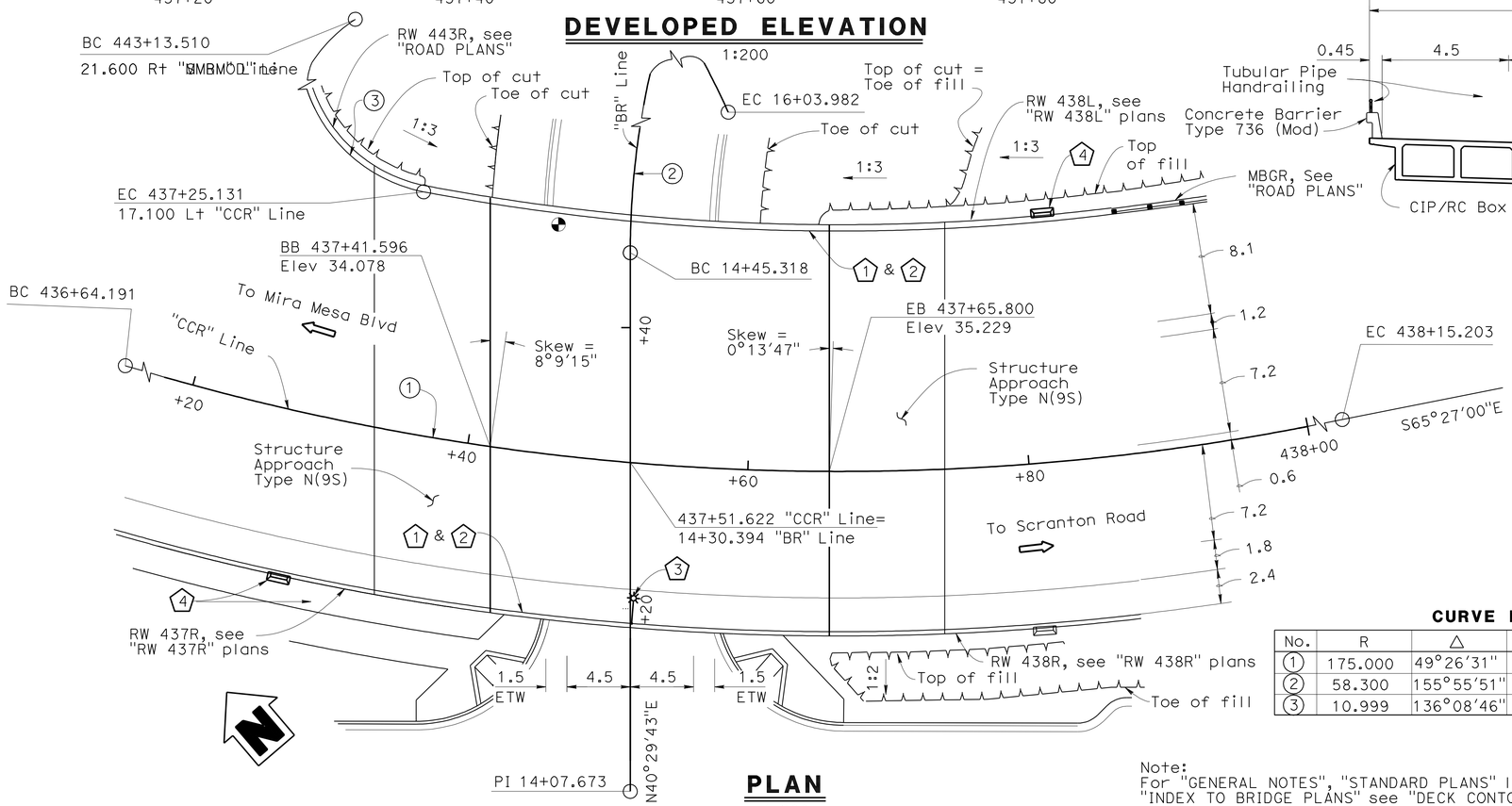

PLAN

1:200

LEGEND

- (A) 1-450 mm ø Future Utility Opening
- (B) 2-Future Utility Conduits (75 mm ø each) to replace future utility conduits shown in Standard Plans
- (C) 1-NPS 3 Water Supply Line (Bridge)
- (D) 1-50 mm ø Electrical (Lighting)
- (E) 1-38 mm ø CNC Conduit, see "ROAD PLANS"
- (1) Paint "BUSINESS ACCESS RD UC"
- (2) Paint Bridge No. 57C0787
- (3) Electrolier, See "ROAD PLANS"
- (4) Pilaster, See "RW PLANS"
- Indicates point of minimum vertical clearance
- Indicates direction of traffic

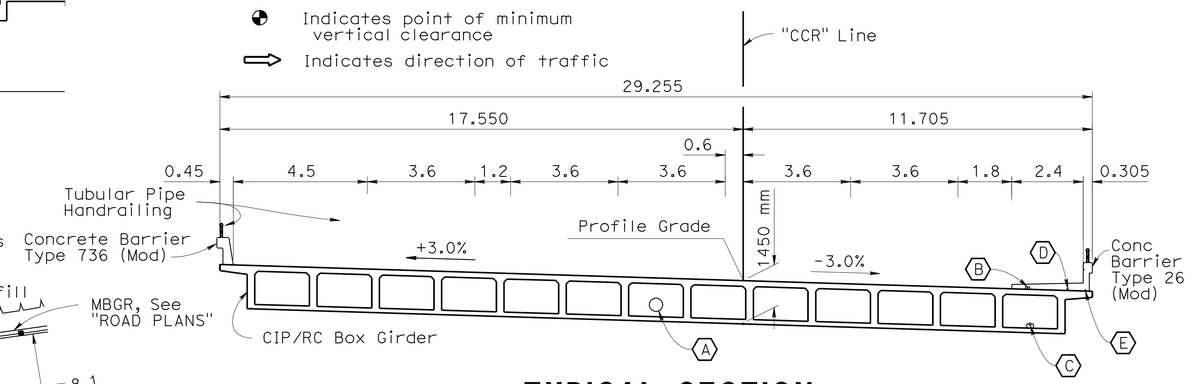

TYPICAL SECTION

1:100

QUANTITIES

STRUCTURE EXCAVATION (BRIDGE)	2035	m3
STRUCTURE BACKFILL (BRIDGE)	2650	m3
STRUCTURAL CONCRETE, BRIDGE FOOTING	360	m3
STRUCTURAL CONCRETE, BRIDGE	840	m3
STRUCTURAL CONCRETE, APPROACH SLAB (TYPE N)	160	m3
ARCHITECTURAL TREATMENT (RANDOM FLUTE TEXTURE)	410	m2
JOINT SEAL (MR 50 MM)	59	m
BAR REINFORCING STEEL (BRIDGE)	140 700	kg
WELDED STEEL PIPE CASING (BRIDGE)	24	m
TUBULAR PIPE HANDRAILING	84	m
CONCRETE BARRIER (TYPE 26 MODIFIED)	42	m
CONCRETE BARRIER (TYPE 736 MODIFIED)	42	m

CURVE DATA

No.	R	Δ	T	L
1	175.000	49°26'31"	80.569	151.012
2	58.300	155°55'51"	273.468	158.664
3	10.999	136°08'46"	27.324	23.138

Note:
For "GENERAL NOTES", "STANDARD PLANS" list and "INDEX TO BRIDGE PLANS" see "DECK CONTOURS" sheet.

ALL DIMENSIONS ARE IN METERS UNLESS OTHERWISE SHOWN

CHUNG-YUAN WEN	DESIGN	BY Arash Monsefan	CHECKED Roya Golchoobian	LRFD	LIVE LOADING: HL-93 WITH "LOW BOY" AND PERMIT DESIGN VEHICLE
DESIGN OVERSIGHT 4-28-09	DETAILS	BY Tatyana Gnip	CHECKED Arash Monsefan	LAYOUT	BY Oscar Colcol / CHECKED Brett Makley
SIGN OFF DATE	QUANTITIES	BY Tatyana Gnip	CHECKED Ivan Martin	SPECIFICATIONS	BY Jeremy LaHaye / PLANS AND SPECS COMPARED Jeremy LaHaye

PREPARED FOR THE STATE OF CALIFORNIA DEPARTMENT OF TRANSPORTATION

Brett Makley
PROJECT ENGINEER

CU 11275
EA 2T0401

BRIDGE NO. 57C0787
KILOMETER POST KP43.2

BUSINESS ACCESS ROAD UC
GENERAL PLAN

DESIGN GENERAL PLAN SHEET (METRIC) (REV. 10/27/05)

ORIGINAL SCALE IN MILLIMETERS FOR REDUCED PLANS 0 10 20 30 40 50 60 70 80 90 100

DISREGARD PRINTS BEARING EARLIER REVISION DATES

REVISION DATES (PRELIMINARY STAGE ONLY) 3-14-08 9-12-08 12-18-08 3-3-09 4-15-09 4-28-09

SHEET 1 OF 23

FILE => 57-c0787-a-gp01.dgn

USERNAME => rtmikes1 DATE PLOTTED => 29-SEP-2010 TIME PLOTTED => 11:49

DIST	COUNTY	ROUTE	KILOMETER POST TOTAL PROJECT	SHEET No	TOTAL SHEETS
11	SD	5,805	R49.9/R51.7, 42.6/46.5	749	886

REGISTERED CIVIL ENGINEER 4-28-09 DATE

9-27-10
PLANS APPROVAL DATE

REGISTERED PROFESSIONAL ENGINEER James L. Rucker No. 47796 Exp. 12-31-09 CIVIL STATE OF CALIFORNIA

The State of California or its officers or agents shall not be responsible for the accuracy or completeness of electronic copies of this plan sheet.

SANDAG
401 B STREET,
SAN DIEGO, CA 92101

T.Y. LIN INTERNATIONAL
5030 CAMINO DE LA SIESTA, SUITE 204,
SAN DIEGO, CA 92108

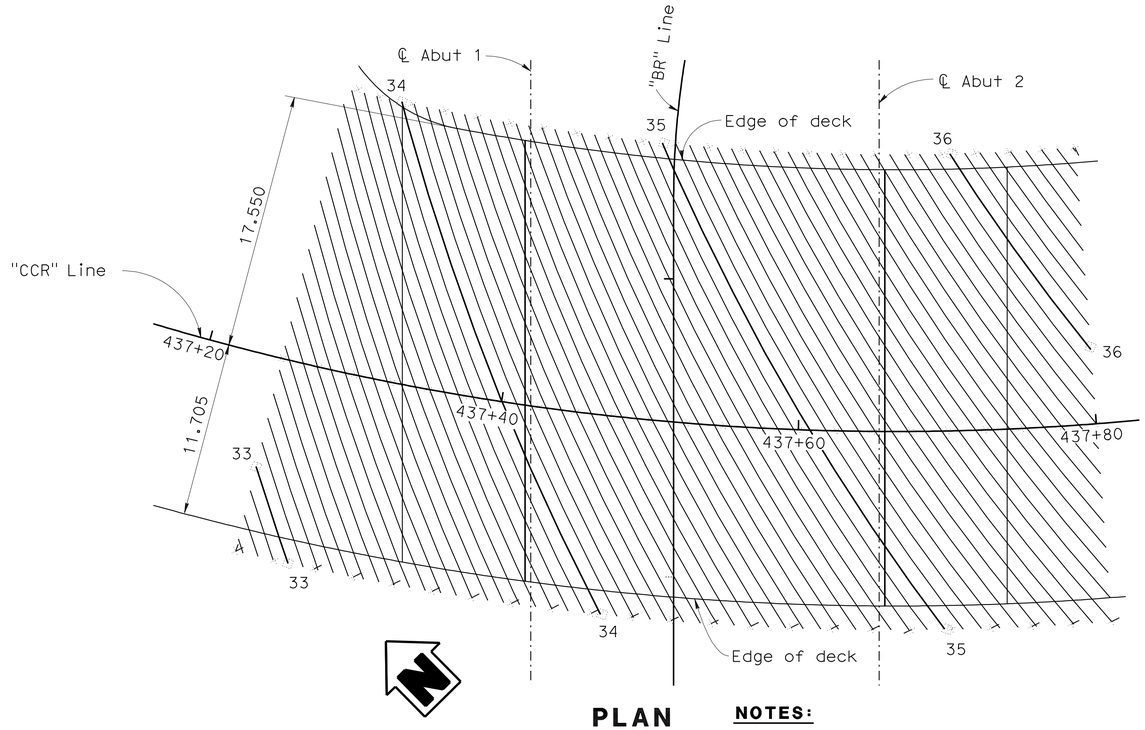

PLAN
1:200

NOTES:

1. Contour interval = 0.05 m.
2. Contours do not include camber.
3. ⊡ - Indicates even meter contours.
4. X - Indicates 2.5 m intervals.

GENERAL NOTES
LOAD RESISTANCE FACTOR DESIGN

DESIGN: AASHTO LRFD Bridge Design Specifications 3rd edition, with 2005/2006 Interims and CALTRANS Amendment V.3.06.01; except that Abutments are designed for WSD of the Caltrans Bridge Design Specifications, April 2000 1996 AASHTO w/Revisions by Caltrans)

SEISMIC DESIGN: Caltrans Seismic Design Criteria, SDC, V1.4, dated June 2006

DEAD LOAD: Includes 1.676 KPa for future wearing surface.

LIVE LOADING: HL93 and permit design load

SEISMIC LOADING: Soil Profile Type C
(Mw=7.0±0.25) Peak Rock Acceleration = 0.5g
Modified by 20% increase in the spectral acceleration for periods of 1.0 sec and greater
no increase for periods less than 0.5 sec, and linear interpolation between 0.5 & 1.0 sec

ACCELERATION RESPONSE SPECTRUM
5% DAMPING

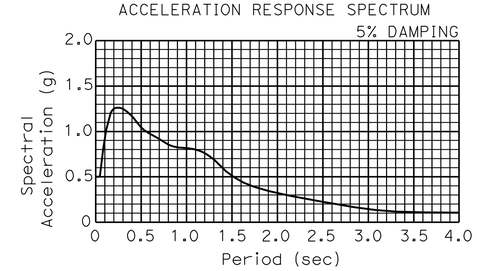

REINFORCED CONCRETE:
fy = 420 MPa
f'c = 25 MPa
n = 8

STANDARD PLANS (DATED JULY 2004)

	A10A	ACRONYMS AND ABBREVIATIONS (A-L)
	A10B	ACRONYMS AND ABBREVIATIONS (M-Z)
	A10C	SYMBOLS (SHEET 1 OF 2)
	A10D	SYMBOLS (SHEET 1 OF 2)
	A62C	LIMITS OF PAYMENT FOR EXCAVATION AND BACKFILL BRIDGE
	B0-1	BRIDGE DETAILS
	B0-3	BRIDGE DETAILS
	B0-5	BRIDGE DETAILS
	B0-13	BRIDGE DETAILS
RSP	B6-21	JOINT SEAL (MAXIMUM MOVEMENT RATING = 50 mm)
	B7-1	BOX GIRDER DETAILS
	B7-10	UTILITY OPENING-BOX GIRDER
	B7-11	UTILITY DETAILS
	B11-51	TUBULAR HAND RAILING
	B11-54	CONCRETE BARRIER TYPE 26
	B11-56	CONCRETE BARRIER TYPE 736
	B14-3	COMMUNICATION AND SPRINKLER CONTROL CONDUITS (CONDUITS LESS THAN SIZE 103)
	B14-4	WATER SUPPLY LINE (BRIDGE) (PIPE SIZES LESS THAN NPS 4)
	B14-5	WATER SUPPLY LINE (DETAILS) (PIPE SIZES LESS THAN NPS 4)
RSP	ES-6A	ELECTRICAL SYSTEMS (LIGHTING STANDARDS TYPE 15 AND 21)

Standard Plan
Sheet No.
Detail No.

INDEX TO BRIDGE PLANS

SHEET No.	TITLE
1.	GENERAL PLAN
2.	DECK CONTOURS
3.	FOUNDATION PLAN
4.	ABUTMENT 1 LAYOUT
5.	ABUTMENT 2 LAYOUT
6.	ABUTMENT DETAILS NO. 1
7.	ABUTMENT DETAILS NO. 2
8.	TYPICAL SECTION
9.	GIRDER LAYOUT
10.	GIRDER DETAILS
11.	BARRIER DETAILS
12.	TUBULAR PIPE HANDRAILING
13.	STRUCTURE APPROACH TYPE N(9S)
14.	STRUCTURE APPROACH DRAINAGE DETAILS
15.	MISCELLANEOUS BRIDGE DETAILS
16.	ARCHITECTURAL DETAILS
17.	LOG OF TEST BORINGS 1 OF 7
18.	LOG OF TEST BORINGS 2 OF 7
19.	LOG OF TEST BORINGS 3 OF 7
20.	LOG OF TEST BORINGS 4 OF 7
21.	LOG OF TEST BORINGS 5 OF 7
22.	LOG OF TEST BORINGS 6 OF 7
23.	LOG OF TEST BORINGS 7 OF 7

ALL DIMENSIONS ARE IN METERS UNLESS OTHERWISE SHOWN

CHUNG-YUAN WEN
DESIGN OVERSIGHT
4-28-09
SIGN OFF DATE

	BY	CHECKED
DESIGN	Arash Monsefan	Roya Golchoobian
DETAILS	Tatyana Gnip	Arash Monsefan
QUANTITIES	Tatyana Gnip	Ivan Martin

PREPARED FOR THE STATE OF CALIFORNIA DEPARTMENT OF TRANSPORTATION

Brett Makley
PROJECT ENGINEER

BRIDGE NO. 57C0787
KILOMETER POST KP43.2

BUSINESS ACCESS ROAD UC
DECK CONTOURS

DESIGN DETAIL SHEET (METRIC) (REV. 10/27/05)

ORIGINAL SCALE IN MILLIMETERS FOR REDUCED PLANS 0 10 20 30 40 50 60 70 80 90 100

CU 11275
EA 2T0401

DISREGARD PRINTS BEARING EARLIER REVISION DATES
REVISION DATES (PRELIMINARY STAGE ONLY) 9-18-08 12-18-08 3-9-09 4-28-09

SHEET 2 OF 23

FILE => 57-c0787-d-dc01.dgn

USERNAME => trmikes1 DATE PLOTTED => 29-SEP-2010 TIME PLOTTED => 11:49

DIST	COUNTY	ROUTE	KILOMETER POST TOTAL PROJECT	SHEET No	TOTAL
11	SD	5,805	R49.9/R51.7, 42.6/46.5	750	886

REGISTERED CIVIL ENGINEER 4-28-09 DATE

9-27-10
PLANS APPROVAL DATE

The State of California or its officers or agents shall not be responsible for the accuracy or completeness of electronic copies of this plan sheet.

REGISTERED PROFESSIONAL ENGINEER James L. Rucker No. 47796 Exp. 12-31-09 CIVIL STATE OF CALIFORNIA

SANDAG
401 B STREET,
SAN DIEGO, CA 92101

T.Y. LIN INTERNATIONAL
5030 CAMINO DE LA SIESTA, SUITE 204,
SAN DIEGO, CA 92108

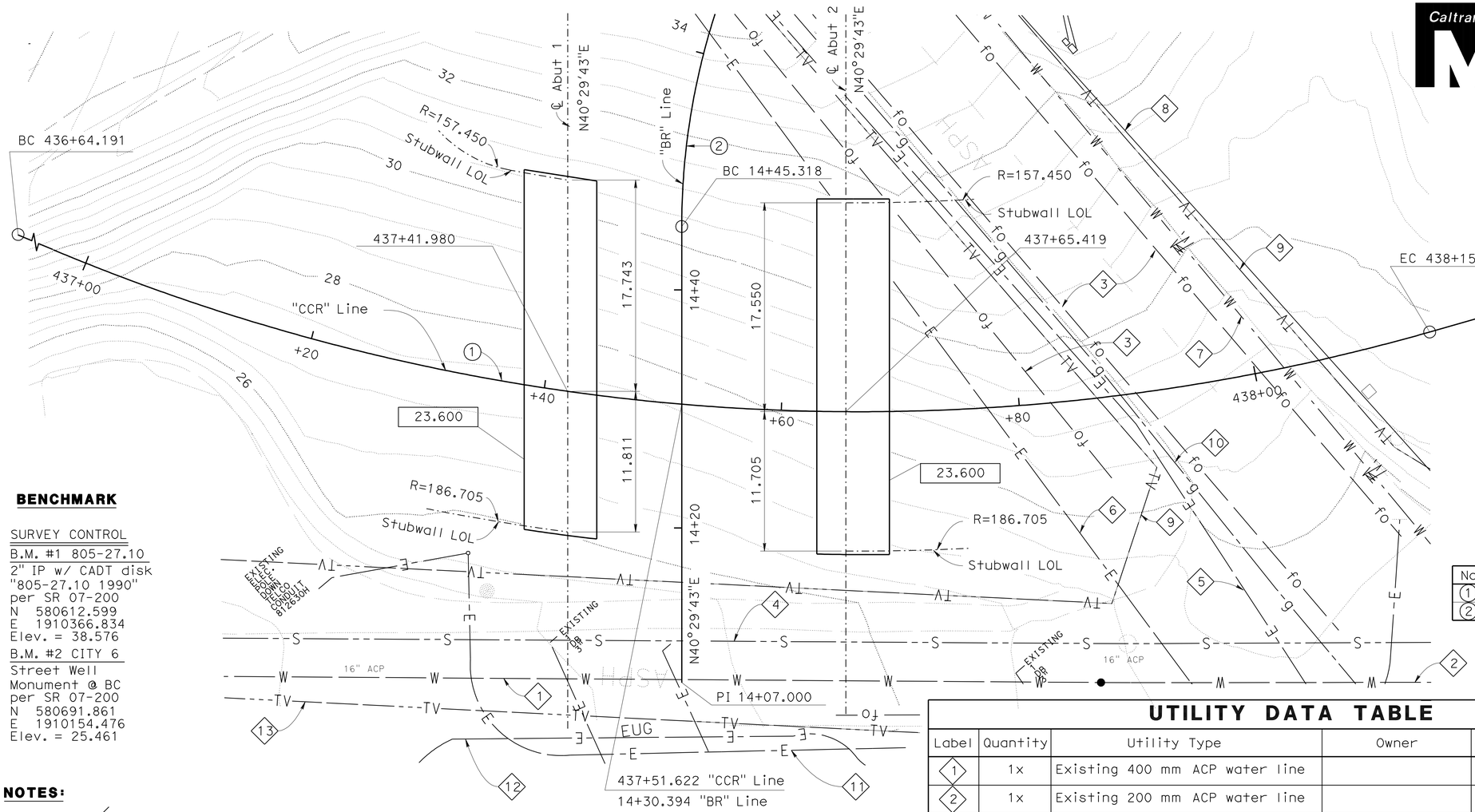

BENCHMARK

SURVEY CONTROL
B.M. #1 805-27.10
2" IP w/ CADT disk
"805-27.10 1990"
per SR 07-200
N 580612.599
E 1910366.834
Elev. = 38.576

B.M. #2 CITY 6
Street Well
Monument @ BC
per SR 07-200
N 580691.861
E 1910154.476
Elev. = 25.461

NOTES:

1. ▭ - Indicates bottom of footing elevation.
2. For limits of excavation & backfill, see A62C
3. —◎— Existing Electrical Pole with Existing Overhead Electrical Line.

PLAN
1:200

CURVE DATA

No.	R	Δ	T	L
1	175.000	49°26'31"	80.569	151.012
2	58.300	155°55'51"	273.468	158.664

UTILITY DATA TABLE

Label	Quantity	Utility Type	Owner	To Be Relocated	Underground (UG) or Overhead (OH)
1	1x	Existing 400 mm ACP water line		N	
2	1x	Existing 200 mm ACP water line		N	
3	1x	Existing Fiber Optic		Y	
4	1x	Existing 750 mm VCP sewer main		N	
5	1x	Existing electrical line	SDG&E	Y	
6	1x	Existing electrical line		Y	
7	1x	Existing 400 mm ACP water line	City of San Diego	Y	
8	1x	Existing telephone line		Y	
9	1x	Existing TV		Y	
10	1x	Existing 50 mm PE gas line		Y	
11	1x	Existing electrical line	SDG&E	N	OH
12	1x	Existing electrical line	SDG&E	N	UG
13	1x	Existing TV		Y	

ALL DIMENSIONS ARE IN METERS UNLESS OTHERWISE SHOWN

SPREAD FOOTING DATA TABLE

Support Location	Working Stress Design (WSD)	
	Permissible Gross Contact Stress (Settlement) (kPa)	Allowable Gross Bearing Capacity (kPa)
Abut 1	1316	430
Abut 2	1316	430

GEOTECHNICAL PROFESSIONAL 4-15-09 APPROVAL DATE

CHUNG-YUAN WEN
DESIGN OVERSIGHT
4-28-09
SIGN OFF DATE

SCALE: VERT.DATUM NAD 29 HORZ.DATUM NAD 83
PHOTOGRAMMETRY AS OF: 10/30/07 ALIGNMENT TIES
SURVEYED BY Dave Sparks DRAFTED BY
FIELD CHECKED BY Dave Sparks CHECKED BY

DESIGN BY Arash Monsefan CHECKED Roya Golchoobian
DETAILS BY Tatyana Gnip CHECKED Arash Monsefan
QUANTITIES BY Tatyana Gnip CHECKED Ivan Martin

PREPARED FOR THE STATE OF CALIFORNIA DEPARTMENT OF TRANSPORTATION

Brett Makley
PROJECT ENGINEER

BRIDGE NO. 57C0787
KILOMETER POST KP43.2

BUSINESS ACCESS ROAD UC
FOUNDATION PLAN

FOUNDATION PLAN SHEET (METRIC) (REV. 10/27/05)

ORIGINAL SCALE IN MILLIMETERS FOR REDUCED PLANS 0 10 20 30 40 50 60 70 80 90 100

CU 11275
EA 2T0401

DISREGARD PRINTS BEARING EARLIER REVISION DATES

REVISION DATES (PRELIMINARY STAGE ONLY) 3-14-08 9-12-08 12-14-08 3-3-09 4-28-09

SHEET 3 OF 23

FILE => 57-c0787-e-fdpl01.dgn

USERNAME => ttmirkes1 DATE PLOTTED => 29-SEP-2010 TIME PLOTTED => 11:49

DIST	COUNTY	ROUTE	KILOMETER POST TOTAL PROJECT	SHEET No	TOTAL SHEETS
11	SD	5,805	R49.9/R51.7, 42.6/46.5	751	886

REGISTERED CIVIL ENGINEER 4-28-09 DATE

9-27-10
PLANS APPROVAL DATE

REGISTERED PROFESSIONAL ENGINEER James L. Rucker No. 47796 Exp. 12-31-09 CIVIL STATE OF CALIFORNIA

The State of California or its officers or agents shall not be responsible for the accuracy or completeness of electronic copies of this plan sheet.

SANDAG
401 B STREET,
SAN DIEGO, CA 92101

T.Y. LIN INTERNATIONAL
5030 CAMINO DE LA SIESTA, SUITE 204,
SAN DIEGO, CA 92108

Caltrans Metric

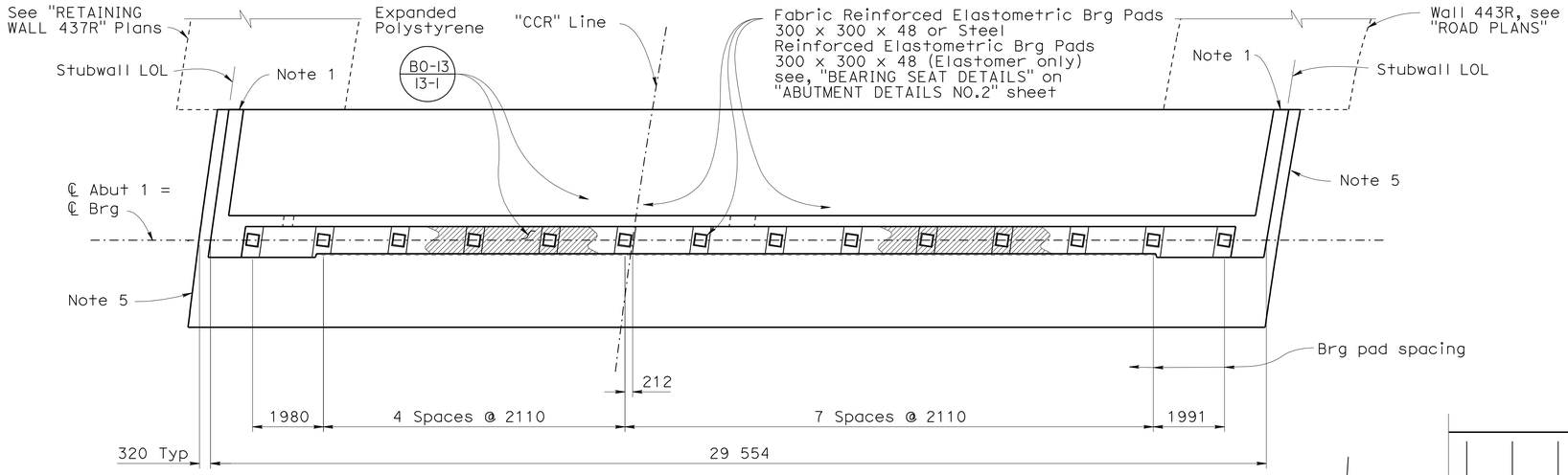

PLAN
1:80

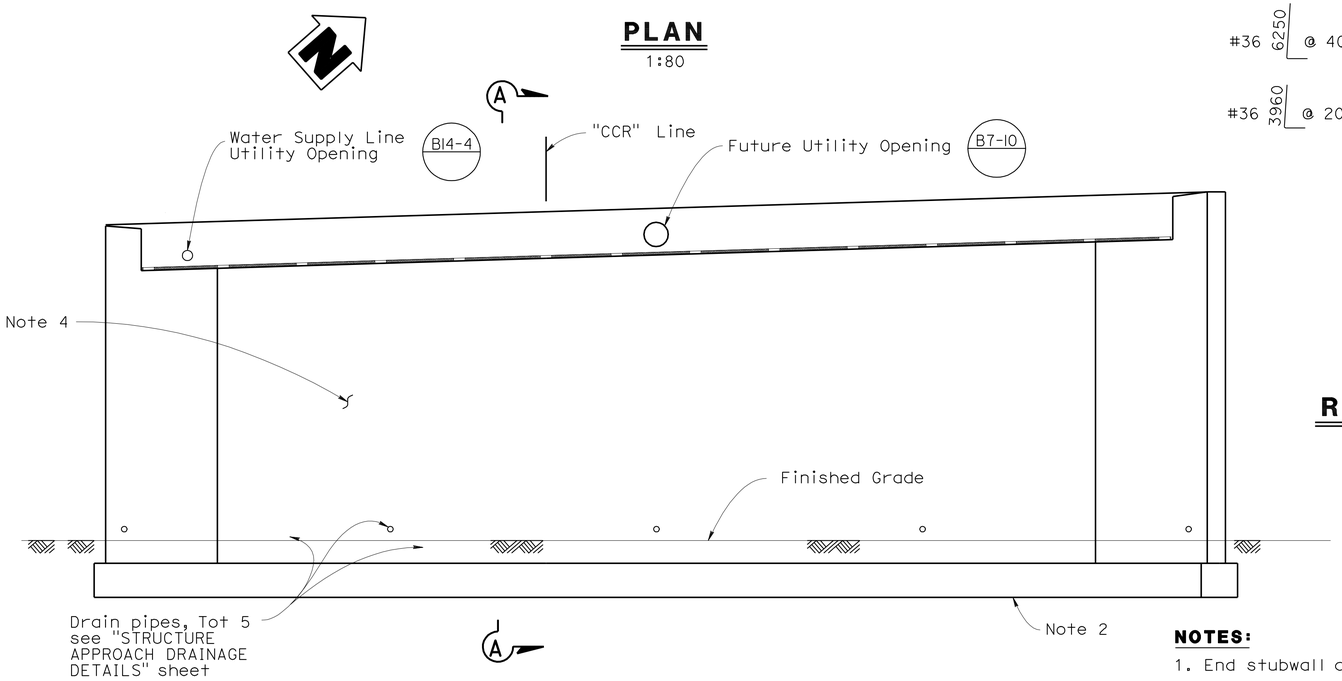

ELEVATION
1:80

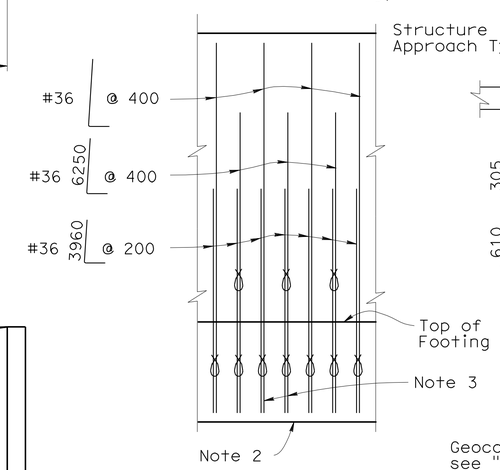

MAIN STEM REINFORCING DETAIL
No Scale

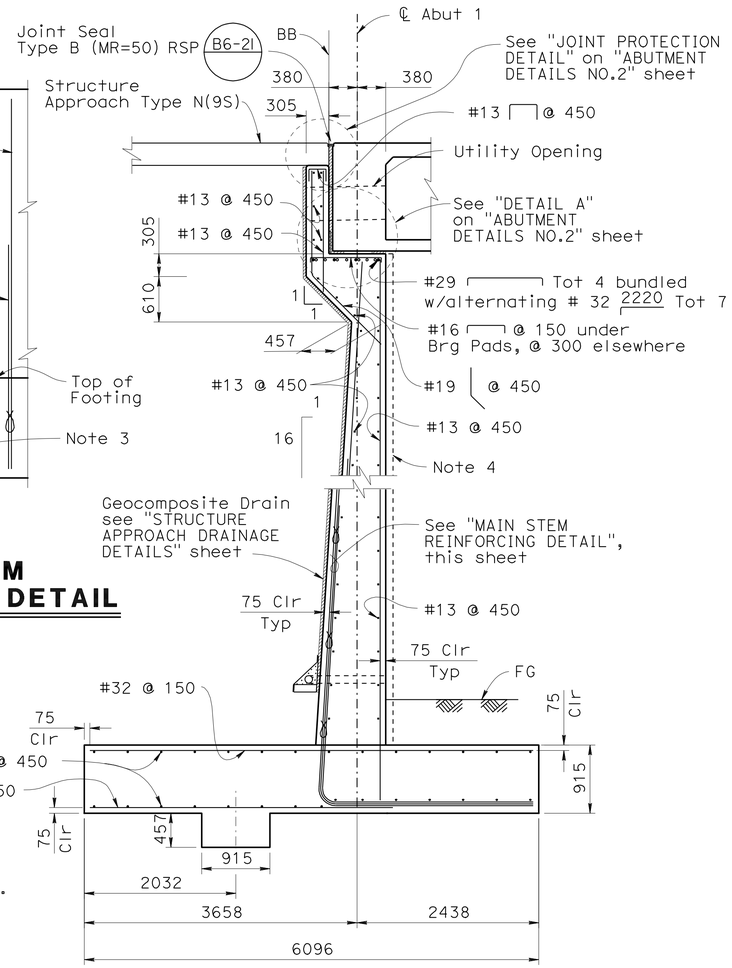

SECTION A-A
1:40

ALL DIMENSIONS ARE IN MILLIMETERS UNLESS OTHERWISE SHOWN

NOTES:

1. End stubwall at back of footing.
2. Footing key not shown for clarify.
3. Hook all bars in the footing.
4. Architectural details not shown. For architectural details, see "ARCHITECTURAL DETAILS" sheet.
5. For footing corner details see, "ABUTMENT 1 FOOTING CORNER DETAIL" on "ABUTMENT DETAILS NO.2" sheet

CHUNG-YUAN WEN
DESIGN OVERSIGHT
4-28-09
SIGN OFF DATE

	BY	CHECKED
DESIGN	Arash Monsefan	Roya Golchoobian
DETAILS	Tatyana Gnip	Arash Monsefan
QUANTITIES	Tatyana Gnip	Ivan Martin

PREPARED FOR THE STATE OF CALIFORNIA DEPARTMENT OF TRANSPORTATION

Brett Makley
PROJECT ENGINEER

BRIDGE NO. 57C0787
KILOMETER POST KP43.2

BUSINESS ACCESS ROAD UC
ABUTMENT 1 LAYOUT

DESIGN DETAIL SHEET (METRIC) (REV. 10/27/05)

ORIGINAL SCALE IN MILLIMETERS FOR REDUCED PLANS 0 10 20 30 40 50 60 70 80 90 100

CU 11275
EA 2T0401

DISREGARD PRINTS BEARING EARLIER REVISION DATES

REVISION DATES (PRELIMINARY STAGE ONLY): 9-18-08 12-14-08 3-9-09 4-28-09

SHEET 4 OF 23

FILE => 57-c0787-f-a01_l01.dgn

USERNAME => trmikest DATE PLOTTED => 29-SEP-2010 TIME PLOTTED => 11:50

DIST	COUNTY	ROUTE	KILOMETER POST TOTAL PROJECT	SHEET No	TOTAL SHEETS
11	SD	5,805	R49.9/R51.7, 42.6/46.5	752	886

REGISTERED CIVIL ENGINEER 4-28-09 DATE

9-27-10
PLANS APPROVAL DATE

REGISTERED PROFESSIONAL ENGINEER James L. Rucker No. 47796 Exp. 12-31-09 CIVIL STATE OF CALIFORNIA

The State of California or its officers or agents shall not be responsible for the accuracy or completeness of electronic copies of this plan sheet.

SANDAG
401 B STREET,
SAN DIEGO, CA 92101

T.Y. LIN INTERNATIONAL
5030 CAMINO DE LA SIESTA, SUITE 204,
SAN DIEGO, CA 92108

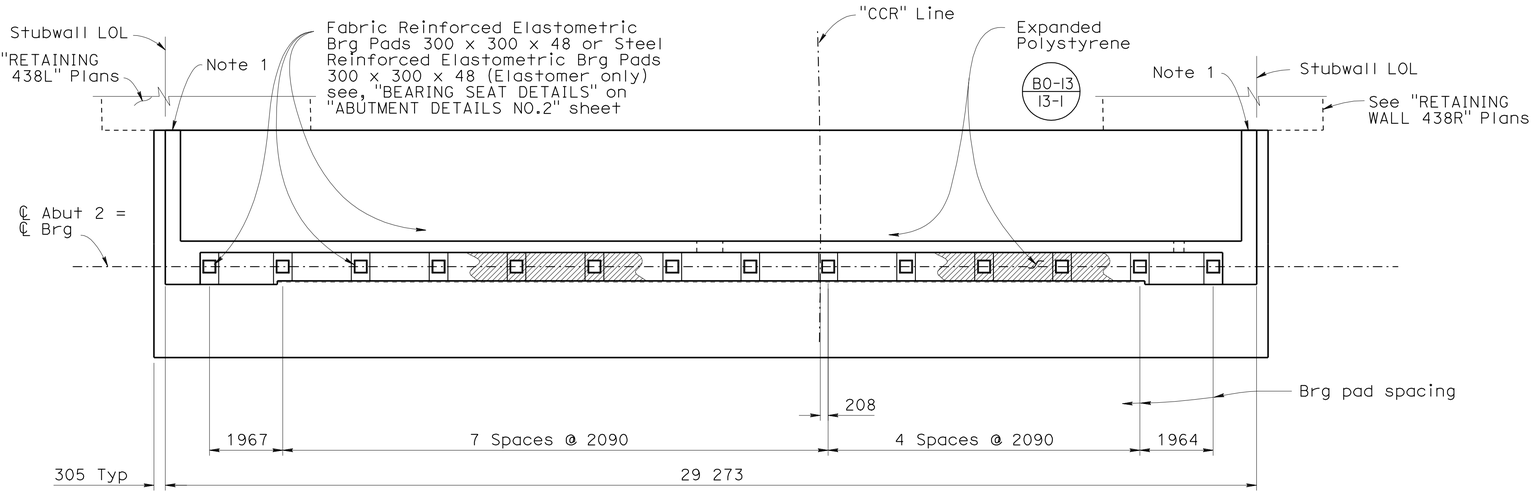

PLAN
1:80

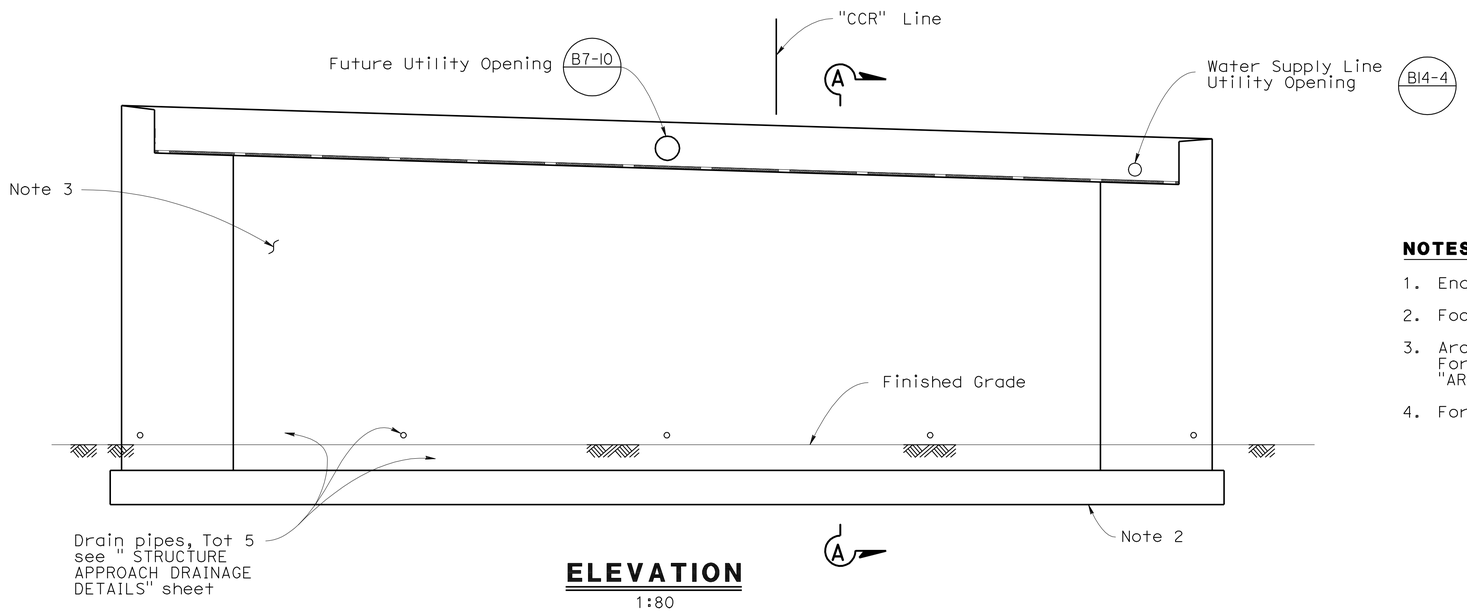

ELEVATION
1:80

NOTES:

1. End stubwall at back of footing.
2. Footing key not shown for clarify.
3. Architectural details not shown. For architectural details, see "ARCHITECTURAL DETAILS" sheet.
4. For "SECTION A-A", see "ABUTMENT 1 LAYOUT" sheet.

ALL DIMENSIONS ARE IN MILLIMETERS UNLESS OTHERWISE SHOWN

CHUNG-YUAN WEN
DESIGN OVERSIGHT
4-28-09
SIGN OFF DATE

	BY	CHECKED
DESIGN	Arash Monsefan	Roya Golchoobian
DETAILS	Tatyana Gnip	Arash Monsefan
QUANTITIES	Tatyana Gnip	Ivan Martin

PREPARED FOR THE STATE OF CALIFORNIA DEPARTMENT OF TRANSPORTATION

Brett Makley
PROJECT ENGINEER

BRIDGE NO. 57C0787
KILOMETER POST KP43.2

BUSINESS ACCESS ROAD UC
ABUTMENT 2 LAYOUT

DESIGN DETAIL SHEET (METRIC) (REV. 10/27/05)

ORIGINAL SCALE IN MILLIMETERS FOR REDUCED PLANS 0 10 20 30 40 50 60 70 80 90 100

CU 11275
EA 2T0401

DISREGARD PRINTS BEARING EARLIER REVISION DATES

REVISION DATES (PRELIMINARY STAGE ONLY): 9-18-08, 12-18-08, 3-9-09, 4-28-09

SHEET 5 OF 23

FILE => 57-c0787-f-a01_102.dgn

USERNAME => trmikest DATE PLOTTED => 29-SEP-2010 TIME PLOTTED => 11:50

DIST	COUNTY	ROUTE	KILOMETER POST TOTAL PROJECT	SHEET No	TOTAL SHEETS
11	SD	5,805	R49.9/R51.7, 42.6/46.5	753	886

Caltrans Metric

REGISTERED CIVIL ENGINEER 4-28-09 DATE

9-27-10
PLANS APPROVAL DATE

REGISTERED PROFESSIONAL ENGINEER James L. Rucker No. 47796 Exp. 12-31-09 CIVIL STATE OF CALIFORNIA

The State of California or its officers or agents shall not be responsible for the accuracy or completeness of electronic copies of this plan sheet.

SANDAG
401 B STREET,
SAN DIEGO, CA 92101

T.Y. LIN INTERNATIONAL
5030 CAMINO DE LA SIESTA, SUITE 204,
SAN DIEGO, CA 92108

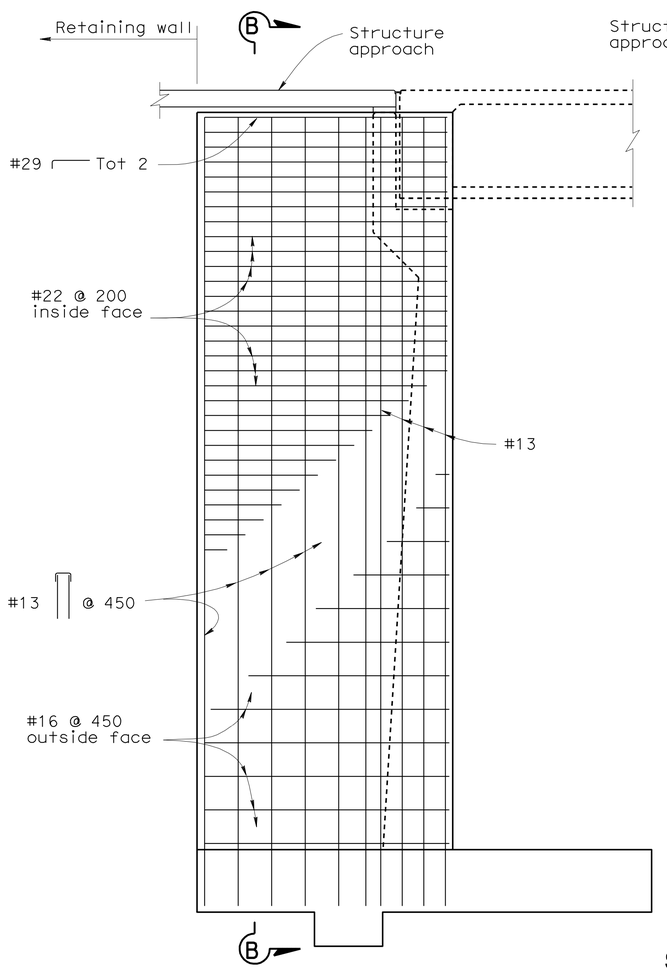

ABUTMENT STUBWALL ELEVATION
1:40

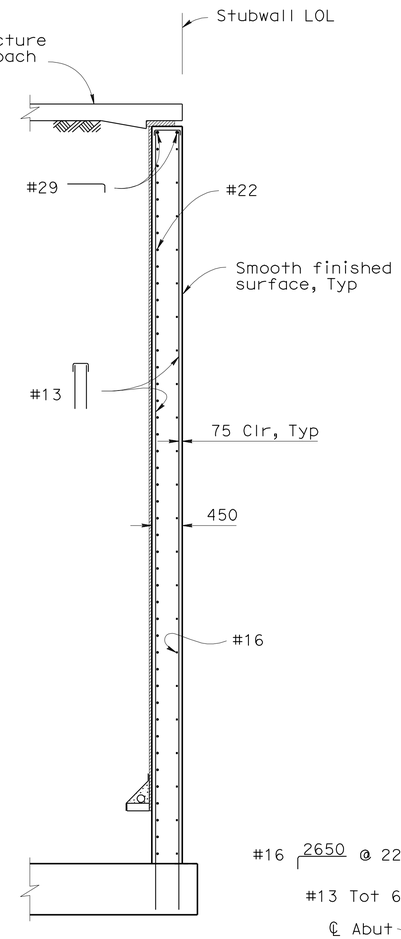

SECTION B-B
1:40

Note:
Abutment 1 shown, Abutment 2 similar unless otherwise noted

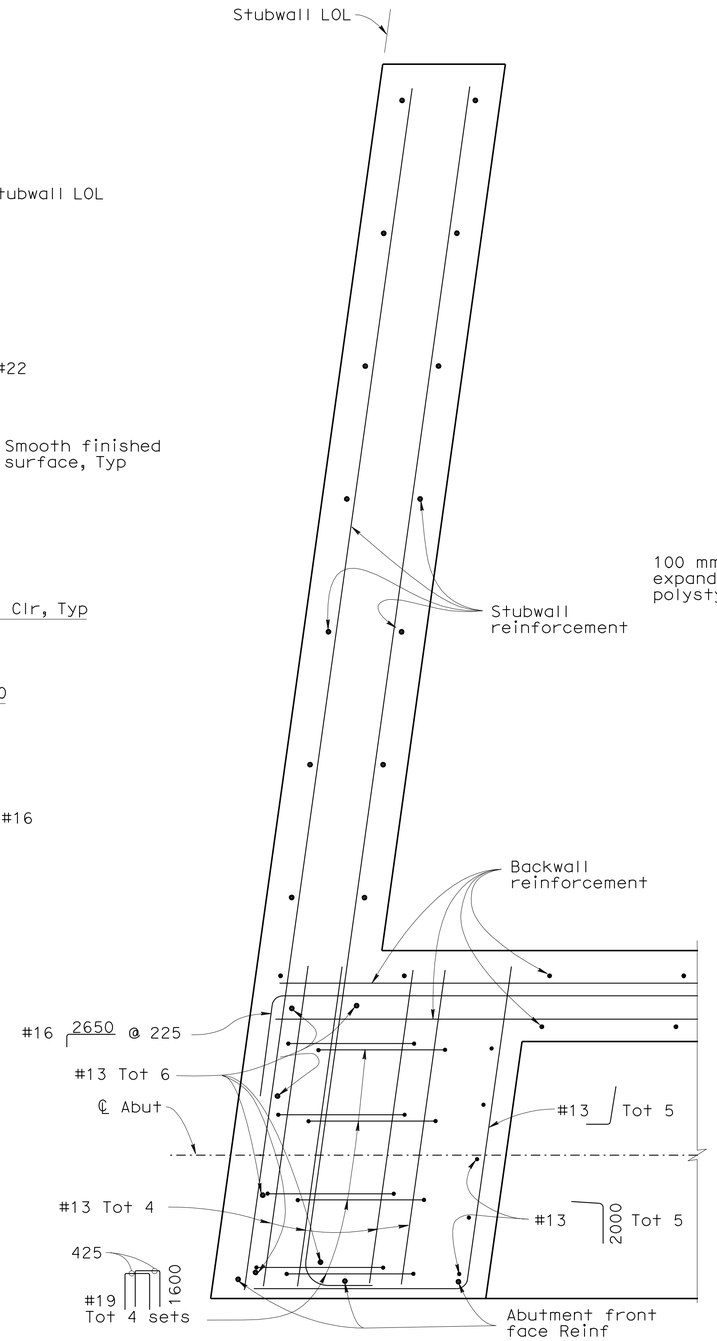

SECTION C-C
1:10

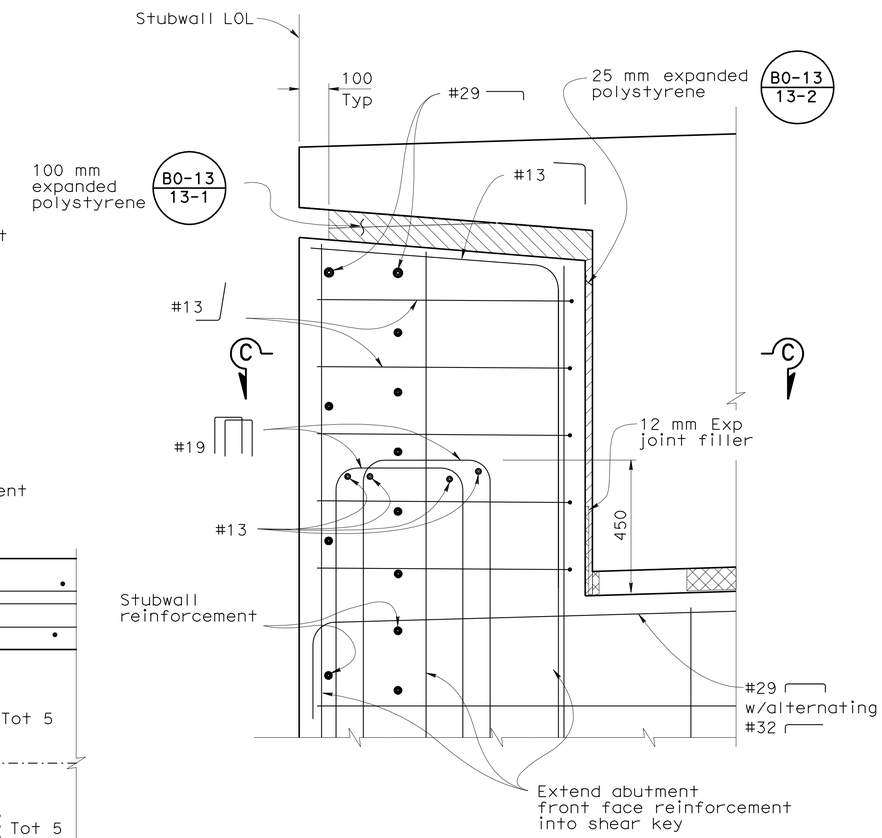

ABUTMENT SHEAR KEY ELEVATION
1:10

ALL DIMENSIONS ARE IN MILLIMETERS UNLESS OTHERWISE SHOWN

CHUNG-YUAN WEN
DESIGN OVERSIGHT
4-28-09
SIGN OFF DATE

	BY	CHECKED
DESIGN	Arash Monsefan	Roya Golchoobian
DETAILS	Tatyana Gnip	Arash Monsefan
QUANTITIES	Tatyana Gnip	Ivan Martin

PREPARED FOR THE STATE OF CALIFORNIA DEPARTMENT OF TRANSPORTATION

Brett Makley
PROJECT ENGINEER

BRIDGE NO. 57C0787
KILOMETER POST KP43.2

BUSINESS ACCESS ROAD UC
ABUTMENT DETAILS NO. 1

DESIGN DETAIL SHEET (METRIC) (REV. 10/27/05)

ORIGINAL SCALE IN MILLIMETERS FOR REDUCED PLANS 0 10 20 30 40 50 60 70 80 90 100

CU 11275
EA 2T0401

DISREGARD PRINTS BEARING EARLIER REVISION DATES

REVISION DATES (PRELIMINARY STAGE ONLY) 9-12-08 12-19-08 3-9-09 4-28-09

SHEET 6 OF 23

FILE => 57-c0787-f-ad01.dgn

USERNAME => ttmikes1 DATE PLOTTED => 29-SEP-2010 TIME PLOTTED => 11:50

DIST	COUNTY	ROUTE	KILOMETER POST TOTAL PROJECT	SHEET No	TOTAL SHEETS
11	SD	5,805	R49.9/R51.7, 42.6/46.5	754	886

REGISTERED CIVIL ENGINEER 4-28-09 DATE

9-27-10
PLANS APPROVAL DATE

REGISTERED PROFESSIONAL ENGINEER James L. Rucker No. 47796 Exp. 12-31-09 CIVIL STATE OF CALIFORNIA

The State of California or its officers or agents shall not be responsible for the accuracy or completeness of electronic copies of this plan sheet.

SANDAG
401 B STREET,
SAN DIEGO, CA 92101

T.Y. LIN INTERNATIONAL
5030 CAMINO DE LA SIESTA, SUITE 204,
SAN DIEGO, CA 92108

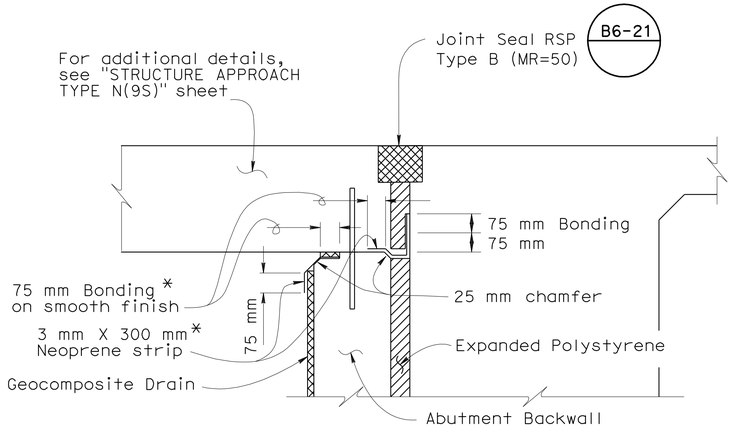

* Place prior to backfilling the Abut backwall (Fold neoprene into chamfer)

JOINT PROTECTION DETAIL

No Scale

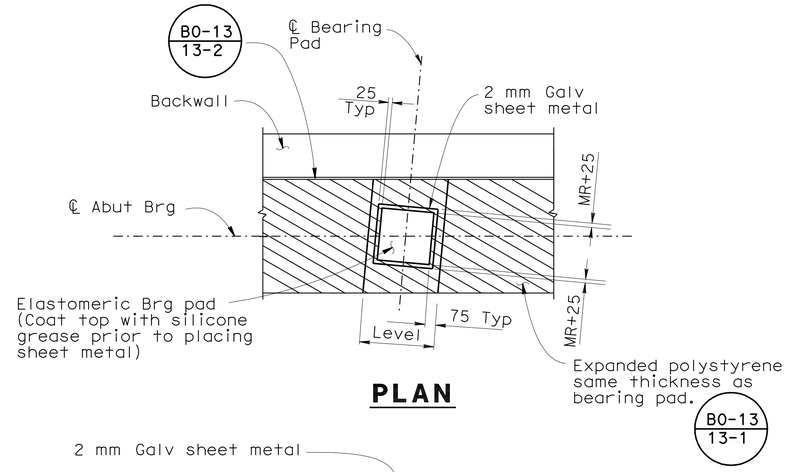

PLAN

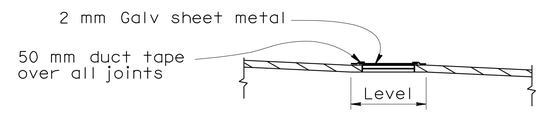

ELEVATION

BEARING SEAT DETAILS

No Scale

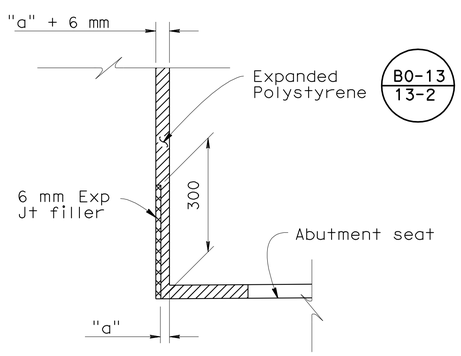

DETAIL A

No Scale

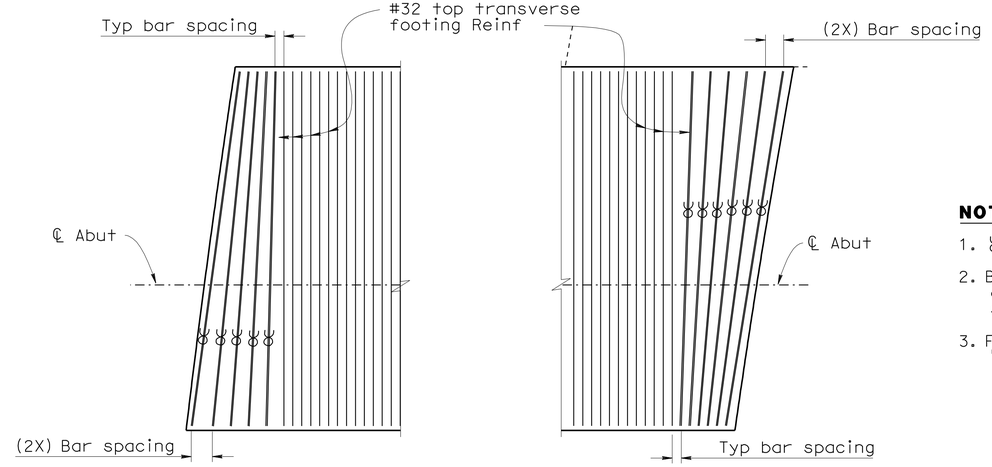

ABUTMENT 1 FOOTING CORNER DETAIL

1:50

NOTES:

1. ϒ Denotes 2 bar bundles.
2. Bottom transverse footing reinforcement and longitudinal footing reinforcement not shown for clarity.
3. For location of "DETAIL A" see "ABUTMENT 1 LAYOUT" sheet.

ALL DIMENSIONS ARE IN MILLIMETERS UNLESS OTHERWISE SHOWN

CHUNG-YUAN WEN
DESIGN OVERSIGHT
4-28-09
SIGN OFF DATE

	BY	CHECKED
DESIGN	Arash Monsefan	Roya Golchoobian
DETAILS	Tatyana Gnip	Arash Monsefan
QUANTITIES	Tatyana Gnip	Ivan Martin

PREPARED FOR THE STATE OF CALIFORNIA DEPARTMENT OF TRANSPORTATION

Brett Makley
PROJECT ENGINEER

BRIDGE NO. 57C0787
KILOMETER POST KP43.2

BUSINESS ACCESS ROAD UC
ABUTMENT DETAILS NO. 2

DESIGN DETAIL SHEET (METRIC) (REV. 10/27/05)

ORIGINAL SCALE IN MILLIMETERS FOR REDUCED PLANS 0 10 20 30 40 50 60 70 80 90 100

CU 11275
EA 2T0401

DISREGARD PRINTS BEARING EARLIER REVISION DATES

REVISION DATES (PRELIMINARY STAGE ONLY) 9-12-08 12-19-08 3-9-09 4-28-09

SHEET 7 OF 23

FILE => 57-c0787-f-ad02.dgn

USERNAME => ttmikes1 DATE PLOTTED => 29-SEP-2010 TIME PLOTTED => 11:50

DIST	COUNTY	ROUTE	KILOMETER POST TOTAL PROJECT	SHEET No	TOTAL SHEETS
11	SD	5,805	R49.9/R51.7, 42.6/46.5	755	886

REGISTERED CIVIL ENGINEER 4-28-09 DATE

9-27-10
PLANS APPROVAL DATE

REGISTERED PROFESSIONAL ENGINEER James L. Rucker No. 47796 Exp. 12-31-09 CIVIL STATE OF CALIFORNIA

The State of California or its officers or agents shall not be responsible for the accuracy or completeness of electronic copies of this plan sheet.

SANDAG
401 B STREET,
SAN DIEGO, CA 92101

T.Y. LIN INTERNATIONAL
5030 CAMINO DE LA SIESTA, SUITE 204,
SAN DIEGO, CA 92108

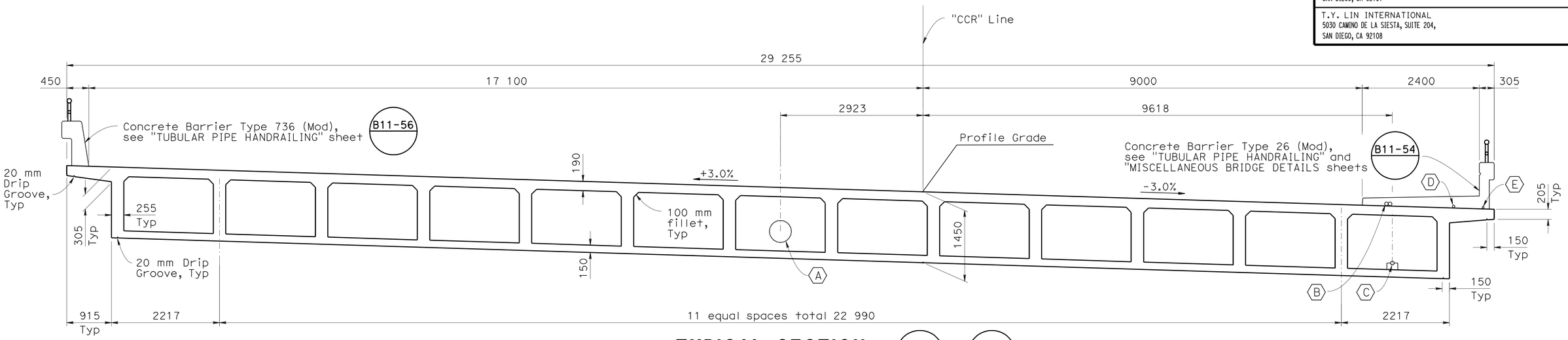

TYPICAL SECTION

1:40

B11-54 B11-56

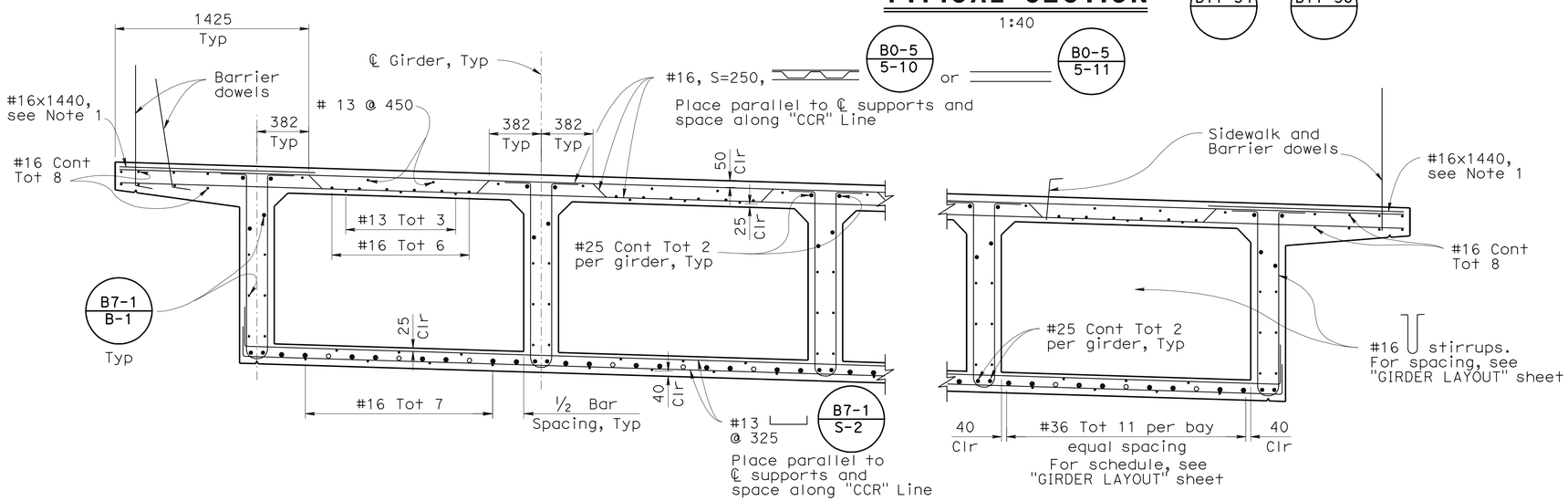

PART TYPICAL SECTION

1:20

B0-5 B7-1

UTILITIES:

- (A) 1-450 mm ø Future Utility Opening
- (B) 2-Future utility conduits (75 mm ø each) to replace future utility conduits shown in Standard Plans
- (C) 1-NPS 3 Water supply line (Bridge)
- (D) 1-50 mm ø Electrical (Lighting)
- (E) 1-38 mm ø CNC Conduit, see "ROAD PLANS"

NOTES:

1. Bundle with each alternating top transverse bar within 1.5m of BB and EB.
2. For Utility Details, see "MISCELLANEOUS BRIDGE DETAILS"" sheet.

ALL DIMENSIONS ARE IN MILLIMETERS UNLESS OTHERWISE SHOWN

CHUNG-YUAN WEN
DESIGN OVERSIGHT
4-28-09
SIGN OFF DATE

	BY	CHECKED
DESIGN	Arash Monsefan	Roya Golchoobian
DETAILS	Tatyana Gnip	Arash Monsefan
QUANTITIES	Tatyana Gnip	Ivan Martin

PREPARED FOR THE STATE OF CALIFORNIA DEPARTMENT OF TRANSPORTATION

Brett Makley
PROJECT ENGINEER

BRIDGE NO. 57C0787
KILOMETER POST KP43.2

BUSINESS ACCESS ROAD UC
TYPICAL SECTION

DESIGN DETAIL SHEET (METRIC) (REV. 10/27/05)

ORIGINAL SCALE IN MILLIMETERS FOR REDUCED PLANS 0 10 20 30 40 50 60 70 80 90 100

CU 11275
EA 2T0401

DISREGARD PRINTS BEARING EARLIER REVISION DATES

REVISION DATES (PRELIMINARY STAGE ONLY): 9-18-08 12-18-08 3-9-09 4-15-09 4-28-09

SHEET 8 OF 23

FILE => 57-c0787-k-ts01.dgn

USERNAME => rtmikes! DATE PLOTTED => 29-SEP-2010 TIME PLOTTED => 11:50

DIST	COUNTY	ROUTE	KILOMETER POST TOTAL PROJECT	SHEET No	TOTAL SHEETS
11	SD	5,805	R49.9/R51.7, 42.6/46.5	756	886

REGISTERED CIVIL ENGINEER 4-28-09 DATE

9-27-10
PLANS APPROVAL DATE

REGISTERED PROFESSIONAL ENGINEER James L. Rucker No. 47796 Exp. 12-31-09 CIVIL STATE OF CALIFORNIA

The State of California or its officers or agents shall not be responsible for the accuracy or completeness of electronic copies of this plan sheet.

SANDAG
401 B STREET,
SAN DIEGO, CA 92101

T.Y. LIN INTERNATIONAL
5030 CAMINO DE LA SIESTA, SUITE 204,
SAN DIEGO, CA 92108

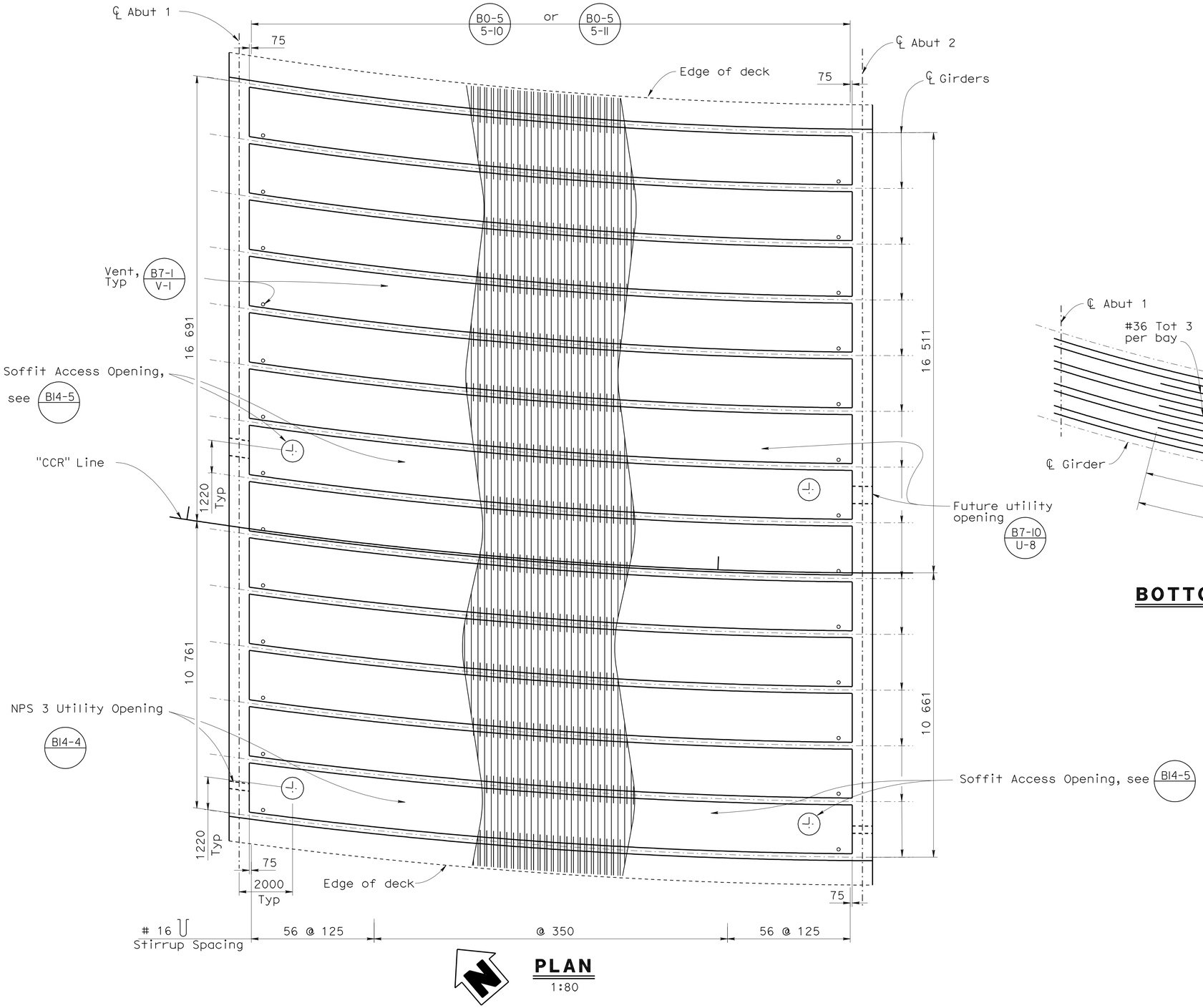

PLAN
1:80

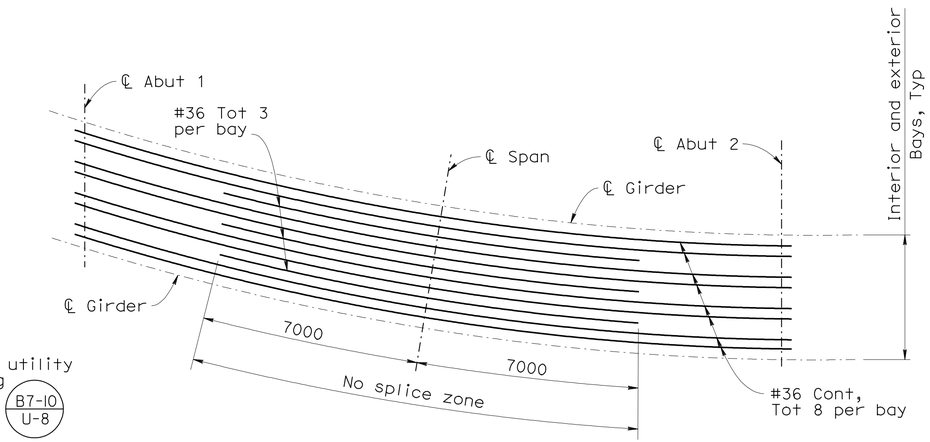

BOTTOM REINFORCEMENT SCHEDULE
No Scale

ALL DIMENSIONS ARE IN MILLIMETERS UNLESS OTHERWISE SHOWN

CHUNG-YUAN WEN
DESIGN OVERSIGHT
4-28-09
SIGN OFF DATE

	BY	CHECKED
DESIGN	Arash Monsefan	Roya Golchoobian
DETAILS	Tatyana Gnip	Arash Monsefan
QUANTITIES	Tatyana Gnip	Ivan Martin

PREPARED FOR THE STATE OF CALIFORNIA DEPARTMENT OF TRANSPORTATION

Brett Makley
PROJECT ENGINEER

BRIDGE NO. 57C0787
KILOMETER POST KP43.2

BUSINESS ACCESS ROAD UC
GIRDER LAYOUT

DESIGN DETAIL SHEET (METRIC) (REV. 10/27/05)

ORIGINAL SCALE IN MILLIMETERS FOR REDUCED PLANS 0 10 20 30 40 50 60 70 80 90 100

CU 11275
EA 2T0401

DISREGARD PRINTS BEARING EARLIER REVISION DATES

REVISION DATES (PRELIMINARY STAGE ONLY) 9-12-08 12-18-08 3-9-09 4-28-09

SHEET 9 OF 23

FILE => 57-c0787-1-g_1o01.dgn

USERNAME => ttmikes1 DATE PLOTTED => 29-SEP-2010 TIME PLOTTED => 11:50

DIST	COUNTY	ROUTE	KILOMETER POST TOTAL PROJECT	SHEET No	TOTAL SHEETS
11	SD	5,805	R49.9/R51.7, 42.6/46.5	757	886

REGISTERED CIVIL ENGINEER 4-28-09 DATE

9-27-10
PLANS APPROVAL DATE

REGISTERED PROFESSIONAL ENGINEER James L. Rucker No. 47796 Exp. 12-31-09 CIVIL STATE OF CALIFORNIA

The State of California or its officers or agents shall not be responsible for the accuracy or completeness of electronic copies of this plan sheet.

SANDAG
401 B STREET,
SAN DIEGO, CA 92101

T.Y. LIN INTERNATIONAL
5030 CAMINO DE LA SIESTA, SUITE 204,
SAN DIEGO, CA 92108

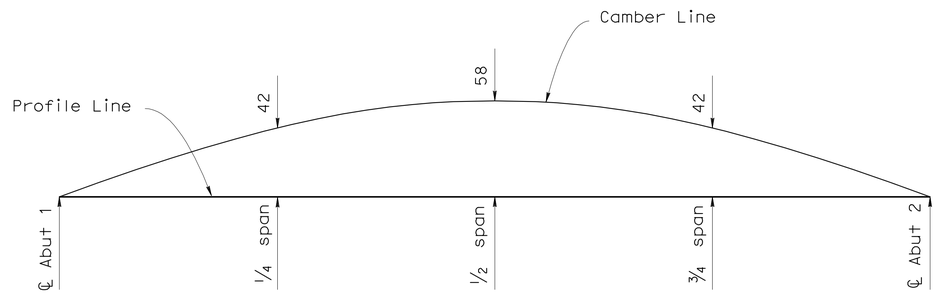

CAMBER DIAGRAM

No Scale

Note: Camber does not include allowance for falsework settlement

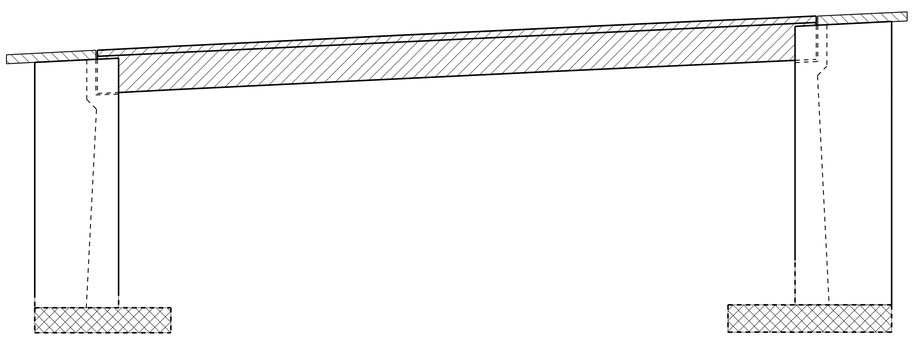

- Structural Concrete, Approach Slab
- Structural Concrete, Bridge Footing (f'c = 25MPa @ 28 days)
- Structural Concrete, Bridge (f'c = 25MPa @ 28 days)
- Structural Concrete, Bridge (f'c = 28MPa @ 28 days)

CONCRETE STRENGTH AND TYPE LIMITS

No Scale

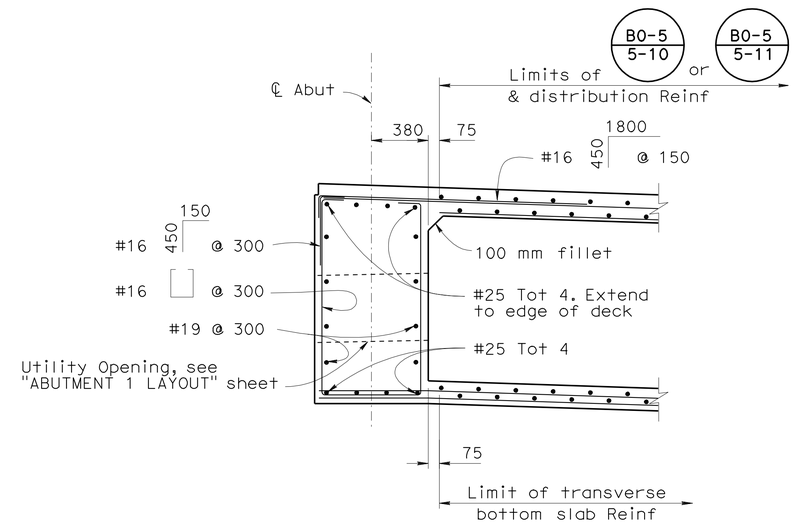

END DIAPHRAGM

1:20

ALL DIMENSIONS ARE IN
MILLIMETERS UNLESS OTHERWISE SHOWN

CHUNG-YUAN WEN
DESIGN OVERSIGHT
4-28-09
SIGN OFF DATE

	BY	CHECKED
DESIGN	Arash Monsefan	Roya Golchoobian
DETAILS	Tatyana Gnip	Arash Monsefan
QUANTITIES	Tatyana Gnip	Ivan Martin

PREPARED FOR THE
STATE OF CALIFORNIA
DEPARTMENT OF TRANSPORTATION

Brett Makley
PROJECT ENGINEER

BRIDGE NO. 57C0787
KILOMETER POST KP43.2

BUSINESS ACCESS ROAD UC
GIRDER DETAILS

DESIGN DETAIL SHEET (METRIC) (REV. 10/27/05)

ORIGINAL SCALE IN MILLIMETERS FOR REDUCED PLANS 0 10 20 30 40 50 60 70 80 90 100

CU 11275
EA 2T0401

DISREGARD PRINTS BEARING EARLIER REVISION DATES

REVISION DATES (PRELIMINARY STAGE ONLY): 9-12-08, 12-18-08, 3-9-09, 4-28-09

SHEET 10 OF 23

FILE => 57-c0787-1-gdt01.dgn

USERNAME => ttmikes1 DATE PLOTTED => 29-SEP-2010 TIME PLOTTED => 11:50

DIST	COUNTY	ROUTE	KILOMETER POST TOTAL PROJECT	SHEET No	TOTAL SHEETS
11	SD	5,805	R49.9/R51.7, 42.6/46.5	758	886

Caltrans Metric

REGISTERED CIVIL ENGINEER 4-28-09 DATE

9-27-10
PLANS APPROVAL DATE

REGISTERED PROFESSIONAL ENGINEER James L. Rucker No. 47796 Exp. 12-31-09 CIVIL STATE OF CALIFORNIA

The State of California or its officers or agents shall not be responsible for the accuracy or completeness of electronic copies of this plan sheet.

SANDAG
401 B STREET,
SAN DIEGO, CA 92101

T.Y. LIN INTERNATIONAL
5030 CAMINO DE LA SIESTA, SUITE 204,
SAN DIEGO, CA 92108

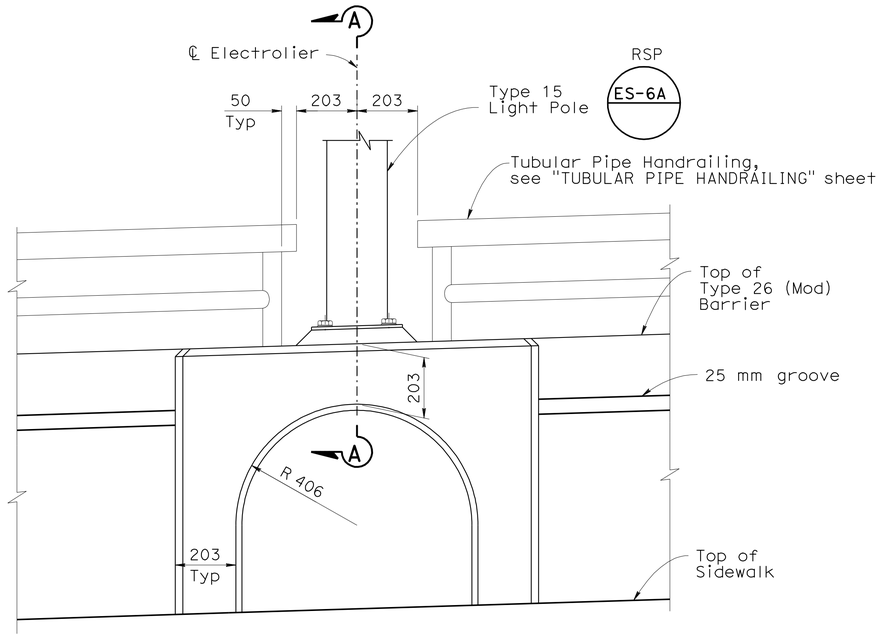

ELEVATION

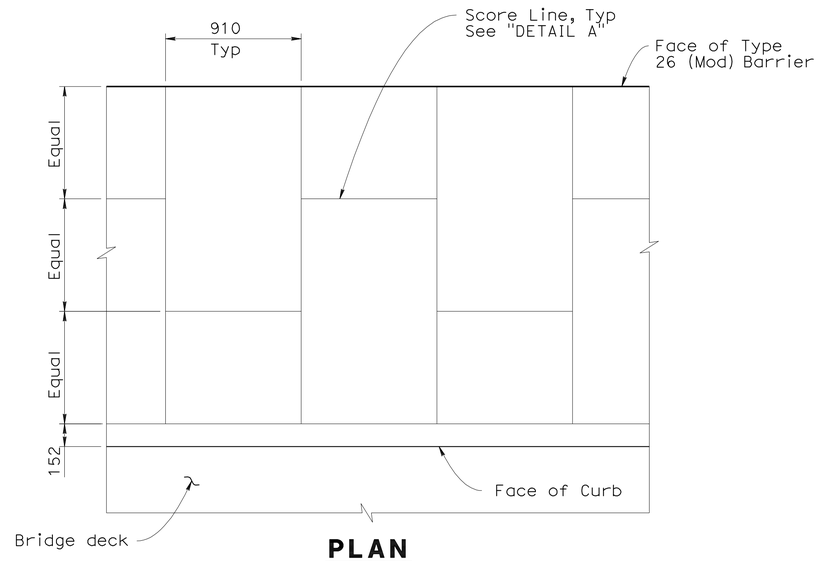

PLAN

1:20

NOTES:

1. Post shall be vertical.
2. Top rail tubular pipe shall be continuous over not less than two posts.
3. BLANK
4. For concrete barrier details and reinforcement not shown, see "TUBULAR PIPE HANDRAILING" and "MISCELLANEOUS BRIDGE DETAILS" sheets.
5. Rails are NPS standard weight A53 grade B Type E Pipes.
6. Scoring detail not shown for clarity.
7. For electrolier locations, see "ROAD PLANS".

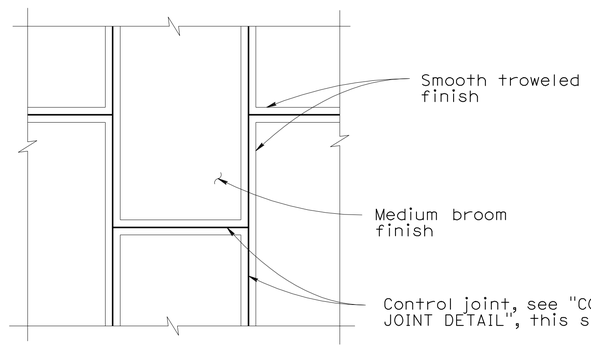

DETAIL A

1:20

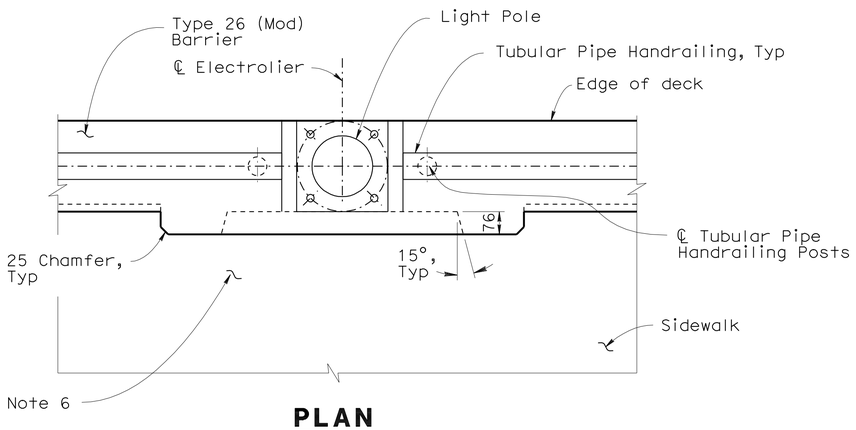

PLAN

ELECTROLIER BASE DETAIL

1:10

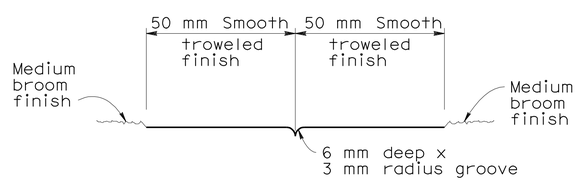

CONTROL JOINT DETAIL

1:1

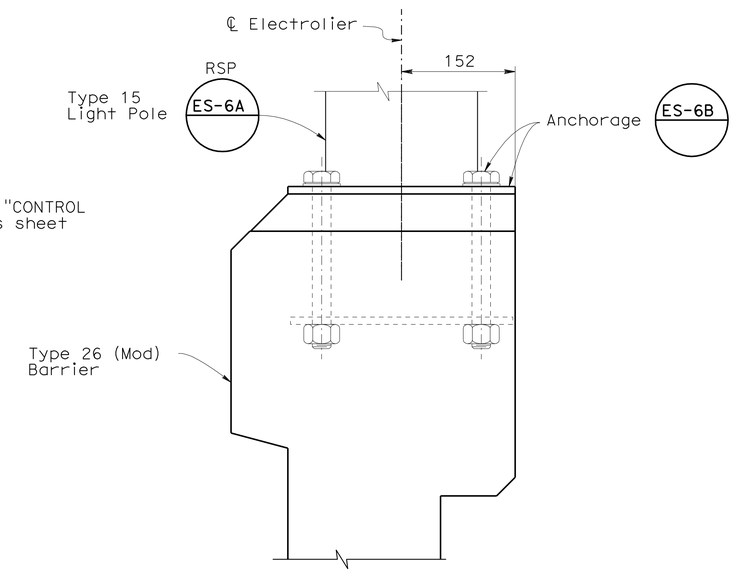

SECTION A-A

1:4

ALL DIMENSIONS ARE IN
MILLIMETERS UNLESS OTHERWISE SHOWN

CHUNG-YUAN WEN
DESIGN OVERSIGHT
4-28-09
SIGN OFF DATE

	BY	CHECKED
DESIGN	Arash Monsefan	Roya Golchoobian
DETAILS	Tatyana Gnip	Arash Monsefan
QUANTITIES	Tatyana Gnip	Ivan Martin

PREPARED FOR THE
STATE OF CALIFORNIA
DEPARTMENT OF TRANSPORTATION

Brett Makley
PROJECT ENGINEER

BRIDGE NO. 57C0787
KILOMETER POST KP43.2

BUSINESS ACCESS ROAD UC
BARRIER DETAILS

DESIGN DETAIL SHEET (METRIC) (REV. 10/27/05)

ORIGINAL SCALE IN MILLIMETERS FOR REDUCED PLANS 0 10 20 30 40 50 60 70 80 90 100

CU 11275
EA 2T0401

DISREGARD PRINTS BEARING EARLIER REVISION DATES

REVISION DATES (PRELIMINARY STAGE ONLY) 9-12-08 12-19-08 3-9-09 4-28-09

SHEET 11 OF 23

FILE => 57-c0787-q-arch01c.dgn

USERNAME => ttmirkes1 DATE PLOTTED => 29-SEP-2010 TIME PLOTTED => 11:51

DIST	COUNTY	ROUTE	KILOMETER POST TOTAL PROJECT	SHEET No	TOTAL SHEETS
11	SD	5,805	R49.9/R51.7, 42.6/46.5	759	886

Caltrans Metric

REGISTERED CIVIL ENGINEER 4-28-09 DATE

9-27-10
PLANS APPROVAL DATE

REGISTERED PROFESSIONAL ENGINEER James L. Rucker No. 47796 Exp. 12-31-09 CIVIL STATE OF CALIFORNIA

The State of California or its officers or agents shall not be responsible for the accuracy or completeness of electronic copies of this plan sheet.

SANDAG
401 B STREET,
SAN DIEGO, CA 92101

T.Y. LIN INTERNATIONAL
5030 CAMINO DE LA SIESTA, SUITE 204,
SAN DIEGO, CA 92108

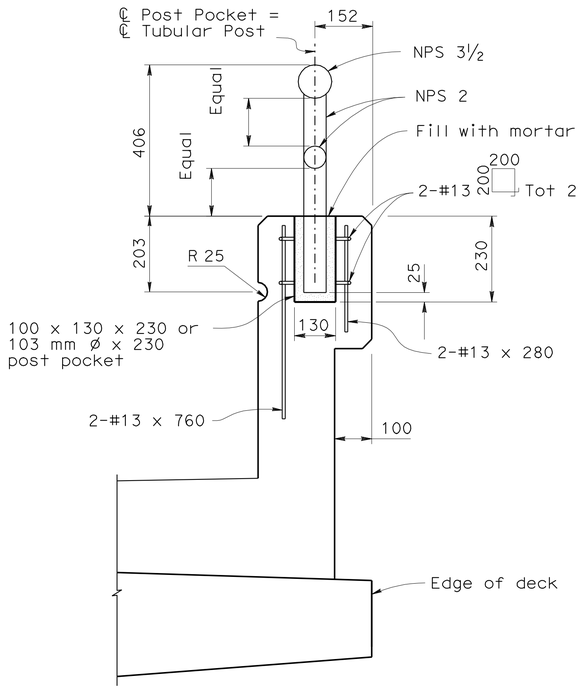

TYPE 26 (MOD)

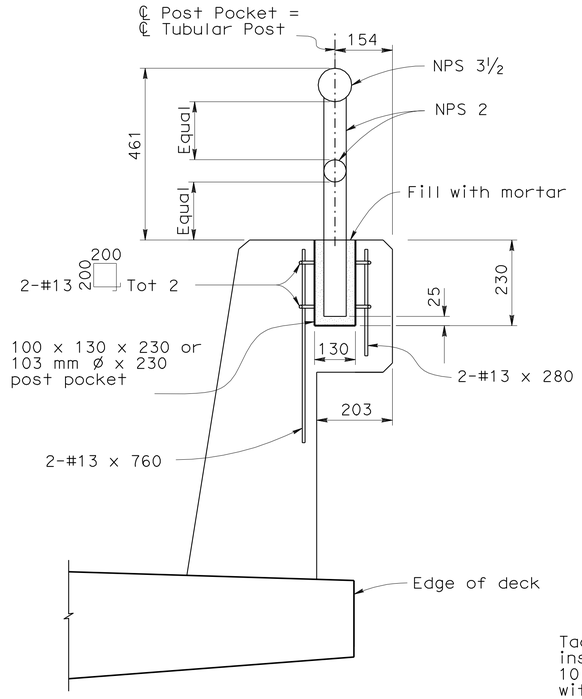

TYPE 736 (MOD)

POST ANCHORAGE DETAILS

No Scale

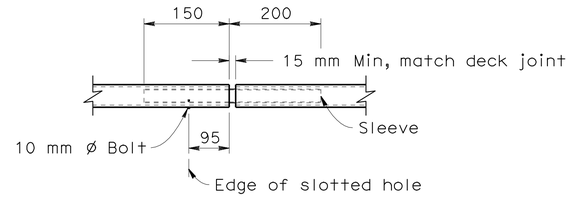

VIEW G-G

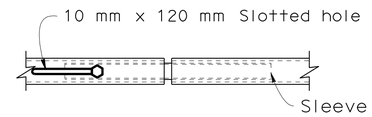

VIEW H-H

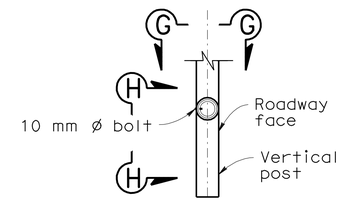

SECTION

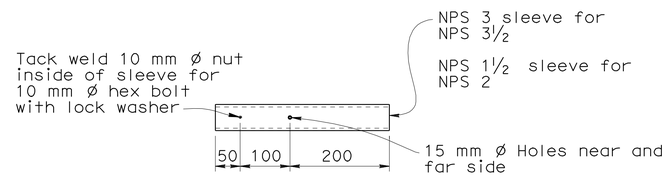

SLEEVE

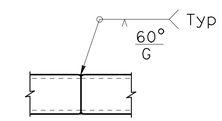

TUBE-WELD SPLICE

TUBULAR PIPE SPLICE DETAILS

No Scale

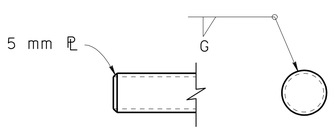

RAIL CAP DETAILS

No Scale

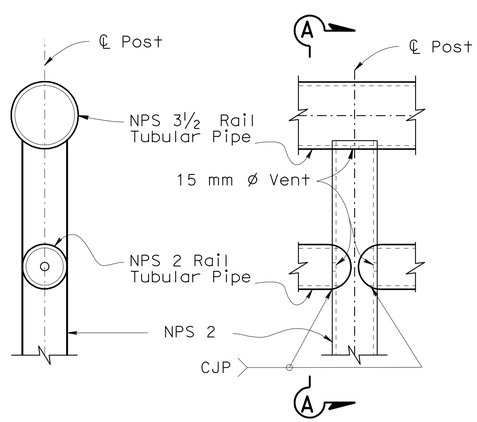

SECTION A-A

1:10

ELEVATION

1:10

For Typ Welded Section

NOTES:

1. Galvanize rail assembly after fabrication.
2. Post shall be vertical.
3. Tubular pipe splices shall be located in the pipes spanning deck or wall joints. Increase joint width in pipes to match expansion joint width and increase sleeve length accordingly.
4. Top rail tubular pipe shall be continuous over not less than two posts.
5. For details and reinforcement not shown see B11-51, B11-54 and B11-56.
6. All tubular pipe posts and rails shall be NPS standard weight A53 grade B Type E Pipes.

ALL DIMENSIONS ARE IN MILLIMETERS UNLESS OTHERWISE SHOWN

CHUNG-YUAN WEN
DESIGN OVERSIGHT
4-28-09
SIGN OFF DATE

	BY	CHECKED
DESIGN	Arash Monsefan	Roya Golchoobian
DETAILS	Tatyana Gnip	Arash Monsefan
QUANTITIES	Tatyana Gnip	Ivan Martin

PREPARED FOR THE STATE OF CALIFORNIA DEPARTMENT OF TRANSPORTATION

Brett Makley
PROJECT ENGINEER

BRIDGE NO. 57C0787
KILOMETER POST KP43.2

BUSINESS ACCESS ROAD UC
TUBULAR PIPE HANDRAILING

DESIGN DETAIL SHEET (METRIC) (REV. 10/27/05)

ORIGINAL SCALE IN MILLIMETERS FOR REDUCED PLANS 0 10 20 30 40 50 60 70 80 90 100

CU 11275
EA 2T0401

DISREGARD PRINTS BEARING EARLIER REVISION DATES

REVISION DATES (PRELIMINARY STAGE ONLY) 9-12-08 12-19-08 3-9-09 4-28-09

SHEET 12 OF 23

FILE => 57-c0787-q-arch02.dgn

USERNAME => ttmikes1 DATE PLOTTED => 29-SEP-2010 TIME PLOTTED => 11:51

DIST	COUNTY	ROUTE	KILOMETER POST TOTAL PROJECT	SHEET No	TOTAL SHEETS
11	SD	5,805	R49.9/R51.7, 42.6/46.5	760	886

REGISTERED CIVIL ENGINEER 4-28-09 DATE

9-27-10
PLANS APPROVAL DATE

REGISTERED PROFESSIONAL ENGINEER James L. Rucker No. 47796 Exp. 12-31-09 CIVIL STATE OF CALIFORNIA

The State of California or its officers or agents shall not be responsible for the accuracy or completeness of electronic copies of this plan sheet.

SANDAG
401 B STREET,
SAN DIEGO, CA 92101

T.Y. LIN INTERNATIONAL
5030 CAMINO DE LA SIESTA, SUITE 204,
SAN DIEGO, CA 92108

Caltrans Metric

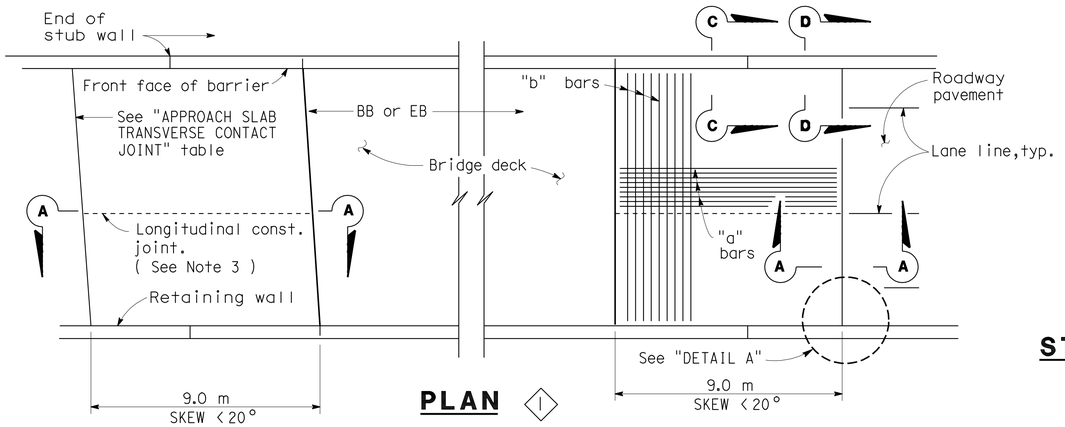

PLAN ◇1

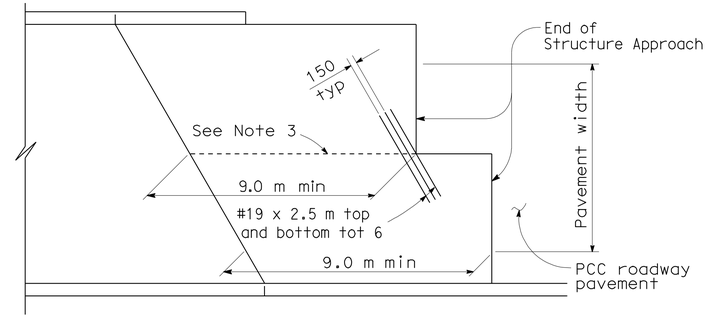

STRUCTURE APPROACH - END STAGGER DETAIL

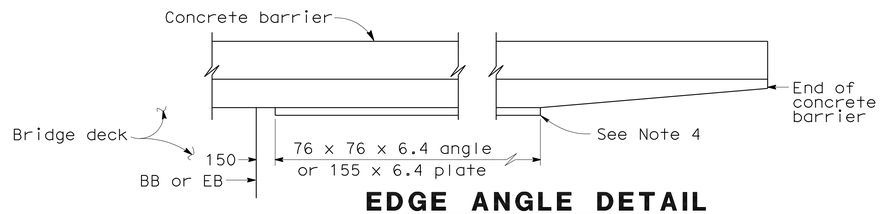

EDGE ANGLE DETAIL

APPROACH SLAB TRANSVERSE CONTACT JOINT		
APPROACH SKEW	WITH AC ROADWAY PAVEMENT	WITH PCC ROADWAY PAVEMENT
< 20°	Parallel to face of paving notch	Parallel to face of paving notch
20°- 45°	Parallel to face of P N use (Detail A)	Stagger lines 7.2 m to 10.8 m apart.
> 45°	Parallel to face of P N use (Detail A)	Stagger at each lane line.

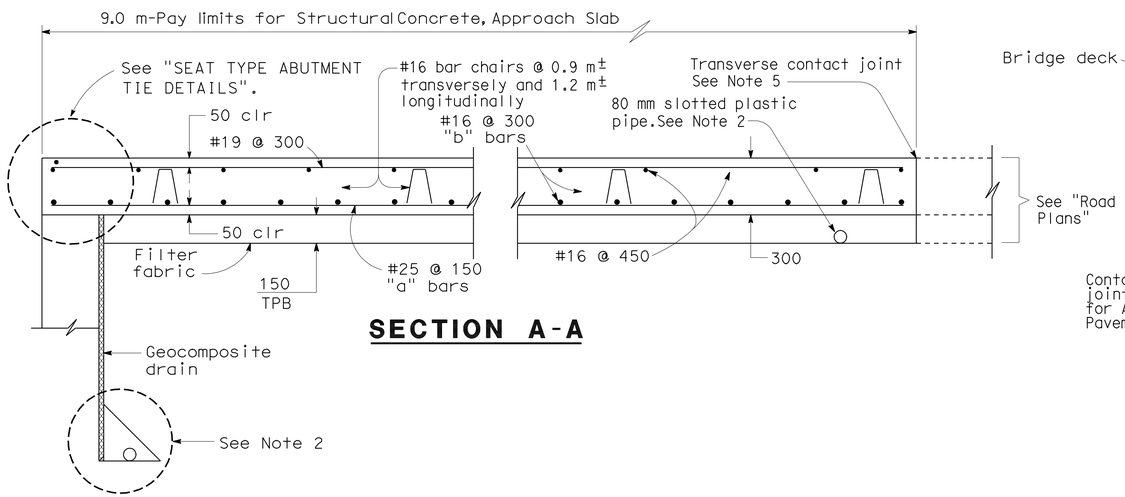

SECTION A-A

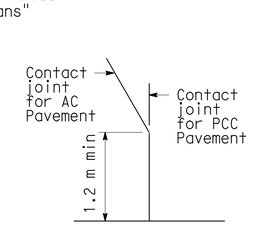

DETAIL A

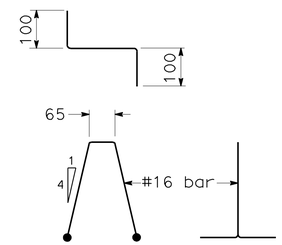

BAR CHAIR DETAIL

◇2

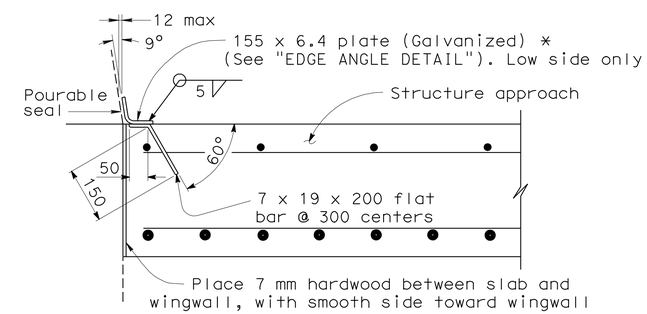

DETAIL B

***(TO BE USED WITH TYPE 732 OR TYPE 736 CONCRETE BARRIER)**

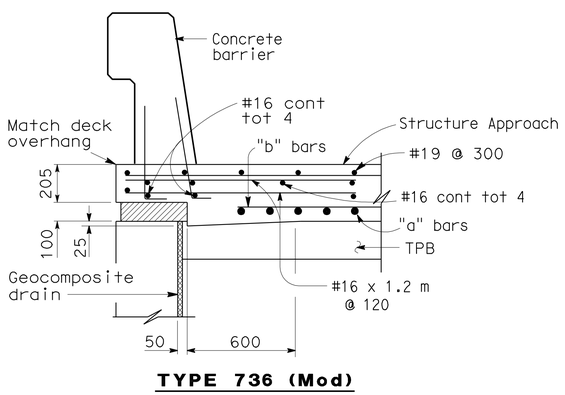

TYPE 736 (Mod)

◇1

SECTION C-C

◇2

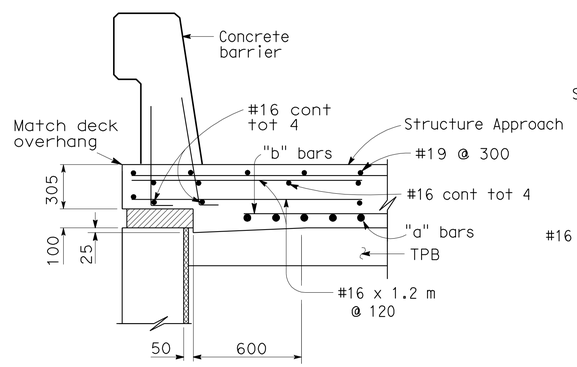

SECTION D-D

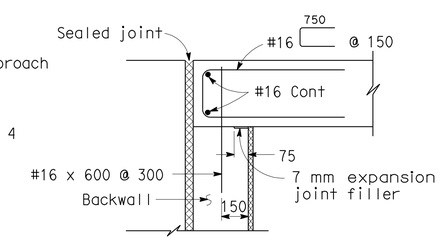

MR ≤ 50 mm

◇2

SEAT TYPE ABUTMENT TIE DETAILS (SEE NOTE 1)

SPECIAL DETAILS

NOTES:

1. For details not shown,see Structure Plans. For MR ≤ 50 mm,adjust bar reinforcement to clear a sawcut for sealed joint,when required.
2. For drainage details,see "STRUCTURE APPROACH DRAINAGE DETAILS" sheet.
3. Longitudinal construction joints,when permitted by the Engineer, shall be located on lane lines.
4. End angle or plate at beginning of barrier transition, end of wingwall or end of structure approach as applicable.
5. For transverse contact joint with new PCC paving, refer to Standard Plan P10.
6. At the contractor's option, approach slab transverse reinforcement may be placed parallel to paving notch. Spacing of transverse reinforcement is measured along ℄ roadway. Remove all polystyrene.

NO SCALE

ALL DIMENSIONS ARE IN MILLIMETERS UNLESS OTHERWISE SHOWN

INTERMEDIATE PS&E

DATE PLOTTED => 29-SEP-2010 TIME PLOTTED => 11:51

STANDARD DRAWING

RELEASE DATE Revised	DESIGN	BY M. TRAFFALIS	CHECKED E. THORKILDSEN	RELEASED BY
FILE NO.	DETAILS	BY R. YEE	CHECKED E. THORKILDSEN	
	SUBMITTED	BY M. HA	DRAWING DATE 4/98	OFFICE CHIEF

◇1 Modified detail
◇2 Detail deleted

STATE OF CALIFORNIA
DEPARTMENT OF TRANSPORTATION

DIVISION OF ENGINEERING SERVICES

CU 11275
EA 2T0401

BRIDGE NO. 57C0787
KILOMETER POST KP43.2

BUSINESS ACCESS ROAD UC

STRUCTURE APPROACH TYPE N(9S)

DISREGARD PRINTS BEARING EARLIER REVISION DATES

REVISION DATES (PRELIMINARY STAGE ONLY): 9-18-08 12-18-08 3-9-09 4-28-09

SHEET 13 OF 23

DS OSD 2147A (METRIC) (REV. 2/25/97)

ORIGINAL SCALE IN MILLIMETERS FOR REDUCED PLANS 0 10 20 30 40 50 60 70 80 90 100

USERNAME => trmikesl

57-c0787-s-sdsd01.

RELEASED 4-23-98

DIST	COUNTY	ROUTE	KILOMETER POST TOTAL PROJECT	SHEET No	TOTAL SHEETS
11	SD	5,805	R49.9/R51.7, 42.6/46.5	761	886

Caltrans Metric

REGISTERED CIVIL ENGINEER 4-28-09 DATE

9-27-10
PLANS APPROVAL DATE

REGISTERED PROFESSIONAL ENGINEER James L. Rucker No. 47796 Exp. 12-31-09 CIVIL STATE OF CALIFORNIA

The State of California or its officers or agents shall not be responsible for the accuracy or completeness of electronic copies of this plan sheet.

SANDAG
401 B STREET,
SAN DIEGO, CA 92101

T.Y. LIN INTERNATIONAL
5030 CAMINO DE LA SIESTA, SUITE 204,
SAN DIEGO, CA 92108

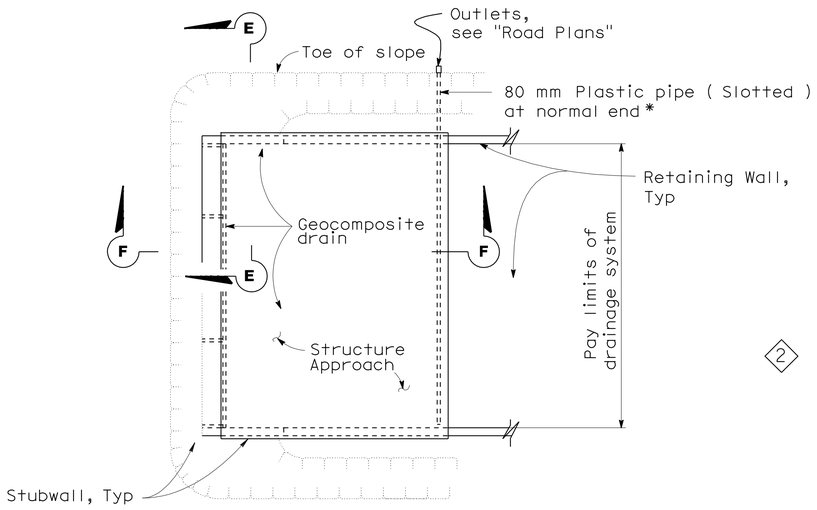

1 **TYPICAL PLAN**

*For pipe layout at staggered end, see "DETAIL B".

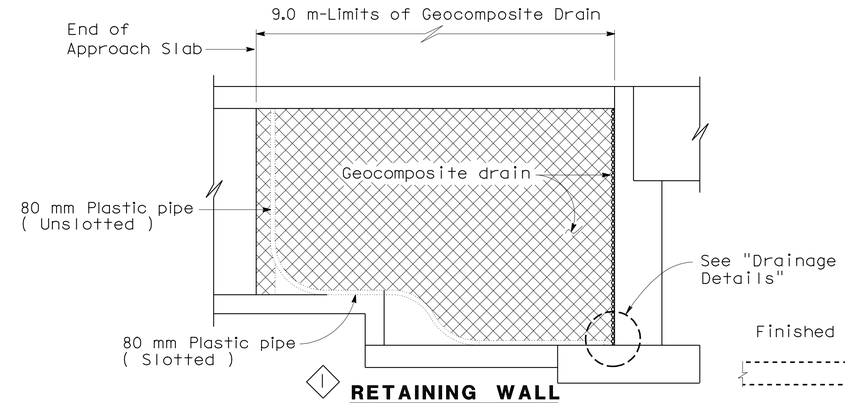

2 1 **RETAINING WALL SECTION F-F**

Note: See "ROAD PLANS" and "RETAINING WALL PLANS" for drainage details.

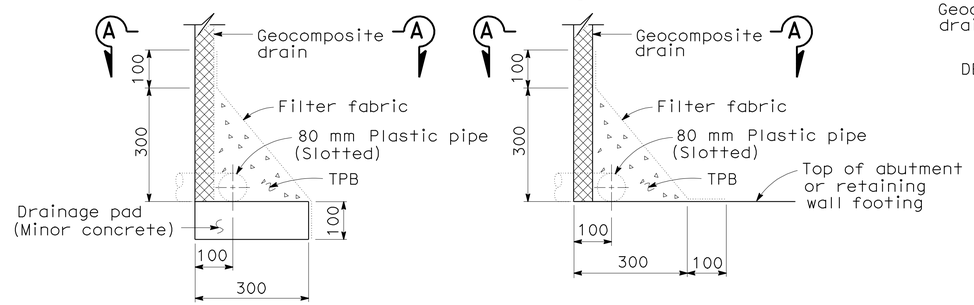

WITHOUT FOOTING **WITH FOOTING**

1 **DRAINAGE DETAILS**

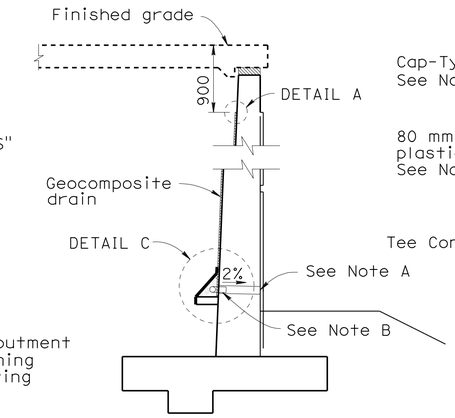

WALL SECTION

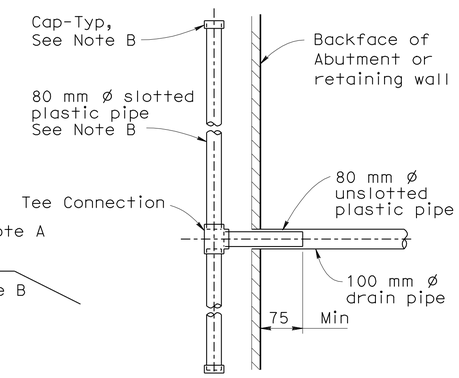

SECTION A-A

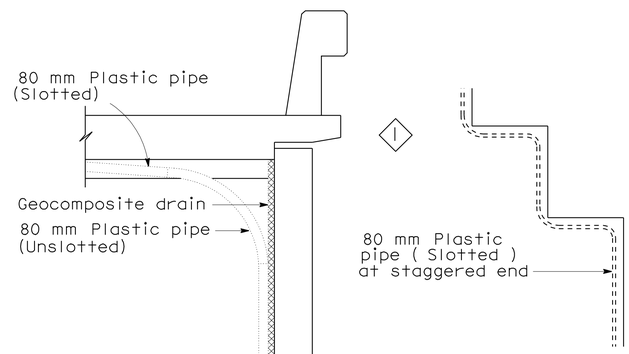

DETAIL B

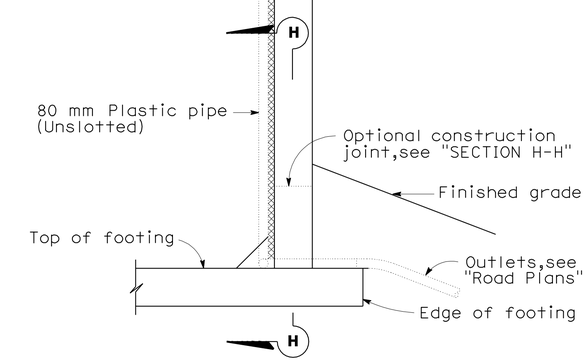

SECTION E-E

Note: Bends and junctions in 80 mm plastic pipe are 750 mm radius min.

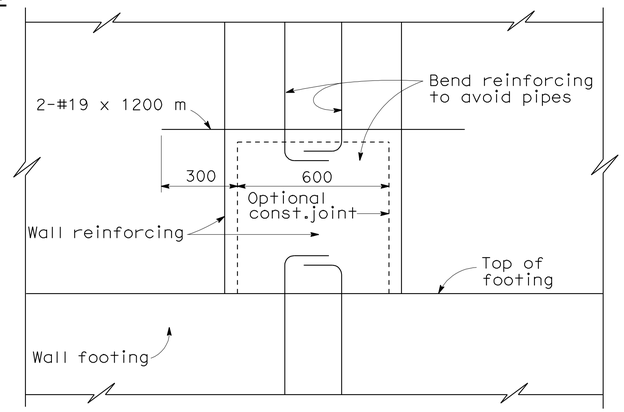

SECTION H-H

NOTES

A. 100 mm ø drains at intermediate sag points and at 7620 mm max. center to center (2743 mm c-c for Type 3 and 2819 mm c-c for Type 4 retaining walls). For walls adjacent to sidewalks or curbs, provide 100 mm plastic pipe under sidewalk to discharge through curb face. Exposed wall drains shall be located 75 mm± above finished grade.

B. Geocomposite drain, cement treated permeable base, and 80 mm ø slotted plastic pipe continuous behind retaining wall or abutment. Cap ends of pipe. Provide "Tee" connection at each 80 mm ø drain.

C. Connect the low end of plastic pipe to the main outlet pipe as applicable.

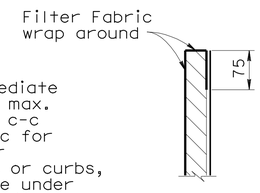

DETAIL A

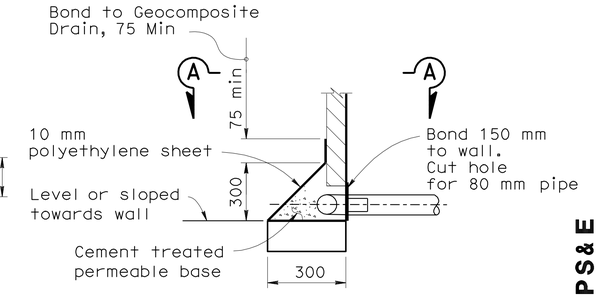

DETAIL C

WEEP HOLE AND GEOCOMPOSITE DRAIN

No Scale

3

SPECIAL DETAIL

NO SCALE

ALL DIMENSIONS ARE IN MILLIMETERS UNLESS OTHERWISE SHOWN

INTERMEDIATE PS&E

DATE PLOTTED => 29-SEP-2010 TIME PLOTTED => 11:51

STANDARD DRAWING

FILE NO.	DESIGN BY M. TRAFFALIS	CHECKED E. THORKILDSEN	APPROVAL RECOMMENDED BY
DRAWING DATE Revised	DETAILS BY R. YEE	CHECKED E. THORKILDSEN	DESIGN SUPERVISOR
	SUBMITTED BY M. HA		

1 Modified detail 3 Added detail
2 Detail deleted

STATE OF CALIFORNIA
DEPARTMENT OF TRANSPORTATION

DIVISION OF STRUCTURES
STRUCTURE DESIGN

BRIDGE NO. 57C0787
KILOMETER POST KP43.2

BUSINESS ACCESS ROAD UC

STRUCTURE APPROACH DRAINAGE DETAILS

DS OSD 2147A (METRIC) (REV. 2/25/97)

ORIGINAL SCALE IN MILLIMETERS FOR REDUCED PLANS 0 10 20 30 40 50 60 70 80 90 100

CU 11275
EA 2T0401

DISREGARD PRINTS BEARING EARLIER REVISION DATES

REVISION DATES (PRELIMINARY STAGE ONLY) 9-12-08 12-19-08 3-9-09 4-28-09

SHEET 14 OF 23

USERNAME => trmikesl 57-c0787-s-sasd02.dgn XS2217.DGN

DIST	COUNTY	ROUTE	KILOMETER POST TOTAL PROJECT	SHEET No	TOTAL SHEETS
11	SD	5,805	R49.9/R51.7, 42.6/46.5	762	886

REGISTERED CIVIL ENGINEER 4-28-09 DATE

9-27-10
PLANS APPROVAL DATE

REGISTERED PROFESSIONAL ENGINEER James L. Rucker No. 47796 Exp. 12-31-09 CIVIL STATE OF CALIFORNIA

The State of California or its officers or agents shall not be responsible for the accuracy or completeness of electronic copies of this plan sheet.

SANDAG
401 B STREET,
SAN DIEGO, CA 92101

T.Y. LIN INTERNATIONAL
5030 CAMINO DE LA SIESTA, SUITE 204,
SAN DIEGO, CA 92108

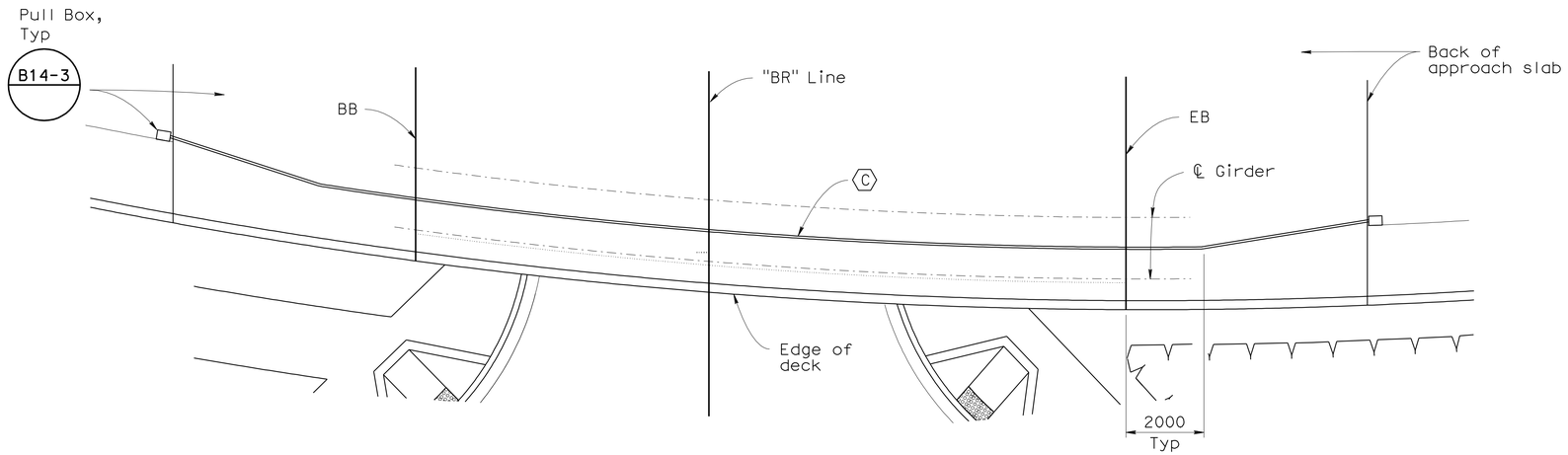

LIMITS OF PAYMENT FOR NPS3 SUPPLY LINE (BRIDGE)

1:100

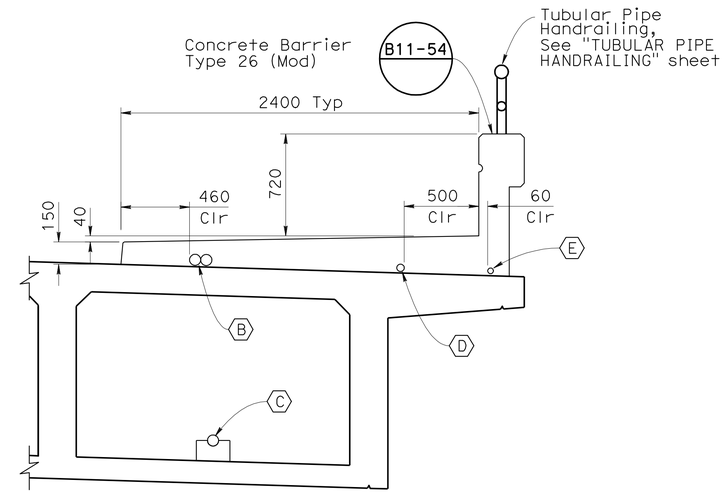

CONCRETE BARRIER TYPE 26 (MOD) DETAIL

1:20

UTILITIES:

A 1-450 mm ø Future Utility Opening, see "GENERAL PLAN" and "TYPICAL SECTION" sheet

B 2-Future utility conduits (75 mm ø each) to replace future utility conduits shown in Standard Plans

C 1-NPS 3 Water supply line (Bridge) B14-4 B14-5

D 1-50 mm ø Electrical (Lighting)

E 1-38 mm ø CNC Conduit, see "ROAD PLANS"

ALL DIMENSIONS ARE IN MILLIMETERS UNLESS OTHERWISE SHOWN

CHUNG-YUAN WEN
DESIGN OVERSIGHT
4-28-09
SIGN OFF DATE

	BY	CHECKED
DESIGN	Arash Monsefan	Roya Golchoobian
DETAILS	Tatyana Gnip	Arash Monsefan
QUANTITIES	Tatyana Gnip	Ivan Martin

PREPARED FOR THE STATE OF CALIFORNIA DEPARTMENT OF TRANSPORTATION

Brett Makley
PROJECT ENGINEER

BRIDGE NO. 57C0787
KILOMETER POST KP43.2

BUSINESS ACCESS ROAD UC
MISCELLANEOUS BRIDGE DETAILS

DESIGN DETAIL SHEET (METRIC) (REV. 10/27/05)

ORIGINAL SCALE IN MILLIMETERS FOR REDUCED PLANS 0 10 20 30 40 50 60 70 80 90 100

CU 11275
EA 2T0401

DISREGARD PRINTS BEARING EARLIER REVISION DATES

REVISION DATES (PRELIMINARY STAGE ONLY) 9-12-08 12-19-08 3-9-09 4-28-09

SHEET 15 OF 23

FILE => 57-c0787-u-miscdt01.dgn

USERNAME => ttmirkes1 DATE PLOTTED => 29-SEP-2010 TIME PLOTTED => 11:51

DIST	COUNTY	ROUTE	KILOMETER POST TOTAL PROJECT	SHEET No	TOTAL SHEETS
11	SD	5,805	R49.9/R51.7, 42.6/46.5	763	886

REGISTERED CIVIL ENGINEER 4-28-09 DATE

9-27-10
PLANS APPROVAL DATE

REGISTERED PROFESSIONAL ENGINEER James L. Rucker No. 47796 Exp. 12-31-09 CIVIL STATE OF CALIFORNIA

The State of California or its officers or agents shall not be responsible for the accuracy or completeness of electronic copies of this plan sheet.

SANDAG
401 B STREET,
SAN DIEGO, CA 92101

T.Y. LIN INTERNATIONAL
5030 CAMINO DE LA SIESTA, SUITE 204,
SAN DIEGO, CA 92108

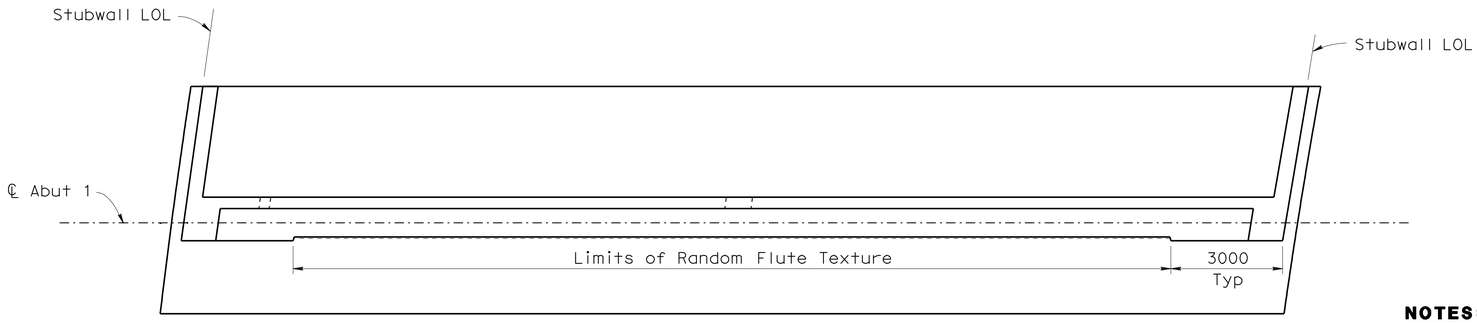

PLAN
1:80

NOTES:

1. Abutment 1 shown, Abutment 2 similar unless otherwise noted.
2. For details not shown, see "ABUTMENT 1 LAYOUT".

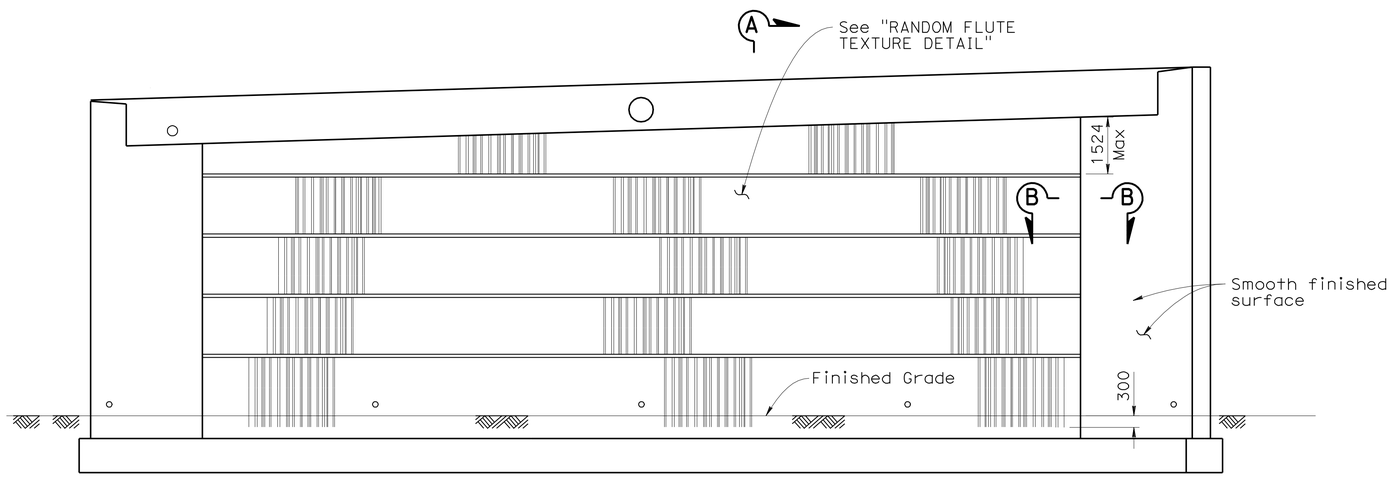

ELEVATION
1:80

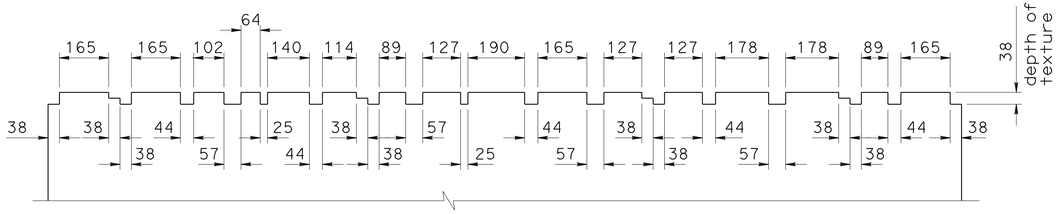

RANDOM FLUTE TEXTURE DETAIL
1:10

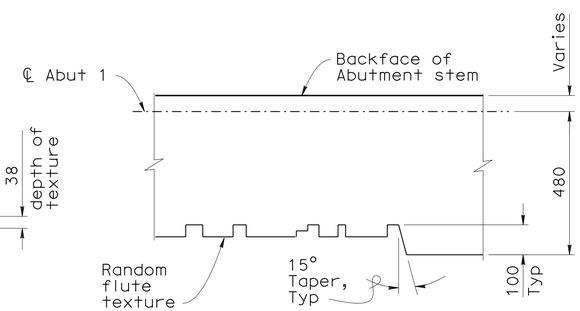

SECTION B-B
1:40

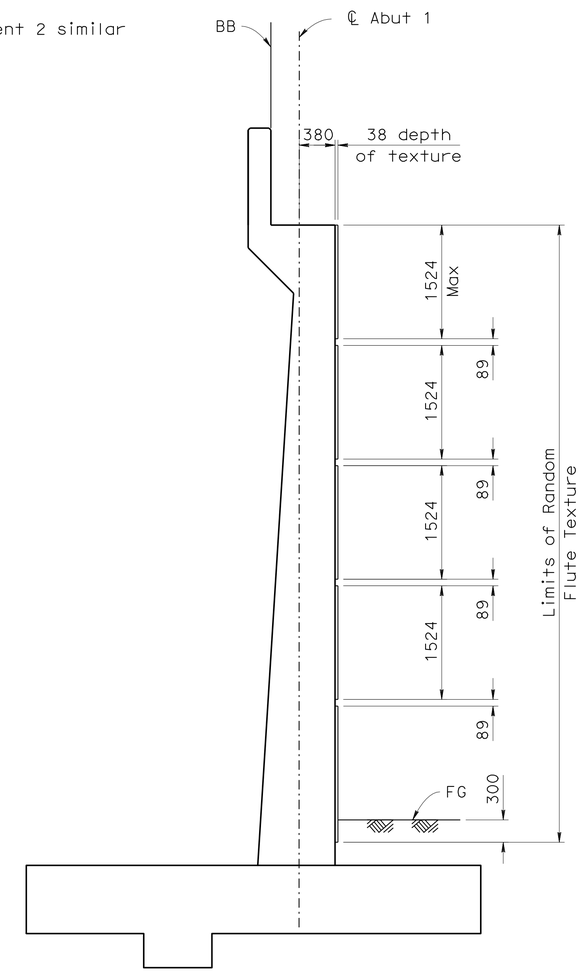

SECTION A-A
1:40

ALL DIMENSIONS ARE IN MILLIMETERS UNLESS OTHERWISE SHOWN

CHUNG-YUAN WEN
DESIGN OVERSIGHT
4-28-09
SIGN OFF DATE

	BY	CHECKED
DESIGN	Arash Monsefan	Roya Golchoobian
DETAILS	Tatyana Gnip	Arash Monsefan
QUANTITIES	Tatyana Gnip	Ivan Martin

PREPARED FOR THE STATE OF CALIFORNIA DEPARTMENT OF TRANSPORTATION

Brett Makley
PROJECT ENGINEER

BRIDGE NO. 57C0787
KILOMETER POST KP43.2

BUSINESS ACCESS ROAD UC
ARCHITECTURAL DETAILS

DESIGN DETAIL SHEET (METRIC) (REV. 10/27/05)

ORIGINAL SCALE IN MILLIMETERS FOR REDUCED PLANS 0 10 20 30 40 50 60 70 80 90 100

CU 11275
EA 2T0401

DISREGARD PRINTS BEARING EARLIER REVISION DATES

REVISION DATES (PRELIMINARY STAGE ONLY) 9-28-08 12-18-08 3-9-09 4-15-09 4-28-09

SHEET 16 OF 23

FILE => 57-c0787-v-archdt01.dgn

USERNAME => trmikes1 DATE PLOTTED => 29-SEP-2010 TIME PLOTTED => 11:52

REFERENCE: CALTRANS SOIL & ROCK LOGGING, CLASSIFICATION, AND PRESENTATION MANUAL (JUNE 2007)

GROUP SYMBOLS AND NAMES

Graphic/Symbol	Group Names	Graphic/Symbol	Group Names
GW	Well-graded GRAVEL Well-graded GRAVEL with SAND	CL	Lean CLAY Lean CLAY with SAND Lean CLAY with GRAVEL SANDY lean CLAY SANDY lean CLAY with GRAVEL GRAVELLY lean CLAY GRAVELLY lean CLAY with SAND
GP	Poorly graded GRAVEL Poorly graded GRAVEL with SAND		
GW-GM	Well-graded GRAVEL with SILT Well-graded GRAVEL with SILT and SAND	CL-ML	SILTY CLAY SILTY CLAY with SAND SILTY CLAY with GRAVEL SANDY SILTY CLAY SANDY SILTY CLAY with GRAVEL GRAVELLY SILTY CLAY GRAVELLY SILTY CLAY with SAND
GW-GC	Well-graded GRAVEL with CLAY (or SILTY CLAY) Well-graded GRAVEL with CLAY and SAND (or SILTY CLAY and SAND)		
GP-GM	Poorly graded GRAVEL with SILT Poorly graded GRAVEL with SILT and SAND	ML	SILT SILT with SAND SILT with GRAVEL SANDY SILT SANDY SILT with GRAVEL GRAVELLY SILT GRAVELLY SILT with SAND
GP-GC	Poorly graded GRAVEL with CLAY (or SILTY CLAY) Poorly graded GRAVEL with CLAY and SAND (or SILTY CLAY and SAND)		
GM	SILTY GRAVEL SILTY GRAVEL with SAND	OL	ORGANIC lean CLAY ORGANIC lean CLAY with SAND ORGANIC lean CLAY with GRAVEL SANDY ORGANIC lean CLAY SANDY ORGANIC lean CLAY with GRAVEL GRAVELLY ORGANIC lean CLAY GRAVELLY ORGANIC lean CLAY with SAND
GC	CLAYEY GRAVEL CLAYEY GRAVEL with SAND		
GC-GM	SILTY, CLAYEY GRAVEL SILTY, CLAYEY GRAVEL with SAND	OL	ORGANIC SILT ORGANIC SILT with SAND ORGANIC SILT with GRAVEL SANDY ORGANIC SILT SANDY ORGANIC SILT with GRAVEL GRAVELLY ORGANIC SILT GRAVELLY ORGANIC SILT with SAND
SW	Well-graded SAND Well-graded SAND with GRAVEL		
SP	Poorly graded SAND Poorly graded SAND with GRAVEL	CH	Fat CLAY Fat CLAY with SAND Fat CLAY with GRAVEL SANDY fat CLAY SANDY fat CLAY with GRAVEL GRAVELLY fat CLAY GRAVELLY fat CLAY with SAND
SW-SM	Well-graded SAND with SILT Well-graded SAND with SILT and GRAVEL		
SW-SC	Well-graded SAND with CLAY (or SILTY CLAY) Well-graded SAND with CLAY and GRAVEL (or SILTY CLAY and GRAVEL)	MH	Elastic SILT Elastic SILT with SAND Elastic SILT with GRAVEL SANDY elastic SILT SANDY elastic SILT with GRAVEL GRAVELLY elastic SILT GRAVELLY elastic SILT with SAND
SP-SM	Poorly graded SAND with SILT Poorly graded SAND with SILT and GRAVEL		
SP-SC	Poorly graded SAND with CLAY (or SILTY CLAY) Poorly graded SAND with CLAY and GRAVEL (or SILTY CLAY and GRAVEL)	OH	ORGANIC fat CLAY ORGANIC fat CLAY with SAND ORGANIC fat CLAY with GRAVEL SANDY ORGANIC fat CLAY SANDY ORGANIC fat CLAY with GRAVEL GRAVELLY ORGANIC fat CLAY GRAVELLY ORGANIC fat CLAY with SAND
SM	SILTY SAND SILTY SAND with GRAVEL		
SC	CLAYEY SAND CLAYEY SAND with GRAVEL	OH	ORGANIC elastic SILT ORGANIC elastic SILT with SAND ORGANIC elastic SILT with GRAVEL SANDY ORGANIC elastic SILT SANDY ORGANIC elastic SILT with GRAVEL GRAVELLY ORGANIC elastic SILT GRAVELLY ORGANIC elastic SILT with SAND
SC-SM	SILTY, CLAYEY SAND SILTY, CLAYEY SAND with GRAVEL		
PT	PEAT	OL/OH	ORGANIC SOIL ORGANIC SOIL with SAND ORGANIC SOIL with GRAVEL SANDY ORGANIC SOIL SANDY ORGANIC SOIL with GRAVEL GRAVELLY ORGANIC SOIL GRAVELLY ORGANIC SOIL with SAND
	COBBLES COBBLES and BOULDERS BOULDERS		

FIELD AND LABORATORY TESTING

- (C) Consolidation (ASTM D 2435)
- (CL) Collapse Potential (ASTM D 5333)
- (CP) Compaction Curve (CTM 216)
- (CR) Corrosivity Testing (CTM 643, CTM 422, CTM 417)
- (CU) Consolidated Undrained Triaxial (ASTM D 4767)
- (DS) Direct Shear (ASTM D 3080)
- (EI) Expansion Index (ASTM D 4829)
- (M) Moisture Content (ASTM D 2216)
- (OC) Organic Content-% (ASTM D 2974)
- (P) Permeability (CTM 220)
- (PA) Particle Size Analysis (ASTM D 422)
- (PI) Plasticity Index (AASHTO T 90) Liquid Limit (AASHTO T 89)
- (PL) Point Load Index (ASTM D 5731)
- (PM) Pressure Meter
- (PP) Pocket Penetrometer
- (R) R-Value (CTM 301)
- (SE) Sand Equivalent (CTM 217)
- (SG) Specific Gravity (AASHTO T 100)
- (SL) Shrinkage Limit (ASTM D 427)
- (SW) Swell Potential (ASTM D 4546)
- (TV) Pocket Torvane
- (UC) Unconfined Compression-Soil (ASTM D 2166) Unconfined Compression-Rock (ASTM D 2938)
- (UU) Unconsolidated Undrained Triaxial (ASTM D 2850)
- (UW) Unit Weight (ASTM D 4767)
- (VS) Vane Shear (AASHTO T 223)

Caltrans Metric

DIST	COUNTY	ROUTE	KILOMETER POST TOTAL PROJECT	SHEET No	TOTAL SHEETS
11	SD	5,805	R49.9/R51.7, 42.6/46.5	764	886

4-28-09
REGISTERED GEOTECHNICAL ENGINEER

9-27-10
PLANS APPROVAL DATE

REGISTERED PROFESSIONAL ENGINEER VAN OLIN NO. 2578 EXP. 6-30-10 GEOTECHNICAL STATE OF CALIFORNIA

The State of California or its officers or agents shall not be responsible for the accuracy or completeness of electronic copies of this plan sheet.

SANDAG
401 B STREET,
SAN DIEGO, CA. 92101

BUREAU VERITAS NORTH AMERICA, INC.
7895 CONVOY CT.
SAN DIEGO, CA. 92111

APPARENT DENSITY OF COHESIONLESS SOILS

Description	SPT N_{60} (Blows / 300 mm)
Very loose	0 - 4
Loose	5 - 10
Medium Dense	11 - 30
Dense	31 - 50
Very Dense	> 50

MOISTURE

Description	Criteria
Dry	Absence of moisture, dusty, dry to the touch
Moist	Damp but no visible water
Wet	Visible free water, usually soil is below water table

PERCENT OR PROPORTION OF SOILS

Description	Criteria
Trace	Particles are present but estimated to be less than 5%
Few	5 to 10%
Little	15 to 25%
Some	30 to 45%
Mostly	50 to 100%

PARTICLE SIZE

Description		Size
Boulder		> 300 mm
Cobble		76 mm to 300 mm
Gravel	Coarse	19 mm to 76 mm
	Fine	No. 4 to 19 mm
Sand	Coarse	No. 10 to No. 4
	Medium	No. 40 to No. 10
	Fine	No. 200 to No. 40

SOIL LEGEND

ENGINEERING SERVICES | GEOTECHNICAL SERVICES

FUNCTIONAL SUPERVISOR
NAME:
DRAWN BY: J. JOHNS
CHECKED BY: G. CUSTENBORDER
FIELD INVESTIGATIONS BY:
V. OLIN
G. CUSTENBORDER

STATE OF CALIFORNIA
DEPARTMENT OF TRANSPORTATION

DIVISION OF ENGINEERING SERVICES
STRUCTURE DESIGN
DESIGN BRANCH

BRIDGE NO. 57-C0787
POST MILES KP43.2/PM26.8

BUSINESS ACCESS ROAD UC
LOG OF TEST BORINGS SHEET NO. 1 OF 7

CU 11275
EA 2T0401

OGS CIVIL LOG OF TEST BORINGS SHEET

ORIGINAL SCALE IN MILLIMETERS FOR REDUCED PLANS 0 10 20 30 40 50 60 70 80 90 100

DISREGARD PRINTS BEARING EARLIER REVISION DATES
REVISION DATES 10/14/08 3/9/09 4/28/09

SHEET 17 OF 23

FILE => 57-c0787-z-lotb01.dgn

USERNAME => trmikesl DATE PLOTTED => 29-SEP-2010 TIME PLOTTED => 11:52

REFERENCE: CALTRANS SOIL & ROCK LOGGING, CLASSIFICATION, AND PRESENTATION MANUAL (JUNE 2007)

Caltrans Metric

DIST	COUNTY	ROUTE	KILOMETER POST TOTAL PROJECT	SHEET No	TOTAL SHEETS
11	SD	5,805	R49.9/R51.7, 42.6/46.5	765	886

REGISTERED GEOTECHNICAL ENGINEER 4-28-09

PLANS APPROVAL DATE 9-27-10

REGISTERED PROFESSIONAL ENGINEER VAN OLIN NO. 2578 EXP. 6-30-10 GEOTECHNICAL STATE OF CALIFORNIA

The State of California or its officers or agents shall not be responsible for the accuracy or completeness of electronic copies of this plan sheet.

SANDAG
401 B STREET,
SAN DIEGO, CA. 92101

BUREAU VERITAS NORTH AMERICA, INC.
7895 CONVOY CT.
SAN DIEGO, CA. 92111

CEMENTATION

Description	Criteria
Weak	Crumbles or breaks with handling or little finger pressure.
Moderate	Crumbles or breaks with considerable finger pressure.
Strong	Will not crumble or break with finger pressure.

CONSISTENCY OF COHESIVE SOILS

Description	Unconfined Compressive Strength (tsm)	Pocket Penetrometer Measurement (tsm)	Torvane Measurement (tsm)	Field Approximation
Very Soft	< 24	< 24	< 12	Easily penetrated several inches by fist
Soft	24 to 48	24 to 48	12 to 24	Easily penetrated several inches by thumb
Medium Stiff	48 to 96	48 to 96	24 to 48	Penetrated several inches by thumb with moderate effort
Stiff	96 to 192	96 to 192	48 to 96	Readily indented by thumb but penetrated only with great effort
Very Stiff	192 to 383	192 to 383	96 to 192	Readily indented by thumbnail
Hard	> 383	> 383	> 192	Indented by thumbnail with difficulty

BOREHOLE IDENTIFICATION

Symbol	Hole Type	Description
Size	A	Auger Boring
Size	R P	Rotary drilled boring Rotary percussion boring (air)
Size	R	Rotary drilled diamond core
Size	HD HA	Hand driven (25 mm soil tube) Hand Auger
●	D	Dynamic Cone Penetration Boring
▲	CPT	Cone Penetration Test (ASTM D 5778-95)
⬚	O	Other

Note: Size in millimeters.

PLASTICITY OF FINE-GRAINED SOILS

Description	Criteria
Nonplastic	A 3 mm thread cannot be rolled at any water content.
Low	The thread can barely be rolled and the lump cannot be formed when drier than the plastic limit.
Medium	The thread is easy to roll and not much time is required to reach the plastic limit. The thread cannot be rerolled after reaching the plastic limit. The lump crumbles when drier than the plastic limit.
High	It takes considerable time rolling and kneading to reach the plastic limit. The thread can be rerolled several times after reaching the plastic limit. The lump can be formed without crumbling when drier than the plastic limit.

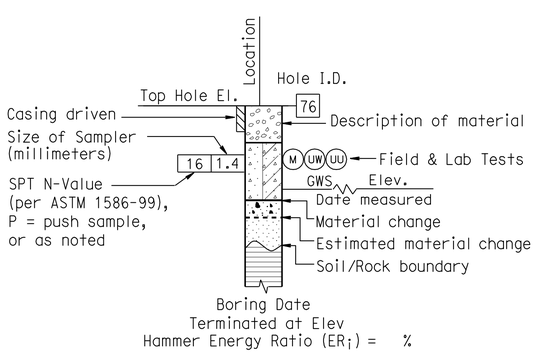

ROTARY BORING

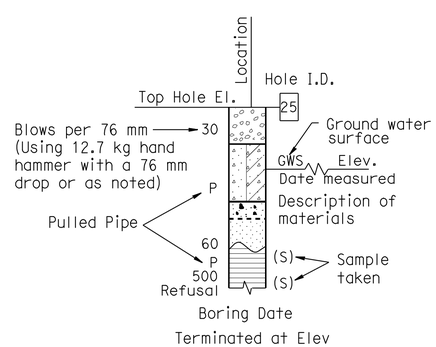

HAND BORING

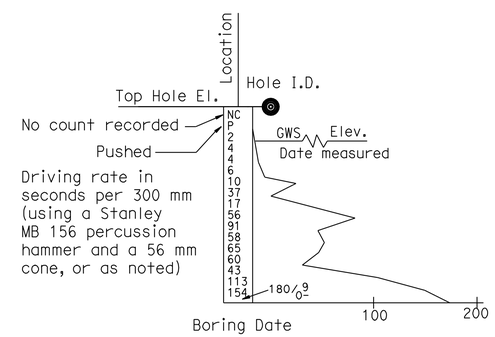

DYNAMIC CONE PENETRATION BORING

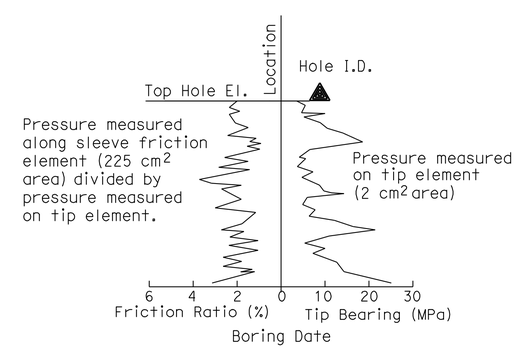

CONE PENETRATION TEST (CPT) SOUNDING

SOIL LEGEND

ENGINEERING SERVICES	GEOTECHNICAL SERVICES	STATE OF CALIFORNIA DEPARTMENT OF TRANSPORTATION	DIVISION OF ENGINEERING SERVICES STRUCTURE DESIGN DESIGN BRANCH	BRIDGE NO. 57-C0787 / POST MILES KP43.2/PM26.8	BUSINESS ACCESS ROAD UC
FUNCTIONAL SUPERVISOR	DRAWN BY: J. JOHNS	FIELD INVESTIGATIONS BY: V. OLIN, G. CUSTENBORDER			LOG OF TEST BORINGS SHEET NO. 2 OF 7
NAME:	CHECKED BY: G. CUSTENBORDER				

OGS CIVIL LOG OF TEST BORINGS SHEET

ORIGINAL SCALE IN MILLIMETERS FOR REDUCED PLANS 0 10 20 30 40 50 60 70 80 90 100

CU 11275
EA 2T0401

DISREGARD PRINTS BEARING EARLIER REVISION DATES 10/14/08 3/24/09 4/28/09

REVISION DATES

SHEET 18 OF 23

FILE => 57-c0787-z-lotb02.dgn

USERNAME => ttmirkes1 DATE PLOTTED => 29-SEP-2010 TIME PLOTTED => 11:52

REFERENCE: CALTRANS SOIL & ROCK LOGGING, CLASSIFICATION, AND PRESENTATION MANUAL (JUNE 2007)

Caltrans Metric

DIST	COUNTY	ROUTE	KILOMETER POST TOTAL PROJECT	SHEET No	TOTAL SHEETS
11	SD	5,805	R49.9/R51.7, 42.6/46.5	766	886

4-28-09
REGISTERED GEOTECHNICAL ENGINEER

9-27-10
PLANS APPROVAL DATE

REGISTERED PROFESSIONAL ENGINEER VAN OLIN NO. 2578 EXP. 6-30-10 GEOTECHNICAL STATE OF CALIFORNIA

The State of California or its officers or agents shall not be responsible for the accuracy or completeness of electronic copies of this plan sheet.

SANDAG
401 B STREET,
SAN DIEGO, CA. 92101

BUREAU VERITAS NORTH AMERICA, INC.
7895 CONVOY CT.
SAN DIEGO, CA. 92111

PERCENT CORE RECOVERY (REC) & ROCK QUALITY DESIGNATION (RQD)

$$REC = \frac{\sum \text{Length of the recovered core pieces}}{\text{Total length of core run}} \times 100\%$$

$$RQD = \frac{\sum \text{Length of intact core pieces} \geq 100\text{ mm}}{\text{Total length of core run}} \times 100\%$$

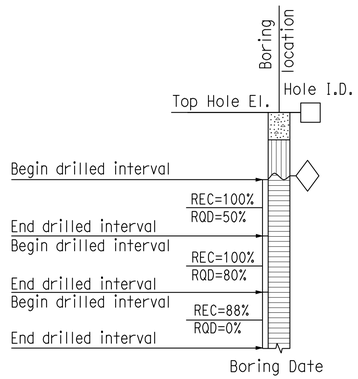

RELATIVE STRENGTH OF INTACT ROCK

Term	Uniaxial Compressive Strength (MPa)
Extremely Strong	> 207
Very Strong	100 - 207
Strong	49 - 100
Medium Strong	25 - 49
Weak	5 - 25
Very Weak	1 - 5
Extremely Weak	< 1

BEDDING SPACING

Description	Thickness / Spacing
Massive	Greater than 3 m
Very thickly bedded	1 m to 3 m
Thickly bedded	300 mm to 1 m
Moderately bedded	100 mm to 300 mm
Thinly bedded	30 mm to 100 mm
Very thinly bedded	10 mm to 30 mm
Laminated	Less than 10 mm

LEGEND OF ROCK MATERIALS

- IGNEOUS ROCK
- SEDIMENTARY ROCK
- METAMORPHIC ROCK

ROCK HARDNESS

Description	Criteria
Extremely Hard	Specimen cannot be scratched with a pocket knife or sharp pick; can only be chipped with repeated heavy hammer blows.
Very Hard	Specimen cannot be scratched with a pocket knife or sharp pick. Breaks with repeated heavy hammer blows.
Hard	Specimen can be scratched with a pocket knife or sharp pick with difficulty (heavy pressure). Heavy hammer blows required to break specimen.
Moderately Hard	Specimen can be scratched with pocket knife or sharp pick with light or moderate pressure. Core breaks with moderate hammer pressure.
Moderately Soft	Specimen can be grooved 5 mm deep with a pocket knife or sharp pick with moderate or heavy pressure. Breaks with light hammer blow or heavy manual pressure.
Soft	Specimen can be grooved or gouged easily by a pocket knife or sharp pick with light pressure, can be scratched with fingernail. Breaks with light to moderate manual pressure.
Very Soft	Specimen can be readily indented, grooved or gouged with fingernail, or carved with a pocket knife. Breaks with light manual pressure.

FRACTURE DENSITY

Description	Observed Fracture Density
Unfractured	No fractures.
Very slightly fractured	Lengths greater than 1 m.
Slightly fractured	Lengths from 300 mm to 1000 mm with few lengths less than 300 mm or greater than 1000 mm.
Moderately fractured	Lengths mostly in 100 mm to 300 mm range with most lengths about 200 mm.
Intensely fractured	Lengths average from 30 mm to 100 mm with scattered fragmented intervals with lengths less than 100 mm.
Very intensely fractured	Mostly chips and fragments with a few scattered short core lengths.

Combination descriptors (such as "Very intensely to intensely fractured") are used where equal distribution of both fracture density characteristics is present over a significant interval or exposure, or where characteristics are "in between" the descriptor definitions. Only two adjacent descriptors may be combined.

WEATHERING DESCRIPTORS FOR INTACT ROCK

Description	Diagnostic features					General Characteristics
	Chemical Weathering-Discoloration and/or oxidation		Mechanical Weathering-Grain boundary conditions (disaggregation) primarily for granitics and some coarse-grained sediments	Texture and Solutioning		
	Body of Rock	Fracture Surfaces		Texture	Solutioning	
Fresh	No discoloration, not oxidized.	No discoloration or oxidation.	No separation, intact (tight).	No change.	No solutioning.	Hammer rings when crystalline rocks are struck.
Slightly Weathered	Discoloration or oxidation is limited to surface of, or short distance from, fractures; some feldspar crystals are dull.	Minor to complete discoloration or oxidation of most surfaces.	No visible separation, intact (tight).	Preserved.	Minor leaching of some soluble minerals may be noted.	Hammer rings when crystalline rocks are struck. Body of rock not weakened.
Moderately Weathered	Discoloration or oxidation extends from fractures usually throughout; Fe-Mg minerals are "rusty," feldspar crystals are "cloudy."	All fracture surfaces are discolored or oxidized.	Partial separation of boundaries visible.	Generally preserved.	Soluble minerals may be mostly leached.	Hammer does not ring when rock is struck. Body of rock is slightly weakened.
Intensely Weathered	Discoloration or oxidation throughout; all feldspars and Fe-Mg minerals are altered to clay to some extent; or chemical alteration produces in-situ disaggregation, see grain boundary conditions.	All fracture surfaces are discolored or oxidized, surfaces friable.	Partial separation, rock is friable; in semiarid conditions granitics are disaggregated.	Texture altered by chemical disintegration (hydration, argillation).	Leaching of soluble minerals may be complete.	Dull sound when struck with hammer, usually can be broken with moderate to heavy manual pressure or by light hammer blow without reference to planes of weakness such as incipient or hairline fractures, or veinlets. Rock is significantly weakened.
Decomposed	Discolored or oxidized throughout, but resistant minerals such as quartz may be unaltered; all feldspars and Fe-Mg minerals are completely altered to clay.		Complete separation of grain boundaries (disaggregated).	Resembles a soil, partial or complete remnant rock structure may be preserved; leaching of soluble minerals usually complete.		Can be granulated by hand. Resistant minerals such as quartz may be present as "stringers" or "dikes."

Combination descriptors (such as "slightly weathered to fresh") are permissible where equal distribution of both weathering characteristics is present over significant intervals or where characteristics present are "in between" the diagnostic feature. However, combination descriptors should not be used where significant, identifiable zones can be delineated. Only two adjacent descriptors may be combined. "Very intensely weathered" is the combination descriptor for "intensely weathered to decomposed."

ROCK LEGEND

ENGINEERING SERVICES	GEOTECHNICAL SERVICES	STATE OF CALIFORNIA DEPARTMENT OF TRANSPORTATION	DIVISION OF ENGINEERING SERVICES STRUCTURE DESIGN DESIGN BRANCH	BRIDGE NO. 57-C0787	BUSINESS ACCESS ROAD UC
FUNCTIONAL SUPERVISOR	DRAWN BY: J. JOHNS	FIELD INVESTIGATIONS BY: V. OLIN, G. CUSTENBORDER		POST MILES KP43.2/PM26.8	LOG OF TEST BORINGS SHEET NO. 3 OF 7
NAME:	CHECKED BY: G. CUSTENBORDER				

OGS CIVIL LOG OF TEST BORINGS SHEET

ORIGINAL SCALE IN MILLIMETERS FOR REDUCED PLANS 0 10 20 30 40 50 60 70 80 90 100

CU 11275
EA 2T0401

DISREGARD PRINTS BEARING EARLIER REVISION DATES → 10/14/08 3/9/09 4/28/09

REVISION DATES

SHEET 19 OF 23

FILE => 57-c0787-z-lotb03.dgn

DATE PLOTTED => 29-SEP-2010 TIME PLOTTED => 11:52

USERNAME => trmikest

Bench Mark
All elevations shown in the LOTBs are in meters and are referenced to the NGVD 1929 Datum.

DIST	COUNTY	ROUTE	KILOMETER POST TOTAL PROJECT	SHEET No	TOTAL SHEETS
11	SD	5 805	R49.9/R51.7, 42.6/46.5	767	886

Caltrans Metric

REGISTERED GEOTECHNICAL ENGINEER 4-28-09

PLANS APPROVAL DATE 9-27-10

REGISTERED PROFESSIONAL ENGINEER VAN OLIN NO. 2578 EXP. 6-30-10 GEOTECHNICAL STATE OF CALIFORNIA

The State of California or its officers or agents shall not be responsible for the accuracy or completeness of electronic copies of this plan sheet.

SANDAG
401 B STREET,
SAN DIEGO, CA. 92101

BUREAU VERITAS NORTH AMERICA, INC.
7895 CONVOY CT.
SAN DIEGO, CA. 92111

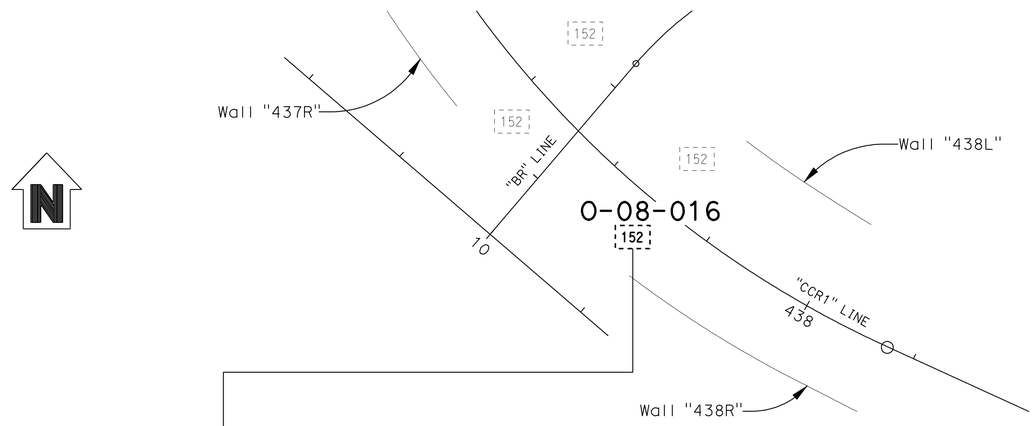

PLAN
1 : 500

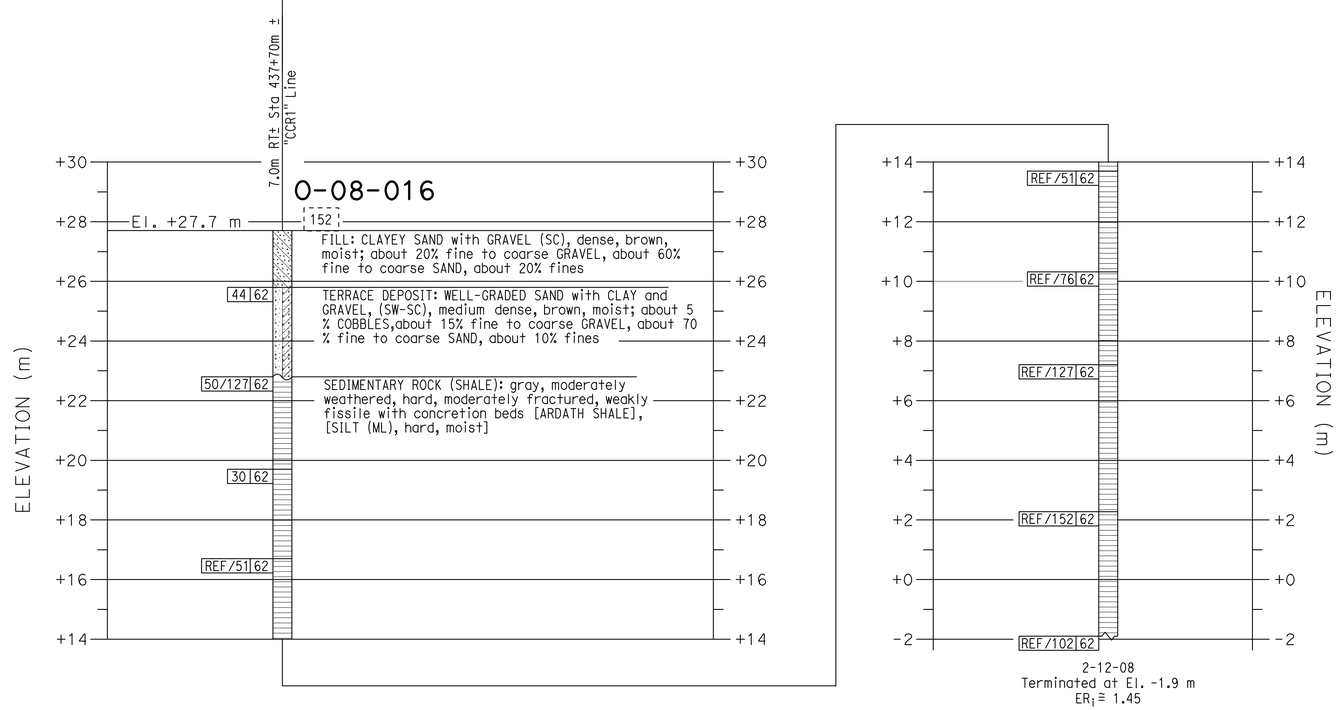

PROFILE
VERTICAL 1 : 100
HORIZONTAL 1 : 500

NOTES:

1. 62 mm diameter samples were taken using a California split-barrel sampler with an inside diameter (I.D.) of 62 mm and an outside diameter (O.D.) of 83 mm.

2. Automatic trip and safety hammer systems consisting of hammer weight of 62.5 kg falling a distance of 762 mm were used to advance the drive samplers in accordance with ASTM D1586.

3. The average hammer energy ratio (ER_i) reflects the percentage efficiency of SPT blowcounts (N-value). The estimated ER_i for the various drilling equipment used was as follows:
   Boart Longyear:
   - Longyear 1405: $ER_i \cong 1.45$
   - Prosonic Track Mounted: $ER_i \cong 1.00$
   - Prosonic 1: $ER_i \cong 1.45$
   - Minisonic: $ER_i \cong 1.00$

   Pacific Drilling:
   - Unimog: $ER_i \cong 1.27$
   - Mole: $ER_i \cong 1.00$
   - Minimole: $ER_i \cong 1.00$

   Test America:
   - CME 95: $ER_i \cong 1.45$

4. The sedimentary rock was obtained utilizing a sonic drilling technique; this method resulted in Core Recovery (REC) values of essentially 100%. Also, given the nature of the Sedimentary Rock (ie., friable, highly fractured, decomposed rock) a Rock Quality Designation (RQD) index is not relevant and therefore not reported on LOTBs.

ENGINEERING SERVICES	GEOTECHNICAL SERVICES	STATE OF CALIFORNIA DEPARTMENT OF TRANSPORTATION	DIVISION OF ENGINEERING SERVICES STRUCTURE DESIGN DESIGN BRANCH	BRIDGE NO. 57-C0787 POST MILES KP43.2/PM26.8	BUSINESS ACCESS ROAD UC
FUNCTIONAL SUPERVISOR	DRAWN BY: J. JOHNS	FIELD INVESTIGATIONS BY: V. OLIN G. CUSTENBORDER			LOG OF TEST BORINGS SHEET NO. 4 OF 7
NAME:	CHECKED BY: G. CUSTENBORDER				

OGS CIVIL LOG OF TEST BORINGS SHEET

ORIGINAL SCALE IN MILLIMETERS FOR REDUCED PLANS 0 10 20 30 40 50 60 70 80 90 100

CU 11275
EA 2T0401

DISREGARD PRINTS BEARING EARLIER REVISION DATES → 10/14/08 3/24/09 4/28/09

REVISION DATES

SHEET 20 OF 23

FILE => 57-c0787-z-lotb04.dgn

DATE PLOTTED => 29-SEP-2010 TIME PLOTTED => 11:53
USERNAME => trmikest

Bench Mark
All elevations shown in the LOTBs are in meters and are referenced to the NGVD 1929 Datum.

DIST	COUNTY	ROUTE	KILOMETER POST TOTAL PROJECT	SHEET No	TOTAL SHEETS
11	SD	5.805	R49.9/R51.7, 42.6/46.5	768	886

Caltrans Metric

4-28-09
REGISTERED GEOTECHNICAL ENGINEER

9-27-10
PLANS APPROVAL DATE

REGISTERED PROFESSIONAL ENGINEER VAN OLIN NO. 2578 EXP. 6-30-10 GEOTECHNICAL STATE OF CALIFORNIA

The State of California or its officers or agents shall not be responsible for the accuracy or completeness of electronic copies of this plan sheet.

SANDAG
401 B STREET,
SAN DIEGO, CA. 92101

BUREAU VERITAS NORTH AMERICA, INC.
7895 CONVOY CT.
SAN DIEGO, CA. 92111

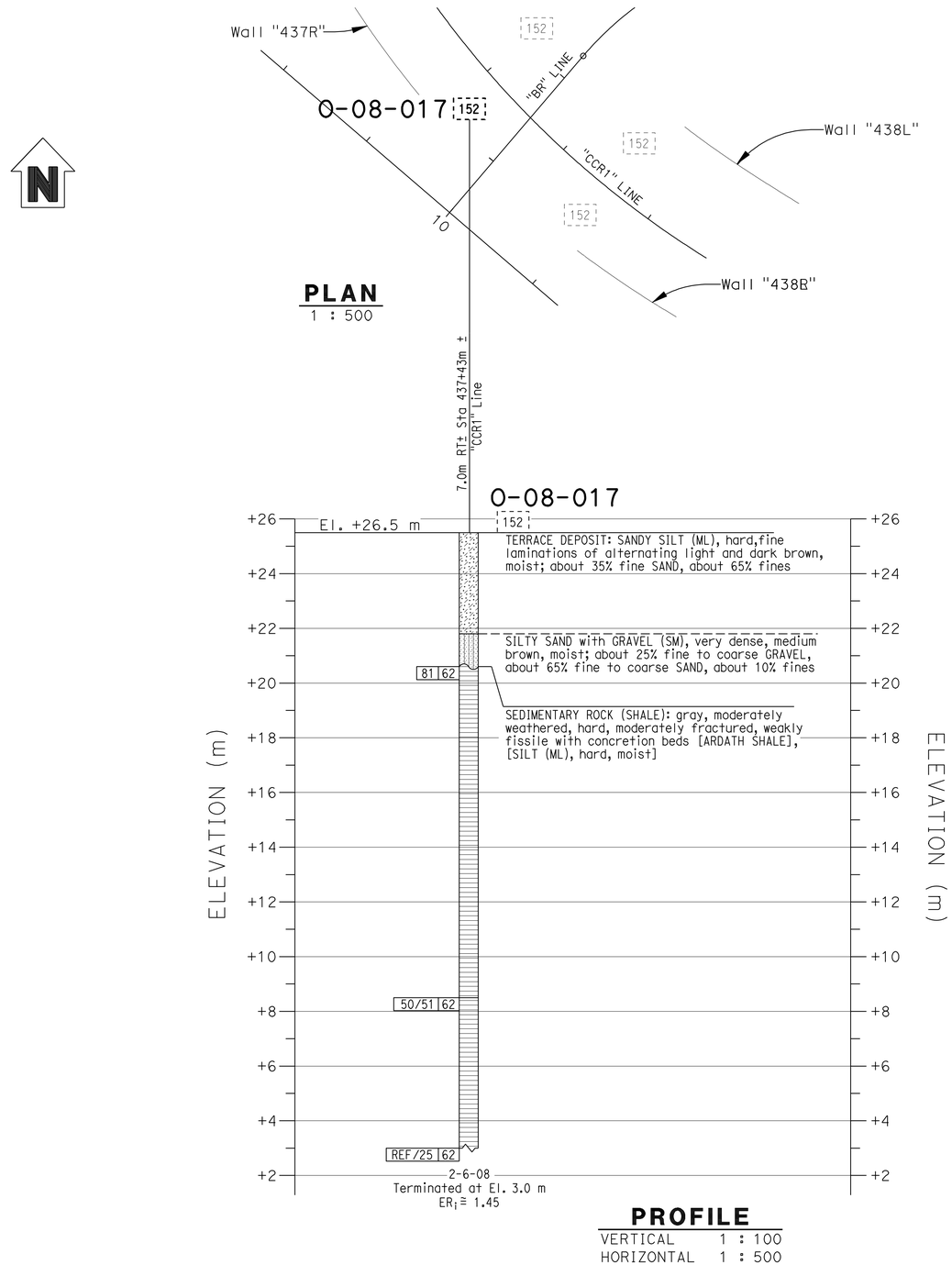

NOTES:

1. 62 mm diameter samples were taken using a California split-barrel sampler with an inside diameter (I.D.) of 62 mm and an outside diameter (O.D.) of 83 mm.

2. Automatic trip and safety hammer systems consisting of hammer weight of 62.5 kg falling a distance of 762 mm were used to advance the drive samplers in accordance with ASTM D1586.

3. The average hammer energy ratio (ER_I) reflects the percentage efficiency of SPT blowcounts (N-value). The estimated ER_I for the various drilling equipment used was as follows:
   Boart Longyear:
   - Longyear 1405: $ER_I \cong 1.45$
   - Prosonic Track Mounted: $ER_I \cong 1.00$
   - Prosonic 1: $ER_I \cong 1.45$
   - Minisonic: $ER_I \cong 1.00$

   Pacific Drilling:
   - Unimog: $ER_I \cong 1.27$
   - Mole: $ER_I \cong 1.00$
   - Minimole: $ER_I \cong 1.00$

   Test America:
   - CME 95: $ER_I \cong 1.45$

4. The sedimentary rock was obtained utilizing a sonic drilling technique; this method resulted in Core Recovery (REC) values of essentially 100%. Also, given the nature of the Sedimentary Rock (ie., friable, highly fractured, decomposed rock) a Rock Quality Designation (RQD) index is not relevant and therefore not reported on LOTBs.

ENGINEERING SERVICES		GEOTECHNICAL SERVICES	STATE OF CALIFORNIA DEPARTMENT OF TRANSPORTATION	DIVISION OF ENGINEERING SERVICES STRUCTURE DESIGN DESIGN BRANCH	BRIDGE NO. 57-C0787 POST MILES KP43.2/PM26.8	BUSINESS ACCESS ROAD UC LOG OF TEST BORINGS SHEET NO. 5 OF 7
FUNCTIONAL SUPERVISOR	DRAWN BY: J. JOHNS	FIELD INVESTIGATIONS BY: V. OLIN G. CUSTENBORDER				
NAME:	CHECKED BY: G. CUSTENBORDER					

OGS CIVIL LOG OF TEST BORINGS SHEET

ORIGINAL SCALE IN MILLIMETERS FOR REDUCED PLANS 0 10 20 30 40 50 60 70 80 90 100

CU 11275
EA 2T0401

DISREGARD PRINTS BEARING EARLIER REVISION DATES → 10/14/08 3/27/09 4/28/09

REVISION DATES

SHEET 21 OF 23

FILE => 57-c0787-z-lotb05.dgn

DATE PLOTTED => 29-SEP-2010 TIME PLOTTED => 11:53
USERNAME => trmikesl

Bench Mark
All elevations shown in the LOTBs are in meters and are referenced to the NGVD 1929 Datum.

DIST	COUNTY	ROUTE	KILOMETER POST TOTAL PROJECT	SHEET No	TOTAL SHEETS
11	SD	5.805	R49.9/R51.7, 42.6/46.5	769	886

Caltrans Metric

4-28-09
REGISTERED GEOTECHNICAL ENGINEER

9-27-10
PLANS APPROVAL DATE

REGISTERED PROFESSIONAL ENGINEER VAN OLIN NO. 2578 EXP. 6-30-10 GEOTECHNICAL STATE OF CALIFORNIA

The State of California or its officers or agents shall not be responsible for the accuracy or completeness of electronic copies of this plan sheet.

SANDAG
401 B STREET,
SAN DIEGO, CA. 92101

BUREAU VERITAS NORTH AMERICA, INC.
7895 CONVOY CT.
SAN DIEGO, CA. 92111

NOTES:

1. 62 mm diameter samples were taken using a California split-barrel sampler with an inside diameter (I.D.) of 62 mm and an outside diameter (O.D.) of 83 mm.

2. Automatic trip and safety hammer systems consisting of hammer weight of 62.5 kg falling a distance of 762 mm were used to advance the drive samplers in accordance with ASTM D1586.

3. The average hammer energy ratio (ER_i) reflects the percentage efficiency of SPT blowcounts (N-value). The estimated ER_i for the various drilling equipment used was as follows:
   Boart Longyear:
   - Longyear 1405: $ER_i \cong 1.45$
   - Prosonic Track Mounted: $ER_i \cong 1.00$
   - Prosonic 1: $ER_i \cong 1.45$
   - Minisonic: $ER_i \cong 1.00$

   Pacific Drilling:
   - Unimog: $ER_i \cong 1.27$
   - Mole: $ER_i \cong 1.00$
   - Minimole: $ER_i \cong 1.00$

   Test America:
   - CME 95: $ER_i \cong 1.45$

4. The sedimentary rock was obtained utilizing a sonic drilling technique; this method resulted in Core Recovery (REC) values of essentially 100%. Also, given the nature of the Sedimentary Rock (ie., friable, highly fractured, decomposed rock) a Rock Quality Designation (RQD) index is not relevant and therefore not reported on LOTBs.

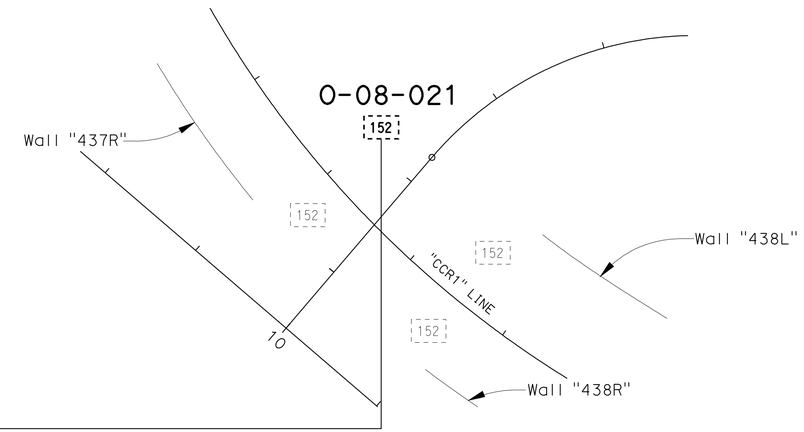

PLAN
1 : 500

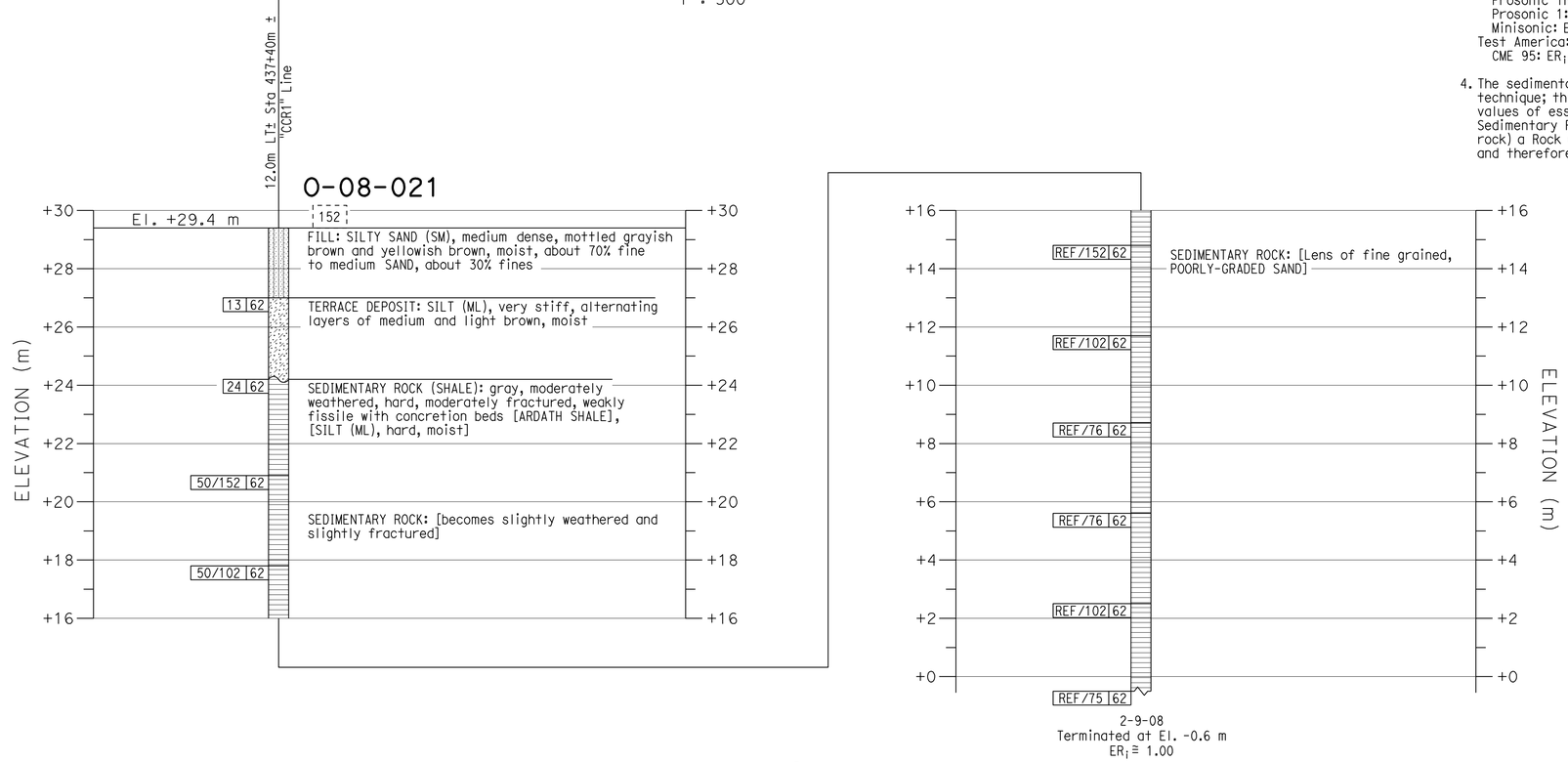

PROFILE
VERTICAL 1 : 100
HORIZONTAL 1 : 500

ENGINEERING SERVICES	GEOTECHNICAL SERVICES	STATE OF CALIFORNIA DEPARTMENT OF TRANSPORTATION	DIVISION OF ENGINEERING SERVICES STRUCTURE DESIGN DESIGN BRANCH	BRIDGE NO. 57-C0787 POST MILES KP43.2/PM26.8	BUSINESS ACCESS ROAD UC LOG OF TEST BORINGS SHEET NO. 6 OF 7
FUNCTIONAL SUPERVISOR	DRAWN BY: J. JOHNS	FIELD INVESTIGATIONS BY: V. OLIN, G. CUSTENBORDER			
NAME:	CHECKED BY: G. CUSTENBORDER				

OGS CIVIL LOG OF TEST BORINGS SHEET
ORIGINAL SCALE IN MILLIMETERS FOR REDUCED PLANS 0 10 20 30 40 50 60 70 80 90 100
CU 11275
EA 2T0401
DISREGARD PRINTS BEARING EARLIER REVISION DATES
REVISION DATES 10/14/08 3/09/09 4/28/09
SHEET 22 OF 23
FILE => 57-c0787-z-lotb06.dgn
USERNAME => ttmirkes1 DATE PLOTTED => 29-SEP-2010 TIME PLOTTED => 11:53

Bench Mark
All elevations shown in the LOTBs are in meters and are referenced to the NGVD 1929 Datum.

DIST	COUNTY	ROUTE	KILOMETER POST TOTAL PROJECT	SHEET No	TOTAL SHEETS
11	SD	5.805	R49.9/R51.7, 42.6/46.5	770	886

Caltrans Metric

4-28-09
REGISTERED GEOTECHNICAL ENGINEER

9-27-10
PLANS APPROVAL DATE

REGISTERED PROFESSIONAL ENGINEER VAN OLIN NO. 2578 EXP. 6-30-10 GEOTECHNICAL STATE OF CALIFORNIA

The State of California or its officers or agents shall not be responsible for the accuracy or completeness of electronic copies of this plan sheet.

SANDAG
401 B STREET,
SAN DIEGO, CA. 92101

BUREAU VERITAS NORTH AMERICA, INC.
7895 CONVOY CT.
SAN DIEGO, CA. 92111

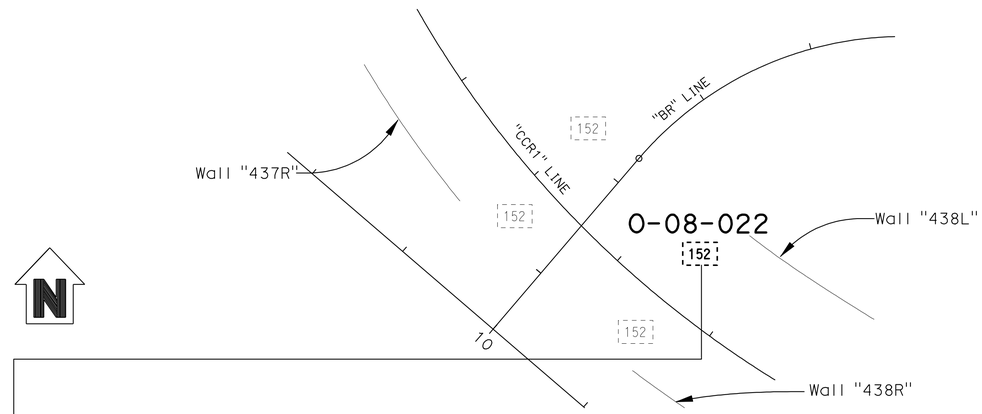

PLAN
1 : 500

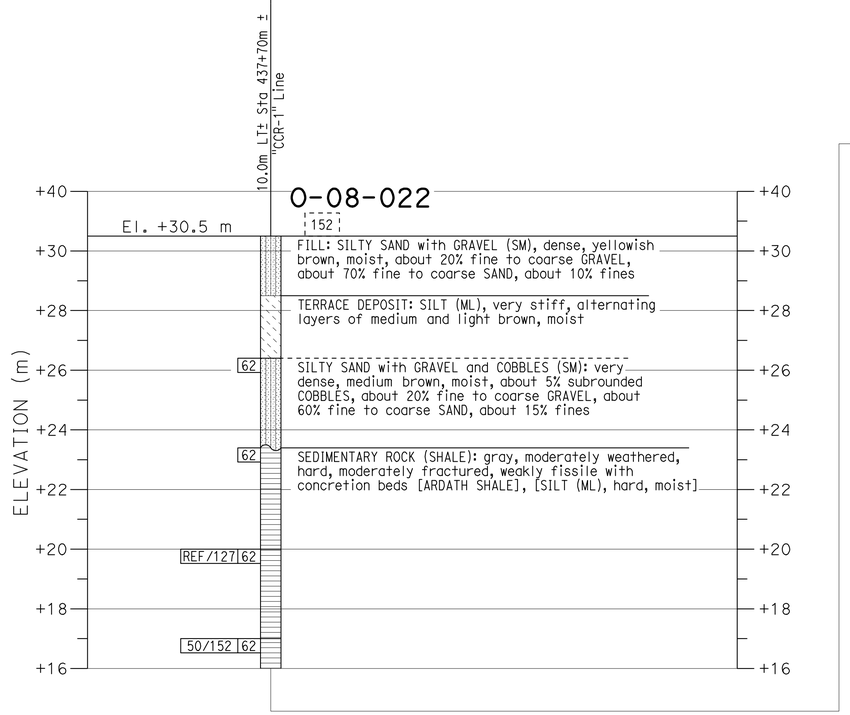

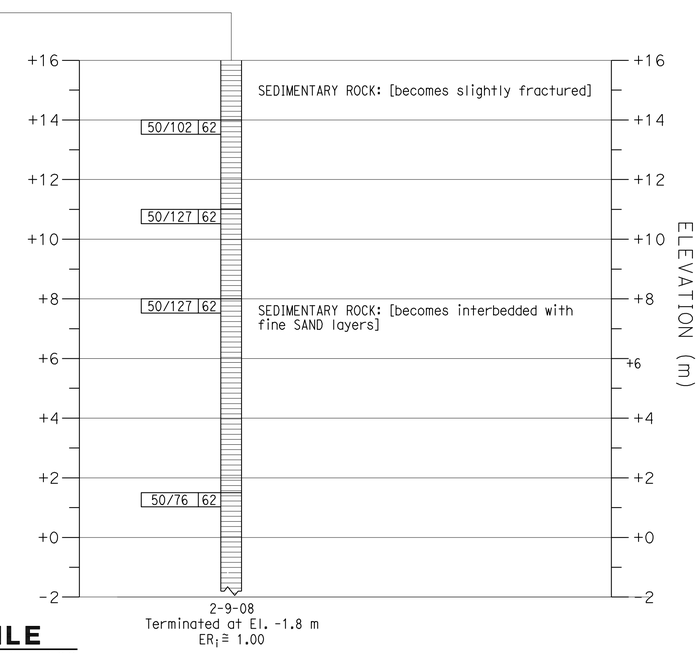

PROFILE
VERTICAL 1 : 100
HORIZONTAL 1 : 500

NOTES:

1. 62 mm diameter samples were taken using a California split-barrel sampler with an inside diameter (I.D.) of 62 mm and an outside diameter (O.D.) of 83 mm.

2. Automatic trip and safety hammer systems consisting of hammer weight of 62.5 kg falling a distance of 762 mm were used to advance the drive samplers in accordance with ASTM D1586.

3. The average hammer energy ratio (ER_i) reflects the percentage efficiency of SPT blowcounts (N-value). The estimated ER_i for the various drilling equipment used was as follows:
   Boart Longyear:
   - Longyear 1405: $ER_i \cong 1.45$
   - Prosonic Track Mounted: $ER_i \cong 1.00$
   - Prosonic 1: $ER_i \cong 1.45$
   - Minisonic: $ER_i \cong 1.00$

   Pacific Drilling:
   - Unimog: $ER_i \cong 1.27$
   - Mole: $ER_i \cong 1.00$
   - Minimole: $ER_i \cong 1.00$

   Test America:
   - CME 95: $ER_i \cong 1.45$

4. The sedimentary rock was obtained utilizing a sonic drilling technique; this method resulted in Core Recovery (REC) values of essentially 100%. Also, given the nature of the Sedimentary Rock (ie., friable, highly fractured, decomposed rock) a Rock Quality Designation (RQD) index is not relevant and therefore not reported on LOTBs.

ENGINEERING SERVICES	GEOTECHNICAL SERVICES	STATE OF CALIFORNIA DEPARTMENT OF TRANSPORTATION	DIVISION OF ENGINEERING SERVICES STRUCTURE DESIGN DESIGN BRANCH	BRIDGE NO. 57-C0787	BUSINESS ACCESS ROAD UC
FUNCTIONAL SUPERVISOR	DRAWN BY: J. JOHNS	FIELD INVESTIGATIONS BY: V. OLIN, G. CUSTENBORDER		POST MILES KP43.2/PM26.8	LOG OF TEST BORINGS SHEET NO. 7 OF 7
NAME:	CHECKED BY: G. CUSTENBORDER				

OGS CIVIL LOG OF TEST BORINGS SHEET

ORIGINAL SCALE IN MILLIMETERS FOR REDUCED PLANS 0 10 20 30 40 50 60 70 80 90 100

CU 11275
EA 2T0401

DISREGARD PRINTS BEARING EARLIER REVISION DATES 10/14/08 3/27/09 4/28/09

REVISION DATES

SHEET 23 OF 23

FILE => 57-c0787-z-lotb07.dgn

USERNAME => trmikesl

DATE PLOTTED => 29-SEP-2010 TIME PLOTTED => 11:53

DIST	COUNTY	ROUTE	KILOMETER POST TOTAL PROJECT	SHEET No	TOTAL SHEETS
11	SD	5,805	R49.9/R51.7, 42.6/46.5	771	886

Caltrans Metric

Peter B Smith 4-28-09
REGISTERED CIVIL ENGINEER DATE

9-27-10
PLANS APPROVAL DATE

REGISTERED PROFESSIONAL ENGINEER Pete B. Smith No. C60122 Exp. 6-30-10 CIVIL STATE OF CALIFORNIA

The State of California or its officers or agents shall not be responsible for the accuracy or completeness of electronic copies of this plan sheet.

SANDAG
401 B STREET,
SAN DIEGO, CA 92101

T.Y. LIN INTERNATIONAL
5030 CAMINO DE LA SIESTA, SUITE 204,
SAN DIEGO, CA 92108

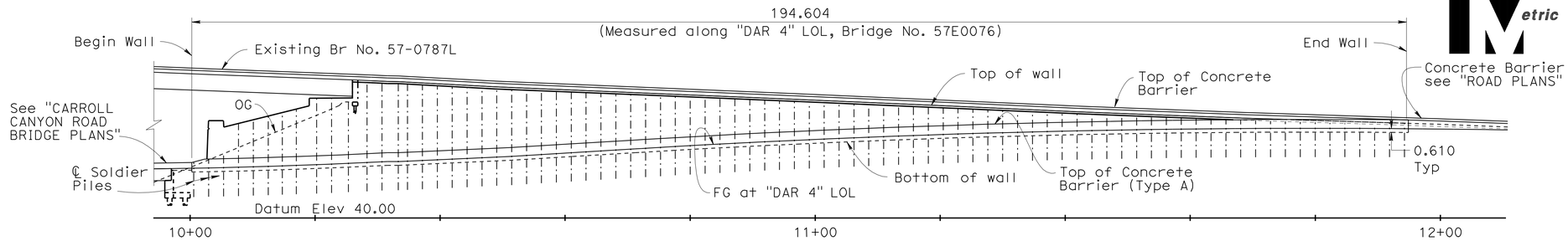

DEVELOPED ELEVATION (DAR 4 WALL)

1:400

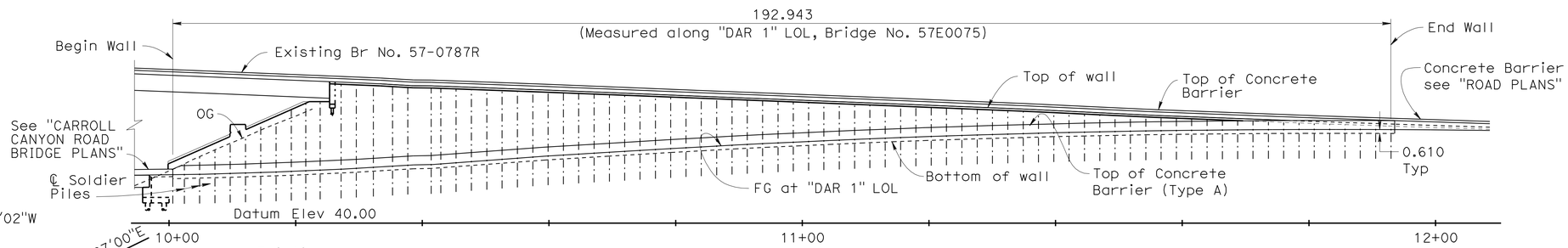

MIRRORED DEVELOPED ELEVATION (DAR 1 WALL)

1:400

CURVE DATA

No.	R	Δ	T	L
1	1066.802	51°0′06"	508.857	949.611
2	1061.399	11°08′58"	103.598	206.542
3	1072.207	28°53′32"	276.216	540.676
4	1059.817	1°41′33"	15.654	31.307
5	1058.097	8°44′58"	80.947	161.578
6	1072.467	0°46′53"	7.313	14.626
7	1075.507	8°06′15"	76.189	152.124
8	218.000	61°52′07"	130.648	235.399

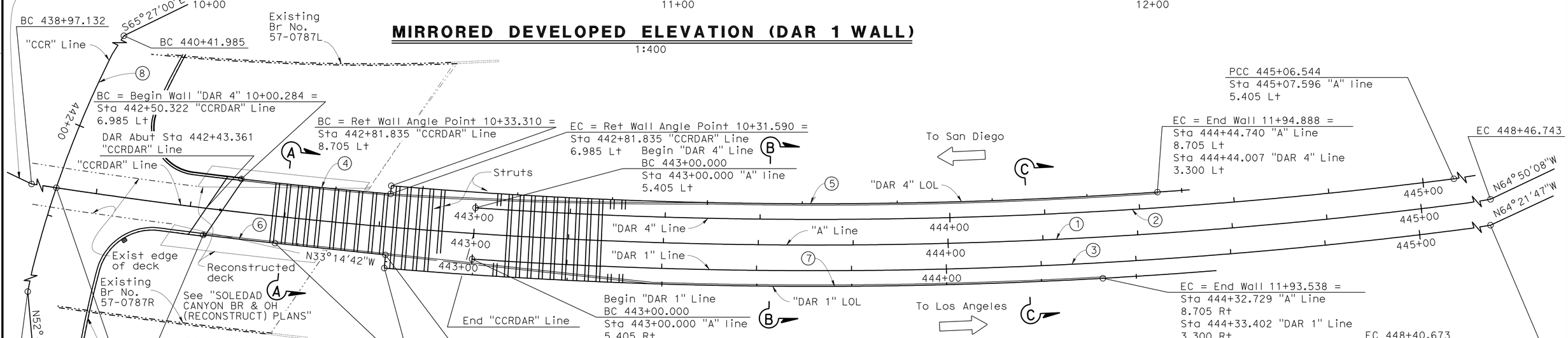

PLAN

1:400

NOTES

1. For "SECTION A-A", "SECTION B-B" and "SECTION C-C", see "GENERAL PLAN NO. 2" sheet.
2. For "GENERAL NOTES", and "INDEX TO PLANS", see "INDEX TO PLANS" sheet.
3. For "QUANTITIES" see "GENERAL PLAN NO. 2" sheet.

BENCHMARK

B.M. #2 - City 6
Street Wall at Begin curve
per Sr 07-0200
N 580691.861 Vert Datum NGVD 29
E 1910154.476 Horz Datum NAD 83
Elev 25.461

LEGEND

- Indicates direction of traffic
- Indicates existing structure
- Indicates new structure

ALL DIMENSIONS ARE IN METERS UNLESS OTHERWISE SHOWN

CHUNG-YUAN WEN
DESIGN OVERSIGHT
4-28-09
SIGN OFF DATE

	BY	CHECKED			
DESIGN	Pete Smith	Anthony Sánchez	LOAD FACTOR DESIGN		
DETAILS	Ivan Martin	Anthony Sánchez	LAYOUT	Pete Smith	Anthony Sánchez
QUANTITIES	Andy Toledo	Shafi Sharifan	SPECIFICATIONS	Jeremy LaHaye	PLANS AND SPECS COMPARED Jeremy LaHaye

PREPARED FOR THE STATE OF CALIFORNIA DEPARTMENT OF TRANSPORTATION

Brett Makley
PROJECT ENGINEER

BRIDGE NO. 57E0075/76
KILOMETER POST KP43.2

CARROLL CANYON (DAR) RETAINING WALLS
GENERAL PLAN NO. 1

DESIGN GENERAL PLAN SHEET (METRIC) (REV. 10/27/05)

ORIGINAL SCALE IN MILLIMETERS FOR REDUCED PLANS 0 10 20 30 40 50 60 70 80 90 100

CU 11275
EA 2T0401

DISREGARD PRINTS BEARING EARLIER REVISION DATES

REVISION DATES (PRELIMINARY STAGE ONLY) 9/12/08 12/19/08 3/09/09 4/28/09

SHEET 1 OF 55

FILE => 57-e0075_76-a-gp01.dgn

USERNAME => trmikesl DATE PLOTTED => 29-SEP-2010 TIME PLOTTED => 11:53

DIST	COUNTY	ROUTE	KILOMETER POST TOTAL PROJECT	SHEET No	TOTAL SHEETS
11	SD	5,805	R49.9/R51.7, 42.6/46.5	772	886

Caltrans Metric

Peter B Smith 4-28-09
REGISTERED CIVIL ENGINEER DATE

9-27-10
PLANS APPROVAL DATE

REGISTERED PROFESSIONAL ENGINEER Pete B. Smith No. C60122 Exp. 6-30-10 CIVIL STATE OF CALIFORNIA

The State of California or its officers or agents shall not be responsible for the accuracy or completeness of electronic copies of this plan sheet.

SANDAG
401 B STREET,
SAN DIEGO, CA 92101

T.Y. LIN INTERNATIONAL
5030 CAMINO DE LA SIESTA, SUITE 204,
SAN DIEGO, CA 92108

QUANTITIES

STRUCTURE EXCAVATION (SOLDIER PILE WALL)	2940	m3
STRUCTURE BACKFILL (SOLDIER PILE WALL)	270	m3
1.2 M CAST-IN-DRILLED-HOLE CONCRETE PILING	1400	m
1.5 M CAST-IN-DRILLED-HOLE CONCRETE PILING	177	m
900 MM CAST-IN-DRILLED-HOLE CONCRETE PILING	630	m
TIEBACK ANCHOR	46	EA
STRUCTURAL CONCRETE, RETAINING WALL	1405	m3
ARCHITECTURAL TREATMENT (RANDOM FLUTE TEXTURE)	795	m2
DRILL AND BOND DOWEL	1620	m
DRILL AND BOND DOWEL (CHEMICAL ADHESIVE)	182	EA
FURNISH 760MM PRECAST PRESTRESSED CONCRETE STRUT (13M - 18M)	31	EA
ERECT 760MM PRECAST PRESTRESSED CONCRETE STRUT (13M - 18M)	31	EA
BAR REINFORCING STEEL (RETAINING WALL)	476 000	kg
HEADED BAR REINFORCEMENT	190	EA
SHOTCRETE	410	m3
WEATHERING STEEL SCONCE	12	EA
WEATHERING STEEL PLATE	42	EA
MINOR CONCRETE (CURB)	23	m
CHAIN LINK RAILING (TYPE 7 MODIFIED)	23	m
CONCRETE BARRIER (TYPE A)	388	m
CONCRETE BARRIER (TYPE 736)	201	m
CONCRETE BARRIER (TYPE 742)	113	m

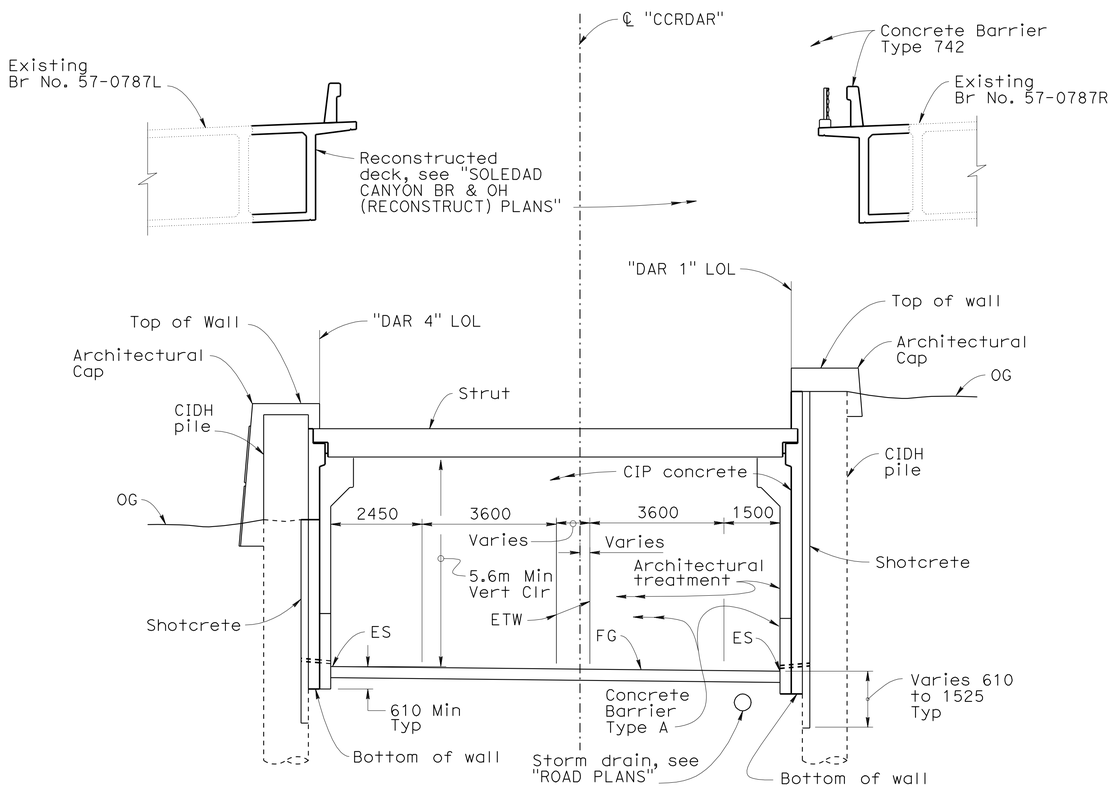

SECTION A-A
1:80

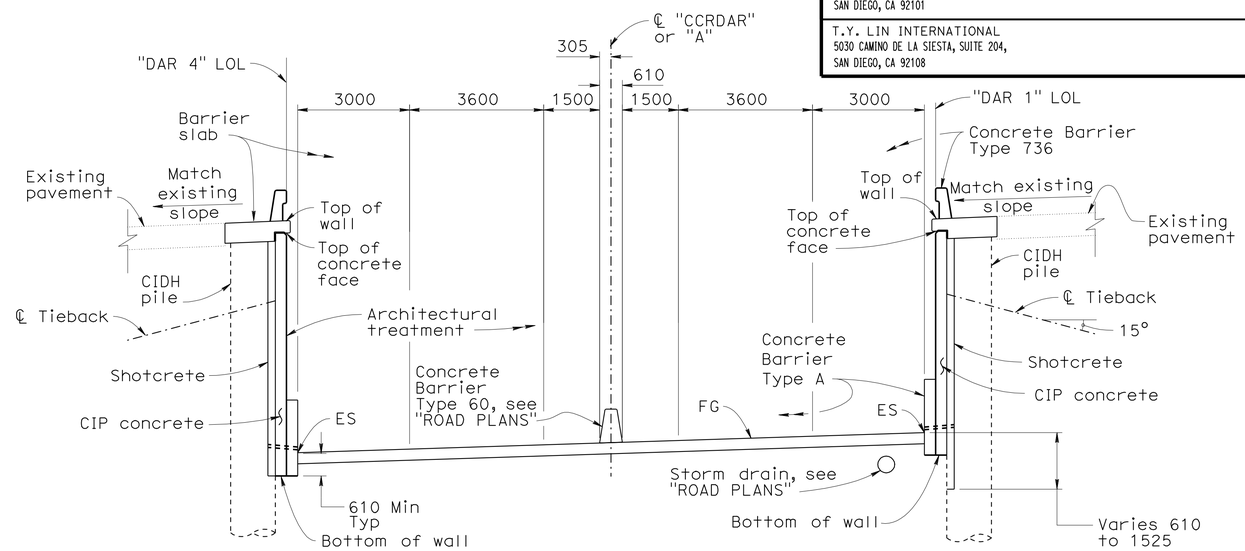

SECTION B-B
1:80

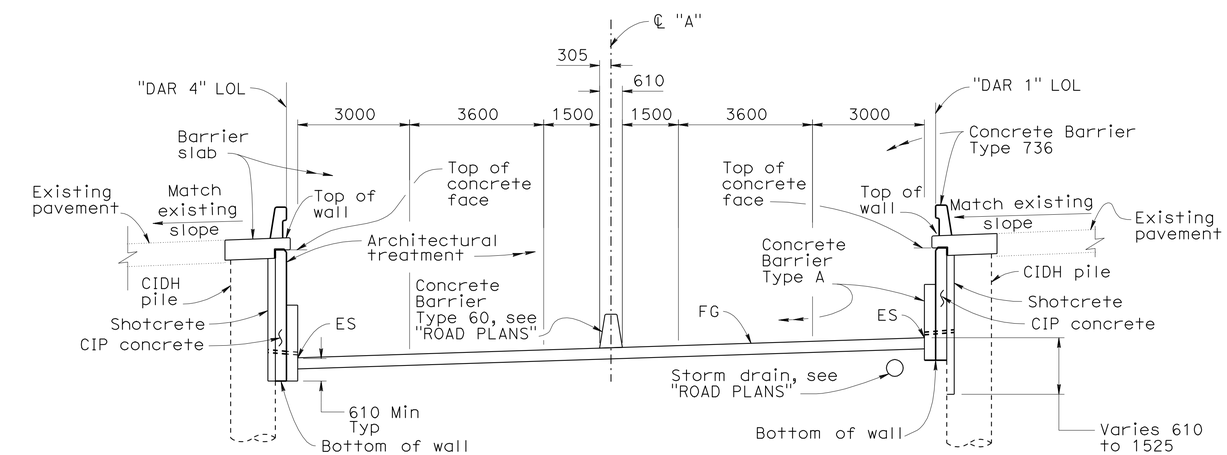

SECTION C-C
1:80

NOTE

For location of "SECTION A-A", "SECTION B-B" AND "SECTION C-C", see "GENERAL PLAN NO. 1" sheet

ALL DIMENSIONS ARE IN MILLIMETERS UNLESS OTHERWISE SHOWN

CHUNG-YUAN WEN
DESIGN OVERSIGHT
4-28-09
SIGN OFF DATE

	BY	CHECKED			
DESIGN	Pete Smith	Anthony Sánchez	LOAD FACTOR DESIGN		
DETAILS	Ivan Martin	Anthony Sánchez	LAYOUT	Pete Smith	Anthony Sánchez
QUANTITIES	Andy Toledo	Shafi Sharifan	SPECIFICATIONS	Jeremy LaHaye	PLANS AND SPECS COMPARED Jeremy LaHaye

PREPARED FOR THE STATE OF CALIFORNIA DEPARTMENT OF TRANSPORTATION

Brett Makley
PROJECT ENGINEER

CU 11275
EA 2T0401

BRIDGE NO. 57E0075/76
KILOMETER POST KP43.2

CARROLL CANYON (DAR) RETAINING WALLS
GENERAL PLAN NO. 2

DISREGARD PRINTS BEARING EARLIER REVISION DATES
REVISION DATES (PRELIMINARY STAGE ONLY) 9/12/08 12/19/08 3/09/09 4/28/09

SHEET 2 OF 55

DESIGN GENERAL PLAN SHEET (METRIC) (REV. 10/27/05)

ORIGINAL SCALE IN MILLIMETERS FOR REDUCED PLANS 0 10 20 30 40 50 60 70 80 90 100

FILE => 57-e0075_76-a-gp02.dgn

USERNAME => rtrmikes; DATE PLOTTED => 29-SEP-2010 TIME PLOTTED => 11:54

DIST	COUNTY	ROUTE	KILOMETER POST TOTAL PROJECT	SHEET No	TOTAL SHEETS
11	SD	5,805	R49.9/R51.7, 42.6/46.5	773	886

Caltrans Metric

Peter B Smith 4-28-09
REGISTERED CIVIL ENGINEER DATE

9-27-10
PLANS APPROVAL DATE

REGISTERED PROFESSIONAL ENGINEER Pete B. Smith No. C60122 Exp. 6-30-10 CIVIL STATE OF CALIFORNIA

The State of California or its officers or agents shall not be responsible for the accuracy or completeness of electronic copies of this plan sheet.

SANDAG
401 B STREET,
SAN DIEGO, CA 92101

T.Y. LIN INTERNATIONAL
5030 CAMINO DE LA SIESTA, SUITE 204,
SAN DIEGO, CA 92108

INDEX TO PLANS

1 GENERAL PLAN NO. 1
2 GENERAL PLAN NO. 2
3 INDEX TO PLANS
4 STRUCTURE PLAN NO. 1
5 STRUCTURE PLAN NO. 2
6 STRUCTURE PLAN NO. 3
7 STRUCTURE PLAN NO. 4
8 WALL SECTIONS NO. 1
9 WALL SECTIONS NO. 2
10 DAR 1 PILE DATA
11 DAR 4 PILE DATA
12 PILE DETAILS NO. 1
13 PILE DETAILS NO. 2
14 PILE DETAILS NO. 3
15 TIEBACK DETAILS
16 STRUT DETAILS
17 STRUT CORBEL DETAILS NO. 1
18 STRUT CORBEL DETAILS NO. 2
19 STRUT CORBEL DETAILS NO. 3
20 WALL FACING DETAILS NO. 1
21 WALL FACING DETAILS NO. 2
22 WALL EXPANSION JOINT DETAILS
23 DAR WALL BARRIER LAYOUT NO. 1
24 DAR WALL BARRIER LAYOUT NO. 2
25 TYPE A BARRIER DETAILS NO. 1
26 TYPE A BARRIER DETAILS NO. 2
27 BARRIER SLAB DETAILS
28 BARRIER SLAB DRAIN INLET NO. 1
29 BARRIER SLAB DRAIN INLET NO. 2
30 WALL DRAINAGE DETAILS
31 MISCELLANEOUS DETAILS NO. 1
32 MISCELLANEOUS DETAILS NO. 2
33 MISCELLANEOUS DETAILS NO. 3
34 DAR 1 ARCHITECTURAL ELEVATION
35 DAR 4 ARCHITECTURAL ELEVATION
36 ARCHITECTURAL DETAILS NO. 1
37 ARCHITECTURAL DETAILS NO. 2
38 ARCHITECTURAL DETAILS NO. 3
39 ARCHITECTURAL DETAILS NO. 4
40 ARCHITECTURAL DETAILS NO. 5
41 ARCHITECTURAL DETAILS NO. 6
42 ARCHITECTURAL DETAILS NO. 7
43 ARCHITECTURAL DETAILS NO. 8
44 WEATHERING STEEL SCONCE
45 LOG OF TEST BORINGS SHEET NO. 1 OF 11
46 LOG OF TEST BORINGS SHEET NO. 2 OF 11
47 LOG OF TEST BORINGS SHEET NO. 3 OF 11
48 LOG OF TEST BORINGS SHEET NO. 4 OF 11
49 LOG OF TEST BORINGS SHEET NO. 5 OF 11
50 LOG OF TEST BORINGS SHEET NO. 6 OF 11
51 LOG OF TEST BORINGS SHEET NO. 7 OF 11
52 LOG OF TEST BORINGS SHEET NO. 8 OF 11
53 LOG OF TEST BORINGS SHEET NO. 9 OF 11
54 LOG OF TEST BORINGS SHEET NO. 10 OF 11
55 LOG OF TEST BORINGS SHEET NO. 11 OF 11

GENERAL NOTES LOAD FACTOR DESIGN

DESIGN: BRIDGE DESIGN SPECIFICATIONS, APRIL 2000, LFD (1996 AASHTO WITH INTERIMS AND REVISIONS BY CALTRANS) SUPPLEMENTED BY STRUCTURAL DESIGN CRITERIA FOR DAR RETAINING WALL, DECEMBER 2008

SOIL PARAMETERS: (For determination of design lateral earth pressure)
$\emptyset=28^\circ$ $\gamma=16.5$ KN/m^3 c =19.1 KN/m^2

SEISMIC DESIGN: CALTRANS SEISMIC DESIGN CRITERIA (SDC) Version 1.4, June 2006

SEISMIC LOADING: SDC ARS Curve for soil profile d (M=7.25)
Peak Rock Acceleration = 0.5 g
(Modified for near source effects per SDC 6.1.2.1)

REINFORCED CONCRETE:
fy = 420 MPa
f'c = 25 Mpa
n = 8

PRESTRESSED CONCRETE: See "PRESTRESSING NOTES" on "STRUT DETAILS" sheet.

TIEBACKS: See "TIEBACK NOTES" on "TIEBACK DETAILS" sheet

STANDARD PLANS (DATED JULY 2004)

A10A	ACRONYMS AND ABBREVIATIONS (A-L)
A10B	ACRONYMS AND ABBREVIATIONS (M-Z)
A10C	SYMBOLS (SHEET 1 OF 2)
A10D	SYMBOLS (SHEET 2 OF 2)
BO-3	BRIDGE DETAILS
RSP D77A	GRATE DETAILS
B11-52	CHAIN LINK RAILING TYPE 7
B11-56	CONCRETE BARRIER TYPE 736
B11-57	CONCRETE BARRIER TYPE 742

STANDARD PLAN SHEET NO.
DETAIL NO.

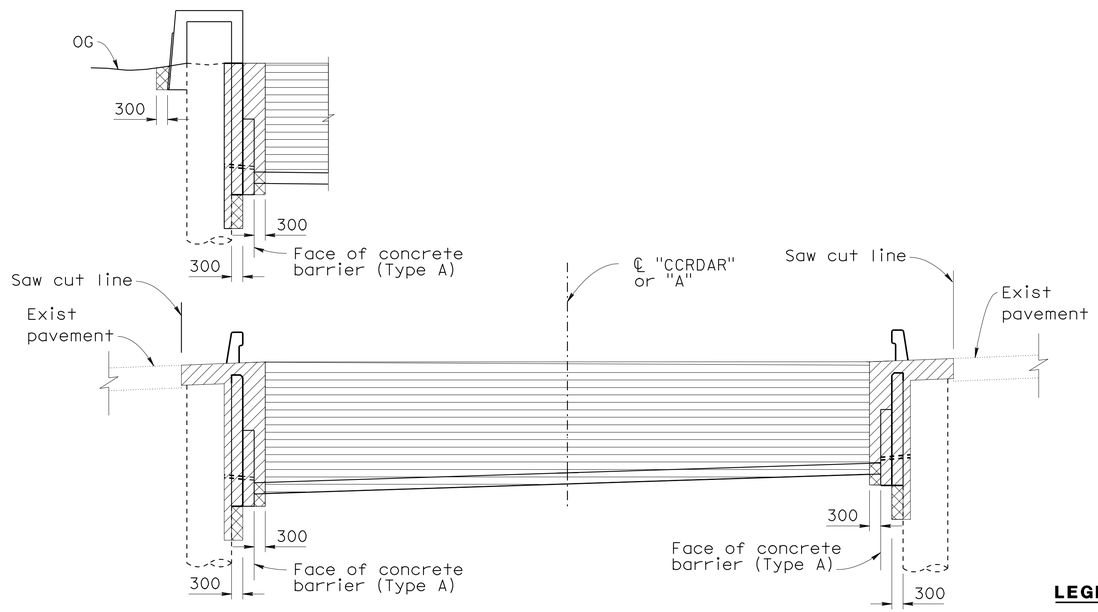

EXCAVATION AND BACKFILL LIMITS

No Scale

LEGEND

- Structure Excavation (Soldier Pile Wall)
- Structure Backfill (Soldier Pile Wall)
- Roadway Excavation, see "ROAD PLANS"

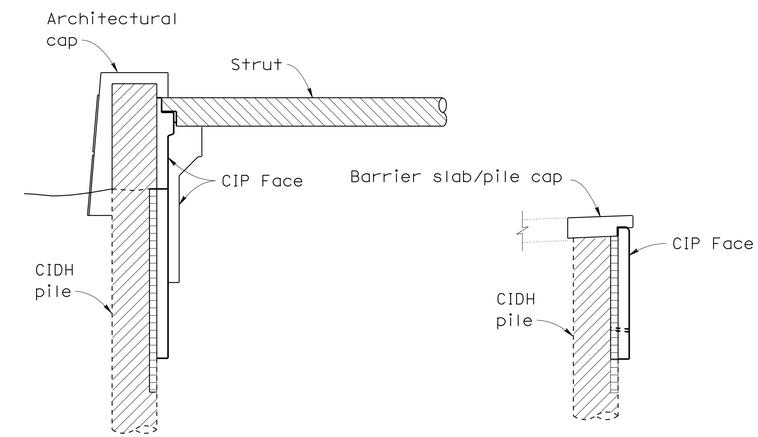

CONCRETE STRENGTH AND TYPE LIMITS

No Scale

LEGEND

- Structural Concrete, Retaining Wall (25 MPa @ 28 days)
- CIDH Concrete Pile (25 MPa @ 28 days)
- Precast Concrete, for strength see "STRUT DETAILS" sheet
- Shotcrete, (22.5 MPa @ 28 days)

NOTE

Concrete barrier Type A not shown

ALL DIMENSIONS ARE IN MILLIMETERS UNLESS OTHERWISE SHOWN

CHUNG-YUAN WEN
DESIGN OVERSIGHT
4-28-09
SIGN OFF DATE

	BY	CHECKED
DESIGN	Pete Smith	Anthony Sánchez
DETAILS	Ivan Martin	Anthony Sánchez
QUANTITIES	Andy Toledo	Shafi Sharifan

PREPARED FOR THE STATE OF CALIFORNIA DEPARTMENT OF TRANSPORTATION

Brett Makley
PROJECT ENGINEER

BRIDGE NO. 57E0075/76
KILOMETER POST KP43.2

CARROLL CANYON (DAR) RETAINING WALLS
INDEX TO PLANS

DESIGN DETAIL SHEET (METRIC) (REV. 10/27/05)

ORIGINAL SCALE IN MILLIMETERS FOR REDUCED PLANS 0 10 20 30 40 50 60 70 80 90 100

CU 11275
EA 2T0401

DISREGARD PRINTS BEARING EARLIER REVISION DATES

REVISION DATES (PRELIMINARY STAGE ONLY) 9/12/08 12/19/08 3/02/09 4/28/09

SHEET 3 OF 55

FILE => 57-e0075_76-a-itp.dgn

USERNAME => trmikesl DATE PLOTTED => 29-SEP-2010 TIME PLOTTED => 11:54

DIST	COUNTY	ROUTE	KILOMETER POST TOTAL PROJECT	SHEET No	TOTAL SHEETS
11	SD	5,805	R49.9/R51.7, 42.6/46.5	774	886

Caltrans Metric

Peter B Smith 4-28-09
REGISTERED CIVIL ENGINEER DATE

9-27-10
PLANS APPROVAL DATE

REGISTERED PROFESSIONAL ENGINEER Pete B. Smith No. C60122 Exp. 6-30-10 CIVIL STATE OF CALIFORNIA

The State of California or its officers or agents shall not be responsible for the accuracy or completeness of electronic copies of this plan sheet.

SANDAG
401 B STREET,
SAN DIEGO, CA 92101

T.Y. LIN INTERNATIONAL
5030 CAMINO DE LA SIESTA, SUITE 204,
SAN DIEGO, CA 92108

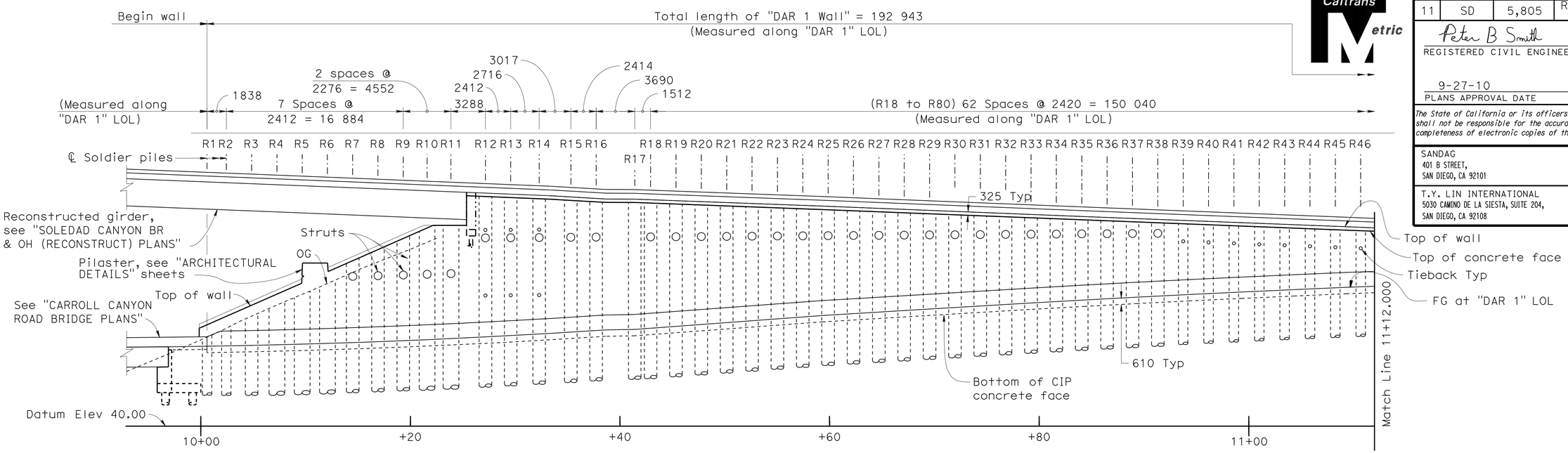

MIRROR DEVELOPED ELEVATION ("DAR 1 WALL")

1:200

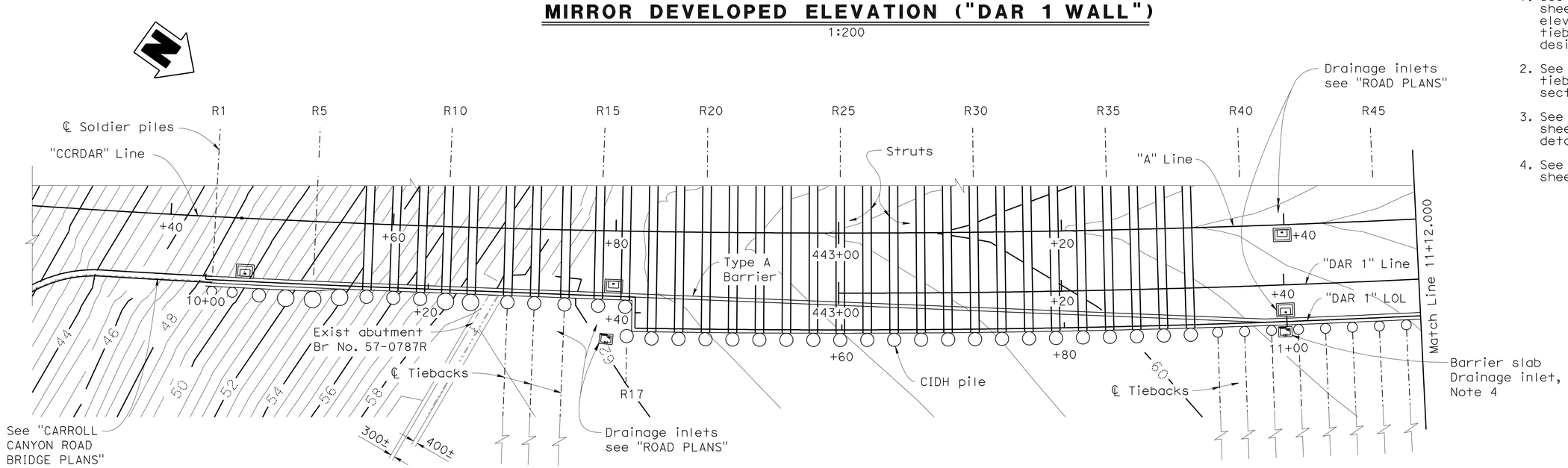

PLAN ("DAR 1 WALL")

1:200

NOTES

1. See "DAR 1 PILE DATA" sheet for pile tip and cut off elevations, strut elevations, tieback data, and pile type designations.
2. See "WALL SECTIONS" sheets for tieback elevations and wall sections.
3. See "ARCHITECTURAL DETAILS" sheets for wall architectural details.
4. See "BARRIER SLAB DRAIN INLET" sheets.

ALL DIMENSIONS ARE IN MILLIMETERS UNLESS OTHERWISE SHOWN

CHUNG-YUAN WEN
DESIGN OVERSIGHT
4-28-09
SIGN OFF DATE

	BY	CHECKED
DESIGN	Pete Smith	Anthony Sánchez
DETAILS	Ivan Martin	Anthony Sánchez
QUANTITIES	Andy Toledo	Shafi Sharifan

PREPARED FOR THE STATE OF CALIFORNIA DEPARTMENT OF TRANSPORTATION

Brett Makley
PROJECT ENGINEER

BRIDGE NO. 57E0075
KILOMETER POST KP43.2

CARROLL CANYON (DAR) RETAINING WALLS
STRUCTURE PLAN NO. 1

DESIGN DETAIL SHEET (METRIC) (REV. 10/27/05)

ORIGINAL SCALE IN MILLIMETERS FOR REDUCED PLANS 0 10 20 30 40 50 60 70 80 90 100

CU 11275
EA 2T0401

DISREGARD PRINTS BEARING EARLIER REVISION DATES

REVISION DATES (PRELIMINARY STAGE ONLY) 9/12/08 12/19/08 3/09/09 4/28/09

SHEET 4 OF 55

FILE => 57-e0075_76-c-sp01.dgn

USERNAME => trmikest DATE PLOTTED => 29-SEP-2010 TIME PLOTTED => 11:54

DIST	COUNTY	ROUTE	KILOMETER POST TOTAL PROJECT	SHEET No	TOTAL SHEETS
11	SD	5,805	R49.9/R51.7, 42.6/46.5	775	886

Caltrans Metric

Peter B Smith 4-28-09
REGISTERED CIVIL ENGINEER DATE

9-27-10
PLANS APPROVAL DATE

REGISTERED PROFESSIONAL ENGINEER Pete B. Smith No. C60122 Exp. 6-30-10 CIVIL STATE OF CALIFORNIA

The State of California or its officers or agents shall not be responsible for the accuracy or completeness of electronic copies of this plan sheet.

SANDAG
401 B STREET,
SAN DIEGO, CA 92101

T.Y. LIN INTERNATIONAL
5030 CAMINO DE LA SIESTA, SUITE 204,
SAN DIEGO, CA 92108

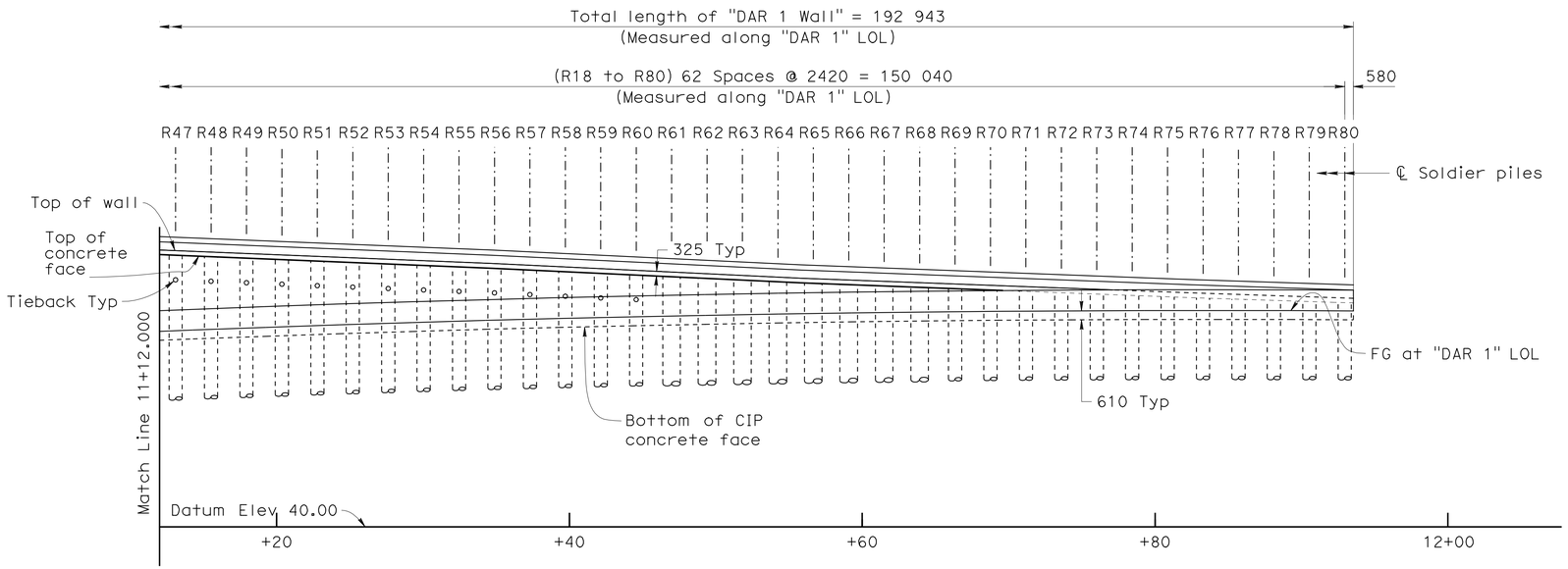

MIRROR DEVELOPED ELEVATION ("DAR 1 WALL")

1:200

NOTES

1. See "DAR 1 PILE DATA" sheet for pile tip and cut off elevations, strut elevations, tieback data, and pile type designations.
2. See "WALL SECTIONS" sheets for tieback elevations and wall sections.
3. See "ARCHITECTURAL DETAILS" sheets for wall architectural details.
4. See "BARRIER SLAB DRAIN INLET" sheets.

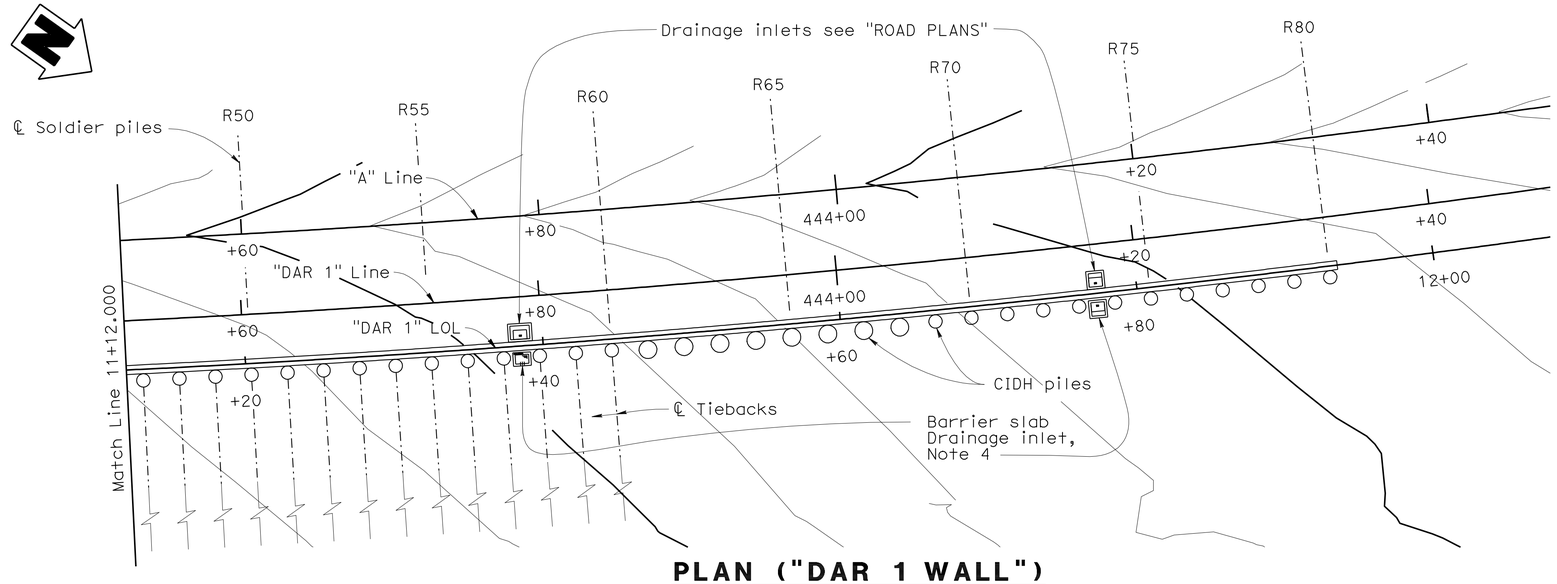

PLAN ("DAR 1 WALL")

1:200

ALL DIMENSIONS ARE IN MILLIMETERS UNLESS OTHERWISE SHOWN

CHUNG-YUAN WEN
DESIGN OVERSIGHT
4-28-09
SIGN OFF DATE

	BY	CHECKED
DESIGN	Pete Smith	Anthony Sánchez
DETAILS	Ivan Martin	Anthony Sánchez
QUANTITIES	Andy Toledo	Shafi Sharifan

PREPARED FOR THE STATE OF CALIFORNIA DEPARTMENT OF TRANSPORTATION

Brett Makley
PROJECT ENGINEER

BRIDGE NO. 57E0075
KILOMETER POST KP43.2

CARROLL CANYON (DAR) RETAINING WALLS
STRUCTURE PLAN NO. 2

DESIGN DETAIL SHEET (METRIC) (REV. 10/27/05)

ORIGINAL SCALE IN MILLIMETERS FOR REDUCED PLANS 0 10 20 30 40 50 60 70 80 90 100

CU 11275
EA 2T0401

DISREGARD PRINTS BEARING EARLIER REVISION DATES → 9/12/08 12/19/08 3/09/09 4/28/09

SHEET 5 OF 55

FILE => 57-e0075_76-c-sp02.dgn

USERNAME => trmikes1 DATE PLOTTED => 29-SEP-2010 TIME PLOTTED => 11:54

DIST	COUNTY	ROUTE	KILOMETER POST TOTAL PROJECT	SHEET No	TOTAL SHEETS
11	SD	5,805	R49.9/R51.7, 42.6/46.5	776	886

Caltrans Metric

Peter B Smith 4-28-09
REGISTERED CIVIL ENGINEER DATE

9-27-10
PLANS APPROVAL DATE

REGISTERED PROFESSIONAL ENGINEER Pete B. Smith No. C60122 Exp. 6-30-10 CIVIL STATE OF CALIFORNIA

The State of California or its officers or agents shall not be responsible for the accuracy or completeness of electronic copies of this plan sheet.

SANDAG
401 B STREET,
SAN DIEGO, CA 92101

T.Y. LIN INTERNATIONAL
5030 CAMINO DE LA SIESTA, SUITE 204,
SAN DIEGO, CA 92108

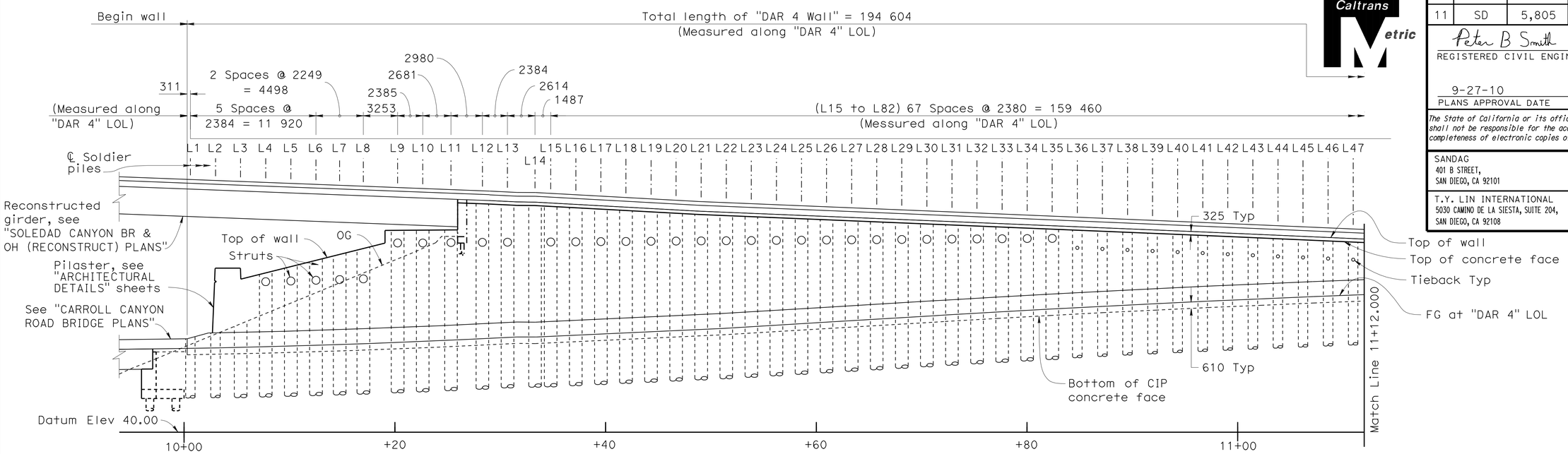

DEVELOPED ELEVATION ("DAR 4 WALL")

1:200

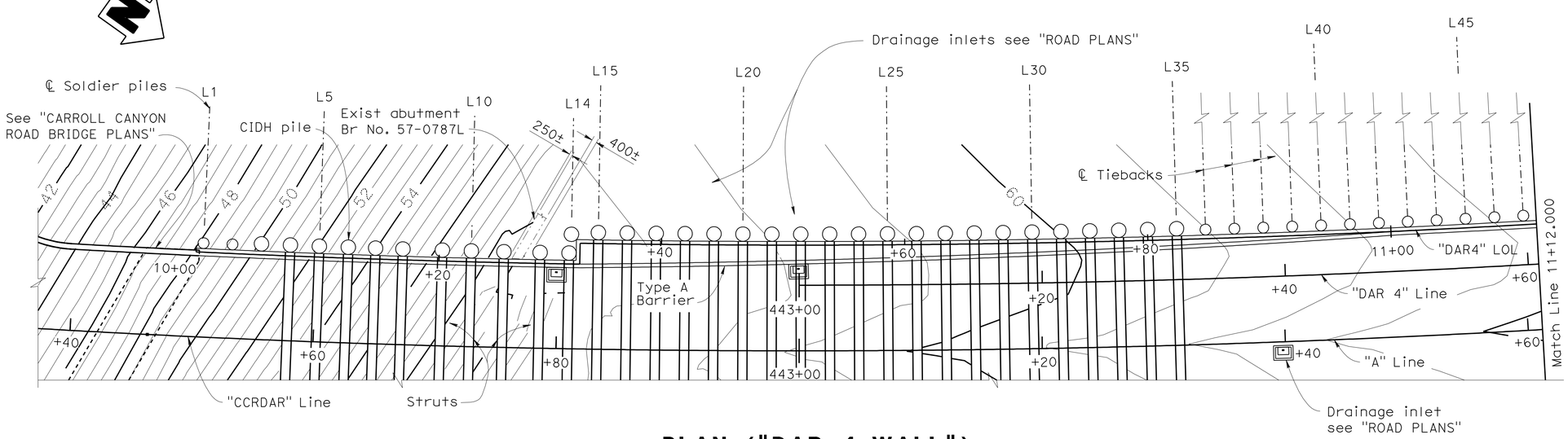

PLAN ("DAR 4 WALL")

1:200

NOTES

1. See "DAR 4 PILE DATA" sheet for pile tip and cut off elevations, strut elevations, tieback data, and pile type designations.
2. See "WALL SECTIONS" sheets for tieback elevations and wall sections.
3. See "ARCHITECTURAL DETAILS" sheets for wall architectural details.

ALL DIMENSIONS ARE IN MILLIMETERS UNLESS OTHERWISE SHOWN

CHUNG-YUAN WEN
DESIGN OVERSIGHT
4-28-09
SIGN OFF DATE

	BY	CHECKED
DESIGN	Pete Smith	Anthony Sánchez
DETAILS	Ivan Martin	Anthony Sánchez
QUANTITIES	Andy Toledo	Shafi Sharifan

PREPARED FOR THE STATE OF CALIFORNIA DEPARTMENT OF TRANSPORTATION

Brett Makley
PROJECT ENGINEER

BRIDGE NO. 57E0076
KILOMETER POST KP43.2

CARROLL CANYON (DAR) RETAINING WALLS
STRUCTURE PLAN NO. 3

DESIGN DETAIL SHEET (METRIC) (REV. 10/27/05)

ORIGINAL SCALE IN MILLIMETERS FOR REDUCED PLANS 0 10 20 30 40 50 60 70 80 90 100

CU 11275
EA 2T0401

DISREGARD PRINTS BEARING EARLIER REVISION DATES
REVISION DATES (PRELIMINARY STAGE ONLY) 9/12/08 12/19/08 3/09/09 4/28/09

SHEET 6 OF 55

FILE => 57-e0075_76-c-sp03.dgn

USERNAME => ttmikes1 DATE PLOTTED => 29-SEP-2010 TIME PLOTTED => 11:54

DIST	COUNTY	ROUTE	KILOMETER POST TOTAL PROJECT	SHEET No	TOTAL SHEETS
11	SD	5,805	R49.9/R51.7, 42.6/46.5	777	886

Caltrans Metric

Peter B Smith 4-28-09
REGISTERED CIVIL ENGINEER DATE

9-27-10
PLANS APPROVAL DATE

REGISTERED PROFESSIONAL ENGINEER Pete B. Smith No. C60122 Exp. 6-30-10 CIVIL STATE OF CALIFORNIA

The State of California or its officers or agents shall not be responsible for the accuracy or completeness of electronic copies of this plan sheet.

SANDAG
401 B STREET,
SAN DIEGO, CA 92101

T.Y. LIN INTERNATIONAL
5030 CAMINO DE LA SIESTA, SUITE 204,
SAN DIEGO, CA 92108

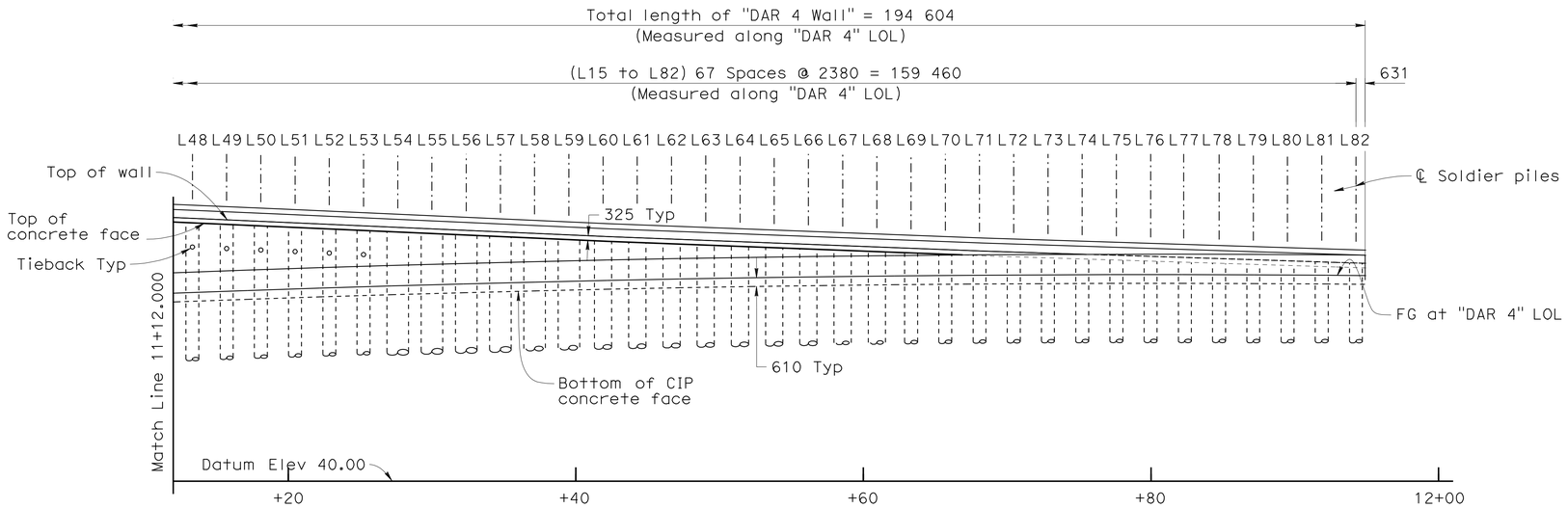

DEVELOPED ELEVATION ("DAR 4 WALL")

1:200

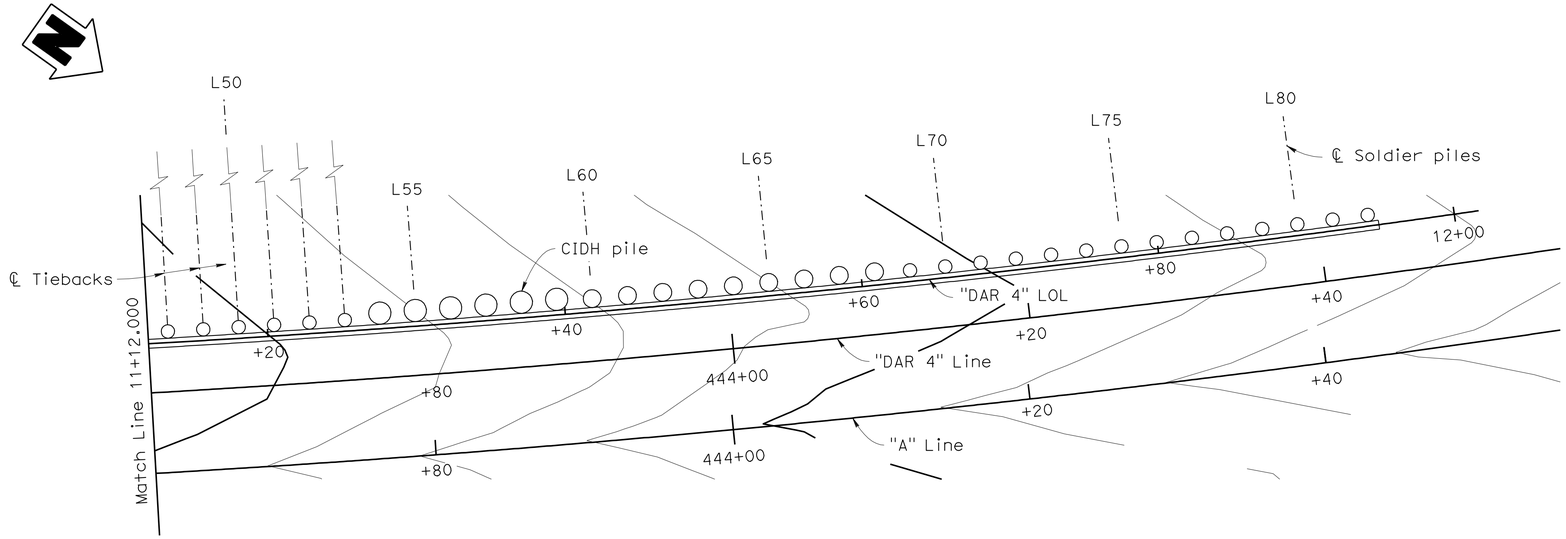

PLAN ("DAR 4 WALL")

1:200

NOTES

1. See "DAR 4 PILE DATA" sheet for pile tip and cut off elevations, strut elevations, tieback data, and pile type designations.
2. See "WALL SECTIONS" sheets for tieback elevations and wall sections.
3. See "ARCHITECTURAL DETAILS" sheets for wall architectural details.

ALL DIMENSIONS ARE IN MILLIMETERS UNLESS OTHERWISE SHOWN

CHUNG-YUAN WEN
DESIGN OVERSIGHT
4-28-09
SIGN OFF DATE

	BY	CHECKED
DESIGN	Pete Smith	Anthony Sánchez
DETAILS	Ivan Martin	Anthony Sánchez
QUANTITIES	Andy Toledo	Shafi Sharifan

PREPARED FOR THE STATE OF CALIFORNIA DEPARTMENT OF TRANSPORTATION

Brett Makley
PROJECT ENGINEER

BRIDGE NO. 57E0076
KILOMETER POST KP43.2

CARROLL CANYON (DAR) RETAINING WALLS
STRUCTURE PLAN NO. 4

DESIGN DETAIL SHEET (METRIC) (REV. 10/27/05)

ORIGINAL SCALE IN MILLIMETERS FOR REDUCED PLANS 0 10 20 30 40 50 60 70 80 90 100

CU 11275
EA 2T0401

DISREGARD PRINTS BEARING EARLIER REVISION DATES

REVISION DATES (PRELIMINARY STAGE ONLY) 9/12/08 12/19/08 3/09/09 4/28/09

SHEET 7 OF 55

FILE => 57-e0075_76-c-sp04.dgn

USERNAME => trmikesl DATE PLOTTED => 29-SEP-2010 TIME PLOTTED => 11:54

DIST	COUNTY	ROUTE	KILOMETER POST TOTAL PROJECT	SHEET No	TOTAL SHEETS
11	SD	5,805	R49.9/R51.7, 42.6/46.5	778	886

Caltrans Metric

Peter B Smith 4-28-09
REGISTERED CIVIL ENGINEER DATE

9-27-10
PLANS APPROVAL DATE

REGISTERED PROFESSIONAL ENGINEER Pete B. Smith No. C60122 Exp. 6-30-10 CIVIL STATE OF CALIFORNIA

The State of California or its officers or agents shall not be responsible for the accuracy or completeness of electronic copies of this plan sheet.

SANDAG
401 B STREET,
SAN DIEGO, CA 92101

T.Y. LIN INTERNATIONAL
5030 CAMINO DE LA SIESTA, SUITE 204,
SAN DIEGO, CA 92108

NOTES

1. Excavation shall not extend more than 600 mm below a tieback until the tieback installation is completed.
2. Excavation shall not extend more than 450 mm below a strut until the strut installation is complete.
3. For pile, tieback, shotcrete facing depth, and strut data, see "DAR 1 PILE DATA" and "DAR 4 PILE DATA" sheets.
4. For limits of architectural treatment, see "ARCHITECTURAL DETAILS" sheets.

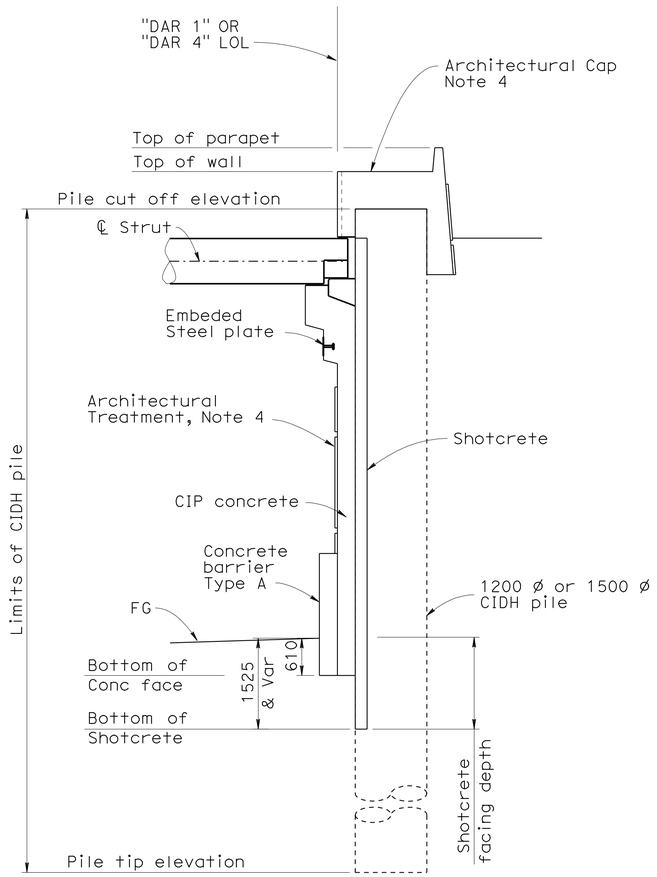

TYPICAL SECTION FOR PILES L4-L11 AND R7-R11

1:50

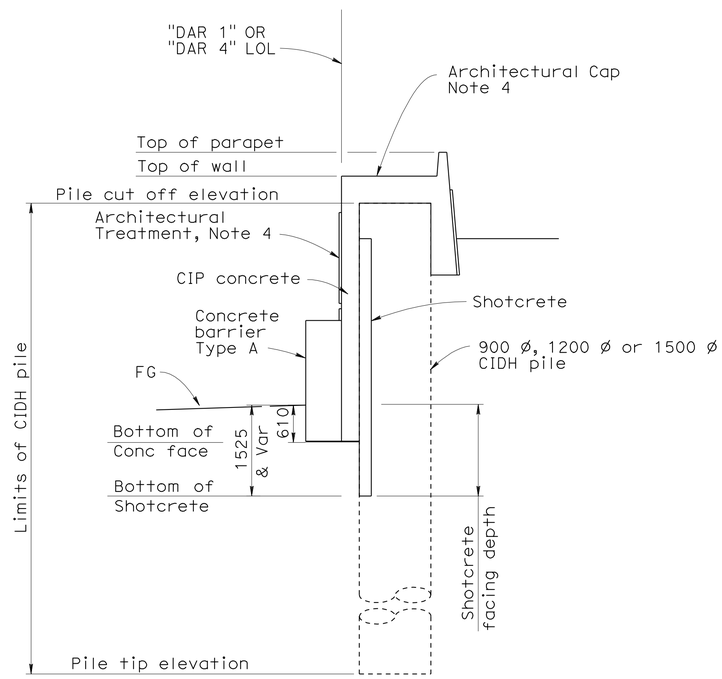

TYPICAL SECTION FOR PILES L1-L3 AND R1-R6

1:50

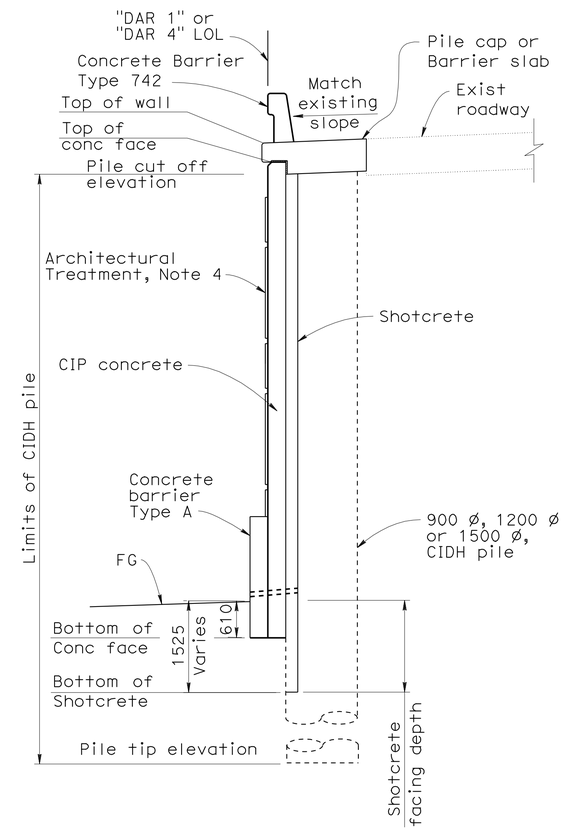

TYPICAL SECTION FOR PILES L14, L54-L82 AND R17, R61-R80

1:50

ALL DIMENSIONS ARE IN MILLIMETERS UNLESS OTHERWISE SHOWN

CHUNG-YUAN WEN
DESIGN OVERSIGHT
4-28-09
SIGN OFF DATE

	BY	CHECKED
DESIGN	Pete Smith	Anthony Sánchez
DETAILS	Ivan Martin	Anthony Sánchez
QUANTITIES	Andy Toledo	Shafi Sharifan

PREPARED FOR THE STATE OF CALIFORNIA DEPARTMENT OF TRANSPORTATION

Brett Makley
PROJECT ENGINEER

BRIDGE NO. 57E0075/76
KILOMETER POST KP43.2

CARROLL CANYON (DAR) RETAINING WALLS
WALL SECTIONS NO. 1

DESIGN DETAIL SHEET (METRIC) (REV. 10/27/05)

ORIGINAL SCALE IN MILLIMETERS FOR REDUCED PLANS 0 10 20 30 40 50 60 70 80 90 100

CU 11275
EA 2T0401

DISREGARD PRINTS BEARING EARLIER REVISION DATES

REVISION DATES (PRELIMINARY STAGE ONLY) 9/12/08 12/19/08 3/02/09 4/28/09

SHEET 8 OF 55

FILE => 57-e0075_76-f-ws01.dgn

USERNAME => trmikesl DATE PLOTTED => 29-SEP-2010 TIME PLOTTED => 11:55

DIST	COUNTY	ROUTE	KILOMETER POST TOTAL PROJECT	SHEET No	TOTAL SHEETS
11	SD	5,805	R49.9/R51.7, 42.6/46.5	779	886

Caltrans Metric

Peter B Smith 4-28-09
REGISTERED CIVIL ENGINEER DATE

9-27-10
PLANS APPROVAL DATE

REGISTERED PROFESSIONAL ENGINEER Pete B. Smith No. C60122 Exp. 6-30-10 CIVIL STATE OF CALIFORNIA

The State of California or its officers or agents shall not be responsible for the accuracy or completeness of electronic copies of this plan sheet.

SANDAG
401 B STREET,
SAN DIEGO, CA 92101

T.Y. LIN INTERNATIONAL
5030 CAMINO DE LA SIESTA, SUITE 204,
SAN DIEGO, CA 92108

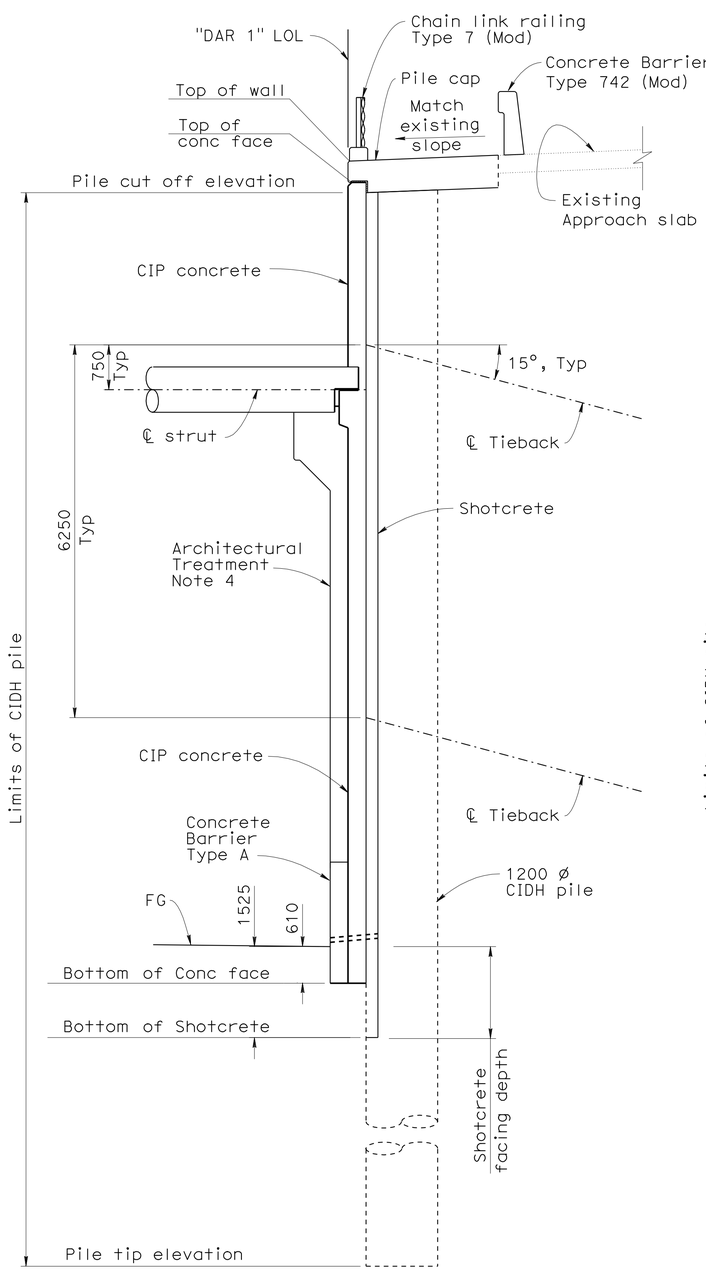

TYPICAL SECTION FOR PILES R12-R14
1:50

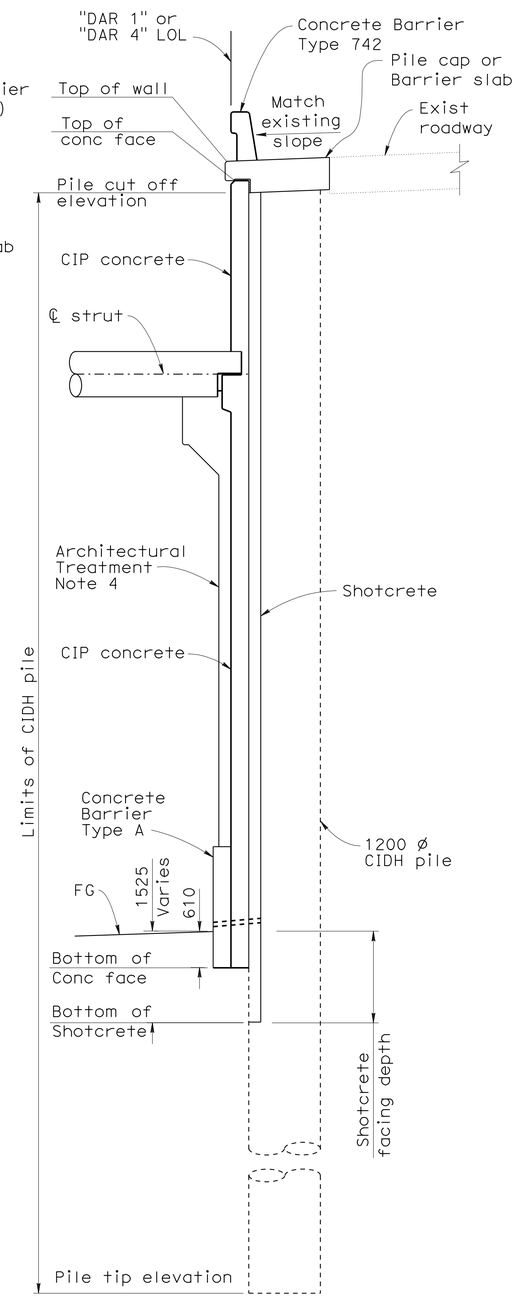

TYPICAL SECTION FOR PILES L12-L13, L15-L35 AND R15-R16, R18-R38
1:50

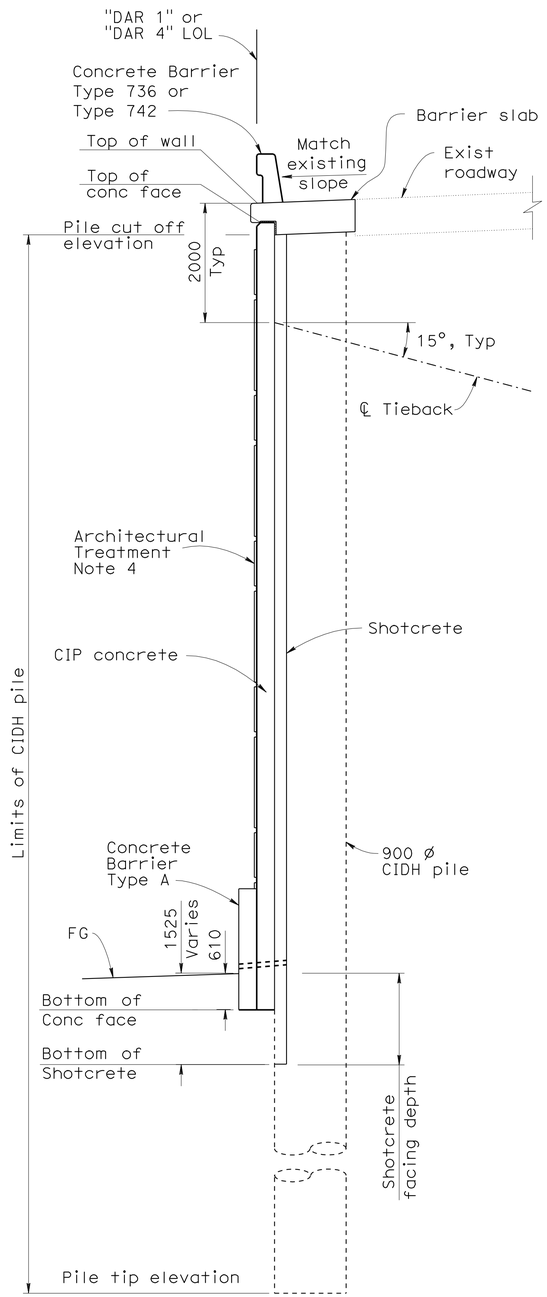

TYPICAL SECTION FOR PILES L36-L53 AND R39-R60
1:50

NOTES

1. Excavation shall not extend more than 600 mm below a tieback until the tieback installation is completed.
2. Excavation shall not extend more than 450 mm below a strut until the strut installation is complete.
3. For pile, tieback, shotcrete facing depth, and strut data, see "DAR 1 PILE DATA" and "DAR 4 PILE DATA" sheets.
4. For limits of architectural treatment, see "ARCHITECTURAL DETAILS" sheets.

ALL DIMENSIONS ARE IN MILLIMETERS UNLESS OTHERWISE SHOWN

CHUNG-YUAN WEN
DESIGN OVERSIGHT
4-28-09
SIGN OFF DATE

	BY	CHECKED
DESIGN	Pete Smith	Anthony Sánchez
DETAILS	Ivan Martin	Anthony Sánchez
QUANTITIES	Andy Toledo	Shafi Sharifan

PREPARED FOR THE STATE OF CALIFORNIA DEPARTMENT OF TRANSPORTATION

Brett Makley
PROJECT ENGINEER

BRIDGE NO. 57E0075/76
KILOMETER POST KP43.2

CARROLL CANYON (DAR) RETAINING WALLS
WALL SECTIONS NO. 2

DESIGN DETAIL SHEET (METRIC) (REV. 10/27/05)

ORIGINAL SCALE IN MILLIMETERS FOR REDUCED PLANS 0 10 20 30 40 50 60 70 80 90 100

CU 11275
EA 2T0401

DISREGARD PRINTS BEARING EARLIER REVISION DATES

REVISION DATES (PRELIMINARY STAGE ONLY) 9/12/08 12/19/08 3/09/09 4/28/09

SHEET 9 OF 55

FILE => 57-e0075_76-f-ws02.dgn

USERNAME => ttmikes1 DATE PLOTTED => 29-SEP-2010 TIME PLOTTED => 11:55

DIST	COUNTY	ROUTE	KILOMETER POST TOTAL PROJECT	SHEET No	TOTAL SHEETS
11	SD	5,805	R49.9/R51.7, 42.6/46.5	780	886

Caltrans Metric

Peter B Smith 4-28-09
REGISTERED CIVIL ENGINEER DATE

9-27-10
PLANS APPROVAL DATE

REGISTERED PROFESSIONAL ENGINEER Pete B. Smith No. C60122 Exp. 6-30-10 CIVIL STATE OF CALIFORNIA

The State of California or its officers or agents shall not be responsible for the accuracy or completeness of electronic copies of this plan sheet.

SANDAG
401 B STREET,
SAN DIEGO, CA 92101

T.Y. LIN INTERNATIONAL
5030 CAMINO DE LA SIESTA, SUITE 204,
SAN DIEGO, CA 92108

NOTES

1. For pile dimensions "Y1", "Y2" and "Y3", see "PILE DETAILS NO. 3" sheet.
2. * Under barrier slab, pile cut off elevation is dependant on existing freeway elevation.
3. For Pile Type, see "PILE DETAILS" sheets.

DAR 1 PILE DATA TABLE

				Pile Dimensions			Strut Data		Tieback Data				Facing Designation		
									First Lift		Second Lift				
Pile Number	Pile Tip Elevation (m)	*Pile Cut Off Elevation (m)	Pile Type	"Y1" (m)	"Y2" (m)	"Y3" (m)	CL Strut Elevation (m)	Strut Type	Tieback Force (kN)	Unbonded Length (m)	Tieback Force (kN)	Unbonded Length (m)	Up Station	Down Station	Shotcrete Facing Depth (m)
R1	40.410	49.320	P1	-----	-----	-----	-----	-----	-----	-----	-----	-----	F1	---	1.525
R2	39.870	50.060	P1	-----	-----	-----	-----	-----	-----	-----	-----	-----	F1	F1	1.525
R3	38.330	51.090	P2	-----	-----	-----	-----	-----	-----	-----	-----	-----	F2	F1	1.525
R4	36.350	52.130	P3	-----	-----	-----	-----	-----	-----	-----	-----	-----	F3	F2	1.525
R5	35.590	53.100	P3	-----	-----	-----	-----	-----	-----	-----	-----	-----	F3	F3	1.525
R6	35.670	54.140	P5	-----	-----	-----	-----	-----	-----	-----	-----	-----	F3	F3	1.525
R7	36.600	55.170	P9	-----	4.300	10.100	54.300	S1	-----	-----	-----	-----	F3	F3	1.525
R8	36.700	56.270	P9	-----	5.200	10.100	54.360	S1	-----	-----	-----	-----	F4	F3	1.525
R9	36.800	57.370	P9	-----	6.200	10.000	54.430	S1	-----	-----	-----	-----	F4	F4	1.525
R10	36.310	58.540	P11	-----	6.500	10.300	54.500	S1	-----	-----	-----	-----	F4	F4	1.525
R11	36.900	58.690	P11	-----	7.100	9.900	54.570	S1	-----	-----	-----	-----	F8	F4	1.525
R12	37.890	61.810	P9	-----	11.500	9.300	57.980	S2	1150	9.300	1500	6.300	F6	F8	1.525
R13	38.050	61.690	P9	-----	11.200	9.300	57.990	S2	950	9.300	1350	6.300	F7	F6	1.525
R14	38.220	61.500	P9	-----	10.800	9.400	58.010	S3	950	9.300	1350	6.300	F7	F7	1.525
R15	37.510	61.290	P6	2.700	10.400	10.300	58.030	S3	-----	-----	-----	-----	F6	F7	1.525
R16	37.660	61.140	P6	2.600	10.100	10.300	58.050	S4	-----	-----	-----	-----	F9	F6	1.525
R17	39.610	61.050	P10	-----	9.800	8.500	-----	-----	-----	-----	-----	-----	F9	F9	0.610
R18	39.700	61.010	P7	2.400	9.700	8.500	58.070	S5	-----	-----	-----	-----	F6	F9	0.610
R19	39.840	60.950	P7	2.400	9.500	8.500	58.090	S5	-----	-----	-----	-----	F6	F6	0.610
R20	39.990	60.890	P7	2.300	9.300	8.500	58.100	S5	-----	-----	-----	-----	F6	F6	0.610
R21	40.140	60.820	P7	2.200	9.100	8.500	58.120	S5	-----	-----	-----	-----	F6	F6	0.610
R22	40.320	60.740	P7	2.100	8.800	8.500	58.140	S5	-----	-----	-----	-----	F5	F6	0.610
R23	40.500	60.660	P7	2.000	8.600	8.500	58.150	S5	-----	-----	-----	-----	F5	F5	0.610
R24	40.680	60.590	P7	1.900	8.300	8.500	58.170	S5	-----	-----	-----	-----	F5	F5	0.610
R25	41.470	60.510	P9	-----	8.000	7.900	58.190	S5	-----	-----	-----	-----	F5	F5	0.610
R26	41.610	60.410	P9	-----	7.800	7.900	58.210	S5	-----	-----	-----	-----	F5	F5	0.610
R27	41.760	60.320	P9	-----	7.600	7.900	58.220	S5	-----	-----	-----	-----	F5	F5	0.610
R28	41.900	60.220	P9	-----	7.300	7.900	58.240	S5	-----	-----	-----	-----	F4	F5	0.610
R29	42.040	60.120	P9	-----	7.100	7.900	58.260	S5	-----	-----	-----	-----	F4	F4	0.610
R30	42.190	60.030	P9	-----	6.800	7.900	58.270	S5	-----	-----	-----	-----	F4	F4	0.610
R31	42.330	59.930	P9	-----	6.600	7.900	58.290	S5	-----	-----	-----	-----	F4	F4	0.610
R32	42.980	59.840	P10	-----	6.400	7.400	58.310	S5	-----	-----	-----	-----	F4	F4	0.610
R33	43.120	59.740	P10	-----	6.100	7.400	58.330	S5	-----	-----	-----	-----	F4	F4	0.610
R34	42.330	59.640	P10	-----	5.900	8.300	58.340	S5	-----	-----	-----	-----	F4	F4	1.525
R35	42.470	59.540	P10	-----	5.600	8.400	58.360	S5	-----	-----	-----	-----	F4	F4	1.525
R36	42.600	59.440	P10	-----	5.400	8.300	58.380	S5	-----	-----	-----	-----	F4	F4	1.525
R37	42.730	59.340	P10	-----	5.200	8.300	58.390	S5	-----	-----	-----	-----	F3	F4	1.525
R38	42.860	59.240	P10	-----	4.900	8.400	58.410	S5	-----	-----	-----	-----	F3	F3	1.525
R39	46.120	59.140	P4	-----	-----	-----	-----	-----	675	5.100	-----	-----	F3	F3	1.525
R40	46.240	59.040	P4	-----	-----	-----	-----	-----	675	5.000	-----	-----	F3	F3	1.525

				Tieback Data		Facing Designation		
				First Lift				
Pile Number	Pile Tip Elevation (m)	*Pile Cut Off Elevation (m)	Pile Type	Tieback Force (kN)	Unbonded Length (m)	Up Station	Down Station	Shotcrete Facing Depth (m)
R41	46.490	58.940	P4	675	4.900	F3	F3	1.525
R42	46.740	58.850	P4	675	4.800	F3	F3	1.525
R43	46.990	58.760	P4	675	4.700	F3	F3	1.525
R44	47.260	58.670	P4	675	4.600	F3	F3	1.525
R45	47.500	58.580	P4	675	4.600	F3	F3	1.525
R46	47.700	58.490	P4	675	4.600	F3	F3	1.525
R47	47.900	58.400	P4	675	4.600	F3	F3	1.525
R48	48.100	58.320	P4	450	4.600	F3	F3	1.525
R49	48.310	58.230	P4	450	4.600	F3	F3	1.525
R50	48.450	58.130	P4	450	4.600	F3	F3	1.525
R51	48.650	58.030	P4	450	4.600	F3	F3	1.525
R52	48.850	57.920	P4	450	4.600	F3	F3	1.525
R53	49.040	57.810	P4	450	4.600	F3	F3	1.525
R54	49.240	57.700	P4	350	4.600	F3	F3	1.525
R55	49.430	57.590	P4	350	4.600	F3	F3	1.525
R56	49.550	57.480	P4	350	4.600	F3	F3	1.525
R57	49.740	57.380	P4	350	4.600	F3	F3	1.525
R58	49.930	57.270	P4	350	4.600	F2	F3	1.525
R59	50.110	57.160	P4	350	4.600	F2	F2	1.525
R60	50.230	57.050	P4	350	4.600	F2	F2	1.525
R61	44.970	56.940	P2	-----	-----	F2	F2	1.525
R62	45.220	56.830	P2	-----	-----	F2	F2	1.525
R63	45.260	56.710	P2	-----	-----	F2	F2	1.525
R64	45.430	56.600	P2	-----	-----	F1	F2	1.525
R65	45.540	56.490	P2	-----	-----	F1	F1	1.525
R66	45.710	56.380	P2	-----	-----	F1	F1	1.525
R67	45.810	56.280	P2	-----	-----	F1	F1	1.525
R68	45.900	56.190	P2	-----	-----	F1	F1	1.525
R69	46.910	56.100	P1	-----	-----	F1	F1	1.525
R70	47.010	56.010	P1	-----	-----	F1	F1	1.525
R71	47.160	55.910	P1	-----	-----	F1	F1	1.525
R72	47.240	55.820	P1	-----	-----	F1	F1	1.525
R73	47.320	55.730	P1	-----	-----	F1	F1	1.525
R74	47.400	55.640	P1	-----	-----	F1	F1	1.525
R75	48.380	55.550	P1	-----	-----	F1	F1	0.610
R76	48.380	55.480	P1	-----	-----	F1	F1	0.610
R77	48.430	55.400	P1	-----	-----	F1	F1	0.610
R78	48.480	55.320	P1	-----	-----	F1	F1	0.610
R79	48.530	55.240	P1	-----	-----	F1	F1	0.610
R80	48.510	55.170	P1	-----	-----	---	F1	0.610

Note:
The contractor shall verify all controlling field dimensions before ordering or fabricating any material.

ALL DIMENSIONS ARE IN MILLIMETERS UNLESS OTHERWISE SHOWN

CHUNG-YUAN WEN
DESIGN OVERSIGHT
4-28-09
SIGN OFF DATE

	BY	CHECKED
DESIGN	Pete Smith	E. Kjolsing, G. Dekker
DETAILS	Ivan Martin	E. Kjolsing, G. Dekker
QUANTITIES	Andy Toledo	Shafi Sharifan

PREPARED FOR THE STATE OF CALIFORNIA DEPARTMENT OF TRANSPORTATION

Brett Makley
PROJECT ENGINEER

BRIDGE NO. 57E0075
KILOMETER POST KP43.2

CARROLL CANYON (DAR) RETAINING WALLS
DAR 1 PILE DATA

DESIGN DETAIL SHEET (METRIC) (REV. 10/27/05)

ORIGINAL SCALE IN MILLIMETERS FOR REDUCED PLANS 0 10 20 30 40 50 60 70 80 90 100

CU 11275
EA 2T0401

DISREGARD PRINTS BEARING EARLIER REVISION DATES

REVISION DATES (PRELIMINARY STAGE ONLY) 9/12/08 12/19/08 3/09/09 4/28/09

SHEET 10 OF 55

FILE => 57-e0075_76-g-wdt01.dgn

USERNAME => trmikesl DATE PLOTTED => 29-SEP-2010 TIME PLOTTED => 11:55

DIST	COUNTY	ROUTE	KILOMETER POST TOTAL PROJECT	SHEET No	TOTAL SHEETS
11	SD	5,805	R49.9/R51.7, 42.6/46.5	781	886

Caltrans Metric

Peter B Smith 4-28-09
REGISTERED CIVIL ENGINEER DATE

9-27-10
PLANS APPROVAL DATE

REGISTERED PROFESSIONAL ENGINEER Pete B. Smith No. C60122 Exp. 6-30-10 CIVIL STATE OF CALIFORNIA

The State of California or its officers or agents shall not be responsible for the accuracy or completeness of electronic copies of this plan sheet.

SANDAG
401 B STREET,
SAN DIEGO, CA 92101

T.Y. LIN INTERNATIONAL
5030 CAMINO DE LA SIESTA, SUITE 204,
SAN DIEGO, CA 92108

NOTES

1. For pile dimensions "Y1", "Y2" and "Y3", see "PILE DETAILS NO. 3" sheet.
2. * Under barrier slab, pile cut off elevation is dependant on existing freeway elevation.
3. For Pile Type, see "PILE DETAILS" sheets.

DAR 4 PILE DATA TABLE

				Pile Dimensions			Strut Data		Tieback Data First Lift		Facing Designation		
Pile Number	Pile Tip Elevation (m)	*Pile Cut Off Elevation (m)	Pile Type	"Y1" (m)	"Y2" (m)	"Y3" (m)	CL Strut Elevation (m)	Strut Type	Tieback Force (kN)	Unbonded Length (m)	Up Station	Down Station	Shotcrete Facing Depth (m)
L1	41.900	48.420	P1	-----	-----	-----	-----	-----	-----	-----	F1	-----	0.610
L2	41.810	49.460	P1	-----	-----	-----	-----	-----	-----	-----	F1	F1	0.610
L3	40.390	53.850	P2	-----	-----	-----	-----	-----	-----	-----	F1	F1	0.610
L4	40.680	54.980	P8	-----	1.000	6.000	54.300	S1	-----	-----	F2	F1	0.610
L5	40.750	55.200	P8	-----	1.500	6.400	54.360	S1	-----	-----	F3	F2	0.610
L6	40.810	55.580	P8	-----	2.500	6.400	54.430	S1	-----	-----	F3	F3	0.610
L7	40.880	56.160	P8	-----	3.400	6.400	54.500	S1	-----	-----	F3	F3	0.610
L8	40.950	56.750	P8	-----	4.300	6.400	54.570	S1	-----	-----	F6	F3	0.610
L9	41.040	58.870	P8	-----	5.500	6.400	57.980	S2	-----	-----	F4	F6	0.610
L10	41.120	58.870	P8	-----	6.400	6.400	57.990	S2	-----	-----	F4	F4	0.610
L11	41.210	58.870	P8	-----	7.000	6.400	58.010	S3	-----	-----	F7	F4	0.610
L12	37.490	61.460	P6	2.900	10.600	10.300	58.030	S3	-----	-----	F6	F7	1.525
L13	37.570	61.360	P6	2.800	10.500	10.200	58.050	S4	-----	-----	F9	F6	1.525
L14	38.450	61.240	P10	-----	10.300	9.400	-----	-----	-----	-----	F9	F9	1.525
L15	38.510	61.190	P7	2.600	10.100	9.500	58.070	S5	-----	-----	F6	F9	1.525
L16	38.610	61.120	P7	2.500	10.000	9.400	58.090	S5	-----	-----	F6	F6	1.525
L17	38.720	61.050	P7	2.400	9.800	9.400	58.100	S5	-----	-----	F6	F6	1.525
L18	38.820	60.990	P7	2.400	9.600	9.500	58.120	S5	-----	-----	F6	F6	1.525
L19	38.930	60.900	P7	2.300	9.400	9.500	58.140	S5	-----	-----	F6	F6	1.525
L20	39.030	60.750	P7	2.100	9.200	9.400	58.150	S5	-----	-----	F6	F6	1.525
L21	39.140	60.590	P7	1.900	8.900	9.400	58.170	S5	-----	-----	F5	F6	1.525
L22	39.850	60.440	P9	-----	8.700	8.800	58.190	S5	-----	-----	F5	F5	1.525
L23	39.990	60.300	P9	-----	8.400	8.800	58.210	S5	-----	-----	F5	F5	1.525
L24	41.060	60.200	P9	-----	8.100	7.900	58.220	S5	-----	-----	F5	F5	0.610
L25	41.200	60.100	P9	-----	7.900	7.900	58.240	S5	-----	-----	F5	F5	0.610
L26	41.350	60.000	P9	-----	7.600	7.900	58.260	S5	-----	-----	F5	F5	0.610
L27	41.490	59.900	P9	-----	7.400	7.900	58.270	S5	-----	-----	F5	F5	0.610
L28	41.630	59.810	P9	-----	7.200	7.900	58.290	S5	-----	-----	F5	F5	0.610
L29	42.280	59.710	P10	-----	6.900	7.400	58.310	S5	-----	-----	F4	F5	0.610
L30	42.420	59.610	P10	-----	6.700	7.400	58.330	S5	-----	-----	F4	F4	0.610
L31	42.560	59.510	P10	-----	6.400	7.400	58.340	S5	-----	-----	F4	F4	0.610
L32	42.700	59.420	P10	-----	6.200	7.400	58.360	S5	-----	-----	F4	F4	0.610
L33	42.830	59.320	P10	-----	6.000	7.400	58.380	S5	-----	-----	F4	F4	0.610
L34	42.970	59.220	P10	-----	5.700	7.400	58.390	S5	-----	-----	F4	F4	0.610
L35	43.100	59.120	P10	-----	5.500	7.400	58.410	S5	-----	-----	F4	F4	0.610
L36	46.050	59.020	P4	-----	-----	-----	-----	-----	675	5.400	F4	F4	0.610
L37	46.170	58.920	P4	-----	-----	-----	-----	-----	675	5.300	F3	F4	0.610
L38	46.420	58.820	P4	-----	-----	-----	-----	-----	675	5.200	F3	F3	0.610
L39	46.670	58.730	P4	-----	-----	-----	-----	-----	675	5.100	F3	F3	0.610
L40	46.920	58.630	P4	-----	-----	-----	-----	-----	675	5.000	F3	F3	0.610
L41	47.160	58.520	P4	-----	-----	-----	-----	-----	675	4.900	F3	F3	0.610

				Tieback Data First Lift		Facing Designation		
Pile Number	Pile Tip Elevation (m)	*Pile Cut Off Elevation (m)	Pile Type	Tieback Force (kN)	Unbonded Length (m)	Up Station	Down Station	Shotcrete Facing Depth (m)
L42	47.400	58.420	P4	550	4.700	F3	F3	0.610
L43	47.670	58.320	P4	550	4.600	F3	F3	0.610
L44	47.990	58.220	P4	550	4.600	F3	F3	0.610
L45	48.190	58.120	P4	550	4.600	F3	F3	0.610
L46	48.380	58.010	P4	550	4.600	F3	F3	0.610
L47	48.580	57.910	P4	450	4.600	F3	F3	0.610
L48	48.740	57.810	P4	450	4.600	F3	F3	0.610
L49	48.940	57.700	P4	450	4.600	F3	F3	0.610
L50	49.130	57.590	P4	450	4.600	F3	F3	0.610
L51	49.330	57.480	P4	450	4.600	F3	F3	0.610
L52	49.530	57.370	P4	450	4.600	F3	F3	0.610
L53	49.720	57.260	P4	450	4.600	F3	F3	0.610
L54	43.190	57.160	P3	-----	-----	F3	F3	0.610
L55	43.260	57.050	P3	-----	-----	F3	F3	0.610
L56	43.330	56.940	P3	-----	-----	F3	F3	0.610
L57	43.390	56.840	P3	-----	-----	F3	F3	0.610
L58	43.480	56.740	P3	-----	-----	F2	F3	0.610
L59	43.600	56.640	P3	-----	-----	F2	F2	0.610
L60	45.450	56.540	P2	-----	-----	F2	F2	0.610
L61	45.570	56.440	P2	-----	-----	F2	F2	0.610
L62	45.750	56.340	P2	-----	-----	F2	F2	0.610
L63	45.920	56.240	P2	-----	-----	F2	F2	0.610
L64	45.960	56.150	P2	-----	-----	F2	F2	0.610
L65	46.140	56.050	P2	-----	-----	F1	F2	0.610
L66	46.230	55.970	P2	-----	-----	F1	F1	0.610
L67	46.330	55.880	P2	-----	-----	F1	F1	0.610
L68	46.420	55.800	P2	-----	-----	F1	F1	0.610
L69	47.430	55.710	P1	-----	-----	F1	F1	0.610
L70	47.520	55.630	P1	-----	-----	F1	F1	0.610
L71	47.600	55.550	P1	-----	-----	F1	F1	0.610
L72	47.680	55.470	P1	-----	-----	F1	F1	0.610
L73	47.760	55.390	P1	-----	-----	F1	F1	0.610
L74	47.840	55.310	P1	-----	-----	F1	F1	0.610
L75	47.900	55.240	P1	-----	-----	F1	F1	0.610
L76	47.910	55.170	P1	-----	-----	F1	F1	0.610
L77	47.960	55.090	P1	-----	-----	F1	F1	0.610
L78	48.000	55.020	P1	-----	-----	F1	F1	0.610
L79	47.990	54.940	P1	-----	-----	F1	F1	0.610
L80	48.030	54.860	P1	-----	-----	F1	F1	0.610
L81	48.070	54.780	P1	-----	-----	F1	F1	0.610
L82	48.050	54.700	P1	-----	-----	-----	F1	0.610

Note:
The contractor shall verify all controlling field dimensions before ordering or fabricating any material.

ALL DIMENSIONS ARE IN MILLIMETERS UNLESS OTHERWISE SHOWN

CHUNG-YUAN WEN
DESIGN OVERSIGHT
4-28-09
SIGN OFF DATE

	BY	CHECKED
DESIGN	Pete Smith	E. Kjolsing, G. Dekker
DETAILS	Ivan Martin	E. Kjolsing, G. Dekker
QUANTITIES	Andy Toledo	Shafi Sharifan

PREPARED FOR THE STATE OF CALIFORNIA DEPARTMENT OF TRANSPORTATION

Brett Makley
PROJECT ENGINEER

BRIDGE NO. 57E0076
KILOMETER POST KP43.2

CARROLL CANYON (DAR) RETAINING WALLS
DAR 4 PILE DATA

DESIGN DETAIL SHEET (METRIC) (REV. 10/27/05)

ORIGINAL SCALE IN MILLIMETERS FOR REDUCED PLANS 0 10 20 30 40 50 60 70 80 90 100

CU 11275
EA 2T0401

DISREGARD PRINTS BEARING EARLIER REVISION DATES

REVISION DATES (PRELIMINARY STAGE ONLY): 9/12/08 12/19/08 3/09/09 4/28/09

SHEET 11 OF 55

FILE => 57-e0075_76-g-wdt02.dgn

USERNAME => trmikest DATE PLOTTED => 29-SEP-2010 TIME PLOTTED => 11:55

DIST	COUNTY	ROUTE	KILOMETER POST TOTAL PROJECT	SHEET No	TOTAL SHEETS
11	SD	5,805	R49.9/R51.7, 42.6/46.5	782	886

Caltrans Metric

Peter B Smith 4-28-09
REGISTERED CIVIL ENGINEER DATE

9-27-10
PLANS APPROVAL DATE

REGISTERED PROFESSIONAL ENGINEER Pete B. Smith No. C60122 Exp. 6-30-10 CIVIL STATE OF CALIFORNIA

The State of California or its officers or agents shall not be responsible for the accuracy or completeness of electronic copies of this plan sheet.

SANDAG
401 B STREET,
SAN DIEGO, CA 92101

T.Y. LIN INTERNATIONAL
5030 CAMINO DE LA SIESTA, SUITE 204,
SAN DIEGO, CA 92108

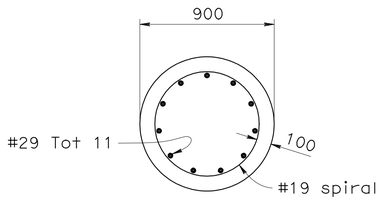

SECTION A-A
1:20

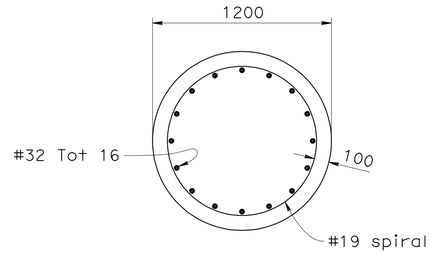

SECTION B-B
1:20

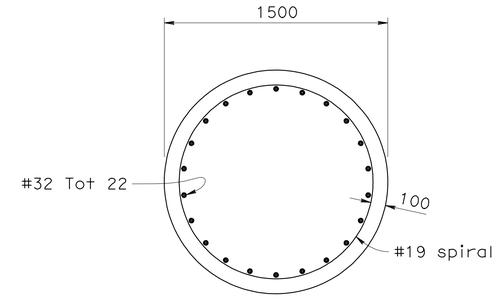

SECTION C-C
1:20

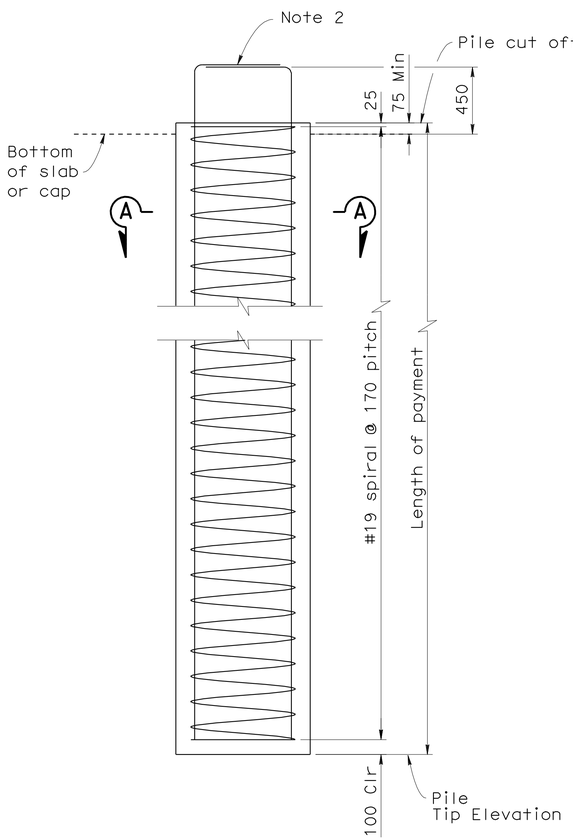

P1 CIDH PILE
1:20

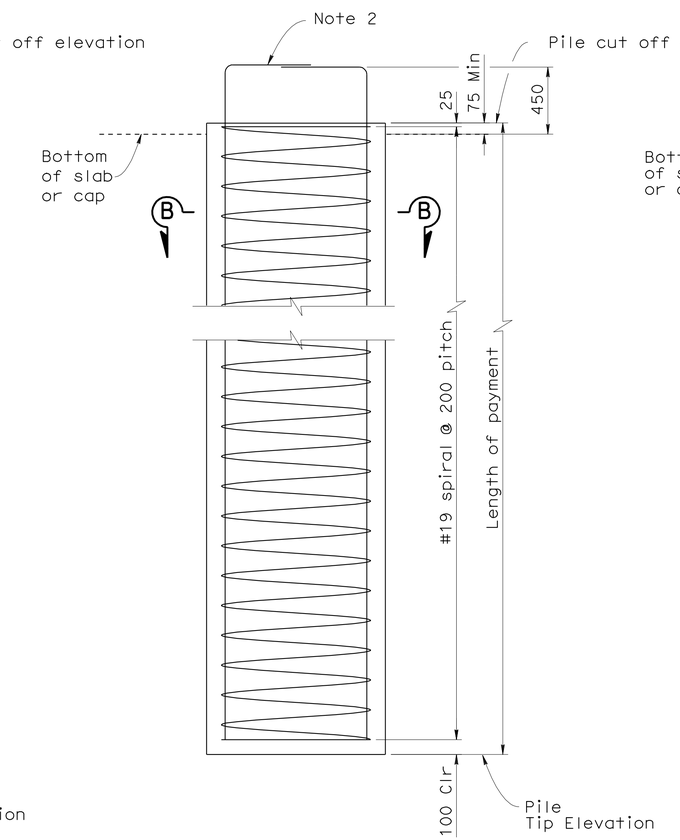

P2 CIDH PILE
1:20

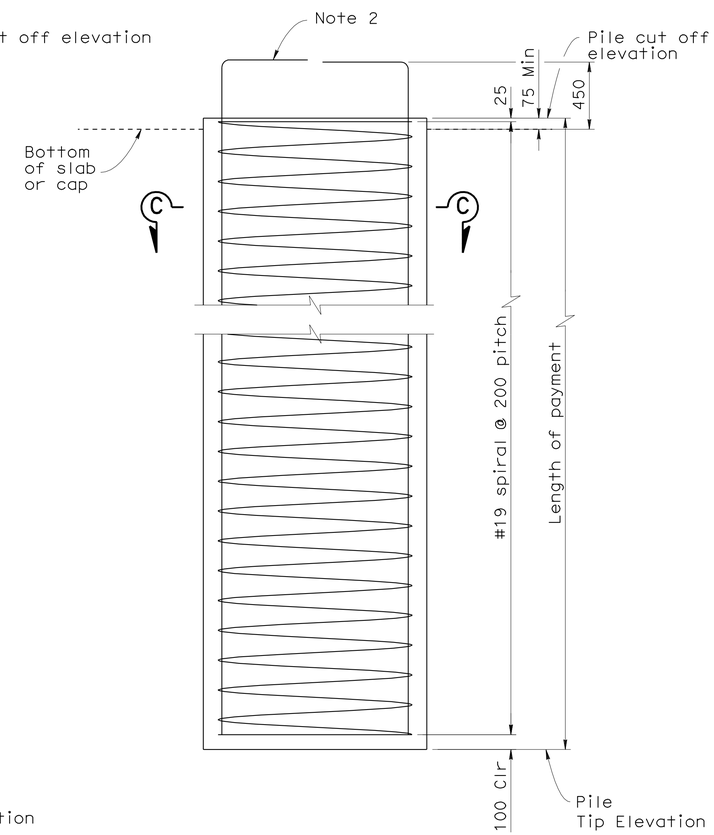

P3 CIDH PILE
1:20

NOTES

1. Lapped splices in spiral pile reinforcement shall be lapped at least 80 bar diameters. Spiral pile reinforcement at splices and at ends shall be terminated with a 135° hook with a 250 mm tail hooked around a longitudinal bar
2. Extend reinforcing into barrier slab where applicable, see "BARRIER SLAB DETAILS" sheet. At other locations, see "PILE TOP DETAIL"

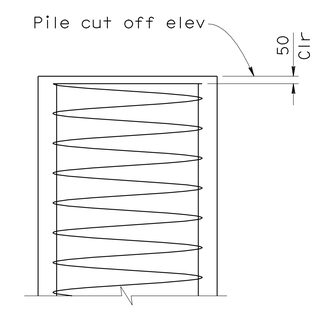

PILE TOP DETAIL
Piles R1-R11 & L1-L11

ALL DIMENSIONS ARE IN MILLIMETERS UNLESS OTHERWISE SHOWN

CHUNG-YUAN WEN
DESIGN OVERSIGHT
4-28-09
SIGN OFF DATE

	BY	CHECKED
DESIGN	Eric Kjolsing	Anthony Sánchez
DETAILS	Ivan Martin	Anthony Sánchez
QUANTITIES	Andy Toledo	Shafi Sharifan

PREPARED FOR THE STATE OF CALIFORNIA DEPARTMENT OF TRANSPORTATION

Brett Makley
PROJECT ENGINEER

BRIDGE NO. 57E0075/76
KILOMETER POST KP43.2

CARROLL CANYON (DAR) RETAINING WALLS
PILE DETAILS NO. 1

DESIGN DETAIL SHEET (METRIC) (REV. 10/27/05)

ORIGINAL SCALE IN MILLIMETERS FOR REDUCED PLANS 0 10 20 30 40 50 60 70 80 90 100

CU 11275
EA 2T0401

DISREGARD PRINTS BEARING EARLIER REVISION DATES

REVISION DATES (PRELIMINARY STAGE ONLY): 9/12/08 12/19/08 3/09/09 4/18/09 4-28-09

SHEET 12 OF 55

FILE => 57-e0075_76-h-pdt01.dgn

USERNAME => trmikes1 DATE PLOTTED => 29-SEP-2010 TIME PLOTTED => 11:55

DIST	COUNTY	ROUTE	KILOMETER POST TOTAL PROJECT	SHEET No	TOTAL SHEETS
11	SD	5,805	R49.9/R51.7, 42.6/46.5	783	886

Caltrans Metric

Peter B Smith 4-28-09
REGISTERED CIVIL ENGINEER DATE

9-27-10
PLANS APPROVAL DATE

REGISTERED PROFESSIONAL ENGINEER Pete B. Smith No. C60122 Exp. 6-30-10 CIVIL STATE OF CALIFORNIA

The State of California or its officers or agents shall not be responsible for the accuracy or completeness of electronic copies of this plan sheet.

SANDAG
401 B STREET,
SAN DIEGO, CA 92101

T.Y. LIN INTERNATIONAL
5030 CAMINO DE LA SIESTA, SUITE 204,
SAN DIEGO, CA 92108

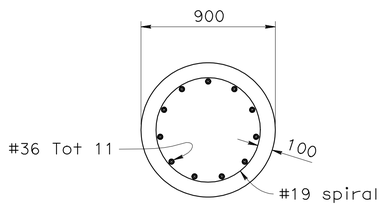

SECTION D-D
1:20

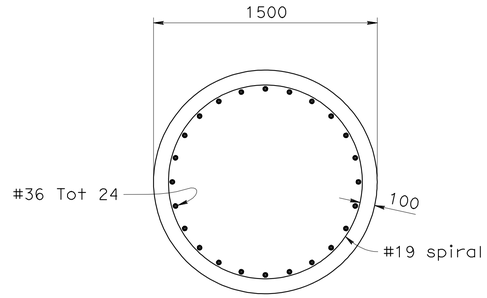

SECTION E-E
1:20

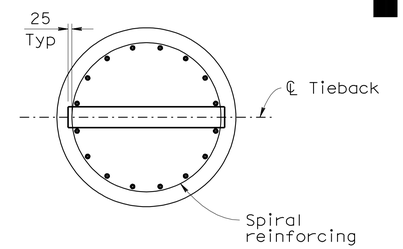

SECTION F-F
1:20

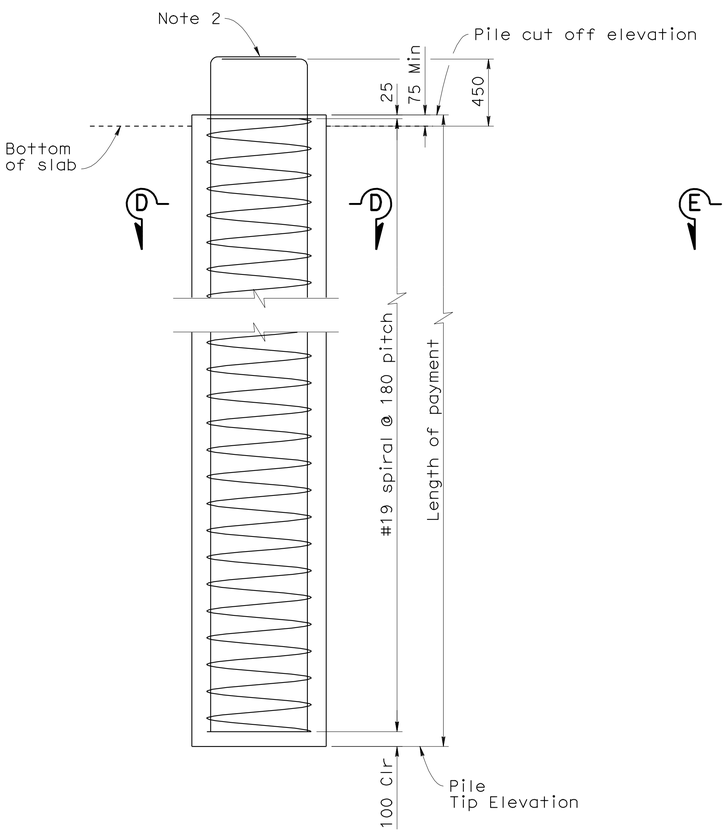

P4 CIDH PILE
1:20

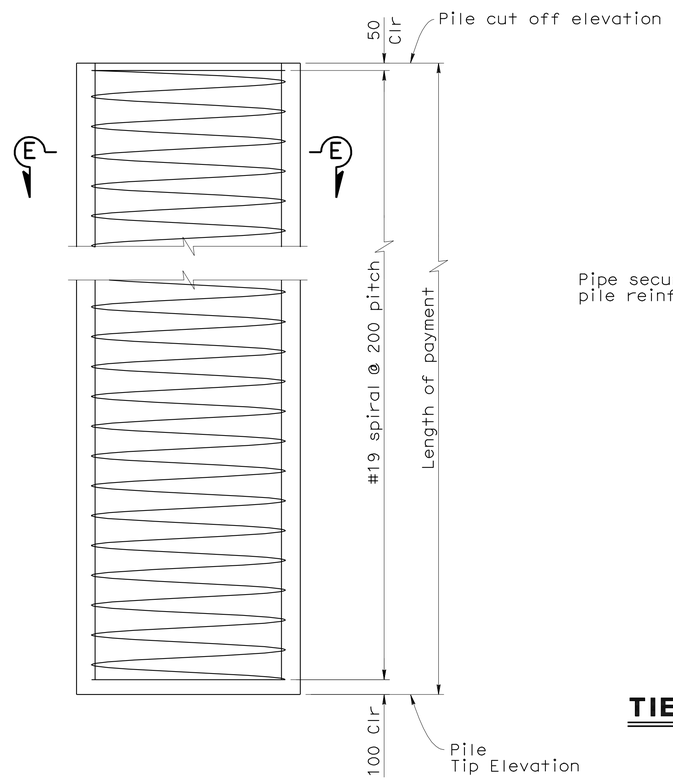

P5 CIDH PILE
1:20

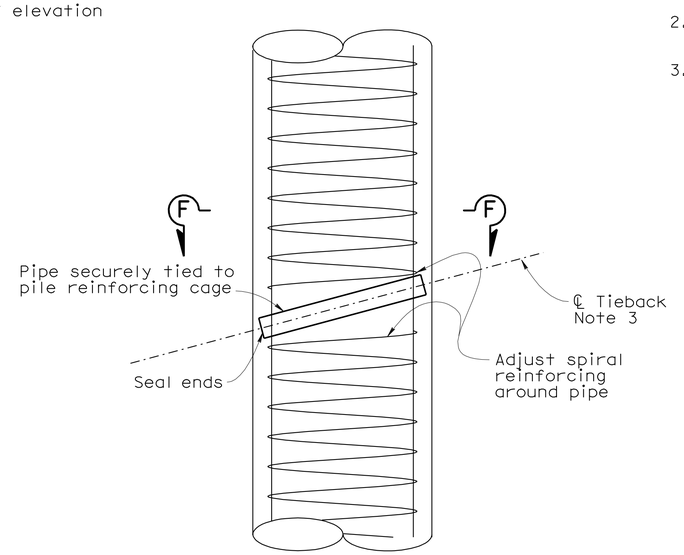

ELEVATION
1:20

TIEBACK FORMED HOLE DETAILS

NOTES

1. Lapped splices in spiral pile reinforcement shall be lapped at least 80 bar diameters. Spiral pile reinforcement at splices and at ends shall be terminated with a 135° hook with a 250 mm tail hooked around a longitudinal bar
2. Extend reinforcing into barrier slab, see "BARRIER SLAB DETAILS" sheet
3. See "TIEBACK DETAILS" sheet for tieback details

ALL DIMENSIONS ARE IN
MILLIMETERS UNLESS OTHERWISE SHOWN

CHUNG-YUAN WEN
DESIGN OVERSIGHT
4-28-09
SIGN OFF DATE

	BY	CHECKED
DESIGN	Eric Kjolsing	Anthony Sánchez
DETAILS	Ivan Martin	Anthony Sánchez
QUANTITIES	Andy Toledo	Shafi Sharifan

PREPARED FOR THE
STATE OF CALIFORNIA
DEPARTMENT OF TRANSPORTATION

Brett Makley
PROJECT ENGINEER

BRIDGE NO. 57E0075/76
KILOMETER POST KP43.2

CARROLL CANYON (DAR) RETAINING WALLS
PILE DETAILS NO. 2

DESIGN DETAIL SHEET (METRIC) (REV. 10/27/05)

ORIGINAL SCALE IN MILLIMETERS FOR REDUCED PLANS 0 10 20 30 40 50 60 70 80 90 100

CU 11275
EA 2T0401

DISREGARD PRINTS BEARING EARLIER REVISION DATES

REVISION DATES (PRELIMINARY STAGE ONLY): ~~9/12/08~~ ~~12/19/08~~ ~~3/09/09~~ ~~4/15/09~~ 4-28-09

SHEET 13 OF 55

FILE => 57-e0075_76-h-pdt02.dgn

USERNAME => trmikes1 DATE PLOTTED => 29-SEP-2010 TIME PLOTTED => 11:55

DIST	COUNTY	ROUTE	KILOMETER POST TOTAL PROJECT	SHEET No	TOTAL SHEETS
11	SD	5,805	R49.9/R51.7, 42.6/46.5	784	886

Caltrans Metric

Peter B Smith 4-28-09
REGISTERED CIVIL ENGINEER DATE

9-27-10
PLANS APPROVAL DATE

REGISTERED PROFESSIONAL ENGINEER Pete B. Smith No. C60122 Exp. 6-30-10 CIVIL STATE OF CALIFORNIA

The State of California or its officers or agents shall not be responsible for the accuracy or completeness of electronic copies of this plan sheet.

SANDAG
401 B STREET,
SAN DIEGO, CA 92101

T.Y. LIN INTERNATIONAL
5030 CAMINO DE LA SIESTA, SUITE 204,
SAN DIEGO, CA 92108

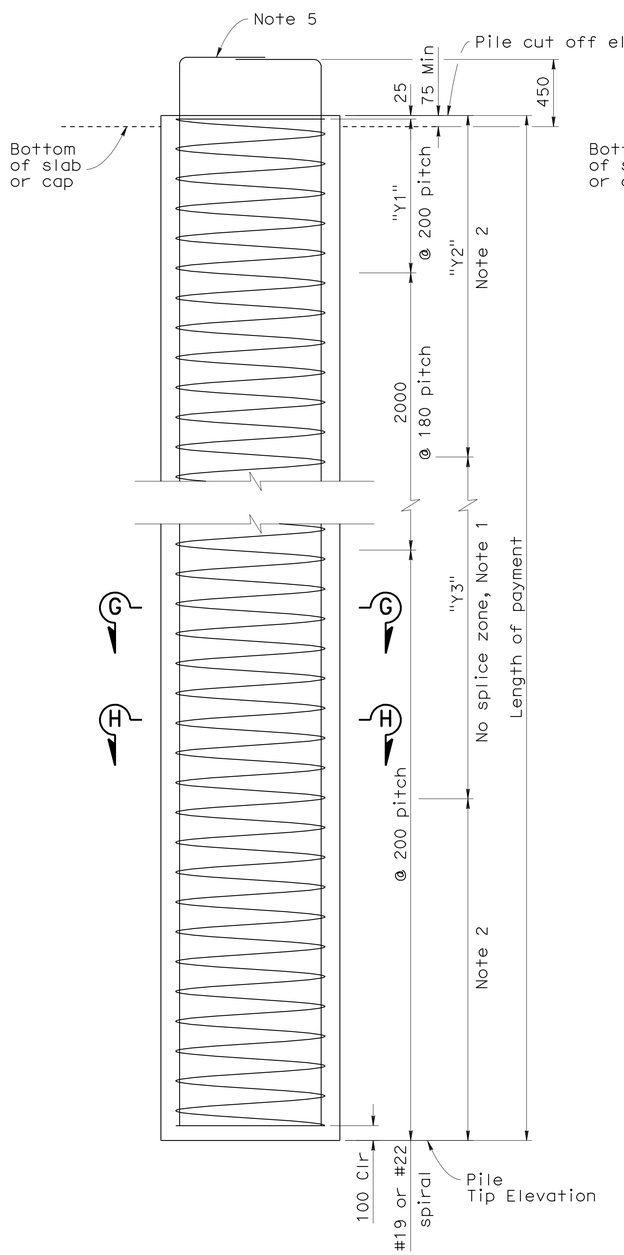

P6-P7 CIDH PILE
1:20

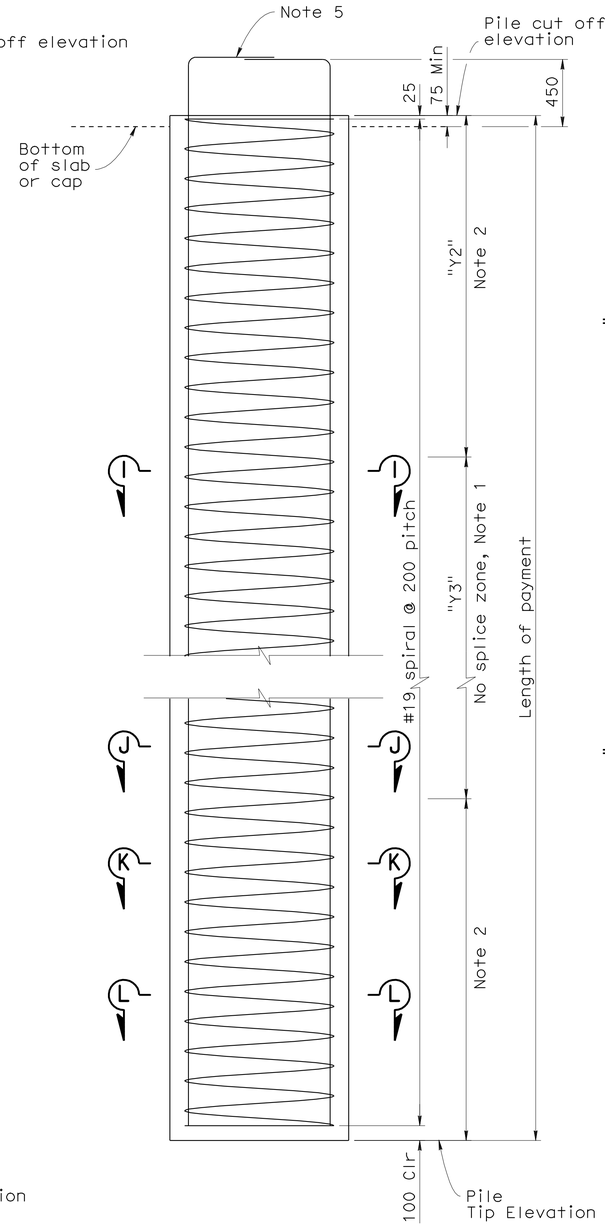

P8-P11 CIDH PILE
1:20

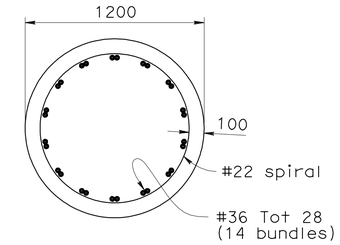

SECTION G-G
1:20

P6 CIDH PILE

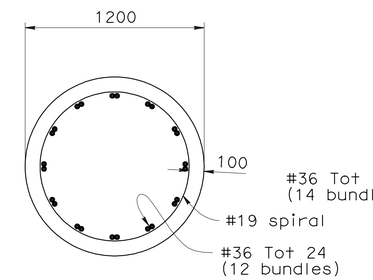

SECTION H-H
1:20

P7 CIDH PILE

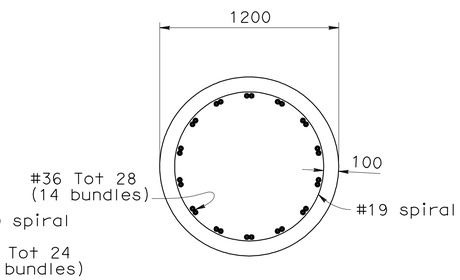

SECTION I-I
1:20

P8 CIDH PILE

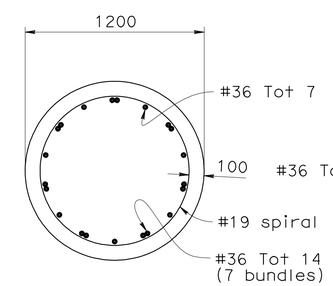

SECTION J-J
1:20

P9 CIDH PILE

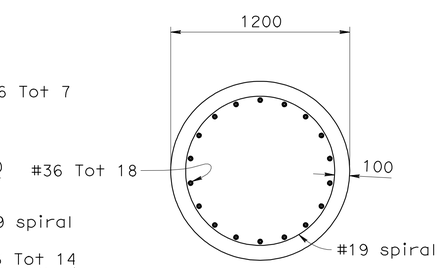

SECTION K-K
1:20

P10 CIDH PILE

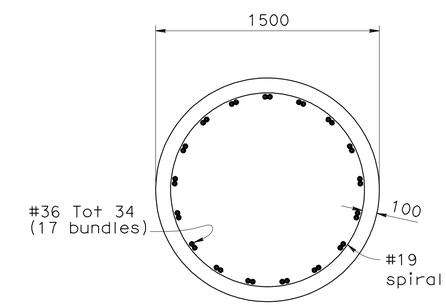

SECTION L-L
1:20

P11 CIDH PILE

NOTES

1. Longitudinal and spiral reinforcing shall not be spliced in "No Splice Zone".
2. Splices in longitudinal and spiral reinforcing shall be ultimate splices.
3. Spiral reinforcing at the ends of the pile cage shall be terminated with an additional full turn and a 135° hook with a 250 mm tail hooked around a longitudinal bar.
4. See "PILE DETAILS NO. 2" sheet for tieback formed hole details.
5. Extend reinforcing into barrier slab, where applicable. See "BARRIER SLAB DETAILS" sheet. At other locations see "PILE TOP DETAILS" on "PILE DETAILS NO. 1" sheet.
6. For "Y1", "Y2" and "Y3" dimensions, see "PILE DATA TABLES" on "DAR 1 PILE DATA" and "DAR 4 PILE DATA" sheets.

ALL DIMENSIONS ARE IN MILLIMETERS UNLESS OTHERWISE SHOWN

CHUNG-YUAN WEN
DESIGN OVERSIGHT
4-28-09
SIGN OFF DATE

	BY	CHECKED
DESIGN	Eric Kjolsing	Anthony Sánchez
DETAILS	Ivan Martin	Anthony Sánchez
QUANTITIES	Andy Toledo	Shafi Sharifan

PREPARED FOR THE STATE OF CALIFORNIA DEPARTMENT OF TRANSPORTATION

Brett Makley
PROJECT ENGINEER

BRIDGE NO. 57E0075/76
KILOMETER POST KP43.2

CARROLL CANYON (DAR) RETAINING WALLS
PILE DETAILS NO. 3

DESIGN DETAIL SHEET (METRIC) (REV. 10/27/05)

ORIGINAL SCALE IN MILLIMETERS FOR REDUCED PLANS 0 10 20 30 40 50 60 70 80 90 100

CU 11275
EA 2T0401

DISREGARD PRINTS BEARING EARLIER REVISION DATES

REVISION DATES (PRELIMINARY STAGE ONLY): 9/12/08 12/19/08 3/20/09 4/28/09

SHEET 14 OF 55

FILE => 57-e0075_76-h-pdt03.dgn

USERNAME => trmikes1 DATE PLOTTED => 29-SEP-2010 TIME PLOTTED => 11:56

DIST	COUNTY	ROUTE	KILOMETER POST TOTAL PROJECT	SHEET No	TOTAL SHEETS
11	SD	5,805	R49.9/R51.7, 42.6/46.5	785	886

Caltrans Metric

Peter B Smith 4-28-09
REGISTERED CIVIL ENGINEER DATE

9-27-10
PLANS APPROVAL DATE

REGISTERED PROFESSIONAL ENGINEER Pete B. Smith No. C60122 Exp. 6-30-10 CIVIL STATE OF CALIFORNIA

The State of California or its officers or agents shall not be responsible for the accuracy or completeness of electronic copies of this plan sheet.

SANDAG
401 B STREET,
SAN DIEGO, CA 92101

T.Y. LIN INTERNATIONAL
5030 CAMINO DE LA SIESTA, SUITE 204,
SAN DIEGO, CA 92108

TIEBACK NOTES

TIEBACKS: Prestressing Steel Strands - ASTM designation: A416

T_{force} = Design Force per Tieback, in kilonewtons (see "DAR 1 PILE DATA" or DAR 4 PILE DATA" sheets)

f_{PU} = Minimum Tensile Strength of Prestressing Steel (MPa)

A_S (Min) = Minimum cross sectional area of Prestressing Steel in Tieback (Square Millimeters)

$$A_S \text{ (Min)} = \frac{1.5\ T}{0.75\ f_{PU}}$$

STRUCTURAL STEEL: Plates - ASTM Designation: A709/A709M, Grade 36 (250) or A36/A36M, Grade 36 (250)

Pipe - ASTM Designation A53

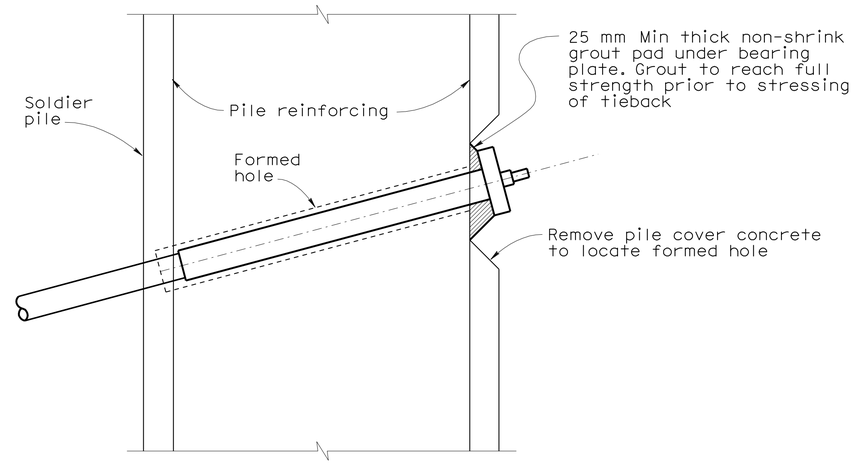

TIEBACK ANCHORAGE DETAIL

No Scale

NOTES

1. Tendon Anchorage Assembly details not shown.
2. Steel tube (Min thickness = 5 mm min. length = 1000 mm) welded to Brg Plate. Inside diameter of steel tube to be at least 13 mm greater than outside diameter of smooth sheathing for bar tendons. Galvanize after fabrication.
3. The drilling of tieback anchors shall be done after pile is in place.

① Level of initial grouting
② Level of secondary grouting
③ Level of initial grouting inside corrugated sheathing

* For minimum unbonded length see Pile Data Tables

** Min. lap of steel tube and smooth sheathing

*** THE BONDED LENGTH SHALL BE DETERMINED BY THE CONTRACTOR

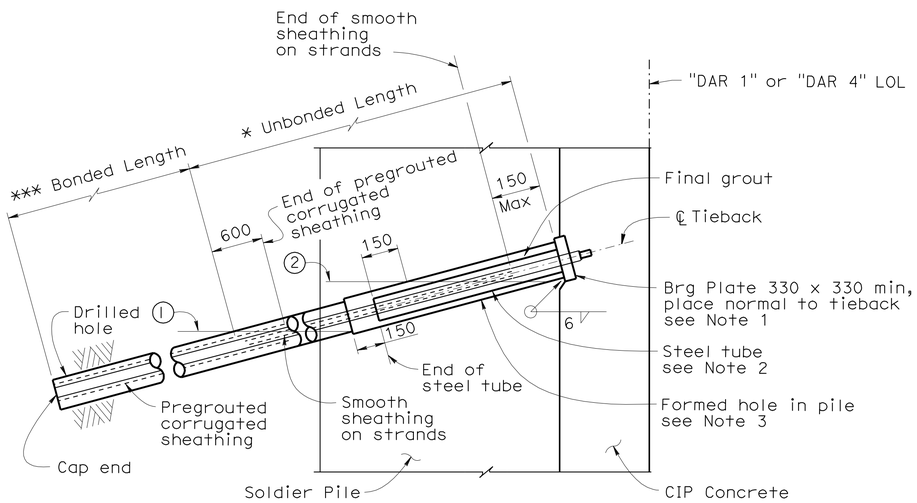

TIEBACK TENDON DETAIL
ALTERNATIVE (A)

No Scale

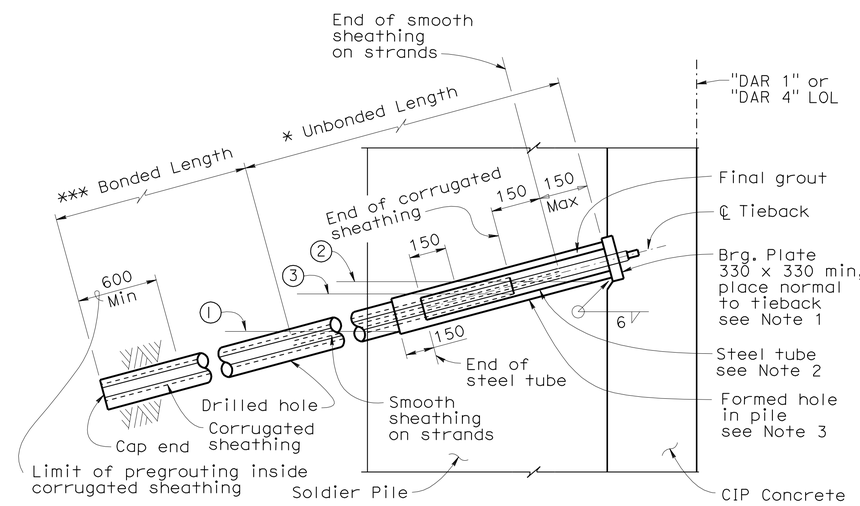

TIEBACK TENDON DETAIL
ALTERNATIVE (B)

No Scale

ALL DIMENSIONS ARE IN MILLIMETERS UNLESS OTHERWISE SHOWN

CHUNG-YUAN WEN
DESIGN OVERSIGHT
4-28-09
SIGN OFF DATE

	BY	CHECKED
DESIGN	Pete Smith	Anthony Sánchez
DETAILS	Ivan Martin	Anthony Sánchez
QUANTITIES	Andy Toledo	Shafi Sharifan

PREPARED FOR THE STATE OF CALIFORNIA DEPARTMENT OF TRANSPORTATION

Brett Makley
PROJECT ENGINEER

BRIDGE NO. 57E0075/76
KILOMETER POST KP43.2

CARROLL CANYON (DAR) RETAINING WALLS
TIEBACK DETAILS

DESIGN DETAIL SHEET (METRIC) (REV. 10/27/05)

ORIGINAL SCALE IN MILLIMETERS FOR REDUCED PLANS 0 10 20 30 40 50 60 70 80 90 100

CU 11275
EA 2T0401

DISREGARD PRINTS BEARING EARLIER REVISION DATES

REVISION DATES (PRELIMINARY STAGE ONLY): 9/12/08 12/19/08 3/03/09 4/28/09

SHEET 15 OF 55

FILE => 57-e0075_76-h-tdt01.dgn

USERNAME => trmikest DATE PLOTTED => 29-SEP-2010 TIME PLOTTED => 11:56

DIST	COUNTY	ROUTE	KILOMETER POST TOTAL PROJECT	SHEET No	TOTAL SHEETS
11	SD	5,805	R49.9/R51.7, 42.6/46.5	786	886

Caltrans Metric

Peter B Smith 4-28-09
REGISTERED CIVIL ENGINEER DATE

9-27-10
PLANS APPROVAL DATE

REGISTERED PROFESSIONAL ENGINEER Pete B. Smith No. C60122 Exp. 6-30-10 CIVIL STATE OF CALIFORNIA

The State of California or its officers or agents shall not be responsible for the accuracy or completeness of electronic copies of this plan sheet.

SANDAG
401 B STREET,
SAN DIEGO, CA 92101

T.Y. LIN INTERNATIONAL
5030 CAMINO DE LA SIESTA, SUITE 204,
SAN DIEGO, CA 92108

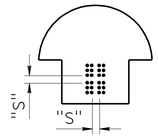

CLEARANCES FOR PRETENSIONED STRANDS

1. Strands may be bundled in groups consisting of 3 vertically 2 horizontally, and separated at the ends.
2. The Min distance "S" between groups or individual strands is 40mm for 9.5mm strands, 45mm for 11mm and 13mm strands and 50mm for 15mm strands.
3. "S" is measured between centers of adjacent strands.
4. Approval of Engineer is required for deviation.

PRESTRESSING NOTES

WORKING FORCE (Pf): the force remaining in the strut after all losses.

CONCRETE STRENGTH: f'ci = 28 MPa at time of initial stressing
f'c = 35 MPa at 28 days

All strands shall be straight and symmetrical about vertical ℄ strut.

Strut Designation	"L" (mm)	P_f (kN)	"X" (mm)
S1	13000	910	240
S2	13075	910	240
S3	13150	910	240
S4	13250	910	240
S5	17750	1250	180

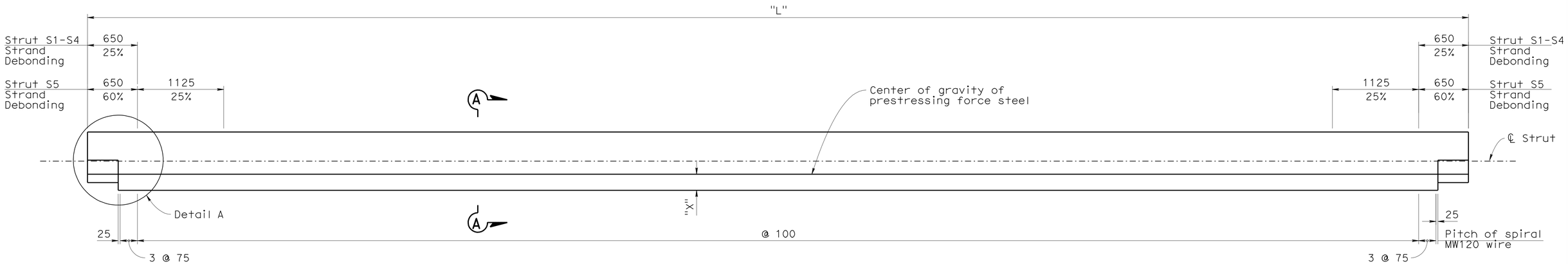

LONGITUDINAL SECTION
1:25

NOTES

1. Lapped splices in spiral reinforcement shall be lapped 80 wire diameters minimum.
2. Spiral reinforcement at splices and at ends shall be terminated by a 135° hook with 150 mm tail hooked around a longitudinal bar or strand.

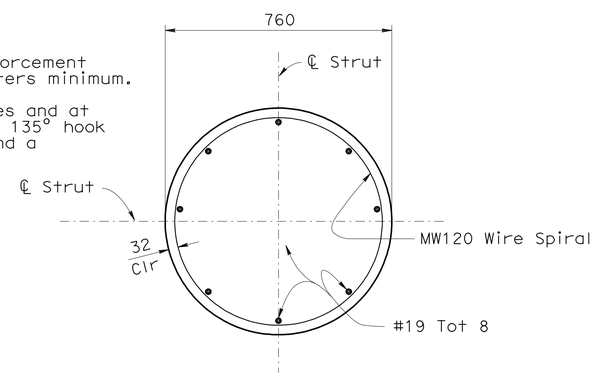

SECTION A-A
1:10

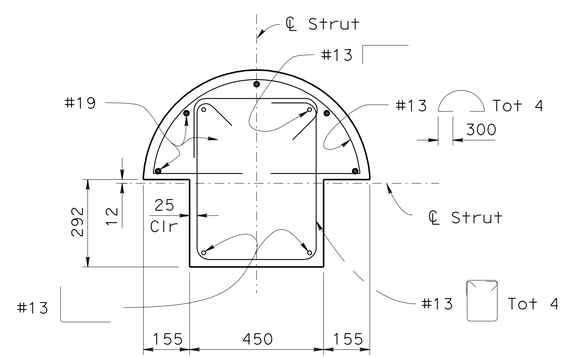

SECTION B-B
1:10

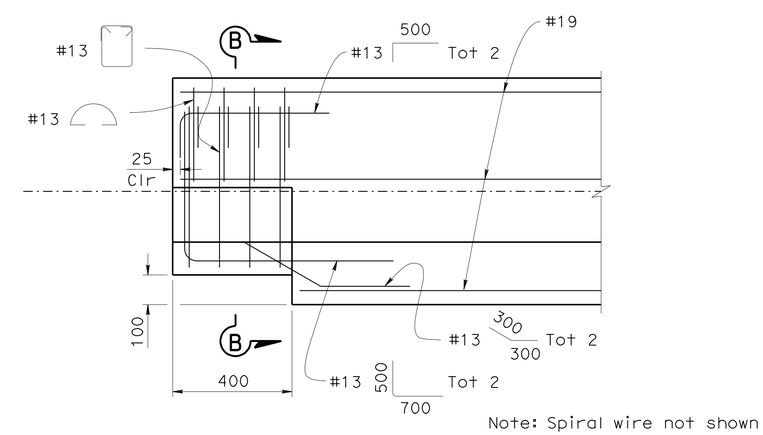

DETAIL A
1:10

ALL DIMENSIONS ARE IN MILLIMETERS UNLESS OTHERWISE SHOWN

CHUNG-YUAN WEN
DESIGN OVERSIGHT
4-28-09
SIGN OFF DATE

	BY	CHECKED
DESIGN	Pete Smith	Eric Kjolsing
DETAILS	Ivan Martin	Eric Kjolsing
QUANTITIES	Andy Toledo	Shafi Sharifan

PREPARED FOR THE STATE OF CALIFORNIA DEPARTMENT OF TRANSPORTATION

Brett Makley
PROJECT ENGINEER

BRIDGE NO. 57E0075/76
KILOMETER POST KP43.2

CARROLL CANYON (DAR) RETAINING WALLS
STRUT DETAILS

DESIGN DETAIL SHEET (METRIC) (REV. 10/27/05)

ORIGINAL SCALE IN MILLIMETERS FOR REDUCED PLANS 0 10 20 30 40 50 60 70 80 90 100

CU 11275
EA 2T0401

DISREGARD PRINTS BEARING EARLIER REVISION DATES
REVISION DATES (PRELIMINARY STAGE ONLY) 9/12/08 12/19/08 3/09/09 4/28/09

SHEET 16 OF 55

FILE => 57-e0075_76-i-sdt01.dgn

USERNAME => trmikesl DATE PLOTTED => 29-SEP-2010 TIME PLOTTED => 11:56

DIST	COUNTY	ROUTE	KILOMETER POST TOTAL PROJECT	SHEET No	TOTAL SHEETS
11	SD	5,805	R49.9/R51.7, 42.6/46.5	787	886

Caltrans Metric

Peter B Smith 4-28-09
REGISTERED CIVIL ENGINEER DATE

9-27-10
PLANS APPROVAL DATE

REGISTERED PROFESSIONAL ENGINEER Pete B. Smith No. C60122 Exp. 6-30-10 CIVIL STATE OF CALIFORNIA

The State of California or its officers or agents shall not be responsible for the accuracy or completeness of electronic copies of this plan sheet.

SANDAG
401 B STREET,
SAN DIEGO, CA 92101

T.Y. LIN INTERNATIONAL
5030 CAMINO DE LA SIESTA, SUITE 204,
SAN DIEGO, CA 92108

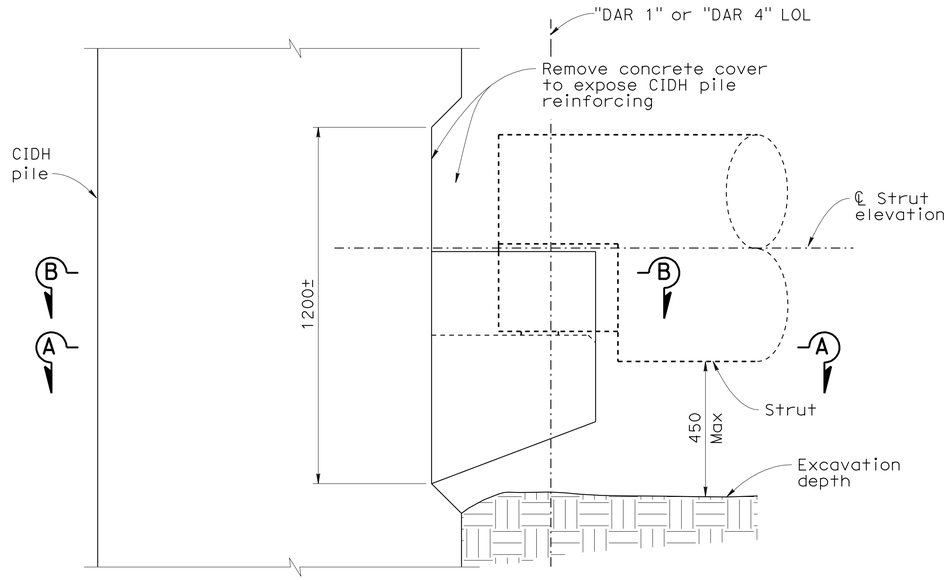

CORBEL ELEVATION - STAGE 1 CORBEL CONSTRUCTION
1:10

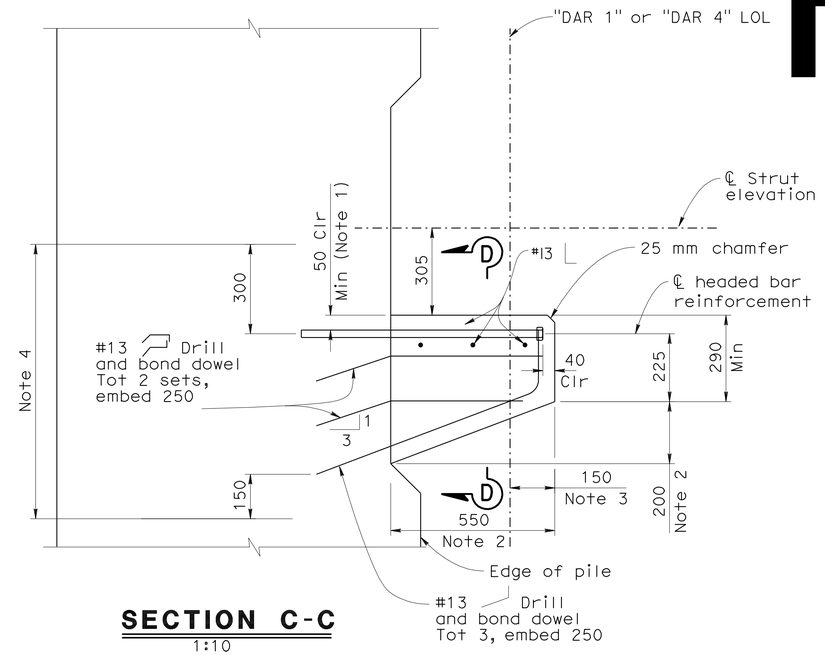

SECTION C-C
1:10

NOTES

1. Cover may be increased to 150 mm Max to avoid conflict with pile lateral reinforcing.
2. Nominal dimension, dimension may vary due to tolerance of constructing CIDH pile.
3. Hold dimension.
4. Shotcrete drill and bond dowels shall not be installed in this region.

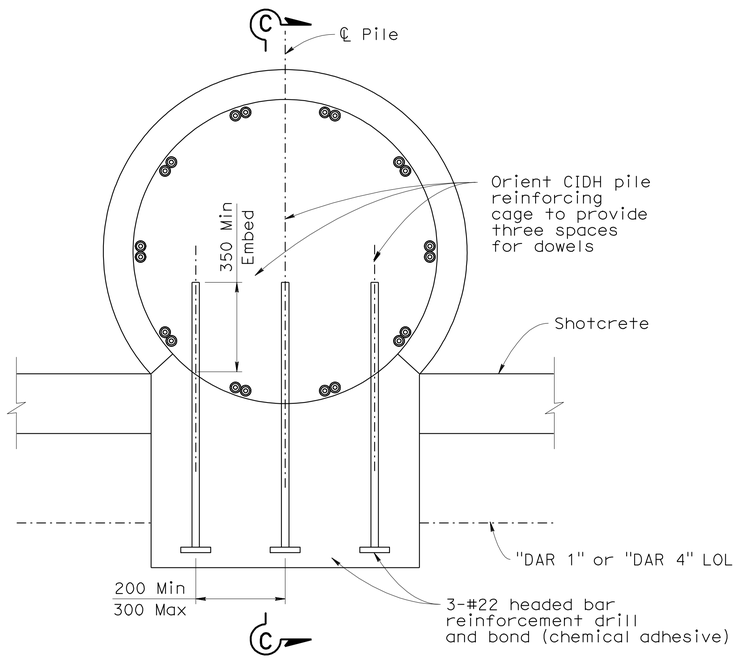

SECTION A-A
1:10

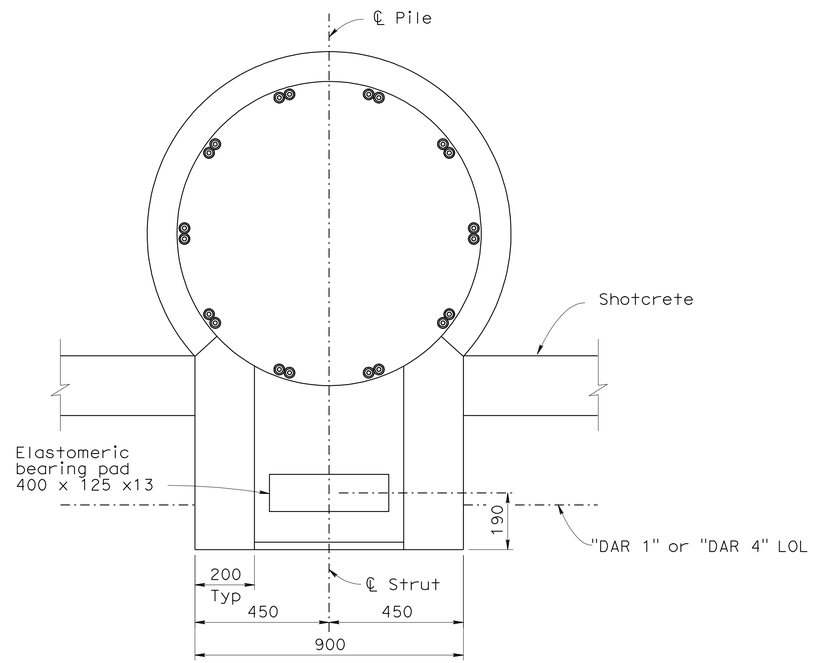

SECTION B-B
1:10

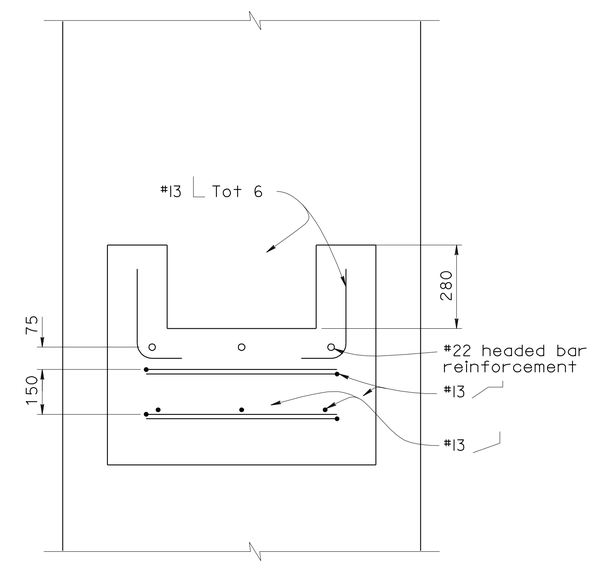

SECTION D-D
1:10

ALL DIMENSIONS ARE IN MILLIMETERS UNLESS OTHERWISE SHOWN

CHUNG-YUAN WEN
DESIGN OVERSIGHT
4-28-09
SIGN OFF DATE

	BY	CHECKED
DESIGN	Pete Smith	Eric Kjolsing
DETAILS	Ivan Martin	Eric Kjolsing
QUANTITIES	Andy Toledo	Shafi Sharifan

PREPARED FOR THE STATE OF CALIFORNIA DEPARTMENT OF TRANSPORTATION

Brett Makley
PROJECT ENGINEER

BRIDGE NO. 57E0075/76
KILOMETER POST KP43.2

CARROLL CANYON (DAR) RETAINING WALLS
STRUT CORBEL DETAILS NO. 1

DESIGN DETAIL SHEET (METRIC) (REV. 10/27/05)

ORIGINAL SCALE IN MILLIMETERS FOR REDUCED PLANS 0 10 20 30 40 50 60 70 80 90 100

CU 11275
EA 2T0401

DISREGARD PRINTS BEARING EARLIER REVISION DATES

REVISION DATES (PRELIMINARY STAGE ONLY): 9/12/08 12/19/08 3/09/09 4/28/09

SHEET 17 OF 55

FILE => 57-e0075_76-j-scdt01.dgn

USERNAME => trmikes1 DATE PLOTTED => 29-SEP-2010 TIME PLOTTED => 11:56

DIST	COUNTY	ROUTE	KILOMETER POST TOTAL PROJECT	SHEET No	TOTAL SHEETS
11	SD	5,805	R49.9/R51.7, 42.6/46.5	788	886

Caltrans Metric

Peter B Smith 4-28-09
REGISTERED CIVIL ENGINEER DATE

9-27-10
PLANS APPROVAL DATE

REGISTERED PROFESSIONAL ENGINEER Pete B. Smith No. C60122 Exp. 6-30-10 CIVIL STATE OF CALIFORNIA

The State of California or its officers or agents shall not be responsible for the accuracy or completeness of electronic copies of this plan sheet.

SANDAG
401 B STREET,
SAN DIEGO, CA 92101

T.Y. LIN INTERNATIONAL
5030 CAMINO DE LA SIESTA, SUITE 204,
SAN DIEGO, CA 92108

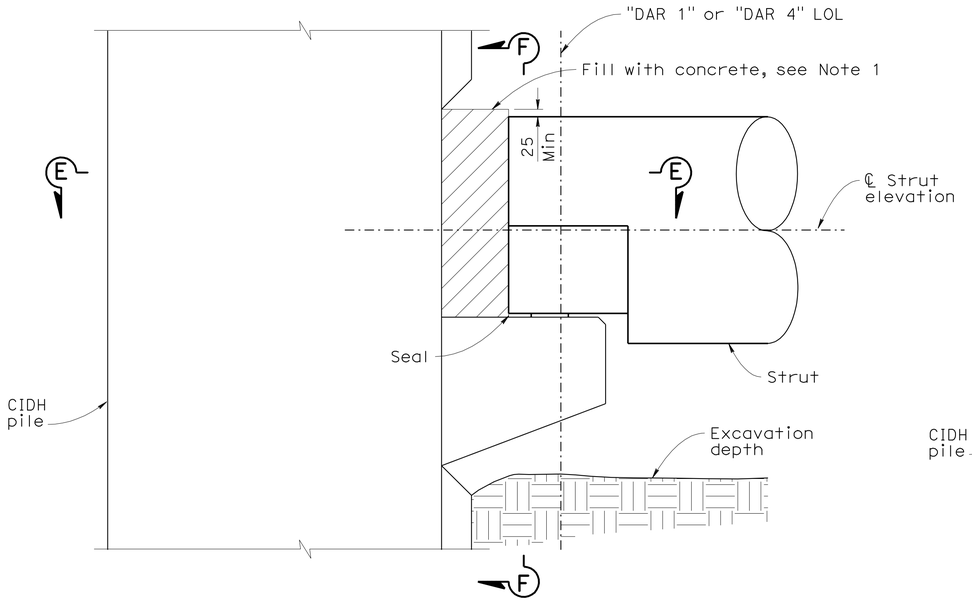

CORBEL ELEVATION - STAGE 2 STRUT INSTALLATION
1:10

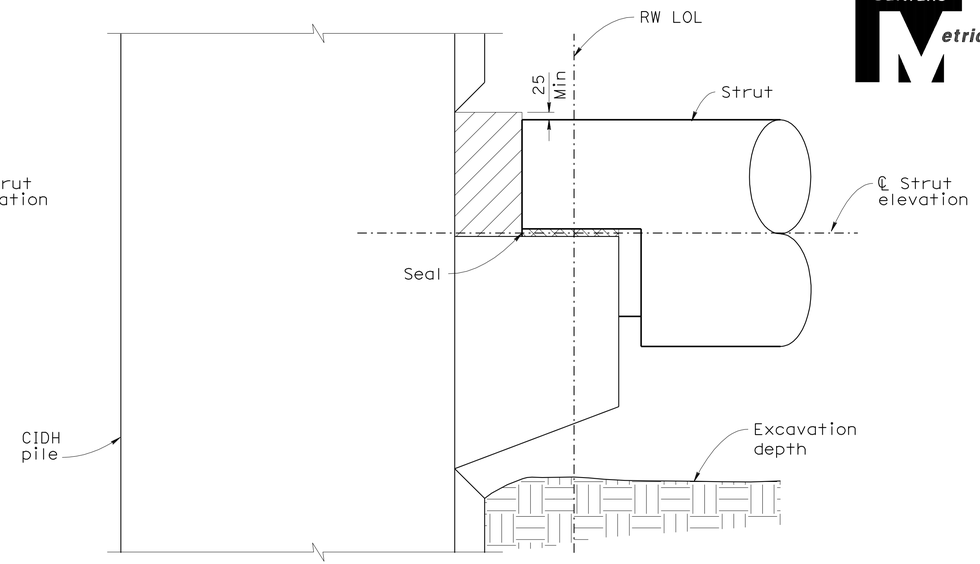

ELEVATION G-G
1:10

NOTE

1. Excavation below strut shall not proceed until fill concrete has reached full strength

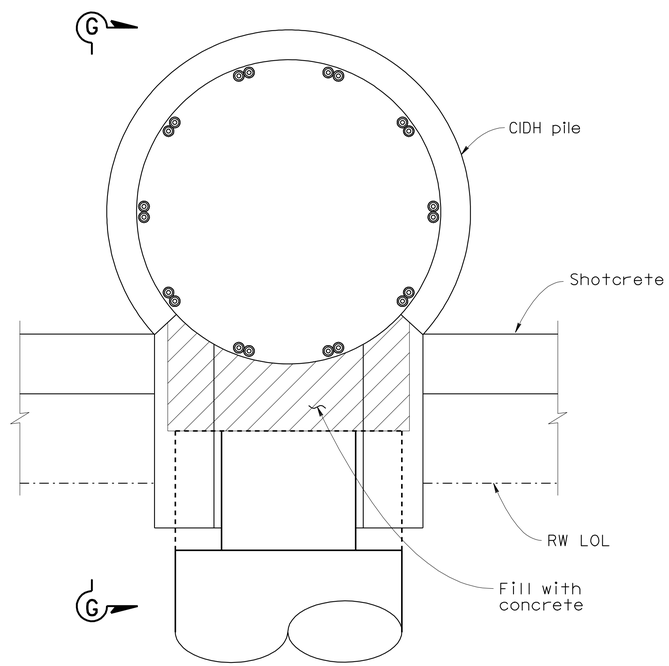

SECTION E-E
1:10

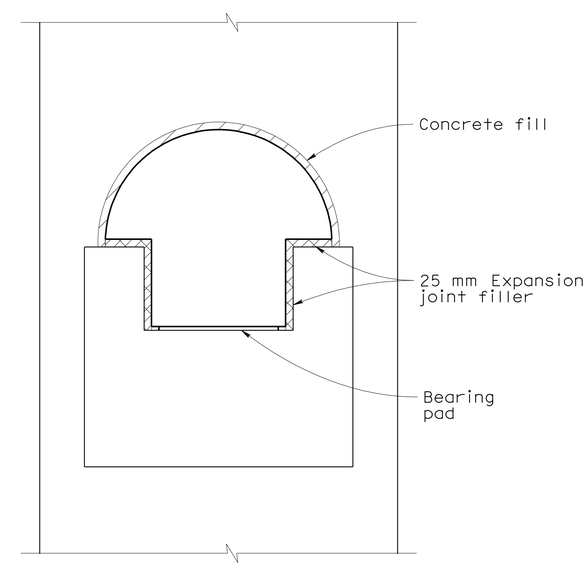

SECTION F-F
1:10

ALL DIMENSIONS ARE IN MILLIMETERS UNLESS OTHERWISE SHOWN

CHUNG-YUAN WEN
DESIGN OVERSIGHT
4-28-09
SIGN OFF DATE

	BY	CHECKED
DESIGN	Pete Smith	Eric Kjolsing
DETAILS	Ivan Martin	Eric Kjolsing
QUANTITIES	Andy Toledo	Shafi Sharifan

PREPARED FOR THE STATE OF CALIFORNIA DEPARTMENT OF TRANSPORTATION

Brett Makley
PROJECT ENGINEER

BRIDGE NO. 57E0075/76
KILOMETER POST KP43.2

CARROLL CANYON (DAR) RETAINING WALLS
STRUT CORBEL DETAILS NO. 2

DESIGN DETAIL SHEET (METRIC) (REV. 10/27/05)

ORIGINAL SCALE IN MILLIMETERS FOR REDUCED PLANS 0 10 20 30 40 50 60 70 80 90 100

CU 11275
EA 2T0401

DISREGARD PRINTS BEARING EARLIER REVISION DATES

REVISION DATES (PRELIMINARY STAGE ONLY) 9/12/08 12/19/08 3/09/09 4/28/09

SHEET 18 OF 55

FILE => 57-e0075_76-j-scdt02.dgn

USERNAME => trmikesl DATE PLOTTED => 29-SEP-2010 TIME PLOTTED => 11:56

DIST	COUNTY	ROUTE	KILOMETER POST TOTAL PROJECT	SHEET No	TOTAL SHEETS
11	SD	5,805	R49.9/R51.7, 42.6/46.5	789	886

Caltrans Metric

Peter B Smith 4-28-09
REGISTERED CIVIL ENGINEER DATE

9-27-10
PLANS APPROVAL DATE

REGISTERED PROFESSIONAL ENGINEER Pete B. Smith No. C60122 Exp. 6-30-10 CIVIL STATE OF CALIFORNIA

The State of California or its officers or agents shall not be responsible for the accuracy or completeness of electronic copies of this plan sheet.

SANDAG
401 B STREET,
SAN DIEGO, CA 92101

T.Y. LIN INTERNATIONAL
5030 CAMINO DE LA SIESTA, SUITE 204,
SAN DIEGO, CA 92108

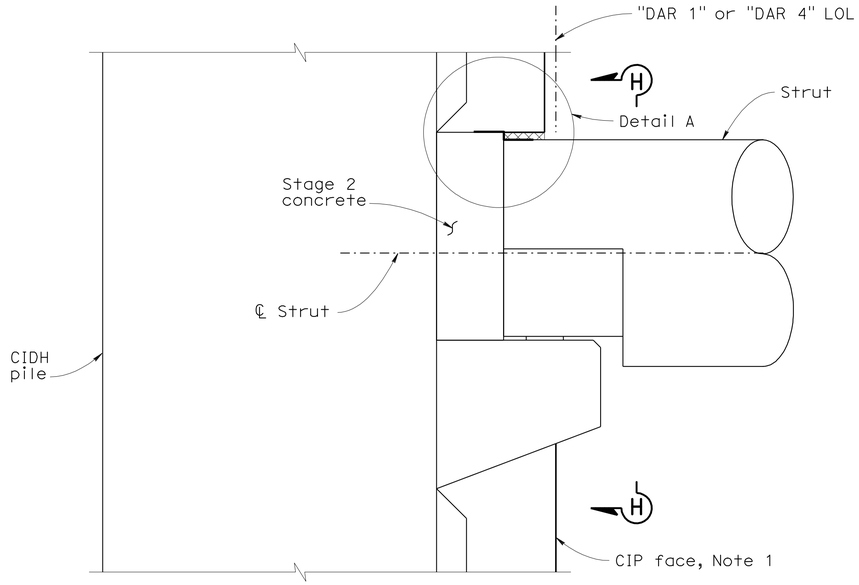

CORBEL ELEVATION - STAGE 3 CIP FACE INSTALLATION
1:10

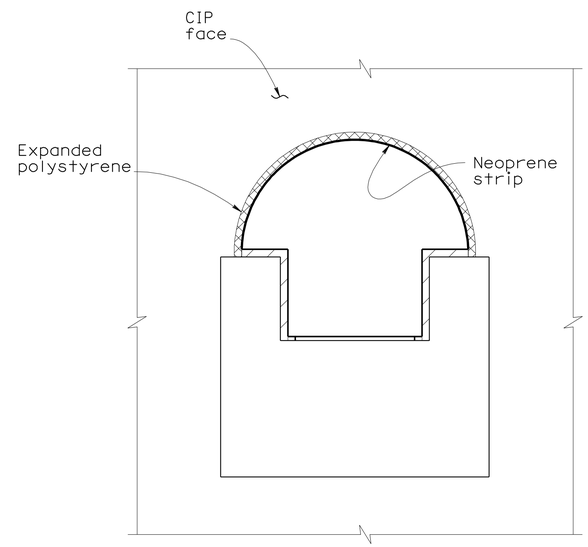

SECTION H-H
1:10

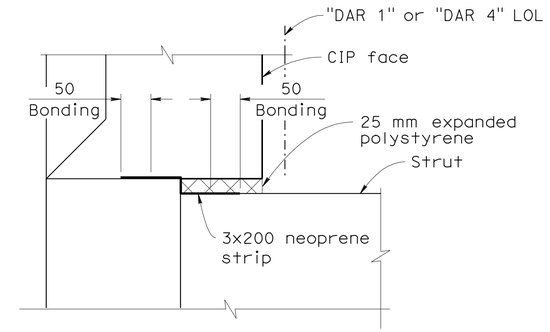

DETAIL A
1:5

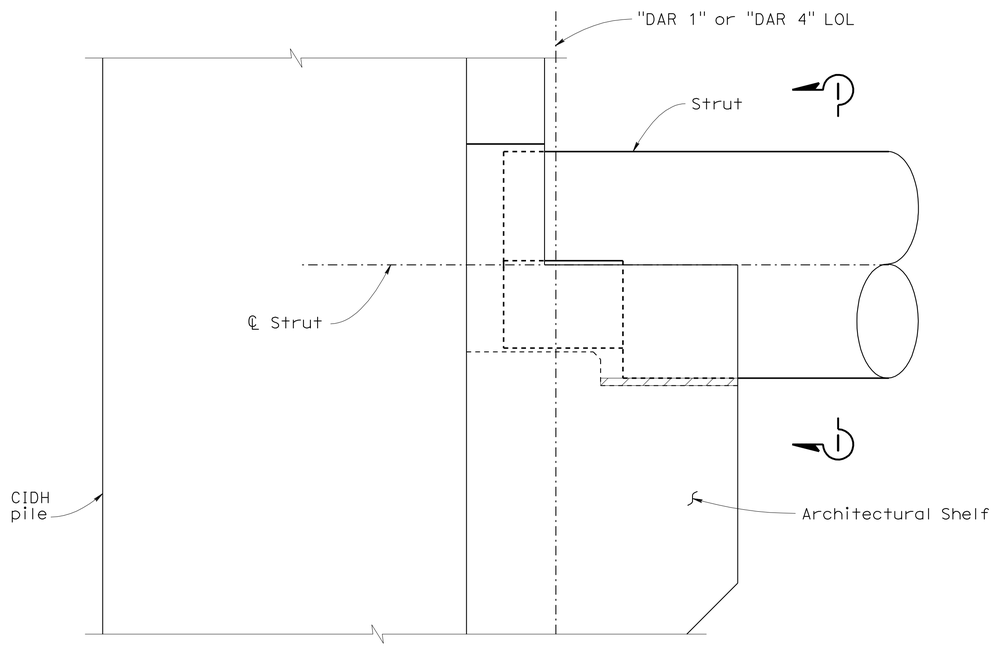

ARCHITECTURAL SHELF ELEVATION
1:10

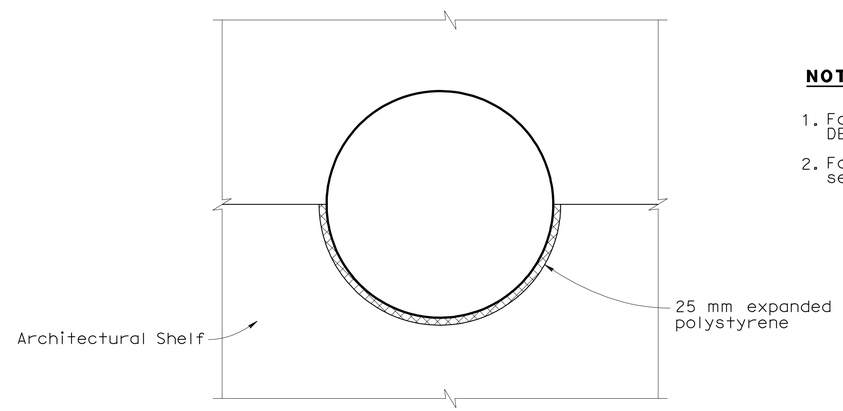

SECTION I-I
1:10

NOTES

1. For reinforcement, see "WALL FACING DETAILS NO. 1" sheet.
2. For dimensions and details not shown, see "ARCHITECTURAL DETAILS" sheets.

ALL DIMENSIONS ARE IN MILLIMETERS UNLESS OTHERWISE SHOWN

CHUNG-YUAN WEN
DESIGN OVERSIGHT
4-28-09
SIGN OFF DATE

	BY	CHECKED
DESIGN	Pete Smith	Eric Kjolsing
DETAILS	Ivan Martin	Eric Kjolsing
QUANTITIES	Andy Toledo	Shafi Sharifan

PREPARED FOR THE STATE OF CALIFORNIA DEPARTMENT OF TRANSPORTATION

Brett Makley
PROJECT ENGINEER

BRIDGE NO. 57E0075/76
KILOMETER POST KP43.2

CARROLL CANYON (DAR) RETAINING WALLS
STRUT CORBEL DETAILS NO. 3

DESIGN DETAIL SHEET (METRIC) (REV. 10/27/05)

ORIGINAL SCALE IN MILLIMETERS FOR REDUCED PLANS 0 10 20 30 40 50 60 70 80 90 100

CU 11275
EA 2T0401

DISREGARD PRINTS BEARING EARLIER REVISION DATES → 9/12/08 12/19/08 3/09/09 4/28/09

REVISION DATES (PRELIMINARY STAGE ONLY)

SHEET 19 OF 55

FILE => 57-e0075_76-j-scdt03.dgn

USERNAME => trmikest DATE PLOTTED => 29-SEP-2010 TIME PLOTTED => 11:56

DIST	COUNTY	ROUTE	KILOMETER POST TOTAL PROJECT	SHEET No	TOTAL SHEETS
11	SD	5,805	R49.9/R51.7, 42.6/46.5	790	886

Caltrans Metric

Peter B Smith 4-28-09
REGISTERED CIVIL ENGINEER DATE

9-27-10
PLANS APPROVAL DATE

REGISTERED PROFESSIONAL ENGINEER Pete B. Smith No. C60122 Exp. 6-30-10 CIVIL STATE OF CALIFORNIA

The State of California or its officers or agents shall not be responsible for the accuracy or completeness of electronic copies of this plan sheet.

SANDAG
401 B STREET,
SAN DIEGO, CA 92101

T.Y. LIN INTERNATIONAL
5030 CAMINO DE LA SIESTA, SUITE 204,
SAN DIEGO, CA 92108

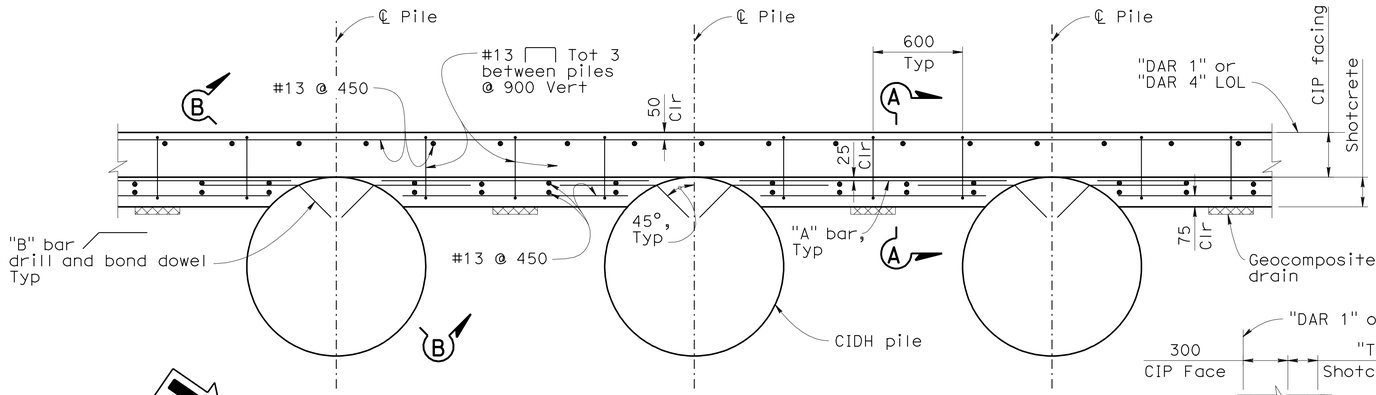

TYPICAL WALL FACING PART PLAN
1:20

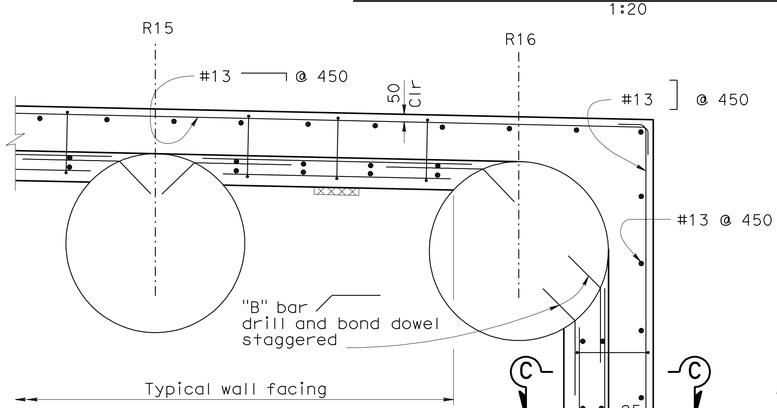

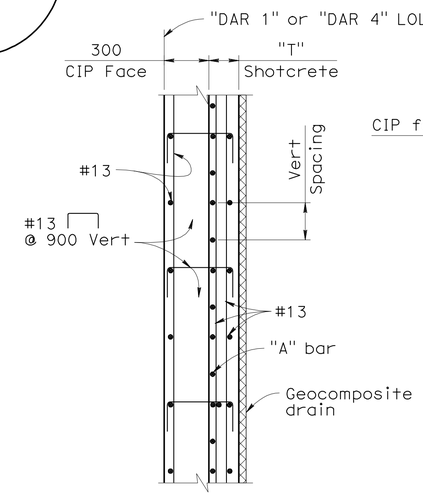

SECTION A-A
1:20

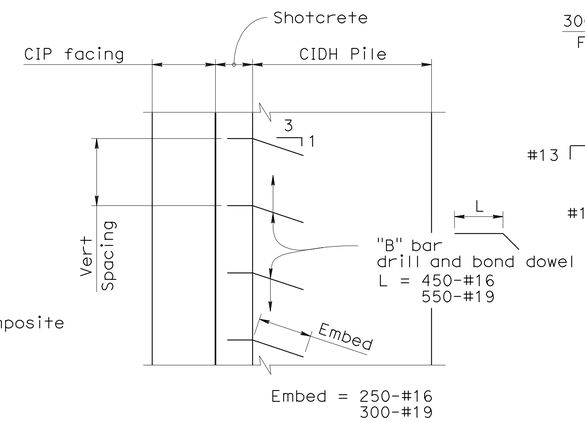

SECTION B-B
1:20

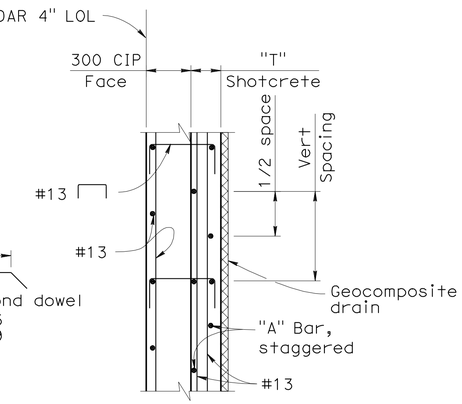

SECTION C-C
1:20

NOTES

1. For Geocomposite drain, see "WALL DRAINAGE DETAILS" sheet
2. "DAR 1" wall shown, "DAR 4" wall similar.
3. For expansion joint details, see "WALL EXPANSION JOINT DETAILS" sheet.

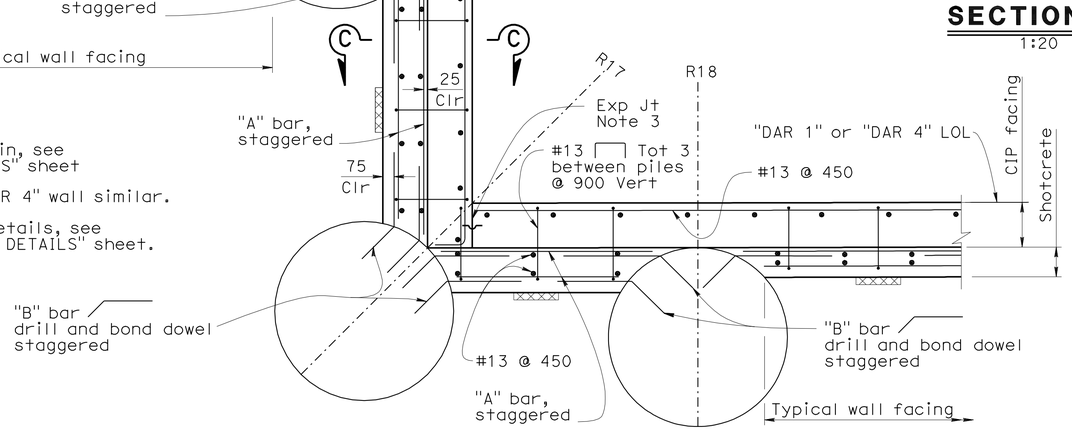

"DAR 1" WALL CORNER TRANSITION WALL FACING PART PLAN
1:20

WALL FACING DATA TABLE

Facing Designation	"A" Bar Size	"A" Bar Vert Spacing	"B" Bar Size	"B" Bar Vert Spacing	"T" Shotcrete
F1	#16	450	#16	450	200
F2	#16	400	#16	450	200
F3	#16	300	#16	450	200
F4	#16	250	#16	400	200
F5	#16	200	#16	350	200
F6	#19	250	#19	450	200
F7	#19	250	#19	300	300
F8	#19	200	#19	250	300
F9	#19	275	#19	275	300

ALL DIMENSIONS ARE IN MILLIMETERS UNLESS OTHERWISE SHOWN

CHUNG-YUAN WEN
DESIGN OVERSIGHT
4-28-09
SIGN OFF DATE

	BY	CHECKED
DESIGN	Pete Smith	Garrett Dekker
DETAILS	Ivan Martin	Garrett Dekker
QUANTITIES	Andy Toledo	Shafi Sharifan

PREPARED FOR THE STATE OF CALIFORNIA DEPARTMENT OF TRANSPORTATION

Brett Makley
PROJECT ENGINEER

BRIDGE NO. 57E0075/76
KILOMETER POST KP43.2

CARROLL CANYON (DAR) RETAINING WALLS
WALL FACING DETAILS NO.1

DESIGN DETAIL SHEET (METRIC) (REV. 10/27/05)

ORIGINAL SCALE IN MILLIMETERS FOR REDUCED PLANS 0 10 20 30 40 50 60 70 80 90 100

CU 11275
EA 2T0401

DISREGARD PRINTS BEARING EARLIER REVISION DATES
REVISION DATES (PRELIMINARY STAGE ONLY) 9/12/08 12/19/08 3/09/09 4/28/09

SHEET 20 OF 55

FILE => 57-e0075_76-k-wdt01.dgn

USERNAME => trmikes! DATE PLOTTED => 29-SEP-2010 TIME PLOTTED => 11:57

DIST	COUNTY	ROUTE	KILOMETER POST TOTAL PROJECT	SHEET No	TOTAL SHEETS
11	SD	5,805	R49.9/R51.7, 42.6/46.5	791	886

Caltrans Metric

Peter B Smith 4-28-09
REGISTERED CIVIL ENGINEER DATE

9-27-10
PLANS APPROVAL DATE

REGISTERED PROFESSIONAL ENGINEER Pete B. Smith No. C60122 Exp. 6-30-10 CIVIL STATE OF CALIFORNIA

The State of California or its officers or agents shall not be responsible for the accuracy or completeness of electronic copies of this plan sheet.

SANDAG
401 B STREET,
SAN DIEGO, CA 92101

T.Y. LIN INTERNATIONAL
5030 CAMINO DE LA SIESTA, SUITE 204,
SAN DIEGO, CA 92108

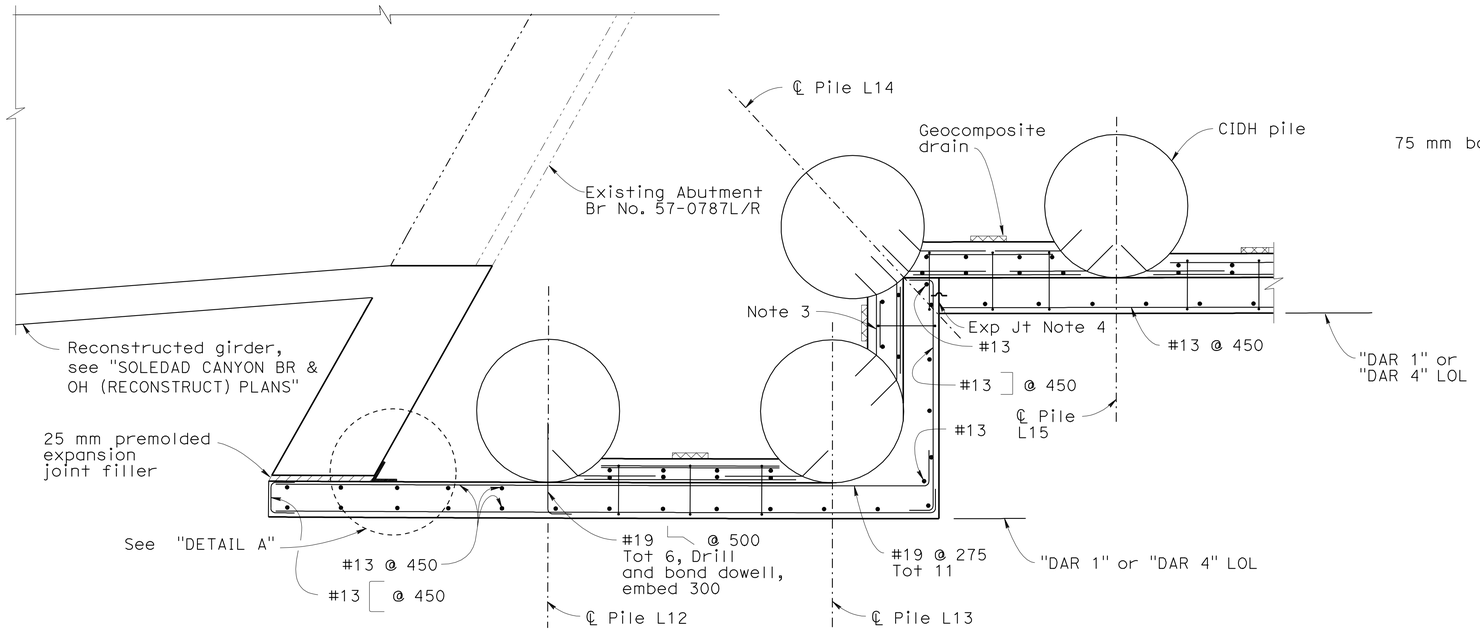

SECTION A-A
1:25

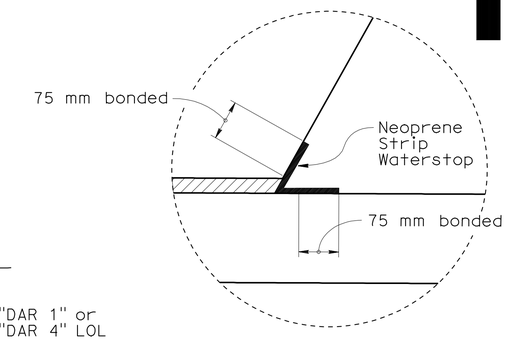

DETAIL A
1:10

NOTES

1. For details not shown, see "WALL FACING DETAILS NO. 1" sheet.
2. "DAR 4" wall shown, "DAR 1" wall similar.
3. "A" bar may be omitted at this location for "DAR 4" only.
4. For expansion joint details, see "WALL EXPANSION JOINT DETAILS" sheet.

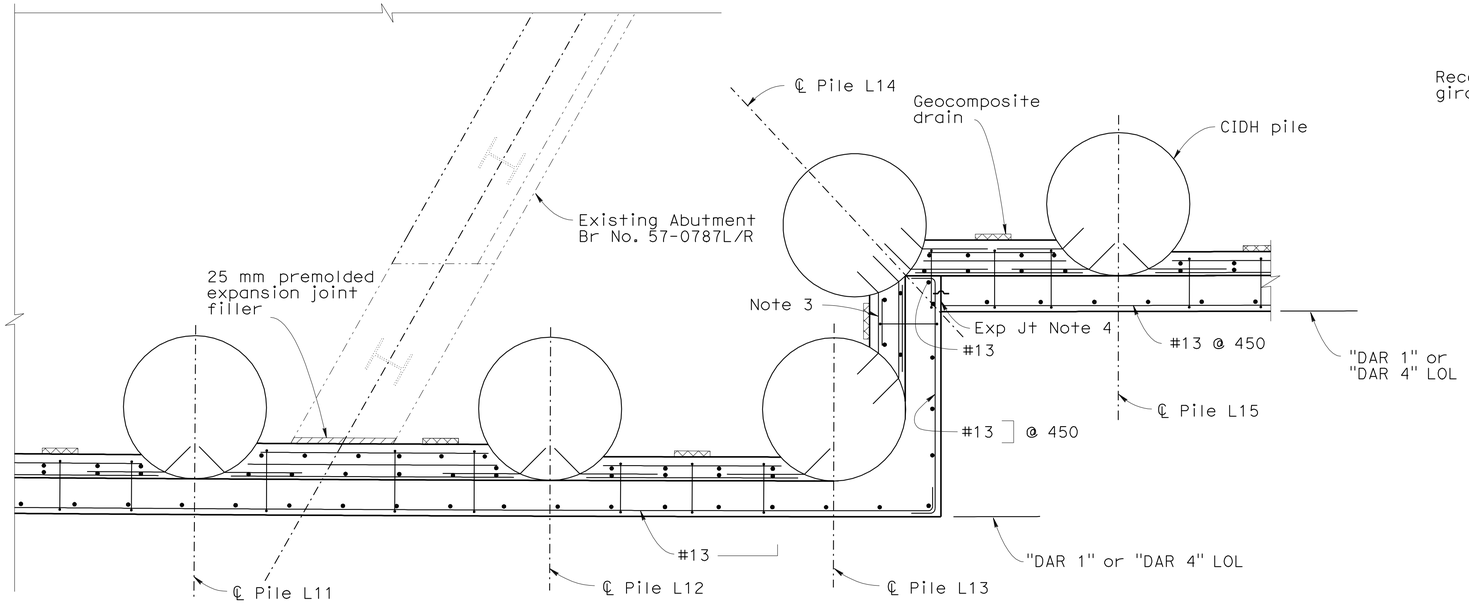

SECTION B-B
1:25

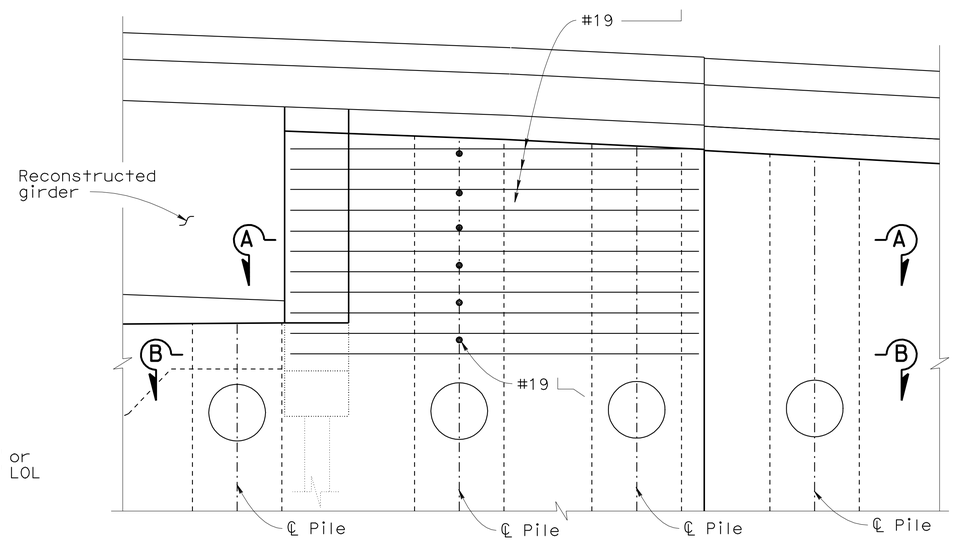

"DAR 4" WALL FACING PART ELEVATION
No Scale

ALL DIMENSIONS ARE IN MILLIMETERS UNLESS OTHERWISE SHOWN

CHUNG-YUAN WEN
DESIGN OVERSIGHT
4-28-09
SIGN OFF DATE

	BY	CHECKED
DESIGN	Pete Smith	Garrett Dekker
DETAILS	Ivan Martin	Garrett Dekker
QUANTITIES	Andy Toledo	Shafi Sharifan

PREPARED FOR THE STATE OF CALIFORNIA DEPARTMENT OF TRANSPORTATION

Brett Makley
PROJECT ENGINEER

BRIDGE NO. 57E0075/76
KILOMETER POST KP43.2

CARROLL CANYON (DAR) RETAINING WALLS
WALL FACING DETAILS NO. 2

DESIGN DETAIL SHEET (METRIC) (REV. 10/27/05)

ORIGINAL SCALE IN MILLIMETERS FOR REDUCED PLANS 0 10 20 30 40 50 60 70 80 90 100

CU 11275
EA 2T0401

DISREGARD PRINTS BEARING EARLIER REVISION DATES

REVISION DATES (PRELIMINARY STAGE ONLY): ~~9/12/08~~ ~~12/19/08~~ ~~3/09/09~~ 4/28/09

SHEET 21 OF 55

FILE => 57-e0075_76-K-wdt02.dgn

USERNAME => trmikes! DATE PLOTTED => 29-SEP-2010 TIME PLOTTED => 11:57

DIST	COUNTY	ROUTE	KILOMETER POST TOTAL PROJECT	SHEET No	TOTAL SHEETS
11	SD	5,805	R49.9/R51.7, 42.6/46.5	792	886

Caltrans Metric

Peter B Smith 4-28-09
REGISTERED CIVIL ENGINEER DATE

9-27-10
PLANS APPROVAL DATE

REGISTERED PROFESSIONAL ENGINEER Pete B. Smith No. C60122 Exp. 6-30-10 CIVIL STATE OF CALIFORNIA

The State of California or its officers or agents shall not be responsible for the accuracy or completeness of electronic copies of this plan sheet.

SANDAG
401 B STREET,
SAN DIEGO, CA 92101

T.Y. LIN INTERNATIONAL
5030 CAMINO DE LA SIESTA, SUITE 204,
SAN DIEGO, CA 92108

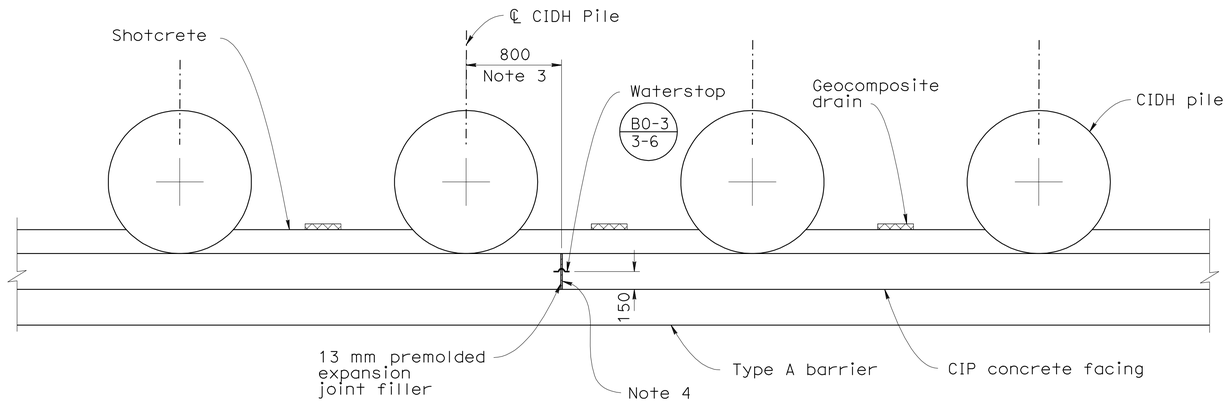

TYPICAL WALL EXPANSION JOINT

1:25

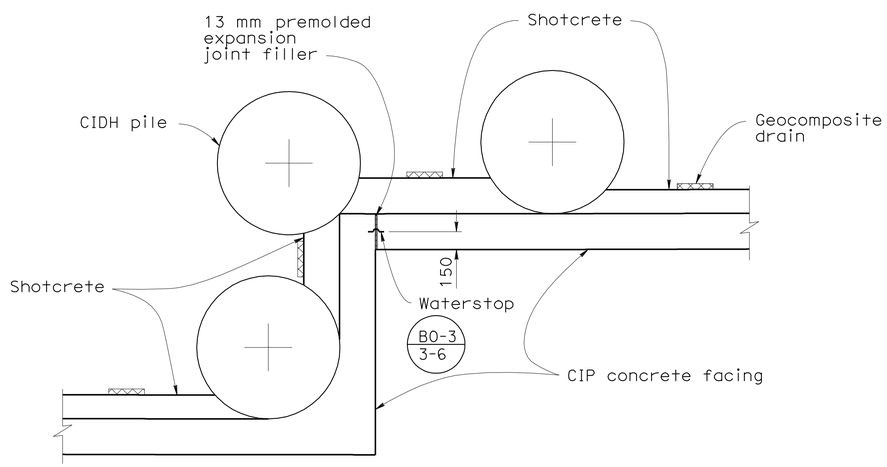

WALL CORNER TRANSITION EXPANSION JOINT

1:25

NOTES

1. "DAR 4" wall shown, "DAR 1" wall similar.
2. For details not shown, see "WALL FACING DETAILS NO. 1" and "WALL FACING DETAILS NO. 2" sheets.
3. Expansion joint may be specified on either side of pile, see "DAR 1 ARCHITECTURAL ELEVATION" and "DAR 4 ARCHITECTURAL ELEVATION" sheets for expansion joint location.
4. Extend expansion joint through Type A barrier, where indicated.

ALL DIMENSIONS ARE IN MILLIMETERS UNLESS OTHERWISE SHOWN

CHUNG-YUAN WEN
DESIGN OVERSIGHT
4-28-09
SIGN OFF DATE

	BY	CHECKED
DESIGN	Pete Smith	Garrett Dekker
DETAILS	Ivan Martin	Garrett Dekker
QUANTITIES	Andy Toledo	Shafi Sharifan

PREPARED FOR THE STATE OF CALIFORNIA DEPARTMENT OF TRANSPORTATION

Brett Makley
PROJECT ENGINEER

BRIDGE NO. 57E0075/76
KILOMETER POST KP43.2

CARROLL CANYON (DAR) RETAINING WALLS
WALL EXPANSION JOINT DETAILS

DESIGN DETAIL SHEET (METRIC) (REV. 10/27/05)

ORIGINAL SCALE IN MILLIMETERS FOR REDUCED PLANS 0 10 20 30 40 50 60 70 80 90 100

CU 11275
EA 2T0401

DISREGARD PRINTS BEARING EARLIER REVISION DATES

REVISION DATES (PRELIMINARY STAGE ONLY): ~~9/12/08~~ ~~12/19/08~~ ~~3/09/09~~ 4/28/09

SHEET 22 OF 55

FILE => 57-e0075_76-k-wejtdt.dgn

USERNAME => ttmikes; DATE PLOTTED => 29-SEP-2010 TIME PLOTTED => 11:57

DIST	COUNTY	ROUTE	KILOMETER POST TOTAL PROJECT	SHEET No	TOTAL SHEETS
11	SD	5,805	R49.9/R51.7, 42.6/46.5	793	886

Caltrans Metric

Peter B Smith 4-28-09
REGISTERED CIVIL ENGINEER DATE

9-27-10
PLANS APPROVAL DATE

REGISTERED PROFESSIONAL ENGINEER Pete B. Smith No. C60122 Exp. 6-30-10 CIVIL STATE OF CALIFORNIA

The State of California or its officers or agents shall not be responsible for the accuracy or completeness of electronic copies of this plan sheet.

SANDAG
401 B STREET,
SAN DIEGO, CA 92101

T.Y. LIN INTERNATIONAL
5030 CAMINO DE LA SIESTA, SUITE 204,
SAN DIEGO, CA 92108

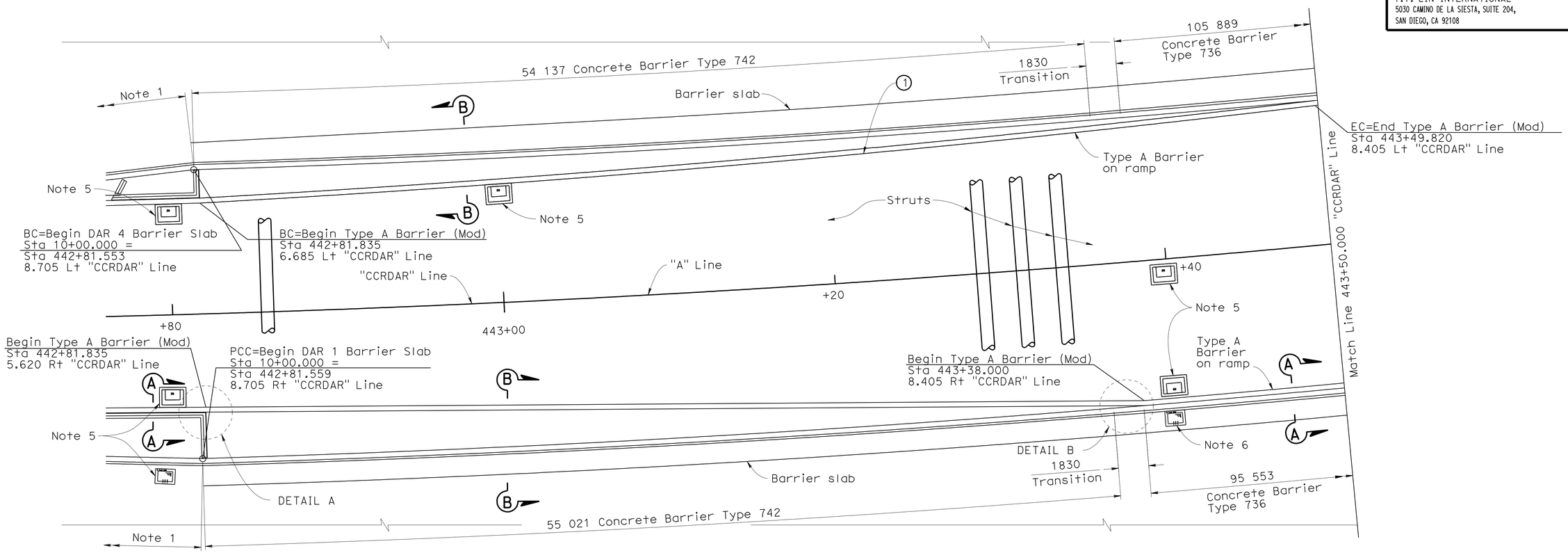

PLAN
1:125

CURVE DATA

No.	R	Δ	T	L
1	1060.117	3°38′58″	33.774	67.526

NOTES

1. See "SOLEDAD CANYON BR & OH (RECONSTRUCT) PLANS".
2. For barrier slab details, see "BARRIER SLAB DETAILS" sheet.
3. For SECTION "A-A" and "B-B", see "TYPE A BARRIER DETAILS NO. 1" sheet .
4. For "DETAIL A" and DETAIL B", see "DAR WALL BARRIER LAYOUT NO. 2" sheet.
5. Drainage inlet, see "ROAD PLANS"
6. Barrier slab drain inlet, see "BARRIER SLAB DRAIN INLET" sheets. See "ROAD PLANS" for inlet locations.

ALL DIMENSIONS ARE IN MILLIMETERS UNLESS OTHERWISE SHOWN

CHUNG-YUAN WEN
DESIGN OVERSIGHT
4-28-09
SIGN OFF DATE

	BY	CHECKED
DESIGN	Pete Smith	Anthony Sánchez
DETAILS	Ivan Martin	Anthony Sánchez
QUANTITIES	Andy Toledo	Shafi Sharifan

PREPARED FOR THE STATE OF CALIFORNIA DEPARTMENT OF TRANSPORTATION

Brett Makley
PROJECT ENGINEER

BRIDGE NO. 57E0075/76
KILOMETER POST KP43.2

CARROLL CANYON (DAR) RETAINING WALLS
DAR WALL BARRIER LAYOUT NO. 1

DESIGN DETAIL SHEET (METRIC) (REV. 10/27/05)

ORIGINAL SCALE IN MILLIMETERS FOR REDUCED PLANS 0 10 20 30 40 50 60 70 80 90 100

CU 11275
EA 2T0401

DISREGARD PRINTS BEARING EARLIER REVISION DATES

REVISION DATES (PRELIMINARY STAGE ONLY): 9/12/08 12/19/08 3/03/09 4/28/09

SHEET 23 OF 55

FILE => 57-e0075_76-1-bbr_lo01.dgn

USERNAME => trmikes1 DATE PLOTTED => 29-SEP-2010 TIME PLOTTED => 11:57

DIST	COUNTY	ROUTE	KILOMETER POST TOTAL PROJECT	SHEET No	TOTAL SHEETS
11	SD	5,805	R49.9/R51.7, 42.6/46.5	794	886

Caltrans Metric

Peter B Smith 4-28-09
REGISTERED CIVIL ENGINEER DATE

9-27-10
PLANS APPROVAL DATE

REGISTERED PROFESSIONAL ENGINEER Pete B. Smith No. C60122 Exp. 6-30-10 CIVIL STATE OF CALIFORNIA

The State of California or its officers or agents shall not be responsible for the accuracy or completeness of electronic copies of this plan sheet.

SANDAG
401 B STREET,
SAN DIEGO, CA 92101

T.Y. LIN INTERNATIONAL
5030 CAMINO DE LA SIESTA, SUITE 204,
SAN DIEGO, CA 92108

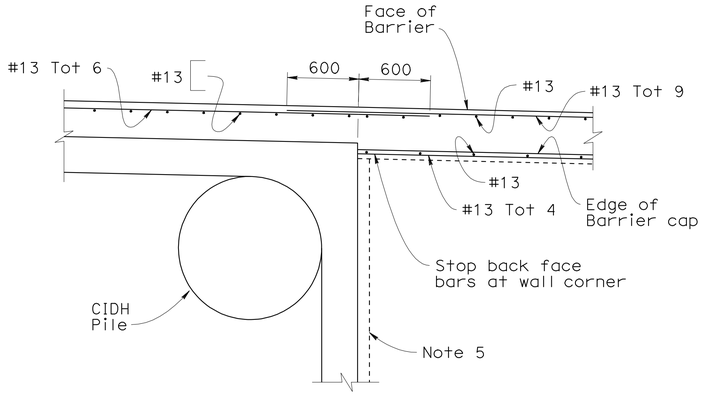

DETAIL A
1:25
(Note 6)

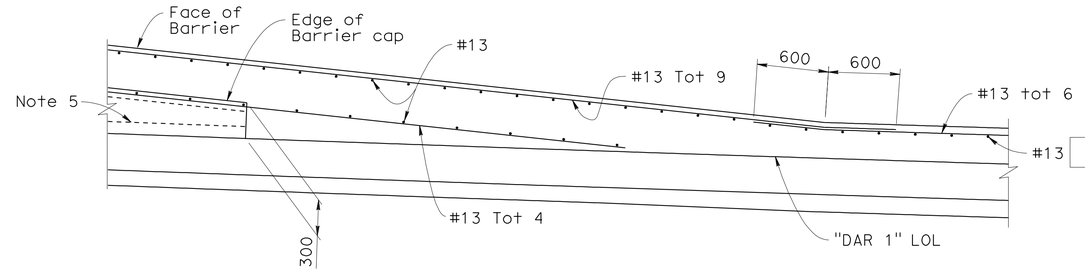

DETAIL B
1:25
(Note 6)

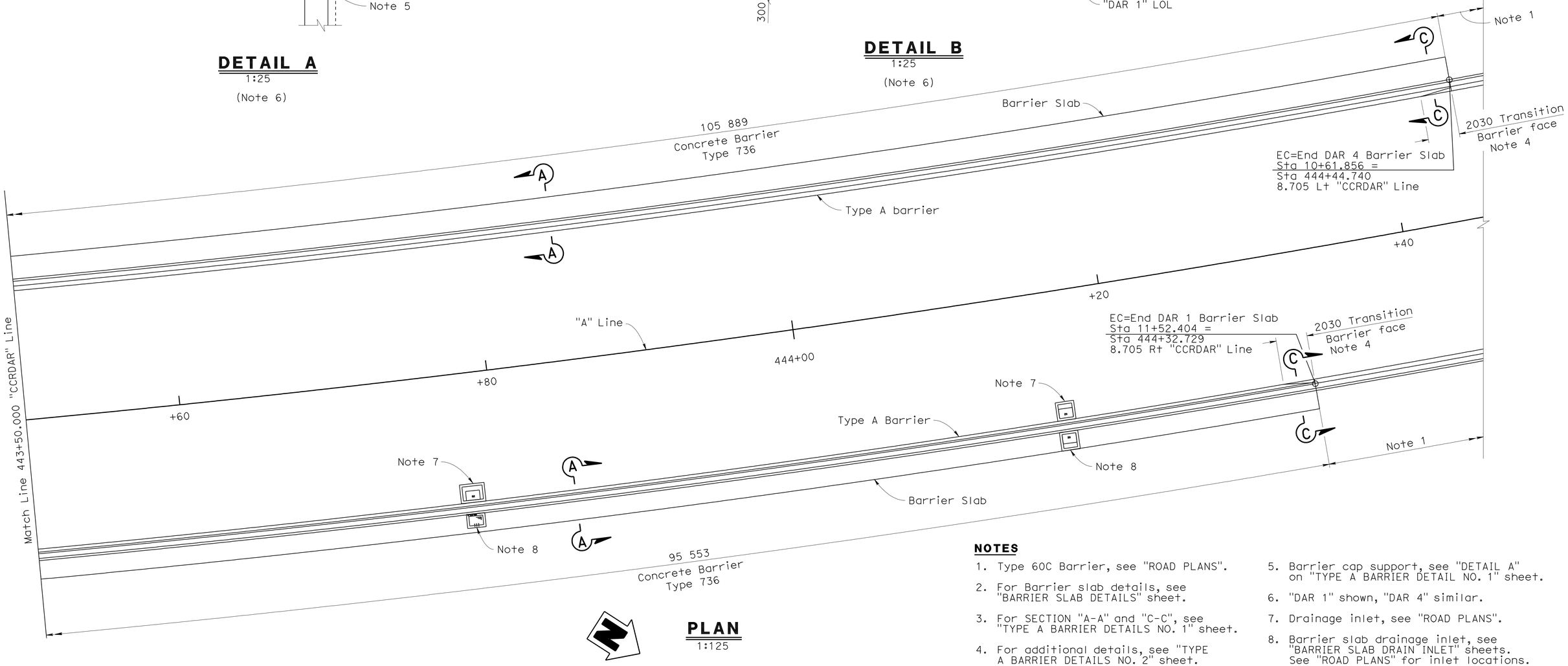

PLAN
1:125

NOTES

1. Type 60C Barrier, see "ROAD PLANS".
2. For Barrier slab details, see "BARRIER SLAB DETAILS" sheet.
3. For SECTION "A-A" and "C-C", see "TYPE A BARRIER DETAILS NO. 1" sheet.
4. For additional details, see "TYPE A BARRIER DETAILS NO. 2" sheet.
5. Barrier cap support, see "DETAIL A" on "TYPE A BARRIER DETAIL NO. 1" sheet.
6. "DAR 1" shown, "DAR 4" similar.
7. Drainage inlet, see "ROAD PLANS".
8. Barrier slab drainage inlet, see "BARRIER SLAB DRAIN INLET" sheets. See "ROAD PLANS" for inlet locations.

ALL DIMENSIONS ARE IN MILLIMETERS UNLESS OTHERWISE SHOWN

CHUNG-YUAN WEN
DESIGN OVERSIGHT
4-28-09
SIGN OFF DATE

	BY	CHECKED
DESIGN	Pete Smith	Anthony Sánchez
DETAILS	Ivan Martin	Anthony Sánchez
QUANTITIES	Andy Toledo	Shafi Sharifan

PREPARED FOR THE STATE OF CALIFORNIA DEPARTMENT OF TRANSPORTATION

Brett Makley
PROJECT ENGINEER

BRIDGE NO. 57E0075/76
KILOMETER POST KP43.2

CARROLL CANYON (DAR) RETAINING WALLS
DAR WALL BARRIER LAYOUT NO. 2

DESIGN DETAIL SHEET (METRIC) (REV. 10/27/05)

ORIGINAL SCALE IN MILLIMETERS FOR REDUCED PLANS 0 10 20 30 40 50 60 70 80 90 100

CU 11275
EA 2T0401

DISREGARD PRINTS BEARING EARLIER REVISION DATES

REVISION DATES (PRELIMINARY STAGE ONLY) 9/12/08 12/19/08 3/09/09 4/28/09

SHEET 24 OF 55

FILE => 57-e0075_76-1-bbr_lo02.dgn

USERNAME => trmikesl DATE PLOTTED => 29-SEP-2010 TIME PLOTTED => 11:57

DIST	COUNTY	ROUTE	KILOMETER POST TOTAL PROJECT	SHEET No	TOTAL SHEETS
11	SD	5,805	R49.9/R51.7, 42.6/46.5	795	886

Caltrans Metric

Peter B Smith 4-28-09
REGISTERED CIVIL ENGINEER DATE

9-27-10
PLANS APPROVAL DATE

REGISTERED PROFESSIONAL ENGINEER Pete B. Smith No. C60122 Exp. 6-30-10 CIVIL STATE OF CALIFORNIA

The State of California or its officers or agents shall not be responsible for the accuracy or completeness of electronic copies of this plan sheet.

SANDAG
401 B STREET,
SAN DIEGO, CA 92101

T.Y. LIN INTERNATIONAL
5030 CAMINO DE LA SIESTA, SUITE 204,
SAN DIEGO, CA 92108

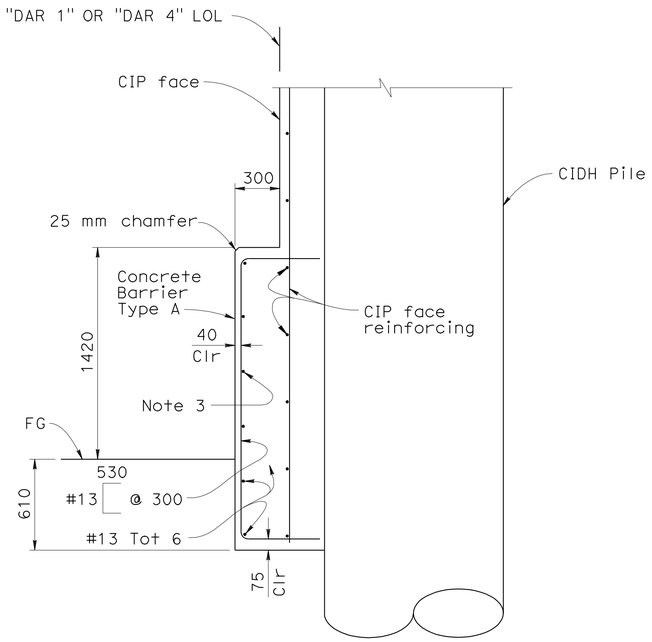

(Note 1)
SECTION A-A
1:20

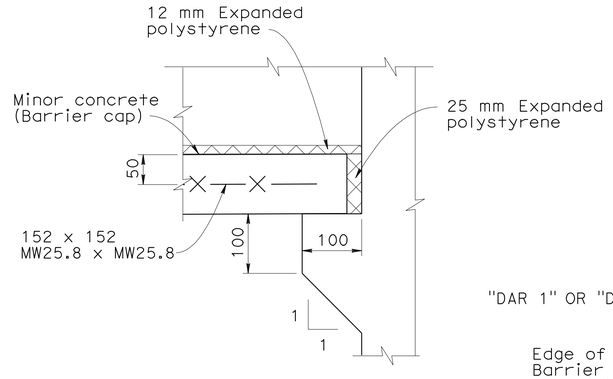

DETAIL A
1:10

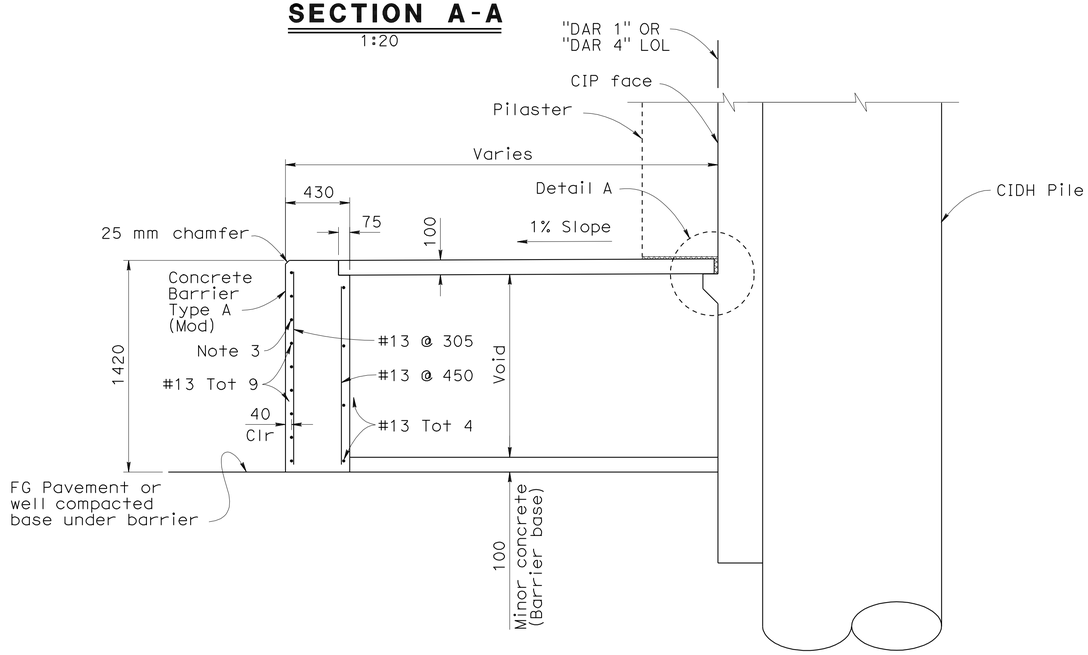

(Note 1)
SECTION B-B
1:20

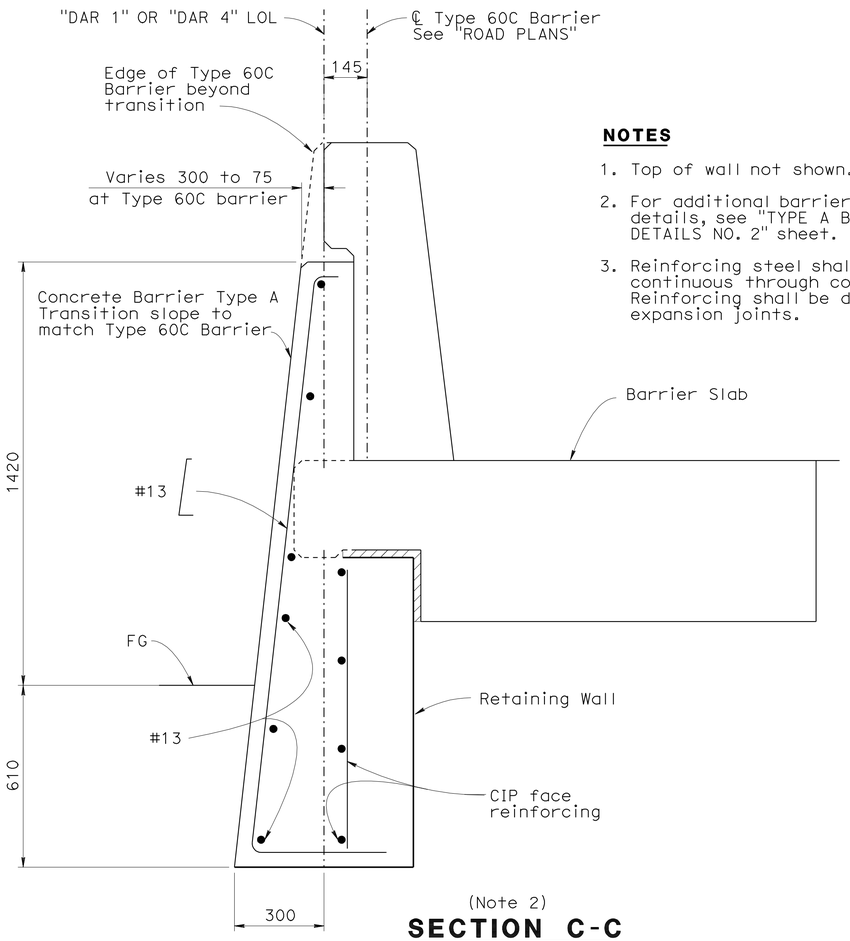

(Note 2)
SECTION C-C
1:10

NOTES

1. Top of wall not shown.
2. For additional barrier transition details, see "TYPE A BARRIER DETAILS NO. 2" sheet.
3. Reinforcing steel shall extend continuous through construction joints. Reinforcing shall be discontinuous at expansion joints.

ALL DIMENSIONS ARE IN MILLIMETERS UNLESS OTHERWISE SHOWN

CHUNG-YUAN WEN
DESIGN OVERSIGHT
4-28-09
SIGN OFF DATE

	BY	CHECKED
DESIGN	Pete Smith	Anthony Sánchez
DETAILS	Ivan Martin	Anthony Sánchez
QUANTITIES	Andy Toledo	Shafi Sharifan

PREPARED FOR THE STATE OF CALIFORNIA DEPARTMENT OF TRANSPORTATION

Brett Makley
PROJECT ENGINEER

BRIDGE NO. 57E0075/76
KILOMETER POST KP43.2

CARROLL CANYON (DAR) RETAINING WALLS
TYPE A BARRIER DETAILS NO. 1

DESIGN DETAIL SHEET (METRIC) (REV. 10/27/05)

ORIGINAL SCALE IN MILLIMETERS FOR REDUCED PLANS 0 10 20 30 40 50 60 70 80 90 100

CU 11275
EA 2T0401

DISREGARD PRINTS BEARING EARLIER REVISION DATES
REVISION DATES (PRELIMINARY STAGE ONLY) 9/12/08 12/19/08 3/09/09 4/28/09

SHEET 25 OF 55

FILE => 57-e0075_76-1-brdt01.dgn

USERNAME => ttmirkes1 DATE PLOTTED => 29-SEP-2010 TIME PLOTTED => 11:57

DIST	COUNTY	ROUTE	KILOMETER POST TOTAL PROJECT	SHEET No	TOTAL SHEETS
11	SD	5,805	R49.9/R51.7, 42.6/46.5	796	886

Caltrans Metric

Peter B Smith 4-28-09
REGISTERED CIVIL ENGINEER DATE

9-27-10
PLANS APPROVAL DATE

REGISTERED PROFESSIONAL ENGINEER Pete B. Smith No. C60122 Exp. 6-30-10 CIVIL STATE OF CALIFORNIA

The State of California or its officers or agents shall not be responsible for the accuracy or completeness of electronic copies of this plan sheet.

SANDAG
401 B STREET,
SAN DIEGO, CA 92101

T.Y. LIN INTERNATIONAL
5030 CAMINO DE LA SIESTA, SUITE 204,
SAN DIEGO, CA 92108

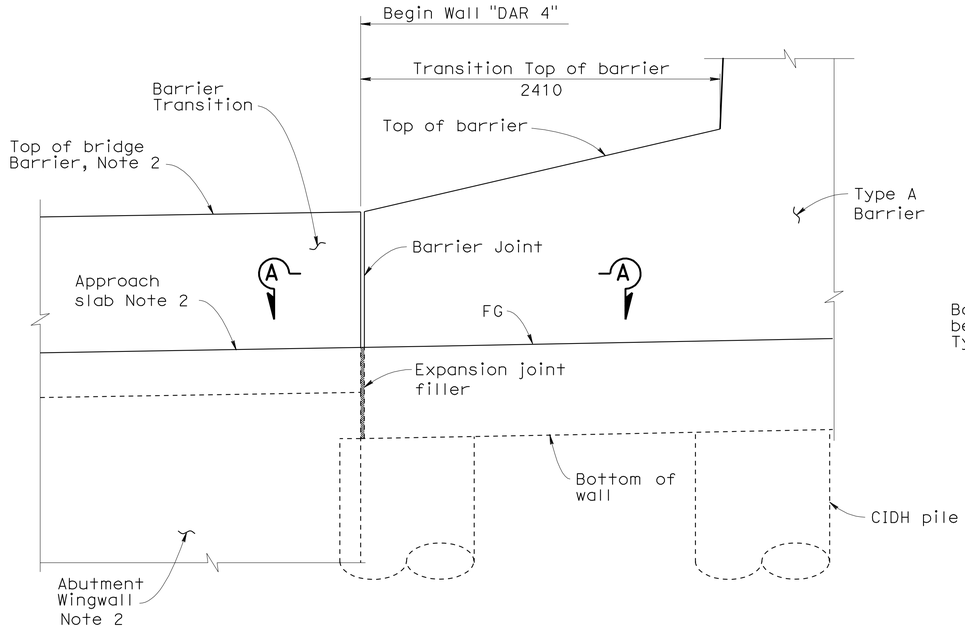

(Note 1)
ELEVATION

WALL END DETAIL AT CCR BRIDGE ABUTMENT
1:20

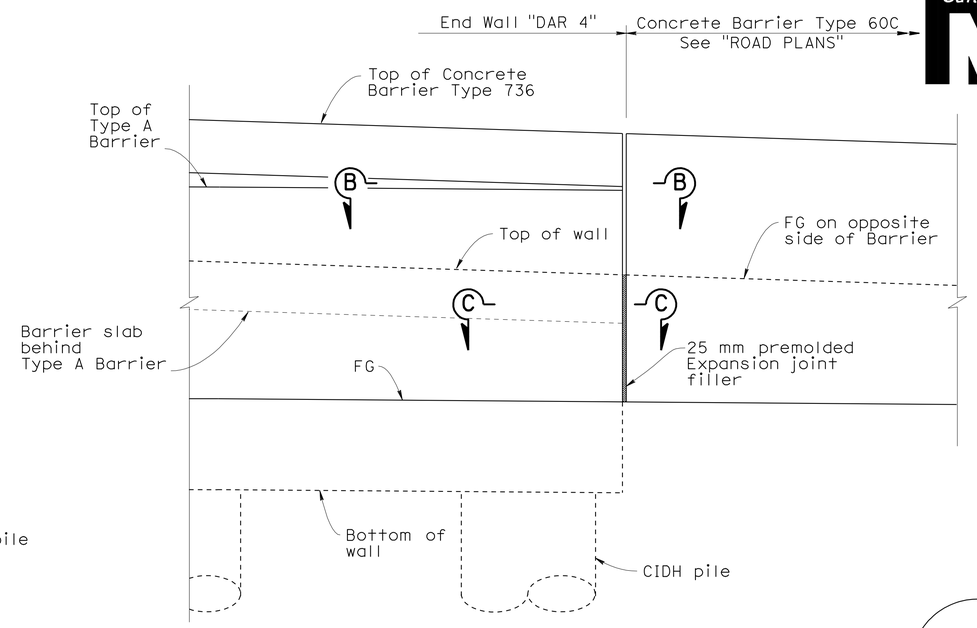

(Note 1)
ELEVATION

WALL END DETAIL AT TYPE 60C BARRIER
1:20

NOTES

1. "DAR 4" wall shown "DAR 1" wall similar.
2. For details, see, "CARROLL CANYON ROAD BRIDGE PLANS".
3. For Type A barrier, see "TYPE A BARRIER DETAILS NO. 1" sheet.

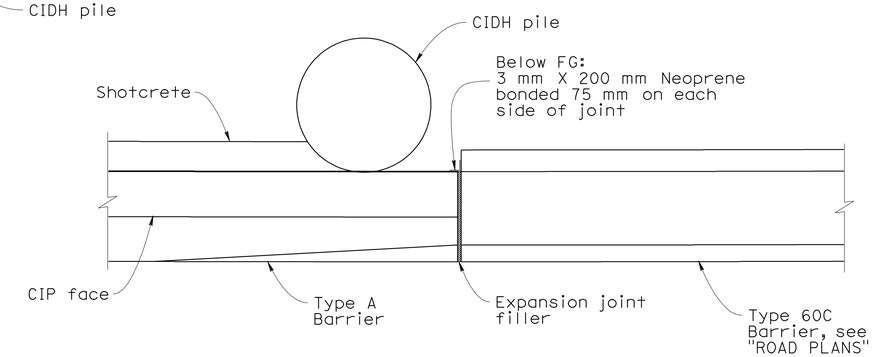

SECTION C-C
1:20

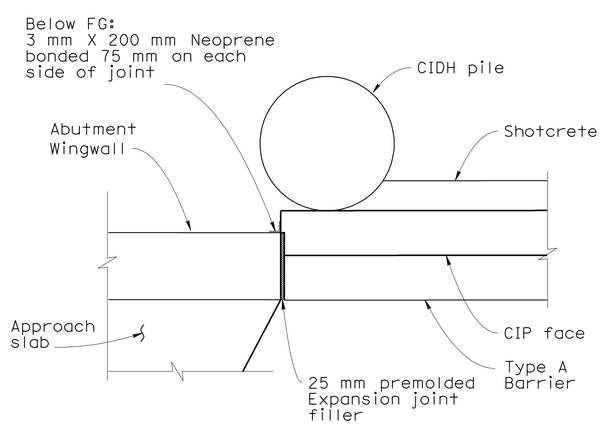

SECTION A-A
1:20

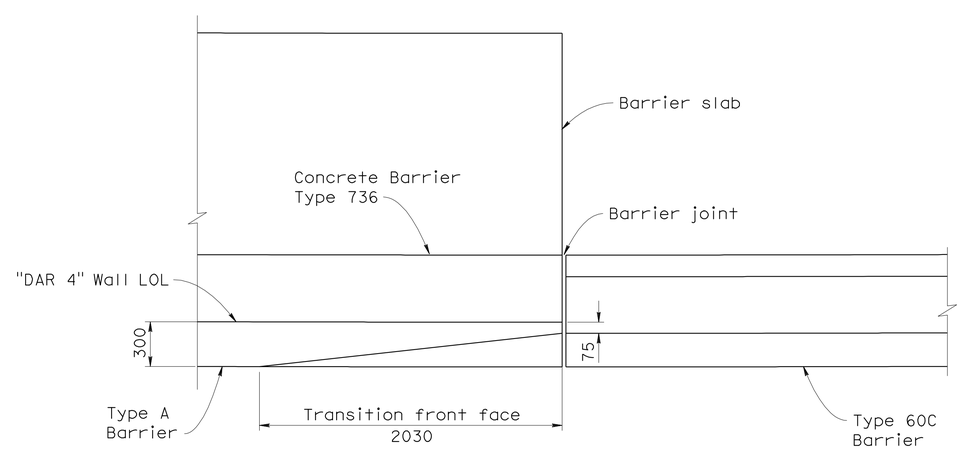

SECTION B-B
1:20

ALL DIMENSIONS ARE IN MILLIMETERS UNLESS OTHERWISE SHOWN

CHUNG-YUAN WEN, DESIGN OVERSIGHT, 4-28-09, SIGN OFF DATE	DESIGN — BY Pete Smith — CHECKED Anthony Sánchez	PREPARED FOR THE STATE OF CALIFORNIA DEPARTMENT OF TRANSPORTATION	Brett Makley, PROJECT ENGINEER
	DETAILS — BY Ivan Martin — CHECKED Anthony Sánchez		
	QUANTITIES — BY Andy Toledo — CHECKED Shafi Sharifan		

BRIDGE NO. 57E0075/76
KILOMETER POST KP43.2

CARROLL CANYON (DAR) RETAINING WALLS
TYPE A BARRIER DETAILS NO. 2

DESIGN DETAIL SHEET (METRIC) (REV. 10/27/05)

ORIGINAL SCALE IN MILLIMETERS FOR REDUCED PLANS 0 10 20 30 40 50 60 70 80 90 100

CU 11275
EA 2T0401

DISREGARD PRINTS BEARING EARLIER REVISION DATES

REVISION DATES (PRELIMINARY STAGE ONLY): ~~9/12/08~~ ~~12/19/08~~ ~~3/09/09~~ 4/28/09

SHEET 26 OF 55

FILE => 57-e0075_76-1-brdt02.dgn

USERNAME => rtmikes1 DATE PLOTTED => 29-SEP-2010 TIME PLOTTED => 11:58

DIST	COUNTY	ROUTE	KILOMETER POST TOTAL PROJECT	SHEET No	TOTAL SHEETS
11	SD	5,805	R49.9/R51.7, 42.6/46.5	797	886

Caltrans Metric

Peter B Smith 4-28-09
REGISTERED CIVIL ENGINEER DATE

9-27-10
PLANS APPROVAL DATE

REGISTERED PROFESSIONAL ENGINEER Pete B. Smith No. C60122 Exp. 6-30-10 CIVIL STATE OF CALIFORNIA

The State of California or its officers or agents shall not be responsible for the accuracy or completeness of electronic copies of this plan sheet.

SANDAG
401 B STREET,
SAN DIEGO, CA 92101

T.Y. LIN INTERNATIONAL
5030 CAMINO DE LA SIESTA, SUITE 204,
SAN DIEGO, CA 92108

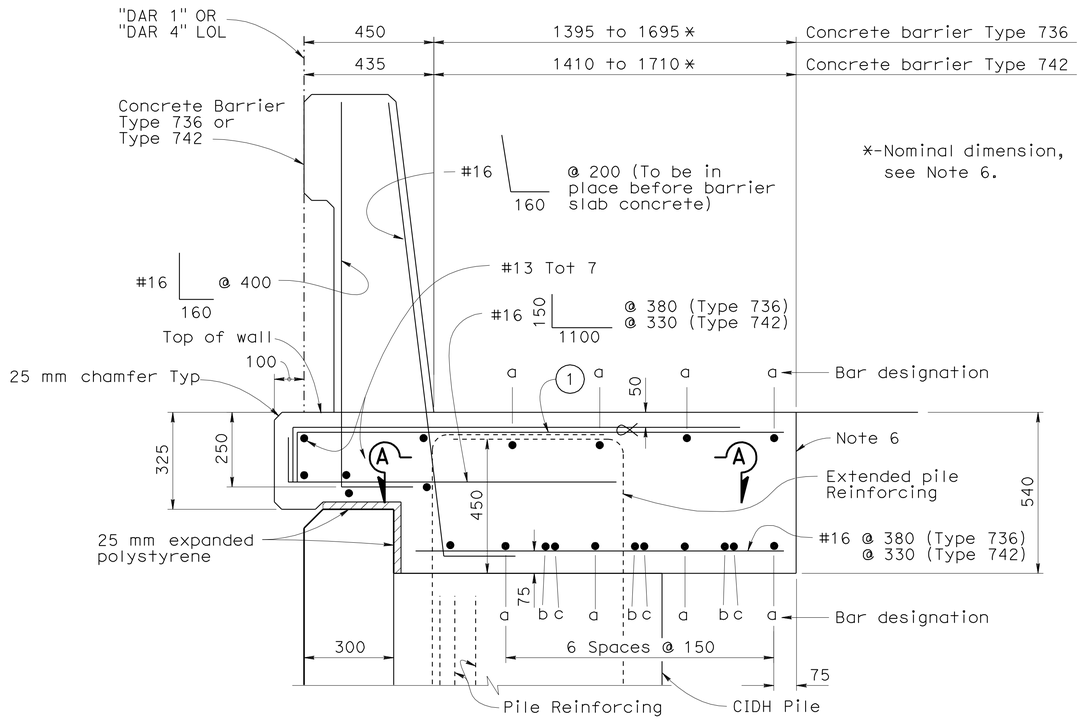

TYPICAL BARRIER SLAB ON CIDH PILE

1:10

(1) #16 1500 @ 380, bundled with #16 @ 380, for Type 736 barrier

#16 1500 @ 330, bundled with #16 @ 330, for Type 742 barrier

"a" bar = #19 continuous
"b" bar = #19 x 18 m
"c" bar = #19 x 15 m

Place "b" and "c" bars at beginning and ending ends of barrier slab.

LEGEND

⌿ - Indicates bundled reinforcing

NOTES:

1. Clearance to reinforcing steel in concrete barrier to be 25 mm.
2. No expansion joints in barrier or barrier slab within limits of wall.
3. For Concrete Barrier reinforcing and details not shown, see BII-56 BII-57
4. Extend 4 pile longitudinal bars into barrier slab with standard hooks, oriented with 2 bars on both sides of slab as shown.
5. For limits of Type 736 and Type 742 barriers, see "DAR WALL BARRIER LAYOUT NO. 1 and NO. 2" sheets.
6. Face of barrier slab to match pavement saw cut line.

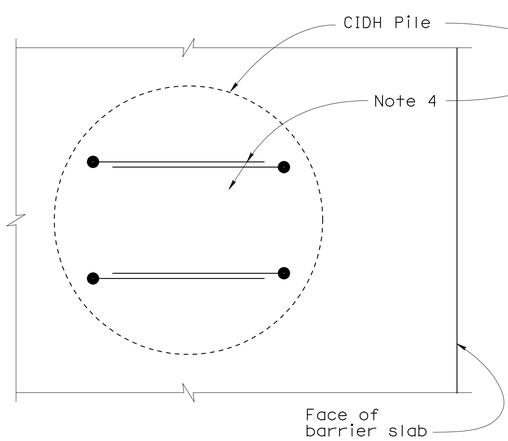

0.900m PILE

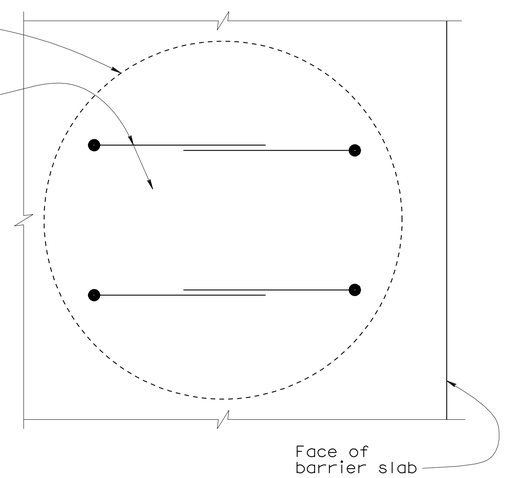

1.2m PILE

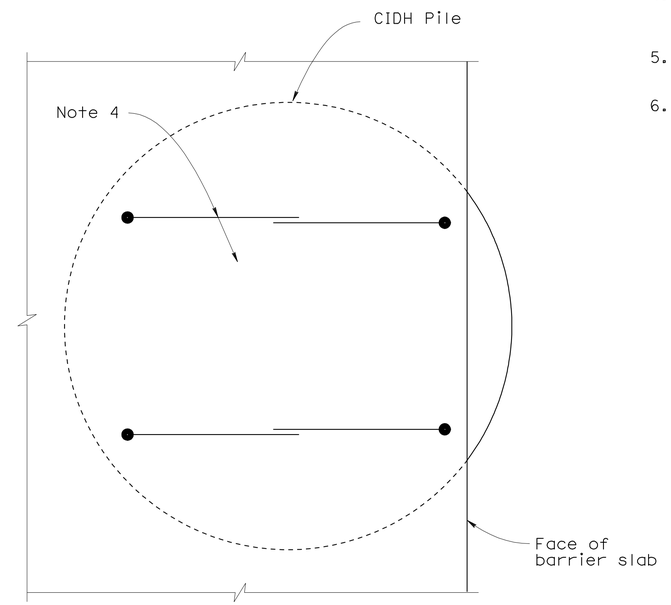

1.5m PILE

SECTION A-A

1:10

ALL DIMENSIONS ARE IN MILLIMETERS UNLESS OTHERWISE SHOWN

CHUNG-YUAN WEN
DESIGN OVERSIGHT
4-28-09
SIGN OFF DATE

	BY	CHECKED
DESIGN	Eric Kjolsing	Anthony Sánchez
DETAILS	Ivan Martin	Anthony Sánchez
QUANTITIES	Andy Toledo	Shafi Sharifan

PREPARED FOR THE STATE OF CALIFORNIA DEPARTMENT OF TRANSPORTATION

Brett Makley
PROJECT ENGINEER

BRIDGE NO. 57E0075/76
KILOMETER POST KP43.2

CARROLL CANYON (DAR) RETAINING WALLS
BARRIER SLAB DETAILS

DESIGN DETAIL SHEET (METRIC) (REV. 10/27/05)

ORIGINAL SCALE IN MILLIMETERS FOR REDUCED PLANS 0 10 20 30 40 50 60 70 80 90 100

CU 11275
EA 2T0401

DISREGARD PRINTS BEARING EARLIER REVISION DATES

REVISION DATES (PRELIMINARY STAGE ONLY) 9/12/08 12/19/08 3/09/09 4/28/09

SHEET 27 OF 55

FILE => 57-e0075_76-1-brdt03.dgn

USERNAME => trmikest DATE PLOTTED => 29-SEP-2010 TIME PLOTTED => 11:58

DIST	COUNTY	ROUTE	KILOMETER POST TOTAL PROJECT	SHEET No	TOTAL SHEETS
11	SD	5,805	R49.9/R51.7, 42.6/46.5	798	886

Caltrans Metric

Peter B Smith 4-28-09
REGISTERED CIVIL ENGINEER DATE

9-27-10
PLANS APPROVAL DATE

REGISTERED PROFESSIONAL ENGINEER Pete B. Smith No. C60122 Exp. 6-30-10 CIVIL STATE OF CALIFORNIA

The State of California or its officers or agents shall not be responsible for the accuracy or completeness of electronic copies of this plan sheet.

SANDAG
401 B STREET,
SAN DIEGO, CA 92101

T.Y. LIN INTERNATIONAL
5030 CAMINO DE LA SIESTA, SUITE 204,
SAN DIEGO, CA 92108

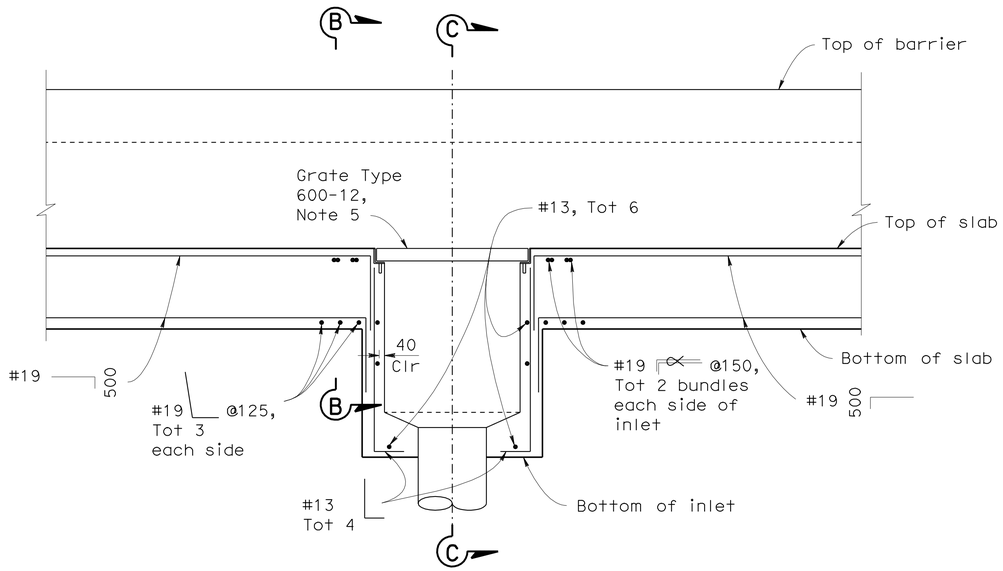

SECTION A-A
1:20

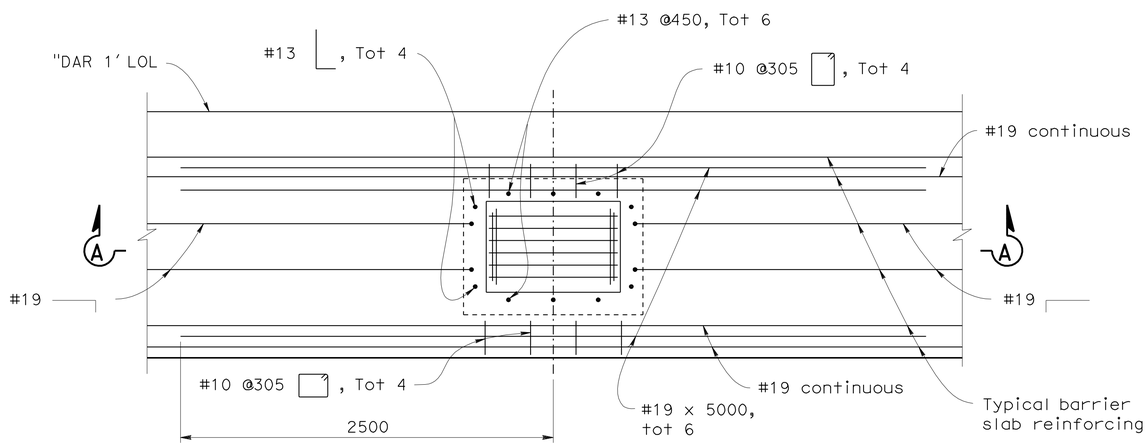

PLAN
1:20

LEGEND

∝ - Indicates bundled reinforcing
o - Indicates typical barrier slab reinforcing

NOTES:

1. Clearance to reinforcing steel in concrete barrier to be 25 mm.
2. No expansion joints in barrier or barrier slab within limits of wall.
3. For Concrete Barrier reinforcing and details not shown, see B11-56 B11-57
4. Face of barrier slab to match pavement saw cut line.
5. See D77A for grate details.
6. For "SECTION C-C", see "BARRIER SLAB DRAIN INLET NO. 2" sheet
7. See "BARRIER SLAB DETAILS" sheet for details and reinforcing not shown

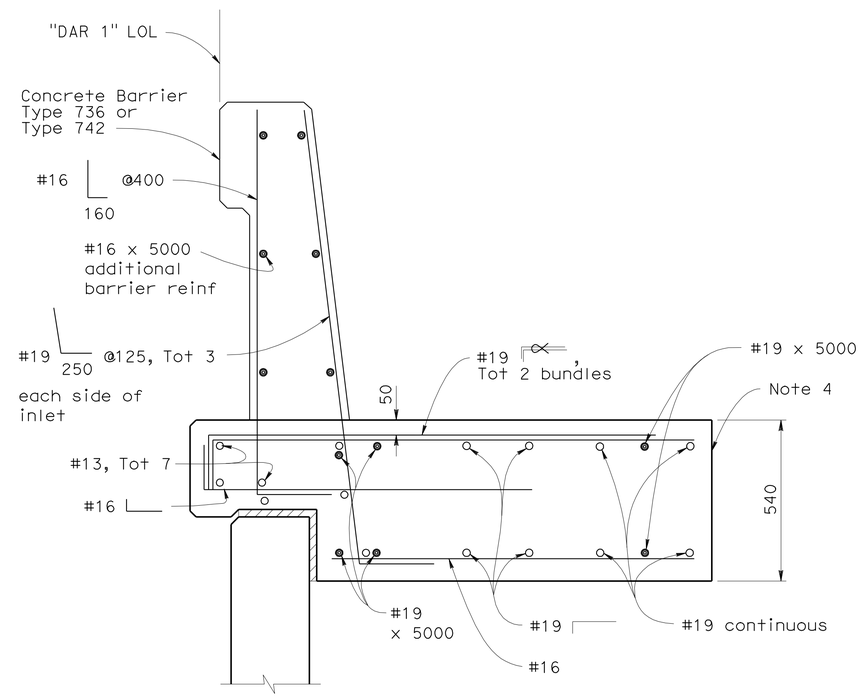

SECTION B-B
1:10

ALL DIMENSIONS ARE IN
MILLIMETERS UNLESS OTHERWISE SHOWN

CHUNG-YUAN WEN
DESIGN OVERSIGHT
4-28-09
SIGN OFF DATE

	BY	CHECKED
DESIGN	Eric Kjolsing	Pete Smith
DETAILS	Yihong Wang	Pete Smith
QUANTITIES	Andy Toledo	Tatyana Gnip

PREPARED FOR THE
STATE OF CALIFORNIA
DEPARTMENT OF TRANSPORTATION

Brett Makley
PROJECT ENGINEER

BRIDGE NO. 57E0075/76
KILOMETER POST KP43.2

CARROLL CANYON (DAR) RETAINING WALLS
BARRIER SLAB DRAIN INLET NO. 1

DESIGN DETAIL SHEET (METRIC) (REV. 10/27/05)

ORIGINAL SCALE IN MILLIMETERS FOR REDUCED PLANS 0 10 20 30 40 50 60 70 80 90 100

CU 11275
EA 2T0401

DISREGARD PRINTS BEARING EARLIER REVISION DATES

REVISION DATES (PRELIMINARY STAGE ONLY) 9/12/08 12/19/08 3/09/09 4/28/09

SHEET 28 OF 55

FILE => 57-e0075_76-r-dd01.dgn

USERNAME => rtmikes! DATE PLOTTED => 29-SEP-2010 TIME PLOTTED => 11:58

DIST	COUNTY	ROUTE	KILOMETER POST TOTAL PROJECT	SHEET No	TOTAL SHEETS
11	SD	5,805	R49.9/R51.7, 42.6/46.5	799	886

Caltrans Metric

Peter B Smith 4-28-09
REGISTERED CIVIL ENGINEER DATE

9-27-10
PLANS APPROVAL DATE

REGISTERED PROFESSIONAL ENGINEER Pete B. Smith No. C60122 Exp. 6-30-10 CIVIL STATE OF CALIFORNIA

The State of California or its officers or agents shall not be responsible for the accuracy or completeness of electronic copies of this plan sheet.

SANDAG
401 B STREET,
SAN DIEGO, CA 92101

T.Y. LIN INTERNATIONAL
5030 CAMINO DE LA SIESTA, SUITE 204,
SAN DIEGO, CA 92108

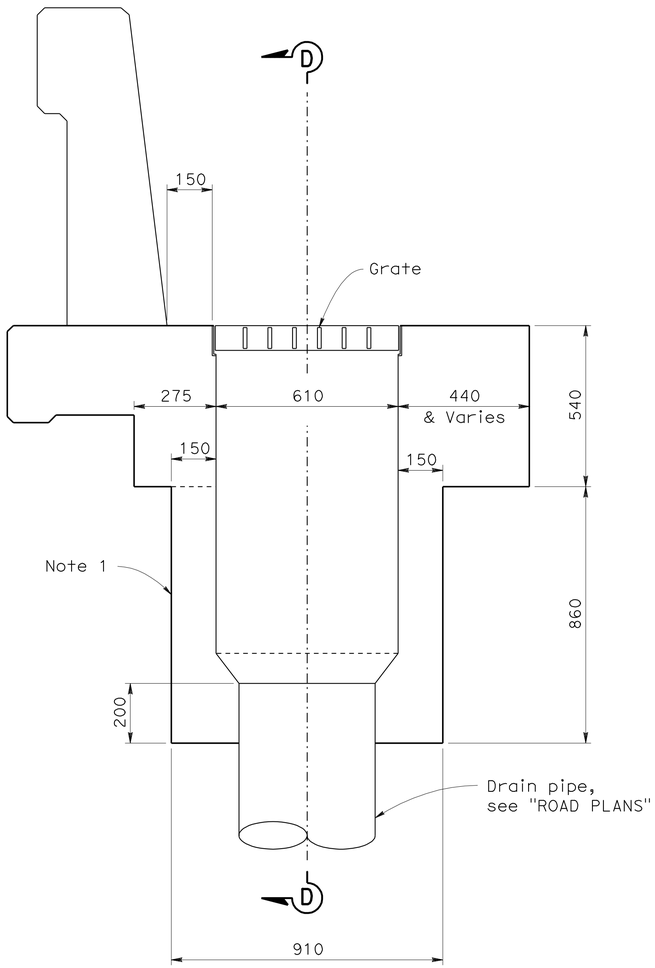

ELEVATION
1:10

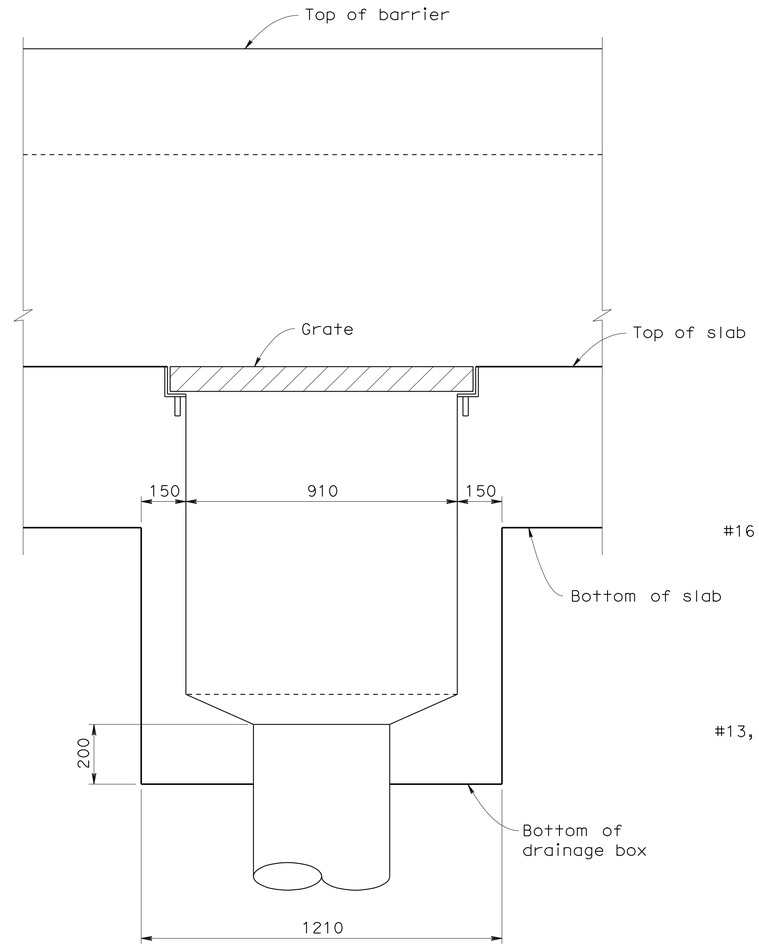

SECTION D-D
1:10

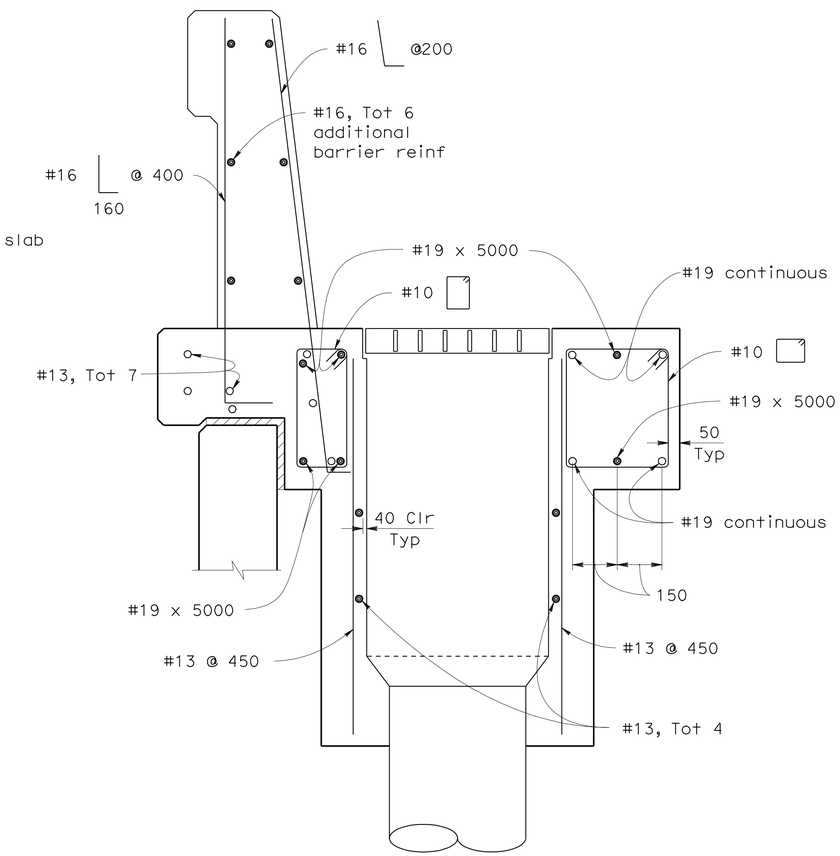

SECTION C-C
1:10

NOTES

1. Shotcrete facing may be incorporated in lower section of inlet box.
2. Reinforcing not shown for clarity
3. For location of "SECTION C-C" and "SECTION D-D", see "BARRIER SLAB DRAIN INLET NO. 1" sheet

ALL DIMENSIONS ARE IN
MILLIMETERS UNLESS OTHERWISE SHOWN

CHUNG-YUAN WEN
DESIGN OVERSIGHT
4-28-09
SIGN OFF DATE

	BY	CHECKED
DESIGN	Eric Kjolsing	Pete Smith
DETAILS	Yihong Wang	Pete Smith
QUANTITIES	Andy Toledo	Tatyana Gnip

PREPARED FOR THE
STATE OF CALIFORNIA
DEPARTMENT OF TRANSPORTATION

Brett Makley
PROJECT ENGINEER

BRIDGE NO. 57E0075/76
KILOMETER POST KP43.2

CARROLL CANYON (DAR) RETAINING WALLS
BARRIER SLAB DRAIN INLET NO. 2

DESIGN DETAIL SHEET (METRIC) (REV. 10/27/05)

ORIGINAL SCALE IN MILLIMETERS FOR REDUCED PLANS 0 10 20 30 40 50 60 70 80 90 100

CU 11275
EA 2T0401

DISREGARD PRINTS BEARING EARLIER REVISION DATES
REVISION DATES (PRELIMINARY STAGE ONLY) 9/27/08 12/19/08 3/03/09 4/28/09

SHEET 29 OF 55

FILE => 57-e0075_76-r-ddet01.dgn

USERNAME => trmikest DATE PLOTTED => 29-SEP-2010 TIME PLOTTED => 11:58

DIST	COUNTY	ROUTE	KILOMETER POST TOTAL PROJECT	SHEET No	TOTAL SHEETS
11	SD	5,805	R49.9/R51.7, 42.6/46.5	800	886

Caltrans Metric

Peter B Smith 4-28-09
REGISTERED CIVIL ENGINEER DATE

9-27-10
PLANS APPROVAL DATE

REGISTERED PROFESSIONAL ENGINEER Pete B. Smith No. C60122 Exp. 6-30-10 CIVIL STATE OF CALIFORNIA

The State of California or its officers or agents shall not be responsible for the accuracy or completeness of electronic copies of this plan sheet.

SANDAG
401 B STREET,
SAN DIEGO, CA 92101

T.Y. LIN INTERNATIONAL
5030 CAMINO DE LA SIESTA, SUITE 204,
SAN DIEGO, CA 92108

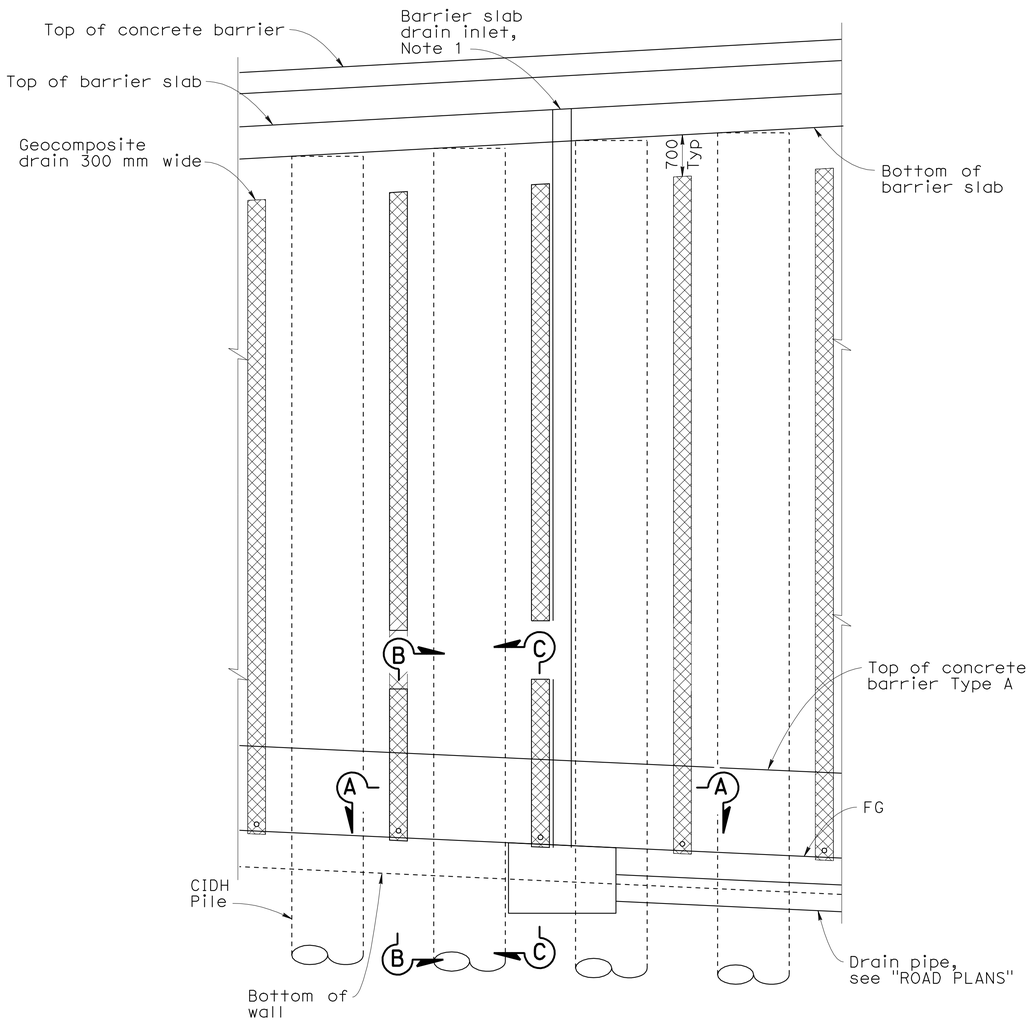

WALL ELEVATION
1:50

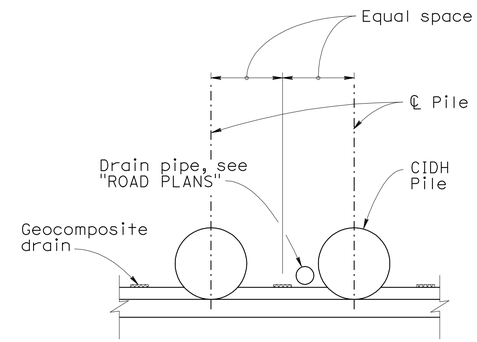

SECTION A-A
1:50

NOTES

1. See "BARRIER SLAB DRAIN INLET NO. 1" sheet

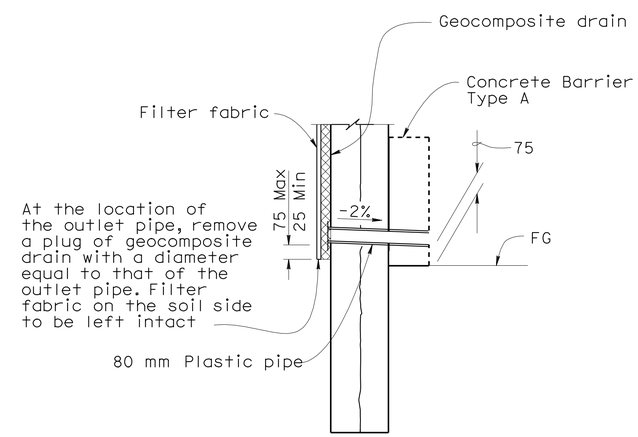

SECTION B-B
No Scale

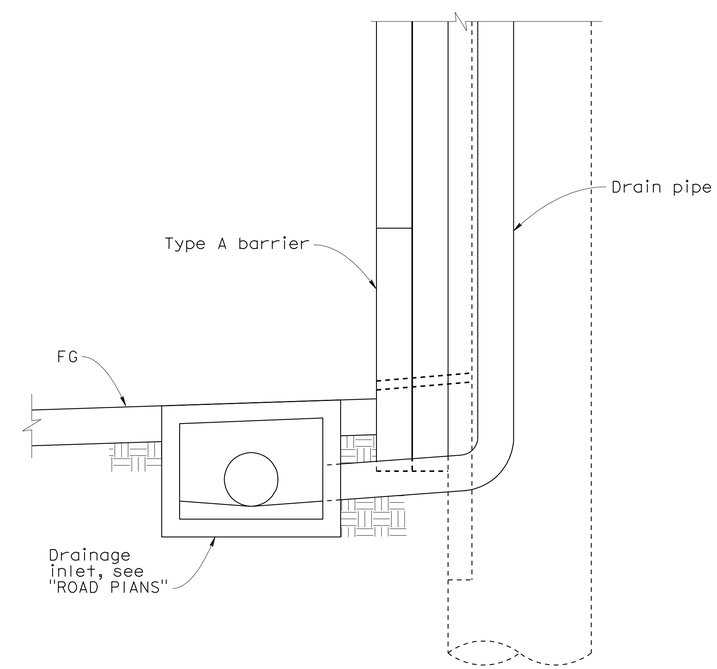

SECTION C-C
1:25

WALL DRAINAGE DETAILS

ALL DIMENSIONS ARE IN MILLIMETERS UNLESS OTHERWISE SHOWN

CHUNG-YUAN WEN
DESIGN OVERSIGHT
4-28-09
SIGN OFF DATE

	BY	CHECKED
DESIGN	Pete Smith	Anthony Sánchez
DETAILS	Ivan Martin	Anthony Sánchez
QUANTITIES	Andy Toledo	Shafi Sharifan

PREPARED FOR THE STATE OF CALIFORNIA DEPARTMENT OF TRANSPORTATION

Brett Makley
PROJECT ENGINEER

BRIDGE NO. 57E0075/76
KILOMETER POST KP43.2

CARROLL CANYON (DAR) RETAINING WALLS
WALL DRAINAGE DETAILS

DESIGN DETAIL SHEET (METRIC) (REV. 10/27/05)

ORIGINAL SCALE IN MILLIMETERS FOR REDUCED PLANS 0 10 20 30 40 50 60 70 80 90 100

CU 11275
EA 2T0401

DISREGARD PRINTS BEARING EARLIER REVISION DATES
REVISION DATES (PRELIMINARY STAGE ONLY) 9/12/08 12/19/08 3/09/09 4/28/09

SHEET 30 OF 55

FILE => 57-e0075_76-r-wddt.dgn

USERNAME => trmikest DATE PLOTTED => 29-SEP-2010 TIME PLOTTED => 11:58