DIST	COUNTY	ROUTE	KILOMETER POST TOTAL PROJECT	SHEET NO.	TOTAL SHEETS
11	SD	5,805	R49.9/R51.7, 42.6/46.5	401	886

REGISTERED CIVIL ENGINEER 5/8/09 DATE

9-27-10
PLANS APPROVAL DATE

PROFESSIONAL ENGINEER REGISTERED MICHAEL L. ROBERTS No. C64413 Exp. 6/30/11 CIVIL STATE OF CALIFORNIA

THE STATE OF CALIFORNIA OR ITS OFFICERS OR AGENTS SHALL NOT BE RESPONSIBLE FOR THE ACCURACY OR COMPLETENESS OF ELECTRONIC COPIES OF THIS PLAN SHEET.

Dokken Engineering
5675 Ruffin Road,
Suite 250
San Diego, CA 92123

Caltrans Metric

NOTES:

1. FEDERAL (MUTCD) SIGN CODES ARE SHOWN UNLESS DESIGNATED BY (CA) INDICATING STANDARD CALIFORNIA SIGN SPECIFICATIONS.
2. MINIMUM POST LENGTHS WERE CALCULATED ASSUMING A LEVEL GROUND SURFACE FROM THE EP. ENSURE "C" DIMENSIONS ARE MET. POST LENGTHS MAY VARY DUE TO SITE CONDITIONS.
3. EXACT LOCATIONS OF SIGNS AND POSTS SHALL BE DETERMINED BY THE ENGINEER.
4. REFER TO "FURNISH ROADSIDE SIGN PANEL" CHART FOR FURTHER INFORMATION.

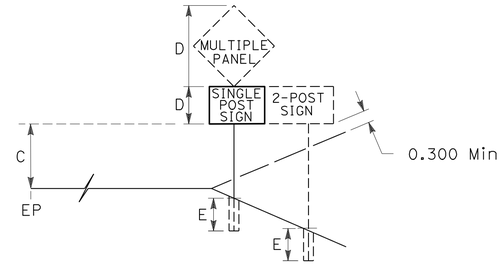

ROADSIDE SIGN QUANTITIES

SHEET No.	SIGN No.	CODE	PANEL SIZE Horiz	PANEL SIZE Vert	D Dim	C Dim	E Min	MIN POST LENGTH	POST SIZE 89 x 89	POST SIZE 89 x 140	POST SIZE 140 x 140	POST SIZE 140 x 184	ROADSIDE SIGN ONE POST	ROADSIDE SIGN TWO POST	ROADSIDE SIGN RELOCATE	ROADSIDE SIGN REMOVE	ROADSIDE SIGN RESET	MAST ARM MOUNTED (N)	METAL (RAIL MOUNTED SIGN)	INSTALL ROADSIDE SIGN (LAMINATED WOOD BOX POST)		ONE POST (WEED CONTROL MAT RUBBER)	FLUSH MOUNTED SIGN	INSTALL SIGN (STRAP AND SADDLE BRACKET METHOD)	REMARKS
			mm	mm	m	m	m	m	mm x mm				EA	EA	EA	EA	EA	EA	kg	EA		EA	EA	EA	
PD-1	101	R3-4	600	600	1.4	1.8	1.1	2.8	X				1												
		R4-7	600	750																					
	102	R3-4														1									
		R4-7																							
		R4-7a(Mod)																							
	103	R3-4	600	600	1.4	1.8	1.1	2.8	X				1												
		R4-7	600	750																					
	104	R4-7														1									
	105	R3-4														1									
		TYPE N(CA)																							
		R3-4																							
		R4-7																							
		R4-7a(Mod)																							
	106	R2-1(45)(CA)														1									
		R3-4																							
		TYPE N(CA)																							
		R3-4																							
		TYPE N(CA)																							
	107	R4-7														1									
		R3-4																							
	108	R3-4	600	600	1.2	1.5	1.1	3.5	X				1												
		R3-2	600	600																					
	109	R7-9a													1										
	110	R2-1(45)(CA)													1										
	111	G20(CA)(Mod)	2740	1829	1.8	2.1	1.8	5.7				X		1											
	112	G8-7(CA)	2440	914	0.9	2.1	1.4	4.4		X				1											
PD-3	301	R91-1(CA)	1200	1650															60						BUSES OK
	302	R6-1(L)	1375	450	0.3	0.5	1.1	2	X				1												
	303	R11(CA)	900	900	0.6	0.6	1.4	3.5		X			1												
		R11A(CA)	900	600																					
	304	R81A(CA)	300	125	0.6	2.1	1.1	3.5	X				1												
		R81(CA)	600	450																					
	305	R10-11	600	750																				1	
	306	G7-1(CA)	2440	457														1							
	307	R73-3(CA)	900	900														1							
	308	R4-7	600	750	0.8	2.1	1.1	3.7	X				1												
		R3-18	600	600																					
	334a	R9-3a	600	600		1.8			X				1												
									SUBTOTAL (THIS SHEET)				8	2	2	5		2	60					1	

(N) - NOT A SEPARATE PAY ITEM, FOR INFORMATION ONLY

SIGN QUANTITIES

SQ-3

STATE OF CALIFORNIA - DEPARTMENT OF TRANSPORTATION
Caltrans

CONSULTANT FUNCTIONAL SUPERVISOR: CHRIS JOHNSON
CALCULATED-DESIGNED BY: MICHAEL KINNEAR
CHECKED BY: MICHAEL ROBERTS
REVISED BY / DATE REVISED

LAST REVISION 05-29-09
DATE PLOTTED => 29-SEP-2010
TIME PLOTTED => 14:35

NOTES:

1. FEDERAL (MUTCD) SIGN CODES ARE SHOWN UNLESS DESIGNATED BY (CA) INDICATING STANDARD CALIFORNIA SIGN SPECIFICATIONS.
2. MINIMUM POST LENGTHS WERE CALCULATED ASSUMING A LEVEL GROUND SURFACE FROM THE EP. ENSURE "C" DIMENSIONS ARE MET. POST LENGTHS MAY VARY DUE TO SITE CONDITIONS.
3. EXACT LOCATIONS OF SIGNS AND POSTS SHALL BE DETERMINED BY THE ENGINEER.
4. REFER TO "FURNISH ROADSIDE SIGN PANEL" CHART FOR FURTHER INFORMATION.

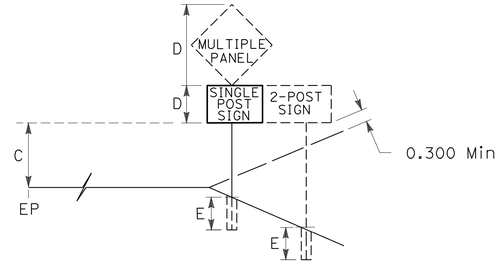

Caltrans Metric

DIST	COUNTY	ROUTE	KILOMETER POST TOTAL PROJECT	SHEET NO.	TOTAL SHEETS
11	SD	5,805	R49.9/R51.7, 42.6/46.5	402	886

REGISTERED CIVIL ENGINEER 5/8/09 DATE

9-27-10
PLANS APPROVAL DATE

PROFESSIONAL ENGINEER REGISTERED MICHAEL L. ROBERTS No. C64413 Exp. 6/30/11 CIVIL STATE OF CALIFORNIA

THE STATE OF CALIFORNIA OR ITS OFFICERS OR AGENTS SHALL NOT BE RESPONSIBLE FOR THE ACCURACY OR COMPLETENESS OF ELECTRONIC COPIES OF THIS PLAN SHEET.

Dokken Engineering
5675 Ruffin Road,
Suite 250
San Diego, CA 92123

ROADSIDE SIGN QUANTITIES

SHEET No.	SIGN No.	CODE	PANEL SIZE Horiz	PANEL SIZE Vert	D Dim	C Dim	E Min	MIN POST LENGTH	POST SIZE 89 x 89	POST SIZE 89 x 140	POST SIZE 140 x 140	POST SIZE 140 x 184	ROADSIDE SIGN ONE POST	ROADSIDE SIGN TWO POST	ROADSIDE SIGN RELOCATE	ROADSIDE SIGN REMOVE	ROADSIDE SIGN RESET	MAST ARM MOUNTED (N)	METAL (RAIL MOUNTED SIGN)	INSTALL ROADSIDE SIGN (LAMINATED WOOD BOX POST)		ONE POST (WEED CONTROL MAT RUBBER)	FLUSH MOUNTED SIGN	INSTALL SIGN (STRAP AND SADDLE BRACKET METHOD)	REMARKS
			mm	mm	m	m	m	m	mm x mm				EA	EA	EA	EA	EA	EA	kg	EA		EA	EA	EA	
PD-3	309	R10-11	600	750		5.2																		1	
		R81B(CA)	200	125		2.1																		1	
		R81(CA)	600	450																				1	
		D11-1	600	450																				1	
	310	R9-3a	600	600		2.1			X				1												
	311	G8-7(CA)	2590	914		5.2																		1	
	312	R81A(CA)	300	125		2.1																		1	
		R81(CA)	600	450																				1	
	313	R61(CA)(Mod)	1524	762														1							
	314	R2-1(45)	600	750		2.1																		1	
	315	R1-1	750	750	0.8	2.1	0.8	3.7		X			1												
		R1-4	450	150																					
	316	R81B(CA)	200	125	1	2.1	0.8	3.3	X				1												
		R81(CA)	600	450																					
		D11-1	600	450																					
	317	R1-1	750	750	0.8	2.1	0.8	3.7		X			1												
		R1-4	450	150																					INSTALL R9-3a BACK OF R1-1 PANEL
	318	R1-1	750	750	0.8	2.1	0.8	3.7		X			1												
		R1-4	450	150																					
	319	W4-10(R)(25)	1200	1200	1.7	2.1	0.8	4.6		X			1												
	320	G8-22(L)(CA)	1220	914																					
	321	R9-3a	600	600		2.1																		1	
	322	W1-7	1200	600															60						
		TYPE N(CA)	450	450																					
	323	R3-4	600	600														1							
	324	R9-3a	450	450																					
	325	R81(CA)	600	450																				1	
	326	G7-1(CA)	2590	457														1							
	327	R3-4	600	600														1							
	328	R2-1(45)	600	750																				1	
	329	R93-2(2)(CA)	900	2100																				1	
	330	G8-22(R)(CA)	1220	914															60						
	331	R4-7	600	750	0.8	0.6	0.8	2.2																	
	332	R81B(CA)	200	125	1	1.5	0.8	3.3																	
		R81(CA)	600	450																					
		D11-1	600	450																					
	333	G7-1(CA)	2440	457														1							
	334	W4-10(L)(25)	1200	1200	1.7	2.1	0.8	4.6																	
	335	R81A(CA)	300	125	0.6	2.1	0.8	3.5																	
		R81(CA)	600	450																					
									SUBTOTAL (THIS SHEET)				6					5	120					12	

(N) - NOT A SEPARATE PAY ITEM, FOR INFORMATION ONLY

SIGN QUANTITIES

SQ-4

STATE OF CALIFORNIA - DEPARTMENT OF TRANSPORTATION
Caltrans

CONSULTANT FUNCTIONAL SUPERVISOR: CHRIS JOHNSON
CALCULATED-DESIGNED BY: MICHAEL KINNEAR
CHECKED BY: MICHAEL ROBERTS
REVISED BY / DATE REVISED

LAST REVISION 05-29-09
DATE PLOTTED => 29-SEP-2010
TIME PLOTTED => 14:35

DIST	COUNTY	ROUTE	KILOMETER POST TOTAL PROJECT	SHEET NO.	TOTAL SHEETS
11	SD	5,805	R49.9/R51.7, 42.6/46.5	403	886

REGISTERED CIVIL ENGINEER 5/8/09 DATE

9-27-10
PLANS APPROVAL DATE

PROFESSIONAL ENGINEER REGISTERED MICHAEL L. ROBERTS No. C64413 Exp. 6/30/11 CIVIL STATE OF CALIFORNIA

THE STATE OF CALIFORNIA OR ITS OFFICERS OR AGENTS SHALL NOT BE RESPONSIBLE FOR THE ACCURACY OR COMPLETENESS OF ELECTRONIC COPIES OF THIS PLAN SHEET.

Dokken Engineering
5675 Ruffin Road,
Suite 250
San Diego, CA 92123

Caltrans Metric

NOTES:

1. FEDERAL (MUTCD) SIGN CODES ARE SHOWN UNLESS DESIGNATED BY (CA) INDICATING STANDARD CALIFORNIA SIGN SPECIFICATIONS.
2. MINIMUM POST LENGTHS WERE CALCULATED ASSUMING A LEVEL GROUND SURFACE FROM THE EP. ENSURE "C" DIMENSIONS ARE MET. POST LENGTHS MAY VARY DUE TO SITE CONDITIONS.
3. EXACT LOCATIONS OF SIGNS AND POSTS SHALL BE DETERMINED BY THE ENGINEER.
4. REFER TO "FURNISH ROADSIDE SIGN PANEL" CHART FOR FURTHER INFORMATION.

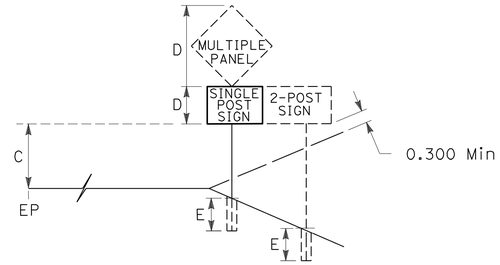

ROADSIDE SIGN QUANTITIES

SHEET No.	SIGN No.	CODE	PANEL SIZE Horiz mm	PANEL SIZE Vert mm	D Dim m	C Dim m	E Min m	MIN POST LENGTH m	POST SIZE 89 x 89 (mm x mm)	POST SIZE 89 x 140 (mm x mm)	POST SIZE 140 x 140 (mm x mm)	POST SIZE 140 x 184 (mm x mm)	ROADSIDE SIGN ONE POST EA	ROADSIDE SIGN TWO POST EA	ROADSIDE SIGN RELOCATE EA	ROADSIDE SIGN REMOVE EA	ROADSIDE SIGN RESET EA	MAST ARM MOUNTED (N) EA	METAL (RAIL MOUNTED SIGN) kg	INSTALL ROADSIDE SIGN (LAMINATED WOOD BOX POST) EA		ONE POST (WEED CONTROL MAT RUBBER) EA	FLUSH MOUNTED SIGN EA	INSTALL SIGN (STRAP AND SADDLE BRACKET METHOD) EA	REMARKS
PD-3	336	R81B(CA)	200	125	1	1.5	0.8	3.3	X				1												
		R81(CA)	600	450																					
		D11-1	600	450																					
	337	G20(CA)(Mod)	2740	1829	1.8	2.1	1.8	5.7				X		1											
	338	G7-1(CA)	2590	457														1							
	339	R3-4	600	600														1							
	340	G8-7(CA)	2440	1524	1.5	2.1	1.8	5.4				X		1											
	341	W3-3	900	900	1.3	2.1	0.8	4.2		X			1												
	342	G86(CA)(Mod)	1680	1270	1.3	2.1	1.5	4.9			X			1											
	343	R18B(Mod)(CA)	1016	914	1	2.1	0.8	3.9		X			1												
	344	R10-11	600	750		5.2																		1	
	345	G7-1(CA)	2440	457														1							
	346	G8-7(CA)	2590	914		5.2																		1	
	347	R3-18	600	600														1							
	348	R9-3a	600	600		2.1												1							
	349	G92(CA)	600	600		0.5																		1	
		G27-2(805)(CA)	625	750																				1	
		G48(CA)	525	229																				1	
		G44(CA)	525	375																				1	
	350	R73-6(CA)	900	900														1							
	351	R5-10a	750	900	0.9	2.1	1.4	4.4		X			1												
	352	G92(CA)	1200	750	2.4	0.5	1.5	5.4			X		1												
		G27-2(805)(CA)	625	750																					
		G48(CA)	525	229																					
		G43(CA)	525	375																					
	353	W3-3	900	900		1.8																		1	
		W10-10(Mod)	600	450																				1	
	354	R6-1(R)	1375	450		0.5																	1		
	355	R11(CA)	900	900		0.6													60						
		R11A(CA)	900	600																					
	356	G92(CA)	1200	750	2.4	0.5	1.5	5.4			X		1												
		G27-2(805)(CA)	625	750																					
		G48(CA)	525	229																					
		G44(CA)	525	375																					
	357	W3-3	900	900		1.8																		1	
		W10-10(Mod)	600	450																				1	
	358	R91-1	1200	1650	1.7	2.1	1.5	5.3			X		1												
		(BUSES OK)(CA)																							
	359	G92(CA)	1200	750	2.4	0.5	1.5	5.4			X											1			
											SUBTOTAL (THIS SHEET)		7	3				6	60			1	1	10	

(N) - NOT A SEPARATE PAY ITEM, FOR INFORMATION ONLY

SIGN QUANTITIES

SQ-5

STATE OF CALIFORNIA - DEPARTMENT OF TRANSPORTATION
Caltrans

CONSULTANT FUNCTIONAL SUPERVISOR: CHRIS JOHNSON
CALCULATED-DESIGNED BY: MICHAEL KINNEAR
CHECKED BY: MICHAEL ROBERTS
REVISED BY / DATE REVISED

LAST REVISION 05-29-09
DATE PLOTTED => 29-SEP-2010
TIME PLOTTED => 14:35

DIST	COUNTY	ROUTE	KILOMETER POST TOTAL PROJECT	SHEET NO.	TOTAL SHEETS
11	SD	5,805	R49.9/R51.7, 42.6/46.5	404	886

REGISTERED CIVIL ENGINEER 5/8/09 DATE

9-27-10
PLANS APPROVAL DATE

PROFESSIONAL ENGINEER REGISTERED MICHAEL L. ROBERTS No. C64413 Exp. 6/30/11 CIVIL STATE OF CALIFORNIA

THE STATE OF CALIFORNIA OR ITS OFFICERS OR AGENTS SHALL NOT BE RESPONSIBLE FOR THE ACCURACY OR COMPLETENESS OF ELECTRONIC COPIES OF THIS PLAN SHEET.

Dokken Engineering
5675 Ruffin Road,
Suite 250
San Diego, CA 92123

Caltrans Metric

NOTES:

1. FEDERAL (MUTCD) SIGN CODES ARE SHOWN UNLESS DESIGNATED BY (CA) INDICATING STANDARD CALIFORNIA SIGN SPECIFICATIONS.
2. MINIMUM POST LENGTHS WERE CALCULATED ASSUMING A LEVEL GROUND SURFACE FROM THE EP. ENSURE "C" DIMENSIONS ARE MET. POST LENGTHS MAY VARY DUE TO SITE CONDITIONS.
3. EXACT LOCATIONS OF SIGNS AND POSTS SHALL BE DETERMINED BY THE ENGINEER.
4. REFER TO "FURNISH ROADSIDE SIGN PANEL" CHART FOR FURTHER INFORMATION.

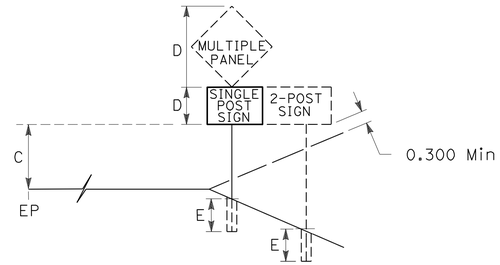

ROADSIDE SIGN QUANTITIES

SHEET No.	SIGN No.	CODE	PANEL SIZE Horiz mm	PANEL SIZE Vert mm	D Dim m	C Dim m	E Min m	MIN POST LENGTH m	POST SIZE 89 x 89 (mm x mm)	POST SIZE 89 x 140 (mm x mm)	POST SIZE 140 x 140 (mm x mm)	POST SIZE 140 x 184 (mm x mm)	ROADSIDE SIGN ONE POST EA	ROADSIDE SIGN TWO POST EA	ROADSIDE SIGN RELOCATE EA	ROADSIDE SIGN REMOVE EA	ROADSIDE SIGN RESET EA	MAST ARM MOUNTED (N) EA	METAL (RAIL MOUNTED SIGN) kg	INSTALL ROADSIDE SIGN (LAMINATED WOOD BOX POST) EA		ONE POST (WEED CONTROL MAT RUBBER) EA	FLUSH MOUNTED SIGN EA	INSTALL SIGN (STRAP AND SADDLE BRACKET METHOD) EA	REMARKS
PD-3		G27-2(805)(CA)	625	750																					
		G48(CA)	525	229																					
		G43(CA)	525	375																					
	360	G8-7(CA)	2440	914	1.6	2.1	1.5	4.5			X			1											
	361	R81A(CA)	300	125	0.6	2.1	0.8	3.5	X				1												
		R81(CA)	600	450																					
PD-4	401	R5-10c	600	300		1.8													60						
	402	R11(CA)	900	900															60						
		R11A(CA)	900	600																					
	403	G20(Mod)(CA)	2740	1829	1.8	2.1	1.8	5.7				X		1											
	404	R6-1(L)	1375	450		0.5																	1		
	405	R81(CA)	600	450															60						
	406	R5-10a	750	900		1.8													60						
	407	G92-1(CA)	1200	1067		0.5													60						
		G27-1(805)(CA)	625	750																					
		G47(CA)	525	229																					
		G34(CA)	525	375																					
	408	G92-1(CA)	1200	1067		0.5													60						
		G27-1(805)(CA)	625	750																					
		G47(CA)	525	229																					
		G43(CA)	525	375																					
	409	R3-4	600	600														1							
	410	R3-4	600	600														1							
	411	R81(CA)	600	450															60						
	412	R2-1(45)	600	750																				1	
	413	TYPE N(CA)	450	450																				1	MOUNT TO CRASH CUSHION
	414	TYPE N(CA)	450	450																				1	MOUNT TO CRASH CUSHION
	415	R3-18	600	600														1							
	416	R2-1(45)	600	750															60						
	417 -	TYPE P(CA)	300	900																				1	MOUNT TO CRASH CUSHION
	418	R9-3a	600	600		2.1																		1	
	419	R9-3a	600	600		2.1																		1	
	420	W51(CA)	1200	1200															60						
PD-5	501	W3-3	900	900																				1	
	502	TYPE N(CA)														1									
	503	R3-4	600	600														1							
	504	G7-1(CA)	2440	457														1							
	505	R(Mod)														1									
		TYPE N(CA)																							
									SUBTOTAL (THIS SHEET)				1	2		2		5	540				1	7	

(N) - NOT A SEPARATE PAY ITEM, FOR INFORMATION ONLY

SIGN QUANTITIES

SQ-6

STATE OF CALIFORNIA - DEPARTMENT OF TRANSPORTATION
Caltrans

CONSULTANT FUNCTIONAL SUPERVISOR: CHRIS JOHNSON
CALCULATED-DESIGNED BY: MICHAEL KINNEAR
CHECKED BY: MICHAEL ROBERTS
REVISED BY / DATE REVISED

LAST REVISION 05-29-09
DATE PLOTTED => 29-SEP-2010
TIME PLOTTED => 14:35

DIST	COUNTY	ROUTE	KILOMETER POST TOTAL PROJECT	SHEET NO.	TOTAL SHEETS
11	SD	5,805	R49.9/R51.7, 42.6/46.5	405	886

Caltrans Metric

REGISTERED CIVIL ENGINEER 5/8/09 DATE

9-27-10
PLANS APPROVAL DATE

PROFESSIONAL ENGINEER REGISTERED MICHAEL L. ROBERTS No. C64413 Exp. 6/30/11 CIVIL STATE OF CALIFORNIA

THE STATE OF CALIFORNIA OR ITS OFFICERS OR AGENTS SHALL NOT BE RESPONSIBLE FOR THE ACCURACY OR COMPLETENESS OF ELECTRONIC COPIES OF THIS PLAN SHEET.

Dokken Engineering
5675 Ruffin Road,
Suite 250
San Diego, CA 92123

NOTES:

1. FEDERAL (MUTCD) SIGN CODES ARE SHOWN UNLESS DESIGNATED BY (CA) INDICATING STANDARD CALIFORNIA SIGN SPECIFICATIONS.
2. MINIMUM POST LENGTHS WERE CALCULATED ASSUMING A LEVEL GROUND SURFACE FROM THE EP. ENSURE "C" DIMENSIONS ARE MET. POST LENGTHS MAY VARY DUE TO SITE CONDITIONS.
3. EXACT LOCATIONS OF SIGNS AND POSTS SHALL BE DETERMINED BY THE ENGINEER.
4. REFER TO "FURNISH ROADSIDE SIGN PANEL" CHART FOR FURTHER INFORMATION.

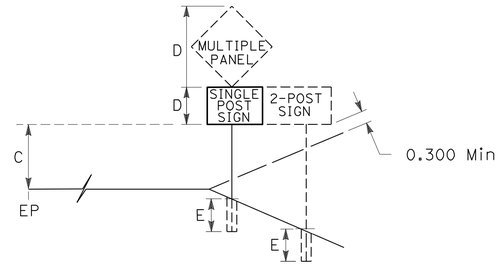

ROADSIDE SIGN QUANTITIES

SHEET No.	SIGN No.	CODE	PANEL SIZE Horiz	PANEL SIZE Vert	D Dim	C Dim	E Min	MIN POST LENGTH	POST SIZE 89 x 89	POST SIZE 89 x 140	POST SIZE 140 x 140	POST SIZE 140 x 184	ROADSIDE SIGN ONE POST	ROADSIDE SIGN TWO POST	ROADSIDE SIGN RELOCATE	ROADSIDE SIGN REMOVE	ROADSIDE SIGN RESET	MAST ARM MOUNTED (N)	METAL (RAIL MOUNTED SIGN)	INSTALL ROADSIDE SIGN (LAMINATED WOOD BOX POST)		ONE POST (WEED CONTROL MAT RUBBER)	FLUSH MOUNTED SIGN	INSTALL SIGN (STRAP AND SADDLE BRACKET METHOD)	REMARKS
			mm	mm	m	m	m	m	mm x mm				EA	EA	EA	EA	EA	EA	kg	EA		EA	EA	EA	
PD-5	506	W1-7	1200	x 600															60						
		TYPE N(CA)	450	x 450																					
	507	R61-26(CA)	1200	x 750														1							
	508	R3-4	600	x 600														1							
	509	W1-6L														1									
		W1-6L														1									
	510	D11-1														1									
	511	R9-3a	600	x 600																				1	
	512	G7-1(CA)	1680	x 457														1							
	513	R73-6	900	x 900														1							
	514	D11-1	600	x 450															60						
	515	R2-1(45)	600	x 750															60						
	516	R3-7(R)	750	x 750	0.8	2.1	1.1	3.7	X				1												
	517	D3-1														1									
		D3-1																							
	518	R9-3a	600	x 600	0.7	2.1	1.1		X				1												
	519	R2-1(35)														1									
		D11-1																							
	520	W1-1a(15)														1									
	521	W1-1														1									
	522	R3-7(R)	750	x 750	0.8	2.1	1.1	3.7		X			1												
	523	G20(CA)(Mod)	2740	x 1829	1.8	2.1	1.8	5.7				X		1											
	524	R8-3A															1								
	525	W2-4	750	x 750																				1	
	526	R(Mod)														1									
	527	W1-6R														1									
		TYPE N(CA)																							
	528	G7-1(CA)	1680	x 457														1							
	529	R81(CA)	600	x 450	0.9	2.1	1.1	3.2		X			1												
		R9-3a	600	x 600																					
	530	R2-1(45)	600	x 750	0.8	2.1	1.1	3.7		X			1												
	531	R93-2(2)(CA)	900	x 2100																				1	
PD-6	601	SW26R(CA)(Mod)														1									
PD-7	701	W4-2R	1200	x 1200	1.7	2.1	1.5	5.3			X		1												
	702	R82-1(CA)	1219	x 2134		2.1																		1	
PD-9	901	R11(CA)	900	x 900		0.6													60						
		R11A(CA)	900	x 600																					
									SUBTOTAL (THIS SHEET)				6	1		10	1	5	240					4	

(N) - NOT A SEPARATE PAY ITEM, FOR INFORMATION ONLY

SIGN QUANTITIES

SQ-7

REVISED BY	DATE REVISED

MICHAEL KINNEAR — CALCULATED-DESIGNED BY
MICHAEL ROBERTS — CHECKED BY
CONSULTANT FUNCTIONAL SUPERVISOR: CHRIS JOHNSON

STATE OF CALIFORNIA - DEPARTMENT OF TRANSPORTATION
Caltrans

LAST REVISION 05-29-09 | DATE PLOTTED => 29-SEP-2010 TIME PLOTTED => 14:35

DIST	COUNTY	ROUTE	KILOMETER POST TOTAL PROJECT	SHEET NO.	TOTAL SHEETS
11	SD	5,805	R49.9/R51.7, 42.6/46.5	406	886

Caltrans Metric

REGISTERED CIVIL ENGINEER 5/8/09 DATE

9-27-10
PLANS APPROVAL DATE

PROFESSIONAL ENGINEER REGISTERED MICHAEL L. ROBERTS No. C64413 Exp. 6/30/11 CIVIL STATE OF CALIFORNIA

THE STATE OF CALIFORNIA OR ITS OFFICERS OR AGENTS SHALL NOT BE RESPONSIBLE FOR THE ACCURACY OR COMPLETENESS OF ELECTRONIC COPIES OF THIS PLAN SHEET.

Dokken Engineering
5675 Ruffin Road,
Suite 250
San Diego, CA 92123

NOTES:

1. FEDERAL (MUTCD) SIGN CODES ARE SHOWN UNLESS DESIGNATED BY (CA) INDICATING STANDARD CALIFORNIA SIGN SPECIFICATIONS.
2. MINIMUM POST LENGTHS WERE CALCULATED ASSUMING A LEVEL GROUND SURFACE FROM THE EP. ENSURE "C" DIMENSIONS ARE MET. POST LENGTHS MAY VARY DUE TO SITE CONDITIONS.
3. EXACT LOCATIONS OF SIGNS AND POSTS SHALL BE DETERMINED BY THE ENGINEER.
4. REFER TO "FURNISH ROADSIDE SIGN PANEL" CHART FOR FURTHER INFORMATION.

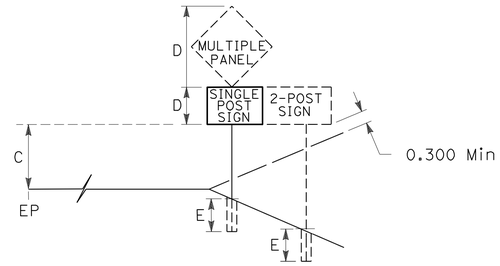

ROADSIDE SIGN QUANTITIES

SHEET No.	SIGN No.	CODE	PANEL SIZE Horiz mm	PANEL SIZE Vert mm	D Dim m	C Dim m	E Min m	MIN POST LENGTH m	POST SIZE 89 x 89 (mm x mm)	POST SIZE 89 x 140 (mm x mm)	POST SIZE 140 x 140 (mm x mm)	POST SIZE 140 x 184 (mm x mm)	ROADSIDE SIGN ONE POST EA	ROADSIDE SIGN TWO POST EA	ROADSIDE SIGN RELOCATE EA	ROADSIDE SIGN REMOVE EA	ROADSIDE SIGN RESET EA	MAST ARM MOUNTED (N) EA	METAL (RAIL MOUNTED SIGN) kg	INSTALL ROADSIDE SIGN (LAMINATED WOOD BOX POST) EA		ONE POST (WEED CONTROL MAT RUBBER) EA	FLUSH MOUNTED SIGN EA	INSTALL SIGN (STRAP AND SADDLE BRACKET METHOD) EA	REMARKS
PD-9	902	W4-2R														1									
		R4-1																							
	903	W4-2R	900	900	2.5	1.8	1.5	5.5			X		1												
		R4-1	610	750																					
	904	R89-2(CA)														1									
	905	R89-2(CA)														1									
	906	W4-3	1200	1200	1.7	2.1	1.5	5.3			X											1			
	907	W51(CA)	1200	1200	1.7	2.1	1.5	5.3			X		1												
	908	W4-3														1									
	909	R89-2(2)(CA)	600	250														1							
	910	R89-2(2)(CA)	600	250														1							
	911	R89-2(2)(CA)	600	250														1							
	912	R91(CA)														1									
	913	W4-2L	900	900	1.3	2.1	1.4	4.8		X			1												
	914	R84-1(CA)	914	1524															60						
	915	W3-3	900	900														1							
	916	R10-6R	600	900	0.9	1.8	1.1	4.1	X				1												
	917	R91-1(CA)														1									
	918	R10-6L	600	900	0.9	1.8	1.1	4.1	X				1												
	919	R5-10a														1									
	920	R5-10a	750	900	0.9	2.1	1.4	4.4		X			1												
	921	R91-1(CA)	1200	1650	1.7	2.1	1.5	5.3			X		1												
	922	G84-1(CA)	900	1350															60						
	923	W3-3														1									
	924	R26A(CA)	600	750	0.8	2.1	1.1	3.7	X				1												
	925	G92(CA)														1									
		G27-2(805)(CA)																							
		G48(CA)																							
		G43(CA)																							
	926	R26A(CA)														1									
	927	R33(Mod)(CA)														1									
		TYPE N(CA)																							
	928	R26A(CA)	600	750	0.8	2.1	1.1	3.7	X				1												
	929	R26A(CA)														1									
	930	W11-2														1									
	931	S32	900	750	1.2	2.1	1.4	4.7		X			1												
		S32-1	450	375																					
	932	S32														1									
		S32-1																							
									SUBTOTAL (THIS SHEET)				10			14		4	120			1			

(N) - NOT A SEPARATE PAY ITEM, FOR INFORMATION ONLY

SIGN QUANTITIES

SQ-8

MICHAEL KINNEAR — REVISED BY
MICHAEL ROBERTS — DATE REVISED
CALCULATED-DESIGNED BY
CHECKED BY
CHRIS JOHNSON — CONSULTANT FUNCTIONAL SUPERVISOR

STATE OF CALIFORNIA - DEPARTMENT OF TRANSPORTATION
Caltrans

LAST REVISION 05-29-09
DATE PLOTTED => 29-SEP-2010
TIME PLOTTED => 14:35

DIST	COUNTY	ROUTE	KILOMETER POST TOTAL PROJECT	SHEET NO.	TOTAL SHEETS
11	SD	5,805	R49.9/R51.7, 42.6/46.5	407	886

REGISTERED CIVIL ENGINEER 5/8/09 DATE

9-27-10
PLANS APPROVAL DATE

PROFESSIONAL ENGINEER REGISTERED MICHAEL L. ROBERTS No. C64413 Exp. 6/30/11 CIVIL STATE OF CALIFORNIA

THE STATE OF CALIFORNIA OR ITS OFFICERS OR AGENTS SHALL NOT BE RESPONSIBLE FOR THE ACCURACY OR COMPLETENESS OF ELECTRONIC COPIES OF THIS PLAN SHEET.

Dokken Engineering
5675 Ruffin Road,
Suite 250
San Diego, CA 92123

Caltrans Metric

NOTES:

1. FEDERAL (MUTCD) SIGN CODES ARE SHOWN UNLESS DESIGNATED BY (CA) INDICATING STANDARD CALIFORNIA SIGN SPECIFICATIONS.
2. MINIMUM POST LENGTHS WERE CALCULATED ASSUMING A LEVEL GROUND SURFACE FROM THE EP. ENSURE "C" DIMENSIONS ARE MET. POST LENGTHS MAY VARY DUE TO SITE CONDITIONS.
3. EXACT LOCATIONS OF SIGNS AND POSTS SHALL BE DETERMINED BY THE ENGINEER.
4. REFER TO "FURNISH ROADSIDE SIGN PANEL" CHART FOR FURTHER INFORMATION.

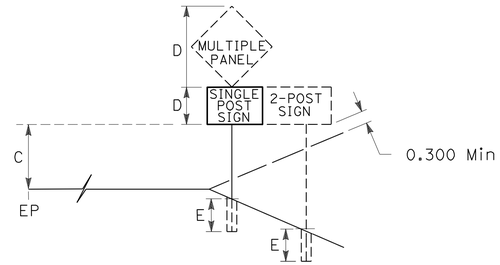

ROADSIDE SIGN QUANTITIES

SHEET No.	SIGN No.	CODE	PANEL SIZE Horiz mm	PANEL SIZE Vert mm	D Dim m	C Dim m	E Min m	MIN POST LENGTH m	POST SIZE 89 x 89	POST SIZE 89 x 140	POST SIZE 140 x 140	POST SIZE 140 x 184	ROADSIDE SIGN ONE POST EA	ROADSIDE SIGN TWO POST EA	ROADSIDE SIGN RELOCATE EA	ROADSIDE SIGN REMOVE EA	ROADSIDE SIGN RESET EA	MAST ARM MOUNTED (N) EA	METAL (RAIL MOUNTED SIGN) kg	INSTALL ROADSIDE SIGN (LAMINATED WOOD BOX POST) EA		ONE POST (WEED CONTROL MAT RUBBER) EA	FLUSH MOUNTED SIGN EA	INSTALL SIGN (STRAP AND SADDLE BRACKET METHOD) EA	REMARKS
PD-9	933	W11-2														1									
	934	R18B(Mod)(CA)	900	900	0.9	2.1	0.8	3.8	X				1												
	935	W74(L)	1200	1200	1.7	2.1	0.8	4.6			X		1												
	936	R18(CA)														1									
	937	W72B(CA)	914	1676															60						
	938	TYPE R	600	750																					MOUNT TO CRASH CUSHION
PD-10	1001	R86-2(CA)	900	1650																				1	
	1002	R18A(L)(CA)	1219	1372		2.1													60						
	1003	W4-7(R)	1200	1200		2.1													60						
	1004	W3-3														1									
	1006	W3-3	900	900	1.3	1.8	1.4	4.8		X			1												
	1007	R61(CA)(Mod)	2290	1143	1.2	2.1	1.5	4.8		X				1											
	1008	R61(CA)(Mod)	2290	1143	1.2	2.1	1.5	4.8		X				1											
	1009	G8-16(CA)	2740	1524	2.1	2.1	1.8	5.8												1					2 POST - TYPE M
		G8-22(CA)	2740	508																					
	1010	R61-13(CA)														1									
	1011	R61-13(CA)														1									
	1012	W1-8R	750	900	0.9	2.1	1.4	4.4		X			1												
	1014	W4-10R(30)(CA)	1219	1219	1.7	2.1	1.5	5.3			X		1												
	1015	W1-8R	750	900	0.9	2.1	1.4	4.4		X			1												
	1019	R91-1(CA)	1200	1650	1.7	2.1	1.5	5.3			X		1												BUSES OK
	1020	R10-6R	600	900		1.8			X				1												
	1021	W1-8R	750	900	0.9	2.1	1.4	4.4		X			1												
	1022	W1-8R	750	900	0.9	2.1	1.4	4.4		X			1												
	1023	W4-2														1									
	1024	W1-8R														1									
	1025	W1-8R														1									
	1026	W1-8R														1									
	1027	R91-1(CA)	1200	1650	1.7	2.1	1.5	5.3			X		1												
	1028	R10-6L	600	900		1.8			X				1												
	1029	W4-3														1									
	1030	R89-2(2)(CA)													1										
	1031	W4-2L	900	900	1.3	2.1	1.4	4.8		X			1												
	1032	R89-2(2)(CA)													1										
									SUBTOTAL (THIS SHEET)				13	2	2	10			180	1				1	

(N) - NOT A SEPARATE PAY ITEM, FOR INFORMATION ONLY

SIGN QUANTITIES

SQ-9

STATE OF CALIFORNIA - DEPARTMENT OF TRANSPORTATION
Caltrans

CONSULTANT FUNCTIONAL SUPERVISOR: CHRIS JOHNSON
CALCULATED-DESIGNED BY: MICHAEL KINNEAR
CHECKED BY: MICHAEL ROBERTS
REVISED BY
DATE REVISED

LAST REVISION 05-29-09
DATE PLOTTED => 29-SEP-2010
TIME PLOTTED => 14:36

NOTES:

1. FEDERAL (MUTCD) SIGN CODES ARE SHOWN UNLESS DESIGNATED BY (CA) INDICATING STANDARD CALIFORNIA SIGN SPECIFICATIONS.
2. MINIMUM POST LENGTHS WERE CALCULATED ASSUMING A LEVEL GROUND SURFACE FROM THE EP. ENSURE "C" DIMENSIONS ARE MET. POST LENGTHS MAY VARY DUE TO SITE CONDITIONS.
3. EXACT LOCATIONS OF SIGNS AND POSTS SHALL BE DETERMINED BY THE ENGINEER.
4. REFER TO "FURNISH ROADSIDE SIGN PANEL" CHART FOR FURTHER INFORMATION.

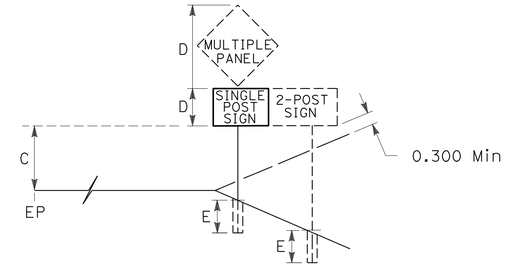

DIST	COUNTY	ROUTE	KILOMETER POST TOTAL PROJECT	SHEET NO.	TOTAL SHEETS
11	SD	5,805	R49.9/R51.7, 42.6/46.5	408	886

Caltrans Metric

REGISTERED CIVIL ENGINEER 5/8/09 DATE

9-27-10
PLANS APPROVAL DATE

PROFESSIONAL ENGINEER REGISTERED MICHAEL L. ROBERTS No. C64413 Exp. 6/30/11 CIVIL STATE OF CALIFORNIA

THE STATE OF CALIFORNIA OR ITS OFFICERS OR AGENTS SHALL NOT BE RESPONSIBLE FOR THE ACCURACY OR COMPLETENESS OF ELECTRONIC COPIES OF THIS PLAN SHEET.

Dokken Engineering
5675 Ruffin Road,
Suite 250
San Diego, CA 92123

ROADSIDE SIGN QUANTITIES

SHEET No.	SIGN No.	CODE	PANEL SIZE Horiz	PANEL SIZE Vert	D Dim	C Dim	E Min	MIN POST LENGTH	POST SIZE 89 x 89	POST SIZE 89 x 140	POST SIZE 140 x 140	POST SIZE 140 x 184	ROADSIDE SIGN ONE POST	ROADSIDE SIGN TWO POST	ROADSIDE SIGN RELOCATE	ROADSIDE SIGN REMOVE	ROADSIDE SIGN RESET	MAST ARM MOUNTED (N)	METAL (RAIL MOUNTED SIGN)	INSTALL ROADSIDE SIGN (LAMINATED WOOD BOX POST)		ONE POST (WEED CONTROL MAT RUBBER)	FLUSH MOUNTED SIGN	INSTALL SIGN (STRAP AND SADDLE BRACKET METHOD)	REMARKS
			mm	mm	m	m	m	m	mm x mm				EA	EA	EA	EA	EA	EA	kg	EA		EA	EA	EA	
PD-10	1033	R89-2(2)(CA)													1								X		
	1034	R10-6														1									
		R89-1(2)(CA)																							
	1035	R10-6														1									
		R89-1(2)(CA)																							
	1036	W4-3	1200	1200	1.7	2.1	1.5	5.3			X											1			
	1037	W4-2R	900	900	2.5	1.8	1.5	5.5			X		1												
		R4-1	610	254																					
PD-11	1101	W4-3L	1200	1200		2.1																		1	
	1102	R86-2(CA)	900	1650		2.1													60						
	1103	R93-2(2)(CA)	900	2100		2.1													60						
	1104	G84-2(27)(CA)	1350	1200	1.2	2.1	1.5	4.8			X											1			
	1105	G84-2(27)(CA)														1									
PD-12	1201	G86(CA)(Mod)	5330	1829	1.8	2.1	1.8	5.7												1					2 POST - TYPE M
	1202	R84-2(CA)	900	1650		2.1																		1	
	1203	R93-2(2)(CA)	900	2100		2.1																		1	
PD-13	1301	R93-2(2)(CA)	900	2100		2.1													60						
	1302	R86-2(CA)	900	1650		2.1													60						
	1303	R86-2(CA)	900	1650		2.1													60						
	1304	R93-2(2)(CA)	900	2100		2.1													60						
PD-15	1501	G(CA)(Mod)														1									
	1502	G(CA)(Mod)	2590	914	0.9	2.1	1.4	4.4		X				1											
	1503	R93-2(2)(CA)	900	2100		2.1													60						
	1504	G86-9(CA)	1070	1676		2.1													60						
	1505	G(CA)(Mod)														1									
PD-16	1601	R86-2(CA)	900	1650		2.1													60						
	1602	R93-2(2)(CA)														1									
	1603	SR50-2(341)(CA)														1									
	1604	G85-8(CA)(Mod)	1070	1676		2.1																		1	
PD-17	1701	SR50-2(401)(CA)	900	1950		2.1													60						
PD-18	1801	R93-2(2)(CA)	900	2100		2.1													60						
PD-19	1901	R86-2(CA)	600	1650		2.1													60						
PD-21	2101	R84-1(CA)														1									
	2102	R93-2(2)(CA)	900	2100																				1	
	2103	R86-2(CA)	600	1650		2.1													60						
PD-22	2201	SR50-2(401)(CA)	914	1950		2.1													60						
PD-23	2301	G85-8(CA)(Mod)	1070	1676		2.1																		1	
PD-24	2401	R86-2(CA)														1									
									SUBTOTAL (THIS SHEET)				1	1	1	9			840	1		2		6	

(N) - NOT A SEPARATE PAY ITEM, FOR INFORMATION ONLY

SIGN QUANTITIES

SQ-10

STATE OF CALIFORNIA - DEPARTMENT OF TRANSPORTATION
Caltrans

CONSULTANT FUNCTIONAL SUPERVISOR: CHRIS JOHNSON
CALCULATED-DESIGNED BY: MICHAEL KINNEAR
CHECKED BY: MICHAEL ROBERTS
REVISED BY / DATE REVISED

LAST REVISION 05-29-09
DATE PLOTTED => 29-SEP-2010
TIME PLOTTED => 14:36

DIST	COUNTY	ROUTE	KILOMETER POST TOTAL PROJECT	SHEET NO.	TOTAL SHEETS
11	SD	5,805	R49.9/R51.7, 42.6/46.5	409	886

REGISTERED CIVIL ENGINEER 5/8/09 DATE

9-27-10
PLANS APPROVAL DATE

PROFESSIONAL ENGINEER REGISTERED MICHAEL L. ROBERTS No. C64413 Exp. 6/30/11 CIVIL STATE OF CALIFORNIA

THE STATE OF CALIFORNIA OR ITS OFFICERS OR AGENTS SHALL NOT BE RESPONSIBLE FOR THE ACCURACY OR COMPLETENESS OF ELECTRONIC COPIES OF THIS PLAN SHEET.

Dokken Engineering
5675 Ruffin Road,
Suite 250
San Diego, CA 92123

Caltrans Metric

NOTES:

1. FEDERAL (MUTCD) SIGN CODES ARE SHOWN UNLESS DESIGNATED BY (CA) INDICATING STANDARD CALIFORNIA SIGN SPECIFICATIONS.
2. MINIMUM POST LENGTHS WERE CALCULATED ASSUMING A LEVEL GROUND SURFACE FROM THE EP. ENSURE "C" DIMENSIONS ARE MET. POST LENGTHS MAY VARY DUE TO SITE CONDITIONS.
3. EXACT LOCATIONS OF SIGNS AND POSTS SHALL BE DETERMINED BY THE ENGINEER.
4. REFER TO "FURNISH ROADSIDE SIGN PANEL" CHART FOR FURTHER INFORMATION.

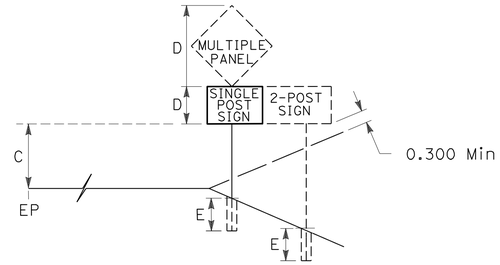

ROADSIDE SIGN QUANTITIES

SHEET No.	SIGN No.	CODE	PANEL SIZE Horiz mm	PANEL SIZE Vert mm	D Dim m	C Dim m	E Min m	MIN POST LENGTH m	POST SIZE 89 x 89 (mm x mm)	POST SIZE 89 x 140 (mm x mm)	POST SIZE 140 x 140 (mm x mm)	POST SIZE 140 x 184 (mm x mm)	ROADSIDE SIGN ONE POST EA	ROADSIDE SIGN TWO POST EA	ROADSIDE SIGN RELOCATE EA	ROADSIDE SIGN REMOVE EA	ROADSIDE SIGN RESET EA	MAST ARM MOUNTED (N) EA	METAL (RAIL MOUNTED SIGN) kg	INSTALL ROADSIDE SIGN (LAMINATED WOOD BOX POST) EA		ONE POST (WEED CONTROL MAT RUBBER) EA	FLUSH MOUNTED SIGN EA	INSTALL SIGN (STRAP AND SADDLE BRACKET METHOD) EA	REMARKS
PD-24	2402	G86-8(CA)(Mod)	1070	1676																				1	
	2403	SR50-2(401)(CA)	914	1950															60						
PD-25	2501	G20(CA)(Mod)	2740	1829	1.8	2.1	1.8	5.7				X		1											
PD-26	2601	G8-7(CA)														1									
	2602	W1-8R														1									
	2603	W1-8R														1									
	2604	G8-7(CA)														1									
		G8-22(CA)																							
	2605	R5-10c														1									
	2606	W1-8R														1									
	2607	R5-1														1									
		R5-1a																							
	2608	R5-10c														1									
	2609	R10-11a														1									
		R6-1(L)																							
	2610	R5-1														1									
		R5-1a																							
	2611	W4-10R(30)(CA)														1									
	2612	W1-8R														1									
	2613	R6-1(R)														1									
		R6-1(L)																							
	2614	R6-1(L)														1									
	2615	W1-8R														1									
	2616	W1-8R														1									
	2617	R49(R)(CA)														1									
		R49(L)(CA)																							
	2618	R16B(CA)														1									
	2619	R4-7														1									
		TYPE N(CA)																							
	2620	R3-18														1									
	2621	R3-4														1									
		R3-4																							
	2622	R3-4														1									
	2623	R17B(CA)														1									
	2624	R10-11a														1									
	2625	R81B(CA)														1									
		R81(CA)																							
		D11-1																							
		G8(CA)(Mod)																							
									SUBTOTAL (THIS SHEET)					1		25			60					1	

(N) - NOT A SEPARATE PAY ITEM, FOR INFORMATION ONLY

SIGN QUANTITIES

SQ-11

REVISED BY | DATE REVISED
MICHAEL KINNEAR | MICHAEL ROBERTS
CALCULATED-DESIGNED BY | CHECKED BY
CONSULTANT FUNCTIONAL SUPERVISOR
CHRIS JOHNSON
STATE OF CALIFORNIA - DEPARTMENT OF TRANSPORTATION
Caltrans

LAST REVISION 05-29-09 | DATE PLOTTED => 29-SEP-2010 TIME PLOTTED => 14:36

DIST	COUNTY	ROUTE	KILOMETER POST TOTAL PROJECT	SHEET NO.	TOTAL SHEETS
11	SD	5,805	R49.9/R51.7, 42.6/46.5	410	886

REGISTERED CIVIL ENGINEER 5/8/09 DATE

9-27-10
PLANS APPROVAL DATE

PROFESSIONAL ENGINEER REGISTERED MICHAEL L. ROBERTS No. C64413 Exp. 6/30/11 CIVIL STATE OF CALIFORNIA

THE STATE OF CALIFORNIA OR ITS OFFICERS OR AGENTS SHALL NOT BE RESPONSIBLE FOR THE ACCURACY OR COMPLETENESS OF ELECTRONIC COPIES OF THIS PLAN SHEET.

Dokken Engineering
5675 Ruffin Road,
Suite 250
San Diego, CA 92123

Caltrans Metric

NOTES:

1. FEDERAL (MUTCD) SIGN CODES ARE SHOWN UNLESS DESIGNATED BY (CA) INDICATING STANDARD CALIFORNIA SIGN SPECIFICATIONS.
2. MINIMUM POST LENGTHS WERE CALCULATED ASSUMING A LEVEL GROUND SURFACE FROM THE EP. ENSURE "C" DIMENSIONS ARE MET. POST LENGTHS MAY VARY DUE TO SITE CONDITIONS.
3. EXACT LOCATIONS OF SIGNS AND POSTS SHALL BE DETERMINED BY THE ENGINEER.
4. REFER TO "FURNISH ROADSIDE SIGN PANEL" CHART FOR FURTHER INFORMATION.

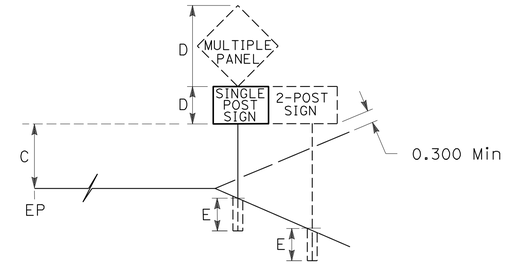

ROADSIDE SIGN QUANTITIES

SHEET No.	SIGN No.	CODE	PANEL SIZE Horiz	PANEL SIZE Vert	D Dim	C Dim	E Min	MIN POST LENGTH	POST SIZE 89 x 89	POST SIZE 89 x 140	POST SIZE 140 x 140	POST SIZE 140 x 184	ROADSIDE SIGN ONE POST	ROADSIDE SIGN TWO POST	ROADSIDE SIGN RELOCATE	ROADSIDE SIGN REMOVE	ROADSIDE SIGN RESET	MAST ARM MOUNTED (N)	METAL (RAIL MOUNTED SIGN)	INSTALL ROADSIDE SIGN (LAMINATED WOOD BOX POST)		ONE POST (WEED CONTROL MAT RUBBER)	FLUSH MOUNTED SIGN	INSTALL SIGN (STRAP AND SADDLE BRACKET METHOD)	REMARKS
			mm	mm	m	m	m	m	mm x mm				EA	EA	EA	EA	EA	EA	kg	EA		EA	EA	EA	
PD-26	2626	G8-7(CA)														1									
	2627	TYPE N(CA)														1									
	2628	TYPE N(CA)														1									
	2629	R6-1(L)														1									
	2630	R61-13(CA)														1									
	2631	R(Mod)														1									
		TYPE N(CA)																							
	2632	R49(R)(CA)														1									
		R49(L)(CA)																							
	2633	R24(CA)														1									
		R25(CA)																							
	2634	R3-7(R)														1									
	2635	R24(CA)														1									
		R25(CA)																							
	2636	W31(CA)														1									
	2637	R26(CA)														1									
	2638	R26(CA)														1									
	2639	R26(CA)														1									
	2640	R26(CA)														1									
	2641	SPECIAL														1									
	2642	R81A(CA)														1									
		R26(CA)																							
	2643	D3-1														1									
		D3-1																							
		D3-1																							
		R1-1																							
		R81B(CA)																							
		R26(CA)																							
	2644	G77(Mod)														1									
	2645	G92(CA)														1									
		G27-2(805)(CA)																							
		G48(CA)																							
		G44(CA)																							
	2646	W3-3														1									
		W10-10(Mod)																							
	2647	R33(CA)(Mod)														1									
		TYPE N(CA)																							
		TYPE N(CA)																							
									SUBTOTAL (THIS SHEET)							22									

(N) - NOT A SEPARATE PAY ITEM, FOR INFORMATION ONLY

SIGN QUANTITIES

SQ-12

STATE OF CALIFORNIA - DEPARTMENT OF TRANSPORTATION
Caltrans

CONSULTANT FUNCTIONAL SUPERVISOR: CHRIS JOHNSON
CALCULATED-DESIGNED BY: MICHAEL KINNEAR
CHECKED BY: MICHAEL ROBERTS
REVISED BY / DATE REVISED

LAST REVISION 05-29-09
DATE PLOTTED => 29-SEP-2010
TIME PLOTTED => 14:36

DIST	COUNTY	ROUTE	KILOMETER POST TOTAL PROJECT	SHEET NO.	TOTAL SHEETS
11	SD	5,805	R49.9/R51.7, 42.6/46.5	411	886

REGISTERED CIVIL ENGINEER 5/8/09 DATE

9-27-10
PLANS APPROVAL DATE

PROFESSIONAL ENGINEER REGISTERED MICHAEL L. ROBERTS No. C64413 Exp. 6/30/11 CIVIL STATE OF CALIFORNIA

THE STATE OF CALIFORNIA OR ITS OFFICERS OR AGENTS SHALL NOT BE RESPONSIBLE FOR THE ACCURACY OR COMPLETENESS OF ELECTRONIC COPIES OF THIS PLAN SHEET.

Dokken Engineering
5675 Ruffin Road,
Suite 250
San Diego, CA 92123

NOTES:

1. FEDERAL (MUTCD) SIGN CODES ARE SHOWN UNLESS DESIGNATED BY (CA) INDICATING STANDARD CALIFORNIA SIGN SPECIFICATIONS.
2. MINIMUM POST LENGTHS WERE CALCULATED ASSUMING A LEVEL GROUND SURFACE FROM THE EP. ENSURE "C" DIMENSIONS ARE MET. POST LENGTHS MAY VARY DUE TO SITE CONDITIONS.
3. EXACT LOCATIONS OF SIGNS AND POSTS SHALL BE DETERMINED BY THE ENGINEER.
4. REFER TO "FURNISH ROADSIDE SIGN PANEL" CHART FOR FURTHER INFORMATION.

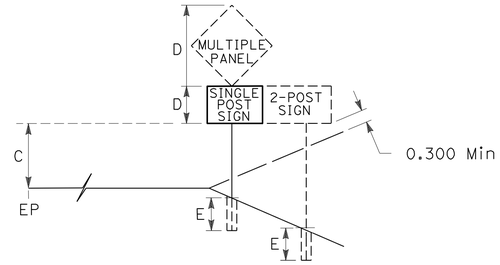

ROADSIDE SIGN QUANTITIES

SHEET No.	SIGN No.	CODE	PANEL SIZE Horiz	PANEL SIZE Vert	D Dim	C Dim	E Min	MIN POST LENGTH	POST SIZE 89 x 89	POST SIZE 89 x 140	POST SIZE 140 x 140	POST SIZE 140 x 184	ROADSIDE SIGN ONE POST	ROADSIDE SIGN TWO POST	ROADSIDE SIGN RELOCATE	ROADSIDE SIGN REMOVE	ROADSIDE SIGN RESET	MAST ARM MOUNTED (N)	METAL (RAIL MOUNTED SIGN)	INSTALL ROADSIDE SIGN (LAMINATED WOOD BOX POST)	ONE POST (WEED CONTROL MAT RUBBER)	FLUSH MOUNTED SIGN	INSTALL SIGN (STRAP AND SADDLE BRACKET METHOD)	REMARKS
			mm	mm	m	m	m	m	mm x mm				EA	EA	EA	EA	EA	EA	kg	EA	EA	EA	EA	
PD-26	2648	G92(CA)														1								
		G27-2(805)(CA)																						
		G48(CA)																						
		G43(CA)																						
	2649	W3-3														1								
		W10-10(Mod)																						
	2650	W3-3														1								
		W10-10(Mod)																						
	2651	W3-3														1								
		W10-10(Mod)																						
	2652	G92(CA)														1								
		G27-2(805)(CA)																						
		G48(CA)																						
		G44(CA)																						
	2653	G92(CA)														1								
		G27-2(805)(CA)																						
		G48(CA)																						
		G43(CA)																						
	2654	W8-5														1								
	2655	G8(CA)(Mod)														1								
	2656	R5-10a														1								
	2657	R33(CA)(Mod)														1								
		R73-2(CA)(Mod)																						
		W16-9P																						
	2658	R3-7(R)														1								
		R10-7																						
	2659	W3-3														1								
SUBTOTAL (THIS SHEET)																12								
SUBTOTAL (SHEET 12)																22								
SUBTOTAL (SHEET 11)														1		25			60				1	
SUBTOTAL (SHEET 10)													1	1	1	9			840	1	2		6	
SUBTOTAL (SHEET 9)													13	2	2	10			180	1			1	
SUBTOTAL (SHEET 8)													10			14		4	120		1			
SUBTOTAL (SHEET 7)													6	1		10	1	5	240				4	
SUBTOTAL (SHEET 6)													1	2		2		5	540			1	7	
SUBTOTAL (SHEET 5)													7	3				6	60		1	1	10	
SUBTOTAL (SHEET 4)													6					5	120				12	
SUBTOTAL (SHEET 3)													8	2	2	5		2	60				1	
TOTAL													52	12	5	109	1	27	2220	2	4	2	42	

(N) - NOT A SEPARATE PAY ITEM, FOR INFORMATION ONLY

SIGN QUANTITIES

SQ-13

STATE OF CALIFORNIA - DEPARTMENT OF TRANSPORTATION
Caltrans

CONSULTANT FUNCTIONAL SUPERVISOR: CHRIS JOHNSON
CALCULATED-DESIGNED BY: MICHAEL KINNEAR
CHECKED BY: MICHAEL ROBERTS
REVISED BY / DATE REVISED

LAST REVISION 05-29-09
DATE PLOTTED => 29-SEP-2010
TIME PLOTTED => 14:36

DIST	COUNTY	ROUTE	KILOMETER POST TOTAL PROJECT	SHEET NO.	TOTAL SHEETS
11	SD	5,805	R49.9/R51.7, 42.6/46.5	412	886

Caltrans Metric

REGISTERED CIVIL ENGINEER 5/8/09 DATE

9-27-10
PLANS APPROVAL DATE

PROFESSIONAL ENGINEER REGISTERED MICHAEL L. ROBERTS No. C64413 Exp. 6/30/11 CIVIL STATE OF CALIFORNIA

THE STATE OF CALIFORNIA OR ITS OFFICERS OR AGENTS SHALL NOT BE RESPONSIBLE FOR THE ACCURACY OR COMPLETENESS OF ELECTRONIC COPIES OF THIS PLAN SHEET.

Dokken Engineering
5675 Ruffin Road,
Suite 250
San Diego, CA 92123

NOTES:
1. FEDERAL (MUTCD) SIGN CODES ARE SHOWN UNLESS DESIGNATED BY (CA) INDICATING STANDARD CALIFORNIA SIGN SPECIFICATIONS.
2. REFER TO"ROADSIDE SIGN QUANTITIES" CHART FOR FURTHER INFORMATION.
   COLOR DESIGNATIONS ARE AS FOLLOWS:
3. GREEN-Grn, WHITE-Wht, BLACK-Blk, BLUE-Blu, YELLOW-Ylw, BROWN-Brn, RED-Red, ORANGE-Org, CREAM-Crm, PANTONE 327C-P327C.

FURNISH ROADSIDE SIGN PANEL

SHEET No.	SIGN No.	CODE	PANEL SIZE Horiz (mm x mm)	PANEL SIZE Vert (mm x mm)	BACKGROUND SHEETING COLOR	BACKGROUND RETRO-REFLECTIVE ASTM TYPE	LEGEND SHEETING COLOR	LEGEND REFLECTIVE ASTM TYPE	LEGEND BLACK(NON-REFLECTIVE)	SIGN PANEL SINGLE SHEET ALUMINUM (m^2) UNFRAMED 1.6 mm	SINGLE SHEET ALUMINUM (m^2) UNFRAMED 2.0 mm	SINGLE SHEET ALUMINUM (m^2) FRAMED 1.6 mm	SINGLE SHEET ALUMINUM (m^2) FRAMED 2.0 mm	LAMINATED (m^2) TYPE B 25.4 mm	LAMINATED (m^2) TYPE H 63.5 mm	PROTECTIVE OVERLAY PREMIUM FILM	REMARKS
PD-1	101	R3-4	600	600	WHITE	VII	Red/Blk	VII	X	0.36						X	
		R4-7	600	750	WHITE	III	BLACK		X	0.45						X	
	103	R3-4	600	600	WHITE	VII	Red/Blk	VII	X	0.36						X	
		R4-7	600	750	WHITE	III	BLACK		X	0.45						X	
	108	R3-4	600	600	WHITE	VII	Red/Blk	VII	X	0.36						X	
		R3-2	600	600	WHITE	VII	Red/Blk	VII	X	0.36						X	
	111	G20(CA)(Mod)	2740	1829	GREEN	IV	Wht/Blk	IV	X				5.01			X	
	112	G8-7(CA)	2440	914	GREEN	IV	WHITE	IV					2.23			X	
PD-3	301	R91-1(CA)	1200	1650	WHITE	III	Wht/Blk	IV	X		1.98					X	BUSES OK
	302	R6-1(L)	1375	450	BLACK		Wht/Blk	IV	X	0.27						X	
	303	R11(CA)	900	900	WHITE	VII	RED	VII		0.81						X	
		R11A(CA)	900	600	RED	VII	WHITE	VII		0.47						X	
	304	R81A(CA)	300	125	WHITE	III	BLACK		X	0.04						X	
		R81(CA)	600	450	WHITE	III	BLACK		X	0.27						X	
	305	R10-11	600	750	WHITE	III	Red/Blk		X	0.45						X	
	306	G7-1(CA)	2440	457	GREEN	IV	WHITE	IV					1.12			X	
	307	R73-3(CA)	900	900	WHITE	III	BLACK		X	0.81						X	
	308	R4-7	600	750	WHITE	III	BLACK		X	0.45						X	
		R3-18	600	600	WHITE	VII	Red/Blk	VII	X	0.36						X	
	309	R10-11	600	750	WHITE	III	Red/Blk		X	0.45						X	
		R81B(CA)	200	125	WHITE	III	BLACK		X	0.03						X	
		R81(CA)	600	450	WHITE	III	BLACK		X	0.27						X	
		D11-1	600	450	GREEN	III	WHITE	IV		0.27						X	
	310	R9-3a	600	X 600	WHITE	III	Red/Blk		X		0.47					X	
	311	G8-7(CA)	2590	914	GREEN	IV	WHITE	IV					2.37			X	
	312	R81A(CA)	300	125	WHITE	III	BLACK		X	0.04						X	
		R81(CA)	600	450	WHITE	III	BLACK		X	0.27						X	
	313	R61(CA)(Mod)	1524	762	WHITE	III	BLACK		X			1.28				X	
	314	R2-1(45)	600	750	WHITE	III	BLACK		X	0.45						X	
	315	R1-1	750	750	RED	VII	WHITE	VII		0.56						X	
		R1-4	450	150	RED	III	WHITE	IV		0.07						X	
	316	R81B(CA)	200	125	WHITE	III	BLACK		X	0.03						X	
		R81(CA)	600	450	WHITE	III	BLACK		X	0.27						X	
		D11-1	600	450	GREEN	III	WHITE	IV		0.27						X	
	317	R1-1	750	750	RED	VII	WHITE	VII		0.56						X	
		R1-4	450	150	RED	III	WHITE	IV		0.07						X	
	318	R1-1	750	750	RED	VII	WHITE	VII		0.56						X	
		R1-4	450	150	RED	III	WHITE	IV		0.07						X	
	319	W4-10(R)(25)	1200	1200	YELLOW	III	BLACK		X			1.44				X	
	320	G8-22(L)(CA)	1220	914	GREEN	IV	WHITE	IV			1.12					X	
	321	R9-3a	600	X 600	WHITE	III	Red/Blk		X		0.47					X	
	322	W1-7	1200	600	YELLOW	III	BLACK		X		0.72					X	
		TYPE N(CA)	450	450	YELLOW	III				0.2						X	
	323	R3-4	600	600	WHITE	VII	Red/Blk	VII	X	0.36						X	
	324	R9-3a	600	600	WHITE	III	Red/Blk		X		0.47					X	
	325	R81(CA)	600	450	WHITE	III	BLACK		X	0.27						X	
	326	G7-1(CA)	2590	457	GREEN	IV	WHITE	IV					2.37			X	
								SUBTOTAL (THIS SHEET)		11.34	5.23	2.72	13.10				

SIGN QUANTITIES

SQ-14

STATE OF CALIFORNIA - DEPARTMENT OF TRANSPORTATION
Caltrans

CONSULTANT FUNCTIONAL SUPERVISOR: CHRIS JOHNSON
CALCULATED-DESIGNED BY: MICHAEL KINNEAR
CHECKED BY: MICHAEL ROBERTS
REVISED BY / DATE REVISED

LAST REVISION 05-29-09
DATE PLOTTED => 29-SEP-2010
TIME PLOTTED => 14:36

DIST	COUNTY	ROUTE	KILOMETER POST TOTAL PROJECT	SHEET NO.	TOTAL SHEETS
11	SD	5,805	R49.9/R51.7, 42.6/46.5	413	886

REGISTERED CIVIL ENGINEER 5/8/09 DATE

9-27-10
PLANS APPROVAL DATE

PROFESSIONAL ENGINEER REGISTERED MICHAEL L. ROBERTS No. C64413 Exp. 6/30/11 CIVIL STATE OF CALIFORNIA

THE STATE OF CALIFORNIA OR ITS OFFICERS OR AGENTS SHALL NOT BE RESPONSIBLE FOR THE ACCURACY OR COMPLETENESS OF ELECTRONIC COPIES OF THIS PLAN SHEET.

Dokken Engineering
5675 Ruffin Road,
Suite 250
San Diego, CA 92123

NOTES:
1. FEDERAL (MUTCD) SIGN CODES ARE SHOWN UNLESS DESIGNATED BY (CA) INDICATING STANDARD CALIFORNIA SIGN SPECIFICATIONS.
2. REFER TO"ROADSIDE SIGN QUANTITIES" CHART FOR FURTHER INFORMATION.
   COLOR DESIGNATIONS ARE AS FOLLOWS:
3. GREEN-Grn, WHITE-Wht, BLACK-Blk, BLUE-Blu, YELLOW-Ylw, BROWN-Brn, RED-Red, ORANGE-Org, CREAM-Crm, PANTONE 327C-P327C.

FURNISH ROADSIDE SIGN PANEL

SHEET No.	SIGN No.	CODE	PANEL SIZE Horiz (mm x mm)	PANEL SIZE Vert (mm x mm)	BACKGROUND SHEETING COLOR	BACKGROUND RETRO-REFLECTIVE ASTM TYPE	LEGEND SHEETING COLOR	LEGEND REFLECTIVE ASTM TYPE	LEGEND BLACK(NON-REFLECTIVE)	SIGN PANEL SINGLE SHEET ALUMINUM (m^2) UNFRAMED 1.6 mm	SINGLE SHEET ALUMINUM (m^2) UNFRAMED 2.0 mm	SINGLE SHEET ALUMINUM (m^2) FRAMED 1.6 mm	SINGLE SHEET ALUMINUM (m^2) FRAMED 2.0 mm	LAMINATED (m^2) TYPE B 25.4 mm	LAMINATED (m^2) TYPE H 63.5 mm	PROTECTIVE OVERLAY PREMIUM FILM	REMARKS
PD-3	327	R3-4	600 x 600		WHITE	VII	Red/Blk	IV	X	0.36						X	
	328	R2-1(45)	600 x 750		WHITE	III	BLACK		X	0.45						X	
	329	R93-2(2)(CA)	900 x 2100		WHITE	III	Wht/Blk	IV	X	1.89						X	
	330	G8-22(R)(CA)	1220 x 914		GREEN	IV	WHITE	IV			1.12					X	
	331	R4-7	600 x 750		WHITE	III	BLACK		X	0.45						X	
	332	R81B(CA)	200 x 125		WHITE	III	BLACK		X	0.03						X	
		R81(CA)	600 x 450		WHITE	III	BLACK		X	0.27						X	
		D11-1	600 x 450		GREEN	III	WHITE	IV		0.27						X	
	333	G7-1(CA)	2440 x 457		GREEN	IV	WHITE	IV					1.12			X	
	334	W4-10(L)(25)	1200 x 1200		YELLOW	III	BLACK		X		1.44					X	
	335	R81A(CA)	300 x 125		WHITE	III	BLACK		X	0.04						X	
		R81(CA)	600 x 450		WHITE	III	BLACK		X	0.27						X	
	336	R81B(CA)	200 x 125		WHITE	III	BLACK		X	0.03						X	
		R81(CA)	600 x 450		WHITE	III	BLACK		X	0.27						X	
		D11-1	600 x 450		GREEN	III	WHITE	IV		0.27						X	
	337	G20(CA)(Mod)	2740 x 1829		GREEN	IV	Wht/Blk	IV	X				5.01			X	
	338	G7-1(CA)	2590 x 457		GREEN	IV	WHITE	IV					2.37			X	
	339	R3-4	600 x 600		WHITE	VII	Red/Blk	VII	X	0.36						X	
	340	G8-7(CA)	2440 x 1524		GREEN	IV	WHITE	IV					3.72			X	
	341	W3-3	900 x 900		YELLOW	VII	BLACK		X		0.81					X	
	342	G86(CA)(Mod)	1680 x 1270		GREEN	IV	WHITE	IV				2.13				X	
	343	R18B(Mod)(CA)	1016 x 914		WHITE	III	BLACK		X	0.93						X	
	344	R10-11	600 x 750		WHITE	III	Red/Blk		X	0.45						X	
	345	G7-1(CA)	2440 x 457		GREEN	IV	WHITE	IV					1.12			X	
	346	G8-7(CA)	2590 x 914		GREEN	IV	WHITE	IV					2.37			X	
	347	R3-18	600 x 600		WHITE	VII	Red/Blk	VII	X	0.36						X	
	348	R9-3a	600 x 600		WHITE	III	Red/Blk		X		0.47					X	
	349	G92(CA)	1200 x 750		GREEN	IV	WHITE	IV			0.9					X	
		G27-2(805)(CA)	625 X 750		WHITE	IV	Blu/Red	IV		1.01						X	
		G48(CA)	525 X 229		BLUE	IV	WHITE	IV		0.28						X	
		G44(CA)	525 x 375		BLUE	IV	WHITE	IV		0.2						X	
	350	R73-6(CA)	900 x 900		WHITE	III	BLACK		X	0.81						X	
	351	R5-10a	750 x 900		WHITE	III	BLACK		X	0.68						X	
	352	G92(CA)	1200 x 750		GREEN	IV	WHITE	IV			0.9					X	
		G27-2(805)(CA)	625 X 750		WHITE	IV	Blu/Red	IV		1.01						X	
		G48(CA)	525 X 229		BLUE	IV	WHITE	IV		0.28						X	
		G43(CA)	525 x 375		BLUE	IV	WHITE	IV		0.2						X	
	353	W3-3	900 x 900		YELLOW	VII	BLACK		X		0.81					X	
		W10-10(Mod)	600 X 450		YELLOW	VII	BLACK		X	0.45						X	
	354	R6-1(R)	1375 X 450		BLACK		Wht/Blk	IV	X	0.27						X	
	355	R11(CA)	900 x 900		WHITE	VII	RED	VII		0.81						X	
		R11A(CA)	900 x 600		RED	VII	WHITE	VII		0.47						X	
	356	G92(CA)	1200 x 750		GREEN	IV	WHITE	IV			0.9					X	
		G27-2(805)(CA)	625 X 750		WHITE	IV	Blu/Red	IV		1.01						X	
		G48(CA)	525X 229		BLUE	IV	WHITE	IV		0.28						X	
		G44(CA)	525 x 375		BLUE	IV	WHITE	IV		0.2						X	
	357	W3-3	900 x 900		YELLOW	VII	BLACK		X		0.81					X	
		W10-10(Mod)	600 X 450		YELLOW	III	BLACK		X	0.45						X	
									SUBTOTAL (THIS SHEET)	15.11	8.16	2.13	15.71				

SIGN QUANTITIES

SQ-15

STATE OF CALIFORNIA - DEPARTMENT OF TRANSPORTATION
Caltrans

CONSULTANT FUNCTIONAL SUPERVISOR: CHRIS JOHNSON
CALCULATED-DESIGNED BY: MICHAEL KINNEAR
CHECKED BY: MICHAEL ROBERTS
REVISED BY / DATE REVISED

LAST REVISION 05-29-09
DATE PLOTTED => 29-SEP-2010
TIME PLOTTED => 14:36

DIST	COUNTY	ROUTE	KILOMETER POST TOTAL PROJECT	SHEET NO.	TOTAL SHEETS
11	SD	5,805	R49.9/R51.7, 42.6/46.5	414	886

REGISTERED CIVIL ENGINEER 5/8/09 DATE

9-27-10
PLANS APPROVAL DATE

PROFESSIONAL ENGINEER REGISTERED MICHAEL L. ROBERTS No. C64413 Exp. 6/30/11 CIVIL STATE OF CALIFORNIA

THE STATE OF CALIFORNIA OR ITS OFFICERS OR AGENTS SHALL NOT BE RESPONSIBLE FOR THE ACCURACY OR COMPLETENESS OF ELECTRONIC COPIES OF THIS PLAN SHEET.

Dokken Engineering
5675 Ruffin Road,
Suite 250
San Diego, CA 92123

NOTES:
1. FEDERAL (MUTCD) SIGN CODES ARE SHOWN UNLESS DESIGNATED BY (CA) INDICATING STANDARD CALIFORNIA SIGN SPECIFICATIONS.
2. REFER TO"ROADSIDE SIGN QUANTITIES" CHART FOR FURTHER INFORMATION.
   COLOR DESIGNATIONS ARE AS FOLLOWS:
3. GREEN-Grn, WHITE-Wht, BLACK-Blk, BLUE-Blu, YELLOW-Ylw, BROWN-Brn, RED-Red, ORANGE-Org, CREAM-Crm, PANTONE 327C-P327C.

FURNISH ROADSIDE SIGN PANEL

SHEET No.	SIGN No.	CODE	PANEL SIZE Horiz (mm x mm)	PANEL SIZE Vert (mm x mm)	BACKGROUND SHEETING COLOR	BACKGROUND RETRO-REFLECTIVE ASTM TYPE	LEGEND SHEETING COLOR	LEGEND REFLECTIVE ASTM TYPE	LEGEND BLACK(NON-REFLECTIVE)	SIGN PANEL SINGLE SHEET ALUMINUM (m^2) UNFRAMED 1.6 mm	SINGLE SHEET ALUMINUM (m^2) UNFRAMED 2.0 mm	SINGLE SHEET ALUMINUM (m^2) FRAMED 1.6 mm	SINGLE SHEET ALUMINUM (m^2) FRAMED 2.0 mm	LAMINATED (m^2) TYPE B 25.4 mm	LAMINATED (m^2) TYPE H 63.5 mm	PROTECTIVE OVERLAY PREMIUM FILM	REMARKS
PD-3	358	R91-1 (BUSES OK)(CA)	1200	1650	WHITE	III	Wht/Blk	IV	X		1.98					X	BUSSES OK
	359	G92(CA)	1200	750	GREEN	IV	WHITE	IV			0.9					X	
		G27-2(805)(CA)	625	750	WHITE	IV	Blu/Red	IV		1.01						X	
		G48(CA)	525	229	BLUE	IV	WHITE	IV		0.28						X	
		G43(CA)	525	375	BLUE	IV	WHITE	IV		0.2						X	
	360	G8-7(CA)	2440	914	GREEN	IV	WHITE	IV					2.23			X	
	361	R81A(CA)	300	125	WHITE	III	BLACK		X	0.04						X	
		R81(CA)	600	450	WHITE	III	BLACK		X	0.27						X	
PD-4	401	R5-10c	600	300	WHITE	III	BLACK		X	0.18						X	
	402	R11(CA)	900	900	WHITE	VII	RED	VII		0.81						X	
		R11A(CA)	900	600	RED	VII	WHITE	VII		0.47						X	
	403	G20(Mod)(CA)	2740	1829	GREEN	IV	Wht/Blk	IV	X				5.01			X	
	404	R6-1(L)	1375	450	BLACK		Wht/Blk	IV	X	0.27						X	
	405	R81(CA)	600	450	WHITE	IV	BLACK		X	0.27						X	
	406	R5-10a	750	900	WHITE	IV	BLACK		X	0.68						X	
	407	G92-1(CA)	1200	1067	GREEN	IV	Wht/Blk	IV	X	0.84						X	
		G27-1(805)(CA)	1125	900	WHITE	IV	Blu/Red	IV		1.01						X	
		G47(CA)	750	375	BLUE	IV	WHITE	IV		0.28						X	
		G34(CA)	525	375	BLUE	IV	WHITE	IV		0.2						X	
	408	G92-1(CA)	1200	1067	GREEN	IV	Wht/Blk	IV	X	0.84						X	
		G27-1(805)(CA)	625	750	WHITE	IV	Blu/Red	IV		1.01						X	
		G47(CA)	525	229	BLUE	IV	WHITE	IV		0.28						X	
		G43(CA)	525	375	BLUE	IV	WHITE	IV		0.2						X	
	409	R3-4	600	600	WHITE	VII	Red/Blk	VII	X	0.36						X	
	410	R3-4	600	600	WHITE	VII	Red/Blk	VII	X	0.36						X	
	411	R81(CA)	600	450	WHITE	III	BLACK		X	0.27						X	
	412	R2-1(45)	600	750	WHITE	III	BLACK		X	0.45						X	
	413	TYPE N(CA)	450	450	YELLOW	III				0.2						X	
	414	TYPE N(CA)	450	450	YELLOW	III				0.2						X	
	415	R3-18	600	600	WHITE	VII	Red/Blk	VII	X	0.36						X	
	416	R2-1(45)	600	750	WHITE	III	BLACK		X	0.45						X	
	417	TYPE P(CA)	300	900	YELLOW	III	BLACK		X	0.27						X	
	418	R9-3a	600	600	WHITE	III	Red/Blk	IV	X	0.2						X	
	419	R9-3a	600	600	WHITE	III	Red/Blk	IV	X	0.2						X	
	420	W51(CA)	1200	1200	YELLOW	III	BLACK		X			1.44				X	
PD-5	501	W3-3	900	900	YELLOW	VII	BLACK		X		0.81					X	
	503	R3-4	600	600	WHITE	VII	Red/Blk	VII	X	0.36						X	
	504	G7-1(CA)	2440	457	GREEN	IV	WHITE	IV					1.12			X	
	506	W1-7	1200	600	YELLOW	III	BLACK		X		0.72					X	
		TYPE N(CA)	450	450	YELLOW	III				0.2						X	
	507	R61-26(CA)	1200	750	WHITE	III	BLACK		X		0.9					X	
	508	R3-4	600	600	WHITE	VII	Red/Blk	VII	X	0.36						X	
	511	R9-3a	600	600	WHITE	III	Red/Blk		X		0.47					X	
	512	G7-1(CA)	1680	457	GREEN	IV	WHITE	IV				0.77				X	
	513	R73-6	900	900	WHITE	III	BLACK		X	0.81						X	
	514	D11-1	600	450	GREEN	III	WHITE	IV		0.27						X	
									SUBTOTAL (THIS SHEET)	14.46	5.78	2.21	8.36				

SIGN QUANTITIES

SQ-16

STATE OF CALIFORNIA - DEPARTMENT OF TRANSPORTATION
Caltrans

CONSULTANT FUNCTIONAL SUPERVISOR: CHRIS JOHNSON
CALCULATED-DESIGNED BY: MICHAEL KINNEAR
CHECKED BY: MICHAEL ROBERTS
REVISED BY / DATE REVISED

LAST REVISION 05-29-09
DATE PLOTTED => 29-SEP-2010
TIME PLOTTED => 14:36

DIST	COUNTY	ROUTE	KILOMETER POST TOTAL PROJECT	SHEET NO.	TOTAL SHEETS
11	SD	5,805	R49.9/R51.7, 42.6/46.5	415	886

REGISTERED CIVIL ENGINEER 5/8/09 DATE

9-27-10
PLANS APPROVAL DATE

PROFESSIONAL ENGINEER REGISTERED MICHAEL L. ROBERTS No. C64413 Exp. 6/30/11 CIVIL STATE OF CALIFORNIA

THE STATE OF CALIFORNIA OR ITS OFFICERS OR AGENTS SHALL NOT BE RESPONSIBLE FOR THE ACCURACY OR COMPLETENESS OF ELECTRONIC COPIES OF THIS PLAN SHEET.

Dokken Engineering
5675 Ruffin Road,
Suite 250
San Diego, CA 92123

NOTES:
1. FEDERAL (MUTCD) SIGN CODES ARE SHOWN UNLESS DESIGNATED BY (CA) INDICATING STANDARD CALIFORNIA SIGN SPECIFICATIONS.
2. REFER TO"ROADSIDE SIGN QUANTITIES" CHART FOR FURTHER INFORMATION.
   COLOR DESIGNATIONS ARE AS FOLLOWS:
3. GREEN-Grn, WHITE-Wht, BLACK-Blk, BLUE-Blu, YELLOW-Ylw, BROWN-Brn, RED-Red, ORANGE-Org, CREAM-Crm, PANTONE 327C-P327C.

FURNISH ROADSIDE SIGN PANEL

SHEET No.	SIGN No.	CODE	PANEL SIZE Horiz (mm x mm)	PANEL SIZE Vert (mm x mm)	BACKGROUND SHEETING COLOR	BACKGROUND RETRO-REFLECTIVE ASTM TYPE	LEGEND SHEETING COLOR	LEGEND REFLECTIVE ASTM TYPE	LEGEND BLACK(NON-REFLECTIVE)	SIGN PANEL SINGLE SHEET ALUMINUM (m^2) UNFRAMED 1.6 mm	SINGLE SHEET ALUMINUM (m^2) UNFRAMED 2.0 mm	SINGLE SHEET ALUMINUM (m^2) FRAMED 1.6 mm	SINGLE SHEET ALUMINUM (m^2) FRAMED 2.0 mm	LAMINATED (m^2) TYPE B 25.4 mm	LAMINATED (m^2) TYPE H 63.5 mm	PROTECTIVE OVERLAY PREMIUM FILM	REMARKS
PD-5	515	R2-1(45)	600	750	WHITE	III	BLACK		X	0.45						X	
	516	R3-7(R)	750	750	WHITE	III	BLACK		X	0.56						X	
	518	R9-3a	600	600	WHITE	III	Red/Blk		X		0.47					X	
	522	R3-7(R)	750	750	WHITE	III	BLACK		X	0.56						X	
	523	G20(CA)(Mod)	2740	1829	GREEN	IV	Wht/Blk	IV	X				5.01			X	
	525	W2-4	750	750	YELLOW	III	BLACK		X	0.56						X	
	528	G7-1(CA)	1680	457	GREEN	IV	WHITE	IV				0.77				X	
	529	R81(CA)	600	450	WHITE	III	BLACK		X	0.27						X	
		R9-3a	600	600	WHITE	III	Red/Blk	IV	X	0.2						X	
	530	R2-1(45)	600	750	WHITE	III	BLACK		X	0.45						X	
	531	R93-2(2)(CA)	900	2100	WHITE	III	Wht/Blk	IV	X	1.89						X	
PD-7	701	W4-2R	1200	1200	YELLOW	III	BLACK		X		1.44					X	
	702	R82-1(CA) (Mod)	1200	2134	WHITE	VII	Wht/Blk	IV	X	1.51						X	
PD-9	901	R11(CA)	900	900	WHITE	VII	RED	VII		0.81						X	
		R11A(CA)	900	600	RED	VII	WHITE	VII		0.47						X	
	903	W4-2R	900	900	YELLOW	III	BLACK		X		0.81					X	
		R4-1	610	750	WHITE	III	BLACK		X	1.08						X	
	906	W4-3	1200	1200	YELLOW	III	BLACK		X		1.44					X	
	907	W51(CA)	1200	1200	YELLOW	III	BLACK		X		1.44					X	
	909	R89-2(2)(CA)	600	250	WHITE	III	BLACK		X	0.15						X	
	910	R89-2(2)(CA)	600	250	WHITE	III	BLACK		X	0.15						X	
	911	R89-2(2)(CA)	600	250	WHITE	III	BLACK		X	0.15						X	
	913	W4-2L	900	900	YELLOW	III	BLACK		X		0.81					X	
	914	R84-1(CA)	914	1524	WHITE	III	Wht/Blk	IV	X	1.39						X	
	915	W3-3	900	900	YELLOW	VII	BLACK		X		0.81					X	
	916	R10-6R	600	900	WHITE	III	BLACK		X	0.54						X	
	918	R10-6L	600	900	WHITE	III	BLACK		X	0.54						X	
	920	R5-10a	750	900	WHITE	III	BLACK		X	0.68						X	
	921	R91-1(CA)	1200	1650	WHITE	III	Wht/Blk	IV	X		1.98					X	
	922	G84-1(CA)	900	1350	GREEN	IV	Wht/Blk	IV	X	1.22						X	
	924	R26A(CA)	600	750	WHITE	III	RED	IV		0.45						X	
	928	R26A(CA)	600	750	WHITE	III	RED	IV		0.45						X	
	931	S32	900	750	P327C	III	Wht/Blk	IV	X	0.68						X	
		S32-1	450	375	P327C	III	Wht/Blk	IV	X	0.17						X	
	934	R18B(Mod)(CA)	900	900	WHITE	III	BLACK		X	0.81						X	
	935	W74(L)	1200	1200	YELLOW	III	BLACK		X		1.44					X	
	937	W72B(CA)	914	1676	YELLOW	III	Wht/Blk	IV	X	1.53						X	
	938	TYPE R	600	750	YELLOW	III	BLACK		X	0.45						X	
PD-10	1001	R86-2(CA)	900	1650	WHITE	III	Wht/Blk	IV	X	1.49						X	
	1002	R18A(L)(CA)(Mod)	1219	1372	WHITE	III	BLACK		X		1.98					X	
	1003	W4-7(R)	1200	1200	YELLOW	III	BLACK		X		1.44					X	
	1006	W3-3	900	900	YELLOW	VII	BLACK		X		0.81					X	
	1007	R61(CA)(Mod)	2290	1143	WHITE	III	BLACK		X				2.62			X	
	1008	R61(CA)(Mod)	2290	1143	WHITE	III	BLACK		X				2.62			X	
	1009	G8-16(CA)	2740	1524	GREEN	IV	WHITE	IV					5.57			X	
		G8-22(CA)	2740	508	GREEN	IV	WHITE	IV					1.63			X	
SUBTOTAL (THIS SHEET)										19.66	14.87	0.77	17.45				

SIGN QUANTITIES

SQ-17

STATE OF CALIFORNIA - DEPARTMENT OF TRANSPORTATION
Caltrans

CONSULTANT FUNCTIONAL SUPERVISOR: CHRIS JOHNSON
CALCULATED-DESIGNED BY: MICHAEL KINNEAR
CHECKED BY: MICHAEL ROBERTS
REVISED BY / DATE REVISED

LAST REVISION 05-29-09
DATE PLOTTED => 29-SEP-2010
TIME PLOTTED => 14:36

DIST	COUNTY	ROUTE	KILOMETER POST TOTAL PROJECT	SHEET NO.	TOTAL SHEETS
11	SD	5,805	R49.9/R51.7, 42.6/46.5	416	886

REGISTERED CIVIL ENGINEER 5/8/09 DATE

9-27-10
PLANS APPROVAL DATE

REGISTERED PROFESSIONAL ENGINEER MICHAEL L. ROBERTS No. C64413 Exp. 6/30/11 CIVIL STATE OF CALIFORNIA

THE STATE OF CALIFORNIA OR ITS OFFICERS OR AGENTS SHALL NOT BE RESPONSIBLE FOR THE ACCURACY OR COMPLETENESS OF ELECTRONIC COPIES OF THIS PLAN SHEET.

Dokken Engineering
5675 Ruffin Road,
Suite 250
San Diego, CA 92123

NOTES:
1. FEDERAL (MUTCD) SIGN CODES ARE SHOWN UNLESS DESIGNATED BY (CA) INDICATING STANDARD CALIFORNIA SIGN SPECIFICATIONS.
2. REFER TO"ROADSIDE SIGN QUANTITIES" CHART FOR FURTHER INFORMATION.
   COLOR DESIGNATIONS ARE AS FOLLOWS:
3. GREEN-Grn, WHITE-Wht, BLACK-Blk, BLUE-Blu, YELLOW-Ylw, BROWN-Brn, RED-Red, ORANGE-Org, CREAM-Crm, PANTONE 327C-P327C.

FURNISH ROADSIDE SIGN PANEL

SHEET No.	SIGN No.	CODE	PANEL SIZE Horiz (mm x mm)	PANEL SIZE Vert (mm x mm)	BACKGROUND SHEETING COLOR	BACKGROUND RETRO-REFLECTIVE ASTM TYPE	LEGEND SHEETING COLOR	LEGEND REFLECTIVE ASTM TYPE	LEGEND BLACK(NON-REFLECTIVE)	SIGN PANEL SINGLE SHEET ALUMINUM (m^2) UNFRAMED 1.6 mm	SINGLE SHEET ALUMINUM (m^2) UNFRAMED 2.0 mm	SINGLE SHEET ALUMINUM (m^2) FRAMED 1.6 mm	SINGLE SHEET ALUMINUM (m^2) FRAMED 2.0 mm	LAMINATED (m^2) TYPE B 25.4 mm	LAMINATED (m^2) TYPE H 63.5 mm	PROTECTIVE OVERLAY PREMIUM FILM	REMARKS
PD-10	1012	W1-8R	750	900	YELLOW	VII	BLACK		X	0.68						X	
	1014	W4-10R(30)(CA)	1219	1219	YELLOW	III	BLACK		X		1.49					X	
	1015	W1-8R	750	900	YELLOW	III	BLACK		X	0.68						X	
	1019	R91-1(CA)	1200	1650	WHITE	III	Wht/Blk	IV	X		1.98					X	
	1020	R10-6R	600	900	WHITE	III	BLACK		X	0.54						X	
	1021	W1-8R	750	900	YELLOW	III	BLACK		X	0.68						X	
	1022	W1-8R	750	900	YELLOW	III	BLACK		X	0.68						X	
	1027	R91-1(CA)	1200	1650	WHITE	III	Wht/Blk	IV	X		1.98					X	
	1028	R10-6L	600	900	WHITE	III	BLACK		X	0.54						X	
	1031	W4-2L	900	900	YELLOW	III	BLACK		X		0.81					X	
	1036	W4-3	1200	1200	YELLOW	III	BLACK		X		1.44					X	
	1037	W4-2R	900	900	YELLOW	III	BLACK		X		0.81					X	
		R4-1	610	254	WHITE	III	BLACK		X	1.08						X	
PD-11	1101	W4-3L	1200	1200	YELLOW	III	BLACK		X		1.44					X	
	1102	R86-2(CA)	900	1650	WHITE	III	Wht/Blk	IV	X	1.49						X	
	1103	R93-2(2)(CA)	900	2100	WHITE	III	Wht/Blk	IV	X	1.89						X	
	1104	G84-2(27)(CA)	1350	1200	GREEN	IV	WHITE	IV			1.62					X	
PD-12	1201	G86(CA)(Mod)	5330	1829	GREEN	IV	WHITE	IV							9.75	X	
	1202	R84-2(CA)	900	1650	WHITE	III	Wht/Blk	IV	X	1.49						X	
	1203	R93-2(2)(CA)	900	2100	WHITE	III	Wht/Blk	IV	X	1.89						X	
PD-13	1301	R93-2(2)(CA)	900	2100	WHITE	III	Wht/Blk	IV	X	1.89						X	
	1302	R86-2(CA)	900	1650	WHITE	III	Wht/Blk	IV	X	1.49						X	
	1303	R86-2(CA)	900	1650	WHITE	III	Wht/Blk	IV	X	1.49						X	
	1304	R93-2(2)(CA)	900	2100	WHITE	III	Wht/Blk	IV	X	1.89						X	
PD-15	1502	G(CA)(Mod)	2590	914	GREEN	IV	WHITE	IV					2.37			X	
	1503	R93-2(2)(CA)	900	2100	WHITE	III	Wht/Blk	IV	X	1.89						X	
	1504	G86-9(CA)	1070	1676	GREEN	IV	Wht/Blk	IV	X	1.79						X	
PD-16	1601	R86-2(CA)	900	1650	WHITE	III	Wht/Blk	IV	X	1.49						X	
	1604	G85-8(CA)(Mod)	1070	1676	GREEN	IV	Wht/Blk	IV	X	1.79						X	
PD-17	1701	SR50-2(401)(CA)	900	1950	WHITE	III	Wht/Blk	IV	X	1.76						X	
PD-18	1801	R93-2(2)(CA)	900	2100	WHITE	III	Wht/Blk	IV	X	1.89						X	
PD-19	1901	R86-2(CA)	600	1650	WHITE	III	Wht/Blk	IV	X	1.49						X	
PD-21	2102	R93-2(2)(CA)	900	2100	WHITE	III	Wht/Blk	IV	X	1.89						X	
	2103	R86-2(CA)	600	1650	WHITE	III	Wht/Blk	IV	X	1.49						X	
PD-22	2201	SR50-2(401)(CA)	914	1950	WHITE	III	Wht/Blk	IV	X	1.76						X	
PD-23	2301	G85-8(CA)(Mod)	1070	1676	GREEN	IV	Wht/Blk	IV	X	1.79						X	
PD-24	2402	G86-8(CA)(Mod)	1070	1676	GREEN	IV	Wht/Blk	IV	X	1.79						X	
	2403	SR50-2(401)(CA)	914	1950	WHITE	III	Wht/Blk	IV	X	1.76						X	
PD-25	2501	G20(CA)(Mod)	2740	1829	GREEN	IV	Wht/Blk	IV	X				5.01			X	
									SUBTOTAL (THIS SHEET)	45.2	11.57		7.38		9.75		
									SUBTOTAL (SQ-17)	19.66	14.87	0.77	17.45				
									SUBTOTAL (SQ-16)	14.46	5.78	2.21	8.36				
									SUBTOTAL (SQ-15)	15.11	8.16	2.13	15.71				
									SUBTOTAL (SQ-14)	11.34	5.23	2.72	13.10				
									TOTAL	105.77	45.61	7.83	62.00		9.75		

SIGN QUANTITIES

SQ-18

STATE OF CALIFORNIA - DEPARTMENT OF TRANSPORTATION
Caltrans

CONSULTANT FUNCTIONAL SUPERVISOR: CHRIS JOHNSON
CALCULATED-DESIGNED BY: MICHAEL KINNEAR
CHECKED BY: MICHAEL ROBERTS
REVISED BY / DATE REVISED

LAST REVISION 05-29-09
DATE PLOTTED => 29-SEP-2010
TIME PLOTTED => 14:36

Dist	COUNTY	ROUTE	KILOMETER POST TOTAL PROJECT	SHEET No.	TOTAL SHEETS
11	SD	5,805	R49.9/R51.7, 42.6/46.5	417	886

REGISTERED CIVIL ENGINEER 05-22-09 DATE

9-27-10
PLANS APPROVAL DATE

REGISTERED PROFESSIONAL ENGINEER SHAHBAZ A ALVI No. C 55293 Exp. 12-31-10 CIVIL STATE OF CALIFORNIA

THE STATE OF CALIFORNIA OR ITS OFFICERS OR AGENTS SHALL NOT BE RESPONSIBLE FOR THE ACCURACY OR COMPLETENESS OF SCANNED COPIES OF THIS PLAN SHEET.

Caltrans Metric

STRUCTURAL SECTION SUMMARY

LOCATION			Conc Pvmt	Conc Pvmt (RAPID STRENGTH CONCRETE)	RAPID STRENGTH Conc BASE	HOT MIX ASPHALT		CLASS 2 AGGREGATE BASE	ASPHALTIC EMULSION (FOG SEAL COAT)	TACK COAT	MINOR HOT MIX ASPHALT		HOT MIX ASPHALT (TYPE A)	
LINE	DESCRIPTION	STATION LIMITS	m^3	m^3	m^3	m^3 (N)	TONNE	m^3	TONNE	TONNE	m^3 (N)	TONNE	m^3 (N)	TONNE
"SVRM"	RAISED MEDIAN	440+09.806- 440+40.386				5.11	12.11	16.79	0.014	0.01				
"SVRM"/"MMBM"	EB/WB DIRECTION	440+65.000 - 444+70.000				1618.82	3836.60	5318.98		3.12				
"BR"	ACCESS ROAD	14+07.673 - 16+00.000				323.12	765.79	1061.68		0.62				
"CCR"	EB/WB DIRECTION	436+88.099 - 448+00.000				1139.07	2703.03	3742.68		2.20				
"SVR2"	WIDENING LANE	10+34.183 - 11+29.271				23.63	56.00	77.60		0.05				
"CCRDAR"/"A"	HOV LANES	442+43.361 - 443+40.000	351.12			175.56	416.08	241.40		0.39				
"A"/"AL"/"AR"	HOV LANES	443+40.000 - 470+33.068	8365.00			4182.60	9912.76	5751.08		9.39				
"A"	SB OUTSIDE LANE	437+43.000 - 449+83.509	1048.37			705.00	1672.92	969.37		0.57				
"A"	SB OUTSIDE SHOULDER	437+43.000 - 449+83.509	361.62			285.32	677.07	855.97	0.71	0.50				
"A"	NB OUTSIDE LANE	443+73.316 - 449+43.365	522.90			261.45	619.64	339.89		0.47				
"A"	NB RAMP SHOULDER	444+09.55 - 444+31.693				9.99	23.68	22.20	0.03	0.02				
"A"	NB OUTSIDE SHOULDER	445+67.183 - 448+54.500				82.20	194.81	246.6	0.21	0.15				
"MMB5U"	ONRAMP (TW) TO SB 805	445+80.000 - 449+28.211				643.68	1525.52	2199.24		0.96				
"MMB5U"	SB RAMP OUTSIDE SHOULDER	445+85.700 - 449+28.211				117.86	279.33	261.90	0.33	0.24				
"MMB5U"	SB RAMP INSIDE SHOULDER	446+86.769 - 449+09.500				38.07	90.23	84.60	0.11	0.08				
"MMB4M"	ONRAMP (TW) TO SB 805	442+97.375 - 446+15.961				508.25	1206.07	1736.52		1.02				
"MMB4M"	SB RAMP INSIDE SHOULDER	443+54.394 - 445+68.992				37.80	89.59	84.00	0.11	0.08				
"MMB4M"	SB RAMP OUTSIDE SHOULDER	443+02.236 - 446+15.961				106.93	253.74	237.62	0.31	0.14				
"MMB6M"	SB OFFRAMP	447+11.000 - 448+59.407				186.84	442.81	638.37		0.28				
"AR"	NB OUTSIDE SHOULDER	466+00.000 - 467+61.417	78.30			39.15	92.79	50.90	0.10	0.07				
"MMB4M"	HSSD	443+89.517 - 445+42.772						92.70	0.12	0.05	41.72	98.99		
"MMB6M"	HSSD	447+91.300 - 448+59.407						41.54	0.05	0.02	18.69	44.36		
"MMB5U"	HSSD	447+64.012 - 448+50.189						53.48	0.07	0.03	24.07	57.11		
"A"	HSSD	446+85.229 - 447+88.100						70.11	0.09	0.06	31.55	74.80		
"SVRM"	COLD PLANE	440+65.000 - 441+43.398								0.34			57.39	136.02
"MMB6M"	COLD PLANE	447+55.000 - 448+20.000								0.17			28.08	66.55
"MMBM"	COLD PLANE	444+14.778 - 445+06.993								0.33			54.37	128.85
"A"	COLD PLANE	442+93.543 - 444+31.693								0.20			33.57	79.55
"A"	COLD PLANE	448+54.405 - 449+43.365								0.04			6.07	14.40
"CCR/SR"	COLD PLANE	445+40.000 - 445+64.909								0.15			24.90	59.01
"AR"	COLD PLANE	466+00.000 - 467+70.843								0.07			12.21	28.97
"A"	NB Misc AREA	444+43.809 - 444+94.756							0.08	0.06	33.30	78.92		
"A"	NB OUTSIDE SHOULDER	442+67.175 - 443+73.316		122.40	122.40									
"A"	L+ TYPE E DIKE	437+43.000 - 440+20.000										34.55		
"A"	L+ TYPE E DIKE	443+94.000 - 444+65.115										8.87		
"A"	L+ TYPE A DIKE	444+65.115 - 445+15.779										6.29		
"A"	L+ TYPE E DIKE	446+92.512 - 449+83.509										36.29		
"A"	R+ TYPE E DIKE	446+85.229 - 447+88.100										12.83		
"A"	R+ TYPE F DIKE	442+67.175 - 443+00.560										3.12		
"MMB4M"	R+ TYPE E DIKE	444+45.648 - 445+42.772										12.11		
"MMB5U"	L+ TYPE F DIKE	445+85.700 - 445+93.300										0.71		
"MMB5U"	L+ TYPE C DIKE	445+93.300 - 446+20.000										1.41		
"MMB5U"	L+ TYPE E DIKE	446+20.000 - 449+28.211										38.44		
"MMB5U"	R+ TYPE E DIKE	447+64.012 - 448+50.189										10.75		
"MMB6M"	L+ TYPE E DIKE	447+35.832 - 448+20.000										10.50		
"MMB6M"	R+ TYPE E DIKE	448+01.738 - 448+57.962										7.01		
"MMB6M"	R+ TYPE E TO C	448+57.962 - 448+59.407										0.18		
"MMBM"	STAGE CONSTRUCTION	STAGE CONSTRUCTION										15.30		
"A"	MVP	466+67.000 R+						31.95	0.03	0.03	10.65	25.24		
"A"	MVP	448+40.000 L+						31.95	0.03	0.03	10.65	25.24		
"MMB5U"	OVERSIDE DRAIN	448+78.233 L+									1.15	2.73		
"A"	OVERSIDE DRAIN	438+41.826 L+									1.15	2.73		
		TOTAL	10 727.31	122.40	122.40		24 870.57	24 259.12*	2.39	21.94*		608.48		513.35*

NOTE:

* FOR ADDITIONAL QUANTITIES, SEE DETOUR QUANTITIES SHEETS.

LEGEND:

(N) - NOT A SEPARATE PAY ITEM, FOR INFORMATION ONLY
HSSD - HIGH SIDE SUPER DITCH
HOV - HIGH OCCUPANCY VEHICLE
TW - TRAVELED WAY
MVP - MAINTENANCE VEHICLE PULLOUT
BSW - BIOFILTRATION SWALE

SUMMARY OF QUANTITIES
Q-1

REVISED BY | DATE REVISED

THEODORE AQUINO | SHAHBAZ A ALVI

CALCULATED-DESIGNED BY | CHECKED BY

FUNCTIONAL SUPERVISOR: MAJID KHARRATI

STATE OF CALIFORNIA - DEPARTMENT OF TRANSPORTATION
Caltrans PROJECT DEVELOPMENT

LAST REVISION 05-26-09 | DATE PLOTTED => 29-SEP-2010 | TIME PLOTTED => 14:37

Dist	COUNTY	ROUTE	KILOMETER POST TOTAL PROJECT	SHEET No.	TOTAL SHEETS
11	SD	5,805	R49.9/R51.7, 42.6/46.5	418	886

REGISTERED CIVIL ENGINEER 05-22-09 DATE

9-27-10
PLANS APPROVAL DATE

REGISTERED PROFESSIONAL ENGINEER SHAHBAZ A ALVI No. C 55293 Exp. 12-31-10 CIVIL STATE OF CALIFORNIA

THE STATE OF CALIFORNIA OR ITS OFFICERS OR AGENTS SHALL NOT BE RESPONSIBLE FOR THE ACCURACY OR COMPLETENESS OF SCANNED COPIES OF THIS PLAN SHEET.

Caltrans Metric

CONCRETE BARRIER

LOCATION			TYPE 60	TYPE 60C	TYPE 60E	TYPE 26 Mod	TYPE 60E Mod	TYPE K	REMOVE
LINE	BEGIN	END	m	m	m	m	m	m	m
"SVRM"/Conc STAIRS	442+45.823	442+49.200				3.6			
"SVRM" & "CCR"	442+53.300 "SVRM"	436+90.187 "CCR"				7.3			
"BR"	15+94.564	15+98.564	4.0						
"MMB5U"	448+39.386	449+09.500	70.1						
"MMB4M"	443+02.236	446+02.438	300.2						
"A"	443+40.000	444+03.248	63.2						
"A"	444+03.248	444+96.362		93.1					
"A"	445+68.862	446+59.500		90.6					
"A" & "MMB2M"	444+43.809	444+97.055	53.2						
"A"	444+43.809 (Rt)	444+94.756 (Rt)	53.9						
"DAR4" & "A"	444+44.007	444+88.544		44.5					
"DAR1" & "A"	444+33.402	444+70.727		37.3					
"DAR1" & "A"	444+70.727	445+00.000	29.3						
"A"	446+59.500	446+90.500					31.0		
"A"	446+90.500	449+24.500		234.0					
"A"	449+24.500	449+55.500					31.0		
"A"	449+55.500	453+00.500		345.0					
"A"	453+00.500	453+31.500					31.0		
"A"	453+31.500	454+81.000		149.5					
"A"	454+81.000	455+19.000			76.0				
"A"	455+19.000	458+26.200		307.2					
"A"	458+26.200	461+67.500	341.3						
"A"	461+67.500	462+82.500		115					
"A"	462+82.500	463+21.000	38.5						
"A"	463+21.000	463+59.000			76.0				
"A"	463+59.000	464+43.000 (Rt)	83.9						
"A"	464+43.000 (Rt)	464+81.000 (Rt)			76.0				
"A"	464+81.000 (Rt)	464+81.728 (Rt)	0.7						
"AL" & "AR"	465+41.860 ("AL" Rt)	466+75.500 ("AR" Lt)	133.7						
"AR"	466+75.500 (Lt)	467+61.382 (Lt)		85.9					
"AR"	467+41.266 (Lt)	467+61.382 (Lt)							20.1
"AL"	468+56.457 (Rt)	470+34.713 (Rt)		178.3					178.3
"SD"	525+68	525+92					24		24
"A"	444+65.115 (Lt)	445+15.779 (Lt)						50.7	
		TOTAL	1172.0	1680.4	228.0	10.9	117.0	50.7	222.4

REMOVE THRIE BEAM BARRIER

LINE	LOCATION	STATION	m	REMARKS
"A"	Lt/Rt	442+80.000 TO 444+99.459	436.00	SINGLE
"A"	Lt	445+66.294 TO 464+78.831	1912.54	SINGLE
"A"	Rt	444+75.200 TO 464+87.947	2012.75	SINGLE
"AL"/"AR"	Lt	465+37.605 TO 467+41.266	407.00	DOUBLE
		TOTAL	4768.29	

PIPE HANDRAILING

SHEET	m
C-11	26.8
TOTAL	26.8

TUBULAR PIPE HANDRAILING

SHEET	m	REMARKS
C-3	10.9	ON TOP OF THE BARRIER TYPE 26 Mod
TOTAL	10.9 *	

* SEE Q-6 FOR ADDITIONAL QUANTITIES.

MINOR CONCRETE (MINOR STRUCTURE)

SHEET	DESCRIPTION	m^3
C-12	PILASTERS @ STAIRS	9.5
C-10	Conc STAIRS	9.9
	TOTAL	19.4 *

* FOR ADDITIONAL QUANTITIES SEE DRAINAGE QUANTITIES AND SANITARY SEWER QUANTITIES.

WEATHERING STEEL PLATE

SHEET	EA
C-12	5
TOTAL	5

SUMMARY OF QUANTITIES
Q-2

STATE OF CALIFORNIA - DEPARTMENT OF TRANSPORTATION
Caltrans PROJECT DEVELOPMENT

FUNCTIONAL SUPERVISOR: MAJID KHARRATI
CALCULATED-DESIGNED BY: THEODORE AQUINO
CHECKED BY: SHAHBAZ A ALVI
REVISED BY
DATE REVISED

LAST REVISION 05-26-09
DATE PLOTTED => 29-SEP-2010
TIME PLOTTED => 14:37

Dist	COUNTY	ROUTE	KILOMETER POST TOTAL PROJECT	SHEET No.	TOTAL SHEETS
11	SD	5,805	R49.9/R51.7, 42.6/46.5	419	886

REGISTERED CIVIL ENGINEER 05-22-09 DATE

9-27-10
PLANS APPROVAL DATE

REGISTERED PROFESSIONAL ENGINEER SHAHBAZ A ALVI No. C 55293 Exp. 12-31-10 CIVIL STATE OF CALIFORNIA

THE STATE OF CALIFORNIA OR ITS OFFICERS OR AGENTS SHALL NOT BE RESPONSIBLE FOR THE ACCURACY OR COMPLETENESS OF SCANNED COPIES OF THIS PLAN SHEET.

Caltrans Metric

COLD PLANE ASPHALT CONCRETE PAVEMENT

LINE	STATION			m^2
"SVRM"	440+65.000	TO	441+43.398	951.21
"MMB6M"	447+55.000	TO	448+20.000	624.00
"MMBM"	444+14.778	TO	445+06.993	1208.17
"A"	442+93.543	TO	444+31.693	745.92
"CCR"/"SR"	445+40.000	TO	445+64.909	553.28
"AR"	466+00.000	TO	467+70.843	270.96
"A"	448+54.500	TO	448+92.495	134.8
			TOTAL	4488.34 *

* FOR ADDITIONAL QUANTITIES SEE DETOUR QUANTITIES SHEETS.

ROCK BLANKET

LINE	DESCRIPTION	STATION			m^2
"SVRM"	RAISED MEDIAN	440+10.800	TO	440+39.500	81
"SVRM"	RAISED MEDIAN	441+34.486	TO	442+28.800	249
				TOTAL	330 *

* FOR ADDITIONAL QUANTITIES SEE STRUCTURE PLANS.

ROCK MULCH

LINE	DESCRIPTION	STATION	m^2
"SVPD"	L+ OF "SVPD" TO Conc STAIRS	442+18.637 TO 442+60.000	135
"BR"	L+ OF "BR" LINE	14+20.000 TO 15+20.000	365
"SVPD"/"SVR2"	L+ OF "SVPD" FROM Conc STAIRS TO "BR" LINE	442+60.000 TO 9+90.000	220
"SVPD"	R+ OF "SVPD" TO "BR" LINE	442+74.000 TO 443+20.000	86
"SVR2"	L+ OF "SVR2" LINE R+ OF "BR" LINE	10+07.657 TO 10+35.284	281
"MMBM"	L+ OF "MMBM" LINE	444+05.000 TO 444+86.781	250
"MMBM"	R+ OF "MMBM" LINE	444+42.000 TO 444+87.479	230
		TOTAL	1567

PAVEMENT JOINTS

LINE	STATION	SEAL PAVEMENT JOINT		SEAL LONGITUDINAL ISOLATION JOINT LENGTH
		LONGITUDINAL JOINT LENGTH	TRANSVERSE JOINT LENGTH	
		m	m	m
"CCRDAR"/"A"	442+43.361 TO 444+98.000	1019	1057	
"A"/"AL"/"AR"	445+68.862 TO 470+33.068	5016	7772	4619
"A" R+	442+67.175 TO 444+94.756	228	212	228
"A" R+	445+56.800 TO 449+43.365	387	357	387
"AR" R+	466+00.000 TO 467+70.843	171	64	171
"A" L+	437+43.000 TO 440+20.000	277	250	277
"A" L+	442+93.509 TO 445+03.867	628	626	206
"A" L+	445+78.658 TO 449+83.509	762	687	398
	SUB TOTAL	8488	11 025	6286
	TOTAL	19 513		6286

PLACE HOT MIX ASPHALT DIKE

LOCATION		STATION LIMITS		TYPE	LENGTH
LINE	R+/L+	BEGIN	END		m
"A"	L+	437+43.000	440+20.000	E	277.00
"A"	L+	443+94.000	444+65.115	E	71.12
"A"	L+	444+65.115	445+15.779	A	50.66
"A"	L+	446+92.512	449+83.509	E	291.00
"A"	R+	446+85.229	447+88.100	E	102.87
"A"	R+	442+67.175	443+00.560	F	33.39
"MMB4M"	R+	444+45.648	445+42.772	E	97.12
MMB5U"	L+	445+85.700	445+93.300	F	7.60
"MMB5U"	L+	445+93.300	446+20.000	C	26.70
"MMB5U"	L+	446+20.000	449+28.211	E	308.21
"MMB5U"	R+	447+64.012	448+50.189	E	86.18
"MMB6M"	L+	447+35.832	448+20.000	E	84.17
"MMB6M"	R+	448+01.738	448+57.962	E	56.22
"MMB6M"	R+	448+57.962	448+59.407	E TO C TRANSITION	1.45
				TOTAL	1493.69 *

* FOR ADDITIONAL QUANTITIES SEE DETOUR QUANTITIES SHEETS.

REMOVE CONCRETE

LINE	BEGIN STATION	END STATION	SIDE	m^3
"SVRM"	440+10.800	440+40.386	R+	15.26
"SVRM"	440+76.479	441+28.307	R+	19.47
"SVRM"	441+19.447	441+33.287	R+	4.08
"SVRM"	441+33.287	441+43.030	R+	5.11
"SVRM"/"MMBM"	441+43.030	443+31.337	R+	25.78
"SVRM"	441+50.735	442+40.000	R+	42.12
"SVRM"	442+42.200	442+44.720	R+	1.90
"SVRM"	442+40.200	442+45.300	R+	1.61
"MMBM"	443+41.100	444+33.700	R+	13.91
"MMBM"	444+49.690	444+80.000	R+	3.88
"SVRM"	440+65.000	442+26.800	L+	47.28
"SVRM"/"MMBM"	442+51.900	444+13.500	L+	41.83
"MMBM"	443+97.010	444+13.700	L+	1.98
"MMBM"	444+11.200	445+06.990	L+	22.23
"SVR2"	9+87.935	9+94.335	R+	1.86
"SR"	445+56.000	445+64.000	L+	4.36
"CCR"	445+23.700	448+00.000	R+	34.63
			TOTAL	287.29

SUMMARY OF QUANTITIES

Q-3

STATE OF CALIFORNIA - DEPARTMENT OF TRANSPORTATION
Caltrans PROJECT DEVELOPMENT

FUNCTIONAL SUPERVISOR: MAJID KHARRATI
CALCULATED-DESIGNED BY: KHOAN LE
CHECKED BY: SHAHBAZ A ALVI
REVISED BY / DATE REVISED

LAST REVISION 05-26-09
DATE PLOTTED => 29-SEP-2010
TIME PLOTTED => 14:37

Dist	COUNTY	ROUTE	KILOMETER POST TOTAL PROJECT	SHEET No.	TOTAL SHEETS
11	SD	5,805	R49.9/R51.7, 42.6/46.5	420	886

REGISTERED CIVIL ENGINEER 05-22-09 DATE

9-27-10
PLANS APPROVAL DATE

REGISTERED PROFESSIONAL ENGINEER SHAHBAZ A ALVI No. C 55293 Exp. 12-31-10 CIVIL STATE OF CALIFORNIA

THE STATE OF CALIFORNIA OR ITS OFFICERS OR AGENTS SHALL NOT BE RESPONSIBLE FOR THE ACCURACY OR COMPLETENESS OF SCANNED COPIES OF THIS PLAN SHEET.

Caltrans Metric

MINOR CONCRETE (MISCELLANEOUS CONSTRUCTION)

LOCATION				CASE OR TYPE (N)	QUANTITY				VOLUME
LINE	SIDE	STATION LIMITS BEGIN	STATION LIMITS END		CURB (N) m	SIDEWALK (N) m^2	CURB MEDIAN (N) m	CURB RAMP (N) M^2	m^3
"SVRM"/"MMB6M"	L†	440+65.000	447+35.832	TYPE HC	179				26.85
"SVRM"/"MMB6M"	L†	442+15.782	447+34.290	CASE A				59.2	5.92
"SVRM"	L†	440+65.000	442+15.782			226.2			22.62
"SVRM"/"CCR"	R†	441+19.100	436+88.100	TYPE GCM	138				17.11
"SVRM"	R†	441+44.155	442+43.779			171.3			17.13
"SVRM"	R†	440+12.783	440+38.079	TYPE GCM			33.8		4.06
"SVRM"/"CCR"	R†	441+35.000	442+28.000	TYPE GC(R†)/GCM(L†)			190		22.8
"SVRM"/"CCR"	R†	442+43.779	436+88.411	CASE A				80	8.00
"SVRM"/"SVR2"	R†	442+14.692	9+84.762			265			26.5
"BR"	L†	9+84.762	14+20.984	CASE A				38	3.80
"BR"/"SVR2"	R†	14+20.898	10+35.284	CASE A				71	7.10
"MMBM"	L†	442+70.000	442+86.000	CASE A				70.5	7.05
"MMBM"	L†	442+86.000	445+06.993			221			22.1
"MMB5U"/"MMBM"	L†	449+28.211	445+06.993	TYPE HC	226				33.9
"SVR2"/"BR"	L†	9+03.471	15+98.564	TYPE GC	290				35.96
"SVR2"/"BR"/"CCR"	R†/L†	438+48.251	11+29.271	TYPE GC	330				40.9
"CCR"	R†	443+91.226	448+00.000	TYPE GC	409				50.7
"CCR"	R†	436+88.100	437+34.814	TYPE GC	48.0				5.95
"CCR"	R†	437+73.582	438+01.000	TYPE GC	27.0				3.35
"CCR"	R†	438+01.000	438+84.489	TYPE GCM	83.0				10.29
"CCR"	L†	438+01.853	438+10.278	TYPE FM	8.0				1.2
"CCR"	L†	438+10.278	438+28.224	TYPE B4	18.0				2.56
"MMB4M"/"MMBM"	R†	445+50.000	444+42.000	TYPE B4	40.0				5.68
"MMBM"	R†	444+42.000	444+80.000	TYPE B2M	38.0				5.8
"CCR"	L†	443+98.740	444+23.000	TYPE FM	24.0				3.6
"CCR"	L†	444+23.000	444+45.000	TYPE B4	22.0				3.12
"CCR"/"SR"	L†	444+45.000	445+64.909	TYPE GC	94.0				11.66
"CCR"	L†	445+20.000	445+30.000	CASE A				46.0	4.60
"MMB4M"	R†	443+55.112	443+89.517	TYPE B4	34.4				4.89
"A"	L†	443+57.183	443+94.000	TYPE B4	37.0				5.25
"SVR2"	R†	9+87.935	9+94.335	CASE C				14.3	1.43
"SVR2"	R†	9+87.935	9+94.335	TYPE A1-150	7.0				0.448
"CCR"/"BR"	L†/R†	438+48.251	16+00.000	CASE A				38.0	3.8
"SVRM"	R†	441+19.100	441+31.209			29.0			2.9
"SVRM"	R†	441+31.209	441+44.155	CASE B				53.3	5.33
"SVR2"/"BR"	L†/R†	10+34.183	15+89.564			268.73			26.87
								TOTAL	461.23

PLACE HOT MIX ASPHALT (Misc AREA)

LINE	DESCRIPTION	STATION	m^2
"MMB4M"	HSSD	443+89.517 - 445+42.772	307.0
"MMB6M"	HSSD	447+91.300 - 448+59.407	136.0
"MMB5U"	HSSD	447+64.012 - 448+50.189	173.0
"A"	HSSD	446+85.229 - 447+88.100	165.0
"MMBM"	CURB RAMP/SW	STAGE CONSTRUCTION	33.0
"MMB5U"	OVERSIDE DRAIN	448+78.233 L†	11.5
"A"	OVERSIDE DRAIN	438+41.826 L†	11.5
"A"	MVP	446+67 R†	71.0
"A"	MVP	448+40 L†	71.0
"A"	NB Misc AREA	444+43.809 - 444+94.756	222.0
		TOTAL	1201.0

CRASH CUSHION

(REACT 4CBB)

LINE	STATION	EA
"MMB5U"	449+09.000	1
	TOTAL	1

(REACT 9CBB)

LINE	STATION	EA
"A"	443+30.000	1
"A"	444+90.000 (L†)	1
"A"	444+40.000 (R†)	1
	TOTAL	3

SAND FILLED

LINE	STATION	EA
"CCRDAR"	441+90.000	48
	TOTAL	48

MINOR CONCRETE (TEXTURED PAVING)

SHEET	LINE	STATION	m^2
L-2,7	"MMBM"	444+23.350 - 445+08.077	231.1
L-7	"MMB4M"	443+55.112 - 444+45.648	390.0
L-2,8	"MMB6M"	447+30.000 - 448+01.739	211.0
L-8	"MMB5U"	446+86.769 - 447+69.276	343.0
L-9	"MMB6M"/"A"	449+29.983 - 449+83.509	227.4
L-7	"A"	444+31.693 - 444+92.133	141.6
		TOTAL	1544.1

SUMMARY OF QUANTITIES
Q-4

REVISED BY | DATE REVISED
THEODORE AQUINO | SHAHBAZ A ALVI
CALCULATED-DESIGNED BY | CHECKED BY
FUNCTIONAL SUPERVISOR
MAJID KHARRATI

STATE OF CALIFORNIA - DEPARTMENT OF TRANSPORTATION
Caltrans PROJECT DEVELOPMENT

LAST REVISION 05-26-09 | DATE PLOTTED => 29-SEP-2010 | TIME PLOTTED => 14:37

Dist	COUNTY	ROUTE	KILOMETER POST TOTAL PROJECT	SHEET No.	TOTAL SHEETS
11	SD	5,805	R49.9/R51.7, 42.6/46.5	421	886

REGISTERED CIVIL ENGINEER 05-22-09 DATE

9-27-10
PLANS APPROVAL DATE

REGISTERED PROFESSIONAL ENGINEER SHAHBAZ A ALVI No. C 55293 Exp. 12-31-10 CIVIL STATE OF CALIFORNIA

THE STATE OF CALIFORNIA OR ITS OFFICERS OR AGENTS SHALL NOT BE RESPONSIBLE FOR THE ACCURACY OR COMPLETENESS OF SCANNED COPIES OF THIS PLAN SHEET.

Caltrans Metric

TEMPORARY FENCE (TYPE ESA)

SHEET NUMBER	LINE	STATION	m
L-2	"BR"	15+78.463 Lt	104
L-2	"SVR2"	11+28.696 Lt	54
L-2	"CCR"	439+77.414 Lt	188
L-3	"CCR"	440+23.573 Lt	47
L-2 - L-5	"CCR"	439+61.315 Rt - 448+16.355 Rt	881
L-4	"CCR"	444+10.118 Lt	180
L-3	"CCR"	440+08.437 Lt	18
L-10	"A"	453+29.237 Lt - 455+02.846	386
		TOTAL	1858

CHAIN LINK FENCE (TYPE CL-1.8)

SHEET NUMBER	LINE	STATION	m
L-1,L-2	"SVRM"	441+63.591 Lt - 442+09.078 Lt	60
L-3,L-4	"CCR"	440+75.364 Lt - 443+37.497 Lt	372
L-2	"MMB4M"	445+00.000 Lt - 445+69.135 Lt	73
L-7	"MMB3"	443+51.602 Rt - 444+57.369 Rt	91
		TOTAL	596

4.9 m CHAIN LINK GATE (TYPE CL-1.8)

SHEET NUMBER	LINE	STATION	EA
L-3	"CCR" BRIDGE	442+30 Rt	1
L-7	"MMB3"	444+80 Rt	1
		TOTAL	2

REMOVE CHAIN LINK FENCE

SHEET NUMBER	LINE	STATION	m (N)
L-1, L-2	"SVRM"	441+63.591 Lt - 442+14.39 Lt	67
L-3, L-4	"CCR"	440+75.364 Lt - 443+15.01 Lt	255
L-4,L-7	"MMB3"	442+51.69 Rt - 445+57.38 Rt	207
L-2	"BR"/"MMB4M"	14+95.169 Rt - 445+00 Lt	144
L-2	"SVR2"	8+95.300 Rt - 9+44.114 Lt	84
		TOTAL	757

TEMPORARY FENCE (TYPE CL-1.8)

SHEET NUMBER	LINE	STATION	m
L-4, L-7	"CCR"	443+33.713 Lt - 443+68.519 Lt	321
L-4, L-7	"CCR"/"MMB3"	443+55.652 Lt "CCR" - 443+87.523 Rt "MMB3"	40
		TOTAL	361

METAL BEAM GUARD RAILING

△ MBGR No.	SHEET No.	LINE	STATION	(N) LAYOUT TYPE	MBGR	REMOVE METAL BEAM GUARD RAILING	ALTERNATIVE FLARED TERMINAL SYSTEM	GUARD RAIL CONNECT TO BRIDGE RAIL, RETAINING WALLS AND ABUTMENTS STANDARD PLAN A77J	REMOVE EXISTING TERMINAL SECTION	REMOVE CABLE ANCHOR ASSEMBLY	GUARD RAILING DELINEATOR	TRANSITION RAILING (TYPE WB)
								(N)	(N)	(N)	TYPE F	
					m	m	EA	EA	EA	EA	EA	EA
1	L-2	"CCR"	438+00 Lt	12B	8.4		1				3	1
2	L-3	"A"	442+80 Rt	12DD	34.2						6	
3	L-4	"CCR"	444+20 Lt	12B	18.0		1		4		3	1
4	L-5	"CCR"	448+00 Rt		33.1			1			6	
5	L-7,L-8	"A"	445+80 Lt	12B	1.9		1		1		1	1
6	L-8	"A"	447+00 Rt	16B		12.0			2			
7	L-3	"A"	442+67.175 Rt-442+93.543 Rt			34.2						
8	L-4,L-5	"CCR"	445+23.746 Rt			300.3						
9	L-7	"A"	444+09.55 Rt			172						
10	L-2,L-8	"MMB5U"	448+20 Lt-449+30 Lt			122.4			2			
11	L-3,L-7	"A"	443+00 Lt			213.2						
12	L-4	"CCR"	445+20 Lt			26.3						
13	L-7	"MMBM"	444+87.479 Rt			19.5						
			TOTALS		95.6	899.9	3				19	3

(N) NOT A SEPARATE PAY ITEM, FOR INFORMATION ONLY

SUMMARY OF QUANTITIES
Q-5

STATE OF CALIFORNIA - DEPARTMENT OF TRANSPORTATION
Caltrans PROJECT DEVELOPMENT

FUNCTIONAL SUPERVISOR MAJID KHARRATI
CALCULATED-DESIGNED BY CASEY LEWIS
CHECKED BY SHAHBAZ A ALVI
REVISED BY
DATE REVISED

LAST REVISION 04-14-10
DATE PLOTTED => 29-SEP-2010
TIME PLOTTED => 14:37

Dist	COUNTY	ROUTE	KILOMETER POST TOTAL PROJECT	SHEET No.	TOTAL SHEETS
11	SD	5,805	R49.9/R51.7, 42.6/46.5	422	886

REGISTERED CIVIL ENGINEER 05-22-09 DATE

9-27-10
PLANS APPROVAL DATE

REGISTERED PROFESSIONAL ENGINEER SHAHBAZ A ALVI No. C 55293 Exp. 12-31-10 CIVIL STATE OF CALIFORNIA

THE STATE OF CALIFORNIA OR ITS OFFICERS OR AGENTS SHALL NOT BE RESPONSIBLE FOR THE ACCURACY OR COMPLETENESS OF SCANNED COPIES OF THIS PLAN SHEET.

Caltrans Metric

RETAINING WALL QUANTITIES

RETAINING WALL	LINE	SIDE	STATION	STRUCTURAL CONCRETE (RETAINING WALL)	BAR Reinf STEEL (RETAINING WALL)	STRUCTURE EXCAVATION (RETAINING WALL)	STRUCTURE BACKFILL (RETAINING WALL)	STRUCTURE EXCAVATION (CRIB WALL)	STRUCTURE BACKFILL (CRIB WALL)	PERVIOUS BACKFILL MATERIAL (RETAINING WALL)	REINFORCED CONCRETE CRIB WALL (TYPE A)	ARCHITECTURAL TREATMENT (RANDOM FLUTE TEXTURE)	CABLE RAILING	TUBULAR PIPE HANDRAILING	ARCHITECTURAL TREATMENT VARIABLE SANDBLAST TEXTURE (N)
				m^3	KG	m^3	m^3	m^3	m^3	m^3	m^2	m^2	m	m	m^2
443R	BR	L+	10+00.000 - 11+08.201	548	48 554	1435	1292			119		550		108	550
445L	CCR	L+	10+00.000 - 10+49.410					205	190		74		50		
			TOTAL	548	48 554	1435	1292	205	190	119	74	550	50 **	108 *	

* FOR ADDITIONAL QUANTITIES SEE SHEET Q-2.

** FOR ADDITIONAL QUANTITIES, SEE DRAINAGE QUANTITIES.

IRRIGATION CROSSOVER

SHEET	LOCATION		SIDE		200 mm CORRUGATED HIGH DENSITY POLYETHYLENE PIPE CONDUIT	WATER LINE CROSSOVER (N)	SPRINKLER CONTROL CROSSOVER (N)
	LINE	STATION	R+	L+	LENGTH	SIZE	SIZE
					m	mm	mm
L-2	"BR"	14+18	X	X	67	75	50
L-2	"BR"	14+58	X	X	19	(2) 50	-
L-2	"BR"	15+78	X	X	15	75	50
L-2	SIDEWALK	-	X	X	6	(2) 50	-
L-2	SIDEWALK	-	X	X	7	(2) 50	-
L-2	ROAD	-	X	X	6	75	50
L-7	"MMB4M"	445+10	X	X	20	75	50
L-8	"MMB5U"	447+85	X	X	21	75	50
L-8	"MMB6M"	448+15	X	X	19	75	50
				TOTALS	180		

(N) - NOT A SEPARATE PAY ITEM. FOR INFORMATION ONLY

ABANDON IRRIGATION CROSSOVER

SHEET	LOCATION		SIDE	
	LINE	STATION	R+	L+
			EA	EA
L-8	"MMB5U"	447+77	0	1
		SUB-TOTAL	0	1
		TOTAL	0	1

DUFF

LINE	BEGIN STATION	END STATION	SIDE	m^2
"SVRM"	440+60	442+20	L+	4970
			TOTAL	4970

WATER METER

SHEET	LOCATION		EA
	LINE	STATION	
IP-1	"MMBM"	L+ 443+88.00	2
IP-2	"SVR2"	L+ 11+22.00	1
		TOTAL	3

SUMMARY OF QUANTITIES
Q-6

STATE OF CALIFORNIA - DEPARTMENT OF TRANSPORTATION
Caltrans PROJECT DEVELOPMENT

FUNCTIONAL SUPERVISOR: MAJID KHARRATI
CALCULATED-DESIGNED BY: MARLENE GROS
CHECKED BY: SHAHBAZ A ALVI
REVISED BY
DATE REVISED

LAST REVISION 05-26-09
DATE PLOTTED => 29-SEP-2010
TIME PLOTTED => 14:37

Dist	COUNTY	ROUTE	KILOMETER POST TOTAL PROJECT	SHEET No.	TOTAL SHEETS
11	SD	5,805	R49.9/R51.7, 42.6/46.5	423	886

Caltrans Metric

05-22-09
REGISTERED CIVIL ENGINEER DATE

9-27-10
PLANS APPROVAL DATE

REGISTERED PROFESSIONAL ENGINEER
THANH D BUI
No. C 64571
Exp. 06-30-11
CIVIL
STATE OF CALIFORNIA

THE STATE OF CALIFORNIA OR ITS OFFICERS OR AGENTS SHALL NOT BE RESPONSIBLE FOR THE ACCURACY OR COMPLETENESS OF SCANNED COPIES OF THIS PLAN SHEET.

EARTHWORK QUANTITIES

LINE	LOCATION	ROADWAY EXCAVATION	EMBANKMENT (N)
		m^3	m^3
"A"	NB & SB	9261	8401
"AR"	NB	151	4
"A"	NB & SB - HOV LANE	10 715	64
"AR"	NB - HOV LANE	822	0
"AL"	SB - HOV LANE	846	0
"CCRDAR"	NB & SB	7060	12
"DAR1"	NB	6651	15
"DAR4"	SB	6650	15
"CCR"	LOCAL ROADWAY	4394	50 229
"SVRM"	LOCAL ROADWAY	6418	1302
"MMBM"	LOCAL ROADWAY	6701	3064
"MMB4M"	LOCAL ROADWAY	6516	392
"MMB5U"	LOCAL ROADWAY	33 998	2260
"MMB6M"	LOCAL ROADWAY	1178	72
"BR"	LOCAL ROADWAY	17 932	4437
"SVR2"	LOCAL ROADWAY	139	55
"MMB3" **	NB		29647
"MMB4M"&"A" **	SB		21902
	TOTAL	119 432*	121 871

* FOR ADDITIONAL QUANTITIES, SEE DETOUR QUANTITIES SHEETS.
** FOR BALANCING THE EARTHWORK WITHIN THE PROJECT LIMIT.

SUMMARY OF QUANTITIES
Q-7

REVISED BY | DATE REVISED
THANH D BUI | YONG PAK
CALCULATED-DESIGNED BY | CHECKED BY
FUNCTIONAL SUPERVISOR
MAJID KHARRATI

STATE OF CALIFORNIA - DEPARTMENT OF TRANSPORTATION
Caltrans PROJECT DEVELOPMENT

LAST REVISION 04-14-10 | DATE PLOTTED => 29-SEP-2010 | TIME PLOTTED => 14:38

Dist	COUNTY	ROUTE	KILOMETER POST TOTAL PROJECT	SHEET No.	TOTAL SHEETS
11	SD	5,805	R49.9/R51.7, 42.6/46.5	424	886

REGISTERED CIVIL ENGINEER 05-22-09 DATE

9-27-10
PLANS APPROVAL DATE

REGISTERED PROFESSIONAL ENGINEER SHAHBAZ A ALVI No. C 55293 Exp. 12-31-10 CIVIL STATE OF CALIFORNIA

THE STATE OF CALIFORNIA OR ITS OFFICERS OR AGENTS SHALL NOT BE RESPONSIBLE FOR THE ACCURACY OR COMPLETENESS OF SCANNED COPIES OF THIS PLAN SHEET.

Caltrans Metric

GRIND EXISTING CONCRETE PAVEMENT

EXISTING LANES 1 AND 2

LINE	LOCATION	STATION			m^2
"CCRDAR"/"A"	LT	442+81.835	TO	444+98.187	1557.73
"A"	LT	445+71.128	TO	464+81.915	13757.67
"AL"	LT	465+41.882	TO	467+61.675	1582.51
"AL"	LT	468+57.546	TO	470+34.713	1275.60
"CCRDAR"/"A"	RT	442+81.835	TO	444+95.050	1535.15
"A"	RT	445+65.434	TO	464+81.547	13796.01
"AR"	RT	465+41.724	TO	467+61.382	1581.54
"AR"	RT	468+53.500	TO	470+33.068	1292.89
				TOTAL	36379.10

			STAIN CONCRETE			STAIN ROCK	
DRAINAGE SYSTEM SHEET No.	DRAINAGE SYSTEM No.	DRAINAGE UNIT	HEADWALL	Conc CHANNEL LINING	Conc APRONS	EXPOSED ROCK SLOPE PROTECTION	
			m^2	m^2	m^2	m^2	DESCRIPTION
D-1	1	a	10	-	-	20	DOUBLE HEADWALL
D-2	1	ae	-	-	25	-	TYPE G2 INLET W/600-12 GRATE W/Conc APRON
D-1	1	ai	-	-	9	-	TYPE G2 INLET W/600-12 GRATE W/Conc APRON
D-2	1	ap	-	167	-	20	Conc CHANNEL WITH RSP
D-2	2	a	4	-	-	20	STRAIGHT PIPE HEADWALL W/RSP
D-2	3	o	-	-	9	-	TYPE G2 INLET W/600-12 GRATE W/Conc APRON
D-2	4	a	3	-	-	18	STRAIGHT PIPE HEADWALL W/RSP
D-2	4	e	-	-	9	-	TYPE G2 INLET W/600-12 GRATE W/Conc APRON
D-2	5	a	3	-	-	-	STRAIGHT PIPE HEADWALL W/RSP
D-3	BSW#4		-	-	-	40	BIOFILTRATION SWALE #4 W/RSP UPSTREAM & DOWNSTREAM
D-3	BSW#5		-	-	-	20	BIOFILTRATION SWALE #5 W/RSP DOWNSTREAM
D-3	6	a	4	-	-	20	"L" HEADWALL W/RSP (W=1450)
D-3	6	c	-	-	9	-	TYPE G2 INLET W/600-12 GRATE W/Conc APRON
D-3	6	e	-	-	9	-	TYPE G2 INLET W/600-12 GRATE W/Conc APRON
D-3	BSW#6		-	-	-	20	BIOFILTRATION SWALE #6 W/RSP DOWNSTREAM
D-4	BSW#7		-	-	-	20	BIOFILTRATION SWALE #7 W/RSP DOWNSTREAM
D-4	7	a	4	-	-	20	"L" HEADWALL, (W=1.45) W/RSP
		SUB TOTAL	28	167	70	218	
		TOTAL	265				

NOTE: FOR ADDITIONAL STAIN ROCK WORK SEE STRUCTURES PLANS

SUMMARY OF QUANTITIES
Q-8

STATE OF CALIFORNIA - DEPARTMENT OF TRANSPORTATION
Caltrans PROJECT DEVELOPMENT

FUNCTIONAL SUPERVISOR MAJID KHARRATI
CALCULATED-DESIGNED BY MARLENE GROS
CHECKED BY THEODORE AQUINO
REVISED BY
DATE REVISED

LAST REVISION 05-26-09
DATE PLOTTED => 29-SEP-2010
TIME PLOTTED => 14:38

Dist	COUNTY	ROUTE	POST MILES TOTAL PROJECT	SHEET No.	TOTAL SHEETS
11	SD	5,805	R49.9/R51.7, 42.6/46.5	425	886

REGISTERED CIVIL ENGINEER 5-07-09 DATE

9-27-10
PLANS APPROVAL DATE

REGISTERED PROFESSIONAL ENGINEER YONG PAK No.C67706 Exp. 06-30-11 CIVIL STATE OF CALIFORNIA

THE STATE OF CALIFORNIA OR ITS OFFICERS OR AGENTS SHALL NOT BE RESPONSIBLE FOR THE ACCURACY OR COMPLETENESS OF SCANNED COPIES OF THIS PLAN SHEET.

Caltrans Metric

CURVE DATA

A
R= 10.650
Δ=136°08'40"
L=25.306

B
R= 321.950
Δ=-12°13'07"
L=68.657

C
R= 290.050
Δ=02°34'58"
L=13.075

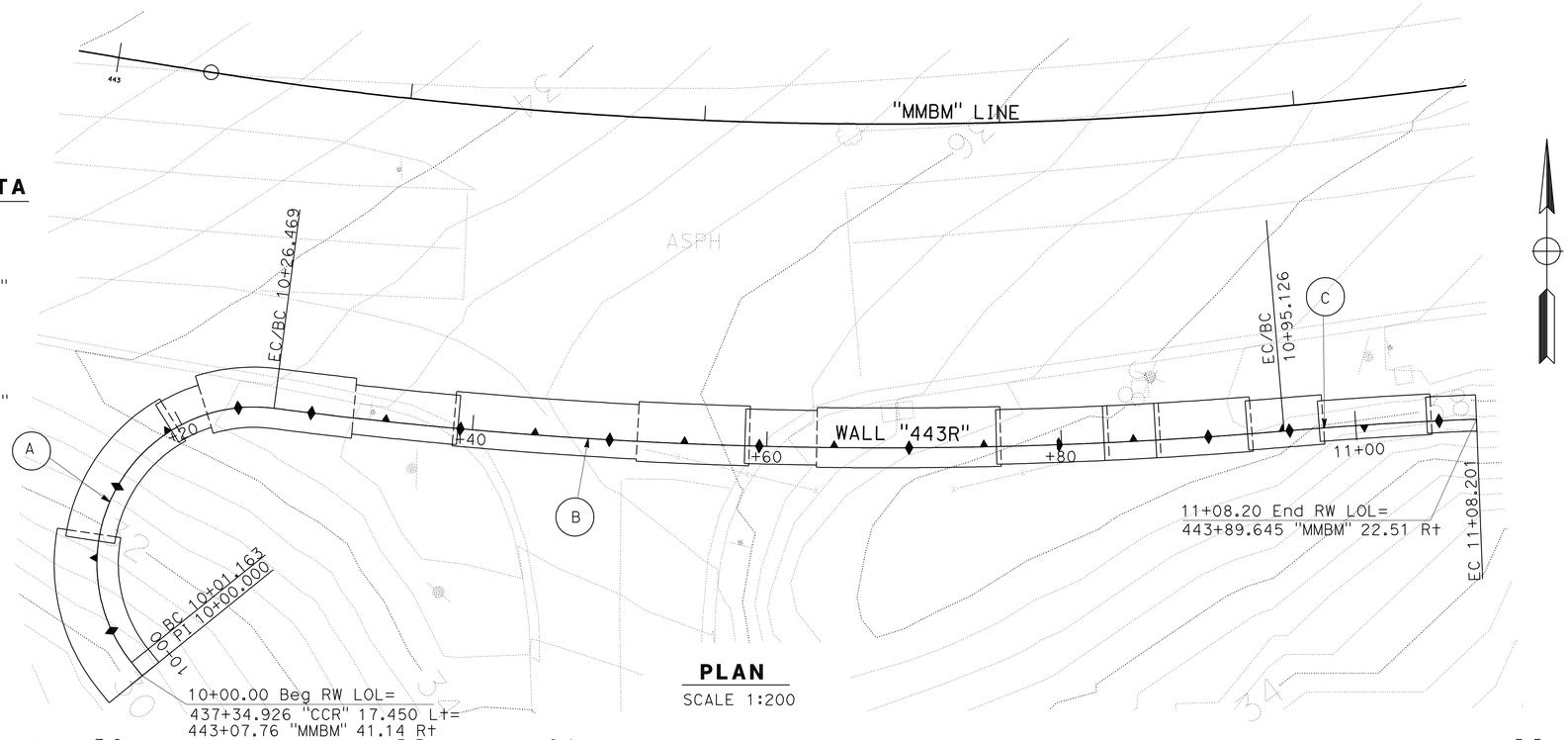

PLAN
SCALE 1:200

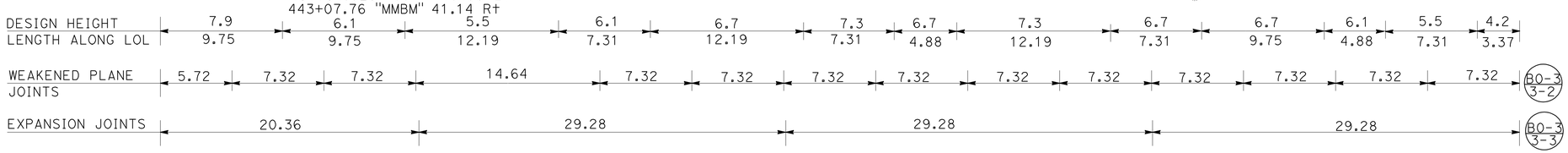

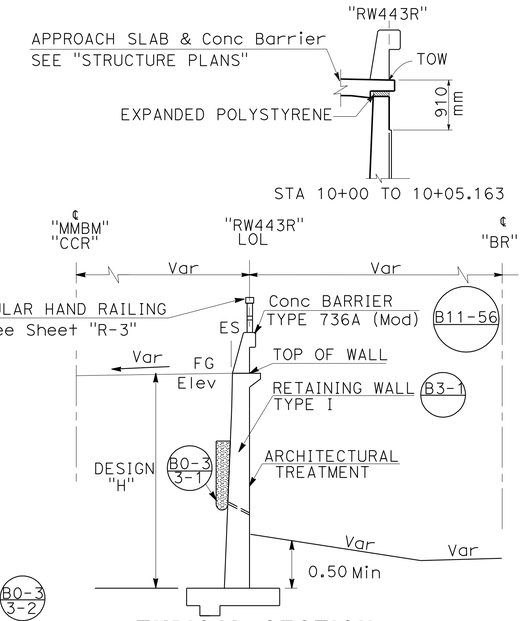

TYPICAL SECTION
NO SCALE

FG AT FACE OF WALL	
STATION	ELEVATION
10+00.000	26.999
10+05.000	28.215
10+10.000	29.352
10+15.000	30.112
10+20.000	30.466
10+25.000	30.416
10+30.000	30.038
10+40.000	29.423
10+50.000	29.560
10+60.000	30.154
10+70.000	30.869
10+80.000	31.668
10+90.000	32.510
11+00.000	34.138
11+08.201	36.148

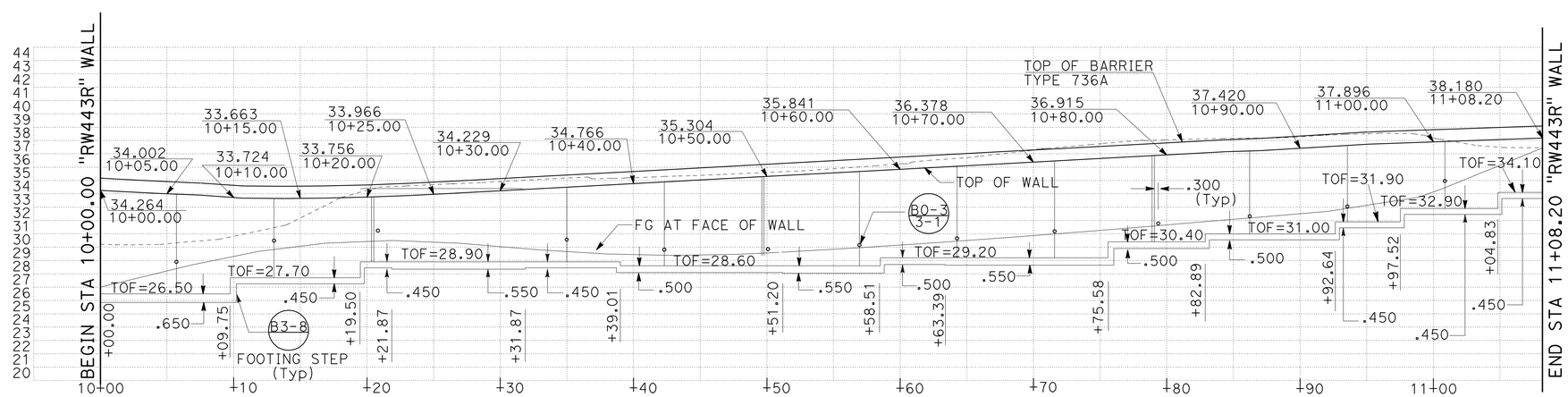

ELEVATION
SCALE Horiz 1:200
Vert 1:200

NOTES:

1. FOR DETAILS NOT SHOWN SEE STANDARD PLAN B3-1
2. FOR ARCHITECTURAL TREATMENT DETAILS SEE RETAINING WALL DETAILS SHEETS
3. TOP OF WALL ELEVATION CONTROLLED BY "CCR" LINE Lt. AND "MMBM" LINE Rt. SHOULDER ELEVATION

THIS PLAN ACCURATE FOR RETAINING WALL WORK ONLY.

ALL DIMENSIONS ARE IN METERS UNLESS OTHERWISE SHOWN.

RW 443R
RETAINING WALL PLAN
R-1

SCALE AS SHOWN

REVISED BY	DATE REVISED

ISRAEL HERNANDEZ — YONG PAK — CALCULATED-DESIGNED BY — CHECKED BY

FUNCTIONAL SUPERVISOR: MAJID KHARRATI

STATE OF CALIFORNIA - DEPARTMENT OF TRANSPORTATION
Caltrans PROJECT DEVELOPMENT

LAST REVISION 06-01-09 | DATE PLOTTED => 29-SEP-2010 | TIME PLOTTED => 14:38

Dist	COUNTY	ROUTE	POST MILES TOTAL PROJECT	SHEET No.	TOTAL SHEETS
11	SD	5,805	R49.9/R51.7, 42.6/46.5	426	886

REGISTERED CIVIL ENGINEER 5-07-09 DATE

9-27-10
PLANS APPROVAL DATE

REGISTERED PROFESSIONAL ENGINEER YONG PAK No.C67706 Exp. 06-30-11 CIVIL STATE OF CALIFORNIA

THE STATE OF CALIFORNIA OR ITS OFFICERS OR AGENTS SHALL NOT BE RESPONSIBLE FOR THE ACCURACY OR COMPLETENESS OF SCANNED COPIES OF THIS PLAN SHEET.

Caltrans Metric

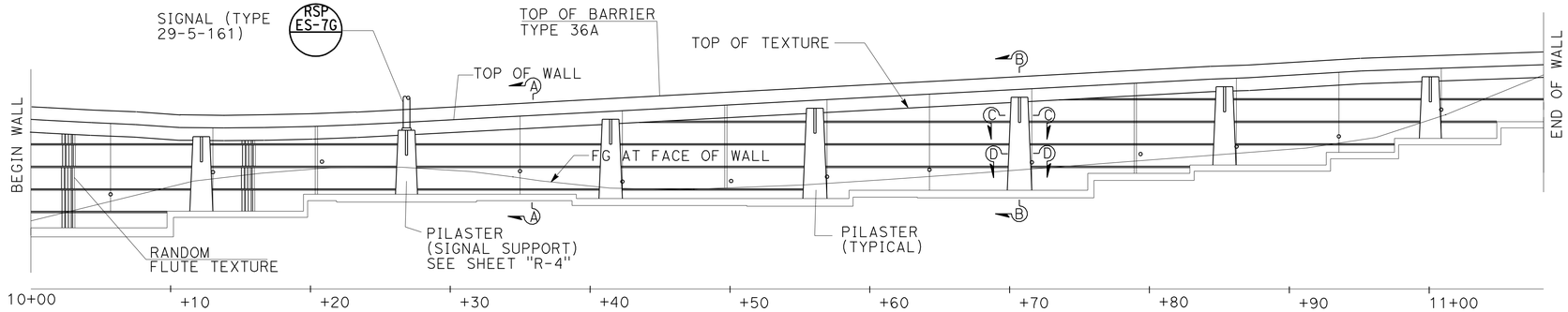

DEVELOPED ELEVATION

SCALE Horiz 1:200
Vert 1:200

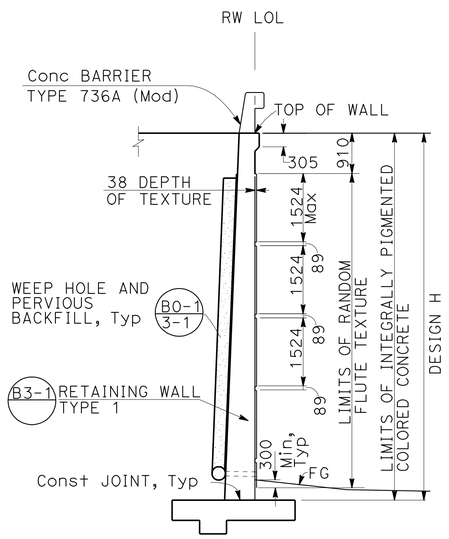

SECTION A-A

NO SCALE

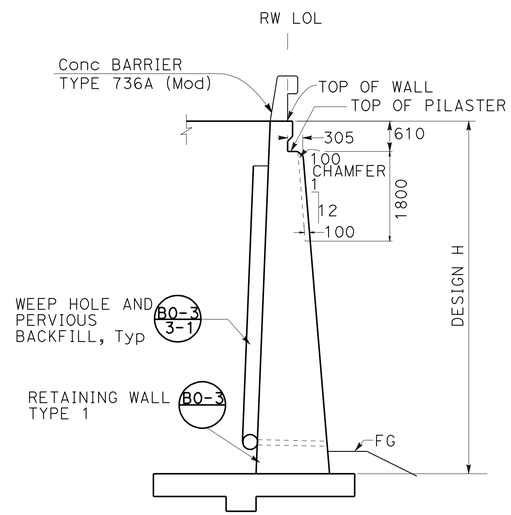

SECTION B-B

NO SCALE

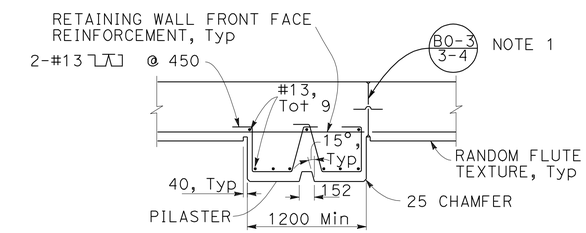

SECTION C-C

NO SCALE

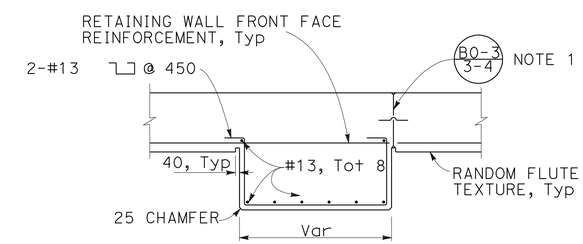

SECTION D-D

NO SCALE

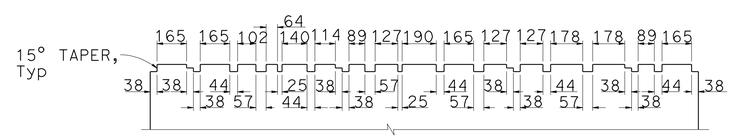

RANDOM FLUTE TEXTURE DETAIL

NO SCALE

NOTES

A. 100 mm ø DRAINS AT INTERMEDIATE SAG POINTS AND AT 7620 mm Max. CENTER TO CENTER (2743 mm C-C FOR TYPE 3 AND 2819 mm C-C FOR TYPE 4 RETAINING WALLS). FOR WALLS ADJACENT TO SIDEWALKS OR CURBS, PROVIDE 100 mm PLASTIC PIPE UNDER SIDEWALK TO DISCHARGE THROUGH CURB FACE. EXPOSED WALL DRAINS SHALL BE LOCATED 75 mm± ABOVE FINISHED GRADE.

B. GEOCOMPOSITE DRAIN, CEMENT TREATED PERMEABLE BASE, AND 80 mm ø SLOTTED PLASTIC PIPE CONTINUOUS BEHIND RETAINING WALL OR ABUTMENT. CAP ENDS OF PIPE. PROVIDE "TEE" CONNECTION AT EACH 80 mm ø DRAIN.

C. CONNECT THE LOW END OF PLASTIC PIPE TO THE MAIN OUTLET PIPE AS APPLICABLE.

D. FOR CONTROL DIMENSION, SEE "RETAINING WALL PLAN" SHEET.

ARCHITECTURAL TEXTURE DETAILS

ALL DIMENSIONS ARE IN MILLIMETERS UNLESS OTHERWISE SHOWN.

RW 443R
RETAINING WALL DETAIL
R-2

SCALE AS SHOWN

STATE OF CALIFORNIA - DEPARTMENT OF TRANSPORTATION
Caltrans PROJECT DEVELOPMENT

FUNCTIONAL SUPERVISOR: MAJID KHARRATI
CALCULATED-DESIGNED BY: ISRAEL HERNANDEZ
CHECKED BY: YONG PAK
REVISED BY
DATE REVISED

LAST REVISION 05-19-09
DATE PLOTTED => 29-SEP-2010
TIME PLOTTED => 14:38

DIST	COUNTY	ROUTE	KILOMETER POST TOTAL PROJECT	SHEET No	TOTAL SHEETS
11	SD	5,805	R49.9/R51.7, 42.6/46.5	427	886

Caltrans Metric

REGISTERED CIVIL ENGINEER — DATE 5-08-09

PLANS APPROVAL DATE 9-27-10

REGISTERED PROFESSIONAL ENGINEER JAMES L. RUCKER No. 47796 Exp. 12-31-09 CIVIL STATE OF CALIFORNIA

The State of California or its officers or agents shall not be responsible for the accuracy or completeness of electronic copies of this plan sheet.

SANDAG
401 B STREET,
SAN DIEGO, CA 92101

T.Y. LIN INTERNATIONAL
5030 CAMINO DE LA SIESTA, SUITE 204,
SAN DIEGO, CA 92108

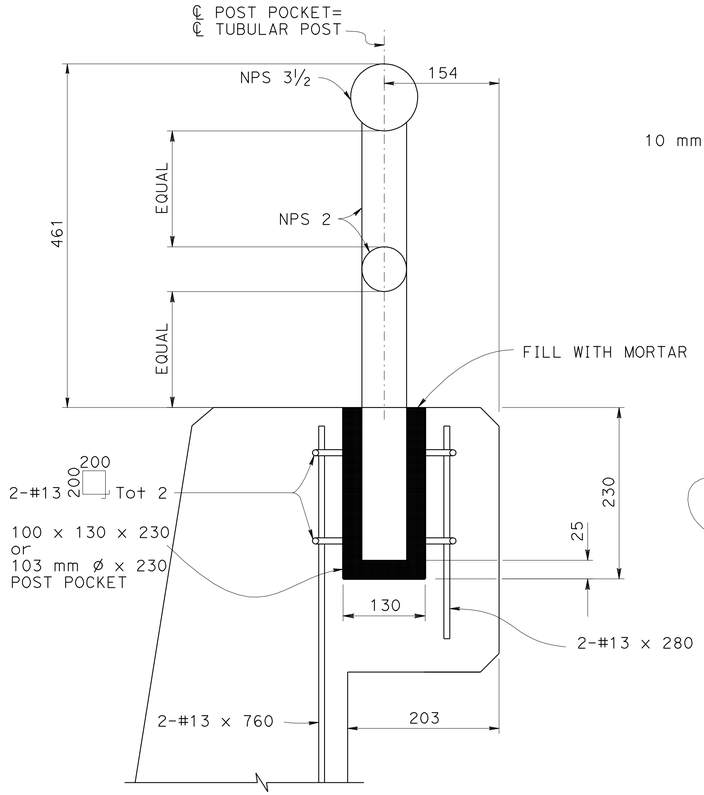

POST ANCHORAGE DETAILS

NO SCALE

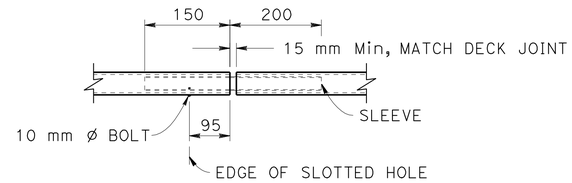

VIEW G-G

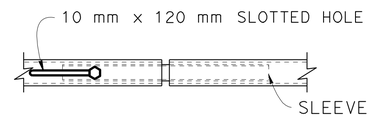

VIEW H-H

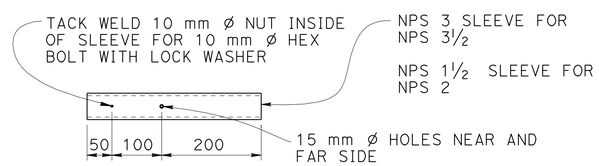

SLEEVE

TUBULAR PIPE SPLICE DETAILS

NO SCALE

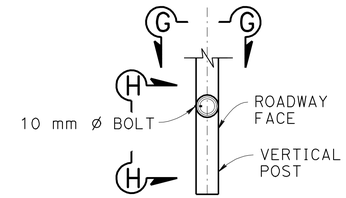

SECTION

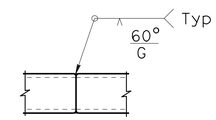

TUBE-WELD SPLICE

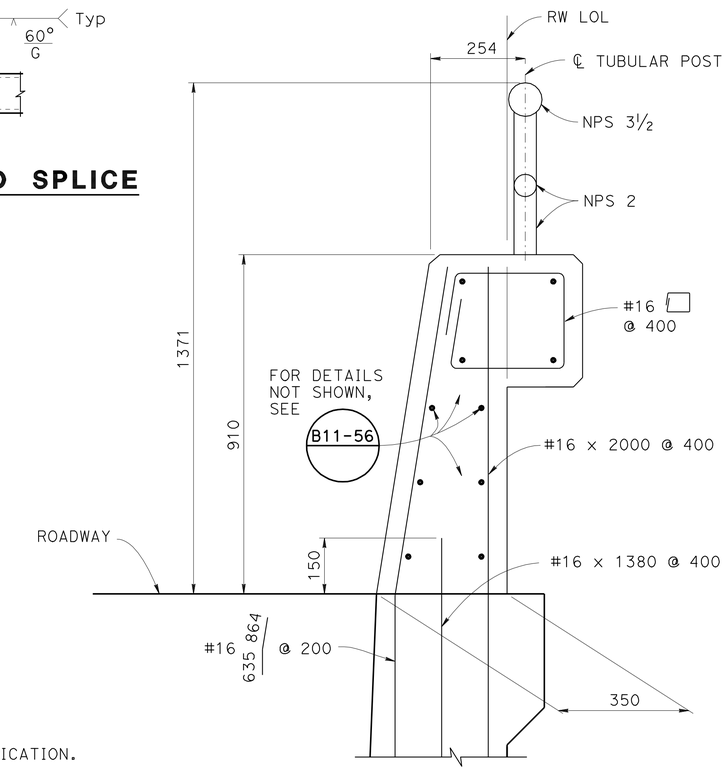

CONCRETE BARRIER TYPE 736A (MOD)

1:8

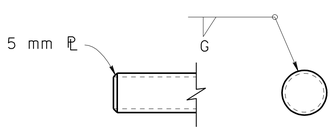

RAIL CAP DETAILS

NO SCALE

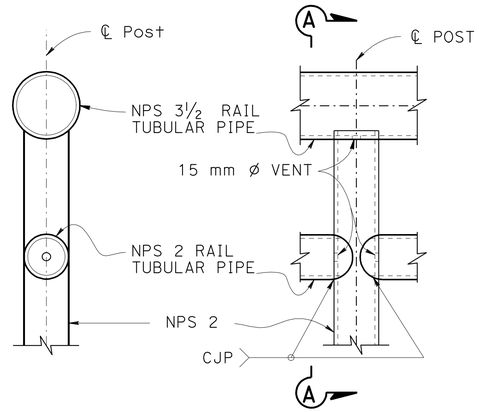

SECTION A-A

1:10

ELEVATION

1:10
FOR Typ WELDED SECTION

NOTES:

1. GALVANIZE RAIL ASSEMBLY AFTER FABRICATION.
2. POST SHALL BE VERTICAL.
3. TUBULAR PIPE SPLICES SHALL BE LOCATED IN THE PIPES SPANNING DECK OR WALL JOINTS. INCREASE JOINT WIDTH IN PIPES TO MATCH EXPANSION JOINT WIDTH AND INCREASE SLEEVE LENGTH ACCORDINGLY.
4. TOP RAIL TUBULAR PIPE SHALL BE CONTINUOUS OVER NOT LESS THAN TWO POSTS.
5. FOR DETAILS AND REINFORCEMENT NOT SHOWN SEE B11-51 AND B11-56.
6. ALL TUBULAR PIPE POSTS AND RAILS SHALL BE NPS STANDARD WEIGHT A53 GRADE B TYPE E PIPES.

ALL DIMENSIONS ARE IN MILLIMETERS UNLESS OTHERWISE SHOWN

CHUNG-YUAN WEN
DESIGN OVERSIGHT
4-28-09
SIGN OFF DATE

	BY	CHECKED
DESIGN	Arash Monsefan	Brett Makley
DETAILS	Tatyana Gnip	Arash Monsefan
QUANTITIES	Tatyana Gnip	Arash Monsefan

PREPARED FOR THE STATE OF CALIFORNIA DEPARTMENT OF TRANSPORTATION

Brett Makley
PROJECT ENGINEER

BRIDGE NO.
KILOMETER POST KP43.2

RETAINING WALL 443R

RETAINING WALL DETAIL R-3

DESIGN DETAIL SHEET (METRIC) (REV. 10/27/05)

ORIGINAL SCALE IN MILLIMETERS FOR REDUCED PLANS 0 10 20 30 40 50 60 70 80 90 100

CU 11275
EA 2T0401

DISREGARD PRINTS BEARING EARLIER REVISION DATES

REVISION DATES (PRELIMINARY STAGE ONLY) 12-19-08 02-23-09 05-20-09

SHEET OF

FILE => b2t040qa003.dgn

USERNAME => trstrk DATE PLOTTED => 29-SEP-2010 TIME PLOTTED => 14:38

DIST	COUNTY	ROUTE	KILOMETER POST TOTAL PROJECT	SHEET No	TOTAL SHEETS
11	SD	5,805	R49.9/R51.7, 42.6/46.5	428	886

Caltrans Metric

REGISTERED CIVIL ENGINEER 5-08-09 DATE

9-27-10
PLANS APPROVAL DATE

REGISTERED PROFESSIONAL ENGINEER BRETT D. MAKLEY No. 66397 Exp. 6-30-10 CIVIL STATE OF CALIFORNIA

The State of California or its officers or agents shall not be responsible for the accuracy or completeness of electronic copies of this plan sheet.

SANDAG
401 B STREET,
SAN DIEGO, CA 92101

T.Y. LIN INTERNATIONAL
5030 CAMINO DE LA SIESTA, SUITE 204,
SAN DIEGO, CA 92108

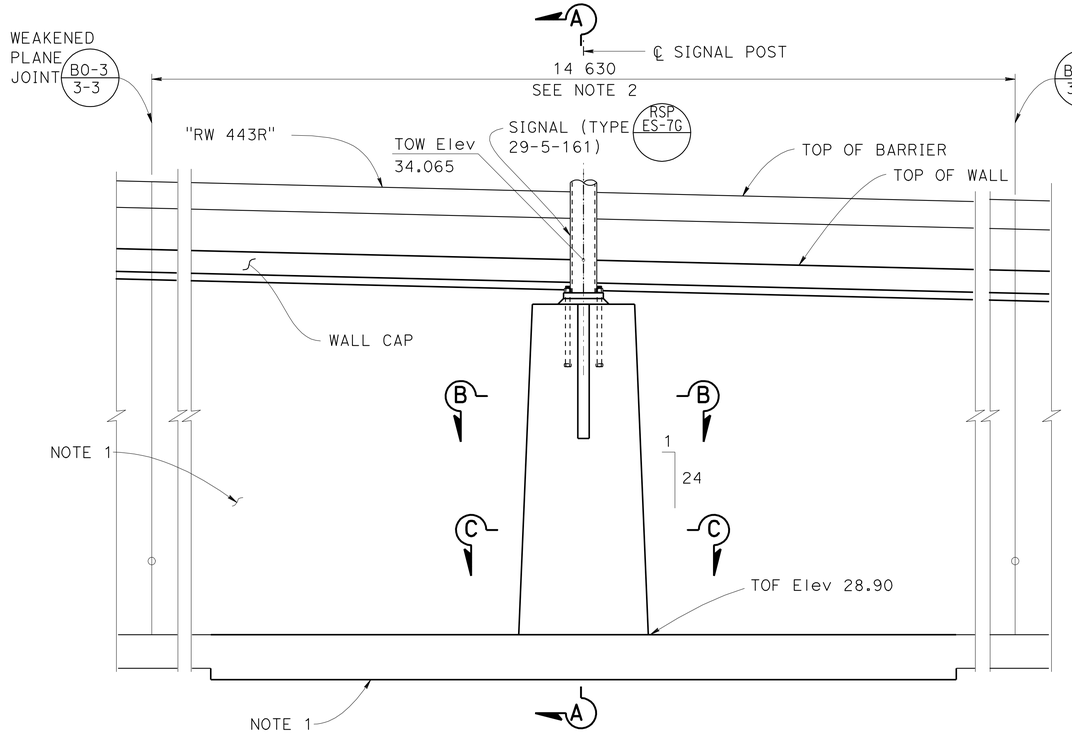

ELEVATION
1:40

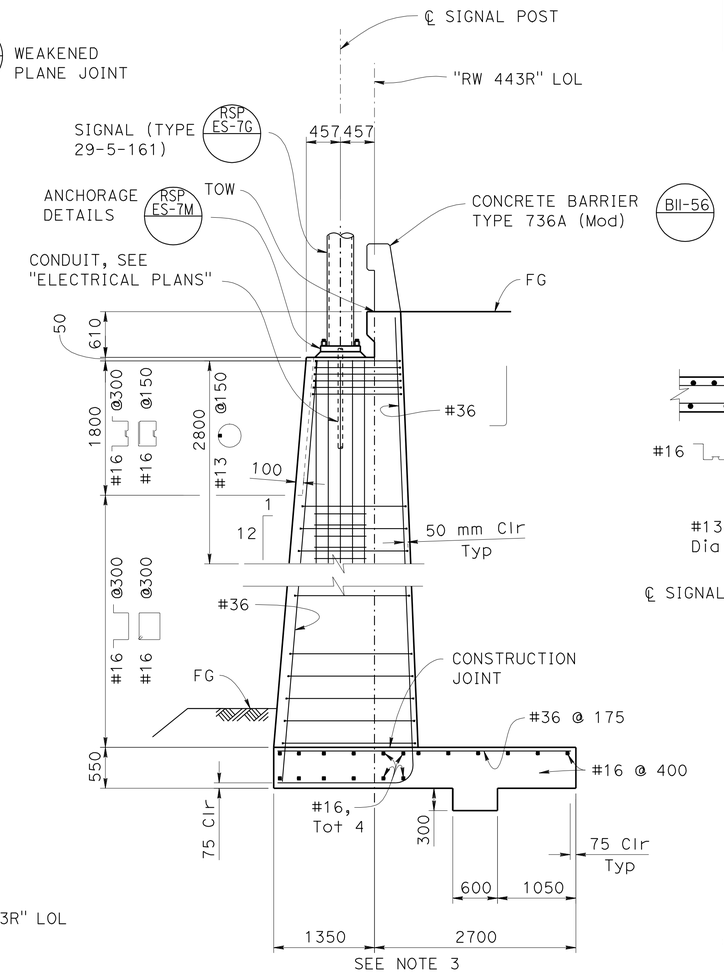

SECTION A-A
1:40

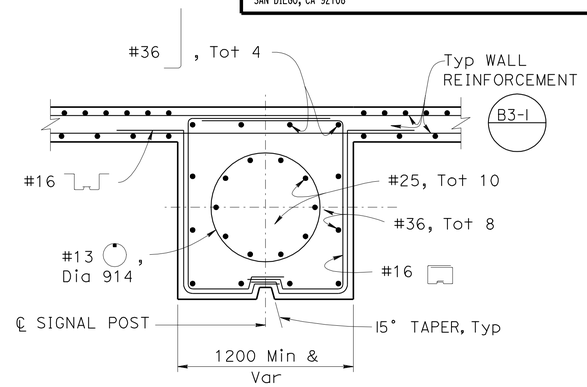

SECTION B-B
1:25

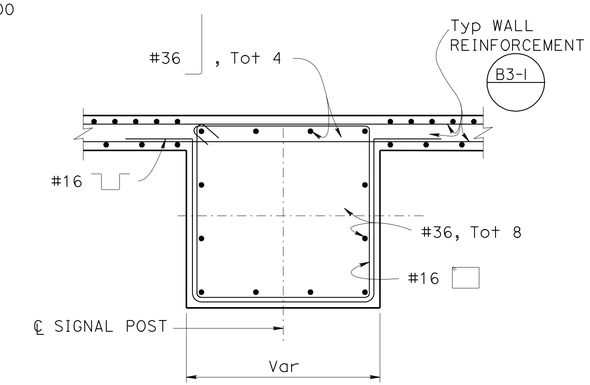

SECTION C-C
1:25

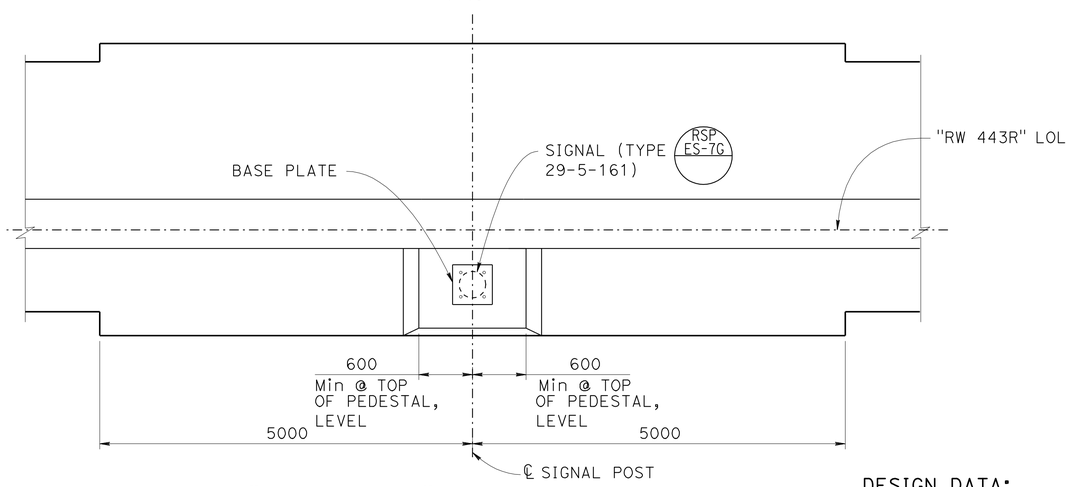

"RW 443R" FOOTING PLAN
1:40

DESIGN DATA:

FOOTING TOE PRESSURE (Max) = 205 kPa

SIGNAL PEDESTAL AND FOUNDATION

APPLIES TO RW "443R" STA 443+13.884 "MMBM" Line

NOTES:

1. FOOTING KEY AND RADOM FLUTE TEXTURE NOT SHOWN FOR CLARITY.
2. NO EXPANSION JOINTS OR WEAKENED PLANE JOINTS ALLOWED IN THIS LIMIT.
3. DEVELOP FOOTING REINFORCEMENT INTO ADJACENT RETAINING WALL FOOTING, TYPICAL LAP LENGTH.

ALL DIMENSIONS ARE IN MILLIMETERS UNLESS OTHERWISE SHOWN

CHUNG-YUAN WEN
DESIGN OVERSIGHT
4-28-09
SIGN OFF DATE

	BY	CHECKED
DESIGN	Arash Monsefan	Brett Makley
DETAILS	Tatyana Gnip	Arash Monsefan
QUANTITIES	Tatyana Gnip	Arash Monsefan

PREPARED FOR THE STATE OF CALIFORNIA DEPARTMENT OF TRANSPORTATION

Brett Makley
PROJECT ENGINEER

BRIDGE NO.
KILOMETER POST KP43.2

RETAINING WALL 433R
RETAINING WALL DETAIL R-4

DESIGN DETAIL SHEET (METRIC) (REV. 10/27/05)

ORIGINAL SCALE IN MILLIMETERS FOR REDUCED PLANS 0 10 20 30 40 50 60 70 80 90 100

CU 11275
EA 2T0401

DISREGARD PRINTS BEARING EARLIER REVISION DATES

REVISION DATES (PRELIMINARY STAGE ONLY) 12-19-08 02-25-09 05-20-09

SHEET OF

FILE => b2t040qa004.dgn

USERNAME => ttrstrk DATE PLOTTED => 29-SEP-2010 TIME PLOTTED => 14:40

Dist	COUNTY	ROUTE	POST MILES TOTAL PROJECT	SHEET No.	TOTAL SHEETS
11	SD	5,805	R49.9/R51.7, 42.6/46.5	429	886

REGISTERED CIVIL ENGINEER 5-07-09 DATE

9-27-10
PLANS APPROVAL DATE

REGISTERED PROFESSIONAL ENGINEER
YONG PAK
No. C67706
Exp. 06-30-11
CIVIL
STATE OF CALIFORNIA

THE STATE OF CALIFORNIA OR ITS OFFICERS OR AGENTS SHALL NOT BE RESPONSIBLE FOR THE ACCURACY OR COMPLETENESS OF SCANNED COPIES OF THIS PLAN SHEET.

Caltrans Metric

CURVE DATA

(A)

R= 275.403
Δ=10°24'08"
L=49.410

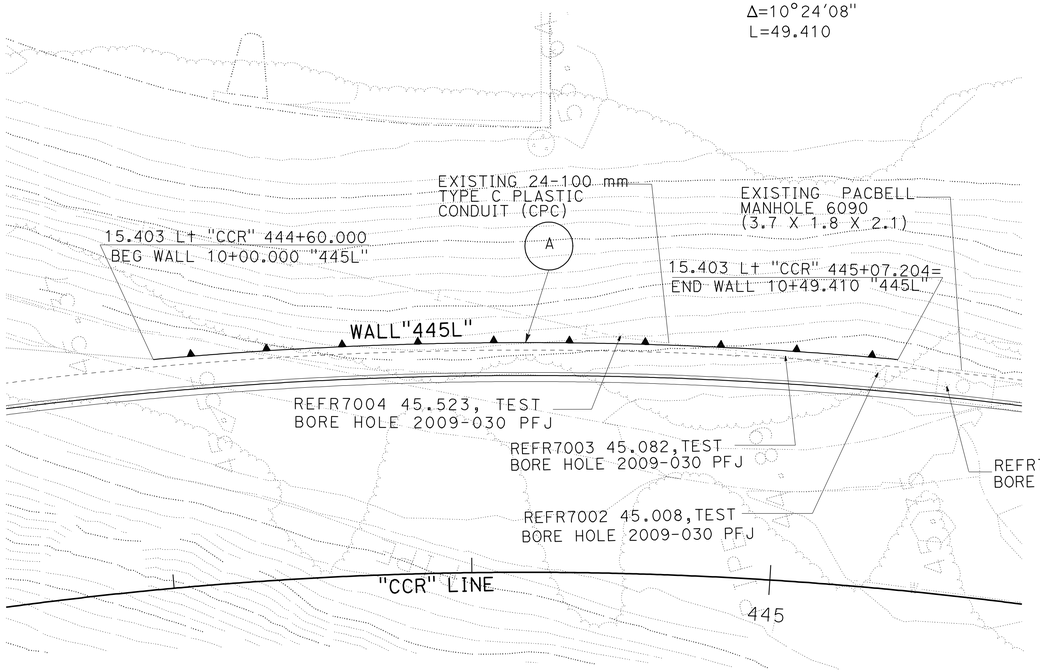

PLAN

SCALE 1:200

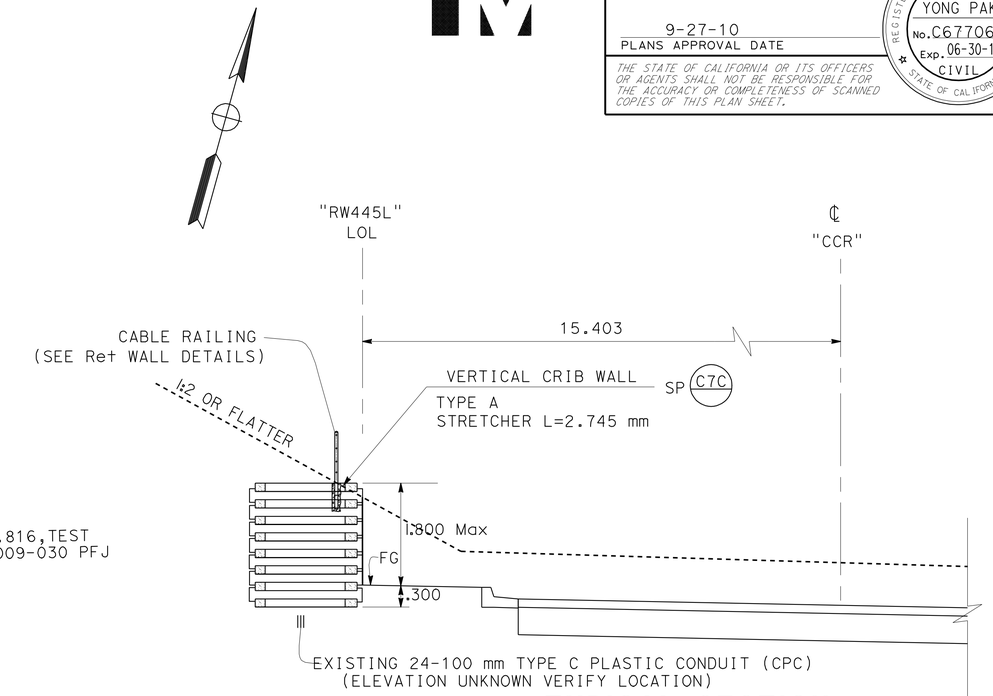

TYPICAL SECTION

NO SCALE

AT FACE OF WALL (STATION)	FG (ELEVATION)	BOTTOM OF WALL (ELEVATION)
10+00.000	44.231	43.931
10+10.592	44.408	44.108
10+21.185	44.607	44.307
10+31.777	44.807	44.507
10+42.370	45.007	44.707
10+49.410	45.207	44.907

ELEVATION

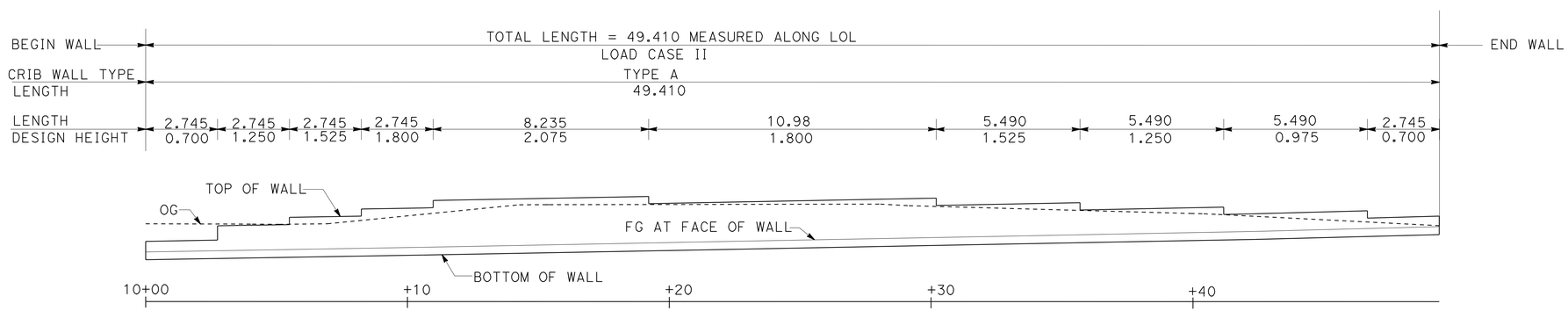

ELEVATION

SCALE Horiz 1:100
Vert 1:100

REINFORCED CONCRETE CRIB WALL
RW "445L"
RETAINING WALL PLAN

ALL DIMENSIONS ARE IN METERS
UNLESS OTHERWISE SHOWN.

SCALE AS SHOWN

R-5

THIS PLAN ACCURATE FOR RETAINING WALL WORK ONLY

STATE OF CALIFORNIA - DEPARTMENT OF TRANSPORTATION
Caltrans PROJECT DEVELOPMENT

FUNCTIONAL SUPERVISOR: MAJID KHARRATI
CALCULATED-DESIGNED BY: ISRAEL HERNANDEZ
CHECKED BY: YONG PAK
REVISED BY
DATE REVISED

LAST REVISION 05-19-09
DATE PLOTTED => 29-SEP-2010
TIME PLOTTED => 14:40

Dist	COUNTY	ROUTE	POST MILES TOTAL PROJECT	SHEET No.	TOTAL SHEETS
11	SD	5,805	R49.9/R51.7, 42.6/46.5	430	886

REGISTERED CIVIL ENGINEER 5-07-09 DATE

9-27-10
PLANS APPROVAL DATE

REGISTERED PROFESSIONAL ENGINEER
YONG PAK
No. C67706
Exp. 06-30-11
CIVIL
STATE OF CALIFORNIA

THE STATE OF CALIFORNIA OR ITS OFFICERS OR AGENTS SHALL NOT BE RESPONSIBLE FOR THE ACCURACY OR COMPLETENESS OF SCANNED COPIES OF THIS PLAN SHEET.

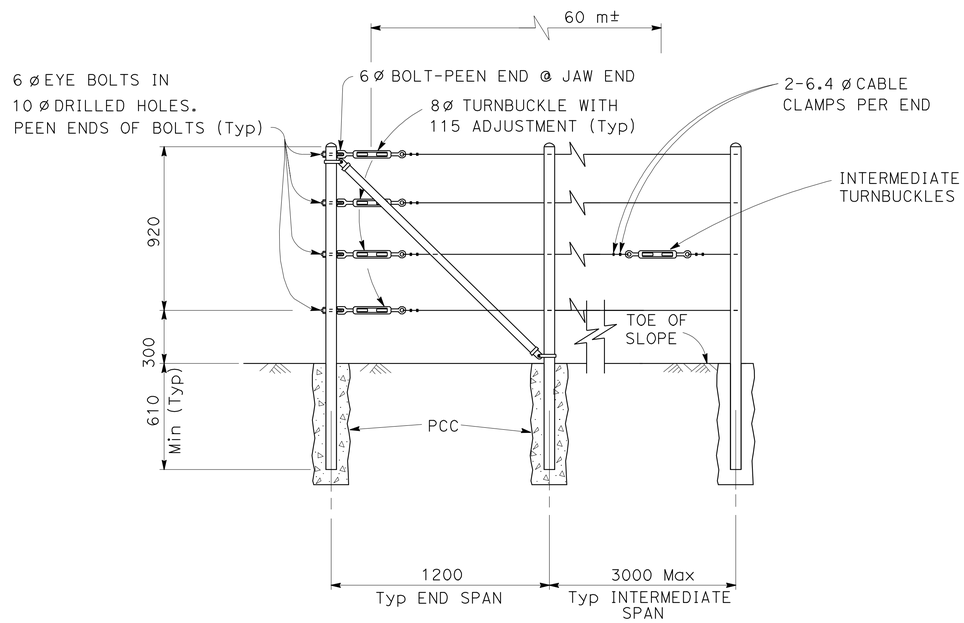

CABLE RAILING

NEW WALL (WITHOUT GUTTER)

NO SCALE

ALL DIMENSIONS ARE IN MILLIMETERS
UNLESS OTHERWISE SHOWN.

RW 445L
RETAINING WALL DETAIL
R-6

STATE OF CALIFORNIA - DEPARTMENT OF TRANSPORTATION
Caltrans PROJECT DEVELOPMENT

FUNCTIONAL SUPERVISOR: MAJID KHARRATI
CALCULATED-DESIGNED BY: ISRAEL HERNANDEZ
CHECKED BY: YONG PAK
REVISED BY
DATE REVISED

LAST REVISION 05-19-09
DATE PLOTTED => 29-SEP-2010
TIME PLOTTED => 14:40

REFERENCE: CALTRANS SOIL & ROCK LOGGING, CLASSIFICATION, AND PRESENTATION MANUAL (JUNE 2007)

GROUP SYMBOLS AND NAMES

Graphic/Symbol	Group Names	Graphic/Symbol	Group Names
GW	Well-graded GRAVEL Well-graded GRAVEL with SAND	CL	Lean CLAY Lean CLAY with SAND Lean CLAY with GRAVEL SANDY lean CLAY SANDY lean CLAY with GRAVEL GRAVELLY lean CLAY GRAVELLY lean CLAY with SAND
GP	Poorly graded GRAVEL Poorly graded GRAVEL with SAND		
GW-GM	Well-graded GRAVEL with SILT Well-graded GRAVEL with SILT and SAND	CL-ML	SILTY CLAY SILTY CLAY with SAND SILTY CLAY with GRAVEL SANDY SILTY CLAY SANDY SILTY CLAY with GRAVEL GRAVELLY SILTY CLAY GRAVELLY SILTY CLAY with SAND
GW-GC	Well-graded GRAVEL with CLAY (or SILTY CLAY) Well-graded GRAVEL with CLAY and SAND (or SILTY CLAY and SAND)		
GP-GM	Poorly graded GRAVEL with SILT Poorly graded GRAVEL with SILT and SAND	ML	SILT SILT with SAND SILT with GRAVEL SANDY SILT SANDY SILT with GRAVEL GRAVELLY SILT GRAVELLY SILT with SAND
GP-GC	Poorly graded GRAVEL with CLAY (or SILTY CLAY) Poorly graded GRAVEL with CLAY and SAND (or SILTY CLAY and SAND)		
GM	SILTY GRAVEL SILTY GRAVEL with SAND	OL	ORGANIC lean CLAY ORGANIC lean CLAY with SAND ORGANIC lean CLAY with GRAVEL SANDY ORGANIC lean CLAY SANDY ORGANIC lean CLAY with GRAVEL GRAVELLY ORGANIC lean CLAY GRAVELLY ORGANIC lean CLAY with SAND
GC	CLAYEY GRAVEL CLAYEY GRAVEL with SAND		
GC-GM	SILTY, CLAYEY GRAVEL SILTY, CLAYEY GRAVEL with SAND	OL	ORGANIC SILT ORGANIC SILT with SAND ORGANIC SILT with GRAVEL SANDY ORGANIC SILT SANDY ORGANIC SILT with GRAVEL GRAVELLY ORGANIC SILT GRAVELLY ORGANIC SILT with SAND
SW	Well-graded SAND Well-graded SAND with GRAVEL		
SP	Poorly graded SAND Poorly graded SAND with GRAVEL	CH	Fat CLAY Fat CLAY with SAND Fat CLAY with GRAVEL SANDY fat CLAY SANDY fat CLAY with GRAVEL GRAVELLY fat CLAY GRAVELLY fat CLAY with SAND
SW-SM	Well-graded SAND with SILT Well-graded SAND with SILT and GRAVEL		
SW-SC	Well-graded SAND with CLAY (or SILTY CLAY) Well-graded SAND with CLAY and GRAVEL (or SILTY CLAY and GRAVEL)	MH	Elastic SILT Elastic SILT with SAND Elastic SILT with GRAVEL SANDY elastic SILT SANDY elastic SILT with GRAVEL GRAVELLY elastic SILT GRAVELLY elastic SILT with SAND
SP-SM	Poorly graded SAND with SILT Poorly graded SAND with SILT and GRAVEL		
SP-SC	Poorly graded SAND with CLAY (or SILTY CLAY) Poorly graded SAND with CLAY and GRAVEL (or SILTY CLAY and GRAVEL)	OH	ORGANIC fat CLAY ORGANIC fat CLAY with SAND ORGANIC fat CLAY with GRAVEL SANDY ORGANIC fat CLAY SANDY ORGANIC fat CLAY with GRAVEL GRAVELLY ORGANIC fat CLAY GRAVELLY ORGANIC fat CLAY with SAND
SM	SILTY SAND SILTY SAND with GRAVEL		
SC	CLAYEY SAND CLAYEY SAND with GRAVEL	OH	ORGANIC elastic SILT ORGANIC elastic SILT with SAND ORGANIC elastic SILT with GRAVEL SANDY ORGANIC elastic SILT SANDY ORGANIC elastic SILT with GRAVEL GRAVELLY ORGANIC elastic SILT GRAVELLY ORGANIC elastic SILT with SAND
SC-SM	SILTY, CLAYEY SAND SILTY, CLAYEY SAND with GRAVEL		
PT	PEAT	OL/OH	ORGANIC SOIL ORGANIC SOIL with SAND ORGANIC SOIL with GRAVEL SANDY ORGANIC SOIL SANDY ORGANIC SOIL with GRAVEL GRAVELLY ORGANIC SOIL GRAVELLY ORGANIC SOIL with SAND
	COBBLES COBBLES and BOULDERS BOULDERS		

FIELD AND LABORATORY TESTING

- (C) Consolidation (ASTM D 2435)
- (CL) Collapse Potential (ASTM D 5333)
- (CP) Compaction Curve (CTM 216)
- (CR) Corrosivity Testing (CTM 643, CTM 422, CTM 417)
- (CU) Consolidated Undrained Triaxial (ASTM D 4767)
- (DS) Direct Shear (ASTM D 3080)
- (EI) Expansion Index (ASTM D 4829)
- (M) Moisture Content (ASTM D 2216)
- (OC) Organic Content-% (ASTM D 2974)
- (P) Permeability (CTM 220)
- (PA) Particle Size Analysis (ASTM D 422)
- (PI) Plasticity Index (AASHTO T 90) Liquid Limit (AASHTO T 89)
- (PL) Point Load Index (ASTM D 5731)
- (PM) Pressure Meter
- (PP) Pocket Penetrometer
- (R) R-Value (CTM 301)
- (SE) Sand Equivalent (CTM 217)
- (SG) Specific Gravity (AASHTO T 100)
- (SL) Shrinkage Limit (ASTM D 427)
- (SW) Swell Potential (ASTM D 4546)
- (TV) Pocket Torvane
- (UC) Unconfined Compression-Soil (ASTM D 2166) Unconfined Compression-Rock (ASTM D 2938)
- (UU) Unconsolidated Undrained Triaxial (ASTM D 2850)
- (UW) Unit Weight (ASTM D 4767)
- (VS) Vane Shear (AASHTO T 223)

Caltrans Metric

DIST	COUNTY	ROUTE	KILOMETER POST TOTAL PROJECT	SHEET No	TOTAL SHEETS
11	SD	5,805	R49.9/R51.7, 42.6/46.5	431	886

06-01-09
CERTIFIED ENGINEERING GEOLOGIST

9-27-10
PLANS APPROVAL DATE

REGISTERED GEOLOGIST GENE CUSTENBORDER No. 1319 CERTIFIED ENGINEERING GEOLOGIST STATE OF CALIFORNIA

The State of California or its officers or agents shall not be responsible for the accuracy or completeness of electronic copies of this plan sheet.

SANDAG
401 B STREET,
SAN DIEGO, CA. 92101

BUREAU VERITAS NORTH AMERICA, INC.
7895 CONVOY CT.
SAN DIEGO, CA. 92111

APPARENT DENSITY OF COHESIONLESS SOILS

Description	SPT N_{60} (Blows / 300 mm)
Very loose	0 - 4
Loose	5 - 10
Medium Dense	11 - 30
Dense	31 - 50
Very Dense	> 50

MOISTURE

Description	Criteria
Dry	Absence of moisture, dusty, dry to the touch
Moist	Damp but no visible water
Wet	Visible free water, usually soil is below water table

PERCENT OR PROPORTION OF SOILS

Description	Criteria
Trace	Particles are present but estimated to be less than 5%
Few	5 to 10%
Little	15 to 25%
Some	30 to 45%
Mostly	50 to 100%

PARTICLE SIZE

Description		Size
Boulder		> 300 mm
Cobble		76 mm to 300 mm
Gravel	Coarse	19 mm to 76 mm
	Fine	No. 4 to 19 mm
Sand	Coarse	No. 10 to No. 4
	Medium	No. 40 to No. 10
	Fine	No. 200 to No. 40

SOIL LEGEND

ENGINEERING SERVICES | GEOTECHNICAL SERVICES

FUNCTIONAL SUPERVISOR
NAME:
DRAWN BY: J. JOHNS
CHECKED BY: G. CUSTENBORDER
FIELD INVESTIGATIONS BY:
V. OLIN
G. CUSTENBORDER

STATE OF CALIFORNIA
DEPARTMENT OF TRANSPORTATION

DIVISION OF ENGINEERING SERVICES
STRUCTURE DESIGN
DESIGN BRANCH

BRIDGE NO.
POST MILES KP43.2/PM26.8

RW "443R"
R-7
LOG OF TEST BORINGS SHEET NO. 1 OF 5

OGS CIVIL LOG OF TEST BORINGS SHEET

ORIGINAL SCALE IN MILLIMETERS FOR REDUCED PLANS 0 10 20 30 40 50 60 70 80 90 100

CU 11275
EA 2T0401

DISREGARD PRINTS BEARING EARLIER REVISION DATES
REVISION DATES 10/14/08 3/9/09
SHEET OF

FILE => b2t040qa007.dgn

USERNAME => tr5ttk DATE PLOTTED => 29-SEP-2010 TIME PLOTTED => 14:40

REFERENCE: CALTRANS SOIL & ROCK LOGGING, CLASSIFICATION, AND PRESENTATION MANUAL (JUNE 2007)

Caltrans Metric

DIST	COUNTY	ROUTE	KILOMETER POST TOTAL PROJECT	SHEET No	TOTAL SHEETS
11	SD	5,805	R49.9/R51.7, 42.6/46.5	432	886

06-01-09
CERTIFIED ENGINEERING GEOLOGIST

9-27-10
PLANS APPROVAL DATE

REGISTERED GEOLOGIST GENE CUSTENBORDER No. 1319 CERTIFIED ENGINEERING GEOLOGIST STATE OF CALIFORNIA

The State of California or its officers or agents shall not be responsible for the accuracy or completeness of electronic copies of this plan sheet.

SANDAG
401 B STREET,
SAN DIEGO, CA. 92101

BUREAU VERITAS NORTH AMERICA, INC.
7895 CONVOY CT.
SAN DIEGO, CA. 92111

CEMENTATION

Description	Criteria
Weak	Crumbles or breaks with handling or little finger pressure.
Moderate	Crumbles or breaks with considerable finger pressure.
Strong	Will not crumble or break with finger pressure.

CONSISTENCY OF COHESIVE SOILS

Description	Unconfined Compressive Strength (tsm)	Pocket Penetrometer Measurement (tsm)	Torvane Measurement (tsm)	Field Approximation
Very Soft	< 24	< 24	< 12	Easily penetrated several inches by fist
Soft	24 to 48	24 to 48	12 to 24	Easily penetrated several inches by thumb
Medium Stiff	48 to 96	48 to 96	24 to 48	Penetrated several inches by thumb with moderate effort
Stiff	96 to 192	96 to 192	48 to 96	Readily indented by thumb but penetrated only with great effort
Very Stiff	192 to 383	192 to 383	96 to 192	Readily indented by thumbnail
Hard	> 383	> 383	> 192	Indented by thumbnail with difficulty

BOREHOLE IDENTIFICATION

Symbol	Hole Type	Description
Size	A	Auger Boring
Size	R P	Rotary drilled boring Rotary percussion boring (air)
Size	R	Rotary drilled diamond core
Size	HD HA	Hand driven (25 mm soil tube) Hand Auger
●	D	Dynamic Cone Penetration Boring
▲	CPT	Cone Penetration Test (ASTM D 5778-95)
⬚	O	Other

Note: Size in millimeters.

PLASTICITY OF FINE-GRAINED SOILS

Description	Criteria
Nonplastic	A 3 mm thread cannot be rolled at any water content.
Low	The thread can barely be rolled and the lump cannot be formed when drier than the plastic limit.
Medium	The thread is easy to roll and not much time is required to reach the plastic limit. The thread cannot be rerolled after reaching the plastic limit. The lump crumbles when drier than the plastic limit.
High	It takes considerable time rolling and kneading to reach the plastic limit. The thread can be rerolled several times after reaching the plastic limit. The lump can be formed without crumbling when drier than the plastic limit.

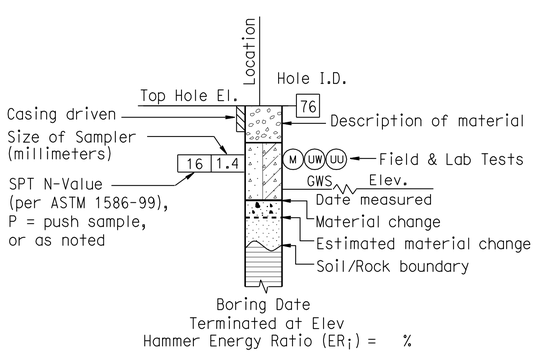

ROTARY BORING

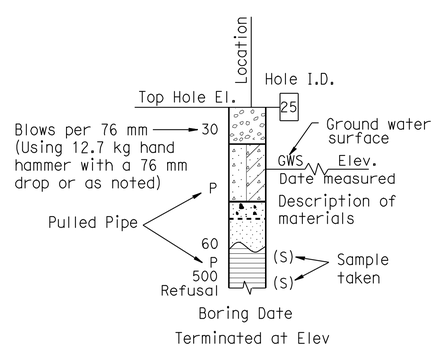

HAND BORING

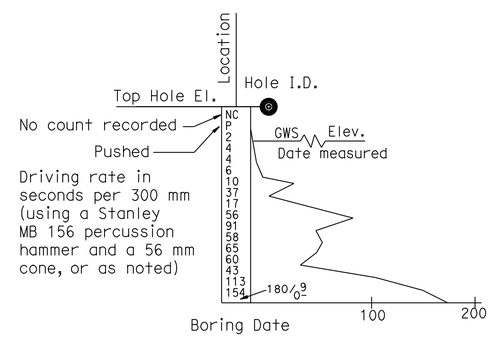

DYNAMIC CONE PENETRATION BORING

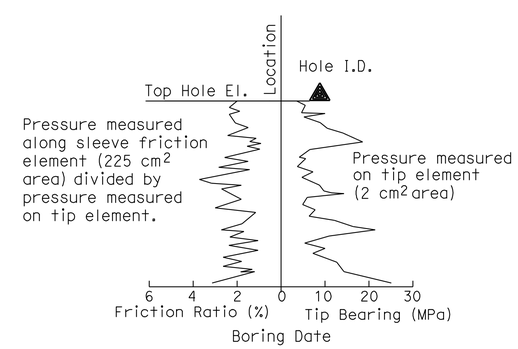

CONE PENETRATION TEST (CPT) SOUNDING

SOIL LEGEND

ENGINEERING SERVICES	GEOTECHNICAL SERVICES	STATE OF CALIFORNIA DEPARTMENT OF TRANSPORTATION	DIVISION OF ENGINEERING SERVICES STRUCTURE DESIGN	BRIDGE NO.	RW "443R" R-8
FUNCTIONAL SUPERVISOR	DRAWN BY: J. JOHNS		DESIGN BRANCH	POST MILES	LOG OF TEST BORINGS SHEET NO. 2 OF 5
NAME:	CHECKED BY: G. CUSTENBORDER	FIELD INVESTIGATIONS BY: V. OLIN, G. CUSTENBORDER		KP43.2/PM26.8	

OGS CIVIL LOG OF TEST BORINGS SHEET

ORIGINAL SCALE IN MILLIMETERS FOR REDUCED PLANS 0 10 20 30 40 50 60 70 80 90 100

CU 11275
EA 2T0401

DISREGARD PRINTS BEARING EARLIER REVISION DATES 10/11/08 3/9/09

REVISION DATES | SHEET | OF

FILE => b2t040qa008.dgn

USERNAME => ttstrk

DATE PLOTTED => 29-SEP-2010 TIME PLOTTED => 14:41

REFERENCE: CALTRANS SOIL & ROCK LOGGING, CLASSIFICATION, AND PRESENTATION MANUAL (JUNE 2007)

Caltrans Metric

DIST	COUNTY	ROUTE	KILOMETER POST TOTAL PROJECT	SHEET No	TOTAL SHEETS
11	SD	5,805	R49.9/R51.7, 42.6/46.5	433	886

06-01-09
CERTIFIED ENGINEERING GEOLOGIST

9-27-10
PLANS APPROVAL DATE

REGISTERED GEOLOGIST GENE CUSTENBORDER No. 1319 CERTIFIED ENGINEERING GEOLOGIST STATE OF CALIFORNIA

The State of California or its officers or agents shall not be responsible for the accuracy or completeness of electronic copies of this plan sheet.

SANDAG
401 B STREET,
SAN DIEGO, CA. 92101

BUREAU VERITAS NORTH AMERICA, INC.
7895 CONVOY CT.
SAN DIEGO, CA. 92111

PERCENT CORE RECOVERY (REC) & ROCK QUALITY DESIGNATION (RQD)

$$REC = \frac{\sum \text{Length of the recovered core pieces}}{\text{Total length of core run}} \times 100\%$$

$$RQD = \frac{\sum \text{Length of intact core pieces} \geq 100 \text{ mm}}{\text{Total length of core run}} \times 100\%$$

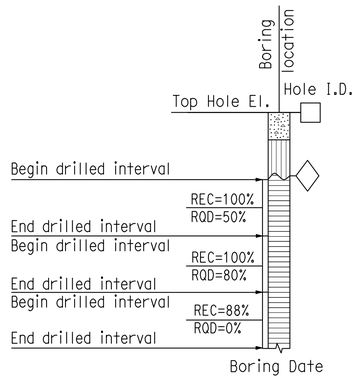

RELATIVE STRENGTH OF INTACT ROCK

Term	Uniaxial Compressive Strength (MPa)
Extremely Strong	> 207
Very Strong	100 - 207
Strong	49 - 100
Medium Strong	25 - 49
Weak	5 - 25
Very Weak	1 - 5
Extremely Weak	< 1

BEDDING SPACING

Description	Thickness / Spacing
Massive	Greater than 3 m
Very thickly bedded	1 m to 3 m
Thickly bedded	300 mm to 1 m
Moderately bedded	100 mm to 300 mm
Thinly bedded	30 mm to 100 mm
Very thinly bedded	10 mm to 30 mm
Laminated	Less than 10 mm

LEGEND OF ROCK MATERIALS

- IGNEOUS ROCK
- SEDIMENTARY ROCK
- METAMORPHIC ROCK

ROCK HARDNESS

Description	Criteria
Extremely Hard	Specimen cannot be scratched with a pocket knife or sharp pick; can only be chipped with repeated heavy hammer blows.
Very Hard	Specimen cannot be scratched with a pocket knife or sharp pick. Breaks with repeated heavy hammer blows.
Hard	Specimen can be scratched with a pocket knife or sharp pick with difficulty (heavy pressure). Heavy hammer blows required to break specimen.
Moderately Hard	Specimen can be scratched with pocket knife or sharp pick with light or moderate pressure. Core breaks with moderate hammer pressure.
Moderately Soft	Specimen can be grooved 5 mm deep with a pocket knife or sharp pick with moderate or heavy pressure. Breaks with light hammer blow or heavy manual pressure.
Soft	Specimen can be grooved or gouged easily by a pocket knife or sharp pick with light pressure, can be scratched with fingernail. Breaks with light to moderate manual pressure.
Very Soft	Specimen can be readily indented, grooved or gouged with fingernail, or carved with a pocket knife. Breaks with light manual pressure.

FRACTURE DENSITY

Description	Observed Fracture Density
Unfractured	No fractures.
Very slightly fractured	Lengths greater than 1 m.
Slightly fractured	Lengths from 300 mm to 1000 mm with few lengths less than 300 mm or greater than 1000 mm.
Moderately fractured	Lengths mostly in 100 mm to 300 mm range with most lengths about 200 mm.
Intensely fractured	Lengths average from 30 mm to 100 mm with scattered fragmented intervals with lengths less than 100 mm.
Very intensely fractured	Mostly chips and fragments with a few scattered short core lengths.

Combination descriptors (such as "Very intensely to intensely fractured") are used where equal distribution of both fracture density characteristics is present over a significant interval or exposure, or where characteristics are "in between" the descriptor definitions. Only two adjacent descriptors may be combined.

WEATHERING DESCRIPTORS FOR INTACT ROCK

Description	Diagnostic features					General Characteristics
	Chemical Weathering-Discoloration and/or oxidation		Mechanical Weathering-Grain boundary conditions (disaggregation) primarily for granitics and some coarse-grained sediments	Texture and Solutioning		
	Body of Rock	Fracture Surfaces		Texture	Solutioning	
Fresh	No discoloration, not oxidized.	No discoloration or oxidation.	No separation, intact (tight).	No change.	No solutioning.	Hammer rings when crystalline rocks are struck.
Slightly Weathered	Discoloration or oxidation is limited to surface of, or short distance from, fractures; some feldspar crystals are dull.	Minor to complete discoloration or oxidation of most surfaces.	No visible separation, intact (tight).	Preserved.	Minor leaching of some soluble minerals may be noted.	Hammer rings when crystalline rocks are struck. Body of rock not weakened.
Moderately Weathered	Discoloration or oxidation extends from fractures usually throughout; Fe-Mg minerals are "rusty," feldspar crystals are "cloudy."	All fracture surfaces are discolored or oxidized.	Partial separation of boundaries visible.	Generally preserved.	Soluble minerals may be mostly leached.	Hammer does not ring when rock is struck. Body of rock is slightly weakened.
Intensely Weathered	Discoloration or oxidation throughout; all feldspars and Fe-Mg minerals are altered to clay to some extent; or chemical alteration produces in-situ disaggregation, see grain boundary conditions.	All fracture surfaces are discolored or oxidized, surfaces friable.	Partial separation, rock is friable; in semiarid conditions granitics are disaggregated.	Texture altered by chemical disintegration (hydration, argillation).	Leaching of soluble minerals may be complete.	Dull sound when struck with hammer, usually can be broken with moderate to heavy manual pressure or by light hammer blow without reference to planes of weakness such as incipient or hairline fractures, or veinlets. Rock is significantly weakened.
Decomposed	Discolored or oxidized throughout, but resistant minerals such as quartz may be unaltered; all feldspars and Fe-Mg minerals are completely altered to clay.		Complete separation of grain boundaries (disaggregated).	Resembles a soil, partial or complete remnant rock structure may be preserved; leaching of soluble minerals usually complete.		Can be granulated by hand. Resistant minerals such as quartz may be present as "stringers" or "dikes."

Combination descriptors (such as "slightly weathered to fresh") are permissible where equal distribution of both weathering characteristics is present over significant intervals or where characteristics present are "in between" the diagnostic feature. However, combination descriptors should not be used where significant, identifiable zones can be delineated. Only two adjacent descriptors may be combined. "Very intensely weathered" is the combination descriptor for "intensely weathered to decomposed."

ROCK LEGEND

ENGINEERING SERVICES	GEOTECHNICAL SERVICES	STATE OF CALIFORNIA DEPARTMENT OF TRANSPORTATION	DIVISION OF ENGINEERING SERVICES STRUCTURE DESIGN	BRIDGE NO. / POST MILES
FUNCTIONAL SUPERVISOR	DRAWN BY: J. JOHNS	FIELD INVESTIGATIONS BY: V. OLIN, G. CUSTENBORDER	DESIGN BRANCH	KP43.2/PM26.8
NAME:	CHECKED BY: G. CUSTENBORDER			

RW "443R"
R-9
LOG OF TEST BORINGS SHEET NO. 3 OF 5

OGS CIVIL LOG OF TEST BORINGS SHEET

ORIGINAL SCALE IN MILLIMETERS FOR REDUCED PLANS 0 10 20 30 40 50 60 70 80 90 100

CU 11275
EA 2T0401

DISREGARD PRINTS BEARING EARLIER REVISION DATES → 10/14/08 3/9/09

REVISION DATES | SHEET | OF

FILE => b2t040qa009.dgn

USERNAME => trestrk DATE PLOTTED => 29-SEP-2010 TIME PLOTTED => 14:41

DIST	COUNTY	ROUTE	KILOMETER POST TOTAL PROJECT	SHEET No	TOTAL SHEETS
11	SD	5,805	R49.9/R51.7, 42.6/46.5	434	886

Caltrans Metric

CERTIFIED ENGINEERING GEOLOGIST 06-01-09

9-27-10
PLANS APPROVAL DATE

REGISTERED GEOLOGIST — GENE CUSTENBORDER No. 1319 — CERTIFIED ENGINEERING GEOLOGIST — STATE OF CALIFORNIA

The State of California or its officers or agents shall not be responsible for the accuracy or completeness of electronic copies of this plan sheet.

SANDAG
401 B STREET,
SAN DIEGO, CA. 92101

BUREAU VERITAS NORTH AMERICA, INC.
7895 CONVOY CT.
SAN DIEGO, CA. 92111

Bench Mark
All elevations shown in the LOTBs are in meters and are referenced to the NGVD 1929 Datum.

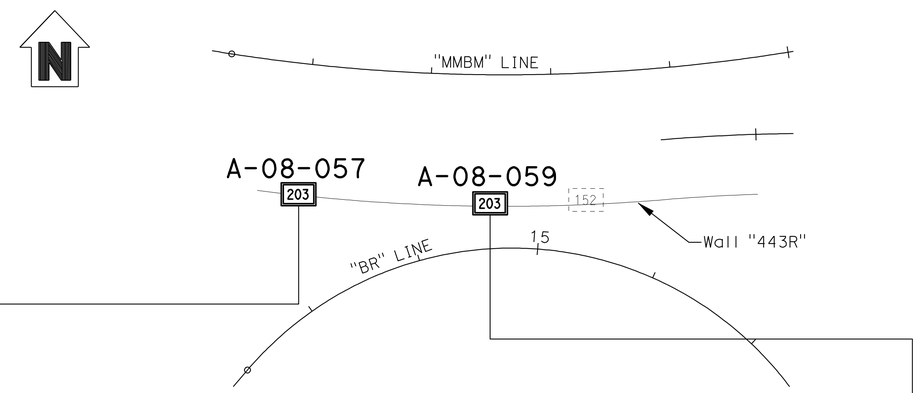

PLAN
1 : 500

NOTES:

1. 62 mm diameter samples were taken using a California split-barrel sampler with an inside diameter (I.D.) of 62 mm and an outside diameter (O.D.) of 83 mm.
2. Automatic trip and safety hammer systems consisting of hammer weight of 62.5 kg falling a distance of 762 mm were used to advance the drive samplers in accordance with ASTM D1586.
3. The average hammer energy ratio (ER_i) reflects the percentage efficiency of SPT blowcounts (N-value). The estimated ER_i for the various drilling equipment used was as follows:
   Boart Longyear:
   Longyear 1405: $ER_i \cong 1.45$
   Prosonic Track Mounted: $ER_i \cong 1.00$
   Prosonic 1: $ER_i \cong 1.45$
   Minisonic: $ER_i \cong 1.00$
   Test America:
   CME 95: $ER_i \cong 1.45$
   Pacific Drilling:
   Unimog: $ER_i \cong 1.27$
   Mole: $ER_i \cong 1.00$
   Minimole: $ER_i \cong 1.00$
4. The sedimentary rock was obtained utilizing a sonic drilling technique; this method resulted in Core Recovery (REC) values of essentially 100%. Also, given the nature of the Sedimentary Rock (ie., friable, highly fractured, decomposed rock) a Rock Quality Designation (RQD) index is not relevant and therefore not reported on LOTBs.

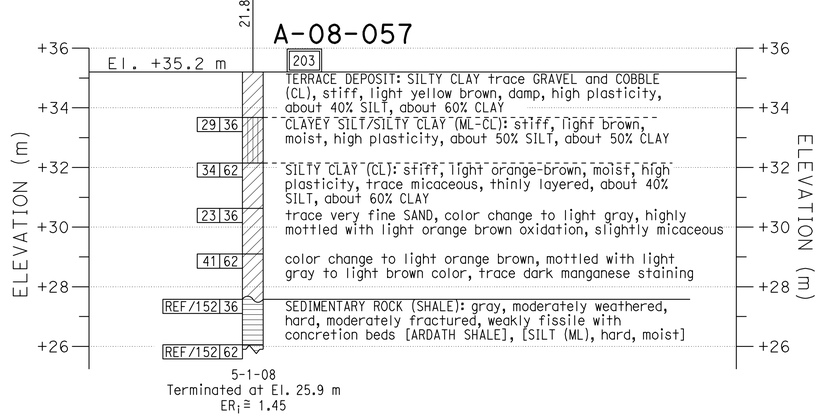

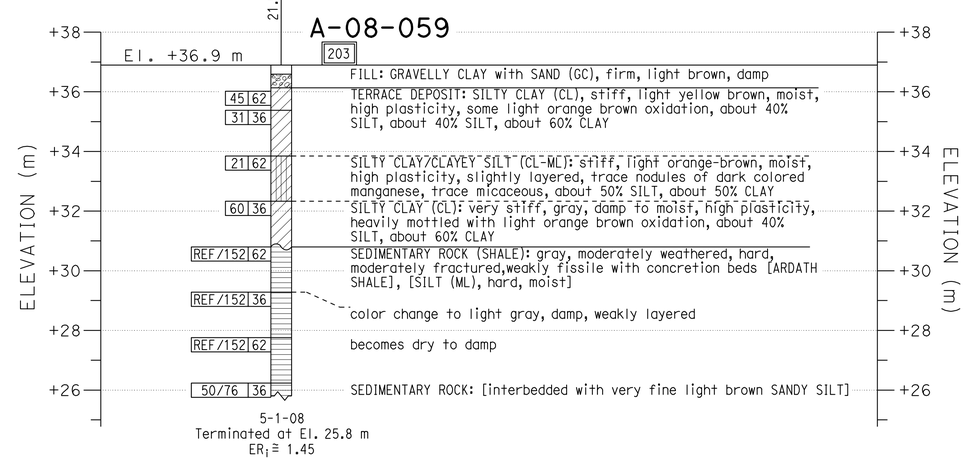

PROFILE
VERTICAL 1 : 100
HORIZONTAL 1 : 500

ENGINEERING SERVICES	GEOTECHNICAL SERVICES	STATE OF CALIFORNIA DEPARTMENT OF TRANSPORTATION	DIVISION OF ENGINEERING SERVICES STRUCTURE DESIGN DESIGN BRANCH	BRIDGE NO. / POST MILES	RW "443R" R-10
FUNCTIONAL SUPERVISOR	DRAWN BY: J. JOHNS	FIELD INVESTIGATIONS BY: V. OLIN, G. CUSTENBORDER			
NAME:	CHECKED BY: G. CUSTENBORDER		CU 11275 EA 2T0401	KP43.2/PM26.8	LOG OF TEST BORINGS SHEET NO. 4 OF 5

OGS CIVIL LOG OF TEST BORINGS SHEET

ORIGINAL SCALE IN MILLIMETERS FOR REDUCED PLANS 0 10 20 30 40 50 60 70 80 90 100

DISREGARD PRINTS BEARING EARLIER REVISION DATES 10/14/08 3/9/09

REVISION DATES | SHEET | OF

FILE => b2t040qa010.dgn

DATE PLOTTED => 29-SEP-2010 TIME PLOTTED => 14:41

USERNAME => ttrstpk

DIST	COUNTY	ROUTE	KILOMETER POST TOTAL PROJECT	SHEET No	TOTAL SHEETS
11	SD	5,805	R49.9/R51.7, 42.6/46.5	435	886

Caltrans Metric

CERTIFIED ENGINEERING GEOLOGIST 06-01-09

9-27-10
PLANS APPROVAL DATE

REGISTERED GEOLOGIST GENE CUSTENBORDER No. 1319 CERTIFIED ENGINEERING GEOLOGIST STATE OF CALIFORNIA

The State of California or its officers or agents shall not be responsible for the accuracy or completeness of electronic copies of this plan sheet.

SANDAG
401 B STREET,
SAN DIEGO, CA. 92101

BUREAU VERITAS NORTH AMERICA, INC.
7895 CONVOY CT.
SAN DIEGO, CA. 92111

Bench Mark
All elevations shown in the LOTBs are in meters and are referenced to the NGVD 1929 Datum.

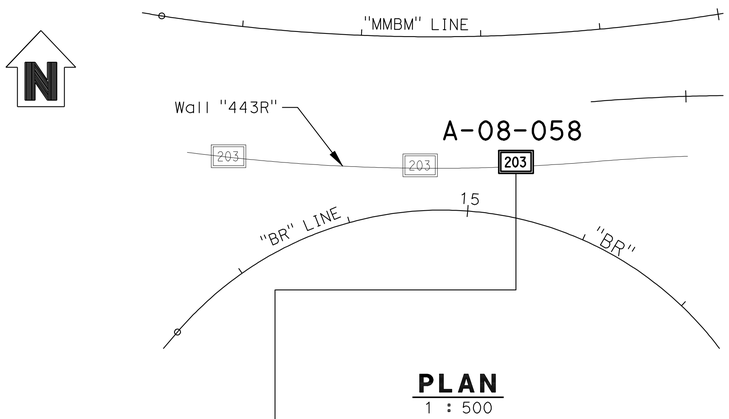

PLAN
1 : 500

NOTES:

1. 62 mm diameter samples were taken using a California split-barrel sampler with an inside diameter (I.D.) of 62 mm and an outside diameter (O.D.) of 83 mm.

2. Automatic trip and safety hammer systems consisting of hammer weight of 62.5 kg falling a distance of 762 mm were used to advance the drive samplers in accordance with ASTM D1586.

3. The average hammer energy ratio (ER_i) reflects the percentage efficiency of SPT blowcounts (N-value). The estimated ER_i for the various drilling equipment used was as follows:
   Boart Longyear:
   - Longyear 1405: $ER_i \cong 1.45$
   - Prosonic Track Mounted: $ER_i \cong 1.00$
   - Prosonic 1: $ER_i \cong 1.45$
   - Minisonic: $ER_i \cong 1.00$

   Pacific Drilling:
   - Unimog: $ER_i \cong 1.27$
   - Mole: $ER_i \cong 1.00$
   - Minimole: $ER_i \cong 1.00$

   Test America:
   - CME 95: $ER_i \cong 1.45$

4. The sedimentary rock was obtained utilizing a sonic drilling technique; this method resulted in Core Recovery (REC) values of essentially 100%. Also, given the nature of the Sedimentary Rock (ie., friable, highly fractured, decomposed rock) a Rock Quality Designation (RQD) index is not relevant and therefore not reported on LOTBs.

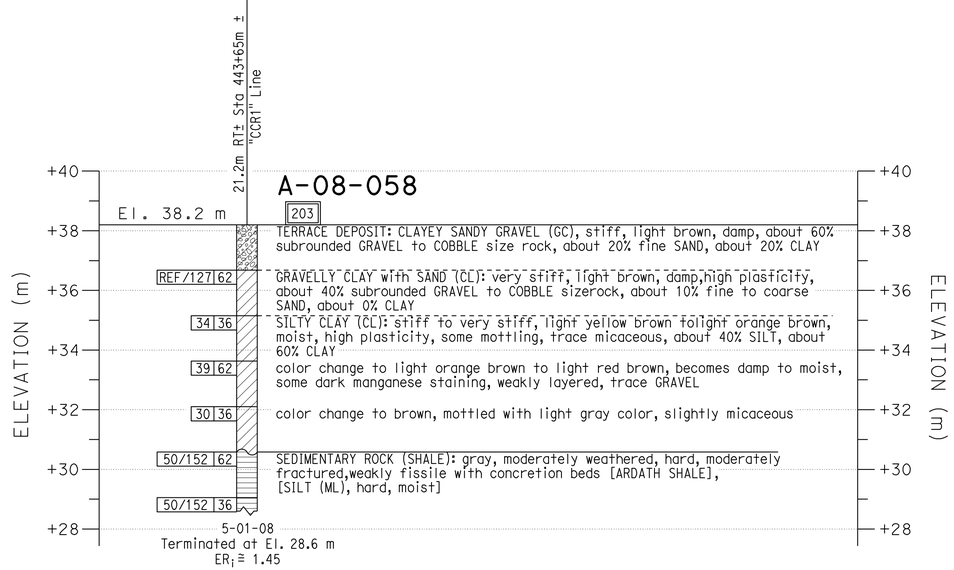

PROFILE
VERTICAL 1 : 100
HORIZONTAL 1 : 500

ENGINEERING SERVICES	GEOTECHNICAL SERVICES	STATE OF CALIFORNIA DEPARTMENT OF TRANSPORTATION	DIVISION OF ENGINEERING SERVICES STRUCTURE DESIGN DESIGN BRANCH	BRIDGE NO. / POST MILES KP43.2/PM26.8	RW "443R" R-11 LOG OF TEST BORINGS SHEET NO. 5 OF 5
FUNCTIONAL SUPERVISOR	DRAWN BY: J. JOHNS	FIELD INVESTIGATIONS BY: V. OLIN, G. CUSTENBORDER			
NAME:	CHECKED BY: G. CUSTENBORDER				

OGS CIVIL LOG OF TEST BORINGS SHEET

ORIGINAL SCALE IN MILLIMETERS FOR REDUCED PLANS 0 10 20 30 40 50 60 70 80 90 100

CU 11275
EA 2T0401

DISREGARD PRINTS BEARING EARLIER REVISION DATES → 10/11/08 3/9/09

REVISION DATES | SHEET | OF

FILE => b2t040qa011.dgn

DATE PLOTTED => 29-SEP-2010 TIME PLOTTED => 14:41
USERNAME => trestrk

REFERENCE: CALTRANS SOIL & ROCK LOGGING, CLASSIFICATION, AND PRESENTATION MANUAL (JUNE 2007)

GROUP SYMBOLS AND NAMES

Graphic/Symbol	Group Names
GW	Well-graded GRAVEL Well-graded GRAVEL with SAND
GP	Poorly graded GRAVEL Poorly graded GRAVEL with SAND
GW-GM	Well-graded GRAVEL with SILT Well-graded GRAVEL with SILT and SAND
GW-GC	Well-graded GRAVEL with CLAY (or SILTY CLAY) Well-graded GRAVEL with CLAY and SAND (or SILTY CLAY and SAND)
GP-GM	Poorly graded GRAVEL with SILT Poorly graded GRAVEL with SILT and SAND
GP-GC	Poorly graded GRAVEL with CLAY (or SILTY CLAY) Poorly graded GRAVEL with CLAY and SAND (or SILTY CLAY and SAND)
GM	SILTY GRAVEL SILTY GRAVEL with SAND
GC	CLAYEY GRAVEL CLAYEY GRAVEL with SAND
GC-GM	SILTY, CLAYEY GRAVEL SILTY, CLAYEY GRAVEL with SAND
SW	Well-graded SAND Well-graded SAND with GRAVEL
SP	Poorly graded SAND Poorly graded SAND with GRAVEL
SW-SM	Well-graded SAND with SILT Well-graded SAND with SILT and GRAVEL
SW-SC	Well-graded SAND with CLAY (or SILTY CLAY) Well-graded SAND with CLAY and GRAVEL (or SILTY CLAY and GRAVEL)
SP-SM	Poorly graded SAND with SILT Poorly graded SAND with SILT and GRAVEL
SP-SC	Poorly graded SAND with CLAY (or SILTY CLAY) Poorly graded SAND with CLAY and GRAVEL (or SILTY CLAY and GRAVEL)
SM	SILTY SAND SILTY SAND with GRAVEL
SC	CLAYEY SAND CLAYEY SAND with GRAVEL
SC-SM	SILTY, CLAYEY SAND SILTY, CLAYEY SAND with GRAVEL
PT	PEAT
	COBBLES COBBLES and BOULDERS BOULDERS

Graphic/Symbol	Group Names
CL	Lean CLAY Lean CLAY with SAND Lean CLAY with GRAVEL SANDY lean CLAY SANDY lean CLAY with GRAVEL GRAVELLY lean CLAY GRAVELLY lean CLAY with SAND
CL-ML	SILTY CLAY SILTY CLAY with SAND SILTY CLAY with GRAVEL SANDY SILTY CLAY SANDY SILTY CLAY with GRAVEL GRAVELLY SILTY CLAY GRAVELLY SILTY CLAY with SAND
ML	SILT SILT with SAND SILT with GRAVEL SANDY SILT SANDY SILT with GRAVEL GRAVELLY SILT GRAVELLY SILT with SAND
OL	ORGANIC lean CLAY ORGANIC lean CLAY with SAND ORGANIC lean CLAY with GRAVEL SANDY ORGANIC lean CLAY SANDY ORGANIC lean CLAY with GRAVEL GRAVELLY ORGANIC lean CLAY GRAVELLY ORGANIC lean CLAY with SAND
OL	ORGANIC SILT ORGANIC SILT with SAND ORGANIC SILT with GRAVEL SANDY ORGANIC SILT SANDY ORGANIC SILT with GRAVEL GRAVELLY ORGANIC SILT GRAVELLY ORGANIC SILT with SAND
CH	Fat CLAY Fat CLAY with SAND Fat CLAY with GRAVEL SANDY fat CLAY SANDY fat CLAY with GRAVEL GRAVELLY fat CLAY GRAVELLY fat CLAY with SAND
MH	Elastic SILT Elastic SILT with SAND Elastic SILT with GRAVEL SANDY elastic SILT SANDY elastic SILT with GRAVEL GRAVELLY elastic SILT GRAVELLY elastic SILT with SAND
OH	ORGANIC fat CLAY ORGANIC fat CLAY with SAND ORGANIC fat CLAY with GRAVEL SANDY ORGANIC fat CLAY SANDY ORGANIC fat CLAY with GRAVEL GRAVELLY ORGANIC fat CLAY GRAVELLY ORGANIC fat CLAY with SAND
OH	ORGANIC elastic SILT ORGANIC elastic SILT with SAND ORGANIC elastic SILT with GRAVEL SANDY ORGANIC elastic SILT SANDY ORGANIC elastic SILT with GRAVEL GRAVELLY ORGANIC elastic SILT GRAVELLY ORGANIC elastic SILT with SAND
OL/OH	ORGANIC SOIL ORGANIC SOIL with SAND ORGANIC SOIL with GRAVEL SANDY ORGANIC SOIL SANDY ORGANIC SOIL with GRAVEL GRAVELLY ORGANIC SOIL GRAVELLY ORGANIC SOIL with SAND

FIELD AND LABORATORY TESTING

- (C) CONSOLIDATION (ASTM D 2435)
- (CL) COLLAPSE POTENTIAL (ASTM D 5333)
- (CP) COMPACTION CURVE (CTM 216)
- (CR) CORROSIVITY TESTING (CTM 643, CTM 422, CTM 417)
- (CU) CONSOLIDATED UNDRAINED TRIAXIAL (ASTM D 4767)
- (DS) DIRECT SHEAR (ASTM D 3080)
- (EI) EXPANSION INDEX (ASTM D 4829)
- (M) MOISTURE CONTENT (ASTM D 2216)
- (OC) ORGANIC CONTENT-% (ASTM D 2974)
- (P) PERMEABILITY (CTM 220)
- (PA) PARTICLE SIZE ANALYSIS (ASTM D 422)
- (PI) PLASTICITY INDEX (AASHTO T 90) LIQUID LIMIT (AASHTO T 89)
- (PL) POINT LOAD INDEX (ASTM D 5731)
- (PM) PRESSURE METER
- (PP) POCKET PENETROMETER
- (R) R-VALUE (CTM 301)
- (SE) SAND EQUIVALENT (CTM 217)
- (SG) SPECIFIC GRAVITY (AASHTO T 100)
- (SL) SHRINKAGE LIMIT (ASTM D 427)
- (SW) SWELL POTENTIAL (ASTM D 4546)
- (TV) POCKET TORVANE
- (UC) UNCONFINED COMPRESSION-SOILI (ASTM D 2166) UNCONFINED COMPRESSION- ROCK (ASTM D 2938)
- (UU) UNCONSOLIDATED UNDRAINED TRIAXIAL (ASTM D 2850)
- (UW) UNIT WEIGHT (ASTM D 4767)
- (VS) VANE SHEAR (AASHTO T 223)

Caltrans Metric

DIST	COUNTY	ROUTE	KILOMETER POST TOTAL PROJECT	SHEET No	TOTAL SHEETS
11	SD	5,805	R49.9/R51.7, 42.6/46.5	436	886

06-01-09
CERTIFIED ENGINEERING GEOLOGIST

9-27-10
PLANS APPROVAL DATE

REGISTERED GEOLOGIST GENE CUSTENBORDER No. 1319 CERTIFIED ENGINEERING GEOLOGIST STATE OF CALIFORNIA

The State of California or its officers or agents shall not be responsible for the accuracy or completeness of electronic copies of this plan sheet.

SANDAG
401 B STREET,
SAN DIEGO, CA. 92101

BUREAU VERITAS NORTH AMERICA, INC.
7895 CONVOY CT.
SAN DIEGO, CA. 92111

APPARENT DENSITY OF COHESIONLESS SOILS

DESCRIPTION	SPT N_{60} (BLOWS / 300 mm)
VERY LOOSE	0 - 4
LOOSE	5 - 10
MEDIUM DENSE	11 - 30
DENSE	31 - 50
VERY DENSE	> 50

MOISTURE

DESCRIPTION	CRITERIA
DRY	ABSENCE OF MOISTURE, DUSTY, DRY TO THE TOUCH
MOIST	DAMP BUT NO VISIBLE WATER
WET	VISIBLE FREE WATER, USUALLY SOIL IS BELOW WATER TABLE

PERCENT OR PROPORTION OF SOILS

DESCRIPTION	CRITERIA
Trace	PARTICLES ARE PRESENT BUT ESTIMATED TO BE LESS THAN 5%
FEW	5 to 10%
LITTLE	15 to 25%
SOME	30 to 45%
MOSTLY	50 to 100%

PARTICLE SIZE

DESCRIPTION		SIZE
BOULDER		> 300 mm
COBBLE		76 mm to 300 mm
GRAVEL	COARSE	19 mm to 76 mm
	FINE	No. 4 to 19 mm
SAND	COARSE	No. 10 to No. 4
	MEDUIM	No. 40 to No. 10
	FINE	No. 200 to No. 40

SOIL LEGEND

ENGINEERING SERVICES		GEOTECHNICAL SERVICES
FUNCTIONAL SUPERVISOR	DRAWN BY: J. JOHNS	FIELD INVESTIGATIONS BY: V. OLIN, G. CUSTENBORDER
NAME:	CHECKED BY: G. CUSTENBORDER	

STATE OF CALIFORNIA
DEPARTMENT OF TRANSPORTATION

DIVISION OF ENGINEERING SERVICES
STRUCTURE DESIGN
DESIGN BRANCH

BRIDGE NO.
POST MILES KP43.2/PM26.8

RW "445L"
R-12
LOG OF TEST BORINGS SHEET NO. 1 OF 4

OGS CIVIL LOG OF TEST BORINGS SHEET

ORIGINAL SCALE IN MILLIMETERS FOR REDUCED PLANS 0 10 20 30 40 50 60 70 80 90 100

CU 11275
EA 2T0401

DISREGARD PRINTS BEARING EARLIER REVISION DATES
REVISION DATES 10/14/08 3/9/09
SHEET OF

FILE => b2t040qa012.dgn

USERNAME => tr5ttk DATE PLOTTED => 29-SEP-2010 TIME PLOTTED => 14:42

REFERENCE: CALTRANS SOIL & ROCK LOGGING, CLASSIFICATION, AND PRESENTATION MANUAL (JUNE 2007)

Caltrans Metric

DIST	COUNTY	ROUTE	KILOMETER POST TOTAL PROJECT	SHEET No	TOTAL SHEETS
11	SD	5,805	R49.9/R51.7, 42.6/46.5	437	886

06-01-09
CERTIFIED ENGINEERING GEOLOGIST

9-27-10
PLANS APPROVAL DATE

REGISTERED GEOLOGIST GENE CUSTENBORDER No. 1319 CERTIFIED ENGINEERING GEOLOGIST STATE OF CALIFORNIA

The State of California or its officers or agents shall not be responsible for the accuracy or completeness of electronic copies of this plan sheet.

SANDAG
401 B STREET,
SAN DIEGO, CA. 92101

BUREAU VERITAS NORTH AMERICA, INC.
7895 CONVOY CT.
SAN DIEGO, CA. 92111

CEMENTATION

DESCRIPTION	CRITERIA
WEAK	CRUMBLED OR BREAKS WITH HANDLING OR LITTLE FINGER PRESSURE.
MODERATE	CRUMBLED OR BREAKS WITH CONSIDERABLE FINGER PRESSURE.
STRONG	WILL NOT CRUMBLED OR BREAKS WITH FINGER PRESSURE.

CONSISTENCY OF COHESIVE SOILS

DESCRIPTION	UNCONFINED COMPRESSIVE STRENGTH (tsm)	POCKET PENETROMETER MEASUREMENT (tsm)	TORVANE MEASUREMENT (tsm)	FIELD APPROXIMATION
VERY SOFT	< 24	< 24	< 12	EASILY PENETRATED SEVERAL INCHES BY FIST
SOFT	24 to 48	24 to 48	12 to 24	EASILY PENETRATED SEVERAL INCHES BY THUMB
MEDIUM STIFF	48 to 96	48 to 96	24 to 48	PENETRATED SEVERAL INCHES BY THUMB WITH MODERATE EFFORT
STIFF	96 to 192	96 to 192	48 to 96	READILY INDENTED BY THUMB BUT PENETRATED ONLY WITH GREAT EFFORT
VERY STIFF	192 to 383	192 to 383	96 to 192	READILY INDENTED BY THUMBNAIL
HARD	> 383	> 383	> 192	READILY INDENTED BY THUMBNAIL WITH DIFFICULTY

BOREHOLE IDENTIFICATION

SYMBOL	HOLE TYPE	DESCRIPTION
Size	A	AUGER BORING
Size	R P	ROTARY DRILLED BORING ROTARY PERCUSSION BORING (AIR)
Size	R	ROTARY DIAMOND CORE
Size	HD HA	HAND DRIVEN (25 mm SOIL TUBE) HAND AUGER
●	D	DYNAMIC CONE PENETRATION BORING
▲	CPT	CONE PENETRATION TEST (ASTM D 5778-95)
⬚	O	OTHER

Note: Size in millimeters.

PLASTICITY OF FINE-GRAINED SOILS

DESCRIPTION	CRITERIA
Nonplastic	A 3 mm THREAD CANNOT BE ROLLED AT ANY WATER CONTENT
LOW	THE THREAD CAN BARELY BE ROLLED AND THE LUMP CANNOT BE FORMED DRIER THAN THE PLASTIC LIMIT.
MEDIUM	THE THREAD IS EASY TO ROLL AND NOT MUCH TIME IS REQUIRED TO REACH THE PLASTIC LIMIT. THE THREAD CANNOT BE REROLLED AFTER REACHING THE PLASTIC LIMIT. THE LUMP CRUMBLES WHEN DRIER THAN THE PLASTIC LIMIT.
HIGH	IT TAKES CONSIDERABLE TIME ROLLING AND KNEADING TO REACH THE PLASTIC LIMIT. THE THREAD CAN BE REROLLED SEVERAL TIMES AFTER REACHING THE PLASTIC LIMIT. THE LUMP CAN BE FORMED WITHOUT CRUMBLING WHEN DRIER THAN THE PLASTIC LIMIT.

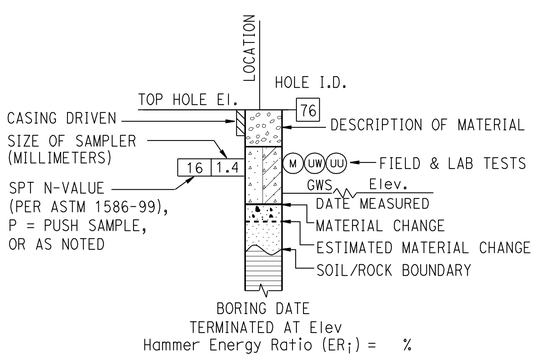

ROTARY BORING

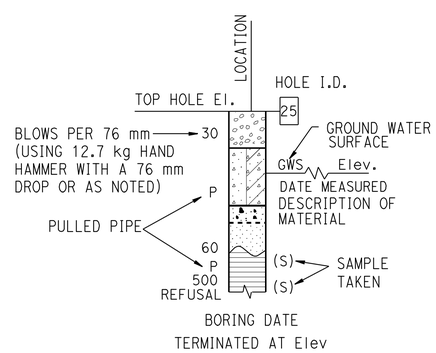

HAND BORING

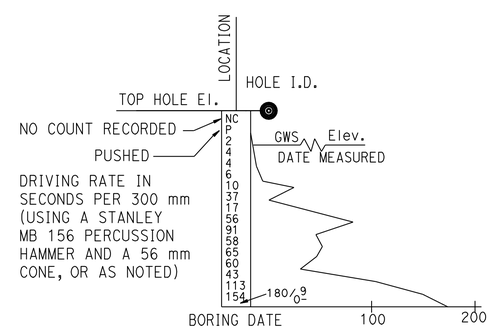

DYNAMIC CONE PENETRATION BORING

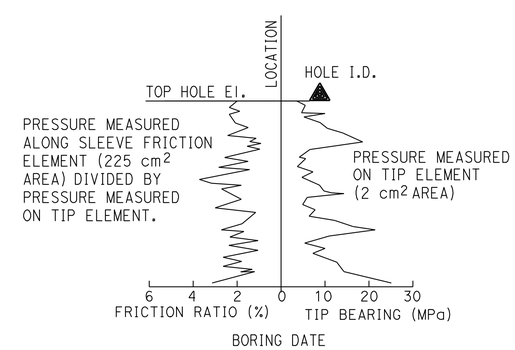

CONE PENETRATION TEST (CPT) SOUNDING

SOIL LEGEND

ENGINEERING SERVICES	GEOTECHNICAL SERVICES	STATE OF CALIFORNIA DEPARTMENT OF TRANSPORTATION	DIVISION OF ENGINEERING SERVICES STRUCTURE DESIGN DESIGN BRANCH	BRIDGE NO. / POST MILES KP43.2/PM26.8	RW "445L" R-13 LOG OF TEST BORINGS SHEET NO. 2 OF 4
FUNCTIONAL SUPERVISOR	DRAWN BY: J. JOHNS	FIELD INVESTIGATIONS BY: V. OLIN, G. CUSTENBORDER			
NAME:	CHECKED BY: G. CUSTENBORDER				

OGS CIVIL LOG OF TEST BORINGS SHEET

ORIGINAL SCALE IN MILLIMETERS FOR REDUCED PLANS 0 10 20 30 40 50 60 70 80 90 100

CU 11275
EA 2T0401

DISREGARD PRINTS BEARING EARLIER REVISION DATES 10/14/08 3/9/09

REVISION DATES | SHEET | OF

FILE => b2t040qa013.dgn

DATE PLOTTED => 29-SEP-2010 TIME PLOTTED => 14:42
USERNAME => ttstpk

REFERENCE: CALTRANS SOIL & ROCK LOGGING, CLASSIFICATION, AND PRESENTATION MANUAL (JUNE 2007)

DIST	COUNTY	ROUTE	KILOMETER POST TOTAL PROJECT	SHEET No	TOTAL SHEETS
11	SD	5,805	R49.9/R51.7, 42.6/46.5	438	886

Caltrans Metric

06-01-09
CERTIFIED ENGINEERING GEOLOGIST

9-27-10
PLANS APPROVAL DATE

REGISTERED GEOLOGIST GENE CUSTENBORDER No. 1319 CERTIFIED ENGINEERING GEOLOGIST STATE OF CALIFORNIA

The State of California or its officers or agents shall not be responsible for the accuracy or completeness of electronic copies of this plan sheet.

SANDAG
401 B STREET,
SAN DIEGO, CA. 92101

BUREAU VERITAS NORTH AMERICA, INC.
7895 CONVOY CT.
SAN DIEGO, CA. 92111

PERCENT CORE RECOVERY (REC) & ROCK QUALITY DESIGNATION (RQD)

$$REC = \frac{\sum \text{LENGTH OF THE RECOVERED CORE PIECES}}{\text{TOTAL LENGTH OF CORE RUN}} \times 100\%$$

$$RQD = \frac{\sum \text{LENGTH OF INTACT CORE PIECES} \geq 100\text{ mm}}{\text{TOTAL LENGTH OF CORE RUN}} \times 100\%$$

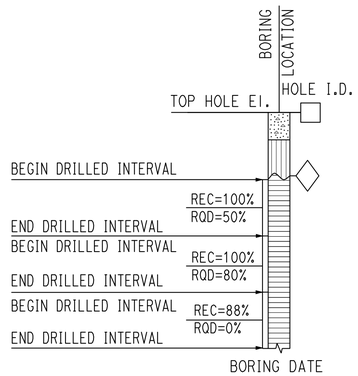

RELATIVE STRENGTH OF INTACT ROCK

TERM	UNIAXIAL COMPRESSIVE STRENGTH (MPa)
EXTREMELY STRONG	> 207
VERY STRONG	100 - 207
STRONG	49 - 100
MEDIUM STRONG	25 - 49
WEAK	5 - 25
VERY WEAK	1 - 5
EXTREMELY WEAK	< 1

BEDDING SPACING

DESCRIPTION	THICKNESS / SPACING
MASSIVE	GREATER THAN 3 m
VERY THICKLY BEDDED	1 m to 3 m
THICKLY BEDDED	300 mm to 1 m
MODERATELY BEDDED	100 mm to 300 mm
THINLY BEDDED	30 mm to 100 mm
VERY THINLY BEDDED	10 mm to 30 mm
LAMINATED	LESS THAN 10 mm

LEGEND OF ROCK MATERIALS

- IGNEOUS ROCK
- SEDIMENTARY ROCK
- METAMORPHIC ROCK

ROCK HARDNESS

DESCRIPTION	CRITERIA
EXTREMELY HARD	SPECIMEN CANNOT BE SCRATCHED WITH A POCKET KNIFE OR SHARP PICK; CAN ONLY BE CHIPPED WITH REPEATED HEAVY HAMMER BLOWS
VERY HARD	SPECIMEN CANNOT BE SCRATCHED WITH A POCKET KNIFE OR SHARP PICK; BREAKS WITH REPEATED HEAVY HAMMER BLOWS
HARD	SPECIMEN CAN BE SCRATCHED WITH A POCKET KNIFE OR SHARP PICK WITH DIFFICULTY (HEAVY PRESSURE. HEAVY HAMMER BLOWS REQUIRED TO BREAK SPECIMEN
MODERATELY HARD	SPECIMEN CAN BE SCRATCHED WITH POCKET KNIFE OR SHARP PICK WITH LIGHT OR MODERATE PRESSURE. CORE BREAKS WITH MODERATE HAMMER PRESSURE.
MODERATELY SOFT	SPECIMEN CAN BE GROOVED 5 mm DEEP WITH POCKET KNIFE OR SHARP PICK WITH MODERATE OR HEAVY PRESSURE. BREAKS WITH LIGHT HAMMER BLOW OR HEAVY MANUAL PRESSURE.
SOFT	SPECIMEN CAN BE GROOVED OR GAUGED EASILY BY POCKET KNIFE OR SHARP PICK WITH LIGHT PRESSURE, CAN BE SCRATCHED WITH FINGERNAIL, BREAKS WITH LIGHT TO MODERATE MANUAL PRESSURE.
VERY SOFT	SPECIMEN CAN BE READILY, INDENTED, GROOVED OR GAUGED WITH FINGERNAIL, OR CARVED WITH A POCKETKNIFE. BREAKS WITH LIGHT MANUAL PRESSURE.

FRACTURE DENSITY

DESCRIPTION	OBSERVED FRACTURE DENSITY
UNFRACTURED	NO FRACTURES.
VERY SLIGHTLY FRACTURED	LENGTHS GREATER THAN 1 m.
SLIGHTLY FRACTURED	LENGTHS FROM 300 mm TO 1000 mm WITH FEW LENGTHS LESS THAN 300 mm OR GREATER THAN 1000 mm.
MODERATELY FRACTURED	LENGTHS MOSTLY IN 100 mm TO 300 mm RANGE WITH MOST LENGTHS ABOUT 200 mm.
INTENSELY FRACTURED	LENGTHS AVERAGE FROM 30 mm TO 100 mm WITH SCATTERED FRAGMENTED INTERVALS WITH LENGTHS LESS THAN 100 mm.
VERY INTENSELY FRACTURED	MOSTLY CHIPS AND FRAGMENTS WITH A FEW SCATTERED SHORT CORE LENGTHS.

COMBINATION DESCRIPTORS (SUCH AS "VERY INTENSELY FRACTURED") ARE USED WHERE EQUAL DISTRIBUTION OF BOTH FRACTURE DENSITY CHARACTERISTICS IS PRESENT OVER A SIGNIFICANT INTERVAL OR EXPOSURE, OR WHERE CHARACTERISTICS ARE "IN BETWEEN" THE DESCRIPTOR DEFINITIONS. ONLY TWO ADJACENT DESCRIPTORS MAY BE COMBINED.

WEATHERING DESCRIPTORS FOR INTACT ROCK

DESCRIPTION	DIAGNOSTIC FEATURES					GENERAL CHARACTERISTICS
	CHEMICAL WEATHERING-DISCOLORATION AND/OR OXIDATION		MECHANICAL WEATHERING-GRAIN BOUNDARY CONDITIONS (DISAGGREGATION) PRIMARILY FOR GRANITICS AND SOME COARSE -GRAINED SEDIMENTS	TEXTURE AND SOLUTIONING		
	BODY OF ROCK	FRACTURES SURFACES		TEXTURE	SOLUTIONING	
FRESH	NO DISCOLORATION,NOT OXIDIZED.	NO DISCOLORATION OR OXIDATION.	NO SEPARATION, INTACT (TIGHT).	NO CHANGE	NO SOLUTIONING	HAMMER RINGS WHEN CRYSTALLINE ROCKS ARE STRUCK.
SLIGHTLY WEATHERED	DISCOLORATION OR OXIDATION IS LIMITED TO SURFACE OF, OR SHORT DISTANCE FROM, FRACTURES; SOME FELDSPAR CRYSTALS ARE DULL.	MINOR TO COMPLETE DISCOLORATION OR OXIDATION OF MOST SURFACES.	NO VISIBLE SEPARATION, INTACT (TIGHT).	PRESERVED.	MINOR LEACHING OF SOME SOLUBLE MINERALS MAY BE NOTED.	HAMMER RINGS WHEN CRYSTALLINE ROCKS ARE STRUCK. BODY OF ROCK NOT WEAKENED.
MODERATELY WEATHERED	DISCOLORATION OR OXIDATION EXTENDS FROM FRACTURES USUALLY THROUGHOUT; Fe-Mg MINERALS ARE "RUSTY," FELDSPAR CRYSTALS ARE "CLOUDY."	ALL FRACTURE SURFACES ARE DISCOLORED OR OXIDIZED.	PARTIAL SEPARATION OF BOUNDARIES VISIBLE.	GENERALLY PRESERVED.	SOLUBLE MINERALS MAY BE MOSTLY LEACHED.	HAMMER DOES NOT RINGS WHEN ROCK IS STRUCK. BODY OF ROCK IS SLIGHTLY WEAKENED.
INTENSELY WEATHERED	DISCOLORATION OR OXIDATION THROUGHOUT; ALL FELDSPARS AND Fe-Mg MINERALS ARE ALTERED TO CLAY TO SOME EXTEND; OR CHEMICAL ALTERATION PRODUCES IN -SITE DISAGGREGATION, SEE GRAIN BOUNDARY CONDITION.	ALL FRACTURE SURFACES ARE DISCOLORED OR OXIDIZED, SURFACES FRIABLE.	PARTIAL SEPARATION, ROCK IS FRIABLE; IN SEMIARID CONDITION GRANITICS ARE DISAGGREGATED.	TEXTURE ALTERED BY CHEMICAL DISINTEGRATION (HYDRATION, ARGILLATION).	LEACHING OF SOLUBLE MINERALS MAY BE COMPLETE.	DULL SOUND WHEN STRUCK WITH HAMMER, USUALLY CAN BE BROKEN WITH MODERATE TO HEAVY MANUAL PRESSURE OR BY LIGHT HAMMER BLOW WITHOUT REFERENCE TO PLANES OF WEAKNESS SUCH AS INCIPIENT OR HAIRLINE FRACTURES, OR VEINLETS. ROCK IS SIGNIFICANTLY WEAKENED.
DECOMPOSED	DISCOLORED OR OXIDIZED THROUGHOUT, BUT RESISTANT MINERALS SUCH AS QUARTZ MAY BE UNALTERED; ALL FELDSPARS AND Fe-Mg MINERALS ARE COMPLETELY ALTERED TO CLAY		COMPLETE SEPARATION OF GRAIN BOUNDARIES (DISAGGREGATED).	RESEMBLES A SOIL, PARTIAL OR COMPLETE REMNANT ROCK STRUCTURE MAY BE PRESERVED; LEACHING OF SOLUBLE MINERALS USUALLY COMPLETE.		CAN BE GRANULATED BY HAND. RESISTANT MINERALS SUCH AS QUARTZ MAY BE PRESENT AS "STRINGERS" OR "DIKES."

COMBINATION DESCRIPTORS (SUCH AS "SLIGHTLY WEATHERED TO FRESH") ARE PERMISSIBLE WHERE EQUAL DISTRIBUTION OF BOTH WEATHERING CHARACTERISTICS IS PRESENT OVER SIGNIFICANT INTERVALS OR WHERE CHARACTERISTICS PRESENT ARE "IN BETWEEN" THE DIAGNOSTIC FEATURE. HOWEVER, COMBINATION DESCRIPTORS SHOULD NOT BE USED WHERE SIGNIFICANT, IDENTIFIABLE ZONES CAN BE DELINEATED. ONLY TWO ADJACENT DESCRIPTORS MAY BE COMBINED. "VERY INTENSELY WEATHERED" IS THE COMBINATION DESCRIPTOR FOR "INTENSELY WEATHERED TO DECOMPOSED."

ROCK LEGEND

ENGINEERING SERVICES | GEOTECHNICAL SERVICES

FUNCTIONAL SUPERVISOR
NAME:
DRAWN BY: J. JOHNS
CHECKED BY: G. CUSTENBORDER
FIELD INVESTIGATIONS BY:
V. OLIN
G. CUSTENBORDER

STATE OF CALIFORNIA
DEPARTMENT OF TRANSPORTATION

DIVISION OF ENGINEERING SERVICES
STRUCTURE DESIGN
DESIGN BRANCH

BRIDGE NO.
POST MILES
KP43.2/PM26.8

RW "445L"
R-14
LOG OF TEST BORINGS SHEET NO. 3 OF 4

OGS CIVIL LOG OF TEST BORINGS SHEET

ORIGINAL SCALE IN MILLIMETERS FOR REDUCED PLANS 0 10 20 30 40 50 60 70 80 90 100

CU 11275
EA 2T0401

DISREGARD PRINTS BEARING EARLIER REVISION DATES → 10/14/08 3/9/09

REVISION DATES | SHEET | OF

FILE => b2t040qa014.dgn

USERNAME => trstrk DATE PLOTTED => 29-SEP-2010 TIME PLOTTED => 14:42

DIST	COUNTY	ROUTE	KILOMETER POST TOTAL PROJECT	SHEET No	TOTAL SHEETS
11	SD	5,805	R49.9/R51.7, 42.6/46.5	439	886

Caltrans Metric

06-01-09
CERTIFIED ENGINEERING GEOLOGIST

9-27-10
PLANS APPROVAL DATE

REGISTERED GEOLOGIST
GENE CUSTENBORDER
No. 1319
CERTIFIED ENGINEERING GEOLOGIST
STATE OF CALIFORNIA

The State of California or its officers or agents shall not be responsible for the accuracy or completeness of electronic copies of this plan sheet.

SANDAG
401 B STREET,
SAN DIEGO, CA. 92101

BUREAU VERITAS NORTH AMERICA, INC.
7895 CONVOY CT.
SAN DIEGO, CA. 92111

Bench Mark
All elevations shown in the LOTBs are in meters and are referenced to the NGVD 1929 Datum.

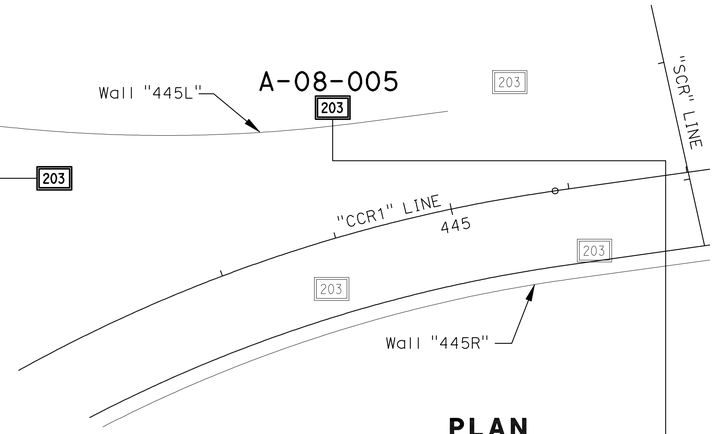

PLAN
1 : 500

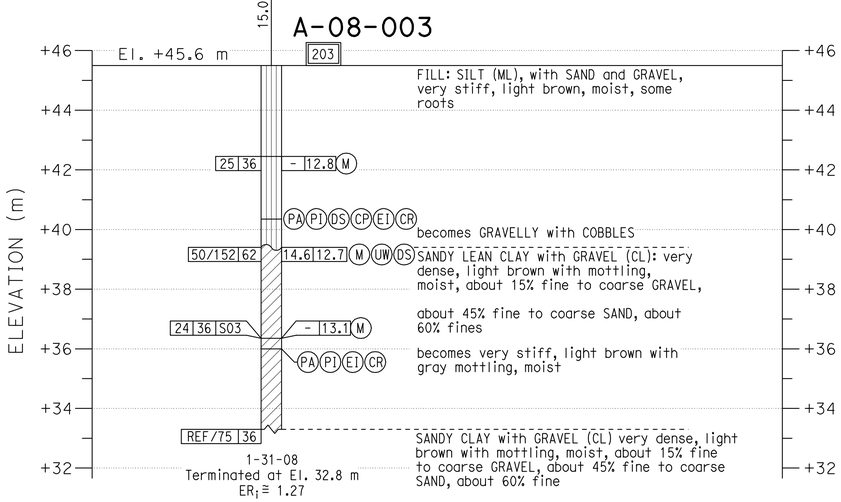

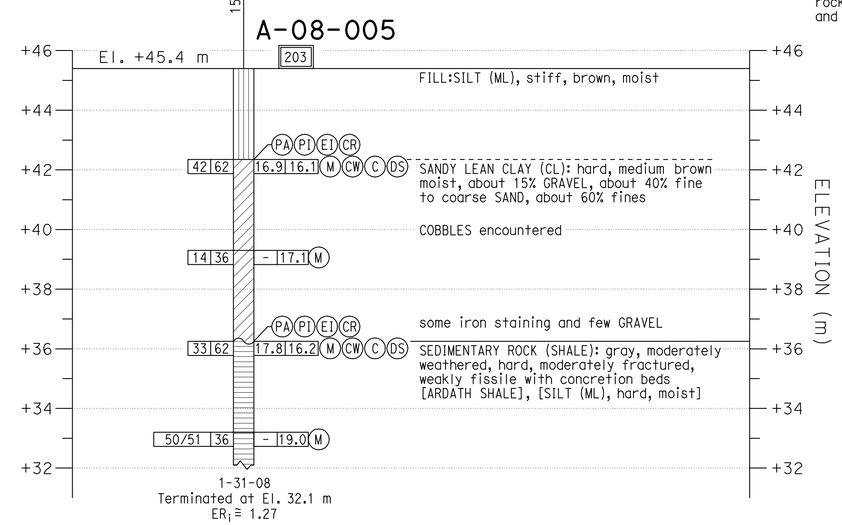

PROFILE
VERTICAL 1 : 100
HORIZONTAL 1 : 500

NOTES:

1. 62 mm diameter samples were taken using a California split-barrel sampler with an inside diameter (I.D.) of 62 mm and an outside diameter (O.D.) of 83 mm.

2. Automatic trip and safety hammer systems consisting of hammer weight of 62.5 kg falling a distance of 762 mm were used to advance the drive samplers in accordance with ASTM D1586.

3. The average hammer energy ratio (ER_i) reflects the percentage efficiency of SPT blowcounts (N-value). The estimated ER_i for the various drilling equipment used was as follows:
   Boart Longyear:
   - Longyear 1405: $ER_i \cong 1.45$
   - Prosonic Track Mounted: $ER_i \cong 1.00$
   - Prosonic 1: $ER_i \cong 1.45$
   - Minisonic: $ER_i \cong 1.00$

   Pacific Drilling:
   - Unimog: $ER_i \cong 1.27$
   - Mole: $ER_i \cong 1.00$
   - Minimole: $ER_i \cong 1.00$

   Test America:
   - CME 95: $ER_i \cong 1.45$

4. The sedimentary rock was obtained utilizing a sonic drilling technique; this method resulted in Core Recovery (REC) values of essentially 100%. Also, given the nature of the Sedimentary Rock (ie., friable, highly fractured, decomposed rock) a Rock Quality Designation (RQD) index is not relevant and therefore not reported on LOTBs.

ENGINEERING SERVICES	GEOTECHNICAL SERVICES	STATE OF CALIFORNIA DEPARTMENT OF TRANSPORTATION	DIVISION OF ENGINEERING SERVICES STRUCTURE DESIGN	BRIDGE NO.	RW "445L" R-15
FUNCTIONAL SUPERVISOR	DRAWN BY: J. JOHNS	FIELD INVESTIGATIONS BY: V. OLIN, G. CUSTENBORDER	DESIGN BRANCH	POST MILES KP43.2/PM26.8	LOG OF TEST BORINGS SHEET NO. 4 OF 4
NAME:	CHECKED BY: G. CUSTENBORDER				

OGS CIVIL LOG OF TEST BORINGS SHEET

ORIGINAL SCALE IN MILLIMETERS FOR REDUCED PLANS 0 10 20 30 40 50 60 70 80 90 100

CU 11275
EA 2T0401

DISREGARD PRINTS BEARING EARLIER REVISION DATES 10/11/08 3/9/09

REVISION DATES | SHEET | OF

FILE => b2t040qa015.dgn

USERNAME => trstrk DATE PLOTTED => 29-SEP-2010 TIME PLOTTED => 14:42

Dist	COUNTY	ROUTE	KILOMETER POST TOTAL PROJECT	SHEET No.	TOTAL SHEETS
11	SD	5,805	R49.9/R51.7, 42.6/46.5	440	886

LICENSED LANDSCAPE ARCHITECT

9-27-10
PLANS APPROVAL DATE

LICENSED LANDSCAPE ARCHITECT MARLENE J. GROS No. 2370 STATE OF CALIFORNIA
09-30-09 Renewal Date
05-14-09 Date

THE STATE OF CALIFORNIA OR ITS OFFICERS OR AGENTS SHALL NOT BE RESPONSIBLE FOR THE ACCURACY OR COMPLETENESS OF ELECTRONIC COPIES OF THIS PLAN SHEET.

Caltrans Metric

ABBREVIATIONS:

AMEND	AMENDMENT	Min	MINIMUM
B&B	BALLED AND BURLAPPED	mm	MILLIMETER
Dia	DIAMETER	NCM	NO COMMON NAME
EA	EACH	No.	NUMBER
g	GRAM	PLT ESTB	PLANT ESTABLISHMENT
kg	KILOGRAM	Pvm+	PAVEMENT
m	METER	R/W	RIGHT OF WAY
m^2	SQUARE METER	SF	STATE-FURNISHED
m^3	CUBIC METER	TAB	TABLET(S)
Max	MAXIMUM	TRVD	TRAVELED
G/C	GROUND COVER	PKT	PACKET

APPLICABLE WHEN CIRCLED:

1 - QUANTITIES SHOWN ARE 'PER PLANT' UNLESS SHOWN AS m^2 APPLICATION RATES.
2 - SUFFICIENT TO RECEIVE ROOT BALL.
3 - INCLUDED WITH AREA MULCH.
4 - AS SHOWN ON PLANS.
5 - UNLESS OTHERWISE SHOWN ON PLANS.
6 - SEE STANDARD DETAIL.
7 - SEE SPECIAL PROVISIONS.
8 - BIOSWALE PLANTING.
9 - RANDOMLY MIXED THROUGHOUT DESIGNATED AREA. 1.2 m MINIMUM SPACING
10 - TWICE THE DIAMETER OF ROOT BALL.
11 - HUMATE 3.4 kg/100 m^2

NOTE:

UNDERLINED PORTIONS OF BOTANICAL NAMES INDICATE ABBREVIATIONS USED ON PLANTING PLANS.

PLANT LIST AND PLANTING SPECIFICATIONS

PLANT GROUP	PLANT No.	SYMBOL	BOTANICAL NAME	COMMON NAME	SIZE	QUANTITY EACH	HOLE SIZE (mm) Dia	HOLE SIZE (mm) DEPTH	BASIN TYPE	IRON SULFATE 1	SOIL Amend kg 1	COMMERCIAL FERTILIZER 1 PLANTING	COMMERCIAL FERTILIZER 1 PLT ESTB	BASIN MULCH 1 (m^3)	STAKING	PLANTING LIMITS MINIMUM DISTANCE (m) FROM TRVD WAY	Pvm+	FENCE	WALL	PAVED DITCH	EARTH DITCH	ON CENTER (m)	REMARKS
A	1		AGAVE ATTENUATA	FOXTAIL AGAVE	No. 1	950	300	450	1	-	0.014	1 PKT	-	-	-	-	4.5	2	2	2	-	1.2	SUCCULENT
	2		MALOSMA LAURINA	LAUREL SUMAC	No. 1	92	300	450	1	-	0.014	1 PKT	-	-	-	-	4.5	3	2	3	-	4	SHRUB
	3		MUEHLENBERGIA RIGENS	DEER GRASS	No. 1	260	300	450	1	-	0.014	1 PKT	-	-	-	-	2	1	1	1	-	9	GRASS
	4		RHUS INTEGRIFOLIA	LEMONADE BERRY	No. 1	74	300	450	1	-	0.014	1 PKT	-	-	-	-	4.5	3	2	3	-	4	SHRUB
B	5		EUPHORBIA TIRUCALLI 'STICKS ON FIRE'	PINK PENCIL BUSH	No. 5	57	2	2	1	-	0.028	2 PKT	-	3	-	-	4.5	3	1.2	3	-	4	SUCCULENT
	6		PINUS TORREYANA	TORREY PINE	No. 5	5	2	2	1	-	0.028	2 PKT	-	0.05	-	9	-	6	6	3	-	4	TREE
	7		PLATANUS RACEMOSA	WESTERN SYCAMORE	No. 5	12	2	2	1	-	0.028	2 PKT	-	0.05	-	9	-	6	6	3	-	4	TREE
	8		POPULUS FREMONTII	WESTERN COTTONWOOD	No. 5	7	2	2	1	-	0.028	2 PKT	-	0.05	-	9	-	6	6	3	-	4	TREE
	9		QUERCUS AGRIFOLIA	CALIFORNIA LIVE OAK	No. 5	47	2	2	1	-	0.028	2 PKT	-	0.05	-	9	-	6	6	3	-	4	TREE
F	10		FESTUCA OVINA GLAUCA	BLUE FESCUE	IN FLATS	4520	-	-	-	-	-	-	-	-	-	-	2	1	1	1	-	0.6	GRASS
G	11		AEONIUM HAWORTHII	HAWORTH'S AEONIUM	ROOTED CUTTINGS	840	-	-	-	-	-	4 kg/ 100m^2	3 kg/ 100m^2	-	-	-	2	1	1	1	-	0.3	GROUNDCOVER
	12		CALANDRINIA SPECTABILIS	CHILEAN PURSLANE	ROOTED CUTTINGS	1870	-	-	-	-	-	4 kg/ 100m^2	3 kg/ 100m^2	-	-	-	2	1	1	1	-	0.6	GROUNDCOVER
	13		SEDUM DENDROIDEUM	BUSH SEDUM	ROOTED CUTTINGS	8140	-	-	-	-	-	4 kg/ 100m^2	3 kg/ 100m^2	-	-	-	2	1	1	1	-	0.75	GROUNDCOVER
	14		SENECIO MANDRALISCAE	BLUE CHALK STICKS	ROOTED CUTTINGS	14540	-	-	-	-	-	4 kg/ 100m^2	3 kg/ 100m^2	-	-	-	2	1	1	1	-	0.3	GROUNDCOVER
	15		SENECIO MANDRALISCAE	BLUE CHALK STICKS	ROOTED CUTTINGS	48810	-	-	-	-	-	4 kg/ 100m^2	3 kg/ 100m^2	-	-	-	2	1	1	1	-	0.25	GROUNDCOVER
M	16		BACCHARIS PILULARIS "PIDGEON POINT"	DWARF COYOTE BUSH	LINERS	2280	-	-	-	-	-	-	-	-	-	-	2	1	1	1	-	1.5	GROUNDCOVER
	17		MUEHLENBERGIA RIGENS	DEER GRASS	LINERS	4520	-	-	-	-	5m^3/ 100m^2	-	3 kg/ 100m^2	-	-	-	2	1	1	1	-	0.6	GRASS 11 8
T	18		NATIVE SOD	NATIVE SOD	SOD	1240 m^2	-	-	-	-	5m^3/ 100m^2	-	3 kg/ 100m^2	-	-	-	-	-	-	-	-	-	TURF 11 7 8
U	19		PLATANUS RACEMOSA	CALIFORNIA SYCAMORE	No. 15	13	10	2	1	-	0.056	8 PKT	-	0.05	-	9	-	6	6	3	-	4	TREE
	20		PINUS TORREYANA	TORREY PINE	No. 15	25	10	2	1	-	0.056	8 PKT	-	0.05	-	9	-	6	6	3	-	4	TREE

MULCH (N)

SHEET	QUANTITY m^3
PP-1	0
PP-2	177
BASIN MULCH	5.45
TOTAL	182.45

(N) NOT A SEPARATE PAY ITEM, FOR INFORMATION ONLY.

LEGEND

- Exist DENSE TREES TO REMAIN
- Exist PALM TO REMAIN
- Exist PALM TO BE REMOVED (CLEARING AND GRUBBING)
- Exist TREE TO REMAIN
- Exist TREE TO BE REMOVED (CLEARING AND GRUBBING)
- LIMIT OF EXOTIC PLANT REMOVAL
- CLEARING AND GRUBBING
- WEED GERMINATION
- ROCK MULCH SEE ROADWAY PLANS
- ESA — ENVIRONMENTALLY SENSITIVE AREA
- MULCH
- MULCH
- MULCH
- TEMPORARY CONSTRUCTION EASEMENT
- CITY PERMANENT EASEMENT

PLANT LIST

PL-1

REVISED BY | DATE REVISED
MARLENE GROS | KENNY MAH
CALCULATED-DESIGNED BY | CHECKED BY
SENIOR LANDSCAPE ARCHITECT | STEPHEN ALVAREZ

STATE OF CALIFORNIA - DEPARTMENT OF TRANSPORTATION
Caltrans PROJECT DEVELOPMENT

LAST REVISION 06-02-09 | DATE PLOTTED => 29-SEP-2010 | TIME PLOTTED => 14:43

Dist	COUNTY	ROUTE	KILOMETER POST TOTAL PROJECT	SHEET No.	TOTAL SHEETS
11	SD	5,805	R49.9/R51.7, 42.6/46.5	441	886

LICENSED LANDSCAPE ARCHITECT

9-27-10
PLANS APPROVAL DATE

LICENSED LANDSCAPE ARCHITECT MARLENE J. GROS No. 2310 STATE OF CALIFORNIA
09-30-09 Renewal Date
05-14-09 Date

THE STATE OF CALIFORNIA OR ITS OFFICERS OR AGENTS SHALL NOT BE RESPONSIBLE FOR THE ACCURACY OR COMPLETENESS OF ELECTRONIC COPIES OF THIS PLAN SHEET.

Caltrans Metric

TREE REMOVAL (N)		
SHEET	TREE EACH	PALM EACH
PR-1	0	0
PR-2	8	0
PR-3	31	4
PR-4	1	0
PR-5	0	0
TOTAL	40	4

(N) NOT A SEPARATE PAY ITEM, FOR INFORMATION ONLY.

SAN DIEGO

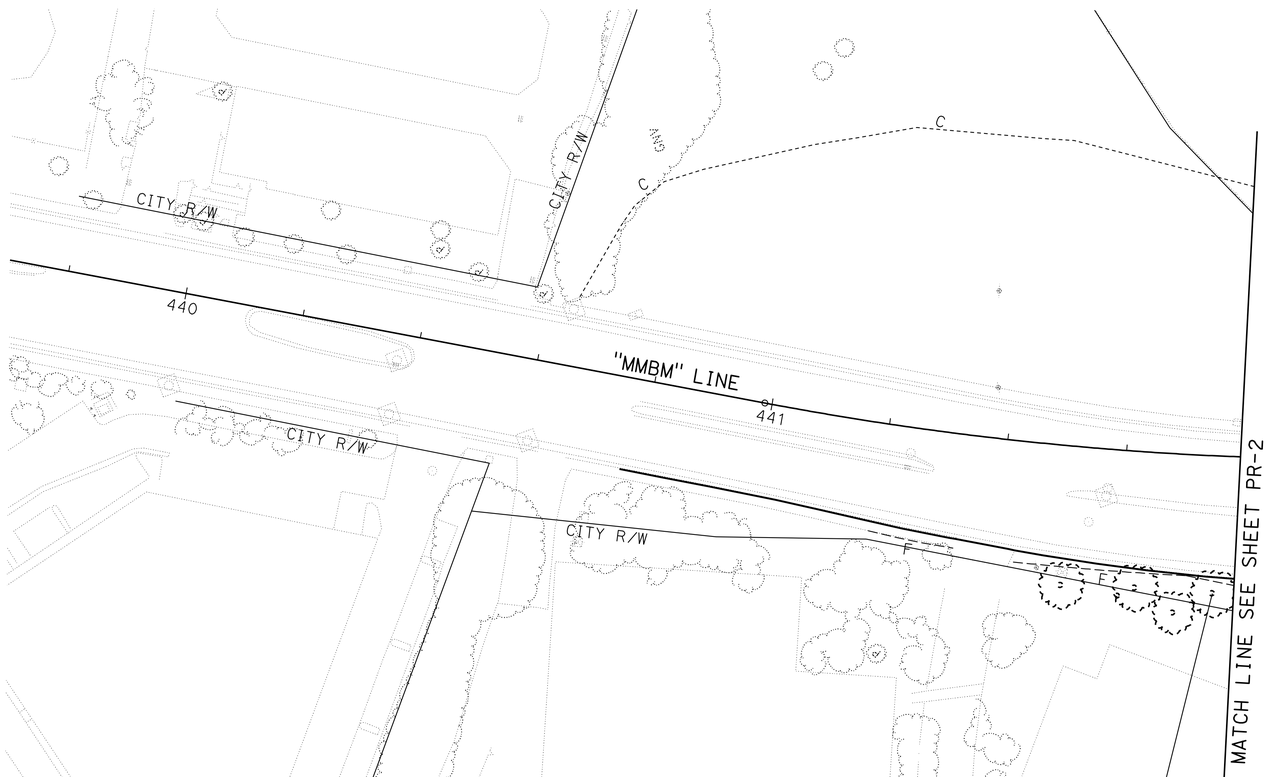

THIS PLAN ACCURATE FOR PLANT REMOVAL WORK ONLY

ALL DIMENSIONS ARE IN METERS UNLESS OTHERWISE SHOWN

PLANT REMOVAL PLAN

SCALE 1:500

PR-1

STATE OF CALIFORNIA - DEPARTMENT OF TRANSPORTATION
Caltrans PROJECT DEVELOPMENT

SENIOR LANDSCAPE ARCHITECT: STEPHEN ALVAREZ
CALCULATED-DESIGNED BY: MARLENE GROS
CHECKED BY: KENNY MAH
REVISED BY
DATE REVISED

LAST REVISION 06-02-09
DATE PLOTTED => 29-SEP-2010
TIME PLOTTED => 14:43

Dist	COUNTY	ROUTE	KILOMETER POST TOTAL PROJECT	SHEET No.	TOTAL SHEETS
11	SD	5,805	R49.9/R51.7, 42.6/46.5	442	886

LICENSED LANDSCAPE ARCHITECT

9-27-10
PLANS APPROVAL DATE

LICENSED LANDSCAPE ARCHITECT MARLENE J. GROS No. 2370 STATE OF CALIFORNIA
09-30-09 Renewal Date
05-14-09 Date

THE STATE OF CALIFORNIA OR ITS OFFICERS OR AGENTS SHALL NOT BE RESPONSIBLE FOR THE ACCURACY OR COMPLETENESS OF ELECTRONIC COPIES OF THIS PLAN SHEET.

Caltrans Metric

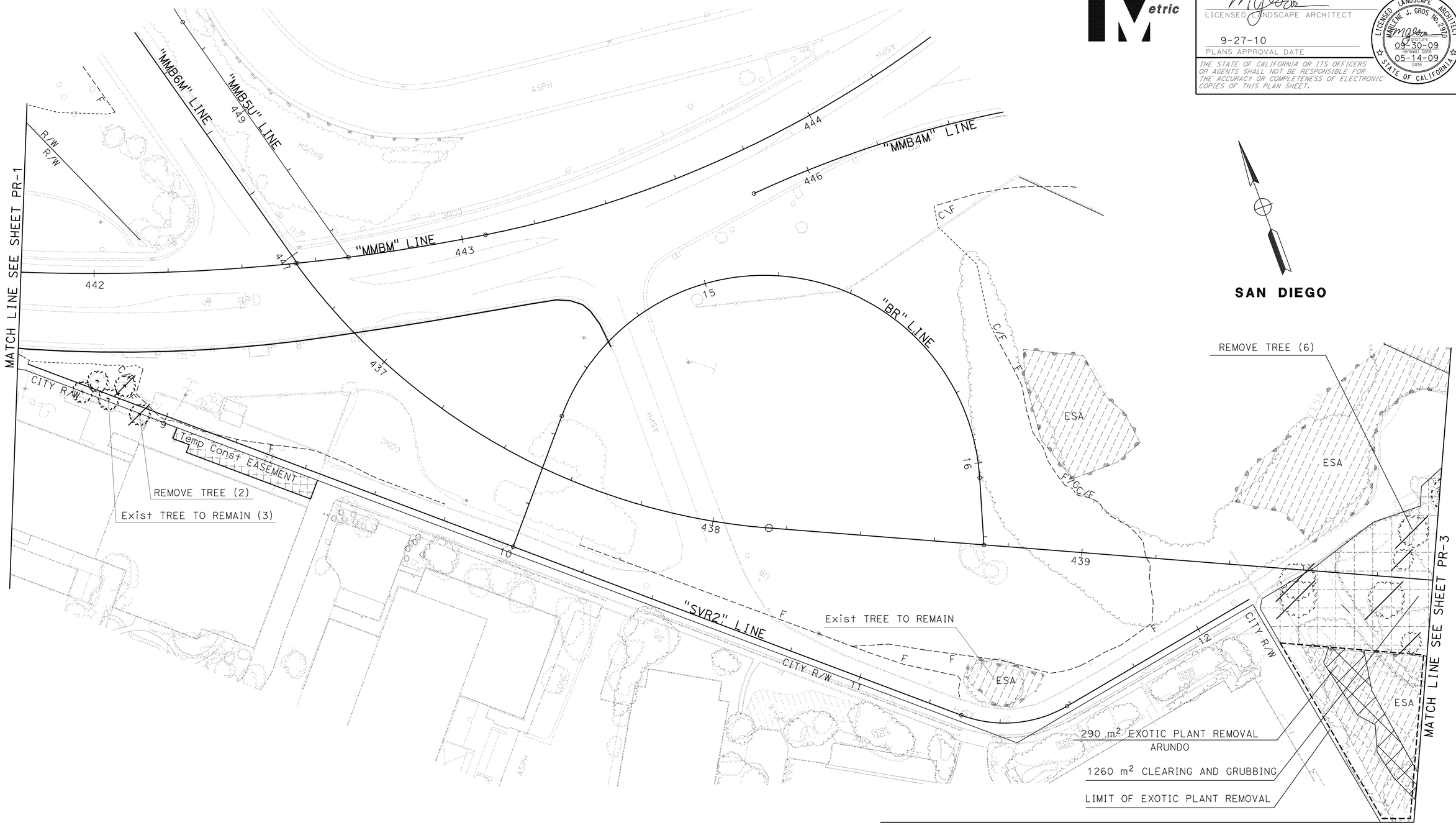

SAN DIEGO

PLANT REMOVAL PLAN

SCALE 1:500

PR-2

THIS PLAN ACCURATE FOR PLANT REMOVAL WORK ONLY

ALL DIMENSIONS ARE IN METERS UNLESS OTHERWISE SHOWN

STATE OF CALIFORNIA - DEPARTMENT OF TRANSPORTATION
Caltrans PROJECT DEVELOPMENT

SENIOR LANDSCAPE ARCHITECT: STEPHEN ALVAREZ
CALCULATED-DESIGNED BY: MARLENE GROS
CHECKED BY: KENNY MAH
REVISED BY
DATE REVISED

LAST REVISION 06-02-09
DATE PLOTTED => 29-SEP-2010
TIME PLOTTED => 14:43

Dist	COUNTY	ROUTE	KILOMETER POST TOTAL PROJECT	SHEET No.	TOTAL SHEETS
11	SD	5,805	R49.9/R51.7, 42.6/46.5	443	886

LICENSED LANDSCAPE ARCHITECT

9-27-10
PLANS APPROVAL DATE

LICENSED LANDSCAPE ARCHITECT MARLENE J. GROS No. 2370 STATE OF CALIFORNIA
Signature
09-30-09
Renewal Date
05-14-09
Date

THE STATE OF CALIFORNIA OR ITS OFFICERS OR AGENTS SHALL NOT BE RESPONSIBLE FOR THE ACCURACY OR COMPLETENESS OF ELECTRONIC COPIES OF THIS PLAN SHEET.

Caltrans Metric

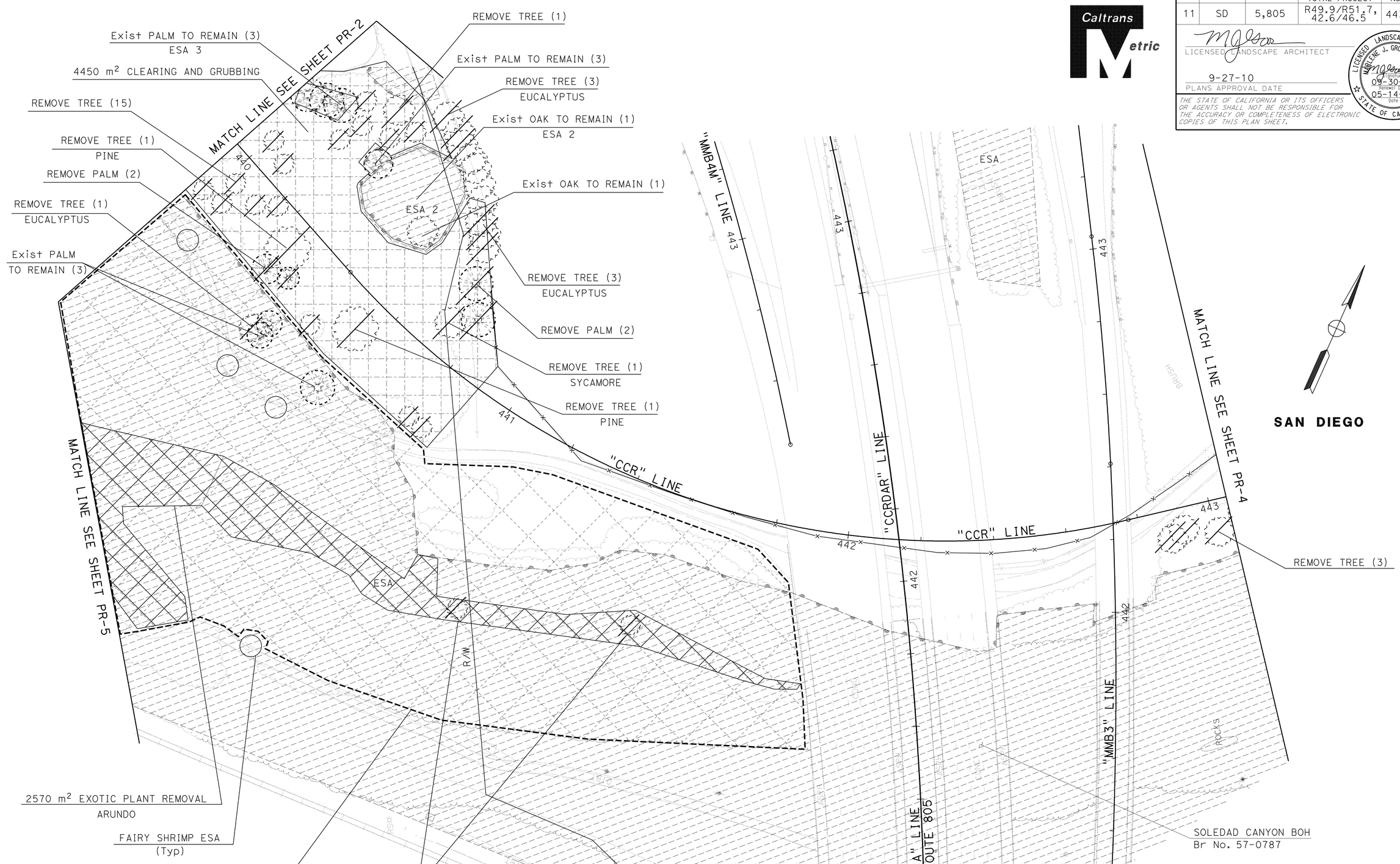

SAN DIEGO

PLANT REMOVAL PLAN

SCALE 1:500

PR-3

THIS PLAN ACCURATE FOR PLANT REMOVAL WORK ONLY

ALL DIMENSIONS ARE IN METERS UNLESS OTHERWISE SHOWN

STATE OF CALIFORNIA - DEPARTMENT OF TRANSPORTATION
Caltrans PROJECT DEVELOPMENT

SENIOR LANDSCAPE ARCHITECT: STEPHEN ALVAREZ
CALCULATED-DESIGNED BY: MARLENE GROS
CHECKED BY: KENNY MAH
REVISED BY
DATE REVISED

LAST REVISION 06-02-09
DATE PLOTTED => 29-SEP-2010
TIME PLOTTED => 14:43

Dist	COUNTY	ROUTE	KILOMETER POST TOTAL PROJECT	SHEET No.	TOTAL SHEETS
11	SD	5,805	R49.9/R51.7, 42.6/46.5	444	886

LICENSED LANDSCAPE ARCHITECT

9-27-10
PLANS APPROVAL DATE

LICENSED LANDSCAPE ARCHITECT MARLENE J. GROS No. 2310 STATE OF CALIFORNIA
Signature
09-30-09
Renewal Date
05-14-09
Date

THE STATE OF CALIFORNIA OR ITS OFFICERS OR AGENTS SHALL NOT BE RESPONSIBLE FOR THE ACCURACY OR COMPLETENESS OF ELECTRONIC COPIES OF THIS PLAN SHEET.

Caltrans Metric

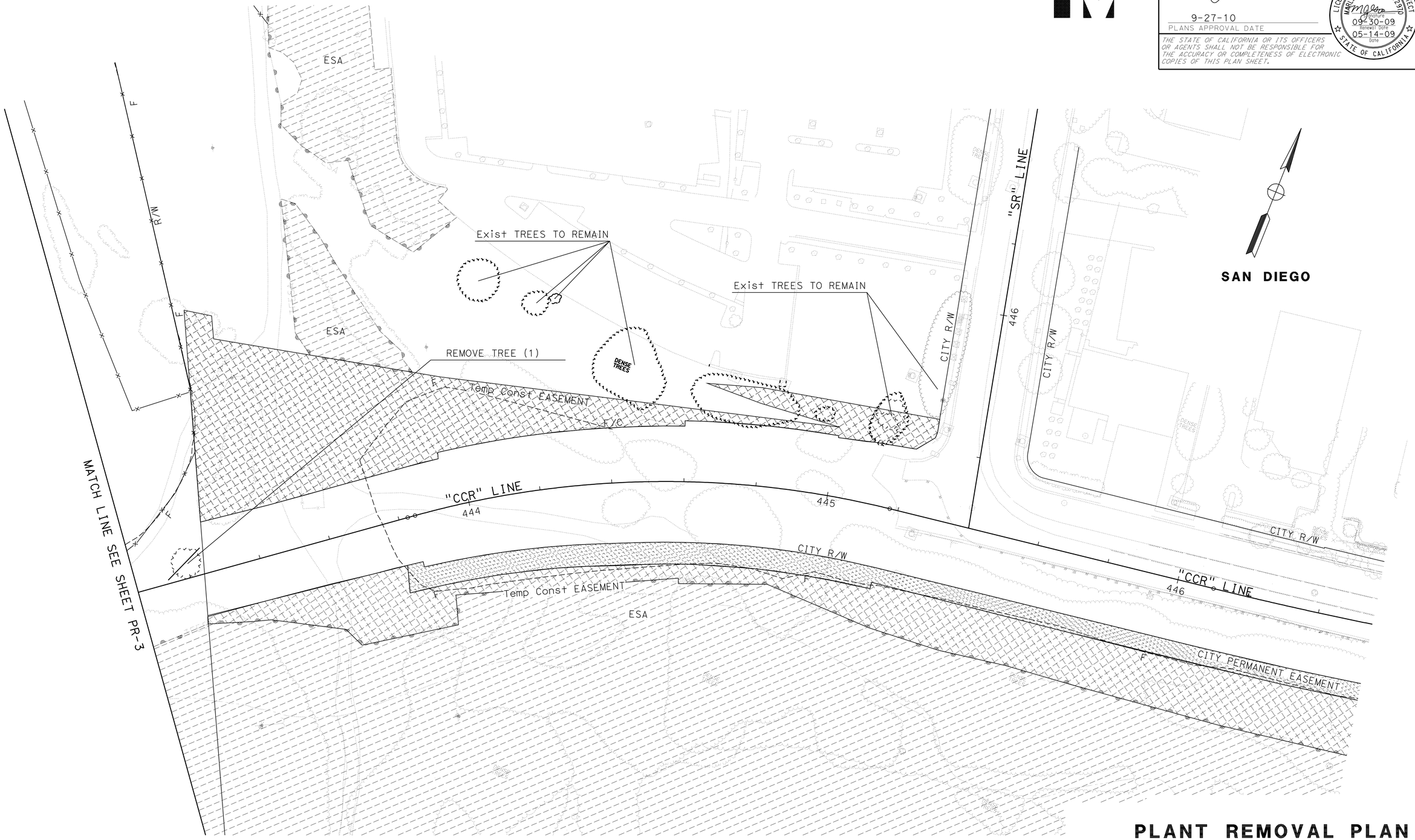

PLANT REMOVAL PLAN

SCALE 1:500

PR-4

THIS PLAN ACCURATE FOR PLANT REMOVAL WORK ONLY

ALL DIMENSIONS ARE IN METERS UNLESS OTHERWISE SHOWN

STATE OF CALIFORNIA - DEPARTMENT OF TRANSPORTATION
Caltrans PROJECT DEVELOPMENT

SENIOR LANDSCAPE ARCHITECT: STEPHEN ALVAREZ
CALCULATED-DESIGNED BY: MARLENE GROS
CHECKED BY: KENNY MAH
REVISED BY
DATE REVISED

LAST REVISION DATE PLOTTED => 29-SEP-2010
06-02-09 TIME PLOTTED => 14:43

BORDER LAST REVISED 3/1/2007
RELATIVE BORDER SCALE IS IN MILLIMETERS 0 20 40 60 80
USERNAME => trstrk
DGN FILE => b2t040tf004.dgn
CU 11275
EA 2T0401

Dist	COUNTY	ROUTE	KILOMETER POST TOTAL PROJECT	SHEET No.	TOTAL SHEETS
11	SD	5,805	R49.9/R51.7, 42.6/46.5	445	886

LICENSED LANDSCAPE ARCHITECT

9-27-10
PLANS APPROVAL DATE

LICENSED LANDSCAPE ARCHITECT
MARLENE J. GROS No. 2370
09-30-09 Renewal Date
05-14-09 Date
STATE OF CALIFORNIA

THE STATE OF CALIFORNIA OR ITS OFFICERS OR AGENTS SHALL NOT BE RESPONSIBLE FOR THE ACCURACY OR COMPLETENESS OF ELECTRONIC COPIES OF THIS PLAN SHEET.

Caltrans Metric

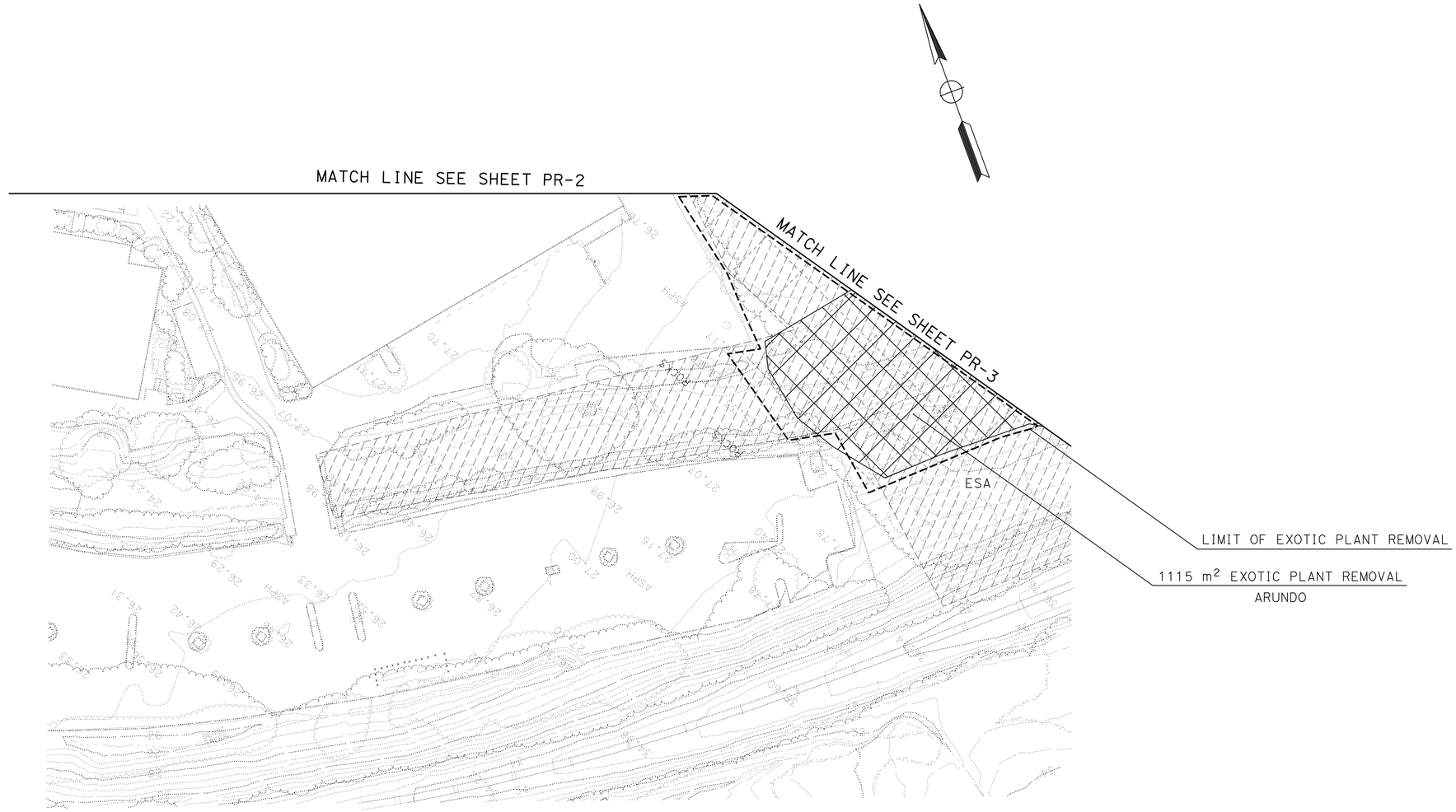

SAN DIEGO

PLANT REMOVAL PLAN

SCALE 1:500

PR-5

THIS PLAN ACCURATE FOR PLANT REMOVAL WORK ONLY

ALL DIMENSIONS ARE IN METERS UNLESS OTHERWISE SHOWN

STATE OF CALIFORNIA - DEPARTMENT OF TRANSPORTATION
Caltrans PROJECT DEVELOPMENT

SENIOR LANDSCAPE ARCHITECT: STEPHEN ALVAREZ
CALCULATED-DESIGNED BY: MARLENE GROS
CHECKED BY: KENNY MAH
REVISED BY
DATE REVISED

LAST REVISION 06-02-09
DATE PLOTTED => 29-SEP-2010
TIME PLOTTED => 14:43

Dist	COUNTY	ROUTE	KILOMETER POST TOTAL PROJECT	SHEET No.	TOTAL SHEETS
11	SD	5,805	R49.9/R51.7, 42.6/46.5	446	886

LICENSED LANDSCAPE ARCHITECT

9-27-10
PLANS APPROVAL DATE

LICENSED LANDSCAPE ARCHITECT MARLENE J. GROS No. 2310 STATE OF CALIFORNIA
09-30-09 Renewal Date
05-14-09 Date

THE STATE OF CALIFORNIA OR ITS OFFICERS OR AGENTS SHALL NOT BE RESPONSIBLE FOR THE ACCURACY OR COMPLETENESS OF ELECTRONIC COPIES OF THIS PLAN SHEET.

Caltrans Metric

SAN DIEGO

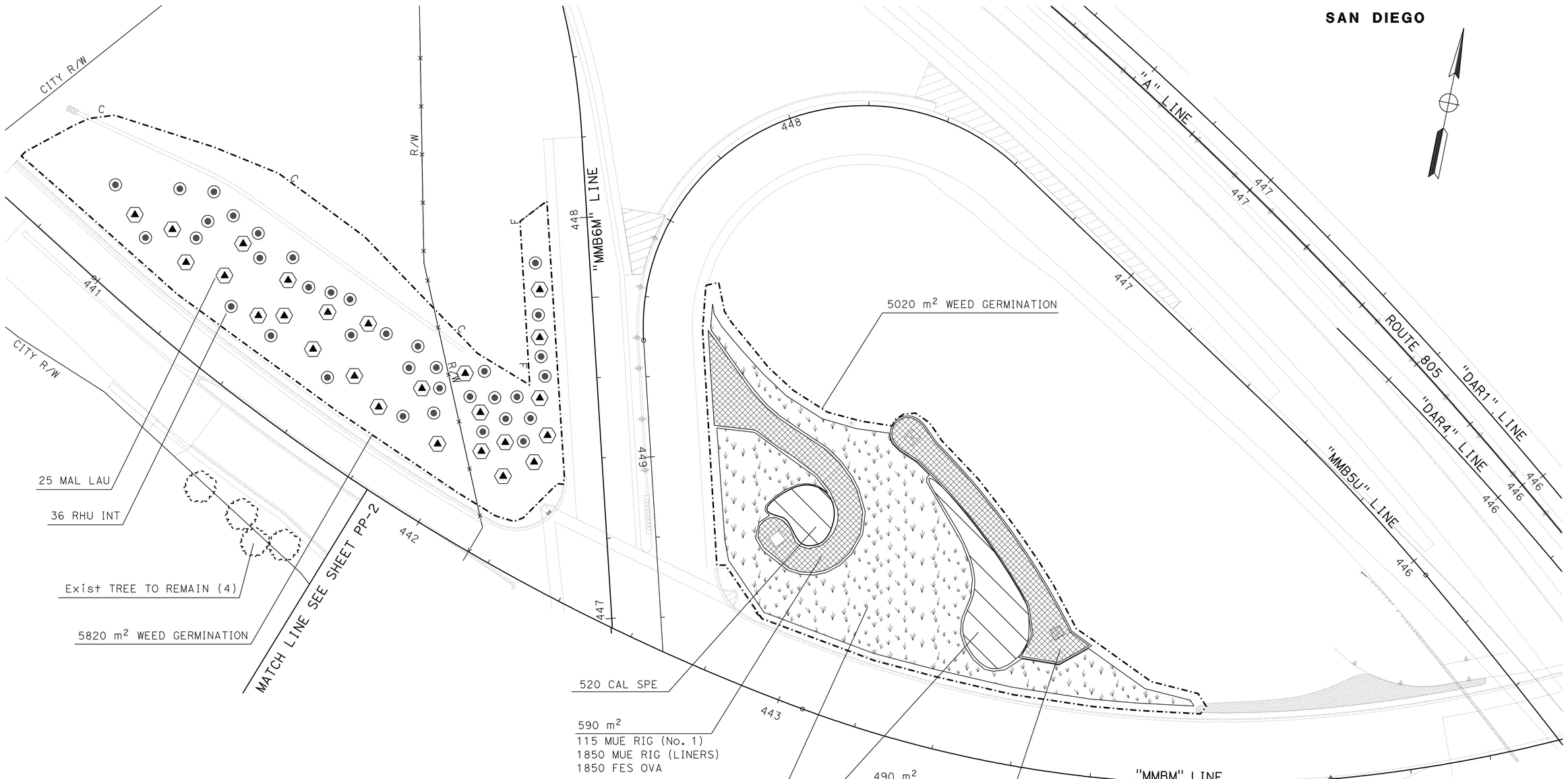

THIS PLAN ACCURATE FOR PLANTING WORK ONLY

ALL DIMENSIONS ARE IN METERS UNLESS OTHERWISE SHOWN

PLANTING PLAN

SCALE 1:500

PP-1

MARLENE GROS	REVISED BY
KENNY MAH	DATE REVISED
CALCULATED-DESIGNED BY	
CHECKED BY	
SENIOR LANDSCAPE ARCHITECT	
STEPHEN ALVAREZ	

STATE OF CALIFORNIA - DEPARTMENT OF TRANSPORTATION
Caltrans PROJECT DEVELOPMENT

LAST REVISION 06-02-09
DATE PLOTTED => 29-SEP-2010
TIME PLOTTED => 14:43

Dist	COUNTY	ROUTE	KILOMETER POST TOTAL PROJECT	SHEET No.	TOTAL SHEETS
11	SD	5,805	R49.9/R51.7, 42.6/46.5	447	886

LICENSED LANDSCAPE ARCHITECT

9-27-10
PLANS APPROVAL DATE

LICENSED LANDSCAPE ARCHITECT MARLENE J. GROS No. 2370 STATE OF CALIFORNIA
09-30-09 Renewal date
05-14-09 Date

THE STATE OF CALIFORNIA OR ITS OFFICERS OR AGENTS SHALL NOT BE RESPONSIBLE FOR THE ACCURACY OR COMPLETENESS OF ELECTRONIC COPIES OF THIS PLAN SHEET.

Caltrans Metric

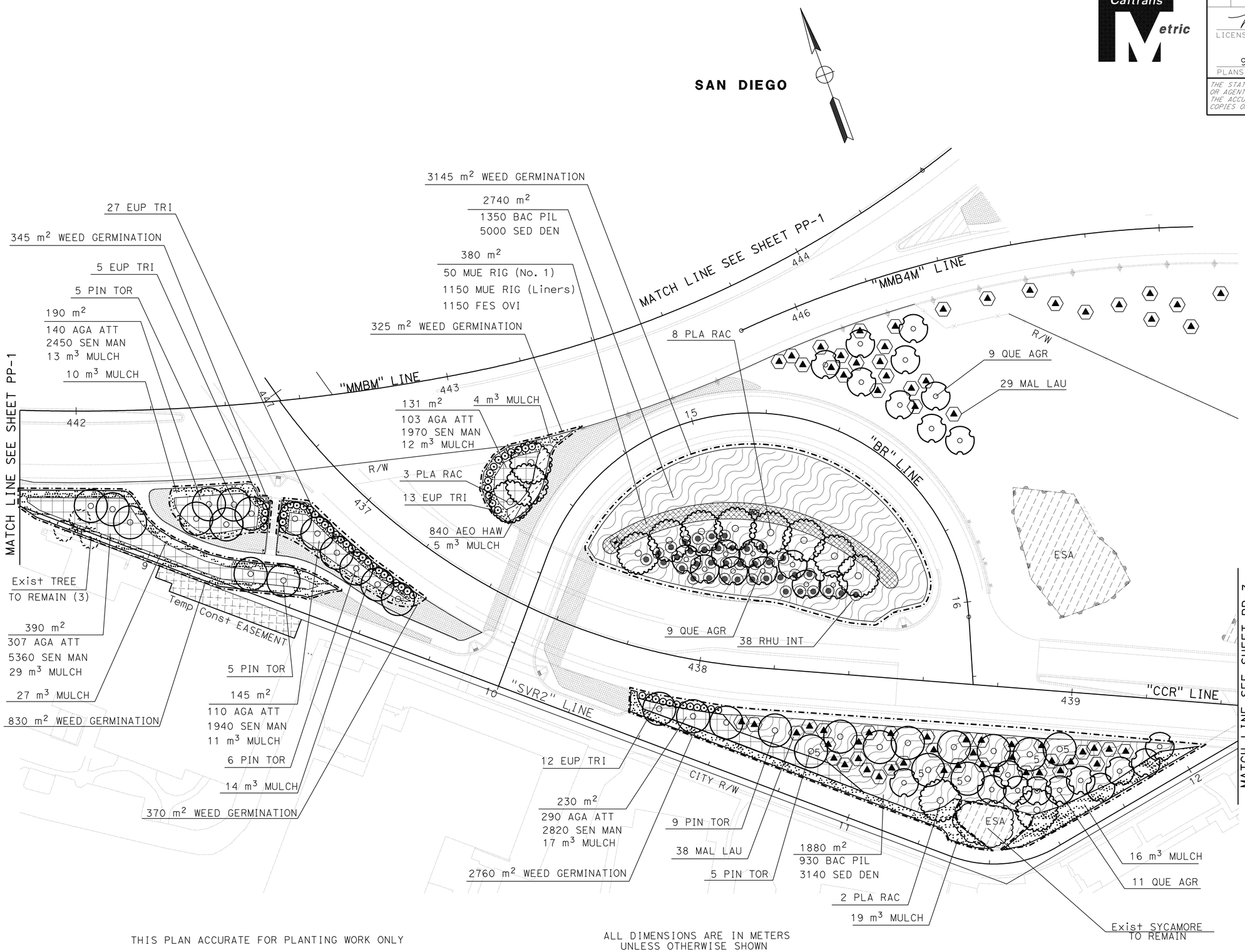

THIS PLAN ACCURATE FOR PLANTING WORK ONLY

ALL DIMENSIONS ARE IN METERS
UNLESS OTHERWISE SHOWN

PLANTING PLAN

SCALE 1:500

PP-2

REVISED BY	DATE REVISED
MARLENE GROS	KENNY MAH

CALCULATED-DESIGNED BY / CHECKED BY

SENIOR LANDSCAPE ARCHITECT: STEPHEN ALVAREZ

STATE OF CALIFORNIA - DEPARTMENT OF TRANSPORTATION
Caltrans PROJECT DEVELOPMENT

LAST REVISION 06-02-09
DATE PLOTTED => 29-SEP-2010
TIME PLOTTED => 14:44

Dist	COUNTY	ROUTE	KILOMETER POST TOTAL PROJECT	SHEET No.	TOTAL SHEETS
11	SD	5,805	R49.9/R51.7, 42.6/46.5	448	886

LICENSED LANDSCAPE ARCHITECT

9-27-10
PLANS APPROVAL DATE

LICENSED LANDSCAPE ARCHITECT MARLENE J. GROS No. 2310 STATE OF CALIFORNIA
Signature
09-30-09
Renewal Date
05-14-09
Date

THE STATE OF CALIFORNIA OR ITS OFFICERS OR AGENTS SHALL NOT BE RESPONSIBLE FOR THE ACCURACY OR COMPLETENESS OF ELECTRONIC COPIES OF THIS PLAN SHEET.

Caltrans Metric

SAN DIEGO

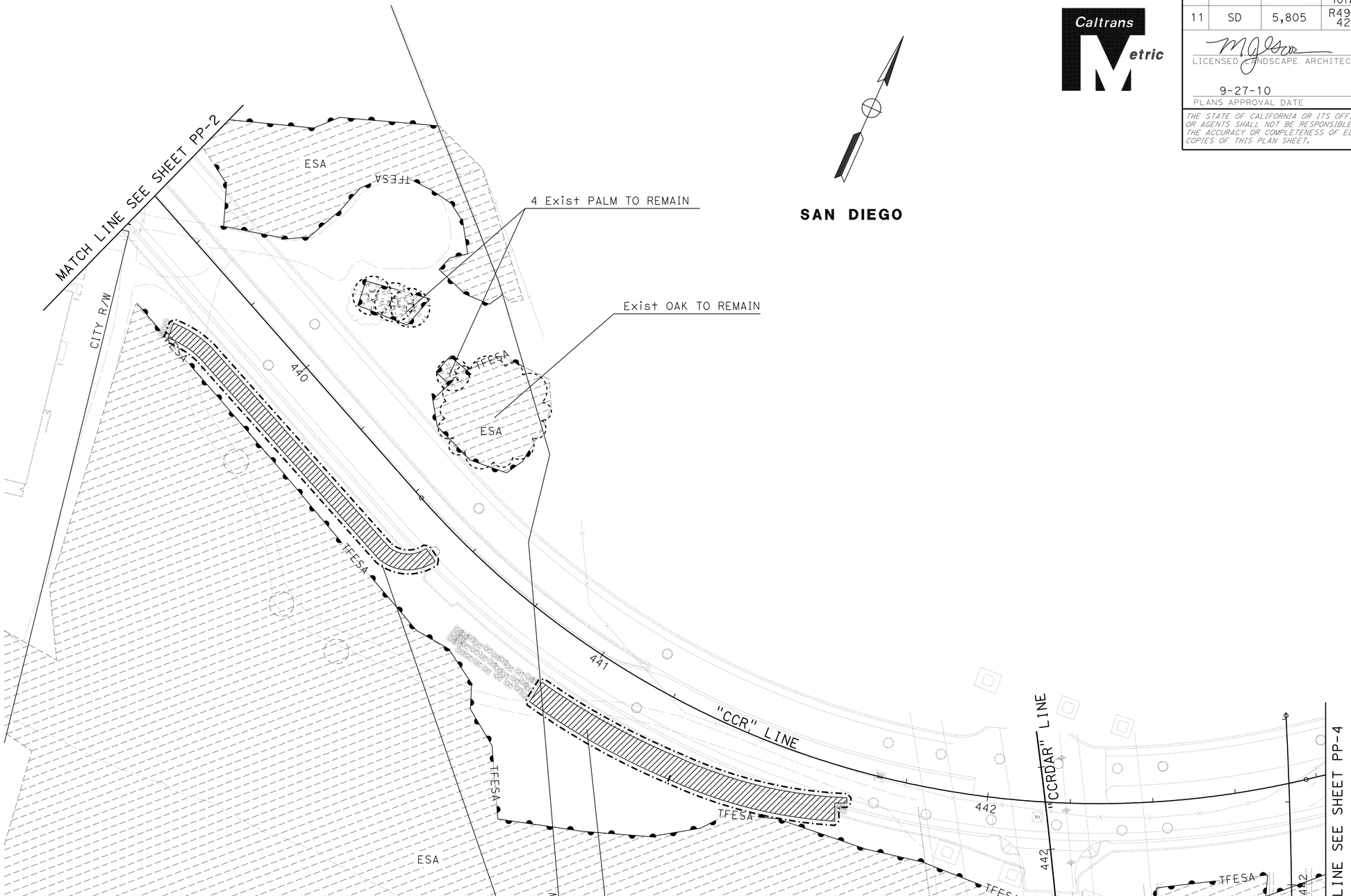

THIS PLAN ACCURATE FOR PLANTING WORK ONLY

ALL DIMENSIONS ARE IN METERS UNLESS OTHERWISE SHOWN

PLANTING PLAN

SCALE 1:500

PP-3

STATE OF CALIFORNIA - DEPARTMENT OF TRANSPORTATION
Caltrans **PROJECT DEVELOPMENT**

SENIOR LANDSCAPE ARCHITECT: STEPHEN ALVAREZ
CALCULATED-DESIGNED BY: MARLENE GROS
CHECKED BY: KENNY MAH
REVISED BY
DATE REVISED

LAST REVISION 06-02-09
DATE PLOTTED => 29-SEP-2010
TIME PLOTTED => 14:44

Dist	COUNTY	ROUTE	KILOMETER POST TOTAL PROJECT	SHEET No.	TOTAL SHEETS
11	SD	5,805	R49.9/R51.7, 42.6/46.5	449	886

LICENSED LANDSCAPE ARCHITECT

9-27-10
PLANS APPROVAL DATE

LICENSED LANDSCAPE ARCHITECT MARLENE J. GROS No. 2310 STATE OF CALIFORNIA
Signature
09-30-09
Renewal Date
05-14-09
Date

THE STATE OF CALIFORNIA OR ITS OFFICERS OR AGENTS SHALL NOT BE RESPONSIBLE FOR THE ACCURACY OR COMPLETENESS OF ELECTRONIC COPIES OF THIS PLAN SHEET.

Caltrans Metric

SAN DIEGO

THIS PLAN ACCURATE FOR PLANTING WORK ONLY

ALL DIMENSIONS ARE IN METERS
UNLESS OTHERWISE SHOWN

PLANTING PLAN

SCALE 1:500

PP-4

STATE OF CALIFORNIA - DEPARTMENT OF TRANSPORTATION
Caltrans **PROJECT DEVELOPMENT**

SENIOR LANDSCAPE ARCHITECT: STEPHEN ALVAREZ

CALCULATED-DESIGNED BY: MARLENE GROS
CHECKED BY: KENNY MAH

REVISED BY
DATE REVISED

LAST REVISION 06-02-09 | DATE PLOTTED => 29-SEP-2010 | TIME PLOTTED => 14:44

Dist	COUNTY	ROUTE	KILOMETER POST TOTAL PROJECT	SHEET No.	TOTAL SHEETS
11	SD	5,805	R49.9/R51.7, 42.6/46.5	450	886

LICENSED LANDSCAPE ARCHITECT

9-27-10
PLANS APPROVAL DATE

LICENSED LANDSCAPE ARCHITECT
MARLENE J. GROS No. 2370
signature
09-30-09
renewal date
05-14-09
date
STATE OF CALIFORNIA

THE STATE OF CALIFORNIA OR ITS OFFICERS OR AGENTS SHALL NOT BE RESPONSIBLE FOR THE ACCURACY OR COMPLETENESS OF ELECTRONIC COPIES OF THIS PLAN SHEET.

Caltrans Metric

SAN DIEGO

THIS PLAN ACCURATE FOR PLANTING WORK ONLY

ALL DIMENSIONS ARE IN METERS
UNLESS OTHERWISE SHOWN

PLANTING PLAN

SCALE 1:500 **PP-5**

STATE OF CALIFORNIA - DEPARTMENT OF TRANSPORTATION
Caltrans PROJECT DEVELOPMENT

SENIOR LANDSCAPE ARCHITECT: STEPHEN ALVAREZ
CALCULATED-DESIGNED BY: MARLENE GROS
CHECKED BY: KENNY MAH
REVISED BY
DATE REVISED

LAST REVISION 06-02-09
DATE PLOTTED => 29-SEP-2010
TIME PLOTTED => 14:44

Dist	COUNTY	ROUTE	KILOMETER POST TOTAL PROJECT	SHEET No.	TOTAL SHEETS
11	SD	5,805	R49.9/R51.7, 42.6/46.5	451	886

LICENSED LANDSCAPE ARCHITECT

9-27-10
PLANS APPROVAL DATE

LICENSED LANDSCAPE ARCHITECT
MARLENE J. GROS No. 2310
09-30-09 Renewal Date
05-14-09 Date
STATE OF CALIFORNIA

THE STATE OF CALIFORNIA OR ITS OFFICERS OR AGENTS SHALL NOT BE RESPONSIBLE FOR THE ACCURACY OR COMPLETENESS OF ELECTRONIC COPIES OF THIS PLAN SHEET.

Caltrans Metric

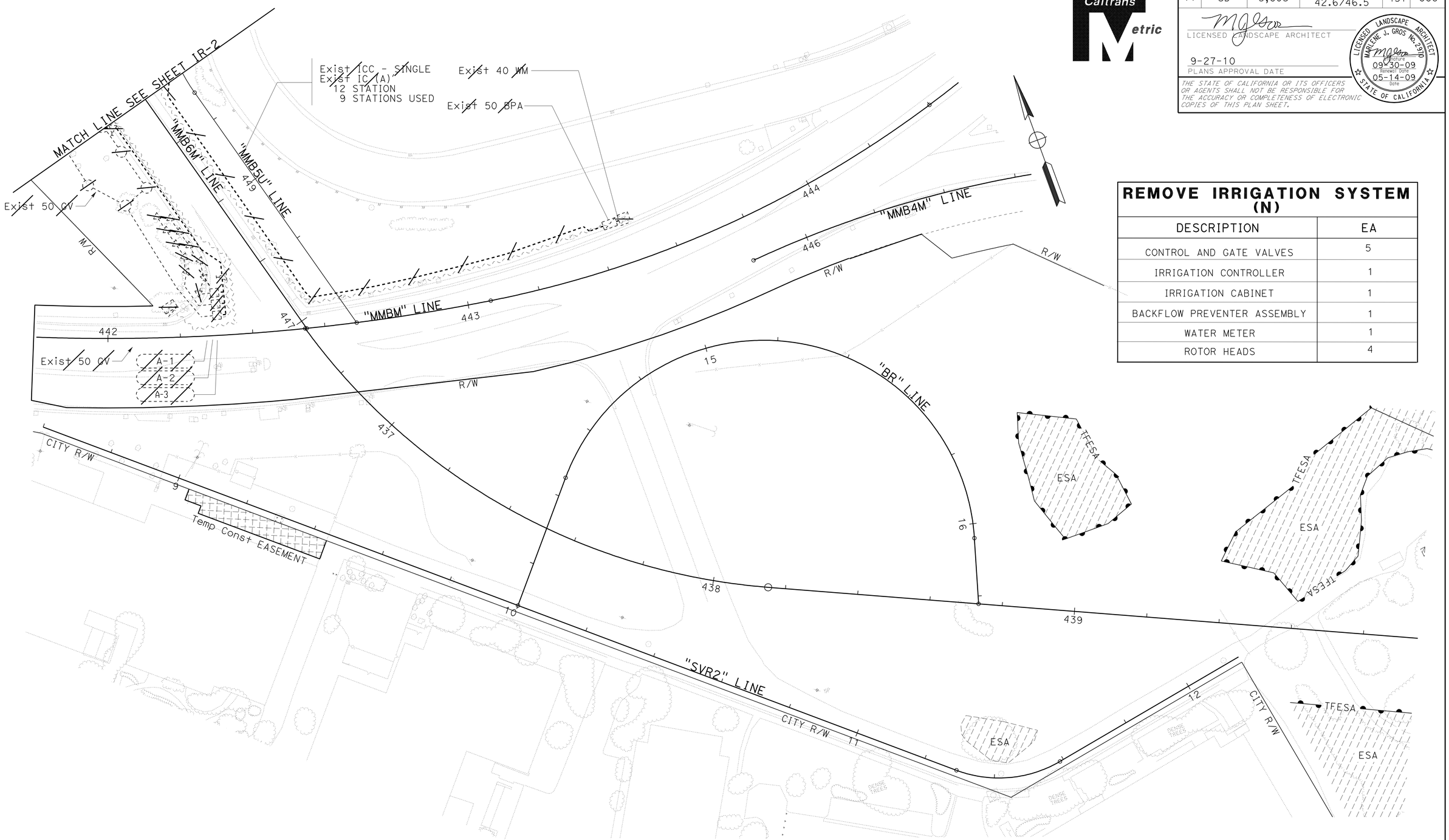

REMOVE IRRIGATION SYSTEM (N)

DESCRIPTION	EA
CONTROL AND GATE VALVES	5
IRRIGATION CONTROLLER	1
IRRIGATION CABINET	1
BACKFLOW PREVENTER ASSEMBLY	1
WATER METER	1
ROTOR HEADS	4

IRRIGATION REMOVAL PLAN

SCALE 1:500

IR-1

THIS PLAN ACCURATE FOR IRRIGATION REMOVAL WORK ONLY

ALL DIMENSIONS ARE IN MILLIMETERS
(DIAMETER NOMINAL) UNLESS OTHERWISE NOTED

REVISED BY | DATE REVISED

MARLENE GROS | KENNY MAH

CALCULATED-DESIGNED BY | CHECKED BY

SENIOR LANDSCAPE ARCHITECT: STEPHEN ALVAREZ

STATE OF CALIFORNIA - DEPARTMENT OF TRANSPORTATION
Caltrans PROJECT DEVELOPMENT

LAST REVISION 06-02-09 | DATE PLOTTED => 29-SEP-2010 | TIME PLOTTED => 14:44

Dist	COUNTY	ROUTE	KILOMETER POST TOTAL PROJECT	SHEET No.	TOTAL SHEETS
11	SD	5,805	R49.9/R51.7, 42.6/46.5	452	886

LICENSED LANDSCAPE ARCHITECT

9-27-10
PLANS APPROVAL DATE

LICENSED LANDSCAPE ARCHITECT MARLENE J. GROS No. 2310 STATE OF CALIFORNIA
Signature
09-30-09
Renewal Date
05-14-09
Date

THE STATE OF CALIFORNIA OR ITS OFFICERS OR AGENTS SHALL NOT BE RESPONSIBLE FOR THE ACCURACY OR COMPLETENESS OF ELECTRONIC COPIES OF THIS PLAN SHEET.

Caltrans Metric

REMOVE IRRIGATION SYSTEM (N)

DESCRIPTION	EA
CONTROL AND GATE VALVES	4
IRRIGATION CONTROLLER	-
IRRIGATION CABINET	-
BACKFLOW DEVICE	-
ROTOR HEADS	19

SAN DIEGO

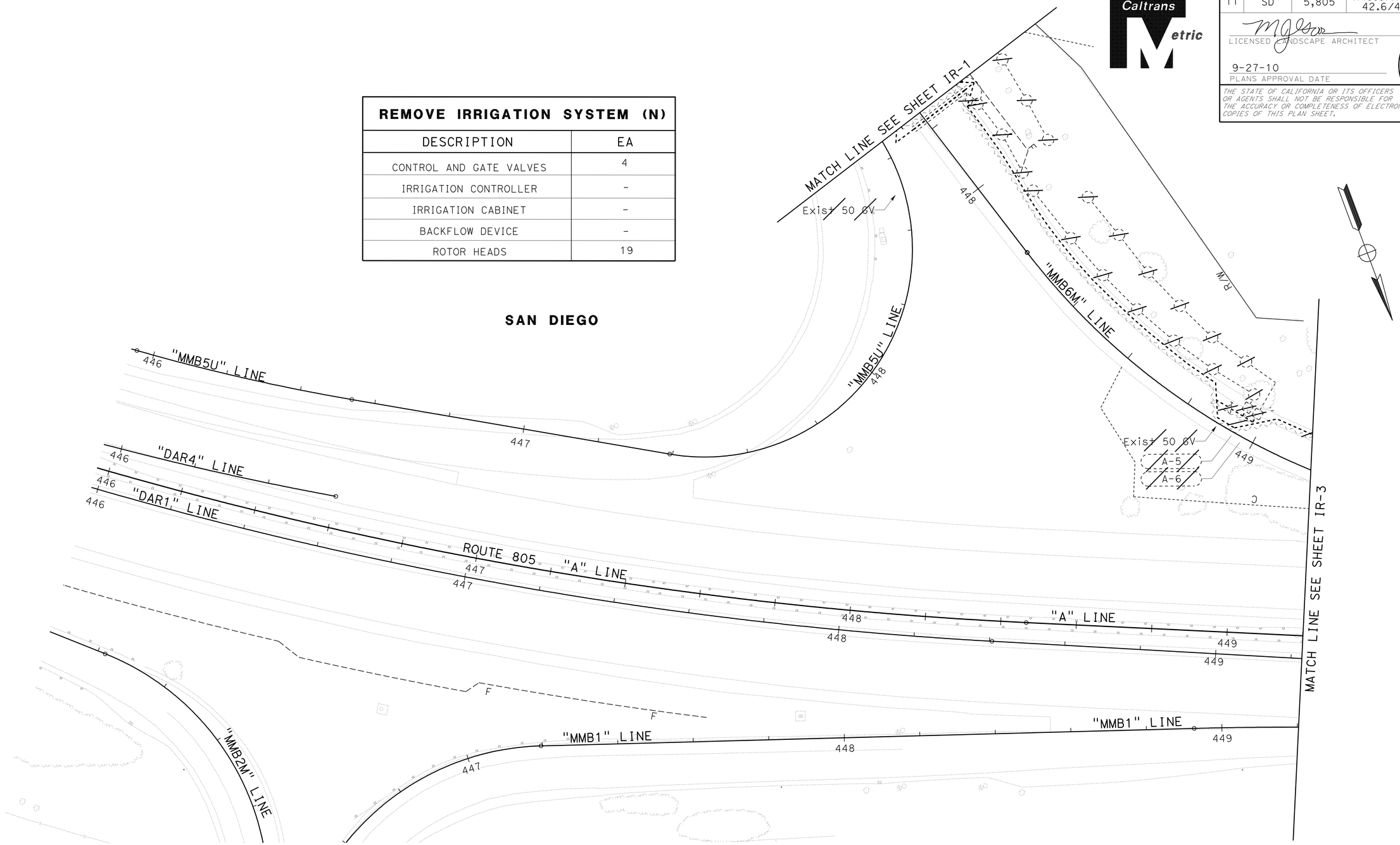

THIS PLAN ACCURATE FOR IRRIGATION REMOVAL WORK ONLY

ALL DIMENSIONS ARE IN MILLIMETERS
(DIAMETER NOMINAL) UNLESS OTHERWISE NOTED

IRRIGATION REMOVAL PLAN

SCALE 1:500

IR-2

STATE OF CALIFORNIA - DEPARTMENT OF TRANSPORTATION
Caltrans PROJECT DEVELOPMENT

SENIOR LANDSCAPE ARCHITECT: STEPHEN ALVAREZ
CALCULATED-DESIGNED BY: MARLENE GROS
CHECKED BY: KENNY MAH
REVISED BY
DATE REVISED

LAST REVISION 06-02-09
DATE PLOTTED => 29-SEP-2010
TIME PLOTTED => 14:44

Dist	COUNTY	ROUTE	KILOMETER POST TOTAL PROJECT	SHEET No.	TOTAL SHEETS
11	SD	5,805	R49.9/R51.7, 42.6/46.5	453	886

LICENSED LANDSCAPE ARCHITECT

9-27-10
PLANS APPROVAL DATE

LICENSED LANDSCAPE ARCHITECT MARLENE J. GROS No. 2310 STATE OF CALIFORNIA
Signature
09-30-09
Renewal date
05-14-09
Date

THE STATE OF CALIFORNIA OR ITS OFFICERS OR AGENTS SHALL NOT BE RESPONSIBLE FOR THE ACCURACY OR COMPLETENESS OF ELECTRONIC COPIES OF THIS PLAN SHEET.

Caltrans Metric

REMOVE IRRIGATION SYSTEM (N)

DESCRIPTION	EA
CONTROL AND GATE VALVES	4
IRRIGATION CONTROLLER	-
IRRIGATION CABINET	-
BACKFLOW DEVICE	-
WATER METER	-

(N)=NOT A SEPARATE PAY ITEM, FOR INFORMATION ONLY

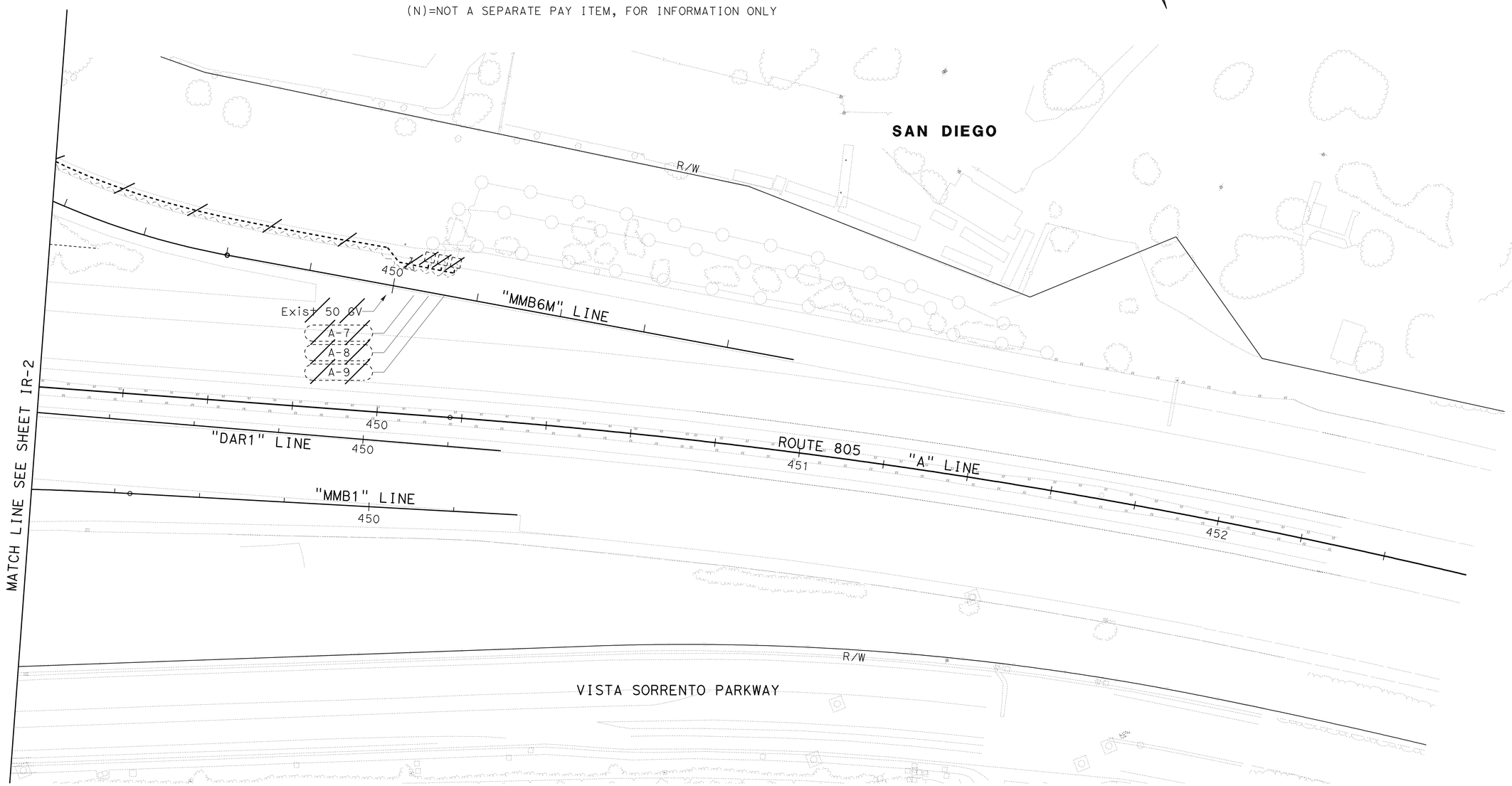

THIS PLAN ACCURATE FOR IRRIGATION REMOVAL WORK ONLY

ALL DIMENSIONS ARE IN MILLIMETERS
(DIAMETER NOMINAL) UNLESS OTHERWISE NOTED

IRRIGATION REMOVAL PLAN

SCALE 1:500

IR-3

STATE OF CALIFORNIA - DEPARTMENT OF TRANSPORTATION
Caltrans PROJECT DEVELOPMENT

SENIOR LANDSCAPE ARCHITECT: STEPHEN ALVAREZ
CALCULATED-DESIGNED BY: MARLENE GROS
CHECKED BY: KENNY MAH
REVISED BY
DATE REVISED

LAST REVISION 06-02-09
DATE PLOTTED => 29-SEP-2010
TIME PLOTTED => 14:44

Dist	COUNTY	ROUTE	KILOMETER POST TOTAL PROJECT	SHEET No.	TOTAL SHEETS
11	SD	5,805	R49.9/R51.7, 42.6/46.5	454	886

LICENSED LANDSCAPE ARCHITECT

9-27-10
PLANS APPROVAL DATE

LICENSED LANDSCAPE ARCHITECT MARLENE J. GROS No. 2370 STATE OF CALIFORNIA
Signature
09-30-09
Renewal Date
05-14-09
Date

THE STATE OF CALIFORNIA OR ITS OFFICERS OR AGENTS SHALL NOT BE RESPONSIBLE FOR THE ACCURACY OR COMPLETENESS OF ELECTRONIC COPIES OF THIS PLAN SHEET.

Caltrans Metric

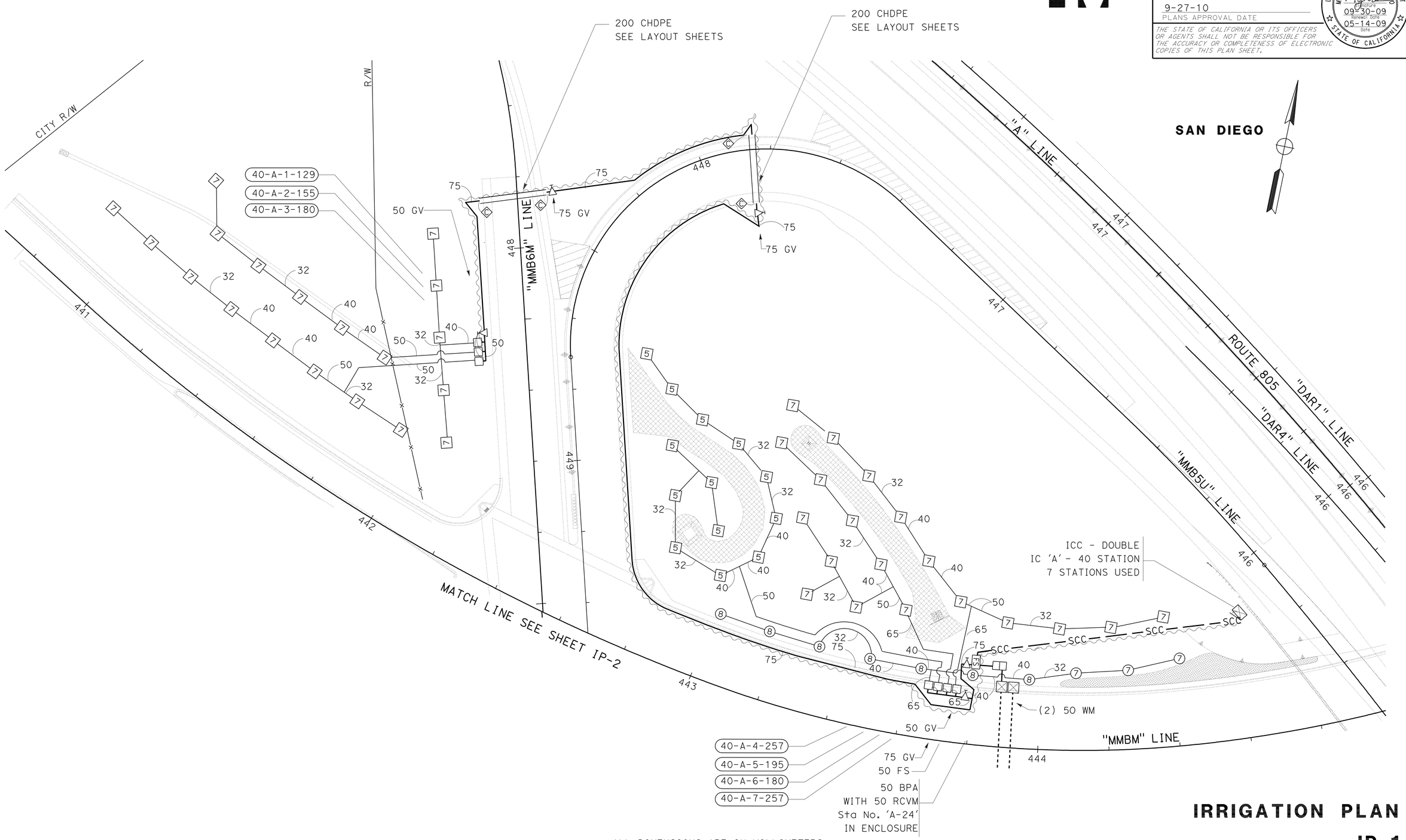

IRRIGATION PLAN

SCALE 1:500

IP-1

THIS PLAN ACCURATE FOR IRRIGATION WORK ONLY

ALL DIMENSIONS ARE IN MILLIMETERS
(DIAMETER NOMINAL) UNLESS OTHERWISE NOTED

STATE OF CALIFORNIA - DEPARTMENT OF TRANSPORTATION
Caltrans PROJECT DEVELOPMENT

SENIOR LANDSCAPE ARCHITECT: STEPHEN ALVAREZ
CALCULATED-DESIGNED BY: MARLENE GROS
CHECKED BY: KENNY MAH
REVISED BY / DATE REVISED

LAST REVISION 06-02-09
DATE PLOTTED => 29-SEP-2010
TIME PLOTTED => 14:44

Dist	COUNTY	ROUTE	KILOMETER POST TOTAL PROJECT	SHEET No.	TOTAL SHEETS
11	SD	5,805	R49.9/R51.7, 42.6/46.5	455	886

LICENSED LANDSCAPE ARCHITECT

9-27-10
PLANS APPROVAL DATE

LICENSED LANDSCAPE ARCHITECT MARLENE J. GROS No. 2310 STATE OF CALIFORNIA
Signature
09-30-09
Renewal Date
05-14-09
Date

THE STATE OF CALIFORNIA OR ITS OFFICERS OR AGENTS SHALL NOT BE RESPONSIBLE FOR THE ACCURACY OR COMPLETENESS OF ELECTRONIC COPIES OF THIS PLAN SHEET.

Caltrans Metric

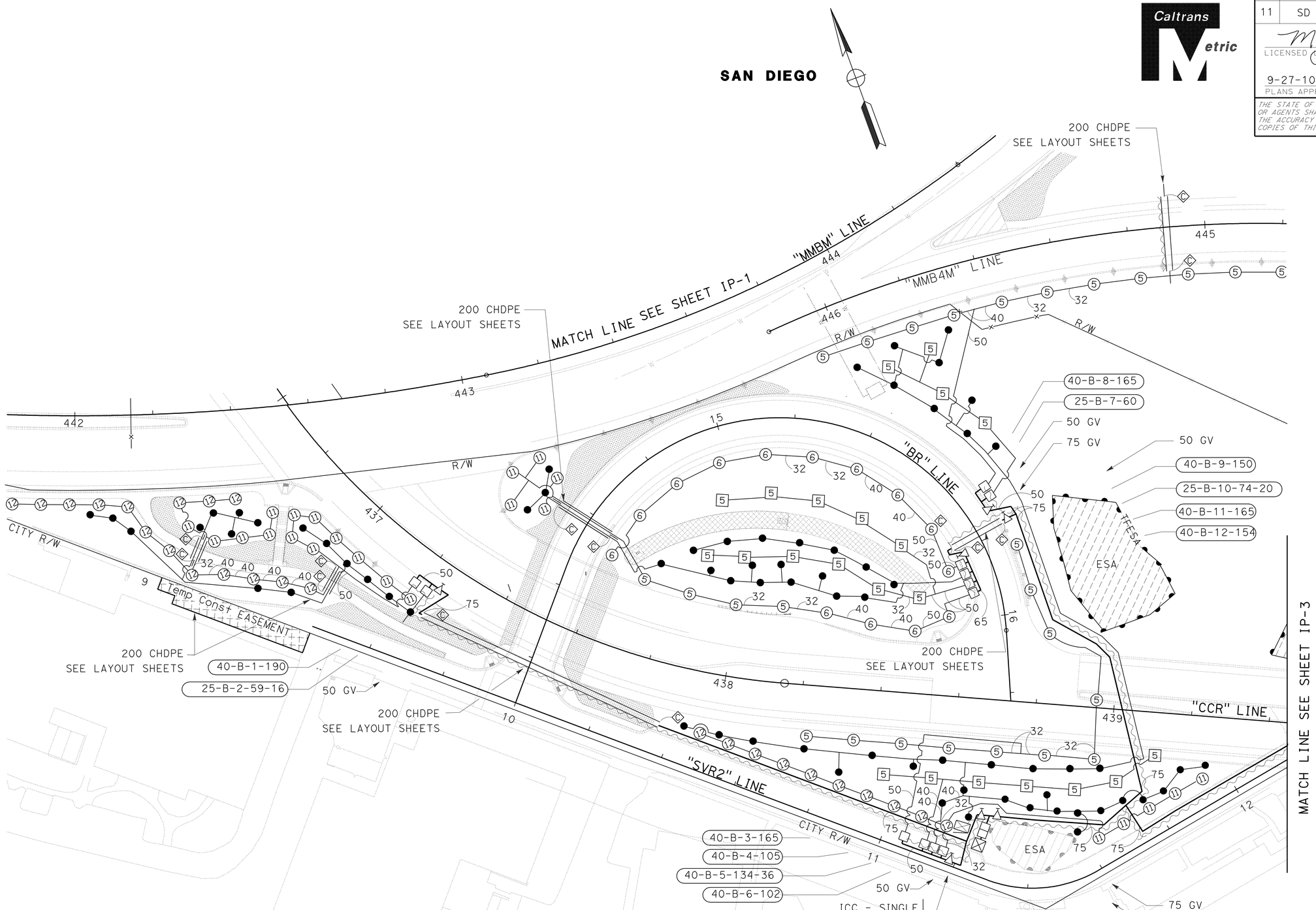

THIS PLAN ACCURATE FOR IRRIGATION WORK ONLY

ALL DIMENSIONS ARE IN MILLIMETERS
(DIAMETER NOMINAL) UNLESS OTHERWISE NOTED

IRRIGATION PLAN

SCALE 1:500

IP-2

STATE OF CALIFORNIA - DEPARTMENT OF TRANSPORTATION
Caltrans PROJECT DEVELOPMENT

SENIOR LANDSCAPE ARCHITECT: STEPHEN ALVAREZ
CALCULATED-DESIGNED BY: MARLENE GROS
CHECKED BY: KENNY MAH
REVISED BY
DATE REVISED

LAST REVISION 06-02-09
DATE PLOTTED => 29-SEP-2010
TIME PLOTTED => 14:44

Dist	COUNTY	ROUTE	KILOMETER POST TOTAL PROJECT	SHEET No.	TOTAL SHEETS
11	SD	5,805	R49.9/R51.7, 42.6/46.5	456	886

Caltrans Metric

LICENSED LANDSCAPE ARCHITECT

9-27-10
PLANS APPROVAL DATE

LICENSED LANDSCAPE ARCHITECT MARLENE J. GROS No. 2370 STATE OF CALIFORNIA
Signature
09-30-09
Renewal Date
05-14-09
Date

THE STATE OF CALIFORNIA OR ITS OFFICERS OR AGENTS SHALL NOT BE RESPONSIBLE FOR THE ACCURACY OR COMPLETENESS OF ELECTRONIC COPIES OF THIS PLAN SHEET.

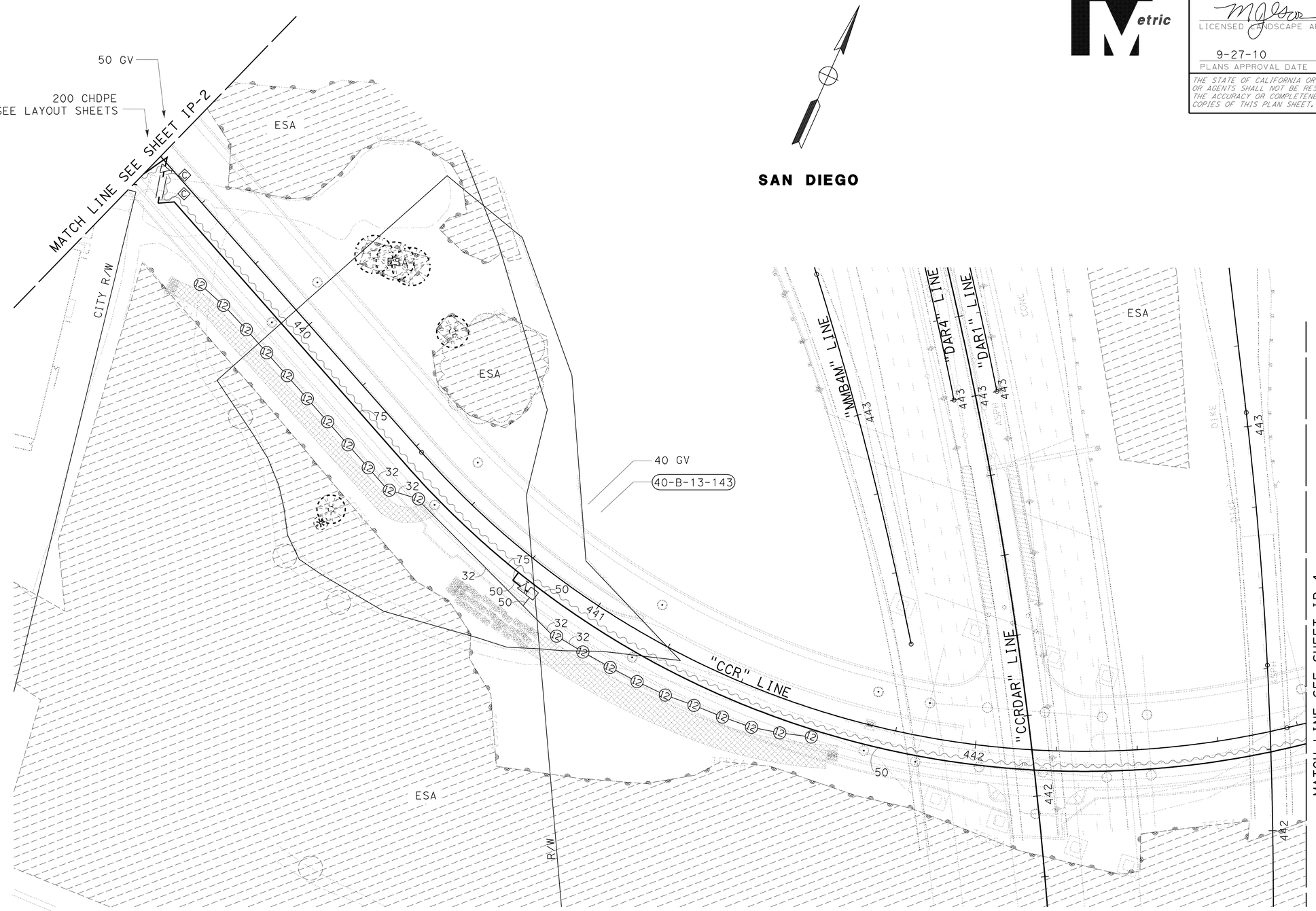

IRRIGATION PLAN

SCALE 1:500

IP-3

THIS PLAN ACCURATE FOR IRRIGATION WORK ONLY

ALL DIMENSIONS ARE IN MILLIMETERS
(DIAMETER NOMINAL) UNLESS OTHERWISE NOTED

STATE OF CALIFORNIA - DEPARTMENT OF TRANSPORTATION
Caltrans PROJECT DEVELOPMENT

SENIOR LANDSCAPE ARCHITECT: STEPHEN ALVAREZ
CALCULATED-DESIGNED BY: MARLENE GROS
CHECKED BY: KENNY MAH
REVISED BY
DATE REVISED

LAST REVISION DATE PLOTTED => 29-SEP-2010
06-02-09 TIME PLOTTED => 14:45

Dist	COUNTY	ROUTE	KILOMETER POST TOTAL PROJECT	SHEET No.	TOTAL SHEETS
11	SD	5,805	R49.9/R51.7, 42.6/46.5	457	886

LICENSED LANDSCAPE ARCHITECT

9-27-10
PLANS APPROVAL DATE

LICENSED LANDSCAPE ARCHITECT
MARLENE J. GROS No. 2310
Signature
09-30-09
Renewal Date
05-14-09
Date
STATE OF CALIFORNIA

THE STATE OF CALIFORNIA OR ITS OFFICERS OR AGENTS SHALL NOT BE RESPONSIBLE FOR THE ACCURACY OR COMPLETENESS OF ELECTRONIC COPIES OF THIS PLAN SHEET.

Caltrans Metric

SAN DIEGO

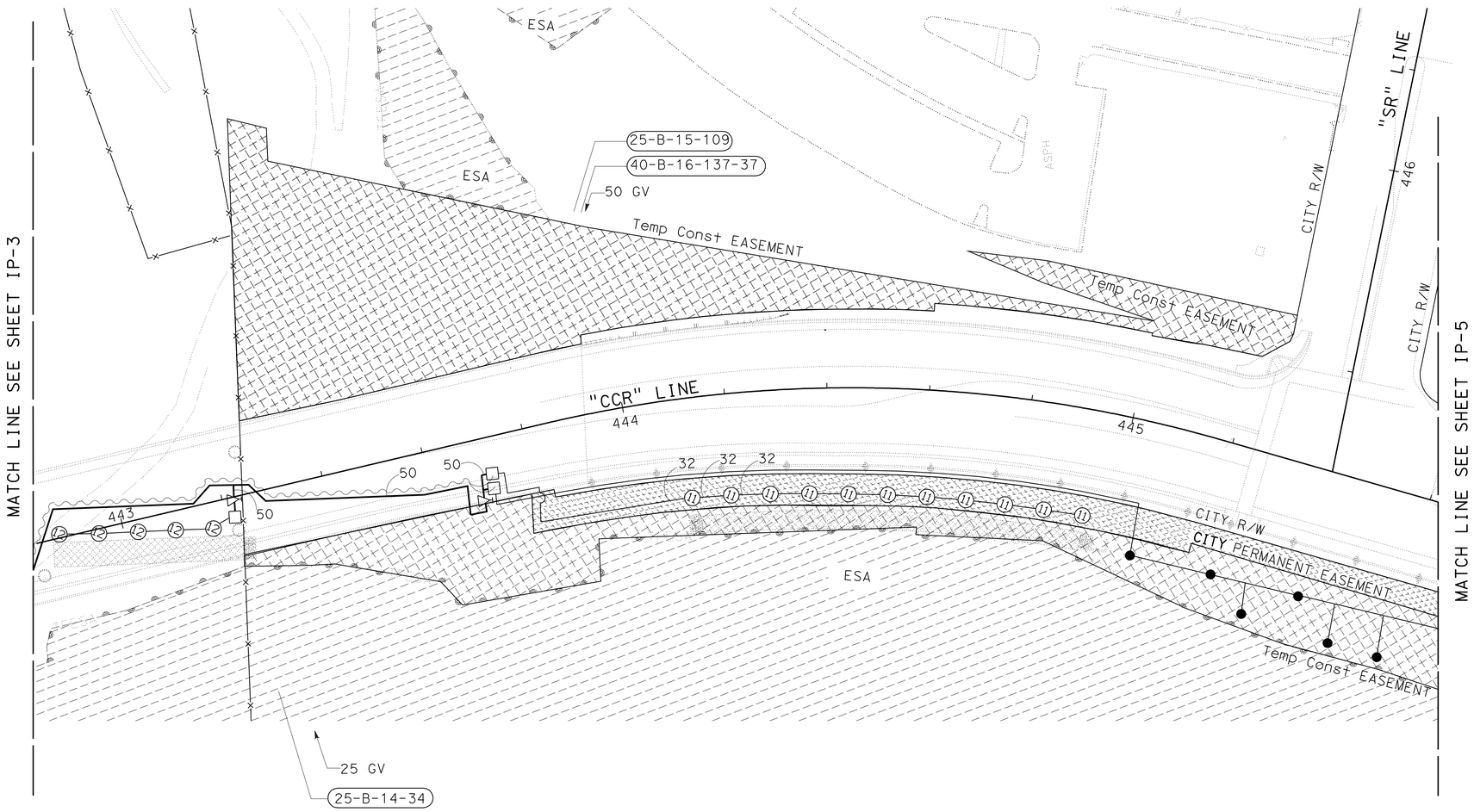

IRRIGATION PLAN

SCALE 1:500

IP-4

THIS PLAN ACCURATE FOR IRRIGATION WORK ONLY

ALL DIMENSIONS ARE IN MILLIMETERS
(DIAMETER NOMINAL) UNLESS OTHERWISE NOTED

STATE OF CALIFORNIA - DEPARTMENT OF TRANSPORTATION
Caltrans PROJECT DEVELOPMENT

SENIOR LANDSCAPE ARCHITECT: STEPHEN ALVAREZ
CALCULATED-DESIGNED BY: MARLENE GROS
CHECKED BY: KENNY MAH
REVISED BY
DATE REVISED

LAST REVISION 06-02-09
DATE PLOTTED => 29-SEP-2010
TIME PLOTTED => 14:45

Dist	COUNTY	ROUTE	KILOMETER POST TOTAL PROJECT	SHEET No.	TOTAL SHEETS
11	SD	5,805	R49.9/R51.7, 42.6/46.5	458	886

LICENSED LANDSCAPE ARCHITECT

9-27-10
PLANS APPROVAL DATE

LICENSED LANDSCAPE ARCHITECT
MARLENE J. GROS No. 2370
Signature
09-30-09
Renewal Date
05-14-09
Date
STATE OF CALIFORNIA

THE STATE OF CALIFORNIA OR ITS OFFICERS OR AGENTS SHALL NOT BE RESPONSIBLE FOR THE ACCURACY OR COMPLETENESS OF ELECTRONIC COPIES OF THIS PLAN SHEET.

Caltrans Metric

SAN DIEGO

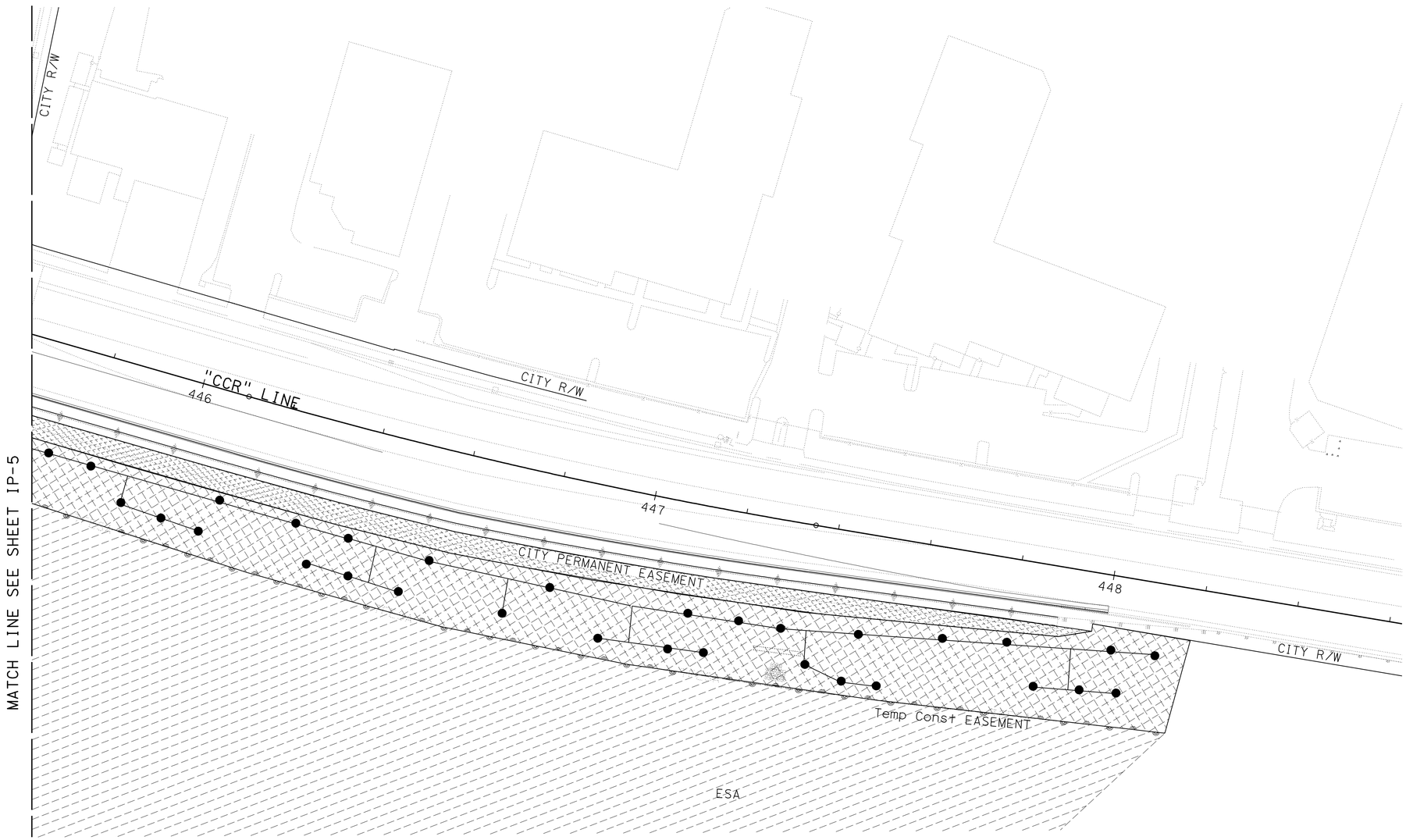

THIS PLAN ACCURATE FOR IRRIGATION WORK ONLY

ALL DIMENSIONS ARE IN METERS
UNLESS OTHERWISE SHOWN

IRRIGATION PLAN

SCALE 1:500

IP-5

STATE OF CALIFORNIA - DEPARTMENT OF TRANSPORTATION
Caltrans **PROJECT DEVELOPMENT**

SENIOR LANDSCAPE ARCHITECT: STEPHEN ALVAREZ
CALCULATED-DESIGNED BY: MARLENE GROS
CHECKED BY: KENNY MAH
REVISED BY
DATE REVISED

LAST REVISION 06-02-09
DATE PLOTTED => 29-SEP-2010
TIME PLOTTED => 14:45

Dist	COUNTY	ROUTE	KILOMETER POST TOTAL PROJECT	SHEET No.	TOTAL SHEETS
11	SD	5,805	R49.9/R51.7, 42.6/46.5	459	886

LICENSED LANDSCAPE ARCHITECT

9-27-10
PLANS APPROVAL DATE

LICENSED LANDSCAPE ARCHITECT MARLENE J. GROS No. 2310 STATE OF CALIFORNIA
Signature 09-30-09 Renewal Date 05-14-09 Date

THE STATE OF CALIFORNIA OR ITS OFFICERS OR AGENTS SHALL NOT BE RESPONSIBLE FOR THE ACCURACY OR COMPLETENESS OF ELECTRONIC COPIES OF THIS PLAN SHEET.

Caltrans Metric

SPRINKLER SCHEDULE

SYMBOL	TYPE	DESCRIPTION	SPRAY PATTERN	OPERATING PRESSURE (KILOPASCAL)	PRESSURE COMPENSATING	PLUS / MINUS 5% ② DISCHARGE: LITERS PER SECOND L/s	LITERS PER MINUTE L/min	LITERS PER HOUR L/h	RADIUS (IN METERS)(m)	WIDTH x LENGTH (IN METERS)(m)	MATERIAL	NOZZLE SIZE IN MILLIMETERS (mm)	INLET CONNECTION (NPT) (DN IN MILLIMETERS)(mm)	POSITIVE-LOCKING ADJ ARC STOP	BACKSPLASH PREVENTER	DIFFUSER PIN	DISTANCE CONTROL FLAP	ADJ DISCHARGE	RISER: TYPE	RISER MATERIAL: PLASTIC	RISER MATERIAL: GALVANIZED	RISER SIZE (IPS) (IN MILLIMETERS) (mm)	RISER HEIGHT (IN MILLIMETERS) (mm)	FLOW SHUT OFF DEVICE	SWING JOINT (TYPE)	RISER SUPPORT	SPRINKLER PROTECTOR (TYPE)	REMARKS
[5]	A-5	GEAR DRIVEN	F	345	-	-	9.5	-	12.2	-	PL	-	20	-	-	X	-	-	I	X	-	20	150	X	I	-	-	③
⑤	A-5	GEAR DRIVEN	P	345	-	-	9.5	-	12.2	-	PL	-	20	-	-	X	-	-	I	X	-	20	150	X	I	-	-	③⑦⑩
⑥	A-6	GEAR DRIVEN	P	345	-	-	9.5	-	12.2	-	PL	-	20	-	-	X	-	-	-	-	-	-	-	-	I	-	I	③⑦ 300 mm POP-UP
[7]	A-7	GEAR DRIVEN	F	345	-	-	25.7	-	14.6	-	PL	-	20	-	-	X	-	-	I	X	-	20	150	-	I	-	-	③⑩
⑦	A-7	GEAR DRIVEN	P	345	-	-	25.7	-	14.6	-	PL	-	20	-	-	X	-	-	I	X	-	20	150	-	I	-	-	③⑦
⑧	A-8	GEAR DRIVEN	P	345	-	-	25.7	-	14.6	-	PL	-	20	-	-	X	-	-	-	-	-	-	-	-	I	-	I	③⑦ 300 mm POP-UP
⑪	A-11	GEAR DRIVEN	P	345	-	-	6.8	-	7.6	-	PL	-	20	-	-	X	-	-	I	X	-	20	150	X	I	-	-	③⑦⑩
[11]	A-11	GEAR DRIVEN	F	345	-	-	6.8	-	7.6	-	PL	-	20	-	-	X	-	-	I	X	-	20	150	X	I	-	-	③⑩
⑫	A-12	GEAR DRIVEN	P	345	-	-	6.8	-	7.6	-	PL	-	20	-	-	X	-	-	I	X	-	20	150	-	I	-	I	③⑦ 300 mm POP-UP
●	C-2 MOD	MODIFIED FLOOD BUBBLER	-	207	X	-	3.7	-	-	-	PL	-	15	-	-	-	-	-	III	X	-	15	-	-	I	-	-	④⑨

NOTE:

X IN THE BOX DENOTES REQUIREMENT.

APPLICABLE WHEN CIRCLED BELOW:

1 - SEE SPECIAL PROVISIONS.
② - IF A PRESSURE COMPENSATING DEVICE IS SPECIFIED, THE DISCHARGE AND RADII SHOWN REFLECT ITS USE.
③ - SHALL HAVE AN INTERNAL OR EXTERNAL CHECK VALVE.
④ - NON-ADJUSTABLE DISCHARGE RATE.
5 - REQUIRED ADJACENT TO SHOULDERS, CURBS, SIDEWALKS, AND DIKES.
6 - SEE DETAIL.
⑦ - ADJUSTABLE ARC.
⑧ - MATCHED PRECIPITATION RATE NOZZLES.
⑨ - REFER TO PIPE SIZING CHARTS.
⑩ - USE FOR SPRIKLERS ON CONTROLLER 'B'

ABBREVIATIONS:

ADJ — ADJUSTABLE
B/B — BRASS/BRONZE
B/B/PL — BRASS/BRONZE/PLASTIC
B/PL — BRASS/PLASTIC
CST — CENTER STRIP
DN — DIAMETER NOMINAL
EST — END STRIP
F — FULL CIRCLE
F/P — FULL/PART CIRCLE
H — HALF CIRCLE
IPS — IRON PIPE SIZE
kPa — KILOPASCAL
L/h — LITERS PER HOUR
L/min — LITERS PER MINUTE
L/s — LITERS PER SECOND
m — METERS
mm — MILLIMETERS
NPT — NATIONAL PIPE THREAD
P — PART CIRCLE
PL — PLASTIC
Q — QUARTER CIRCLE
SST — SIDE STRIP
T — THIRD CIRCLE
TQ — THREE QUARTER CIRCLE
TT — TWO THIRDS CIRCLE

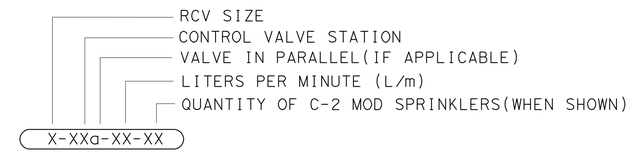

PROPOSED VALVE CODE

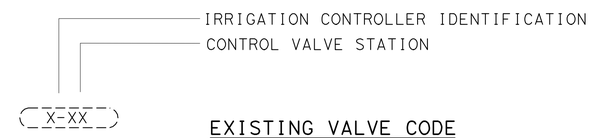

EXISTING VALVE CODE

LEGEND:

XX-X-XX-XXX-XXX — NEW IRRIGATION VALVE TO BE INSTALLED
X-XX — EXISTING IRRIGATION VALVE TO BE REMOVED
EXISTING IRRIGATION TO BE REMOVED
—SCC— 40 mm SPRINKLER CONTROL CONDUIT(SCC) FOR FLOW SENSOR CABLE/CNC FOR RCVM
BIOFILTRATION SWALE
IRRIGATION CROSSOVER

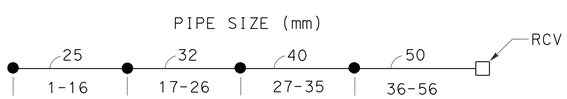

PIPE SIZING CHART
SPRINKLER TYPE C-2 MOD

NOTES:

1. ALL NEW LATERAL PIPE NOT LABELED SHALL BE 25 mm OR AS SHOWN ON THE PIPE SIZING CHART.
2. ALL NEW MAINLINE PIPE WHICH HAS A CHANGE IN DIRECTION OF 90 DEGREES OR MORE SHALL HAVE (2)-45 DEGREE ELBOWS.
3 ALL IRRIGATION TO BE INSTALLED OUTSIDE OF BIOFILTRATION SWALE AREA.

ALL DIMENSIONS ARE IN MILLIMETERS (DIAMETER NOMINAL) UNLESS OTHERWISE NOTED

LANDSCAPE DETAILS

NO SCALE

LD-1

STATE OF CALIFORNIA - DEPARTMENT OF TRANSPORTATION
Caltrans PROJECT DEVELOPMENT

SENIOR LANDSCAPE ARCHITECT: STEPHEN ALVAREZ
CALCULATED-DESIGNED BY: MARLENE GROS
CHECKED BY: KENNY MAH
REVISED BY / DATE REVISED

LAST REVISION 06-02-09
DATE PLOTTED => 29-SEP-2010
TIME PLOTTED => 14:45

Dist	COUNTY	ROUTE	KILOMETER POST TOTAL PROJECT	SHEET No.	TOTAL SHEETS
11	SD	5,805	R49.9/R51.7, 42.6/46.5	460	886

LICENSED LANDSCAPE ARCHITECT

9-27-10
PLANS APPROVAL DATE

LICENSED LANDSCAPE ARCHITECT MARLENE J. GROS No. 2370 STATE OF CALIFORNIA
09-30-09 Renewal date
05-14-09 Date

THE STATE OF CALIFORNIA OR ITS OFFICERS OR AGENTS SHALL NOT BE RESPONSIBLE FOR THE ACCURACY OR COMPLETENESS OF ELECTRONIC COPIES OF THIS PLAN SHEET.

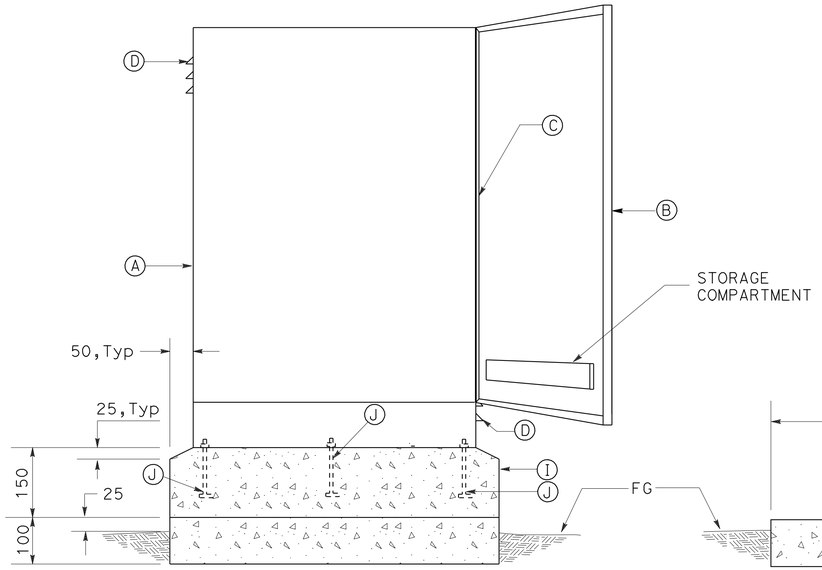

FRONT ELEVATION

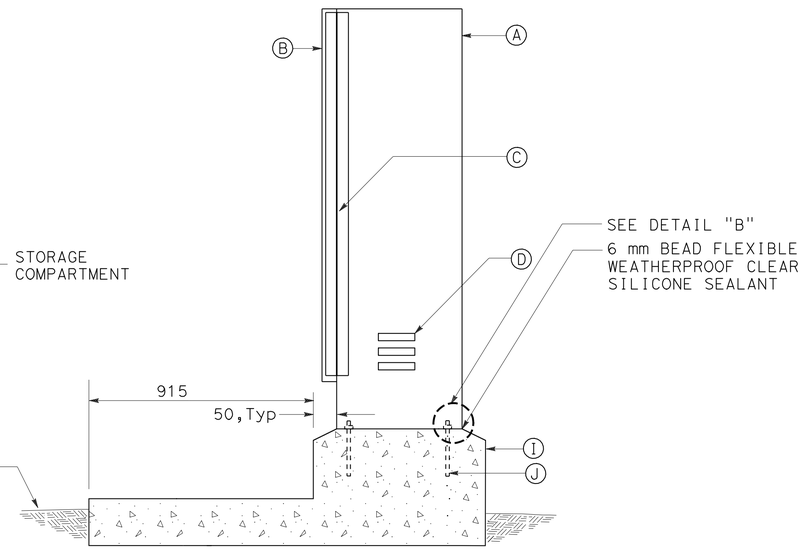

SIDE SECTION

CABINET, SECURITY DOOR, AND FOUNDATION

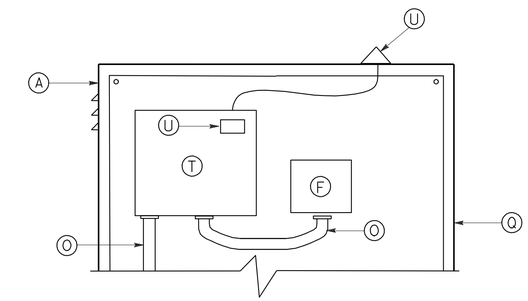

ICC 'A' & 'B' CONTROLLER LAYOUT

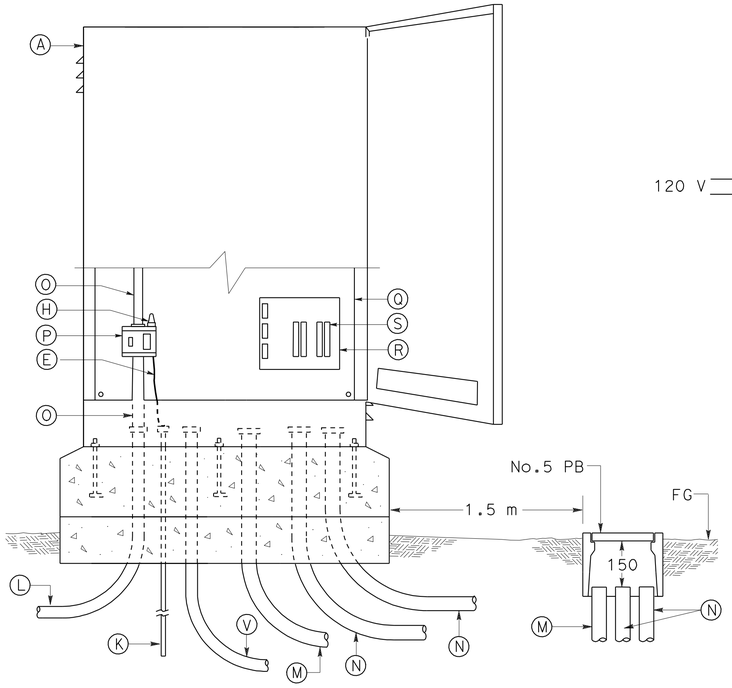

FRONT ELEVATION
ELECTRICAL LAYOUT

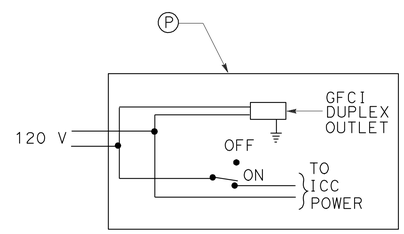

DETAIL "A"

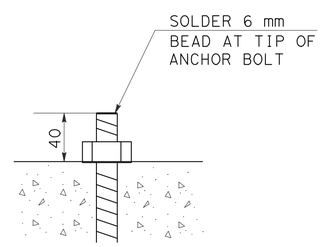

DETAIL "B"

LEGEND (THIS SHEET ONLY):

- Ⓐ STAINLESS STEEL CONTROLLER ENCLOSURE CABINET
- Ⓑ DOOR WITH THREE POINT LOCKING MECHANISM, FLUSH-MOUNTED ACCESS HANDLE FOR PADLOCK, AND STORAGE FOR PLANS
- Ⓒ CONTINUOUS STAINLESS STEEL PIANO HINGE
- Ⓓ LOUVERS AT TOP AND BOTTOM FOR CROSS VENTILATION
- Ⓔ No. 8 AWG GROUND CONDUCTOR
- Ⓕ EVAPOTRANSPIRATION (ET) MANAGER
- Ⓖ JUNCTION BOX
- Ⓗ SURGE PROTECTION
- Ⓘ PCC PAD AND FOUNDATION
- Ⓙ 10 mm DIAMETER, 70 mm LONG, WINGED STAINLESS STEEL ANCHOR BOLTS WITH WASHERS AND HEX HEAD LOCKNUTS
- Ⓚ 16 mm X 3.0 m LONG COPPER CLAD STEEL ROD GROUND ELECTRODE AND GROUND CLAMP
- Ⓛ SIZE 27, TYPE 3 CONDUIT FOR ELECTRICAL SERVICE AND TELEPHONE SERVICE(CCU ONLY)(TOTAL 2).
- Ⓜ SIZE 41, TYPE 3 CONDUIT FOR RCVMF INPUT WIRING
- Ⓝ SIZE 53, TYPE 3 CONDUIT FOR LOW VOLTAGE WIRING(2 FOR SINGLE CABINET, 3 FOR DOUBLE CABINET)
- Ⓞ SIZE 27, TYPE 4 CONDUIT
- Ⓟ 2 GANG WEATHER PROOF BOX WITH GROUND FAULT PROTECTED RECEPTACLE AND ON-OFF SWITCH, SEE DETAIL "A" ON THIS SHEET
- Ⓠ STAINLESS STEEL MOUNTING PANEL(4 mm Min THICKNESS), ATTACHED TO ENCLOSURE
- Ⓡ BRUSHED ALUMINUM MOUNTING BOARD, SECURED WITH STAINLESS STEEL BOLTS
- Ⓢ UNIVERSAL CONVERTER FOR LOW VOLTAGE WIRE CONNECTIONS
- Ⓣ IRRIGATION CONTROLLER (QUANTITIES SHOWN ON PLANS)
- Ⓤ TRC RECEIVER CARD AND ANTENNA (MADONNA STYLE) AT CONTROLLER 'A' ONLY.

ALL DIMENSIONS ARE IN MILLIMETERS (DIAMETER NOMINAL) UNLESS OTHERWISE NOTED

LANDSCAPE DETAILS

NO SCALE

LD-2

REVISED BY | DATE REVISED
MARLENE GROS | KENNY MAH
CALCULATED-DESIGNED BY | CHECKED BY
SENIOR LANDSCAPE ARCHITECT | STEPHEN ALVAREZ

STATE OF CALIFORNIA - DEPARTMENT OF TRANSPORTATION
Caltrans PROJECT DEVELOPMENT

LAST REVISION 06-02-09 | DATE PLOTTED => 29-SEP-2010 | TIME PLOTTED => 14:45

Dist	COUNTY	ROUTE	KILOMETER POST TOTAL PROJECT	SHEET No.	TOTAL SHEETS
11	SD	5,805	R49.9/R51.7, 42.6/46.5	461	886

Caltrans Metric

LICENSED LANDSCAPE ARCHITECT

9-27-10
PLANS APPROVAL DATE

LICENSED LANDSCAPE ARCHITECT MARLENE J. GROS No. 2370 STATE OF CALIFORNIA
09-30-09 Renewal Date
05-14-09 Date

THE STATE OF CALIFORNIA OR ITS OFFICERS OR AGENTS SHALL NOT BE RESPONSIBLE FOR THE ACCURACY OR COMPLETENESS OF ELECTRONIC COPIES OF THIS PLAN SHEET.

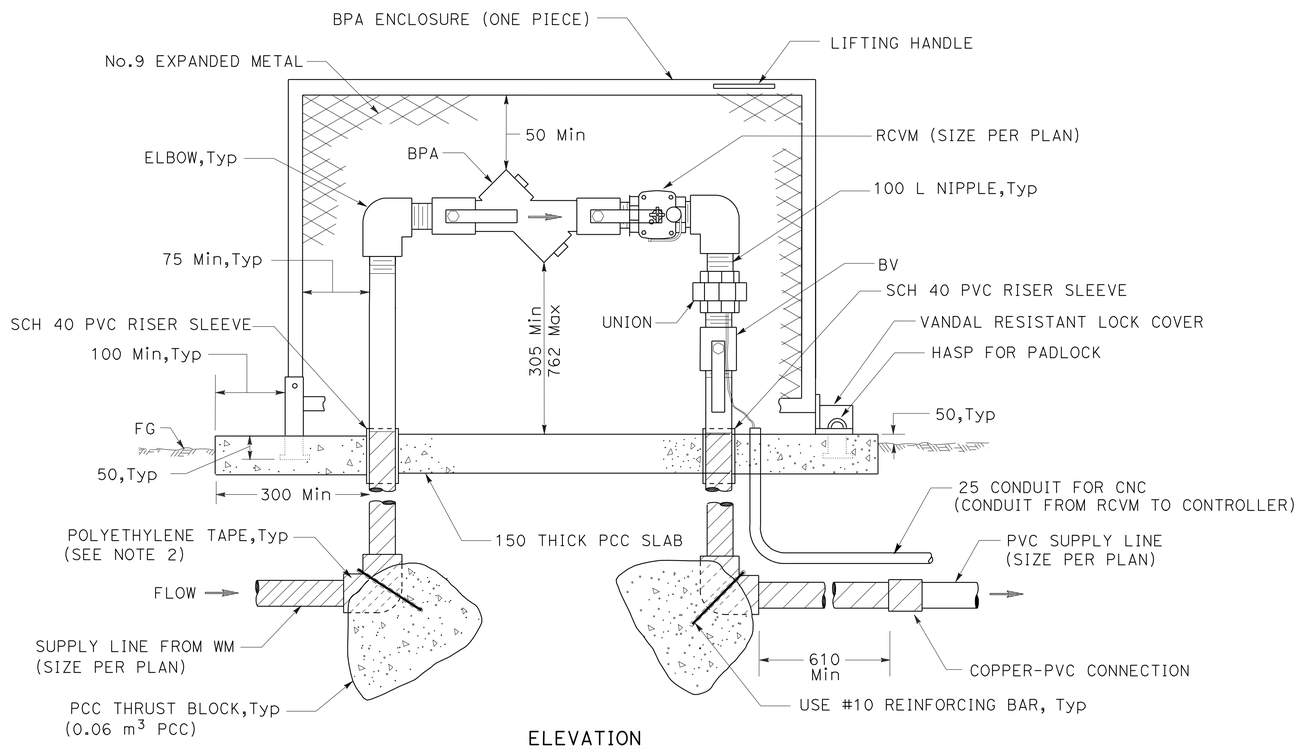

ELEVATION

NOTES:

1. WS AND FITTINGS SHALL BE SAME SIZE AS BACKFLOW PREVENTER SHOWN ON PLANS. BPA SHALL BE CONSTRUCTED WITH COPPER PIPE FROM WM THROUGH BPA TO CONNECTION TO PVC AS SHOWN ON DETAIL.
2. ALL METAL IN CONTACT WITH SOIL AND PCC SHALL BE POLYETHYLENE WRAPPED USING 50 mm WIDE PLASTIC BACKED ADHESIVE TAPE 20 MIL THICK WITH 15 mm OVERLAP.

BACKFLOW PREVENTER ASSEMBLY IN ENCLOSURE (BPAE)

THRUST BLOCK DETAIL

INSTALLATION	TYPE FITTING	INSTALLATION	TYPE FITTING
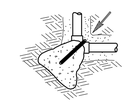	90° ELL	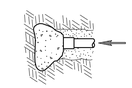	DEAD END
	BEND 45° 22.5° 11.25°		GATE VALVE
	TEE	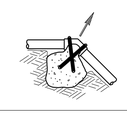	VERTICAL BEND (TYPE I) 45° 22.5° 11.25°
		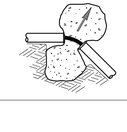	OR VERTICAL BEND (TYPE II) 45° 22.5° 11.25°

NOTES:
Min 0.03 m^3 PCC FOR PIPE 40 mm AND SMALLER.
Min 0.06 m^3 PCC FOR PIPE 50 mm AND LARGER.
USE #10 REINFORCING BAR WHERE SHOWN (∩).

ALL DIMENSIONS ARE IN MILLIMETERS
(DIAMETER NOMINAL) UNLESS OTHERWISE NOTED

LANDSCAPE DETAILS

NO SCALE

LD-3

REVISED BY	DATE REVISED

CALCULATED-DESIGNED BY: MARLENE GROS
CHECKED BY: KENNY MAH
SENIOR LANDSCAPE ARCHITECT: STEPHEN ALVAREZ

STATE OF CALIFORNIA - DEPARTMENT OF TRANSPORTATION
Caltrans PROJECT DEVELOPMENT

LAST REVISION 06-02-09 DATE PLOTTED => 29-SEP-2010 TIME PLOTTED => 14:45

Dist	COUNTY	ROUTE	KILOMETER POST TOTAL PROJECT	SHEET No.	TOTAL SHEETS
11	SD	5,805	R49.9/R51.7, 42.6/46.5	462	886

LICENSED LANDSCAPE ARCHITECT

9-27-10
PLANS APPROVAL DATE

LICENSED LANDSCAPE ARCHITECT MARLENE J. GROS No. 2370 STATE OF CALIFORNIA
09-30-09 Renewal Date
05-14-09 Date

THE STATE OF CALIFORNIA OR ITS OFFICERS OR AGENTS SHALL NOT BE RESPONSIBLE FOR THE ACCURACY OR COMPLETENESS OF ELECTRONIC COPIES OF THIS PLAN SHEET.

Caltrans Metric

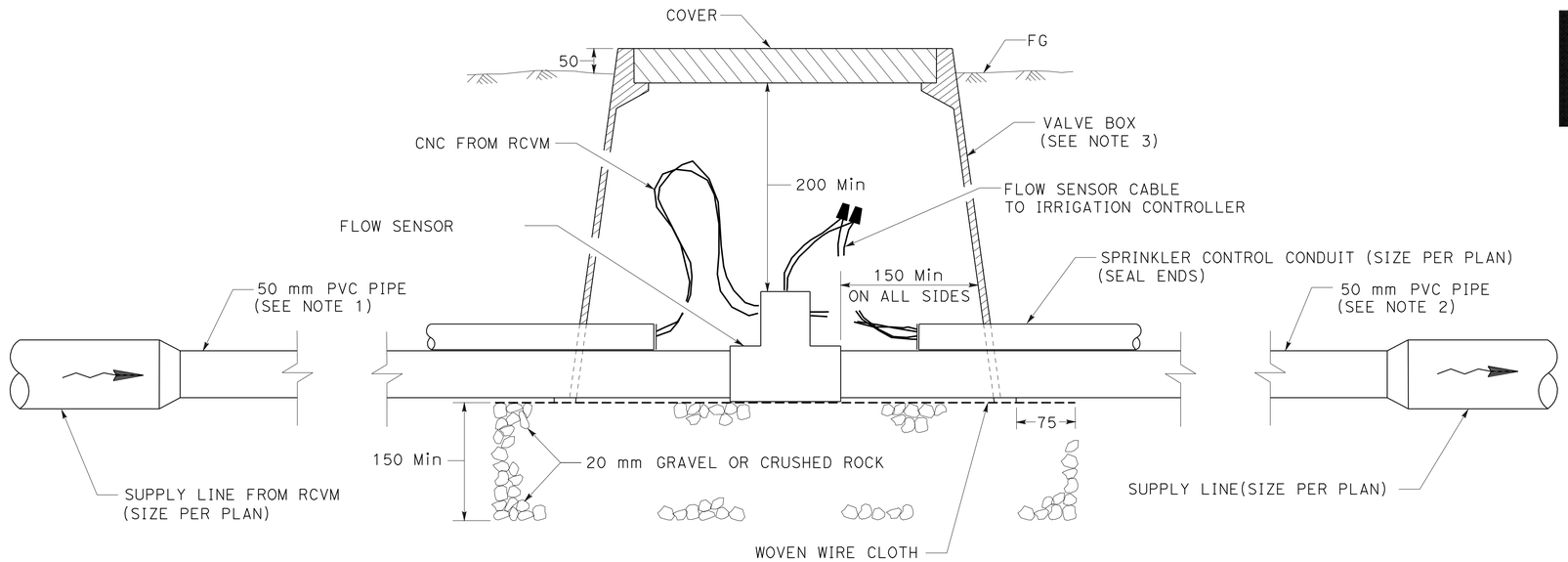

NOTES:

1. LENGTH = 500 mm, Min FROM FITTING TO FLOW SENSOR.
2. LENGTH = 250 mm, Min FROM FLOW SENSOR TO FITTING.
3. VALVE BOX OR BOX EXTENSION WITH 2 SIDE OPENINGS. SEAL OPENINGS WITH No.30 ASPHALT-SATURATED FELT.

FLOW SENSOR

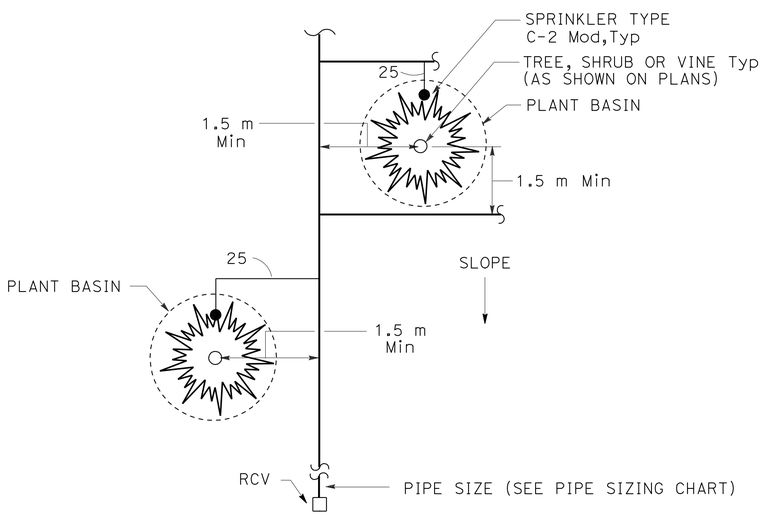

PLAN

SPRINKLER TYPE C-2 MOD INSTALLATION

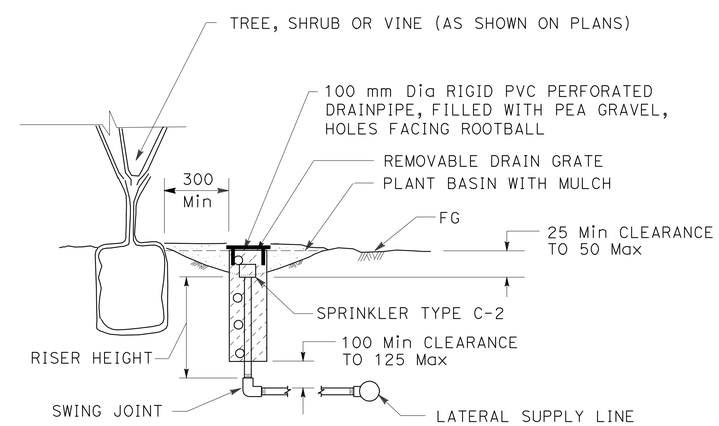

NOTE:
INSTALL SPRINKLER TYPE C-2 Mod ON UP-HILL SIDE OF PLANT WHEN ON SLOPE.

SECTION

SPRINKLER TYPE C-2 MOD INSTALLATION

ALL DIMENSIONS ARE IN MILLIMETERS
(DIAMETER NOMINAL) UNLESS OTHERWISE NOTED

LANDSCAPE DETAILS

NO SCALE

LD-4

REVISED BY	DATE REVISED

MARLENE GROS — KENNY MAH — CALCULATED-DESIGNED BY — CHECKED BY

SENIOR LANDSCAPE ARCHITECT: STEPHEN ALVAREZ

STATE OF CALIFORNIA - DEPARTMENT OF TRANSPORTATION
Caltrans PROJECT DEVELOPMENT

LAST REVISION 06-02-09 | DATE PLOTTED => 29-SEP-2010 | TIME PLOTTED => 14:45

DIST	COUNTY	ROUTE	KILOMETER POST TOTAL PROJECT	SHEET No.	TOTAL SHEETS
11	SD	5,805	R49.9/R51.7, 42.6/46.5	463	886

REGISTERED CIVIL ENGINEER 05-06-09 DATE

9-27-10
PLANS APPROVAL DATE

REGISTERED PROFESSIONAL ENGINEER JOSE OSTDIEK No. C65334 Exp. 9/30/09 CIVIL STATE OF CALIFORNIA

THE STATE OF CALIFORNIA OR ITS OFFICERS OR AGENTS SHALL NOT BE RESPONSIBLE FOR THE ACCURACY OR COMPLETENESS OF ELECTRONIC COPIES OF THIS PLAN SHEET.

Dokken Engineering
5675 Ruffin Road,
Suite 250
San Diego, CA 92123

Caltrans Metric

NOTE:

FOR COMPLETE RIGHT OF WAY AND ACCURATE ACCESS DATA, SEE RIGHT OF WAY RECORD MAPS AT DISTRICT OFFICE.

NOTES (TSO):

1 - ALL CITY LUMINAIRES MUST HAVE TYPE IV PEC.

2 - EXISTING CITY LUMINAIRE TO REMAIN.

3 - CONNECT ELECTROLIER TO EX LIGHTING CIRCUIT.

4 - STANDARD CITY LUMINAIRE (CALTRANS TYPE 15 - 250 WATTS, TYPE III MEDIUM DISTRIBUTION).

5 - USE PRIMARY 480 V AND SECONDARY 240 V 500 VA XFMR 240 V TO LIGHTING FIXTURE.

NOTE (CITY LIGHTING SHEETS E-1 TO E-5):

1 - ALL CITY LUMINAIRES MUST HAVE THE ISOLUX CURVE SHOWN ON THIS SHEET, UNLESS OTHERWISE NOTED.

CONDUIT NOTES (TSO):

1 - 53C, 2#10 (S)

2 - 53C, 2#8 (LTG-240 V CITY)

CITY LUMINAIRE ISOLUX CURVE - TYPE IV SHORT FULL CUTOFF

CUTOFF LUMINAIRE
9.6 m MOUNTING HEIGHT
LAMP OPERATED AT 16 000 lm
150 W HIGH PRESSURE SODIUM LAMP
ANSI DESIGNATION S55

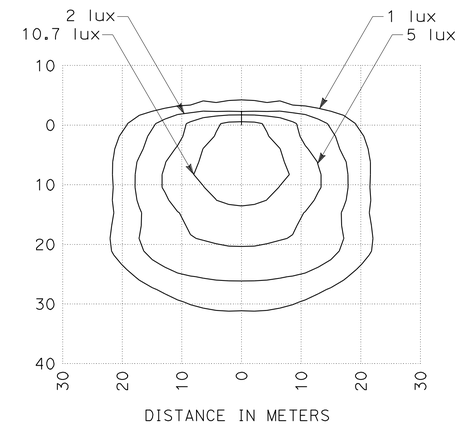

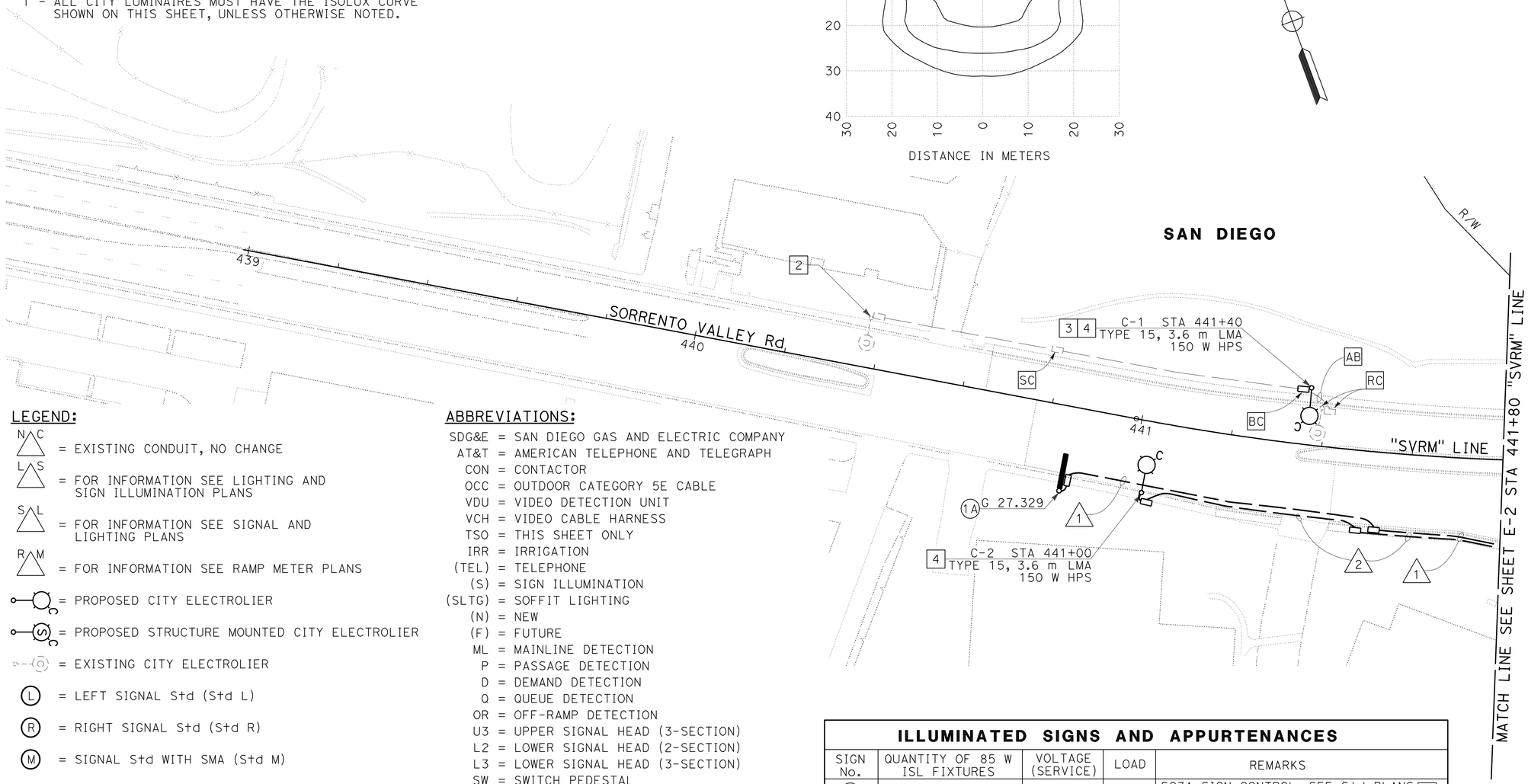

LEGEND:

- = EXISTING CONDUIT, NO CHANGE
- = FOR INFORMATION SEE LIGHTING AND SIGN ILLUMINATION PLANS
- = FOR INFORMATION SEE SIGNAL AND LIGHTING PLANS
- = FOR INFORMATION SEE RAMP METER PLANS
- = PROPOSED CITY ELECTROLIER
- = PROPOSED STRUCTURE MOUNTED CITY ELECTROLIER
- = EXISTING CITY ELECTROLIER
- (L) = LEFT SIGNAL Std (Std L)
- (R) = RIGHT SIGNAL Std (Std R)
- (M) = SIGNAL Std WITH SMA (Std M)

ABBREVIATIONS:

SDG&E = SAN DIEGO GAS AND ELECTRIC COMPANY
AT&T = AMERICAN TELEPHONE AND TELEGRAPH
CON = CONTACTOR
OCC = OUTDOOR CATEGORY 5E CABLE
VDU = VIDEO DETECTION UNIT
VCH = VIDEO CABLE HARNESS
TSO = THIS SHEET ONLY
IRR = IRRIGATION
(TEL) = TELEPHONE
(S) = SIGN ILLUMINATION
(SLTG) = SOFFIT LIGHTING
(N) = NEW
(F) = FUTURE
ML = MAINLINE DETECTION
P = PASSAGE DETECTION
D = DEMAND DETECTION
Q = QUEUE DETECTION
OR = OFF-RAMP DETECTION
U3 = UPPER SIGNAL HEAD (3-SECTION)
L2 = LOWER SIGNAL HEAD (2-SECTION)
L3 = LOWER SIGNAL HEAD (3-SECTION)
SW = SWITCH PEDESTAL
VDS = VEHICLE DETECTION SYSTEM
MVDS = MICROWAVE VEHICLE DETECTION SYSTEM
FOXX = FIBER OPTIC CABLE:
XX DENOTES NUMBER OF SINGLEMODE FIBERS
MDCS (X) = MULTIDUCT CONDUIT SYSTEM:
(X) - NUMBER OF DUCTS
DAR = DIRECT ACCESS RAMP
EX = EXISTING

ILLUMINATED SIGNS AND APPURTENANCES

SIGN No.	QUANTITY OF 85 W ISL FIXTURES	VOLTAGE (SERVICE)	LOAD	REMARKS
1A	1	480 V	87 W	SC3A SIGN CONTROL, SEE Std PLANS RSP ES-15C, RSP ES-15D 5

THIS PLAN IS ACCURATE FOR ELECTRICAL WORK ONLY

ALL DIMENSIONS ARE IN METERS UNLESS OTHERWISE SHOWN

LIGHTING AND SIGN ILLUMINATION LIGHTING (CITY STREET)

SCALE 1:500

E-1

REVISED BY	DATE REVISED
JOHN MIKELL	JOSE OSTDIEK

CALCULATED-DESIGNED BY
CHECKED BY

CONSULTANT FUNCTION SUPERVISOR
CHRIS JOHNSON

STATE OF CALIFORNIA - DEPARTMENT OF TRANSPORTATION
Caltrans

LAST REVISION 05-27-09
DATE PLOTTED => 29-SEP-2010
TIME PLOTTED => 14:45

DIST	COUNTY	ROUTE	KILOMETER POST TOTAL PROJECT	SHEET No.	TOTAL SHEETS
11	SD	5,805	R49.9/R51.7, 42.6/46.5	464	886

REGISTERED CIVIL ENGINEER 05-06-09 DATE

9-27-10
PLANS APPROVAL DATE

REGISTERED PROFESSIONAL ENGINEER JOSE OSTDIEK No. C65334 Exp. 9/30/09 CIVIL STATE OF CALIFORNIA

THE STATE OF CALIFORNIA OR ITS OFFICERS OR AGENTS SHALL NOT BE RESPONSIBLE FOR THE ACCURACY OR COMPLETENESS OF ELECTRONIC COPIES OF THIS PLAN SHEET.

Dokken Engineering
5675 Ruffin Road,
Suite 250
San Diego, CA 92123

Caltrans Metric

NOTE:

FOR COMPLETE RIGHT OF WAY AND ACCURATE ACCESS DATA, SEE RIGHT OF WAY RECORD MAPS AT DISTRICT OFFICE.

NOTES (TSO):

1 - ALL CITY LUMINAIRES MUST HAVE TYPE IV PEC.
2 - STANDARD CITY LUMINAIRE (CALTRANS TYPE 15-250 WATTS, TYPE III MEDIUM DISTRIBUTION).
3 - SEE "BRIDGE ELECTRICAL DETAILS", SHEET E-51.
4 - SEE SHEETS E-17 AND E-18, FOR DETAILS AND WIRING DIAGRAM.
5 - RC Exist PULL BOX.
6 - SEE "BRIDGE ELECTRICAL DETAILS", SEE SHEET E-48.
7 - SEE IRRIGATION PLANS, CONNECT 2#10 (IRR).
8 - TYPE III-BF SERVICE EQUIPMENT ENCLOSURE. SEE SHEET E-20 FOR WIRING DIAGRAM.
9 - USE PRIMARY 480 V AND SECONDARY 240 V 500 VA XFMR 240 V TO LIGHTING FIXTURE.

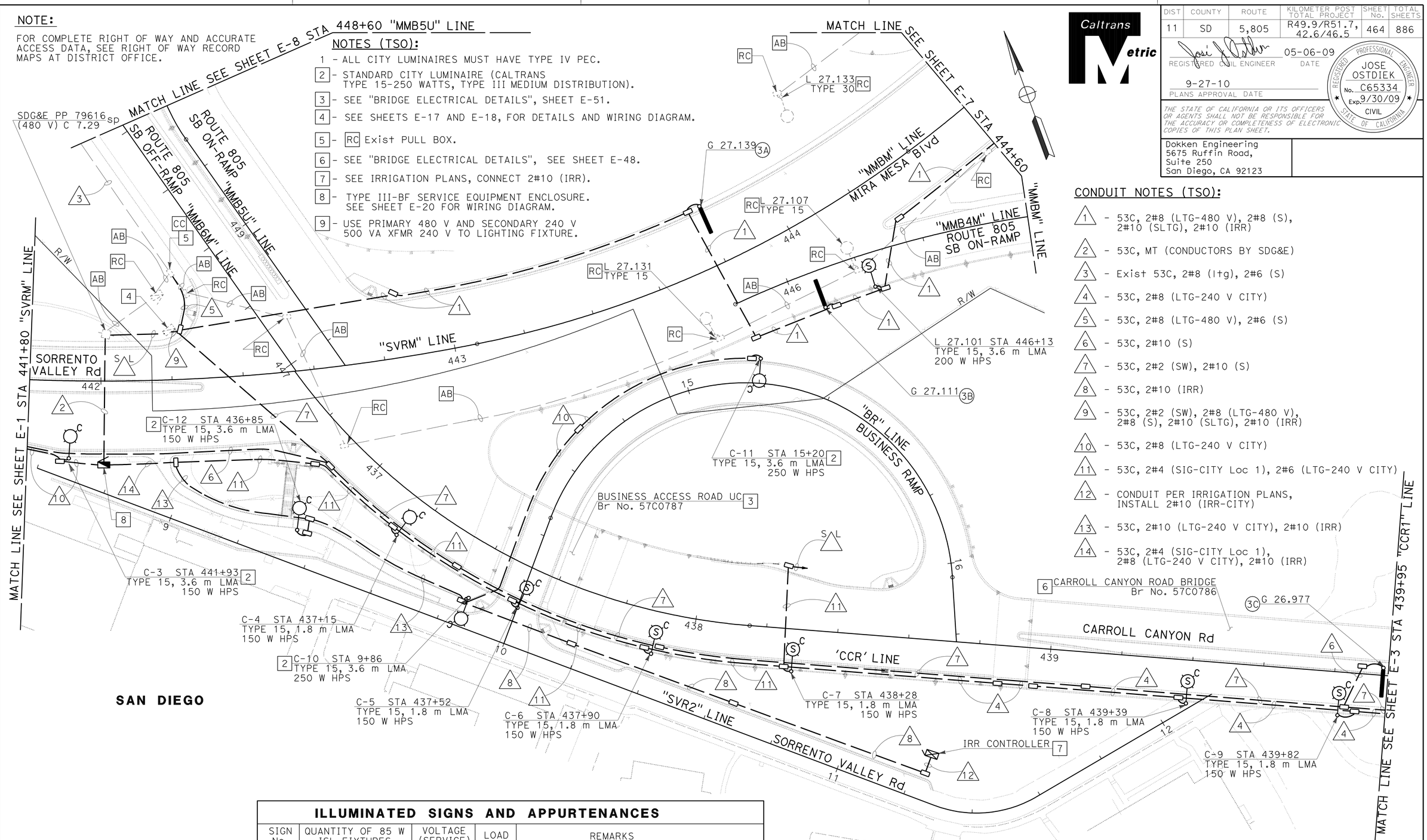

CONDUIT NOTES (TSO):

1 - 53C, 2#8 (LTG-480 V), 2#8 (S), 2#10 (SLTG), 2#10 (IRR)
2 - 53C, MT (CONDUCTORS BY SDG&E)
3 - Exist 53C, 2#8 (ltg), 2#6 (S)
4 - 53C, 2#8 (LTG-240 V CITY)
5 - 53C, 2#8 (LTG-480 V), 2#6 (S)
6 - 53C, 2#10 (S)
7 - 53C, 2#2 (SW), 2#10 (S)
8 - 53C, 2#10 (IRR)
9 - 53C, 2#2 (SW), 2#8 (LTG-480 V), 2#8 (S), 2#10 (SLTG), 2#10 (IRR)
10 - 53C, 2#8 (LTG-240 V CITY)
11 - 53C, 2#4 (SIG-CITY Loc 1), 2#6 (LTG-240 V CITY)
12 - CONDUIT PER IRRIGATION PLANS, INSTALL 2#10 (IRR-CITY)
13 - 53C, 2#10 (LTG-240 V CITY), 2#10 (IRR)
14 - 53C, 2#4 (SIG-CITY Loc 1), 2#8 (LTG-240 V CITY), 2#10 (IRR)

ILLUMINATED SIGNS AND APPURTENANCES

SIGN No.	QUANTITY OF 85 W ISL FIXTURES	VOLTAGE (SERVICE)	LOAD	REMARKS
3A	1	480 V	87 W	SC3A SIGN CONTROL, SEE Std PLANS RSP ES-15C, RSP ES-15D 9
3B	1	480 V	87 W	SC3A SIGN CONTROL, SEE Std PLANS RSP ES-15C, RSP ES-15D 9
3C	1	480 V	87 W	SC3A SIGN CONTROL, SEE Std PLANS RSP ES-15C, RSP ES-15D 9

THIS PLAN IS ACCURATE FOR ELECTRICAL WORK ONLY

ALL DIMENSIONS ARE IN METERS UNLESS OTHERWISE SHOWN

LIGHTING AND SIGN ILLUMINATION LIGHTING (CITY STREET) ELECTRIC SERVICE (IRRIGATION)

SCALE 1:500

E-2

STATE OF CALIFORNIA - DEPARTMENT OF TRANSPORTATION
Caltrans

CONSULTANT FUNCTION SUPERVISOR: CHRIS JOHNSON
CALCULATED-DESIGNED BY: JOHN MIKELL
CHECKED BY: JOSE OSTDIEK
REVISED BY / DATE REVISED

LAST REVISION 05-27-09
DATE PLOTTED => 29-SEP-2010
TIME PLOTTED => 14:46

DIST	COUNTY	ROUTE	KILOMETER POST TOTAL PROJECT	SHEET No.	TOTAL SHEETS
11	SD	5,805	R49.9/R51.7, 42.6/46.5	465	886

REGISTERED CIVIL ENGINEER 05-06-09 DATE

9-27-10
PLANS APPROVAL DATE

PROFESSIONAL ENGINEER REGISTERED JOSE OSTDIEK No. C65334 Exp. 9/30/09 CIVIL STATE OF CALIFORNIA

THE STATE OF CALIFORNIA OR ITS OFFICERS OR AGENTS SHALL NOT BE RESPONSIBLE FOR THE ACCURACY OR COMPLETENESS OF ELECTRONIC COPIES OF THIS PLAN SHEET.

Dokken Engineering
5675 Ruffin Road,
Suite 250
San Diego, CA 92123

Caltrans Metric

NOTE:

FOR COMPLETE RIGHT OF WAY AND ACCURATE ACCESS DATA, SEE RIGHT OF WAY RECORD MAPS AT DISTRICT OFFICE.

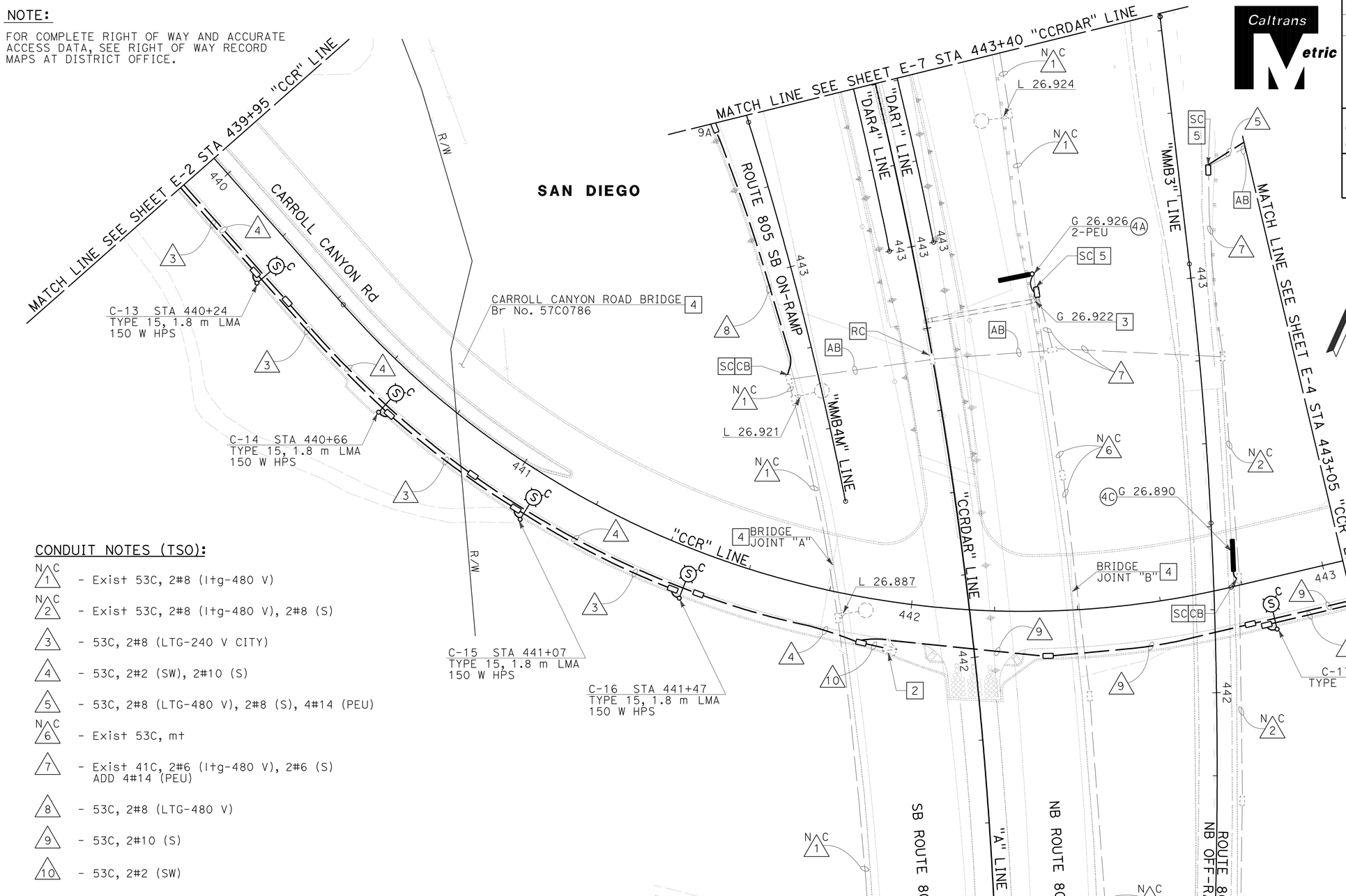

NOTES (TSO):

1 - ALL CITY LUMINAIRES MUST HAVE TYPE IV PEC.

2 - SEE "SIGNAL AND LIGHTING (LOCATION 2)", SHEETS E-21 AND E-22 FOR DETAILS AND WIRING DIAGRAM.

3 - RS Exist SIGN LIGHTING FIXTURES AND SIGN CONTROL. SEE SIGN PLANS.

4 - SEE "BRIDGE ELECTRICAL DETAILS", SEE SHEET E-48, E-49, AND E-50.

5 - REPLACE EXISTING PULL BOX WITH A NEW No. 5 PULL BOX.

6 - USE PRIMARY 480 V AND SECONDARY 240 V 500 VA XFMR 240 V TO LIGHTING FIXTURE.

CONDUIT NOTES (TSO):

N C 1 - Exist 53C, 2#8 (Itg-480 V)

N C 2 - Exist 53C, 2#8 (Itg-480 V), 2#8 (S)

3 - 53C, 2#8 (LTG-240 V CITY)

4 - 53C, 2#2 (SW), 2#10 (S)

5 - 53C, 2#8 (LTG-480 V), 2#8 (S), 4#14 (PEU)

N C 6 - Exist 53C, mt

7 - Exist 41C, 2#6 (Itg-480 V), 2#6 (S) ADD 4#14 (PEU)

8 - 53C, 2#8 (LTG-480 V)

9 - 53C, 2#10 (S)

10 - 53C, 2#2 (SW)

ILLUMINATED SIGNS AND APPURTENANCES

SIGN No.	QUANTITY OF 85 W ISL FIXTURES	VOLTAGE (SERVICE)	LOAD	REMARKS
4A	1	480 V	87 W	SC3A SIGN CONTROL, SEE Std PLANS RSP ES-15C, RSP ES-15D 6
4C	1	480 V	87 W	SC3A SIGN CONTROL, SEE Std PLANS RSP ES-15C, RSP ES-15D 6

THIS PLAN IS ACCURATE FOR ELECTRICAL WORK ONLY

ALL DIMENSIONS ARE IN METERS UNLESS OTHERWISE SHOWN

LIGHTING AND SIGN ILLUMINATION LIGHTING (CITY STREET)

SCALE 1:500

E-3

STATE OF CALIFORNIA - DEPARTMENT OF TRANSPORTATION

Caltrans

CONSULTANT FUNCTIONAL SUPERVISOR: CHRIS JOHNSON

CALCULATED-DESIGNED BY: JOHN MIKELL

CHECKED BY: JOSE OSTDIEK

REVISED BY | DATE REVISED

LAST REVISION 05-27-09 | DATE PLOTTED => 29-SEP-2010 TIME PLOTTED => 14:46

DIST	COUNTY	ROUTE	KILOMETER POST TOTAL PROJECT	SHEET No.	TOTAL SHEETS
11	SD	5,805	R49.9/R51.7, 42.6/46.5	466	886

REGISTERED CIVIL ENGINEER 05-06-09 DATE

9-27-10
PLANS APPROVAL DATE

PROFESSIONAL ENGINEER REGISTERED JOSE OSTDIEK No. C65334 Exp. 9/30/09 CIVIL STATE OF CALIFORNIA

THE STATE OF CALIFORNIA OR ITS OFFICERS OR AGENTS SHALL NOT BE RESPONSIBLE FOR THE ACCURACY OR COMPLETENESS OF ELECTRONIC COPIES OF THIS PLAN SHEET.

Dokken Engineering
5675 Ruffin Road,
Suite 250
San Diego, CA 92123

Caltrans Metric

NOTE:

FOR COMPLETE RIGHT OF WAY AND ACCURATE ACCESS DATA, SEE RIGHT OF WAY RECORD MAPS AT DISTRICT OFFICE.

NOTES (TSO):

1 - RC Exist TYPE A SERVICE.

2 - TYPE III-BF SERVICE EQUIPMENT ENCLOSURE. SEE WIRING DIAGRAM ON THIS SHEET.

3 - ALL CITY LUMINAIRES MUST HAVE TYPE IV PEC.

4 - INSTALL TYPE H SERVICE RISER PER SDG&E REQUIREMENTS.

5 - SEE SHEETS E-23 AND E-24, FOR DETAILS AND WIRING DIAGRAM.

6 - SEE "BRIDGE ELECTRICAL DETAILS", SHEET E-50.

7 - SEE SHEET E-23 FOR CONTINUATION.

8 - USE PRIMARY 480 V AND SECONDARY 240 V, 500 VA XFMR 240 V TO LIGHTING FIXTURE.

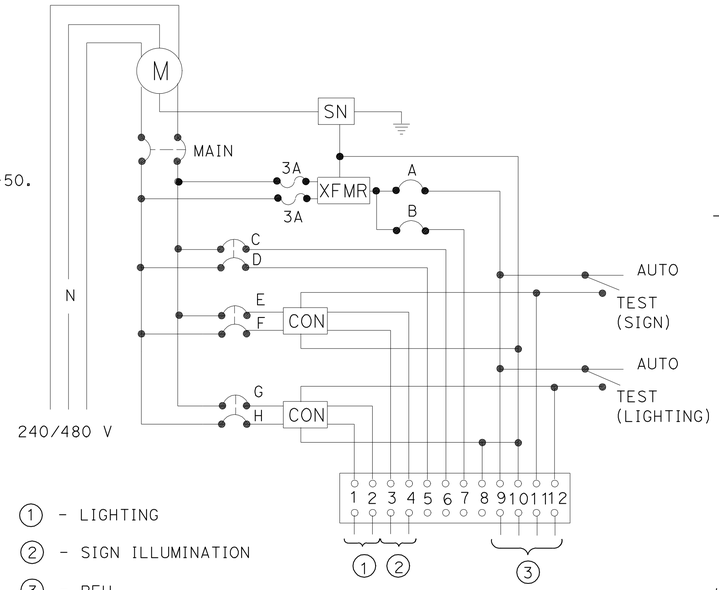

WIRING DIAGRAM

TYPE III-BF SERVICE EQUIPMENT ENCLOSURE SEE RSP ES-2C AND RSP ES-2E

CIRCUIT BREAKERS

MAIN-2P-100 A
A-1P-15 A
B-1P-15 A SPARE
C, D } 2P-30 A SPARE
E, F } 2P-30 A
G, H } 2P-30 A

CONDUIT NOTES (TSO):

1 - 53C, MT (CONDUCTORS BY SDG&E)

2 - 53C, 2#8 (LTG-480 V), 2#8 (S), 4#14 (PEU)

3 - 53C, 2#10 (S)

4 - 53C, 2#8 (LTG-240 V CITY)

5 - 53C, 2#6 (LTG-240 V CITY)

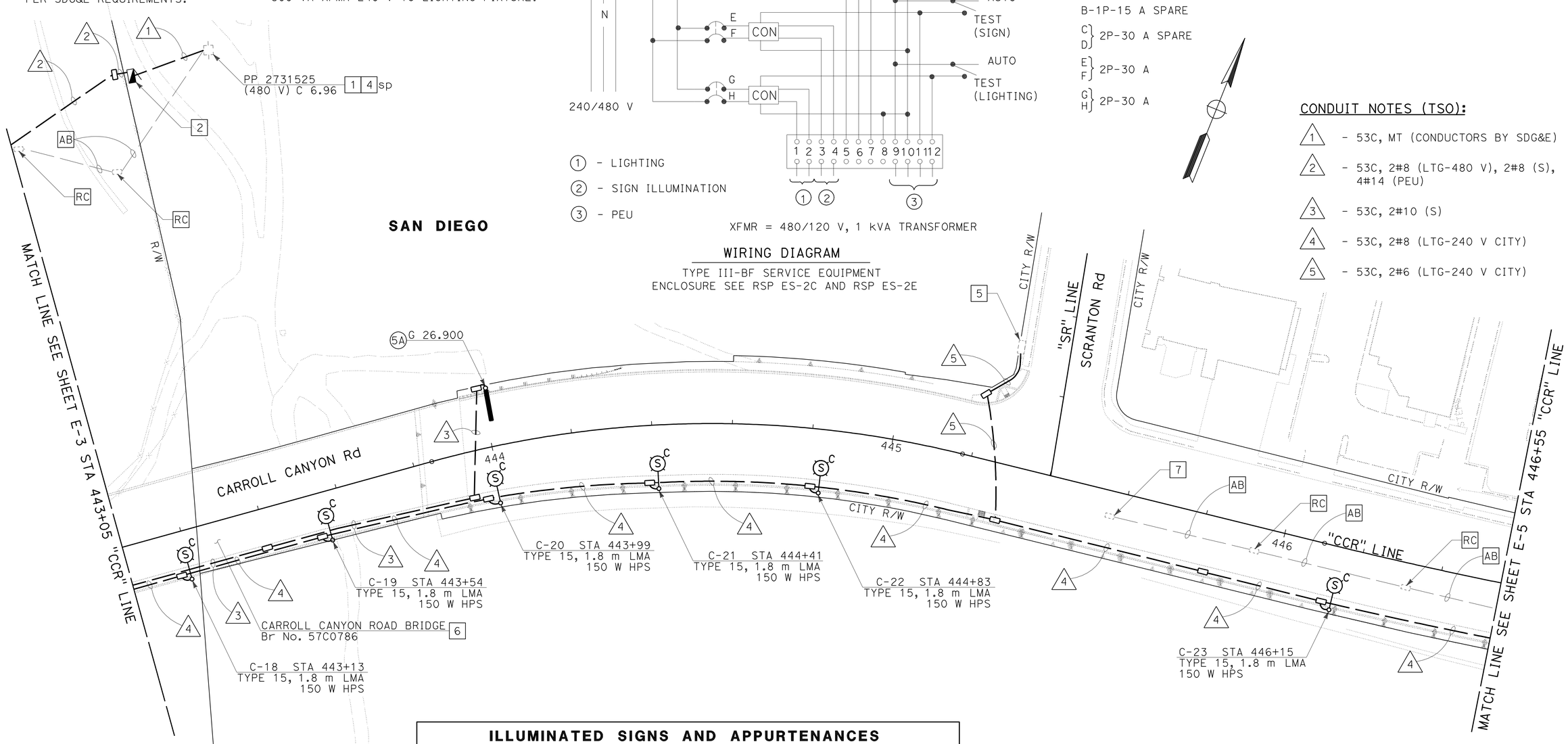

ILLUMINATED SIGNS AND APPURTENANCES				
SIGN No.	QUANTITY OF 85 W ISL FIXTURES	VOLTAGE (SERVICE)	LOAD	REMARKS
5A	1	480 V	87 W	SC3A SIGN CONTROL, SEE Std PLANS RSP ES-15C, RSP ES-15D [8]

THIS PLAN IS ACCURATE FOR ELECTRICAL WORK ONLY

ALL DIMENSIONS ARE IN METERS UNLESS OTHERWISE SHOWN

LIGHTING AND SIGN ILLUMINATION LIGHTING (CITY STREET)

SCALE 1:500

E-4

STATE OF CALIFORNIA - DEPARTMENT OF TRANSPORTATION
Caltrans

CONSULTANT FUNCTIONAL SUPERVISOR: CHRIS JOHNSON
CALCULATED-DESIGNED BY: JOHN MIKELL
CHECKED BY: JOSE OSTDIEK
REVISED BY / DATE REVISED

LAST REVISION 05-27-09
DATE PLOTTED => 29-SEP-2010
TIME PLOTTED => 14:46

DIST	COUNTY	ROUTE	KILOMETER POST TOTAL PROJECT	SHEET No.	TOTAL SHEETS
11	SD	5,805	R49.9/R51.7, 42.6/46.5	467	886

REGISTERED CIVIL ENGINEER 05-06-09 DATE

9-27-10
PLANS APPROVAL DATE

PROFESSIONAL ENGINEER REGISTERED JOSE OSTDIEK No. C65334 Exp. 9/30/09 CIVIL STATE OF CALIFORNIA

THE STATE OF CALIFORNIA OR ITS OFFICERS OR AGENTS SHALL NOT BE RESPONSIBLE FOR THE ACCURACY OR COMPLETENESS OF ELECTRONIC COPIES OF THIS PLAN SHEET.

Dokken Engineering
5675 Ruffin Road,
Suite 250
San Diego, CA 92123

Caltrans Metric

NOTE:

FOR COMPLETE RIGHT OF WAY AND ACCURATE ACCESS DATA, SEE RIGHT OF WAY RECORD MAPS AT DISTRICT OFFICE.

NOTE (TSO):

1 - ALL CITY LUMINAIRES MUST HAVE TYPE IV PEC.

CONDUIT NOTE (TSO):

1 - 53C, 2#8 (LTG-240 V CITY)

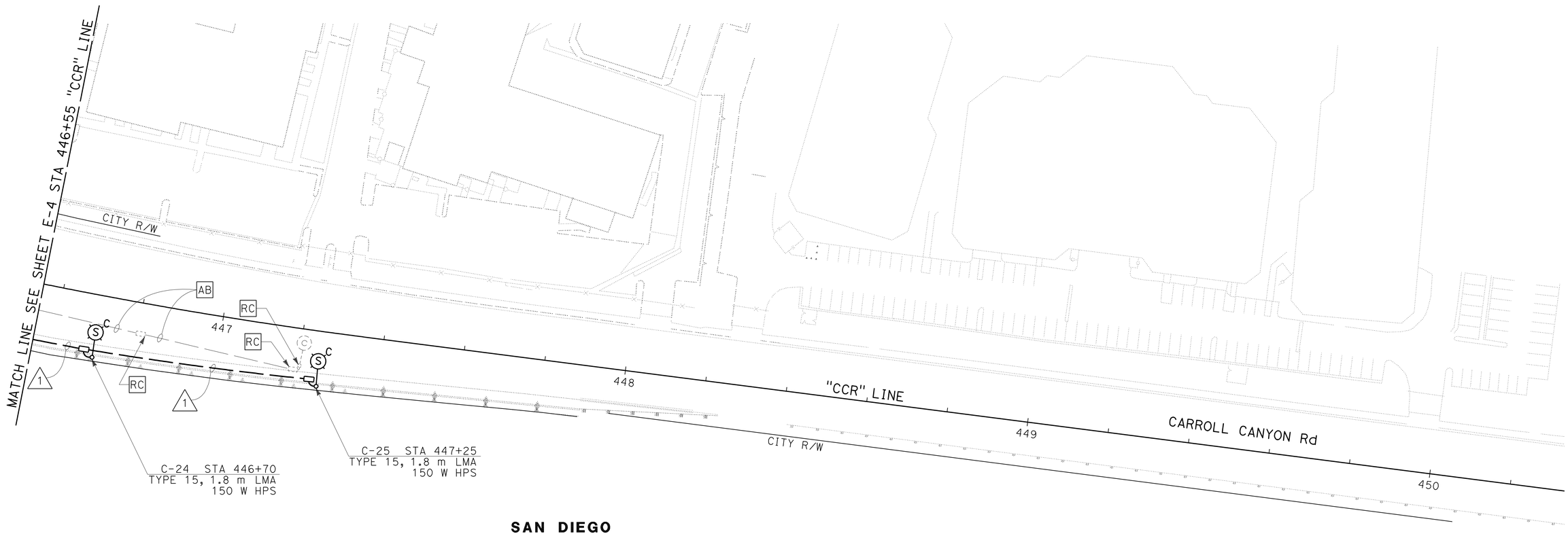

THIS PLAN IS ACCURATE FOR ELECTRICAL WORK ONLY

ALL DIMENSIONS ARE IN METERS UNLESS OTHERWISE SHOWN

LIGHTING (CITY STREET)

SCALE 1:500

E-5

STATE OF CALIFORNIA - DEPARTMENT OF TRANSPORTATION

Caltrans

CONSULTANT FUNCTIONAL SUPERVISOR: CHRIS JOHNSON

CALCULATED-DESIGNED BY: JOHN MIKELL

CHECKED BY: JOSE OSTDIEK

REVISED BY / DATE REVISED

LAST REVISION 05-27-09

DATE PLOTTED => 29-SEP-2010
TIME PLOTTED => 14:46

DIST	COUNTY	ROUTE	KILOMETER POST TOTAL PROJECT	SHEET No.	TOTAL SHEETS
11	SD	5,805	R49.9/R51.7, 42.6/46.5	468	886

REGISTERED CIVIL ENGINEER 05-06-09 DATE

9-27-10
PLANS APPROVAL DATE

REGISTERED PROFESSIONAL ENGINEER JOSE OSTDIEK No. C65334 Exp. 9/30/09 CIVIL STATE OF CALIFORNIA

THE STATE OF CALIFORNIA OR ITS OFFICERS OR AGENTS SHALL NOT BE RESPONSIBLE FOR THE ACCURACY OR COMPLETENESS OF ELECTRONIC COPIES OF THIS PLAN SHEET.

Dokken Engineering
5675 Ruffin Road,
Suite 250
San Diego, CA 92123

Caltrans Metric

NOTE:

FOR COMPLETE RIGHT OF WAY AND ACCURATE ACCESS DATA, SEE RIGHT OF WAY RECORD MAPS AT DISTRICT OFFICE.

NOTES (TSO):

1 - RC 8 FLUORESCENT SIGN LIGHTING FIXTURES AND SIGN CONTROL. INSTALL ISL FIXTURES AS SHOWN.

2 - USE PRIMARY 480 V AND SECONDARY 240 V, 500 VA XFMR. 240 V TO LIGHTING FIXTURE.

CONDUIT NOTES (TSO):

N C 1 - Exist 53C, 2#8 (Itg), 2#8 (S)

2 - Exist 53C, 2#8 (S), ADD 2#10 (LTG-480 V)

N C 3 - Exist 53C, mt

4 - 53C, 2#10 (LTG-480 V)

N C 5 - Exist 53C, 2#8 (S)

ILLUMINATED SIGNS AND APPURTENANCES

SIGN No.	QUANTITY OF 85 W ISL FIXTURES	VOLTAGE (SERVICE)	LOAD	REMARKS
7A	2	480 V	174 W	SC3A SIGN CONTROL, SEE Std PLANS RSP ES-15C, RSP ES-15D 2

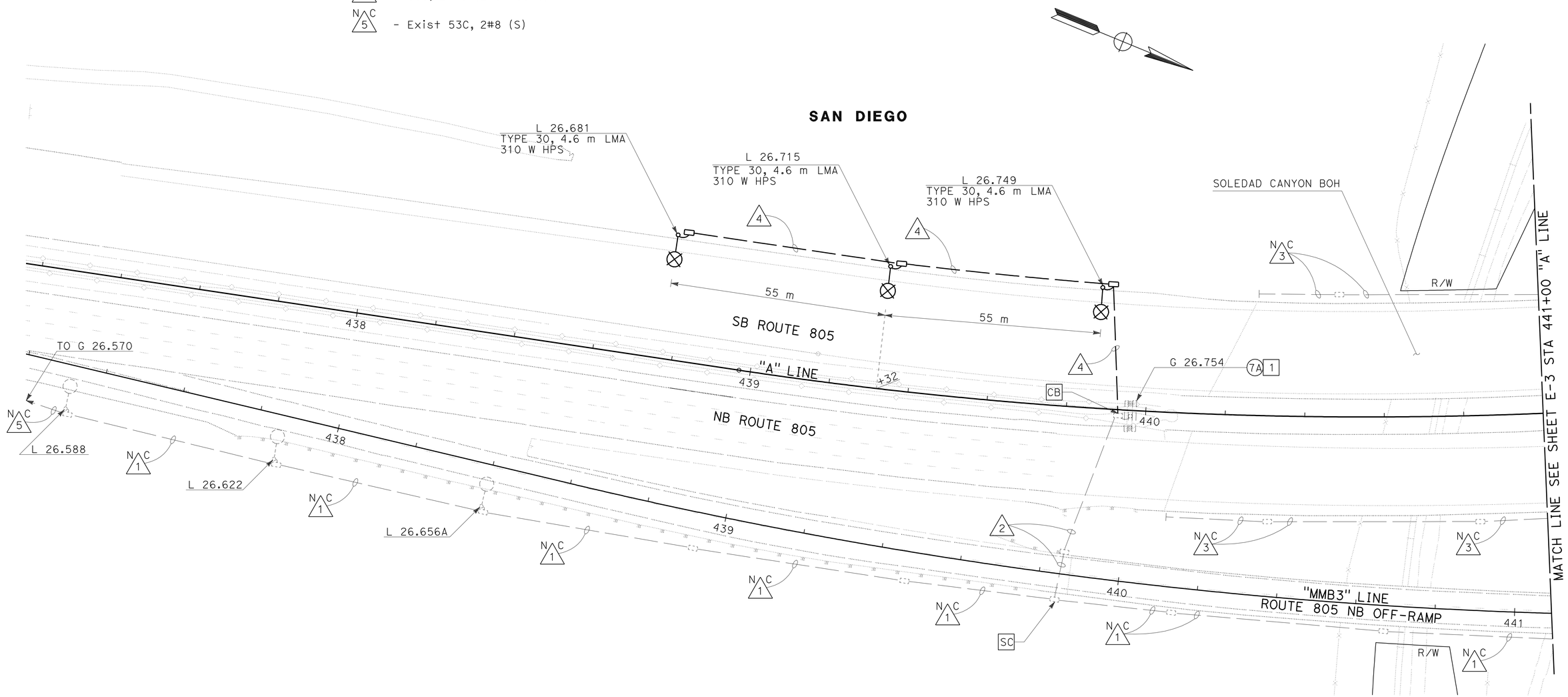

THIS PLAN IS ACCURATE FOR ELECTRICAL WORK ONLY

ALL DIMENSIONS ARE IN METERS UNLESS OTHERWISE SHOWN

LIGHTING AND SIGN ILLUMINATION

SCALE 1:500

E-6

STATE OF CALIFORNIA - DEPARTMENT OF TRANSPORTATION

Caltrans

CONSULTANT FUNCTIONAL SUPERVISOR CHRIS JOHNSON

CALCULATED-DESIGNED BY JOHN MIKELL

CHECKED BY JOSE OSTDIEK

REVISED BY DATE REVISED

LAST REVISION 05-30-09

DATE PLOTTED => 29-SEP-2010
TIME PLOTTED => 14:46

DIST	COUNTY	ROUTE	KILOMETER POST TOTAL PROJECT	SHEET No.	TOTAL SHEETS
11	SD	5,805	R49.9/R51.7, 42.6/46.5	469	886

REGISTERED CIVIL ENGINEER 05-06-09 DATE

9-27-10
PLANS APPROVAL DATE

PROFESSIONAL ENGINEER REGISTERED JOSE OSTDIEK No. C65334 Exp. 9/30/09 CIVIL STATE OF CALIFORNIA

THE STATE OF CALIFORNIA OR ITS OFFICERS OR AGENTS SHALL NOT BE RESPONSIBLE FOR THE ACCURACY OR COMPLETENESS OF ELECTRONIC COPIES OF THIS PLAN SHEET.

Dokken Engineering
5675 Ruffin Road,
Suite 250
San Diego, CA 92123

Caltrans Metric

NOTE:

FOR COMPLETE RIGHT OF WAY AND ACCURATE ACCESS DATA, SEE RIGHT OF WAY RECORD MAPS AT DISTRICT OFFICE.

NOTES (TSO):

1 - RC 4 FLUORESCENT SIGN LIGHTING FIXTURES AND SIGN CONTROL.

2 - SEE "BRIDGE ELECTRICAL DETAILS", SHEET E-52.

3 - SEE IRRIGATION PLANS.

4 - RC EXISTING BARRIER MOUNTED PULL BOXES AND CONDUIT IN EXISTING BARRIER TO BE REMOVED.

5 - RC EXISTING PULL BOX, CC NEW AND EXISTING CONDUIT, SC CONDUCTORS.

6 - HM-80 LUMINAIRE. SEE ORIENTATION DETAIL ON SHEET E-8.

7 - USE PRIMARY 480 V AND SECONDARY 240 V, 500 VA XFMR. 240 V TO LIGHTING FIXTURE.

CONDUIT NOTES (TSO):

N C 1 - Exist 53C, 2#8 (Itg-480 V)

2 - 53C, 2#8 (LTG-480 V), 2#8 (S), 2#10 (SLTG), 2#10 (IRR)

3 - 27C, 2#10 (SLTG)

4 - 53C, 2#10 (SLTG), 2#10 (IRR)

5 - 53C, 2#10 (S)

6 - 53C, 2#8 (LTG-480 V), 2#10 (S)

7 - Exist 27C, 2#10 (SLTG)

8 - 53C, 2#8 (LTG-480 V)

9 - 53C, 2#10 (IRR)

10 - CONDUIT PER IRRIGATION PLANS, INSTALL 2#10 (IRR)

11 - 53C, 2#8(LTG), 2#10 (S), 2#10 (SLTG)

N C 12 - Exist 53C, 2#8 (S)

N C 13 - Exist 3-78C, 2#8 (S)

N C 14 - Exist 41C, 2#8 (S)

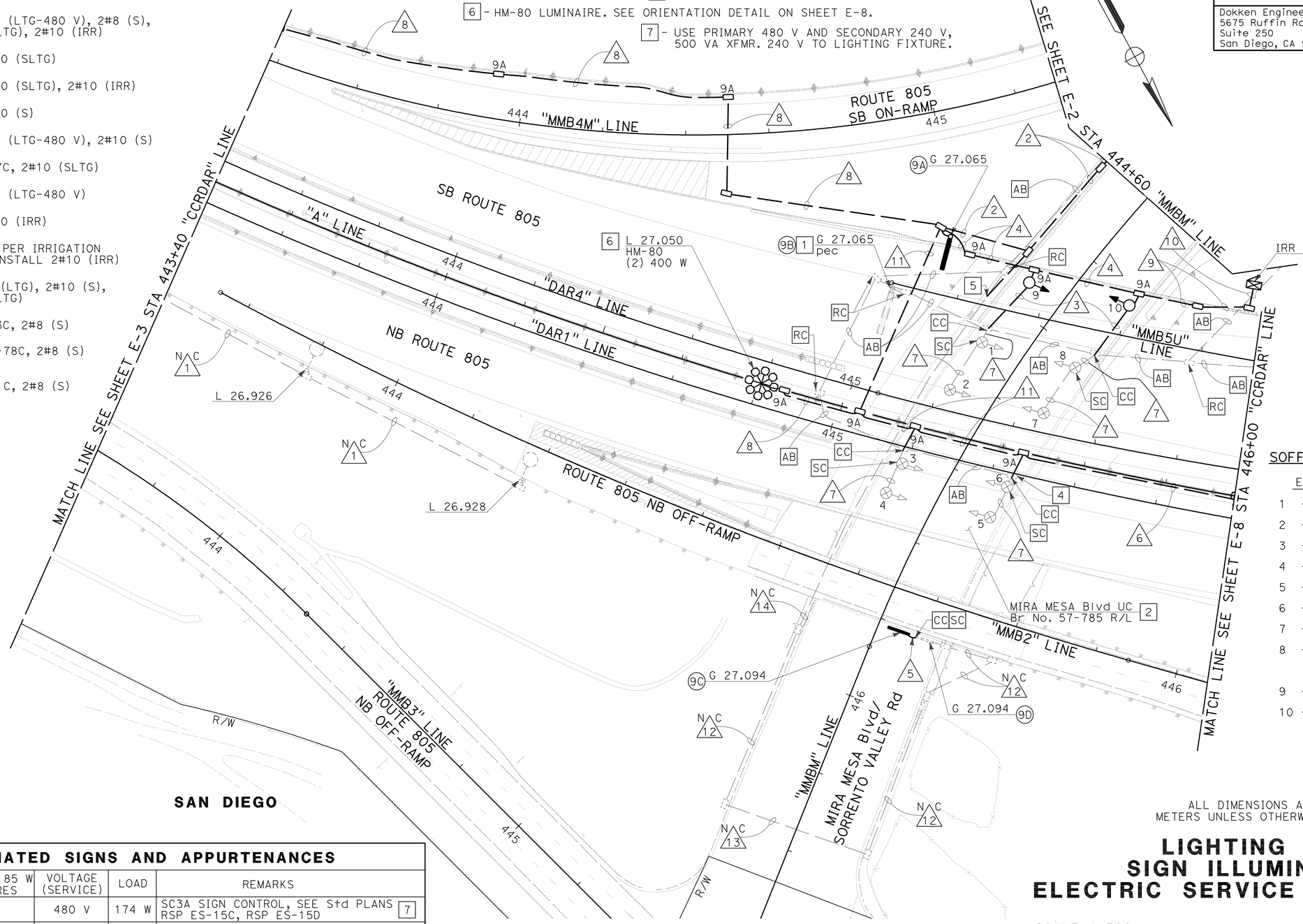

SOFFIT LUMINAIRES (70 W HPS):

EXISTING

1 - B27.083
2 - B27.077
3 - B27.078
4 - B27.072
5 - B27.088
6 - B27.094
7 - B27.095
8 - B27.077

NEW

9 - B27.087
10 - B27.103

SAN DIEGO

ALL DIMENSIONS ARE IN METERS UNLESS OTHERWISE SHOWN

ILLUMINATED SIGNS AND APPURTENANCES				
SIGN No.	QUANTITY OF 85 W ISL FIXTURES	VOLTAGE (SERVICE)	LOAD	REMARKS
9A	2	480 V	174 W	SC3A SIGN CONTROL, SEE Std PLANS RSP ES-15C, RSP ES-15D 7
9C	2	480 V	174 W	SC3A SIGN CONTROL, SEE Std PLANS RSP ES-15C, RSP ES-15D 7

THIS PLAN IS ACCURATE FOR ELECTRICAL WORK ONLY

LIGHTING AND SIGN ILLUMINATION ELECTRIC SERVICE (IRRIGATION)

SCALE 1:500

E-7

STATE OF CALIFORNIA - DEPARTMENT OF TRANSPORTATION

Caltrans

CONSULTANT FUNCTIONAL SUPERVISOR: CHRIS JOHNSON

CALCULATED-DESIGNED BY: JOHN MIKELL

CHECKED BY: JOSE OSTDIEK

REVISED BY / DATE REVISED

LAST REVISION 05-27-09

DATE PLOTTED => 29-SEP-2010
TIME PLOTTED => 14:46

DIST	COUNTY	ROUTE	KILOMETER POST TOTAL PROJECT	SHEET No.	TOTAL SHEETS
11	SD	5,805	R49.9/R51.7, 42.6/46.5	470	886

REGISTERED CIVIL ENGINEER 05-06-09 DATE

9-27-10
PLANS APPROVAL DATE

REGISTERED PROFESSIONAL ENGINEER JOSE OSTDIEK No. C65334 Exp. 9/30/09 CIVIL STATE OF CALIFORNIA

THE STATE OF CALIFORNIA OR ITS OFFICERS OR AGENTS SHALL NOT BE RESPONSIBLE FOR THE ACCURACY OR COMPLETENESS OF ELECTRONIC COPIES OF THIS PLAN SHEET.

Dokken Engineering
5675 Ruffin Road,
Suite 250
San Diego, CA 92123

Caltrans Metric

NOTE:

FOR COMPLETE RIGHT OF WAY AND ACCURATE ACCESS DATA, SEE RIGHT OF WAY RECORD MAPS AT DISTRICT OFFICE.

CONDUIT NOTES (TSO):

1 - 53C, 2#8 (LTG-480 V)

2 - 53C, 2#8 (LTG-480 V), 2#10 (S)

3 - Exist 53C, 2#8 (ltg), 2#6 (S)

4 - 78C, STATE-FURNISHED CMS HARNESS #4 AND CMS HARNESS #5

5 - 78C, 2#4 CMS POWER, 1#4 CMS NEUTRAL

6 - 53C, 2#6 CMS CONTROLLER

7 - 2-27C, 1 sic (REUSED), mt

8 - 2-78C, 2#1/0 (CMS POWER)

9 - 3-27C, 1 sic (REUSED), mt

N C 10 - Exist 78C, 2#1/0 (CMS POWER)

N C 11 - Exist 3-27C, 1 sic

NOTES (TSO):

1 - RS Exist CMS MODULE.

2 - RL EXISTING TYPE III-BF SERVICE EQUIPMENT ENCLOSURE.

3 - RS EXISTING CMS CONTROLLER.

4 - AB Exist CONDUIT, RS Exist CMS HARNESS CABLES.

5 - HM-80 LUMINAIRE, SEE "HM-80 ORIENTATION" DETAIL THIS SHEET.

6 - STATE-FURNISHED CMS CONTROLLER CONSTRUCT FOUNDATION PER RSP ES-3C.

7 - USE PRIMARY 480 V AND SECONDARY 240 V, 500 VA XFMR. 240 V TO LIGHTING FIXTURE.

8 - CMS MODULE ON SIGN No. 10B.

ILLUMINATED SIGNS AND APPURTENANCES

SIGN No.	QUANTITY OF 85 W ISL FIXTURES	VOLTAGE (SERVICE)	LOAD	REMARKS
10A	2	480 V	174 W	SC3A SIGN CONTROL, SEE Std PLANS RSP ES-15C, RSP ES-15D 7

"HM-80 ORIENTATION" DETAIL

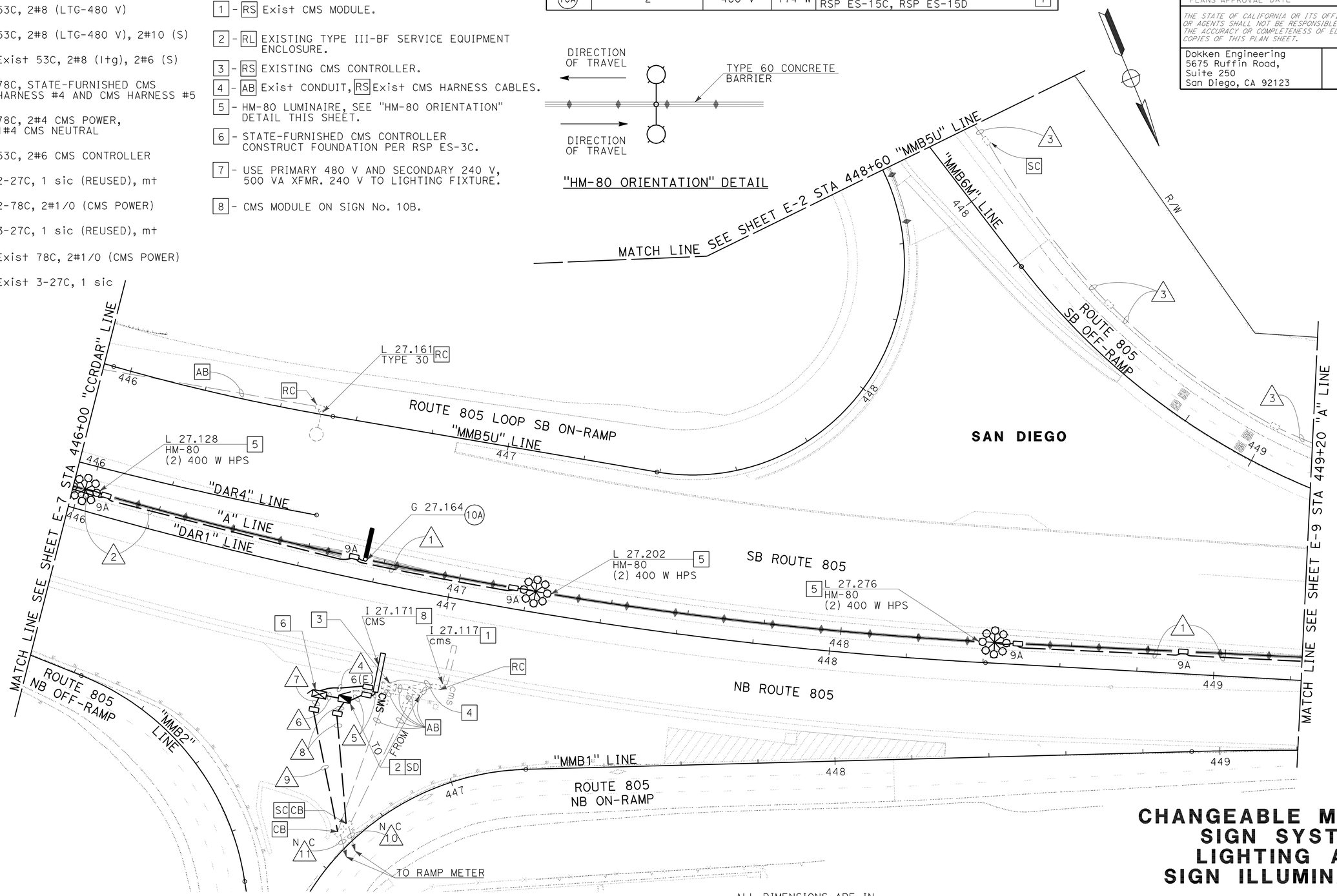

THIS PLAN IS ACCURATE FOR ELECTRICAL WORK ONLY

ALL DIMENSIONS ARE IN METERS UNLESS OTHERWISE SHOWN

CHANGEABLE MESSAGE SIGN SYSTEM LIGHTING AND SIGN ILLUMINATION

SCALE 1:500

E-8

STATE OF CALIFORNIA - DEPARTMENT OF TRANSPORTATION

Caltrans

CONSULTANT FUNCTIONAL SUPERVISOR: CHRIS JOHNSON

CALCULATED-DESIGNED BY: JOHN MIKELL

CHECKED BY: JOSE OSTDIEK

REVISED BY / DATE REVISED

LAST REVISION 05-27-09

DATE PLOTTED => 29-SEP-2010
TIME PLOTTED => 14:46

DIST	COUNTY	ROUTE	KILOMETER POST TOTAL PROJECT	SHEET No.	TOTAL SHEETS
11	SD	5,805	R49.9/R51.7, 42.6/46.5	471	886

REGISTERED CIVIL ENGINEER 05-06-09 DATE

9-27-10
PLANS APPROVAL DATE

REGISTERED PROFESSIONAL ENGINEER JOSE OSTDIEK No. C65334 Exp. 9/30/09 CIVIL STATE OF CALIFORNIA

THE STATE OF CALIFORNIA OR ITS OFFICERS OR AGENTS SHALL NOT BE RESPONSIBLE FOR THE ACCURACY OR COMPLETENESS OF ELECTRONIC COPIES OF THIS PLAN SHEET.

Dokken Engineering
5675 Ruffin Road,
Suite 250
San Diego, CA 92123

Caltrans Metric

NOTE:

FOR COMPLETE RIGHT OF WAY AND ACCURATE ACCESS DATA, SEE RIGHT OF WAY RECORD MAPS AT DISTRICT OFFICE.

CONDUIT NOTES (TSO):

- N/C 1 - Exist 53C, 2#8 (Itg), 2#6 (S)
- 2 - Exist 41C, 2#8 (Itg) ADD 2#10 (S)
- N/C 3 - Exist 41C, 2#8 (Itg)
- 4 - 53C, 2#10 (S)
- N/C 5 - Exist 53C, 2#8 (S)
- 6 - 53C, 2#8 (LTG-480 V)
- 7 - 53C, 2#8 (LTG-480 V), 2#10 (S)

NOTES (TSO):

1. REPLACE EXISTING PULL BOX WITH A NEW No. 9A STRUCTURE PULL BOX. INTERCEPT EXISTING CONDUITS AND EXTEND TO NEW PULL BOX.
2. USE PRIMARY 480 V AND SECONDARY 240 V, 500 VA XFMR 240 V TO LIGHTING FIXTURE.

HI MAST LUMINAIRE ISOLUX CURVE - TYPE IV SHORT CUTOFF

25 m MOUNTING HEIGHT
LAMP OPERATED AT 51 000 lm
400 W HIGH PRESSURE SODIUM LAMP
ANSI DESIGNATION S51

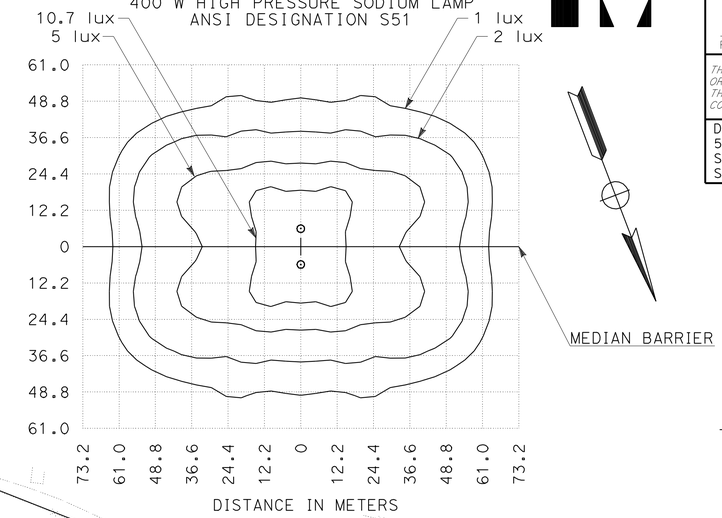

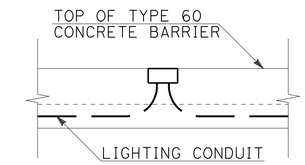

DETAIL "A"

TYPICAL No. 9A PULL BOX INSTALLATION
(NO SCALE)
SEE CONSTRUCTION DETAILS

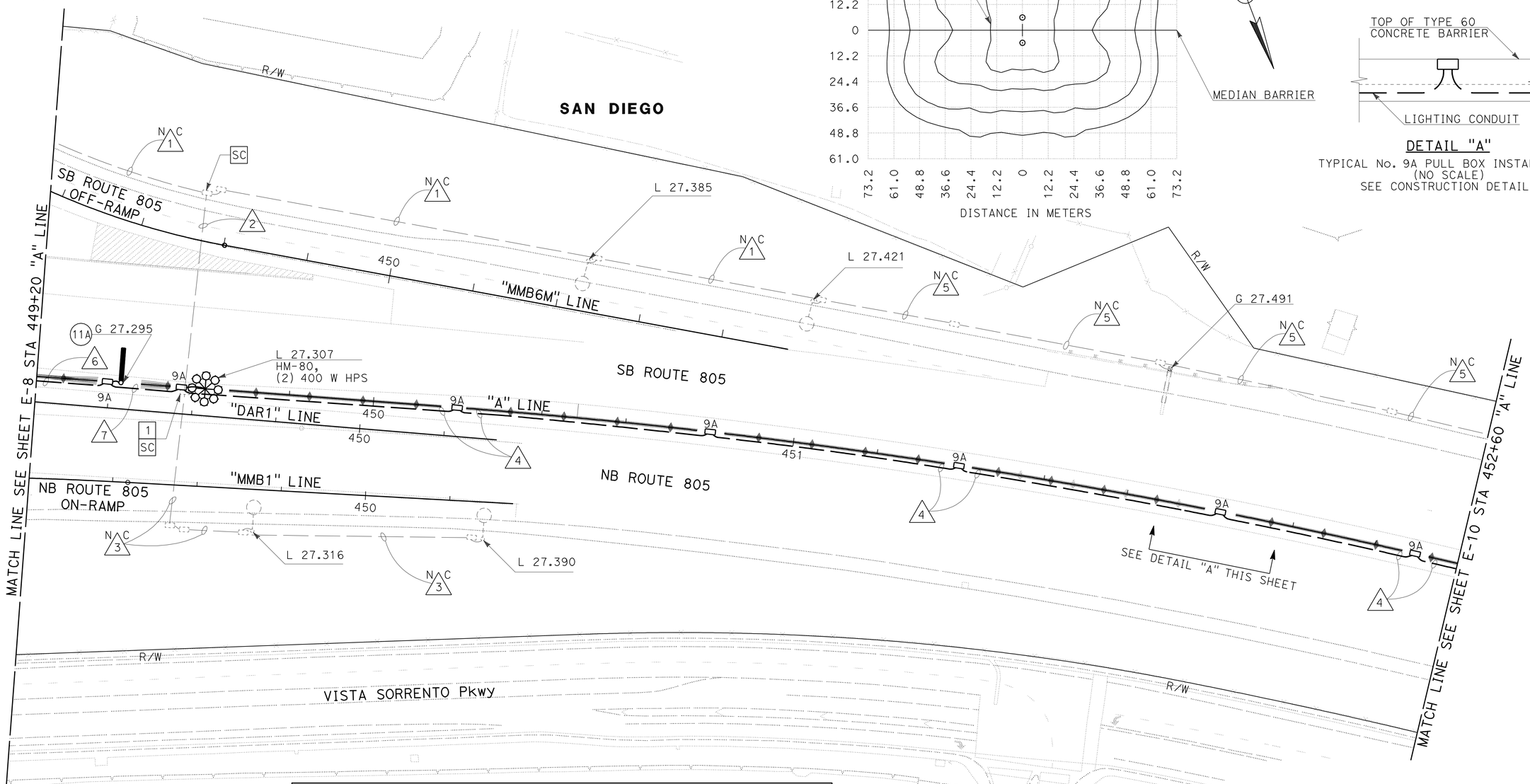

ILLUMINATED SIGNS AND APPURTENANCES

SIGN No.	QUANTITY OF 85 W ISL FIXTURES	VOLTAGE (SERVICE)	LOAD	REMARKS
11A	2	480 V	174 W	SC3A SIGN CONTROL, SEE Std PLANS RSP ES-15C, RSP ES-15D 2

THIS PLAN IS ACCURATE FOR ELECTRICAL WORK ONLY

ALL DIMENSIONS ARE IN METERS UNLESS OTHERWISE SHOWN

LIGHTING AND SIGN ILLUMINATION

SCALE 1:500

E-9

STATE OF CALIFORNIA - DEPARTMENT OF TRANSPORTATION
Caltrans

CONSULTANT FUNCTIONAL SUPERVISOR: CHRIS JOHNSON
CALCULATED-DESIGNED BY: JOHN MIKELL
CHECKED BY: JOSE OSTDIEK
REVISED BY / DATE REVISED

LAST REVISION 05-27-09
DATE PLOTTED => 29-SEP-2010
TIME PLOTTED => 14:46

NOTE:

FOR COMPLETE RIGHT OF WAY AND ACCURATE ACCESS DATA, SEE RIGHT OF WAY RECORD MAPS AT DISTRICT OFFICE.

NOTES (TSO):

1 - RS Exist SIGN LIGHTING FIXTURES AND SIGN CONTROL. SEE SIGN PLANS.

2 - USE PRIMARY 480 V AND SECONDARY 240 V, 500 VA XFMR 240 V TO LIGHTING FIXTURE.

CONDUIT NOTES (TSO):

N C 1 - Exist 53C, 2#8 (S)

2 - 53C, 2#10 (S)

N C 3 - Exist MDCS (8), 1 FO72

N C 4 - Exist 27C, 1 FO12

ILLUMINATED SIGNS AND APPURTENANCES

SIGN No.	QUANTITY OF 85 W ISL FIXTURES	VOLTAGE (SERVICE)	LOAD	REMARKS
12A	2	480 V	174 W	SC3A SIGN CONTROL, SEE Std PLANS RSP ES-15C, RSP ES-15D 2
12C	5	480 V	435 W	SC3A SIGN CONTROL, SEE Std PLANS RSP ES-15C, RSP ES-15D 2

Caltrans Metric

DIST	COUNTY	ROUTE	KILOMETER POST TOTAL PROJECT	SHEET No.	TOTAL SHEETS
11	SD	5,805	R49.9/R51.7, 42.6/46.5	472	886

REGISTERED CIVIL ENGINEER 05-06-09 DATE

9-27-10
PLANS APPROVAL DATE

REGISTERED PROFESSIONAL ENGINEER JOSE OSTDIEK No. C65334 Exp. 9/30/09 CIVIL STATE OF CALIFORNIA

THE STATE OF CALIFORNIA OR ITS OFFICERS OR AGENTS SHALL NOT BE RESPONSIBLE FOR THE ACCURACY OR COMPLETENESS OF ELECTRONIC COPIES OF THIS PLAN SHEET.

Dokken Engineering
5675 Ruffin Road,
Suite 250
San Diego, CA 92123

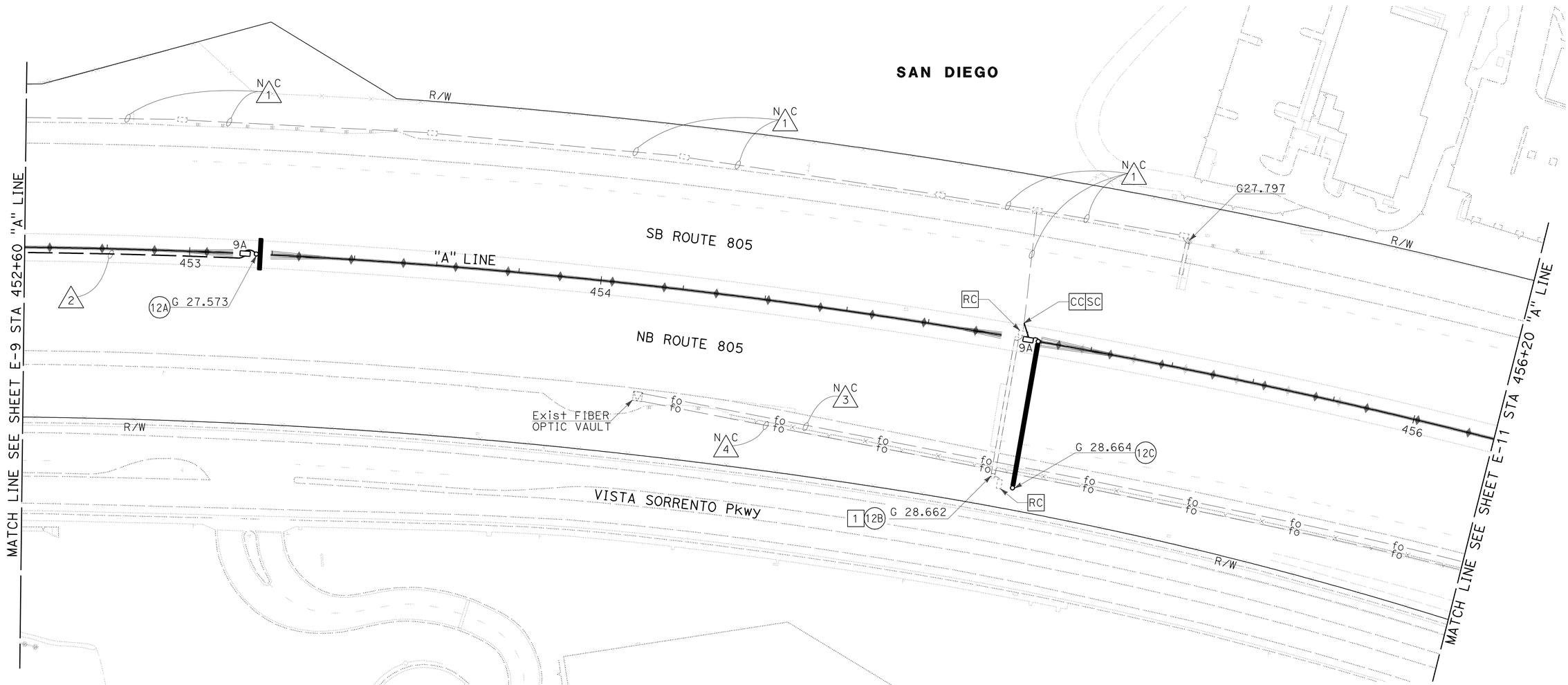

THIS PLAN IS ACCURATE FOR ELECTRICAL WORK ONLY

ALL DIMENSIONS ARE IN METERS UNLESS OTHERWISE SHOWN

LIGHTING AND SIGN ILLUMINATION

SCALE 1:500

E-10

STATE OF CALIFORNIA - DEPARTMENT OF TRANSPORTATION

Caltrans

CONSULTANT FUNCTIONAL SUPERVISOR: CHRIS JOHNSON

CALCULATED-DESIGNED BY: JOHN MIKELL

CHECKED BY: JOSE OSTDIEK

REVISED BY | DATE REVISED

LAST REVISION 05-27-09 | DATE PLOTTED => 29-SEP-2010 | TIME PLOTTED => 14:47

DIST	COUNTY	ROUTE	KILOMETER POST TOTAL PROJECT	SHEET No.	TOTAL SHEETS
11	SD	5,805	R49.9/R51.7, 42.6/46.5	473	886

REGISTERED CIVIL ENGINEER 05-06-09 DATE

9-27-10
PLANS APPROVAL DATE

REGISTERED PROFESSIONAL ENGINEER JOSE OSTDIEK No. C65334 Exp. 9/30/09 CIVIL STATE OF CALIFORNIA

THE STATE OF CALIFORNIA OR ITS OFFICERS OR AGENTS SHALL NOT BE RESPONSIBLE FOR THE ACCURACY OR COMPLETENESS OF ELECTRONIC COPIES OF THIS PLAN SHEET.

Dokken Engineering
5675 Ruffin Road,
Suite 250
San Diego, CA 92123

Caltrans Metric

NOTE:

FOR COMPLETE RIGHT OF WAY AND ACCURATE ACCESS DATA, SEE RIGHT OF WAY RECORD MAPS AT DISTRICT OFFICE.

NOTES (TSO):

1 - Exist MODEL 170 CONTROLLER ASSEMBLY IN MODEL 334 CABINET TO REMAIN.

2 - Exist TYPE III SERVICE EQUIPMENT ENCLOSURE WITH THE FOLLOWING CIRCUIT BREAKERS:
2P - 100 A (MAIN)
1P - 50 A (SPARE)
1P - 15 A (TDC)
1P - 30 A (TMS)
1P - 30 A (IRR)
RS 1P - 50 A (SPARE) CB AND REPLACE WITH
1P - 15 A CB AND RELAVEL "MVDS".

3 - Exist TELEPHONE DEMARCATION CABINET TO REMAIN.

4 - AB Exist DETECTOR LOOPS.

5 - INSTALL STATE-FURNISHED MVDS AS SHOWN. SEE "MVDS ELECTRICAL DETAILS", SHEET E-44.

CONDUIT NOTES (TSO):

1 - Exist 78C, 20 dlc, 2#6 (tms) REMOVE 20 dlc

2 - Exist 53C, 1 FO12, ADD 1 OCC (MVDS)

3 - Exist 41C, 2#8 (tms), 2#10 (tdc), 2#10 (irr) ADD 2#10 (MVDS)

N C 4 - Exist 27C, 1 sic

N C 5 - Exist 27C, 2#10 (tdc)

6 - 53C, 2#10 (MVDS)

N C 7 - Exist MDCS (8), 1 F072

N C 8 - Exist 53C, 2#6 (ltg)

N C 9 - Exist 27C, 1 FO12

10 - 53C, 1 OCC

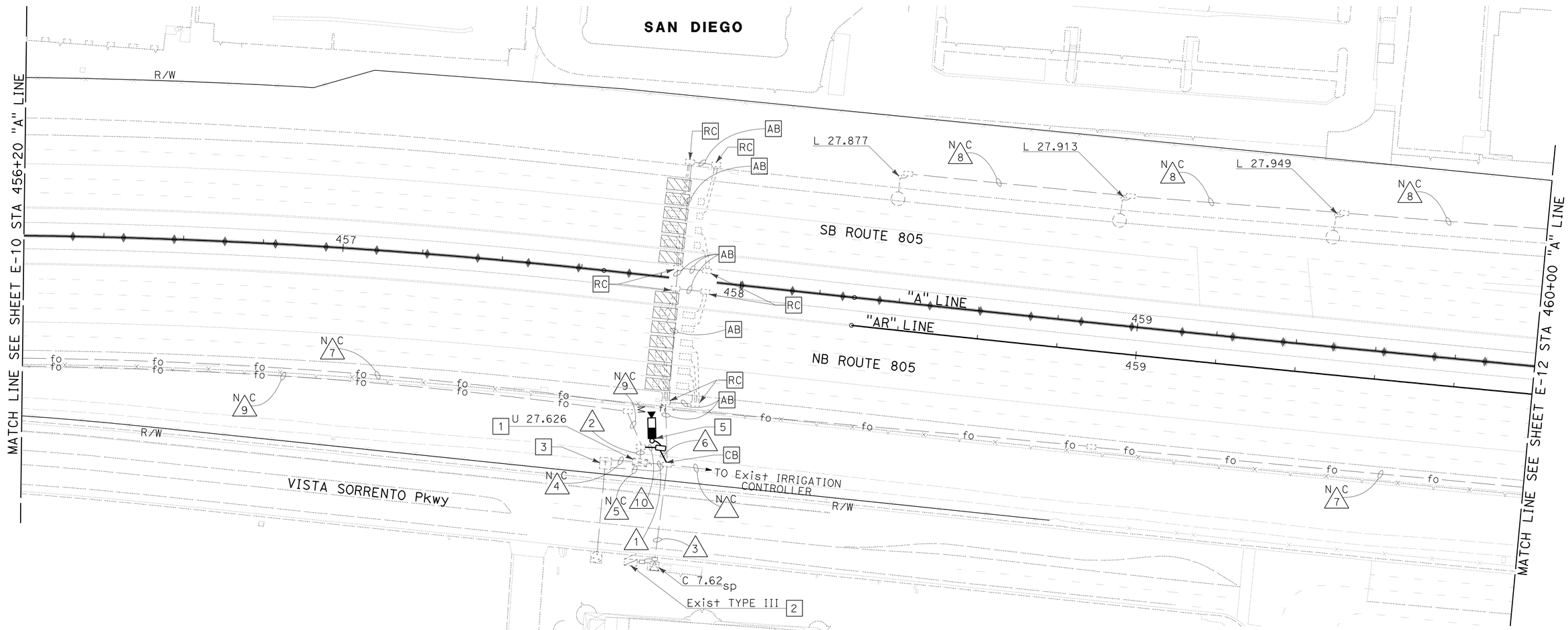

LIGHTING AND SIGN ILLUMINATION TRAFFIC MONITORING STATION (LOCATION 1)

SCALE 1:500

E-11

THIS PLAN IS ACCURATE FOR ELECTRICAL WORK ONLY

ALL DIMENSIONS ARE IN METERS UNLESS OTHERWISE SHOWN

STATE OF CALIFORNIA - DEPARTMENT OF TRANSPORTATION

Caltrans

CONSULTANT FUNCTIONAL SUPERVISOR: CHRIS JOHNSON

CALCULATED-DESIGNED BY: JOHN MIKELL

CHECKED BY: JOSE OSTDIEK

REVISED BY / DATE REVISED

LAST REVISION 05-27-09

DATE PLOTTED => 29-SEP-2010
TIME PLOTTED => 14:47

DIST	COUNTY	ROUTE	KILOMETER POST TOTAL PROJECT	SHEET No.	TOTAL SHEETS
11	SD	5,805	R49.9/R51.7, 42.6/46.5	474	886

REGISTERED CIVIL ENGINEER 05-06-09 DATE

9-27-10
PLANS APPROVAL DATE

REGISTERED PROFESSIONAL ENGINEER JOSE OSTDIEK No. C65334 Exp. 9/30/09 CIVIL STATE OF CALIFORNIA

THE STATE OF CALIFORNIA OR ITS OFFICERS OR AGENTS SHALL NOT BE RESPONSIBLE FOR THE ACCURACY OR COMPLETENESS OF ELECTRONIC COPIES OF THIS PLAN SHEET.

Dokken Engineering
5675 Ruffin Road,
Suite 250
San Diego, CA 92123

Caltrans Metric

NOTE:

FOR COMPLETE RIGHT OF WAY AND ACCURATE ACCESS DATA, SEE RIGHT OF WAY RECORD MAPS AT DISTRICT OFFICE.

NOTES (TSO):

1 - RC 5 mv FIXTURES AND SIGN CONTROL SEE SIGN PLANS.

2 - Exist CONTROLLER TO REMAIN.

3 - Exist CLOSED CIRCUIT TELEVISION (cctv) TO REMAIN.

4 - RC 8 FLUORESCENT SIGN LIGHTING FIXTURES. SEE SIGN PLANS.

5 - USE PRIMARY 480 V AND SECONDARY 240 V, 500 VA XFMR 240 V TO LIGHTING FIXTURE.

CONDUIT NOTES (TSO):

N C 1 - Exist 53C, 2#6 (ltg), 2#6 (S)

N C 2 - Exist 53C, 2#6 (ltg), 2#6 (S), 2#6 (cctv)

N C 3 - Exist MDCS (8), 1 FO72

N C 4 - Exist 53C, 2#6 (ltg)

N C 5 - Exist 53C, 2#6 (cctv)

N C 6 - Exist 78C, VIDEO CABLE

N C 7 - Exist 53C, 1 FO12

8 - 53C, 2#6 (LTG)

9 - 53C, 2#6 (LTG), 2#6 (S)

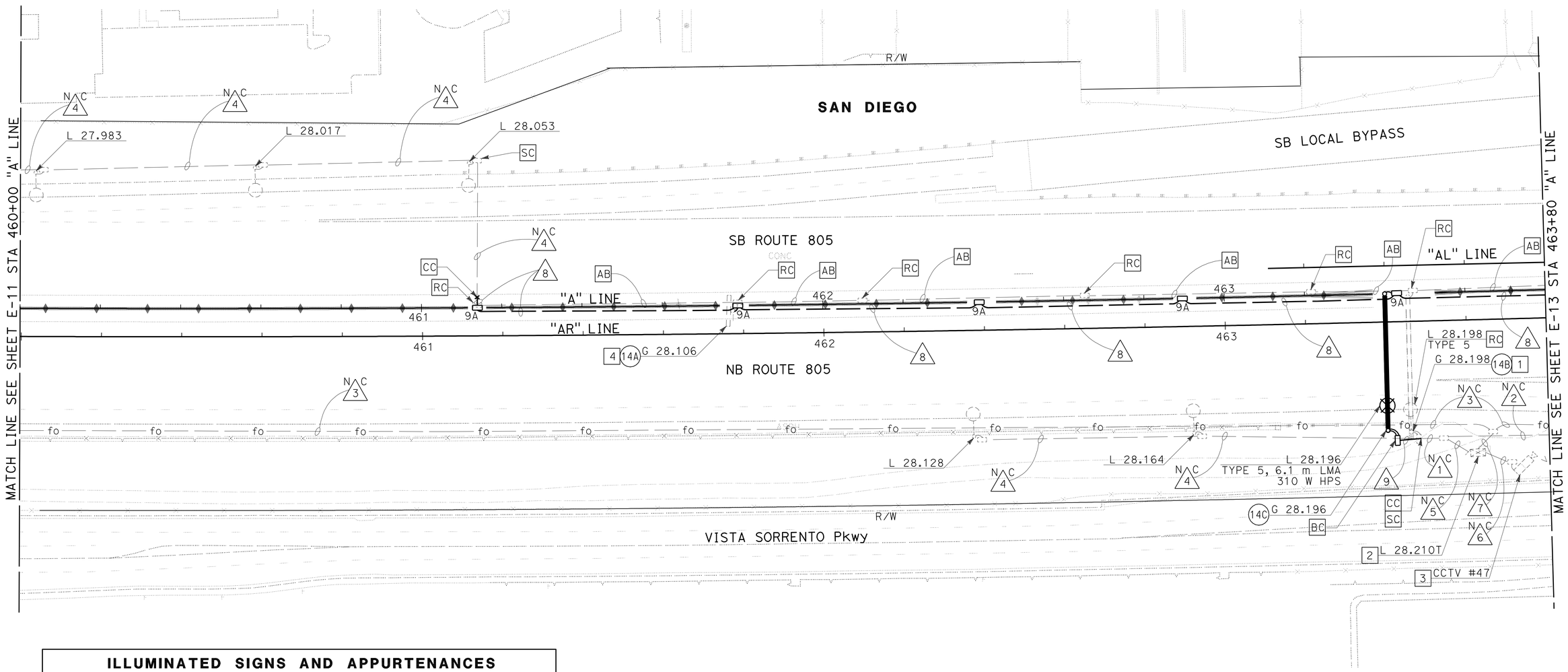

ILLUMINATED SIGNS AND APPURTENANCES				
SIGN No.	QUANTITY OF 85 W ISL FIXTURES	VOLTAGE (SERVICE)	LOAD	REMARKS
14C	4	480 V	348 W	SC3A SIGN CONTROL, SEE Std PLANS RSP ES-15C, RSP ESP-15D 5

THIS PLAN IS ACCURATE FOR ELECTRICAL WORK ONLY

ALL DIMENSIONS ARE IN METERS UNLESS OTHERWISE SHOWN

LIGHTING AND SIGN ILLUMINATION

SCALE 1:500

E-12

STATE OF CALIFORNIA - DEPARTMENT OF TRANSPORTATION

Caltrans

CONSULTANT FUNCTIONAL SUPERVISOR: CHRIS JOHNSON

CALCULATED-DESIGNED BY: JOHN MIKELL

CHECKED BY: JOSE OSTDIEK

REVISED BY / DATE REVISED

LAST REVISION 05-27-09

DATE PLOTTED => 29-SEP-2010
TIME PLOTTED => 14:47

DIST	COUNTY	ROUTE	KILOMETER POST TOTAL PROJECT	SHEET No.	TOTAL SHEETS
11	SD	5,805	R49.9/R51.7, 42.6/46.5	475	886

REGISTERED CIVIL ENGINEER 05-06-09 DATE

9-27-10
PLANS APPROVAL DATE

REGISTERED PROFESSIONAL ENGINEER JOSE OSTDIEK No. C65334 Exp. 9/30/09 CIVIL STATE OF CALIFORNIA

THE STATE OF CALIFORNIA OR ITS OFFICERS OR AGENTS SHALL NOT BE RESPONSIBLE FOR THE ACCURACY OR COMPLETENESS OF ELECTRONIC COPIES OF THIS PLAN SHEET.

Dokken Engineering
5675 Ruffin Road,
Suite 250
San Diego, CA 92123

Caltrans Metric

NOTE:

FOR COMPLETE RIGHT OF WAY AND ACCURATE ACCESS DATA, SEE RIGHT OF WAY RECORD MAPS AT DISTRICT OFFICE.

NOTES (TSO):

1 - RS Exist SIGN LIGHTING FIXTURES AND SIGN CONTROL. SEE SIGN PLANS.

2 - Exist TYPE III SERVICE EQUIPMENT ENCLOSURE TO REMAIN.

3 - SEE "BRIDGE ELECTRICAL DETAILS", SHEET E-53.

4 - USE PRIMARY 480 V AND SECONDARY 240 V, 500 VA XFMR 240 V TO LIGHTING FIXTURE.

CONDUIT NOTES (TSO):

NC 1 - Exist 53C, SERVICE CONDUCTORS

2 - 53C, 2#6 (LTG), 2#6 (S)

3 - Exist 41C, ADD 2#8 (sltg)

NC 4 - Exist 53C, 2#6 (sltg), 2#6 (S)

NC 5 - Exist 53C, 2#6 (sltg), 2#6 (S), 2#6 (cctv), 4#14 (peu)
- Exist 53C, 2#4 (PEDESTAL)

NC 6 - Exist 53C, 2#6 (ltg), 2#6 (S), 2#6 (cctv), 4#14 (peu)

NC 7 - Exist 53C, 2#4 (PEDESTAL), 2#6 (ltg)

NC 8 - Exist 53C, 2#4 (PEDESTAL)

NC 9 - Exist MDCS (8), 1 FO72

10 - 53C, 2#6 (LTG)

NC 11 - Exist 53C, 2#6 (ltg), 2#6 (S), 2#6 (cctv)

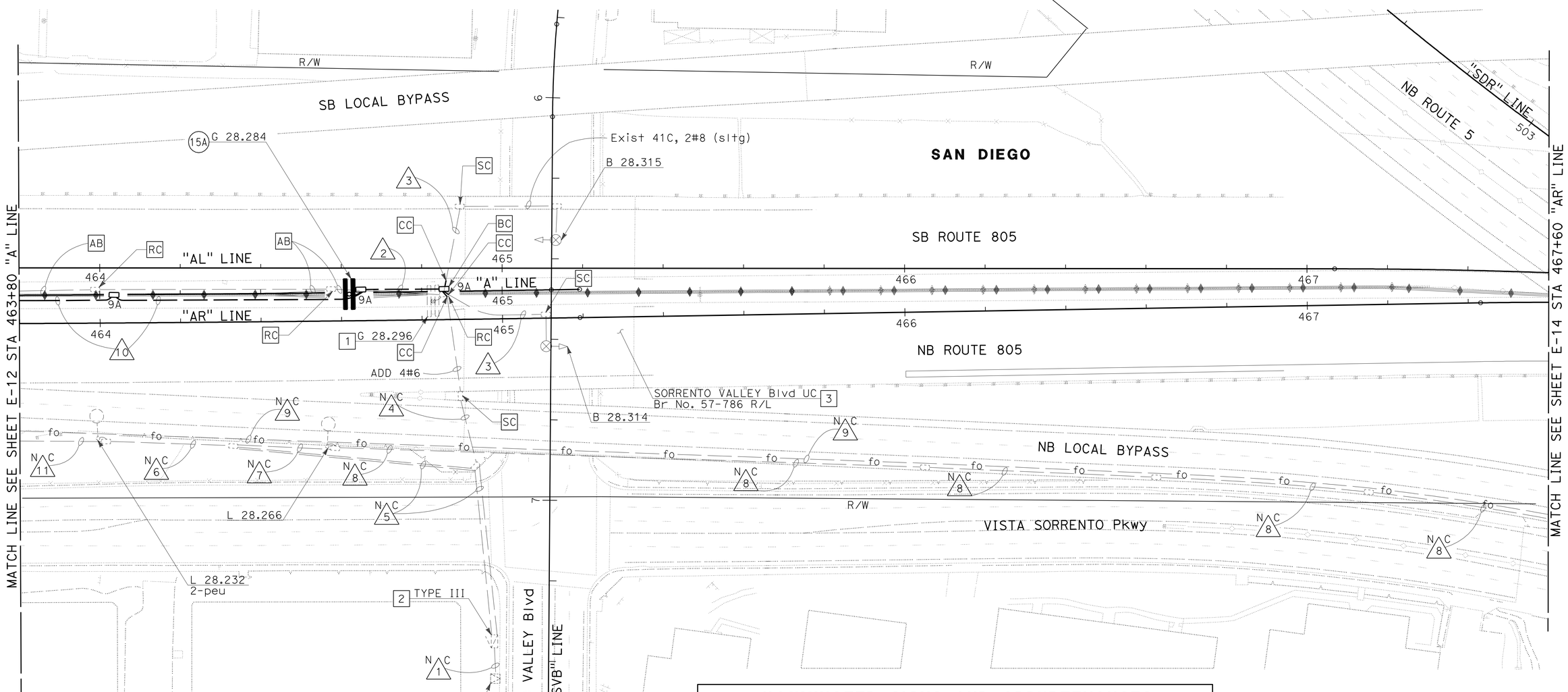

ILLUMINATED SIGNS AND APPURTENANCES				
SIGN No.	QUANTITY OF 85 W ISL FIXTURES	VOLTAGE (SERVICE)	LOAD	REMARKS
15A	4	480 V	348 W	SC3A SIGN CONTROL, SEE Std PLANS RSP ES-15C, RSP ES-15D 4

THIS PLAN IS ACCURATE FOR ELECTRICAL WORK ONLY

ALL DIMENSIONS ARE IN METERS UNLESS OTHERWISE SHOWN

LIGHTING AND SIGN ILLUMINATION

SCALE 1:500

E-13

STATE OF CALIFORNIA - DEPARTMENT OF TRANSPORTATION
Caltrans

CONSULTANT FUNCTIONAL SUPERVISOR: CHRIS JOHNSON
CALCULATED-DESIGNED BY: JOHN MIKELL
CHECKED BY: JOSE OSTDIEK
REVISED BY / DATE REVISED

LAST REVISION 05-28-09
DATE PLOTTED => 29-SEP-2010
TIME PLOTTED => 14:47

DIST	COUNTY	ROUTE	KILOMETER POST TOTAL PROJECT	SHEET No.	TOTAL SHEETS
11	SD	5,805	R49.9/R51.7, 42.6/46.5	476	886

REGISTERED CIVIL ENGINEER 05-06-09 DATE

9-27-10
PLANS APPROVAL DATE

REGISTERED PROFESSIONAL ENGINEER JOSE OSTDIEK No. C65334 Exp. 9/30/09 CIVIL STATE OF CALIFORNIA

THE STATE OF CALIFORNIA OR ITS OFFICERS OR AGENTS SHALL NOT BE RESPONSIBLE FOR THE ACCURACY OR COMPLETENESS OF ELECTRONIC COPIES OF THIS PLAN SHEET.

Dokken Engineering
5675 Ruffin Road,
Suite 250
San Diego, CA 92123

Caltrans Metric

NOTES (TSO):

1 - Exist TMS FIELD ELEMENT TO REMAIN.
2 - Exist SERVICE EQUIPMENT ENCLOSURE TO REMAIN.
3 - RC Exist 6 dlc, ADD 6 DLC.
4 - RS Exist SIGN, LIGHTING FIXTURES AND SIGN CONTROL. SEE SIGN SHEETS.
5 - AB Exist DETECTOR LOOPS AND REPLACE AS SHOWN. SEE DETAIL 'ML' SHEET E-43 FOR SPACING AND PLACEMENT DETAILS.
6 - Exist DETECTOR LOOPS TO REMAIN.
7 - RC Exist 4 dlc, ADD 4 DLC.

NOTE:

FOR COMPLETE RIGHT OF WAY AND ACCURATE ACCESS DATA, SEE RIGHT OF WAY RECORD MAPS AT DISTRICT OFFICE.

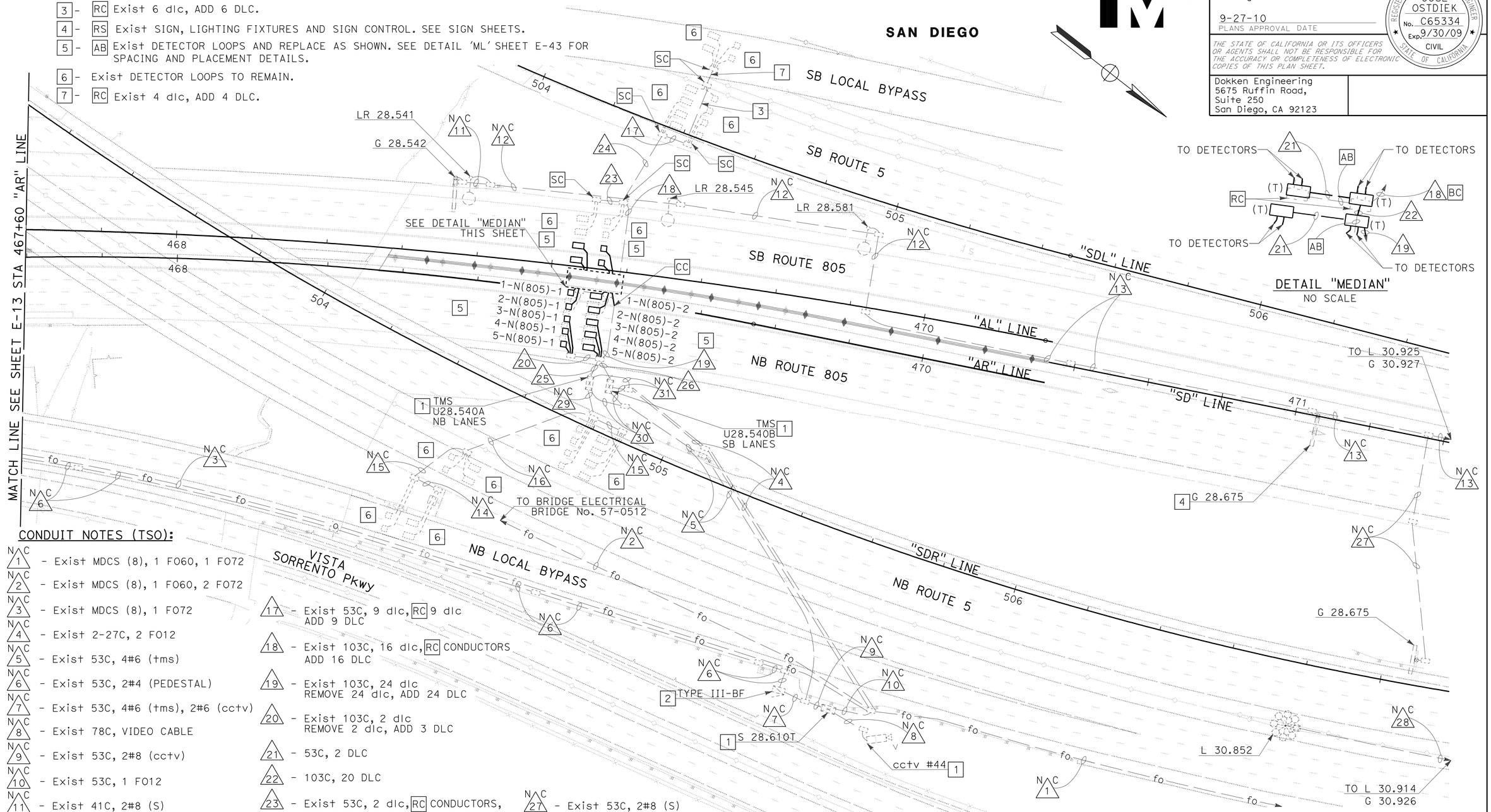

CONDUIT NOTES (TSO):

1 - Exist MDCS (8), 1 FO60, 1 FO72
2 - Exist MDCS (8), 1 FO60, 2 FO72
3 - Exist MDCS (8), 1 FO72
4 - Exist 2-27C, 2 FO12
5 - Exist 53C, 4#6 (tms)
6 - Exist 53C, 2#4 (PEDESTAL)
7 - Exist 53C, 4#6 (tms), 2#6 (cctv)
8 - Exist 78C, VIDEO CABLE
9 - Exist 53C, 2#8 (cctv)
10 - Exist 53C, 1 FO12
11 - Exist 41C, 2#8 (S)
12 - Exist 41C, 2#8 (ltg), 2#8 (S)
13 - Exist 53C, 2#8 (ltg), 2#8 (S)
14 - Exist 53C, 2 dlc
15 - Exist 53C, 4 dlc
16 - Exist 53C, 8 dlc
17 - Exist 53C, 9 dlc, RC 9 dlc ADD 9 DLC
18 - Exist 103C, 16 dlc, RC CONDUCTORS ADD 16 DLC
19 - Exist 103C, 24 dlc REMOVE 24 dlc, ADD 24 DLC
20 - Exist 103C, 2 dlc REMOVE 2 dlc, ADD 3 DLC
21 - 53C, 2 DLC
22 - 103C, 20 DLC
23 - Exist 53C, 2 dlc, RC CONDUCTORS, ADD 2 DLC
24 - Exist 53C, 12 dlc, RC CONDUCTORS, ADD 12 DLC
25 - Exist 53C, 8 dlc, RC CONDUCTORS, ADD 10 DLC
26 - Exist 103C, 20 dlc, RC CONDUCTORS, ADD 20 DLC
27 - Exist 53C, 2#8 (S)
28 - Exist 78C, 2#2 (ltg1), 2#2 (ltg2)
29 - Exist 103C, 16 dlc
30 - Exist 53C, 2#6 (tms)
31 - Exist 27C, 1 FO12

THIS PLAN IS ACCURATE FOR ELECTRICAL WORK ONLY

ALL DIMENSIONS ARE IN METERS UNLESS OTHERWISE SHOWN

LIGHTING AND SIGN ILLUMINATION TRAFFIC MONITORING STATION (LOCATION 2)

SCALE 1:500

E-14

REVISED BY	DATE REVISED
JOHN MIKELL	JOSE OSTDIEK

CALCULATED-DESIGNED BY / CHECKED BY

CONSULTANT FUNCTIONAL SUPERVISOR: CHRIS JOHNSON

STATE OF CALIFORNIA - DEPARTMENT OF TRANSPORTATION

Caltrans

LAST REVISION 05-28-09 | DATE PLOTTED => 29-SEP-2010 | TIME PLOTTED => 14:47

DIST	COUNTY	ROUTE	KILOMETER POST TOTAL PROJECT	SHEET No.	TOTAL SHEETS
11	SD	5,805	R49.9/R51.7, 42.6/46.5	477	886

REGISTERED CIVIL ENGINEER 05-06-09 DATE

9-27-10
PLANS APPROVAL DATE

REGISTERED PROFESSIONAL ENGINEER JOSE OSTDIEK No. C65334 Exp. 9/30/09 CIVIL STATE OF CALIFORNIA

THE STATE OF CALIFORNIA OR ITS OFFICERS OR AGENTS SHALL NOT BE RESPONSIBLE FOR THE ACCURACY OR COMPLETENESS OF ELECTRONIC COPIES OF THIS PLAN SHEET.

Dokken Engineering
5675 Ruffin Road,
Suite 250
San Diego, CA 92123

Caltrans Metric

NOTE:

FOR COMPLETE RIGHT OF WAY AND ACCURATE ACCESS DATA, SEE RIGHT OF WAY RECORD MAPS AT DISTRICT OFFICE.

CONDUIT NOTES (TSO):

N C 1 - Exist 53C, 2#6 (S)

2 - 53C, 2#10 (S)

NOTES (TSO):

1 - USE PRIMARY 480 V AND SECONDARY 240 V 500 VA XFMR 240 V TO LIGHTING FIXTURE.

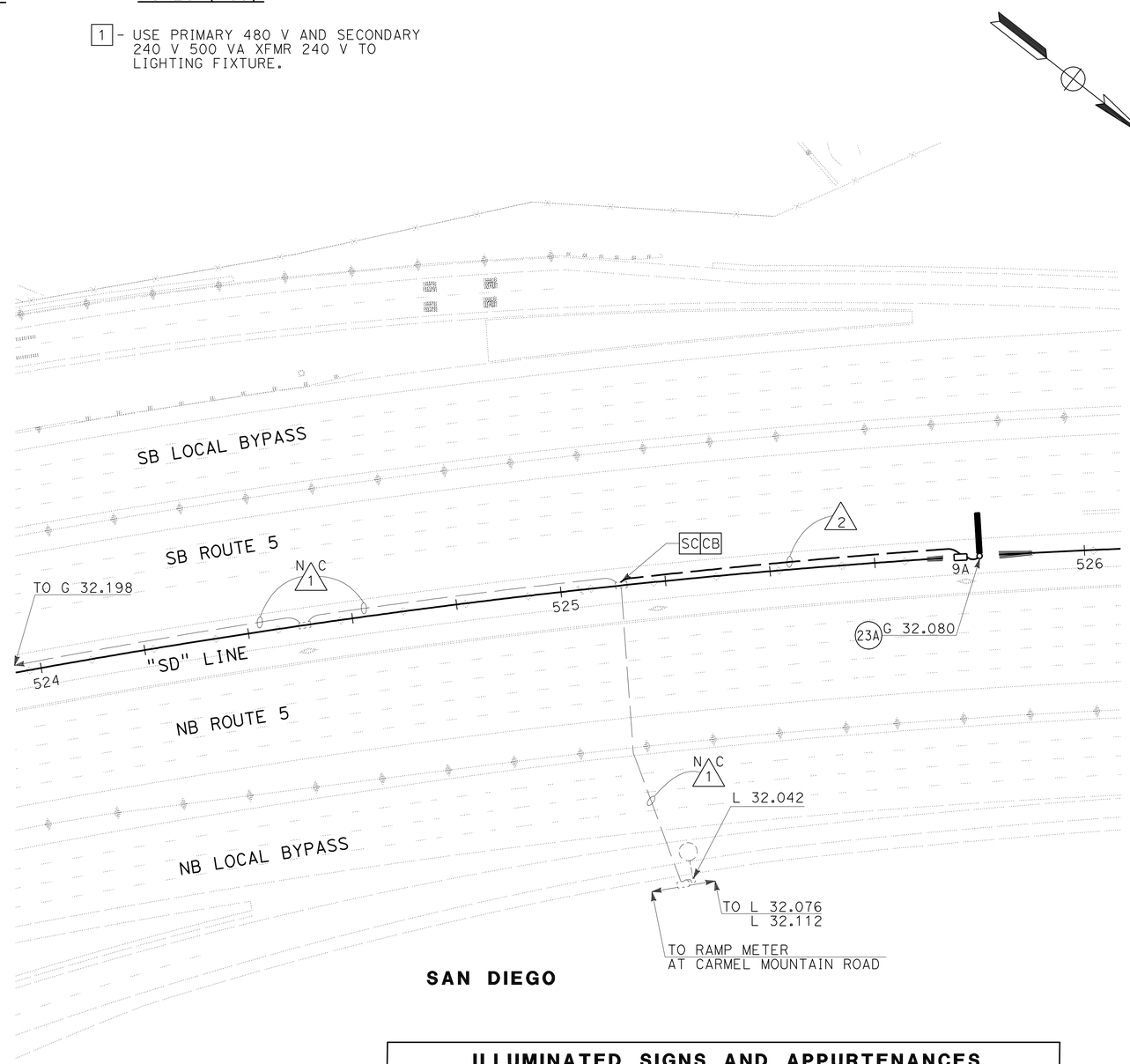

SAN DIEGO

ILLUMINATED SIGNS AND APPURTENANCES

SIGN No.	QUANTITY OF 85 W ISL FIXTURES	VOLTAGE (SERVICE)	LOAD	REMARKS
23A	1	480 V	87 W	SC3A SIGN CONTROL, SEE Std PLANS RSP ES-15C, RSP ES-15D 1

THIS PLAN IS ACCURATE FOR ELECTRICAL WORK ONLY

ALL DIMENSIONS ARE IN METERS UNLESS OTHERWISE SHOWN

LIGHTING AND SIGN ILLUMINATION

SCALE 1:500

E-15

REVISED BY | DATE REVISED

JOHN MIKELL | JOSE OSTDIEK

CALCULATED-DESIGNED BY | CHECKED BY

CONSULTANT FUNCTIONAL SUPERVISOR: CHRIS JOHNSON

STATE OF CALIFORNIA - DEPARTMENT OF TRANSPORTATION

Caltrans

LAST REVISION 05-28-09 | DATE PLOTTED => 29-SEP-2010 TIME PLOTTED => 14:47

DIST	COUNTY	ROUTE	KILOMETER POST TOTAL PROJECT	SHEET No.	TOTAL SHEETS
11	SD	5,805	R49.9/R51.7, 42.6/46.5	478	886

REGISTERED CIVIL ENGINEER 05-06-09 DATE

9-27-10
PLANS APPROVAL DATE

REGISTERED PROFESSIONAL ENGINEER JOSE OSTDIEK No. C65334 Exp. 9/30/09 CIVIL STATE OF CALIFORNIA

THE STATE OF CALIFORNIA OR ITS OFFICERS OR AGENTS SHALL NOT BE RESPONSIBLE FOR THE ACCURACY OR COMPLETENESS OF ELECTRONIC COPIES OF THIS PLAN SHEET.

Dokken Engineering
5675 Ruffin Road,
Suite 250
San Diego, CA 92123

Caltrans Metric

NOTE:

FOR COMPLETE RIGHT OF WAY AND ACCURATE ACCESS DATA, SEE RIGHT OF WAY RECORD MAPS AT DISTRICT OFFICE.

NOTES (TSO):

1 - RS Exist 332 CABINET, 170 CONTROLLER AND ALL EQUIPMENT COMPLETE. RC Exist bbs. RL Exist EVD DISCRIMINATORS.

2 - RS Exist TYPE III-BF SERVICE EQUIPMENT ENCLOSURE.

3 - RC Exist PEDESTRIAN BARRICADE.

4 - RC Exist SIGNAL STANDARD AND ALL EQUIPMENT COMPLETE.

5 - Exist SERVICE POINT TO REMAIN.

6 - AB Exist DETECTOR LOOPS AND CONDUITS. RC EX PULL BOXES AND CONDUCTORS UNLESS OTHERWISE NOTED.

7 - RL Exist EVD TO NEW POLE LOCATION. SEE SHEET E-17.

8 - REMOVE Exist sic FROM CONTROLLER TO PULL BOX LOCATED AT Approx STATION 445+20 "MMBM" LINE. sic TO BE REUSED AND CONNECTED TO NEW CONTROLLER. SEE SHEET E-17.

P - PROPOSED LOCATION OF NEW TRAFFIC SIGNAL STANDARD. SEE SIGNAL AND LIGHTING (LOCATION 1).

T1A - APPROXIMATE LOCATION OF TEMPORARY TRAFFIC SIGNAL STANDARD. SEE SIGNAL AND LIGHTING (LOCATION 1) STAGE 1A.

T1B - APPROXIMATE LOCATION OF TEMPORARY TRAFFIC SIGNAL STANDARD. SEE SIGNAL AND LIGHTING (LOCATION 1) STAGE 1B.

EXISTING POLE AND EQUIPMENT SCHEDULE

No.	STANDARD TYPE	MAST ARM SIG	MAST ARM LUM	SIGNAL MOUNTING AND PLACEMENT VEHICLE POLE	VEHICLE MAST ARM	PEDESTRIAN SIGNAL	PEDESTRIAN PPB	REMARKS
A	1-A	—	—	TV-1-T	—	SP-1-T	—	—
B	26-4-129	12.2	4.6	SV-2-TB	(2) MAS	SP-2-T	—	180 W LPS
C	15	—	4.6	SV-1-T	—	SP-1-T	—	180 W LPS
D	19-3-129	9.1	4.6	SV-2-TB	(3) MAS	—	—	180 W LPS
E	15	—	4.6	SV-1-T	—	—	—	180 W LPS
F	1-A	—	—	TV-1-T	—	—	—	—
G	1-A	—	—	TV-1-T	—	SP-2-T	—	—
H	17-2-129	6.1	—	SV-1-T	(1) MAS	—	—	—

EXISTING PHASE DIAGRAM

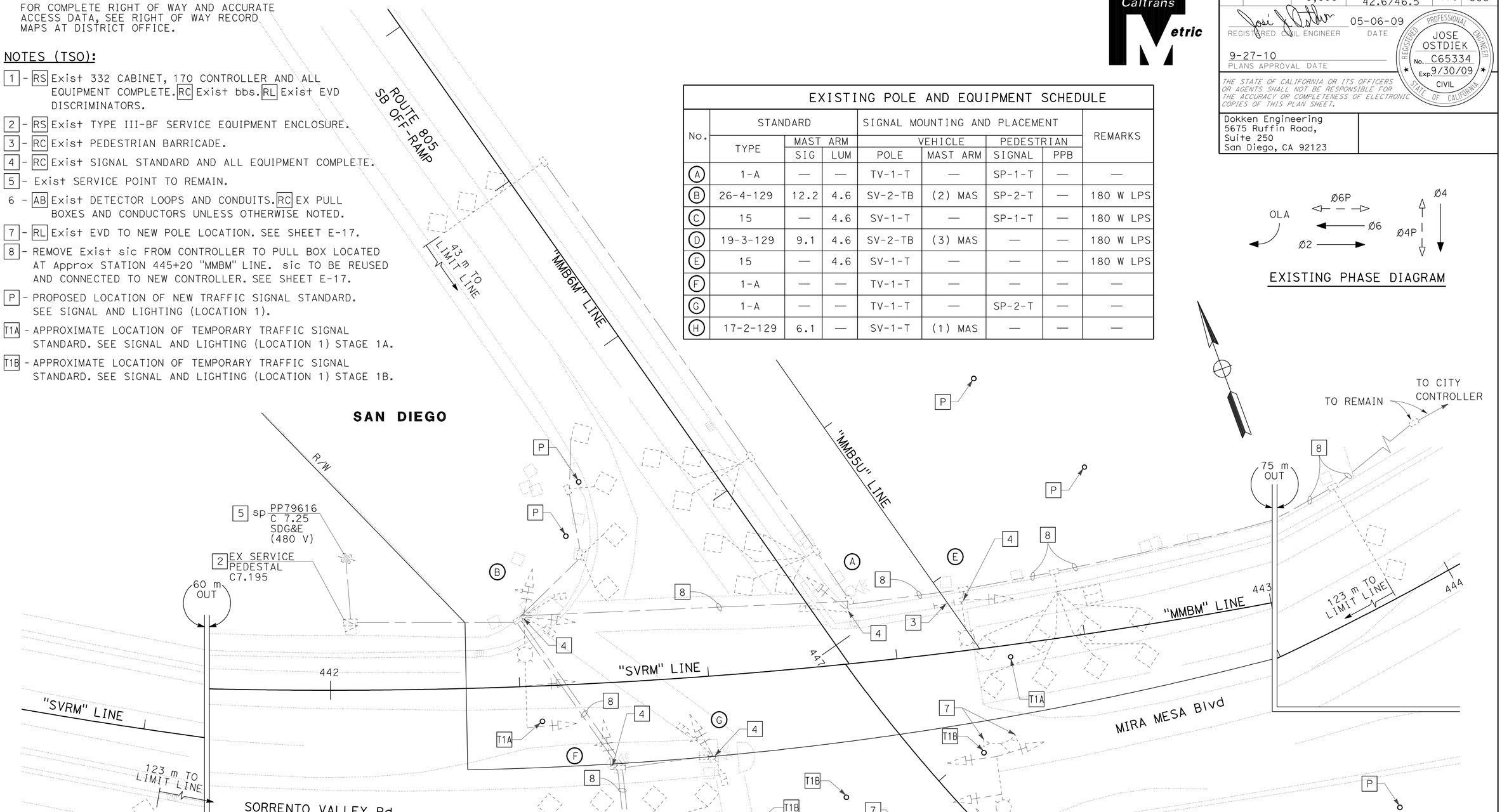

SIGNAL No. P27.193
SB ROUTE 805 OFF-RAMP/
MIRA MESA Blvd/SORRENTO VALLEY Rd

SIGNAL AND LIGHTING (LOCATION 1) EXISTING AND REMOVE

SCALE 1:200

E-16

THIS PLAN IS ACCURATE FOR ELECTRICAL WORK ONLY

ALL DIMENSIONS ARE IN METERS UNLESS OTHERWISE SHOWN

STATE OF CALIFORNIA - DEPARTMENT OF TRANSPORTATION

Caltrans

CONSULTANT FUNCTIONAL SUPERVISOR CHRIS JOHNSON

CALCULATED-DESIGNED BY JOHN MIKELL

CHECKED BY JOSE OSTDIEK

REVISED BY DATE REVISED

LAST REVISION 05-28-09

DATE PLOTTED => 29-SEP-2010
TIME PLOTTED => 14:47

DIST	COUNTY	ROUTE	KILOMETER POST TOTAL PROJECT	SHEET No.	TOTAL SHEETS
11	SD	5,805	R49.9/R51.7, 42.6/46.5	479	886

REGISTERED CIVIL ENGINEER 05-06-09 DATE

9-27-10
PLANS APPROVAL DATE

PROFESSIONAL ENGINEER REGISTERED JOSE OSTDIEK No. C65334 Exp. 9/30/09 CIVIL STATE OF CALIFORNIA

THE STATE OF CALIFORNIA OR ITS OFFICERS OR AGENTS SHALL NOT BE RESPONSIBLE FOR THE ACCURACY OR COMPLETENESS OF ELECTRONIC COPIES OF THIS PLAN SHEET.

Dokken Engineering
5675 Ruffin Road,
Suite 250
San Diego, CA 92123

Caltrans Metric

NOTE:
FOR COMPLETE RIGHT OF WAY AND ACCURATE ACCESS DATA, SEE RIGHT OF WAY RECORD MAPS AT DISTRICT OFFICE.

NOTES:
SEE SHEET E-18.

CONDUIT NOTES:
SEE SHEET E-18.

POLE AND EQUIPMENT SCHEDULE:
SEE SHEET E-18.

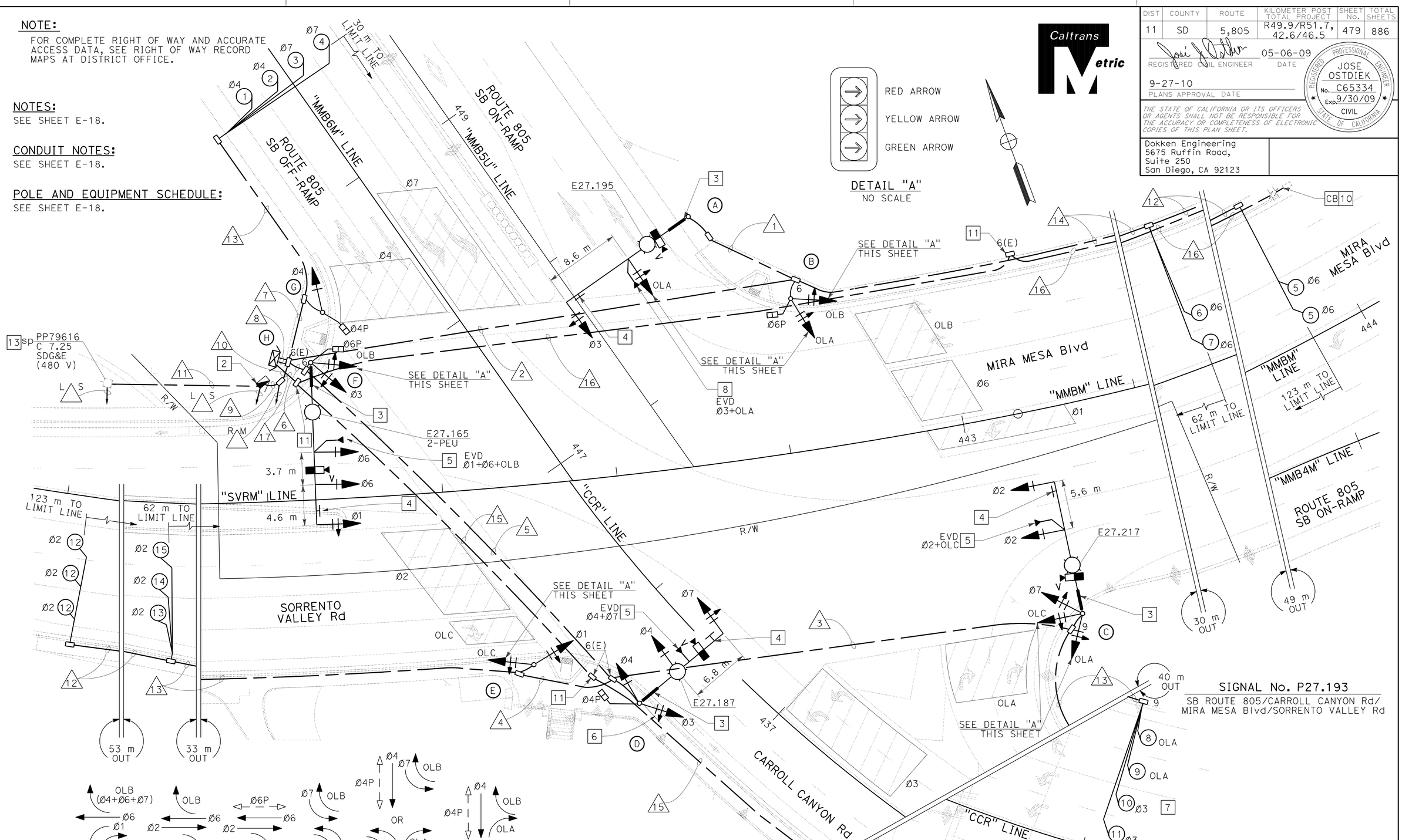

SIGNAL AND LIGHTING (LOCATION 1)

SCALE 1:200

E-17

THIS PLAN IS ACCURATE FOR ELECTRICAL WORK ONLY

ALL DIMENSIONS ARE IN METERS UNLESS OTHERWISE SHOWN

REVISED BY	DATE REVISED
JOHN MIKELL	JOSE OSTDIEK

CALCULATED-DESIGNED BY / CHECKED BY

SUPERVISOR: CHRIS JOHNSON — CONSULTANT FUNCTIONAL SUPERVISOR

STATE OF CALIFORNIA - DEPARTMENT OF TRANSPORTATION — Caltrans

LAST REVISION 05-28-09 — DATE PLOTTED => 29-SEP-2010 — TIME PLOTTED => 15:01

DIST	COUNTY	ROUTE	KILOMETER POST TOTAL PROJECT	SHEET No.	TOTAL SHEETS
11	SD	5,805	R49.9/R51.7, 42.6/46.5	480	886

REGISTERED CIVIL ENGINEER 05-06-09 DATE

9-27-10
PLANS APPROVAL DATE

REGISTERED PROFESSIONAL ENGINEER JOSE OSTDIEK No. C65334 Exp. 9/30/09 CIVIL STATE OF CALIFORNIA

THE STATE OF CALIFORNIA OR ITS OFFICERS OR AGENTS SHALL NOT BE RESPONSIBLE FOR THE ACCURACY OR COMPLETENESS OF ELECTRONIC COPIES OF THIS PLAN SHEET.

Dokken Engineering
5675 Ruffin Road,
Suite 250
San Diego, CA 92123

Caltrans Metric

NOTES (FOR SHEETS E-17 AND E-18):

1 - STATE-FURNISHED MODEL 170E CONTROLLER ASSEMBLY IN TYPE 332 CABINET. FURNISH AND INSTALL VDU, VIDEO DISPLAY AND COMMUNICATION CARD IN CABINET. RELOCATE EX EVD DISCRIMINATOR CARDS TO NEW CABINET. FURNISH AND INSTALL 1 NEW EVD DISCRIMINATION CARD.

2 - TYPE III-CF SERVICE EQUIPMENT ENCLOSURE. SEE WIRING DIAGRAM ON THIS SHEET.

3 - SIGN PANEL AND MOUNTING HARDWARE. (SEE SIGN PLANS FOR PANEL AND STREET NAME SIGN DETAILS)

4 - DETAIL "U" ES-7N REQUIRED. (SEE SIGN PLANS)

5 - RELOCATED EMERGENCY VEHICLE DETECTOR (EVD). MOUNTING PER STANDARD PLAN ES-4E.

6 - SV-1-T PHASE 3 SIGNAL HEAD MOUNTED AT 5.2 m ABOVE BASE PLATE.

7 - DETECTOR LOOPS 5 m FROM END OF BRIDGE APPROACH SLAB.

8 - FURNISH AND INSTALL 1 NEW EMERGENCY VEHICLE DETECTOR (EVD) PER STANDARD PLAN ES-4E.

9 - INTERCONNECT CONDUIT AND CABLE TO CONTROLLER CABINET Approx 221 m AWAY AT CARROLL CANYON ROAD AND THE BUSINESS ACCESS RAMP.

10 - EXTEND INTERCONNECT CONDUIT TO EX PULL BOX AT Approx STATION 445+20 "MMBM" LINE. SIC CONNECTS TO SIGNAL AT MIRA MESA Blvd AND VISTA SORRENTO Pkwy.

11 - EXTEND PULL BOX 50 mm (Min) BELOW THE BOTTOM OF CONDUIT. CONDUIT BENDS SHALL BE AT AN ANGLE OF 22.5° OR LESS.

12 - FURNISH AND INSTALL BATTERIES AND EXTERNAL BBS CABINET. SEE "CABINET HOUSING DETAILS" AND "FOUNDATION DETAILS" ON SHEET E-46.

13 - TWO TYPE H SERVICE RISER PER SDG&E REQUIREMENT.

CONDUIT NOTES (FOR SHEETS E-17 AND E-18):

9 - 53C, 2#8 (SIG), 2#8 (LTG-240 V), 4#14 (PEU) 4#6 (RM), 2#14 (TDC)

10 - 53C, 2#10 (LTG-240 V), 4#14 (PEU), 2#8 (SIG)

11 - 53C, MT (CONDUCTORS BY SDG&E)

12 - 53C, 1 DLC

13 - 53C, 4 DLC

14 - 53C, 3 DLC

15 - 53C, 1 SIC
53C, MT

16 - 53C, 1 sic (REUSED)

17 - 53C, 1 SIC,
1 sic (REUSED)
53C, MT

POLE AND EQUIPMENT SCHEDULE

No.	STANDARD TYPE	STANDARD MAST ARM SIG	STANDARD MAST ARM LUM	STANDARD PLACEMENT DIMENSIONS A	STANDARD PLACEMENT DIMENSIONS B	SIGNAL MOUNTING AND PLACEMENT VEHICLE POLE	VEHICLE MAST ARM	PEDESTRIAN SIGNAL	PEDESTRIAN PPB	REMARKS
A	29A-5-161	16.7	4.6	3.9	1.2	-	(1) MAT (1) MAS	-	-	310 W HPS
B	1-A	-	-	3.8	1.2	TV-2-T	-	SP-1-T	Ø6 →	
C	29A-5-161	15.2	4.6	***		SV-3-TB	(1) MAT (1) MAS	-	-	310 W HPS
D	26A-4-161	12.2	4.6	2.3	1.2	SV-1-T 6 SV-1-T	(1) MAT (1) MAS	SP-1-T	-	310 W HPS
E	1-A	-	-	0.8	1.2	TV-2-T	-	-	Ø4 →	
F	61A-5-100	18.3	4.6	4.7	1.2	SV-2-TD	(1) MAT (2) MAS	SP-1-T	← Ø4	310 W HPS, 2-PEU
G	1-A	-	-	9.2	1.2	TV-1-T	-	SP-1-T	Ø6 →	
H	STATE-FURNISHED MODEL 170E CONTROLLER ASSEMBLY.								1 12	

*** SEE RETAINING WALL 443R PLANS FOR ANCHORAGE DETAILS.

CONDUIT AND CONDUCTOR SCHEDULE

AWG SIZE OR CABLE TYPE	PHASE	POLE OR CIRCUIT	CONDUIT SIZE AND RUN 78 (1)	78 (2)	78 (3)	53 (4)	78 (5)	2-78 (6)	78 (7)	2-103 (8)
3CSC		POLE - A	- 1	- 1						1
		- B		1	1					1 1
		- C			2		2	2		2
		- D					2	2		2
		- E				1 1	1 1	1		1 1
		- F						1 2		1 2
		- G							1 1	1 1
12CSC										
TOTAL 3CSC / 12CSC			1	1 2	2	1 1	1 5	2 7	1 1	4 10
8		SIG								2
10		LTG (240 V)	2	2	2		2	2		
14		PEU						4		
TYPE B DLC										
	Ø2					4	4	4		4
	Ø3				2		2	2		2
	Ø4								2	2
	Ø6			3						3
	Ø7								2	2
	OLA				2		2	2		2
VCH	2+OLC				1		1	1		1
	4+7						1	1		1
	6+1+OLB							1		1
	3+OLA		1	1						1
EVD			1	1	1		2	3		4
TOTAL CONDUCTORS / CABLES			5	10	10	6	20	29	6	39

WIRING DIAGRAM

TYPE III-CF SERVICE EQUIPMENT ENCLOSURE SEE RSP ES-2C AND RSP ES-2F

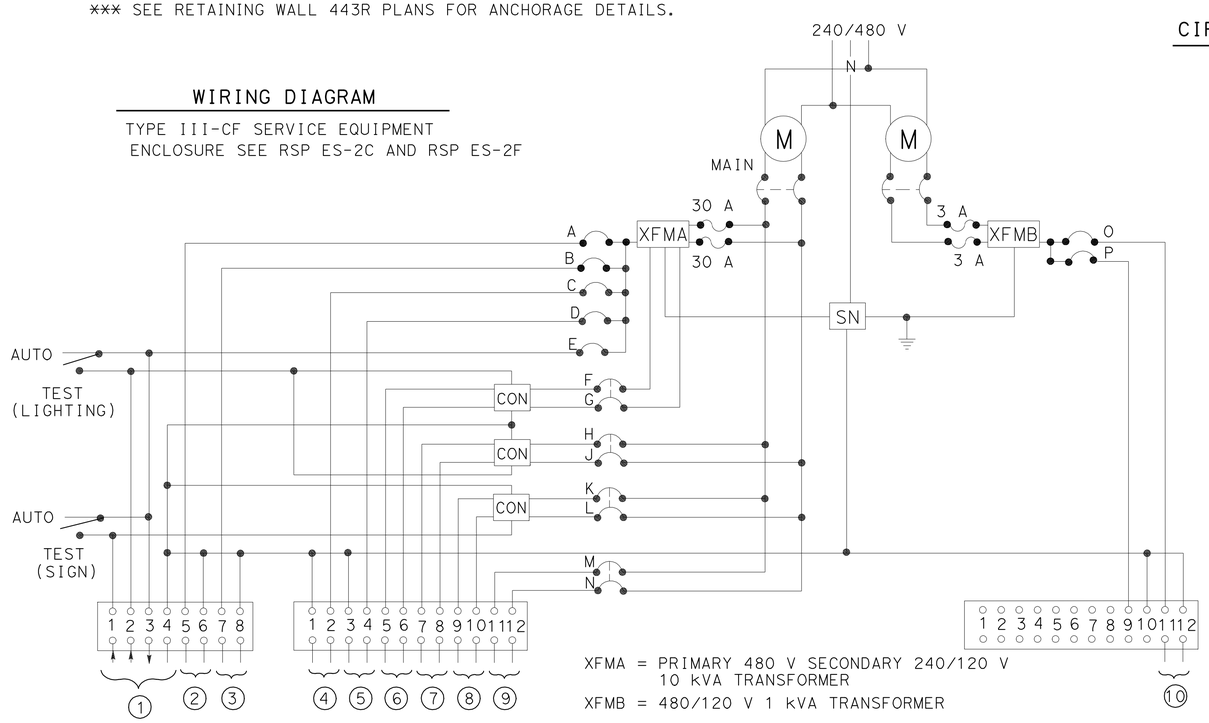

XFMA = PRIMARY 480 V SECONDARY 240/120 V
10 kVA TRANSFORMER

XFMB = 480/120 V 1 kVA TRANSFORMER

CIRCUIT BREAKERS

MAIN-2-2P-100 A
A-1P-30 A
B-1P-30 A
C-1P-50 A
D-1P-15 A
E-1P-15 A
F, G } 2P-30 A
H, J } 2P-30 A
K, L } 2P-30 A
M, N } 2P-50 A
O-1P-15 A
P-1P-15 A SPARE

1 - PEU
2 Z27.217
3 Z27.213
4 - SIGNAL
5 - TDC
6 - SIG AND RM LIGHTING
7 - HIGHWAY AND SOFFIT LTG
8 - SIGN ILLUMINATION
9 - SWITCH PEDESTAL
10 - IRRIGATION CONTROLLER

ALL DIMENSIONS ARE IN METERS UNLESS OTHERWISE SHOWN

SIGNAL No. P27.193
SB ROUTE 805/CARROLL CANYON Rd/
MIRA MESA Blvd/SORRENTO VALLEY Rd

SIGNAL AND LIGHTING (LOCATION 1)

NO SCALE

E-18

STATE OF CALIFORNIA - DEPARTMENT OF TRANSPORTATION
Caltrans

CONSULTANT FUNCTIONAL SUPERVISOR: CHRIS JOHNSON
CALCULATED-DESIGNED BY: JOHN MIKELL
CHECKED BY: JOSE OSTDIEK
REVISED BY / DATE REVISED

LAST REVISION 05-30-09
DATE PLOTTED => 29-SEP-2010
TIME PLOTTED => 14:48

DIST	COUNTY	ROUTE	KILOMETER POST TOTAL PROJECT	SHEET No.	TOTAL SHEETS
11	SD	5,805	R49.9/R51.7, 42.6/46.5	481	886

REGISTERED CIVIL ENGINEER 05-06-09 DATE

9-27-10
PLANS APPROVAL DATE

PROFESSIONAL ENGINEER REGISTERED JOSE OSTDIEK No. C65334 Exp. 9/30/09 CIVIL STATE OF CALIFORNIA

THE STATE OF CALIFORNIA OR ITS OFFICERS OR AGENTS SHALL NOT BE RESPONSIBLE FOR THE ACCURACY OR COMPLETENESS OF ELECTRONIC COPIES OF THIS PLAN SHEET.

Dokken Engineering
5675 Ruffin Road,
Suite 250
San Diego, CA 92123

Caltrans Metric

NOTES:
SEE SHEET E-20.

CONDUIT NOTES:
SEE SHEET E-20.

POLE AND EQUIPMENT SCHEDULE:
SEE SHEET E-20.

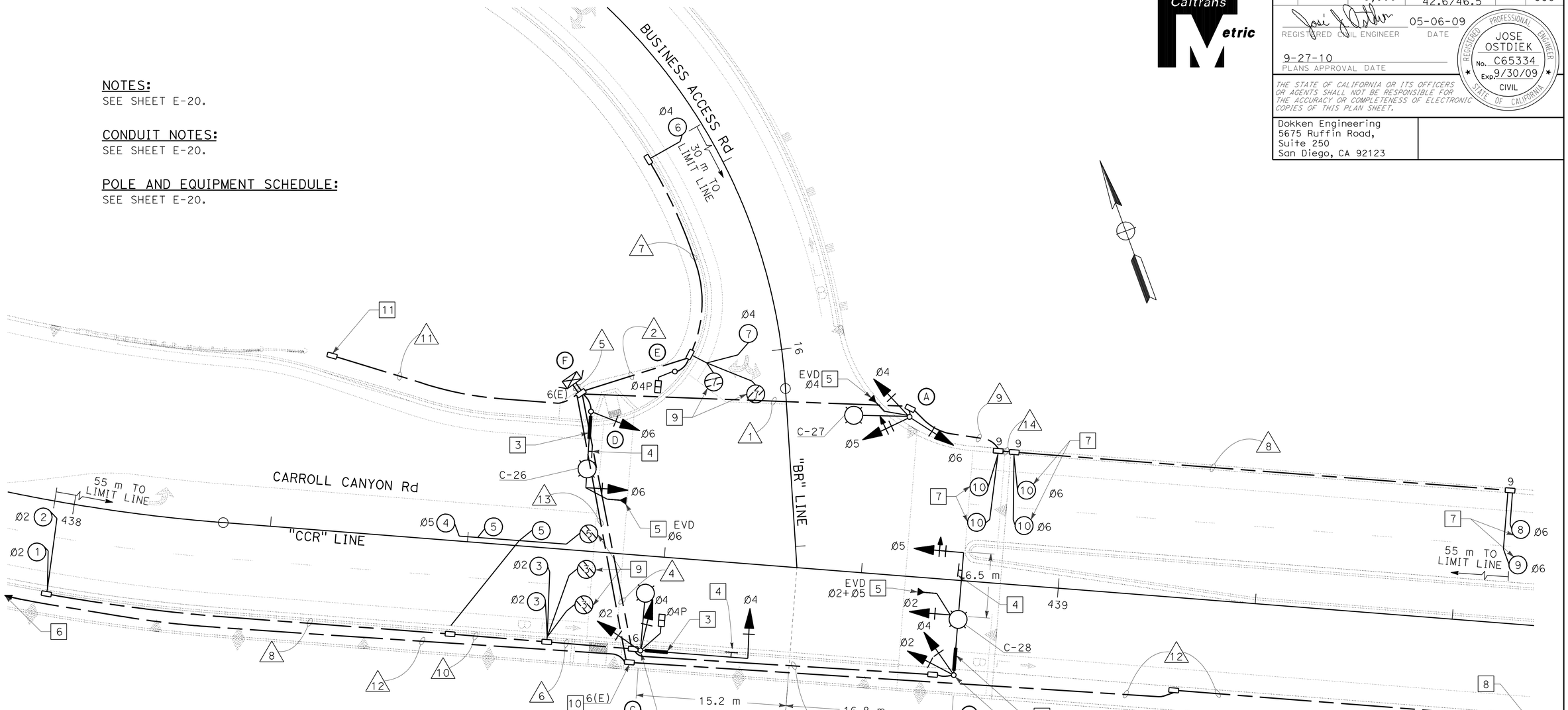

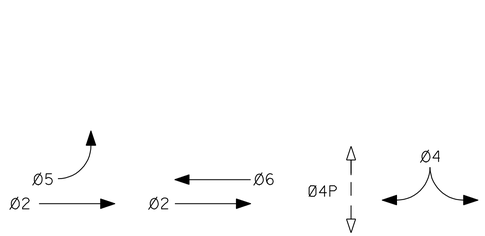

TRAFFIC PHASE DIAGRAM

CITY STREET SIGNAL
CARROLL CANYON Rd/
BUSINESS ACCESS Rd

SIGNAL AND LIGHTING
(CITY STREET LOCATION 1)

SCALE 1:200

E-19

THIS PLAN IS ACCURATE FOR ELECTRICAL WORK ONLY

ALL DIMENSIONS ARE IN METERS UNLESS OTHERWISE SHOWN

STATE OF CALIFORNIA - DEPARTMENT OF TRANSPORTATION
Caltrans

CONSULTANT FUNCTIONAL SUPERVISOR: CHRIS JOHNSON
CALCULATED-DESIGNED BY: JOHN MIKELL
CHECKED BY: JOSE OSTDIEK
REVISED BY / DATE REVISED

LAST REVISION 05-28-09
DATE PLOTTED => 29-SEP-2010
TIME PLOTTED => 14:48

DIST	COUNTY	ROUTE	KILOMETER POST TOTAL PROJECT	SHEET No.	TOTAL SHEETS
11	SD	5,805	R49.9/R51.7, 42.6/46.5	482	886

REGISTERED CIVIL ENGINEER 05-06-09 DATE

9-27-10
PLANS APPROVAL DATE

REGISTERED PROFESSIONAL ENGINEER JOSE OSTDIEK No. C65334 Exp. 9/30/09 CIVIL STATE OF CALIFORNIA

THE STATE OF CALIFORNIA OR ITS OFFICERS OR AGENTS SHALL NOT BE RESPONSIBLE FOR THE ACCURACY OR COMPLETENESS OF ELECTRONIC COPIES OF THIS PLAN SHEET.

Dokken Engineering
5675 Ruffin Road,
Suite 250
San Diego, CA 92123

Caltrans Metric

NOTES (FOR SHEETS E-19 AND E-20):

1 - INSTALL STATE-FURNISHED MODEL 170E CONTROLLER ASSEMBLY IN TYPE 332 CABINET. FURNISH AND INSTALL EVD DISCRIMINATOR CARDS.

2 - SEE RETAINING WALL 438R PLANS "SIGNAL IN SIDEWALK" SHEET FOR DETAIL.

3 - SIGN PANEL AND MOUNTING HARDWARE. (SEE SIGN PLANS FOR PANEL AND STREET NAME SIGN DETAILS).

4 - DETAIL "U" ES-7N REQUIRED. (SEE SIGN PLANS).

5 - EMERGENCY VEHICLE DETECTOR (EVD) PER STANDARD PLAN ES-4E.

6 - INTERCONNECT CONDUIT AND CABLE TO CONTROLLER CABINET Approx 200 m WEST AT CARROLL CANYON ROAD AND MIRA MESA BOULEVARD/Rte 805 SB RAMPS.

7 PREFORMED INDUCTIVE LOOPS ON BRIDGE DECK. SEE "BRIDGE ELECTRICAL DETAILS", SHEET E-50.

8 INTERCONNECT CONDUIT AND CABLE TO CONTROLLER CABINET Approx 350 m EAST AT CORROLL CANYON ROAD AND Rte 805 SB/NB DIRECT ACCESS RAMP (DAR).

9 MODIFIED TYPE E LIMIT LINE/CROSSWALK DETECTORS. SEE DETAIL 'E-MOD', SHEET E-43, FOR SAWCUT AND WINDING INFORMATION.

10 EXTEND PULL BOX 50 mm (Min) BELOW THE BOTTOM OF CONDUIT. CONDUIT BENDS SHALL BE AT AN ANGLE OF 22.5° OR LESS.

11 SEE SHEET E-2, FOR CONTINUATION.

12 FURNISH AND INSTALL BATTERIES AND EXTERNAL BBS CABINET. SEE "CABINET HOUSING DETAILS" AND "FOUNDATION DETAILS" ON SHEET E-46.

13 PLACE LUMINAIRE MAST ARM AT 90° TO SIGNAL MAST ARM.

CONDUIT NOTES (FOR SHEETS E-19 AND E-20):

6 - 53C, 5 DLC

7 - 53C, 1 DLC

8 - 53C, 2 DLC

9 - 53C, 3 DLC

10 - 53C, 4 DLC

11 - 53C, 2#4 (SIG-CITY LOC. 1), 2#10 (LTG-240 V CITY)

12 - 53C, 1 SIC
53C, MT

13 - 53C, 2 SIC

14 - 53C, 2 DLC
4 PAIR LOOP WIRES

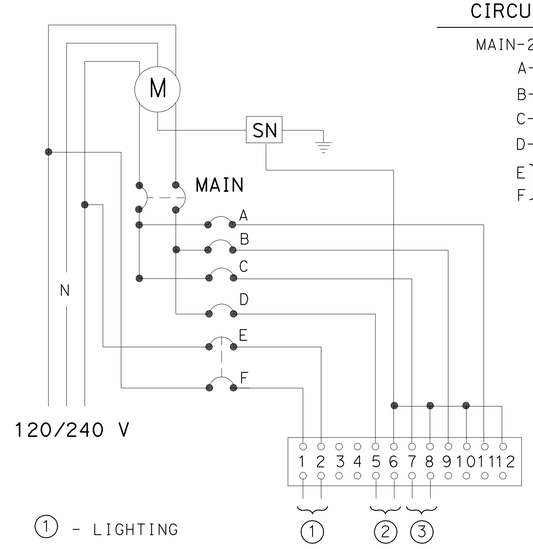

① - LIGHTING
② - SIGNAL (CITY)
③ - IRRIGATION (CITY)

WIRING DIAGRAM

TYPE III-BF SERVICE EQUIPMENT
ENCLOSURE SEE RSP ES-2C AND RSP ES-2E

CIRCUIT BREAKERS

MAIN-2P-100 A
A-1P-15 A - SPARE
B-1P-15 A - SPARE
C-1P-15 A
D-1P-50 A
E, F } 2P-30 A

CONDUIT AND CONDUCTOR SCHEDULE

AWG SIZE OR CABLE TYPE	PHASE	POLE OR CIRCUIT	CONDUIT SIZE AND RUN 78 (1)	53 (2)	78 (3)	78 (4)	2-103 (5)
3CSC / 12CSC		POLE - A	- / 2				- / 2
		- B			- / 2	- / 2	- / 2
		- C				1 / 1	1 / 1
		- D				-	1 / 1
		- E		- / 1			- / 1
TOTAL 3CSC / 12CSC			- / 2	- / 1	- / 2	1 / 3	2 / 7
10		LTG	2		2	2	
4		SIGNAL POWER					2
TYPE B DLC	Ø2					3	3
	Ø4			2			2
	Ø5					2	2
	Ø6		3				3
EVD			1		1	1	3
SIC							2
TOTAL CONDUCTORS / CABLES			8	3	5	12	26

POLE AND EQUIPMENT SCHEDULE

No.	STANDARD TYPE	STANDARD MAST ARM SIG	STANDARD MAST ARM LUM	STANDARD PLACEMENT DIMENSIONS A	STANDARD PLACEMENT DIMENSIONS B	SIGNAL MOUNTING AND PLACEMENT VEHICLE POLE	VEHICLE MAST ARM	PEDESTRIAN SIGNAL	PEDESTRIAN PPB	REMARKS
A	15TS	-	4.6	7.0	1.2	SV-3-TC	-	-	-	200 W HPS, TYPE IV PEC
B	26-4-161	12.2	4.6	2		SV-2-TD	(1) MAT (1) MAS	-	-	200 W HPS, TYPE IV PEC
C	24-3-161	10.7	4.6	2		SV-2-T	(1) MAS	SP-1-T	Ø4	200 W HPS, TYPE IV PEC 13
D	19-2-161	6.1	4.6	1.3	1.1	SV-1-T	(1) MAS		Ø4	200 W HPS, TYPE IV PEC
E	1-A	-	-	11.3	0.8	-	-	TP-1-T	-	
F	STATE-FURNISHED MODEL 170E CONTROLLER ASSEMBLY.									1 12

CITY STREET SIGNAL
CARROLL CANYON Rd/
BUSINESS ACCESS Rd

SIGNAL AND LIGHTING
(CITY STREET LOCATION 1)

NO SCALE

E-20

ALL DIMENSIONS ARE IN METERS UNLESS OTHERWISE SHOWN

REVISED BY | DATE REVISED
JOHN MIKELL | JOSE OSTDIEK
CALCULATED-DESIGNED BY | CHECKED BY
CONSULTANT FUNCTIONAL SUPERVISOR: CHRIS JOHNSON
STATE OF CALIFORNIA - DEPARTMENT OF TRANSPORTATION
Caltrans

LAST REVISION 05-30-09 | DATE PLOTTED => 29-SEP-2010 TIME PLOTTED => 14:48

DIST	COUNTY	ROUTE	KILOMETER POST TOTAL PROJECT	SHEET No.	TOTAL SHEETS
11	SD	5,805	R49.9/R51.7, 42.6/46.5	483	886

REGISTERED CIVIL ENGINEER 05-06-09 DATE

9-27-10
PLANS APPROVAL DATE

PROFESSIONAL ENGINEER REGISTERED JOSE OSTDIEK No. C65334 Exp. 9/30/09 CIVIL STATE OF CALIFORNIA

THE STATE OF CALIFORNIA OR ITS OFFICERS OR AGENTS SHALL NOT BE RESPONSIBLE FOR THE ACCURACY OR COMPLETENESS OF ELECTRONIC COPIES OF THIS PLAN SHEET.

Dokken Engineering
5675 Ruffin Road,
Suite 250
San Diego, CA 92123

Caltrans Metric

NOTE:
FOR COMPLETE RIGHT OF WAY AND ACCURATE ACCESS DATA, SEE RIGHT OF WAY RECORD MAPS AT DISTRICT OFFICE.

NOTES:
SEE SHEET E-22.

CONDUIT NOTES:
SEE SHEET E-22.

POLE AND EQUIPMENT SCHEDULE:
SEE SHEET E-22.

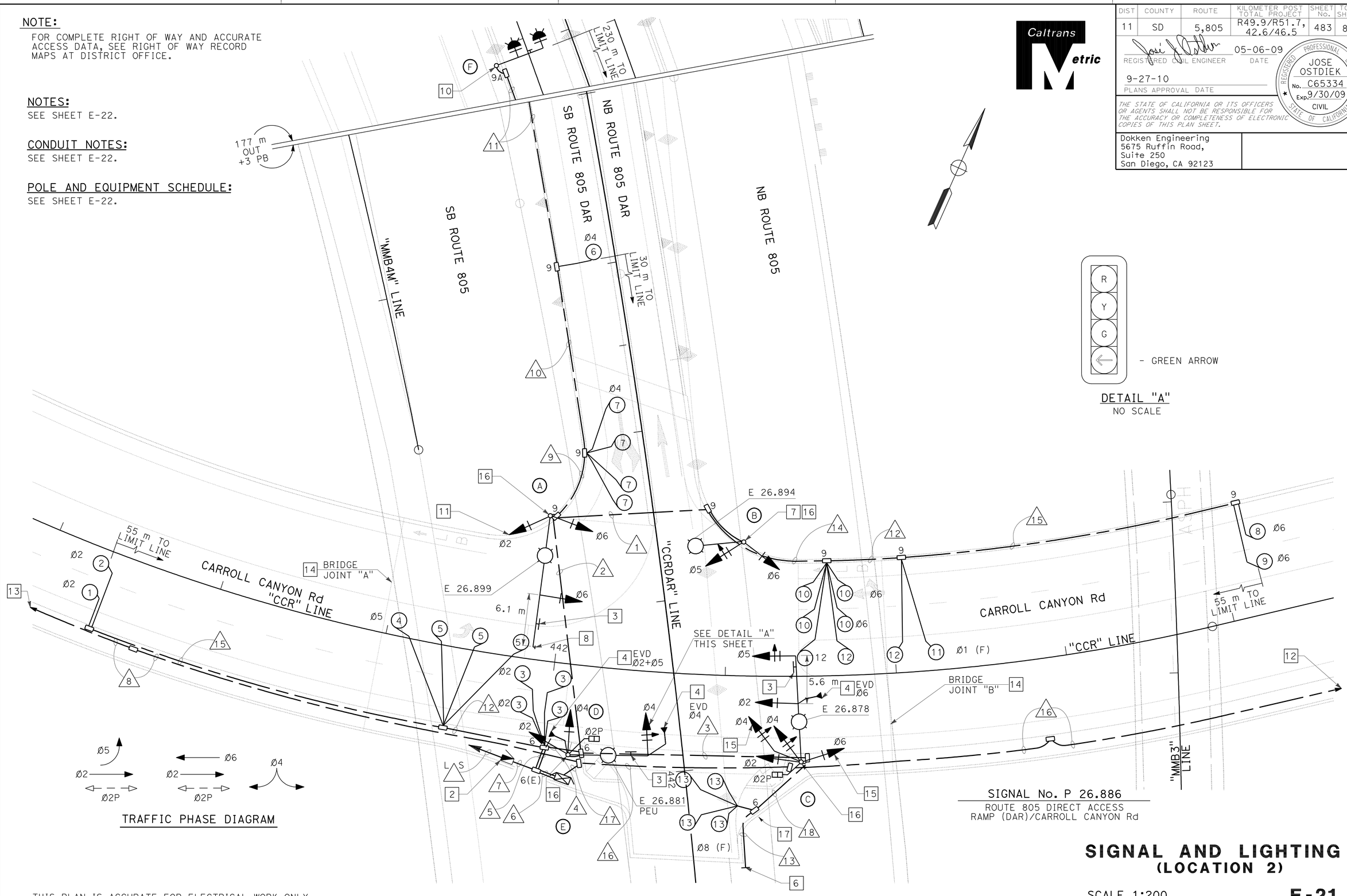

DETAIL "A"
NO SCALE

THIS PLAN IS ACCURATE FOR ELECTRICAL WORK ONLY

ALL DIMENSIONS ARE IN METERS UNLESS OTHERWISE SHOWN

SIGNAL AND LIGHTING (LOCATION 2)

SCALE 1:200

E-21

STATE OF CALIFORNIA - DEPARTMENT OF TRANSPORTATION
Caltrans

CONSULTANT FUNCTIONAL SUPERVISOR: CHRIS JOHNSON
CALCULATED-DESIGNED BY: JOHN MIKELL
CHECKED BY: JOSE OSTDIEK
REVISED BY / DATE REVISED

LAST REVISION 05-28-09 DATE PLOTTED => 29-SEP-2010 TIME PLOTTED => 15:04

DIST	COUNTY	ROUTE	KILOMETER POST TOTAL PROJECT	SHEET No.	TOTAL SHEETS
11	SD	5,805	R49.9/R51.7, 42.6/46.5	484	886

REGISTERED CIVIL ENGINEER 05-06-09 DATE

9-27-10
PLANS APPROVAL DATE

PROFESSIONAL ENGINEER REGISTERED JOSE OSTDIEK No. C65334 Exp. 9/30/09 CIVIL STATE OF CALIFORNIA

THE STATE OF CALIFORNIA OR ITS OFFICERS OR AGENTS SHALL NOT BE RESPONSIBLE FOR THE ACCURACY OR COMPLETENESS OF ELECTRONIC COPIES OF THIS PLAN SHEET.

Dokken Engineering
5675 Ruffin Road,
Suite 250
San Diego, CA 92123

Caltrans Metric

NOTES (FOR SHEETS E-21 AND E-22):

1. STATE-FURNISHED MODEL 170E CONTROLLER ASSEMBLY IN TYPE 332 CABINET. FURNISH AND INTALL EVD DISCRIMINATOR CARDS.
2. TYPE III-BF SERVICE EQUIPMENT ENCLOSURE. SEE WIRING DIAGRAM THIS SHEET. SEE STRUCTURE PLANS FOR ANCHORAGE.
3. DETAIL "U" ES-7N REQUIRED. (SEE SIGN PLANS)
4. EMERGENCY VEHICLE DETECTOR (EVD) PER STANDARD PLAN ES-4E.
5. ALL DETECTOR LOOPS SHALL BE PREFORMED INDUCTIVE LOOPS. SEE SHEET E-49.
6. CAPPED END OF SPARE 53C, PER RSP ES-9A DETAIL C. (FOR FUTURE USE)
7. CAP AT SIGNAL MAST ARM CONNECTION. (FOR FUTURE USE)
8. CAPPED-OFF TENON. (FOR FUTURE USE)
9. FURNISH AND INSTALL BATTERIES AND EXTERNAL BBS CABINET. SEE "CABINET HOUSING DETAILS" ON SHEET E-46.
10. TYPE 9B FLASHING BEACON PER RSP ES-7K. MOUNT ON BARRIER END BLOCK. SEE SIGN PLANS.
11. SV-1-T (Ø2) SIGNAL HEAD MOUNTED AT 5.2 m ABOVE BASE PLATE.
12. INTERCONNECT CONDUIT AND CABLE TO CONTROLLER CABINET Approx 330 m EAST AT CARROLL CANYON ROAD AND SCRANTON ROAD.
13. INTERCONNECT CONDUIT AND CABLE TO CONTROLLER CABINET Approx 350 m WEST AT CARROLL CANYON ROAD AND BUSINESS ACCESS ROAD.
14. SEE SHEET E-49 FOR INFORMATION.
15. SV-2-TA (Ø4 & Ø6) SIGNAL HEADS MOUNTED AT 5.2 m ABOVE BASE PLATE.
16. SEE CARROLL CANYON ROAD BRDIGE SIGN AND SIGNAL SUPPORT DETAILS (STRUCTURE PLANS) No. 2 AND 3 FOR PLACEMENT AND ANCHORAGE DETAILS.
17. COIL TWO 45 m LONG DLC IN PULL BOX FOR FUTURE USE.

CONDUIT NOTES (FOR SHEETS E-21 AND E-22):

7. - 53C, 2#6 (SIG), 2#10 (LTG-240 V), 3#14 (PEU), 2#14 (FB)
8. - 53C, 1 SIC 53C, MT
9. - 53C, 2 DLC, 2#14 (FB)
10. - 53C, 1 DLC, 2#14 (FB)
11. - 53C, 2#14 (FB)
12. - 53C, 3 DLC, 2 PAIRS LOOP WIRES
13. - 53C, MT
14. - 53C, 5 DLC
15. - 53C, 2 DLC
16. - 53C, 1 SIC
17. - 53C, 2 SIC
18. - 53C, 3 DLC (F)

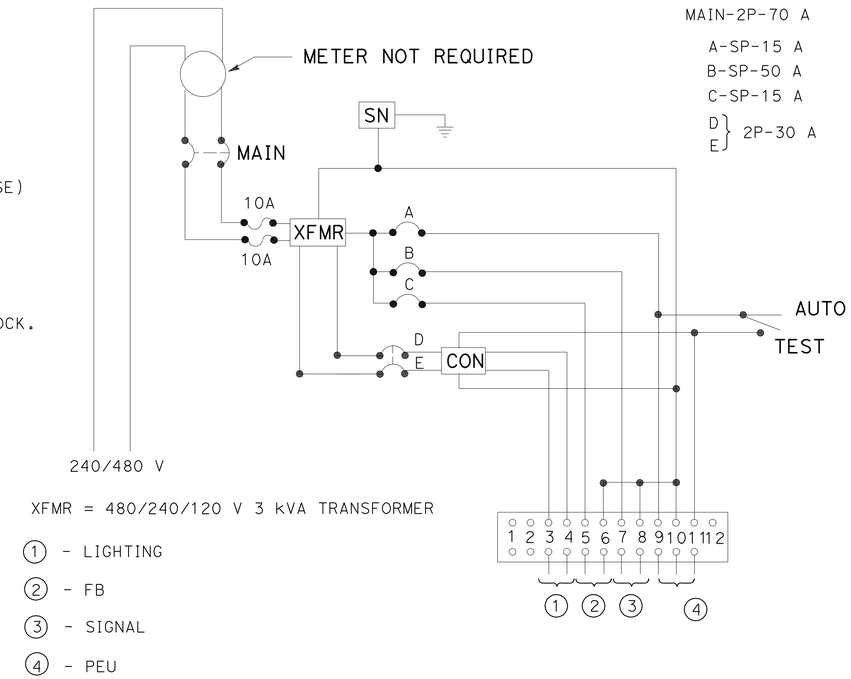

XFMR = 480/240/120 V 3 kVA TRANSFORMER

1 - LIGHTING
2 - FB
3 - SIGNAL
4 - PEU

CIRCUIT BREAKERS

MAIN-2P-70 A
A-SP-15 A
B-SP-50 A
C-SP-15 A
D, E } 2P-30 A

WIRING DIAGRAM

TYPE III-BF SERVICE EQUIPMENT ENCLOSURE SEE RSP ES-2C AND RSP ES-2E

CONDUIT AND CONDUCTOR SCHEDULE

AWG SIZE OR CABLE TYPE	PHASE	POLE OR CIRCUIT	CONDUIT SIZE AND RUN 53 (1)	78 (2)	78 (3)	2-78 (4)	2-78 (5)	2-78 (6)
3CSC		POLE - A	/	- / 2	/	- / 2	- / 2	- / 2
		- B	- / 2	- / 2	/	- / 2	- / 2	- / 2
		- C	/	/	1 / 2	1 / 2	1 / 2	1 / 2
		- D	/	/	/	1 / 1	1 / 1	1 / 1
12CSC								
TOTAL 3CSC / 12CSC			- / 2	- / 4	1 / 2	2 / 7	2 / 7	2 / 7
6		SIG						2
10		LTG (240 V)	2	2	2	2	2	
14		PEU				3	3	
14		FB		2		2	2	
TYPE B DLC	Ø2						3	3
	Ø5						2	2
	Ø6		3	3		3	3	3
	Ø4			2		2	2	2
	Ø1	FUTURE	2	2		2	2	2
	Ø8	FUTURE			3	3	3	3
EVD					1	3	3	3
TOTAL CONDUCTORS / CABLES			9	15	9	29	34	29

POLE AND EQUIPMENT SCHEDULE

No.	STANDARD TYPE	STANDARD MAST ARM SIG	STANDARD MAST ARM LUM	STANDARD PLACEMENT DIMENSIONS A	B	SIGNAL MOUNTING AND PLACEMENT VEHICLE POLE	VEHICLE MAST ARM	PEDESTRIAN SIGNAL	PEDESTRIAN PPB	REMARKS
A	29-5-161	15.2	4.6	16		SV-1-T 11 SV-1-T	8	-	-	200 W HPS
B	19-3-161	7	4.6			SV-2-TA	-	-	-	200 W HPS
C	26-4-161	12.2	4.6			SV-2-TA 15 SV-2-TA	(1) MAT (1) MAS	SP-1-T	Ø2 →	200 W HPS
D	19-3-161	9.1	4.6			SV-2-TA	(1) MAS-4B	SP-1-T	← Ø2	200 W HPS, PEU
E	STATE-FURNISHED MODEL 170E CONTROLLER ASSEMBLY.									1 9 SEE STRUCTURE PLANS FOR ANCHORAGE.
F	TYPE 9B FLASHING BEACON PER RSP ES-7K.									

SIGNAL No. P 26.886
ROUTE 805 DIRECT ACCESS RAMP (DAR)/CARROLL CANYON Rd

ALL DIMENSIONS ARE IN METERS UNLESS OTHERWISE SHOWN

SIGNAL AND LIGHTING
(LOCATION 2)

NO SCALE

E-22

STATE OF CALIFORNIA - DEPARTMENT OF TRANSPORTATION
Caltrans

CONSULTANT FUNCTIONAL SUPERVISOR: CHRIS JOHNSON
CALCULATED-DESIGNED BY: JOHN MIKELL
CHECKED BY: JOSE OSTDIEK
REVISED BY / DATE REVISED

LAST REVISION 05-30-09
DATE PLOTTED => 29-SEP-2010
TIME PLOTTED => 14:48

DIST	COUNTY	ROUTE	KILOMETER POST TOTAL PROJECT	SHEET No.	TOTAL SHEETS
11	SD	5,805	R49.9/R51.7, 42.6/46.5	485	886

REGISTERED CIVIL ENGINEER — DATE 05-06-09

PLANS APPROVAL DATE 9-27-10

PROFESSIONAL ENGINEER — REGISTERED — JOSE OSTDIEK — No. C65334 — Exp. 9/30/09 — CIVIL — STATE OF CALIFORNIA

THE STATE OF CALIFORNIA OR ITS OFFICERS OR AGENTS SHALL NOT BE RESPONSIBLE FOR THE ACCURACY OR COMPLETENESS OF ELECTRONIC COPIES OF THIS PLAN SHEET.

Dokken Engineering
5675 Ruffin Road,
Suite 250
San Diego, CA 92123

Caltrans Metric

NOTE:

FOR COMPLETE RIGHT OF WAY AND ACCURATE ACCESS DATA, SEE RIGHT OF WAY RECORD MAPS AT DISTRICT OFFICE.

NOTES:

SEE SHEET E-24.

CONDUIT NOTES:

SEE SHEET E-24.

POLE AND EQUIPMENT SCHEDULE:

SEE SHEET E-24.

PROPOSED PHASE DIAGRAM

SAN DIEGO

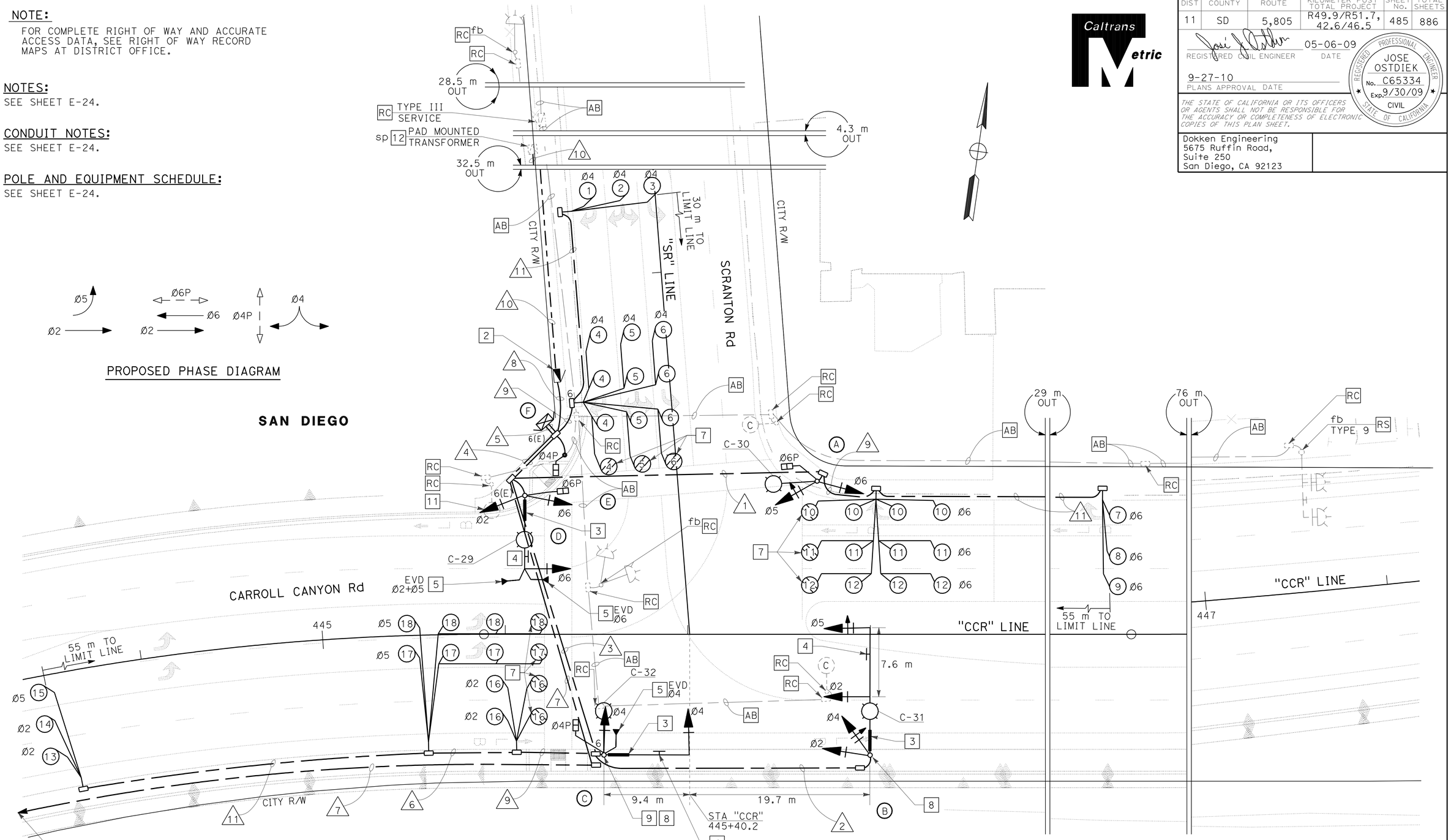

CITY STREET SIGNAL

CARROLL CANYON Rd/SCRANTON Rd

SIGNAL AND LIGHTING (CITY STREET LOCATION 2)

SCALE 1:200

E-23

THIS PLAN IS ACCURATE FOR ELECTRICAL WORK ONLY

ALL DIMENSIONS ARE IN METERS UNLESS OTHERWISE SHOWN

REVISED BY	DATE REVISED

JOHN MIKELL — JOSE OSTDIEK

CALCULATED-DESIGNED BY — CHECKED BY

CONSULTANT FUNCTIONAL SUPERVISOR — CHRIS JOHNSON

STATE OF CALIFORNIA - DEPARTMENT OF TRANSPORTATION

Caltrans

LAST REVISION 05-28-09 — DATE PLOTTED => 29-SEP-2010 — TIME PLOTTED => 14:48

DIST	COUNTY	ROUTE	KILOMETER POST TOTAL PROJECT	SHEET No.	TOTAL SHEETS
11	SD	5,805	R49.9/R51.7, 42.6/46.5	486	886

REGISTERED CIVIL ENGINEER 05-06-09 DATE

9-27-10
PLANS APPROVAL DATE

REGISTERED PROFESSIONAL ENGINEER JOSE OSTDIEK No. C65334 Exp. 9/30/09 CIVIL STATE OF CALIFORNIA

THE STATE OF CALIFORNIA OR ITS OFFICERS OR AGENTS SHALL NOT BE RESPONSIBLE FOR THE ACCURACY OR COMPLETENESS OF ELECTRONIC COPIES OF THIS PLAN SHEET.

Dokken Engineering
5675 Ruffin Road,
Suite 250
San Diego, CA 92123

Caltrans Metric

NOTES (FOR SHEETS E-23 AND E-24):

1. INSTALL STATE-FURNISHED MODEL 170E CONTROLLER ASSEMBLY IN TYPE 332 CABINET. FURNISH AND INSTALL EVD DISCRIMINATOR CARDS.
2. TYPE III-BF SERVICE EQUIPMENT ENCLOSURE. SEE WIRING DIAGRAM ON THIS SHEET.
3. SIGN PANEL AND MOUNTING HARDWARE. (SEE SIGN PLANS FOR PANEL INFORMATION AND STREET NAME SIGN DETAILS)
4. DETAIL "U" ES-7N REQUIRED. (SEE SIGN PLANS)
5. EMERGENCY VEHICLE DETECTOR (EVD) PER STANDARD PLAN ES-4E.
6. INTERCONNECT CONDUIT AND CABLE TO CONTROLLER CABINET Approx 330 m EAST AT CARROLL CANYON ROAD AND Rte 805 SB/NB ON/OFF-RAMPS.
7. MODIFIED TYPE E LIMIT LINE/CROSSWALK DETECTORS. SEE DETAIL 'E-MOD', SHEET E-43, FOR SAWCUT AND WINDING INFORMATION.
8. SEE RETAINING WALL 445R FOR SIGNAL POLE LOCATION AND FOUNDATION DETAILS.
9. PLACE LUMINAIRE MAST ARM AT 90° TO SIGNAL MAST ARM.
10. FURNISH AND INSTALL BATTERIES AND EXTERNAL BBS CABINET. SEE "CABINET HOUSING DETAILS" AND "FOUNDATION DETAILS" ON SHEET E-46.
11. MOUNT PHASE 2 SIGNAL HEAD 5.2 m ABOVE BASE PLATE.
12. CONDUIT TO ENTER PER SDG&E REQUIREMENT.

CONDUIT NOTES (FOR SHEETS E-23 AND E-24):

6 - 53C, 5 DLC

7 - 53C, 1 SIC

8 - 53C, 2#10 (LTG), 2#6 (SIG)

9 - 53C, 6 DLC

10 - 53C, MT (CONDUCTORS BY SDG&E)

11 - 53C, 3 DLC

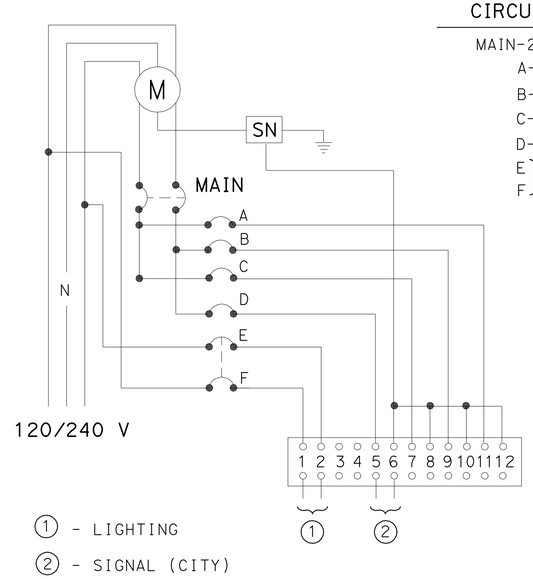

1 - LIGHTING

2 - SIGNAL (CITY)

WIRING DIAGRAM

TYPE III-BF SERVICE EQUIPMENT ENCLOSURE SEE RSP ES-2C AND RSP ES-2E

CIRCUIT BREAKERS

MAIN-2P-100 A
A-1P-15 A - SPARE
B-1P-15 A - SPARE
C-1P-15 A - SPARE
D-1P-50 A
E, F } 2P-30 A

POLE AND EQUIPMENT SCHEDULE

No.	STANDARD TYPE	STANDARD MAST ARM SIG	STANDARD MAST ARM LUM	STANDARD PLACEMENT DIMENSIONS A	STANDARD PLACEMENT DIMENSIONS B	SIGNAL MOUNTING AND PLACEMENT VEHICLE POLE	VEHICLE MAST ARM	PEDESTRIAN SIGNAL	PEDESTRIAN PPB	REMARKS
A	15TS	-	4.6	4.4	0.8	SV-2-TA	-	SP-1-T	Ø6 →	200 W HPS, TYPE IV PEC
B	26-4-161	13.7	4.6	SEE PLAN	8	SV-2-TD	(1) MAS (1) MAS	-	-	200 W HPS, TYPE IV PEC
C	19-3-161	9.1	3.7	SEE PLAN	8	SV-1-T	(1) MAS	SP-1-T	← Ø4	200 W HPS, TYPE IV PEC 9
D	19-3-161	7.6	4.6	4.4	1.2	SV-1-T SV-1-T 11	(1) MAS	SP-1-T	← Ø4	200 W HPS, TYPE IV PEC
E	1-A	-	-	4.4	1.2	-	-	SP-1-T	Ø6 →	
F	STATE-FURNISHED MODEL 170E CONTROLLER ASSEMBLY.									1 10

CONDUIT AND CONDUCTOR SCHEDULE

AWG SIZE OR CABLE TYPE	PHASE	POLE OR CIRCUIT	CONDUIT SIZE AND RUN 78 (1)	78 (2)	78 (3)	2-103 (4)	2-103 (5)
3CSC		POLE - A	1 / 1			1 / 1	1 / 1
		- B		- / 2	- / 2	- / 2	- / 2
		- C			1 / 1	1 / 1	1 / 1
		- D				1 / 1	1 / 1
		- E					1 / 1
12CSC							
TOTAL 3CSC / 12CSC			1 / 1	- / 2	1 / 3	3 / 5	4 / 6
6		SIGNAL POWER					2
10		LTG	2	2	2	2	
TYPE B DLC	Ø2				3	3	3
	Ø4						6
	Ø5				3	3	3
	Ø6		6			6	6
EVD					1	3	3
SIC						1	1
TOTAL CONDUCTORS / CABLES			10	4	13	26	34

CITY STREET SIGNAL
CARROLL CANYON Rd/SCRANTON Rd

ALL DIMENSIONS ARE IN METERS UNLESS OTHERWISE SHOWN

SIGNAL AND LIGHTING (CITY STREET LOCATION 2)

NO SCALE

E-24

STATE OF CALIFORNIA - DEPARTMENT OF TRANSPORTATION
Caltrans

CONSULTANT FUNCTIONAL SUPERVISOR CHRIS JOHNSON
CALCULATED-DESIGNED BY JOHN MIKELL
CHECKED BY JOSE OSTDIEK
REVISED BY
DATE REVISED

LAST REVISION 05-30-09
DATE PLOTTED => 29-SEP-2010
TIME PLOTTED => 14:48

DIST	COUNTY	ROUTE	KILOMETER POST TOTAL PROJECT	SHEET No.	TOTAL SHEETS
11	SD	5,805	R49.9/R51.7, 42.6/46.5	487	886

REGISTERED CIVIL ENGINEER 05-06-09 DATE

9-27-10
PLANS APPROVAL DATE

PROFESSIONAL ENGINEER REGISTERED JOSE OSTDIEK No. C65334 Exp. 9/30/09 CIVIL STATE OF CALIFORNIA

THE STATE OF CALIFORNIA OR ITS OFFICERS OR AGENTS SHALL NOT BE RESPONSIBLE FOR THE ACCURACY OR COMPLETENESS OF ELECTRONIC COPIES OF THIS PLAN SHEET.

Dokken Engineering
5675 Ruffin Road,
Suite 250
San Diego, CA 92123

Caltrans Metric

CONDUIT AND CONDUCTOR SCHEDULE

CABLE/ AWG SIZE	CIRCUIT ID	CONDUIT SIZE AND RUN NUMBER										
		2-78 △1	53 △2	78 △3	78 △4	53 △5	53 △6	78 △7	53 △8	53 △9	53 △10	53 △11
6	RM POWER	2		2					2	2		2
8	LTG		2	2					2	2		2
14	FB	2		2					2	2		
12CSC	Std M	1	1									
DLC	DETECTORS ML	11		11	11	11	11	5				
	D	3		3	1	1			2			
	P	3		3	1							
	Q	3		3					3	3		
	OR											
OCC	RM (LOCATION 2)										1	
SIC	RM (LOCATION 2)										1	
TOTAL CONDUCTORS/CABLES		25	3	26	13	12	11	5	11	9	2	4

NOTE: FOR COMPLETE RIGHT OF WAY AND ACCURATE ACCESS DATA, SEE RIGHT OF WAY RECORD MAPS AT DISTRICT OFFICE.

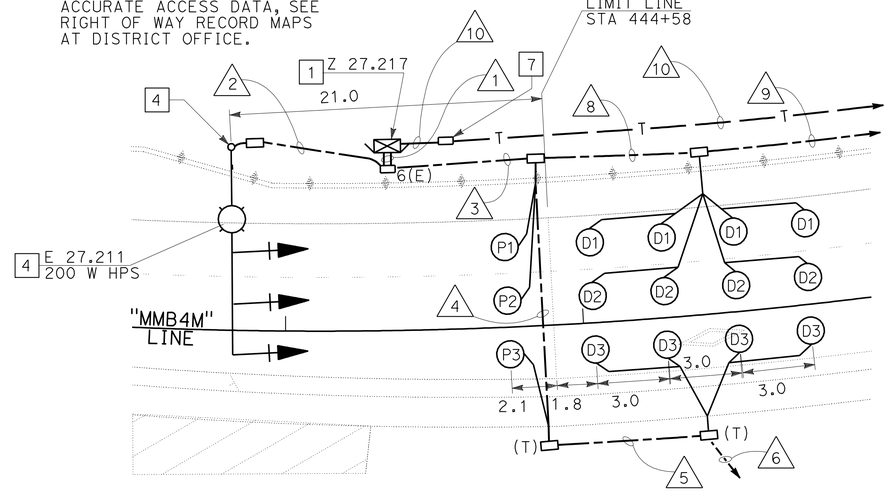

DETAIL "RM 1"
NO SCALE

NOTES (TSO):

1. STATE-FURNISHED MODEL 170 CONTROLLER ASSEMBLY IN MODEL 334 CABINET. CONSTRUCT FOUNDATION PER RSP ES-3C.
2. SEE SHEET E-26 FOR CONTINUATION.
3. TYPE 1-A FB. SEE DETAIL 'FB' SHEET E-42.
4. SEE DETAIL 'A' ON SHEET E-42.
5. SEE SHEETS E-17 AND E-18, FOR INFORMATION.
6. INSTALL MODIFIED TYPE A LOOP DETECTORS. SEE DETAIL 'MLA' ON SHEET E-43.
7. 22° CONDUIT SWEEPS FOR FUTURE FIBER OPTICS.

CONDUIT NOTES (TSO):

△12 - 53C, 3 DLC (ML)

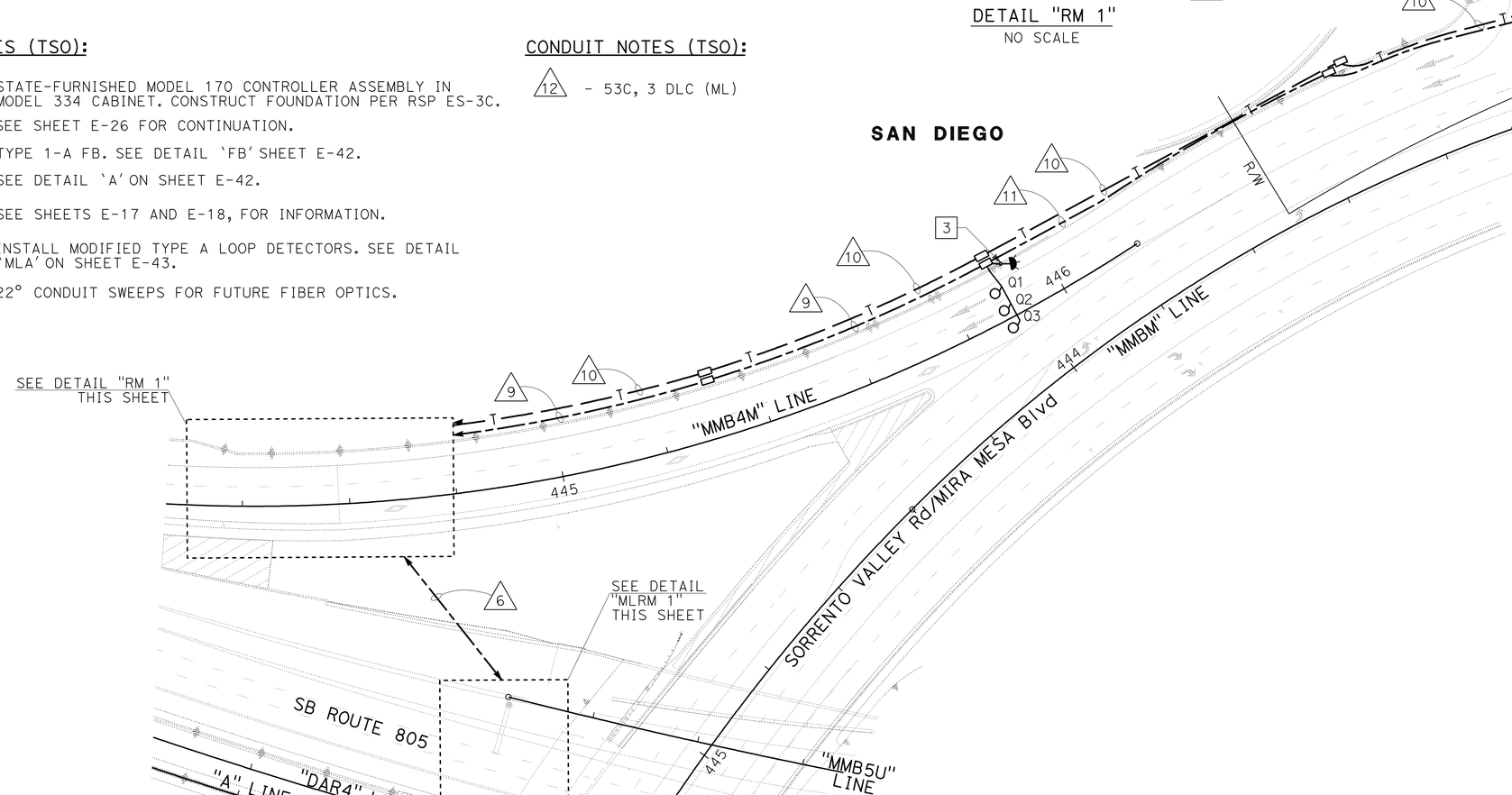

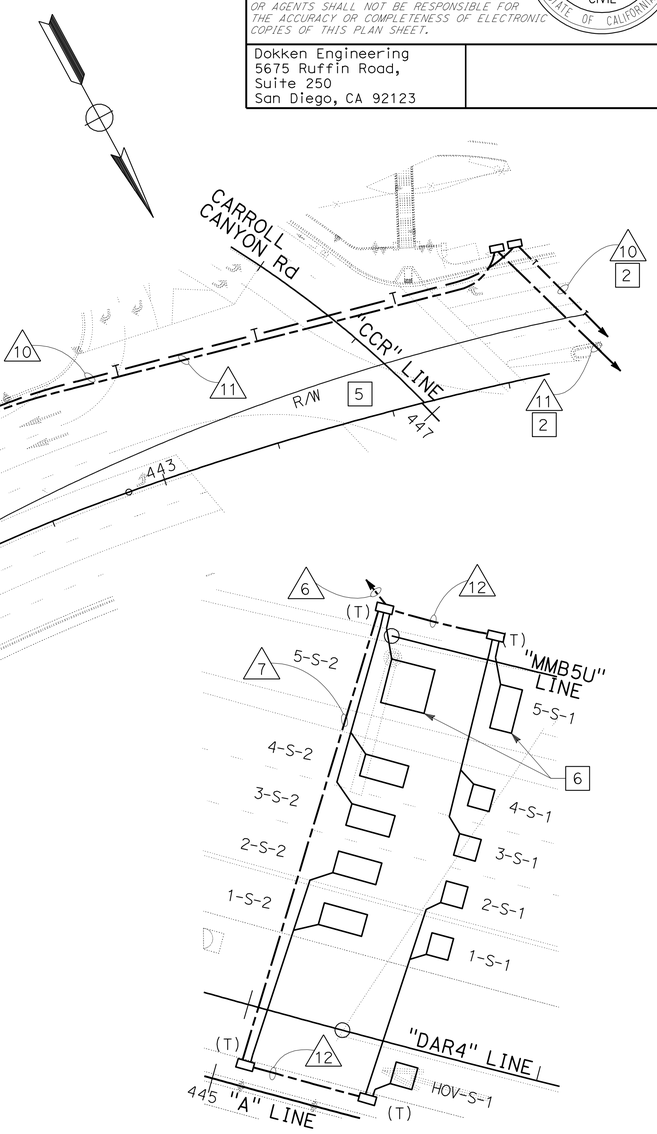

DETAIL "MLRM 1"
(SEE DETAIL "ML" SHEET E-43)
NO SCALE

RAMP METERING SYSTEM
(LOCATION 1)

SCALE 1:500

E-25

THIS PLAN IS ACCURATE FOR ELECTRICAL WORK ONLY

ALL DIMENSIONS ARE IN METERS UNLESS OTHERWISE SHOWN

REVISED BY	DATE REVISED
JOHN MIKELL	JOSE OSTDIEK

CALCULATED-DESIGNED BY / CHECKED BY

CONSULTANT FUNCTIONAL SUPERVISOR: CHRIS JOHNSON

STATE OF CALIFORNIA - DEPARTMENT OF TRANSPORTATION
Caltrans

LAST REVISION 05-30-09 | DATE PLOTTED => 29-SEP-2010 | TIME PLOTTED => 14:48

DIST	COUNTY	ROUTE	KILOMETER POST TOTAL PROJECT	SHEET No.	TOTAL SHEETS
11	SD	5,805	R49.9/R51.7, 42.6/46.5	488	886

REGISTERED CIVIL ENGINEER 05-06-09 DATE

9-27-10
PLANS APPROVAL DATE

REGISTERED PROFESSIONAL ENGINEER JOSE OSTDIEK No. C65334 Exp. 9/30/09 CIVIL STATE OF CALIFORNIA

THE STATE OF CALIFORNIA OR ITS OFFICERS OR AGENTS SHALL NOT BE RESPONSIBLE FOR THE ACCURACY OR COMPLETENESS OF ELECTRONIC COPIES OF THIS PLAN SHEET.

Dokken Engineering
5675 Ruffin Road,
Suite 250
San Diego, CA 92123

Caltrans Metric

CONDUIT AND CONDUCTOR SCHEDULE

CABLE/ AWG SIZE	CIRCUIT ID	CONDUIT SIZE AND RUN NUMBER										
		2-78 △1	78 △2	53 △3	78 △4	53 △5	53 △6	53 △7	53 △8	78 △9	53 △10	53 △11
6	RM POWER	2		2								2
8	LTG		2	2								2
14	FB	2		2								2
12CSC	Std M	1	1									
DLC	DETECTORS ML	12		12	12			12	9	6	3	
	D	3		3	1	1						2
	P	3		3	1							
	Q	3		3								3
	OR	2		2			2					2
TOTAL CONDUCTORS/CABLES		28	3	29	14	1	2	12	9	6	3	13

NOTES (TSO):

1. STATE-FURNISHED MODEL 170 CONTROLLER ASSEMBLY IN MODEL 334 CABINET. CONSTRUCT FOUNDATION PER RSP ES-3C.
2. SEE SHEETS E-17 AND E-18, FOR DETAILS.
3. TYPE 1-A FB. SEE DETAIL 'FB' SHEET E-42.
4. SEE DETAIL 'B' ON SHEET E-42.
5. TYPE A TELEPHONE DEMARCATION CABINET (TDC). FOR DETAILS SEE RSP ES-3D.
6. SEE SHEET E-25, FOR CIRCUIT CONTINUITY.
7. SEE SHEETS E-17 AND E-18, FOR INTERSECTION DETAILS.
8. 22° CONDUIT SWEEPS FOR FUTURE FIBER OPTICS.
9. TYPE H CONDUIT RISER PER AT&T REQUIREMNETS.

CONDUIT NOTES (TSO):

△12 - 53C, 2#6 (RM POWER), 2#8 (LTG), 2#14 (FB), 3 DLC (Q), 2 DLC (OR)

△13 - 53C, 2#6 (RM POWER), 2#8 (LTG)

△14 - 41C, MT (CONDUCTORS BY AT&T)

△15 - 53C, 2#6 (RM POWER), 2#8 (LTG), 2#14 (TDC)

△16 - 53C, 2#14 (TDC)

△17 - 53C, 1 OCC, 2 SIC

△18 - 53C, 2#6 (RM POWER), 2#8 (LTG), 2#14 (FB), 3 DLC (Q)

△19 - 53C, 1 SIC (TELEPHONE)

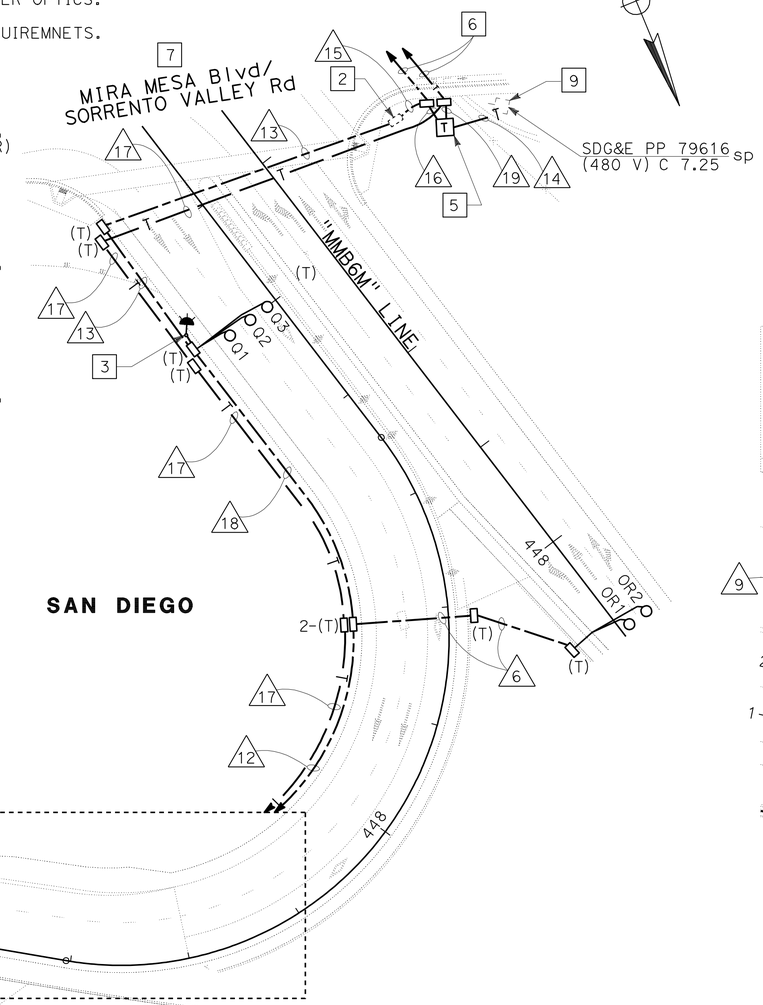

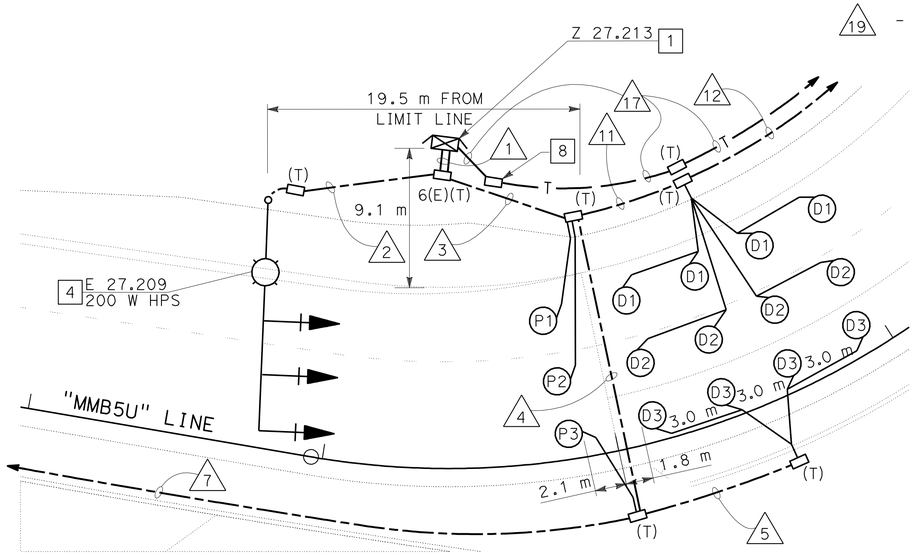

DETAIL "RM 2"
(SEE DETAIL 'B' SHEET E-42)
NO SCALE

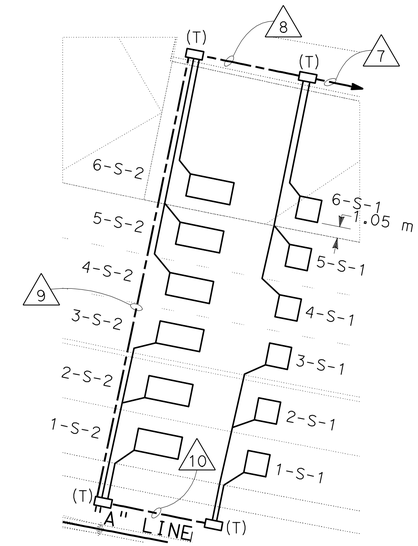

DETAIL "MLRM 2"
(SEE DETAIL "ML" SHEET E-43)
NO SCALE

THIS PLAN IS ACCURATE FOR ELECTRICAL WORK ONLY

ALL DIMENSIONS ARE IN METERS UNLESS OTHERWISE SHOWN

RAMP METERING SYSTEM
(LOCATION 2)

SCALE 1:500

E-26

STATE OF CALIFORNIA - DEPARTMENT OF TRANSPORTATION
Caltrans

CONSULTANT FUNCTIONAL SUPERVISOR: CHRIS JOHNSON
CALCULATED-DESIGNED BY: JOHN MIKELL
CHECKED BY: JOSE OSTDIEK
REVISED BY / DATE REVISED

LAST REVISION 05-28-09
DATE PLOTTED => 29-SEP-2010
TIME PLOTTED => 14:49

DIST	COUNTY	ROUTE	KILOMETER POST TOTAL PROJECT	SHEET No.	TOTAL SHEETS
11	SD	5,805	R49.9/R51.7, 42.6/46.5	489	886

REGISTERED CIVIL ENGINEER 05-06-09 DATE

9-27-10
PLANS APPROVAL DATE

REGISTERED PROFESSIONAL ENGINEER JOSE OSTDIEK No. C65334 Exp. 9/30/09 CIVIL STATE OF CALIFORNIA

THE STATE OF CALIFORNIA OR ITS OFFICERS OR AGENTS SHALL NOT BE RESPONSIBLE FOR THE ACCURACY OR COMPLETENESS OF ELECTRONIC COPIES OF THIS PLAN SHEET.

Dokken Engineering
5675 Ruffin Road,
Suite 250
San Diego, CA 92123

Caltrans Metric

NOTES (TSO):

1 - Exist MODEL 170 CONTROLLER ASSEMBLY IN MODEL 334 CABINET.

2 - Exist TYPE III SERVICE EQUIPMENT ENCLOSURE.

3 - Exist TYPE 1-A FB.

4 - REPLACE Exist PULL BOX WITH A NEW 5(T) PULL BOX.

5 - Exist STANDARD TO REMAIN.

6 - AB ALL Exist NORTHBOUND ROUTE 805 MAINLINE LOOP DETECTORS.

7 - Exist TRAFFIC SIGNAL NOT SHOWN.

CONDUIT AND CONDUCTOR SCHEDULE

CABLE/ AWG SIZE	CIRCUIT ID	CONDUIT SIZE AND RUN NUMBER									
		78 N C 1	53 N C 2	53 N C 3	78(N) 4	78(N) 5	78(N) 6	53(N) 7	78(N) 8	53(N) 9	53(N) 10
9CSC	Std M		1	1	1	1	1				
	Std Rt			1	1	1	1				
	Std Lt				1	1	1				
TOTAL 9CSC			1	2	3	3	3				
#8	LTG		2	2	2	2	2				
DLC	DETECTORS ML							10(N)	4(N)	2(N)	3(N)
	D	1		1	1	3	3				
	P			1	3	3	3				
	Q										
	OR										
TOTAL CONDUCTORS/CABLES		1	3	6	9	11	11	10(N)	4(N)	2(N)	3(N)

ALL CONDUITS EXISTING UNLESS NOTED (N) = NEW.
ALL CONDUCTORS/CABLES EXISTING UNLESS NOTED (N) = NEW.

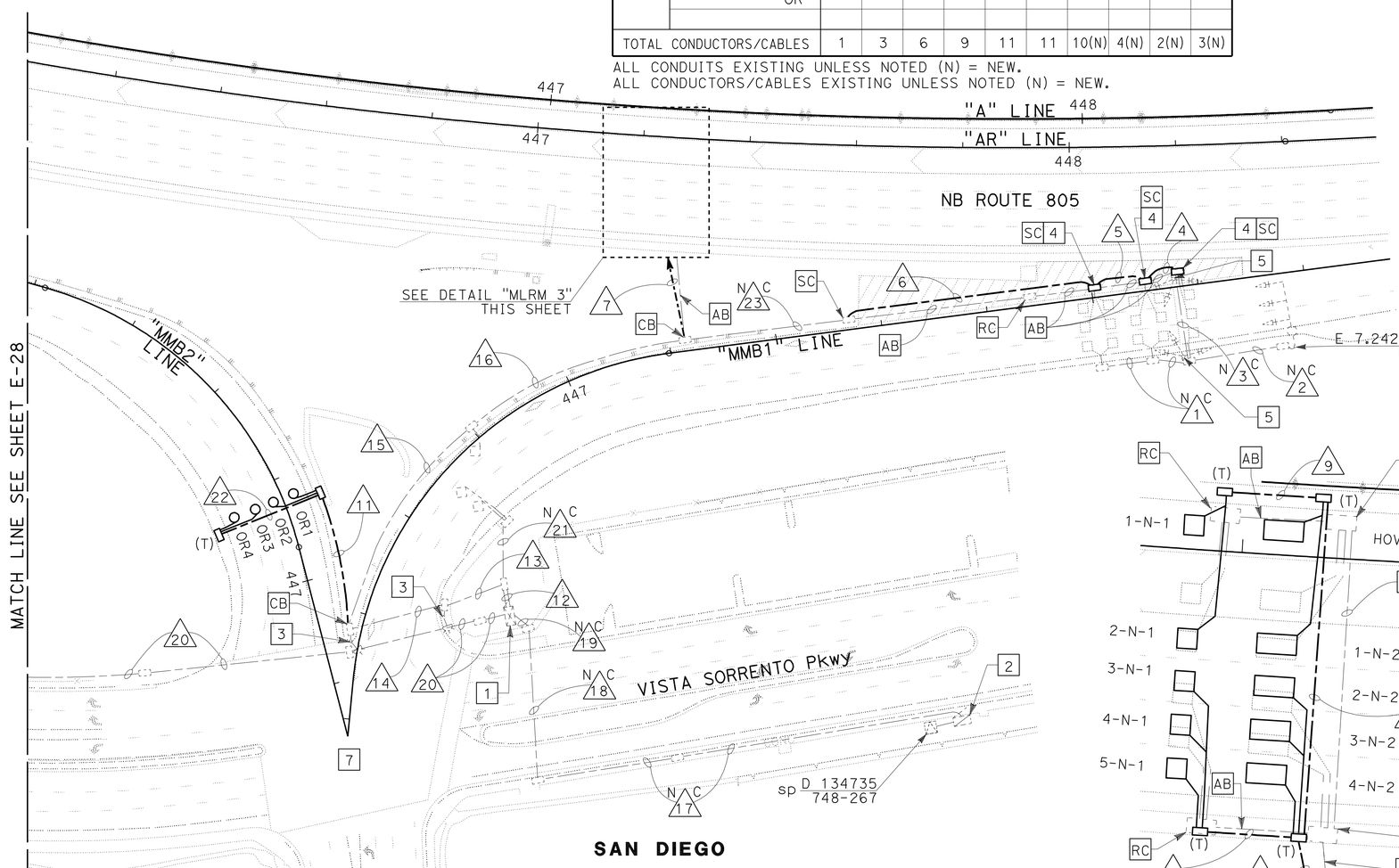

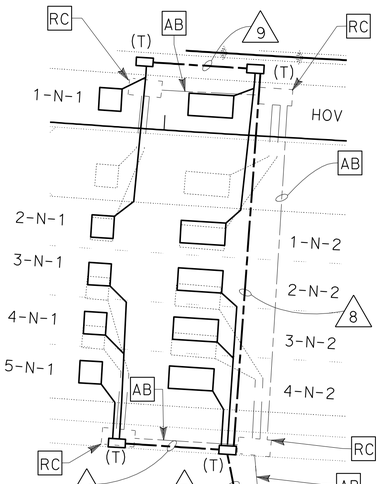

DETAIL "MLRM 3"
(SEE DETAIL "ML" SHEET E-43)
NO SCALE

CONDUIT NOTES (TSO):

11 - 53C, 4 DLC (OR)

12 - Exist 2-78C, 3-9csc, 2#8 (ltg), 2#12 (fb), 3 dlc (P), 3 dlc (D), 3 dlc (Q), 8 dlc (ML)
REMOVE 8 dlc (ML)
ADD 10 DLC (ML), 4 DLC (OR)

13 - Exist 78C, 3-9csc, 2#8 (ltg), 2#12 (fb), 3 dlc (P), 3 dlc (D), 1 dlc (Q), 8 dlc (ML)
REMOVE 8 dlc (ML)
ADD 10 DLC (ML), 4 DLC (OR)

14 - Exist 78C, 3-9csc, 2#8 (ltg), 2#12 (fb), 3 dlc (P), 3 dlc (D), 1 dlc (Q), 8 dlc (ML)
REMOVE 8 dlc (ML)
ADD 10 DLC (ML), 4 DLC (OR)

15 - Exist 78C, 3-9csc, 2#8 (ltg), 3 dlc (P), 3 dlc (D), 1 dlc (Q), 8 dlc (ML)
REMOVE 8 dlc (ML)
ADD 10 DLC (ML)

16 - Exist 78C, 3-9csc, 2#8 (ltg), 3 dlc (P), 3 dlc (D), 8 dlc (ML)
REMOVE 8 dlc (ML)
ADD 10 DLC (ML)

N C 17 - Exist 53C, 2#6 (sig), 2#6 (rm power), 2#8 (ltg), 2#1/0 (cms power), 3#14 (peu)

N C 18 - Exist 53C, 2#8 (ltg), 2#6 (rm power), EXISTING TRAFFIC SIGNAL CONDUCTORS

N C 19 - Exist 53C, 2#6 (rm power), 2#8 (ltg)

20 - Exist 53C, 2 sic
ADD 4 DLC (OR)

N C 21 - Exist 53C, 2 dlc (Q)

22 - 53C, 2 DLC (OR)

N C 23 - Exist 78C, 3-9csc, 2#8 (ltg), 3 dlc (P), 3 dlc (D)

RAMP METERING SYSTEM (LOCATION 3)

SCALE 1:500

E-27

THIS PLAN IS ACCURATE FOR ELECTRICAL WORK ONLY

ALL DIMENSIONS ARE IN METERS UNLESS OTHERWISE SHOWN

REVISED BY	DATE REVISED
JOHN MIKELL	JOSE OSTDIEK
CALCULATED-DESIGNED BY	CHECKED BY
CONSULTANT FUNCTIONAL SUPERVISOR	CHRIS JOHNSON

STATE OF CALIFORNIA - DEPARTMENT OF TRANSPORTATION
Caltrans

LAST REVISION 05-28-09
DATE PLOTTED => 29-SEP-2010
TIME PLOTTED => 14:49

DIST	COUNTY	ROUTE	KILOMETER POST TOTAL PROJECT	SHEET No.	TOTAL SHEETS
11	SD	5,805	R49.9/R51.7, 42.6/46.5	490	886

REGISTERED CIVIL ENGINEER 05-06-09 DATE

9-27-10
PLANS APPROVAL DATE

PROFESSIONAL ENGINEER REGISTERED JOSE OSTDIEK No. C65334 Exp. 9/30/09 CIVIL STATE OF CALIFORNIA

THE STATE OF CALIFORNIA OR ITS OFFICERS OR AGENTS SHALL NOT BE RESPONSIBLE FOR THE ACCURACY OR COMPLETENESS OF ELECTRONIC COPIES OF THIS PLAN SHEET.

Dokken Engineering
5675 Ruffin Road,
Suite 250
San Diego, CA 92123

Caltrans Metric

NOTES (TSO):

1 - Exist TRAFFIC SIGNAL NOT SHOWN.

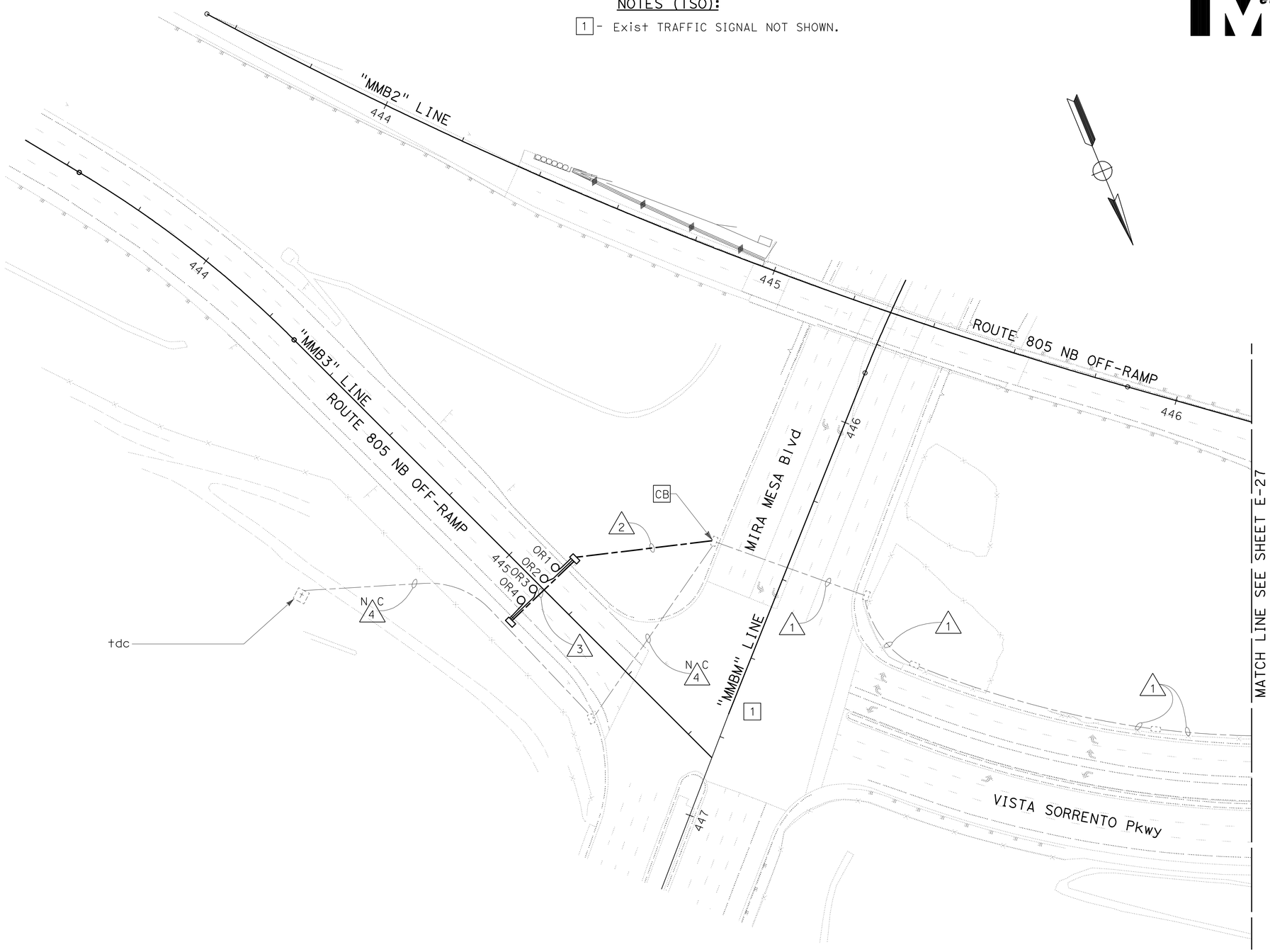

CONDUIT NOTES (TSO):

1 - Exist 53C, 2 sic
ADD 4 DLC (OR)

2 - 53C, 4 DLC (OR)

3 - 53C, 2 DLC (OR)

N C 4 - Exist 53C, 2 sic

RAMP METERING SYSTEM
(LOCATION 3)

SCALE 1:500

E-28

THIS PLAN IS ACCURATE FOR ELECTRICAL WORK ONLY

ALL DIMENSIONS ARE IN METERS UNLESS OTHERWISE SHOWN

REVISED BY	DATE REVISED
JOHN MIKELL	JOSE OSTDIEK

CALCULATED-DESIGNED BY
CHECKED BY

CONSULTANT FUNCTIONAL SUPERVISOR
CHRIS JOHNSON

STATE OF CALIFORNIA - DEPARTMENT OF TRANSPORTATION
Caltrans

LAST REVISION 05-28-09
DATE PLOTTED => 29-SEP-2010
TIME PLOTTED => 14:49

DIST	COUNTY	ROUTE	KILOMETER POST TOTAL PROJECT	SHEET No.	TOTAL SHEETS
11	SD	5,805	R49.9/R51.7, 42.6/46.5	491	886

REGISTERED CIVIL ENGINEER 05-06-09 DATE

9-27-10
PLANS APPROVAL DATE

PROFESSIONAL ENGINEER REGISTERED JOSE OSTDIEK No. C65334 Exp. 9/30/09 CIVIL STATE OF CALIFORNIA

THE STATE OF CALIFORNIA OR ITS OFFICERS OR AGENTS SHALL NOT BE RESPONSIBLE FOR THE ACCURACY OR COMPLETENESS OF ELECTRONIC COPIES OF THIS PLAN SHEET.

Dokken Engineering
5675 Ruffin Road,
Suite 250
San Diego, CA 92123

Caltrans Metric

NOTE:

FOR COMPLETE RIGHT OF WAY AND ACCURATE ACCESS DATA, SEE RIGHT OF WAY RECORD MAPS AT DISTRICT OFFICE.

NOTES (TSO):

1 - ALL Exist PULL BOXES AND CONDUITS TO REMAIN UNLESS OTHERWISE NOTED.

2 - Exist RM CONTROLLER ASSEMBLY TO REMAIN.

3 - TO Exist TYPE-III SERVICE. SEE SHEET E-33 FOR CONTINUATION.

4 - AB ALL Exist LOOP DETECTORS.

5 - RC Exist TYPE 1-A STANDARD.

6 - Exist 1-A FB TO REMAIN.

7 - Exist TDC

8 - Exist 1-A TO REMAIN.

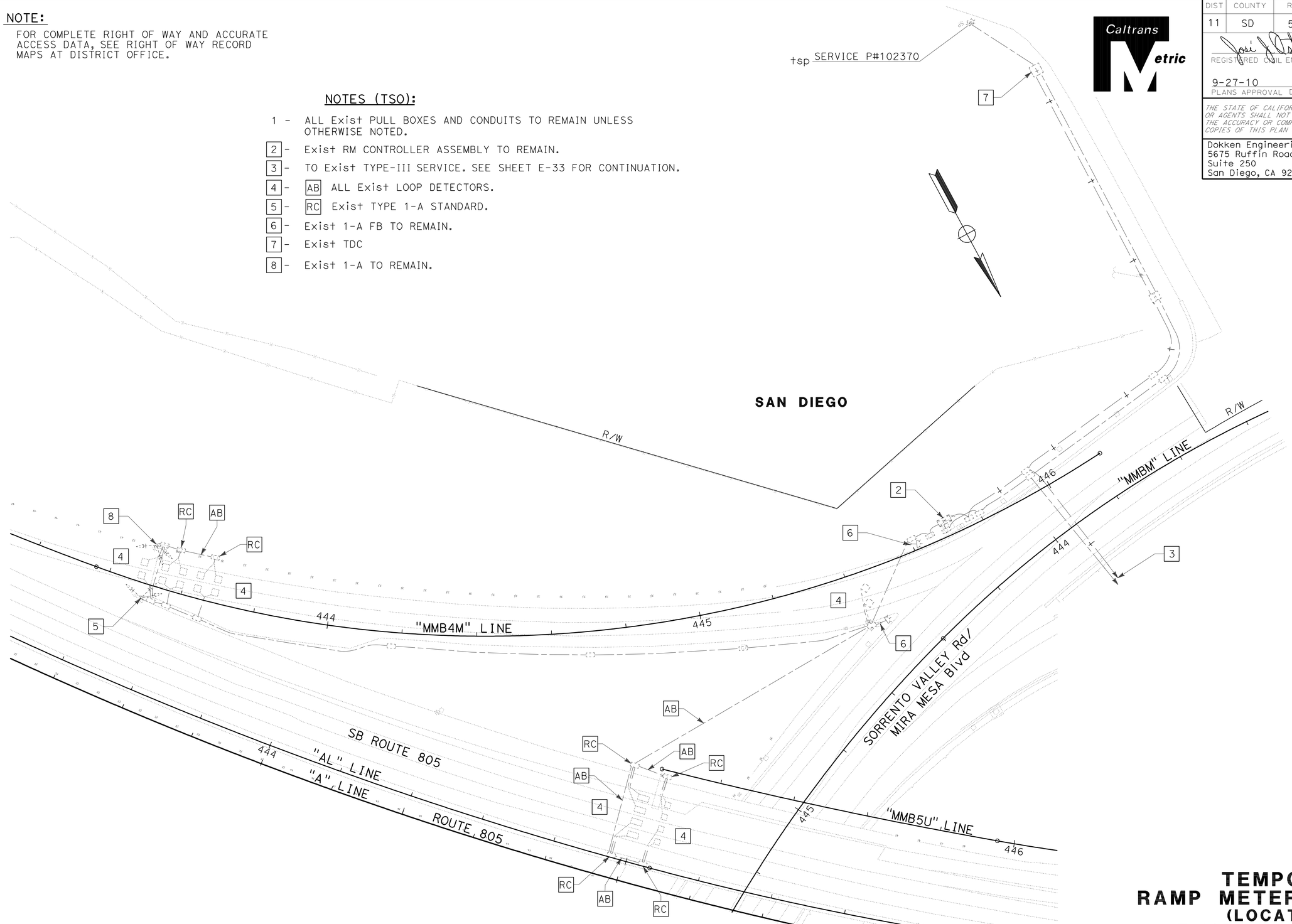

THIS PLAN IS ACCURATE FOR ELECTRICAL WORK ONLY

ALL DIMENSIONS ARE IN METERS UNLESS OTHERWISE SHOWN

TEMPORARY RAMP METERING SYSTEM (LOCATION 1) EXISTING AND REMOVE

SCALE 1:500

E-29

REVISED BY	DATE REVISED
JOHN MIKELL	
JOSE OSTDIEK	

CALCULATED-DESIGNED BY
CHECKED BY

CONSULTANT FUNCTIONAL SUPERVISOR
CHRIS JOHNSON

STATE OF CALIFORNIA - DEPARTMENT OF TRANSPORTATION
Caltrans

LAST REVISION 05-28-09
DATE PLOTTED => 29-SEP-2010
TIME PLOTTED => 14:49

DIST	COUNTY	ROUTE	KILOMETER POST TOTAL PROJECT	SHEET No.	TOTAL SHEETS
11	SD	5,805	R49.9/R51.7, 42.6/46.5	492	886

REGISTERED CIVIL ENGINEER 05-06-09 DATE

9-27-10
PLANS APPROVAL DATE

PROFESSIONAL ENGINEER REGISTERED JOSE OSTDIEK No. C65334 Exp. 9/30/09 CIVIL STATE OF CALIFORNIA

THE STATE OF CALIFORNIA OR ITS OFFICERS OR AGENTS SHALL NOT BE RESPONSIBLE FOR THE ACCURACY OR COMPLETENESS OF ELECTRONIC COPIES OF THIS PLAN SHEET.

Dokken Engineering
5675 Ruffin Road,
Suite 250
San Diego, CA 92123

Caltrans Metric

NOTE:

FOR COMPLETE RIGHT OF WAY AND ACCURATE ACCESS DATA, SEE RIGHT OF WAY RECORD MAPS AT DISTRICT OFFICE.

NOTES (TSO):

1 - Exist CONDUIT AND PULL BOXES TO REMAIN UNLESS OTHERWISE NOTED.

[2] - Exist 1-A STANDARD.

[3] - TYPE 15TS. SEE DETAIL ON SHEET E-47. CALIBRATE VIS AND MVDS TO LANE ASSIGNMENT AS SHOWN.

[4] - Exist FLASHING BEACON.

[5] - FURNISH AND INSTALL VDU, VIDEO DISPLAY, COMMUNICATION CARD, AND DETECTOR UNITS (MVDS) IN EX CONTROLLER CABINET.

CONDUIT NOTES (TSO):

N C 1 - Exist 53C, 2 (sic)

2 - Exist 53C, 2-12SCS, 4 dlc, [RC] 4 dlc, ADD 2#8 (RM LGT), 1 VIDEO HARNESS CABLE, 1 MVDS CABLE

3 - Exist 78C, 2-12CSC, 2#14 (fb), 14 dlc [RC] 14 dlc ADD 1 VIDEO HARNESS, 1 MVDS CABLE, 2#8 (RM LTG)

N C 4 - Exist 41C, 2#4 (rm)

N C 5 - Exist 41C, 2#4 (rm), 2#10 (tdc)

N C 6 - Exist 27C, 1 sic

N C 7 - Exist 27C, 2#10 (tdc)

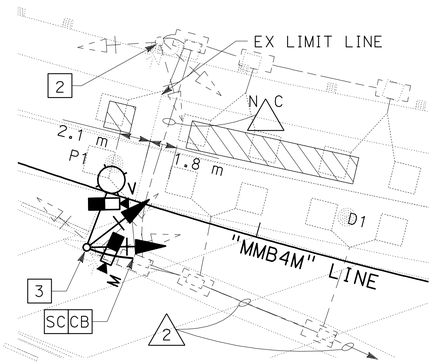

DETAIL "A"
NO SCALE

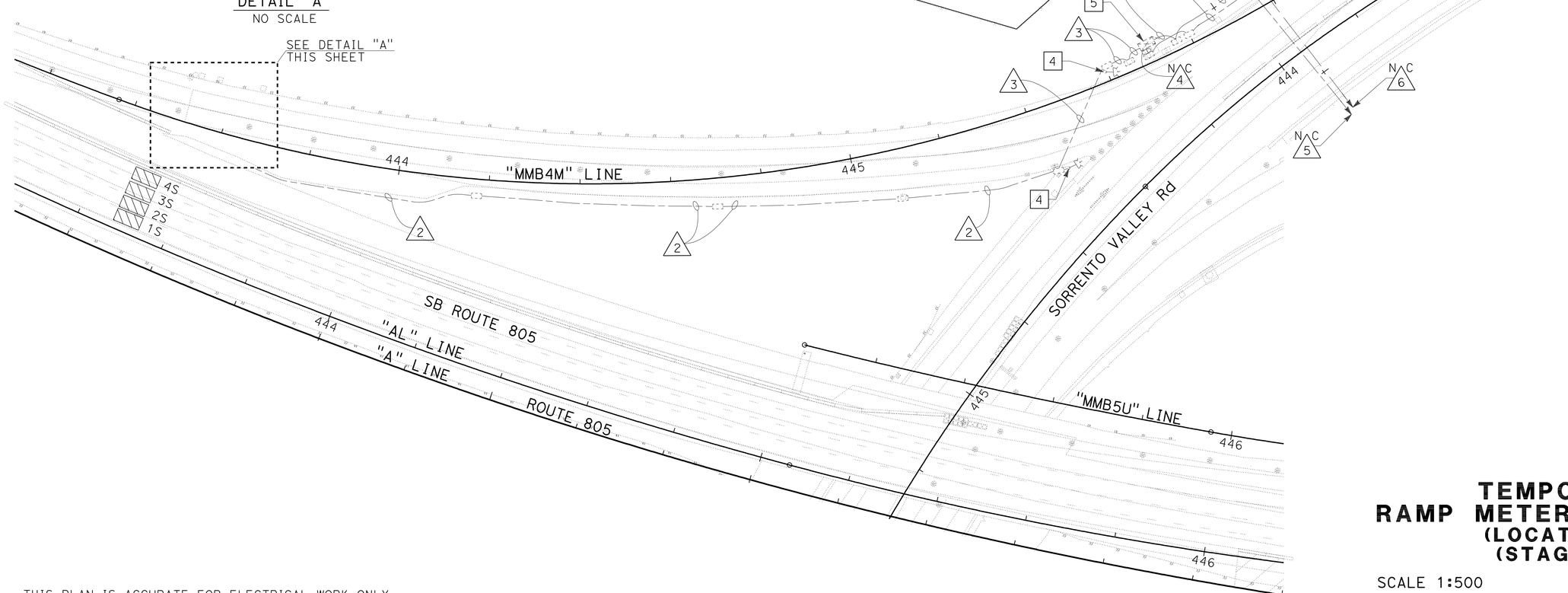

THIS PLAN IS ACCURATE FOR ELECTRICAL WORK ONLY

ALL DIMENSIONS ARE IN METERS UNLESS OTHERWISE SHOWN

TEMPORARY RAMP METERING SYSTEM (LOCATION 1) (STAGE 1A)

SCALE 1:500

E-30

STATE OF CALIFORNIA - DEPARTMENT OF TRANSPORTATION

Caltrans

CONSULTANT FUNCTIONAL SUPERVISOR: CHRIS JOHNSON

CALCULATED-DESIGNED BY: JOHN MIKELL

CHECKED BY: JOSE OSTDIEK

REVISED BY | DATE REVISED

LAST REVISION 05-28-09 | DATE PLOTTED => 29-SEP-2010 | TIME PLOTTED => 14:49

DIST	COUNTY	ROUTE	KILOMETER POST TOTAL PROJECT	SHEET No.	TOTAL SHEETS
11	SD	5,805	R49.9/R51.7, 42.6/46.5	493	886

REGISTERED CIVIL ENGINEER 05-06-09 DATE

9-27-10
PLANS APPROVAL DATE

REGISTERED PROFESSIONAL ENGINEER JOSE OSTDIEK No. C65334 Exp. 9/30/09 CIVIL STATE OF CALIFORNIA

THE STATE OF CALIFORNIA OR ITS OFFICERS OR AGENTS SHALL NOT BE RESPONSIBLE FOR THE ACCURACY OR COMPLETENESS OF ELECTRONIC COPIES OF THIS PLAN SHEET.

Dokken Engineering
5675 Ruffin Road,
Suite 250
San Diego, CA 92123

Caltrans Metric

NOTES (TSO):

1 - Exist CONDUIT AND PULL BOXES TO REMAIN UNLESS OTHERWISE NOTED.

2 - RL RM CONTROLLER ASSEMBLY. MOUNT CONTROLLER OM WOODEN PALLET.

3 - RL TYPE 15TS. REPOSITION MVDS AND VIS UNITS. RECALIBRATE TO LANE ASSIGNMENTS AS SHOWN.

4 - SECURE CONDUIT TO TEMP RAILING (TYPE K) AT 3.0 m INTERVALS. SEE DETAILS ON SHEET E-39.

5 - SEE SHEET E-35 FOR CONTINUATION.

6 - RELOCATED TYPE 1-A FLASHING BEACON.

CONDUIT NOTES (TSO):

1 - 53C, 1 SIC

2 - 53C, 1-9CSC, 2#8 (RM LGT), 1 VIDEO CABLE HARNESS, 1 MVDS CABLE

3 - 78C, 2#8 (RM), 2#14 (FB), 1-9CSC, 1 VIDEO CABLE HARNESS, 1 MVDS CABLE

4 - 53C, 2#14 (FB), 2#8 (RM), 2#8 (RM LTG)

5 - 53C, 2#8 (RM), 2#8 (RM LTG)

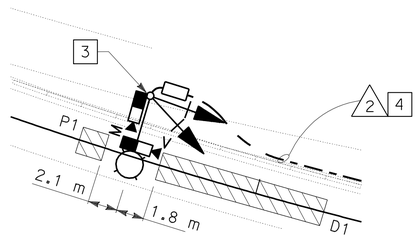

DETAIL "A"
SCALE 1:200

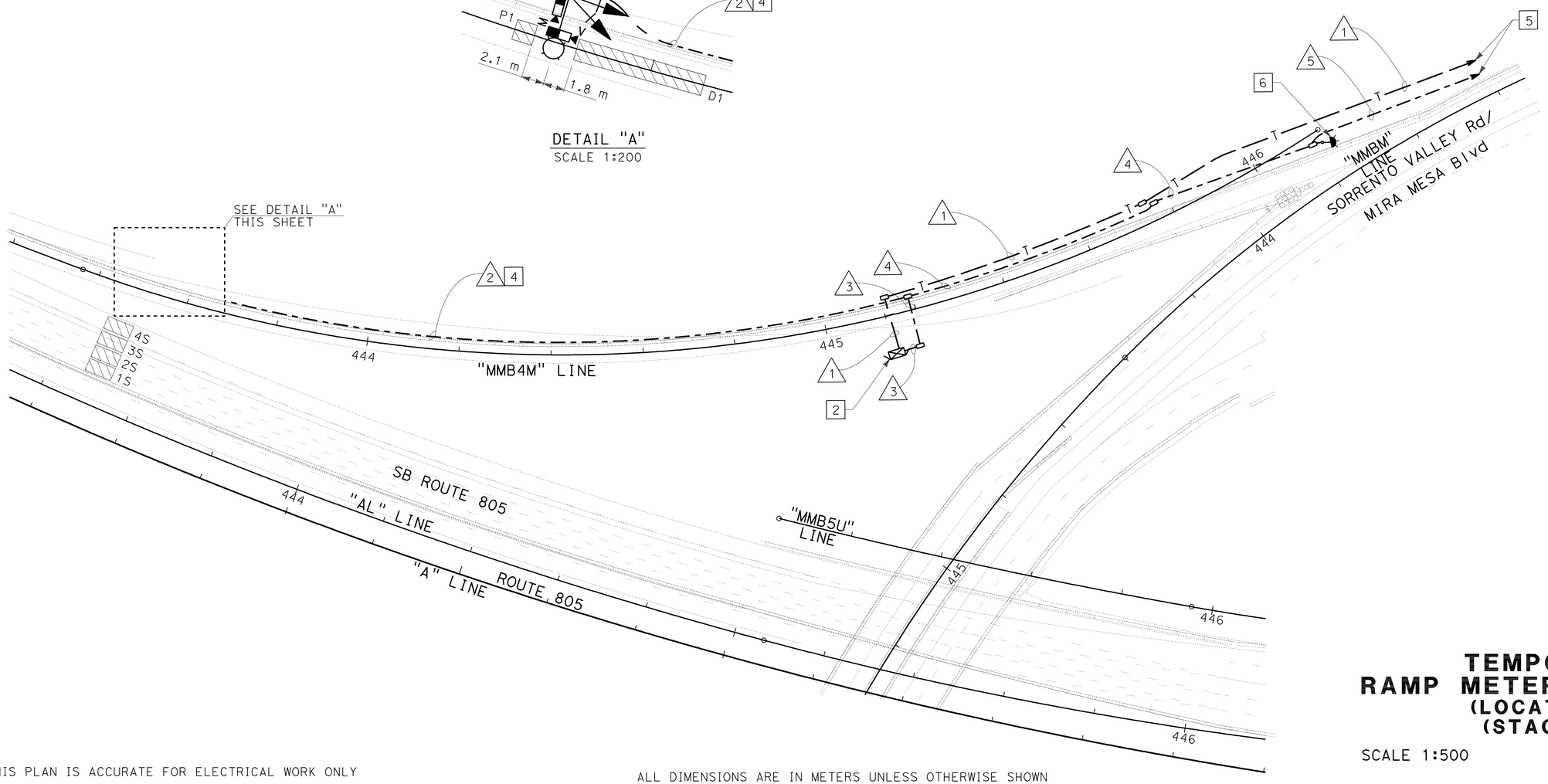

THIS PLAN IS ACCURATE FOR ELECTRICAL WORK ONLY

ALL DIMENSIONS ARE IN METERS UNLESS OTHERWISE SHOWN

TEMPORARY RAMP METERING SYSTEM (LOCATION 1) (STAGE 1B)

SCALE 1:500

E-31

STATE OF CALIFORNIA - DEPARTMENT OF TRANSPORTATION
Caltrans

CONSULTANT FUNCTIONAL SUPERVISOR: CHRIS JOHNSON
CALCULATED-DESIGNED BY: JOHN MIKELL
CHECKED BY: JOSE OSTDIEK
REVISED BY / DATE REVISED

LAST REVISION 05-28-09
DATE PLOTTED => 29-SEP-2010
TIME PLOTTED => 14:49

DIST	COUNTY	ROUTE	KILOMETER POST TOTAL PROJECT	SHEET No.	TOTAL SHEETS
11	SD	5,805	R49.9/R51.7, 42.6/46.5	494	886

REGISTERED CIVIL ENGINEER 05-06-09 DATE

9-27-10
PLANS APPROVAL DATE

PROFESSIONAL ENGINEER REGISTERED JOSE OSTDIEK No. C65334 Exp. 9/30/09 CIVIL STATE OF CALIFORNIA

THE STATE OF CALIFORNIA OR ITS OFFICERS OR AGENTS SHALL NOT BE RESPONSIBLE FOR THE ACCURACY OR COMPLETENESS OF ELECTRONIC COPIES OF THIS PLAN SHEET.

Dokken Engineering
5675 Ruffin Road,
Suite 250
San Diego, CA 92123

Caltrans Metric

NOTE:

FOR COMPLETE RIGHT OF WAY AND ACCURATE ACCESS DATA, SEE RIGHT OF WAY RECORD MAPS AT DISTRICT OFFICE.

NOTES (TSO):

1 - PERNANENT RAMP METERING EQUIPMENT TO BE USED FOR THIS STAGE AS SHOWN.

2 - RAMP METER CONTROLLER ASSEMBLY.

3 - TYPE 1-A FLASHING BEACON.

4 - PERMANENT RAMP METERING EQUIPMENT. SEE SHEET E-25.

5 - RELOCATE VDU, VIDEO DISPLAY, COMMUNICATION CARD, AND DETECTOR UNITS (MVDS TO NEW CONTROLLER CABINET).

6 - RELOCATED TYPE 15TS WITH MVDS AND VIS. SEE DETAILS ON SHEET E-47. RECALIBRATE MVDS AND VIS TO LANES AS SHOWN.

7 - SECURE CONDUIT TO TEMPORARY RAILING (TYPE K) AT 3.0 m INTERVALS. SEE SHEET E-39 FOR DETAILS.

8 - SEE SHEET E-36 FOR CONTINUATION.

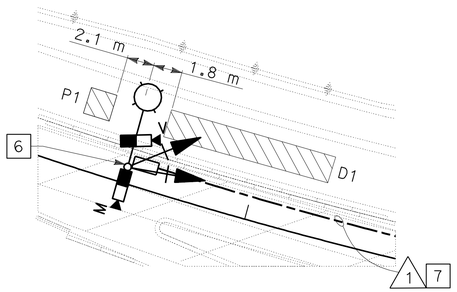

DETAIL "A"
NO SCALE

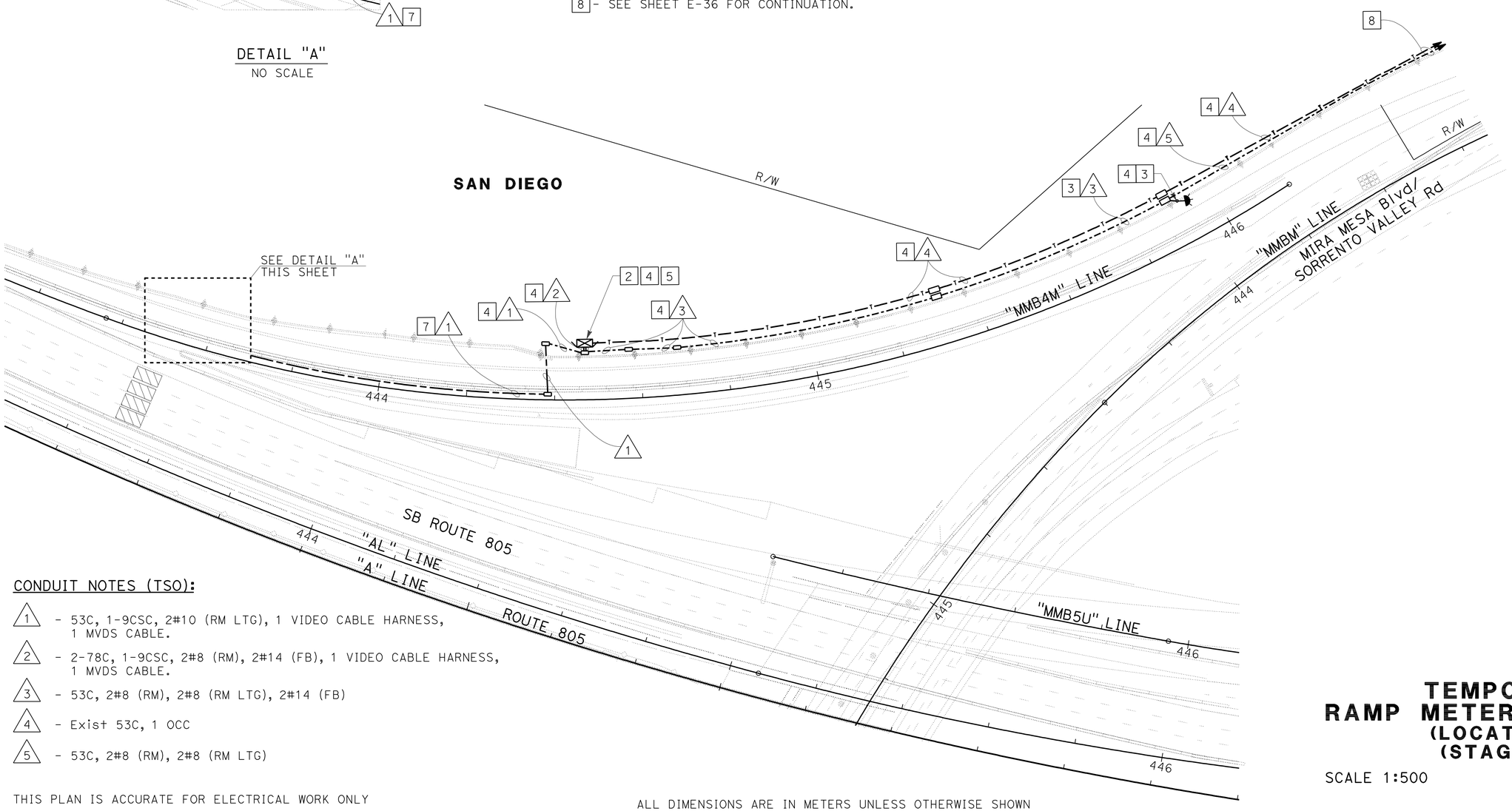

CONDUIT NOTES (TSO):

1 - 53C, 1-9CSC, 2#10 (RM LTG), 1 VIDEO CABLE HARNESS, 1 MVDS CABLE.

2 - 2-78C, 1-9CSC, 2#8 (RM), 2#14 (FB), 1 VIDEO CABLE HARNESS, 1 MVDS CABLE.

3 - 53C, 2#8 (RM), 2#8 (RM LTG), 2#14 (FB)

4 - Exist 53C, 1 OCC

5 - 53C, 2#8 (RM), 2#8 (RM LTG)

THIS PLAN IS ACCURATE FOR ELECTRICAL WORK ONLY

ALL DIMENSIONS ARE IN METERS UNLESS OTHERWISE SHOWN

TEMPORARY RAMP METERING SYSTEM (LOCATION 1) (STAGE 2A)

SCALE 1:500

E-32

STATE OF CALIFORNIA - DEPARTMENT OF TRANSPORTATION
Caltrans

CONSULTANT FUNCTIONAL SUPERVISOR: CHRIS JOHNSON
CALCULATED-DESIGNED BY: JOHN MIKELL
CHECKED BY: JOSE OSTDIEK
REVISED BY / DATE REVISED

LAST REVISION 05-28-09
DATE PLOTTED => 29-SEP-2010
TIME PLOTTED => 15:04

DIST	COUNTY	ROUTE	KILOMETER POST TOTAL PROJECT	SHEET No.	TOTAL SHEETS
11	SD	5,805	R49.9/R51.7, 42.6/46.5	495	886

REGISTERED CIVIL ENGINEER 05-06-09 DATE

9-27-10
PLANS APPROVAL DATE

REGISTERED PROFESSIONAL ENGINEER JOSE OSTDIEK No. C65334 Exp. 9/30/09 CIVIL STATE OF CALIFORNIA

THE STATE OF CALIFORNIA OR ITS OFFICERS OR AGENTS SHALL NOT BE RESPONSIBLE FOR THE ACCURACY OR COMPLETENESS OF ELECTRONIC COPIES OF THIS PLAN SHEET.

Dokken Engineering
5675 Ruffin Road,
Suite 250
San Diego, CA 92123

Caltrans Metric

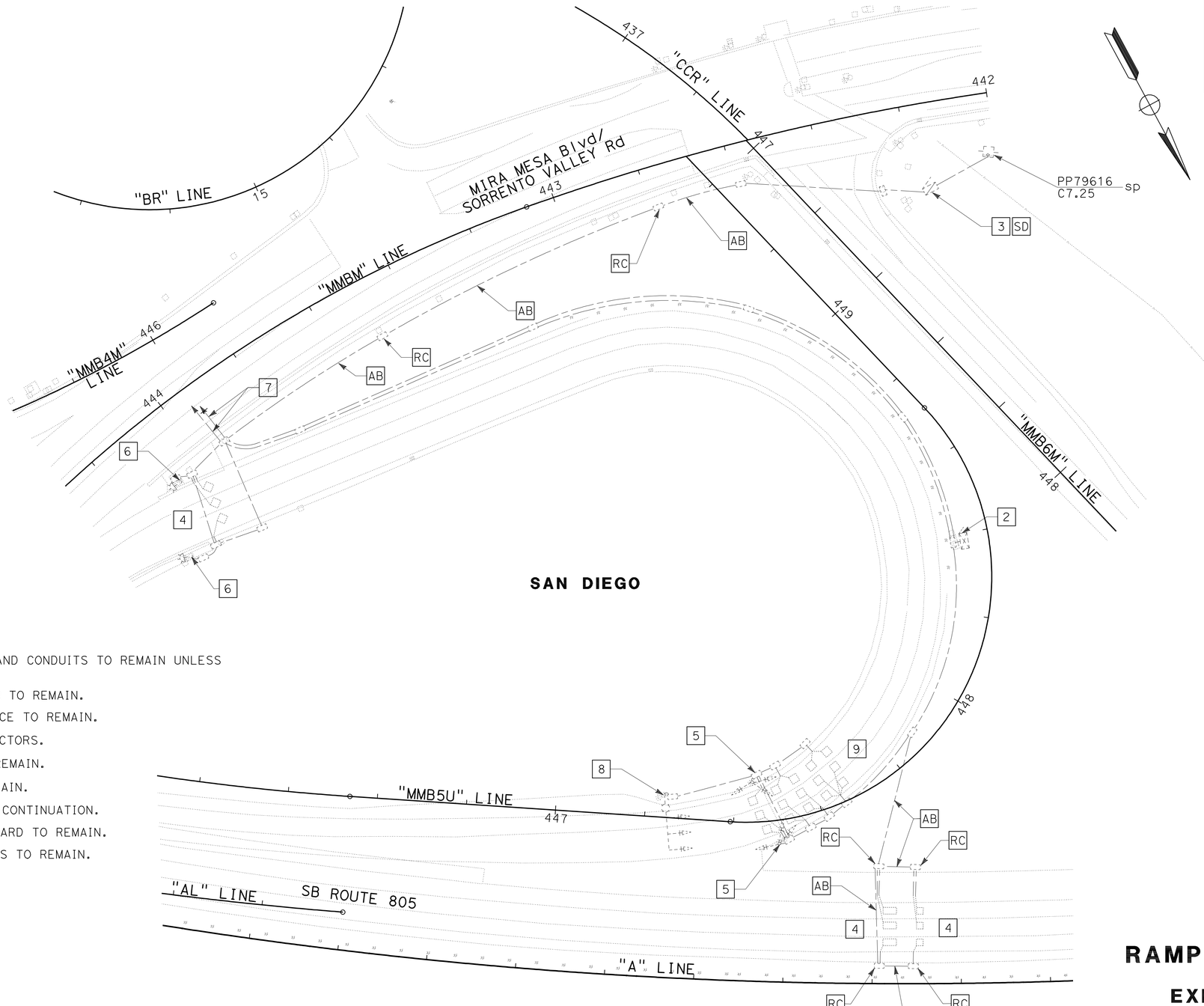

NOTES (TSO):

1 - ALL EX PULL BOXES AND CONDUITS TO REMAIN UNLESS OTHERWISE NOTED.

2 - Exist RM CONTROLLER TO REMAIN.

3 - Exist TYPE-III SERVICE TO REMAIN.

4 - AB Exist LOOP DETECTORS.

5 - Exist TYPE 1-A TO REMAIN.

6 - Exist 1-A FB TO REMAIN.

7 - SEE SHEET E-29 FOR CONTINUATION.

8 - Exist TYPE 26 STANDARD TO REMAIN.

9 - Exist LOOP DETECTORS TO REMAIN.

THIS PLAN IS ACCURATE FOR ELECTRICAL WORK ONLY

ALL DIMENSIONS ARE IN METERS UNLESS OTHERWISE SHOWN

TEMPORARY RAMP METERING SYSTEM (LOCATION 2) EXISTING AND REMOVE

SCALE 1:500

E-33

REVISED BY	DATE REVISED

JOHN MIKELL — CALCULATED-DESIGNED BY
JOSE OSTDIEK — CHECKED BY
CHRIS JOHNSON — CONSULTANT FUNCTIONAL SUPERVISOR

STATE OF CALIFORNIA - DEPARTMENT OF TRANSPORTATION
Caltrans

LAST REVISION 05-28-09
DATE PLOTTED => 29-SEP-2010
TIME PLOTTED => 14:49

DIST	COUNTY	ROUTE	KILOMETER POST TOTAL PROJECT	SHEET No.	TOTAL SHEETS
11	SD	5,805	R49.9/R51.7, 42.6/46.5	496	886

REGISTERED CIVIL ENGINEER 05-06-09 DATE

9-27-10
PLANS APPROVAL DATE

REGISTERED PROFESSIONAL ENGINEER JOSE OSTDIEK No. C65334 Exp. 9/30/09 CIVIL STATE OF CALIFORNIA

THE STATE OF CALIFORNIA OR ITS OFFICERS OR AGENTS SHALL NOT BE RESPONSIBLE FOR THE ACCURACY OR COMPLETENESS OF ELECTRONIC COPIES OF THIS PLAN SHEET.

Dokken Engineering
5675 Ruffin Road,
Suite 250
San Diego, CA 92123

Caltrans Metric

NOTES (TSO):

1 - Exist CONDUIT AND PULL BOXES TO REMAIN UNLESS OTHERWISE NOTED. SEE SHEET E-28 (LOCATION 1 EXISTING AND REMOVE).

2 - Exist RM CONTROLLER ASSEMBLY TO REMAIN.

3 - Exist TYPE III SERVICE TO REMAIN.

4 - Exist FLASHING BEACON TO REMAIN.

5 - FURNISH AND INSTALL VDU, VIDEO DISPLAY, COMMUNICATION CARD, AND DETECTOR UNITS (MVDS) IN Exist CONTROLLER CABINET.

6 - Exist TYPE 1-A.

7 - Exist TYPE 26 TO REMAIN.

8 - TYPE VDS40 WITH MVDS. SEE DETAILS ON SHEET E-44. CALIBRATE MVDS FOR DETECTION ZONES AS SHOWN ON THESE PLANS.

9 - SEE SHEET E-30 FOR CONTINUATION.

10. - PROTECT EXISTING ELECTRICAL EQUIPMENT IN PLACE.

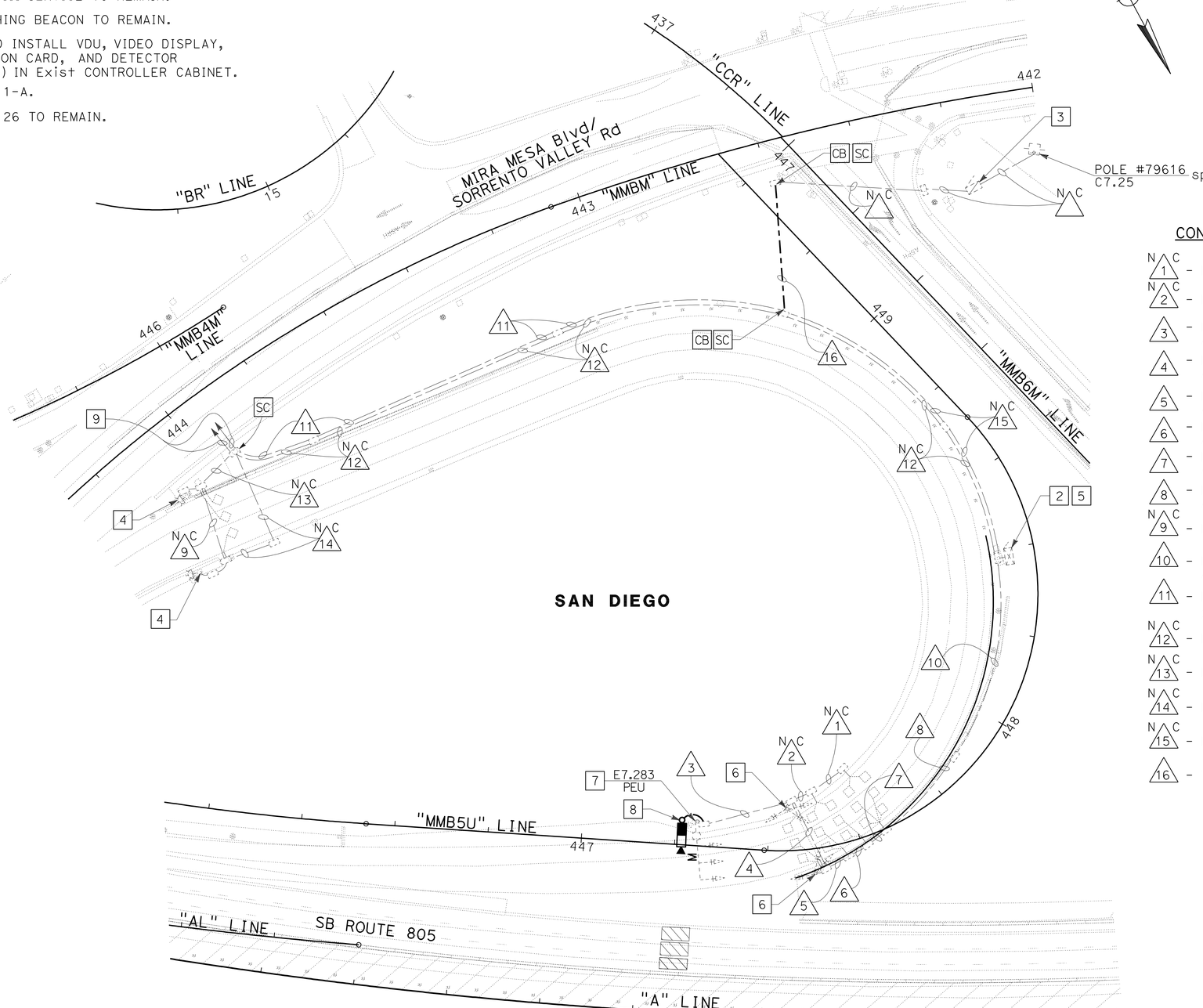

CONDUIT NOTES (TSO):

N C 1 - Exist 53C, 1 dlc

N C 2 - Exist 53C, 1 dlc

3 - Exist 53C, 1-3CSC, 1-12CSC, 2#8 (ltg), 3#14 (peu), ADD 1 MVDS CABLE

4 - Exist 78C, 2-3CSC, 2-12CSC, 2#8 (ltg), 2 dlc, 3#14 (peu), ADD 1 MVDS CABLE

5 - Exist 78C, 3-3CSC, 3-12CSC, 2#8 (ltg), 4 dlc, 3#14 (peu), ADD 1 MVDS CABLE

6 - Exist 53C, 3-3CSC, 3-12CSC, 2#8 (ltg), 6 dlc, 3#14 (peu), ADD 1 MVDS CABLE

7 - Exist 53C, 3-3CSC, 3-12CSC, 2#8 (ltg), 6 dlc, 3#14 (peu), ADD 1 MVDS CABLE

8 - Exist 53C, 3-3CSC, 3-12CSC, 2#8 (LTG), 6 dlc, 3#14 (PEU), ADD 1 MVDS CABLE

N C 9 - Exist 53C, 1 dlc

10 - Exist 78C, 3-3CSC, 3-12CSC, 2#8 (LTG), 12 dlc, 3#14 (PEU), ADD 1 MVDS CABLE, REMOVE 8 dlc

11 - Exist 78C, 2#8 (LTG), 2#12 (fb), 2#10 (tdc), 2#4 (rm), 3 dlc, ADD 2#4 (RM)

N C 12 - Exist 53C, 1 sic

N C 13 - Exist 53C, 2#12 (fb), 3 dlc

N C 14 - Exist 78C, 2#12 (fb)

N C 15 - Exist 78C, 2#8 (ltg), 2#12 (fb), 3 dlc, 2#4 (rm), 3#14 (PEU)

16 - 78C, 4#4 (rm), 2#8 (ltg), 3#14 (peu), 2#10 (tdc)

TEMPORARY RAMP METERING SYSTEM (LOCATION 2) (STAGE 1A)

SCALE 1:500

E-34

THIS PLAN IS ACCURATE FOR ELECTRICAL WORK ONLY

ALL DIMENSIONS ARE IN METERS UNLESS OTHERWISE SHOWN

REVISED BY	DATE REVISED
JOHN MIKELL	JOSE OSTDIEK

CALCULATED-DESIGNED BY / CHECKED BY

CONSULTANT FUNCTIONAL SUPERVISOR: CHRIS JOHNSON

STATE OF CALIFORNIA - DEPARTMENT OF TRANSPORTATION

Caltrans

LAST REVISION 05-28-09

DATE PLOTTED => 29-SEP-2010
TIME PLOTTED => 14:49

DIST	COUNTY	ROUTE	KILOMETER POST TOTAL PROJECT	SHEET No.	TOTAL SHEETS
11	SD	5,805	R49.9/R51.7, 42.6/46.5	497	886

REGISTERED CIVIL ENGINEER 05-06-09 DATE

9-27-10
PLANS APPROVAL DATE

PROFESSIONAL ENGINEER REGISTERED JOSE OSTDIEK No. C65334 Exp. 9/30/09 CIVIL STATE OF CALIFORNIA

THE STATE OF CALIFORNIA OR ITS OFFICERS OR AGENTS SHALL NOT BE RESPONSIBLE FOR THE ACCURACY OR COMPLETENESS OF ELECTRONIC COPIES OF THIS PLAN SHEET.

Dokken Engineering
5675 Ruffin Road,
Suite 250
San Diego, CA 92123

Caltrans Metric

NOTES (TSO):

1 - PERMANENT RAMP METER EQUIPMENT TO BE USED FOR THIS STAGE AS SHOWN.

2 - RELOCATED RM CONTROLLER ASSEMBLY.

3 - SEE SHEET E-31 FOR CONTINUATION.

4 - RELOCATE EX FLASHING BEACON.

5 - Exist VDU, VIDEO DISPLAY, COMMUNICATION CARD, AND DETECTOR UNITS (MVDS) IN RELOCATED CABINET.

6 - Exist TYPE 1-A.

7 - Exist TYPE 26 STANDARD TO REMAIN.

8 - Exist VDS40 WITH MVDS. SEE DETAILS ON SHEET E-44. REPOSITION MVDS UNIT, RECALIBRATE TO LANE ASSIGNMENTS AS SHOWN.

9 - PERMANENT RAMP METER EQUIPMENT SEE SHEET E-26 FOR INFORMATION.

10 - SECURE CONDUIT TO TEMPORARY RAILING (TYPE K) AT 3.0 m INTERVALS. SEE DETAILS ON SHEET E-39.

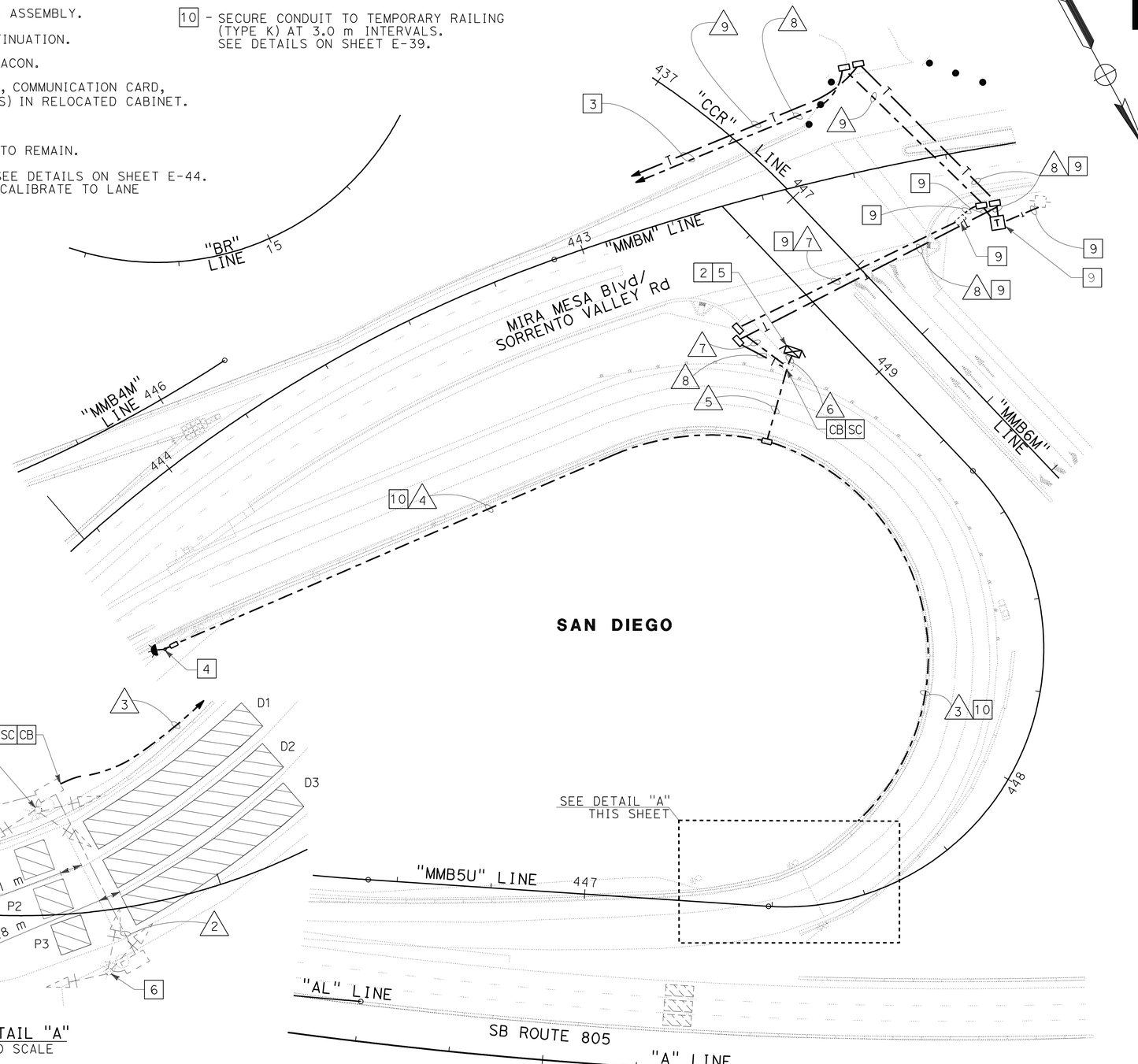

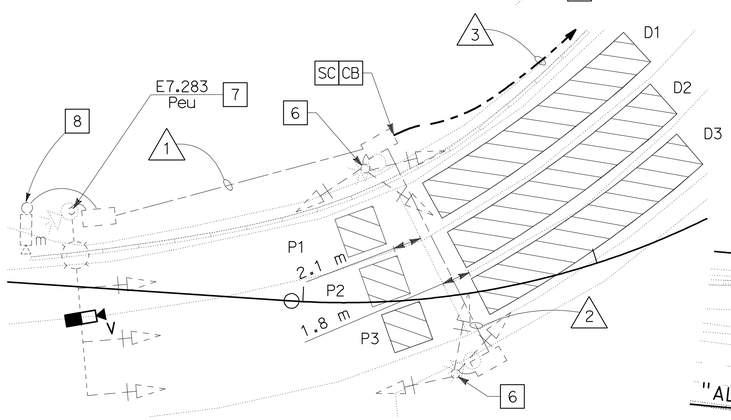

DETAIL "A"
NO SCALE

CONDUIT NOTES (TSO):

1 - Exist 53C, 1-12CSC, 2#8 (ltg), 1 MVDS CABLE ADD 1 VIDEO CABLE HARNESS, 3#14 (Peu)

2 - Exist 53C, REMOVE EXISTING CONDUCTORS ADD 1-9CSC

3 - 78C, 1-12CSC, 2-9CSC, 2#8 (LTG), 1 MVDS CABLE, 1 VIDEO CABLE HARNESS

4 - 53C, 2#14 (FB)

5 - 78C, 1-12CSC, 2-9CSC, 2#8 (LTG), 2#14 (FB), 1 MVDS CABLE, 1 VIDEO CABLE HARNESS,

6 - 78C, 1-12CSC, 2-9CSC, 2#8 (RM), 2#14 (FB), 1 MVDS CABLE, 1 VIDEO CABLE HARNESS,

7 - 78C, 2#8 (RM), 2#8 (LTG)

8 - 53C, 1 OCC

9 - 53C, 2#8 (RM), 2#8 (RM LTG)

TEMPORARY RAMP METERING SYSTEM
(LOCATION 2)
(STAGE 1B)

SCALE 1:500

E-35

THIS PLAN IS ACCURATE FOR ELECTRICAL WORK ONLY

ALL DIMENSIONS ARE IN METERS UNLESS OTHERWISE SHOWN

REVISED BY	DATE REVISED

CALCULATED-DESIGNED BY: JOHN MIKELL
CHECKED BY: JOSE OSTDIEK
CONSULTANT FUNCTIONAL SUPERVISOR: CHRIS JOHNSON

STATE OF CALIFORNIA - DEPARTMENT OF TRANSPORTATION
Caltrans

LAST REVISION 05-28-09
DATE PLOTTED => 29-SEP-2010
TIME PLOTTED => 14:50

DIST	COUNTY	ROUTE	KILOMETER POST TOTAL PROJECT	SHEET No.	TOTAL SHEETS
11	SD	5,805	R49.9/R51.7, 42.6/46.5	498	886

REGISTERED CIVIL ENGINEER 05-06-09 DATE

9-27-10
PLANS APPROVAL DATE

REGISTERED PROFESSIONAL ENGINEER JOSE OSTDIEK No. C65334 Exp. 9/30/09 CIVIL STATE OF CALIFORNIA

THE STATE OF CALIFORNIA OR ITS OFFICERS OR AGENTS SHALL NOT BE RESPONSIBLE FOR THE ACCURACY OR COMPLETENESS OF ELECTRONIC COPIES OF THIS PLAN SHEET.

Dokken Engineering
5675 Ruffin Road,
Suite 250
San Diego, CA 92123

Caltrans Metric

NOTES (TSO):

1 - SEE SHEET E-35 FOR ADDITIONAL INFORMATION.

2 - Exist RM CONTROLLER ASSEMBLY.

3 - SEE SHEET E-32 FOR CONTINUATION.

4 - RELOCATED FLASHING BEACON.

5 - Exist VDU, VIDEO DISPLAY, COMMUNICATION CARD, AND DETECTOR UNITS (MVDS) IN EXISTING CABINET.

6 - PERMANENT EQUIPMENT INSTALLED DURING PREVIOUS STAGE.

7 - RELOCATED TYPE 26 STANDARD.

8 - RELOCATED VDS40 WITH MVDS. SEE DETAILS ON SHEET E-44. REPOSITION MVDS UNIT, RECALIBRATE TO LANE ASSIGNMENTS AS SHOWN.

9 - SEE DETAIL "A" THIS SHEET.

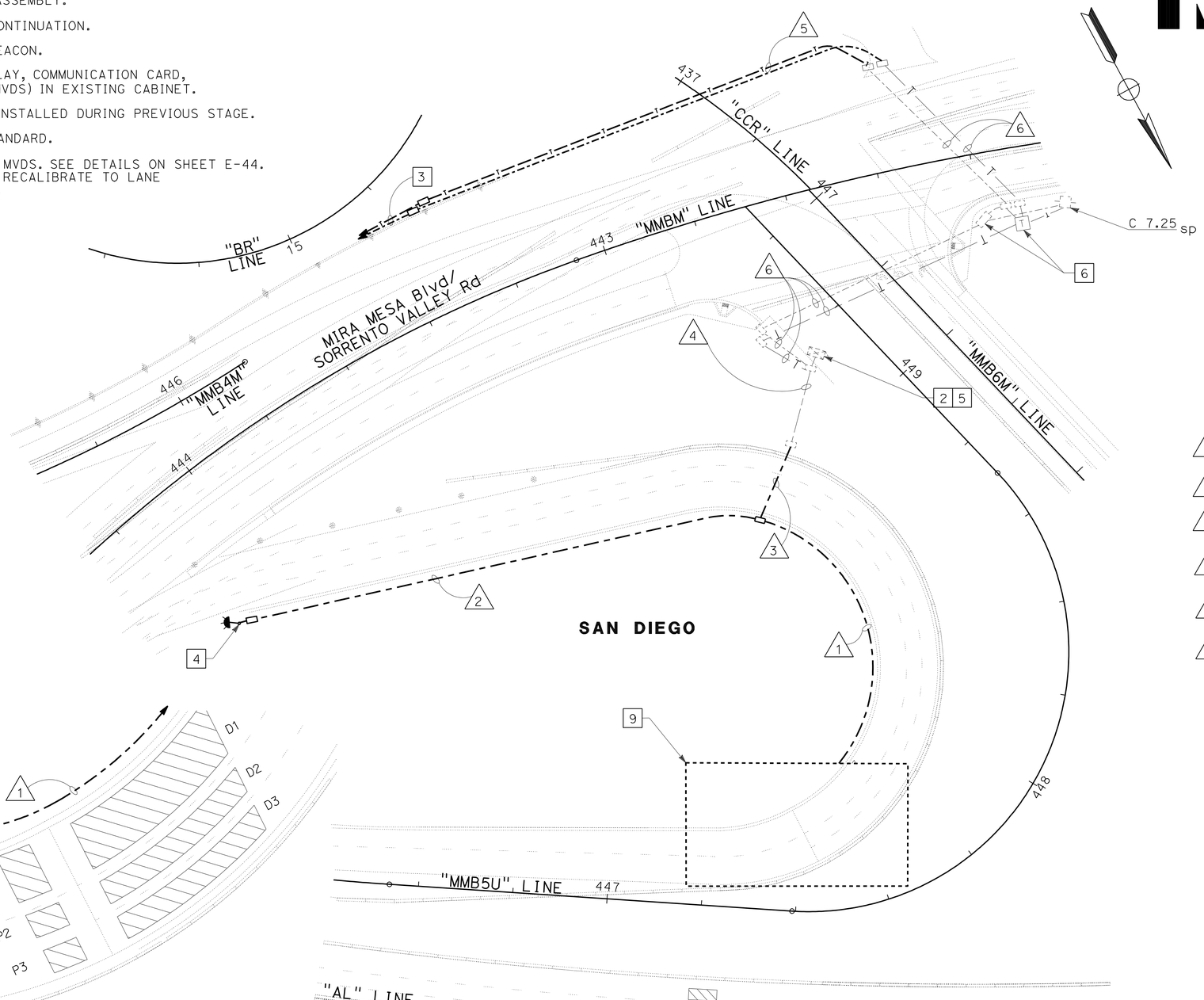

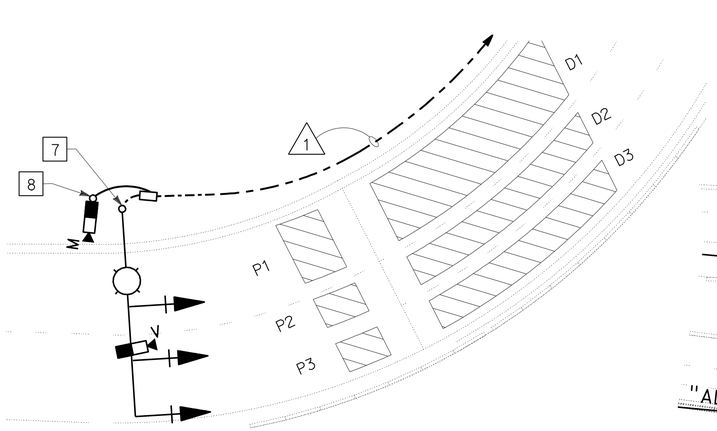

DETAIL "A"
NO SCALE

CONDUIT NOTES (TSO):

1 - 78C, 1-12CSC, 2#8 (RM LTG), 1 MVDS CABLE, 1 VIDEO HARNESS CABLE

2 - 53C, 2#14 (FB)

3 - 78C, 1-12CSC, 2#8 (RM LTG), 2#14 (FB), 1 MVDS CABLE, 1 VIDEO HARNESS CABLE

4 - Exist 78C, 1-12CSC, 2#8 (RM LTG), 2#14 (FB), 1 MVDS CABLE, 1 VIDEO HARNESS CABLE

5 - 53C, 1 OCC

6 - SEE SHEET E-35 FOR INFORMATION

TEMPORARY RAMP METERING SYSTEM (LOCATION 2) (STAGE 2A)

SCALE 1:500

E-36

THIS PLAN IS ACCURATE FOR ELECTRICAL WORK ONLY

ALL DIMENSIONS ARE IN METERS UNLESS OTHERWISE SHOWN

REVISED BY	DATE REVISED
JOHN MIKELL	JOSE OSTDIEK

CALCULATED-DESIGNED BY
CHECKED BY

CONSULTANT FUNCTIONAL SUPERVISOR
CHRIS JOHNSON

STATE OF CALIFORNIA - DEPARTMENT OF TRANSPORTATION
Caltrans

LAST REVISION 05-28-09
DATE PLOTTED => 29-SEP-2010
TIME PLOTTED => 14:50

DIST	COUNTY	ROUTE	KILOMETER POST TOTAL PROJECT	SHEET No.	TOTAL SHEETS
11	SD	5,805	R49.9/R51.7, 42.6/46.5	499	886

REGISTERED CIVIL ENGINEER 05-06-09 DATE

9-27-10
PLANS APPROVAL DATE

PROFESSIONAL ENGINEER REGISTERED JOSE OSTDIEK No. C65334 Exp. 9/30/09 CIVIL STATE OF CALIFORNIA

THE STATE OF CALIFORNIA OR ITS OFFICERS OR AGENTS SHALL NOT BE RESPONSIBLE FOR THE ACCURACY OR COMPLETENESS OF ELECTRONIC COPIES OF THIS PLAN SHEET.

Dokken Engineering
5675 Ruffin Road,
Suite 250
San Diego, CA 92123

Caltrans Metric

NOTES (TSO):

1 - ALL EX PULL BOXES AND CONDUITS TO REMAIN UNLESS OTHERWISE NOTED.

2 - Exist RM CONTROLLER TO REMAIN.

3 - TO Exist TYPE-III SERVICE.

4 - AB ALL Exist MAINLINE LOOP DETECTORS.

5 - Exist TYPE 1-A TO REMAIN.

6 - Exist 1-A FB TO REMAIN.

7 - Exist TYPE 26 STANDARD TO REMAIN.

8 - Exist LOOP DETECTORS TO REMAIN.

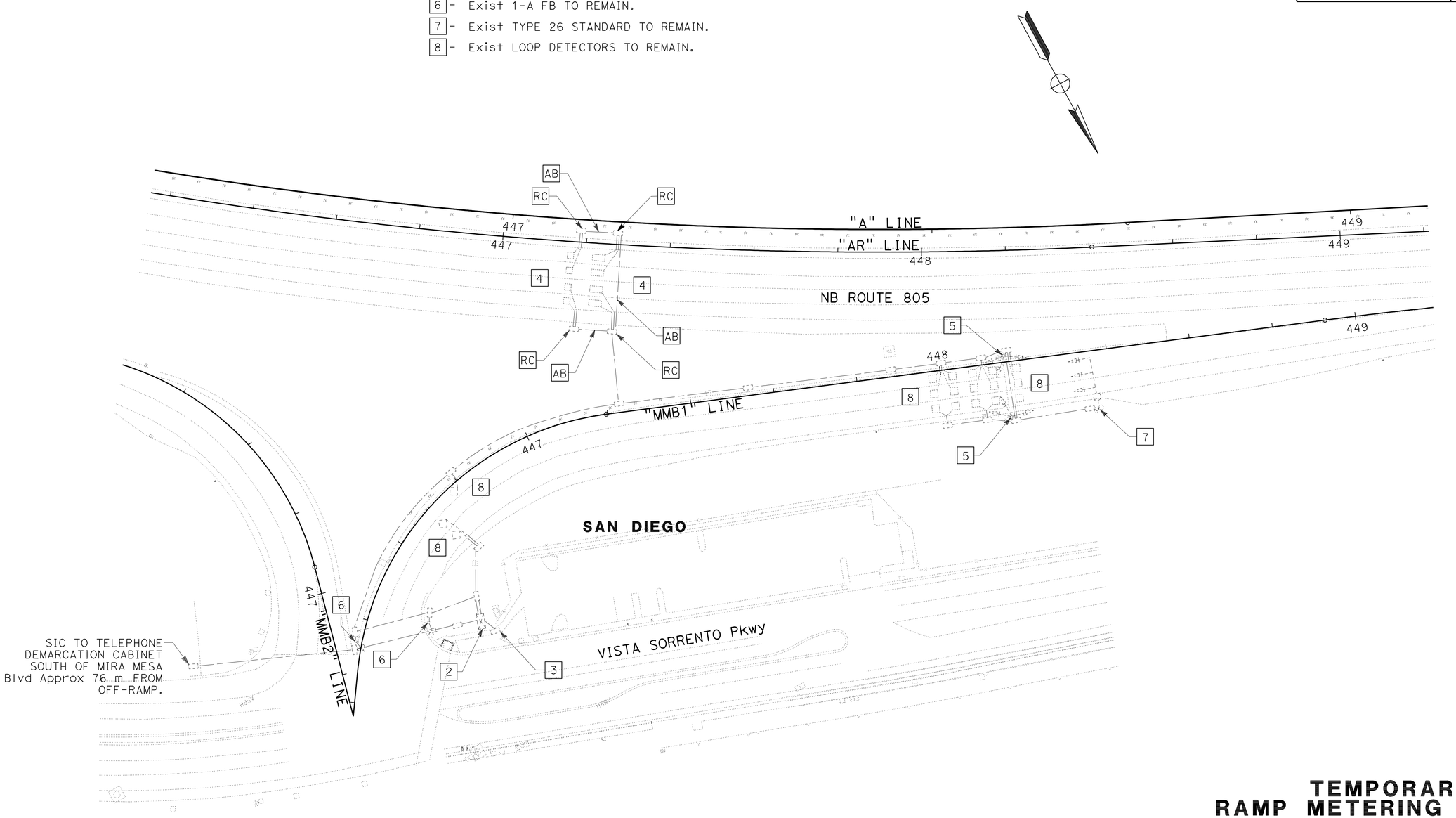

TEMPORARY RAMP METERING SYSTEM (LOCATION 3) EXISTING AND REMOVE

SCALE 1:500

E-37

THIS PLAN IS ACCURATE FOR ELECTRICAL WORK ONLY

ALL DIMENSIONS ARE IN METERS UNLESS OTHERWISE SHOWN

STATE OF CALIFORNIA - DEPARTMENT OF TRANSPORTATION

Caltrans

CONSULTANT FUNCTIONAL SUPERVISOR: CHRIS JOHNSON

CALCULATED-DESIGNED BY: JOHN MIKELL

CHECKED BY: JOSE OSTDIEK

REVISED BY / DATE REVISED

LAST REVISION 05-28-09

DATE PLOTTED => 29-SEP-2010
TIME PLOTTED => 14:50

DIST	COUNTY	ROUTE	KILOMETER POST TOTAL PROJECT	SHEET No.	TOTAL SHEETS
11	SD	5,805	R49.9/R51.7, 42.6/46.5	500	886

REGISTERED CIVIL ENGINEER 05-06-09 DATE

9-27-10
PLANS APPROVAL DATE

REGISTERED PROFESSIONAL ENGINEER JOSE OSTDIEK No. C65334 Exp. 9/30/09 CIVIL STATE OF CALIFORNIA

THE STATE OF CALIFORNIA OR ITS OFFICERS OR AGENTS SHALL NOT BE RESPONSIBLE FOR THE ACCURACY OR COMPLETENESS OF ELECTRONIC COPIES OF THIS PLAN SHEET.

Dokken Engineering
5675 Ruffin Road,
Suite 250
San Diego, CA 92123

Caltrans Metric

NOTES (TSO):

1 - SEE SHEET E-37 FOR EXISTING RAMP METER CONFIGURATION.

2 - Exist RM CONTROLLER ASSEMBLY. FURNISH AND INSTALL MVDS CARDS.

3 - TO Exist TYPE III SERVICE.

4 - TYPE VDS40 WITH MVDS. SEE DETAILS ON SHEET E-44.

5 - SEE SHEET E-27 "MODIFY RAMP METERING SYSTEM (LOCATION 3)" FOR ADDITIONAL INFORMATION.

CONDUIT NOTES (TSO):

1 - Exist 53C, 8 dlc. REMOVE dlc ADD 1 MVDS CABLE.

2 - Exist 78C, 3-9csc, 2#8 (ltg), 3 dlc (P), 3 dlc (D), 8 dlc (ML)
REMOVE 8 dlc (ML)
ADD 1 MVDS CABLE

3 - Exist 78C, 3-9csc, 2#8 (ltg), 3 dlc (P), 3 dlc (D), 1 dlc (Q), 8 dlc (ML)
REMOVE 8 dlc (ML)
ADD 1 MVDS CABLE

4 - Exist 78C, 3-9csc, 2#8 (ltg), 2#12 (fb), 3 dlc (P), 3 dlc (D), 1 dlc (Q), 8 dlc (ML)
REMOVE 8 dlc (ML)
ADD 1 MVDS CABLE

5 - Exist 78C, 3-9csc, 2#8 (ltg), 2#12 (fb), 3 dlc (P), 3 dlc (D), 1 dlc (Q), 8 dlc (ML)
REMOVE 8 dlc (ML)
ADD 1 MVDS CABLE

6 - Exist 2-78C, 3-9csc, 2#8 (ltg), 2#12 (fb), 3 dlc (P), 3 dlc (D), 3 dlc (Q), 8 dlc (ML)
REMOVE 8 dlc (ML)
ADD 1 MVDS CABLE

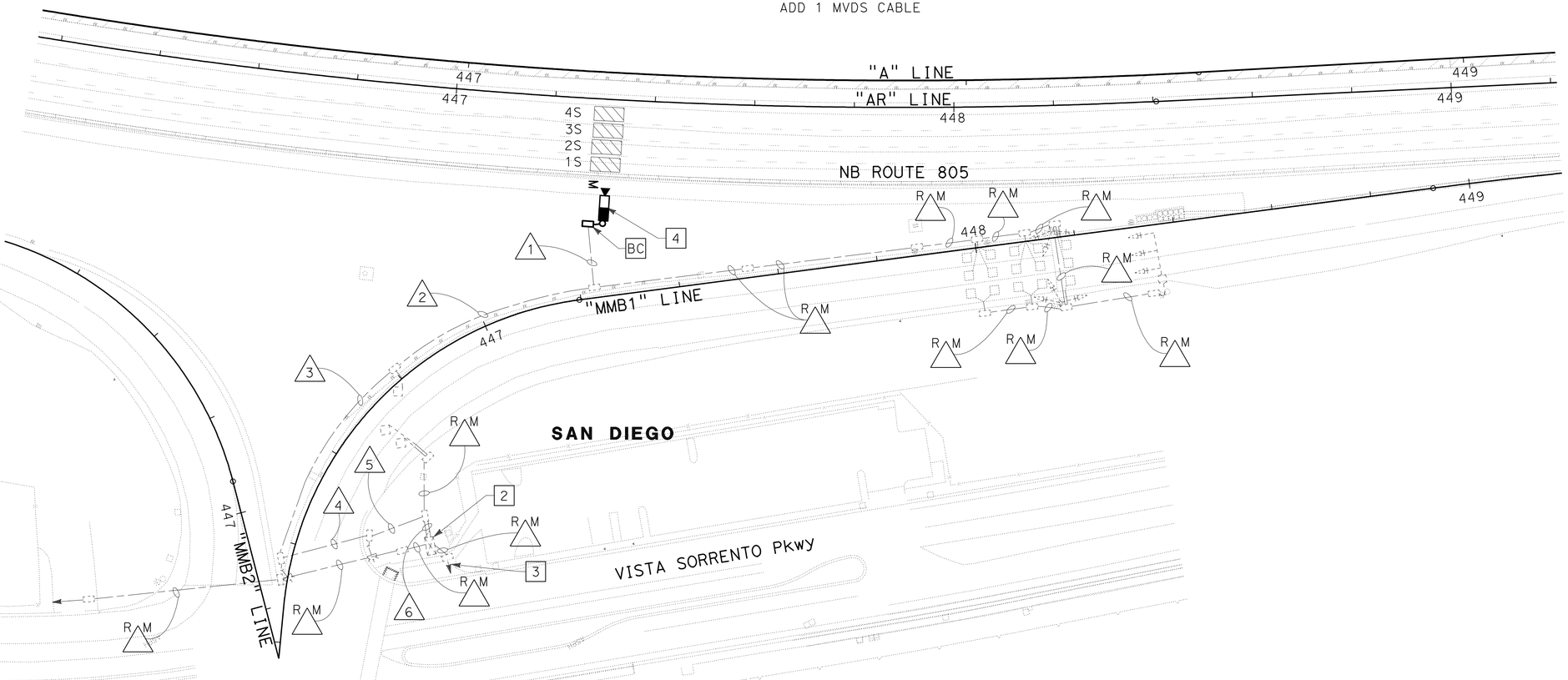

TEMPORARY RAMP METERING SYSTEM (LOCATION 3) (STAGE 1A)

SCALE 1:500

E-38

THIS PLAN IS ACCURATE FOR ELECTRICAL WORK ONLY

ALL DIMENSIONS ARE IN METERS UNLESS OTHERWISE SHOWN

STATE OF CALIFORNIA - DEPARTMENT OF TRANSPORTATION
Caltrans

CONSULTANT FUNCTIONAL SUPERVISOR: CHRIS JOHNSON

CALCULATED-DESIGNED BY: JOHN MIKELL
CHECKED BY: JOSE OSTDIEK

REVISED BY | DATE REVISED

LAST REVISION 05-28-09 | DATE PLOTTED => 29-SEP-2010 | TIME PLOTTED => 14:50