Dist	COUNTY	ROUTE	KILOMETER POST TOTAL PROJECT	SHEET No.	TOTAL SHEETS
11	SD	5,805	R49.9/R51.7, 42.6/46.5	201	886

REGISTERED CIVIL ENGINEER 05-20-09 DATE

9-27-10
PLANS APPROVAL DATE

REGISTERED PROFESSIONAL ENGINEER SHAHBAZ A ALVI No. 55293 Exp. 12-31-10 CIVIL STATE OF CALIFORNIA

THE STATE OF CALIFORNIA OR ITS OFFICERS OR AGENTS SHALL NOT BE RESPONSIBLE FOR THE ACCURACY OR COMPLETENESS OF SCANNED COPIES OF THIS PLAN SHEET.

Caltrans Metric

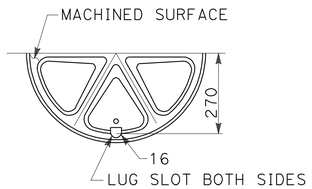

BOTTOM OF COVER

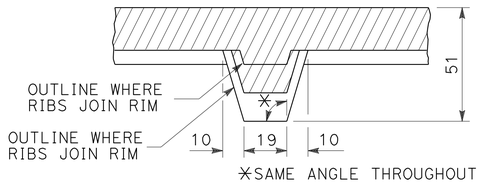

SECTION THROUGH RIB AT MID RADIUS

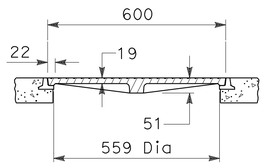

SECTION THROUGH FRAME AND COVER

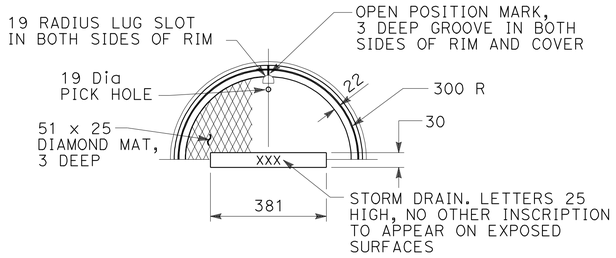

TOP OF FRAME AND COVER

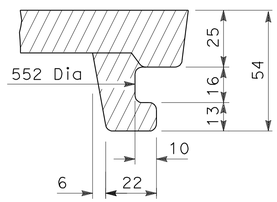

SECTION THROUGH LUG

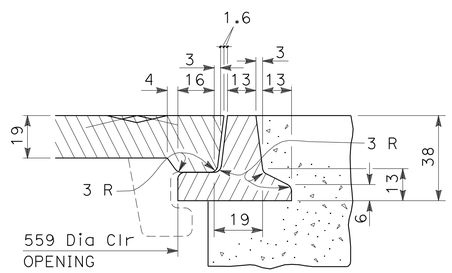

SECTION THROUGH RIM

MANHOLE FRAME AND COVER TYPE B & B1 INLET

NOT TO SCALE

1 e g i k m o q s ak am ao 2 e

3 a e g i k m 4 c 5 c g 7 g i m q 7B c

NOTES: MANHOLE FRAME AND COVER FOR TYPE B INLET

1. THE FRAME AND COVER SHALL BE CAST IRON. CAST IRON SHALL CONFORM TO ASTM 48, CLASS 30.
2. FRAME AND COVER FOR USE IN NON-TRAFFIC AREA ONLY.
3. WEIGHTS: FRAME 13.2 kg-15 kg
   COVER 43 kg-50 kg

BOX SECTION REINFORCEMENT

MAXIMUM SPAN X OR Y	DEPTH V	THICK-NESS T	Horiz & FLOOR Reinf
914 TO 1219	1219	152	#13 @ 457
1245 TO 2134		152	#13 @ 305
2159 TO 2438		152	#13 @ 203
914 TO 1219	1245 TO 2438	152	#13 @ 457
1245 TO 1524		152	#13 @ 305
1549 TO 1829		152	#13 @ 203
1854 TO 2438		152	#13 @ 152
914 TO 1219	2464 TO 3658	152	#13 @ 381
1245 TO 1524		203	#13 @ 305
1549 TO 1829		203	#13 @ 203
1854 TO 2438		203	#13 @ 152
914 TO 1219	3683 TO 4877	152	#13 @ 305
1245 TO 1524		203	#13 @ 305
1549 TO 1829		203	#13 @ 203
1854 TO 2134		203	#13 @ 152
2159 TO 2438		203	#16 @ 203
914 TO 1219	4902 TO 6096	203	#13 @ 305
1245 TO 1524		254	#13 @ 305
1549 TO 1829		254	#13 @ 203
1854 TO 2134		254	#13 @ 152
2159 TO 2438		254	#16 @ 203
914 TO 1219	6121 TO 7315	203	#13 @ 305
1245 TO 1524		254	#13 @ 305
1549 TO 1829		254	#13 @ 203
1854 TO 2134		254	#13 @ 152
2159 TO 2438		305	#16 @ 203

TYPE B & B1 INLET DETAILS

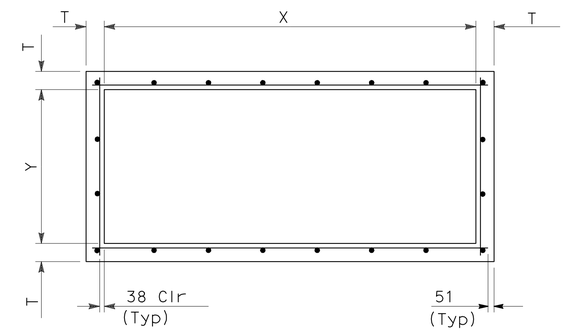

VERTICAL REINFORCING #13 @ 457 Max, FOR HORIZONTAL REINFORCING, SEE TABLE

TYPICAL BOX SECTION

NOTES: FOR TYPICAL BOX SECTION AND STEP DETAIL

1. CONCRETE SHALL BE MINOR Conc UNLESS OTHERWISE NOTED.
2. FLOOR SHALL HAVE A WOOD TROWEL FINISH AND, EXCEPT WHERE USED AS JUNCTION BOXES, SHALL HAVE A MINIMUM SLOPE OF 12:1 FROM ALL DIRECTIONS TOWARD THE OUTLET.
3. DEPTH V IS MEASURED FROM THE TOP OF THE STRUCTURE TO THE FLOWLINE OF THE BOX.

ALL DIMENSIONS ARE IN MILLIMETERS UNLESS OTHERWISE SHOWN

DRAINAGE DETAILS

NO SCALE

DD-12

REVISED BY	DATE REVISED

THEO AQUINO — SHAHBAZ A ALVI

CALCULATED-DESIGNED BY — CHECKED BY

FUNCTIONAL SUPERVISOR — MAJID KHARRATI

STATE OF CALIFORNIA - DEPARTMENT OF TRANSPORTATION

Caltrans PROJECT DEVELOPMENT

LAST REVISION 05-29-09 DATE PLOTTED => 29-SEP-2010 TIME PLOTTED => 14:01

Dist	COUNTY	ROUTE	KILOMETER POST TOTAL PROJECT	SHEET No.	TOTAL SHEETS
11	SD	5,805	R49.9/R51.7, 42.6/46.5	202	886

REGISTERED CIVIL ENGINEER 05-20-09 DATE

9-27-10
PLANS APPROVAL DATE

REGISTERED PROFESSIONAL ENGINEER SHAHBAZ A ALVI No. 55293 Exp. 12-31-10 CIVIL STATE OF CALIFORNIA

THE STATE OF CALIFORNIA OR ITS OFFICERS OR AGENTS SHALL NOT BE RESPONSIBLE FOR THE ACCURACY OR COMPLETENESS OF SCANNED COPIES OF THIS PLAN SHEET.

Caltrans Metric

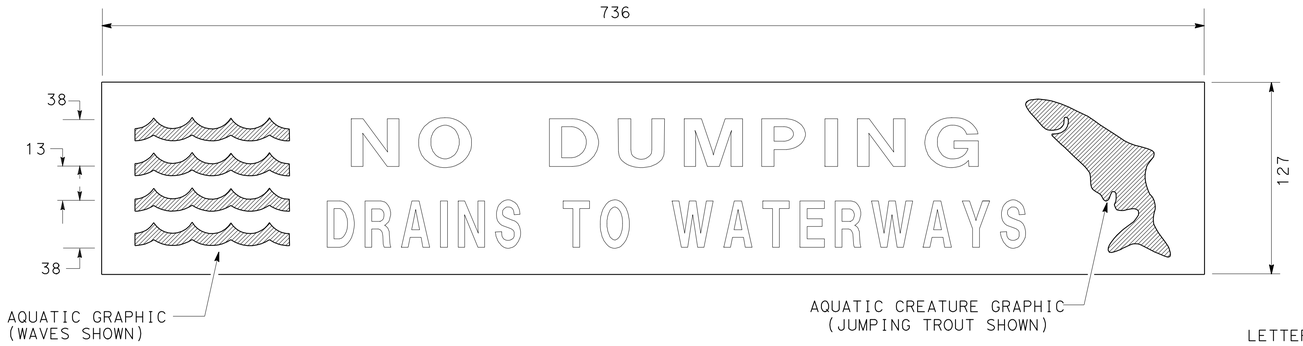

PLAN

DRAINAGE INLET MARKER

(PREFABRICATED THERMOPLASTIC)

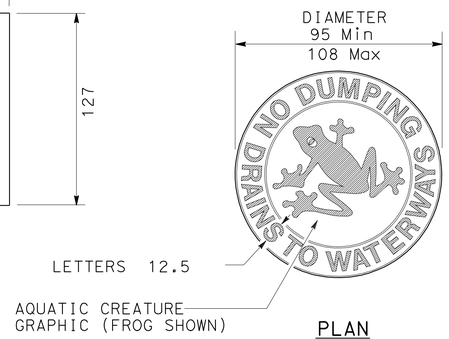

PLAN

DRAINAGE INLET MARKER

(PLASTIC)

NOTES:

1. THE STAMPED CONCRETE IMPRESSION SHALL BE LEGIBLE AND FREE OF BLEMISHES.
2. THE DIMENSIONS OF THE DRAINAGE INLET MARKER (STAMPED CONCRETE IMPRINT OR PREFABRICATED THERMOPLASTIC) SHALL VARY NO MORE THAN 25 mm IN WIDTH AND LENGTH.
3. THE DRAINAGE INLET MARKER SHALL BE CENTERED OPPOSITE THE DRAINAGE FACILITY.
4. THE TEXT, GRAHIC AND BACKGROUND SHALL BE OF CONTRASTING COLORS FOR THE PREFABRICATED THERMOPLASTIC AND PLASTIC DRAINAGE INLET MARKERS. COLORS FOR TEXT AND GRAPHICSHALL BE BLUE OR GREEN.

PLAN

DRAINAGE INLET MARKER

(STAMPED CONCRETE IMPRINT)

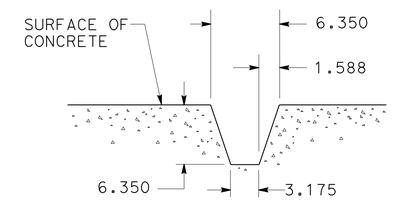

SECTION A-A

STAMPED CONCRETE

IMPRINT DETAIL

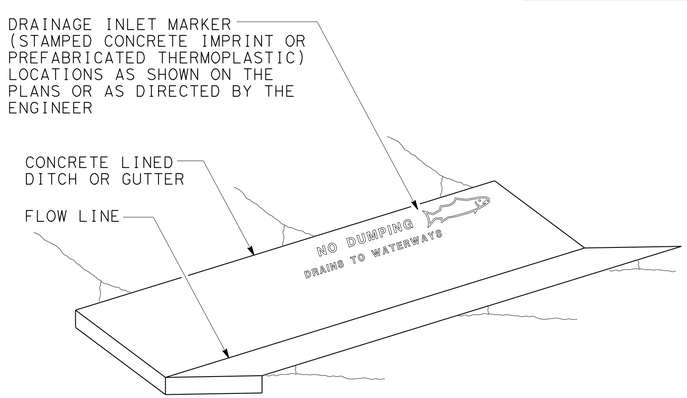

PERSPECTIVE

DRAINAGE INLET MARKER ON

CONCRETE LINED DITCH

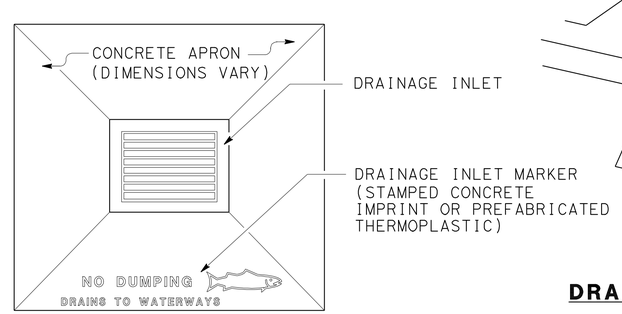

PLAN

DRAINAGE INLET MARKER ON

DRAINAGE INLET APRON

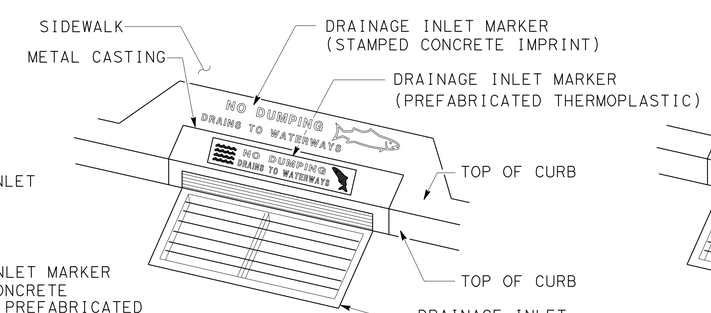

PERSPECTIVE

DRAINAGE INLET MARKER ON

DRAINAGE INLET

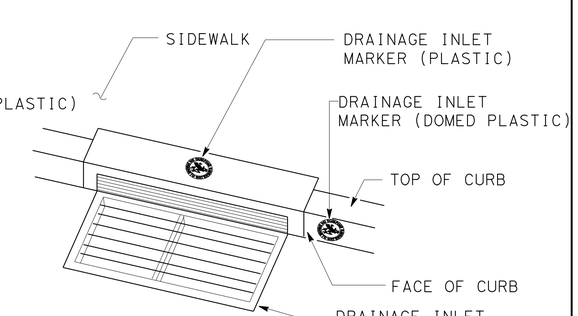

PERSPECTIVE

DRAINAGE INLET MARKER (PLASTIC)

ON DRAINAGE INLET

ALL DIMENSIONS ARE IN MILLIMETERS UNLESS OTHERWISE SHOWN

NO SCALE

DRAINAGE DETAILS

DD-13

REVISED BY	DATE REVISED

CALCULATED-DESIGNED BY	CHECKED BY
THEO AQUINO	SHAHBAZ A ALVI

FUNCTIONAL SUPERVISOR: MAJID KHARRATI

STATE OF CALIFORNIA - DEPARTMENT OF TRANSPORTATION

Caltrans PROJECT DEVELOPMENT

LAST REVISION 05-29-09 DATE PLOTTED => 29-SEP-2010 TIME PLOTTED => 14:01

Dist	COUNTY	ROUTE	KILOMETER POST TOTAL PROJECT	SHEET No.	TOTAL SHEETS
11	SD	5,805	R49.9/R51.7, 42.6/46.5	203	886

REGISTERED CIVIL ENGINEER 05-20-09 DATE

9-27-10
PLANS APPROVAL DATE

REGISTERED PROFESSIONAL ENGINEER SHAHBAZ A ALVI No. 55293 Exp. 12-31-10 CIVIL STATE OF CALIFORNIA

THE STATE OF CALIFORNIA OR ITS OFFICERS OR AGENTS SHALL NOT BE RESPONSIBLE FOR THE ACCURACY OR COMPLETENESS OF SCANNED COPIES OF THIS PLAN SHEET.

Caltrans Metric

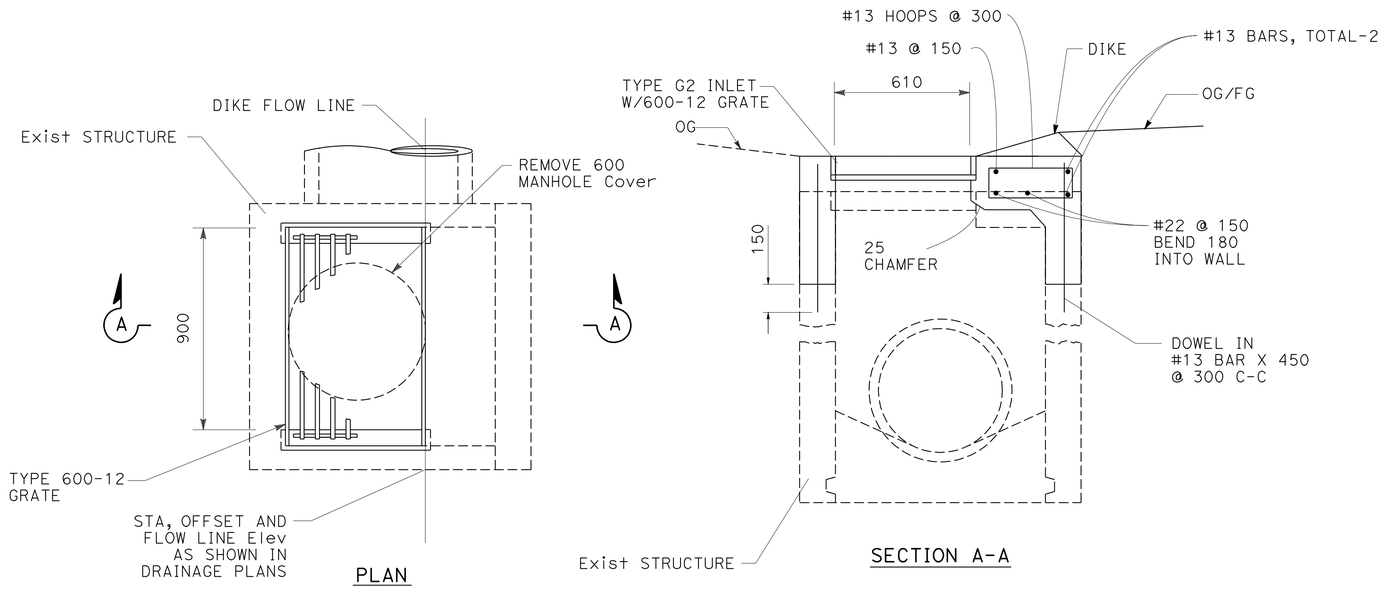

MODIFY JUNCTION STRUCTURE TO G2 INLET

10B 10C

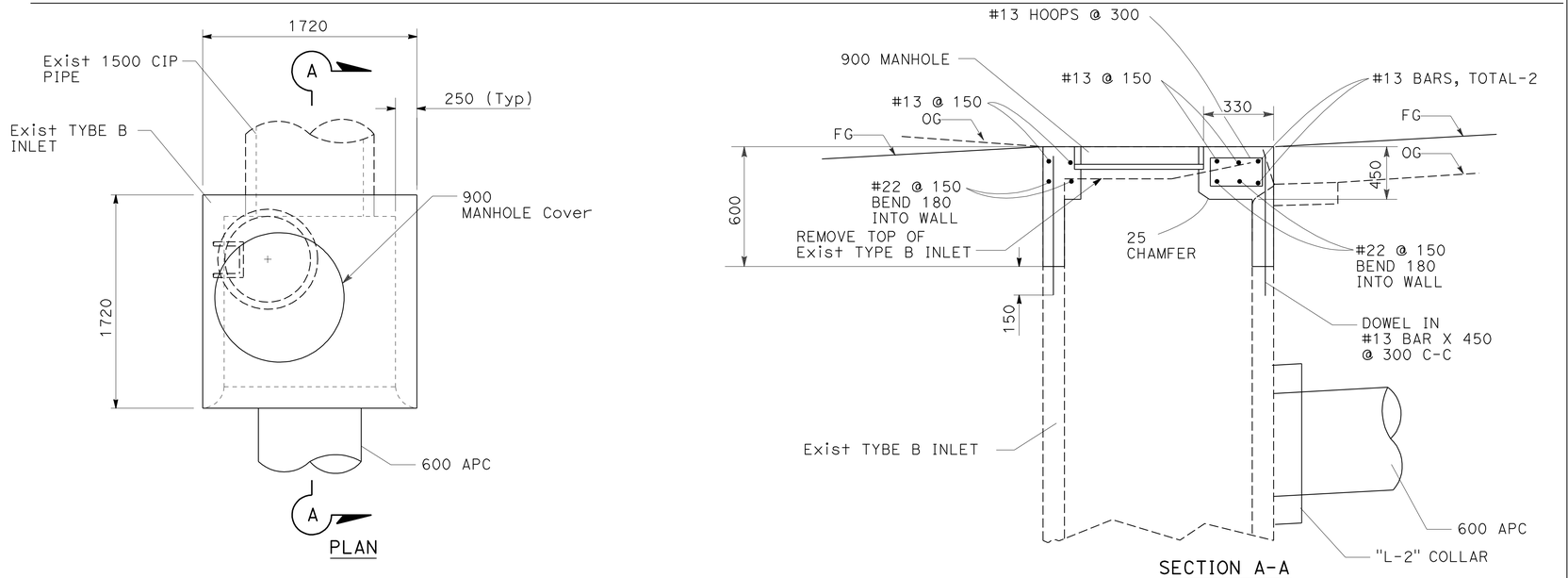

MODIFY Exist TYPE B INLET

7B

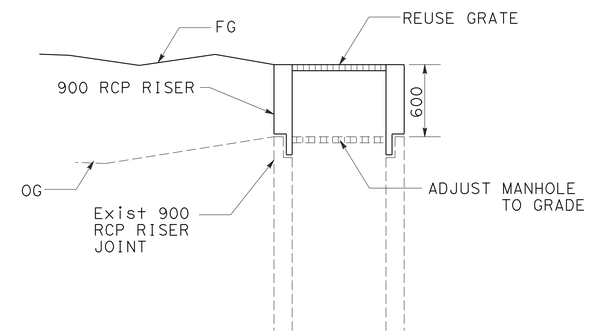

MODIFY INLET (Exist RCP RISER WITH MANHOLE)

10A

MODIFY INLET

ALL DIMENSIONS ARE IN MILLIMETERS UNLESS OTHERWISE SHOWN

DRAINAGE DETAILS

NO SCALE

DD-14

REVISED BY	DATE REVISED
THEO AQUINO	SHAHBAZ A ALVI

CALCULATED-DESIGNED BY SHAHBAZ A ALVI
CHECKED BY

FUNCTIONAL SUPERVISOR MAJID KHARRATI

STATE OF CALIFORNIA - DEPARTMENT OF TRANSPORTATION
Caltrans PROJECT DEVELOPMENT

LAST REVISION 05-29-09 DATE PLOTTED => 29-SEP-2010 TIME PLOTTED => 14:01

Dist	COUNTY	ROUTE	KILOMETER POST TOTAL PROJECT	SHEET No.	TOTAL SHEETS
11	SD	5,805	R49.9/R51.7, 42.6/46.5	204	886

Caltrans Metric

REGISTERED CIVIL ENGINEER 05-21-09 DATE

9-27-10
PLANS APPROVAL DATE

REGISTERED PROFESSIONAL ENGINEER TIMOTHY V VO No. 65662 Exp. 09-30-09 CIVIL STATE OF CALIFORNIA

THE STATE OF CALIFORNIA OR ITS OFFICERS OR AGENTS SHALL NOT BE RESPONSIBLE FOR THE ACCURACY OR COMPLETENESS OF SCANNED COPIES OF THIS PLAN SHEET.

ALTERNATIVE PIPE CULVERTS				
DESIGNATION	RCP	METAL PIPES: SSRP (POLYMERISED ASPHALT INVERT OR POLYMERIC SHEET COATING) CSP WITH BITUMINOUS COATING AND PAVED INVERT		PLASTIC PIPES: HDPE-RIBBED OR CORRUGATED-TYPE S OR C PVC-RIBBED OR CORRUGATED
	SIZE (mm)	SIZE (mm)	THICKNESS (mm)	SIZE (mm)
300 mm APC	300	300	2.77	300
450 mm APC	450	450	2.77	450
600 mm APC	600	600	2.77	600
750 mm APC	750	750	2.77	750
900 mm APC	900	900	2.77	900

	DRAINAGE SYSTEM No.	DRAINAGE UNIT	DRAINAGE INLET MARKER	ABANDON INLET	ABANDON CULVERT	REMOVE CULVERT	REMOVE INLET	REMOVE CULVERT (N)	REMOVE INLET (N)	REMOVE HEADWALL	CAP RISER	HEIGHT OF INLET (N)	MINOR CONCRETE (MINOR STRUCTURE)	Max HEIGHT OF COVER (N)	APC 200 mm	APC 450 mm	APC 600 mm	APC 750 mm	APC 900 mm	600 mm ALTERNATIVE PIPE DOWNDRAIN	450 mm HDPE TYPE S	600 mm HDPE TYPE S	750 mm HDPE TYPE S	900 mm HDPE TYPE S	600 mm RCP "CLASS V SPECIAL- METHOD 2"	900 mm RCP "CLASS V SPECIAL- METHOD 2"	1050 mm RCP "CLASS II- METHOD 1"	1200 mm RCP 'CLASS II- METHOD 1"	1350 mm RCP "CLASS III- METHOD 1"	300 mm RCP RISER	900 mm PRECAST CONCRETE PIPE RISER	MODIFY INLET	PIPE JOINT CLASSIFICATION (N)	CONCRETE (CHANNEL LINING)	CONCRETE (CONCRETE APRON)	MISCELLANEOUS IRON AND STEEL	GRATED LINE DRAIN	MINOR CONCRETE (BACKFILL)	ROCK SLOPE PROTECTION FABRIC	ROCK SLOPE PROTECTION (LIGHT , METHOD B)	CLASS 2 CONCRETE (MINOR STRUCTURE)	CABLE RAILING	DITCH EXCAVATION	SAND BACKFILL	DESCRIPTION	STATION	DRAINAGE SYSTEM SHEET No.	DRAINAGE SYSTEM No.	DRAINAGE UNIT
			EA	EA	EA	m	EA	m	EA	EA	EA	m	m^3	m	m	m	m	m	m	m	m	m	m	m	m	m	m	m	m	m	m	EA		m^3	m^3	KG	m	m^3	m^2	m^3	m^3	m	m^3	m^3					
1	a												2.78																												6.4			STRAIGHT PIPE DOUBLE HEADWALL W/CABLE RAILING	35.3 m L+ 440+60.721 "SVRM"	D-1	1	a
1	b													1.6														43.9					S												1200 mm x 43.9 RCP		D-1	1	b
1	c											2.3	4.24																							80								JUNCTION STRUCTURE W/900 mm MANHOLE FRAME & COVER	9.4 m L+ 440+65.300 "SVRM"	D-1	1	c
1	d													1.6													40.4						S												1050 mm x 40.4 RCP		D-1	1	d
1	e	1										1.7	2.08																							65								TYPE B INLET (L=1.80) W/DRAINAGE INLET MARKER	8.6 m L+ 441+07.360 "SVRM"	D-1	1	e
1	f													1.6										5.7									S												900 mm x 5.7 HDPE (TYPE S)		D-1	1	f
1	g	1										1.6	2.00																							65								TYPE B INLET (L=1.80) W/DRAINAGE INLET MARKER	8.7 m L+ 441+14.560 "SVRM"	D-1	1	g
1	h													1.5										5.7									S												900 mm x 5.7 HDPE (TYPE S)		D-1	1	h
1	i	1										1.5	1.91																							65								TYPE B INLET (L=1.80) W/DRAINAGE INLET MARKER	8.9 m L+ 441+21.760 "SVRM"	D-1	1	i
1	j													1.4										18.7									S												900 mm x 18.7 HDPE (TYPE S)		D-2	1	j
1	k	1										1.4	1.83																							65								TYPE B INLET (L=1.80) W/DRAINAGE INLET MARKER	9.4 m L+ 441+42.000 "SVRM"	D-2	1	k
1	l													0.72			11.8																S												600 mm x 11.8 APC		D-2	1	l
1	m											1.2	2.36																							77								TYPE B1 INLET, L=4.0 W/CHECKERED PLATE COVER	3.2 m L+ 441+42.000 "SVRM"	D-2	1	m
1	n													1.6								12.1											S												750 mm x 12.1 HDPE (TYPE S)		D-2	1	n
1	o	1										1.3	1.75																							65								TYPE B INLET (L=1.80) W/DRAINAGE INLET MARKER	9.4 m L+ 441+55.600 "SVRM"	D-2	1	o
1	p													1.3								11.8											S												750 mm x 11.8 HDPE (TYPE S)		D-2	1	p
1	q	1										1.3	1.75																							65								TYPE B INLET (L=1.80) W/DRAINAGE INLET MARKER	9.4 m L+ 441+68.700 "SVRM"	D-2	1	q
1	r													2.0								45.5											S												750 mm x 45.5 HDPE (TYPE S)		D-8	1	r
1	s	1										2.0	3.33																							65								TYPE B-1 INLET (L=5.0) W/DRAINAGE INLET MARKER	9.4 m L+ 442+15.642 "SVRM"	D-8	1	s
1	t													1.6			57.1																S												600 mm x 57.1 APC		D-8	1	t
1	u	1										2.2	3.49																							77								TYPE B1INLET, L=5.0 W/CHECKERED PLATED COVER W/DRAINAGE INLET MARKER	9.2 m L+ 436+89.000 "CCR"	D-2	1	u
1	v													1.34			44.8																S												600 mm x 44.8 APC		D-2	1	v
1	w	1										1.5	2.29																							77								TYPE B1 INLET, L=3.0 W/CHECKERED PLATED COVER W/DRAINAGE INLET MARKER	9.0 m L+ 437+33.000 "CCR"	D-2	1	w
1	x													1.48				20.2															S												750 mm x 20.2 APC		D-2	1	x
1	y	1										2.8	4.14																							77								TYPE B INLET (L=1.8) W/DRAINAGE INLET MARKER	10.0 m L+ 447+35.000 "MMB6M"	D-2	1	y
1	z													1.47			55																S												600 mm x 55 APC		D-2	1	z
1	aa											1.5	1.39																							148								TYPE G2 INLET W/ 600-12X GRATE	9.5 m L+ 447+91.000 "MMB6M"	D-2	1	aa
1	ab													0.85			17.8																S												600 mm x 17.80 APC		D-2	1	ab
1	ac											1.5	1.39																							148								TYPE G2 INLET W/600-12 GRATE	9.5 m R+ 447+91.000 "MMB6M"	D-2	1	ac
1	ad													2.4								54.2											S												750 mm x 54.2 HDPE (TYPE S)		D-2	1	ad
1	ae											1.2	1.2																						2.36	148								TYPE G2 INLET W/600-12 GRATE W/Conc APRON	37 m L+ 442+84.452 "MMBM"	D-2	1	ae
1	af													1.08							24.3												S												600 mm x 24.3 HDPE (TYPE S)		D-2	1	af
1	ag											1.5	1.39																							148								TYPE G2 INLET W/ 600-12 GRATE	58.2 m L+ 442+98.500 "MMBM"	D-1	1	ag
1	ah													4.0			16.3																P												600 mm x 16.3 APC		D-1	1	ah
1	ai											3.6	4.6																						0.43	148								TYPE G2 INLET W/600-12 GRATE W/Conc APRON	72.5 m L+ 443+09.088 "MMBM"	D-1	1	ai
1	aj													1.83			20.2																S												600 mm x 20.2 APC		D-2	1	aj
1	ak	1										2.1	2.78																							77								TYPE B1 INLET, L=3.0 W/CHECKERED PLATED COVER W/DRAINAGE INLET MARKER	16.6 m L+ 442+90.638 "MMBM"	D-2	1	ak
1	al													1.62			37																S												600 mm x 37 APC		D-2	1	al
1	am	1										2.1	2.78																							77								TYPE B1 INLET, L=3.0 W/CHECKERED PLATED COVER W/DRAINAGE INLET MARKER	16.6 m L+ 443+30.982 "MMBM"	D-2	1	am
SUBTOTAL			12										49.48				260	20.2			24.3	123.6	30.1			40.4	43.9								2.79	1737					6.4							

NOTES:
1. PIPE JOINT TYPES D -DOWNDRAIN S -STANDARD
SO -SOIL TIGHT W -WATER TIGHT
P -POSITIVE
2. (N) NOT A SEPARATE PAY ITEM FOR INFORMATION ONLY.
3. HDPE - HIGH DENSITY POLYETHYLENE PIPE
4. GRATED LINE DRAIN ARE 0.6% PRE-SLOPED

DRAINAGE QUANTITIES
DQ-1

STATE OF CALIFORNIA - DEPARTMENT OF TRANSPORTATION
Caltrans PROJECT DEVELOPMENT

FUNCTIONAL SUPERVISOR: MAJID KHARRATI
CALCULATED-DESIGNED BY: ALI ABUDIAB
CHECKED BY: SHAHBAZ A ALVI
REVISED BY / DATE REVISED

LAST REVISION 06-01-09
DATE PLOTTED => 29-SEP-2010
TIME PLOTTED => 14:01

Dist	COUNTY	ROUTE	KILOMETER POST TOTAL PROJECT	SHEET No.	TOTAL SHEETS
11	SD	5,805	R49.9/R51.7, 42.6/46.5	205	886

REGISTERED CIVIL ENGINEER 05-21-09 DATE

9-27-10
PLANS APPROVAL DATE

REGISTERED PROFESSIONAL ENGINEER TIMOTHY V VO No. 65662 Exp. 09-30-09 CIVIL STATE OF CALIFORNIA

THE STATE OF CALIFORNIA OR ITS OFFICERS OR AGENTS SHALL NOT BE RESPONSIBLE FOR THE ACCURACY OR COMPLETENESS OF SCANNED COPIES OF THIS PLAN SHEET.

Caltrans Metric

DRAINAGE SYSTEM No.	DRAINAGE UNIT	DRAINAGE INLET MARKER	ABANDON INLET	ABANDON CULVERT	REMOVE CULVERT	REMOVE INLET	REMOVE CULVERT (N)	REMOVE INLET (N)	REMOVE HEADWALL	CAP RISER	HEIGHT OF INLET (N)	MINOR CONCRETE (MINOR STRUCTURE)	Max HEIGHT OF COVER (N)	APC 200 mm	APC 450 mm	APC 600 mm	APC 750 mm	APC 900 mm	600 mm ALTERNATIVE PIPE DOWNDRAIN	450 mm HDPE TYPE S	600 mm HDPE TYPE S	750 mm HDPE TYPE S	900 mm HDPE TYPE S	600 mm RCP "CLASS V SPECIAL- METHOD 2"	900 mm RCP "CLASS V SPECIAL- METHOD 2"	1050 mm RCP "CLASS II- METHOD 1"	1200 mm RCP 'CLASS II- METHOD 1"	1350 mm RCP "CLASS III- METHOD 1"	300 mm RCP RISER	900 mm PRECAST CONCRETE PIPE RISER	MODIFY INLET	PIPE JOINT CLASSIFICATION (N)	CONCRETE (CHANNEL LINING)	CONCRETE (CONCRETE APRON)	MISCELLANEOUS IRON AND STEEL	GRATED LINE DRAIN	MINOR CONCRETE (BACKFILL)	ROCK SLOPE PROTECTION FABRIC	ROCK SLOPE PROTECTION (LIGHT , METHOD B)	CLASS 2 CONCRETE (MINOR STRUCTURE)	CABLE RAILING	DITCH EXCAVATION	SAND BACKFILL	DESCRIPTION	STATION	DRAINAGE SYSTEM SHEET No.	DRAINAGE SYSTEM No.	DRAINAGE UNIT
		EA	EA	EA	m	EA	m	EA	EA	EA	m	m^3	m	m	m	m	m	m	m	m	m	m	m	m	m	m	m	m	m	m	m	EA		m^3	m^3	KG	m	m^2	m^3	m^3	m^3	m	m^3	m^3					
1	an												1.52			45.2																S												600 mm x 45.2 APC		D-2	1	an
1	ao	1									2.1	2.78																							77									TYPE B1 INLET, L=3.0 W/CHECKERED PLATED COVER W/DRAINAGE INLET MARKER	16.6m Lt 443+80.362 "MMBM"	D-2	1	ao
1	ap											0.68																					13					20	15					Conc CHANNEL W/CUT OFF WALL AND RSP		D-2	1	ap
1	aq								1																																			REMOVE TYPE A DOUBLE PIPE HEADWALL		D-2	1	aq
1	ar				44																																							REMOVE 750 mm X 44 RCP		D-2	1	ar
1	as					1																																						REMOVE CLEANOUT (H=2.2)		D-2	1	as
1	at				80																																							REMOVE 750 mm X 80 RCP		D-2	1	at
1	au			1																																						30.9	ABANDON 750 mm X 70 RCP		D-2	1	au
1	av		1																																							1.1	ABANDON INLET (TYPE GO, H=1.5)		D-2	1	av
1	aw			1																																						9.7	ABANDON 750 mm X 22 RCP		D-2	1	aw
1	ax		1																																							1.0	ABANDON CAPPED INLET (H=1.4)		D-2	1	ax
1	ay			1																																						5.4	ABANDON 450 mm X 34 CMP		D-2	1	ay
1	az					1																																						REMOVE 450 mm X 6.1 SCSP INLET		D-2	1	az
1	ba				2																																							REMOVE 450 mm X 2 RCP		D-8	1	ba
1	bb					1																																						REMOVE 450 mm X 6.7 SCSP INLET		D-2	1	bb
1	bc			1																																						4.4	ABANDON 750 mm X 10 RCP		D-2	1	bc
1	bd		1																																							1.1	ABANDON INLET (TYPE GO, H=1.5)		D-2	1	bd
1	be			1																																						3.2	ABANDON 600 mm X 23 CMP		D-2	1	be
1	bf					1																																						REMOVE 450 mm x 6.1 m		D-2	1	bf
1	bg			1																																						6.6	ABANDON 600 mm X 23 CMP		D-2	1	bg
1	bh		1																																							1.0	ABANDON INLET (TYPE GDO, H=1.4)		D-2	1	bh
1	bi				33																																							REMOVE 600 mm X 33 RCP		D-2	1	bi
1	bj					1																																						REMOVE INLET (TYPE GDO, H=1.5)		D-2	1	bj
1	bk				17																																							REMOVE 600 mm X 17 RCP		D-2	1	bk
1	bl					1																																						REMOVE INLET (TYPE GO, H=2.4)		D-2	1	bl
1	bm				96																																							REMOVE 600 mm X 96 CMP		D-2	1	bm
1	bn					1																																						REMOVE 450 mm X 6.7 SCSP INLET		D-8	1	bn
1	bo				56																																							REMOVE 600 mm X 56 RCP		D-2	1	bo
1	bp					1																																						REMOVE INLET (TYPE G2, H=1.8)		D-2	1	bp
1	bq			1																																						22.6	ABANDON 600 mm X 80 RCP		D-2	1	bq
1	br		1																																							1.1	ABANDON INLET (TYPE GO, H=1.5)		D-2	1	br
1	bs				6																																							REMOVE 600 mm X 6 RCP		D-2	1	bs
2	a											1.13																									20	15		3			STRAIGHT PIPE HEADWALL W/RSP & CABLE RAILING	33.4 m Lt 443+67.1 "MMBM"	D-2	2	a
2	b												1.2				1.15														S												750 mm x 1.15 APC		D-2	2	b
2	c										0.85	2.55																							80								JUNCTION STRUCTURE W/900 mm MANHOLE FRAME & COVER	32.4 m Lt 443+68.53 "MMBM"	D-2	2	c
SUBTOTAL		1	5	7	334	8			1			7.14				45.2	1.15																13		157			40	30		3		88.1					

DRAINAGE QUANTITIES
DQ-2

STATE OF CALIFORNIA - DEPARTMENT OF TRANSPORTATION
Caltrans® PROJECT DEVELOPMENT

FUNCTIONAL SUPERVISOR: MAJID KHARRATI
CALCULATED-DESIGNED BY: ALI ABUDIAB
CHECKED BY: SHAHBAZ A ALVI
REVISED BY / DATE REVISED

LAST REVISION 06-01-09
DATE PLOTTED => 29-SEP-2010
TIME PLOTTED => 14:01

Dist	COUNTY	ROUTE	KILOMETER POST TOTAL PROJECT	SHEET No.	TOTAL SHEETS
11	SD	5,805	R49.9/R51.7, 42.6/46.5	206	886

Caltrans Metric

REGISTERED CIVIL ENGINEER 05-21-09 DATE

9-27-10
PLANS APPROVAL DATE

REGISTERED PROFESSIONAL ENGINEER TIMOTHY V VO No. 65662 Exp. 09-30-09 CIVIL STATE OF CALIFORNIA

THE STATE OF CALIFORNIA OR ITS OFFICERS OR AGENTS SHALL NOT BE RESPONSIBLE FOR THE ACCURACY OR COMPLETENESS OF SCANNED COPIES OF THIS PLAN SHEET.

DRAINAGE SYSTEM No.	DRAINAGE UNIT	DRAINAGE INLET MARKER	ABANDON INLET	ABANDON CULVERT	REMOVE CULVERT	REMOVE INLET	REMOVE CULVERT (N)	REMOVE INLET (N)	REMOVE HEADWALL	CAP RISER	HEIGHT OF INLET (N)	MINOR CONCRETE (MINOR STRUCTURE)	Max HEIGHT OF COVER (N)	APC 200 mm	APC 450 mm	APC 600 mm	APC 750 mm	APC 900 mm	600 mm ALTERNATIVE PIPE DOWNDRAIN	450 mm HDPE TYPE S	600 mm HDPE TYPE S	750 mm HDPE TYPE S	900 mm HDPE TYPE S	600 mm RCP "CLASS V SPECIAL- METHOD 2"	900 mm RCP "CLASS V SPECIAL- METHOD 2"	1050 mm RCP "CLASS II- METHOD 1"	1200 mm RCP 'CLASS II- METHOD 1"	1350 mm RCP "CLASS III- METHOD 1"	300 mm RCP RISER	900 mm PRECAST CONCRETE PIPE RISER	MODIFY INLET	PIPE JOINT CLASSIFICATION (N)	CONCRETE (CHANNEL LINING)	CONCRETE (CONCRETE APRON)	MISCELLANEOUS IRON AND STEEL	GRATED LINE DRAIN	MINOR CONCRETE (BACKFILL)	ROCK SLOPE PROTECTION FABRIC	ROCK SLOPE PROTECTION (LIGHT , METHOD B)	CLASS 2 CONCRETE (MINOR STRUCTURE)	CABLE RAILING	DITCH EXCAVATION	SAND BACKFILL	DESCRIPTION	STATION	DRAINAGE SYSTEM SHEET No.	DRAINAGE SYSTEM No.	DRAINAGE UNIT
		EA	EA	EA	m	EA	m	EA	EA	EA	m	m^3	m	m	m	m	m	m	m	m	m	m	m	m	m	m	m	m	m	m	EA		m^3	m^3	KG	m^3	m^2	m^3	m^3	m^3	m	m^3	m^3					
2	d												1.44								70.5										S												600 mm x 70.5 HDPE (TYPE S)		D-2	2	d
2	e	1									2.2	2.86																						77									TYPE B1 INLET, L=3 W/CHECKERED PLATED COVER W/DRAINAGE INLET MARKER	16 m Lt 444+45.500 "MMBM"	D-2	2	e
2	f												1.58			66.1															S												600 mm x 66.1 APC		D-2	2	f
2	g										1.2	1.2																						148									TYPE G2 INLET W/ 600-12 GRATE	11.6 m Lt 446+44.353 "MMB5U"	D-8	2	g
2	h																																		6								6 m GLD W/REMOVABLE GRATE		D-8	2	h
3	a	1				1					0.76	1.37																						65									TYPE B INLET (L=2.0) & REMOVE Exist TYPE B INLET (H=0.9) W/DRAINAGE INLET MARKER	4.8 m Rt 9+57.000 "SVR2"	D-2	3	a
3	b												0.59							15.8											S					12.6							450 mm x 15.8 HDPE (TYPE S) W/MINOR Conc (BACKFILL)		D-2	3	b
3	c	1									0.75	1.60																						217									TYPE GT4 INLET W/ Dbl 600-12X GRATE W/DRAINAGE INLET MARKER	4.1 m Rt 9+42.413 "SVR2"	D-2	3	c
3	d												0.9							9											S					10.3							Dbl 450 mm x 9.0 HDPE (TYPE S) W/MINOR Conc (BACKFILL)		D-2	3	d
3	e	1									0.9	1.48																						65									TYPE B INLET (L=2.0) W/DRAINAGE INLET MARKER	4.1 m Rt 9+60.000 "SVR2"	D-2	3	e
3	f												0.80			33															S												600 mm x 33 APC		D-2	3	f
3	g	1									1.0	1.38																						65									TYPE B INLET (L=1.5) W/DRAINAGE INLET MARKER	3.9 m Lt 9+94.000 "SVR2"	D-2	3	g
3	h												1.7			12															S												600 mm x 12 APC		D-2	3	h
3	i	1									1.32	1.65																						65									TYPE B INLET (L=1.5) W/DRAINAGE INLET MARKER	6.1 m Lt 14+21.500 "BR"	D-2	3	i
3	j												1.63			29.1															S												600 mm x 29.1 APC		D-2	3	j
3	k										2.54	3.65																						65									TYPE B INLET (L=1.5) W/DRAINAGE INLET MARKER	6.2 m Lt 14+51.800 "BR"	D-2	3	k
3	l												1.48			12.4															S												600 mm x 12.4 APC		D-2	3	l
3	m										2.05	2.25																						65									TYPE B INLET (L=1.5) W/DRAINAGE INLET MARKER	6.0 m Rt 14+52.219 "BR"	D-2	3	m
3	n												1.5			8.5															S												600 mm x 8.5 APC		D-2	3	n
3	o										1.3	1.26																					0.43	148									TYPE G2 INLET W/600-12 GRATE W/Conc APRON	14.7 m Rt 14+57.531 "BR"	D-2	3	o
3	p							1																																			REMOVE INLET (TYPE B, H=1.0)		D-2	3	p
4	a											0.68																									18	13.5					STRAIGHT PIPE HEADWALL W/RSP	25.5 m Rt 15+21.620 "BR"	D-2	4	a
4	b												0.9		19																P												450 mm x 19.0 APC		D-2	4	b
4	c										1.8	2.04																						65									TYPE B INLET (L=1.5) W/DRAINAGE INLET MARKER	6.0 m Rt 15+27.25 "BR"	D-2	4	c
4	d												0.9			15.4															S												600 mm x 15.4 APC		D-2	4	d
4	e										1.5	1.39																					0.43	148									TYPE G2 INLET W/600-12 GRATE W/Conc APRON	9.7 m Lt 15+29.086 "BR"	D-2	4	e
4	f												1.55		11.4																D												450 mm x 11.4 APC DD		D-2	4	f
4	g										2.0	1.7																						148									TYPE G2 INLET W/600-12 GRATE	9.5 m Lt 446+01.413 "MMB4M"	D-2	4	g
4	h																																		6								6 m GLD W/REMOVABLE GRATE		D-2	4	h
5	a											0.68																															STRAIGHT PIPE HEADWALL	40.1 m Lt 438+13.255 "CCR"	D-2	5	a
5	b												1.8		26.5																P												450 mm x 26.5 APC		D-2	5	b
5	c										2.8	4.09																						65									TYPE B INLET (L=1.8) W/DRAINAGE INLET MARKER	15.8 m Lt 438+25.00 "CCR"	D-2	5	c
5	d												1.8			22.4															S												600 mm x 22.4 APC		D-2	5	d
5	e										1.5	1.39																						108									TYPE G2 INLET W/600-12X GRATE	17.1 m Lt 438+00.441 "CCR"	D-2	5	e
5	f												0.95			24															S												600 mm x 24.0 APC		D-2	5	f
5	g	1									1.6	2.00																						108									TYPE B INLET (L=1.8) W/DRAINAGE INLET MARKER	12.9 m Lt 438+50.174 "CCR"	D-2	5	g
SUBTOTAL		7				1						32.67			56.9	222.9				24.8	70.5												0.86	1622	12	22.9	18	13.5								

DRAINAGE QUANTITIES
DQ-3

STATE OF CALIFORNIA - DEPARTMENT OF TRANSPORTATION
Caltrans® PROJECT DEVELOPMENT

FUNCTIONAL SUPERVISOR: MAJID KHARRATI
CALCULATED-DESIGNED BY: SHAHBAZ A ALVI
CHECKED BY: ALI ABUDIAB
REVISED BY / DATE REVISED

LAST REVISION 06-01-09
DATE PLOTTED => 29-SEP-2010
TIME PLOTTED => 14:02

Dist	COUNTY	ROUTE	KILOMETER POST TOTAL PROJECT	SHEET No.	TOTAL SHEETS
11	SD	5,805	R49.9/R51.7, 42.6/46.5	207	886

REGISTERED CIVIL ENGINEER 05-21-09 DATE

9-27-10
PLANS APPROVAL DATE

REGISTERED PROFESSIONAL ENGINEER TIMOTHY V VO No. 65662 Exp. 09-30-09 CIVIL STATE OF CALIFORNIA

THE STATE OF CALIFORNIA OR ITS OFFICERS OR AGENTS SHALL NOT BE RESPONSIBLE FOR THE ACCURACY OR COMPLETENESS OF SCANNED COPIES OF THIS PLAN SHEET.

Caltrans Metric

DRAINAGE SYSTEM No.	DRAINAGE UNIT	DRAINAGE INLET MARKER	ABANDON INLET	ABANDON CULVERT	REMOVE CULVERT	REMOVE INLET	REMOVE CULVERT (N)	REMOVE INLET (N)	REMOVE HEADWALL	CAP RISER	HEIGHT OF INLET (N)	MINOR CONCRETE (MINOR STRUCTURE)	Max HEIGHT OF COVER (N)	APC 200 mm	APC 450 mm	APC 600 mm	APC 750 mm	APC 900 mm	APC 600 mm ALTERNATIVE PIPE DOWNDRAIN	450 mm HDPE TYPE S	600 mm HDPE TYPE S	750 mm HDPE TYPE S	900 mm HDPE TYPE S	450 mm RCP	900 mm RCP "CLASS V SPECIAL- METHOD 2"	1050 mm RCP "CLASS II- METHOD 1"	1200 mm RCP 'CLASS II- METHOD 1"	1350 mm RCP "CLASS III- METHOD 1"	ROCK SLOPE PROTECTION (1/4 T , METHOD B)	900 mm PRECAST CONCRETE PIPE RISER	MODIFY INLET	PIPE JOINT CLASSIFICATION (N)	CONCRETE (CHANNEL LINING)	CONCRETE (CONCRETE APRON)	MISCELLANEOUS IRON AND STEEL	GRATED LINE DRAIN	MINOR CONCRETE (BACKFILL)	ROCK SLOPE PROTECTION FABRIC	ROCK SLOPE PROTECTION (LIGHT , METHOD B)	CLASS 2 CONCRETE (MINOR STRUCTURE)	CABLE RAILING	DITCH EXCAVATION	SAND BACKFILL	DESCRIPTION	STATION	DRAINAGE SYSTEM SHEET No.	DRAINAGE SYSTEM No.	DRAINAGE UNIT
		EA	EA	EA	m	EA	m	EA	EA	EA	m	m^3	m	m	m	m	m	m	m	m	m	m	m	m	m	m	m	m	m^3	m	EA		m^3	m^3	KG	m	m^3	m^2	m^3	m^3	m	m^3	m^3						
5	h												1.8		31																S													450 mm x 31 APC		D-2	5	h
5	i										1.5	1.39																						108										TYPE G2 INLET W/600-12X GRATE	15.5 m Lt 438+82.112 "CCR"	D-2	5	i
																																					40	30			34		BIOFILTRATION SWALE#4 W/RSP UPSTREAM & DOWNSTREAM	17.8 m Rt 439+81.920 "CCR"	D-3		
																																					20	15			616		BIOFILTRATION SWALE#5 W/RSP DOWNSTREAM	18.3 m Rt 440+72.077 "CCR"	D-3		
6	a											1.61																									28	12					"L" HEADWALL, (W=1900) W/RSP	11.2 m Rt 441+64.750 "CCR"	D-3	6	a
6	b												1.0			15															S													600 mm x 15 APC		D-3	6	b
6	c										1.5	1.39																					0.43	148									TYPE G2 INLET W/600-12 GRATE W/Conc APRON	38.88 m Rt 442+21.800 "A"	D-3	6	c
6	d												1.35		39.1																S													450 mm x 39.1 APC		D-3	6	d
6	e										1.2	1.2																					0.43	148									TYPE G2 INLET W/600-12 GRATE W/Conc APRON	1.8 m Rt 442+08.049 "A"	D-3	6	e
6	f													20																														200 mm x 20 APC		D-3	6	f
6	g													12																														200 mm x 12 APC		D-3	6	g
6	h													14																														200 mm x 14 APC		D-3	6	h
6	i													7																														200 mm x 7 APC		D-3	6	i
6	j												1.2						40.0												S													600 mm x 40.0 APC DD		D-3	6	j
6	k										2.2	2.97																						365									JUNCTION STRUCTURE W/900 mm MANHOLE FRAME & COVER	14.5 m Lt 442+54.0 "CCRDAR"	D-3	6	k
6	l												1.5			7.4															S													600 mm x 7.4 APC		D-3	6	l
6	m										1.5	1.39																						148									TYPE G2 INLET W/600-12 GRATE	6.53 m Lt 442+54.0 "CCRDAR"	D-3	6	m
6	n												.9			24.9																												600 mm x 24.9 APC		D-3	6	n
6	o										1.2	1.2																						148									TYPE G2 INLET W/600-12 GRATE	6.20 m Lt 442+80.0 "CCRDAR"	D-3	6	o
6	p																																		10								10.0 m GLD	6.20 m Lt 442+80.0 "CCRDAR"	D-3	6	p
6	q												.9			58.6																												600 mm x 58.6 APC		D-3	6	q
6	r										2.3	1.89																						148									TYPE G2 INLET W/600-12 GRATE	2.4 m Lt 443+40.0 "DAR4"	D-3	6	r
6	s												1.9			7.3															S													600 mm x 7.3 APC		D-3	6	s
6	t										2.5	2.01																						148									TYPE G2 INLET W/600-12 GRATE	5.08 m Lt 443+40.0 "DAR1"	D-3	6	t
6	u												2.7			37.7															S													600 mm x 37.7 APC		D-7	6	u
6	v										3.3	4.23																																TYPE G2 INLET W/600-12 GRATE	4.94 m Lt 443+78.6 "DAR1"	D-7	6	v
6	w												2.7			71.1															S													600 mm x 71.1 APC		D-7	6	w
6	x										2.6	3.42																						148									TYPE G2 INLET W/600-12 GRATE	4.90 m Lt 444+50.5 "DAR1"	D-7	6	x
6	y												.7			7.8															S													600 mm x 7.8 APC		D-7	6	y
6	z										1.5	1.39																						148									TYPE G2 INLET W/600-12 GRATE	9.2 m Rt 444+49.8 "A"	D-7	6	z
6	aa												1.1											31.7							S													450 mm x 31.7 RCP		D-7	6	aa
6	ab										1.2	1.2																						148									TYPE G2 INLET W/600-12 GRATE	9.3 m Rt 444+16.6 "A"	D-7	6	ab
6	ac												0.8											37.5							S													450 mm x 37.5 RCP		D-7	6	ac
6	ad										1.2	1.2																						148									TYPE G2 INLET W/600-12 GRATE	9.3 m Rt 443+78.3 "A"	D-7	6	ad
6	ae												0.8											37.7							S													450 mm x 37.7 RCP		D-7	6	ae
6	af										1.2	1.2																						148									TYPE G2 INLET W/600-12 GRATE	9.3 m Rt 443+39.7 "A"	D-3	6	af
6	ag												0.8											49.5							S													450 mm x 49.5 RCP		D-3	6	ag
6	ah										1.2	1.2																						148									TYPE G2 INLET W/600-12 GRATE	9.3 m Rt 442+89.4 "A"	D-3	6	ah
SUBTOTAL												28.89		53	70.1	229.8			40.0					156.4									0.86	2249	10		88	57			650						

DRAINAGE QUANTITIES
DQ-4

ALI ABUDIAB — REVISED BY
SHAHBAZ A ALVI — DATE REVISED
CALCULATED-DESIGNED BY
CHECKED BY
FUNCTIONAL SUPERVISOR
MAJID KHARRATI

STATE OF CALIFORNIA - DEPARTMENT OF TRANSPORTATION
Caltrans PROJECT DEVELOPMENT

LAST REVISION 04-14-10
DATE PLOTTED => 29-SEP-2010
TIME PLOTTED => 14:02

Dist	COUNTY	ROUTE	KILOMETER POST TOTAL PROJECT	SHEET No.	TOTAL SHEETS
11	SD	5,805	R49.9/R51.7, 42.6/46.5	208	886

REGISTERED CIVIL ENGINEER 05-21-09 DATE

9-27-10
PLANS APPROVAL DATE

REGISTERED PROFESSIONAL ENGINEER TIMOTHY V VO No. 65662 Exp. 09-30-09 CIVIL STATE OF CALIFORNIA

THE STATE OF CALIFORNIA OR ITS OFFICERS OR AGENTS SHALL NOT BE RESPONSIBLE FOR THE ACCURACY OR COMPLETENESS OF SCANNED COPIES OF THIS PLAN SHEET.

Caltrans Metric

DRAINAGE SYSTEM No.	DRAINAGE UNIT	DRAINAGE INLET MARKER	ABANDON INLET	ABANDON CULVERT	REMOVE CULVERT	REMOVE INLET	REMOVE CULVERT (N)	REMOVE INLET (N)	REMOVE HEADWALL	CAP RISER	HEIGHT OF INLET (N)	MINOR CONCRETE (MINOR STRUCTURE)	Max HEIGHT OF COVER (N)	APC 200 mm	APC 450 mm	APC 600 mm	APC 750 mm	APC 900 mm	APC 600 mm ALTERNATIVE PIPE DOWNDRAIN	450 mm HDPE TYPE S	600 mm HDPE TYPE S	750 mm HDPE TYPE S	900 mm HDPE TYPE S	450 mm RCP	900 mm RCP "CLASS V SPECIAL- METHOD 2"	1050 mm RCP "CLASS II- METHOD 1"	1200 mm RCP "CLASS II- METHOD 1"	1350 mm RCP "CLASS III- METHOD 1"	ROCK SLOPE PROTECTION (1/4 T , METHOD B)	900 mm PRECAST CONCRETE PIPE RISER	MODIFY INLET	PIPE JOINT CLASSIFICATION (N)	CONCRETE (CHANNEL LINING)	CONCRETE (CONCRETE APRON)	MISCELLANEOUS IRON AND STEEL	GRATED LINE DRAIN	MINOR CONCRETE (BACKFILL)	ROCK SLOPE PROTECTION FABRIC	ROCK SLOPE PROTECTION (LIGHT , METHOD B)	CLASS 2 CONCRETE (MINOR STRUCTURE)	CABLE RAILING	DITCH EXCAVATION	SAND BACKFILL	DESCRIPTION	STATION	DRAINAGE SYSTEM SHEET No.	DRAINAGE SYSTEM No.	DRAINAGE UNIT
		EA	EA	EA	m	EA	m	EA	EA	EA	m	m^3	m	m	m	m	m	m	m	m	m	m	m	m	m	m	m	m	m^3	m	EA		m^3	m^3	KG	m	m^3	m^2	m^3	m^3	m	m^3	m^3					
6	ai												2.0			37.1															S												600 mm x 37.1 APC		D-7	6	ai
6	aj										1.2	1.2																						148								TYPE G2 INLET W/600-12 GRATE	4.9 m L+ 444+88.500 "DAR1"	D-7	6	aj
6	ak												0.6			7.8															S												600 mm x 7.8 APC		D-7	6	ak
6	al										1.2	1.2																						148								TYPE G2 INLET W/600-12 GRATE	2.8m L+ 444+86.6 "DAR4"	D-7	6	al
6	am												0.9			7.8															S												600 mm x 7.8 APC		D-7	6	am
6	an										1.5	1.39																						148								TYPE G2 INLET W/600-12 GRATE	9.2 m R+ 444+87.600 "A"	D-7	6	an
6	ao												1.0		4.6																S												450 mm x 4.6 APC		D-7	6	ao
6	ap										1.2	1.2																						148								TYPE G2 INLET W/600-12 GRATE	9.0 m R+ 444+93.000 "A"	D-7	6	ap
																																								1.8		GRADED CHANNEL #1	7.7 m R+ 439+93.181 "CCR"	D-3		
																																								1.0		GRADED CHANNEL #2	7.7 m R+ 440+53.422 "CCR"	D-3		
																																								1.6		GRADED CHANNEL #3	7 m L+ 441+73.680 "CCR"	D-3		
6B	a											.90																	30								52						SINGLE HEAD WALL w/ RSP	79.05 m L+ 443+36.6 "CCR"	D-4	6B	a
6B	b															106.0															S												600 mm x 106.0 APC		D-7	6B	b
6B	c										1.7	2.27																						296								TYPE GT4 INLET W/600-12 GRATE	10.08 m R+ 444+10.5 "MMB3"	D-7	6B	c
6B	d							1																							S												REMOVE EXIST INLET		D-7	6B	d
6B	e											.44																					9.2										Conc. CHANNEL W/ CUTOFF WALL		D-4	6B	e
6A	a												0.7			1.8															S												600 mm x 1.8 APC W/Conc COLLAR	28.0 m L+ 439+96.703 "A"	D-6	6A	a
6A	b										1.1	1.15																						148								TYPE G2 INLET W/600-12 GRATE	30 m L+ 439+98.500 "A"	D-6	6A	b
6A	c																																		10							10 m GLD		D-6	6A	c
6A	d												1.5			37.1															S												600 mm x 37.1 APC		D-6	6A	d
6A	e										1.5	1.39																						148								TYPE G2 INLET W/600-12 GRATE	30.3 m L+ 439+60 "A"	D-6	6A	e
6A	f																																		6.0							6.0 m GLD W/REMOVABLE GRATE		D-6	6A	f
6A	g									1																																CAP RISER	28.5 m L+ 438+66.854 "A"	D-6	6A	g
6A	g							2																																		REMOVE INLETS(450 mm x 1.2 CMP & 22 m SCMP)		D-6	6A	h
																																				20	15		32			BIOFILTRATION SWALE#6 W/RSP DOWNSTREAM	11.7 m R+ 443+21.952 "CCR"	D-3		
																																				20	15		160			BIOFILTRATION SWALE#7 W/RSP DOWNSTREAM	22.7 m R+ 444+10.905 "CCR"	D-4		
7	a											1.13																						80			20	15				"L" HEADWALL, W=1.45 W/RSP	25.53m R+ 445+00.000 "CCR"	D-4	7	a
7	b												6.6			27.3															S												600 mm x 27.3 APC		D-4	7	b
7	c										1.8																												2.5			JUNCTION STRUCTURE Hb=1.8	3.6m R+ 445+17.000 "CCR"	D-4	7	c
7	d																													4.5													900 mm x 4.5 RCP RISER		D-4	7	d
7	e										4.8	7.81																						365								JUNCTION STRUCTURE W/900 mm MANHOLE FRAME & COVER W/RSP	3.6m R+ 445+17.000 "CCR"	D-4	7	e
7	f												1.6			7.0															S												600 mm x 7.0 APC		D-4	7	f
7	g										1.8	2.85																						77								TYPE B1 INLET (L=4.0) W/DRAINAGE INLET MARKER	12.6 m R+ 445+20.461 "CCR"	D-4	7	g
7	h												2.2			78.2															S												600 mm x 78.2 APC		D-4	7	h
7	i										1.8	2.85																						77								TYPE B1 INLET (L=4.0) W/DRAINAGE INLET MARKER	12.3 m R+ 446+00.222 "CCR"	D-4	7	i
SUBTOTAL										1		25.78			4.6	310.1													30	4.5			9.2		1783	16		112	45	2.5		196.4					

DRAINAGE QUANTITIES
DQ-5

ALI ABUDIAB — REVISED BY
SHAHBAZ A ALVI — DATE REVISED
CALCULATED-DESIGNED BY
CHECKED BY
FUNCTIONAL SUPERVISOR
MAJID KHARRATI

STATE OF CALIFORNIA - DEPARTMENT OF TRANSPORTATION
Caltrans PROJECT DEVELOPMENT

LAST REVISION 04-14-10
DATE PLOTTED => 29-SEP-2010
TIME PLOTTED => 14:02

Dist	COUNTY	ROUTE	KILOMETER POST TOTAL PROJECT	SHEET No.	TOTAL SHEETS
11	SD	5,805	R49.9/R51.7, 42.6/46.5	209	886

Caltrans Metric

Tim Vo 05-21-09
REGISTERED CIVIL ENGINEER DATE

9-27-10
PLANS APPROVAL DATE

REGISTERED PROFESSIONAL ENGINEER TIMOTHY V VO No. 65662 Exp. 09-30-09 CIVIL STATE OF CALIFORNIA

THE STATE OF CALIFORNIA OR ITS OFFICERS OR AGENTS SHALL NOT BE RESPONSIBLE FOR THE ACCURACY OR COMPLETENESS OF SCANNED COPIES OF THIS PLAN SHEET.

DRAINAGE SYSTEM No.	DRAINAGE UNIT	DRAINAGE INLET MARKER	ABANDON INLET	ABANDON CULVERT	REMOVE CULVERT	REMOVE INLET	REMOVE CULVERT (N)	REMOVE INLET (N)	REMOVE HEADWALL	CAP RISER	HEIGHT OF INLET (N)	MINOR CONCRETE (MINOR STRUCTURE)	Max HEIGHT OF COVER (N)	APC 200 mm	APC 450 mm	APC 600 mm	APC 750 mm	APC 900 mm	600 mm ALTERNATIVE PIPE DOWNDRAIN	450 mm HDPE TYPE S	600 mm HDPE TYPE S	750 mm HDPE TYPE S	900 mm HDPE TYPE S	600 mm RCP "CLASS V SPECIAL- METHOD 2"	900 mm RCP "CLASS V SPECIAL- METHOD 2"	1050 mm RCP "CLASS II- METHOD 1"	1200 mm RCP 'CLASS II- METHOD 1"	1350 mm RCP "CLASS III- METHOD 1"	300 mm RCP RISER	900 mm PRECAST CONCRETE PIPE RISER	MODIFY INLET	PIPE JOINT CLASSIFICATION (N)	CONCRETE (CHANNEL LINING)	CONCRETE (CONCRETE APRON)	MISCELLANEOUS IRON AND STEEL	GRATED LINE DRAIN	MINOR CONCRETE (BACKFILL)	ROCK SLOPE PROTECTION FABRIC	ROCK SLOPE PROTECTION (LIGHT , METHOD B)	CLASS 2 CONCRETE (MINOR STRUCTURE)	CABLE RAILING	DITCH EXCAVATION	SAND BACKFILL	DESCRIPTION	STATION	DRAINAGE SYSTEM SHEET No.	DRAINAGE SYSTEM No.	DRAINAGE UNIT
		EA	EA	EA	m	EA	m	EA	EA	EA	m	m^3	m	m	m	m	m	m	m	m	m	m	m	m	m	m	m	m	m	m	m	EA		m^3	m^3	KG	m	m^3	m^2	m^3	m^3	m	m^3	m^3					
7	j												2.2			74.7																S												600 mm x 74.7 APC		D-4	7	j
7	k										2.9	2.77																							365									JUNCTION STRUCTURE W/900 mm MANHOLE FRAME&COVER	CENTER LINE 444+40.000 "CCR"	D-4	7	k
7	l												2.2			15.8																S												600 mm x 15.8 APC		D-4	7	l
7	m										1.6	2.69																							77									TYPE B1 INLET L=4.0m W/DRAINAGE MARKER	12.1 m R+ 444+29.907 "CCR"	D-4	7	m
7	n												1.6			35.4																S												600 mm x 35.4 APC		D-4	7	n
7	o										2.3	3.83																							365									JUNCTION STRUCTURE W/900 mm MANHOLE FRAME&COVER	CENTER LINE 444+03.738 "CCR"	D-4	7	o
	p												1.4			11.2																												600 mm x 11.2 APC		D-4	7	p
	q										1.6	3.00																							77									TYPE B1 INLET L=5.0m W/DRAINAGE MARKER	11.1 m R+ 444+29.907 "CCR"	D-4	7	q
7A	a												1.3					20							20							S												900 mm x 20 RCP W/Conc COLLAR		D-4	7A	a
7A	b																																							1.6				JUNCTION STRUCTURE Hb=1.8	5.21m R+ 445+25.000 "CCR"	D-4	7A	b
7A	c												11.2																	6														900 mm x 6.0 RCP RISER		D-4	7A	c
7A	d										3.6	2.21																							365									JUNCTION STRUCTURE W/900 mm MANHOLE FRAME&COVER	5.21 m R+ 445+25.000 "CCR"	D-4	7A	d
7A	e				9																																							REMOVE 900 mm X 9 CIPP		D-4	7A	e
7A	f					1																																						REMOVE INLET (TYPE F)		D-4	7A	f
7A	g				13																																							REMOVE 900 mm X 13 CIPP		D-4	7A	g
7A	h					1																																						REMOVE INLET (TYPE B1)		D-4	7A	h
7B	a																														1													MODIFY Exist TYPE B INLET, H=.6	8.0 m R+ 447+31.000 "CCR"	D-4	7B	a
7B	b															1.9																S												600 mm x 1.9 APC		D-4	7B	b
7B	c										1.5	1.91																							77									TYPE B INLET (L=1.8) W/DRAINAGE INLET MARKER	10.3 m R+ 447+31.000 "CCR"	D-4	7B	c
7B	d																																	1.3										CHANNEL LINNING	26 m R+ 447+31.000 "CCR"	D-4	7B	d
	a										1.4	1.33																							148									TYPE G2 INLET W/600-12 GRATE	15.8 m R+ 444+51.156 "MMBM"	D-7	8	a
	b												0.8			8																S												600 mm x 8.0 APC		D-7	8	b
	c										1.4	1.33																							148									TYPE G2 INLET W/600-12 GRATE	6.8 m R+ 445+40.000 "MMB4M"	D-2	8	c
	d												0.9								15											S					4.94								600 mm x 15.0 HDPE (TYPE S)		D-2	8	d
	e										0.9	1.01																							148									TYPE G2 INLET W/600-12 GRATE	9.4 m R+ 445+40.000 "MMB4M"	D-2	8	e
	f																																			6.0								6.0 m GLD W/REMOVABE GRATE		D-2	8	f
	g												0.9			29.2																S												600 mm x 29.2 APC		D-7	8	g
	h										1.5	1.39																							148									TYPE G2 INLET W/600-12 GRATE	16.2 m R+ 444+80.010 "MMBM"	D-7	8	h
	i												2.8			35.4																P												600 mm x 35.4 APC		D-7	8	i
	j										1.5	1.39																							148									TYPE G2 INLET W/600-12 GRATE	43.2 m L+ 445+00.755 "A"	D-7	8	j
	k																																			6.0								6.0 m GLD W/REMOVABLE GRATE		D-7	8	k
	l					1																																						REMOVE 450 mm X 6 SCSP INLET		D-7	8	l
	m				15																																							REMOVE 450 mm X 15 CMP		D-7	8	m
	n					1																																						REMOVE INLET (TYPE G2, H=1.7)		D-7	8	n
	o				40																																							REMOVE 600 mm X 40 CMP		D-7	8	o
	p			1																																						4.5	ABANDON 600 mm X 16 CMP		D-7	8	p
SUBTOTAL				1	77	4						22.86				211.6		20			15				20					6	1		1.3		2066	12	4.94			1.6			4.5					

DRAINAGE QUANTITIES
DQ-6

ALI ABUDIAB — SHAHBAZ A ALVI — REVISED BY — DATE REVISED — CALCULATED-DESIGNED BY — CHECKED BY — FUNCTIONAL SUPERVISOR — MAJID KHARRATI

STATE OF CALIFORNIA - DEPARTMENT OF TRANSPORTATION
Caltrans PROJECT DEVELOPMENT

LAST REVISION 06-01-09 | DATE PLOTTED => 29-SEP-2010 | TIME PLOTTED => 14:02

Dist	COUNTY	ROUTE	KILOMETER POST TOTAL PROJECT	SHEET No.	TOTAL SHEETS
11	SD	5,805	R49.9/R51.7, 42.6/46.5	210	886

REGISTERED CIVIL ENGINEER 05-20-09 DATE

9-27-10
PLANS APPROVAL DATE

REGISTERED PROFESSIONAL ENGINEER SHABAZ A ALVI No. 55293 Exp. 12-31-10 CIVIL STATE OF CALIFORNIA

THE STATE OF CALIFORNIA OR ITS OFFICERS OR AGENTS SHALL NOT BE RESPONSIBLE FOR THE ACCURACY OR COMPLETENESS OF SCANNED COPIES OF THIS PLAN SHEET.

Caltrans Metric

DRAINAGE SYSTEM No.	DRAINAGE UNIT	DRAINAGE INLET MARKER	ABANDON INLET	ABANDON CULVERT	REMOVE CULVERT	REMOVE INLET	REMOVE CULVERT (N)	REMOVE INLET (N)	REMOVE HEADWALL	CAP RISER	HEIGHT OF INLET (N)	MINOR CONCRETE (MINOR STRUCTURE)	Max HEIGHT OF COVER (N)	APC 200 mm	APC 450 mm	APC 600 mm	APC 750 mm	APC 900 mm	600 mm ALTERNATIVE PIPE DOWNDRAIN	450 mm HDPE TYPE S	600 mm HDPE TYPE S	750 mm HDPE TYPE S	900 mm HDPE TYPE S	600 mm RCP "CLASS V SPECIAL- METHOD 2"	900 mm RCP "CLASS V SPECIAL- METHOD 2"	1050 mm RCP "CLASS II- METHOD 1"	1200 mm RCP 'CLASS II- METHOD 1"	1350 mm RCP "CLASS III- METHOD 1"	300 mm RCP RISER	900 mm PRECAST CONCRETE PIPE RISER	MODIFY INLET	PIPE JOINT CLASSIFICATION (N)	CONCRETE (CHANNEL LINING)	CONCRETE (CONCRETE APRON)	MISCELLANEOUS IRON AND STEEL	GRATED LINE DRAIN	MINOR CONCRETE (BACKFILL)	ROCK SLOPE PROTECTION FABRIC	ROCK SLOPE PROTECTION (LIGHT , METHOD B)	CLASS 2 CONCRETE (MINOR STRUCTURE)	CABLE RAILING	DITCH EXCAVATION	SAND BACKFILL	DESCRIPTION	STATION	DRAINAGE SYSTEM SHEET No.	DRAINAGE SYSTEM No.	DRAINAGE UNIT
		EA	EA	EA	m	EA	m	EA	EA	EA	m	m^3	m	m	m	m	m	m	m	m	m	m	m	m	m	m	m	m	m	m	EA		m^3	m^3	KG	m	m^3	m^2	m^3	m^3	m	m^3	m^3					
8	q		1																																							0.6	ABANDON INLET (TYPE G1, H=1.1)		D-7	8	q
8	r				17																																						REMOVE 600 mm x 17 CMP		D-7	8	r
8	s					1																																					REMOVE 450 X 6 SCSP INLET		D-7	8	s
8	t			1																																						12.7	ABANDON 600 mm X 45 CMP		D-7	8	t
8	u					1																																					REMOVE INLET (TYPE G1, H=1.5)		D-7	8	u
9	a										1.4	1.33																						148									TYPE G2 INLET Mod W/600-12 GRATE	0.4 Rt 449+18.60 "SD 805"	D-8	9	a
9	b																																			10							10 m GLD W/REMOVABLE GRATE		D-8	9	b
9	c												0.9			17.0																S											600 mm x 17 APC		D-8	9	c
9	d										1.5	1.39																						148									TYPE G2 INLET W/600-12 GRATE	0.5 m Rt 449+00.000 "A"	D-8	9	d
9	e												0.9			19.1																S											600 mm x 19.1 APC		D-8	9	e
9	f										1.3	2.6																						148									TYPE G2 INLET W/600-12 GRATE	0.5 m Rt 448+80.000 "A"	D-8	9	f
9	g												0.9			29.1																S											600 mm x 29.1 APC		D-8	9	g
9	h										1.5	2.8																						148									TYPE G2 INLET W/600-12 GRATE	0.5 m Rt 448+60.000 "A"	D-8	9	h
9	i												0.9			29.1																S											600 mm x 29.1 APC		D-8	9	i
9	j										1.5	2.8																						148									TYPE G2 INLET W/600-12 GRATE	0.5 m Rt 448+20.000 "A"	D-8	9	j
9	k												0.9			39.1																S											600 mm x 39.1 APC		D-8	9	k
9	l										1.5	2.8																						148									TYPE G2 INLET W/600-12 GRATE	0.5 m Rt 447+80.000 "A"	D-8	9	l
9	m												0.9			39.2																S											600 mm x 39.2 APC		D-8	9	m
9	n										1.5	2.8																						148									TYPE G2 INLET W/600-12 GRATE	0.5 m Rt 447+40.000 "A"	D-8	9	n
9	o												0.9			39.2																S											600 mm x 39.2 APC		D-8	9	o
9	p										1.5	2.8																						148									TYPE G2 INLET W/600-12 GRATE	0.5 m Rt 447+00.000 "A"	D-8	9	p
9	q												0.9			49.2																S											600 mm x 49.2 APC		D-8	9	q
9	r										1.5	2.8																						148									TYPE G2 INLET W/600-12 GRATE	0.5 m Rt 446+50.000 "A"	D-8	9	r
9	s												1.4			49.2																S											600 mm x 49.2 APC		D-8	9	s
9	t										1.5	1.39																						148									TYPE G2 INLET W/600-12 GRATE	0.5 m Rt 446+00.000 "A"	D-7	9	t
9	u												0.9			29.2																S											600 mm x 29.2 APC		D-7	9	u
9	v										1.5	1.39																						148									TYPE G2 INLET W/600-12 GRATE	0.5 m Rt 445+70.000 "A"	D-7	9	v
9	w							1																																			REMOVE 900 mm x 1.1 RISER		D-8	9	w
9A	a										1.4	1.33																						148									TYPE G2 INLET W/600-12 GRATE	28.1 m Lt 449+32.005 "A"	D-9	9A	a
9A	b												1.3			12.1																S											600 mm x 12.1 APC		D-9	9A	b
9A	c										3.9	4.9																						148									TYPE G2 INLET W/600-12 GRATE	28.2 m Lt 449+17.705 "A"	D-8	9A	c
9A	d																																			10							10 m GLD W/REMOVABLE GRATE		D-8	9A	d
9A	e					1				1																																	CAP PIPE RISER & REMOVE 450 X 6.1 SCMP INLET		D-8	9A	e
	a										1.5	1.39																						148									TYPE G2 INLET W/600-12 GRATE W/SAFETY CAGE	0.5 m Lt 451+71.945 "A"	D-9	10	a
	b												0.9			31.1																S											600 mm x 31.1 APC		D-9	10	b
	c										1.2	1.2																						148									TYPE G2 INLET W/600-12 GRATE	0.5 m Lt 451+40.000 "A"	D-9	10	c
SUBTOTAL		1	1	17	3					1		33.72				382.6																		2220	20							13.3					

DRAINAGE QUANTITIES
DQ-7

THEO AQUINO | REVISED BY
SHAHBAZ A ALVI | DATE REVISED
CALCULATED-DESIGNED BY
CHECKED BY
FUNCTIONAL SUPERVISOR
MAJID KHARRATI

STATE OF CALIFORNIA - DEPARTMENT OF TRANSPORTATION
Caltrans PROJECT DEVELOPMENT

LAST REVISION 06-02-09 | DATE PLOTTED => 29-SEP-2010 | TIME PLOTTED => 14:02

Dist	COUNTY	ROUTE	KILOMETER POST TOTAL PROJECT	SHEET No.	TOTAL SHEETS
11	SD	5,805	R49.9/R51.7, 42.6/46.5	211	886

REGISTERED CIVIL ENGINEER 05-20-09 DATE

9-27-10
PLANS APPROVAL DATE

REGISTERED PROFESSIONAL ENGINEER SHABAZ A ALVI No. 55293 Exp. 12-31-10 CIVIL STATE OF CALIFORNIA

THE STATE OF CALIFORNIA OR ITS OFFICERS OR AGENTS SHALL NOT BE RESPONSIBLE FOR THE ACCURACY OR COMPLETENESS OF SCANNED COPIES OF THIS PLAN SHEET.

Caltrans Metric

DRAINAGE SYSTEM No.	DRAINAGE UNIT	DRAINAGE INLET MARKER	ABANDON INLET	ABANDON CULVERT	REMOVE CULVERT	REMOVE INLET	REMOVE CULVERT (N)	REMOVE INLET (N)	REMOVE HEADWALL	CAP RISER	HEIGHT OF INLET (N)	MINOR CONCRETE (MINOR STRUCTURE)	Max HEIGHT OF COVER (N)	APC 200 mm	APC 450 mm	APC 600 mm	APC 750 mm	APC 900 mm	600 mm ALTERNATIVE PIPE DOWNDRAIN	450 mm HDPE TYPE S	600 mm HDPE TYPE S	750 mm HDPE TYPE S	900 mm HDPE TYPE S	600 mm RCP "CLASS V SPECIAL- METHOD 2"	900 mm RCP "CLASS V SPECIAL- METHOD 2"	1050 mm RCP "CLASS II- METHOD 1"	1200 mm RCP 'CLASS II- METHOD 1"	1350 mm RCP "CLASS III- METHOD 1"	300 mm RCP RISER	900 mm PRECAST CONCRETE PIPE RISER	MODIFY INLET	PIPE JOINT CLASSIFICATION (N)	CONCRETE (CHANNEL LINING)	CONCRETE (CONCRETE APRON)	MISCELLANEOUS IRON AND STEEL	GRATED LINE DRAIN	MINOR CONCRETE (BACKFILL)	ROCK SLOPE PROTECTION FABRIC	ROCK SLOPE PROTECTION (LIGHT , METHOD B)	CLASS 2 CONCRETE (MINOR STRUCTURE)	CABLE RAILING	DITCH EXCAVATION	SAND BACKFILL	DESCRIPTION	STATION	DRAINAGE SYSTEM SHEET No.	DRAINAGE SYSTEM No.	DRAINAGE UNIT
		EA	EA	EA	m	EA	m	EA	EA	EA	m	m^3	m	m	m	m	m	m	m	m	m	m	m	m	m	m	m	m	m	m	EA		m^3	m^3	KG	m	m^3	m^2	m^3	m^3	m	m^3	m^3					
10	d												0.6			59.1															S											600 mm x 59.1 APC		D-9	10	d
10	e										1.2	1.2																						148								TYPE G2 INLET W/600-12 GRATE	0.5 m Lt 450+80.000 "A"	D-9	10	e
10	f												0.6			79.1															S											600 mm x 79.1 APC		D-9	10	f
10	g										1.2	1.2																						148								TYPE G2 INLET W/600-12 GRATE	0.5 m Lt 450+00.000 "A"	D-9	10	g
10	h												0.6			39.1															S											600 mm x 39.1 APC		D-9	10	h
10	i										1.2	1.2																						148								TYPE G2 INLET W/600-12 GRATE	0.5 m Lt 459+60.000 "A"	D-9	10	i
10	j																																		12								12.0 m GLD W/REMOVABLE GRATE		D-9	10	j
10	k						1																																				REMOVE 900 mm X 1.40 CMP		D-9	10	k
10A	a																												0.6	1													MODIFY INLET & PLACE 900 mm X 0.6 RCP RISER	1.9 m Rt 951+69.653 "A"	D-9	10A	a
10B	a																													1				148									MODIFY INLET	28.3 m Rt 450+36.330 "A"	D-9	10B	a
10B	b																																		10								10 m GLD W/REMOVABLE GRATE		D-9	10B	b
10C	a																													1				148									MODIFY INLET	28.3 m Rt 451+45.700 "A"	D-9	10C	a
10C	b																																		10								10 m GLD W/REMOVABLE GRATE		D-9	10C	b
11	a										3.2	4.13																						148								TYPE G2 INLET W/600-12 GRATE	0.5 m Lt 453+30.000 "A"	D-10	11	a
11	b												1.2			28.9															S											600 mm x 28.9 APC		D-10	11	b
11	c										1.5	1.39																						148								TYPE G2 INLET W/600-12 GRATE	0.5 m Lt 453+00.000 "A"	D-10	11	c
11	d												0.8			59.1															S											600 mm x 59.1 APC		D-10	11	d
11	e										1.2	1.2																						148								TYPE G2 INLET W/600-12 GRATE	0.5 m Lt 452+40.000 "A"	D-9	11	e
11	f						0.9																											148								REMOVE 900 mm X .90 RCP		D-9	11	f
12	a										1.3	2.6																			S			158								TYPE G2 INLET W/600-12 GRATE	1.1 m Lt 455+12.38.000 "A"	D-10	12	a
12	b												0.7			51.5																										600 mm x 51.5 APC		D-10	12	b
12	c										1.2	2.5																						148								TYPE G2 INLET W/600-12 GRATE	0.5 m Lt 454+60.000 "A"	D-10	12	c
12	d												1.2			59.1															S											600 mm x 59.1 APC		D-10	12	d
12	e										1.2	1.2																						148								TYPE G2 INLET W/600-12 GRATE	0.5 m Lt 454+00.000 "A"	D-10	12	e
12	f						1																																				REMOVE 900 mm X 1.30 RCP RISER		D-10	12	f
13	a										2.8	3.6																						148								TYPE G2 INLET W/ 600-12 GRATE	0.4 m Lt 455+70.000 "A"	D-10	13	a
14	a										2.8	3.6																						148								TYPE G2 INLET W/ 600-12 GRATE	0.4 m Lt 456+40.000 "A"	D-11	14	a
SUBTOTAL												23.82				375.9													0.6	3			2082	32												

DRAINAGE QUANTITIES
DQ-8

THEO AQUINO — REVISED BY
SHAHBAZ A ALVI — DATE REVISED
CALCULATED-DESIGNED BY
CHECKED BY
FUNCTIONAL SUPERVISOR
MAJID KHARRATI

STATE OF CALIFORNIA - DEPARTMENT OF TRANSPORTATION
Caltrans PROJECT DEVELOPMENT

LAST REVISION 06-02-09
DATE PLOTTED => 29-SEP-2010
TIME PLOTTED => 14:02

Dist	COUNTY	ROUTE	KILOMETER POST TOTAL PROJECT	SHEET No.	TOTAL SHEETS
11	SD	5,805	R49.9/R51.7, 42.6/46.5	212	886

REGISTERED CIVIL ENGINEER 05-20-09 DATE

9-27-10
PLANS APPROVAL DATE

REGISTERED PROFESSIONAL ENGINEER SHABAZ A ALVI No. 55293 Exp. 12-31-10 CIVIL STATE OF CALIFORNIA

THE STATE OF CALIFORNIA OR ITS OFFICERS OR AGENTS SHALL NOT BE RESPONSIBLE FOR THE ACCURACY OR COMPLETENESS OF SCANNED COPIES OF THIS PLAN SHEET.

Caltrans Metric

DRAINAGE SYSTEM No.	DRAINAGE UNIT	DRAINAGE INLET MARKER	ABANDON INLET	ABANDON CULVERT	REMOVE CULVERT	REMOVE INLET	REMOVE CULVERT (N)	REMOVE INLET (N)	REMOVE HEADWALL	CAP RISER	HEIGHT OF INLET (N)	MINOR CONCRETE (MINOR STRUCTURE)	Max HEIGHT OF COVER (N)	APC 200 mm	APC 450 mm	APC 600 mm	APC 750 mm	APC 900 mm	600 mm ALTERNATIVE PIPE DOWNDRAIN	450 mm HDPE TYPE S	600 mm HDPE TYPE S	750 mm HDPE TYPE S	900 mm HDPE TYPE S	450 mm RCP	900 mm RCP "CLASS V SPECIAL- METHOD 2"	1050 mm RCP "CLASS II- METHOD 1"	1200 mm RCP 'CLASS II- METHOD 1"	1350 mm RCP "CLASS III- METHOD 1"	ROCK SLOPE PROTECTION (1/4 T , METHOD B)	900 mm PRECAST CONCRETE PIPE RISER	MODIFY INLET	PIPE JOINT CLASSIFICATION (N)	CONCRETE (CHANNEL LINING)	CONCRETE (CONCRETE APRON)	MISCELLANEOUS IRON AND STEEL	GRATED LINE DRAIN	MINOR CONCRETE (BACKFILL)	ROCK SLOPE PROTECTION FABRIC	ROCK SLOPE PROTECTION (LIGHT , METHOD B)	CLASS 2 CONCRETE (MINOR STRUCTURE)	CABLE RAILING	DITCH EXCAVATION	SAND BACKFILL	DESCRIPTION	STATION	DRAINAGE SYSTEM SHEET No.	DRAINAGE SYSTEM No.	DRAINAGE UNIT
		EA	EA	EA	m	EA	EA	EA	EA	EA	m	m^3	m	m	m	m	m	m	m	m	m	m	m	m	m	m	m	m	m^3	m	EA		m^3	m^3	KG	m	m^3	m^2	m^3	m^3	m	m^3	m^3					
15	a										2.8	3.6																						148									TYPE G2 INLET W/ 600-12 GRATE	0.4 m L+ 457+00.000 "A"	D-11	15	a
16	a										1.6	1.5																						148									TYPE G2 INLET W/ 600-12 GRATE	0.4 m L+ 457+53.560 "A"	D-11	16	a
16	b							1																																			REMOVE 900 mm x 1.4 GCP RISER		D-11	16	b
17	a										3.40	7.63																						296									TYPE G2 INLET Mod W/ Dbl 600-12 GRATE	0.3 m L+ 460+86.860 "A"	D-12	17	a
17	b												3.4															170			S												1350 mm x 170 RCP		D-12	17	b
17	c										3.30	7.43																						296									TYPE G2 INLET Mod W/ Dbl 600-12 GRATE	0.3 m L+ 459+16.175 "A"	D-12	17	c
17	d							1																																			REMOVE INLET		D-11	17	d
17	e						170																																				REMOVE 1350 mm x 170 RCP		D-11	17	e
17	f							1																																			REMOVE INLET		D-11	17	f
18	a										1.5	3.75																						306									TYPE G2 INLET Mod W/ Dbl 600-12 GRATE & SAFETY CAGE	0.305m L+ 462+62.200 "A"	D-12	18	a
18	b							1																																			REMOVE 900 mm x 1.3 RCP RISER		D-12	18	b
19	a										1.5	3.75																						306									TYPE G2 INLET Mod W/ Dbl 600-12 GRATE & SAFETY CAGE	0.075m L+ 464+39.900 "A"	D-13	19	a
19	b																																		10								10 m GLD W/REMOVABLE GRATE		D-13	19	b
19	c																																		10								10 m GLD W/REMOVABLE GRATE		D-13	19	c
19	d							1																																			REMOVE 900 mm x 1.3 RCP RISER		D-13	19	d
20	a										1.5	2.18																				1.3		296									TYPE GT4 INLET W/Dbl 600-12 GRATE W/GUTTER DEPRESSION	2.4 m L+ 467+57.120 "AR"	D-13	20	a
20	b												0.78			15.2														S													600 mm x 15.2 APC		D-13	20	b
20	c										1.2	1.89																						296									TYPE GT4 INLET W/Dbl 600-12 GRATE	3.2 m L+ 467+40.000 "AR"	D-13	20	c
20	d												0.51			18.1														S													600 mm x 18.1 APC		D-13	20	d
20	e										1.0	1.70																						296									TYPE GT4 INLET W/Dbl 600-12 GRATE	4.5 m L+ 467+20.000 "AR"	D-13	20	e
20	f							1																																			REMOVE 600 mm X 1.4 CMP		D-13	20	f
20	g						1.4																																				REMOVE GMP INLET		D-13	20	g
21	a												2.32			2.6														S													600 mm x 2.6 APC W/Conc COLLAR		D-14	21	a
21	b										2.8	3.65																						148									TYPE G2 INLET W/600-12 GRATE	4.4 m L+ 468+73.160 "AR"	D-14	21	b
21	c																																		6								6 m GLD W/REMOVABLE GRATE		D-14	21	c
21	d												1.8			56.1														S													600 mm x 56.1 APC		D-14	21	d
21	e										1.8	1.58																						148									TYPE G2 INLET W/ 600-12 GRATE	5.0 m L+ 469+30.145 "AR"	D-14	21	e
21	f												1.5			49														S													600 mm x 49.0 APC		D-14	21	f
21	g										1.2	1.39																						148									TYPE G2 INLET W/ 600-12 GRATE	5.7 m L+ 469+80.000 "AR"	D-14	21	g
21	h							1																																			REMOVE INLET (TYPE GMP, H=2.8)		D-14	21	h
21	i						2.6																																				REMOVE 600 mm X 2.6 RCP		D-14	21	i
21	j							1																																			REMOVE INLET (TYPE G2, H=1.7)		D-14	21	j
21	k						56.1	1																																			REMOVE 600 mm X 56.1 APC		D-14	21	k
21	l							1																																			REMOVE INLET (TYPE G2, H=0.9)		D-14	21	l
SUBTOTAL												40.05				141												170					1.3	2832	26											
TOTAL		20	6	9	428	16			1	2		264.4 **			53	131.6	2178.8	21.4	20	40.0	24.8	109.8	123.6	30.1	156.4	20	40.4	43.9	170	30	11.1	4		23.5	5.8	16748 ***	128	27.8	258	146	4.1	9.4 *	846.4	106					

NOTES:

*: FOR ADDITIONAL QUANTITIES, SEE SUMMARY OF QUANTITIES.

**: FOR ADDITIONAL QUANTITIES, SEE SANITARY SEWER QUANTITIES AND SUMMARY OF QUANTITIES.

***: FOR ADDITIONAL QUANTITIES, SEE SANITARY SEWER QUANTITIES.

DRAINAGE QUANTITIES
DQ-9

REVISED BY | DATE REVISED

THEO AQUINO | SHAHBAZ A ALVI

CALCULATED-DESIGNED BY | CHECKED BY

FUNCTIONAL SUPERVISOR | MAJID KHARRATI

STATE OF CALIFORNIA - DEPARTMENT OF TRANSPORTATION

Caltrans PROJECT DEVELOPMENT

LAST REVISION 04-14-10 | DATE PLOTTED => 29-SEP-2010 | TIME PLOTTED => 14:02

DIST	COUNTY	ROUTE	KILOMETER POST TOTAL PROJECT	SHEET No.	TOTAL SHEETS
11	SD	5,805	R49.9/R51.7, 42.6/46.5	213	886

REGISTERED CIVIL ENGINEER 05-11-09 DATE

9-27-10
PLANS APPROVAL DATE

REGISTERED PROFESSIONAL ENGINEER CARL SPIER No. 49744 Exp. 9-30-10 CIVIL STATE OF CALIFORNIA

THE STATE OF CALIFORNIA OR ITS OFFICERS OR AGENTS SHALL NOT BE RESPONSIBLE FOR THE ACCURACY OR COMPLETENESS OF SCANNED COPIES OF THIS PLAN SHEET.

CITY OF SAN DIEGO
600 B STREET, SUITE 800
SAN DIEGO, CA 92101

Caltrans Metric

ABBREVIATIONS:

VCP VITRIFIED CLAY PIPE
IE INVERT ELEVATION
PVC POLYVINYL CHLORIDE
ESA ENVIRONMENTALLY SENSITIVE AREA

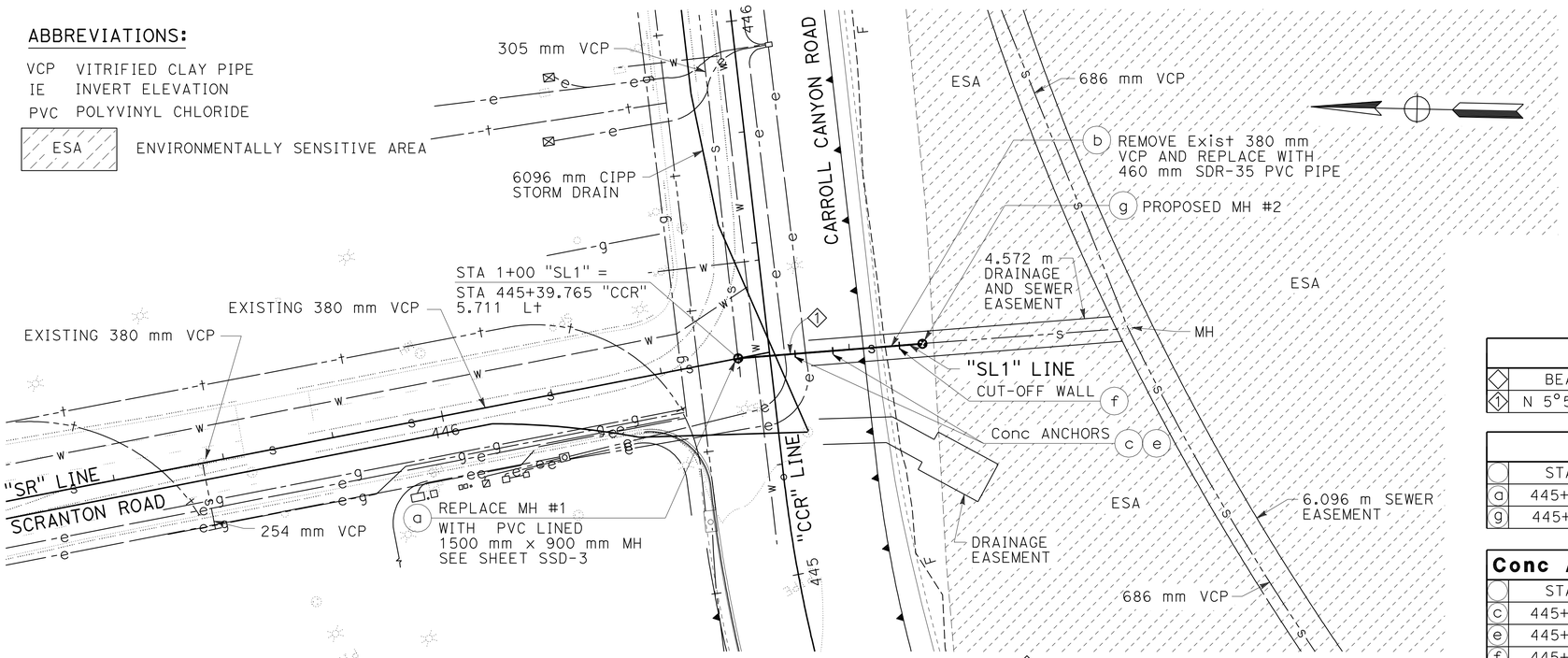

SANITARY SEWER SYSTEM No. 1
PLAN
SCALE 1:500

SEWER LINE DATA

	BEARING	RADIUS	LENGTH	REMARKS
1	N 5°54'22" W	N/A	70.101	380 mm VC

MANHOLE DATA

	STATION	SIDE	OFFSET	REMARKS
a	445+39.765	Lt "CCR"	5.711	
g	445+38.581	Rt "CCR"	27.440	

Conc ANCHOR AND Conc CUTOFF WALL DATA

	STATION	SIDE	OFFSET	REMARKS
c	445+39.399	Rt "CCR"	4.533	Conc ANCHOR
e	445+39.157	Rt "CCR"	11.307	Conc ANCHOR
f	445+38.729	Rt "CCR"	18.491	Conc CUTOFF WALL

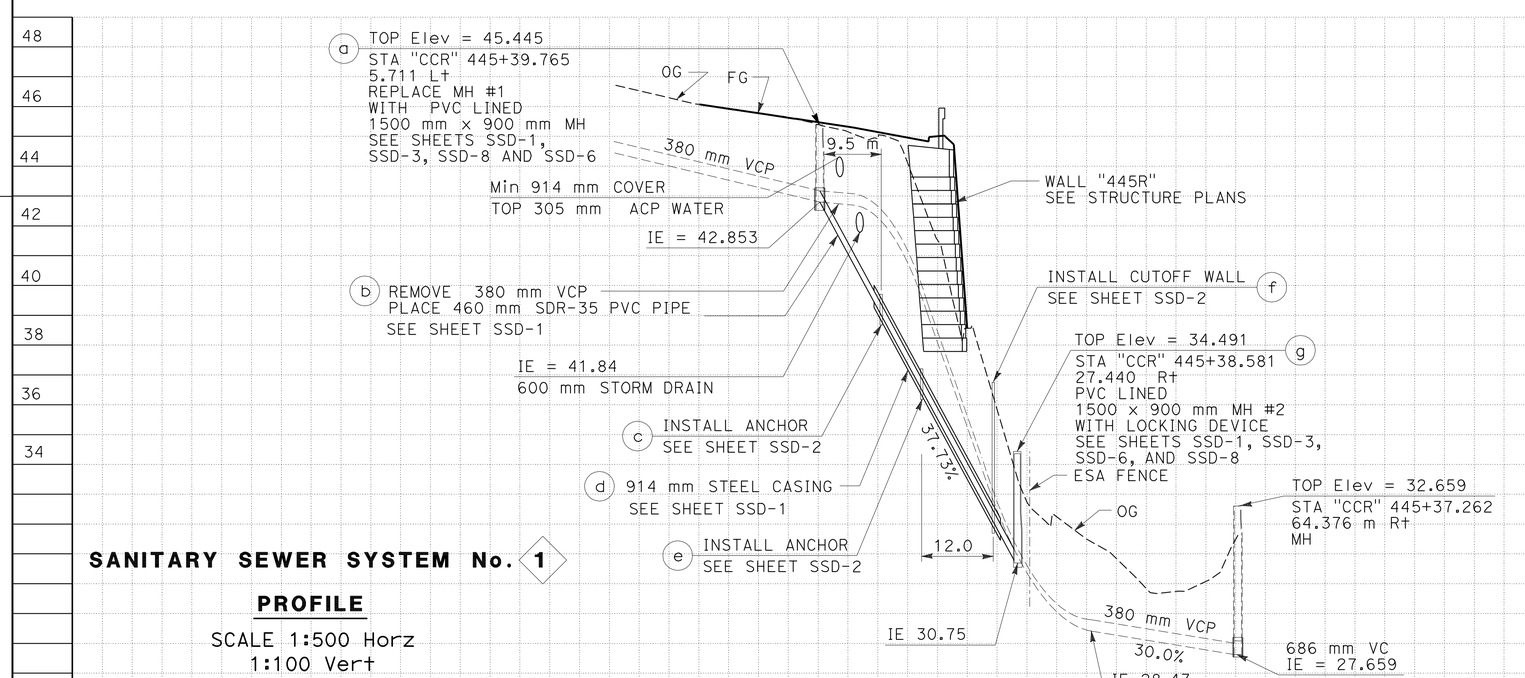

SANITARY SEWER SYSTEM No. 1
PROFILE
SCALE 1:500 Horz
1:100 Vert
THIS PLAN ACCURATE FOR SANITARY SEWER WORK ONLY

LEGEND:

SYMBOL	EXISTING UTILITY	OWNER
— t —	EXISTING UDERGROUND TELEPHONE	ATT
— e —	EXISTING UNDERGROUND ELECTRICAL	SDGE
--(oh)—e—	EXISTING OVERHEAD ELECTRICAL	SDGE
— g —	EXISTING UNDERGROUND GAS	SDGE
— w —	EXISTING UNDERGROUND WATER	CITY OF SAN DIEGO
— s —	EXISTING UNDERGROUND SEWER	CITY OF SAN DIEGO
— fo —	EXISTING UNDERGROUND FIBER OPTIC	ATT
— tv —	EXISTING UNDERGROUND TV	COX CBLE

ALL DIMENSIONS ARE IN METERS UNLESS OTHERWISE SHOWN

SANITARY SEWER PLAN AND PROFILE

SCALE AS SHOWN **SS-1**

REVISED BY | DATE REVISED
FARLITO VALENZUELA | MAHMOUD ORIQAT
CALCULATED-DESIGNED BY | CHECKED BY
CONSULTANT FUNCTIONAL SUPERVISOR | MAHMOUD ORIQAT
STATE OF CALIFORNIA - DEPARTMENT OF TRANSPORTATION
Caltrans

LAST REVISION 05-30-09 | DATE PLOTTED => 29-SEP-2010 | TIME PLOTTED => 14:03

DIST	COUNTY	ROUTE	KILOMETER POST TOTAL PROJECT	SHEET No.	TOTAL SHEETS
11	SD	5,805	R49.9/R51.7, 42.6/46.5	214	886

Caltrans Metric

REGISTERED CIVIL ENGINEER 05-11-09 DATE

9-27-10
PLANS APPROVAL DATE

REGISTERED PROFESSIONAL ENGINEER CARL SPIER No. 49744 Exp. 9-30-10 CIVIL STATE OF CALIFORNIA

THE STATE OF CALIFORNIA OR ITS OFFICERS OR AGENTS SHALL NOT BE RESPONSIBLE FOR THE ACCURACY OR COMPLETENESS OF SCANNED COPIES OF THIS PLAN SHEET.

CITY OF SAN DIEGO
600 B STREET, SUITE 800
SAN DIEGO, CA 92101

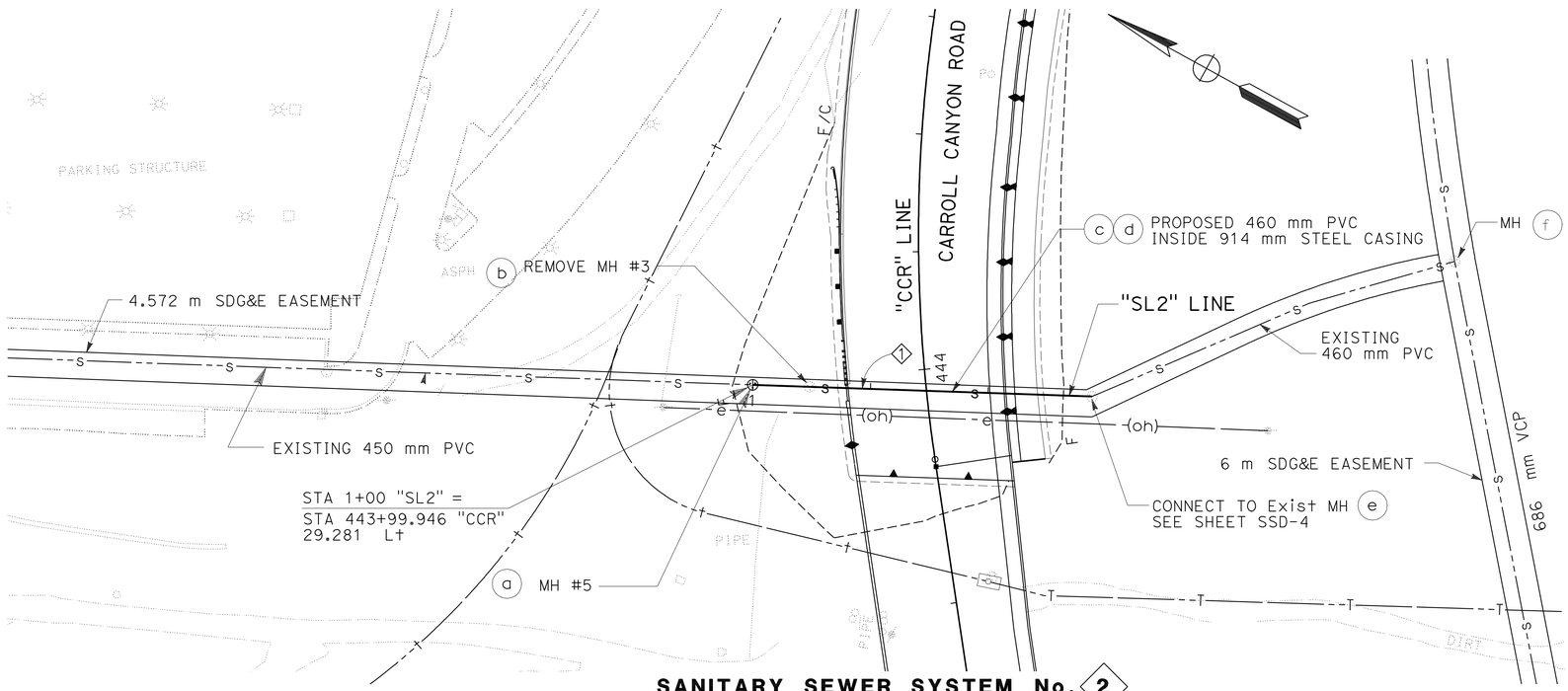

SANITARY SEWER SYSTEM No. 2
PLAN
SCALE 1:500

THIS PLAN ACCURATE FOR SANITARY SEWER WORK ONLY

SEWER LINE DATA				
	BEARING	RADIUS	LENGTH	REMARKS
1	S 26°54'38" E	N/A	57.668	460 mm PVC

MANHOLE DATA				
	STATION	SIDE	OFFSET	REMARKS
a	443+99.946	Lt "CCR"	29.281	
b	443+98.836	Lt "CCR"	19.664	
e	443+92.043	Rt "CCR"	27.847	
f	444+15.936	Rt "CCR"	90.969	

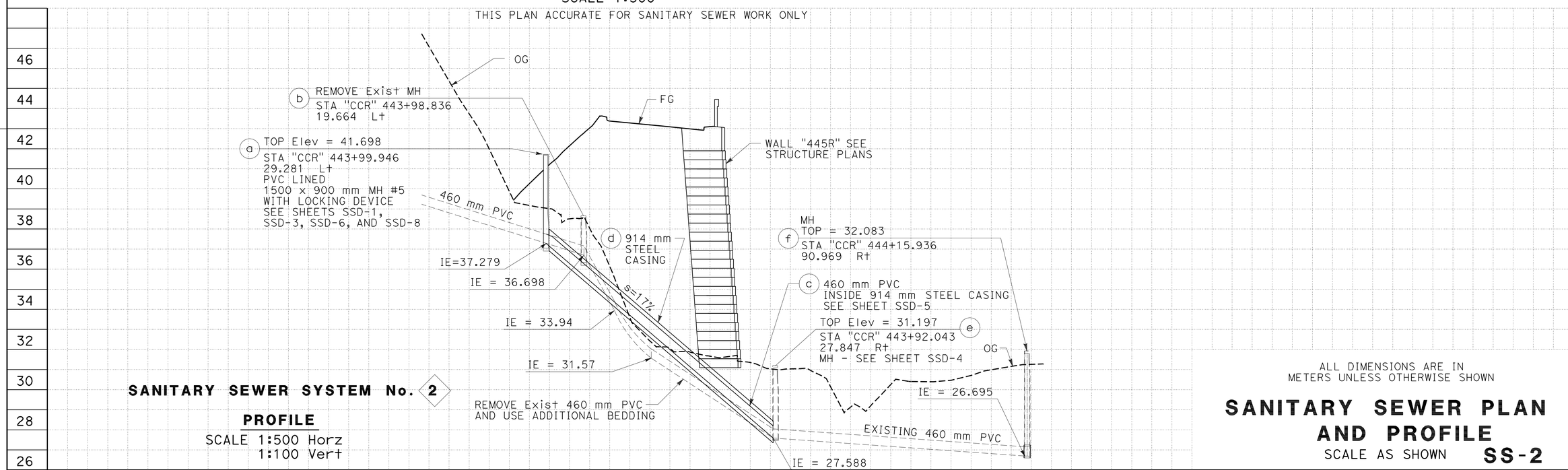

SANITARY SEWER SYSTEM No. 2
PROFILE
SCALE 1:500 Horz
1:100 Vert

ALL DIMENSIONS ARE IN
METERS UNLESS OTHERWISE SHOWN

SANITARY SEWER PLAN AND PROFILE
SCALE AS SHOWN **SS-2**

STATE OF CALIFORNIA - DEPARTMENT OF TRANSPORTATION
Caltrans

CONSULTANT FUNCTIONAL SUPERVISOR: MAHMOUD ORIQAT
CALCULATED-DESIGNED BY: FARLITO VALENZUELA
CHECKED BY: MAHMOUD ORIQAT
REVISED BY
DATE REVISED

LAST REVISION 05-30-09
DATE PLOTTED => 29-SEP-2010
TIME PLOTTED => 14:03

DIST	COUNTY	ROUTE	KILOMETER POST TOTAL PROJECT	SHEET No.	TOTAL SHEETS
11	SD	5,805	R49.9/R51.7, 42.6/46.5	215	886

REGISTERED CIVIL ENGINEER 05-11-09 DATE

9-27-10
PLANS APPROVAL DATE

REGISTERED PROFESSIONAL ENGINEER CARL SPIER No. 49744 Exp. 9-30-10 CIVIL STATE OF CALIFORNIA

THE STATE OF CALIFORNIA OR ITS OFFICERS OR AGENTS SHALL NOT BE RESPONSIBLE FOR THE ACCURACY OR COMPLETENESS OF SCANNED COPIES OF THIS PLAN SHEET.

CITY OF SAN DIEGO
600 B STREET, SUITE 800
SAN DIEGO, CA 92101

Caltrans Metric

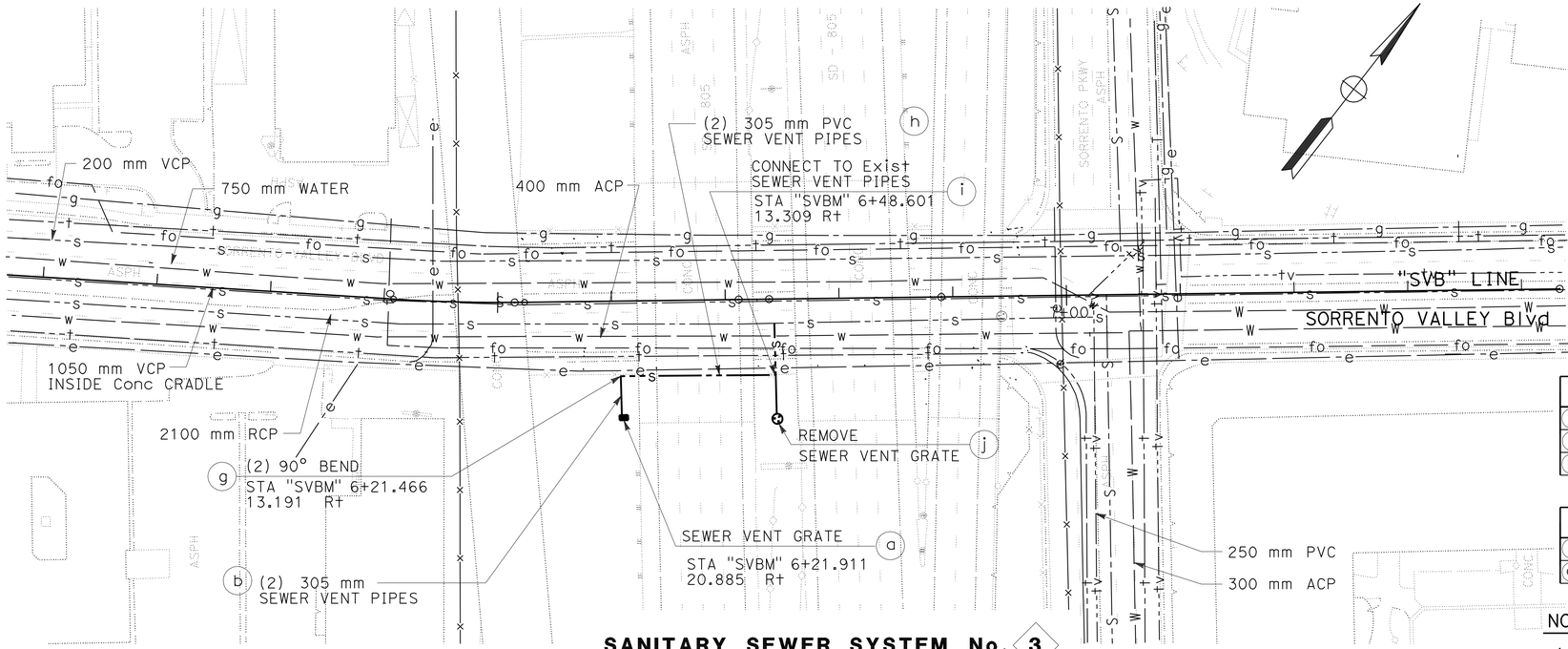

SANITARY SEWER SYSTEM No. 3
PLAN
SCALE 1:500
THIS PLAN ACCURATE FOR SANITARY SEWER WORK ONLY

SEWER LINE DATA

	BEARING	RADIUS	LENGTH	REMARKS
b	N 39°38'04" W	N/A	6.855	
h	N 51°39'32" E	N/A	27.136	

VENT DATA

	STATION	SIDE	OFFSET	REMARKS
a	6+21.911	Rt "SVBM"	20.885	

NOTES:

1. THE (2) PROPOSED 305 mm SEWER VENT PIPES SHALL MAINTAIN POSITIVE SLOPE, NO MINIMUM, TOWARDS THE EXISTING SEWER VENT PIPES.
2. THE TOP ELEVATION OF THE PROPOSED SEWER VENT SHALL MATCH THE ELEVATION OF THE REMOVED EXISTING SEWER VENT.

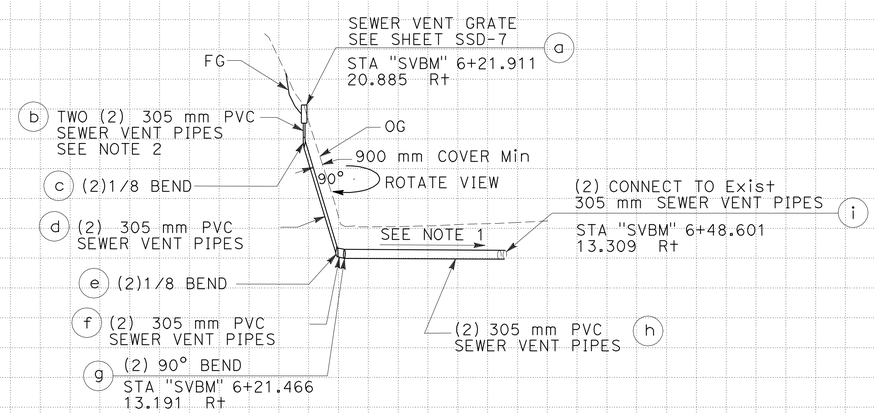

SANITARY SEWER SYSTEM No. 3
PROFILE
SCALE 1:500 Horiz
1:100 Vert

ALL DIMENSIONS ARE IN METERS UNLESS OTHERWISE SHOWN

SANITARY SEWER PLAN AND PROFILE
SCALE AS SHOWN **SS-3**

Station	1+00	2+00
m³ Exc		
m³ Emb		

STATE OF CALIFORNIA - DEPARTMENT OF TRANSPORTATION
Caltrans

CONSULTANT FUNCTIONAL SUPERVISOR: MAHMOUD ORIQAT
CALCULATED-DESIGNED BY: FARLITO VALENZUELA
CHECKED BY: MAHMOUD ORIQAT
REVISED BY / DATE REVISED

LAST REVISION 05-30-09
DATE PLOTTED => 29-SEP-2010
TIME PLOTTED => 14:03

DIST	COUNTY	ROUTE	KILOMETER POST TOTAL PROJECT	SHEET No.	TOTAL SHEETS
11	SD	5,805	R49.9/R51.7, 42.6/46.5	216	886

Caltrans Metric

REGISTERED CIVIL ENGINEER 05-11-09 DATE

9-27-10
PLANS APPROVAL DATE

REGISTERED PROFESSIONAL ENGINEER CARL SPIER No. 49744 Exp. 9-30-10 CIVIL STATE OF CALIFORNIA

THE STATE OF CALIFORNIA OR ITS OFFICERS OR AGENTS SHALL NOT BE RESPONSIBLE FOR THE ACCURACY OR COMPLETENESS OF SCANNED COPIES OF THIS PLAN SHEET.

CITY OF SAN DIEGO
600 B STREET, SUITE 800
SAN DIEGO, CA 92101

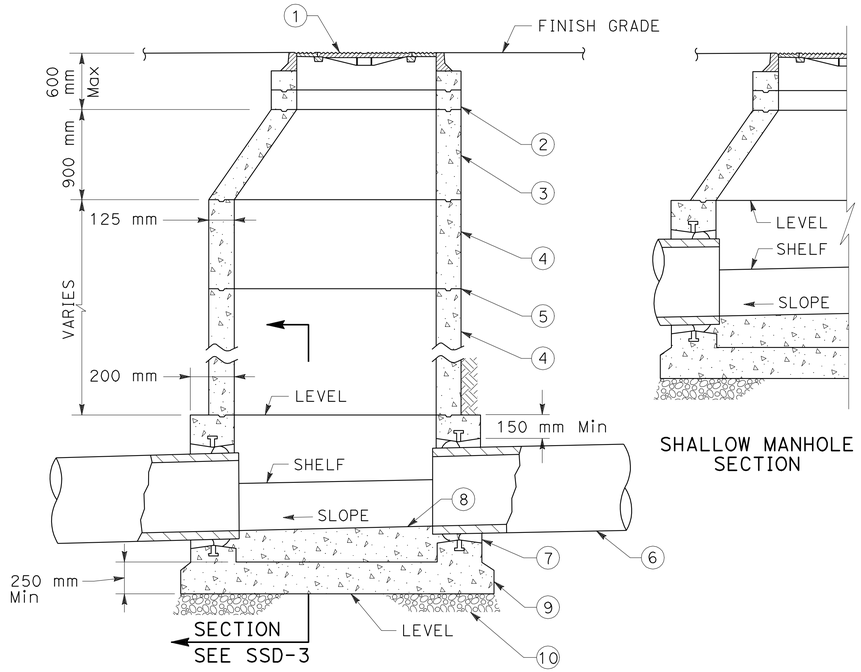

SHALLOW MANHOLE SECTION

1. 900 mm MANHOLE FRAME AND TWO CONCENTRIC COVERS SEE SSD-6
2. 900 mm Dia GRADE RING(S) 150 mm TO 450 mm HIGH
3. ECCENTRIC CONE SEE NOTE 1
4. 1500 mm Dia RING(S) VARIABLE HEIGHT
5. WATER TIGHT JOINTS SEE SSD-8
6. SEWER MAIN
7. MANHOLE PIPE CONNECTOR SEE SSD-4
8. FIELD INSTALLED INVERT SEE SSD-4
9. CONCRETE BASE, PRECAST OR CAST IN PLACE
10. 150 mm OF 19 mm CRUSHED ROCK

1500 mm DIAMETER PRECAST MANHOLE INSTALLATION

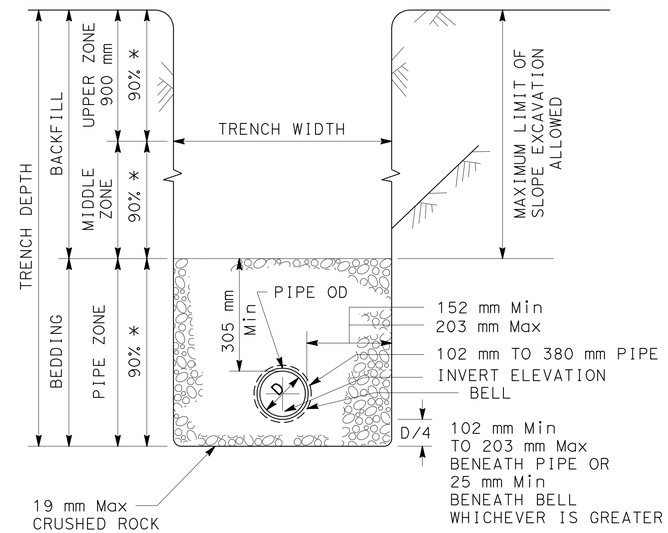

PIPE BEDDING AND TRENCH BACKFILL FOR SEWERS WITH ROCK ENVELOPE

NOTES:

1. VERTICAL WALL OF CONE TO BE ON THE UPSTREAM SIDE OF MANHOLE SEE SSD-8 FOR ACCESS LOCATIONS.
2. FOR MANHOLE BASES SEE SSD-3.
3. MANHOLE FOR MAINS 450 mm AND LARGER SHALL BE COATED AND LINED PER SSD-3.
4. MATERIALS SHALL BE SELECTED FROM THE CITY OF SAN DIEGO'S APPROVED MATERIALS LIST.

NOTES:

1. (*) INDICATES MINIMUM RELATIVE COMPACTION.
2. MINIMUM DEPTH OF COVER FROM THE TOP OF PIPE TO FINISH GRADE FOR ALL SANITARY SEWER INSTALLATIONS SHALL BE 914 mm.

ALL DIMENSIONS ARE IN METERS UNLESS OTHERWISE SHOWN

SANITARY SEWER DETAILS

NO SCALE

SSD-1

REVISED BY	DATE REVISED

CONSULTANT FUNCTIONAL SUPERVISOR: MAHMOUD ORIQAT
CALCULATED-DESIGNED BY: FARLITO VALENZUELA
CHECKED BY: MAHMOUD ORIQAT

STATE OF CALIFORNIA - DEPARTMENT OF TRANSPORTATION
Caltrans

LAST REVISION 05-30-09
DATE PLOTTED => 29-SEP-2010
TIME PLOTTED => 14:03

DIST	COUNTY	ROUTE	KILOMETER POST TOTAL PROJECT	SHEET No.	TOTAL SHEETS
11	SD	5,805	R49.9/R51.7, 42.6/46.5	217	886

REGISTERED CIVIL ENGINEER 05-11-09 DATE

9-27-10
PLANS APPROVAL DATE

REGISTERED PROFESSIONAL ENGINEER CARL SPIER No. 49744 Exp. 9-30-10 CIVIL STATE OF CALIFORNIA

THE STATE OF CALIFORNIA OR ITS OFFICERS OR AGENTS SHALL NOT BE RESPONSIBLE FOR THE ACCURACY OR COMPLETENESS OF SCANNED COPIES OF THIS PLAN SHEET.

CITY OF SAN DIEGO
600 B STREET, SUITE 800
SAN DIEGO, CA 92101

Caltrans Metric

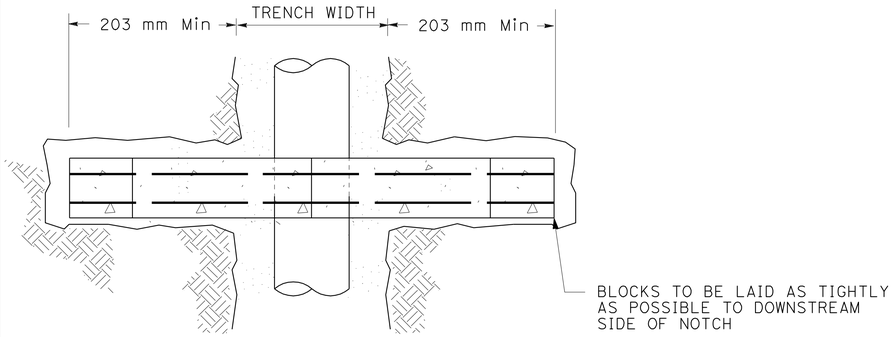

PLAN

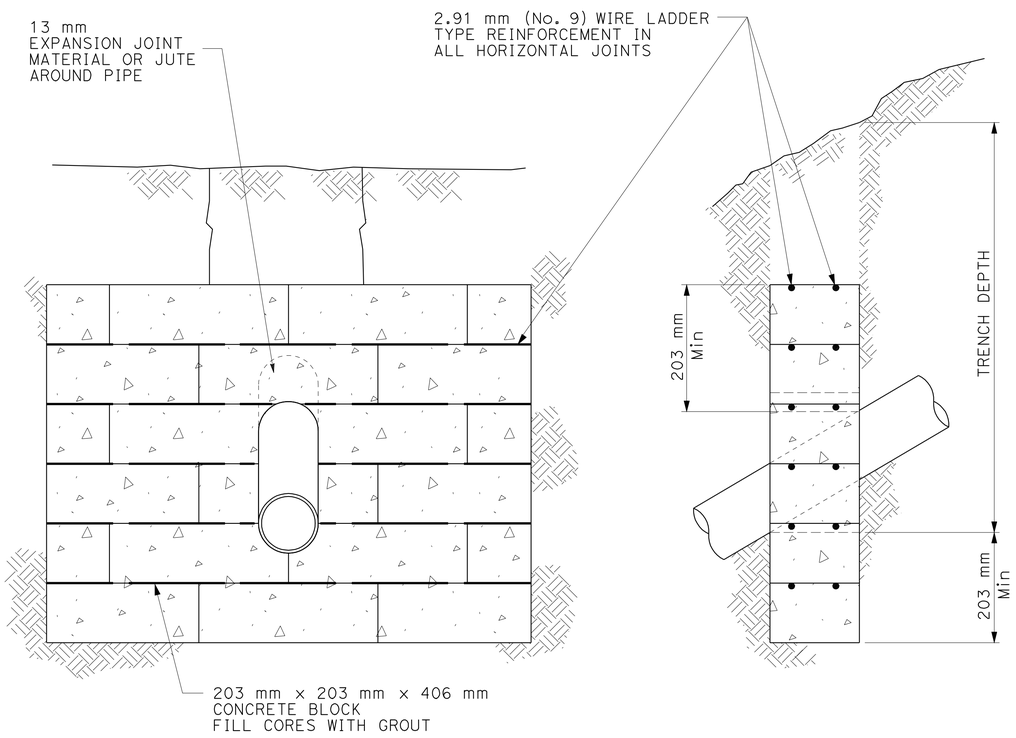

FRONT ELEVATION **SIDE ELEVATION**

CONCRETE ANCHOR

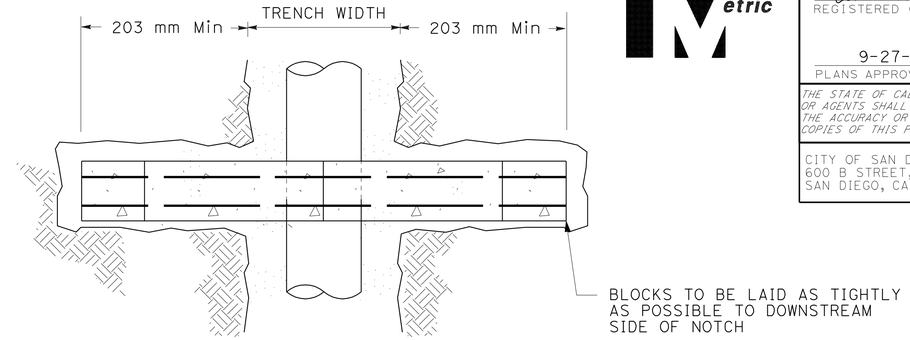

PLAN

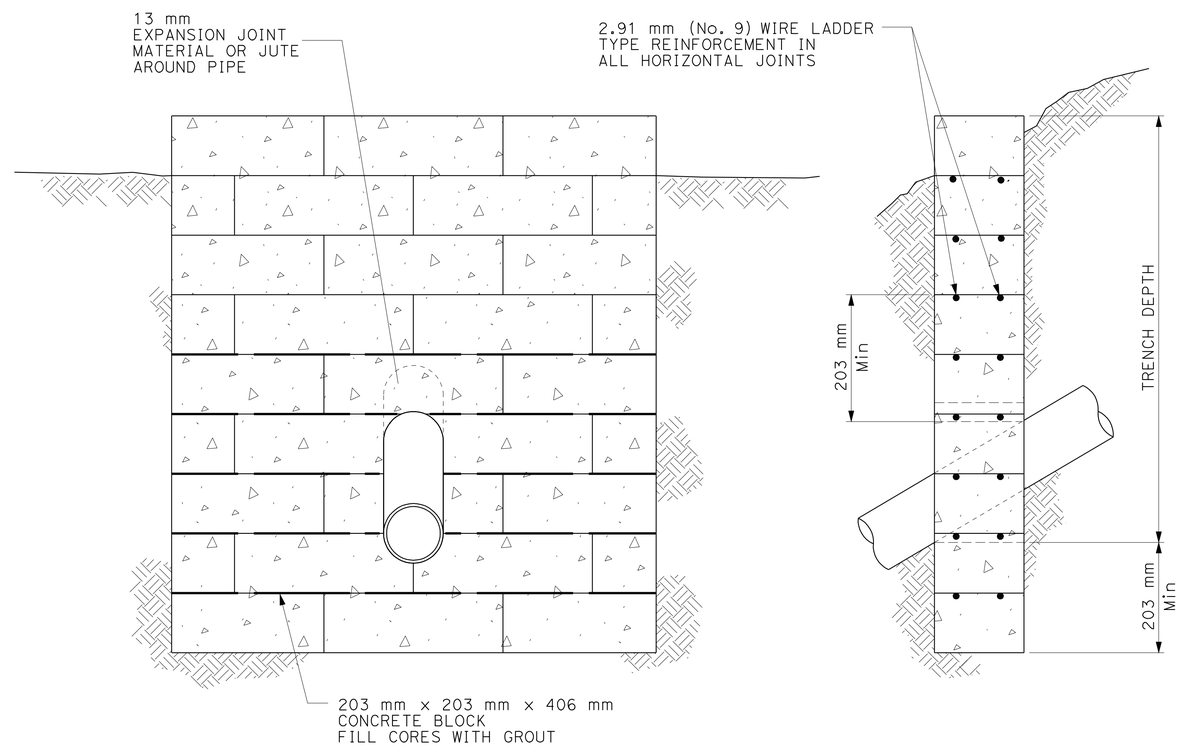

FRONT ELEVATION **SIDE ELEVATION**

CONCRETE CUTOFF WALL

ALL DIMENSIONS ARE IN METERS UNLESS OTHERWISE SHOWN

SANITARY SEWER DETAILS

NO SCALE

SSD-2

STATE OF CALIFORNIA - DEPARTMENT OF TRANSPORTATION
Caltrans

CONSULTANT FUNCTIONAL SUPERVISOR: MAHMOUD ORIQAT
CALCULATED-DESIGNED BY: FARLITO VALENZUELA
CHECKED BY: MAHMOUD ORIQAT
REVISED BY
DATE REVISED

LAST REVISION 05-30-09
DATE PLOTTED => 29-SEP-2010
TIME PLOTTED => 14:03

DIST	COUNTY	ROUTE	KILOMETER POST TOTAL PROJECT	SHEET No.	TOTAL SHEETS
11	SD	5,805	R49.9/R51.7, 42.6/46.5	218	886

Caltrans Metric

REGISTERED CIVIL ENGINEER 05-11-09 DATE

9-27-10
PLANS APPROVAL DATE

REGISTERED PROFESSIONAL ENGINEER CARL SPIER No. 49744 Exp. 9-30-10 CIVIL STATE OF CALIFORNIA

THE STATE OF CALIFORNIA OR ITS OFFICERS OR AGENTS SHALL NOT BE RESPONSIBLE FOR THE ACCURACY OR COMPLETENESS OF SCANNED COPIES OF THIS PLAN SHEET.

CITY OF SAN DIEGO
600 B STREET, SUITE 800
SAN DIEGO, CA 92101

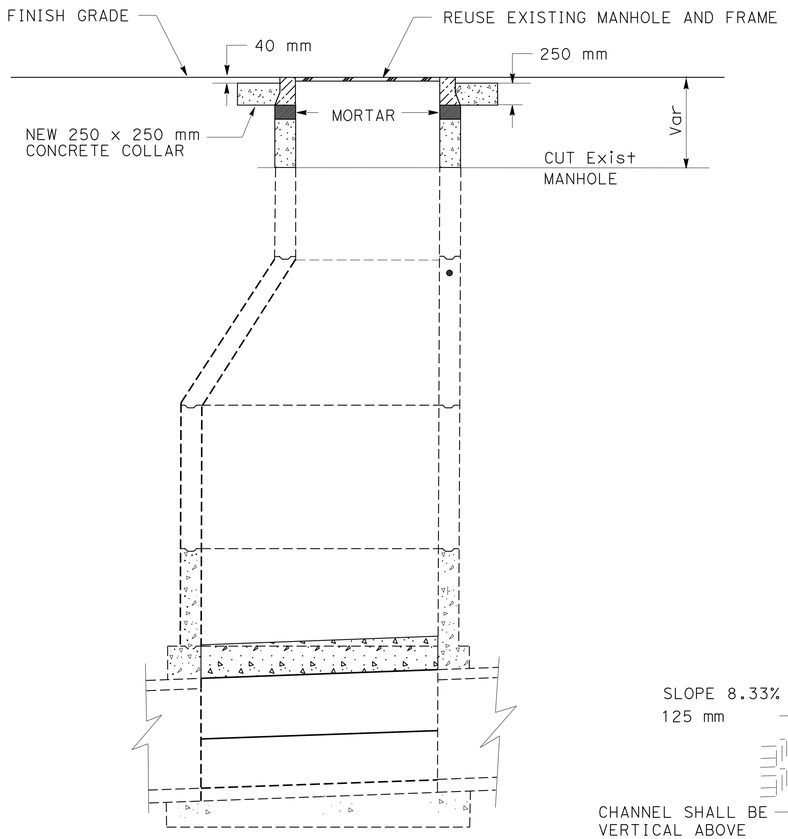

ADJUST MANHOLE

NO SCALE

NOTE: REMOVE EXISTING UPPER RINGS AND RESET MH FRAME AND COVER TO GRADE

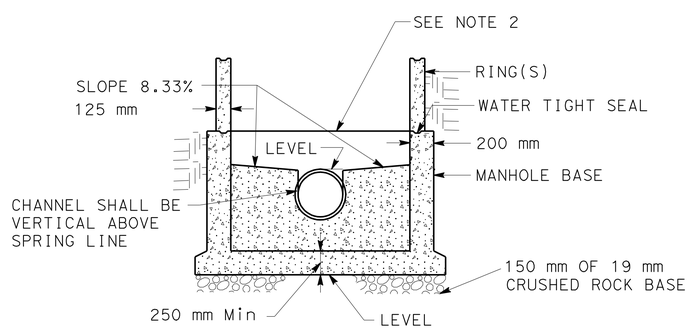

SEWER MANHOLE BASE

NOTES:

1. FOR MANHOLE INSTALLATIONS SEE SSD-1.
2. LOWEST POINT ON SHELF SHALL BE EVEN WITH TOP OF PIPE.
3. MATERIALS SHALL BE SELECTED FROM THE CITY OF SAN DIEGO'S APPROVED MATERIALS LIST.

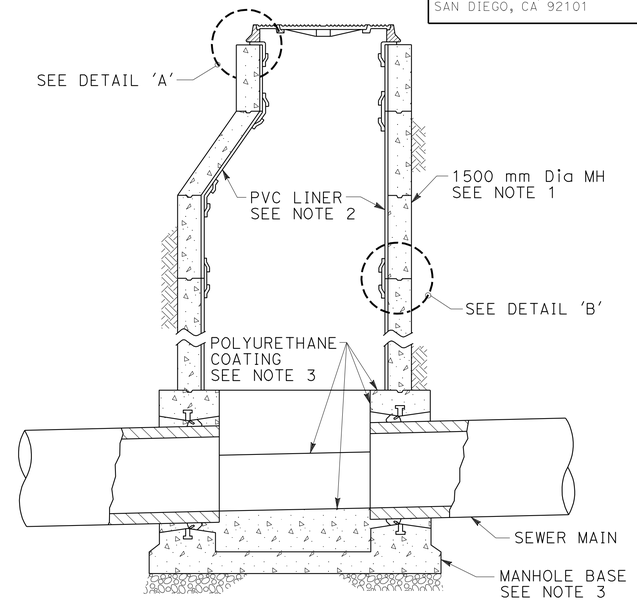

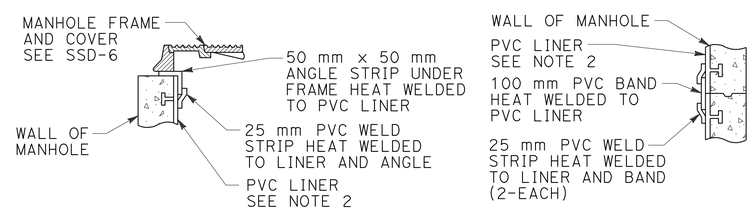

DETAIL 'A'
MANHOLE FRAME AND COVER

DETAIL 'B'
MANHOLE JOINT SECTIONS

MANHOLE COATING AND LINING SYSTEM

NOTES:

1. MANHOLES FOR SEWER MAINS 450 mm AND LARGER SHALL BE COATED AND LINED.
2. MANHOLE SHAFT AND CONE SECTIONS, AND GRADE RINGS SHALL HAVE A PVC LINER PLACED WITH T-SHAPED SUPPORTS INTEGRALLY CAST INTO THE CONCRETE.
3. ELASTOMERIC POLYURETHANE COATING SHALL BE APPLIED TO THE INTERIOR OF MANHOLE BASES.
4. MATERIALS SHALL BE SELECTED FROM THE CITY OF SAN DIEGO'S APPROVED MATERIALS LIST.

ALL DIMENSIONS ARE IN METERS UNLESS OTHERWISE SHOWN

SANITARY SEWER DETAILS

NO SCALE

SSD-3

REVISED BY	DATE REVISED

CALCULATED-DESIGNED BY: FARLITO VALENZUELA
CHECKED BY: MAHMOUD ORIQAT
CONSULTANT FUNCTIONAL SUPERVISOR: MAHMOUD ORIQAT
STATE OF CALIFORNIA - DEPARTMENT OF TRANSPORTATION
Caltrans

LAST REVISION 05-30-09
DATE PLOTTED => 29-SEP-2010
TIME PLOTTED => 14:03

DIST	COUNTY	ROUTE	KILOMETER POST TOTAL PROJECT	SHEET No.	TOTAL SHEETS
11	SD	5,805	R49.9/R51.7, 42.6/46.5	219	886

Caltrans Metric

REGISTERED CIVIL ENGINEER 05-11-09 DATE

9-27-10
PLANS APPROVAL DATE

REGISTERED PROFESSIONAL ENGINEER CARL SPIER No. 49744 Exp. 9-30-10 CIVIL STATE OF CALIFORNIA

THE STATE OF CALIFORNIA OR ITS OFFICERS OR AGENTS SHALL NOT BE RESPONSIBLE FOR THE ACCURACY OR COMPLETENESS OF SCANNED COPIES OF THIS PLAN SHEET.

CITY OF SAN DIEGO
600 B STREET, SUITE 800
SAN DIEGO, CA 92101

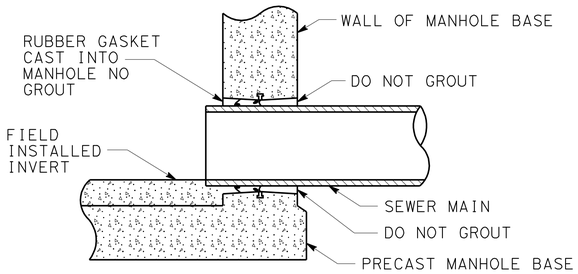

PRECAST MANHOLE BASE TYPE 'A'

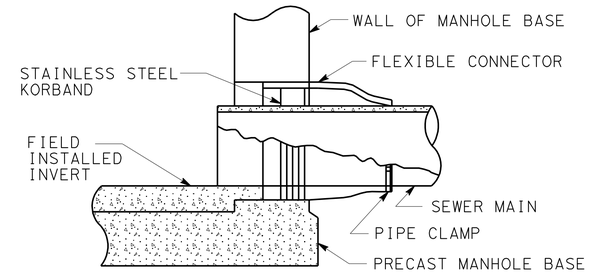

PRECAST MANHOLE BASE TYPE 'B'

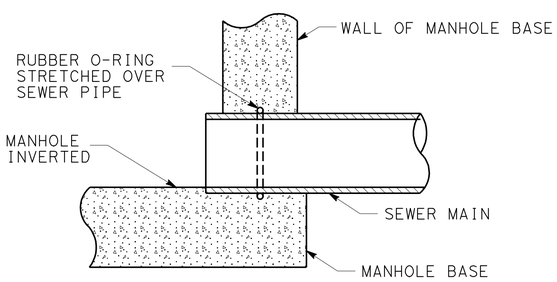

CAST IN PLACE MANHOLE BASE

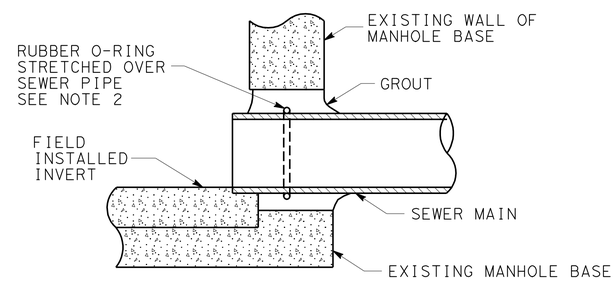

BREAKING INTO Exist MANHOLE BASE

MANHOLE PIPE CONNECTORS

NOTES:

1. A RUBBER O-RING OR A FLEXIBLE CONNECTOR (AS SHOWN IN PRECAST MANHOLE BASE TYPE 'B') CAN BE USED WHEN BREAKING INTO EXISTING MANHOLE.
2. FOR MANHOLES REQUIRING COATING AND LINING, SEE SSD-3.
3. MATERIALS SHALL BE SELECTED FROM THE CITY OF SAN DIEGO'S APPROVED MATERIALS LIST.

ALL DIMENSIONS ARE IN METERS UNLESS OTHERWISE SHOWN

SANITARY SEWER DETAILS

NO SCALE

SSD-4

STATE OF CALIFORNIA - DEPARTMENT OF TRANSPORTATION
Caltrans

CONSULTANT FUNCTIONAL SUPERVISOR: MAHMOUD ORIQAT
CALCULATED-DESIGNED BY: FARLITO VALENZUELA
CHECKED BY: MAHMOUD ORIQAT
REVISED BY / DATE REVISED

LAST REVISION 05-30-09
DATE PLOTTED => 23-SEP-2010
TIME PLOTTED => 14:03

Dist	COUNTY	ROUTE	KILOMETER POST TOTAL PROJECT	SHEET No.	TOTAL SHEETS
11	SD	5,805	R49.9/R51.7, 42.6/46.5	220	886

Caltrans Metric

REGISTERED CIVIL ENGINEER 05-11-09 DATE

9-27-10
PLANS APPROVAL DATE

REGISTERED PROFESSIONAL ENGINEER CARL SPIER No. 49744 Exp. 9-30-10 CIVIL STATE OF CALIFORNIA

THE STATE OF CALIFORNIA OR ITS OFFICERS OR AGENTS SHALL NOT BE RESPONSIBLE FOR THE ACCURACY OR COMPLETENESS OF ELECTRONIC COPIES OF THIS PLAN SHEET.

CITY OF SAN DIEGO
600 B STREET, SUITE 800
SAN DIEGO, CA 92101

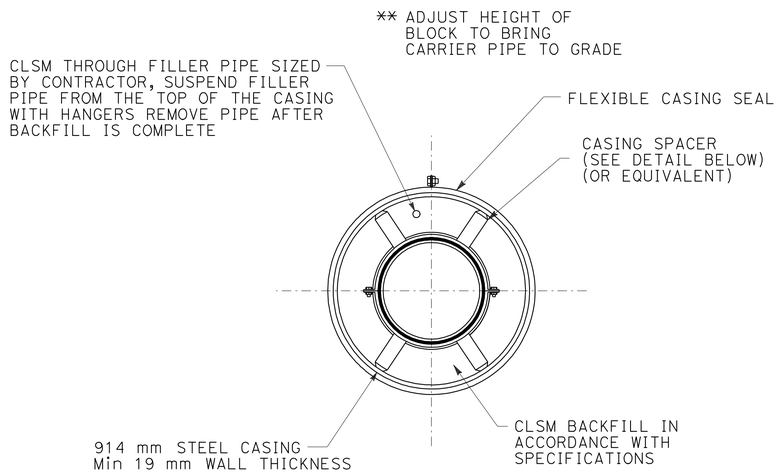

SECTION A-A

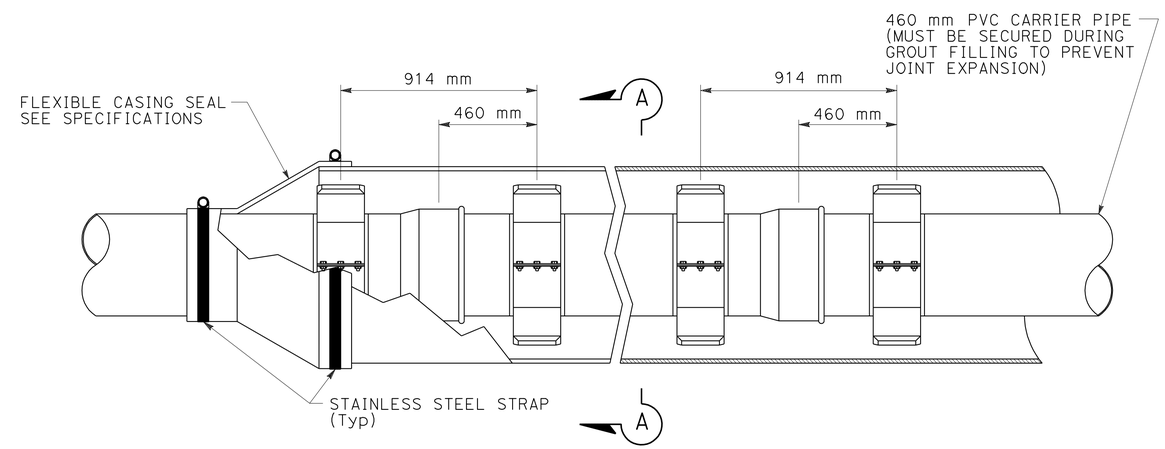

PROPOSED 460 mm PVC SEWER MAIN WITH 914 mm STEEL CASING

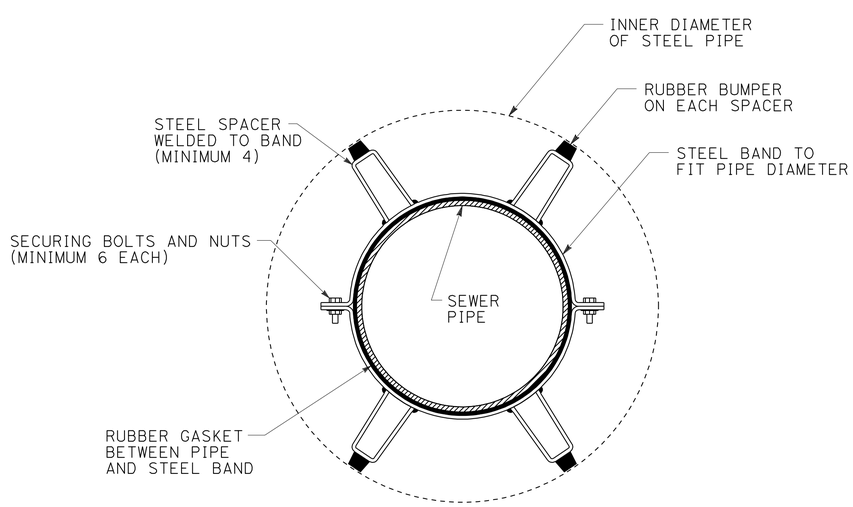

DETAILS OF CASING SPACER

ALL DIMENSIONS ARE IN METERS UNLESS OTHERWISE SHOWN

SANITARY SEWER DETAILS

SCALE 1:500

SSD-5

STATE OF CALIFORNIA - DEPARTMENT OF TRANSPORTATION
Caltrans

CONSULTANT FUNCTIONAL SUPERVISOR: MAHMOUD ORIGAT
CALCULATED-DESIGNED BY: FARLITO VALENZUELA
CHECKED BY: MAHMOUD ORIGAT
REVISED BY
DATE REVISED

LAST REVISION 05-30-09
DATE PLOTTED => 29-SEP-2010
TIME PLOTTED => 14:04

DIST	COUNTY	ROUTE	KILOMETER POST TOTAL PROJECT	SHEET No.	TOTAL SHEETS
11	SD	5,805	R49.9/R51.7, 42.6/46.5	221	886

REGISTERED CIVIL ENGINEER 05-11-09 DATE

9-27-10
PLANS APPROVAL DATE

REGISTERED PROFESSIONAL ENGINEER CARL SPIER No. 49744 Exp. 9-30-10 CIVIL STATE OF CALIFORNIA

THE STATE OF CALIFORNIA OR ITS OFFICERS OR AGENTS SHALL NOT BE RESPONSIBLE FOR THE ACCURACY OR COMPLETENESS OF SCANNED COPIES OF THIS PLAN SHEET.

CITY OF SAN DIEGO
600 B STREET, SUITE 800
SAN DIEGO, CA 92101

Caltrans Metric

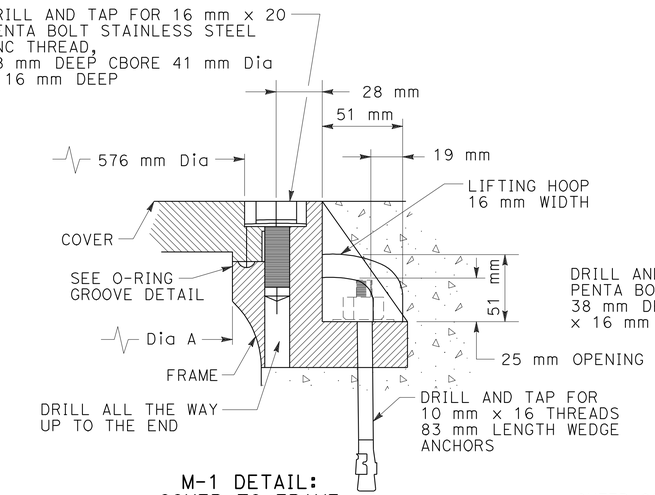

M-1 DETAIL:
COVER TO FRAME

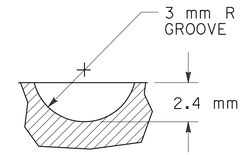

NEOPRENE O-RING GROOVE DETAIL

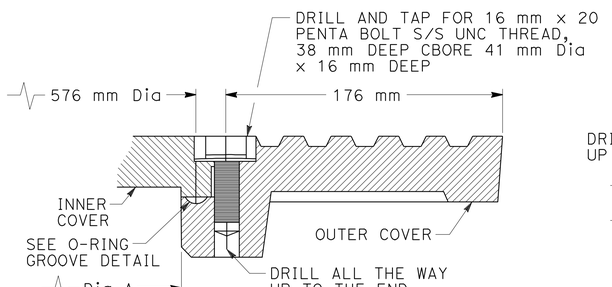

M-3A DETAIL:
INNER COVER TO OUTER COVER

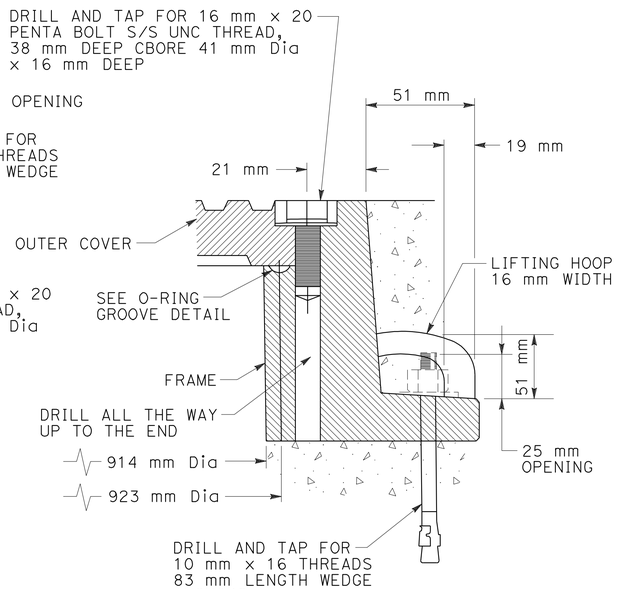

M-3B DETAIL:
OUTER COVER TO FRAME

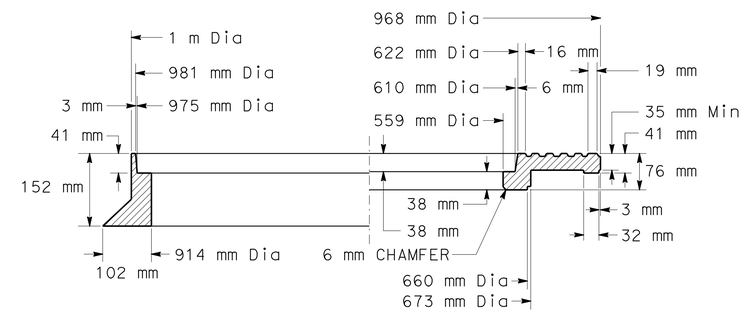

HALF SECTION FRAME AND COVER

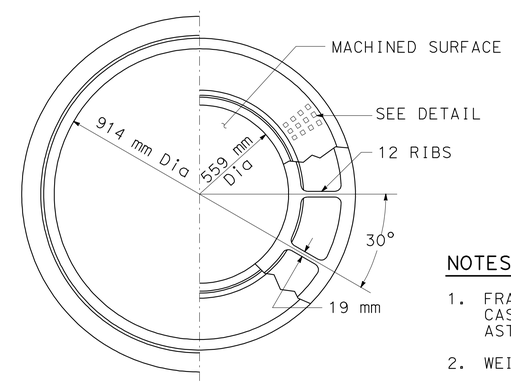

HALF PLAN FRAME AND COVER

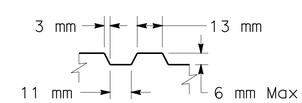

DETAIL

NOTES:

1. FRAME AND COVER SHALL BE CAST IRON. CAST IRON SHALL CONFORM TO ASTM 48, CLASS 35B.
2. WEIGHTS: FRAME 142 - 165 kg
   OUTER COVER 130 - 150 kg
   INNER COVER 67 - 78 kg
3. MACHINE ALL MATCHING SURFACES AND SEATS OF FRAME AND COVER TO PREVENT ROCKING.
4. IMPORTED FRAMES AND COVERS SHALL HAVE THE COUNTRY OF ORIGIN MARKED IN COMPLIANCE WITH FEDERAL REGULATIONS.

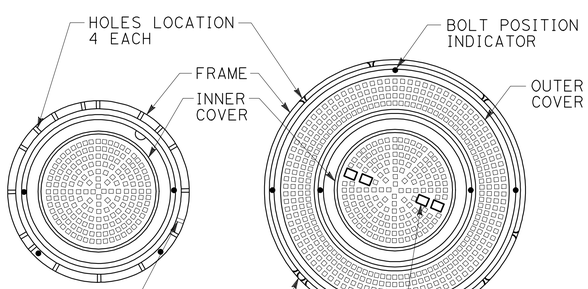

M-1 COVER AND FRAME BOLT REPLACEMENT (SEE NOTE 3)

M-3 CONCENTRIC COVERS AND FRAME BOLT REPLACEMENT (SEE NOTE 3)

NOTES:

1. 16 mm x 20 PENTA BOLT S/S UNC THREAD, 316 STAINLESS STEEL SOCKET HEAD CAP SCREW AND 38 mm OD x 17 mm ID x 0.078 THICK 316 STAINLESS STEEL WASHER.
2. 6 mm NEOPRENE O-RING GASKET SHALL BE GLUED INTO MACHINED GROOVE. GLUE SHALL MEET THE REQUIREMENTS OF MIL-M-81288 (AMEND. 1).
3. BOLTDOWN PATTERNS:
   M-1 DETAIL (610 mm COVER AND FRAME):
   INSTALL TWO (2) BOLTS AT 180 DEGREES.

   M-3A DETAIL (CONCENTRIC COVERS):
   BETWEEN INNER AND OUTER COVERS INSTALL TWO (2) BOLTS AT 180 DEGREES.

   M-3B DETAIL (OUTER COVER AND FRAME):
   BETWEEN OUTER COVER AND FRAME INSTALL FOUR (4) BOLTS AT 90 DEGREES.

   FOR M-1 AND M-3 OUTER COVER FRAME DRILL 4 HOLES FOR 10 mm x 16 STAINLESS STEEL WEDGE ANCHORS 95 mm LENGTH AT 90 DEGREES.

MANHOLE COVER - LOCKING DEVICE

914 mm MANHOLE FRAME AND TWO CONCENTRIC COVERS HEAVY DUTY

ALL DIMENSIONS ARE IN METERS UNLESS OTHERWISE SHOWN

SANITARY SEWER DETAILS

NO SCALE

SSD-6

REVISED BY	DATE REVISED

FARLITO VALENZUELA — MAHMOUD ORIQAT — CALCULATED-DESIGNED BY — CHECKED BY

CONSULTANT FUNCTIONAL SUPERVISOR — MAHMOUD ORIQAT

STATE OF CALIFORNIA - DEPARTMENT OF TRANSPORTATION — Caltrans

LAST REVISION 05-30-09 — DATE PLOTTED => 29-SEP-2010 — TIME PLOTTED => 14:54

DIST	COUNTY	ROUTE	KILOMETER POST TOTAL PROJECT	SHEET No.	TOTAL SHEETS
11	SD	5,805	R49.9/R51.7, 42.6/46.5	222	886

REGISTERED CIVIL ENGINEER 05-11-09 DATE

9-27-10
PLANS APPROVAL DATE

REGISTERED PROFESSIONAL ENGINEER CARL SPIER No. 49744 Exp. 9-30-10 CIVIL STATE OF CALIFORNIA

THE STATE OF CALIFORNIA OR ITS OFFICERS OR AGENTS SHALL NOT BE RESPONSIBLE FOR THE ACCURACY OR COMPLETENESS OF SCANNED COPIES OF THIS PLAN SHEET.

CITY OF SAN DIEGO
600 B STREET, SUITE 800
SAN DIEGO, CA 92101

Caltrans Metric

NOTE:

ALL STEEL FOR GRATE AND RELATED PARTS SHALL BE GALVANIZED.

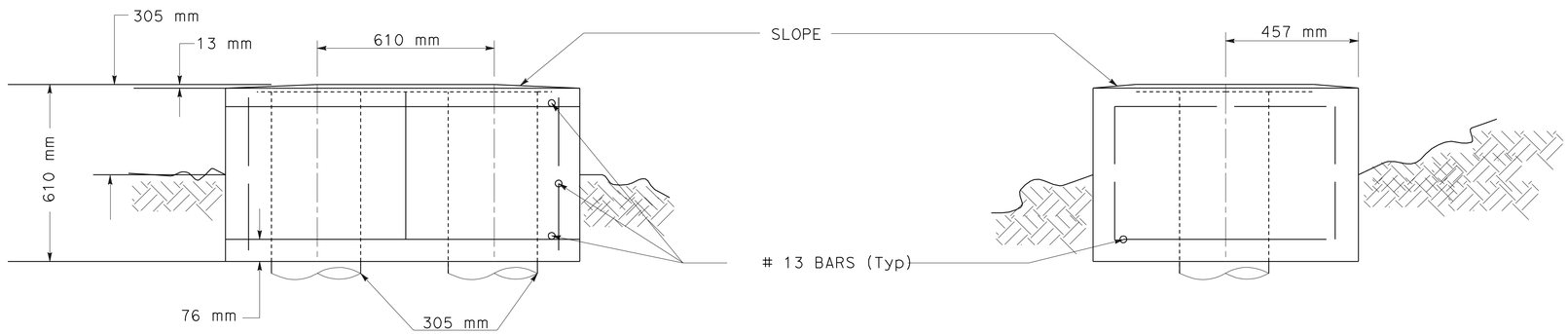

ELEVATION

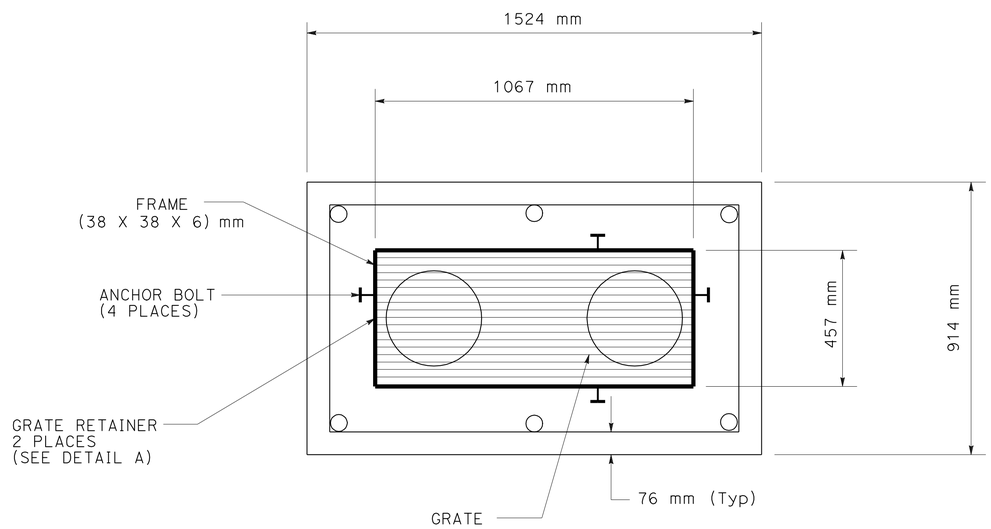

PLAN VIEW

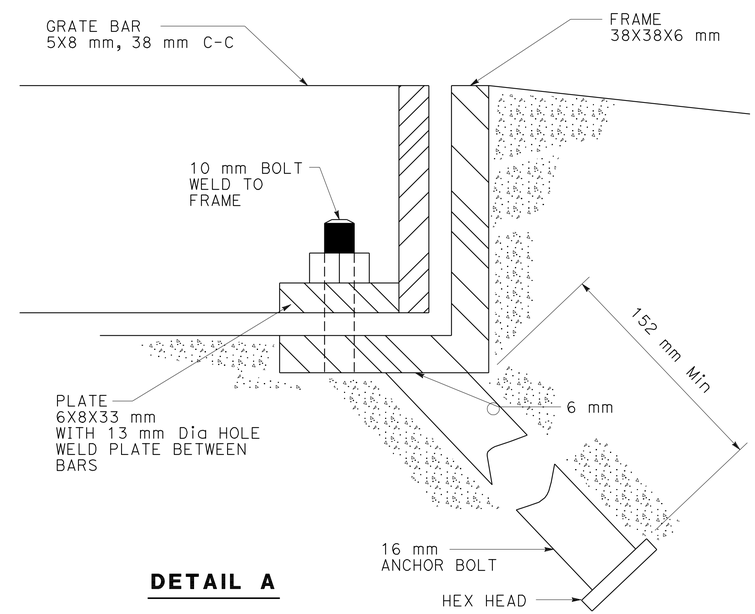

DETAIL A

SEWER VENT GRATE

ALL DIMENSIONS ARE IN METERS UNLESS OTHERWISE SHOWN

SANITARY SEWER DETAILS

NO SCALE

SSD-7

STATE OF CALIFORNIA - DEPARTMENT OF TRANSPORTATION
Caltrans

CONSULTANT FUNCTIONAL SUPERVISOR: MAHMOUD ORIQAT
CALCULATED-DESIGNED BY: FARLITO VALENZUELA
CHECKED BY: MAHMOUD ORIQAT
REVISED BY / DATE REVISED

LAST REVISION 05-30-09
DATE PLOTTED => 29-SEP-2010
TIME PLOTTED => 14:04

DIST	COUNTY	ROUTE	KILOMETER POST TOTAL PROJECT	SHEET No.	TOTAL SHEETS
11	SD	5,805	R49.9/R51.7, 42.6/46.5	223	886

REGISTERED CIVIL ENGINEER 05-11-09 DATE

9-27-10
PLANS APPROVAL DATE

REGISTERED PROFESSIONAL ENGINEER CARL SPIER No. 49744 Exp. 9-30-10 CIVIL STATE OF CALIFORNIA

THE STATE OF CALIFORNIA OR ITS OFFICERS OR AGENTS SHALL NOT BE RESPONSIBLE FOR THE ACCURACY OR COMPLETENESS OF SCANNED COPIES OF THIS PLAN SHEET.

CITY OF SAN DIEGO
600 B STREET, SUITE 800
SAN DIEGO, CA 92101

Caltrans Metric

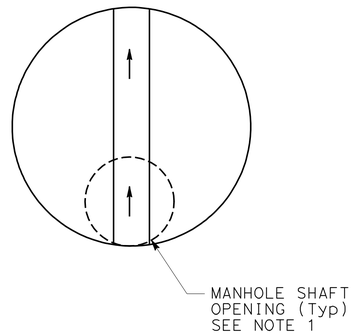

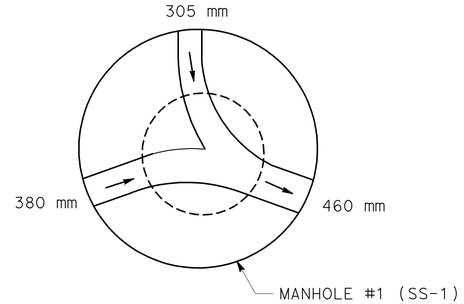

MANHOLE ACCESS LOCATION PLAN VIEW

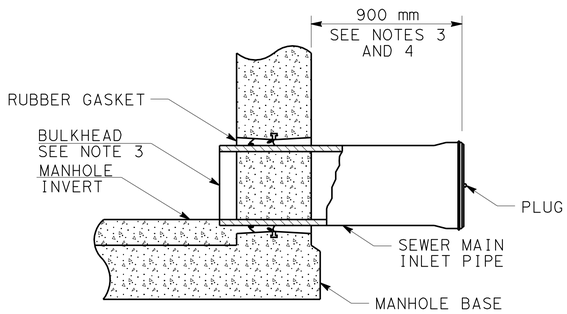

MANHOLE STUB OUT FOR FUTURE CONNECTION

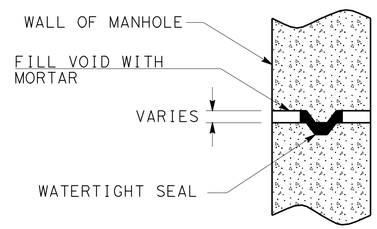

WATERTIGHT MANHOLE JOINT

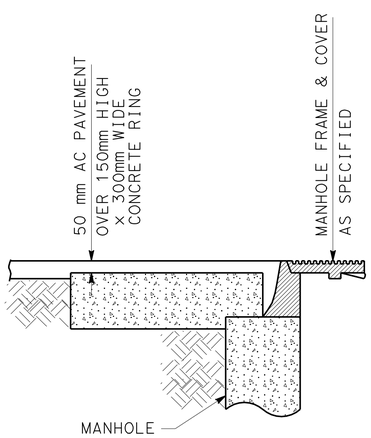

PAVED AND
TRAVELED AREAS

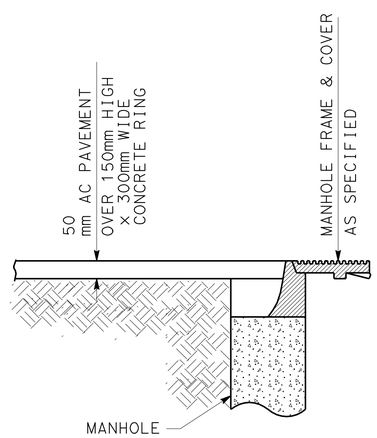

PAVED AND
TRAVELED AREAS

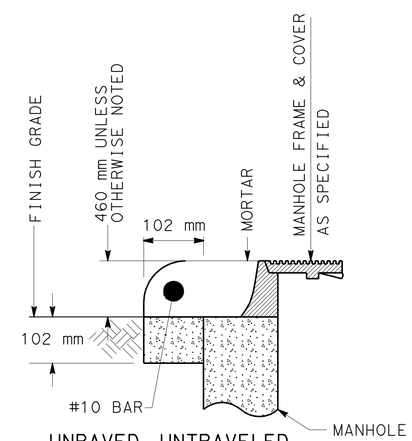

UNPAVED, UNTRAVELED
SHOULDER AREAS, AREAS
IN EASEMENTS

MANHOLE MISCELLANEOUS DETAILS

NOTES:

1. VERTICAL WALL OF CONE TO BE ON THE UP STREAM SIDE OF MANHOLE.
2. FOR MANHOLES REQURING COATING AND LINING SEE SSD-3.
3. BULKHEADS SHALL BE INSTALLED AT THE MANHOLE END OF STUBS.
4. SEWER MAIN TO BE LAID WITH BELLS UP-GRADE.
5. MATERIALS SHALL BE SELECTED FROM THE CITY OF SAN DIEGO'S APPROVED MATERIALS LIST.

ALL DIMENSIONS ARE IN
METERS UNLESS OTHERWISE SHOWN

SANITARY SEWER DETAILS

NO SCALE

SSD-8

REVISED BY	DATE REVISED

FARLITO VALENZUELA
MAHMOUD ORIQAT
CALCULATED-DESIGNED BY
CHECKED BY
CONSULTANT FUNCTIONAL SUPERVISOR
MAHMOUD ORIQAT

STATE OF CALIFORNIA - DEPARTMENT OF TRANSPORTATION
Caltrans

LAST REVISION 05-30-09
DATE PLOTTED => 29-SEP-2010
TIME PLOTTED => 14:04

DIST	COUNTY	ROUTE	KILOMETER POST TOTAL PROJECT	SHEET No.	TOTAL SHEETS
11	SD	5,805	R49.9/R51.7, 42.6/46.5	224	886

Caltrans Metric

REGISTERED CIVIL ENGINEER 05-11-09 DATE

9-27-10
PLANS APPROVAL DATE

REGISTERED PROFESSIONAL ENGINEER CARL SPIER No. 49744 Exp. 9-30-10 CIVIL STATE OF CALIFORNIA

THE STATE OF CALIFORNIA OR ITS OFFICERS OR AGENTS SHALL NOT BE RESPONSIBLE FOR THE ACCURACY OR COMPLETENESS OF SCANNED COPIES OF THIS PLAN SHEET.

CITY OF SAN DIEGO
600 B STREET, SUITE 800
SAN DIEGO, CA 92101

NOTE:
STEEL CASING ON SHEET SS-3 SHALL BE DIELECTRICALLY COATED.

SANITARY SEWER QUANTITIES

SANITARY SEWER PLAN SHEET No.	460 mm SEWER MAIN	914 mm STEEL CASING	305 mm VENT PIPE	MANHOLES 1500 mm X 900 mm	MODIFY MANHOLE (100 mm X 900 mm)	TEMPORARY RESURFACING (N)	CUTOFF WALL (N)	CONCRETE ANCHORS (N)	REMOVE MANHOLE	MINOR CONCRETE (MINOR STRUCTURE)	ADDITIONAL BEDDING (N)	MISC IRON AND STEEL						DESCRIPTION	SANITARY SEWER PLAN SHEET No.
	m	m	m	EA	EA	m^3	m^2	EA	EA	m^3	m^3	Kg							
SS-1	34	22.4		2		6	1	2											SS-1
SS-2	56.6	56.6		1	1				1		50								SS-2
SS-3			84							1		50						VENT GRATE	SS-3
TOTAL	90.6	79	84	3	1		1	2	1	1*		50**							

(N) = NOT A SEPARATE PAY ITEM, FOR INFORMATION ONLY

* FOR ADDITIONAL QUANTITIES, SEE DRAINAGE QUANTITIES AND SUMMARY OF QUANTITIES.

** FOR ADDITIONAL QUANTITIES, SEE DRAINAGE QUANTITIES.

REVISED BY	DATE REVISED

CALCULATED-DESIGNED BY	FARLITO VALENZUELA
CHECKED BY	MAHMOUD ORIQAT
CONSULTANT FUNCTIONAL SUPERVISOR	MAHMOUD ORIQAT

STATE OF CALIFORNIA - DEPARTMENT OF TRANSPORTATION
Caltrans

SANITARY SEWER QUANTITIES

SSQ-1

LAST REVISION 05-30-09
DATE PLOTTED => 29-SEP-2010
TIME PLOTTED => 14:04

Dist	COUNTY	ROUTE	KILOMETER POST TOTAL PROJECT	SHEET No.	TOTAL SHEETS
11	SD	5,805	R49.9/R51.7, 42.6/46.5	225	886

Caltrans Metric

REGISTERED CIVIL ENGINEER 05-19-09 DATE

9-27-10
PLANS APPROVAL DATE

REGISTERED PROFESSIONAL ENGINEER ANH HOANG No. 66009 Exp. 06-30-10 CIVIL STATE OF CALIFORNIA

THE STATE OF CALIFORNIA OR ITS OFFICERS OR AGENTS SHALL NOT BE RESPONSIBLE FOR THE ACCURACY OR COMPLETENESS OF ELECTRONIC COPIES OF THIS PLAN SHEET.

NOTES:

1. ALL UTILITIES TO BE FIELD VERIFIED.
2. FOR COMPLETE RIGHT OF WAY AND ACCURATE ACCESS DATA SEE RIGHT OF WAY RECORD MAPS AT DISTRICT OFFICE.

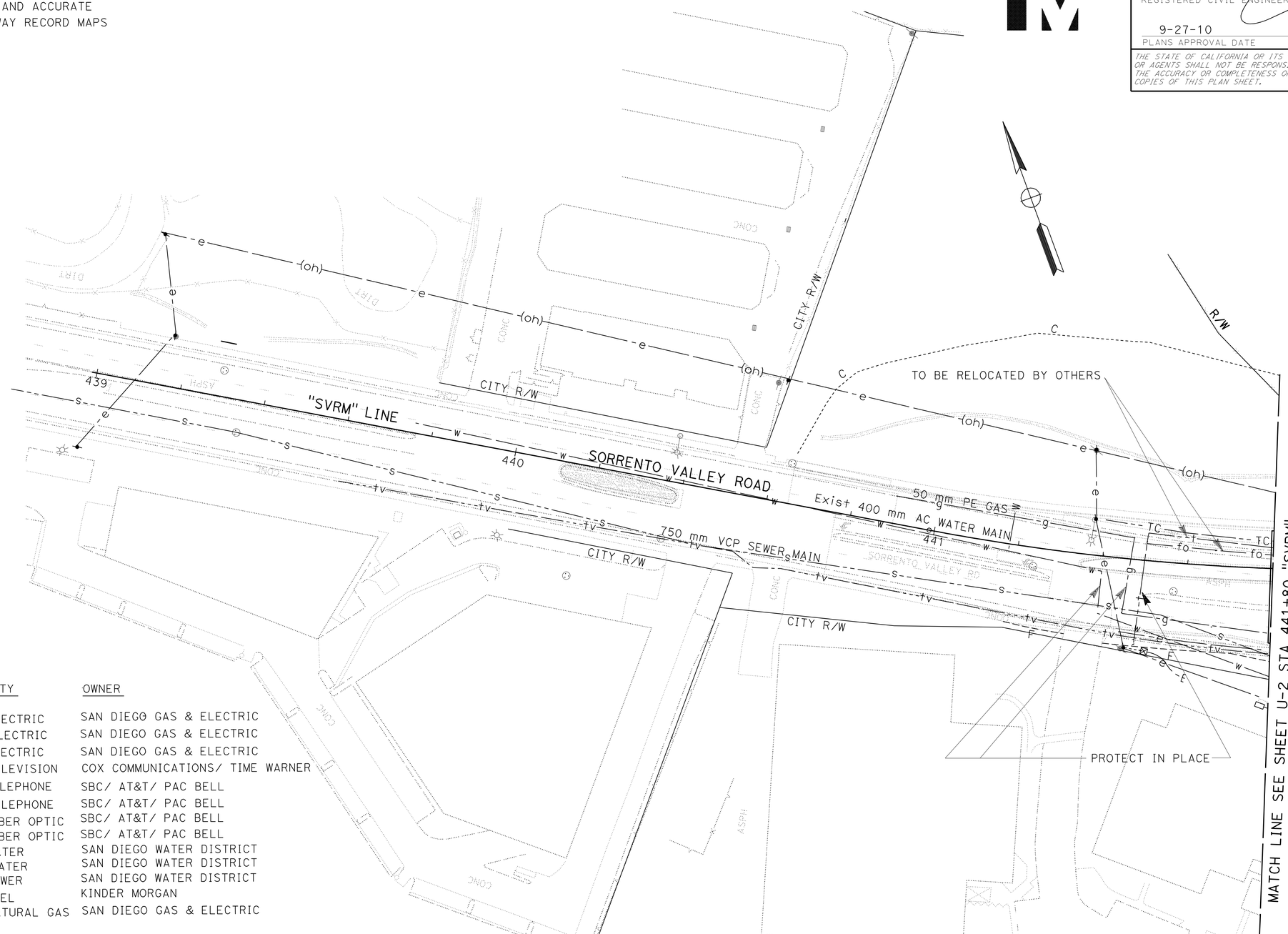

LEGEND:

SYMBOL	EXISTING UTILITY	OWNER
— e —(oh)—	EXISTING OH ELECTRIC	SAN DIEGO GAS & ELECTRIC
— E —	PROPOSED OH ELECTRIC	SAN DIEGO GAS & ELECTRIC
— e —	EXISTING UG ELECTRIC	SAN DIEGO GAS & ELECTRIC
— tv —	EXISTING UG TELEVISION	COX COMMUNICATIONS/ TIME WARNER
— t —	EXISTING UG TELEPHONE	SBC/ AT&T/ PAC BELL
— t —(oh)	EXISTING OH TELEPHONE	SBC/ AT&T/ PAC BELL
— fo —	EXISTING UG FIBER OPTIC	SBC/ AT&T/ PAC BELL
— fo-(oh) -	EXISTING UG FIBER OPTIC	SBC/ AT&T/ PAC BELL
- — w — -	EXISTING UG WATER	SAN DIEGO WATER DISTRICT
- — W — -	PROPOSED UG WATER	SAN DIEGO WATER DISTRICT
— s —	EXISTING UG SEWER	SAN DIEGO WATER DISTRICT
— o —	EXISTING UG FUEL	KINDER MORGAN
— g —	EXISTING UG NATURAL GAS	SAN DIEGO GAS & ELECTRIC

ABBREVIATION:

RecW - RECLAIMED WATER
TC - UG TRAFFIC CONTROL
VCP - VITRIFIED CLAY PIPE
ACP - ASBESTOS CEMENT PIPE

THIS PLAN ACCURATE FOR UTILITY WORK ONLY

ALL DIMENSIONS ARE IN METERS UNLESS OTHERWISE SHOWN

SCALE 1:500

UTILITY PLAN
U-1

STATE OF CALIFORNIA - DEPARTMENT OF TRANSPORTATION
Caltrans DESIGN

FUNCTIONAL SUPERVISOR: ABU BAKR AL-JAFRI
CALCULATED-DESIGNED BY: MATT MATHEWS
CHECKED BY: ANH HOANG
REVISED BY
DATE REVISED

LAST REVISION 05-31-09
DATE PLOTTED => 29-SEP-2010
TIME PLOTTED => 14:04

Dist	COUNTY	ROUTE	KILOMETER POST TOTAL PROJECT	SHEET No.	TOTAL SHEETS
11	SD	5,805	R49.9/R51.7, 42.6/46.5	226	886

Anh Hoang 05-19-09
REGISTERED CIVIL ENGINEER DATE

9-27-10
PLANS APPROVAL DATE

REGISTERED PROFESSIONAL ENGINEER ANH HOANG No. 66009 Exp. 06-30-10 CIVIL STATE OF CALIFORNIA

THE STATE OF CALIFORNIA OR ITS OFFICERS OR AGENTS SHALL NOT BE RESPONSIBLE FOR THE ACCURACY OR COMPLETENESS OF ELECTRONIC COPIES OF THIS PLAN SHEET.

Caltrans Metric

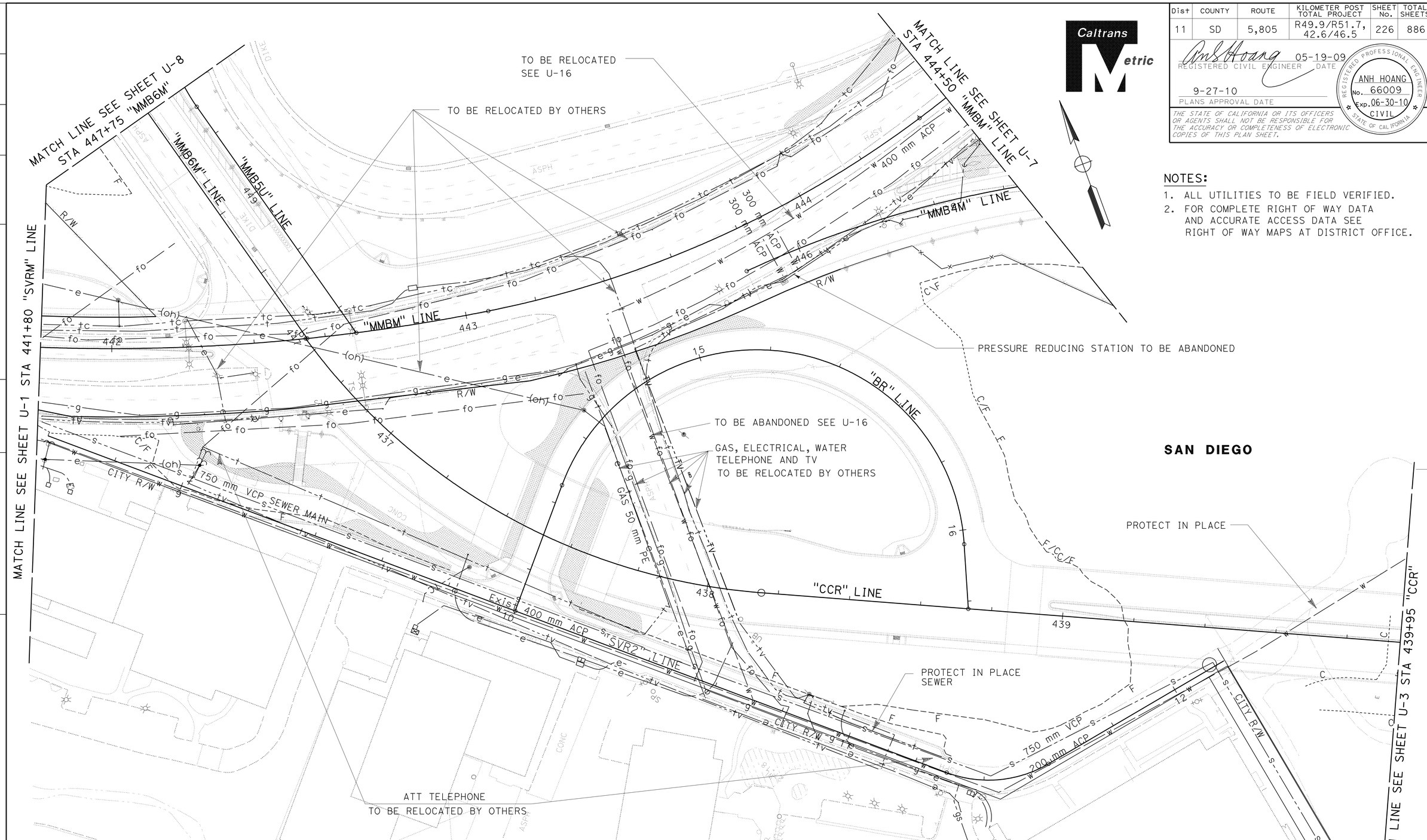

NOTES:

1. ALL UTILITIES TO BE FIELD VERIFIED.
2. FOR COMPLETE RIGHT OF WAY DATA AND ACCURATE ACCESS DATA SEE RIGHT OF WAY MAPS AT DISTRICT OFFICE.

ALL DIMENSIONS ARE IN METERS UNLESS OTHERWISE SHOWN

THIS PLAN ACCURATE FOR UTILITY WORK ONLY

SCALE 1:500

UTILITY PLAN U-2

REVISED BY	DATE REVISED

CALCULATED-DESIGNED BY	MATT MATHEWS
CHECKED BY	ANH HOANG
FUNCTIONAL SUPERVISOR	ABU BAKR AL-JAFRI

STATE OF CALIFORNIA - DEPARTMENT OF TRANSPORTATION
Caltrans DESIGN

LAST REVISION 05-31-09 | DATE PLOTTED => 29-SEP-2010 | TIME PLOTTED => 14:04

Dist	COUNTY	ROUTE	KILOMETER POST TOTAL PROJECT	SHEET No.	TOTAL SHEETS
11	SD	5,805	R49.9/R51.7, 42.6/46.5	227	886

REGISTERED CIVIL ENGINEER 05-19-09 DATE

9-27-10
PLANS APPROVAL DATE

REGISTERED PROFESSIONAL ENGINEER ANH HOANG No. 66009 Exp. 06-30-10 CIVIL STATE OF CALIFORNIA

THE STATE OF CALIFORNIA OR ITS OFFICERS OR AGENTS SHALL NOT BE RESPONSIBLE FOR THE ACCURACY OR COMPLETENESS OF ELECTRONIC COPIES OF THIS PLAN SHEET.

Caltrans Metric

NOTES:

1. ALL UTILITIES TO BE FIELD VERIFIED.
2. FOR COMPLETE RIGHT OF WAY AND ACCURATE ACCESS DATA SEE RIGHT OF WAY MAPS AT DISTRICT OFFICE.

THIS PLAN ACCURATE FOR UTILITY WORK ONLY

ALL DIMENSIONS ARE IN METERS UNLESS OTHERWISE SHOWN

SCALE 1:500

UTILITY PLAN
U-3

STATE OF CALIFORNIA - DEPARTMENT OF TRANSPORTATION
Caltrans DESIGN

FUNCTIONAL SUPERVISOR: ABU BAKR AL-JAFRI
CALCULATED-DESIGNED BY: MATT MATHEWS
CHECKED BY: ANH HOANG
REVISED BY
DATE REVISED

LAST REVISION 05-31-09
DATE PLOTTED => 29-SEP-2010
TIME PLOTTED => 14:05

Dist	COUNTY	ROUTE	KILOMETER POST TOTAL PROJECT	SHEET No.	TOTAL SHEETS
11	SD	5,805	R49.9/R51.7, 42.6/46.5	228	886

REGISTERED CIVIL ENGINEER 05-19-09 DATE

9-27-10
PLANS APPROVAL DATE

REGISTERED PROFESSIONAL ENGINEER ANH HOANG No. 66009 Exp. 06-30-10 CIVIL STATE OF CALIFORNIA

THE STATE OF CALIFORNIA OR ITS OFFICERS OR AGENTS SHALL NOT BE RESPONSIBLE FOR THE ACCURACY OR COMPLETENESS OF ELECTRONIC COPIES OF THIS PLAN SHEET.

Caltrans Metric

NOTES:

1. ALL UTILITIES TO BE FIELD VERIFIED.
2. FOR COMPLETE RIGHT OF WAY AND ACCURATE ACCESS DATA SEE RIGHT OF WAY MAPS AT DISTRICT OFFICE.

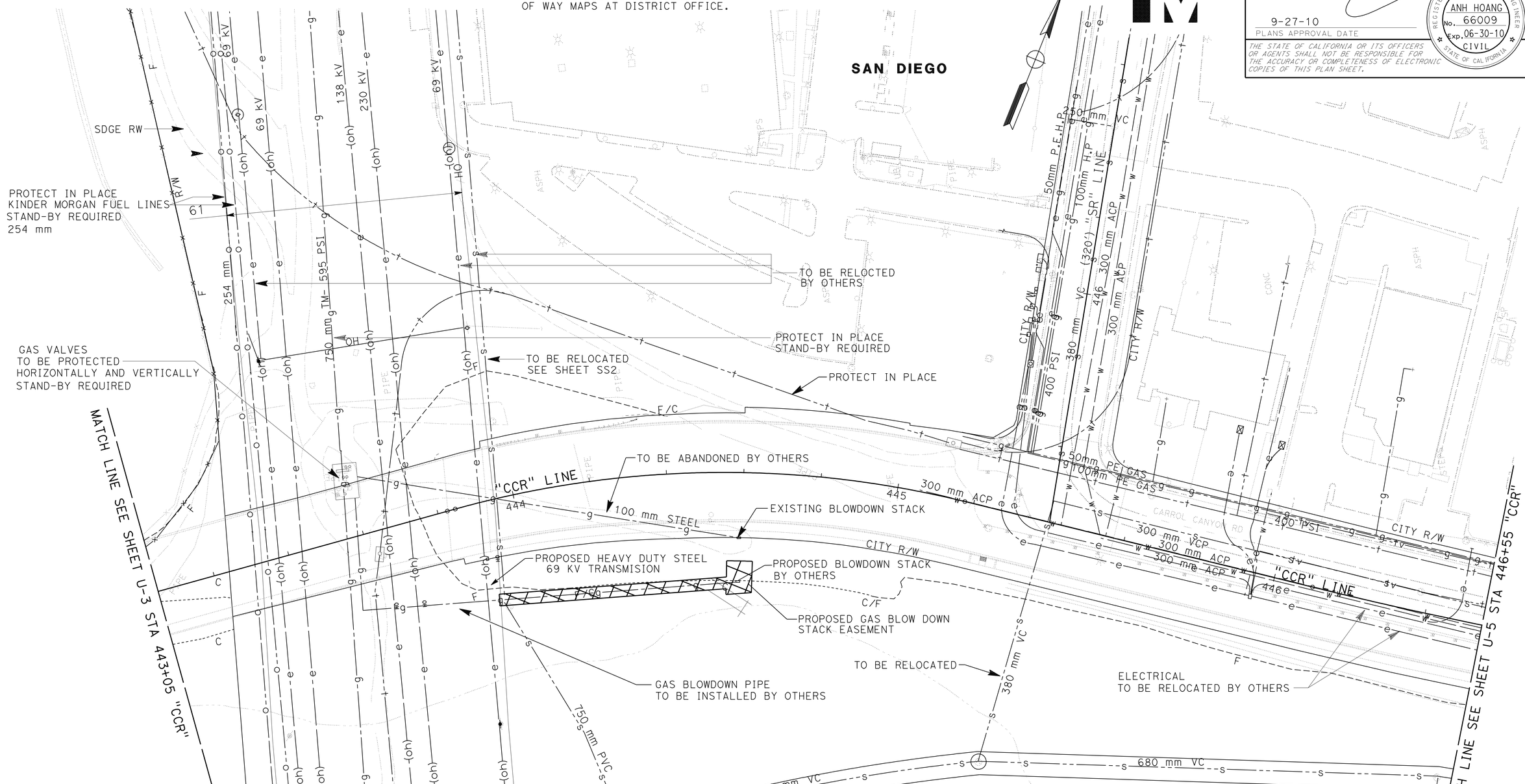

THIS PLAN ACCURATE FOR UTILITY WORK ONLY

ALL DIMENSIONS ARE IN METERS UNLESS OTHERWISE SHOWN

UTILITY PLAN

SCALE 1:500

U-4

STATE OF CALIFORNIA - DEPARTMENT OF TRANSPORTATION

Caltrans DESIGN

FUNCTIONAL SUPERVISOR: ABU BAKR AL-JAFRI

CALCULATED-DESIGNED BY: MATT MATHEWS

CHECKED BY: ANH HOANG

REVISED BY / DATE REVISED

LAST REVISION 06-01-09 DATE PLOTTED => 29-SEP-2010 TIME PLOTTED => 14:05

BORDER LAST REVISED 3/1/2007

RELATIVE BORDER SCALE IS IN MILLIMETERS 0 20 40 60 80

USERNAME => trstrk
DGN FILE => b2t040ka004.dgn

CU 11275

EA 2T0401

Dist	COUNTY	ROUTE	KILOMETER POST TOTAL PROJECT	SHEET No.	TOTAL SHEETS
11	SD	5,805	R49.9/R51.7, 42.6/46.5	229	886

Caltrans Metric

REGISTERED CIVIL ENGINEER 05-19-09 DATE

9-27-10
PLANS APPROVAL DATE

REGISTERED PROFESSIONAL ENGINEER ANH HOANG No. 66009 Exp. 06-30-10 CIVIL STATE OF CALIFORNIA

THE STATE OF CALIFORNIA OR ITS OFFICERS OR AGENTS SHALL NOT BE RESPONSIBLE FOR THE ACCURACY OR COMPLETENESS OF ELECTRONIC COPIES OF THIS PLAN SHEET.

NOTES:

1. ALL UTILITIES TO BE FIELD VERIFIED.
2. FOR COMPLETE RIGHT OF WAY AND ACCURATE ACCESS DATA SEE RIGHT OF WAY MAPS AT DISTRICT OFFICE.

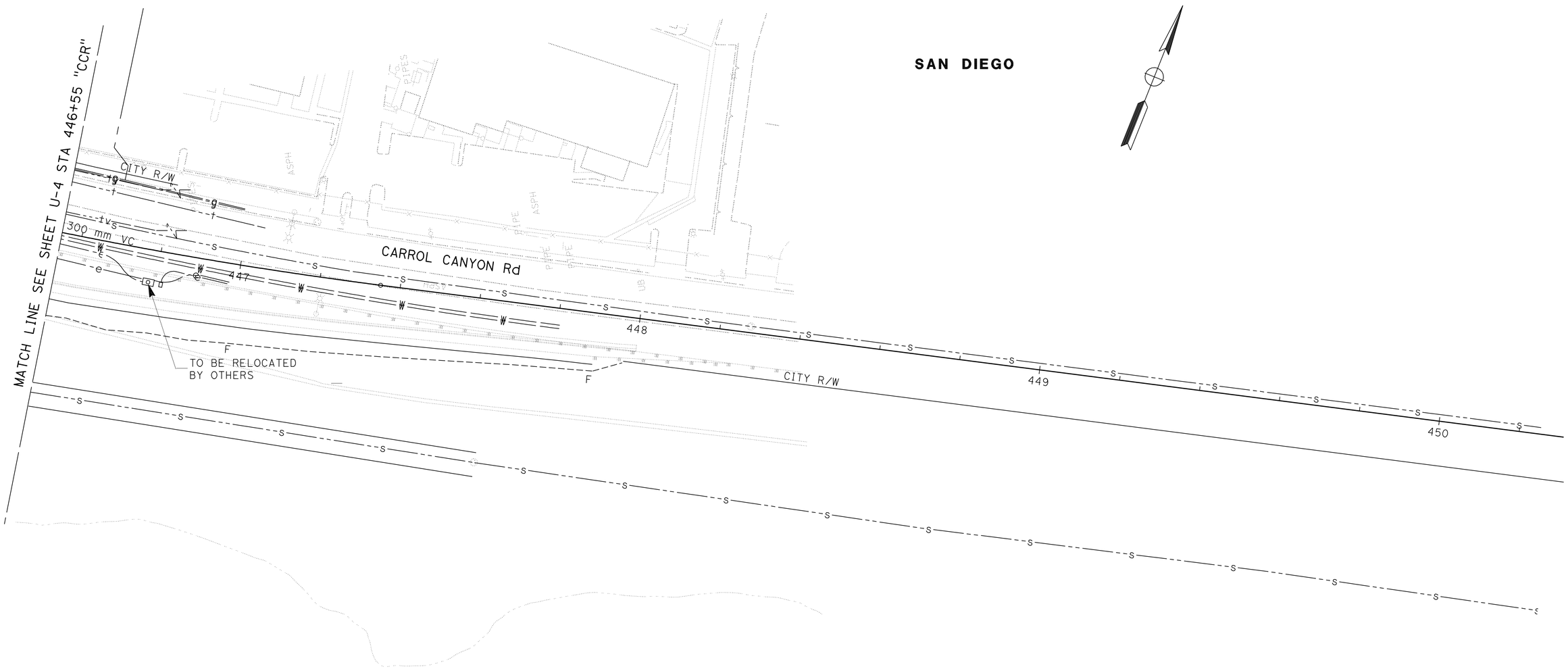

ALL DIMENSIONS ARE IN METERS UNLESS OTHERWISE SHOWN

THIS PLAN ACCURATE FOR UTILITY WORK ONLY

SCALE 1:500

UTILITY PLAN
U-5

STATE OF CALIFORNIA - DEPARTMENT OF TRANSPORTATION
Caltrans DESIGN

FUNCTIONAL SUPERVISOR: ABU BAKR AL-JAFRI
CALCULATED-DESIGNED BY: MATT MATHEWS
CHECKED BY: ANH HOANG
REVISED BY / DATE REVISED

LAST REVISION 05-31-09
DATE PLOTTED => 29-SEP-2010
TIME PLOTTED => 14:05

Dist	COUNTY	ROUTE	KILOMETER POST TOTAL PROJECT	SHEET No.	TOTAL SHEETS
11	SD	5,805	R49.9/R51.7, 42.6/46.5	230	886

Caltrans Metric

REGISTERED CIVIL ENGINEER 05-19-09 DATE

9-27-10
PLANS APPROVAL DATE

REGISTERED PROFESSIONAL ENGINEER
ANH HOANG
No. 66009
Exp. 06-30-10
CIVIL
STATE OF CALIFORNIA

THE STATE OF CALIFORNIA OR ITS OFFICERS OR AGENTS SHALL NOT BE RESPONSIBLE FOR THE ACCURACY OR COMPLETENESS OF ELECTRONIC COPIES OF THIS PLAN SHEET.

NOTES:

1. ALL UTILITIES TO BE FIELD VERIFIED.
2. FOR COMPLETE RIGHT OF WAY AND ACCURATE ACCESS DATA SEE RIGHT OF WAY MAPS AT DISTRICT OFFICE.
3. THERE ARE NO UTILITIES ON THIS SHEET.

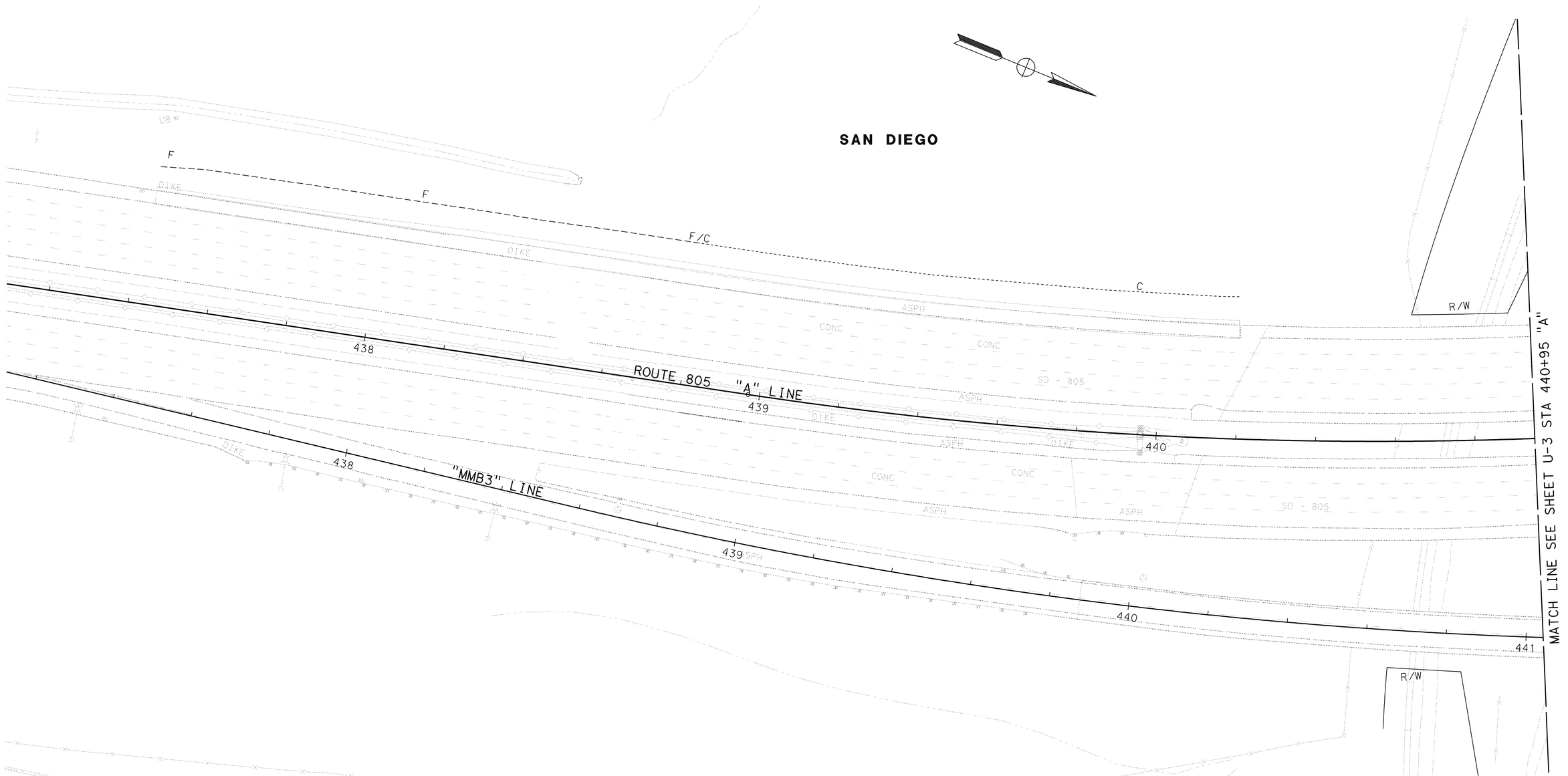

ALL DIMENSIONS ARE IN METERS UNLESS OTHERWISE SHOWN

THIS PLAN ACCURATE FOR UTILITY WORK ONLY

SCALE 1:500

UTILITY PLAN

U-6

REVISED BY	
DATE REVISED	
MATT MATHEWS	
ANH HOANG	
CALCULATED-DESIGNED BY	
CHECKED BY	
FUNCTIONAL SUPERVISOR	
ABU BAKR AL-JAFRI	

STATE OF CALIFORNIA - DEPARTMENT OF TRANSPORTATION
Caltrans
DESIGN

LAST REVISION 05-31-09
DATE PLOTTED => 29-SEP-2010
TIME PLOTTED => 14:05

Dist	COUNTY	ROUTE	KILOMETER POST TOTAL PROJECT	SHEET No.	TOTAL SHEETS
11	SD	5,805	R49.9/R51.7, 42.6/46.5	231	886

REGISTERED CIVIL ENGINEER 05-19-09 DATE

9-27-10
PLANS APPROVAL DATE

REGISTERED PROFESSIONAL ENGINEER ANH HOANG No. 66009 Exp. 06-30-10 CIVIL STATE OF CALIFORNIA

THE STATE OF CALIFORNIA OR ITS OFFICERS OR AGENTS SHALL NOT BE RESPONSIBLE FOR THE ACCURACY OR COMPLETENESS OF ELECTRONIC COPIES OF THIS PLAN SHEET.

Caltrans Metric

NOTES:

1. ALL UTILITIES TO BE FIELD VERIFIED.
2. FOR COMPLETE RIGHT OF WAY AND ACCURATE ACCESS DATA SEE RIGHT OF WAY MAPS AT DISTRICT OFFICE.

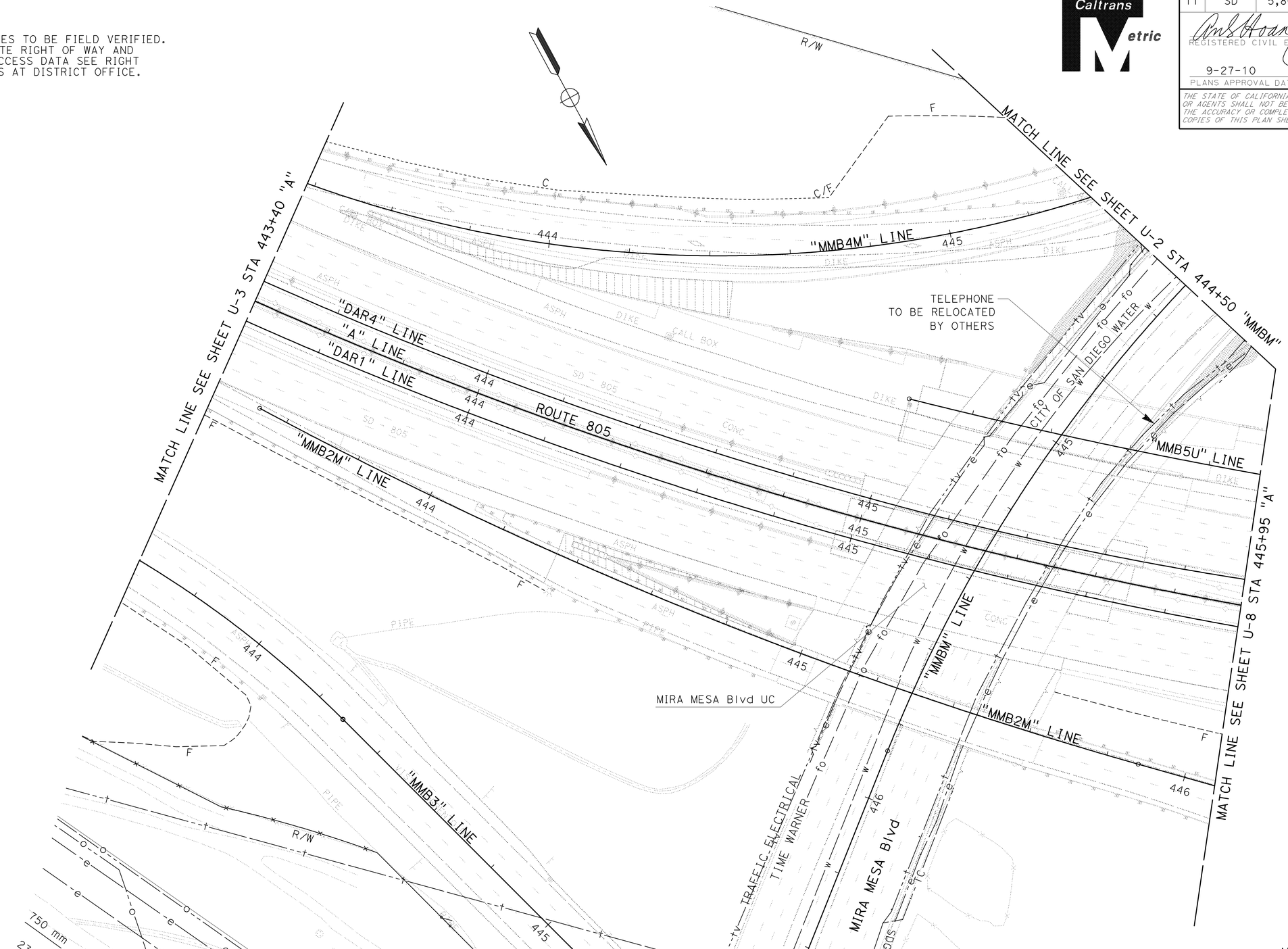

ALL DIMENSIONS ARE IN METERS UNLESS OTHERWISE SHOWN

UTILITY PLAN

SCALE 1:500

U-7

THIS PLAN ACCURATE FOR UTILITY WORK ONLY

STATE OF CALIFORNIA - DEPARTMENT OF TRANSPORTATION
Caltrans DESIGN

FUNCTIONAL SUPERVISOR: ABU BAKR AL-JAFRI

CALCULATED-DESIGNED BY: MATT MATHEWS
CHECKED BY: ANH HOANG

REVISED BY | DATE REVISED

LAST REVISION 05-31-09 | DATE PLOTTED => 29-SEP-2010 | TIME PLOTTED => 14:05

Dist	COUNTY	ROUTE	KILOMETER POST TOTAL PROJECT	SHEET No.	TOTAL SHEETS
11	SD	5,805	R49.9/R51.7, 42.6/46.5	232	886

REGISTERED CIVIL ENGINEER 05-19-09 DATE

9-27-10
PLANS APPROVAL DATE

REGISTERED PROFESSIONAL ENGINEER ANH HOANG No. 66009 Exp. 06-30-10 CIVIL STATE OF CALIFORNIA

THE STATE OF CALIFORNIA OR ITS OFFICERS OR AGENTS SHALL NOT BE RESPONSIBLE FOR THE ACCURACY OR COMPLETENESS OF ELECTRONIC COPIES OF THIS PLAN SHEET.

Caltrans Metric

NOTES:

1. ALL UTILITIES TO BE FIELD VERIFIED.
2. FOR COMPLETE RIGHT OF WAY AND ACCURATE ACCESS DATA SEE RIGHT OF WAY MAPS AT DISTRICT OFFICE.

SAN DIEGO

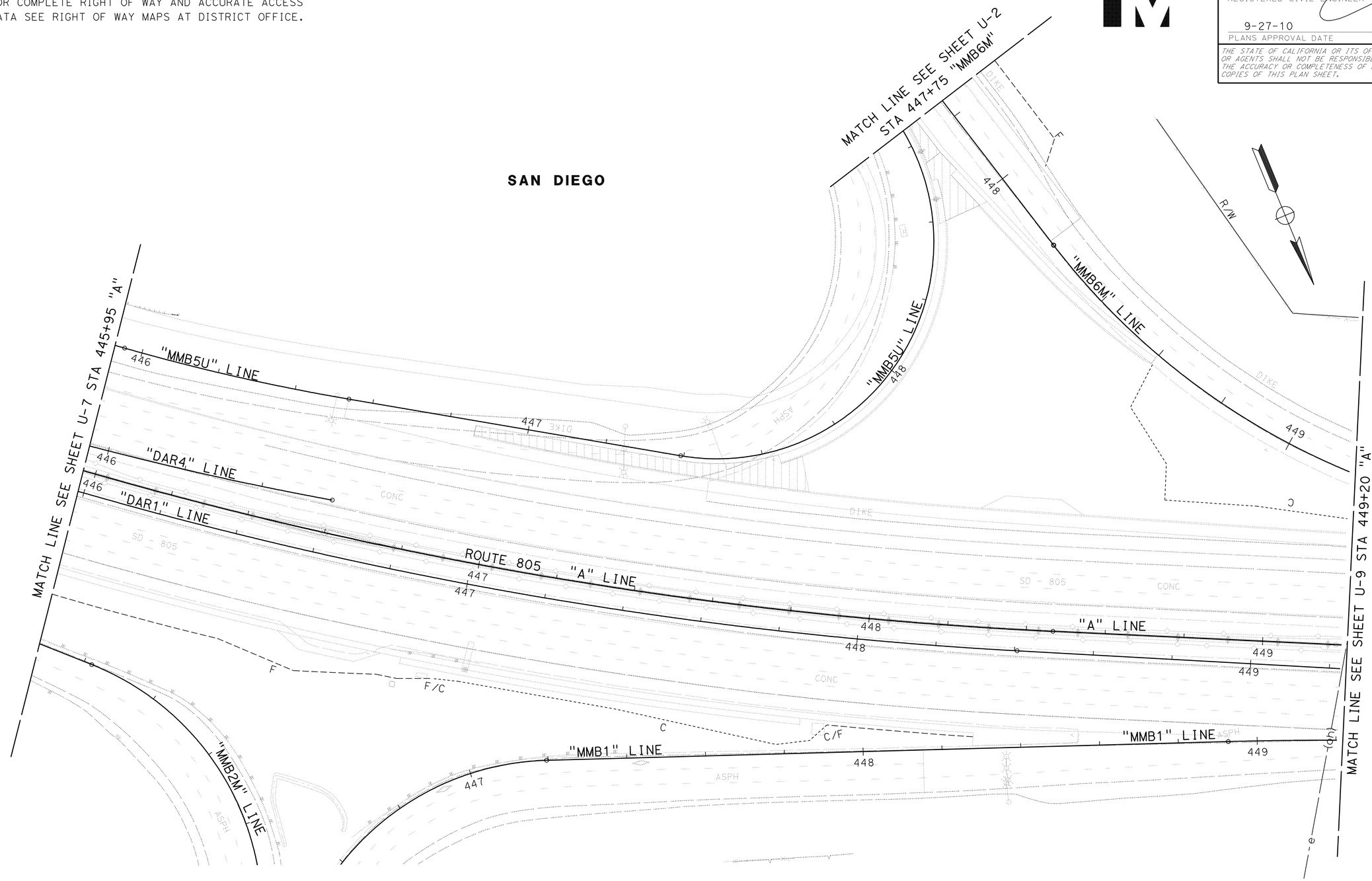

ALL DIMENSIONS ARE IN METERS UNLESS OTHERWISE SHOWN

THIS PLAN ACCURATE FOR UTILITY WORK ONLY

SCALE 1:500

UTILITY PLAN

U-8

STATE OF CALIFORNIA - DEPARTMENT OF TRANSPORTATION

Caltrans **DESIGN**

FUNCTIONAL SUPERVISOR: ABU BAKR AL-JAFRI

CALCULATED-DESIGNED BY: MATT MATHEWS

CHECKED BY: ANH HOANG

REVISED BY / DATE REVISED

LAST REVISION 05-31-09 DATE PLOTTED => 29-SEP-2010 TIME PLOTTED => 14:05

Dist	COUNTY	ROUTE	KILOMETER POST TOTAL PROJECT	SHEET No.	TOTAL SHEETS
11	SD	5,805	R49.9/R51.7, 42.6/46.5	233	886

REGISTERED CIVIL ENGINEER 05-19-09 DATE

9-27-10
PLANS APPROVAL DATE

REGISTERED PROFESSIONAL ENGINEER ANH HOANG No. 66009 Exp. 06-30-10 CIVIL STATE OF CALIFORNIA

THE STATE OF CALIFORNIA OR ITS OFFICERS OR AGENTS SHALL NOT BE RESPONSIBLE FOR THE ACCURACY OR COMPLETENESS OF ELECTRONIC COPIES OF THIS PLAN SHEET.

Caltrans Metric

NOTES:

1. ALL UTILITIES TO BE FIELD VERIFIED.
2. FOR COMPLETE RIGHT OF WAY AND ACCURATE ACCESS DATA SEE RIGHT OF WAY MAPS AT DISTRICT OFFICE.

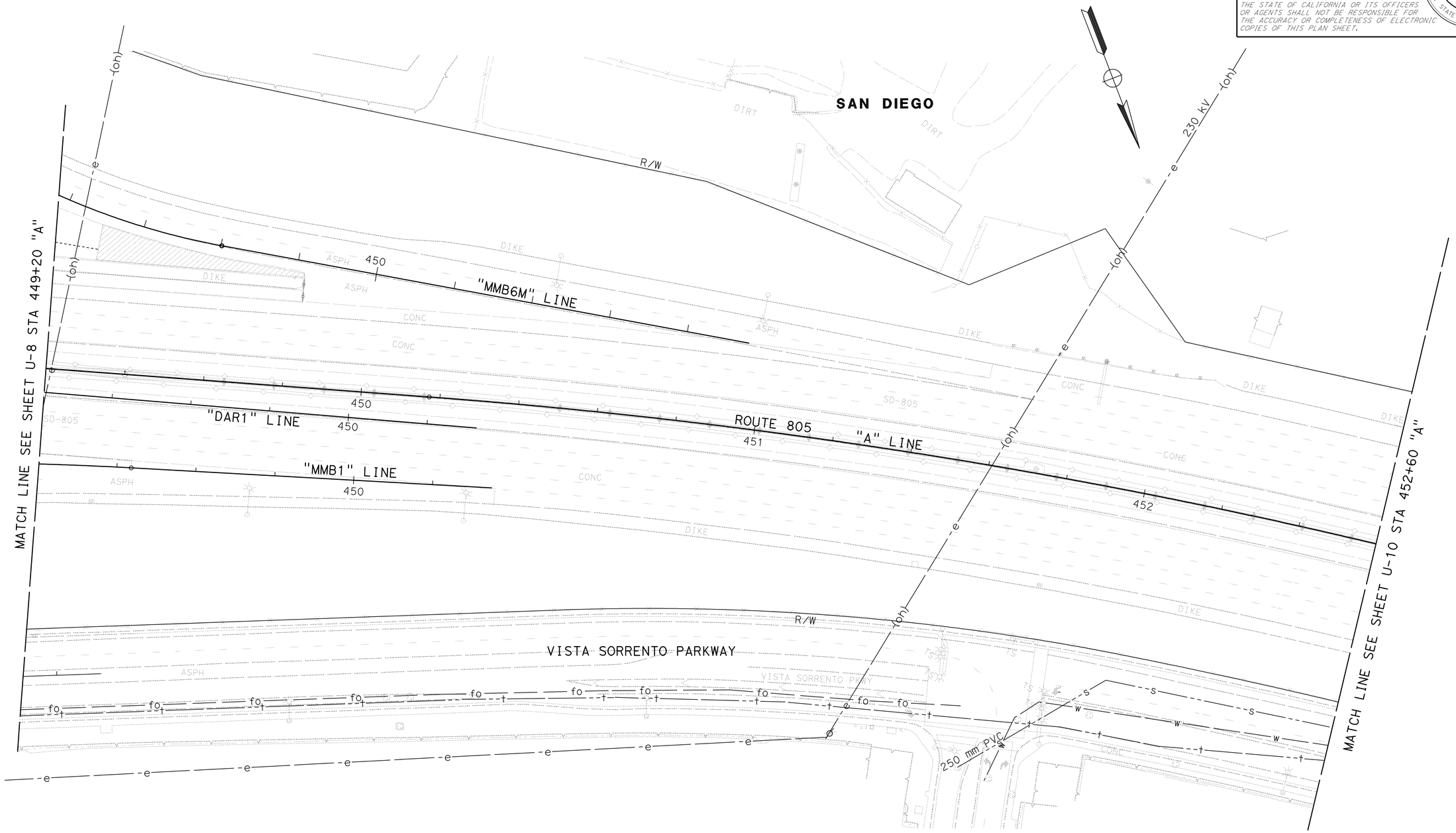

ALL DIMENSIONS ARE IN METERS UNLESS OTHERWISE SHOWN

THIS PLAN ACCURATE FOR UTILITY WORK ONLY

SCALE 1:500

UTILITY PLAN

U-9

STATE OF CALIFORNIA - DEPARTMENT OF TRANSPORTATION
Caltrans DESIGN

FUNCTIONAL SUPERVISOR: ABU BAKR AL-JAFRI
CALCULATED-DESIGNED BY: MATT MATHEWS
CHECKED BY: ANH HOANG
REVISED BY / DATE REVISED

LAST REVISION 05-31-09
DATE PLOTTED => 29-SEP-2010
TIME PLOTTED => 14:05

Dist	COUNTY	ROUTE	KILOMETER POST TOTAL PROJECT	SHEET No.	TOTAL SHEETS
11	SD	5,805	R49.9/R51.7, 42.6/46.5	234	886

REGISTERED CIVIL ENGINEER 05-19-09 DATE

9-27-10
PLANS APPROVAL DATE

REGISTERED PROFESSIONAL ENGINEER ANH HOANG No. 66009 Exp. 06-30-10 CIVIL STATE OF CALIFORNIA

THE STATE OF CALIFORNIA OR ITS OFFICERS OR AGENTS SHALL NOT BE RESPONSIBLE FOR THE ACCURACY OR COMPLETENESS OF ELECTRONIC COPIES OF THIS PLAN SHEET.

Caltrans Metric

NOTES:

1. ALL UTILITIES TO BE FIELD VERIFIED.
2. FOR COMPLETE RIGHT OF WAY AND ACCURATE ACCESS DATA SEE RIGHT OF WAY MAPS AT DISTRICT OFFICE.

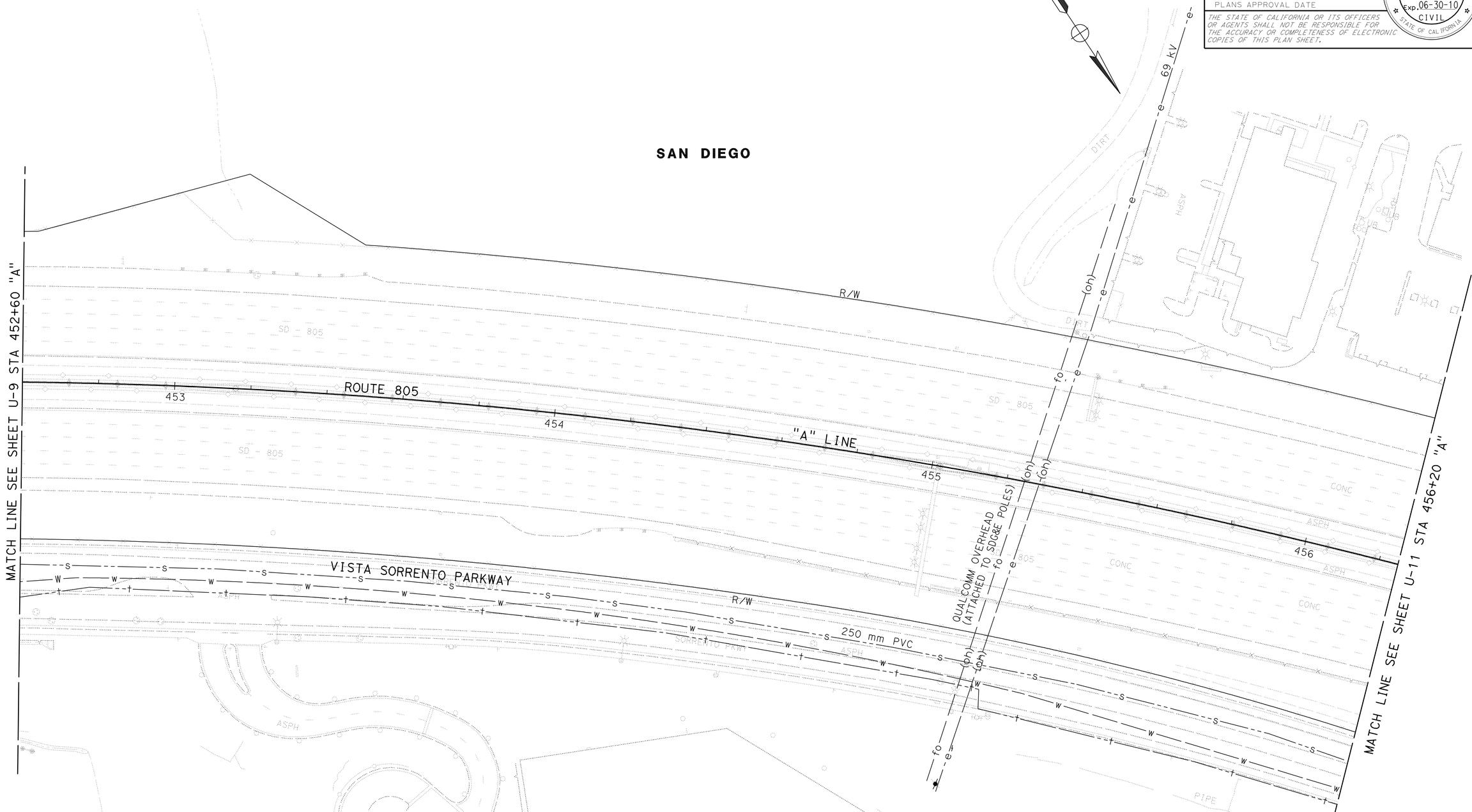

ALL DIMENSIONS ARE IN METERS UNLESS OTHERWISE SHOWN

THIS PLAN ACCURATE FOR UTILITY WORK ONLY

SCALE 1:500

UTILITY PLAN U-10

STATE OF CALIFORNIA - DEPARTMENT OF TRANSPORTATION
Caltrans DESIGN

FUNCTIONAL SUPERVISOR: ABU BAKR AL-JAFRI
CALCULATED-DESIGNED BY: MATT MATHEWS
CHECKED BY: ANH HOANG
REVISED BY / DATE REVISED

LAST REVISION 05-31-09
DATE PLOTTED => 29-SEP-2010
TIME PLOTTED => 14:05

Dist	COUNTY	ROUTE	KILOMETER POST TOTAL PROJECT	SHEET No.	TOTAL SHEETS
11	SD	5,805	R49.9/R51.7, 42.6/46.5	235	886

Anh Hoang 05-19-09
REGISTERED CIVIL ENGINEER DATE

9-27-10
PLANS APPROVAL DATE

REGISTERED PROFESSIONAL ENGINEER
ANH HOANG
No. 66009
Exp. 06-30-10
CIVIL
STATE OF CALIFORNIA

THE STATE OF CALIFORNIA OR ITS OFFICERS OR AGENTS SHALL NOT BE RESPONSIBLE FOR THE ACCURACY OR COMPLETENESS OF ELECTRONIC COPIES OF THIS PLAN SHEET.

Caltrans Metric

NOTES:

1. ALL UTILITIES TO BE FIELD VERIFIED.
2. FOR COMPLETE RIGHT OF WAY AND ACCURATE ACCESS DATA SEE RIGHT OF WAY MAPS AT DISTRICT OFFICE.

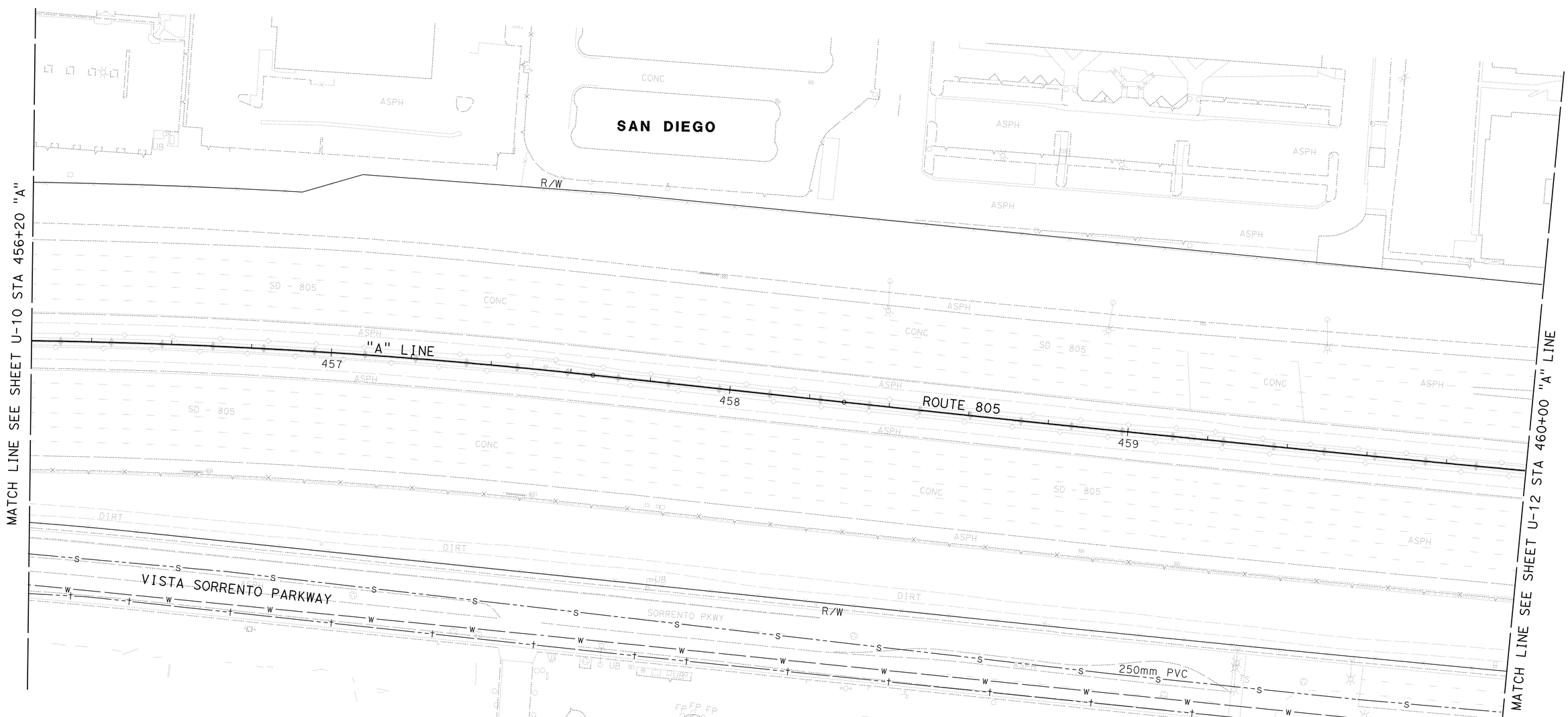

ALL DIMENSIONS ARE IN METERS UNLESS OTHERWISE SHOWN

THIS PLAN ACCURATE FOR UTILITY WORK ONLY

SCALE 1:500

UTILITY PLAN

U-11

STATE OF CALIFORNIA - DEPARTMENT OF TRANSPORTATION
Caltrans DESIGN

FUNCTIONAL SUPERVISOR: ABU BAKR AL-JAFRI
CALCULATED-DESIGNED BY: MATT MATHEWS
CHECKED BY: ANH HOANG
REVISED BY
DATE REVISED

LAST REVISION 05-31-09
DATE PLOTTED => 29-SEP-2010
TIME PLOTTED => 14:05

Dist	COUNTY	ROUTE	KILOMETER POST TOTAL PROJECT	SHEET No.	TOTAL SHEETS
11	SD	5,805	R49.9/R51.7, 42.6/46.5	236	886

Caltrans Metric

REGISTERED CIVIL ENGINEER 05-19-09 DATE

9-27-10
PLANS APPROVAL DATE

REGISTERED PROFESSIONAL ENGINEER ANH HOANG No. 66009 Exp. 06-30-10 CIVIL STATE OF CALIFORNIA

THE STATE OF CALIFORNIA OR ITS OFFICERS OR AGENTS SHALL NOT BE RESPONSIBLE FOR THE ACCURACY OR COMPLETENESS OF ELECTRONIC COPIES OF THIS PLAN SHEET.

NOTES:

1. ALL UTILITIES TO BE FIELD VERIFIED.
2. FOR COMPLETE RIGHT OF WAY AND ACCURATE ACCESS DATA SEE RIGHT OF WAY MAPS AT DISTRICT OFFICE.

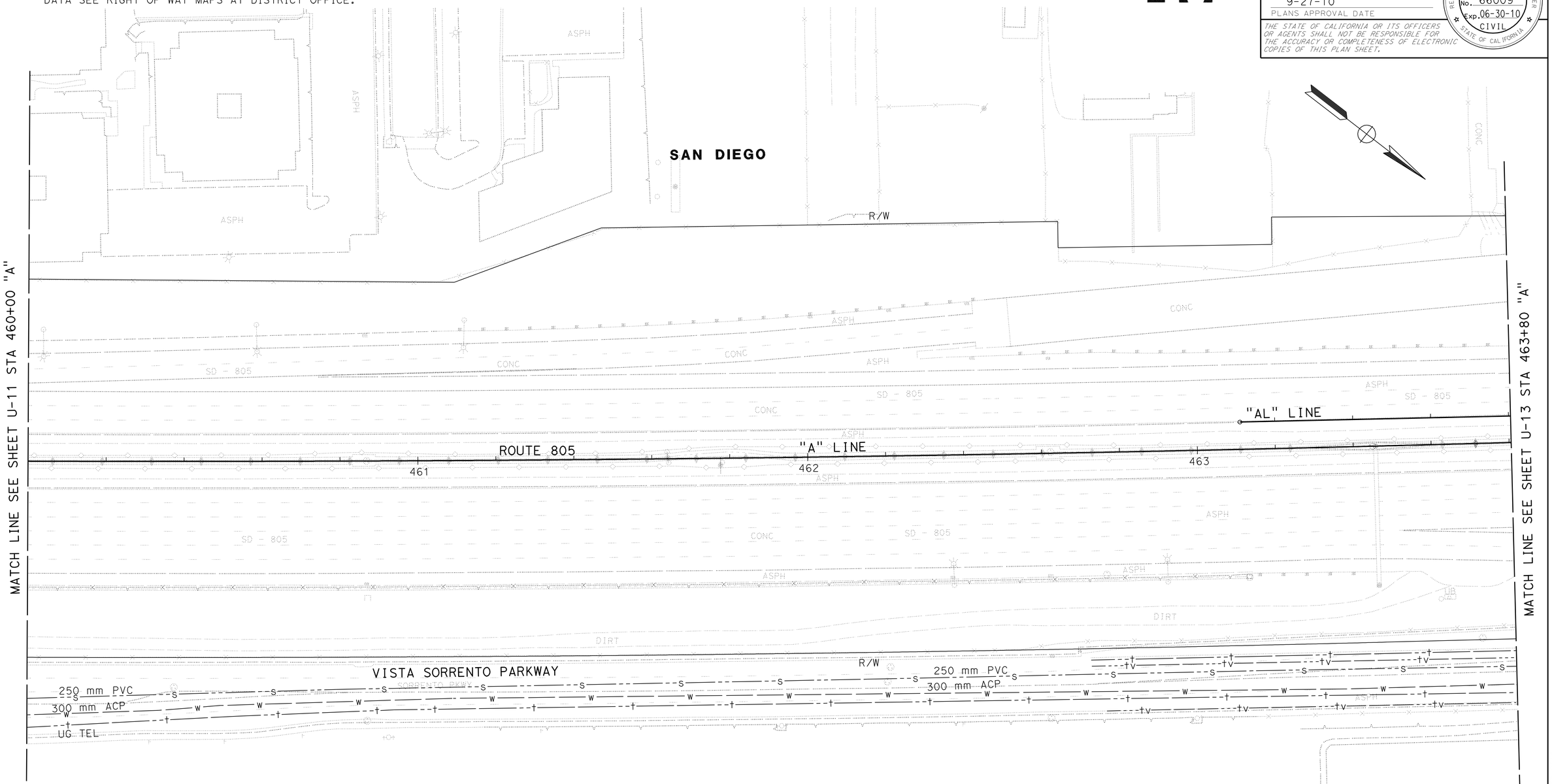

ALL DIMENSIONS ARE IN METERS UNLESS OTHERWISE SHOWN

THIS PLAN ACCURATE FOR UTILITY WORK ONLY

SCALE 1:500

UTILITY PLAN U-12

STATE OF CALIFORNIA - DEPARTMENT OF TRANSPORTATION
Caltrans DESIGN

FUNCTIONAL SUPERVISOR: ABU BAKR AL-JAFRI
CALCULATED-DESIGNED BY: MATT MATHEWS
CHECKED BY: ANH HOANG
REVISED BY / DATE REVISED

LAST REVISION 05-31-09
DATE PLOTTED => 29-SEP-2010
TIME PLOTTED => 14:06

Dist	COUNTY	ROUTE	KILOMETER POST TOTAL PROJECT	SHEET No.	TOTAL SHEETS
11	SD	5,805	R49.9/R51.7, 42.6/46.5	237	886

Caltrans Metric

REGISTERED CIVIL ENGINEER 05-19-09 DATE

9-27-10
PLANS APPROVAL DATE

REGISTERED PROFESSIONAL ENGINEER ANH HOANG No. 66009 Exp. 06-30-10 CIVIL STATE OF CALIFORNIA

THE STATE OF CALIFORNIA OR ITS OFFICERS OR AGENTS SHALL NOT BE RESPONSIBLE FOR THE ACCURACY OR COMPLETENESS OF ELECTRONIC COPIES OF THIS PLAN SHEET.

NOTES:

1. ALL UTILITIES TO BE FIELD VERIFIED.
2. FOR COMPLETE RIGHT OF WAY AND ACCURATE ACCESS DATA SEE RIGHT OF WAY MAPS AT DISTRICT OFFICE.

ALL DIMENSIONS ARE IN METERS UNLESS OTHERWISE SHOWN

UTILITY PLAN

SCALE 1:500

U-13

THIS PLAN ACCURATE FOR UTILITY WORK ONLY

STATE OF CALIFORNIA - DEPARTMENT OF TRANSPORTATION
Caltrans DESIGN

FUNCTIONAL SUPERVISOR: ABU BAKR AL-JAFRI
CALCULATED-DESIGNED BY: MATT MATHEWS
CHECKED BY: ANH HOANG
REVISED BY / DATE REVISED

LAST REVISION 06-01-09
DATE PLOTTED => 29-SEP-2010
TIME PLOTTED => 14:06

Dist	COUNTY	ROUTE	KILOMETER POST TOTAL PROJECT	SHEET No.	TOTAL SHEETS
11	SD	5,805	R49.9/R51.7, 42.6/46.5	238	886

REGISTERED CIVIL ENGINEER 05-19-09 DATE

9-27-10
PLANS APPROVAL DATE

REGISTERED PROFESSIONAL ENGINEER ANH HOANG No. 66009 Exp. 06-30-10 CIVIL STATE OF CALIFORNIA

THE STATE OF CALIFORNIA OR ITS OFFICERS OR AGENTS SHALL NOT BE RESPONSIBLE FOR THE ACCURACY OR COMPLETENESS OF ELECTRONIC COPIES OF THIS PLAN SHEET.

Caltrans Metric

NOTES:

1. ALL UTILITIES TO BE FIELD VERIFIED.
2. FOR COMPLETE RIGHT OF WAY AND ACCURATE ACCESS DATA SEE RIGHT OF WAY MAPS AT DISTRICT OFFICE.

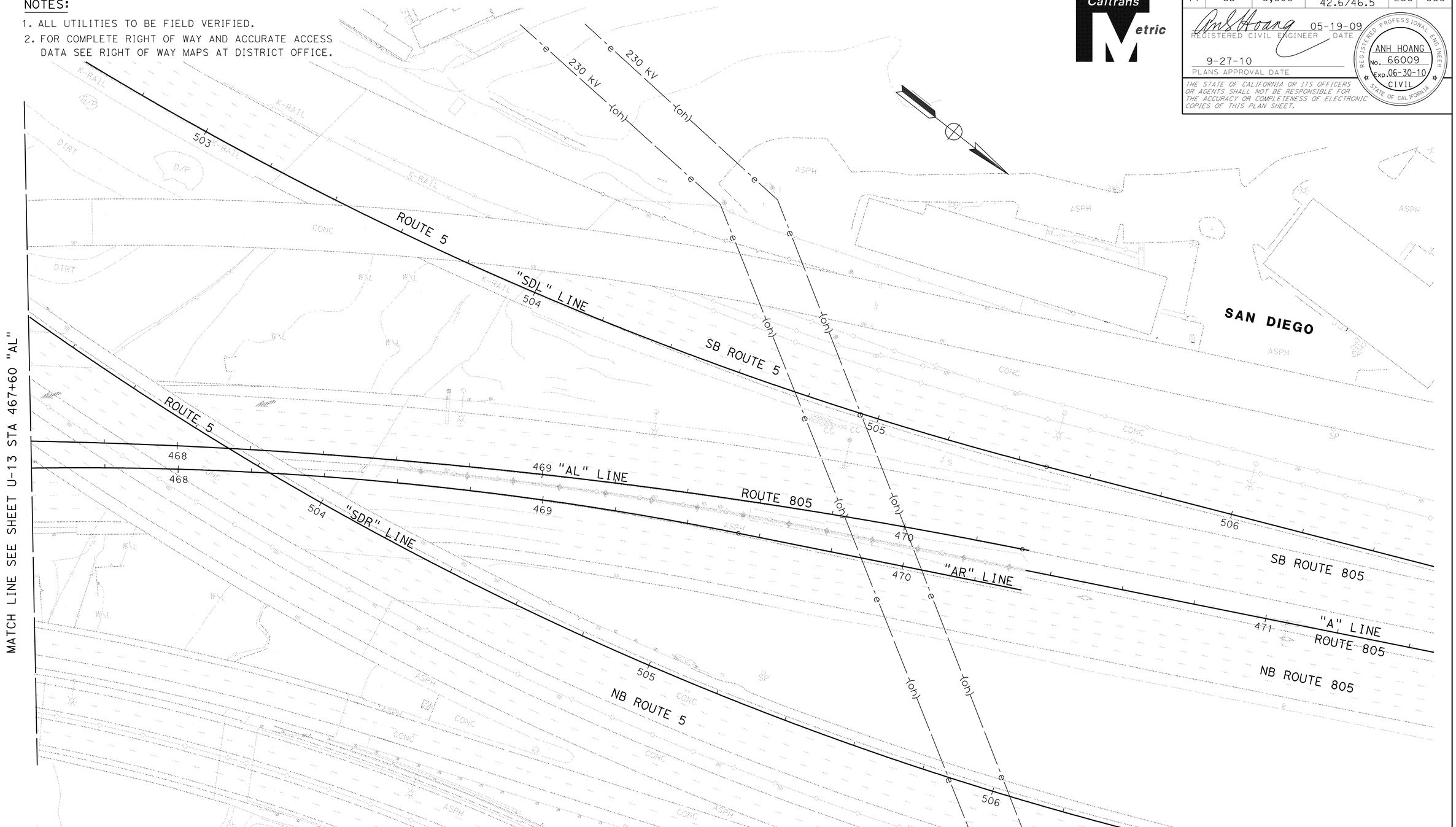

THIS PLAN ACCURATE FOR UTILITY WORK ONLY

ALL DIMENSIONS ARE IN METERS UNLESS OTHERWISE SHOWN

SCALE 1:500

UTILITY PLAN

U-14

STATE OF CALIFORNIA - DEPARTMENT OF TRANSPORTATION

Caltrans DESIGN

FUNCTIONAL SUPERVISOR: ABU BAKR AL-JAFRI

CALCULATED-DESIGNED BY: MATT MATHEWS

CHECKED BY: ANH HOANG

REVISED BY / DATE REVISED

LAST REVISION 05-31-09

DATE PLOTTED => 29-SEP-2010
TIME PLOTTED => 14:06

Dist	COUNTY	ROUTE	KILOMETER POST TOTAL PROJECT	SHEET No.	TOTAL SHEETS
11	SD	5,805	R49.9/R51.7, 42.6/46.5	239	886

Caltrans Metric

REGISTERED CIVIL ENGINEER 05-19-09 DATE

9-27-10
PLANS APPROVAL DATE

REGISTERED PROFESSIONAL ENGINEER ANH HOANG No. 66009 Exp. 06-30-10 CIVIL STATE OF CALIFORNIA

THE STATE OF CALIFORNIA OR ITS OFFICERS OR AGENTS SHALL NOT BE RESPONSIBLE FOR THE ACCURACY OR COMPLETENESS OF ELECTRONIC COPIES OF THIS PLAN SHEET.

NOTES:

1. ALL UTILITIES TO BE FIELD VERIFIED.
2. FOR COMPLETE RIGHT OF WAY AND ACCURATE ACCESS DATA SEE RIGHT OF WAY MAPS AT DISTRICT OFFICE.
3. THERE ARE NO UTITLITES ON THIS SHEET.

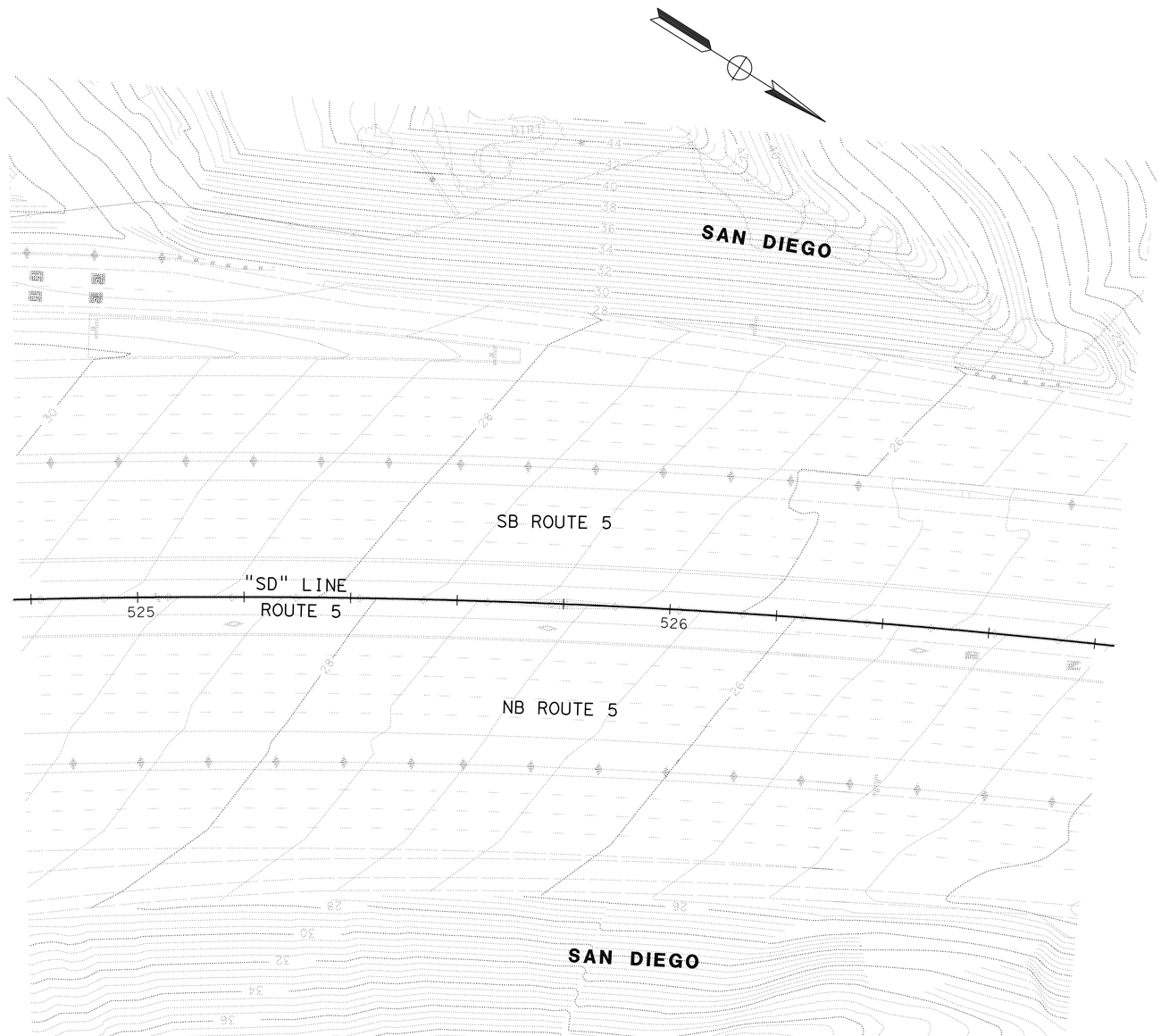

THIS PLAN ACCURATE FOR UTILITY WORK ONLY

ALL DIMENSIONS ARE IN METERS UNLESS OTHERWISE SHOWN

UTILITY PLAN

SCALE 1:500

U-15

STATE OF CALIFORNIA - DEPARTMENT OF TRANSPORTATION
Caltrans DESIGN

FUNCTIONAL SUPERVISOR: ABU BAKR AL-JAFRI

CALCULATED-DESIGNED BY: MATT MATHEWS
CHECKED BY: ANH HOANG

REVISED BY | DATE REVISED

LAST REVISION 06-01-09 | DATE PLOTTED => 29-SEP-2010 | TIME PLOTTED => 14:06

DIST	COUNTY	ROUTE	KILOMETER POST TOTAL PROJECT	SHEET No.	TOTAL SHEETS
11	SD	5,805	R49.9/R51.7, 42.6/46.5	240	886

REGISTERED CIVIL ENGINEER 05-11-09 DATE

9-27-10
PLANS APPROVAL DATE

REGISTERED PROFESSIONAL ENGINEER CARL SPIER 49744 Exp. 9-30-10 CIVIL STATE OF CALIFORNIA

THE STATE OF CALIFORNIA OR ITS OFFICERS OR AGENTS SHALL NOT BE RESPONSIBLE FOR THE ACCURACY OR COMPLETENESS OF SCANNED COPIES OF THIS PLAN SHEET.

CITY OF SAN DIEGO
600 B STREET, SUITE 800
SAN DIEGO, CA 92101

Caltrans Metric

WATER LINE DATA

◇	BEARING	RADIUS	LENGTH	REMARKS
1	N/A	370.734	69.281	400 mm PVC DR-18
2	S11°18'03"E	N/A	54.041	400 mm PVC DR-25
3	S54°49'54"E	N/A	44.421	400 mm PVC DR-25
4	S08°49'54"E	N/A	33.413	400 mm PVC DR-25
5	S37°40'06"W	N/A	70.427	400 mm PVC DR-25
6	S83°14'00"W	N/A	22.121	400 mm PVC DR-25
7	N49°46'00"W	N/A	72.460	400 mm PVC DR-25

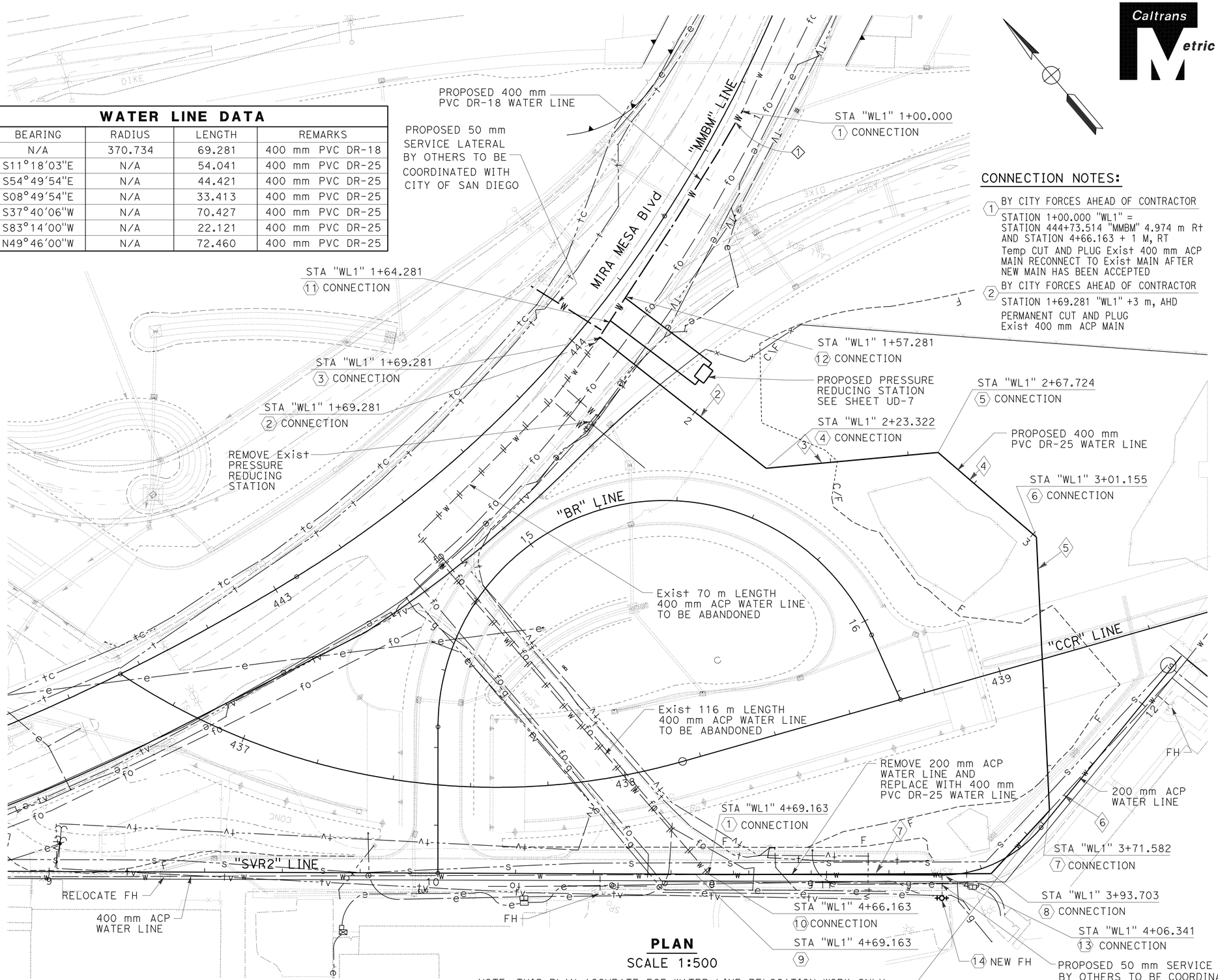

CONNECTION NOTES:

1 BY CITY FORCES AHEAD OF CONTRACTOR
STATION 1+00.000 "WL1" = STATION 444+73.514 "MMBM" 4.974 m Rt AND STATION 4+66.163 + 1 M, RT
Temp CUT AND PLUG Exist 400 mm ACP MAIN RECONNECT TO Exist MAIN AFTER NEW MAIN HAS BEEN ACCEPTED

2 BY CITY FORCES AHEAD OF CONTRACTOR
STATION 1+69.281 "WL1" +3 m, AHD
PERMANENT CUT AND PLUG Exist 400 mm ACP MAIN

3 BY CONTRACTOR
STATION 1+69.281 "WL1"
1 - 400 mm 90° BEND (MJ, F), Lt, Bk
1 - 400 mm BUTTERLY VALVE, RS (F, MJ), Bk

4 BY CONTRACTOR
STATION 2+23.322 "WL1"
1 - 400 mm 45° BEND (MJ), Ahd

5 BY CONTRACTOR
STATION 2+67.724 "WL1"
1 - 400 mm 45° BEND (MJ), Ahd

6 BY CONTRACTOR
STATION 3+01.155 "WL1"
1 - 400 mm 45° BEND (MJ), Ahd

7 BY CITY FORCES AHEAD OF CONTRACTOR
STATION 3+71.582 "WL1"
1 - 400 mm TEE (F)
2 - 400 mm BUTTERFLY VALVES, RS (F), Lt, Bk
1 - 400 mm BUTTERFLY VALVE, RS (F, MJ), Rt
1 - 400 mm 45° BEND (F, MJ), Bk
1 - 400 mm X 200 mm REDUCER (F, MJ) Lt
1 - 400 mm X 200 mm REDUCER, TEMP (MJ) RT (PHASE 1)
1- 1 m DR-25 PIPE, Temp, (PHASE 1)

8 BY CONTRACTOR
STATION 3+93.703 "WL1"
1 - 400 mm 45° BEND (MJ), Ahd

9 BY CITY FORCES AHEAD OF CONTRACTOR
STATION 4+69.163 "WL1" +5 m, Ahd AND * STA "WL1" 3+71.582
Temp CUT AND PLUG Exist 400 mm ACP MAIN RECONNECT TO Exist MAIN AFTER NEW MAIN HAS BEEN ACCEPTED

10 BY CITY FORCES AHEAD OF CONTRACTOR
STATION 4+66.163 "WL1" +3 m, Rt
PERMANENT CUT AND PLUG Exist 400 mm ACP MAIN

11 BY CONTRACTOR
STATION 1+64.281 "WL1"
1 - 400 mm x 300 mm TEE (MJ, F, F) Lt, Rt, Bk
1 - 400 mm BUTTERFLY VALVE, RS (F, MJ), Rt
1 - 300 mm BUTTERFLY VALVE, RS (F, MJ), Bk

12 BY CONTRACTOR
STATION 1+57.281 "WL1"
1 - 400 mm x 300 mm TEE (MJ, F, F) Lt, Rt, Bk
1 - 400 mm BUTTERFLY VALVE, RS (F, MJ), Rt
1 - 300 mm BUTTERFLY VALVE, RS (F, MJ), Bk

13 BY CONTRACTOR
STATION 4+06.341 "WL1"
1 - 400 mm x 150 mm TEE (MJ, MJ, F)
1 - 150 mm FH ASSEMBLY, Lt

14 BY CONTRACTOR
STATION 4+06.341 "WL1"
1 - 400 mm x 150 mm TEE (MJ, MJ, F)
1 - 150 mm FH ASSEMBLY

ALL DIMENSIONS ARE IN METERS UNLESS OTHERWISE SHOWN

PLAN
SCALE 1:500

NOTE: THIS PLAN ACCURATE FOR WATER LINE RELOCATION WORK ONLY

UTILITY PLAN
U-16

SCALE 1:500

REVISED BY	DATE REVISED
FARLITO VALENZUELA	MAHMOUD ORIQAT

CALCULATED-DESIGNED BY	CHECKED BY
CONSULTANT FUNCTIONAL SUPERVISOR	MAHMOUD ORIQAT

STATE OF CALIFORNIA - DEPARTMENT OF TRANSPORTATION
Caltrans

LAST REVISION 05-31-09 | DATE PLOTTED => 29-SEP-2010 | TIME PLOTTED => 14:06

DIST	COUNTY	ROUTE	KILOMETER POST TOTAL PROJECT	SHEET No.	TOTAL SHEETS
11	SD	5,805	R49.9/R51.7, 42.6/46.5	241	886

REGISTERED CIVIL ENGINEER 05-11-09 DATE

9-27-10
PLANS APPROVAL DATE

REGISTERED PROFESSIONAL ENGINEER CARL SPIER No. 49744 Exp. 9-30-10 CIVIL STATE OF CALIFORNIA

THE STATE OF CALIFORNIA OR ITS OFFICERS OR AGENTS SHALL NOT BE RESPONSIBLE FOR THE ACCURACY OR COMPLETENESS OF SCANNED COPIES OF THIS PLAN SHEET.

CITY OF SAN DIEGO
600 B STREET, SUITE 800
SAN DIEGO, CA 92101

Caltrans Metric

CONSTRUCTION NOTES:

1. CONTRACTOR SHALL MAINTAIN MINIMUM 900 mm COVER FROM FINISH GRADE TO TOP OF PIPE.

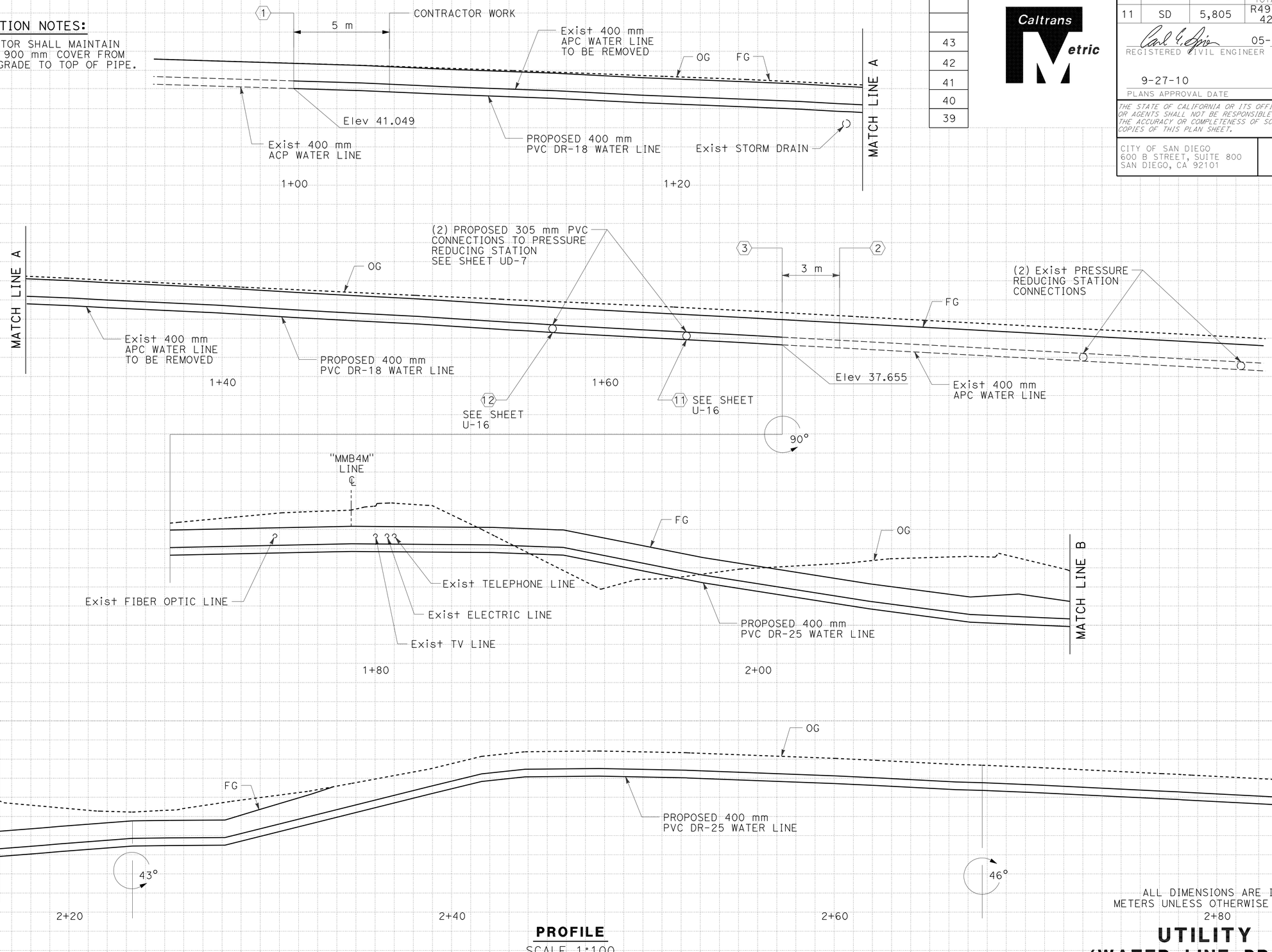

PROFILE
SCALE 1:100

ALL DIMENSIONS ARE IN METERS UNLESS OTHERWISE SHOWN

UTILITY PLAN (WATER LINE PROFILES)

SCALE 1:100 **U-17**

REVISED BY | DATE REVISED

FARLITO VALENZUELA | MAHMOUD ORIQAT

CALCULATED-DESIGNED BY | CHECKED BY

CONSULTANT FUNCTIONAL SUPERVISOR | MAHMOUD ORIQAT

STATE OF CALIFORNIA - DEPARTMENT OF TRANSPORTATION

Caltrans

LAST REVISION 05-31-09 | DATE PLOTTED => 29-SEP-2010 | TIME PLOTTED => 14:06

DIST	COUNTY	ROUTE	KILOMETER POST TOTAL PROJECT	SHEET No.	TOTAL SHEETS
11	SD	5,805	R49.9/R51.7, 42.6/46.5	242	886

REGISTERED CIVIL ENGINEER 05-11-09 DATE

9-27-10
PLANS APPROVAL DATE

REGISTERED PROFESSIONAL ENGINEER CARL SPIER No. 49744 Exp. 9-30-10 CIVIL STATE OF CALIFORNIA

THE STATE OF CALIFORNIA OR ITS OFFICERS OR AGENTS SHALL NOT BE RESPONSIBLE FOR THE ACCURACY OR COMPLETENESS OF SCANNED COPIES OF THIS PLAN SHEET.

CITY OF SAN DIEGO
600 B STREET, SUITE 800
SAN DIEGO, CA 92101

Caltrans Metric

CONSTRUCTION NOTES:

1. CONTRACTOR SHALL MAINTAIN MINIMUM 900 mm COVER FROM FINISH GRADE TO TOP OF PIPE.

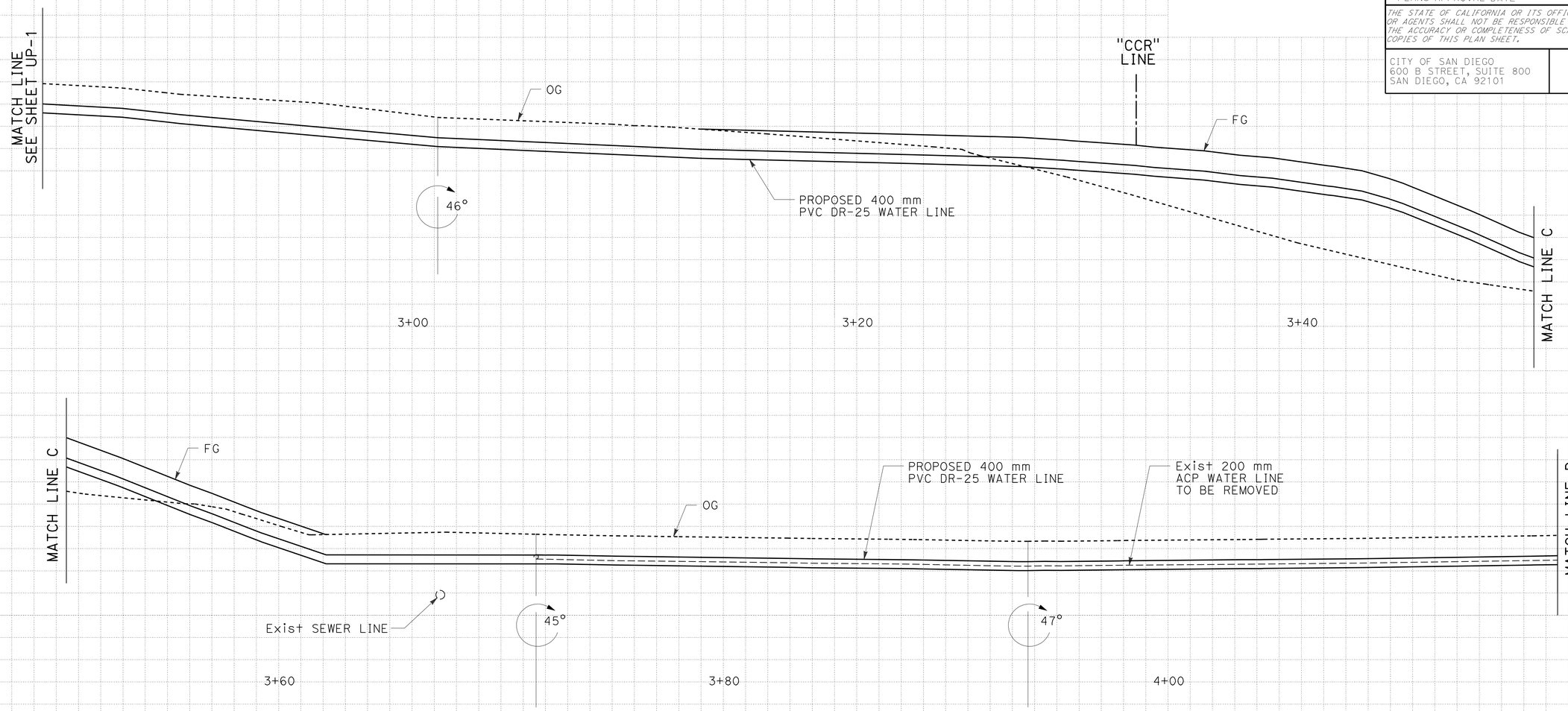

PROFILE

ALL DIMENSIONS ARE IN METERS UNLESS OTHERWISE SHOWN

UTILITY PLAN (WATER LINE PROFILES)

SCALE 1:100

U-18

REVISED BY | DATE REVISED

FARLITO VALENZUELA | MAHMOUD ORIQAT

CALCULATED-DESIGNED BY | CHECKED BY

CONSULTANT FUNCTIONAL SUPERVISOR: MAHMOUD ORIQAT

STATE OF CALIFORNIA - DEPARTMENT OF TRANSPORTATION

Caltrans

LAST REVISION 05-31-09 | DATE PLOTTED => 29-SEP-2010 | TIME PLOTTED => 14:06

DIST	COUNTY	ROUTE	KILOMETER POST TOTAL PROJECT	SHEET No.	TOTAL SHEETS
11	SD	5,805	R49.9/R51.7, 42.6/46.5	243	886

REGISTERED CIVIL ENGINEER 05-11-09 DATE

9-27-10
PLANS APPROVAL DATE

REGISTERED PROFESSIONAL ENGINEER CARL SPIER No. 49744 Exp. 9-30-10 CIVIL STATE OF CALIFORNIA

THE STATE OF CALIFORNIA OR ITS OFFICERS OR AGENTS SHALL NOT BE RESPONSIBLE FOR THE ACCURACY OR COMPLETENESS OF SCANNED COPIES OF THIS PLAN SHEET.

CITY OF SAN DIEGO
600 B STREET, SUITE 800
SAN DIEGO, CA 92101

Caltrans Metric

WORK BY CITY OF SAN DIEGO FORCES

Sht/NOTE No.	STA	TYPE OF CONNECTION	MATERIALS
U-16/1	1+00.000 "WL1" = STA 444+73.514 "MMBM"	Temp CUT AND PLUG Exist 400 mm ACP MAIN, RECONNECT TO Exist MAIN AFTER NEW MAIN HAS BEEN ACCEPTED	
U-16/2	1+69.281 "WL1" +3 m, AHD	PERMANEMT CUT AND PLUG Exist 400 mm ACP MAIN	
U-16/7	3+71.582 "WL1"	CUT-IN TEE/VALVES TO Exist 200 mm ACP MAIN	1 - 400 mm TEE (F) 2 - 400 mm BUTTERFLY VALVE, RS (F) Lt, Bk 1 - 400 mm BUTTERFLY VALVE, RS (F, MJ) Rt 1 - 400 mm 45° BEND (F, MJ) BK 1 - 400 mm X 200 mm REDUCER (F, MJ) Lt 1 - 400 mm X 200 mm REDUCER, TEMPORARY (MJ) Rt (PHASE I) 1 - 1 m DR-25 PIPE TEMPORARY (PHASE I)
U-16/9	4+69.163 "WL1" +5 m, AHD	Temp CUT AND PLUG Exist 400 mm ACP MAIN, RECONNECT TO Exist MAIN AFTER NEW MAIN HAS BEEN ACCEPTED	
U-16/10	4+66.163 "WL1" +3 m, Rt	PERMANEMT CUT AND PLUG Exist 400 mm ACP MAIN	

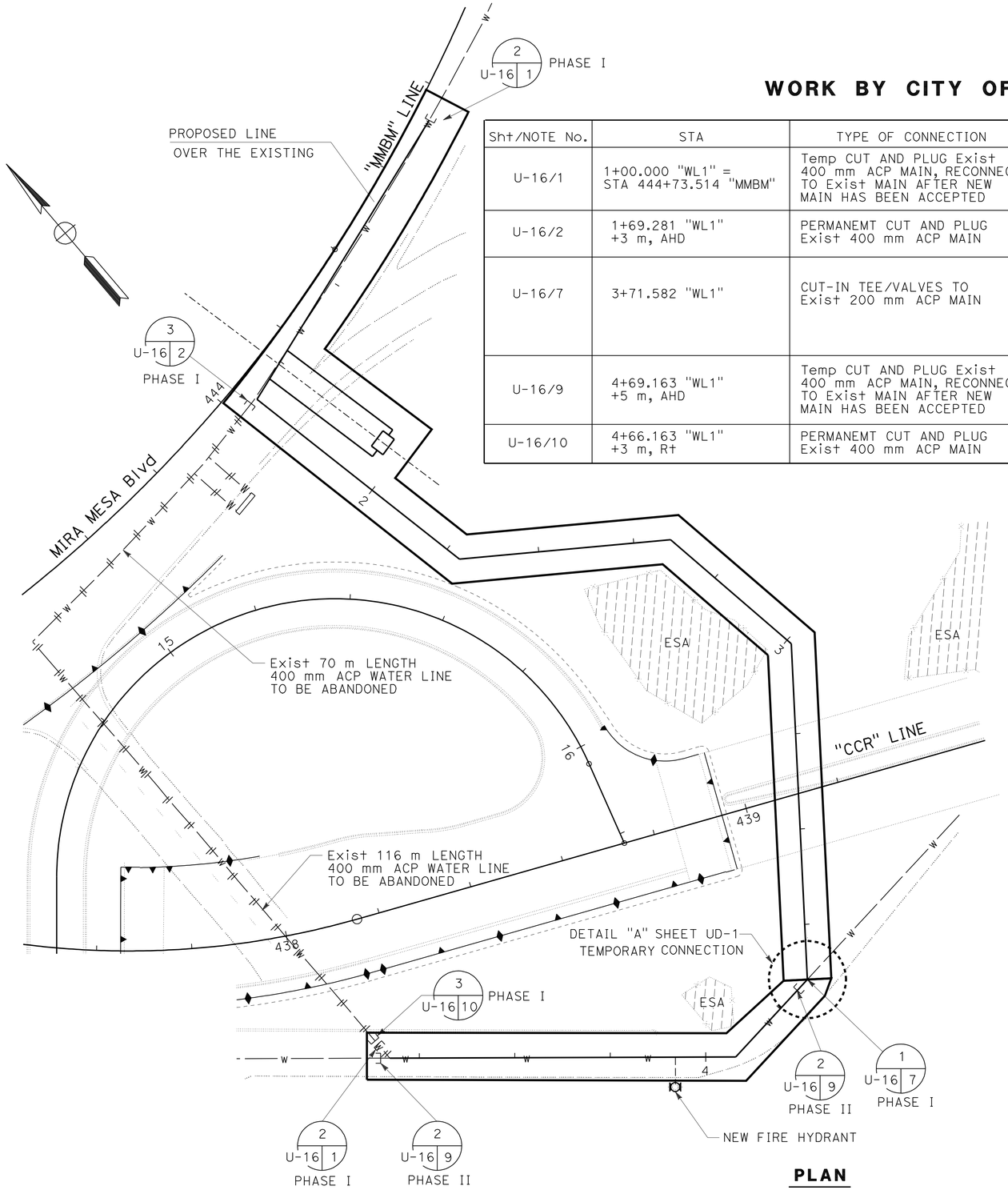

PLAN

PHASE 1

PHASE 2

AREA TO BE HIGHLINED IN PHASES

WORK BY CITY FORCES

1 — BC - TEE CUT-IN

2 — BC - CUT AND PLUG
AC - RECONNECT

3 — BC - CUT AND ABANDON

LEGEND: (THIS SHEET ONLY)

- EXISTING WATER MAIN
- PRESSURE ZONE BOUNDARY
- PROPOSED WATER MAIN
- FIRE HYDRANT TO REMAIN IN SERVICE DURING CONSTRUCTION
- FIRE HYDRANT TO BE REPLACED
- 3 / 24 6 — CITY FORCES NOTE NUMBER (THIS SHEET); CITY FORCES NOTE NUMBER (PLAN & PROFILE Sht); PLAN & PROFILE "D" SHEET NUMBER
- BC --- BEFORE CONTRACTOR
- AC --- AFTER CONTRACTOR
- ESA — ENVIRONMENTALLY SENSITIVE AREA

ALL DIMENSIONS ARE IN METERS UNLESS OTHERWISE SHOWN

THIS PLAN ACCURATE FOR WATER LINE RELOCATION WORK ONLY

SCALE 1:500

UTILITY PLAN

U-19

STATE OF CALIFORNIA - DEPARTMENT OF TRANSPORTATION
Caltrans

CONSULTANT FUNCTIONAL SUPERVISOR: MAHMOUD ORIQAT
CALCULATED-DESIGNED BY: FARLITO VALENZUELA
CHECKED BY: MAHMOUD ORIQAT
REVISED BY
DATE REVISED

LAST REVISION 05-31-09
DATE PLOTTED => 29-SEP-2010
TIME PLOTTED => 14:06

Dist	COUNTY	ROUTE	KILOMETER POST TOTAL PROJECT	SHEET No.	TOTAL SHEETS
11	SD	5,805	R49.9/R51.7, 42.6/46.5	244	886

REGISTERED CIVIL ENGINEER 05-11-09 DATE

9-27-10
PLANS APPROVAL DATE

REGISTERED PROFESSIONAL ENGINEER
CARL E. SPIER
No. C 49744
Exp. 9-30-10
CIVIL
STATE OF CALIFORNIA

THE STATE OF CALIFORNIA OR ITS OFFICERS OR AGENTS SHALL NOT BE RESPONSIBLE FOR THE ACCURACY OR COMPLETENESS OF SCANNED COPIES OF THIS PLAN SHEET.

CITY OF SAN DIEGO
600 B STREET, SUITE 800
SAN DIEGO, CA 92101

Caltrans Metric

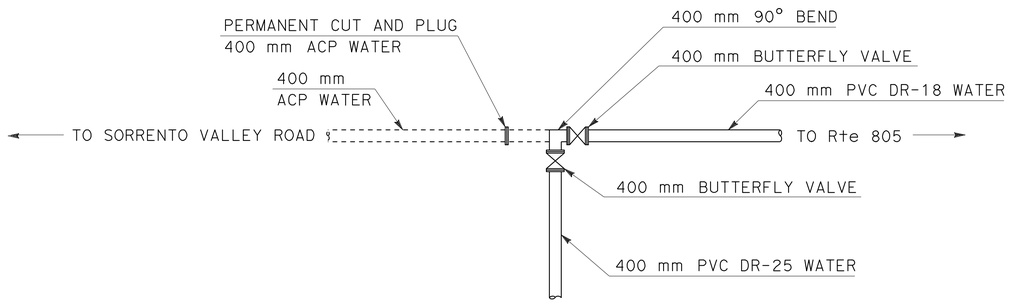

MIRA MESA BOULEVARD STA 444+05 "MMBM" LINE
CONNECTION DETAIL

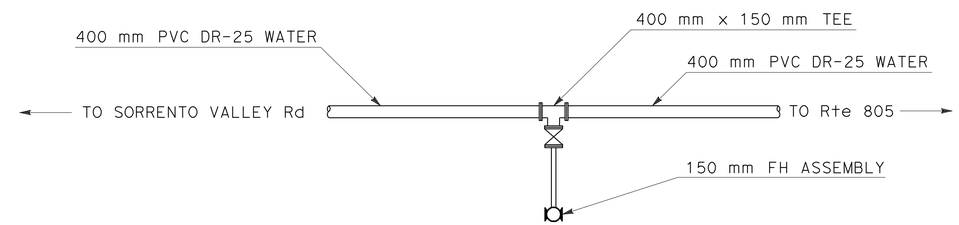

SORRENTO VALLEY ROAD STA 11+30 "SVR2" LINE
CONSTRUCTION DETAIL

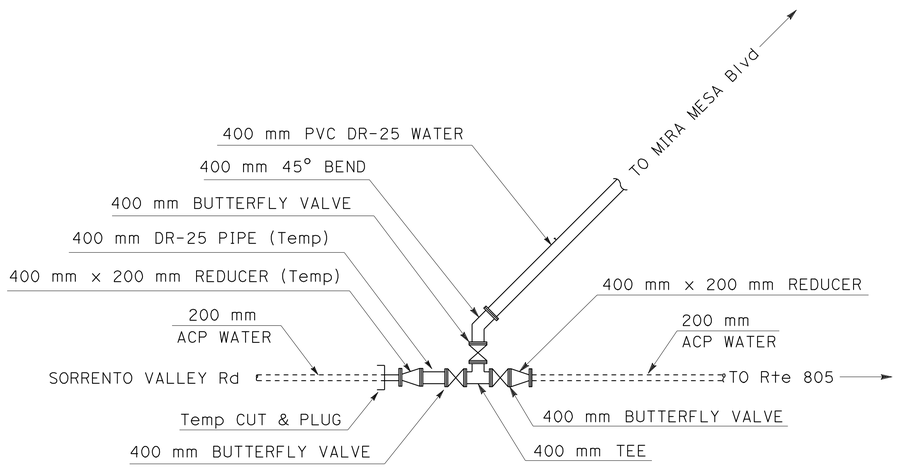

TEMPORARY CONNECTION DETAIL "A"

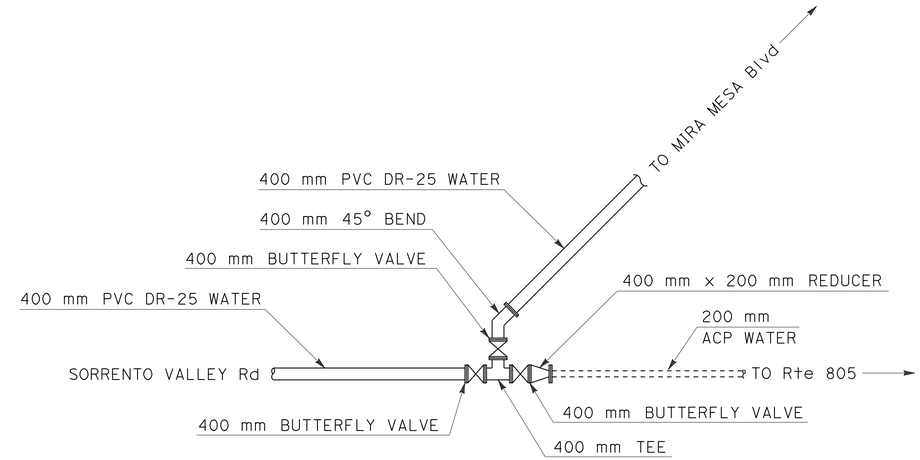

SORRENTO VALLEY ROAD STA 11+63 "SVR2" LINE
CONNECTION DETAIL

ALL DIMENSIONS ARE IN
METERS UNLESS OTHERWISE SHOWN

UTILITY DETAILS

NO SCALE **UD-1**

STATE OF CALIFORNIA - DEPARTMENT OF TRANSPORTATION
Caltrans

CONSULTANT FUNCTIONAL SUPERVISOR: MAHMOUD ORIQAT
CALCULATED-DESIGNED BY: FARLITO VALENZUELA
CHECKED BY: MAHMOUD ORIQAT
REVISED BY
DATE REVISED

LAST REVISION 05-23-09
DATE PLOTTED => 29-SEP-2010
TIME PLOTTED => 14:07

Dist	COUNTY	ROUTE	KILOMETER POST TOTAL PROJECT	SHEET No.	TOTAL SHEETS
11	SD	5,805	R49.9/R51.7, 42.6/46.5	245	886

REGISTERED CIVIL ENGINEER — DATE 05-11-09

9-27-10
PLANS APPROVAL DATE

REGISTERED PROFESSIONAL ENGINEER — CARL E. SPIER No. C 49744 Exp. 9-30-10 CIVIL — STATE OF CALIFORNIA

THE STATE OF CALIFORNIA OR ITS OFFICERS OR AGENTS SHALL NOT BE RESPONSIBLE FOR THE ACCURACY OR COMPLETENESS OF SCANNED COPIES OF THIS PLAN SHEET.

CITY OF SAN DIEGO
600 B STREET, SUITE 800
SAN DIEGO, CA 92101

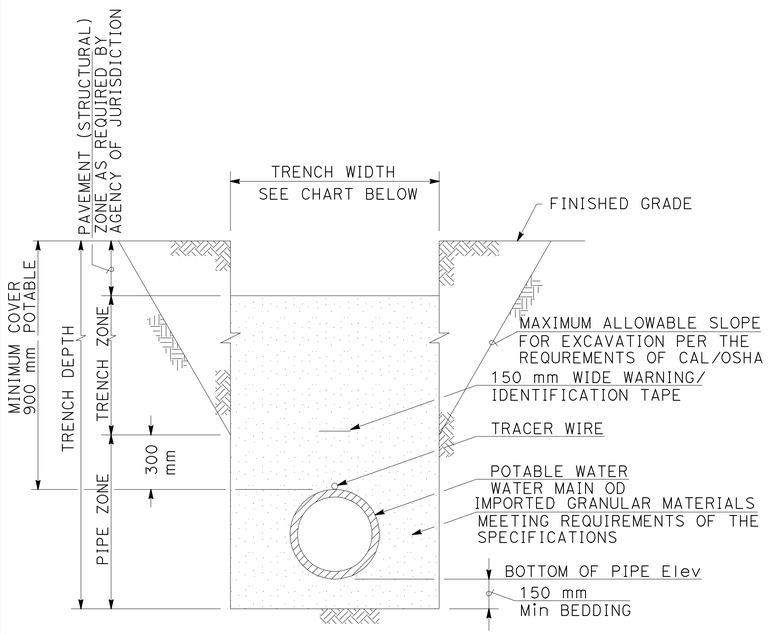

TRENCH SECTION

NOTES:
1. PAVING OR PAVEMENT REPAIR TO BE DONE IN ACCORDINACE TO THE STANDARDS.
2. EXCAVATE BELL HOLES AT EACH PIPE JOINT TO PERMIT PROPER ASSEMBLY AND INSPECTION OF THE ENTIRE JOINT.
3. ALL PIPELINE TRENCHES SHALL BE EXCAVATED SO THAT THE DISTANCE BETWEEN TRENCH WALLS AT THE TOP OF PIPE SHALL BE AS SHOWN BELOW:

TRENCH WIDTH

NOMINAL PIPE INSIDE DIAMETER	Min DISTANCE	Max DISTANCE
100 mm & SMALLER	450 mm	700 mm
150 mm & 200 mm	600 mm	800 mm
250 mm & 300 mm	700 mm	900 mm
400 mm THRU 900 mm	OD PLUS 600 mm	OD PLUS 900 mm

PIPE BEDDING AND TRENCH BACKFILL FOR POTABLE AND RECYCLED WATER MAINS

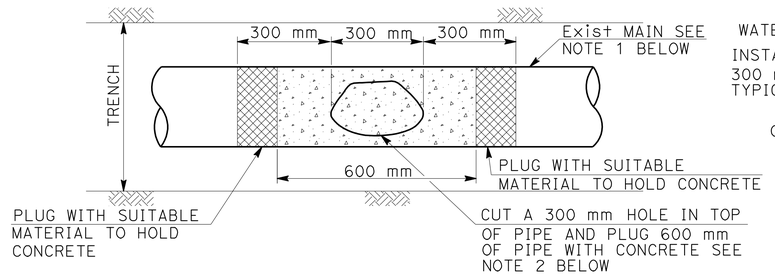

MIDDLE OF Exist MAIN

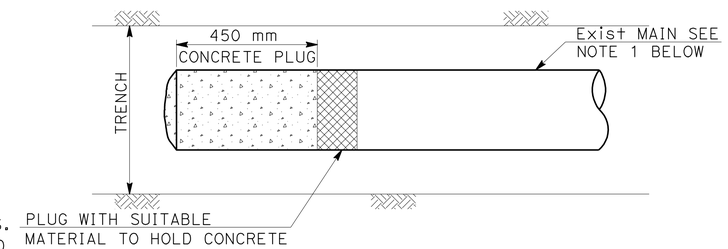

END OF Exist MAIN

NOTES:
1. WATER AND RECYCLED WATER MAINS AND SEWER LATERALS 100 mm DIAMETER AND SMALLER SHALL HAVE A SHORT SECTION OF PIPE REMOVED AND PIPE ENDS ENCASED IN CONCRETE.
2. EXISTING MAIN TO BE PLUGGED WITH CONCRETE OR PRESSURE GROUTED AT INTERVALS OFABOUT 61 m OR AS DIRECTED BY THE ENGINEER.
3. EXISTING MAINS 300 mm AND LARGER REQUIRE THE ENTIRE LENGTH OF THE PIPE TO BE FILLED BY PRESSURE GROUTING OR BY BLOWN SAND.
4. EXISTING VALVES SHALL BE TURNED TO THE CLOSED POSITION. REMOVE GATE WELL AND REPLACE WITH COMPACTED BACKFILL.
5. PRIOR APPROVAL REQUIRED FOR CUTTING & PLUGGING.

CUTTING AND PLUGGING ABANDONED WATER MAIN

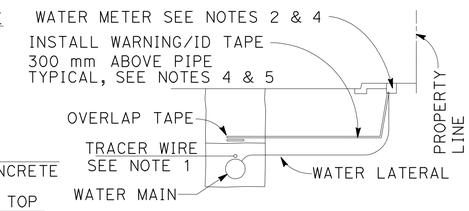

SECTION AT WATER LATERALS

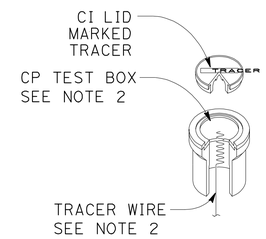

TRACER WIRE ACCESS PORT (CP BOX) DETAIL

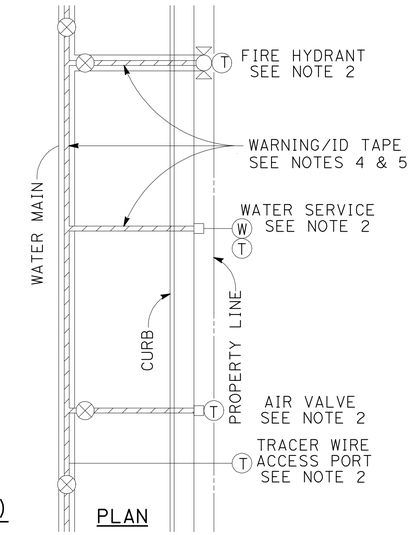

PLAN

NOTES:
1. TRACER WIRE TO RUN CONTINUOUSLY ALONG THE ENTIRE LENGTH OF WATER MAINS. WIRE SHALL BE SECURED TO THE PIPE AND MAINTAINED ON PIPE CENTERLINE DURING TRENCH BACKFILL.
2. TRACER WIRE ACCESS PORTS SHALL BE INSTALLED WITHIN THE CONCRETE SPLASH PAD OF ALL FIRE HYDRANTS IN ACCORDANCE WITH THE STANDARD DRAWINGS. TRACER WIRE MAY TERMINATE WITHIN METER BOX, BLOWOFF BOX OR AIR VALVE. TRACER WIRE MAY TERMINATE IN A CP TEST BOX ONLY IF NO OTHER APPURTENANCE EXISTS WITHIN THE REQUIRED 305 M INTERVAL. ALL BURIED WIRES THAT REQUIRE TRENCHING TO A TEST BOX LOCATION SHALL BE INSTALLED, WITHOUT SPLICE, IN A CONDUIT IN THE TRENCH AT A MINIMUM DEPTH OF 600 mm.
3. WIRE SPLICE CONNECTORS SHALL BE SILICONE FILLED TYPE.
4. WARNING/IDENTIFICATION TAPE SHALL BE INSTALLED 300 mm ABOVE THE PIPE AND RUN CONTINUOUSLY ALONG THE ENTIRE LENGTH OF THE PIPE AND ALL RELATED APPURTENANCES.
5. MATERIALS SHALL BE SELECTED FROM THE CITY OF SAN DIEGO'S APPROVED MATERIALS LIST.

WARNING IDENTIFICATION TAPE AND TRACER WIRE INSTALLATIONS

ALL DIMENSIONS ARE IN METERS UNLESS OTHERWISE SHOWN

UTILITY DETAILS

NO SCALE — **UD-2**

REVISED BY — DATE REVISED
FARLITO VALENZUELA — MAHMOUD ORIQAT
CALCULATED-DESIGNED BY — CHECKED BY
CONSULTANT FUNCTIONAL SUPERVISOR — MAHMOUD ORIQAT
STATE OF CALIFORNIA - DEPARTMENT OF TRANSPORTATION — Caltrans

LAST REVISION 05-23-09 — DATE PLOTTED => 29-SEP-2010 — TIME PLOTTED => 14:07

Dist	COUNTY	ROUTE	KILOMETER POST TOTAL PROJECT	SHEET No.	TOTAL SHEETS
11	SD	5,805	R49.9/R51.7, 42.6/46.5	246	886

REGISTERED CIVIL ENGINEER — DATE 05-11-09

9-27-10
PLANS APPROVAL DATE

REGISTERED PROFESSIONAL ENGINEER — CARL E. SPIER No. C 49744 Exp. 9-30-10 CIVIL — STATE OF CALIFORNIA

THE STATE OF CALIFORNIA OR ITS OFFICERS OR AGENTS SHALL NOT BE RESPONSIBLE FOR THE ACCURACY OR COMPLETENESS OF SCANNED COPIES OF THIS PLAN SHEET.

CITY OF SAN DIEGO
600 B STREET, SUITE 800
SAN DIEGO, CA 92101

Caltrans Metric

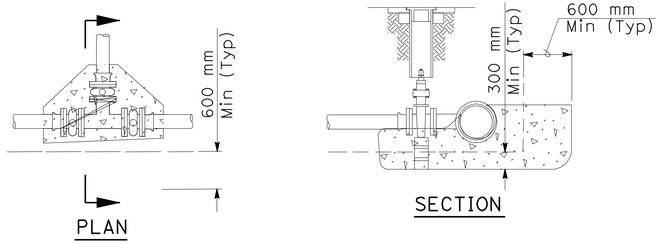

TEE WITH GATE VALVES

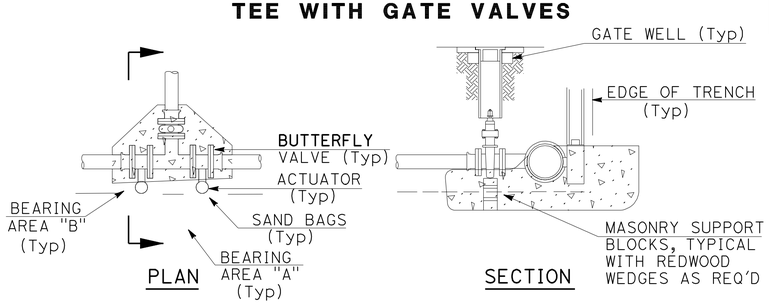

TEE WITH BUTTERFLY VALVES ON MAIN

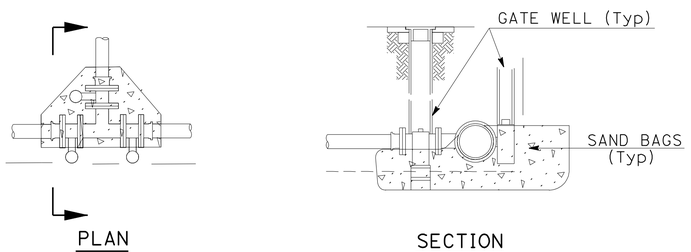

TEE WITH BUTTERFLY VALVES

VALVE SUPPORT BLOCK

VALVE SIZE	DIMENSION "A"	DIMENSION "B"
100 mm	300 mm	300 mm
150 mm	300 mm	300 mm
200 mm	325 mm	350 mm
250 mm	350 mm	400 mm
300 mm	375 mm	450 mm
400 mm	400 mm	500 mm
450 mm	425 mm	550 mm
500 mm	450 mm	600 mm
550 mm	475 mm	650 mm
600 mm	500 mm	700 mm
DIMENSION "C" = TRENCH WIDTH PLUS TWO TIMES THE PIPE DIAMETER		

THRUST AND ANCHOR BLOCKS

MAIN SIZE	TEES & END CAP	90° BEND	45° BEND	22½° BEND
100 mm	0.4	0.5	0.3	0.1
150 mm	0.7	0.9	0.5	0.2
200 mm	1.1	1.5	0.8	0.4
250 mm	1.6	2.2	1.2	0.6
300 mm	2.2	3.1	1.8	0.9
400 mm	4.6	6.5	3.5	1.8
450 mm	5.4	7.7	4.1	2.1
500 mm	6.7	9.5	5.1	2.6
550 mm	8.1	11.4	6.2	3.2
600 mm	9.6	13.6	7.4	3.8
MINIMUM BEARING AREA IN SQUARE METERS SEE NOTE 1				

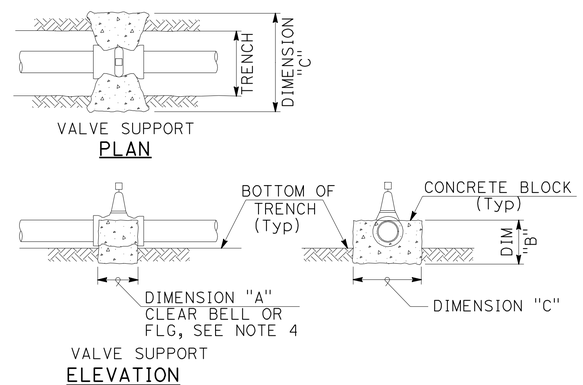

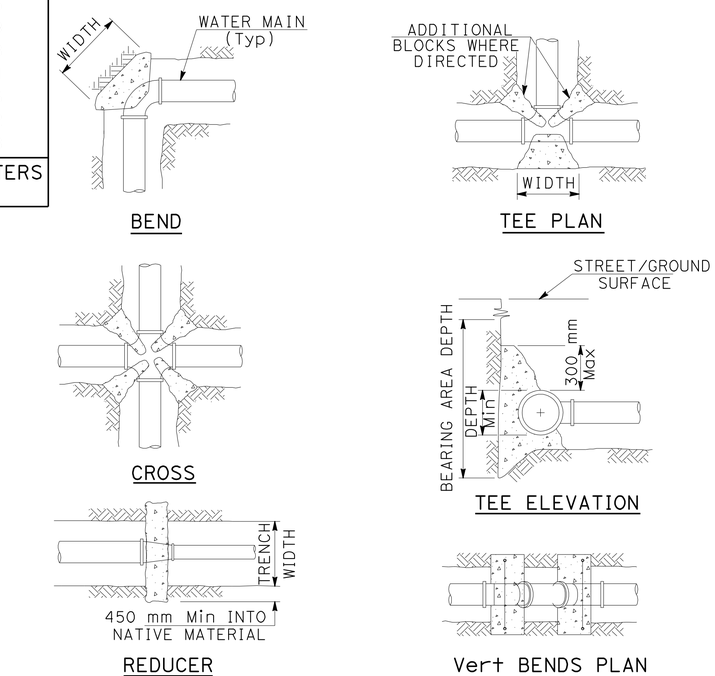

NOTES:

1. BEARING AREA BASED ON SOIL BEARING VALUE OF 71,821 kPa AND 1551 kPa LINE PRESSURE AND A MINIMUM OF 900 mm COVER
   FOR BEARING= 47,880 kPa, 1.5 x AREA SHOWN
   FOR BEARING= 23,940 kPa, 3.0 x AREA SHOWN
2. THRUST BLOCKS SHALL BE CENTERED ON THE FITTING SO THAT THE BEARING AREA IS EXACTLY OPPOSITE THE RESULTANT DIRECTION OF THRUST.
3. CONCRETE SHALL BE PLACED SO THAT FITTINGS AND VALVES WILL BE ACCESSIBLE FOR REPAIRS OR REPLACEMENT.
4. ALL THRUST AND ANCHOR BLOCKS SHALL BE POURED AGAINST WETTED UNDISTURBED SOIL.
5. FOR MINIMUM CONCRETE CURING TIME REFER TO SPECIAL PROVISIONS.

NOTES:

1. BEARING AREA "B" MUST BE EQUAL TO OR GREATER THAN THE AREA REQUIRED FOR A 90° ELBOW INSTALLATION.
2. INSTALL SAND BAGS AROUND BUTTERFLY VALVE ACTUATOR TO ISOLATE IT FROM CONCRETE.
3. BFV'S INSTALLED AT CROSSES OR TEES REQUIRE A 450 mm FLANGED DUCTILE IRON SPOOL TO BE INSTALLED BETWEEN THE FITTING AND VALVE.

NOTE:

1. THE ANCHOR BLOCKS ON VERTICAL BENDS REQUIRE THE CITY OF SAN DIEGO'S APPROVAL.

CONCRETE THRUST AND ANCHOR BLOCK INSTALLATIONS

ALL DIMENSIONS ARE IN METERS UNLESS OTHERWISE SHOWN

UTILITY DETAILS

NO SCALE — **UD-3**

REVISED BY	DATE REVISED
FARLITO VALENZUELA	MAHMOUD ORIQAT
CALCULATED-DESIGNED BY	CHECKED BY
CONSULTANT FUNCTIONAL SUPERVISOR	MAHMOUD ORIQAT

STATE OF CALIFORNIA - DEPARTMENT OF TRANSPORTATION — Caltrans

LAST REVISION 05-23-09 — DATE PLOTTED => 23-SEP-2010 TIME PLOTTED => 14:07

DIST	COUNTY	ROUTE	KILOMETER POST TOTAL PROJECT	SHEET No.	TOTAL SHEETS
11	SD	5,805	R49.9/R51.7, 42.6/46.5	247	886

REGISTERED CIVIL ENGINEER — DATE 05-11-09

9-27-10
PLANS APPROVAL DATE

REGISTERED PROFESSIONAL ENGINEER CARL E. SPIER No. C 49744 Exp. 9-30-10 CIVIL STATE OF CALIFORNIA

THE STATE OF CALIFORNIA OR ITS OFFICERS OR AGENTS SHALL NOT BE RESPONSIBLE FOR THE ACCURACY OR COMPLETENESS OF SCANNED COPIES OF THIS PLAN SHEET.

CITY OF SAN DIEGO
600 B STREET, SUITE 800
SAN DIEGO, CA 92101

Caltrans Metric

ITEM No.	SIZE AND DESCRIPTION
1	200 mm GATE WELL 2-PIECE MACHINED FRAME AND LID
2	150 mm HIGH x 150 mm WIDE ASPHALT CONCRETE RING
3	CAULDER COUPLING
4	VALVE STEM EXTENSION SEE NOTES 1 & 2
5	200 mm PVC CL200, C-900 PIPE x REQUIRED LENGTH GATE WELL, WHITE IN COLOR ONLY
6	RESILIENT WEDGE GATE VALVE
7	WATER MAIN
8	BUTTERFLY VALVE

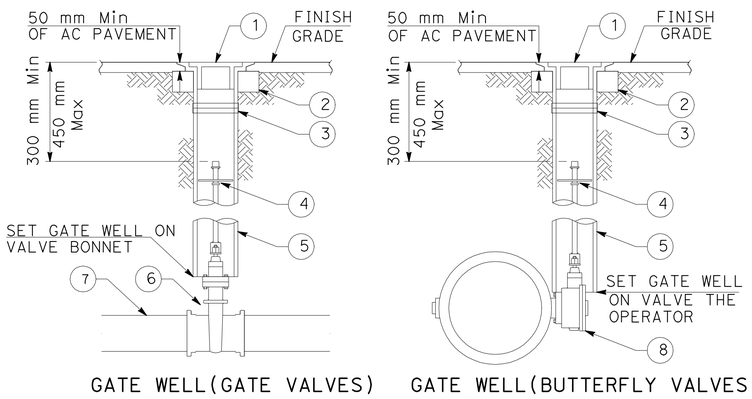

GATE WELL(GATE VALVES) GATE WELL(BUTTERFLY VALVES)

BFV OPERATOR POSITION BFV OPERATOR POSITION

GATE WELL INSTALLATION

FOR VALVES IN AREAS WHERE SPEED LIMIT IS 56 km/h OR GREATER

NOTES:

1. VALVES DEEPER THAN 1.5 m REQUIRE A VALVE STEM EXTENSION.
2. EXTENSION STEMS SHALL NOT BE ATTACHED/BOLTED TO OPERATING NUT.
3. GATE WELL AND LID SHALL BE SET SO THAT NO MORE THAN TWO 25 mm ADJUSTMENT RINGS ARE USED.
4. BFV OPERATORS TO BE LOCATED TO THE CURBLINE SIDE OF WATER MAIN.
5. BFV'S INSTALLED AT CROSSES OR TEES REQUIRE A 450 mm FLANGED. DUCTILE IRON SPOOL TO BE INSTALLED BETWEEN THE FITTING AND VALVE.
6. GATE WELLS SHALL BE IDENTIFIED AS DESCRIBED ON DETAILS.
7. FOR INLINE VALVE ANCHOR BLOCK INSTALLATION SEE DETAILS.
8. MATERIALS SHALL BE SELECTED FROM THE CITY OF SAN DIEGO'S APPROVED MATERIAL LIST.

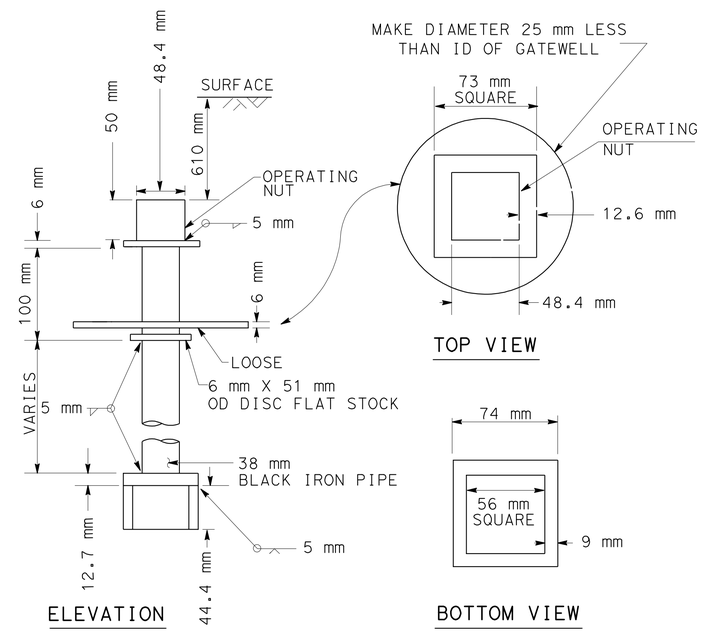

VALVE STEM EXTENSION

NOTES:

1. EXTENSION TO BE USED WHEN TOP OF OPERATING NUT IS 1525 mm OR MORE BELOW FINISH GRADE
2. PAINT ALL FINISHED SURFACES WITH ASPHALT VARNISH.

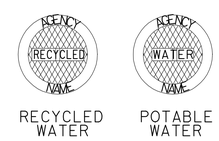

RECYCLED WATER POTABLE WATER

GATE WELL LIDS

SEE NOTE 1

NOTES:

1. GATE WELL LIDS SHALL BE CAST WITH THE "AGENCY NAME" AND THE WORD "WATER" FOR USE WITH POTABLE WATER SYSTEMS AND "RECYCLED" FOR USE WITH RECYCLED WATER SYSTEMS, LIDS SHALL INCLUDE A 25 mm LIFTING SLOT.
2. PVC GATE WELLS SHALL BE MANUFACTURED IN WHITE OR BLUE FOR USE WITH POTABLE WATER, AND PURPLE FOR USE WITH RECYCLED WATER.
3. THE INSIDE PORTIONS OF THE GATE WELL LID AND PVC GATE WELL SHALL BE IDENTIFIED WITH A PAINTED IDENTIFICATION MARKING. IDENTIFICATION MARKINGS SHALL BE OF THE COLORS SHOWN ABOVE.
4. THE TOP EXTERIOR PORTION OF GATE WELL LIDS SHALL BE PAINTED WITH COLORS TO IDENTIFY THE USE OF THE VALVE INSTALLED, AS SHOWN ABOVE.
5. MATERIALS SHALL BE SELECTED FROM THE CITY OF SAN DIEGO'S APPROVED MATERIALS LIST.

GATE WELL IDENTIFICATION

COLOR	GATE WELL LIDS USED FOR:
RED	NORMALLY CLOSED SYSTEM VALVES (NCV)
PURPLE	RECYCLED WATER VALVES: LINE VALVES & AIR VALVES
YELLOW	POTABLE WATER VALVES: LINE VALVES, FIRE SERVICES, & AIR VALVES
WHITE	FIRE HYDRANTS

GATE WELL LID COLORS
SEE NOTE 4

COLOR	GATE WELL AND LIDS USED FOR:
RED	NORMALLY CLOSED SYSTEM VALVES (NCV)
WHITE	RESILIENT WEDGE GATE VALVES
GREEN	BUTTERFLY VALVES

PAINTED IDENTIFICATION MARKING
SEE NOTE 3

ALL DIMENSIONS ARE IN METERS UNLESS OTHERWISE SHOWN

UTILITY DETAILS

NO SCALE **UD-4**

STATE OF CALIFORNIA - DEPARTMENT OF TRANSPORTATION
Caltrans

CONSULTANT FUNCTIONAL SUPERVISOR: MAHMOUD ORIQAT
CALCULATED-DESIGNED BY: FARLITO VALENZUELA
CHECKED BY: MAHMOUD ORIQAT
REVISED BY
DATE REVISED

LAST REVISION 05-23-09
DATE PLOTTED => 29-SEP-2010
TIME PLOTTED => 14:07

Dist	COUNTY	ROUTE	KILOMETER POST TOTAL PROJECT	SHEET No.	TOTAL SHEETS
11	SD	5,805	R49.9/R51.7, 42.6/46.5	248	886

REGISTERED CIVIL ENGINEER — DATE 05-11-09

9-27-10
PLANS APPROVAL DATE

REGISTERED PROFESSIONAL ENGINEER — CARL E. SPIER No. C 49744 Exp. 9-30-10 CIVIL — STATE OF CALIFORNIA

THE STATE OF CALIFORNIA OR ITS OFFICERS OR AGENTS SHALL NOT BE RESPONSIBLE FOR THE ACCURACY OR COMPLETENESS OF SCANNED COPIES OF THIS PLAN SHEET.

CITY OF SAN DIEGO
600 B STREET, SUITE 800
SAN DIEGO, CA 92101

Caltrans Metric

NOTES:

SLOPE CONCRETE PAD AWAY FROM COVER.

MATERIALS:

1. CONCRETE: 610 mm X 610 mm X 102 mm THICKNESS PER SSPWC 330-C-23
2. REINFORCING FABRIC 102 mm X 102 mm GAUGE 10 WIRE.
3. CABLE

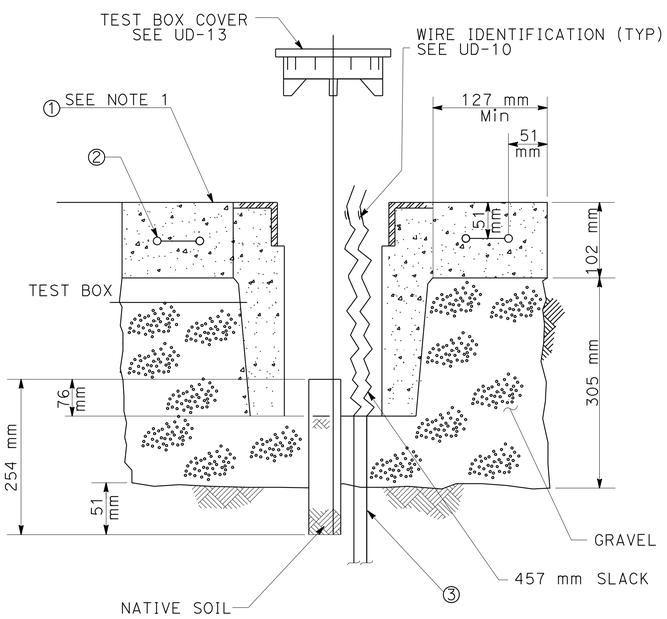

AT-GRADE CATHODIC
PROTECTION TEST STATION
WIRING DIAGRAM FOR ROADWAYS

TEST STATION SECTION

MATERIALS:

1. CABLE AWG #8
   COPPER ASTM B3
   STRANDED ASTM B8
   INSULATION ASTM D1248
   TYPE 1, CLASS C,
   GRADE 5.
2. POLYETHYLENE WARNING TAPE.
3. SAND BEDDING

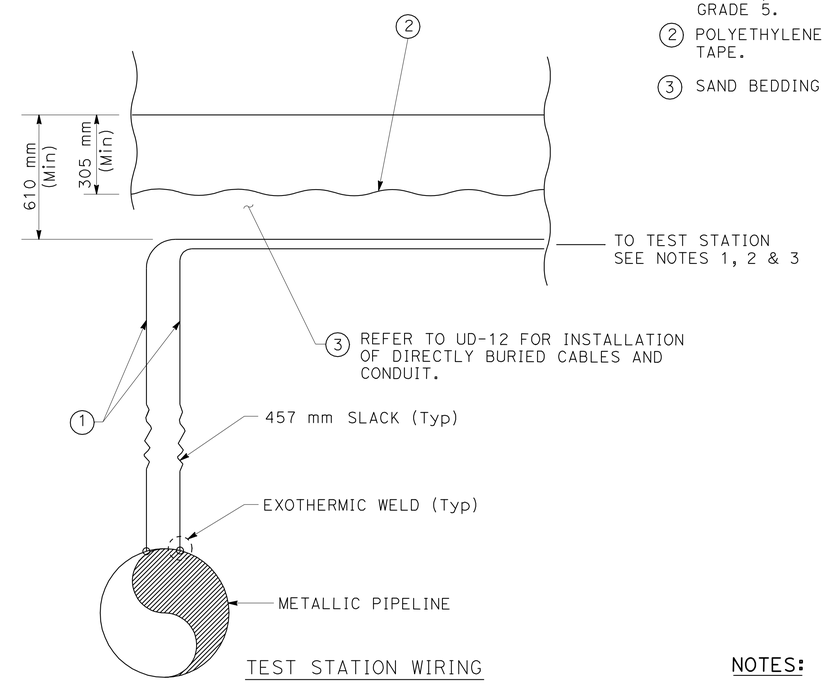

TEST STATION WIRING

APWA BLUE 152 mm WIDE TAPE WITH WHITE LETTERING CONTINUOUSLY IMPRINTED

CAUTION CAUTION
BURIED CATHODIC PROTECTION LINE BELOW
CALL 619-515-3525

AT-GRADE CATHODIC PROTECTION TEST STATION INSTALLATION FOR ROADWAYS

NOTES:

1. THE LOCATION OF TEST STATION SHALL BE DETERMINED AND APPROVED BY CITY CORROSION ENGINEER.
2. AT ROADWAYS USETEST STATION SECTION ON SHEET UD-13.
3. FOR INSTALLATION OF DIRECTLY BURIED CABLES & CONDUIT SEE UD-11.

ALL DIMENSIONS ARE IN METERS UNLESS OTHERWISE SHOWN

UTILITY DETAILS

NO SCALE

UD-5

STATE OF CALIFORNIA - DEPARTMENT OF TRANSPORTATION
Caltrans

CONSULTANT FUNCTIONAL SUPERVISOR: MAHMOUD ORIQAT
CALCULATED-DESIGNED BY: FARLITO VALENZUELA
CHECKED BY: MAHMOUD ORIQAT
REVISED BY / DATE REVISED

LAST REVISION 05-23-09 | DATE PLOTTED => 29-SEP-2010 | TIME PLOTTED => 14:07

DIST	COUNTY	ROUTE	KILOMETER POST TOTAL PROJECT	SHEET No.	TOTAL SHEETS
11	SD	5,805	R49.9/R51.7, 42.6/46.5	249	886

REGISTERED CIVIL ENGINEER — DATE 05-11-09

PLANS APPROVAL DATE 9-27-10

REGISTERED PROFESSIONAL ENGINEER CARL E. SPIER No. C 49744 Exp. 9-30-10 CIVIL STATE OF CALIFORNIA

THE STATE OF CALIFORNIA OR ITS OFFICERS OR AGENTS SHALL NOT BE RESPONSIBLE FOR THE ACCURACY OR COMPLETENESS OF SCANNED COPIES OF THIS PLAN SHEET.

CITY OF SAN DIEGO
600 B STREET, SUITE 800
SAN DIEGO, CA 92101

Caltrans Metric

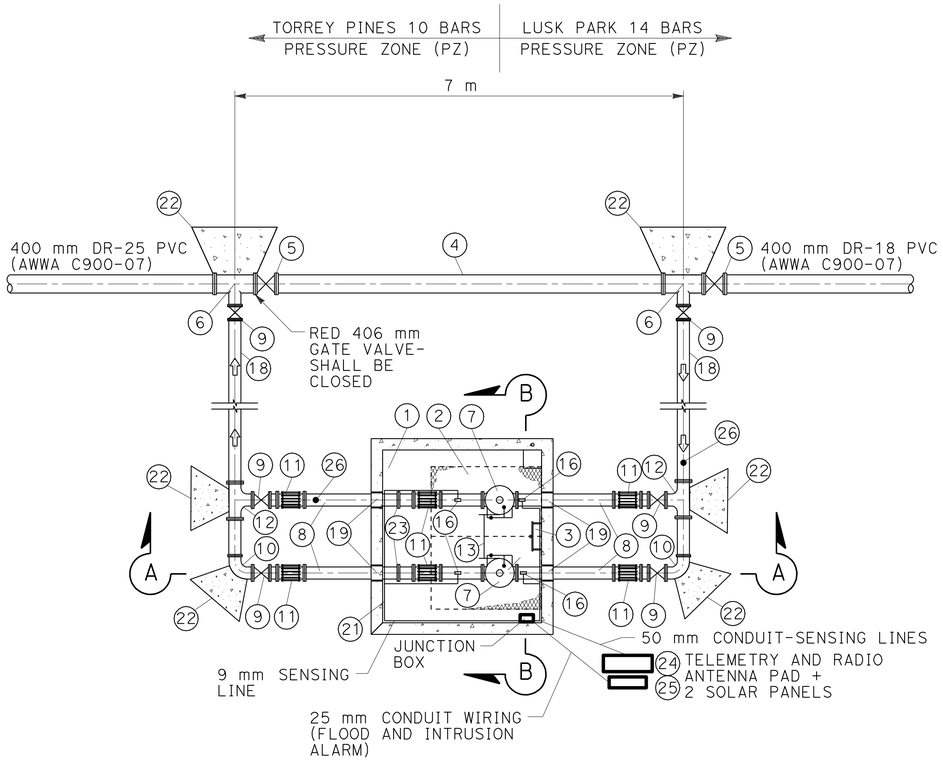

PRESURE REDUCING STATION (PRS) PLAN VIEW

DESCRIPTION:

1. 3048 mm X 2743 mm (INSIDE DIMENSION) PRECAST CONCRETE VAULT, CONTRACTOR TO PROVIDE SHOP DRAWING PRIOR TO MANUFACTURING
2. 2438 mm X 1829 mm DUAL-LEAF ACCESS HATCH BILCO JD-H20 SPRING ASSISTED HINGED ALUMINUM HATCH OR EQUAL WITH HATCH DRAIN TO DAYLIGHT
3. FRP LADDER WITH LADDER UP POST-SEE UD-7
4. 406 mm DR-18 PVC PIPE (AWWA C900-07)
5. 406 mm GATE VALVE (2 EA), (F, MJ)
6. 406 mm X 305 mm TEE (3 EA), (F)
7. 305 mm PRESSURE REDUCING VALVE, FLANGED WITH VALVE POSITION INDICATOR AND FLOW MONITORING KIT
8. 305 mm Dia FLG SPOOL FLG X P.E. (2 EA)
9. 305 mm GATE VALVE (7 EA), (F OR MJ)
10. 305 mm ~90°BEND (4 EA) (F)
11. 305 mm FLEXIBLE COUPLING WITH THRUST RESTRAINTS -SEE UD-9
12. 305 mm X 305 mm TEE (2 EA)
13. 610 mm CLEARANCE MINIMUM BETWEEN EDGE OF VALVES
14. 458 mm X 458 mm X 305 mm SUMP WITH CAST IRON GRATE
15. ADJUSTABLE PIPE SUPPORTS (6) - SEE UD-7
16. PRESSURE GAUGE WITH 13 mm OUTLET FOR 10 mm PRESSURE TUBING-SEE UD-7
17. VALVE BOX - VALVE WELL TYPE "A"
18. 305 mm Dia PIPE PER AWWA C151
19. WALL PENETRATION (SEE DETAIL, THIS SHEET)
20. 305 mm Dia FLG SPOOL
21. 10 mm COPPER TUBING (WALL MOUNTED)
22. THRUST BLOCK
23. INSULATING FLANGE KIT SEE UD-11
24. TELEMETRY AND RADIO ANTENNA PAD
25. 2 SOLAR PANEL / BP 3160 - HIGH EFFICIENCY PHOTOVOLTAIC MODULE USING SILICON NITRIDE MULTICRYSTALLINE SILICON CELLS. 160 WATTS PHOTOVOLTAIC MODULE
26. TEST STATION PER UD-5 AND UD-13

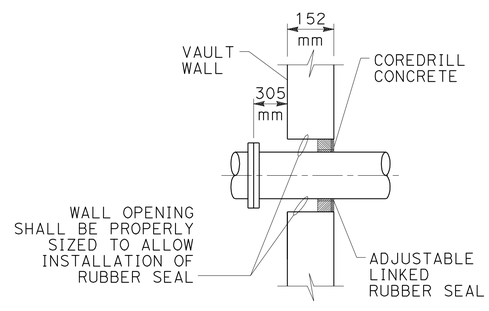

WALL PENETRATION DETAIL (TYPICAL)

NOTES:

1. CONTRACTOR TO CLOSE RED VALVE
2. WELL CASING COVER FOR RED VALVE TO BE PAINTED RED
3. COORDINATE WITH CITY WATER OPERATIONS AND SCADA PERSONNEL THAT RED VALVE IS CLOSED AND IN GOOD WORKING ORDER
4. PRESSURE SETTINGS TO BE PROVIDED BY CITY WATER OPERATIONS AND CLA-VAL REPRESENTITIVE TO ADJUST SET POINTS AND CITY WATER OPERATIONS TO CERTIFY SETTINGS
5. VALVES AND APPURTENANCES MUST BE DSIGNED FOR A MINIMUM WORKING PRESSURE OF 14 BARS
6. EXPOSED PIPING IN VAULT MUST HAVE A MINIMUM STEEL THICKNESS OF 6.4 mm
7. THE 10 mm PRESSURE SENSING LINE MUST BE TYPE K "SOFT" COPPER TUBING IN PVC 50 mm CONDUIT TO PRESSURE TRANSMITTER PANEL ON TELEMETRY AND RADIO ANTENNA POLE
8. INSTRUMENTATION/ELECTRICAL AND PROGRAMMING TO BE DONE BY CITY FORCES
9. THE TOP ELEVATION OF THE PRS VAULT MUST BE 305 mm HIGHER THAN THE HIGHEST FINAL GRADE AROUND THE VAULT
10. THE CONTRACTOR MUST INSTALL 914 mm BROW-DITCH WITH MINIMUM 1% SLOPE AT THE NORTH SIDE OF THE PRS VAULT TO DIVERT RUN-OFF INTO THE ACCESS ROAD AROUND THE VAULT

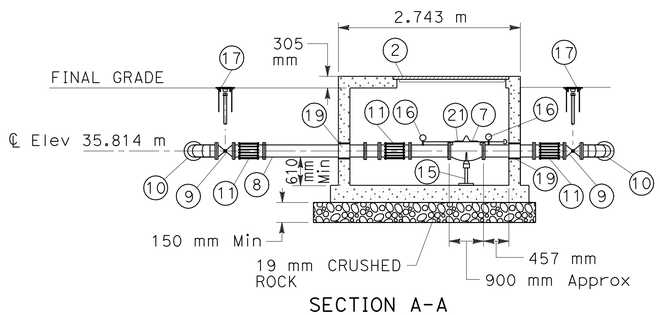

SECTION A-A

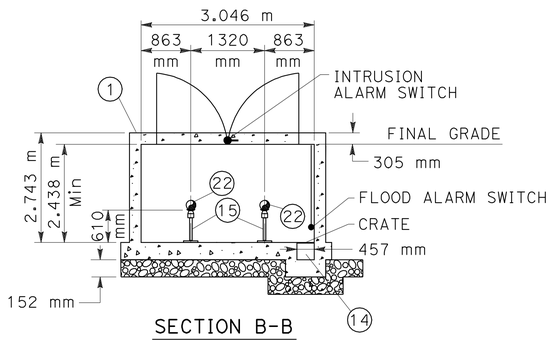

SECTION B-B

ALL DIMENSIONS ARE IN METERS UNLESS OTHERWISE SHOWN

UTILITY DETAILS

NO SCALE

UD-6

STATE OF CALIFORNIA - DEPARTMENT OF TRANSPORTATION

Caltrans

CONSULTANT FUNCTIONAL SUPERVISOR: MAHMOUD ORIQAT

CALCULATED-DESIGNED BY: FARLITO VALENZUELA — CHECKED BY: MAHMOUD ORIQAT

REVISED BY — DATE REVISED

LAST REVISION 05-23-09 — DATE PLOTTED => 29-SEP-2010 — TIME PLOTTED => 14:07

Dist	COUNTY	ROUTE	KILOMETER POST TOTAL PROJECT	SHEET No.	TOTAL SHEETS
11	SD	5,805	R49.9/R51.7, 42.6/46.5	250	886

REGISTERED CIVIL ENGINEER — DATE 05-11-09

9-27-10
PLANS APPROVAL DATE

REGISTERED PROFESSIONAL ENGINEER — CARL E. SPIER No. C 49744 Exp. 9-30-10 CIVIL — STATE OF CALIFORNIA

THE STATE OF CALIFORNIA OR ITS OFFICERS OR AGENTS SHALL NOT BE RESPONSIBLE FOR THE ACCURACY OR COMPLETENESS OF SCANNED COPIES OF THIS PLAN SHEET.

CITY OF SAN DIEGO
600 B STREET, SUITE 800
SAN DIEGO, CA 92101

Caltrans Metric

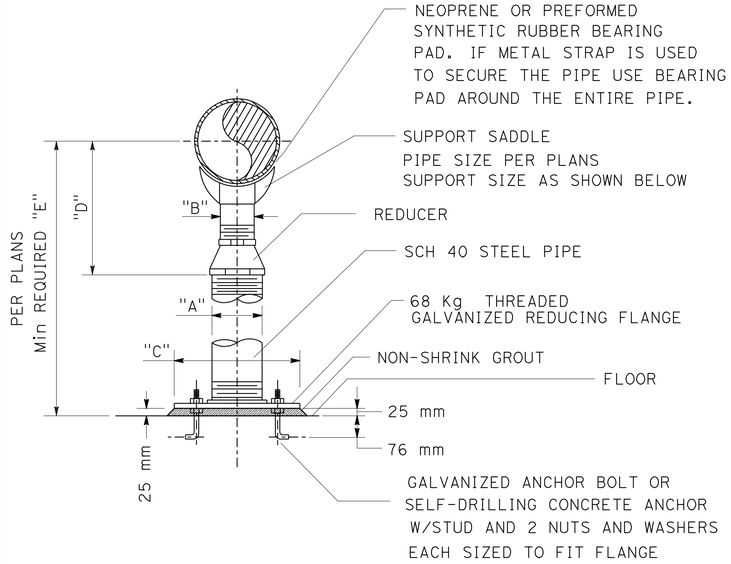

UNER FLANGE ADJUSTABLE SUPPORT APPROXIMATE DIMENSIONS IN MILLIMETERS							
PIPE SIZE	FLANGE OD	SUPPORT SIZE	A	B	C	D	E Min
100	230	254	76	63	228	330	432
150	280	304	76	63	228	355	482
200	342	355	100	76	279	406	533
250	406	406	100	76	279	432	559

UNDER FLANGE SUPPORT

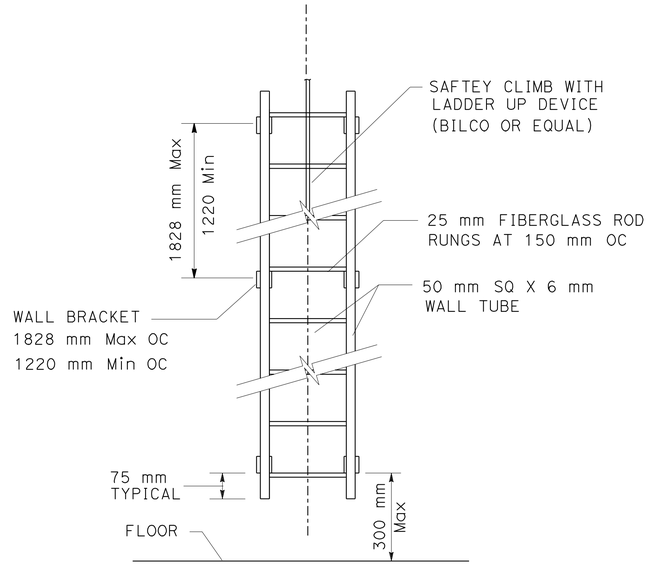

LADDER ELEVATION

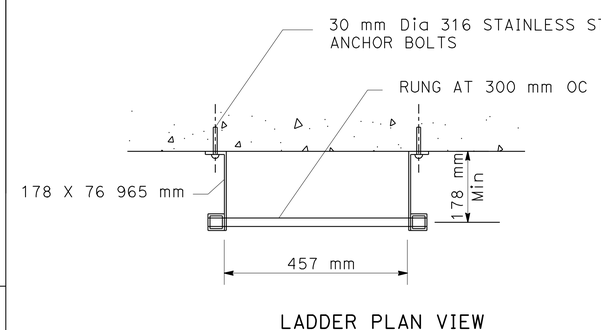

LADDER PLAN VIEW

NOTE:
ALL JOINTS EPOXIED AND 316 SS RIVETED

FIBERGLASS PLASTIC (FPR) LADDER

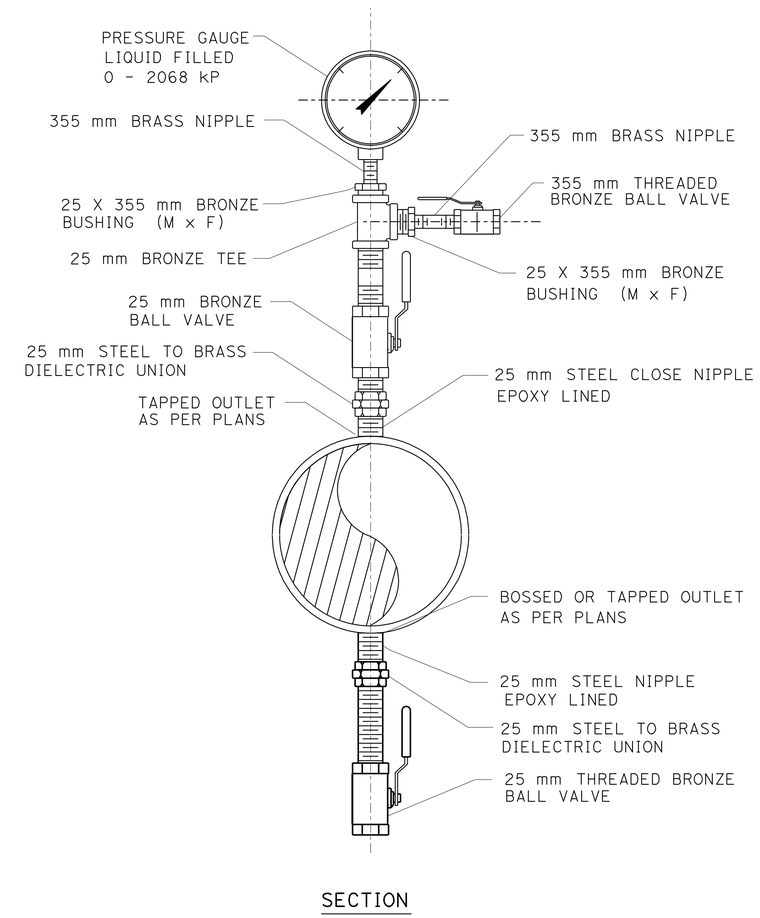

SECTION

PRESSURE GAUGE AND DRAIN

ALL DIMENSIONS ARE IN METERS UNLESS OTHERWISE SHOWN

UTILITY DETAILS

NO SCALE — **UD-7**

REVISED BY	DATE REVISED

FARLITO VALENZUELA — MAHMOUD ORIQAT

CALCULATED-DESIGNED BY — CHECKED BY

CONSULTANT FUNCTIONAL SUPERVISOR — MAHMOUD ORIQAT

STATE OF CALIFORNIA - DEPARTMENT OF TRANSPORTATION — Caltrans

LAST REVISION 05-23-09 — DATE PLOTTED => 23-SEP-2010 — TIME PLOTTED => 14:08

Dist	COUNTY	ROUTE	KILOMETER POST TOTAL PROJECT	SHEET No.	TOTAL SHEETS
11	SD	5,805	R49.9/R51.7, 42.6/46.5	251	886

REGISTERED CIVIL ENGINEER — DATE 05-11-09

9-27-10
PLANS APPROVAL DATE

REGISTERED PROFESSIONAL ENGINEER — CARL E. SPIER No. C 49744 Exp. 9-30-10 CIVIL — STATE OF CALIFORNIA

THE STATE OF CALIFORNIA OR ITS OFFICERS OR AGENTS SHALL NOT BE RESPONSIBLE FOR THE ACCURACY OR COMPLETENESS OF SCANNED COPIES OF THIS PLAN SHEET.

CITY OF SAN DIEGO
600 B STREET, SUITE 800
SAN DIEGO, CA 92101

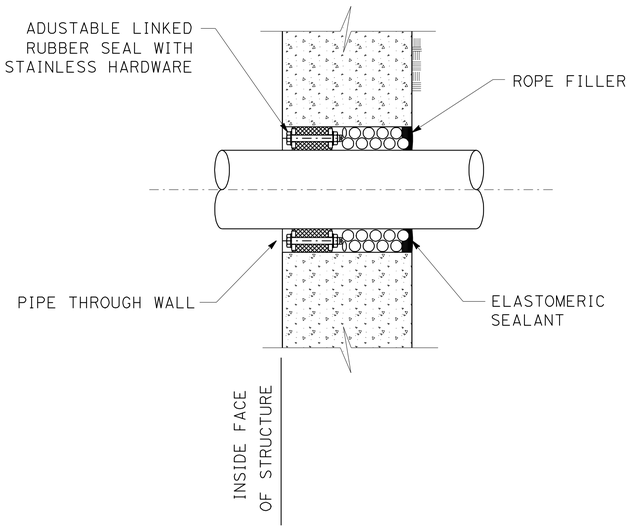

SECTION

LINK SEALING DEVICE

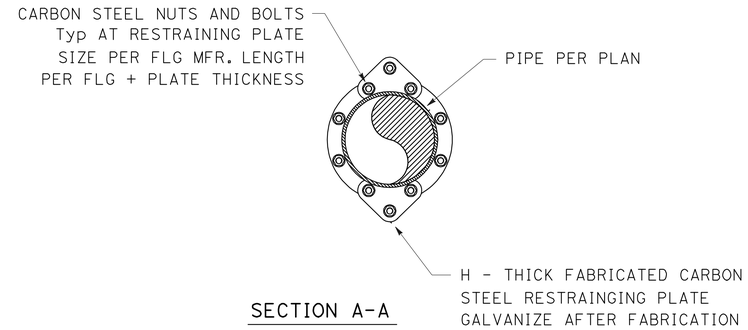

SECTION A-A

SEE SHEET UD-6

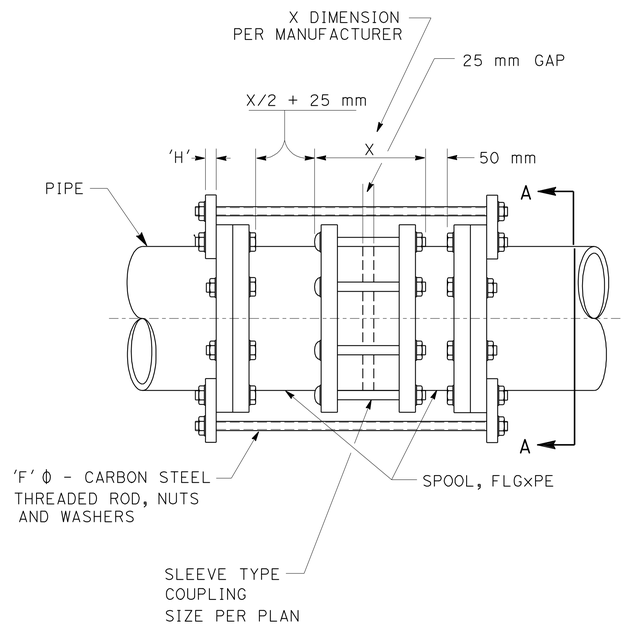

PLAN

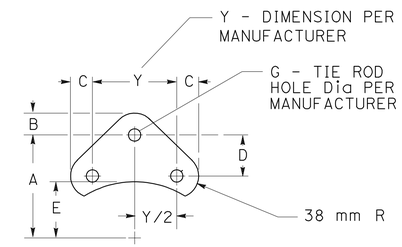

NOTE:
BOLT CIRCLE RADIUS PER MANUFACTURER

RESTRAINING PLATE DIMENSIONS IN MILLIMETERS

PIPE SIZE	No. RODS	A	B	C	D	E	F	G	H
76	2	130	35	35	54	57	19 Φ	19 Φ	16 Φ
101	2	149	35	35	57	67	19 Φ	19 Φ	16 Φ
152	2	171	38	38	60	92	19 Φ	22 Φ	19 Φ
208	2	203	38	38	63	117	19 Φ	22 Φ	19 Φ
254	2	238	38	38	63	149	19 Φ	22 Φ	19 Φ
305	2	279	38	38	71	175	22 Φ	25 Φ	22 Φ

COUPLING RESTRAINTS

ALL DIMENSIONS ARE IN METERS UNLESS OTHERWISE SHOWN

UTILITY DETAILS

NO SCALE

UD-8

STATE OF CALIFORNIA - DEPARTMENT OF TRANSPORTATION
Caltrans

CONSULTANT FUNCTIONAL SUPERVISOR: MAHMOUD ORIQAT
CALCULATED-DESIGNED BY: FARLITO VALENZUELA
CHECKED BY: MAHMOUD ORIQAT
REVISED BY / DATE REVISED

LAST REVISION 05-23-09
DATE PLOTTED => 29-SEP-2010
TIME PLOTTED => 14:08

Dist	COUNTY	ROUTE	KILOMETER POST TOTAL PROJECT	SHEET No.	TOTAL SHEETS
11	SD	5,805	R49.9/R51.7, 42.6/46.5	252	886

REGISTERED CIVIL ENGINEER — 05-11-09 DATE

9-27-10
PLANS APPROVAL DATE

REGISTERED PROFESSIONAL ENGINEER — CARL E. SPIER No. C 49744 Exp. 9-30-10 CIVIL — STATE OF CALIFORNIA

THE STATE OF CALIFORNIA OR ITS OFFICERS OR AGENTS SHALL NOT BE RESPONSIBLE FOR THE ACCURACY OR COMPLETENESS OF SCANNED COPIES OF THIS PLAN SHEET.

CITY OF SAN DIEGO
600 B STREET, SUITE 800
SAN DIEGO, CA 92101

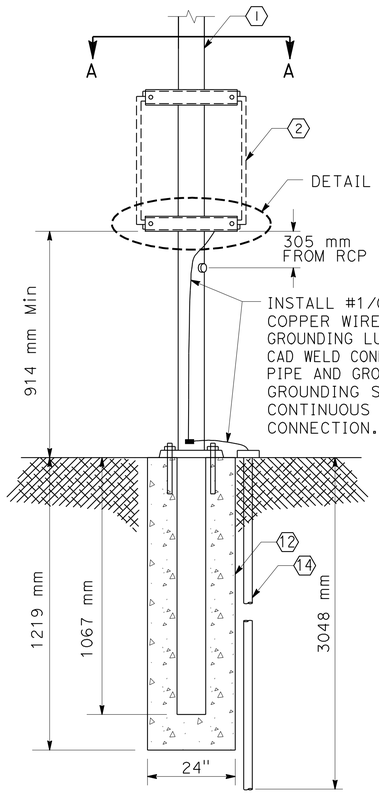

FRONT VIEW

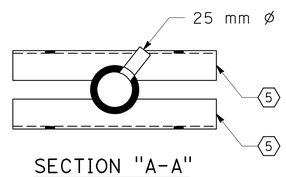

SECTION "A-A"
NO SCALE

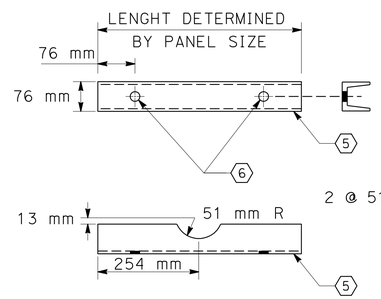

DETAIL "B"

RCP PANEL MOUNTED POLE

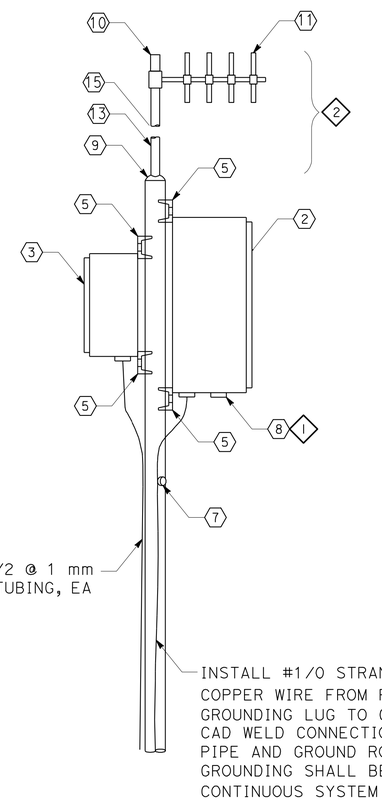

SIDE VIEW

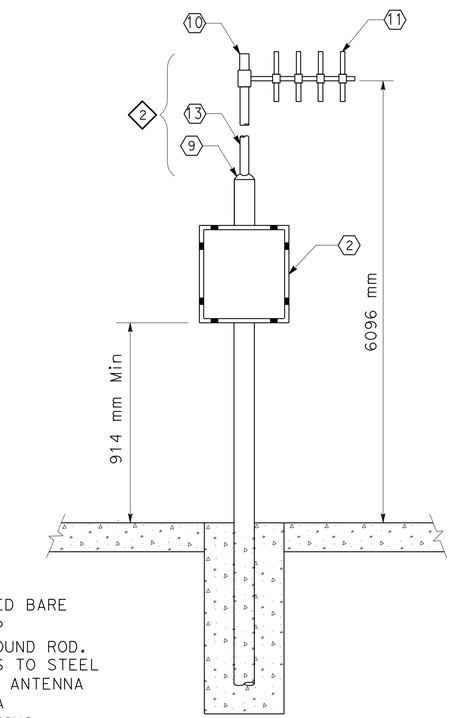

ELEVATION

PANEL MOUNTING DETAIL

KEYNOTES:

1. 102 mm Sch 40 GALVANIZED STEEL PIPE
2. RCP PANEL
3. TRANSMITTER PANEL (610 mm X 508 mm X 203 mm D - 4X S/S)
4. NOT USED
5. C3X4 No. 10 CHANNEL WELD TO ANTENNA MAST.
6. HOLE LOCATION FOR BRACKET TO BE DETERMINED BY CONTRACTOR FOR SPECIFIC PANEL SIZE.
7. 25 mm NPT COUPLING FOR COAX TO RCP Min 25 mm FROM BOTTOM OF RCP.
8. CONDUIT CONNECTION TO PANEL TO BE DETERMINED BY CONTRACTOR.
9. 102 mm X 51 mm GALVANIZED BELL REDUCER, WELDED.
10. 51 mm CAP
11. ANTENNA 10 db YAGI.
12. 3000 lb CONCRETE BASE.
13. 51 Sch 80 GALVANIZED STEEL PIPE.
14. 19 mm X 3048 mm RODS AND CLAMPS.
15. IRON RIDGE SP/03 UNIVERSAL SIDE OF POLE MOUNT ITEM UNI SP 03

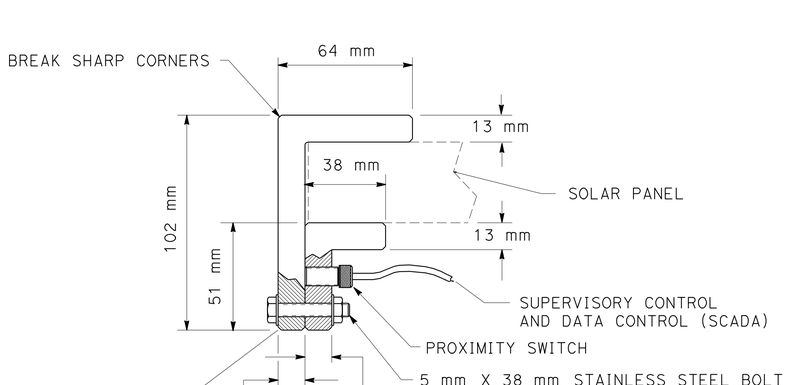

SOLAR PANEL THEFT PREVENTION FRAME

NOTES:

1. PROVIDE CONDUIT AND CABLE PER PLAN DRAWINGS.
2. DELETE ANTENNA AND 2" PIPE FOR INSTALLATION WHERE ANTENNA IS INSTALLED ON STREET LIGHTING STANDARD.
3. ALL COMPONENTS SHOWN ARE TO BE PROVIDED BY THE CONTRACTOR. (SOLAR PANELS MOUNT KIT)

ALL DIMENSIONS ARE IN METERS UNLESS OTHERWISE SHOWN

UTILITY DETAILS

NO SCALE

UD-9

REVISED BY	DATE REVISED

CALCULATED-DESIGNED BY: FARLITO VALENZUELA
CHECKED BY: MAHMOUD ORIQAT
CONSULTANT FUNCTIONAL SUPERVISOR: MAHMOUD ORIQAT
STATE OF CALIFORNIA - DEPARTMENT OF TRANSPORTATION
Caltrans

LAST REVISION 05-23-09
DATE PLOTTED => 23-SEP-2010
TIME PLOTTED => 14:08

Dist	COUNTY	ROUTE	KILOMETER POST TOTAL PROJECT	SHEET No.	TOTAL SHEETS
11	SD	5,805	R49.9/R51.7, 42.6/46.5	253	886

REGISTERED CIVIL ENGINEER — DATE 05-11-09

9-27-10
PLANS APPROVAL DATE

REGISTERED PROFESSIONAL ENGINEER — CARL E. SPIER No. C 49744 Exp. 9-30-10 CIVIL — STATE OF CALIFORNIA

THE STATE OF CALIFORNIA OR ITS OFFICERS OR AGENTS SHALL NOT BE RESPONSIBLE FOR THE ACCURACY OR COMPLETENESS OF SCANNED COPIES OF THIS PLAN SHEET.

CITY OF SAN DIEGO
600 B STREET, SUITE 800
SAN DIEGO, CA 92101

Caltrans Metric

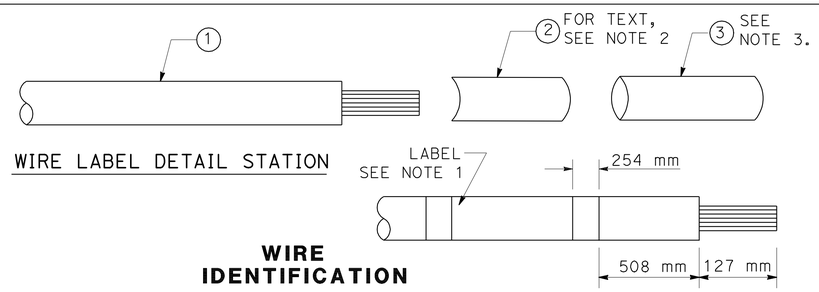

WIRE LABEL DETAIL STATION

WIRE IDENTIFICATION

LEGEND:

PIPE MATERIAL

CCI - COATED CAST IRON
CDI - COATED DUCTILE IRON
SCRC - STEEL CYLINDER REINFORCED CONCRETE
PSCS - PRE-STRESSED CONCRETE-STEEL CYLINDER
RCCP - REINFORCED CONCRETE CYLINDER PIPE (W/O STEEL)
SCRW - STEEL CYLINDER REINFORCED ROD WRAPPED
CMLC - CEMENT MORTAR LINED-COATED STEEL CYLINDER
CMLCT - CEMENT MORTAR LINED-COATED-TAPED STEEL CYLINDER
CSTL - COATED STEEL CYLINDER

WIRE LABEL

CPTS# (CATHODIC PROTECTION TEST STATION NUMBERING)
CPTS#1, 2, 3, ...N

TYPE OF INSTALLATION

2WTS - 2-WIRE TEST STATION
EXAMPLE: CPTS#1, 2WTS, 180+00, 30, OTAY 2, CSTL

4WIJTS - 4-WIRE INSULATING JOINT TEST STATION
EXAMPLE: CPTS#2, 4WIJTS, 180+00, 30, OTAY 2, CSTL, NORTH OR SOUTH OR EAST OR WEST FOR WIRE TAGS

6WTS - 6-WIRE TEST STATION
EXAMPLE: STRUCTURE#1 - CPTS#3, 6WTS, 180+00, 30, OTAY 2, CSTL NORTH OR SOUTH OR EAST OR WEST FOR WIRE TAGS
STRUCTURE#2 - CPTS#3, 6WTS, 120+60, 24, MIDCITY, SCRW NORTH OR SOUTH OR EAST OR WEST FOR WIRE TAGS
STRUCTURE#3 - CPTS#3, 6WTS, 101+25, 54, TROJAN, RCCP, NORTH OR SOUTH OR EAST OR WEST FOR WIRE TAGS

CTS - CURRENT TEST STATION
EXAMPLE: CPTS#10, CTS, 180+00, 200 FT., OTAY 2, CSTL, NORTH OR SOUTH OR EAST OR WEST FOR WIRE TAGS

CSGTS - CASING TEST STATION
EXAMPLE: CPTS#12, CSGTS, 180+00, 30, OTAY 2, CSTL NORTH OR SOUTH OR EAST OR WEST FOR WIRE TAGS

ASTA - ANODE STATION
EXAMPLE: ANODE#1, 2, 3, ...N FOR ANODE WIRES; 30, OTAY 2, CSTL, 180+00, CPTS#6 FOR STRUCTURE WIRE

BSTA - BOND STATION
EXAMPLE: CPTS#18, BSTA, 30, OTAY 2, CSTL, 180+00; 54, OTAY 3, SCRW, 65+20

FXSTA - FOREIGN CROSSING STATION
EXAMPLE: CPTS#4, FXSTA; 30, OTAY 2, CSTL, 180+00; 24 SDGE

MATERIALS:

1. CABLE: AWG ASTM B8 & B3.
2. LABEL: FILE FOLDER, SELF ADHESIVE WHITE 17mm X 87mm.
3. SLEEVE: HEAT SHRINK, ADHESIVE LINED POLYOLEFIN, CLEAR THIN WALL TUBING.

NOTES:

1. CABLES SHALL BE TAGGED USING TIMES ROMAN 10 POINT FONT.
2. TEXT SHALL BE PRESENTED IN THE FOLLOWING ORDER:
   - CPTS #
   - TYPE OF INSTALLATION
   - STATIONING
   - PIPE DIAMETER
   - FACILITY NAME
   - PIPE MATERIAL
   - WIRE DIRECTIONAL ORIENTATION
     - NORTH
     - SOUTH
     - EAST
     - WEST
3. PLACE SLEEVE AFTER ATTACHMENT OF LABEL TO CABLE.

NOTES:

COAT INSULATING UNION WITH WAX TAPE TYPE COATING PER SPECIFICATIONS.

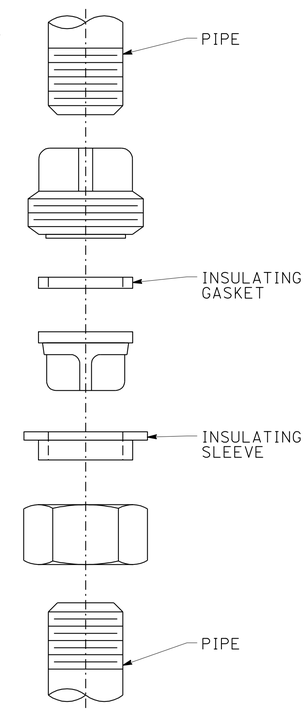

INSULATED MECHANICAL PIPE UNION

ALL DIMENSIONS ARE IN METERS UNLESS OTHERWISE SHOWN

UTILITY DETAILS

NO SCALE

UD-10

STATE OF CALIFORNIA - DEPARTMENT OF TRANSPORTATION
Caltrans

CONSULTANT FUNCTIONAL SUPERVISOR: MAHMOUD ORIQAT
CALCULATED-DESIGNED BY: FARLITO VALENZUELA
CHECKED BY: MAHMOUD ORIQAT
REVISED BY
DATE REVISED

LAST REVISION 05-23-09
DATE PLOTTED => 29-SEP-2010
TIME PLOTTED => 14:08

Dist	COUNTY	ROUTE	KILOMETER POST TOTAL PROJECT	SHEET No.	TOTAL SHEETS
11	SD	5,805	R49.9/R51.7, 42.6/46.5	254	886

REGISTERED CIVIL ENGINEER — DATE 05-11-09

9-27-10
PLANS APPROVAL DATE

REGISTERED PROFESSIONAL ENGINEER — CARL E. SPIER — No. C 49744 — Exp. 9-30-10 — CIVIL — STATE OF CALIFORNIA

THE STATE OF CALIFORNIA OR ITS OFFICERS OR AGENTS SHALL NOT BE RESPONSIBLE FOR THE ACCURACY OR COMPLETENESS OF SCANNED COPIES OF THIS PLAN SHEET.

CITY OF SAN DIEGO
600 B STREET, SUITE 800
SAN DIEGO, CA 92101

Caltrans Metric

MATERIALS:

1. POLYETHYLENE WARNING TAPE
2. SAND BEDDING

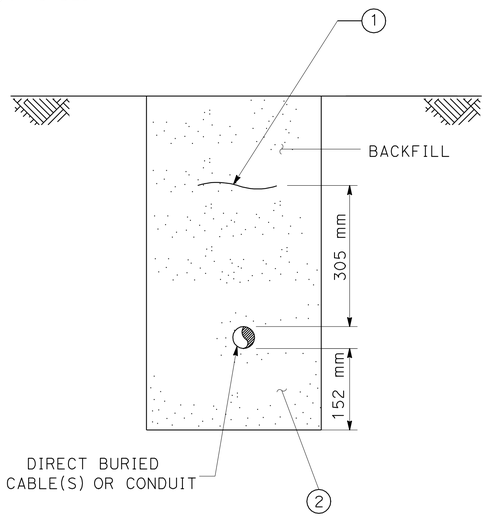

CABLE(S) AND CONDUIT
TRENCH SECTION

INSTALLATION OF DIRECTLY BURIED CABLES AND CONDUIT

NOTES:

1. CLEAN SHARP STONES AND RUBBLE FROM THE BOTTOM OF DITCH.

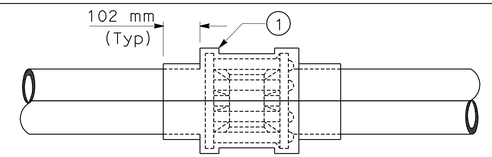

DETAIL 1
MECHANICAL COUPLING

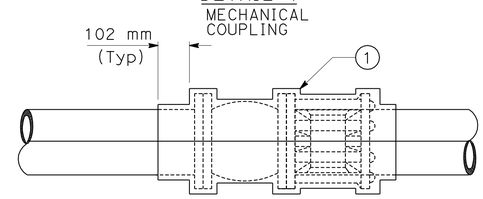

DETAIL 2
MECHANICAL COUPLING & FLANGE VALVE

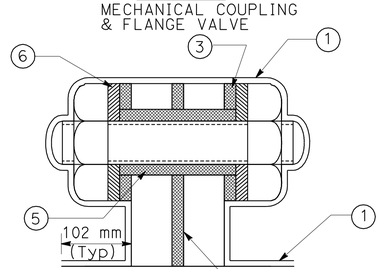

DETAIL 3
INSULATING FLANGE JOINTS, UNDERGROUND INSTALLATION

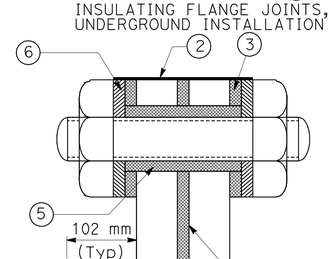

DETAIL 4
INSULATING FLANGE JOINTS, ABOVE-GROUND INSTALLATION

INSULATING FLANGE AND MECHANICAL JOINTS EXTERNAL PROTECTION

MATERIALS:

1. PROTECTIVE COATING: 3-PARTS PETROLATUM AWWA C217 OR APPROVED EQUAL.
2. TAPE: WRAPAROUND 76 mm WIDE, 1.27 mm THICK. CROSS LINKED POLYOLEFIN. HEAT SHRINKABLE, PRECOATED WITH HOT MELT-ADHESIVE.
3. WASHER: INSULATING EPOXY GLASS
4. GASKET: 3.30 mm THICK EPOXY GLASS INSULATING MATERIALS WITH NEOPRENE SEALING ELEMENT.
5. SLEEVE: INSULATING EPOXY GLASS. .76 mm THICK. ID=BOLT DIAMETER + .51mm.
6. WASHER: STEEL, 3.30 mm THICK.

NOTES:

1. WHEREVER POSSIBLE, INSULATING FLANGE ASSEMBLIES SHOULD BE ASSEMBLED PRIOR TO INSTALLATION & TESTED ELECTRICALLY USING GAS ELECTRONIC TOOL OR APPROVED EQUAL TO INSURE THAT THE INSTALLATION IS EFFECTIVE.
2. WRAP FLANGE ASSEMBLY AS SHOWN WITH 3-PART PETROLATUM TAPE PER AWWA C217.
3. INSULATING FLANGE BOLT HOLE DIAMETER SHOULD BE 3.30 mm BIGGER THAN THE INSULATING SLEEVE OD.
4. RECOMMENDED FLANGE INSTALLATION PROCEDURE:
   - CLEAN & INSPECT PIPE FLANGE FACES, APPLY NON-CONDUCTIVE LUBRICANT TO ALL THREADS.
   - INSTALL THE GASKET, ALIGN FLANGES & GASKETS.
   - USE ALIGNMENT PIN IN TWO DIAMETRICALLY OPPOSITE BOLT HOLES.
   - INSERT INSULATING SLEEVES INTO BOLT HOLES.
   - INSERT THE BOLT WITH BOTH INSULATING WASHES.
   - TIGHTEN TWO DIAMETRICALLY OPPOSITE BOLTS TO 30% TOTAL TORQUE.
   - TIGHTEN ALL BOLTS TO 50% AFTER REPLACING TWO ALIGNMENT PINS WITH BOLTS AND TO 100% OF FINAL TORQUE VALUE.

ALL DIMENSIONS ARE IN METERS UNLESS OTHERWISE SHOWN

UTILITY DETAILS

NO SCALE — **UD-11**

STATE OF CALIFORNIA - DEPARTMENT OF TRANSPORTATION — Caltrans

CONSULTANT FUNCTIONAL SUPERVISOR: MAHMOUD ORIQAT
CALCULATED-DESIGNED BY: FARLITO VALENZUELA
CHECKED BY: MAHMOUD ORIQAT
REVISED BY — DATE REVISED

LAST REVISION 05-23-09 — DATE PLOTTED => 29-SEP-2010 — TIME PLOTTED => 14:08

Dist	COUNTY	ROUTE	KILOMETER POST TOTAL PROJECT	SHEET No.	TOTAL SHEETS
11	SD	5,805	R49.9/R51.7, 42.6/46.5	255	886

REGISTERED CIVIL ENGINEER — DATE 05-11-09

9-27-10
PLANS APPROVAL DATE

REGISTERED PROFESSIONAL ENGINEER — CARL E. SPIER No. C 49744 Exp. 9-30-10 CIVIL — STATE OF CALIFORNIA

THE STATE OF CALIFORNIA OR ITS OFFICERS OR AGENTS SHALL NOT BE RESPONSIBLE FOR THE ACCURACY OR COMPLETENESS OF SCANNED COPIES OF THIS PLAN SHEET.

CITY OF SAN DIEGO
600 B STREET, SUITE 800
SAN DIEGO, CA 92101

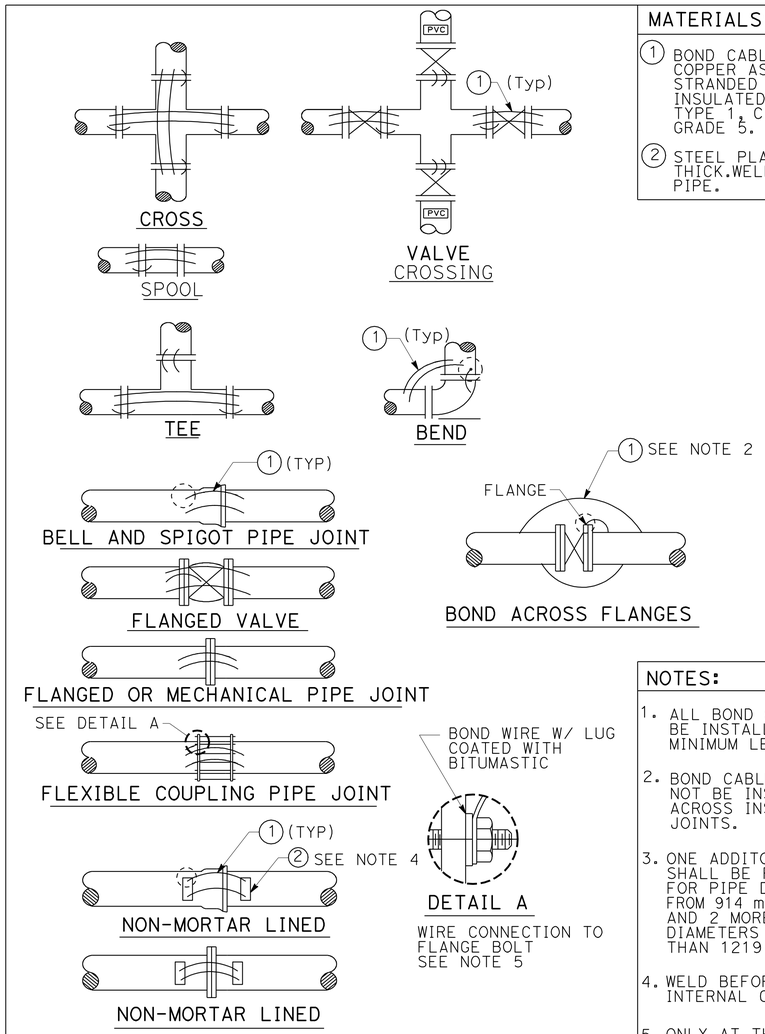

JOINT BONDING OF NON-WELDED PIPE JOINTS & FITTINGS

MATERIALS:

1. BOND CABLE: AWG #6 COPPER ASTM B3 STRANDED ASTM B8 INSULATED ASTM D1248 TYPE 1, CLASS C GRADE 5.
2. STEEL PLATE: 3.3 mm THICK.WELD TO THE PIPE.

NOTES:

1. ALL BOND CABLE SHALL BE INSTALLED AT MINIMUM LENGTH.
2. BOND CABLES SHALL NOT BE INSTALLED ACROSS INSULATING JOINTS.
3. ONE ADDITONAL CABLE SHALL BE REQUIRED FOR PIPE DIAMETERS FROM 914 mm TO 1219 mm AND 2 MORE FOR DIAMETERS LARGER THAN 1219 mm.
4. WELD BEFORE APPLYING INTERNAL COATING.
5. ONLY AT THE APPROVAL OF CITY'S CORROSION ENGINEER.

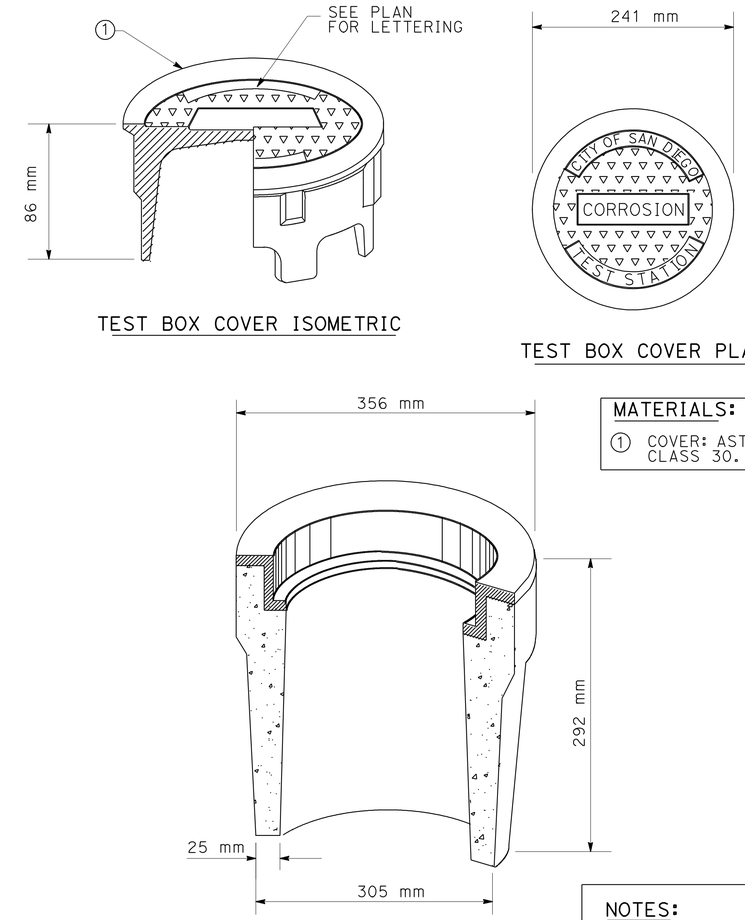

MATERIALS:

1. COVER: ASTM A 48 CLASS 30.

NOTES:

1. COVER WEIGHT: 5.44Kg.
2. BODY WEIGHT: 26.31Kg.
3. THE COVER SHALL HAVE CASTED MARKING IN 13 mm HIGH RAISED LETTERS.

AT-GRADE CONCRETE TEST BOX

ALL DIMENSIONS ARE IN METERS UNLESS OTHERWISE SHOWN

UTILITY DETAILS

NO SCALE

UD-12

STATE OF CALIFORNIA - DEPARTMENT OF TRANSPORTATION

CONSULTANT FUNCTIONAL SUPERVISOR: MAHMOUD ORIQAT

CALCULATED-DESIGNED BY: FARLITO VALENZUELA — CHECKED BY: MAHMOUD ORIQAT

REVISED BY — DATE REVISED

LAST REVISION 05-23-09 — DATE PLOTTED => 29-SEP-2010 — TIME PLOTTED => 14:08

Dist	COUNTY	ROUTE	KILOMETER POST TOTAL PROJECT	SHEET No.	TOTAL SHEETS
11	SD	5,805	R49.9/R51.7, 42.6/46.5	256	886

REGISTERED CIVIL ENGINEER — DATE 05-11-09

9-27-10
PLANS APPROVAL DATE

REGISTERED PROFESSIONAL ENGINEER — CARL E. SPIER No. C 49744 Exp. 9-30-10 CIVIL — STATE OF CALIFORNIA

THE STATE OF CALIFORNIA OR ITS OFFICERS OR AGENTS SHALL NOT BE RESPONSIBLE FOR THE ACCURACY OR COMPLETENESS OF SCANNED COPIES OF THIS PLAN SHEET.

CITY OF SAN DIEGO
600 B STREET, SUITE 800
SAN DIEGO, CA 92101

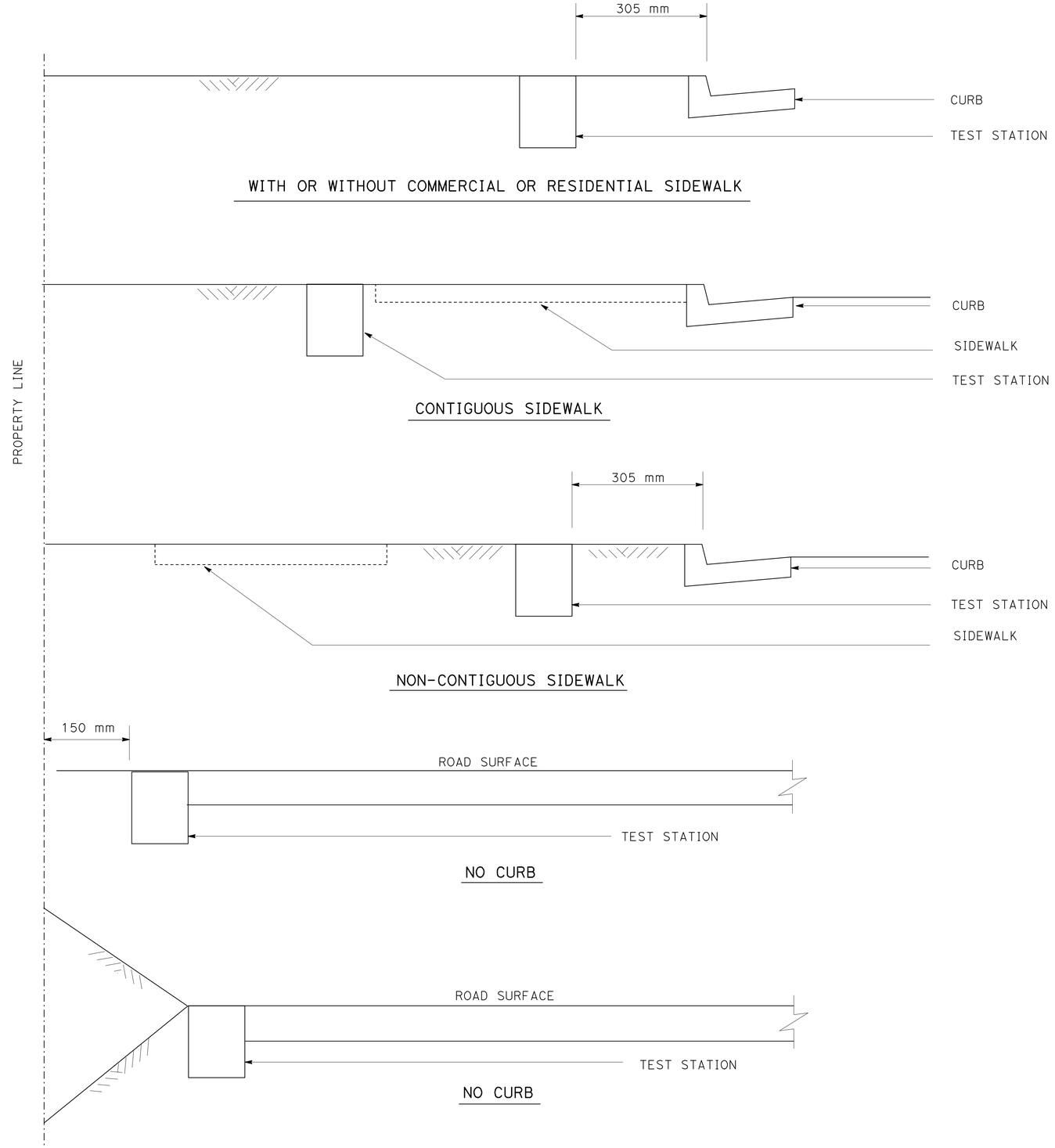

TEST STATION LOCATION

ALL DIMENSIONS ARE IN METERS UNLESS OTHERWISE SHOWN

UTILITY DETAILS

NO SCALE

UD-13

STATE OF CALIFORNIA - DEPARTMENT OF TRANSPORTATION
Caltrans

CONSULTANT FUNCTIONAL SUPERVISOR: MAHMOUD ORIQAT
CALCULATED-DESIGNED BY: FARLITO VALENZUELA
CHECKED BY: MAHMOUD ORIQAT
REVISED BY
DATE REVISED

LAST REVISION 05-23-09
DATE PLOTTED => 29-SEP-2010
TIME PLOTTED => 14:09

DIST	COUNTY	ROUTE	KILOMETER POST TOTAL PROJECT	SHEET No.	TOTAL SHEETS
11	SD	5,805	R49.9/R51.7, 42.6/46.5	257	886

Caltrans Metric

REGISTERED CIVIL ENGINEER — DATE 05-11-09

9-27-10
PLANS APPROVAL DATE

REGISTERED PROFESSIONAL ENGINEER — CARL E. SPIER No. C 49744 Exp. 9-30-10 CIVIL — STATE OF CALIFORNIA

THE STATE OF CALIFORNIA OR ITS OFFICERS OR AGENTS SHALL NOT BE RESPONSIBLE FOR THE ACCURACY OR COMPLETENESS OF SCANNED COPIES OF THIS PLAN SHEET.

CITY OF SAN DIEGO
600 B STREET, SUITE 800
SAN DIEGO, CA 92101

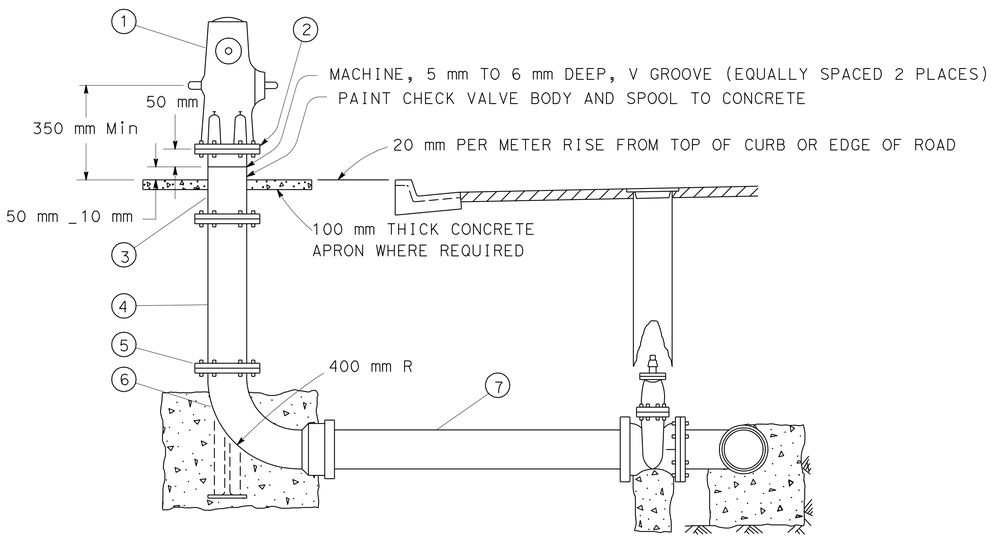

150 mm FIRE HYDRANT

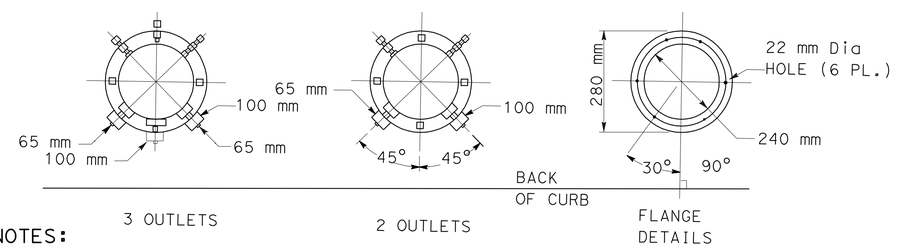

NOTES:

1. ITEM (4) & (7) MAY BE CEMENT LINED AND COATED STEEL PIPE WHERE PERMITED.
2. EXTENSION SPOOL (3) & (4) MAYBE COMBINED AS ONE SPOOL.

LEGEND:

(1) FIRE HYDRANT.
(2) 150 mm EXTENSION SPOOL (DOUBLE MACHINE GROOVED).
(3) BREAK -OFF CHECK VALVE BODY OR EXTENSION SPOOL AS REQUIRED BY AGENCY OR SHOWN ON PLANS.
(4) EXTENSION SPOOL.
(5) 19 mm X 75 mm HEX HEAD MACHINE BOLTS AND NUTS (TYPICAL).
(6) HYDRANT ELBOW.
(7) WATER PIPE.

FIRE HYDRANT INSTALLATION

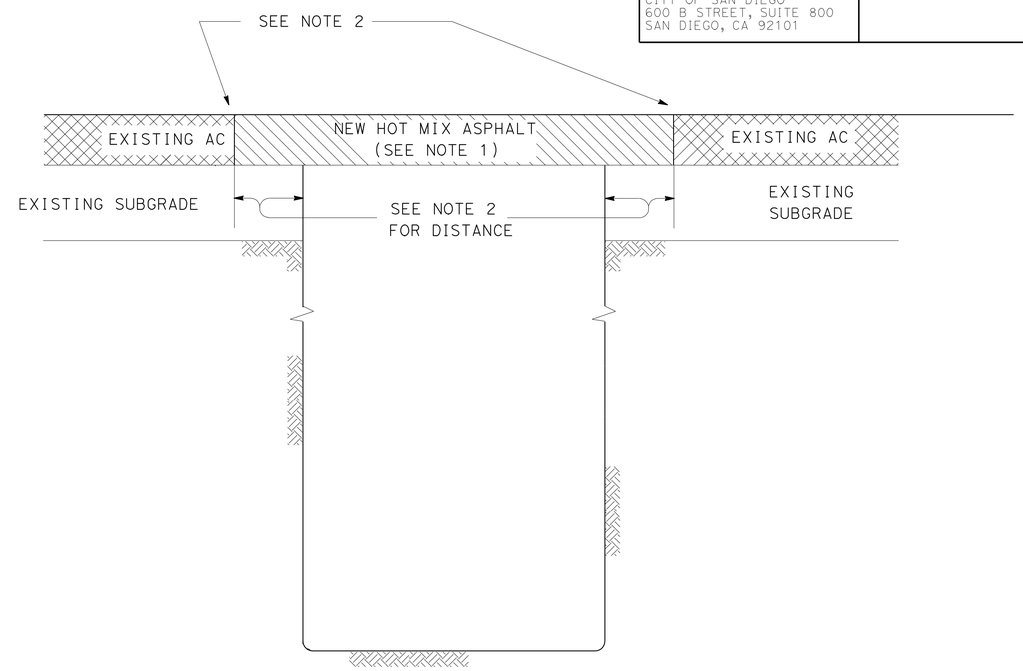

TRENCH RESURFACING DETAIL

NOTES:

1. MATCH EXISTING AC DEPTH OR 150 mm MINIMUM TO CALTRANS STANDARD
2. TRENCH EDGES TO BE CUT A MINIMUM OF 150 mm WIDER THAN TRENCH FOR TRENCHES 1000 mm WIDE OR LESS AND 300 mm FOR TRENCHES WIDER THAN 1000 mm.
3. BASE MATERIAL SHALL BE REPLACED TO DEPTH OF EXISTING BASE. HOT MIX ASPHALT BE SUBSTITUTED FOR BASE MATERIAL.
4. SLOUGHING OF TRENCH UNDER PAVEMENT SHALL BE CAUSE FOR REQUIRING ADDITIONAL PAVEMENT AND BASE AT CONTRACTORS EXPENSE.
5. A TACK COAT OF ASPHALTIC EMULSION OR PAVING ASPHALT SHALL BE APPLIED TO EXISTING AC AT ALL CONTACT SURFACES PRIOR TO RESURFACING.

ALL DIMENSIONS ARE IN METERS UNLESS OTHERWISE SHOWN

UTILITY DETAILS

NO SCALE

UD-14

REVISED BY	DATE REVISED

FARLITO VALENZUELA
MAHMOUD ORIQAT

CALCULATED-DESIGNED BY
CHECKED BY

CONSULTANT FUNCTIONAL SUPERVISOR
MAHMOUD ORIQAT

STATE OF CALIFORNIA - DEPARTMENT OF TRANSPORTATION
Caltrans

LAST REVISION 06-26-09
DATE PLOTTED => 29-SEP-2010
TIME PLOTTED => 14:09

Dist	COUNTY	ROUTE	KILOMETER POST TOTAL PROJECT	SHEET No.	TOTAL SHEETS
11	SD	5,805	R49.9/R51.7, 42.6/46.5	258	886

REGISTERED CIVIL ENGINEER 05-11-09 DATE

9-27-10
PLANS APPROVAL DATE

REGISTERED PROFESSIONAL ENGINEER CARL E. SPIER No. C 49744 Exp. 9-30-10 CIVIL STATE OF CALIFORNIA

THE STATE OF CALIFORNIA OR ITS OFFICERS OR AGENTS SHALL NOT BE RESPONSIBLE FOR THE ACCURACY OR COMPLETENESS OF SCANNED COPIES OF THIS PLAN SHEET.

CITY OF SAN DIEGO
600 B STREET, SUITE 800
SAN DIEGO, CA 92101

Caltrans Metric

WATER SYSTEM QUANTITIES

UTILITY PLAN SHEET No.	400 mm WATER MAIN	400 mm BUTTERFLY VALVE	300 mm BUTTERFLY VALVE	ABANDON WATER FACILITIES	PAVEMENT RESTORATION FOR CITY FORCES FINAL CONNECTION (N)	ADJUST EXISTING GATE VALVE COVERS TO GRADE	ADJUST MANHOLE FRAME AND COVER TO GRADE	TEMPORARY RESURFACING (N)	FIRE HYDRANT	WARNING TAPE AND TRACING WIRE (N)	UTILITY PLAN SHEET No.
	m	Ea	Ea	m	m^2	Ea	Ea	m^2	Ea	m	
U-1						1					U-1
U-2										400	U-2
U-5						2	3				U-5
	366.1	3	2	186	25			75	1		U-16
SHEET TOTAL	366.1	3	2	186		3	3		1		

(N) = NOT A SEPARATE PAY ITEM, FOR INFORMATION ONLY.

UTILITY QUANTITES
(WATER LINE RELOCATION)

UQ-1

STATE OF CALIFORNIA - DEPARTMENT OF TRANSPORTATION
Caltrans

CONSULTANT FUNCTIONAL SUPERVISOR: MAHMOUD ORIQAT
CALCULATED-DESIGNED BY: FARLITO VALENZUELA
CHECKED BY: MAHMOUD ORIQAT
REVISED BY
DATE REVISED

LAST REVISION 05-24-09
DATE PLOTTED => 29-SEP-2010
TIME PLOTTED => 14:09

DIST	COUNTY	ROUTE	KILOMETER POST TOTAL PROJECT	SHEET NO.	TOTAL SHEETS
11	SD	5,805	R49.9/R51.7, 42.6/46.5	259	886

Glen P Parker — REGISTERED CIVIL ENGINEER — 5-08-09 DATE

9-27-10
PLANS APPROVAL DATE

REGISTERED PROFESSIONAL ENGINEER — GLEN PARKER No. C66490 Exp. 6/30/10 CIVIL — STATE OF CALIFORNIA

THE STATE OF CALIFORNIA OR ITS OFFICERS OR AGENTS SHALL NOT BE RESPONSIBLE FOR THE ACCURACY OR COMPLETENESS OF ELECTRONIC COPIES OF THIS PLAN SHEET.

Dokken Engineering
5675 Ruffin Road,
Suite 250
San Diego, CA 92123

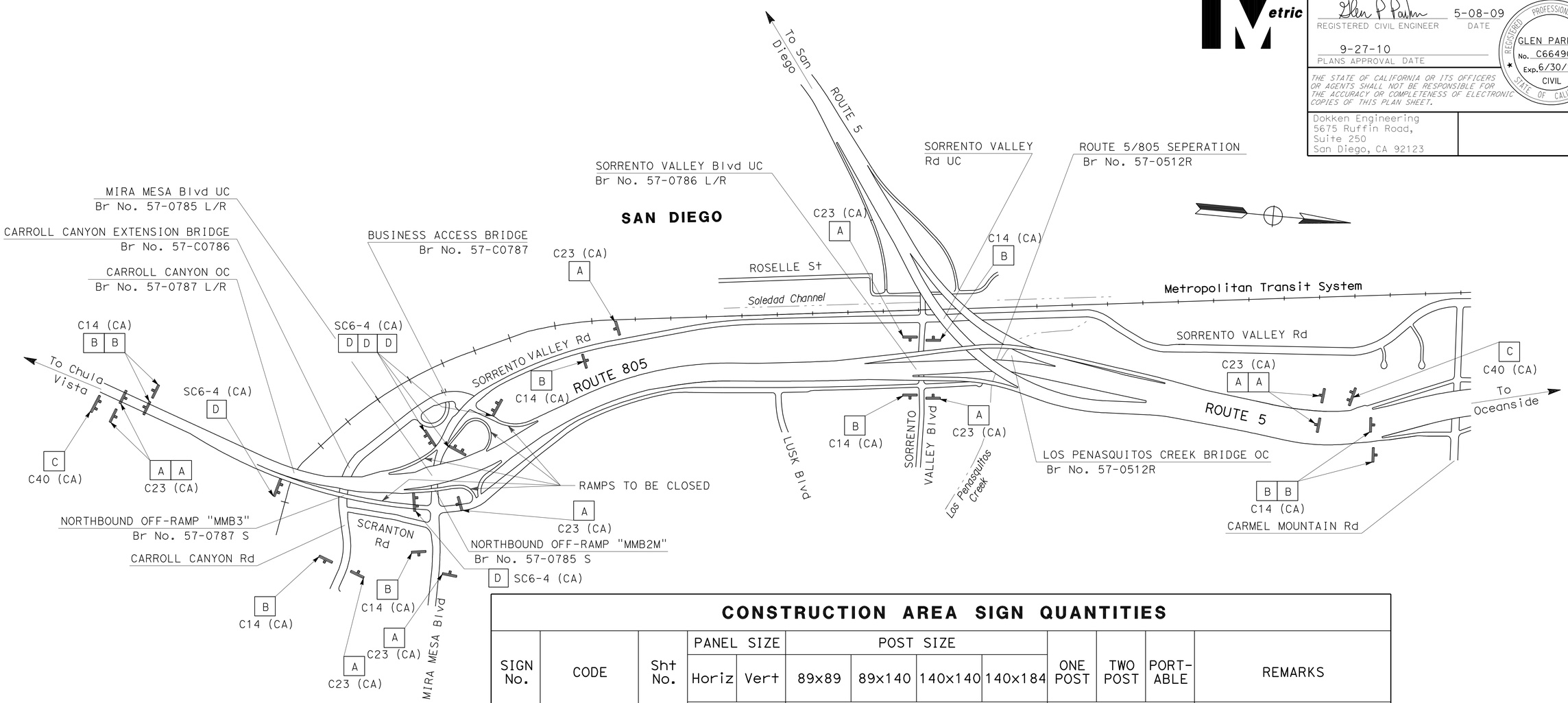

CONSTRUCTION AREA SIGN QUANTITIES

SIGN No.	CODE	Sht No.	PANEL SIZE Horiz	PANEL SIZE Vert	POST SIZE 89x89	POST SIZE 89x140	POST SIZE 140x140	POST SIZE 140x184	ONE POST	TWO POST	PORT-ABLE	REMARKS
			mm X mm		mm X mm				No. of SIGNS			
A	C23 (CA)	CS-1	1219 X 1219			x			10			STATIONARY
B	C14 (CA)		1219 X 610			x			9			STATIONARY
C	C40 (CA)		3658 X 1524					x		2		STATIONARY
D	SC6-4 (CA)		1219 X 1524								5	PORTABLE
								TOTAL	19	2	5	

LEGEND:

[X] = CONSTRUCTION AREA SIGN

NOTES:

1. EXACT SIGN LOCATIONS TO BE DETERMINED BY THE ENGINEER.
2. FEDERAL MUTCD SIGN CODES ARE SHOWN UNLESS DESIGNATED (CA) INDICATING STANDARD CALIFORNIA SIGN SPECIFICATIONS ARE USED.
3. EXISTING UTILITIES HAVE NOT BEEN SHOWN ON THESE PLAN SHEETS. THE CONTRACTOR SHALL VERIFY LOCATIONS OF EXISTING UTILITIES AND AVOID IMPACTING THESE EXISTING UTILITIES BY ADJUSTING THE FIELD LOCATION OF SIGNS AND POSTS IN CONSULTATION WITH THE ENGINEER.
4. FOR OTHER CONSTRUCTION AREA SIGNS, SEE TRAFFIC HANDLING PLANS AND STAGE CONSTRUCTION PLANS.

THIS PLAN ACCURATE FOR CONSTRUCTION AREA SIGN WORK ONLY

CONSTRUCTION AREA SIGNS

NO SCALE

CS-1

STATE OF CALIFORNIA - DEPARTMENT OF TRANSPORTATION
Caltrans

CONSULTANT FUNCTIONAL SUPERVISOR: CHRIS JOHNSON
CALCULATED-DESIGNED BY: DANIEL WAGNER
CHECKED BY: GLEN PARKER
REVISED BY
DATE REVISED

LAST REVISION 05-07-09
DATE PLOTTED => 29-SEP-2010
TIME PLOTTED => 14:09

Dist	COUNTY	ROUTE	KILOMETER POST TOTAL PROJECT	SHEET No.	TOTAL SHEETS
11	SD	5,805	R49.9/R51.7, 42.6/46.5	260	886

REGISTERED CIVIL ENGINEER 05-08-09 DATE

9-27-10
PLANS APPROVAL DATE

REGISTERED PROFESSIONAL ENGINEER YONG PAK No. C67706 Exp. 06-30-11 CIVIL STATE OF CALIFORNIA

THE STATE OF CALIFORNIA OR ITS OFFICERS OR AGENTS SHALL NOT BE RESPONSIBLE FOR THE ACCURACY OR COMPLETENESS OF SCANNED COPIES OF THIS PLAN SHEET.

Caltrans Metric

LEGEND:

- STAGE CONSTRUCTION
- DIRECTION OF TRAFFIC
- XX — CONSTRUCTION AREA SIGN (MUTCD SIGN CODES ARE SHOWN UNLESS DESIGNATED BY (CA) INDICATING CALIFORNIA SIGN SPECIFICATIONS ARE USED)
- B (XX) — BEGIN PAVEMENT DELINEATION DETAIL
- E (XX) — END PAVEMENT DELINEATION DETAIL
- BR (XX) — BEGIN REMOVE PAVEMENT DELINEATION DETAIL
- ER (XX) — END REMOVE PAVEMENT DELINEATION DETAIL
- R (XX) — REMOVE PAVEMENT DELINEATION DETAIL
- (XX) — PAVEMENT DELINEATION DETAIL
- T (XX) — TEMPORARY PAVEMENT DELINEATION DETAIL
- (AA/BB) — COMBINATION DETAIL-DETAILS AA AND BB
- BRT (XX) — BEGIN REMOVE TEMPORARY PAVEMENT DELINEATION DETAIL
- ERT (XX) — END REMOVE TEMPORARY PAVEMENT DELINEATION DETAIL
- I — TYPE III BARRICADE
- TEMPORARY CRASH CUSHION (TYPE ABSORB 350) (SEE CONSTRUCTION DETAIL SHEETS)
- TEMPORARY CRASH CUSHION ARRAY
- TRAFFIC PLASTIC DRUM (TPD)
- TEMPORARY RAILING (TYPE K)
- CONSTRUCTION WORK AREA THIS STAGE
- WORK TO BE DONE DURING PERMITTED ROAD LANE CLOSURE
- S/L — SAWCUT LINE
- HOV — HIGH OCCUPANCY VEHICLE

STAGE 1A

1. RESTRIPE AND PLACE Temp RAILING (TYPE K) NB AND SB Rte 805.
2. CONSTRUCT Temp CONSTRUCTION ACCESS ROAD "D-3" LINE.
3. CONSTRUCT Temp BUSINESS ACCESS ROAD "D-1" LINE.
4. PLACE Temp RAILING (TYPE K) "MMB1".
5. RESTRIPE AND PLACE Temp RAILING (TYPE K) "MMB2M".
6. RESTRIPE "MMB4M".
7. RESTRIPE AND PLACE Temp RAILING (TYPE K) "MMB6M".
8. CONSTRUCT "MMB6M".
9. RESTRIPE AND PLACE Temp RAILING (TYPE-K) ON SORRENTO VALLEY ROAD AND MIRA MESA Blvd.
10. CONSTRUCT NORTHSIDE OF SORRENTO VALLEY ROAD AND MIRA MESA Blvd (SIDEWALK SHALL BE OPEN AT ALL TIMES).
11. REMOVE AND PAVE RAISED ISLANDS ON SORRENTO VALLEY ROAD.
12. CONSTRUCT Rte 805 HOV LANES.
13. CONSTRUCT OUTSIDE WIDENING SB Sta FROM 442+70 TO 445+20 (MUST COMPLETE AT THIS STAGE).
14. CONSTRUCT OUTSIDE WIDENING NB Sta FROM 442+67 TO 449+40 (MUST COMPLETE AT THIS STAGE).
15. REMOVE AND REPLACE NB OUTSIDE Conc BARRIER ON MIRA MESA Blvd UC.
16. CONSTRUCT CARROLL CANYON ROAD BRIDGE.
17. CONSTRUCT RW 445L/R.
18. RELOCATE SEWER VENT ON "SVB" LINE.
19. CONSTRUCT INTERSECTION OF "MMB6M", SORRENTO VALLEY ROAD, AND MIRA MESA Blvd PRIOR TO STAGE 1B.
20. CONSTRUCT SEWER LINES ON "CCR" LINE.

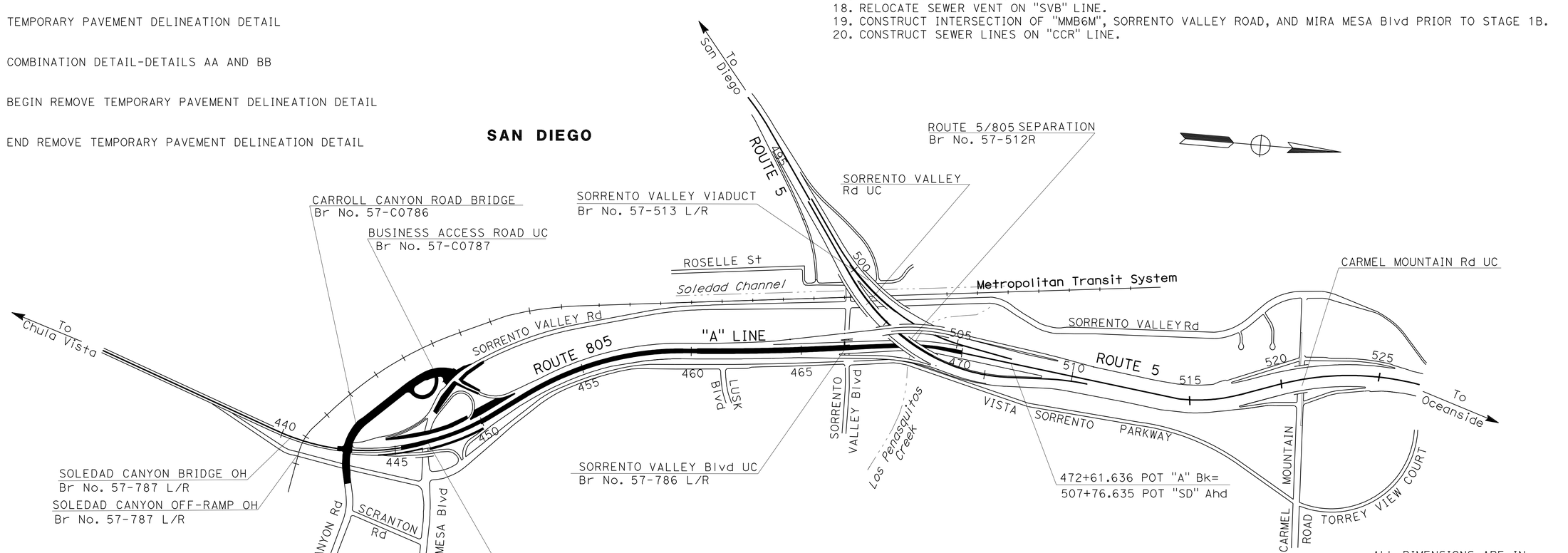

ALL DIMENSIONS ARE IN METERS UNLESS OTHERWISE SHOWN

THIS PLAN ACCURATE FOR STAGE CONSTRUCTION AND TRAFFIC HANDLING WORK ONLY

NO SCALE

STAGE 1A INDEX
STAGE CONSTRUCTION AND TRAFFIC HANDLING PLAN

SC-1

STATE OF CALIFORNIA - DEPARTMENT OF TRANSPORTATION
Caltrans PROJECT DEVELOPMENT

FUNCTIONAL SUPERVISOR: MAJID KHARRATI
CALCULATED-DESIGNED BY: KEN SAYLER
CHECKED BY: YONG PAK
REVISED BY / DATE REVISED

LAST REVISION 05-16-09
DATE PLOTTED => 29-SEP-2010
TIME PLOTTED => 14:09

Dist	COUNTY	ROUTE	KILOMETER POST TOTAL PROJECT	SHEET No.	TOTAL SHEETS
11	SD	5,805	R49.9/R51.7, 42.6/46.5	261	886

REGISTERED CIVIL ENGINEER 05-08-09 DATE

9-27-10
PLANS APPROVAL DATE

REGISTERED PROFESSIONAL ENGINEER YONG PAK No. C67706 Exp. 06-30-11 CIVIL STATE OF CALIFORNIA

THE STATE OF CALIFORNIA OR ITS OFFICERS OR AGENTS SHALL NOT BE RESPONSIBLE FOR THE ACCURACY OR COMPLETENESS OF SCANNED COPIES OF THIS PLAN SHEET.

Caltrans Metric

STAGE 1B

1. RESTRIPE AND PLACE Temp RAILING (TYPE K) ON NB AND SB Rte 805.
2. CONTINUE TO CONSTRUCT Rte 805 HOV LANES.
3. RESTRIPE AND PLACE Temp RAILING (TYPE K) ON "MMB4M".
4. RESTRIPE AND PLACE Temp RAILING (TYPE K) ON "MMB6M".
5. RESTRIPE AND PLACE Temp RAILING (TYPE-K) ON SORRENTO VALLEY ROAD AND MIRA MESA Blvd.
6. RESTRIPE AND PLACE Temp RAILING (TYPE-K) ON SORRENTO VALLEY Blvd.
7. CONSTRUCT RW 443R AND BUSINESS ACCESS ROAD UC & RW 437R & RW 438L &438R.
8. PLACE Temp RAILING (TYPE-K) AT LEFT SIDE OF SHOULDER ON "MMB5U" LINE.
9. CONSTRUCT MIRA MESA Blvd UC (CLOSING MEDIAN GAP AND SOUTH BOUND WIDENING).
10. CONSTRUCT DIRECT ACCESS RAMP WALLS.
11. CONSTRUCT SOUTHSIDE OF "MMB4M".
12. CONSTRUCT SOUTHSIDE OF "SVRM" AND "MMBM" (SIDEWALK SHALL BE OPEN AT ALL TIME).
13. CONSTRUCT SORRENTO VALLEY Blvd UC.
14. CONSTRUCT DETOUR FOR "D-2".
15. CONSTRUCT PRESSURE REDUCING STATION ON "BR" LINE.
16. CONTINUE TO CONSTRUCT CARROLL CANYON ROAD BRIDGE, RW 445L/R.
17. CONSTRUCT SOLEDAD CANYON BRIDGE OH.

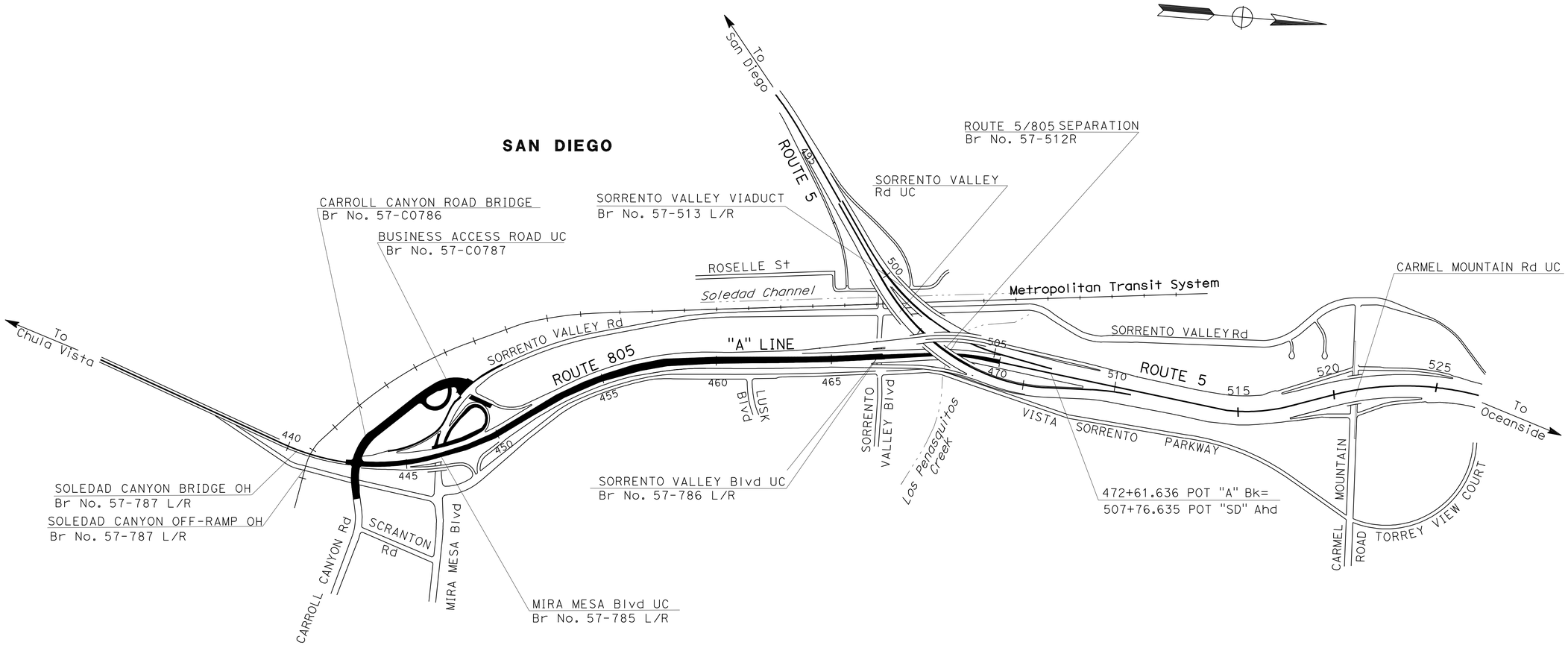

ALL DIMENSIONS ARE IN METERS UNLESS OTHERWISE SHOWN

STAGE 1B INDEX
STAGE CONSTRUCTION AND TRAFFIC HANDLING PLAN

NO SCALE

SC-2

THIS PLAN ACCURATE FOR STAGE CONSTRUCTION AND TRAFFIC HANDLING WORK ONLY

STATE OF CALIFORNIA - DEPARTMENT OF TRANSPORTATION
Caltrans PROJECT DEVELOPMENT

FUNCTIONAL SUPERVISOR: MAJID KHARRATI
CALCULATED-DESIGNED BY: KEN SAYLER
CHECKED BY: YONG PAK
REVISED BY / DATE REVISED

LAST REVISION 05-16-09 DATE PLOTTED => 29-SEP-2010 TIME PLOTTED => 14:09

Dist	COUNTY	ROUTE	KILOMETER POST TOTAL PROJECT	SHEET No.	TOTAL SHEETS
11	SD	5,805	R49.9/R51.7, 42.6/46.5	262	886

REGISTERED CIVIL ENGINEER DATE 05-08-09

PLANS APPROVAL DATE 9-27-10

REGISTERED PROFESSIONAL ENGINEER YONG PAK No. C67706 Exp. 06-30-11 CIVIL STATE OF CALIFORNIA

THE STATE OF CALIFORNIA OR ITS OFFICERS OR AGENTS SHALL NOT BE RESPONSIBLE FOR THE ACCURACY OR COMPLETENESS OF SCANNED COPIES OF THIS PLAN SHEET.

Caltrans Metric

STAGE 2A

1. RESTRIPE AND PLACE Temp RAILING (TYPE K) ON NB AND SB Rte 805.
2. RESTRIPE AND PLACE Temp RAILING (TYPE K) ON MMB4M.
3. RESTRIPE AND PLACE Temp RAILING (TYPE K) ON "SVRM" AND "MMBM".
4. CONSTRUCT NORTHSIDE OF "MMB4M".
5. CONSTRUCT "MMB5U".
6. CONSTRUCT REMAINING "SVRM" AND "MMBM" (SIDEWALK SHALL BE OPEN AT ALL TIME).
7. CONSTRUCT OUTSIDE WIDENING ON NB (Sta 466+00 TO 467+71 "A") AND SB Rte 805 (Sta 437+43 TO 440+20 "A").
8. CONTINUE TO CONSTRUCT DIRECT ACCESS RAMP WALLS.
9. COMPLETE ALL STRUCTURES.

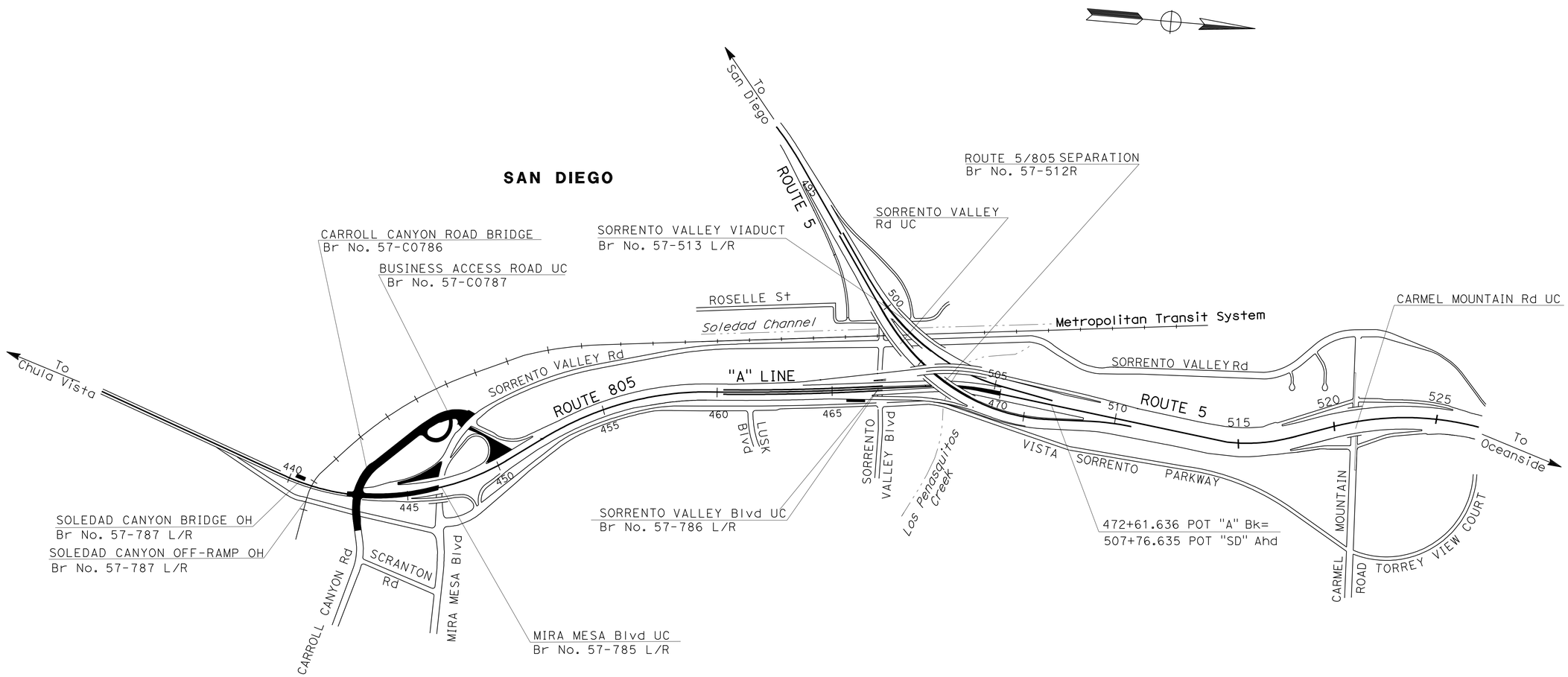

ALL DIMENSIONS ARE IN METERS UNLESS OTHERWISE SHOWN

STAGE 2A INDEX

STAGE CONSTRUCTION AND TRAFFIC HANDLING PLAN

NO SCALE

SC-3

THIS PLAN ACCURATE FOR STAGE CONSTRUCTION AND TRAFFIC HANDLING WORK ONLY

STATE OF CALIFORNIA - DEPARTMENT OF TRANSPORTATION
Caltrans PROJECT DEVELOPMENT

FUNCTIONAL SUPERVISOR: MAJID KHARRATI
CALCULATED-DESIGNED BY: KEN SAYLER
CHECKED BY: YONG PAK
REVISED BY / DATE REVISED

LAST REVISION 05-16-09
DATE PLOTTED => 29-SEP-2010
TIME PLOTTED => 14:09

Dist	COUNTY	ROUTE	KILOMETER POST TOTAL PROJECT	SHEET No.	TOTAL SHEETS
11	SD	5,805	R49.9/R51.7, 42.6/46.5	263	886

REGISTERED CIVIL ENGINEER 05-08-09 DATE

9-27-10
PLANS APPROVAL DATE

REGISTERED PROFESSIONAL ENGINEER
YONG PAK
No. C67706
Exp. 06-30-11
CIVIL
STATE OF CALIFORNIA

THE STATE OF CALIFORNIA OR ITS OFFICERS OR AGENTS SHALL NOT BE RESPONSIBLE FOR THE ACCURACY OR COMPLETENESS OF SCANNED COPIES OF THIS PLAN SHEET.

Caltrans Metric

STAGE 2B

1. RESTRIPE AND PLACE Temp RAILING (TYPE K) ON MIRA MESA Blvd "MMBM" LINE.
2. PLACE Temp RAILING (TYPE K) ON "MMB5U".
3. REMOVE DETOUR "D-2" LINE AND CONSTRUCT FINAL GRADING.
4. REMOVE DETOUR "D-1" AND CONSTRUCT FINAL GRADING.
5. CONSTRUCT FINAL GRADING AT "MMB3" LINE.
6. COMPLETE "MMB5U" AND "MMBM".
7. CONSTRUCT OVERHEAD SIGN AT STATION 525+80 "SD" LINE.

STAGE 2C

1. REMOVE ALL STAGE CONSTRUCTION PAVEMENT DELINEATION.

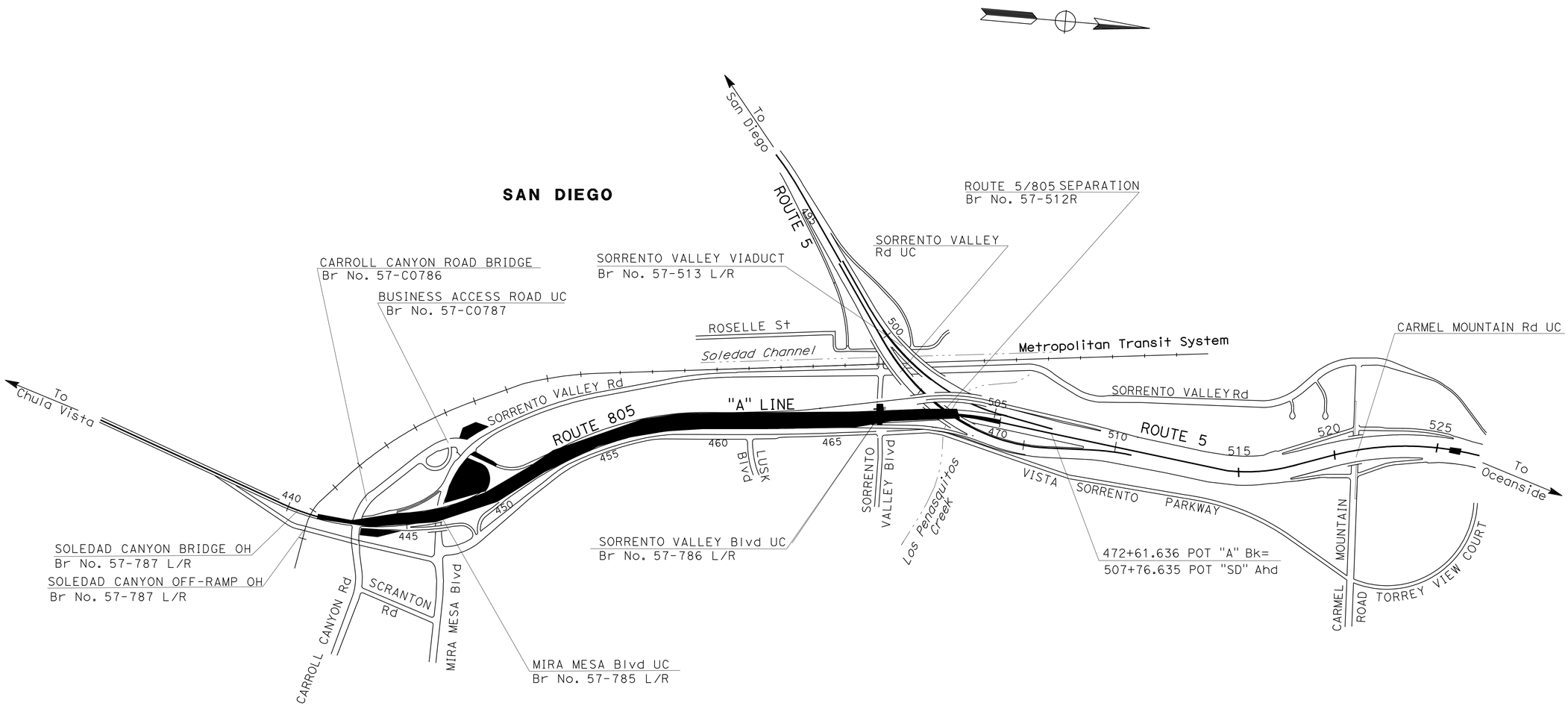

ALL DIMENSIONS ARE IN METERS UNLESS OTHERWISE SHOWN

STAGE 2B AND 2C INDEX

STAGE CONSTRUCTION AND TRAFFIC HANDLING PLAN

NO SCALE

SC-4

THIS PLAN ACCURATE FOR STAGE CONSTRUCTION AND TRAFFIC HANDLING WORK ONLY

STATE OF CALIFORNIA - DEPARTMENT OF TRANSPORTATION
Caltrans PROJECT DEVELOPMENT

FUNCTIONAL SUPERVISOR: MAJID KHARRATI
CALCULATED-DESIGNED BY: KEN SAYLER
CHECKED BY: YONG PAK
REVISED BY / DATE REVISED

LAST REVISION 05-16-09
DATE PLOTTED => 29-SEP-2010
TIME PLOTTED => 14:09

Dist	COUNTY	ROUTE	KILOMETER POST TOTAL PROJECT	SHEET No.	TOTAL SHEETS
11	SD	5,805	R49.9/R51.7, 42.6/46.5	264	886

REGISTERED CIVIL ENGINEER 05-08-09 DATE

9-27-10
PLANS APPROVAL DATE

REGISTERED PROFESSIONAL ENGINEER YONG PAK No. C67706 Exp. 06-30-11 CIVIL STATE OF CALIFORNIA

THE STATE OF CALIFORNIA OR ITS OFFICERS OR AGENTS SHALL NOT BE RESPONSIBLE FOR THE ACCURACY OR COMPLETENESS OF SCANNED COPIES OF THIS PLAN SHEET.

Caltrans Metric

NOTE:

1. FOR COMPLETE RIGHT OF WAY AND ACCURATE ACCESS DATA, SEE RIGHT OF WAY RECORD MAPS AT DISTRICT OFFICE.

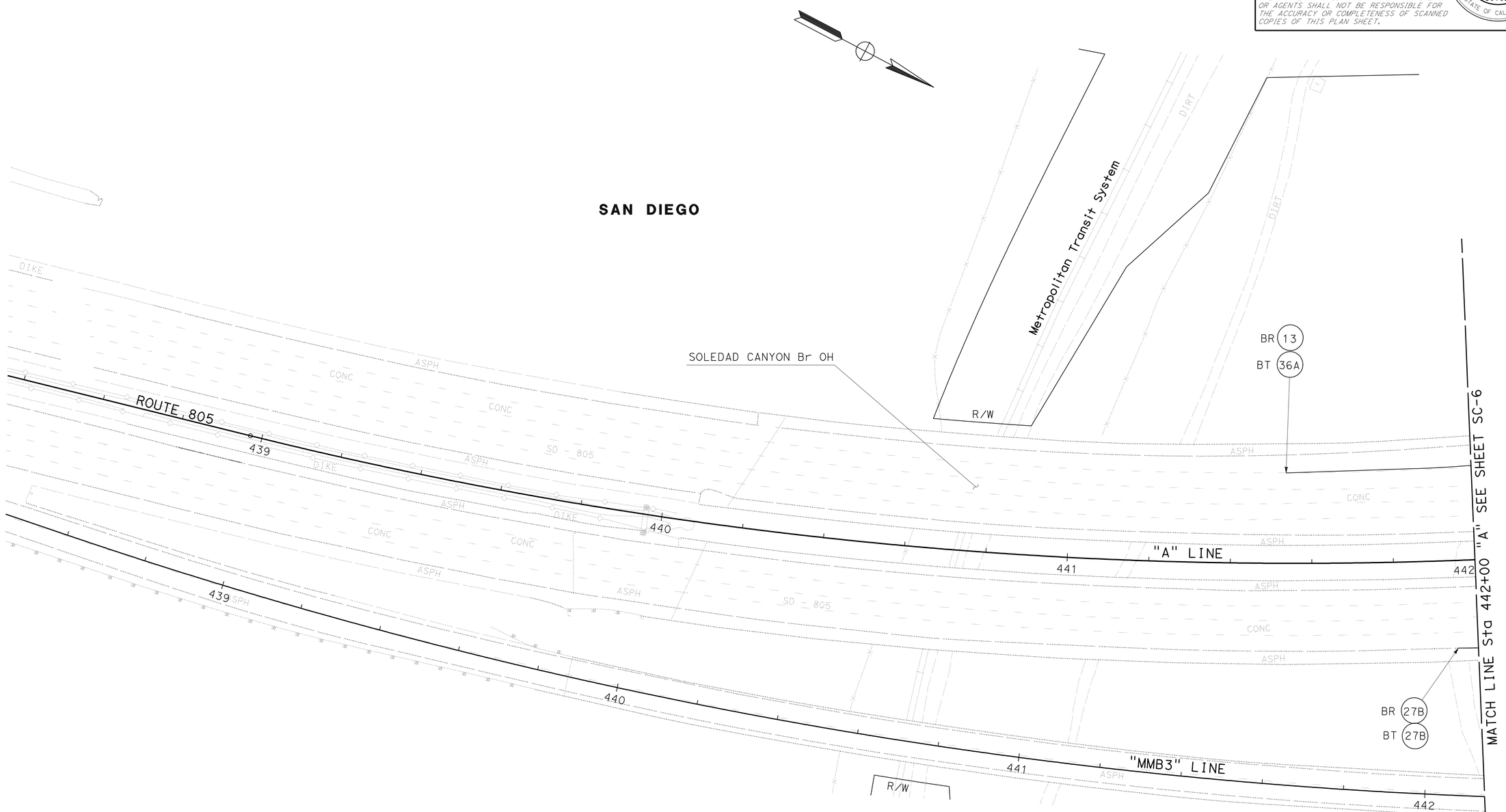

THIS PLAN ACCURATE FOR STAGE CONSTRUCTION AND TRAFFIC HANDLING WORK ONLY

ALL DIMENSIONS ARE IN METERS UNLESS OTHERWISE SHOWN

STAGE 1A
STAGE CONSTRUCTION AND TRAFFIC HANDLING PLAN

SCALE 1:500

SC-5

REVISED BY	DATE REVISED

KEN SAYLER — CALCULATED-DESIGNED BY
YONG PAK — CHECKED BY
MAJID KHARRATI — FUNCTIONAL SUPERVISOR

STATE OF CALIFORNIA - DEPARTMENT OF TRANSPORTATION
Caltrans® PROJECT DEVELOPMENT

LAST REVISION 05-16-09 DATE PLOTTED => 29-SEP-2010 TIME PLOTTED => 14:09

Dist	COUNTY	ROUTE	KILOMETER POST TOTAL PROJECT	SHEET No.	TOTAL SHEETS
11	SD	5,805	R49.9/R51.7, 42.6/46.5	265	886

REGISTERED CIVIL ENGINEER 05-08-09 DATE

9-27-10
PLANS APPROVAL DATE

REGISTERED PROFESSIONAL ENGINEER YONG PAK No. C67706 Exp 06-30-11 CIVIL STATE OF CALIFORNIA

THE STATE OF CALIFORNIA OR ITS OFFICERS OR AGENTS SHALL NOT BE RESPONSIBLE FOR THE ACCURACY OR COMPLETENESS OF SCANNED COPIES OF THIS PLAN SHEET.

Caltrans Metric

NOTE:

1. FOR COMPLETE RIGHT OF WAY AND ACCURATE ACCESS DATA, SEE RIGHT OF WAY RECORD MAPS AT DISTRICT OFFICE.

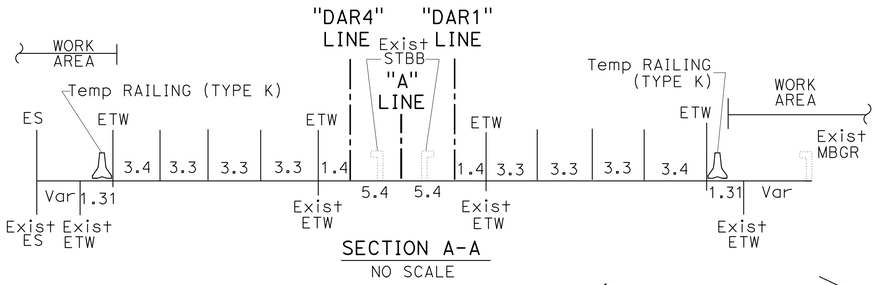

SECTION A-A
NO SCALE

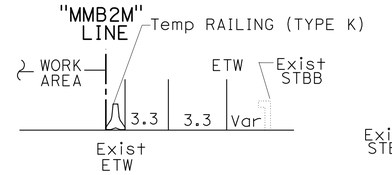

SECTION B-B
NO SCALE

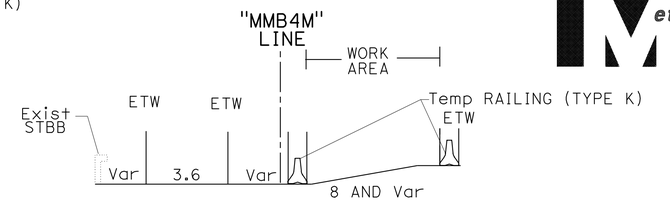

SECTION C-C
NO SCALE

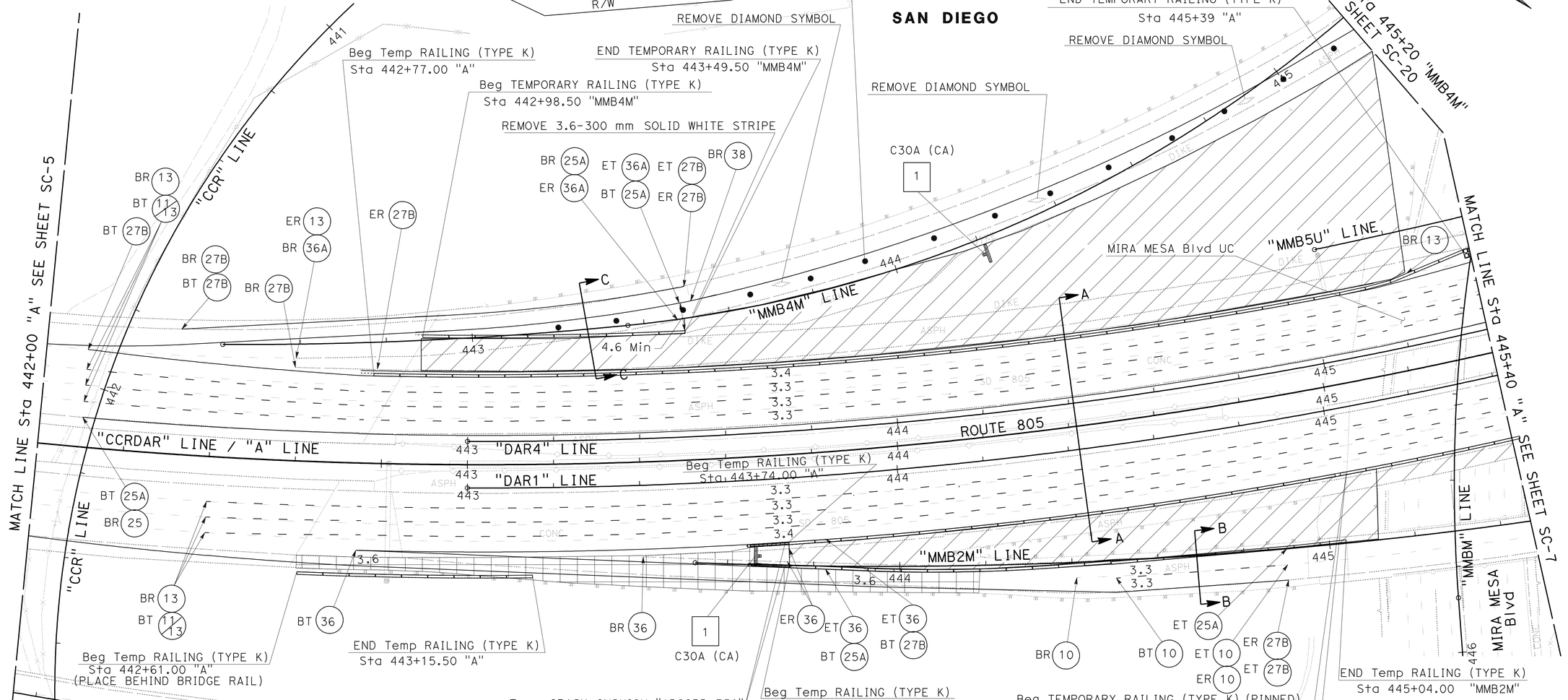

THIS PLAN ACCURATE FOR STAGE CONSTRUCTION AND TRAFFIC HANDLING WORK ONLY

ALL DIMENSIONS ARE IN METERS UNLESS OTHERWISE SHOWN

SCALE 1:500

STAGE 1A
STAGE CONSTRUCTION AND TRAFFIC HANDLING PLAN

SC-6

STATE OF CALIFORNIA - DEPARTMENT OF TRANSPORTATION
Caltrans PROJECT DEVELOPMENT

FUNCTIONAL SUPERVISOR: MAJID KHARRATI
CALCULATED-DESIGNED BY: KEN SAYLER
CHECKED BY: YONG PAK
REVISED BY / DATE REVISED

LAST REVISION 05-16-09
DATE PLOTTED => 29-SEP-2010
TIME PLOTTED => 14:10

Dist	COUNTY	ROUTE	KILOMETER POST TOTAL PROJECT	SHEET No.	TOTAL SHEETS
11	SD	5,805	R49.9/R51.7, 42.6/46.5	266	886

REGISTERED CIVIL ENGINEER 05-08-09 DATE

9-27-10
PLANS APPROVAL DATE

REGISTERED PROFESSIONAL ENGINEER
YONG PAK
No. C67706
Exp. 06-30-11
CIVIL
STATE OF CALIFORNIA

THE STATE OF CALIFORNIA OR ITS OFFICERS OR AGENTS SHALL NOT BE RESPONSIBLE FOR THE ACCURACY OR COMPLETENESS OF SCANNED COPIES OF THIS PLAN SHEET.

Caltrans Metric

NOTE:

1. FOR COMPLETE RIGHT OF WAY AND ACCURATE ACCESS DATA, SEE RIGHT OF WAY RECORD MAPS AT DISTRICT OFFICE.

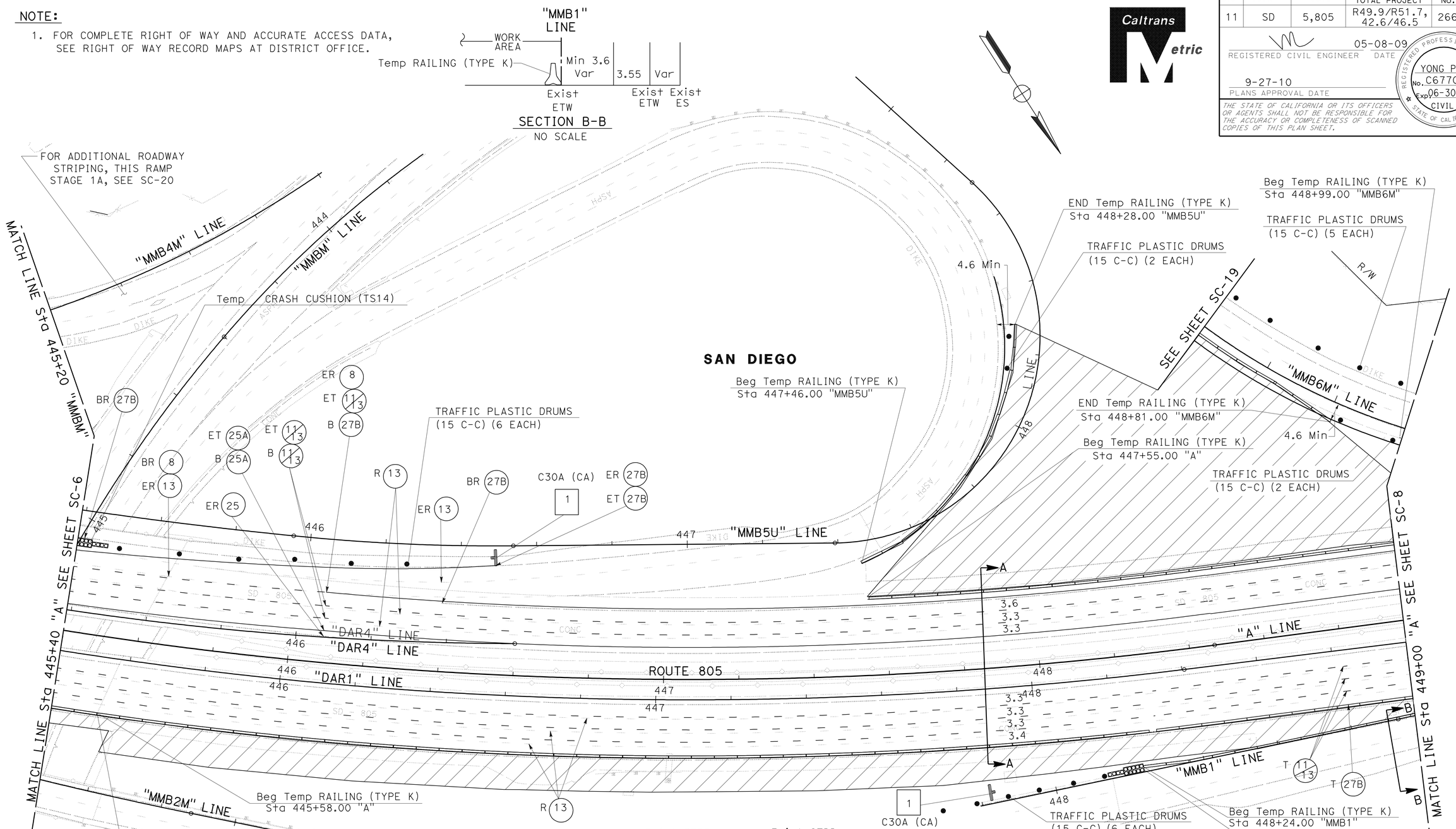

THIS PLAN ACCURATE FOR STAGE CONSTRUCTION AND TRAFFIC HANDLING WORK ONLY

ALL DIMENSIONS ARE IN METERS UNLESS OTHERWISE SHOWN

STAGE CONSTRUCTION AND TRAFFIC HANDLING PLAN
STAGE 1A

SCALE 1:500

SC-7

STATE OF CALIFORNIA - DEPARTMENT OF TRANSPORTATION
Caltrans PROJECT DEVELOPMENT

FUNCTIONAL SUPERVISOR: MAJID KHARRATI
CALCULATED-DESIGNED BY: KEN SAYLER
CHECKED BY: YONG PAK
REVISED BY
DATE REVISED

LAST REVISION DATE PLOTTED => 29-SEP-2010
TIME PLOTTED => 14:10

Dist	COUNTY	ROUTE	KILOMETER POST TOTAL PROJECT	SHEET No.	TOTAL SHEETS
11	SD	5,805	R49.9/R51.7, 42.6/46.5	267	886

REGISTERED CIVIL ENGINEER 05-08-09 DATE

9-27-10
PLANS APPROVAL DATE

REGISTERED PROFESSIONAL ENGINEER YONG PAK No. C67706 Exp. 06-30-11 CIVIL STATE OF CALIFORNIA

THE STATE OF CALIFORNIA OR ITS OFFICERS OR AGENTS SHALL NOT BE RESPONSIBLE FOR THE ACCURACY OR COMPLETENESS OF SCANNED COPIES OF THIS PLAN SHEET.

Caltrans Metric

NOTE:

1. FOR COMPLETE RIGHT OF WAY AND ACCURATE ACCESS DATA, SEE RIGHT OF WAY RECORD MAPS AT DISTRICT OFFICE.

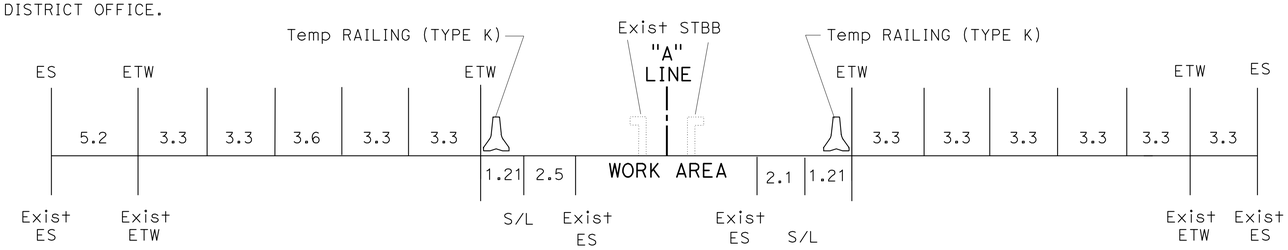

SECTION A-A
NO SCALE

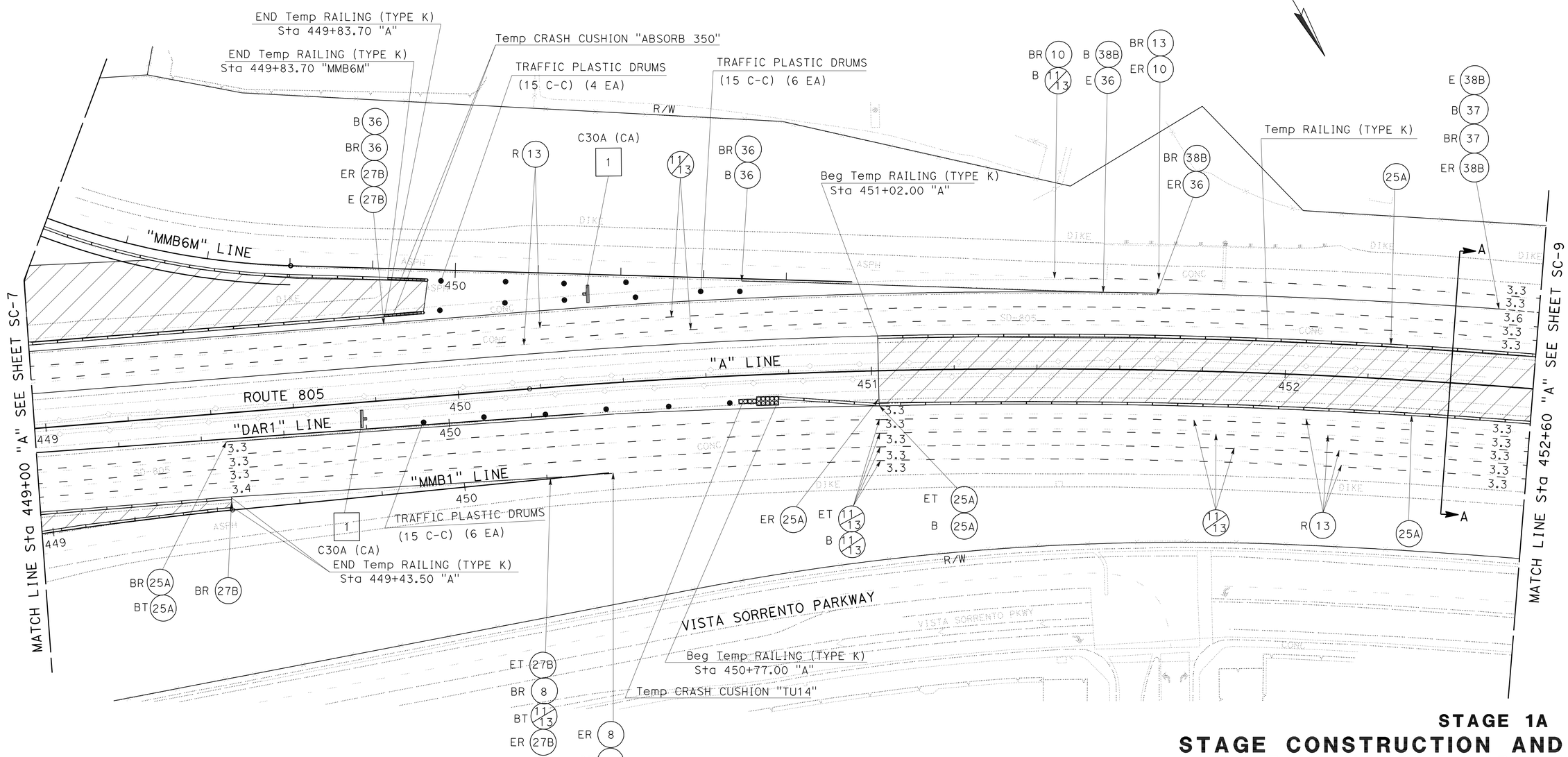

THIS PLAN ACCURATE FOR STAGE CONSTRUCTION AND TRAFFIC HANDLING WORK ONLY

ALL DIMENSIONS ARE IN METERS UNLESS OTHERWISE SHOWN

STAGE 1A

STAGE CONSTRUCTION AND TRAFFIC HANDLING PLAN

SCALE 1:500

SC-8

STATE OF CALIFORNIA - DEPARTMENT OF TRANSPORTATION
Caltrans PROJECT DEVELOPMENT

FUNCTIONAL SUPERVISOR: MAJID KHARRATI
CALCULATED-DESIGNED BY: KEN SAYLER
CHECKED BY: YONG PAK
REVISED BY / DATE REVISED

LAST REVISION 05-16-09
DATE PLOTTED => 29-SEP-2010
TIME PLOTTED => 14:10

Dist	COUNTY	ROUTE	KILOMETER POST TOTAL PROJECT	SHEET No.	TOTAL SHEETS
11	SD	5,805	R49.9/R51.7, 42.6/46.5	268	886

REGISTERED CIVIL ENGINEER 05-08-09 DATE

9-27-10
PLANS APPROVAL DATE

REGISTERED PROFESSIONAL ENGINEER YONG PAK No. C67706 Exp. 06-30-11 CIVIL STATE OF CALIFORNIA

THE STATE OF CALIFORNIA OR ITS OFFICERS OR AGENTS SHALL NOT BE RESPONSIBLE FOR THE ACCURACY OR COMPLETENESS OF SCANNED COPIES OF THIS PLAN SHEET.

Caltrans Metric

NOTE:

1. FOR COMPLETE RIGHT OF WAY AND ACCURATE ACCESS DATA, SEE RIGHT OF WAY RECORD MAPS AT DISTRICT OFFICE.

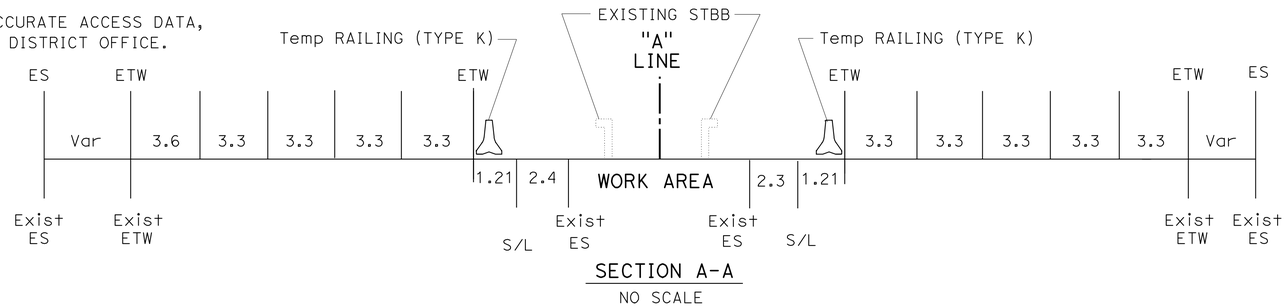

SECTION A-A
NO SCALE

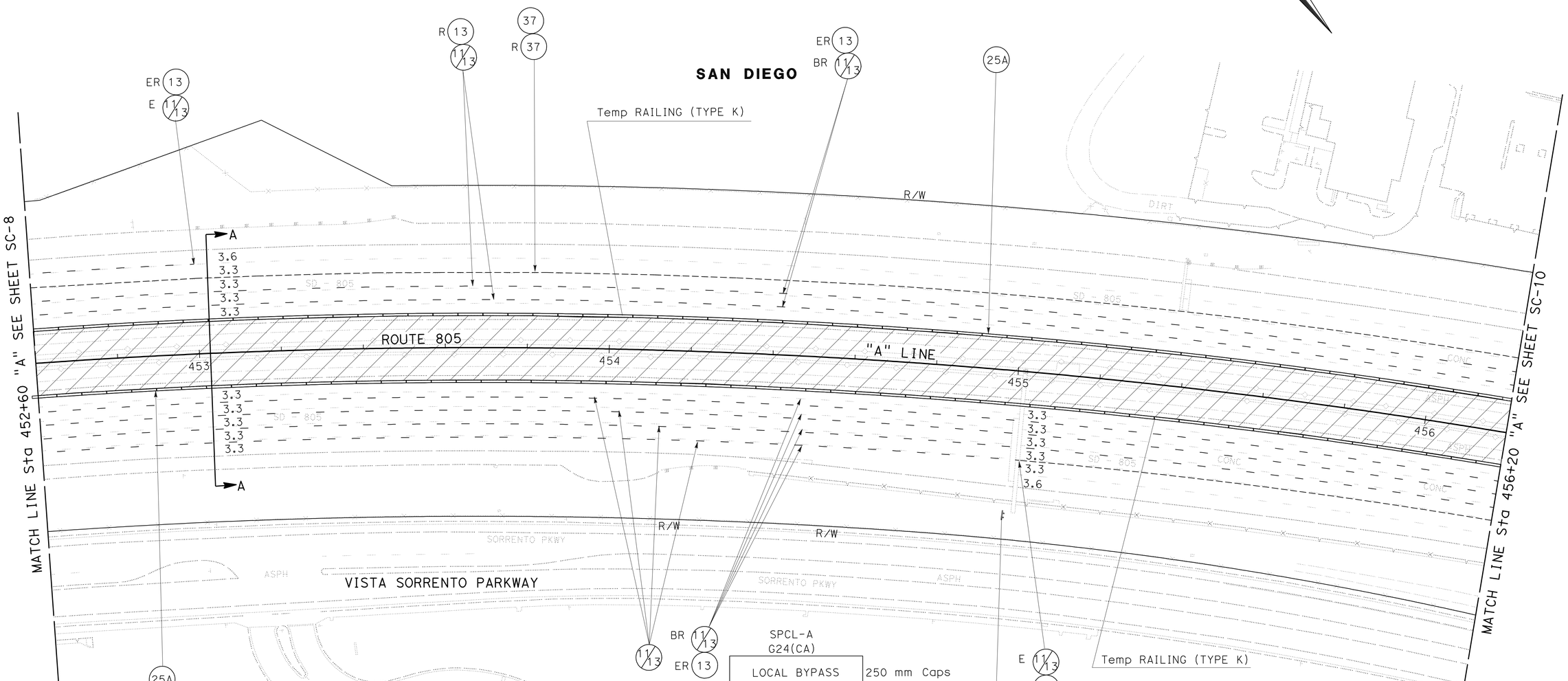

THIS PLAN ACCURATE FOR STAGE CONSTRUCTION AND TRAFFIC HANDLING WORK ONLY

ALL DIMENSIONS ARE IN METERS UNLESS OTHERWISE SHOWN

STAGE 1A

STAGE CONSTRUCTION AND TRAFFIC HANDLING PLAN

SCALE 1:500

SC-9

STATE OF CALIFORNIA - DEPARTMENT OF TRANSPORTATION
Caltrans PROJECT DEVELOPMENT

FUNCTIONAL SUPERVISOR: MAJID KHARRATI
CALCULATED-DESIGNED BY: KEN SAYLER
CHECKED BY: YONG PAK
REVISED BY / DATE REVISED

LAST REVISION 05-17-09
DATE PLOTTED => 29-SEP-2010
TIME PLOTTED => 14:10

Dist	COUNTY	ROUTE	KILOMETER POST TOTAL PROJECT	SHEET No.	TOTAL SHEETS
11	SD	5,805	R49.9/R51.7, 42.6/46.5	269	886

REGISTERED CIVIL ENGINEER 05-08-09 DATE

9-27-10
PLANS APPROVAL DATE

REGISTERED PROFESSIONAL ENGINEER YONG PAK No. C67706 Exp. 06-30-11 CIVIL STATE OF CALIFORNIA

THE STATE OF CALIFORNIA OR ITS OFFICERS OR AGENTS SHALL NOT BE RESPONSIBLE FOR THE ACCURACY OR COMPLETENESS OF SCANNED COPIES OF THIS PLAN SHEET.

Caltrans Metric

NOTE:

1. FOR COMPLETE RIGHT OF WAY AND ACCURATE ACCESS DATA, SEE RIGHT OF WAY RECORD MAPS AT DISTRICT OFFICE.

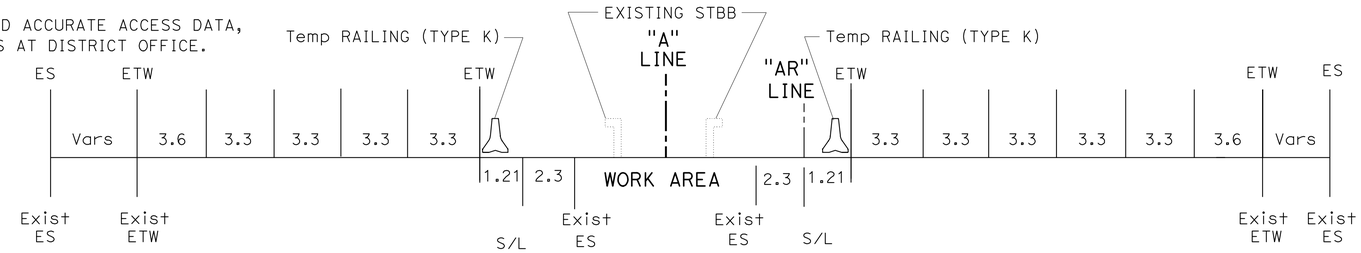

SECTION A-A
NO SCALE

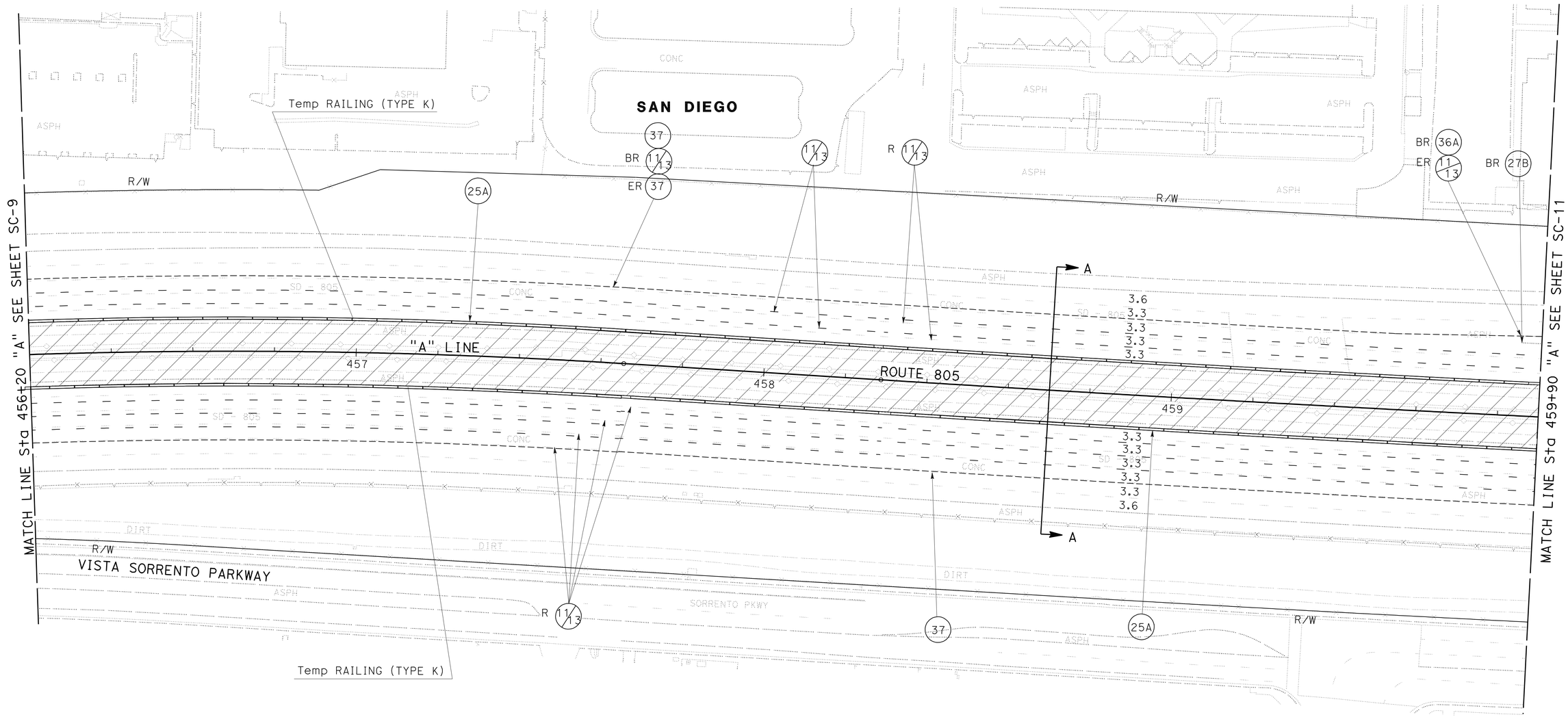

THIS PLAN ACCURATE FOR STAGE CONSTRUCTION AND TRAFFIC HANDLING WORK ONLY

ALL DIMENSIONS ARE IN METERS UNLESS OTHERWISE SHOWN

STAGE 1A

STAGE CONSTRUCTION AND TRAFFIC HANDLING PLAN

SCALE 1:500

SC-10

STATE OF CALIFORNIA - DEPARTMENT OF TRANSPORTATION
Caltrans PROJECT DEVELOPMENT

FUNCTIONAL SUPERVISOR: MAJID KHARRATI
CALCULATED-DESIGNED BY: KEN SAYLER
CHECKED BY: YONG PAK
REVISED BY / DATE REVISED

LAST REVISION 05-17-09 DATE PLOTTED => 29-SEP-2010 TIME PLOTTED => 14:10

Dist	COUNTY	ROUTE	KILOMETER POST TOTAL PROJECT	SHEET No.	TOTAL SHEETS
11	SD	5,805	R49.9/R51.7, 42.6/46.5	270	886

REGISTERED CIVIL ENGINEER 05-08-09 DATE

9-27-10
PLANS APPROVAL DATE

REGISTERED PROFESSIONAL ENGINEER YONG PAK No. C67706 Exp. 06-30-11 CIVIL STATE OF CALIFORNIA

THE STATE OF CALIFORNIA OR ITS OFFICERS OR AGENTS SHALL NOT BE RESPONSIBLE FOR THE ACCURACY OR COMPLETENESS OF SCANNED COPIES OF THIS PLAN SHEET.

Caltrans Metric

NOTE:

1. FOR COMPLETE RIGHT OF WAY AND ACCURATE ACCESS DATA, SEE RIGHT OF WAY RECORD MAPS AT DISTRICT OFFICE.

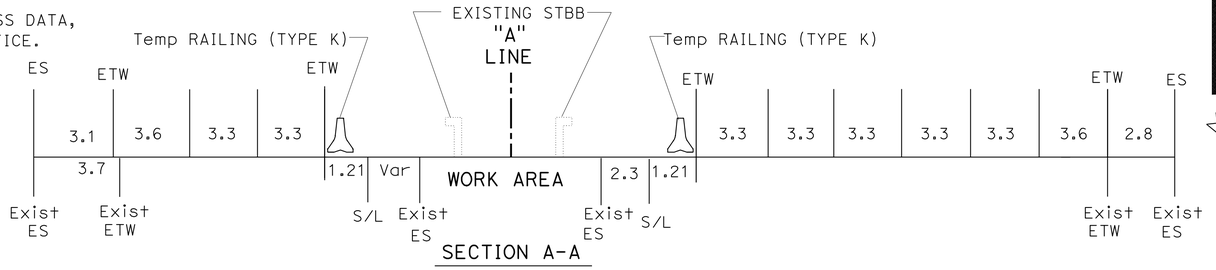

SECTION A-A
NO SCALE

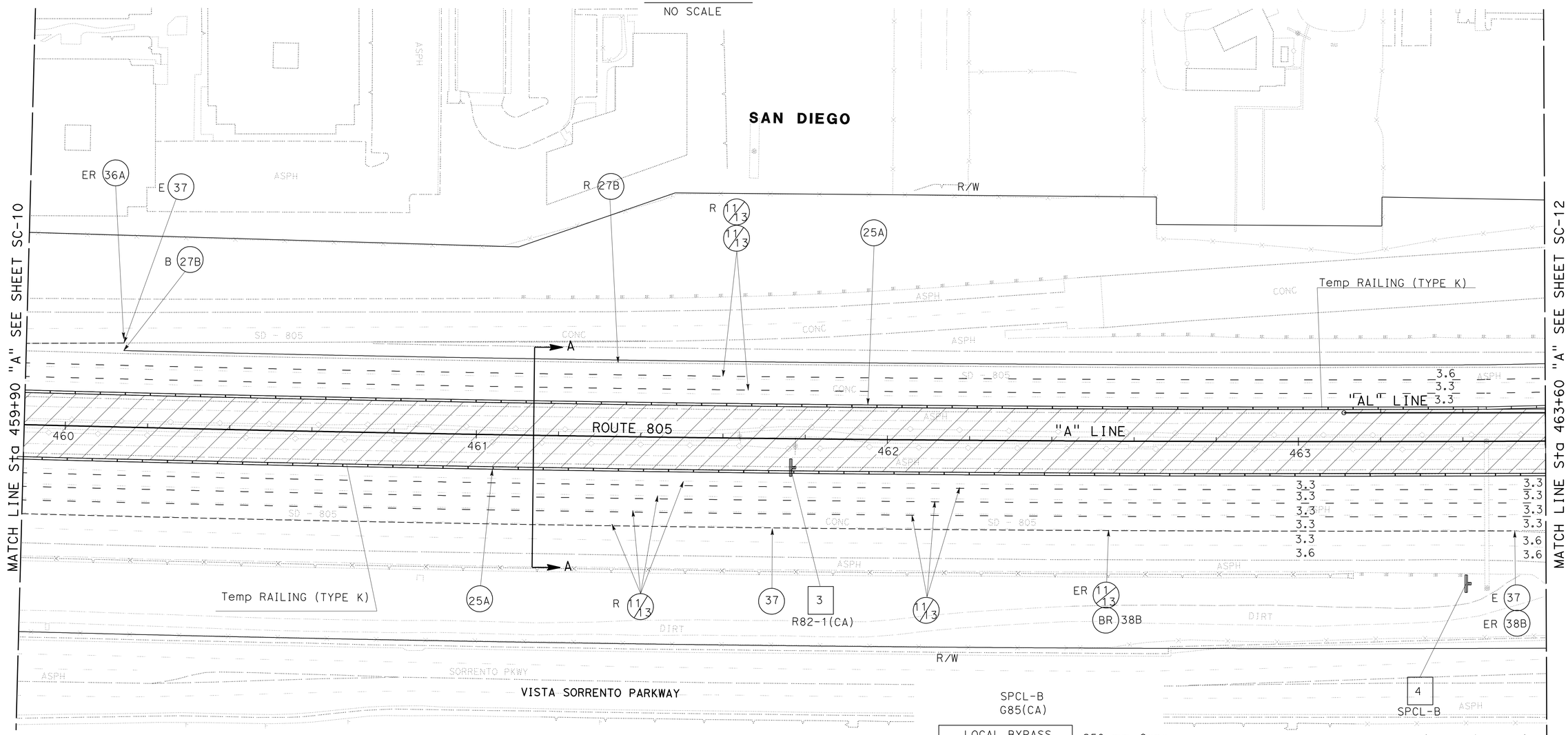

SPCL-B
G85(CA)

LOCAL BYPASS	
Jct 56 EAST	250 mm Caps
	250 mm Caps
ONLY	250 mm Caps

(3.0 X 1.8)

STAGE 1A
STAGE CONSTRUCTION AND TRAFFIC HANDLING PLAN

SCALE 1:500

SC-11

THIS PLAN ACCURATE FOR STAGE CONSTRUCTION AND TRAFFIC HANDLING WORK ONLY

ALL DIMENSIONS ARE IN METERS UNLESS OTHERWISE SHOWN

STATE OF CALIFORNIA - DEPARTMENT OF TRANSPORTATION
Caltrans PROJECT DEVELOPMENT

FUNCTIONAL SUPERVISOR: MAJID KHARRATI
CALCULATED-DESIGNED BY: KEN SAYLER
CHECKED BY: YONG PAK
REVISED BY / DATE REVISED

LAST REVISION 05-17-09 DATE PLOTTED => 29-SEP-2010 TIME PLOTTED => 14:10

Dist	COUNTY	ROUTE	KILOMETER POST TOTAL PROJECT	SHEET No.	TOTAL SHEETS
11	SD	5,805	R49.9/R51.7, 42.6/46.5	271	886

REGISTERED CIVIL ENGINEER 05-08-09 DATE

9-27-10
PLANS APPROVAL DATE

REGISTERED PROFESSIONAL ENGINEER YONG PAK No. C67706 Exp. 06-30-11 CIVIL STATE OF CALIFORNIA

THE STATE OF CALIFORNIA OR ITS OFFICERS OR AGENTS SHALL NOT BE RESPONSIBLE FOR THE ACCURACY OR COMPLETENESS OF SCANNED COPIES OF THIS PLAN SHEET.

Caltrans Metric

NOTE:

1. FOR COMPLETE RIGHT OF WAY AND ACCURATE ACCESS DATA, SEE RIGHT OF WAY RECORD MAPS AT DISTRICT OFFICE.

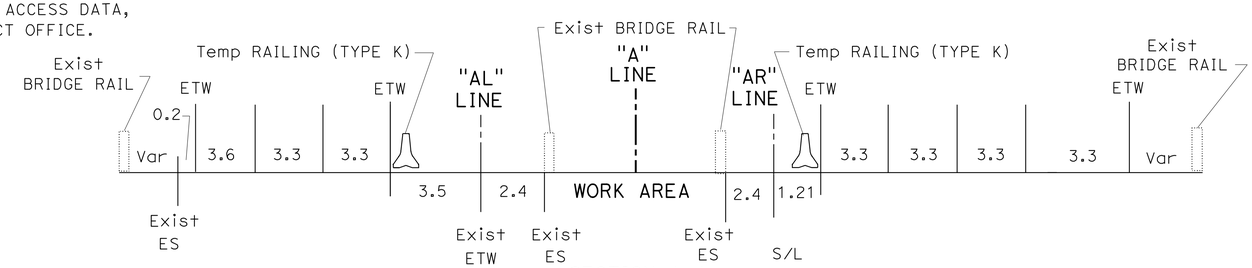

SECTION A-A
NO SCALE

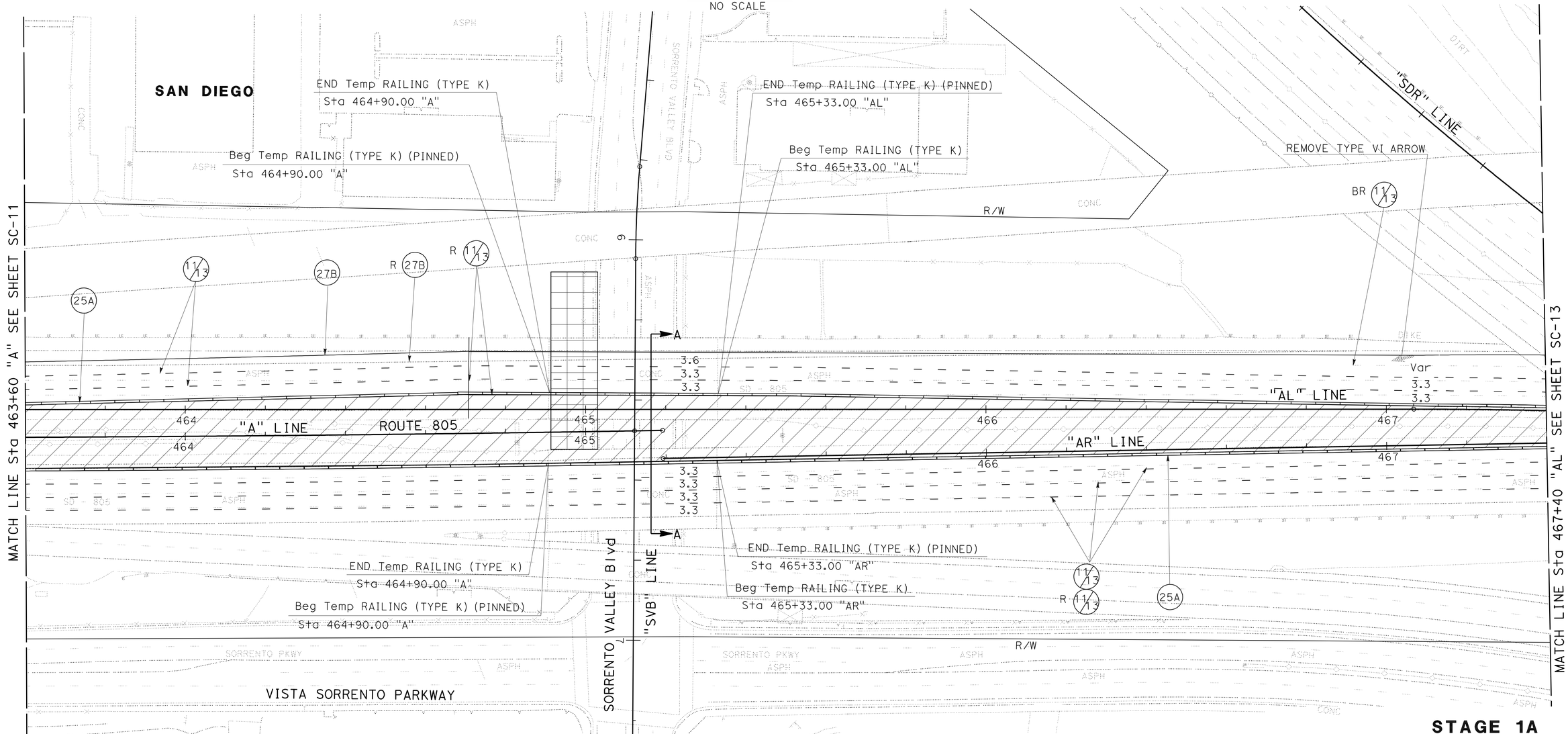

THIS PLAN ACCURATE FOR STAGE CONSTRUCTION AND TRAFFIC HANDLING WORK ONLY

ALL DIMENSIONS ARE IN METERS UNLESS OTHERWISE SHOWN

STAGE 1A

STAGE CONSTRUCTION AND TRAFFIC HANDLING PLAN

SCALE 1:500

SC-12

STATE OF CALIFORNIA - DEPARTMENT OF TRANSPORTATION
Caltrans PROJECT DEVELOPMENT

FUNCTIONAL SUPERVISOR: MAJID KHARRATI
CALCULATED-DESIGNED BY: KEN SAYLER
CHECKED BY: YONG PAK
REVISED BY
DATE REVISED

LAST REVISION 05-17-09
DATE PLOTTED => 29-SEP-2010
TIME PLOTTED => 14:10

Dist	COUNTY	ROUTE	KILOMETER POST TOTAL PROJECT	SHEET No.	TOTAL SHEETS
11	SD	5,805	R49.9/R51.7, 42.6/46.5	272	886

REGISTERED CIVIL ENGINEER 05-08-09 DATE

9-27-10
PLANS APPROVAL DATE

REGISTERED PROFESSIONAL ENGINEER YONG PAK No. C67706 Exp. 06-30-11 CIVIL STATE OF CALIFORNIA

THE STATE OF CALIFORNIA OR ITS OFFICERS OR AGENTS SHALL NOT BE RESPONSIBLE FOR THE ACCURACY OR COMPLETENESS OF SCANNED COPIES OF THIS PLAN SHEET.

Caltrans Metric

NOTE:

1. FOR COMPLETE RIGHT OF WAY AND ACCURATE ACCESS DATA, SEE RIGHT OF WAY RECORD MAPS AT DISTRICT OFFICE.

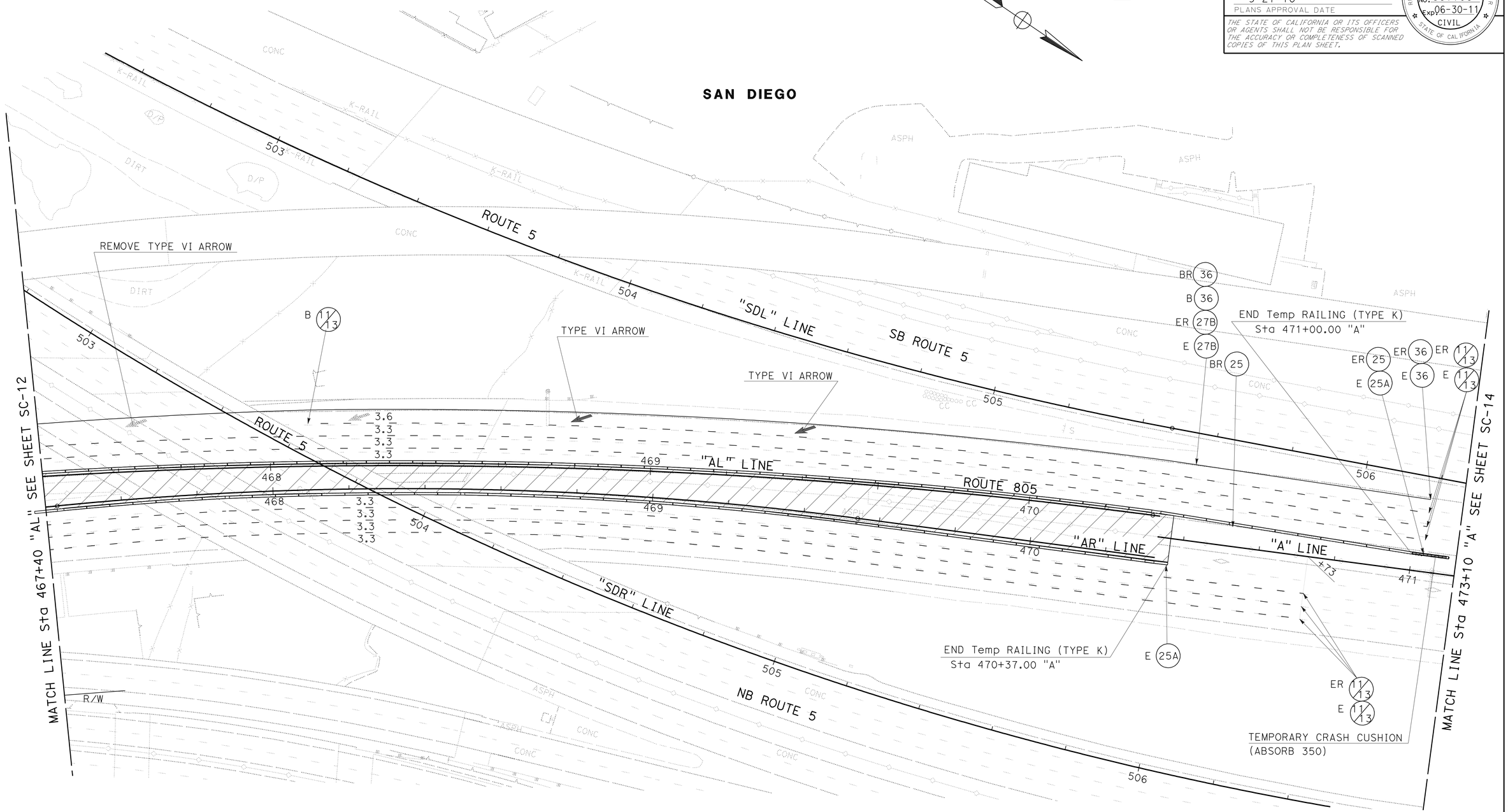

THIS PLAN ACCURATE FOR STAGE CONSTRUCTION AND TRAFFIC HANDLING WORK ONLY

ALL DIMENSIONS ARE IN METERS UNLESS OTHERWISE SHOWN

STAGE 1A

STAGE CONSTRUCTION AND TRAFFIC HANDLING PLAN

SCALE 1:500

SC-13

STATE OF CALIFORNIA - DEPARTMENT OF TRANSPORTATION
Caltrans PROJECT DEVELOPMENT

FUNCTIONAL SUPERVISOR: MAJID KHARRATI

CALCULATED-DESIGNED BY: KEN SAYLER
CHECKED BY: YONG PAK

REVISED BY | DATE REVISED

LAST REVISION 05-17-09 | DATE PLOTTED => 29-SEP-2010 | TIME PLOTTED => 14:10

Dist	COUNTY	ROUTE	KILOMETER POST TOTAL PROJECT	SHEET No.	TOTAL SHEETS
11	SD	5,805	R49.9/R51.7, 42.6/46.5	273	886

REGISTERED CIVIL ENGINEER DATE 05-08-09

PLANS APPROVAL DATE 9-27-10

REGISTERED PROFESSIONAL ENGINEER YONG PAK No. C67706 Exp. 06-30-11 CIVIL STATE OF CALIFORNIA

THE STATE OF CALIFORNIA OR ITS OFFICERS OR AGENTS SHALL NOT BE RESPONSIBLE FOR THE ACCURACY OR COMPLETENESS OF SCANNED COPIES OF THIS PLAN SHEET.

Caltrans Metric

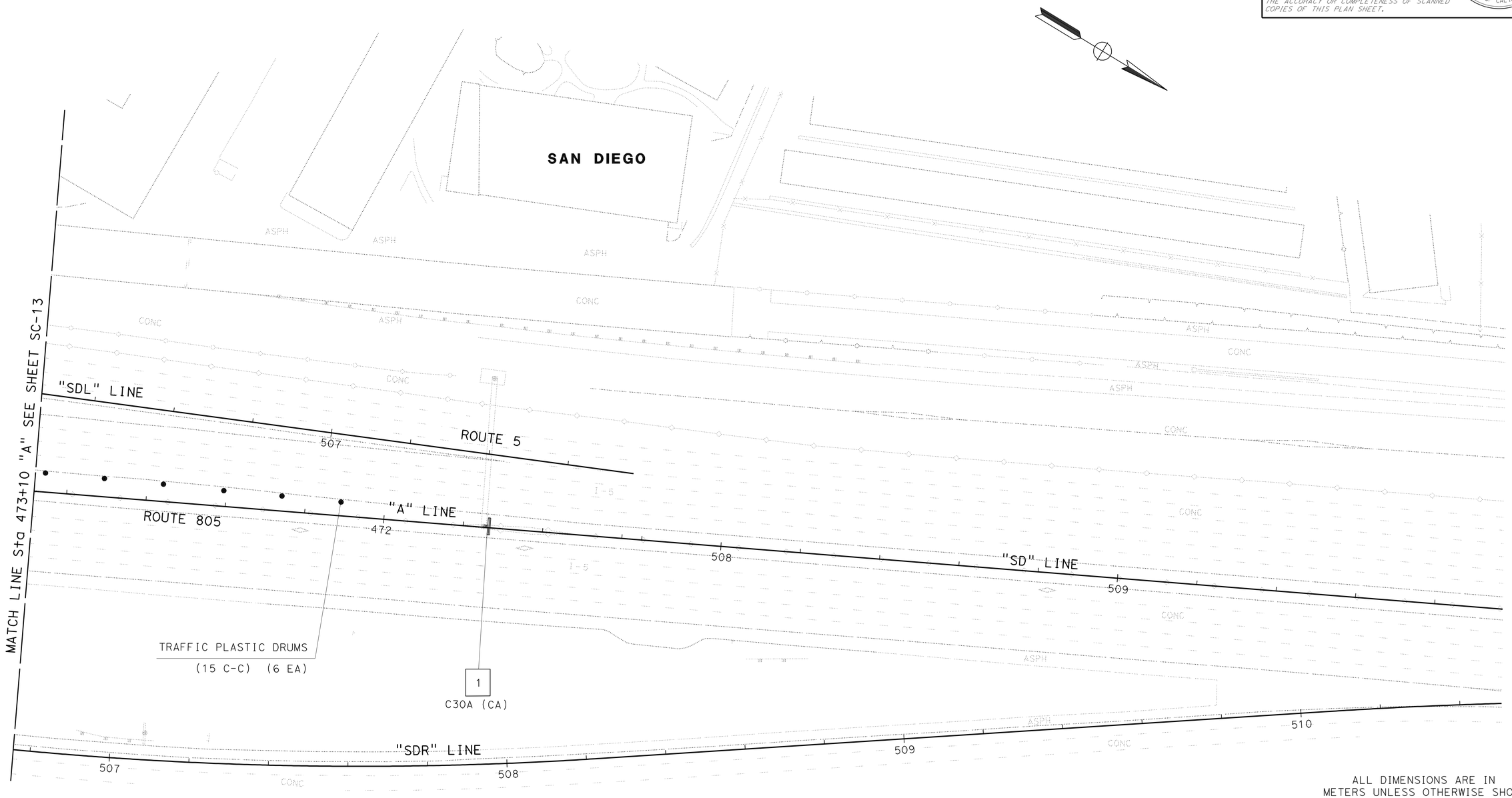

ALL DIMENSIONS ARE IN METERS UNLESS OTHERWISE SHOWN

THIS PLAN ACCURATE FOR STAGE CONSTRUCTION AND TRAFFIC HANDLING WORK ONLY

SCALE 1:500

STAGE 1A
STAGE CONSTRUCTION AND TRAFFIC HANDLING PLAN

SC-14

STATE OF CALIFORNIA - DEPARTMENT OF TRANSPORTATION
Caltrans PROJECT DEVELOPMENT

FUNCTIONAL SUPERVISOR: MAJID KHARRATI
CALCULATED-DESIGNED BY: KEN SAYLER
CHECKED BY: YONG PAK
REVISED BY / DATE REVISED

LAST REVISION 05-17-09 DATE PLOTTED => 29-SEP-2010 TIME PLOTTED => 14:11

Dist	COUNTY	ROUTE	KILOMETER POST TOTAL PROJECT	SHEET No.	TOTAL SHEETS
11	SD	5,805	R49.9/R51.7, 42.6/46.5	274	886

REGISTERED CIVIL ENGINEER 05-08-09 DATE

9-27-10
PLANS APPROVAL DATE

REGISTERED PROFESSIONAL ENGINEER YONG PAK No. C67706 Exp. 06-30-11 CIVIL STATE OF CALIFORNIA

THE STATE OF CALIFORNIA OR ITS OFFICERS OR AGENTS SHALL NOT BE RESPONSIBLE FOR THE ACCURACY OR COMPLETENESS OF SCANNED COPIES OF THIS PLAN SHEET.

Caltrans Metric

NOTE:

1. FOR COMPLETE RIGHT OF WAY AND ACCURATE ACCESS DATA, SEE RIGHT OF WAY RECORD MAPS AT DISTRICT OFFICE.
2. CARROLL CANYON ROAD BRIDGE IS NOT ENTIRELY SHOWN ON THE STAGE CONSTRUCTION PLAN.

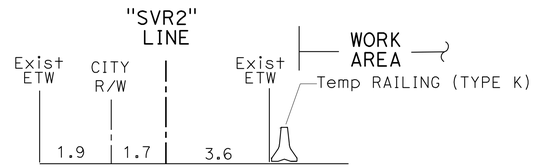

SECTION A-A
NO SCALE

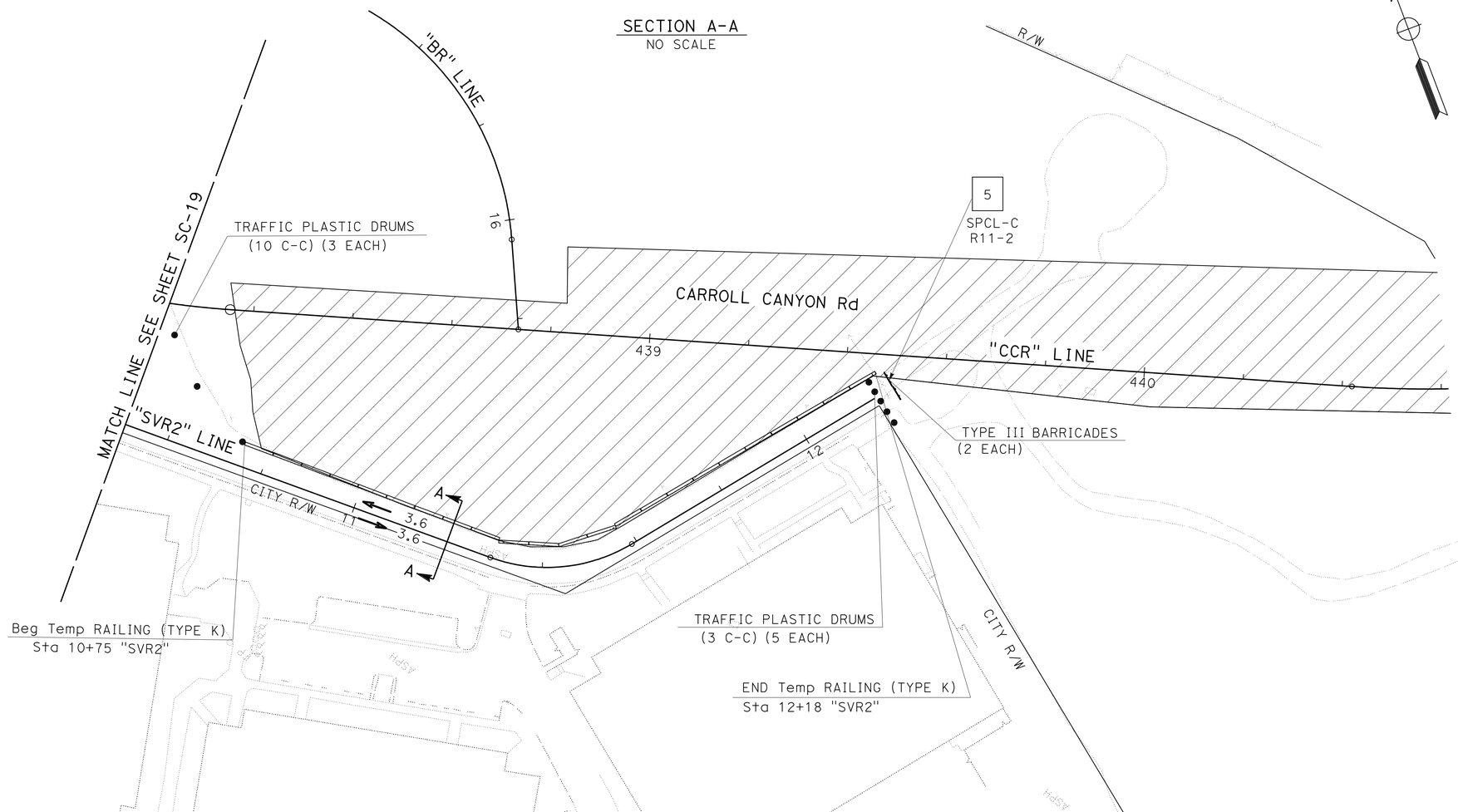

SPCL-C

CONSTRUCTION TRAFFIC ONLY

(1.0 X 0.9)

ALL DIMENSIONS ARE IN METERS UNLESS OTHERWISE SHOWN

THIS PLAN ACCURATE FOR STAGE CONSTRUCTION AND TRAFFIC HANDLING WORK ONLY

SCALE 1:500

STAGE 1A
STAGE CONSTRUCTION AND TRAFFIC HANDLING PLAN

SC-15

REVISED BY	DATE REVISED

CALCULATED-DESIGNED BY	KEN SAYLER
CHECKED BY	YONG PAK

FUNCTIONAL SUPERVISOR: MAJID KHARRATI

STATE OF CALIFORNIA - DEPARTMENT OF TRANSPORTATION
Caltrans PROJECT DEVELOPMENT

LAST REVISION 05-17-09 DATE PLOTTED => 29-SEP-2010 TIME PLOTTED => 14:11

Dist	COUNTY	ROUTE	KILOMETER POST TOTAL PROJECT	SHEET No.	TOTAL SHEETS
11	SD	5,805	R49.9/R51.7, 42.6/46.5	275	886

REGISTERED CIVIL ENGINEER 05-08-09 DATE

9-27-10
PLANS APPROVAL DATE

REGISTERED PROFESSIONAL ENGINEER YONG PAK No. C67706 Exp 06-30-11 CIVIL STATE OF CALIFORNIA

THE STATE OF CALIFORNIA OR ITS OFFICERS OR AGENTS SHALL NOT BE RESPONSIBLE FOR THE ACCURACY OR COMPLETENESS OF SCANNED COPIES OF THIS PLAN SHEET.

Caltrans Metric

NOTES:

1. FOR COMPLETE RIGHT OF WAY AND ACCURATE ACCESS DATA, SEE RIGHT OF WAY RECORD MAPS AT DISTRICT OFFICE.
2. CARROLL CANYON ROAD BRIDGE IS NOT ENTIRELY SHOWN ON THE STAGE CONSTRUCTION PLAN.

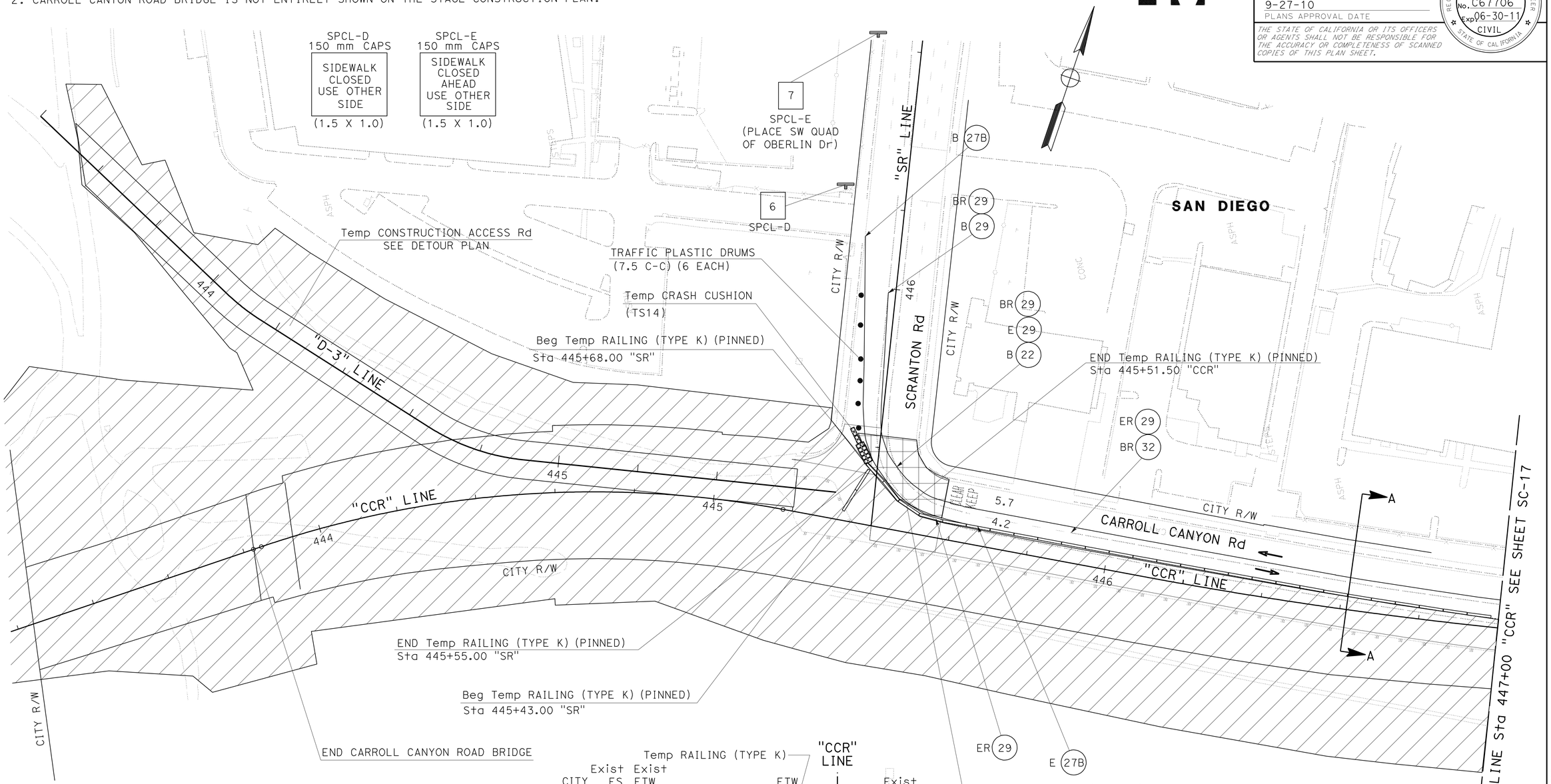

SECTION A-A
NO SCALE

THIS PLAN ACCURATE FOR STAGE CONSTRUCTION AND TRAFFIC HANDLING WORK ONLY

ALL DIMENSIONS ARE IN METERS UNLESS OTHERWISE SHOWN

STAGE 1A
STAGE CONSTRUCTION AND TRAFFIC HANDLING PLAN

SCALE 1:500

SC-16

REVISED BY	DATE REVISED
KEN SAYLER	YONG PAK

CALCULATED-DESIGNED BY / CHECKED BY

FUNCTIONAL SUPERVISOR: MAJID KHARRATI

STATE OF CALIFORNIA - DEPARTMENT OF TRANSPORTATION
Caltrans PROJECT DEVELOPMENT

LAST REVISION 05-20-09 DATE PLOTTED => 29-SEP-2010 TIME PLOTTED => 14:11

Dist	COUNTY	ROUTE	KILOMETER POST TOTAL PROJECT	SHEET No.	TOTAL SHEETS
11	SD	5,805	R49.9/R51.7, 42.6/46.5	276	886

05-08-09
REGISTERED CIVIL ENGINEER DATE

9-27-10
PLANS APPROVAL DATE

REGISTERED PROFESSIONAL ENGINEER
YONG PAK
No. C67706
Exp. 06-30-11
CIVIL
STATE OF CALIFORNIA

THE STATE OF CALIFORNIA OR ITS OFFICERS OR AGENTS SHALL NOT BE RESPONSIBLE FOR THE ACCURACY OR COMPLETENESS OF SCANNED COPIES OF THIS PLAN SHEET.

Caltrans Metric

NOTE:

1. FOR COMPLETE RIGHT OF WAY AND ACCURATE ACCESS DATA, SEE RIGHT OF WAY RECORD MAPS AT DISTRICT OFFICE.

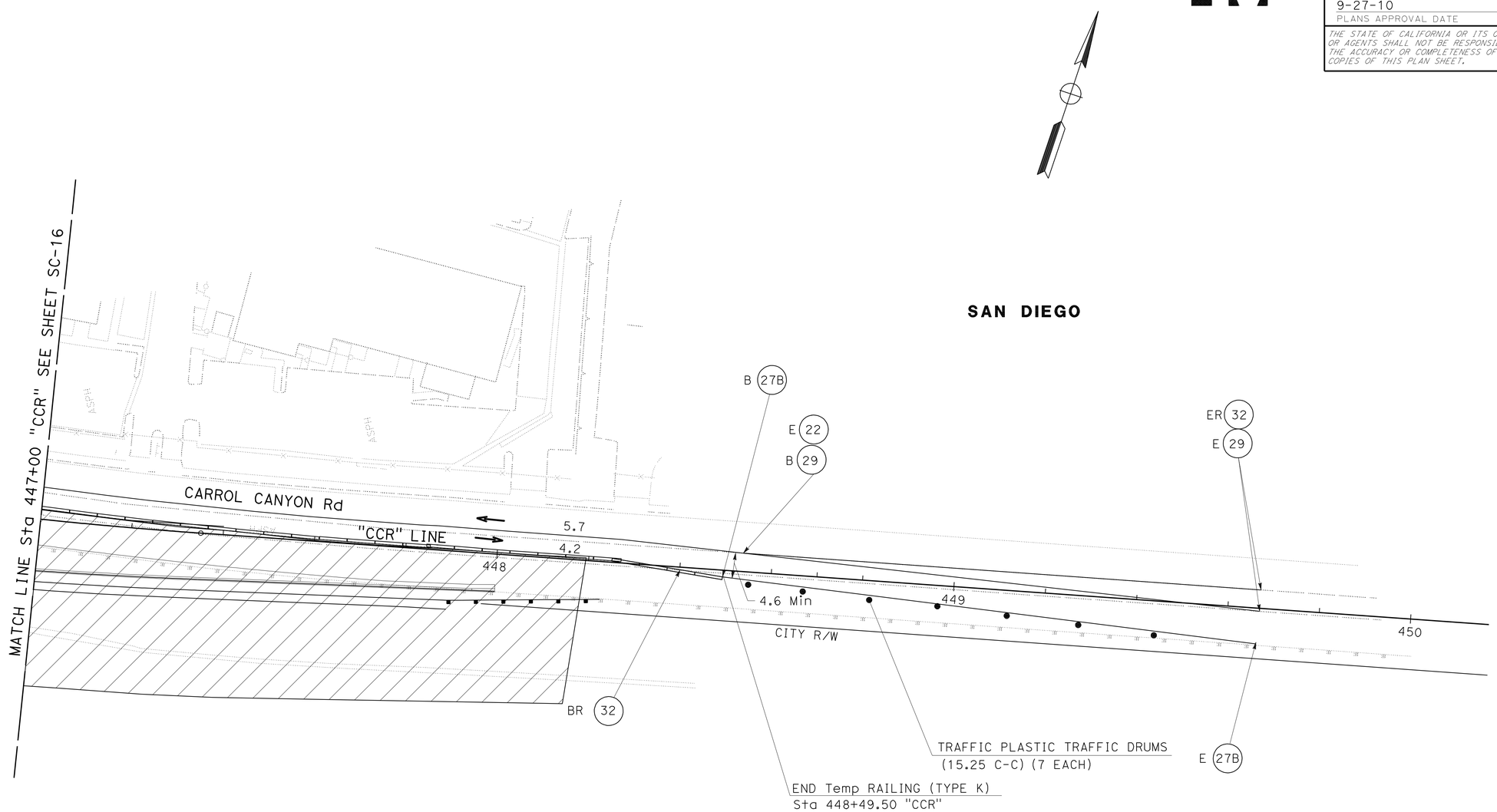

THIS PLAN ACCURATE FOR STAGE CONSTRUCTION AND TRAFFIC HANDLING WORK ONLY

ALL DIMENSIONS ARE IN METERS UNLESS OTHERWISE SHOWN

STAGE 1A
STAGE CONSTRUCTION AND TRAFFIC HANDLING PLAN

SCALE 1:500

SC-17

STATE OF CALIFORNIA - DEPARTMENT OF TRANSPORTATION
Caltrans PROJECT DEVELOPMENT

FUNCTIONAL SUPERVISOR: MAJID KHARRATI
CALCULATED-DESIGNED BY: KEN SAYLER
CHECKED BY: YONG PAK
REVISED BY
DATE REVISED

LAST REVISION 05-17-09
DATE PLOTTED => 29-SEP-2010
TIME PLOTTED => 1411

Dist	COUNTY	ROUTE	KILOMETER POST TOTAL PROJECT	SHEET No.	TOTAL SHEETS
11	SD	5,805	R49.9/R51.7, 42.6/46.5	277	886

REGISTERED CIVIL ENGINEER 05-08-09 DATE

9-27-10
PLANS APPROVAL DATE

REGISTERED PROFESSIONAL ENGINEER YONG PAK No. C67706 Exp. 06-30-11 CIVIL STATE OF CALIFORNIA

THE STATE OF CALIFORNIA OR ITS OFFICERS OR AGENTS SHALL NOT BE RESPONSIBLE FOR THE ACCURACY OR COMPLETENESS OF SCANNED COPIES OF THIS PLAN SHEET.

Caltrans Metric

NOTE:

1. FOR COMPLETE RIGHT OF WAY AND ACCURATE ACCESS DATA, SEE RIGHT OF WAY RECORD MAPS AT DISTRICT OFFICE.

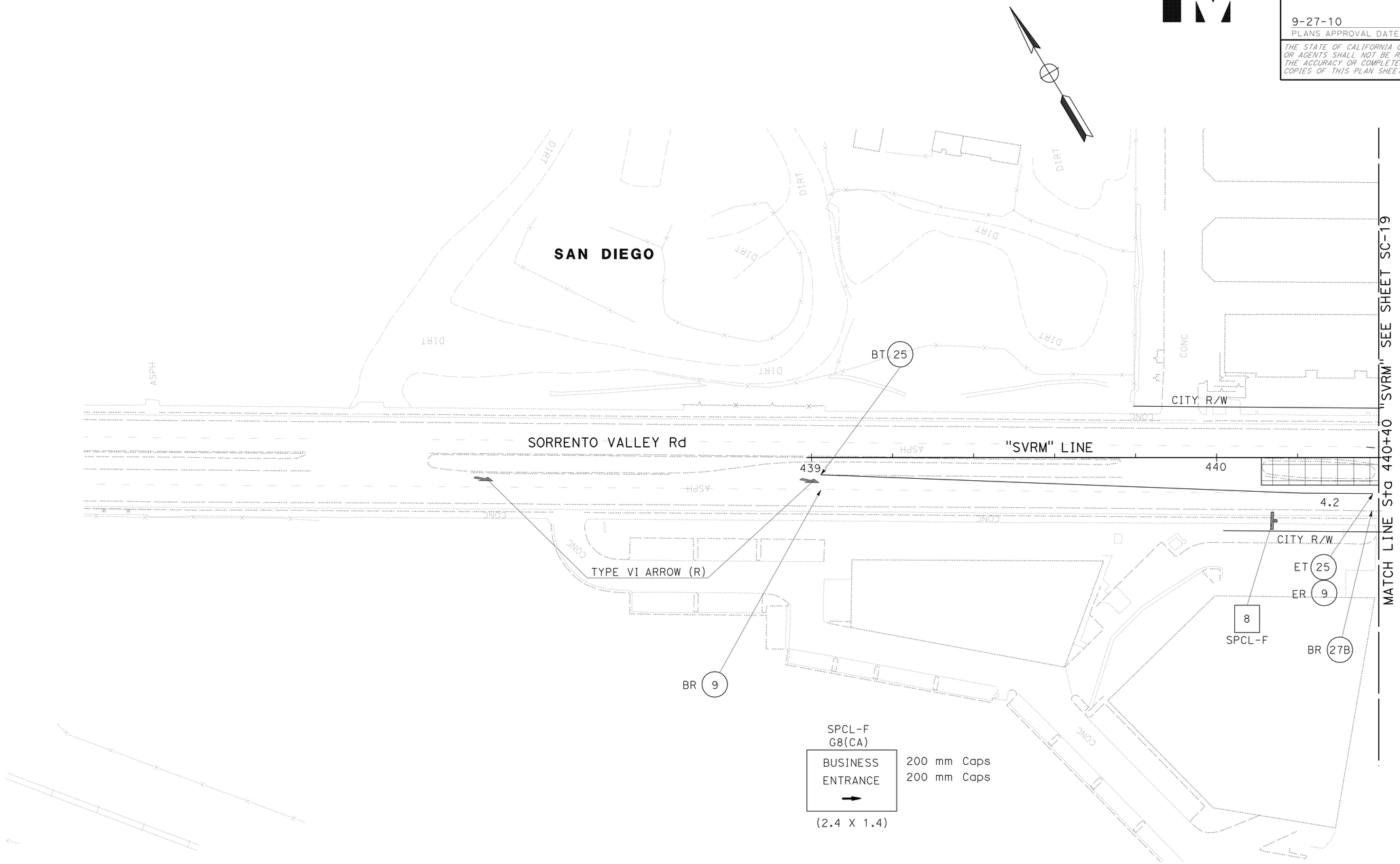

THIS PLAN ACCURATE FOR STAGE CONSTRUCTION AND TRAFFIC HANDLING WORK ONLY

ALL DIMENSIONS ARE IN METERS UNLESS OTHERWISE SHOWN

SCALE 1:500

STAGE 1A
STAGE CONSTRUCTION AND TRAFFIC HANDLING PLAN

SC-18

REVISED BY	DATE REVISED

CALCULATED-DESIGNED BY	KEN SAYLER
CHECKED BY	YONG PAK

FUNCTIONAL SUPERVISOR: MAJID KHARRATI

STATE OF CALIFORNIA - DEPARTMENT OF TRANSPORTATION
Caltrans PROJECT DEVELOPMENT

LAST REVISION 05-17-09 | DATE PLOTTED => 29-SEP-2010 | TIME PLOTTED => 14:11

Dist	COUNTY	ROUTE	KILOMETER POST TOTAL PROJECT	SHEET No.	TOTAL SHEETS
11	SD	5,805	R49.9/R51.7, 42.6/46.5	278	886

REGISTERED CIVIL ENGINEER 05-08-09 DATE

9-27-10
PLANS APPROVAL DATE

REGISTERED PROFESSIONAL ENGINEER YONG PAK No. C67706 Exp 06-30-11 CIVIL STATE OF CALIFORNIA

THE STATE OF CALIFORNIA OR ITS OFFICERS OR AGENTS SHALL NOT BE RESPONSIBLE FOR THE ACCURACY OR COMPLETENESS OF SCANNED COPIES OF THIS PLAN SHEET.

Caltrans Metric

NOTE:

1. FOR COMPLETE RIGHT OF WAY AND ACCURATE ACCESS DATA, SEE RIGHT OF WAY RECORD MAPS AT DISTRICT OFFICE.

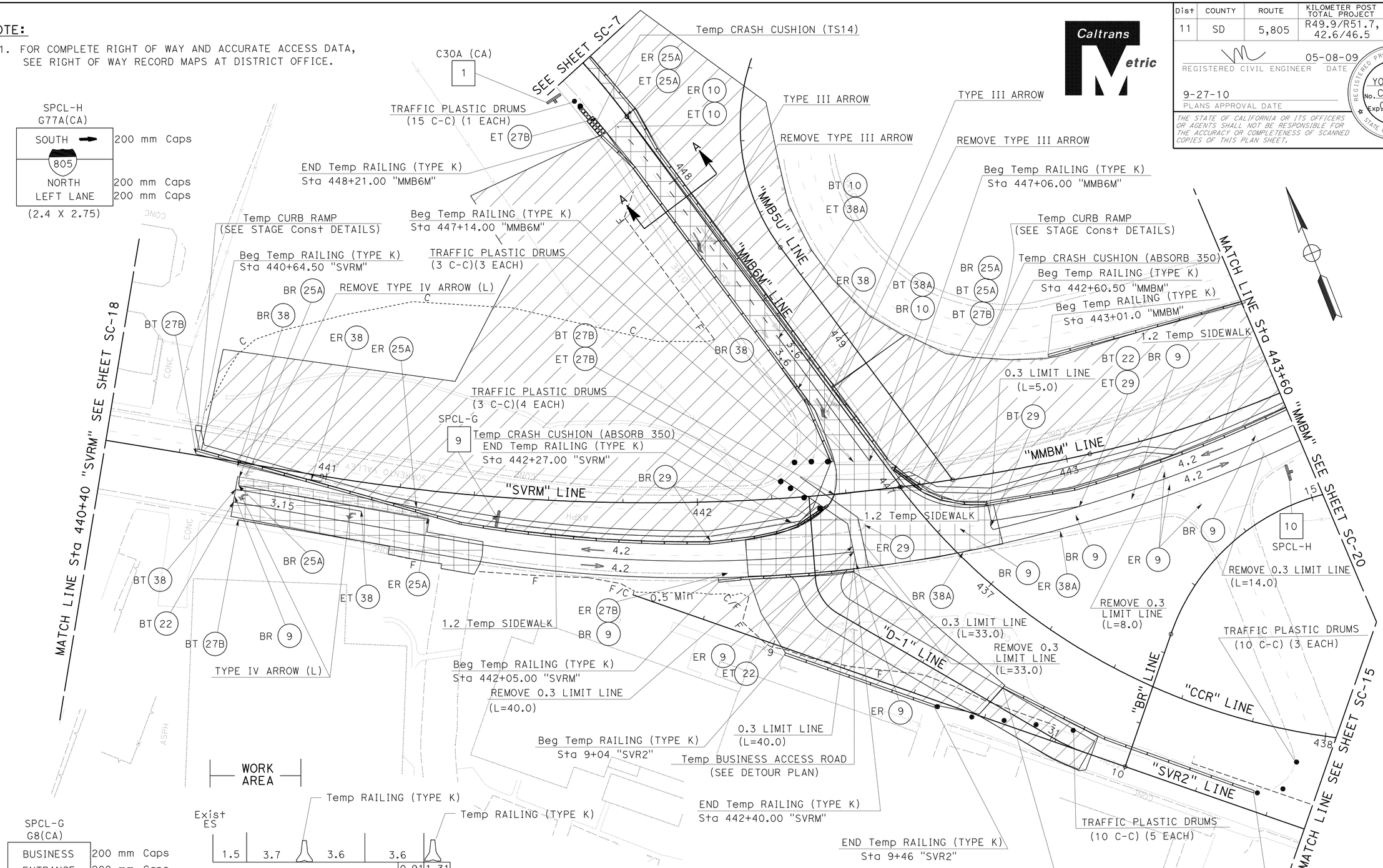

THIS PLAN ACCURATE FOR STAGE CONSTRUCTION AND TRAFFIC HANDLING WORK ONLY

ALL DIMENSIONS ARE IN METERS UNLESS OTHERWISE SHOWN

STAGE 1A
STAGE CONSTRUCTION AND TRAFFIC HANDLING PLAN

SCALE 1:500

SC-19

STATE OF CALIFORNIA - DEPARTMENT OF TRANSPORTATION
Caltrans PROJECT DEVELOPMENT

FUNCTIONAL SUPERVISOR: MAJID KHARRATI
CALCULATED-DESIGNED BY: KEN SAYLER
CHECKED BY: YONG PAK
REVISED BY / DATE REVISED

LAST REVISION 05-17-09
DATE PLOTTED => 29-SEP-2010
TIME PLOTTED => 14:11

Dist	COUNTY	ROUTE	KILOMETER POST TOTAL PROJECT	SHEET No.	TOTAL SHEETS
11	SD	5,805	R49.9/R51.7, 42.6/46.5	279	886

REGISTERED CIVIL ENGINEER 05-08-09 DATE

9-27-10
PLANS APPROVAL DATE

REGISTERED PROFESSIONAL ENGINEER YONG PAK No. C67706 Exp. 06-30-11 CIVIL STATE OF CALIFORNIA

THE STATE OF CALIFORNIA OR ITS OFFICERS OR AGENTS SHALL NOT BE RESPONSIBLE FOR THE ACCURACY OR COMPLETENESS OF SCANNED COPIES OF THIS PLAN SHEET.

Caltrans Metric

NOTE:

1. FOR COMPLETE RIGHT OF WAY AND ACCURATE ACCESS DATA, SEE RIGHT OF WAY RECORD MAPS AT DISTRICT OFFICE.

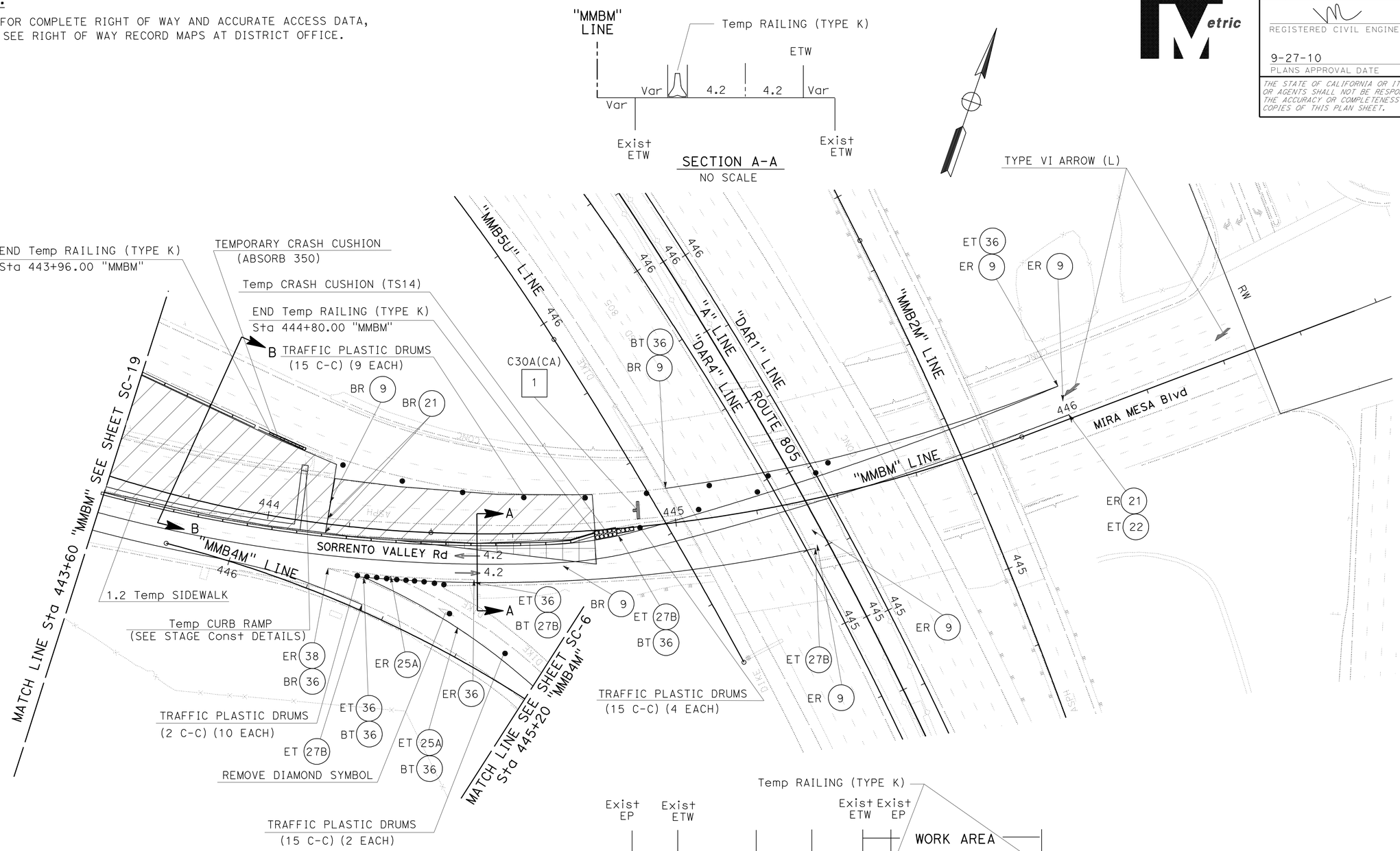

THIS PLAN ACCURATE FOR STAGE CONSTRUCTION AND TRAFFIC HANDLING WORK ONLY

ALL DIMENSIONS ARE IN METERS UNLESS OTHERWISE SHOWN

SCALE 1:500

STAGE 1A
STAGE CONSTRUCTION AND TRAFFIC HANDLING PLAN

SC-20

STATE OF CALIFORNIA - DEPARTMENT OF TRANSPORTATION
Caltrans PROJECT DEVELOPMENT

FUNCTIONAL SUPERVISOR: MAJID KHARRATI
CALCULATED-DESIGNED BY: KEN SAYLER
CHECKED BY: YONG PAK
REVISED BY
DATE REVISED

LAST REVISION 05-17-09
DATE PLOTTED => 29-SEP-2010
TIME PLOTTED => 14:11

Dist	COUNTY	ROUTE	KILOMETER POST TOTAL PROJECT	SHEET No.	TOTAL SHEETS
11	SD	5,805	R49.9/R51.7, 42.6/46.5	280	886

REGISTERED CIVIL ENGINEER 05-08-09 DATE

9-27-10
PLANS APPROVAL DATE

REGISTERED PROFESSIONAL ENGINEER YONG PAK No. C67706 Exp. 06-30-11 CIVIL STATE OF CALIFORNIA

THE STATE OF CALIFORNIA OR ITS OFFICERS OR AGENTS SHALL NOT BE RESPONSIBLE FOR THE ACCURACY OR COMPLETENESS OF SCANNED COPIES OF THIS PLAN SHEET.

Caltrans Metric

NOTE:

1. FOR COMPLETE RIGHT OF WAY AND ACCURATE ACCESS DATA, SEE RIGHT OF WAY RECORD MAPS AT DISTRICT OFFICE.

SECTION A-A
NO SCALE

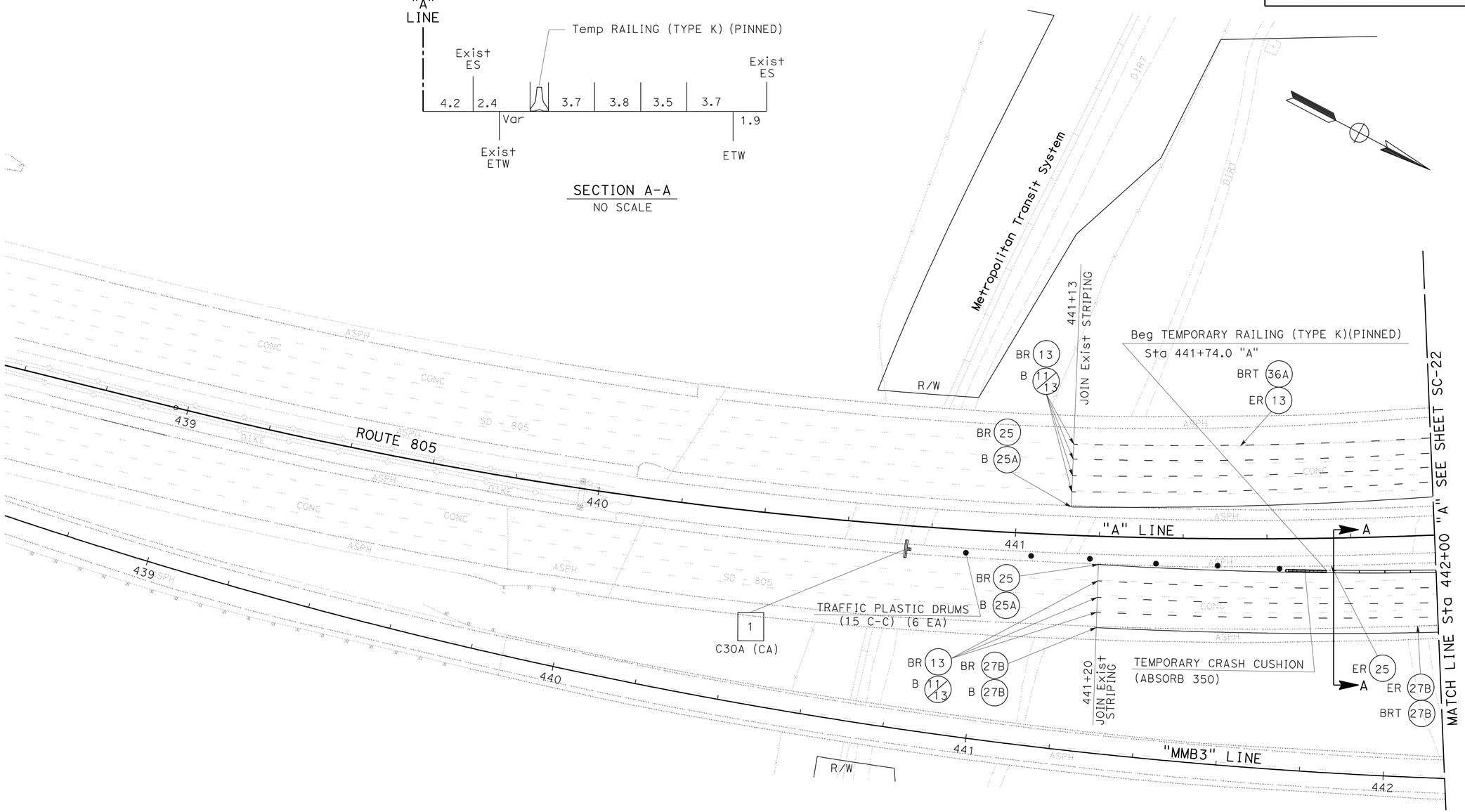

STAGE 1B
STAGE CONSTRUCTION AND TRAFFIC HANDLING PLAN

SCALE 1:500

SC-21

THIS PLAN ACCURATE FOR STAGE CONSTRUCTION AND TRAFFIC HANDLING WORK ONLY

ALL DIMENSIONS ARE IN METERS UNLESS OTHERWISE SHOWN

STATE OF CALIFORNIA - DEPARTMENT OF TRANSPORTATION
Caltrans PROJECT DEVELOPMENT

FUNCTIONAL SUPERVISOR: MAJID KHARRATI
CALCULATED-DESIGNED BY: KEN SAYLER
CHECKED BY: YONG PAK
REVISED BY / DATE REVISED

LAST REVISION 05-17-09 | DATE PLOTTED => 29-SEP-2010 | TIME PLOTTED => 14:11

Dist	COUNTY	ROUTE	KILOMETER POST TOTAL PROJECT	SHEET No.	TOTAL SHEETS
11	SD	5,805	R49.9/R51.7, 42.6/46.5	281	886

REGISTERED CIVIL ENGINEER 05-08-09 DATE

9-27-10
PLANS APPROVAL DATE

REGISTERED PROFESSIONAL ENGINEER YONG PAK No. C67706 Exp. 06-30-11 CIVIL STATE OF CALIFORNIA

THE STATE OF CALIFORNIA OR ITS OFFICERS OR AGENTS SHALL NOT BE RESPONSIBLE FOR THE ACCURACY OR COMPLETENESS OF SCANNED COPIES OF THIS PLAN SHEET.

Caltrans Metric

NOTE:

1. FOR COMPLETE RIGHT OF WAY AND ACCURATE ACCESS DATA, SEE RIGHT OF WAY RECORD MAPS AT DISTRICT OFFICE.

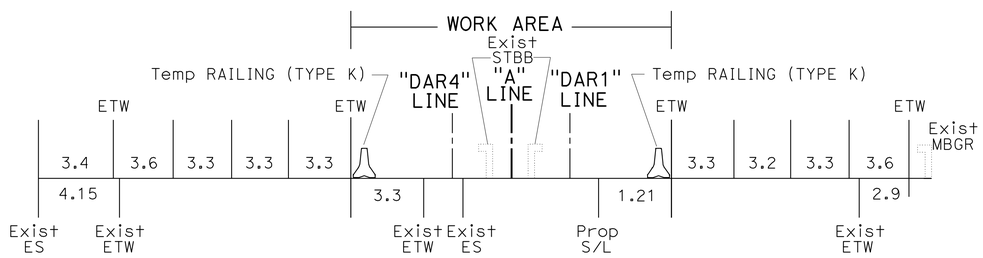

SECTION A-A
NO SCALE

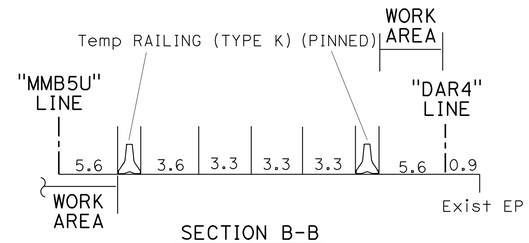

SECTION B-B
NO SCALE

SECTION C-C
NO SCALE

SAN DIEGO

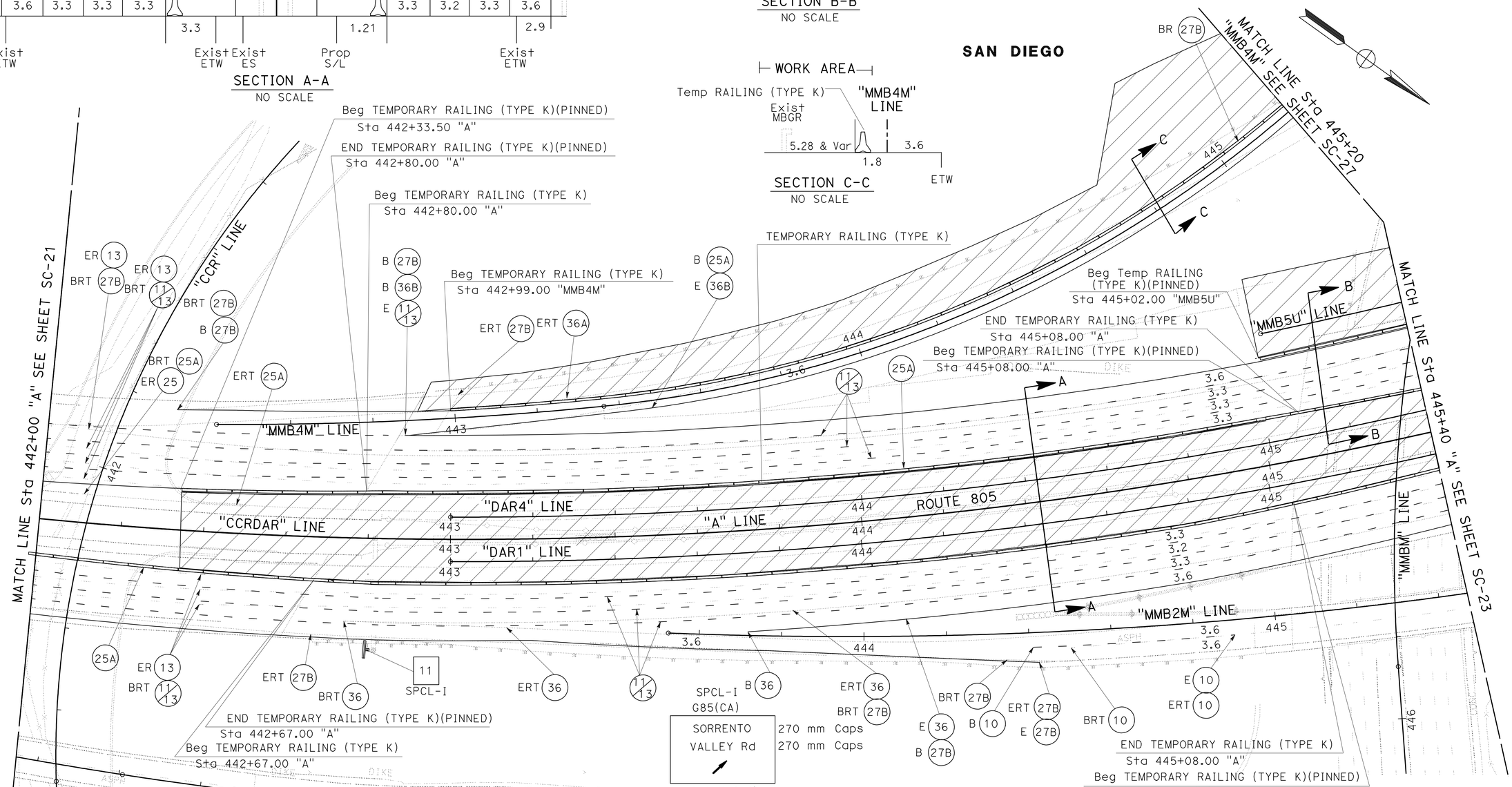

THIS PLAN ACCURATE FOR STAGE CONSTRUCTION AND TRAFFIC HANDLING WORK ONLY

ALL DIMENSIONS ARE IN METERS UNLESS OTHERWISE SHOWN

SCALE 1:500

STAGE 1B

STAGE CONSTRUCTION AND TRAFFIC HANDLING PLAN

SC-22

REVISED BY	DATE REVISED
KEN SAYLER	YONG PAK
CALCULATED-DESIGNED BY	CHECKED BY
FUNCTIONAL SUPERVISOR	MAJID KHARRATI

STATE OF CALIFORNIA - DEPARTMENT OF TRANSPORTATION
Caltrans PROJECT DEVELOPMENT

LAST REVISION 05-17-09 DATE PLOTTED => 29-SEP-2010 TIME PLOTTED => 14:11

Dist	COUNTY	ROUTE	KILOMETER POST TOTAL PROJECT	SHEET No.	TOTAL SHEETS
11	SD	5,805	R49.9/R51.7, 42.6/46.5	282	886

REGISTERED CIVIL ENGINEER 05-08-09 DATE

9-27-10
PLANS APPROVAL DATE

REGISTERED PROFESSIONAL ENGINEER YONG PAK No. C67706 Exp 06-30-11 CIVIL STATE OF CALIFORNIA

THE STATE OF CALIFORNIA OR ITS OFFICERS OR AGENTS SHALL NOT BE RESPONSIBLE FOR THE ACCURACY OR COMPLETENESS OF SCANNED COPIES OF THIS PLAN SHEET.

Caltrans Metric

NOTE:

1. FOR COMPLETE RIGHT OF WAY AND ACCURATE ACCESS DATA, SEE RIGHT OF WAY RECORD MAPS AT DISTRICT OFFICE.

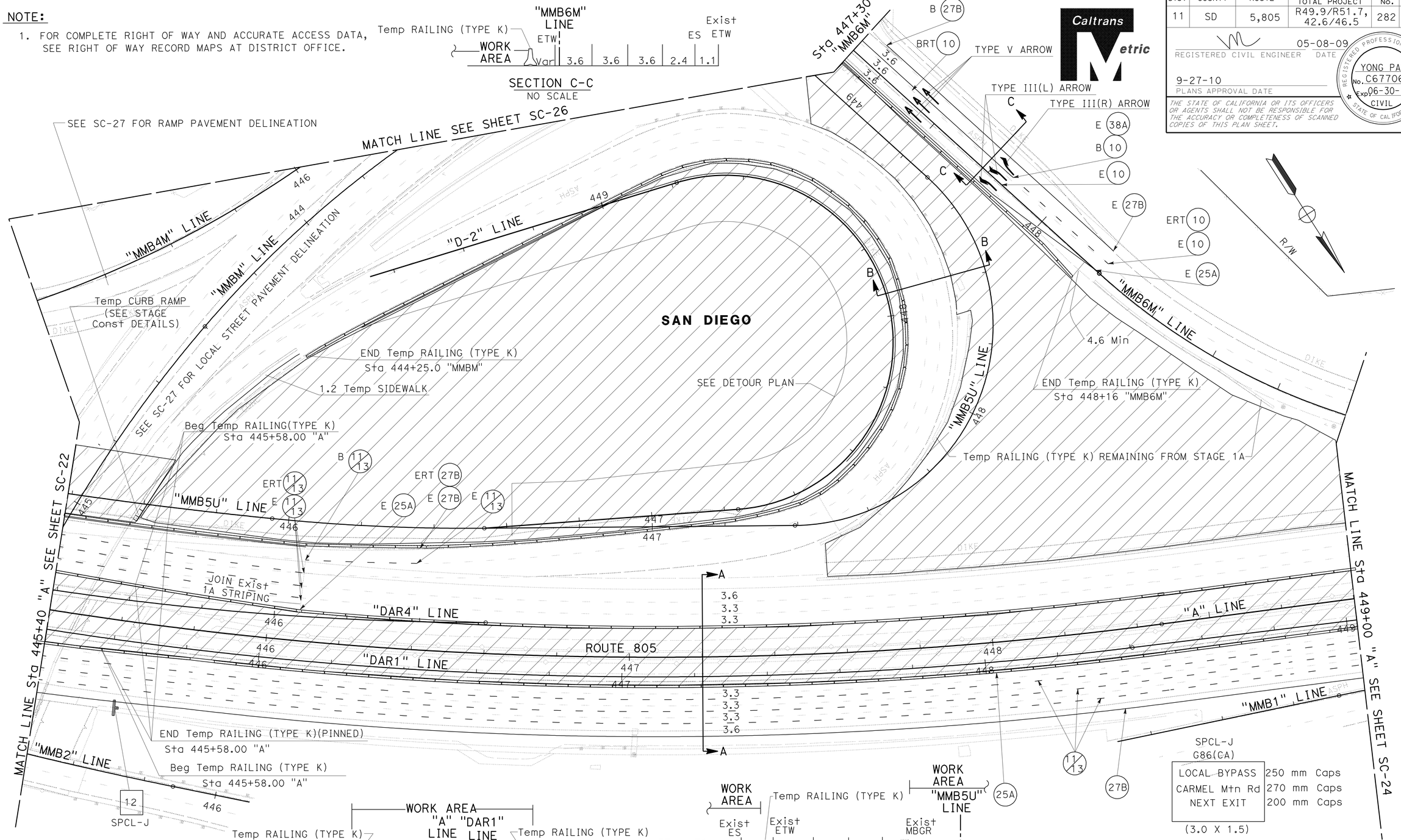

THIS PLAN ACCURATE FOR STAGE CONSTRUCTION AND TRAFFIC HANDLING WORK ONLY

ALL DIMENSIONS ARE IN METERS UNLESS OTHERWISE SHOWN

STAGE 1B
STAGE CONSTRUCTION AND TRAFFIC HANDLING PLAN

SCALE 1:500

SC-23

STATE OF CALIFORNIA - DEPARTMENT OF TRANSPORTATION
Caltrans PROJECT DEVELOPMENT

FUNCTIONAL SUPERVISOR: MAJID KHARRATI
CALCULATED-DESIGNED BY: KEN SAYLER
CHECKED BY: YONG PAK
REVISED BY / DATE REVISED

LAST REVISION 05-17-09
DATE PLOTTED => 29-SEP-2010
TIME PLOTTED => 14:12

BORDER LAST REVISED 4/11/2008
RELATIVE BORDER SCALE IS IN MILLIMETERS 0 20 40 60 80
USERNAME => trstrk
DGN FILE => b2t040ma023.dgn
CU 11275
EA 2T0401

Dist	COUNTY	ROUTE	KILOMETER POST TOTAL PROJECT	SHEET No.	TOTAL SHEETS
11	SD	5,805	R49.9/R51.7, 42.6/46.5	283	886

REGISTERED CIVIL ENGINEER 05-08-09 DATE

9-27-10
PLANS APPROVAL DATE

REGISTERED PROFESSIONAL ENGINEER YONG PAK No. C67706 Exp. 06-30-11 CIVIL STATE OF CALIFORNIA

THE STATE OF CALIFORNIA OR ITS OFFICERS OR AGENTS SHALL NOT BE RESPONSIBLE FOR THE ACCURACY OR COMPLETENESS OF SCANNED COPIES OF THIS PLAN SHEET.

Caltrans Metric

NOTE:

1. FOR COMPLETE RIGHT OF WAY AND ACCURATE ACCESS DATA, SEE RIGHT OF WAY RECORD MAPS AT DISTRICT OFFICE.

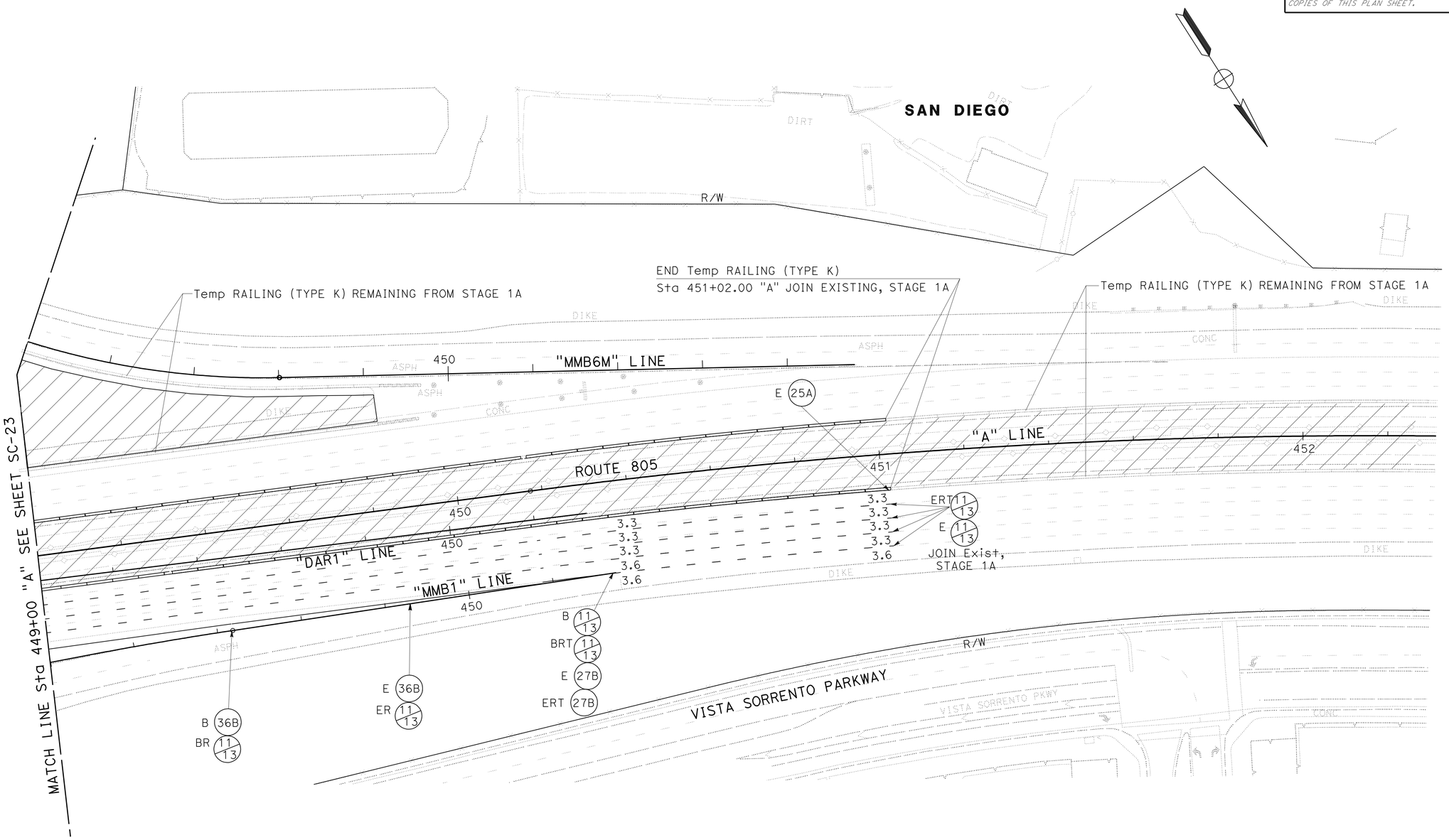

THIS PLAN ACCURATE FOR STAGE CONSTRUCTION AND TRAFFIC HANDLING WORK ONLY

ALL DIMENSIONS ARE IN METERS UNLESS OTHERWISE SHOWN

SCALE 1:500

STAGE 1B
STAGE CONSTRUCTION AND TRAFFIC HANDLING PLAN

SC-24

REVISED BY	DATE REVISED

CALCULATED-DESIGNED BY	CHECKED BY
KEN SAYLER	YONG PAK

FUNCTIONAL SUPERVISOR: MAJID KHARRATI

STATE OF CALIFORNIA - DEPARTMENT OF TRANSPORTATION
Caltrans PROJECT DEVELOPMENT

LAST REVISION 05-18-09 DATE PLOTTED => 29-SEP-2010 TIME PLOTTED => 14:12

Dist	COUNTY	ROUTE	KILOMETER POST TOTAL PROJECT	SHEET No.	TOTAL SHEETS
11	SD	5,805	R49.9/R51.7, 42.6/46.5	284	886

REGISTERED CIVIL ENGINEER 05-08-09 DATE

9-27-10
PLANS APPROVAL DATE

REGISTERED PROFESSIONAL ENGINEER YONG PAK No. C67706 Exp. 06-30-11 CIVIL STATE OF CALIFORNIA

THE STATE OF CALIFORNIA OR ITS OFFICERS OR AGENTS SHALL NOT BE RESPONSIBLE FOR THE ACCURACY OR COMPLETENESS OF SCANNED COPIES OF THIS PLAN SHEET.

Caltrans Metric

NOTE:

1. FOR COMPLETE RIGHT OF WAY AND ACCURATE ACCESS DATA, SEE RIGHT OF WAY RECORD MAPS AT DISTRICT OFFICE.

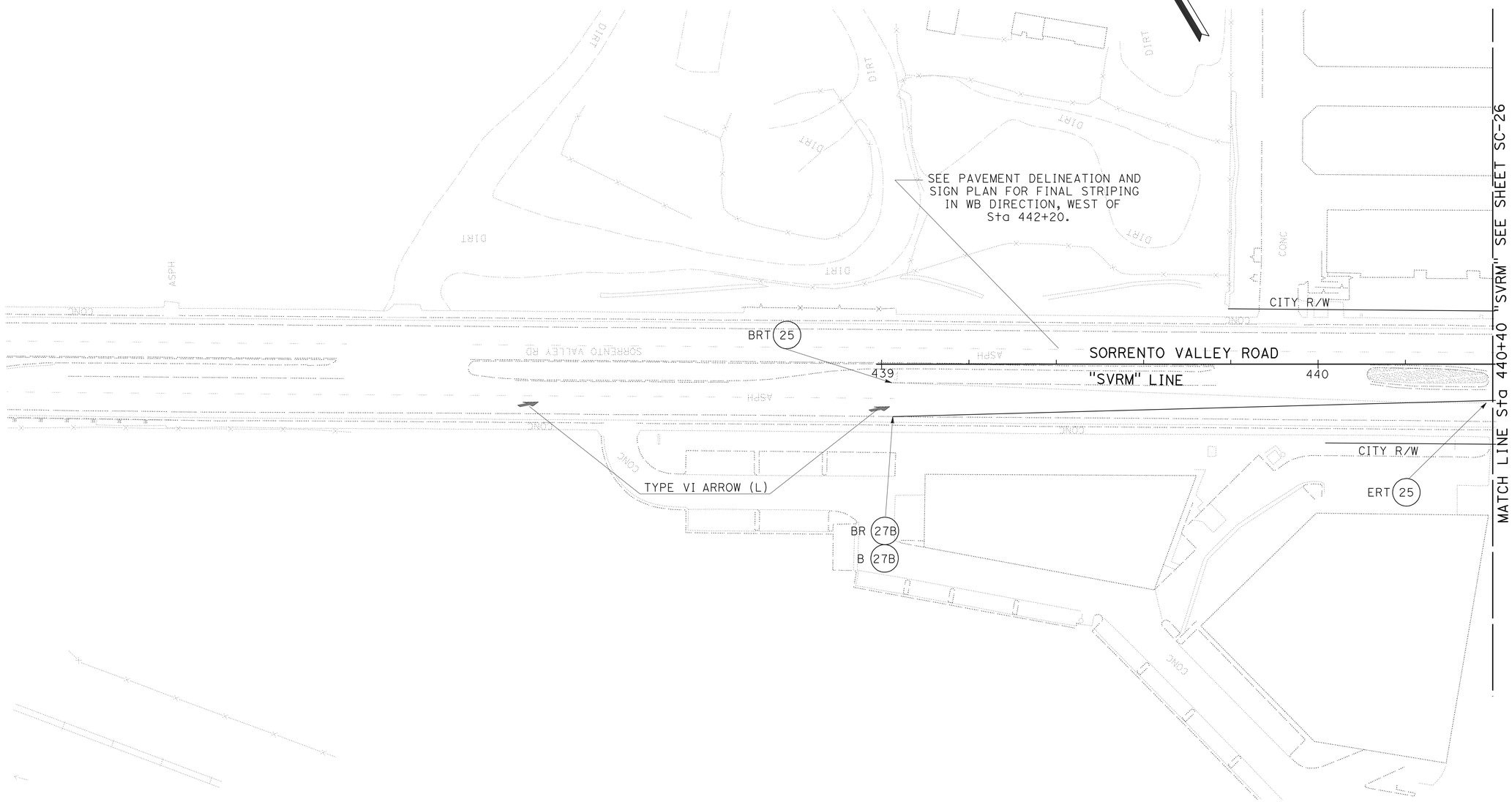

STAGE 1B
STAGE CONSTRUCTION AND TRAFFIC HANDLING PLAN

THIS PLAN ACCURATE FOR STAGE CONSTRUCTION AND TRAFFIC HANDLING WORK ONLY

ALL DIMENSIONS ARE IN METERS UNLESS OTHERWISE SHOWN

SCALE 1:500

SC-25

REVISED BY | DATE REVISED

KEN SAYLER | YONG PAK

CALCULATED-DESIGNED BY | CHECKED BY

FUNCTIONAL SUPERVISOR: MAJID KHARRATI

STATE OF CALIFORNIA - DEPARTMENT OF TRANSPORTATION
Caltrans PROJECT DEVELOPMENT

LAST REVISION 05-17-09 | DATE PLOTTED => 29-SEP-2010 | TIME PLOTTED => 14:12

Dist	COUNTY	ROUTE	KILOMETER POST TOTAL PROJECT	SHEET No.	TOTAL SHEETS
11	SD	5,805	R49.9/R51.7, 42.6/46.5	285	886

REGISTERED CIVIL ENGINEER 05-08-09 DATE

9-27-10
PLANS APPROVAL DATE

REGISTERED PROFESSIONAL ENGINEER YONG PAK No. C67706 Exp. 06-30-11 CIVIL STATE OF CALIFORNIA

THE STATE OF CALIFORNIA OR ITS OFFICERS OR AGENTS SHALL NOT BE RESPONSIBLE FOR THE ACCURACY OR COMPLETENESS OF SCANNED COPIES OF THIS PLAN SHEET.

Caltrans Metric

NOTE:

1. FOR COMPLETE RIGHT OF WAY AND ACCURATE ACCESS DATA, SEE RIGHT OF WAY RECORD MAPS AT DISTRICT OFFICE.

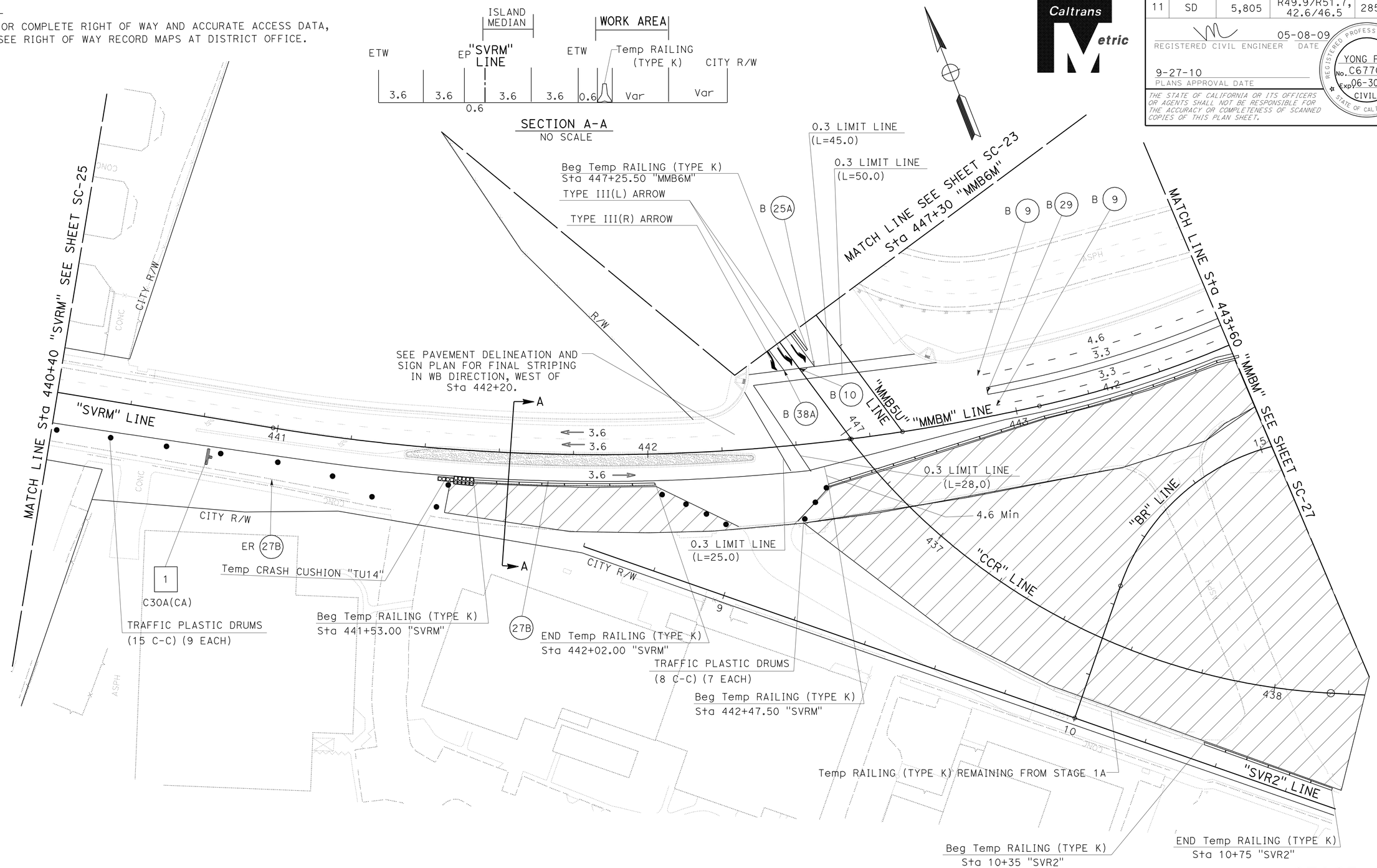

STAGE 1B
STAGE CONSTRUCTION AND TRAFFIC HANDLING PLAN

SCALE 1:500

SC-26

THIS PLAN ACCURATE FOR STAGE CONSTRUCTION AND TRAFFIC HANDLING WORK ONLY

ALL DIMENSIONS ARE IN METERS UNLESS OTHERWISE SHOWN

STATE OF CALIFORNIA - DEPARTMENT OF TRANSPORTATION
Caltrans PROJECT DEVELOPMENT

FUNCTIONAL SUPERVISOR: MAJID KHARRATI
CALCULATED-DESIGNED BY: KEN SAYLER
CHECKED BY: YONG PAK
REVISED BY
DATE REVISED

LAST REVISION 05-18-09
DATE PLOTTED => 29-SEP-2010
TIME PLOTTED => 14:12

Dist	COUNTY	ROUTE	KILOMETER POST TOTAL PROJECT	SHEET No.	TOTAL SHEETS
11	SD	5,805	R49.9/R51.7, 42.6/46.5	286	886

REGISTERED CIVIL ENGINEER 05-08-09 DATE

9-27-10
PLANS APPROVAL DATE

REGISTERED PROFESSIONAL ENGINEER YONG PAK No. C67706 Exp 06-30-11 CIVIL STATE OF CALIFORNIA

THE STATE OF CALIFORNIA OR ITS OFFICERS OR AGENTS SHALL NOT BE RESPONSIBLE FOR THE ACCURACY OR COMPLETENESS OF SCANNED COPIES OF THIS PLAN SHEET.

Caltrans Metric

NOTE:

1. FOR COMPLETE RIGHT OF WAY AND ACCURATE ACCESS DATA, SEE RIGHT OF WAY RECORD MAPS AT DISTRICT OFFICE.

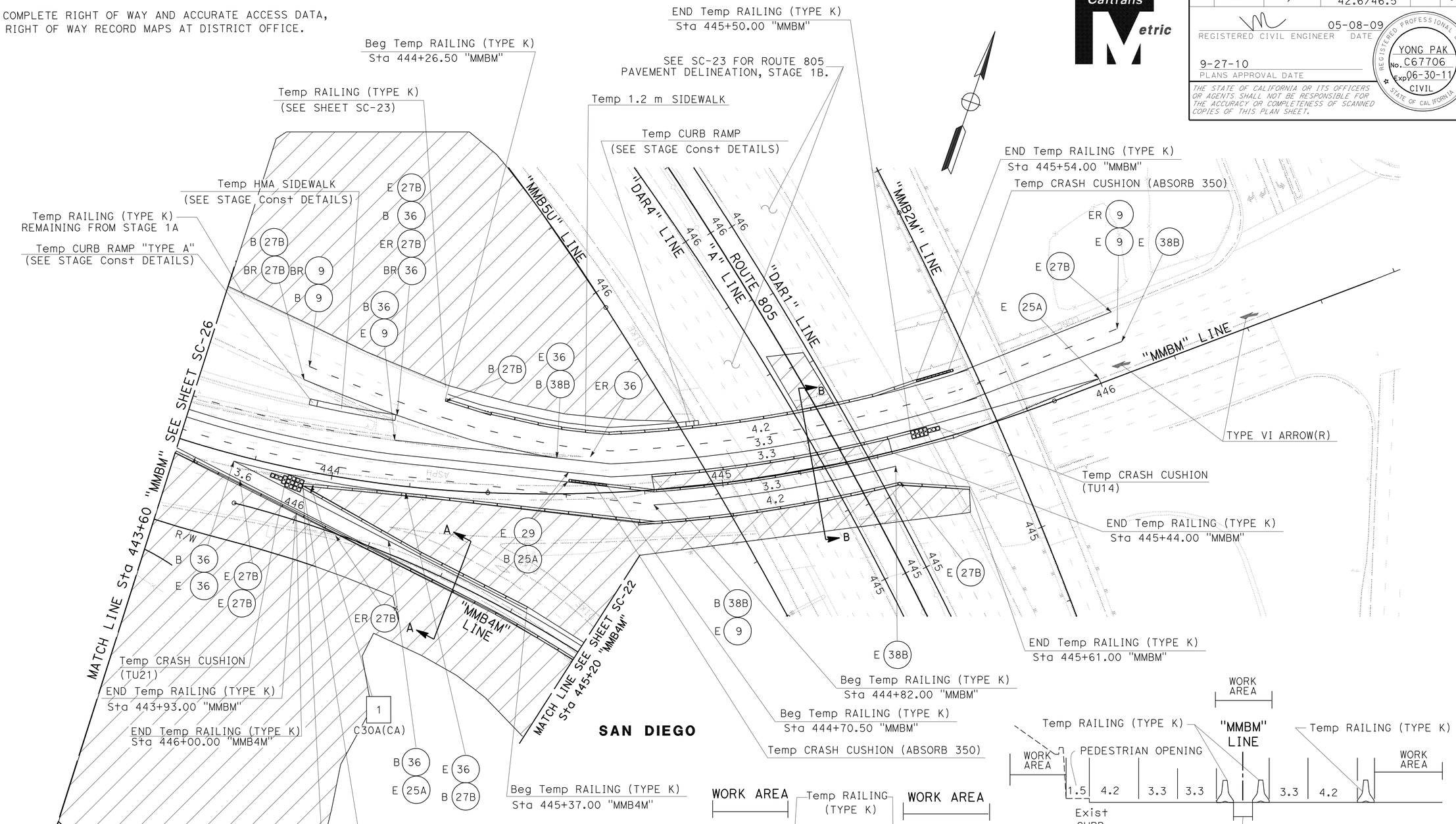

THIS PLAN ACCURATE FOR STAGE CONSTRUCTION AND TRAFFIC HANDLING WORK ONLY

ALL DIMENSIONS ARE IN METERS UNLESS OTHERWISE SHOWN

STAGE1B

STAGE CONSTRUCTION AND TRAFFIC HANDLING PLAN

SCALE 1:500

SC-27

REVISED BY	DATE REVISED
KEN SAYLER	YONG PAK

CALCULATED-DESIGNED BY / CHECKED BY

FUNCTIONAL SUPERVISOR: MAJID KHARRATI

STATE OF CALIFORNIA - DEPARTMENT OF TRANSPORTATION
Caltrans PROJECT DEVELOPMENT

LAST REVISION 05-18-09 | DATE PLOTTED => 29-SEP-2010 | TIME PLOTTED => 14:12

Dist	COUNTY	ROUTE	KILOMETER POST TOTAL PROJECT	SHEET No.	TOTAL SHEETS
11	SD	5,805	R49.9/R51.7, 42.6/46.5	287	886

REGISTERED CIVIL ENGINEER 05-08-09 DATE

9-27-10
PLANS APPROVAL DATE

REGISTERED PROFESSIONAL ENGINEER YONG PAK No. C67706 Exp. 06-30-11 CIVIL STATE OF CALIFORNIA

THE STATE OF CALIFORNIA OR ITS OFFICERS OR AGENTS SHALL NOT BE RESPONSIBLE FOR THE ACCURACY OR COMPLETENESS OF SCANNED COPIES OF THIS PLAN SHEET.

Caltrans Metric

NOTE:

1. FOR COMPLETE RIGHT OF WAY AND ACCURATE ACCESS DATA, SEE RIGHT OF WAY RECORD MAPS AT DISTRICT OFFICE.

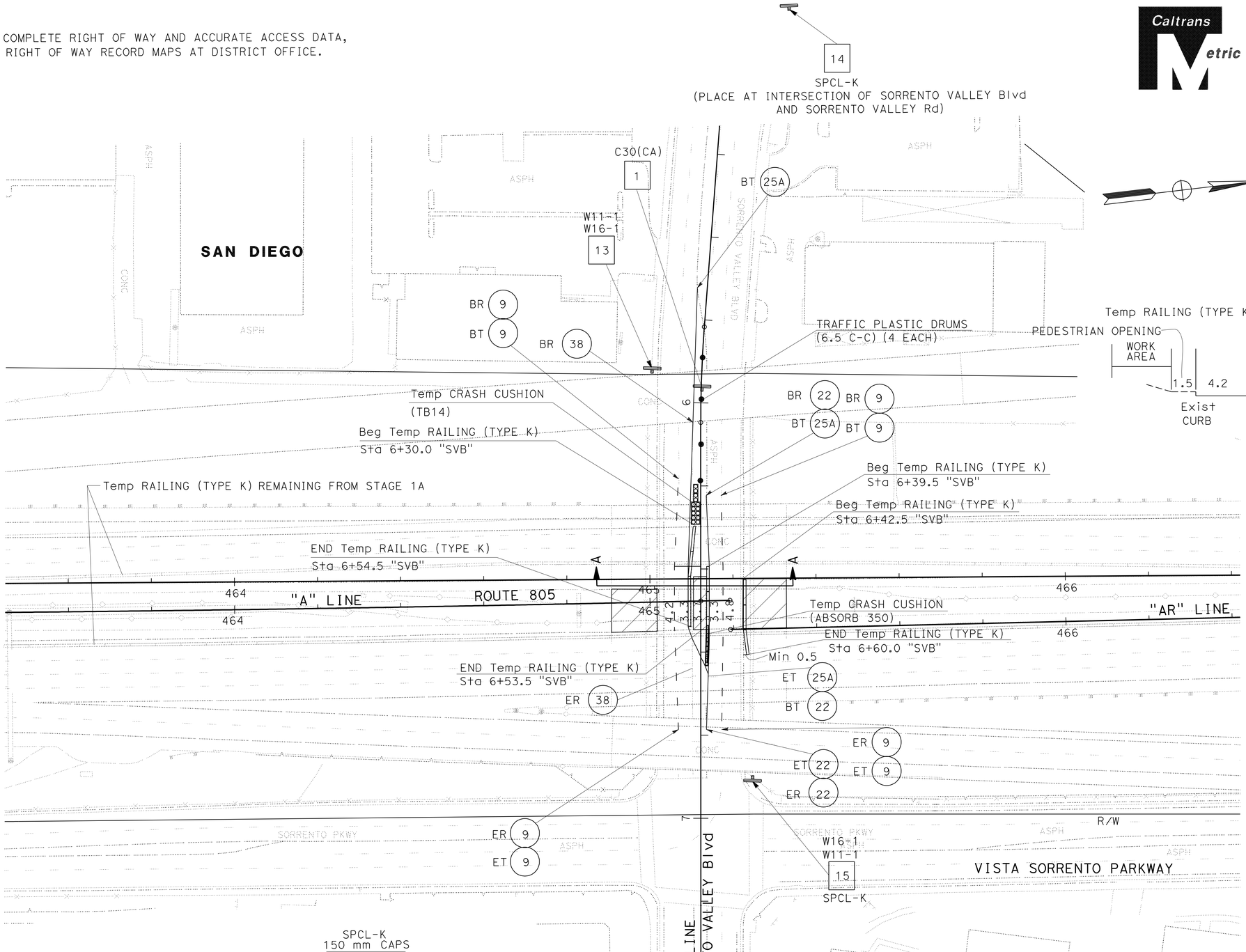

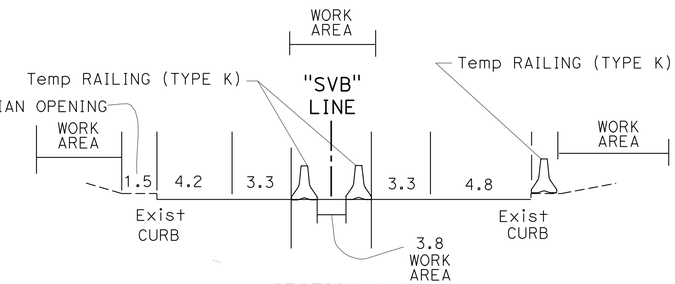

SECTION A-A
NO SCALE

THIS PLAN ACCURATE FOR STAGE CONSTRUCTION AND TRAFFIC HANDLING WORK ONLY

ALL DIMENSIONS ARE IN METERS UNLESS OTHERWISE SHOWN

SCALE 1:500

STAGE 1B
STAGE CONSTRUCTION AND TRAFFIC HANDLING PLAN

SC-28

REVISED BY	DATE REVISED

CALCULATED-DESIGNED BY	CHECKED BY
KEN SAYLER	YONG PAK

FUNCTIONAL SUPERVISOR: MAJID KHARRATI

STATE OF CALIFORNIA - DEPARTMENT OF TRANSPORTATION
Caltrans PROJECT DEVELOPMENT

LAST REVISION 05-18-09 | DATE PLOTTED => 29-SEP-2010 | TIME PLOTTED => 14:12

Dist	COUNTY	ROUTE	KILOMETER POST TOTAL PROJECT	SHEET No.	TOTAL SHEETS
11	SD	5,805	R49.9/R51.7, 42.6/46.5	288	886

REGISTERED CIVIL ENGINEER 05-08-09 DATE

9-27-10
PLANS APPROVAL DATE

REGISTERED PROFESSIONAL ENGINEER YONG PAK No. C67706 Exp. 06-30-11 CIVIL STATE OF CALIFORNIA

THE STATE OF CALIFORNIA OR ITS OFFICERS OR AGENTS SHALL NOT BE RESPONSIBLE FOR THE ACCURACY OR COMPLETENESS OF SCANNED COPIES OF THIS PLAN SHEET.

Caltrans Metric

NOTE:

1. FOR COMPLETE RIGHT OF WAY AND ACCURATE ACCESS DATA, SEE RIGHT OF WAY RECORD MAPS AT DISTRICT OFFICE.

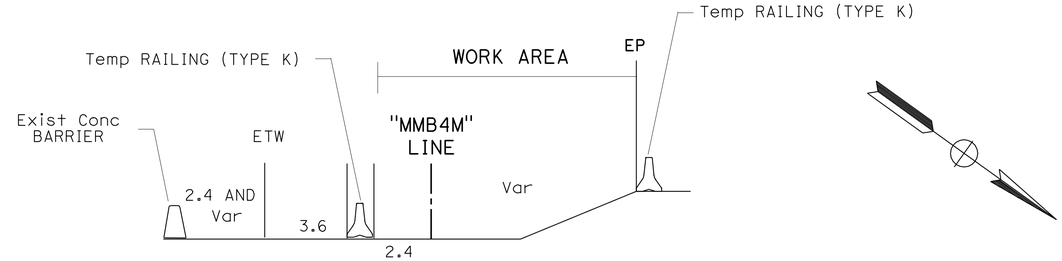

SECTION A-A
NO SCALE

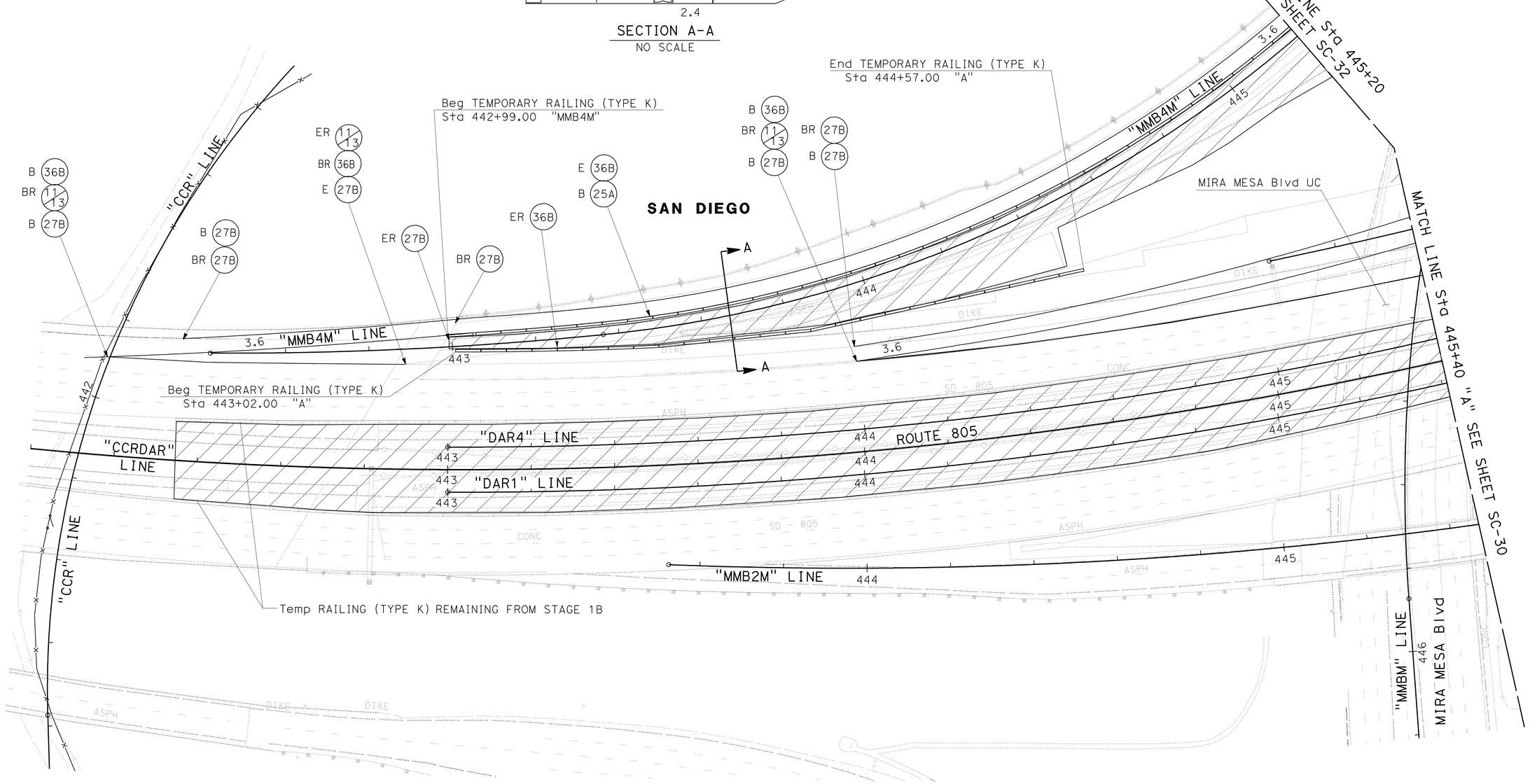

STAGE 2A

STAGE CONSTRUCTION AND TRAFFIC HANDLING PLAN

SCALE 1:500

SC-29

THIS PLAN ACCURATE FOR STAGE CONSTRUCTION AND TRAFFIC HANDLING WORK ONLY

ALL DIMENSIONS ARE IN METERS UNLESS OTHERWISE SHOWN

STATE OF CALIFORNIA - DEPARTMENT OF TRANSPORTATION
Caltrans PROJECT DEVELOPMENT

FUNCTIONAL SUPERVISOR: MAJID KHARRATI
CALCULATED-DESIGNED BY: KEN SAYLER
CHECKED BY: YONG PAK
REVISED BY
DATE REVISED

LAST REVISION 05-18-09
DATE PLOTTED => 29-SEP-2010
TIME PLOTTED => 14:12

Dist	COUNTY	ROUTE	KILOMETER POST TOTAL PROJECT	SHEET No.	TOTAL SHEETS
11	SD	5,805	R49.9/R51.7, 42.6/46.5	289	886

REGISTERED CIVIL ENGINEER 05-08-09 DATE

9-27-10
PLANS APPROVAL DATE

REGISTERED PROFESSIONAL ENGINEER YONG PAK No. C67706 Exp 06-30-11 CIVIL STATE OF CALIFORNIA

THE STATE OF CALIFORNIA OR ITS OFFICERS OR AGENTS SHALL NOT BE RESPONSIBLE FOR THE ACCURACY OR COMPLETENESS OF SCANNED COPIES OF THIS PLAN SHEET.

Caltrans Metric

NOTE:

1. FOR COMPLETE RIGHT OF WAY AND ACCURATE ACCESS DATA, SEE RIGHT OF WAY RECORD MAPS AT DISTRICT OFFICE.

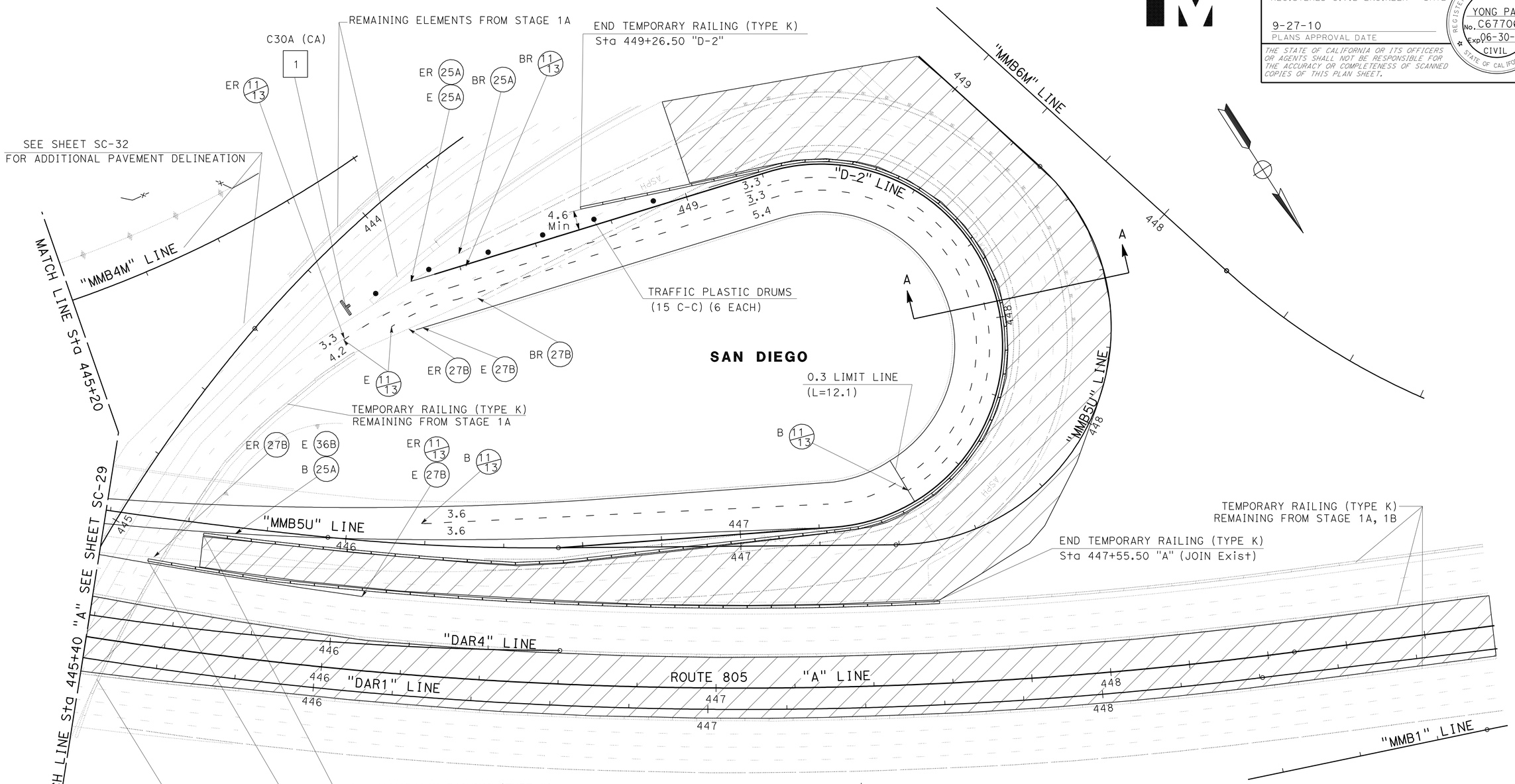

THIS PLAN ACCURATE FOR STAGE CONSTRUCTION AND TRAFFIC HANDLING WORK ONLY

ALL DIMENSIONS ARE IN METERS UNLESS OTHERWISE SHOWN

STAGE 2A
STAGE CONSTRUCTION AND TRAFFIC HANDLING PLAN

SCALE 1:500

SC-30

STATE OF CALIFORNIA - DEPARTMENT OF TRANSPORTATION
Caltrans PROJECT DEVELOPMENT

FUNCTIONAL SUPERVISOR: MAJID KHARRATI
CALCULATED-DESIGNED BY: KEN SAYLER
CHECKED BY: YONG PAK
REVISED BY / DATE REVISED

LAST REVISION 05-18-09 DATE PLOTTED => 29-SEP-2010 TIME PLOTTED => 14:13

Dist	COUNTY	ROUTE	KILOMETER POST TOTAL PROJECT	SHEET No.	TOTAL SHEETS
11	SD	5,805	R49.9/R51.7, 42.6/46.5	290	886

REGISTERED CIVIL ENGINEER 05-08-09 DATE

9-27-10
PLANS APPROVAL DATE

REGISTERED PROFESSIONAL ENGINEER
YONG PAK
No. C67706
Exp. 06-30-11
CIVIL
STATE OF CALIFORNIA

THE STATE OF CALIFORNIA OR ITS OFFICERS OR AGENTS SHALL NOT BE RESPONSIBLE FOR THE ACCURACY OR COMPLETENESS OF SCANNED COPIES OF THIS PLAN SHEET.

Caltrans Metric

NOTE:

1. FOR COMPLETE RIGHT OF WAY AND ACCURATE ACCESS DATA, SEE RIGHT OF WAY RECORD MAPS AT DISTRICT OFFICE.

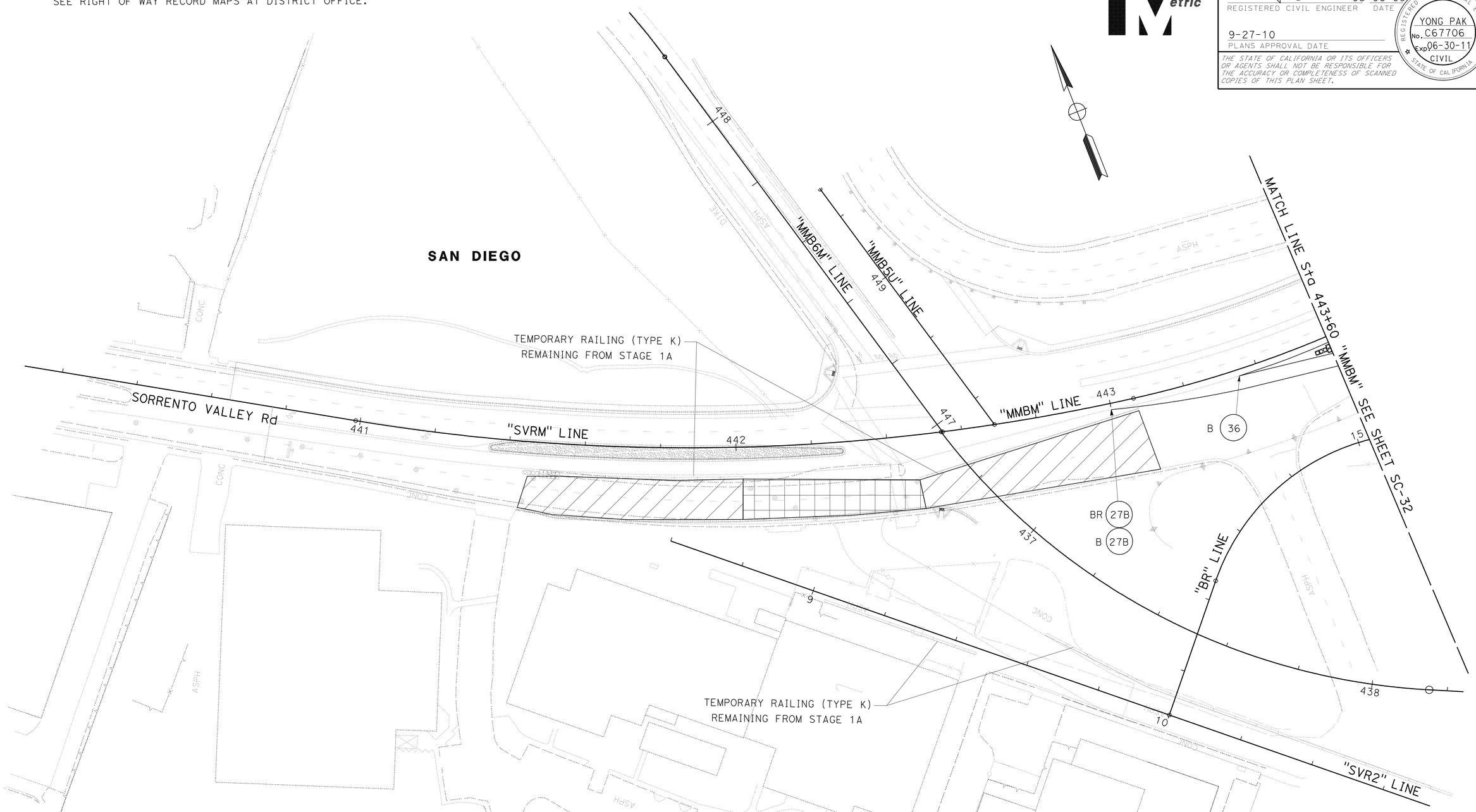

THIS PLAN ACCURATE FOR STAGE CONSTRUCTION AND TRAFFIC HANDLING WORK ONLY

ALL DIMENSIONS ARE IN METERS UNLESS OTHERWISE SHOWN

SCALE 1:500

STAGE 2A
STAGE CONSTRUCTION AND TRAFFIC HANDLING PLAN

SC-31

STATE OF CALIFORNIA - DEPARTMENT OF TRANSPORTATION
Caltrans PROJECT DEVELOPMENT

FUNCTIONAL SUPERVISOR: MAJID KHARRATI
CALCULATED-DESIGNED BY: KEN SAYLER
CHECKED BY: YONG PAK
REVISED BY
DATE REVISED

LAST REVISION 05-18-09
DATE PLOTTED => 29-SEP-2010
TIME PLOTTED => 14:13

Dist	COUNTY	ROUTE	KILOMETER POST TOTAL PROJECT	SHEET No.	TOTAL SHEETS
11	SD	5,805	R49.9/R51.7, 42.6/46.5	291	886

REGISTERED CIVIL ENGINEER 05-08-09 DATE

9-27-10
PLANS APPROVAL DATE

REGISTERED PROFESSIONAL ENGINEER YONG PAK No. C67706 Exp 06-30-11 CIVIL STATE OF CALIFORNIA

THE STATE OF CALIFORNIA OR ITS OFFICERS OR AGENTS SHALL NOT BE RESPONSIBLE FOR THE ACCURACY OR COMPLETENESS OF SCANNED COPIES OF THIS PLAN SHEET.

Caltrans Metric

NOTE:

1. FOR COMPLETE RIGHT OF WAY AND ACCURATE ACCESS DATA, SEE RIGHT OF WAY RECORD MAPS AT DISTRICT OFFICE.

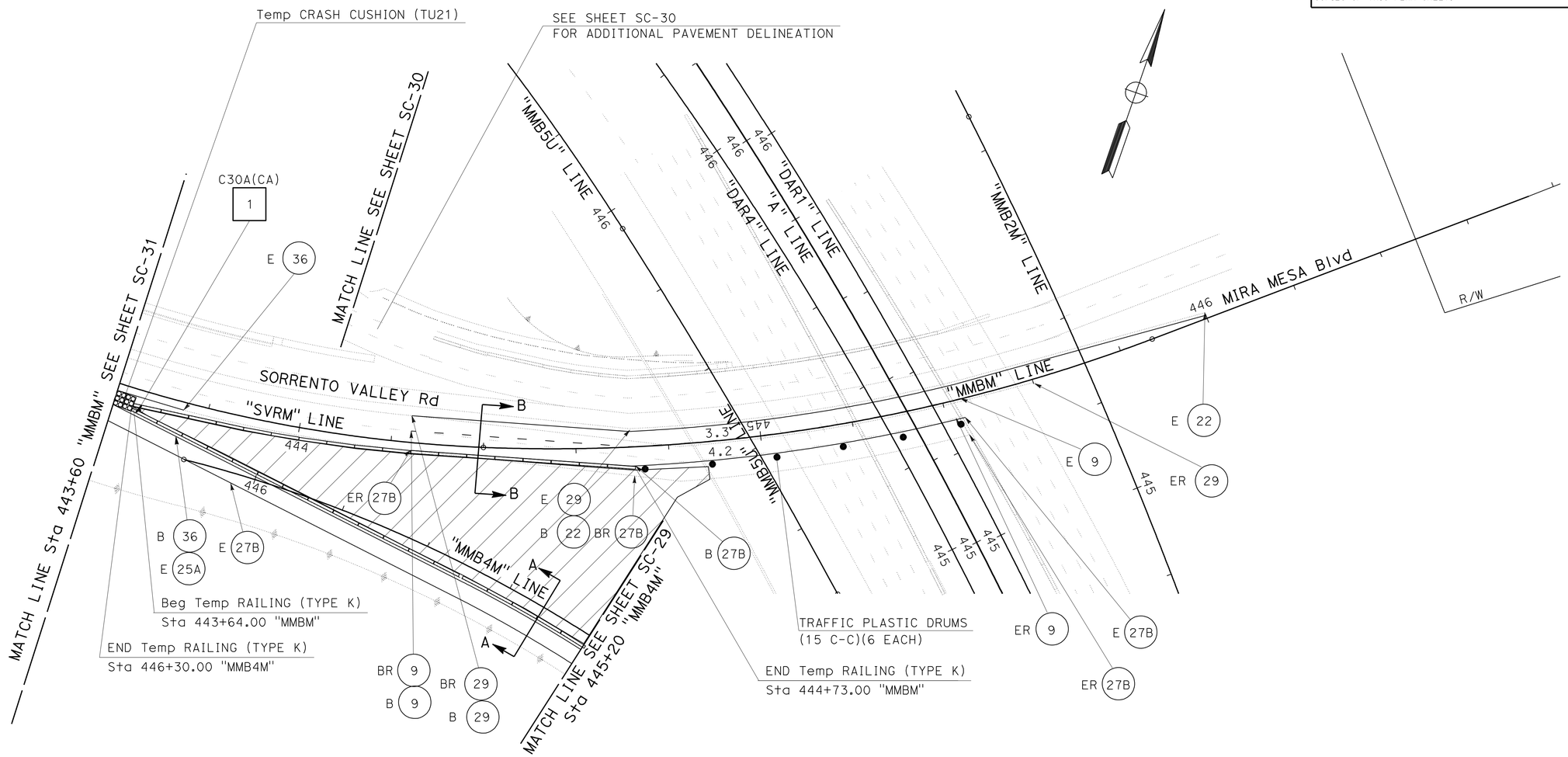

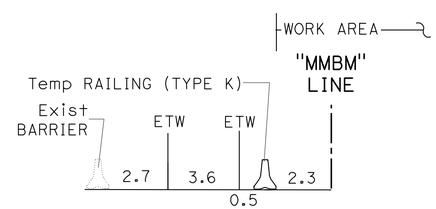

SECTION A-A
NO SCALE

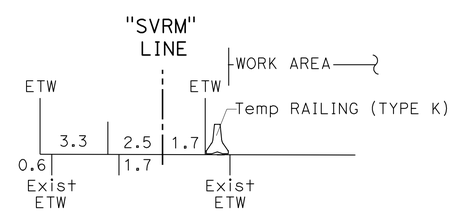

SECTION B-B
NO SCALE

THIS PLAN ACCURATE FOR STAGE CONSTRUCTION AND TRAFFIC HANDLING WORK ONLY

ALL DIMENSIONS ARE IN METERS UNLESS OTHERWISE SHOWN

SCALE 1:500

STAGE 2A
STAGE CONSTRUCTION AND TRAFFIC HANDLING PLAN

SC-32

STATE OF CALIFORNIA - DEPARTMENT OF TRANSPORTATION
Caltrans® PROJECT DEVELOPMENT

FUNCTIONAL SUPERVISOR: MAJID KHARRATI
CALCULATED-DESIGNED BY: KEN SAYLER
CHECKED BY: YONG PAK
REVISED BY / DATE REVISED

LAST REVISION 05-18-09 DATE PLOTTED => 29-SEP-2010 TIME PLOTTED => 14:13

Dist	COUNTY	ROUTE	KILOMETER POST TOTAL PROJECT	SHEET No.	TOTAL SHEETS
11	SD	5,805	R49.9/R51.7, 42.6/46.5	292	886

REGISTERED CIVIL ENGINEER 05-08-09 DATE

9-27-10
PLANS APPROVAL DATE

REGISTERED PROFESSIONAL ENGINEER YONG PAK No. C67706 Exp 06-30-11 CIVIL STATE OF CALIFORNIA

THE STATE OF CALIFORNIA OR ITS OFFICERS OR AGENTS SHALL NOT BE RESPONSIBLE FOR THE ACCURACY OR COMPLETENESS OF SCANNED COPIES OF THIS PLAN SHEET.

Caltrans Metric

NOTE:

1. FOR COMPLETE RIGHT OF WAY AND ACCURATE ACCESS DATA, SEE RIGHT OF WAY RECORD MAPS AT DISTRICT OFFICE.

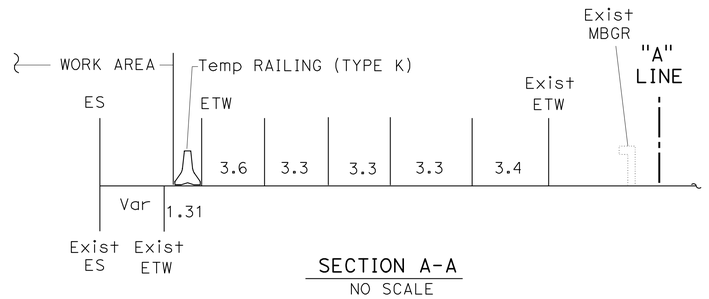

SECTION A-A
NO SCALE

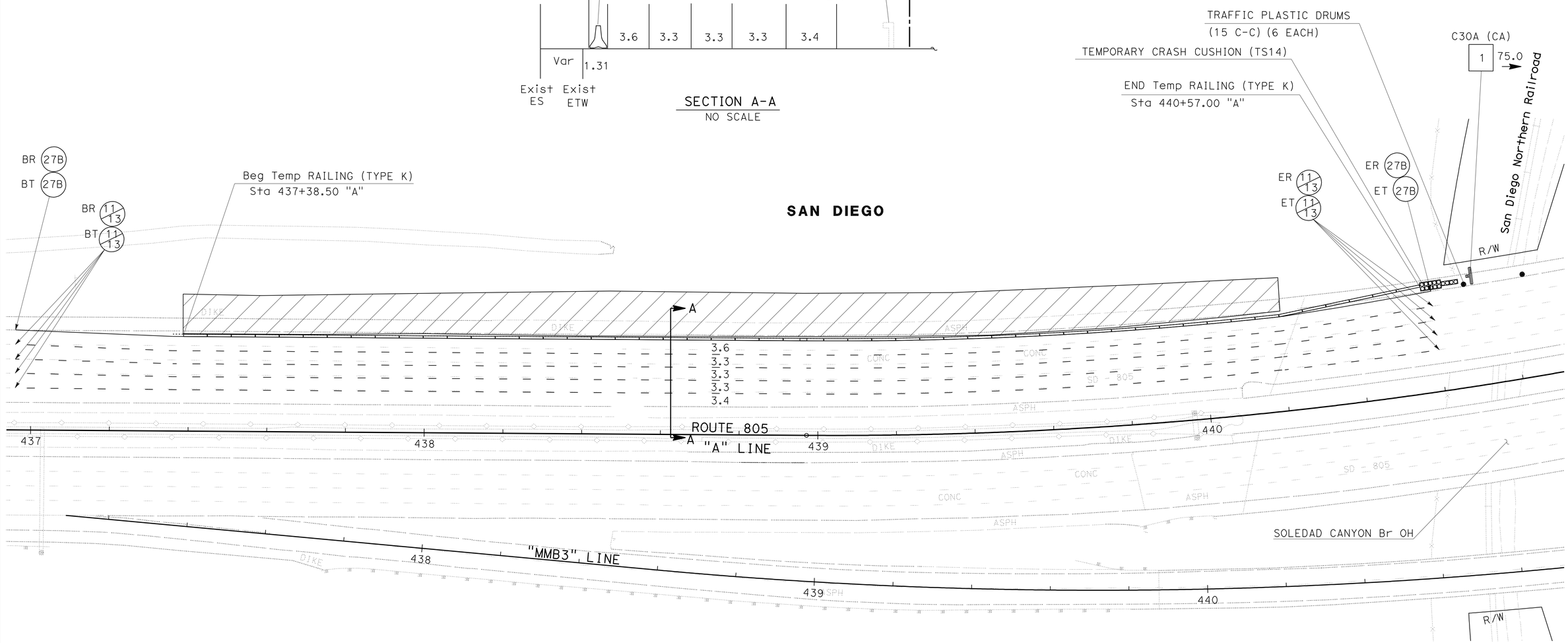

STAGE 2A

STAGE CONSTRUCTION AND TRAFFIC HANDLING PLAN

SCALE 1:500

SC-33

THIS PLAN ACCURATE FOR STAGE CONSTRUCTION AND TRAFFIC HANDLING WORK ONLY

ALL DIMENSIONS ARE IN METERS UNLESS OTHERWISE SHOWN

STATE OF CALIFORNIA - DEPARTMENT OF TRANSPORTATION
Caltrans PROJECT DEVELOPMENT

FUNCTIONAL SUPERVISOR MAJID KHARRATI
CALCULATED-DESIGNED BY KEN SAYLER
CHECKED BY YONG PAK
REVISED BY
DATE REVISED

LAST REVISION 05-18-09
DATE PLOTTED => 29-SEP-2010
TIME PLOTTED => 14:13

Dist	COUNTY	ROUTE	KILOMETER POST TOTAL PROJECT	SHEET No.	TOTAL SHEETS
11	SD	5,805	R49.9/R51.7, 42.6/46.5	293	886

REGISTERED CIVIL ENGINEER 05-08-09 DATE

9-27-10
PLANS APPROVAL DATE

REGISTERED PROFESSIONAL ENGINEER YONG PAK No. C67706 Exp. 06-30-11 CIVIL STATE OF CALIFORNIA

THE STATE OF CALIFORNIA OR ITS OFFICERS OR AGENTS SHALL NOT BE RESPONSIBLE FOR THE ACCURACY OR COMPLETENESS OF SCANNED COPIES OF THIS PLAN SHEET.

Caltrans Metric

NOTE:

1. FOR COMPLETE RIGHT OF WAY AND ACCURATE ACCESS DATA, SEE RIGHT OF WAY RECORD MAPS AT DISTRICT OFFICE.

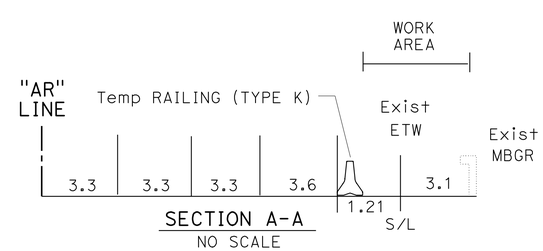

SECTION A-A
NO SCALE

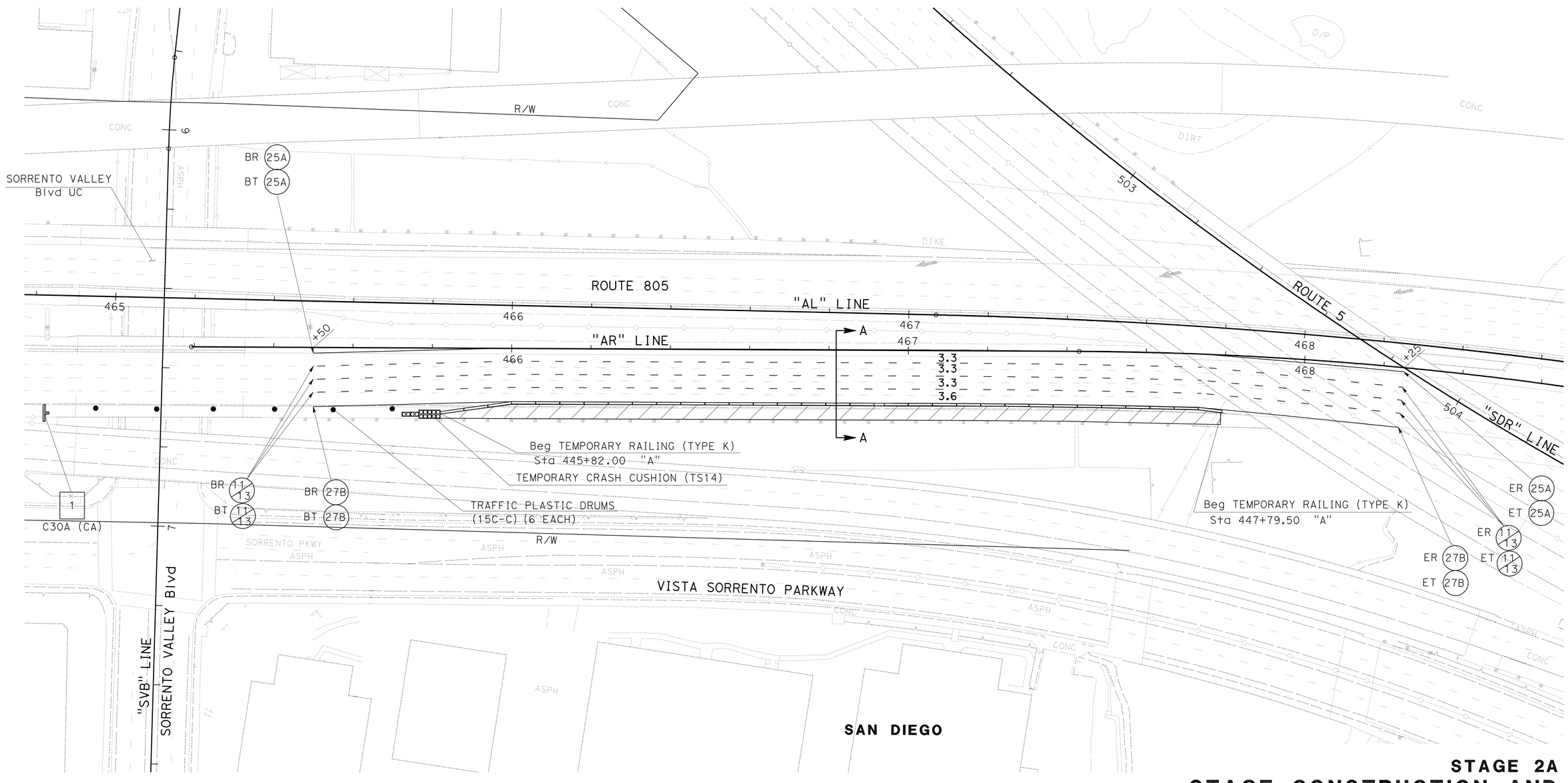

THIS PLAN ACCURATE FOR STAGE CONSTRUCTION AND TRAFFIC HANDLING WORK ONLY

ALL DIMENSIONS ARE IN METERS UNLESS OTHERWISE SHOWN

SCALE 1:500

STAGE 2A
STAGE CONSTRUCTION AND TRAFFIC HANDLING PLAN

SC-34

REVISED BY | DATE REVISED
KEN SAYLER | YONG PAK
CALCULATED-DESIGNED BY | CHECKED BY
FUNCTIONAL SUPERVISOR
MAJID KHARRATI

STATE OF CALIFORNIA - DEPARTMENT OF TRANSPORTATION
Caltrans PROJECT DEVELOPMENT

LAST REVISION 05-18-09 | DATE PLOTTED => 29-SEP-2010 | TIME PLOTTED => 14:13

Dist	COUNTY	ROUTE	KILOMETER POST TOTAL PROJECT	SHEET No.	TOTAL SHEETS
11	SD	5,805	R49.9/R51.7, 42.6/46.5	294	886

REGISTERED CIVIL ENGINEER 05-08-09 DATE

9-27-10
PLANS APPROVAL DATE

REGISTERED PROFESSIONAL ENGINEER YONG PAK No. C67706 Exp. 06-30-11 CIVIL STATE OF CALIFORNIA

THE STATE OF CALIFORNIA OR ITS OFFICERS OR AGENTS SHALL NOT BE RESPONSIBLE FOR THE ACCURACY OR COMPLETENESS OF SCANNED COPIES OF THIS PLAN SHEET.

Caltrans Metric

NOTE:

1. FOR COMPLETE RIGHT OF WAY AND ACCURATE ACCESS DATA, SEE RIGHT OF WAY RECORD MAPS AT DISTRICT OFFICE.

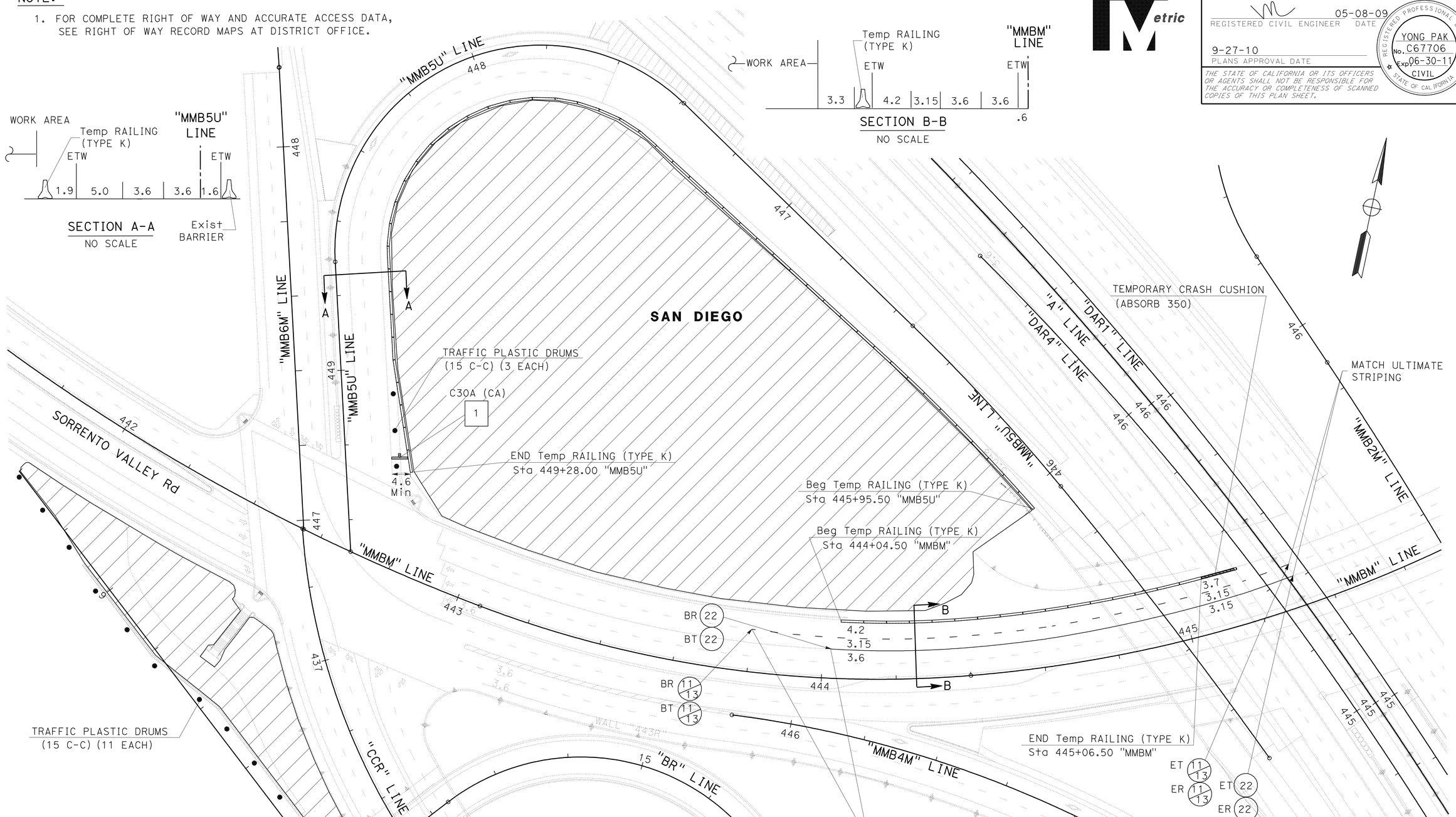

STAGE 2B
STAGE CONSTRUCTION AND TRAFFIC HANDLING PLAN

SCALE 1:500

SC-35

THIS PLAN ACCURATE FOR STAGE CONSTRUCTION AND TRAFFIC HANDLING WORK ONLY

ALL DIMENSIONS ARE IN METERS UNLESS OTHERWISE SHOWN

REVISED BY	DATE REVISED

CALCULATED-DESIGNED BY	KEN SAYLER
CHECKED BY	YONG PAK
FUNCTIONAL SUPERVISOR	MAJID KHARRATI

STATE OF CALIFORNIA - DEPARTMENT OF TRANSPORTATION
Caltrans PROJECT DEVELOPMENT

LAST REVISION 05-20-09 | DATE PLOTTED => 29-SEP-2010 | TIME PLOTTED => 14:13

Dist	COUNTY	ROUTE	KILOMETER POST TOTAL PROJECT	SHEET No.	TOTAL SHEETS
11	SD	5,805	R49.9/R51.7, 42.6/46.5	295	886

REGISTERED CIVIL ENGINEER 05-08-09 DATE

9-27-10
PLANS APPROVAL DATE

REGISTERED PROFESSIONAL ENGINEER YONG PAK No. C67706 Exp. 06-30-11 CIVIL STATE OF CALIFORNIA

THE STATE OF CALIFORNIA OR ITS OFFICERS OR AGENTS SHALL NOT BE RESPONSIBLE FOR THE ACCURACY OR COMPLETENESS OF SCANNED COPIES OF THIS PLAN SHEET.

Caltrans Metric

NOTE:

1. FOR COMPLETE RIGHT OF WAY AND ACCURATE ACCESS DATA, SEE RIGHT OF WAY RECORD MAPS AT DISTRICT OFFICE.

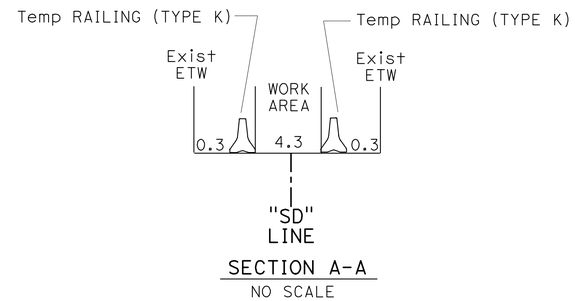

SECTION A-A
NO SCALE

SAN DIEGO

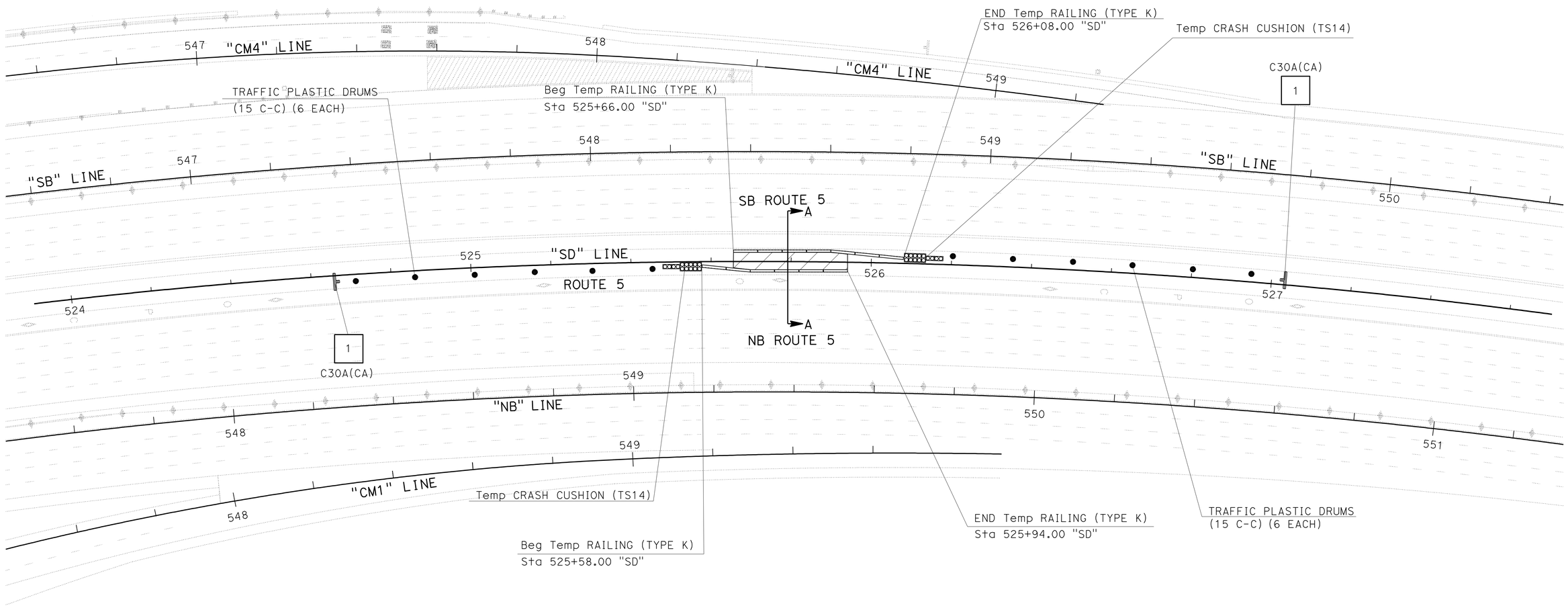

STAGE 2B

STAGE CONSTRUCTION AND TRAFFIC HANDLING PLAN

THIS PLAN ACCURATE FOR STAGE CONSTRUCTION AND TRAFFIC HANDLING WORK ONLY

ALL DIMENSIONS ARE IN METERS UNLESS OTHERWISE SHOWN

SCALE 1:500

SC-36

STATE OF CALIFORNIA - DEPARTMENT OF TRANSPORTATION
Caltrans® PROJECT DEVELOPMENT

FUNCTIONAL SUPERVISOR: MAJID KHARRATI
CALCULATED-DESIGNED BY: KEN SAYLER
CHECKED BY: YONG PAK
REVISED BY / DATE REVISED

LAST REVISION 05-20-09
DATE PLOTTED => 29-SEP-2010
TIME PLOTTED => 14:13

Dist	COUNTY	ROUTE	KILOMETER POST TOTAL PROJECT	SHEET No.	TOTAL SHEETS
11	SD	5,805	R49.9/R51.7, 42.6/46.5	296	886

REGISTERED CIVIL ENGINEER 05-08-09 DATE

9-27-10
PLANS APPROVAL DATE

REGISTERED PROFESSIONAL ENGINEER
YONG PAK
No. C67706
Exp. 06-30-11
CIVIL
STATE OF CALIFORNIA

THE STATE OF CALIFORNIA OR ITS OFFICERS OR AGENTS SHALL NOT BE RESPONSIBLE FOR THE ACCURACY OR COMPLETENESS OF SCANNED COPIES OF THIS PLAN SHEET.

Caltrans Metric

NOTE:

1. FOR COMPLETE RIGHT OF WAY AND ACCURATE ACCESS DATA, SEE RIGHT OF WAY RECORD MAPS AT DISTRICT OFFICE.

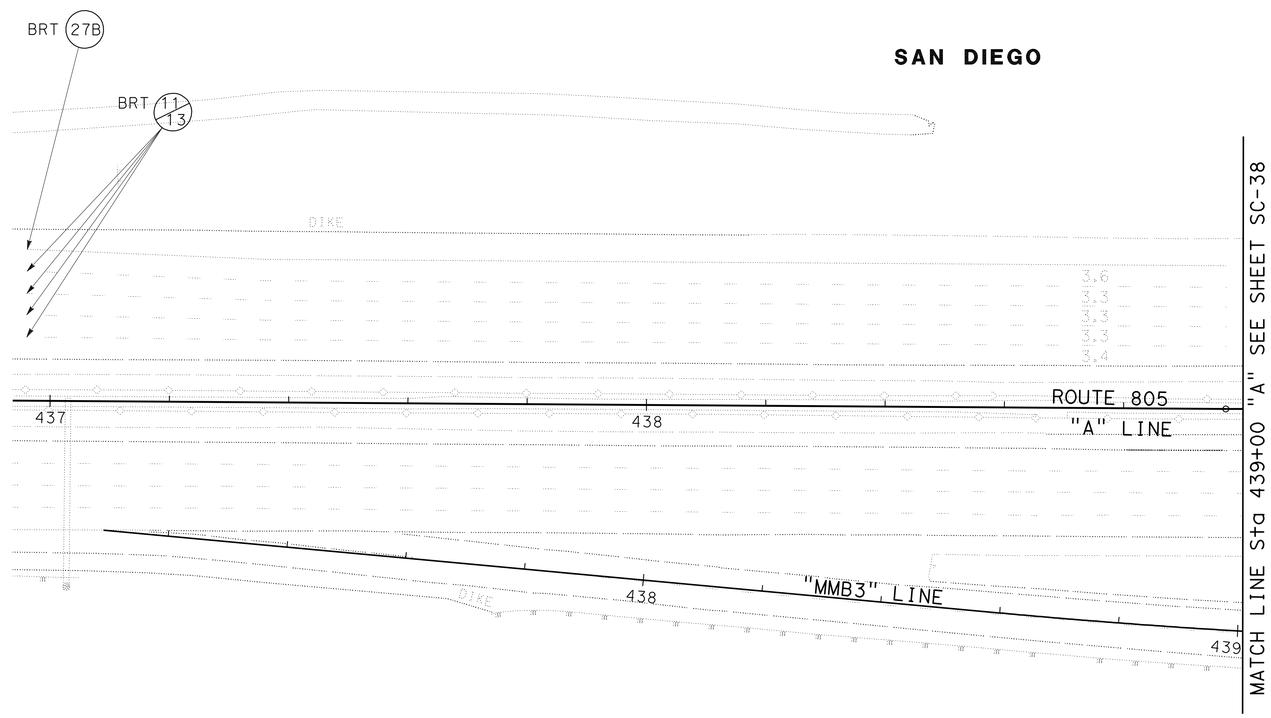

STAGE 2C

STAGE CONSTRUCTION AND TRAFFIC HANDLING PLAN

SCALE 1:500

SC-37

THIS PLAN ACCURATE FOR STAGE CONSTRUCTION AND TRAFFIC HANDLING WORK ONLY

ALL DIMENSIONS ARE IN METERS UNLESS OTHERWISE SHOWN

STATE OF CALIFORNIA - DEPARTMENT OF TRANSPORTATION
Caltrans PROJECT DEVELOPMENT

FUNCTIONAL SUPERVISOR: MAJID KHARRATI
CALCULATED-DESIGNED BY: KEN SAYLER
CHECKED BY: YONG PAK
REVISED BY
DATE REVISED

LAST REVISION 05-20-09
DATE PLOTTED => 29-SEP-2010
TIME PLOTTED => 14:13

Dist	COUNTY	ROUTE	KILOMETER POST TOTAL PROJECT	SHEET No.	TOTAL SHEETS
11	SD	5,805	R49.9/R51.7, 42.6/46.5	297	886

REGISTERED CIVIL ENGINEER 05-08-09 DATE

9-27-10
PLANS APPROVAL DATE

REGISTERED PROFESSIONAL ENGINEER
YONG PAK
No. C67706
Exp. 06-30-11
CIVIL
STATE OF CALIFORNIA

THE STATE OF CALIFORNIA OR ITS OFFICERS OR AGENTS SHALL NOT BE RESPONSIBLE FOR THE ACCURACY OR COMPLETENESS OF SCANNED COPIES OF THIS PLAN SHEET.

Caltrans Metric

NOTE:

1. FOR COMPLETE RIGHT OF WAY AND ACCURATE ACCESS DATA, SEE RIGHT OF WAY RECORD MAPS AT DISTRICT OFFICE.

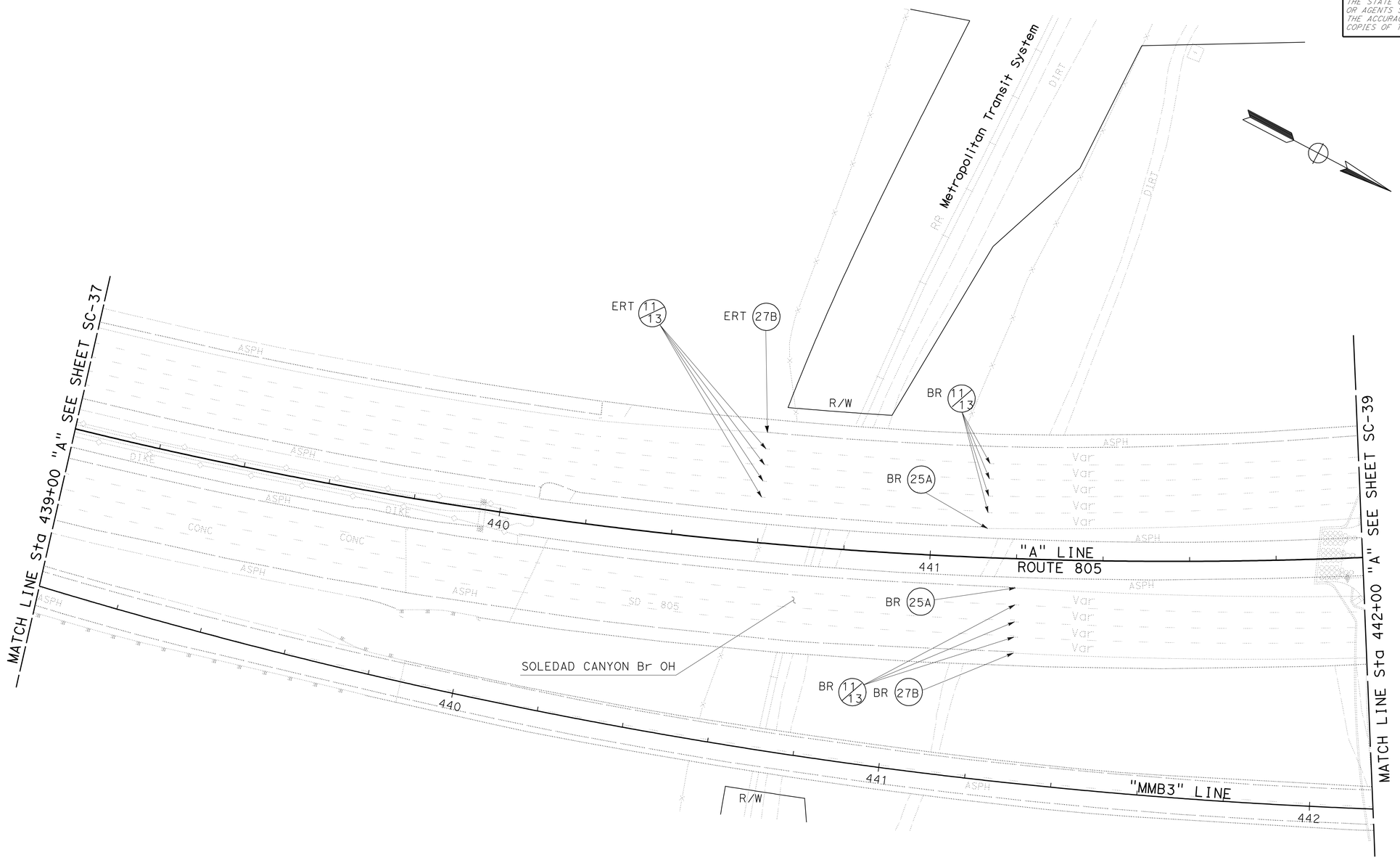

THIS PLAN ACCURATE FOR STAGE CONSTRUCTION AND TRAFFIC HANDLING WORK ONLY

ALL DIMENSIONS ARE IN METERS UNLESS OTHERWISE SHOWN

SCALE 1:500

STAGE 2C
STAGE CONSTRUCTION AND TRAFFIC HANDLING PLAN

SC-38

STATE OF CALIFORNIA - DEPARTMENT OF TRANSPORTATION
Caltrans PROJECT DEVELOPMENT

FUNCTIONAL SUPERVISOR: MAJID KHARRATI
CALCULATED-DESIGNED BY: KEN SAYLER
CHECKED BY: YONG PAK
REVISED BY / DATE REVISED

LAST REVISION 05-20-09
DATE PLOTTED => 29-SEP-2010
TIME PLOTTED => 14:13

Dist	COUNTY	ROUTE	KILOMETER POST TOTAL PROJECT	SHEET No.	TOTAL SHEETS
11	SD	5,805	R49.9/R51.7, 42.6/46.5	298	886

REGISTERED CIVIL ENGINEER 05-08-09 DATE

9-27-10
PLANS APPROVAL DATE

REGISTERED PROFESSIONAL ENGINEER YONG PAK No. C67706 Exp. 06-30-11 CIVIL STATE OF CALIFORNIA

THE STATE OF CALIFORNIA OR ITS OFFICERS OR AGENTS SHALL NOT BE RESPONSIBLE FOR THE ACCURACY OR COMPLETENESS OF SCANNED COPIES OF THIS PLAN SHEET.

Caltrans Metric

NOTE:

1. FOR COMPLETE RIGHT OF WAY AND ACCURATE ACCESS DATA, SEE RIGHT OF WAY RECORD MAPS AT DISTRICT OFFICE.

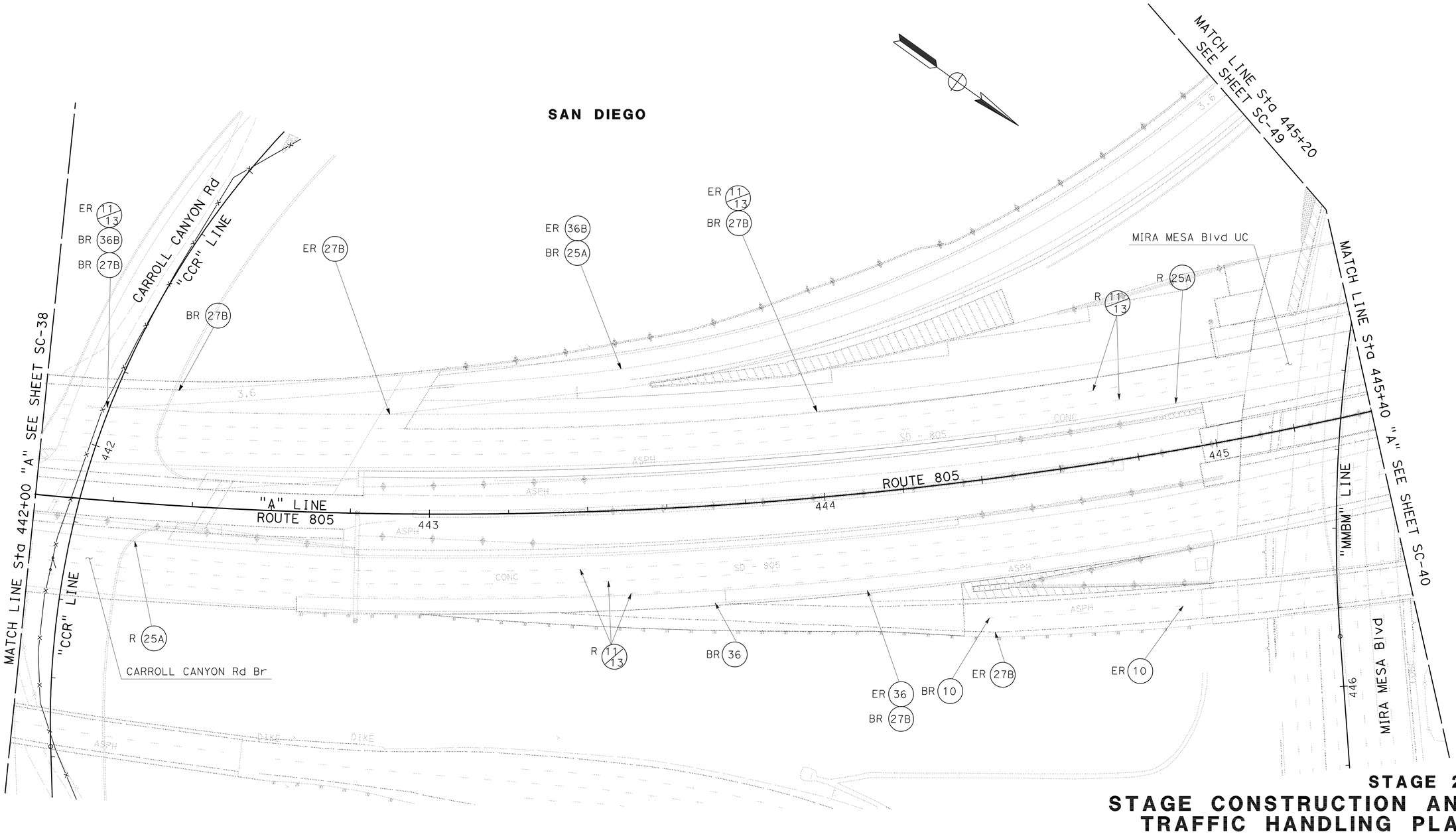

STAGE 2C

STAGE CONSTRUCTION AND TRAFFIC HANDLING PLAN

THIS PLAN ACCURATE FOR STAGE CONSTRUCTION AND TRAFFIC HANDLING WORK ONLY

ALL DIMENSIONS ARE IN METERS UNLESS OTHERWISE SHOWN

SCALE 1:500

SC-39

REVISED BY	DATE REVISED

CALCULATED-DESIGNED BY	KEN SAYLER
CHECKED BY	YONG PAK
FUNCTIONAL SUPERVISOR	MAJID KHARRATI

STATE OF CALIFORNIA - DEPARTMENT OF TRANSPORTATION
Caltrans PROJECT DEVELOPMENT

LAST REVISION 05-20-09 DATE PLOTTED => 29-SEP-2010 TIME PLOTTED => 14:14

Dist	COUNTY	ROUTE	KILOMETER POST TOTAL PROJECT	SHEET No.	TOTAL SHEETS
11	SD	5,805	R49.9/R51.7, 42.6/46.5	299	886

REGISTERED CIVIL ENGINEER 05-08-09 DATE

9-27-10
PLANS APPROVAL DATE

REGISTERED PROFESSIONAL ENGINEER YONG PAK No. C67706 Exp. 06-30-11 CIVIL STATE OF CALIFORNIA

THE STATE OF CALIFORNIA OR ITS OFFICERS OR AGENTS SHALL NOT BE RESPONSIBLE FOR THE ACCURACY OR COMPLETENESS OF SCANNED COPIES OF THIS PLAN SHEET.

Caltrans Metric

NOTE:

1. FOR COMPLETE RIGHT OF WAY AND ACCURATE ACCESS DATA, SEE RIGHT OF WAY RECORD MAPS AT DISTRICT OFFICE.

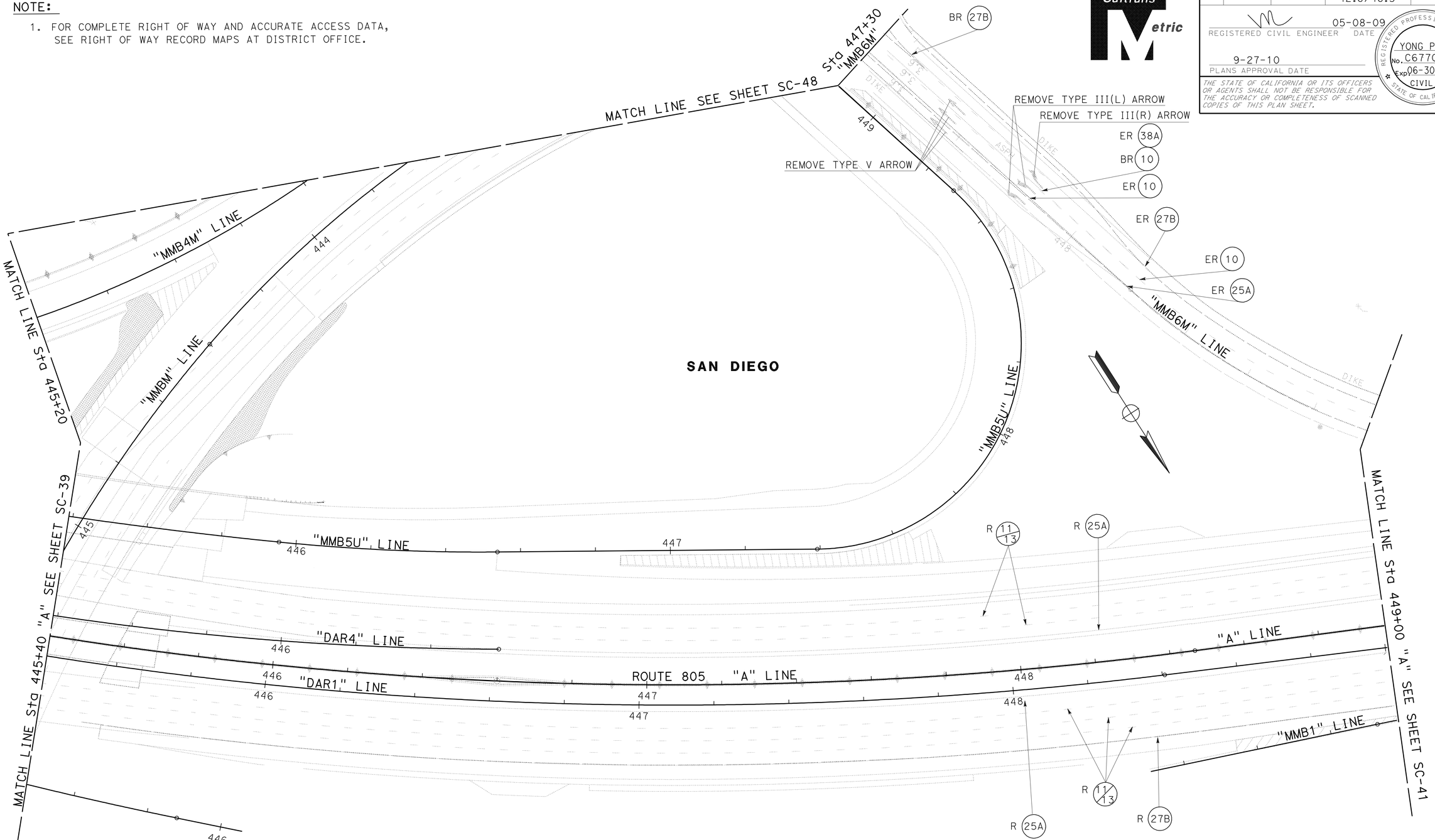

THIS PLAN ACCURATE FOR STAGE CONSTRUCTION AND TRAFFIC HANDLING WORK ONLY

ALL DIMENSIONS ARE IN METERS UNLESS OTHERWISE SHOWN

SCALE 1:500

STAGE 2C
STAGE CONSTRUCTION AND TRAFFIC HANDLING PLAN

SC-40

STATE OF CALIFORNIA - DEPARTMENT OF TRANSPORTATION
Caltrans PROJECT DEVELOPMENT

FUNCTIONAL SUPERVISOR: MAJID KHARRATI
CALCULATED-DESIGNED BY: KEN SAYLER
CHECKED BY: YONG PAK
REVISED BY / DATE REVISED

LAST REVISION 05-20-09
DATE PLOTTED => 29-SEP-2010
TIME PLOTTED => 14:14

Dist	COUNTY	ROUTE	KILOMETER POST TOTAL PROJECT	SHEET No.	TOTAL SHEETS
11	SD	5,805	R49.9/R51.7, 42.6/46.5	300	886

REGISTERED CIVIL ENGINEER 05-08-09 DATE

9-27-10
PLANS APPROVAL DATE

REGISTERED PROFESSIONAL ENGINEER YONG PAK No. C67706 Exp. 06-30-11 CIVIL STATE OF CALIFORNIA

THE STATE OF CALIFORNIA OR ITS OFFICERS OR AGENTS SHALL NOT BE RESPONSIBLE FOR THE ACCURACY OR COMPLETENESS OF SCANNED COPIES OF THIS PLAN SHEET.

Caltrans Metric

NOTE:

1. FOR COMPLETE RIGHT OF WAY AND ACCURATE ACCESS DATA, SEE RIGHT OF WAY RECORD MAPS AT DISTRICT OFFICE.

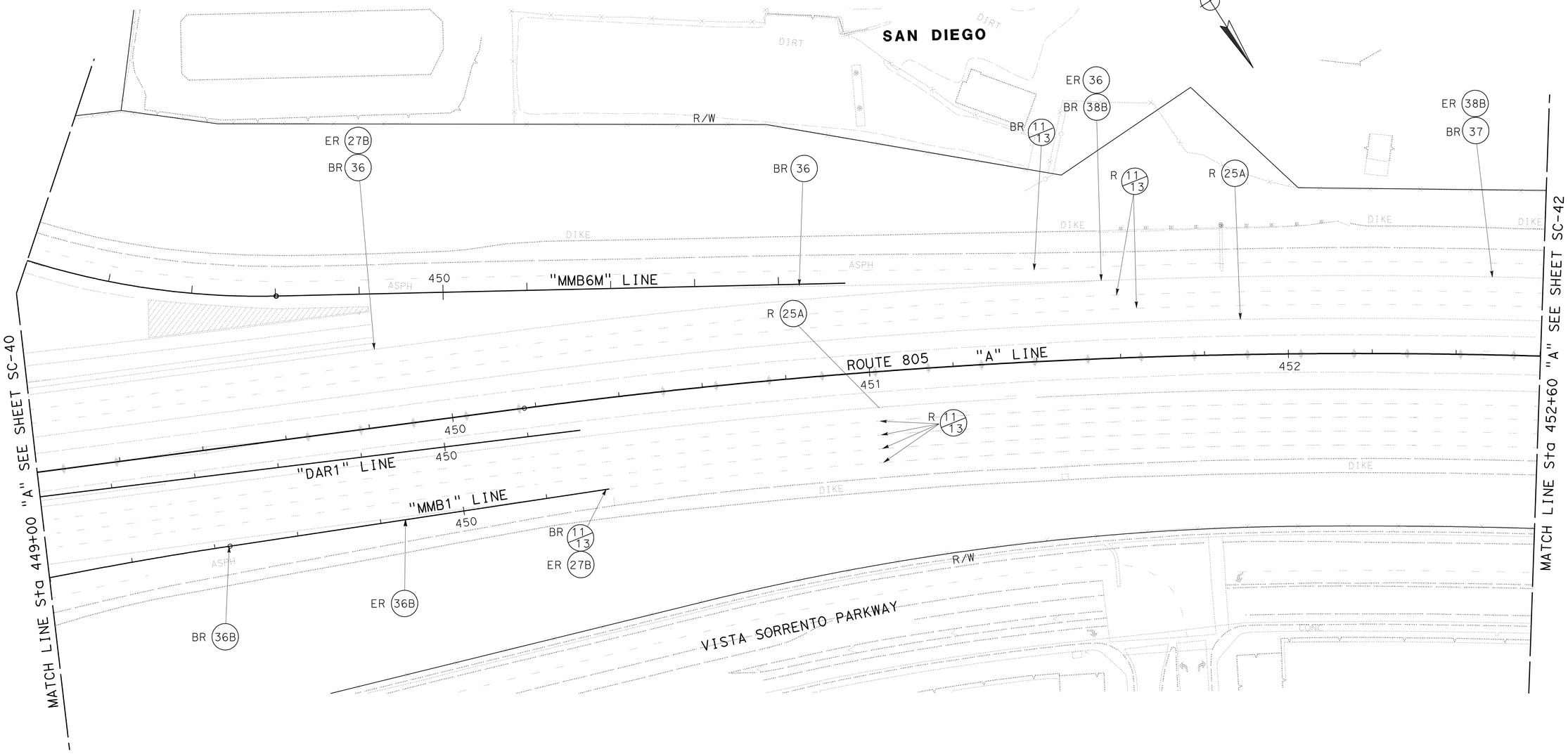

THIS PLAN ACCURATE FOR STAGE CONSTRUCTION AND TRAFFIC HANDLING WORK ONLY

ALL DIMENSIONS ARE IN METERS UNLESS OTHERWISE SHOWN

SCALE 1:500

STAGE 2C
STAGE CONSTRUCTION AND TRAFFIC HANDLING PLAN

SC-41

STATE OF CALIFORNIA - DEPARTMENT OF TRANSPORTATION
Caltrans® PROJECT DEVELOPMENT

FUNCTIONAL SUPERVISOR: MAJID KHARRATI
CALCULATED-DESIGNED BY: KEN SAYLER
CHECKED BY: YONG PAK
REVISED BY / DATE REVISED

LAST REVISION 05-20-09 DATE PLOTTED => 29-SEP-2010 TIME PLOTTED => 14:14