Dist	COUNTY	ROUTE	KILOMETER POST TOTAL PROJECT	SHEET No.	TOTAL SHEETS
11	SD	5,805	R49.9/R51.7, 42.6/46.5	101	886

REGISTERED CIVIL ENGINEER 05-13-09 DATE

9-27-10
PLANS APPROVAL DATE

REGISTERED PROFESSIONAL ENGINEER SHAHBAZ A ALVI No. C55293 Exp. 12-31-10 CIVIL STATE OF CALIFORNIA

THE STATE OF CALIFORNIA OR ITS OFFICERS OR AGENTS SHALL NOT BE RESPONSIBLE FOR THE ACCURACY OR COMPLETENESS OF ELECTRONIC COPIES OF THIS PLAN SHEET.

Caltrans Metric

NOTE:

FOR COMPLETE RIGHT OF WAY AND ACCURATE ACCESS DATA, SEE RIGHT OF WAY RECORD MAPS AT DISTRICT OFFICE.

TEMPORARY WATER POLLUTION CONTROL PLAN
STAGE 1A

SCALE 1:500

WPC-6

THIS PLAN ACCURATE FOR TEMPORARY WATER POLLUTION CONTROL WORK ONLY

ALL DIMENSIONS ARE IN METERS UNLESS OTHERWISE SHOWN

STATE OF CALIFORNIA - DEPARTMENT OF TRANSPORTATION
Caltrans PROJECT DEVELOPMENT

FUNCTIONAL SUPERVISOR: MAJID KHARRATI

CALCULATED-DESIGNED BY: ALLEN LOPEZ
CHECKED BY: SHAHBAZ A ALVI

REVISED BY / DATE REVISED

LAST REVISION 05-29-09 DATE PLOTTED => 29-SEP-2010 TIME PLOTTED => 13:45

Dist	COUNTY	ROUTE	KILOMETER POST TOTAL PROJECT	SHEET No.	TOTAL SHEETS
11	SD	5,805	R49.9/R51.7, 42.6/46.5	102	886

REGISTERED CIVIL ENGINEER 05-13-09 DATE

PLANS APPROVAL DATE 9-27-10

REGISTERED PROFESSIONAL ENGINEER SHAHBAZ A ALVI No. C55293 Exp. 12-31-10 CIVIL STATE OF CALIFORNIA

THE STATE OF CALIFORNIA OR ITS OFFICERS OR AGENTS SHALL NOT BE RESPONSIBLE FOR THE ACCURACY OR COMPLETENESS OF ELECTRONIC COPIES OF THIS PLAN SHEET.

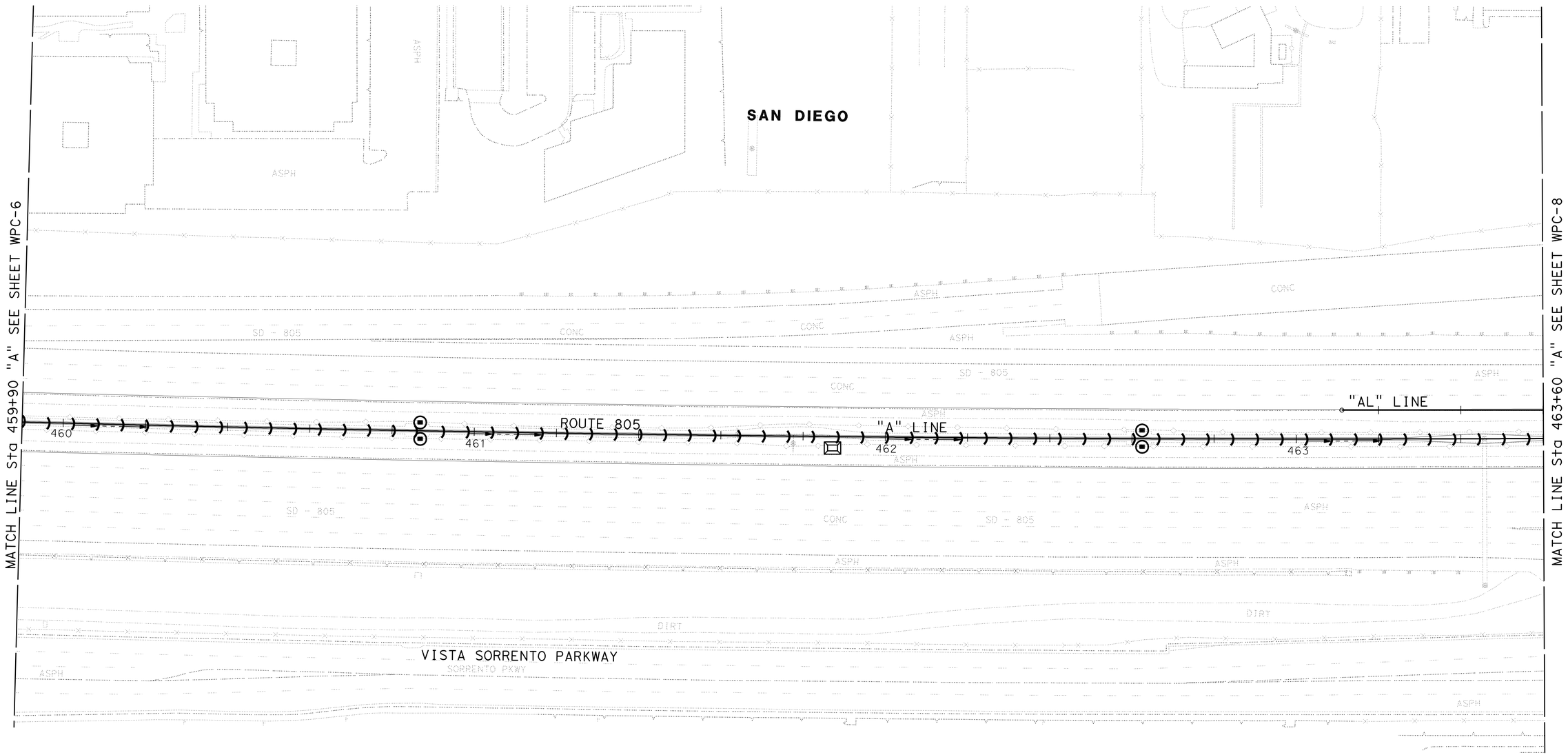

TEMPORARY WATER POLLUTION CONTROL PLAN
STAGE 1A

SCALE 1:500

WPC-7

THIS PLAN ACCURATE FOR TEMPORARY WATER POLLUTION CONTROL WORK ONLY

ALL DIMENSIONS ARE IN METERS UNLESS OTHERWISE SHOWN

STATE OF CALIFORNIA - DEPARTMENT OF TRANSPORTATION
Caltrans PROJECT DEVELOPMENT

FUNCTIONAL SUPERVISOR: MAJID KHARRATI

CALCULATED-DESIGNED BY: ALLEN LOPEZ
CHECKED BY: SHAHBAZ A ALVI

REVISED BY
DATE REVISED

LAST REVISION 05-29-09
DATE PLOTTED => 29-SEP-2010
TIME PLOTTED => 13:45

Dist	COUNTY	ROUTE	KILOMETER POST TOTAL PROJECT	SHEET No.	TOTAL SHEETS
11	SD	5,805	R49.9/R51.7, 42.6/46.5	103	886

REGISTERED CIVIL ENGINEER 05-13-09 DATE

9-27-10
PLANS APPROVAL DATE

REGISTERED PROFESSIONAL ENGINEER SHAHBAZ A ALVI No. C55293 Exp. 12-31-10 CIVIL STATE OF CALIFORNIA

THE STATE OF CALIFORNIA OR ITS OFFICERS OR AGENTS SHALL NOT BE RESPONSIBLE FOR THE ACCURACY OR COMPLETENESS OF ELECTRONIC COPIES OF THIS PLAN SHEET.

Caltrans Metric

NOTE:

FOR COMPLETE RIGHT OF WAY AND ACCURATE ACCESS DATA, SEE RIGHT OF WAY RECORD MAPS AT DISTRICT OFFICE.

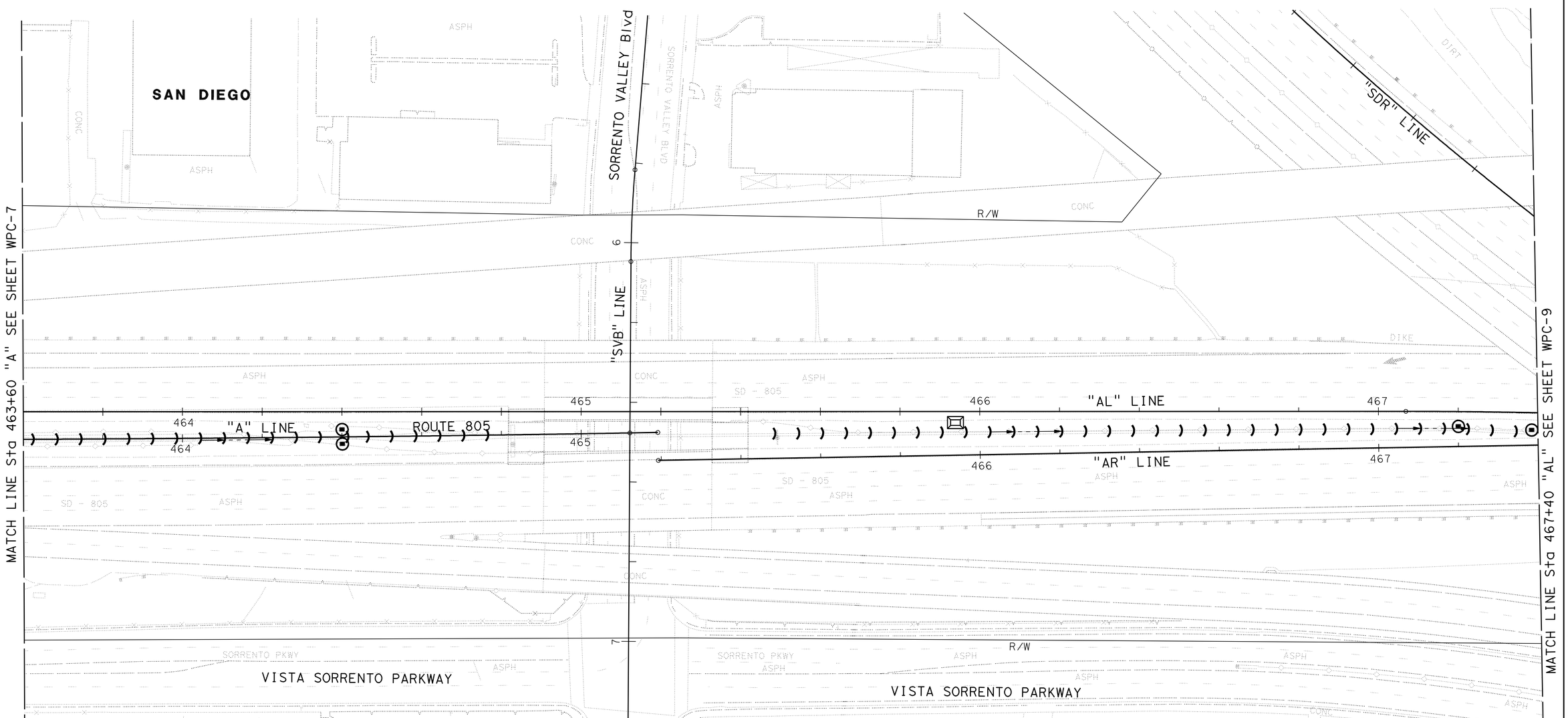

TEMPORARY WATER POLLUTION CONTROL PLAN
STAGE 1A

SCALE 1:500

WPC- 8

THIS PLAN ACCURATE FOR TEMPORARY WATER POLLUTION CONTROL WORK ONLY

ALL DIMENSIONS ARE IN METERS UNLESS OTHERWISE SHOWN

STATE OF CALIFORNIA - DEPARTMENT OF TRANSPORTATION
Caltrans PROJECT DEVELOPMENT

FUNCTIONAL SUPERVISOR: MAJID KHARRATI

CALCULATED-DESIGNED BY: ALLEN LOPEZ
CHECKED BY: SHAHBAZ A ALVI

REVISED BY
DATE REVISED

LAST REVISION 05-29-09
DATE PLOTTED => 29-SEP-2010
TIME PLOTTED => 13:45

Dist	COUNTY	ROUTE	KILOMETER POST TOTAL PROJECT	SHEET No.	TOTAL SHEETS
11	SD	5,805	R49.9/R51.7, 42.6/46.5	104	886

REGISTERED CIVIL ENGINEER 05-13-09 DATE

9-27-10
PLANS APPROVAL DATE

REGISTERED PROFESSIONAL ENGINEER SHAHBAZ A ALVI No. C55293 Exp. 12-31-10 CIVIL STATE OF CALIFORNIA

THE STATE OF CALIFORNIA OR ITS OFFICERS OR AGENTS SHALL NOT BE RESPONSIBLE FOR THE ACCURACY OR COMPLETENESS OF ELECTRONIC COPIES OF THIS PLAN SHEET.

Caltrans Metric

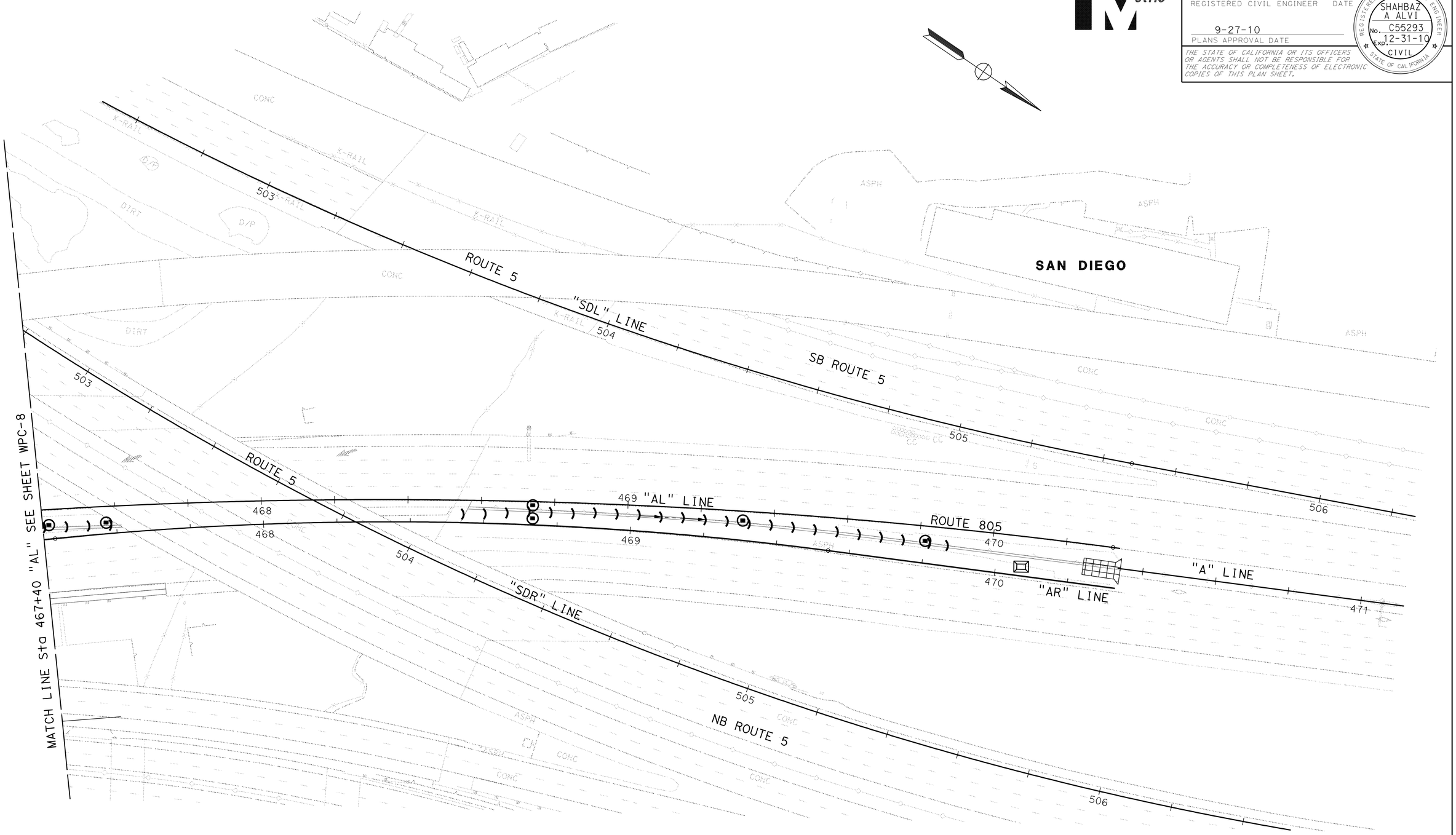

TEMPORARY WATER POLLUTION CONTROL PLAN
STAGE 1A

SCALE 1:500

WPC-9

THIS PLAN ACCURATE FOR TEMPORARY WATER POLLUTION CONTROL WORK ONLY

ALL DIMENSIONS ARE IN METERS UNLESS OTHERWISE SHOWN

STATE OF CALIFORNIA - DEPARTMENT OF TRANSPORTATION
Caltrans® PROJECT DEVELOPMENT

FUNCTIONAL SUPERVISOR: MAJID KHARRATI

CALCULATED-DESIGNED BY: ALLEN LOPEZ
CHECKED BY: SHAHBAZ A ALVI

REVISED BY | DATE REVISED

LAST REVISION DATE PLOTTED => 29-SEP-2010
05-29-09 TIME PLOTTED => 13:45

Dist	COUNTY	ROUTE	KILOMETER POST TOTAL PROJECT	SHEET No.	TOTAL SHEETS
11	SD	5,805	R49.9/R51.7, 42.6/46.5	105	886

REGISTERED CIVIL ENGINEER 05-13-09 DATE

9-27-10
PLANS APPROVAL DATE

REGISTERED PROFESSIONAL ENGINEER SHAHBAZ A ALVI No. C55293 Exp. 12-31-10 CIVIL STATE OF CALIFORNIA

THE STATE OF CALIFORNIA OR ITS OFFICERS OR AGENTS SHALL NOT BE RESPONSIBLE FOR THE ACCURACY OR COMPLETENESS OF ELECTRONIC COPIES OF THIS PLAN SHEET.

Caltrans Metric

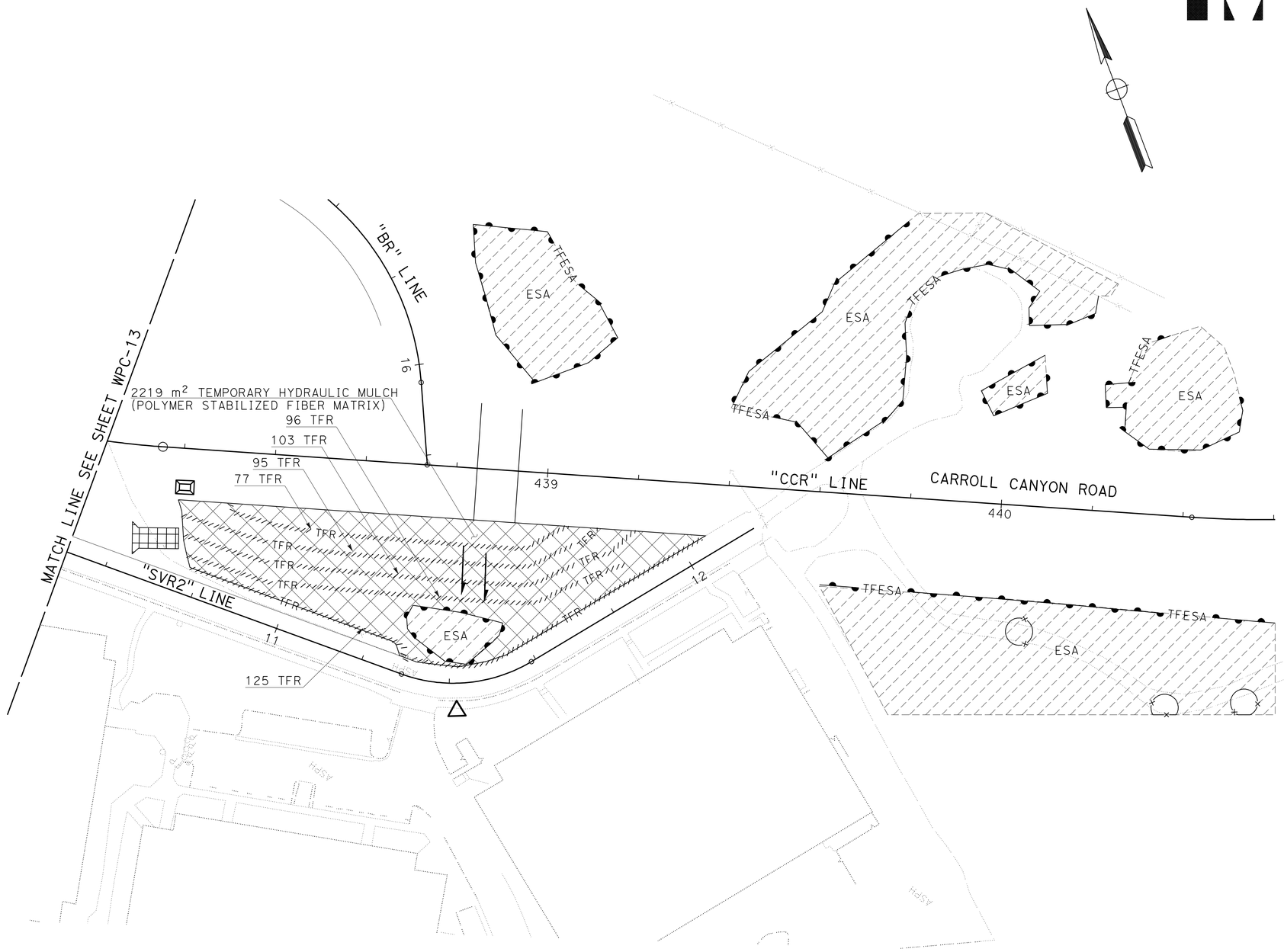

TEMPORARY WATER POLLUTION CONTROL PLAN
STAGE 1A

SCALE 1:500

WPC-10

THIS PLAN ACCURATE FOR TEMPORARY WATER POLLUTION CONTROL WORK ONLY

ALL DIMENSIONS ARE IN METERS UNLESS OTHERWISE SHOWN

STATE OF CALIFORNIA - DEPARTMENT OF TRANSPORTATION
Caltrans PROJECT DEVELOPMENT

FUNCTIONAL SUPERVISOR: MAJID KHARRATI
CALCULATED-DESIGNED BY: ALLEN LOPEZ
CHECKED BY: SHAHBAZ A ALVI
REVISED BY / DATE REVISED

LAST REVISION 05-29-09 | DATE PLOTTED => 29-SEP-2010 | TIME PLOTTED => 13:45

Dist	COUNTY	ROUTE	KILOMETER POST TOTAL PROJECT	SHEET No.	TOTAL SHEETS
11	SD	5,805	R49.9/R51.7, 42.6/46.5	106	886

REGISTERED CIVIL ENGINEER 05-13-09 DATE

9-27-10
PLANS APPROVAL DATE

REGISTERED PROFESSIONAL ENGINEER SHAHBAZ A ALVI No. C55293 Exp. 12-31-10 CIVIL STATE OF CALIFORNIA

THE STATE OF CALIFORNIA OR ITS OFFICERS OR AGENTS SHALL NOT BE RESPONSIBLE FOR THE ACCURACY OR COMPLETENESS OF ELECTRONIC COPIES OF THIS PLAN SHEET.

Caltrans Metric

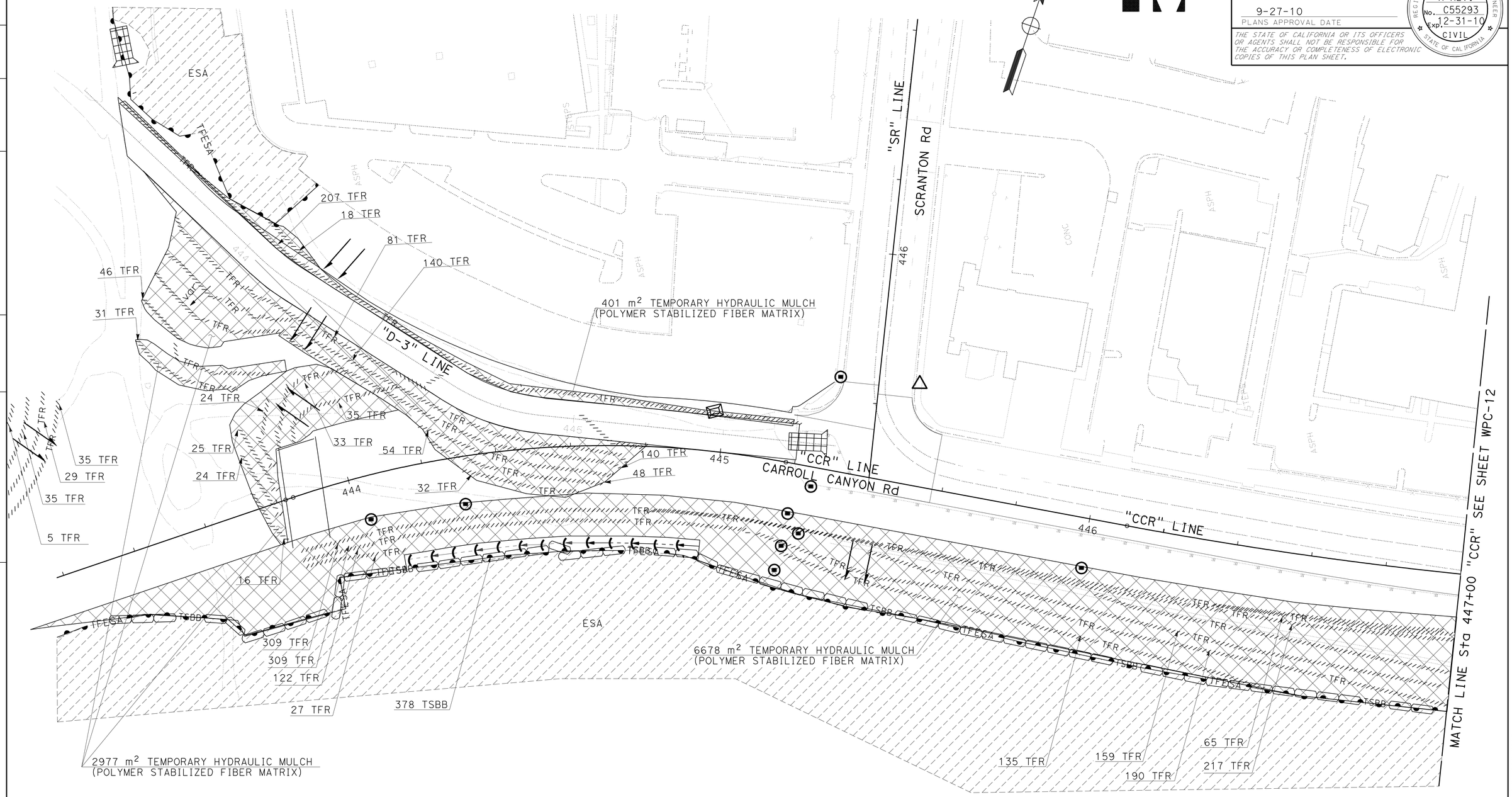

TEMPORARY WATER POLLUTION CONTROL PLAN
STAGE 1A

SCALE 1:500

WPC-11

THIS PLAN ACCURATE FOR TEMPORARY WATER POLLUTION CONTROL WORK ONLY

ALL DIMENSIONS ARE IN METERS UNLESS OTHERWISE SHOWN

STATE OF CALIFORNIA - DEPARTMENT OF TRANSPORTATION
Caltrans PROJECT DEVELOPMENT

FUNCTIONAL SUPERVISOR MAJID KHARRATI
CALCULATED-DESIGNED BY ALLEN LOPEZ
CHECKED BY SHAHBAZ A ALVI
REVISED BY
DATE REVISED

LAST REVISION 04-14-10
DATE PLOTTED => 29-SEP-2010
TIME PLOTTED => 13:45

Dist	COUNTY	ROUTE	KILOMETER POST TOTAL PROJECT	SHEET No.	TOTAL SHEETS
11	SD	5,805	R49.9/R51.7, 42.6/46.5	107	886

Caltrans Metric

REGISTERED CIVIL ENGINEER 05-13-09 DATE

9-27-10
PLANS APPROVAL DATE

REGISTERED PROFESSIONAL ENGINEER
SHAHBAZ A ALVI
No. C55293
Exp. 12-31-10
CIVIL
STATE OF CALIFORNIA

THE STATE OF CALIFORNIA OR ITS OFFICERS OR AGENTS SHALL NOT BE RESPONSIBLE FOR THE ACCURACY OR COMPLETENESS OF ELECTRONIC COPIES OF THIS PLAN SHEET.

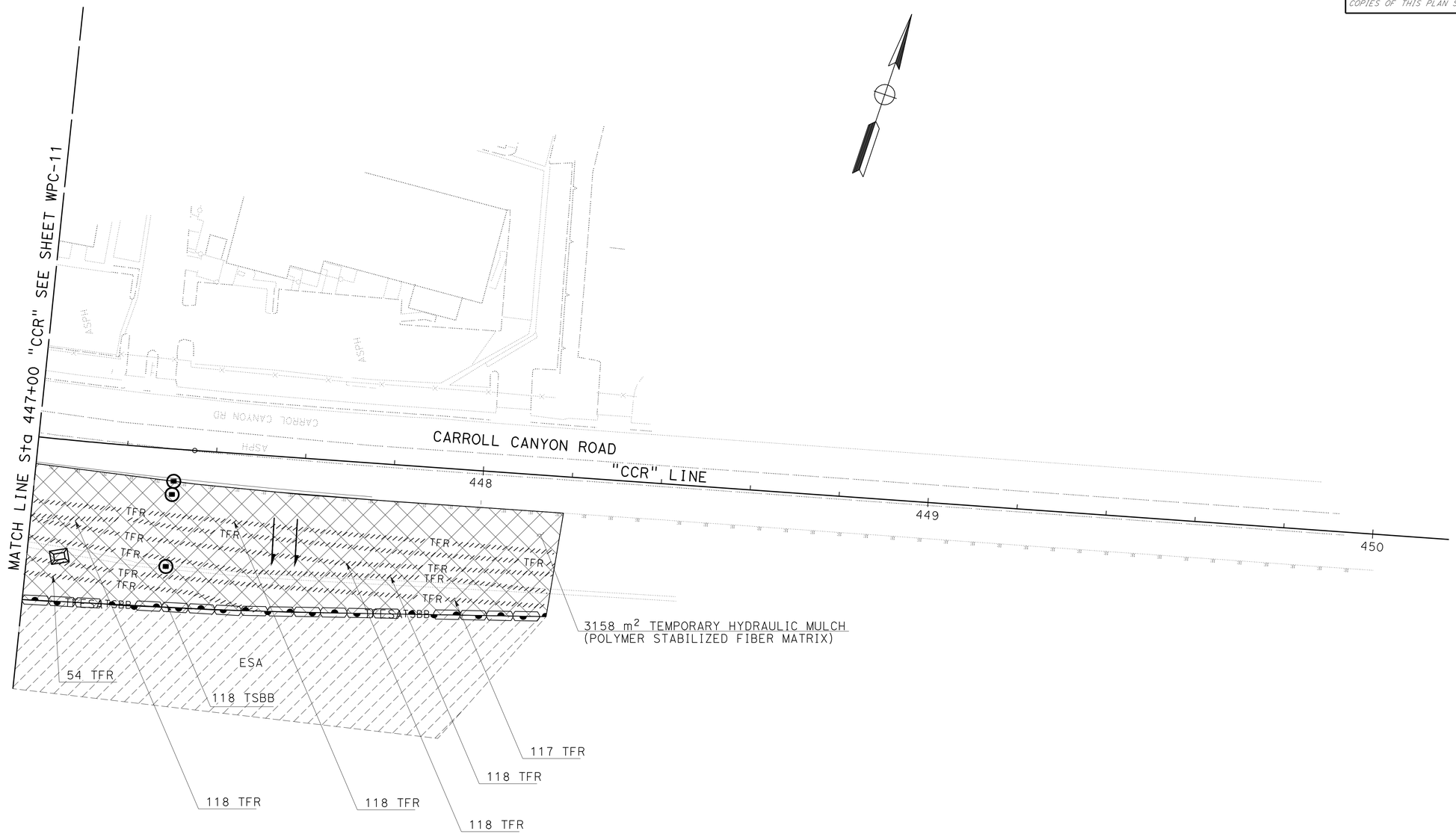

TEMPORARY WATER POLLUTION CONTROL PLAN
STAGE 1A

SCALE 1:500

WPC-12

THIS PLAN ACCURATE FOR TEMPORARY WATER POLLUTION CONTROL WORK ONLY

ALL DIMENSIONS ARE IN METERS UNLESS OTHERWISE SHOWN

STATE OF CALIFORNIA - DEPARTMENT OF TRANSPORTATION
Caltrans PROJECT DEVELOPMENT

FUNCTIONAL SUPERVISOR: MAJID KHARRATI

CALCULATED-DESIGNED BY: ALLEN LOPEZ
CHECKED BY: SHAHBAZ A ALVI

REVISED BY
DATE REVISED

LAST REVISION 05-29-09 | DATE PLOTTED => 29-SEP-2010 | TIME PLOTTED => 13:45

Dist	COUNTY	ROUTE	KILOMETER POST TOTAL PROJECT	SHEET No.	TOTAL SHEETS
11	SD	5,805	R49.9/R51.7, 42.6/46.5	108	886

REGISTERED CIVIL ENGINEER 05-13-09 DATE

9-27-10
PLANS APPROVAL DATE

REGISTERED PROFESSIONAL ENGINEER SHAHBAZ A ALVI No. C55293 Exp. 12-31-10 CIVIL STATE OF CALIFORNIA

THE STATE OF CALIFORNIA OR ITS OFFICERS OR AGENTS SHALL NOT BE RESPONSIBLE FOR THE ACCURACY OR COMPLETENESS OF ELECTRONIC COPIES OF THIS PLAN SHEET.

Caltrans Metric

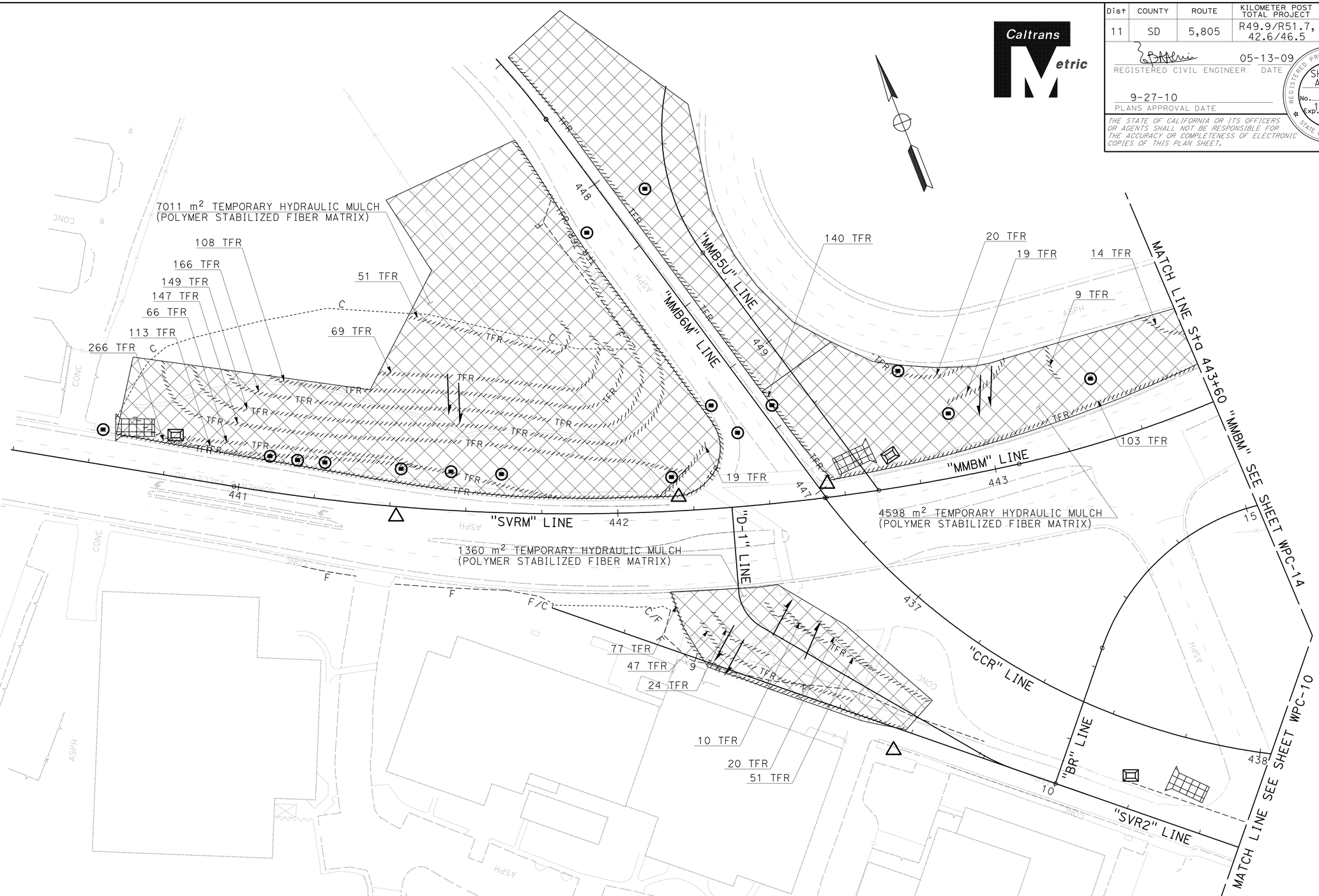

TEMPORARY WATER POLLUTION CONTROL PLAN
STAGE 1A

SCALE 1:500

WPC-13

THIS PLAN ACCURATE FOR TEMPORARY WATER POLLUTION CONTROL WORK ONLY

ALL DIMENSIONS ARE IN METERS UNLESS OTHERWISE SHOWN

STATE OF CALIFORNIA - DEPARTMENT OF TRANSPORTATION
Caltrans PROJECT DEVELOPMENT

FUNCTIONAL SUPERVISOR: MAJID KHARRATI
CALCULATED-DESIGNED BY: ALLEN LOPEZ
CHECKED BY: SHAHBAZ A ALVI
REVISED BY
DATE REVISED

LAST REVISION 05-29-09 DATE PLOTTED => 29-SEP-2010 TIME PLOTTED => 13:46

Dist	COUNTY	ROUTE	KILOMETER POST TOTAL PROJECT	SHEET No.	TOTAL SHEETS
11	SD	5,805	R49.9/R51.7, 42.6/46.5	109	886

REGISTERED CIVIL ENGINEER 05-13-09 DATE

9-27-10
PLANS APPROVAL DATE

REGISTERED PROFESSIONAL ENGINEER SHAHBAZ A ALVI No. C55293 Exp. 12-31-10 CIVIL STATE OF CALIFORNIA

THE STATE OF CALIFORNIA OR ITS OFFICERS OR AGENTS SHALL NOT BE RESPONSIBLE FOR THE ACCURACY OR COMPLETENESS OF ELECTRONIC COPIES OF THIS PLAN SHEET.

Caltrans Metric

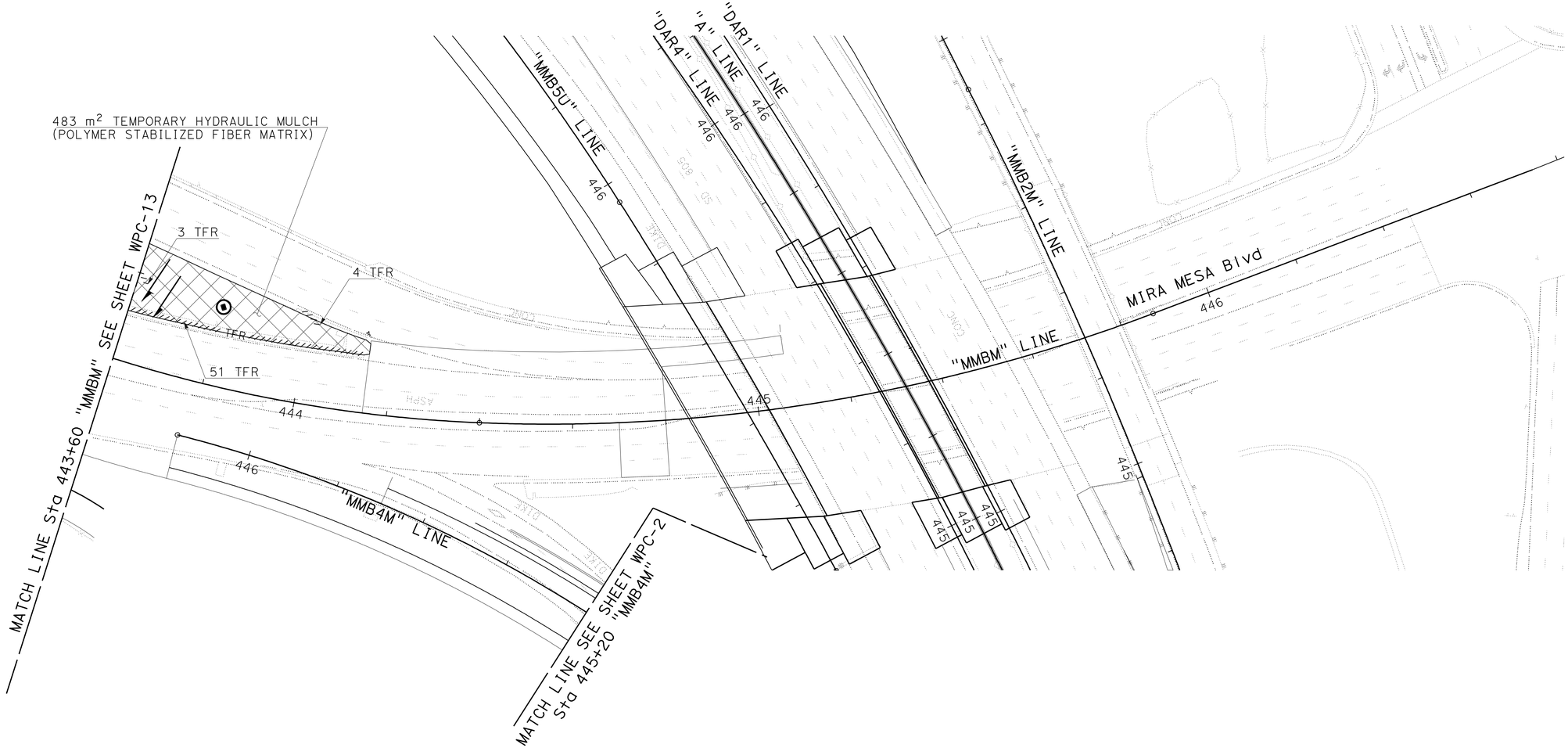

TEMPORARY WATER POLLUTION CONTROL PLAN
STAGE 1A

SCALE 1:500

WPC-14

THIS PLAN ACCURATE FOR TEMPORARY WATER POLLUTION CONTROL WORK ONLY

ALL DIMENSIONS ARE IN METERS UNLESS OTHERWISE SHOWN

STATE OF CALIFORNIA - DEPARTMENT OF TRANSPORTATION
Caltrans PROJECT DEVELOPMENT

FUNCTIONAL SUPERVISOR MAJID KHARRATI
CALCULATED-DESIGNED BY ALLEN LOPEZ
CHECKED BY SHAHBAZ A ALVI
REVISED BY
DATE REVISED

LAST REVISION 05-29-09
DATE PLOTTED => 29-SEP-2010
TIME PLOTTED => 13:46

Dist	COUNTY	ROUTE	KILOMETER POST TOTAL PROJECT	SHEET No.	TOTAL SHEETS
11	SD	5,805	R49.9/R51.7, 42.6/46.5	110	886

REGISTERED CIVIL ENGINEER 05-13-09 DATE

9-27-10
PLANS APPROVAL DATE

REGISTERED PROFESSIONAL ENGINEER SHAHBAZ A ALVI No. C55293 Exp. 12-31-10 CIVIL STATE OF CALIFORNIA

THE STATE OF CALIFORNIA OR ITS OFFICERS OR AGENTS SHALL NOT BE RESPONSIBLE FOR THE ACCURACY OR COMPLETENESS OF ELECTRONIC COPIES OF THIS PLAN SHEET.

Caltrans Metric

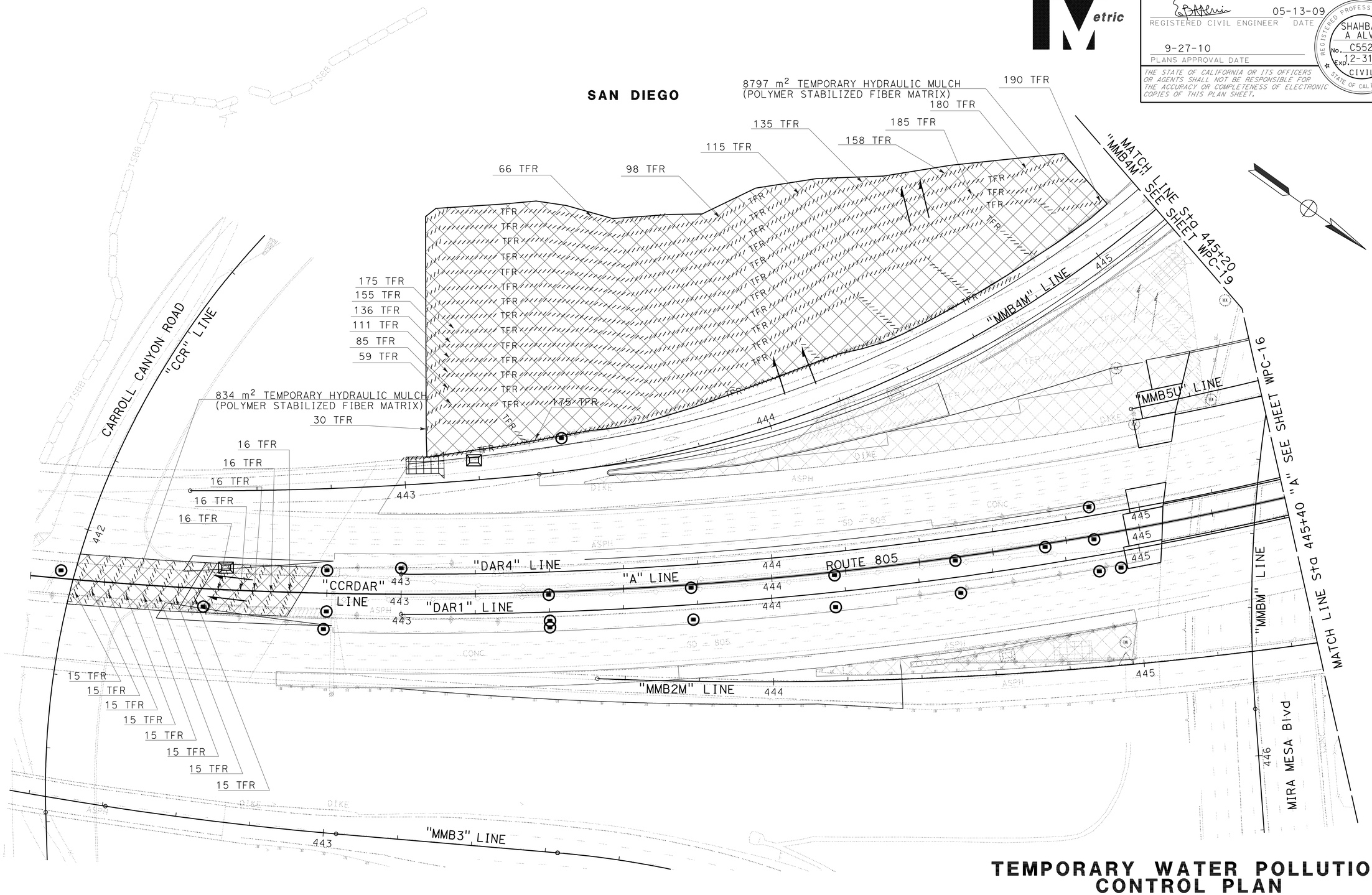

TEMPORARY WATER POLLUTION CONTROL PLAN
STAGE 1B

SCALE 1:500

WPC-15

THIS PLAN ACCURATE FOR TEMPORARY WATER POLLUTION CONTROL WORK ONLY

ALL DIMENSIONS ARE IN METERS UNLESS OTHERWISE SHOWN

STATE OF CALIFORNIA - DEPARTMENT OF TRANSPORTATION
Caltrans PROJECT DEVELOPMENT

FUNCTIONAL SUPERVISOR MAJID KHARRATI
CALCULATED-DESIGNED BY ALLEN LOPEZ
CHECKED BY SHAHBAZ A ALVI
REVISED BY
DATE REVISED

LAST REVISION 04-14-10
DATE PLOTTED => 29-SEP-2010
TIME PLOTTED => 13:46

Dist	COUNTY	ROUTE	KILOMETER POST TOTAL PROJECT	SHEET No.	TOTAL SHEETS
11	SD	5,805	R49.9/R51.7, 42.6/46.5	111	886

REGISTERED CIVIL ENGINEER 05-13-09 DATE

9-27-10
PLANS APPROVAL DATE

REGISTERED PROFESSIONAL ENGINEER SHAHBAZ A ALVI No. C55293 Exp. 12-31-10 CIVIL STATE OF CALIFORNIA

THE STATE OF CALIFORNIA OR ITS OFFICERS OR AGENTS SHALL NOT BE RESPONSIBLE FOR THE ACCURACY OR COMPLETENESS OF ELECTRONIC COPIES OF THIS PLAN SHEET.

Caltrans Metric

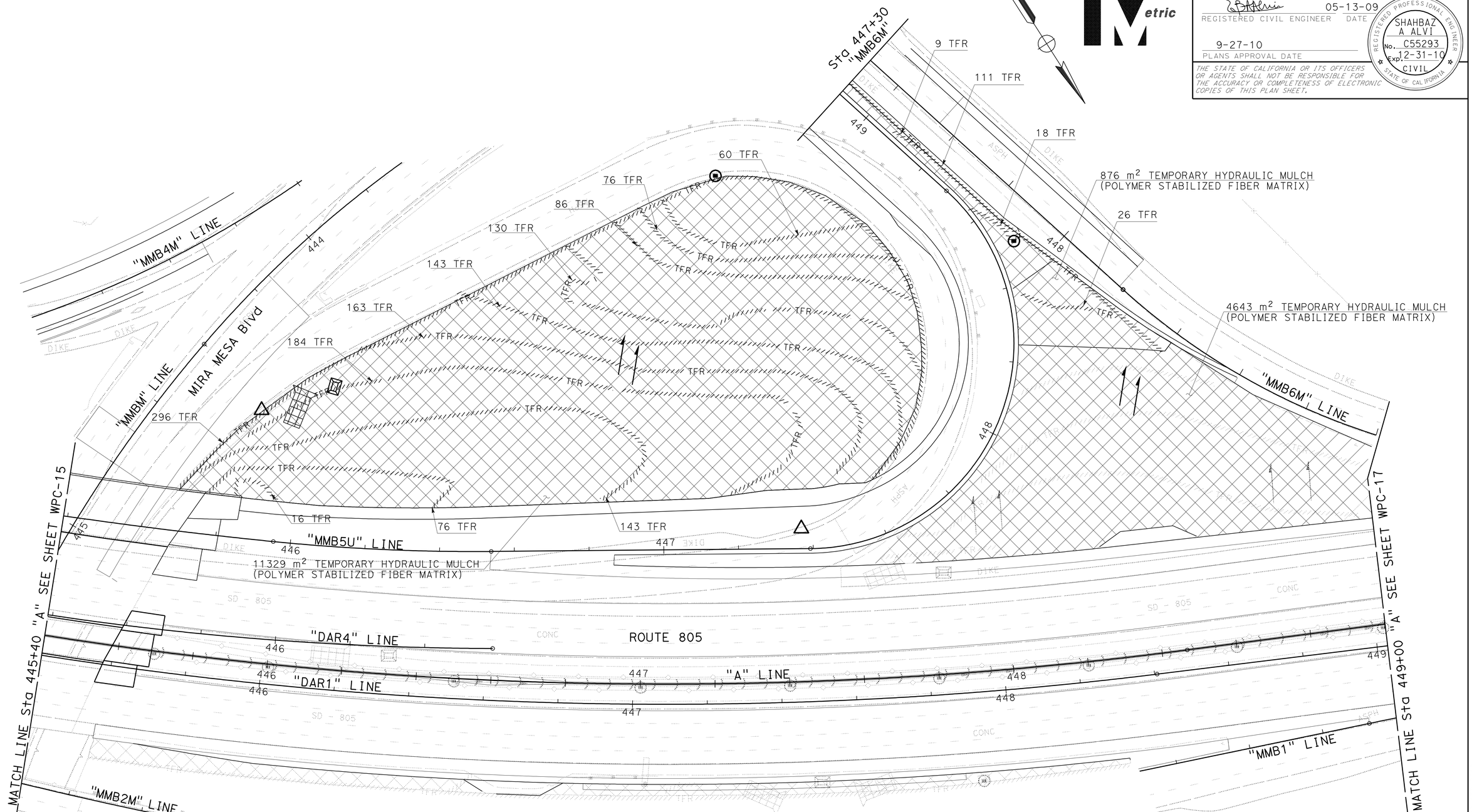

SAN DIEGO

TEMPORARY WATER POLLUTION CONTROL PLAN
STAGE 1B

SCALE 1:500

WPC-16

THIS PLAN ACCURATE FOR TEMPORARY WATER POLLUTION CONTROL WORK ONLY

ALL DIMENSIONS ARE IN METERS UNLESS OTHERWISE SHOWN

STATE OF CALIFORNIA - DEPARTMENT OF TRANSPORTATION
Caltrans PROJECT DEVELOPMENT

FUNCTIONAL SUPERVISOR: MAJID KHARRATI
CALCULATED-DESIGNED BY: ALLEN LOPEZ
CHECKED BY: SHAHBAZ A ALVI
REVISED BY
DATE REVISED

LAST REVISION 06-01-09
DATE PLOTTED => 29-SEP-2010
TIME PLOTTED => 13:46

Dist	COUNTY	ROUTE	KILOMETER POST TOTAL PROJECT	SHEET No.	TOTAL SHEETS
11	SD	5,805	R49.9/R51.7, 42.6/46.5	112	886

REGISTERED CIVIL ENGINEER 05-13-09 DATE

9-27-10
PLANS APPROVAL DATE

REGISTERED PROFESSIONAL ENGINEER SHAHBAZ A ALVI No. C55293 Exp. 12-31-10 CIVIL STATE OF CALIFORNIA

THE STATE OF CALIFORNIA OR ITS OFFICERS OR AGENTS SHALL NOT BE RESPONSIBLE FOR THE ACCURACY OR COMPLETENESS OF ELECTRONIC COPIES OF THIS PLAN SHEET.

Caltrans Metric

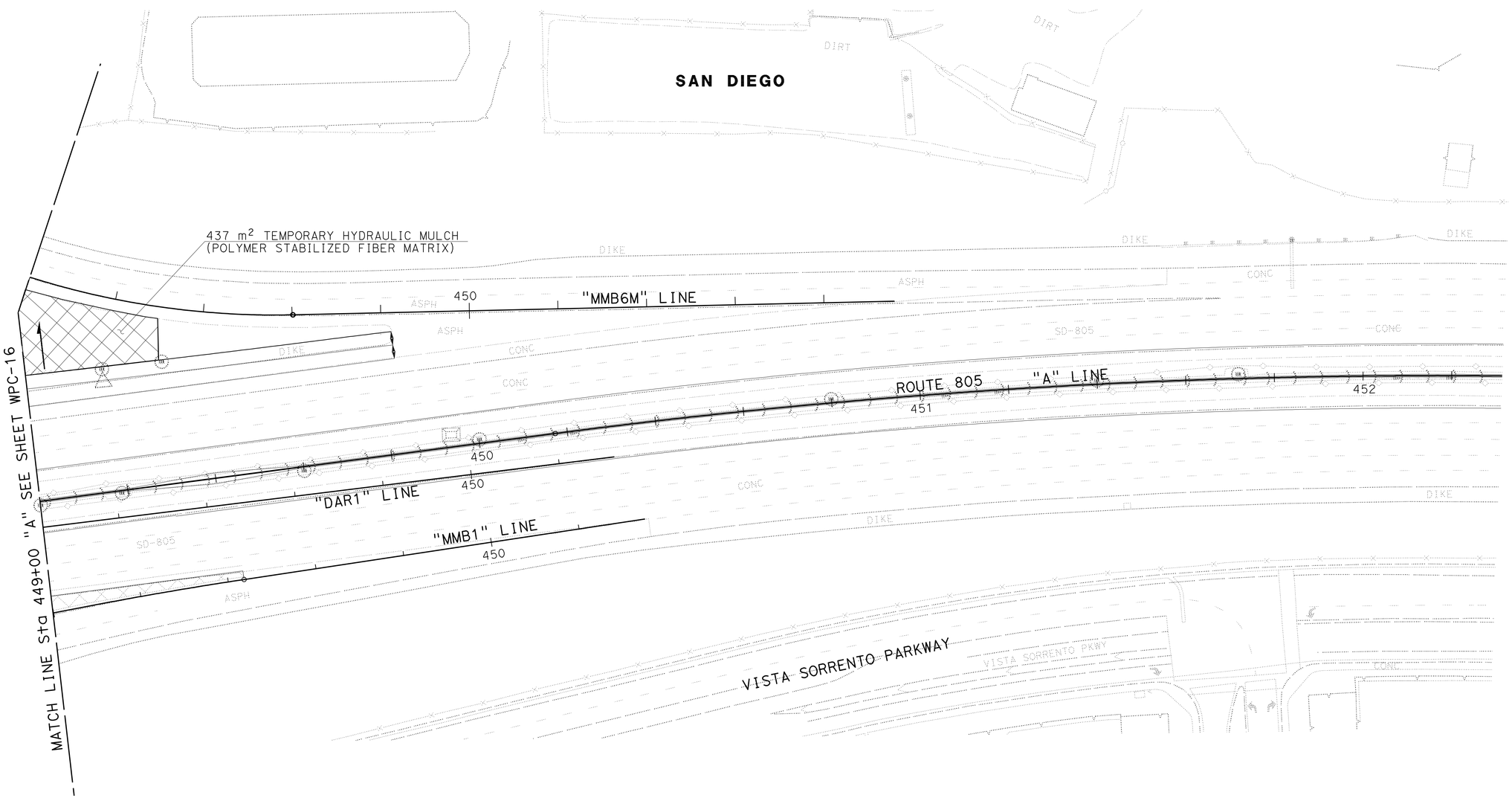

TEMPORARY WATER POLLUTION CONTROL PLAN
STAGE 1B

SCALE 1:500

WPC-17

THIS PLAN ACCURATE FOR TEMPORARY WATER POLLUTION CONTROL WORK ONLY

ALL DIMENSIONS ARE IN METERS UNLESS OTHERWISE SHOWN

REVISED BY	DATE REVISED

CALCULATED-DESIGNED BY	ALLEN LOPEZ
CHECKED BY	SHAHBAZ A ALVI

FUNCTIONAL SUPERVISOR: MAJID KHARRATI

STATE OF CALIFORNIA - DEPARTMENT OF TRANSPORTATION
Caltrans PROJECT DEVELOPMENT

LAST REVISION 06-01-09
DATE PLOTTED => 29-SEP-2010
TIME PLOTTED => 13:46

Dist	COUNTY	ROUTE	KILOMETER POST TOTAL PROJECT	SHEET No.	TOTAL SHEETS
11	SD	5,805	R49.9/R51.7, 42.6/46.5	113	886

REGISTERED CIVIL ENGINEER 05-13-09 DATE

9-27-10
PLANS APPROVAL DATE

REGISTERED PROFESSIONAL ENGINEER SHAHBAZ A ALVI No. C55293 Exp. 12-31-10 CIVIL STATE OF CALIFORNIA

THE STATE OF CALIFORNIA OR ITS OFFICERS OR AGENTS SHALL NOT BE RESPONSIBLE FOR THE ACCURACY OR COMPLETENESS OF ELECTRONIC COPIES OF THIS PLAN SHEET.

Caltrans Metric

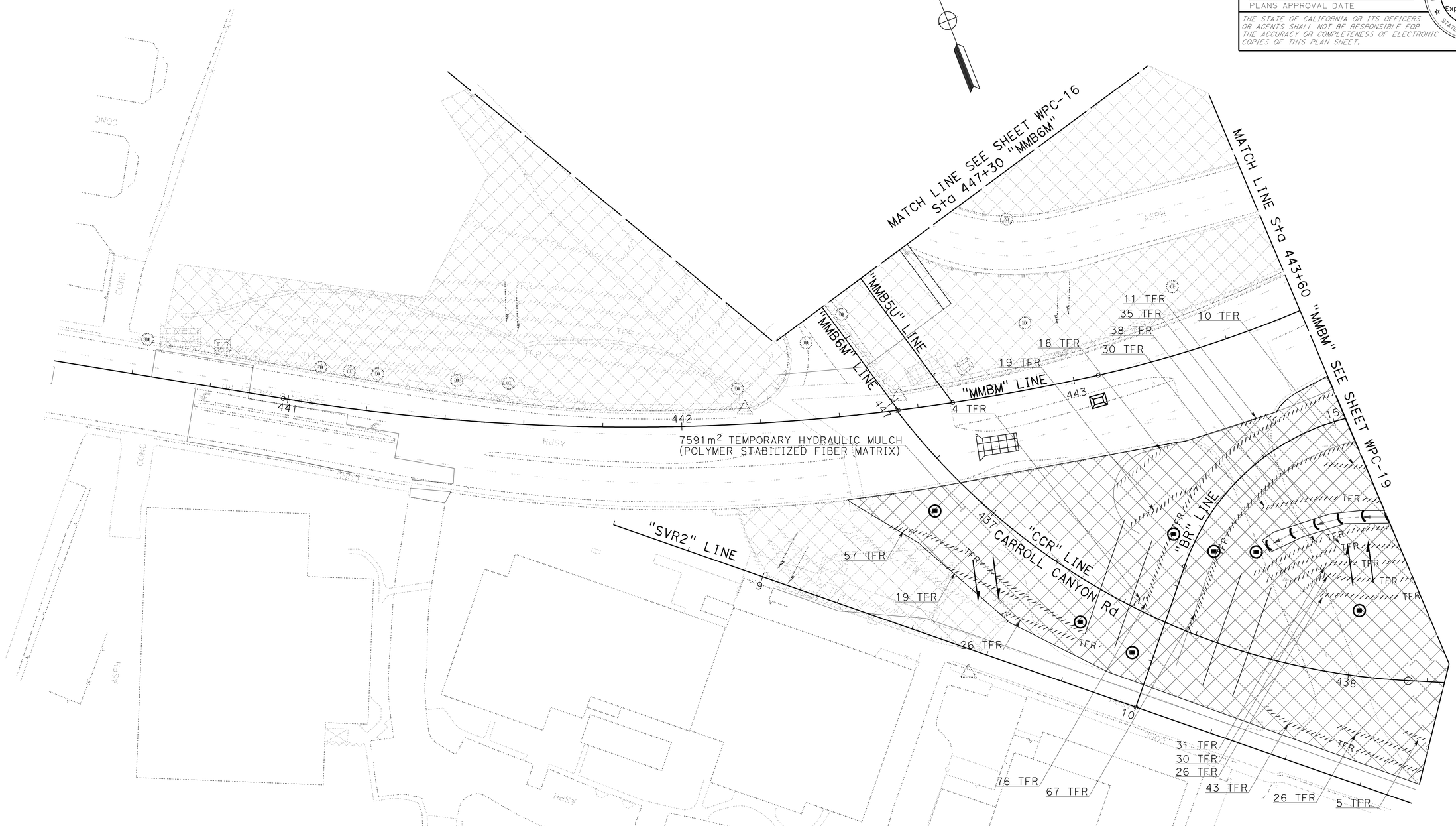

TEMPORARY WATER POLLUTION CONTROL PLAN
STAGE 1B

SCALE 1:500

WPC-18

THIS PLAN ACCURATE FOR TEMPORARY WATER POLLUTION CONTROL WORK ONLY

ALL DIMENSIONS ARE IN METERS UNLESS OTHERWISE SHOWN

STATE OF CALIFORNIA - DEPARTMENT OF TRANSPORTATION
Caltrans PROJECT DEVELOPMENT

FUNCTIONAL SUPERVISOR: MAJID KHARRATI

CALCULATED-DESIGNED BY: ALLEN LOPEZ
CHECKED BY: SHAHBAZ A ALVI

REVISED BY | DATE REVISED

LAST REVISION 06-01-09
DATE PLOTTED => 29-SEP-2010
TIME PLOTTED => 13:46

Dist	COUNTY	ROUTE	KILOMETER POST TOTAL PROJECT	SHEET No.	TOTAL SHEETS
11	SD	5,805	R49.9/R51.7, 42.6/46.5	114	886

REGISTERED CIVIL ENGINEER 05-13-09 DATE

9-27-10
PLANS APPROVAL DATE

REGISTERED PROFESSIONAL ENGINEER SHAHBAZ A ALVI No. C55293 Exp. 12-31-10 CIVIL STATE OF CALIFORNIA

THE STATE OF CALIFORNIA OR ITS OFFICERS OR AGENTS SHALL NOT BE RESPONSIBLE FOR THE ACCURACY OR COMPLETENESS OF ELECTRONIC COPIES OF THIS PLAN SHEET.

Caltrans Metric

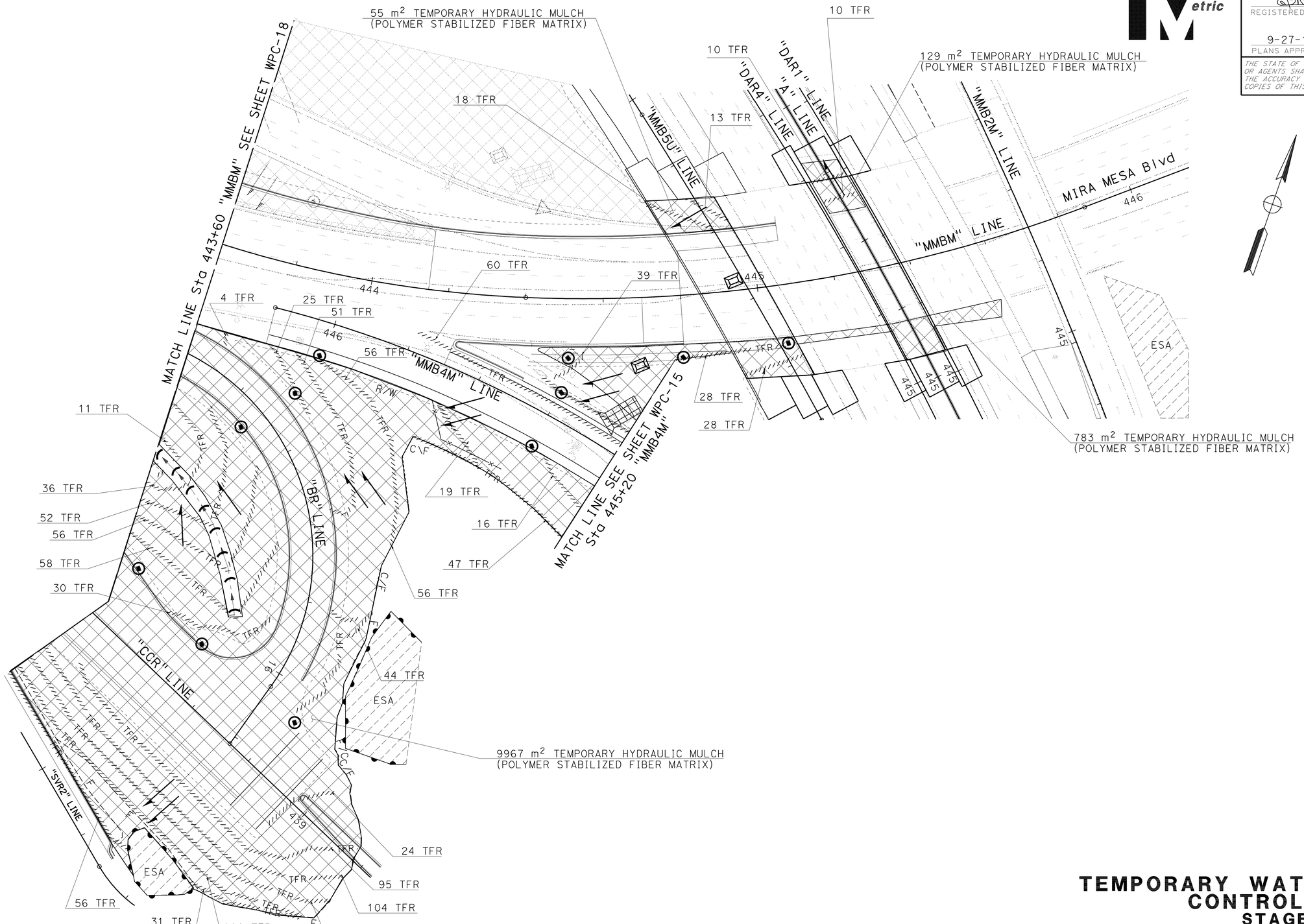

THIS PLAN ACCURATE FOR TEMPORARY WATER POLLUTION CONTROL WORK ONLY

ALL DIMENSIONS ARE IN METERS UNLESS OTHERWISE SHOWN

TEMPORARY WATER POLLUTION CONTROL PLAN
STAGE 1B

SCALE 1:500

WPC-19

STATE OF CALIFORNIA - DEPARTMENT OF TRANSPORTATION
Caltrans PROJECT DEVELOPMENT

FUNCTIONAL SUPERVISOR: MAJID KHARRATI
CALCULATED-DESIGNED BY: ALLEN LOPEZ
CHECKED BY: SHAHBAZ A ALVI
REVISED BY
DATE REVISED

LAST REVISION 06-01-09 | DATE PLOTTED => 29-SEP-2010 | TIME PLOTTED => 13:47

Dist	COUNTY	ROUTE	KILOMETER POST TOTAL PROJECT	SHEET No.	TOTAL SHEETS
11	SD	5,805	R49.9/R51.7, 42.6/46.5	115	886

REGISTERED CIVIL ENGINEER 05-13-09 DATE

9-27-10
PLANS APPROVAL DATE

REGISTERED PROFESSIONAL ENGINEER SHAHBAZ A ALVI No. C55293 Exp. 12-31-10 CIVIL STATE OF CALIFORNIA

THE STATE OF CALIFORNIA OR ITS OFFICERS OR AGENTS SHALL NOT BE RESPONSIBLE FOR THE ACCURACY OR COMPLETENESS OF ELECTRONIC COPIES OF THIS PLAN SHEET.

Caltrans Metric

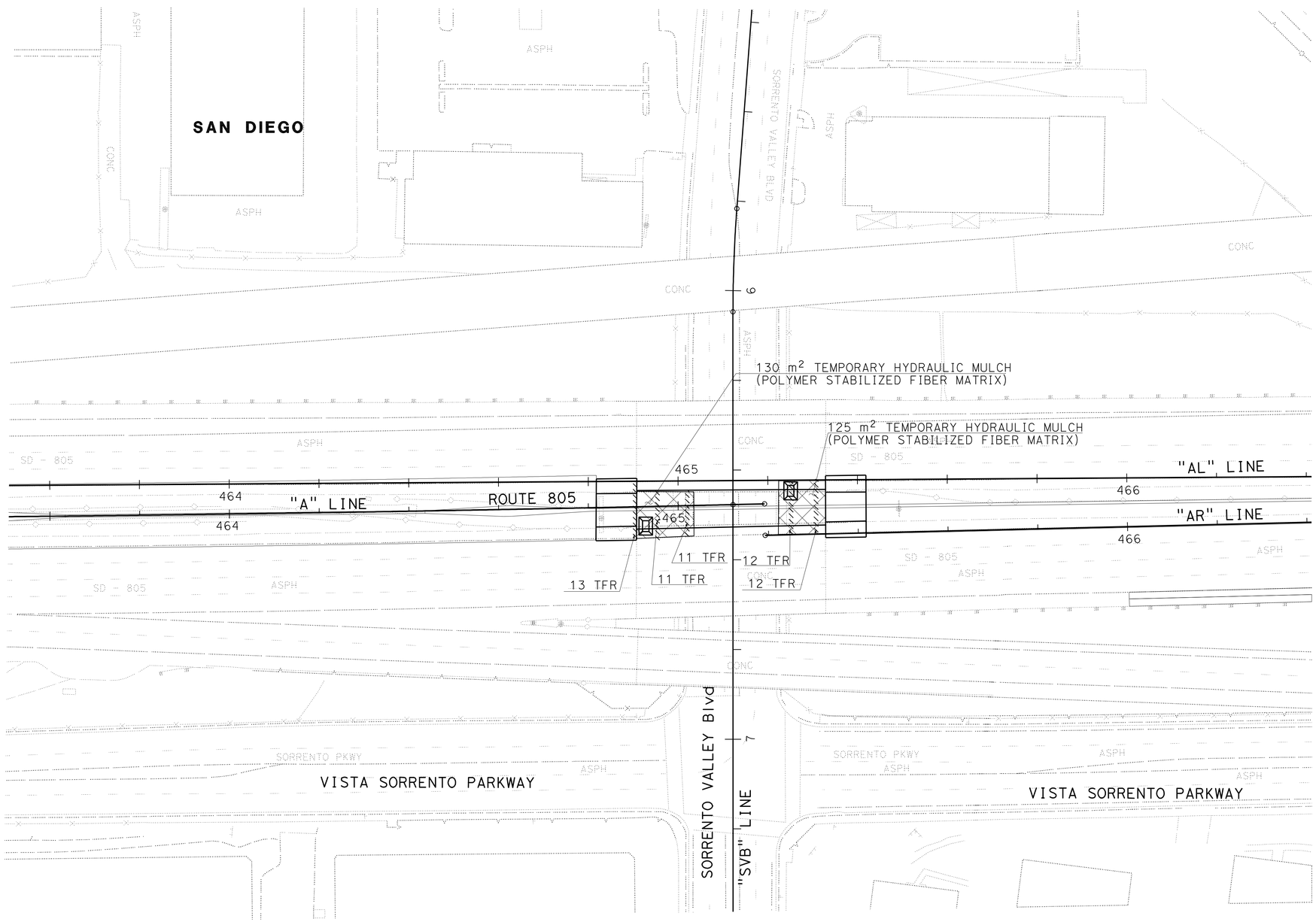

TEMPORARY WATER POLLUTION CONTROL PLAN
STAGE 1B

SCALE 1:500

WPC-20

THIS PLAN ACCURATE FOR TEMPORARY WATER POLLUTION CONTROL WORK ONLY

ALL DIMENSIONS ARE IN METERS UNLESS OTHERWISE SHOWN

STATE OF CALIFORNIA - DEPARTMENT OF TRANSPORTATION
Caltrans PROJECT DEVELOPMENT

FUNCTIONAL SUPERVISOR: MAJID KHARRATI

CALCULATED-DESIGNED BY: ALLEN LOPEZ
CHECKED BY: SHAHBAZ A ALVI

REVISED BY | DATE REVISED

LAST REVISION 06-01-09
DATE PLOTTED => 29-SEP-2010
TIME PLOTTED => 13:47

Dist	COUNTY	ROUTE	KILOMETER POST TOTAL PROJECT	SHEET No.	TOTAL SHEETS
11	SD	5,805	R49.9/R51.7, 42.6/46.5	116	886

REGISTERED CIVIL ENGINEER 05-13-09 DATE

9-27-10
PLANS APPROVAL DATE

REGISTERED PROFESSIONAL ENGINEER SHAHBAZ A ALVI No. C55293 Exp. 12-31-10 CIVIL STATE OF CALIFORNIA

THE STATE OF CALIFORNIA OR ITS OFFICERS OR AGENTS SHALL NOT BE RESPONSIBLE FOR THE ACCURACY OR COMPLETENESS OF ELECTRONIC COPIES OF THIS PLAN SHEET.

Caltrans Metric

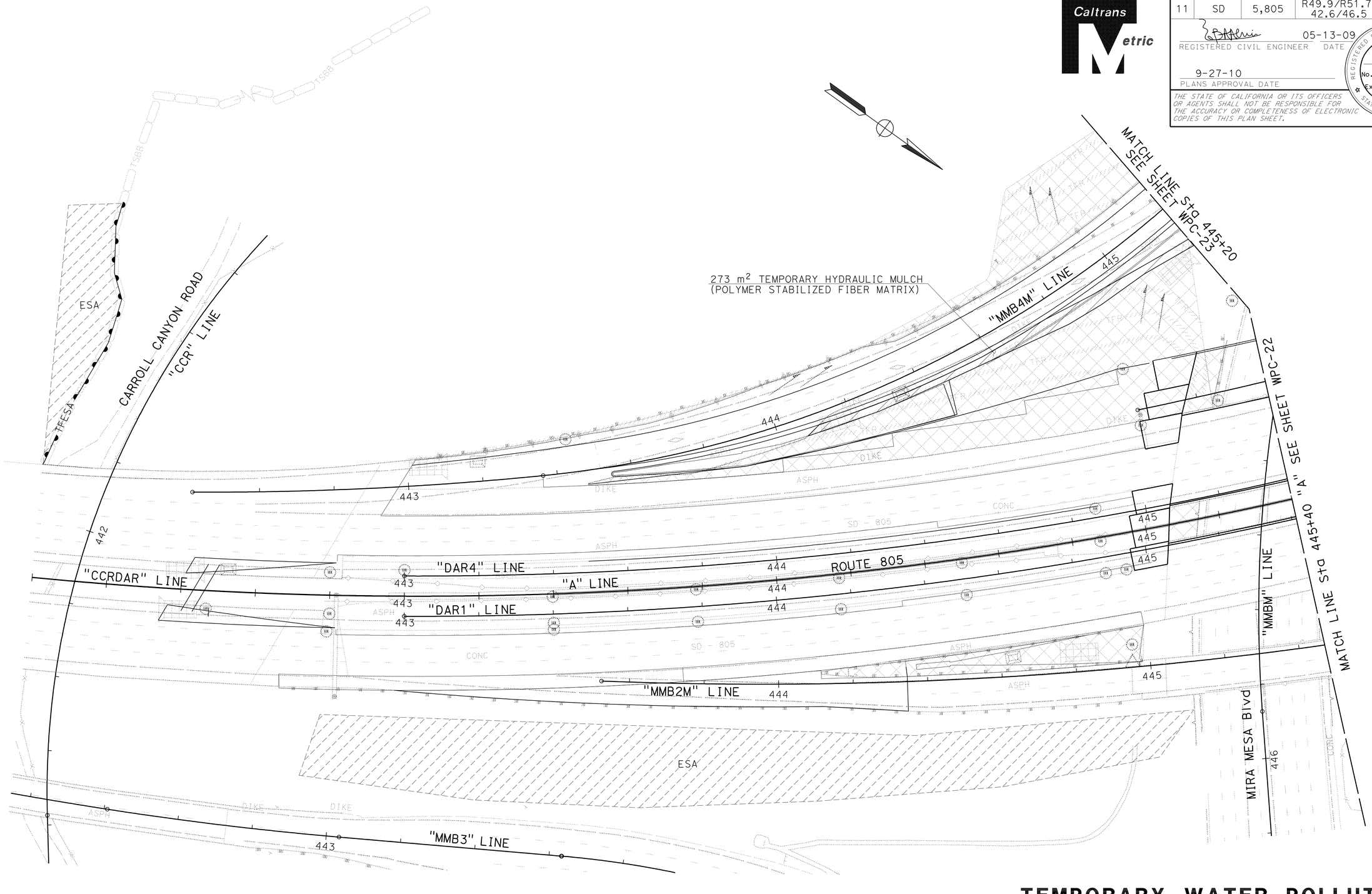

TEMPORARY WATER POLLUTION CONTROL PLAN
STAGE 2A

SCALE 1:500

WPC-21

THIS PLAN ACCURATE FOR TEMPORARY WATER POLLUTION CONTROL WORK ONLY

ALL DIMENSIONS ARE IN METERS UNLESS OTHERWISE SHOWN

STATE OF CALIFORNIA - DEPARTMENT OF TRANSPORTATION
Caltrans PROJECT DEVELOPMENT

FUNCTIONAL SUPERVISOR: MAJID KHARRATI

CALCULATED-DESIGNED BY: THEO AQUINO
CHECKED BY: SHAHBAZ A ALVI

REVISED BY
DATE REVISED

LAST REVISION 06-01-09
DATE PLOTTED => 29-SEP-2010
TIME PLOTTED => 13:47

Dist	COUNTY	ROUTE	KILOMETER POST TOTAL PROJECT	SHEET No.	TOTAL SHEETS
11	SD	5,805	R49.9/R51.7, 42.6/46.5	117	886

REGISTERED CIVIL ENGINEER 05-13-09 DATE

9-27-10
PLANS APPROVAL DATE

REGISTERED PROFESSIONAL ENGINEER SHAHBAZ A ALVI No. C55293 Exp. 12-31-10 CIVIL STATE OF CALIFORNIA

THE STATE OF CALIFORNIA OR ITS OFFICERS OR AGENTS SHALL NOT BE RESPONSIBLE FOR THE ACCURACY OR COMPLETENESS OF ELECTRONIC COPIES OF THIS PLAN SHEET.

Caltrans Metric

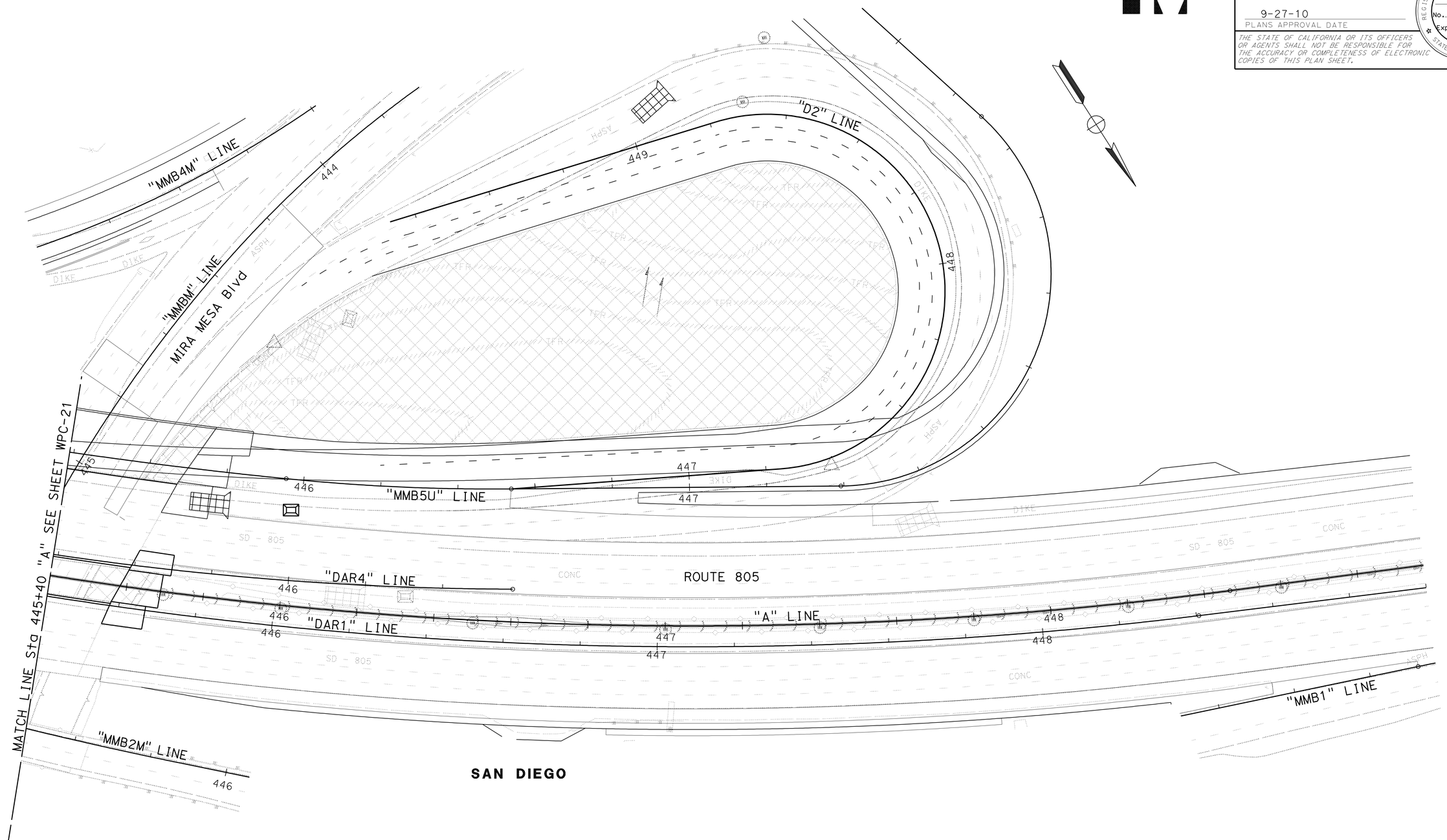

THIS PLAN ACCURATE FOR TEMPORARY WATER POLLUTION CONTROL WORK ONLY

ALL DIMENSIONS ARE IN METERS UNLESS OTHERWISE SHOWN

TEMPORARY WATER POLLUTION CONTROL PLAN
STAGE 2A

SCALE 1:500

WPC-22

STATE OF CALIFORNIA - DEPARTMENT OF TRANSPORTATION
Caltrans PROJECT DEVELOPMENT

FUNCTIONAL SUPERVISOR: MAJID KHARRATI

CALCULATED-DESIGNED BY: THEO AQUINO
CHECKED BY: SHAHBAZ A ALVI

REVISED BY | DATE REVISED

LAST REVISION 06-01-09 DATE PLOTTED => 29-SEP-2010 TIME PLOTTED => 13:47

Dist	COUNTY	ROUTE	KILOMETER POST TOTAL PROJECT	SHEET No.	TOTAL SHEETS
11	SD	5,805	R49.9/R51.7, 42.6/46.5	118	886

REGISTERED CIVIL ENGINEER 05-13-09 DATE

9-27-10
PLANS APPROVAL DATE

REGISTERED PROFESSIONAL ENGINEER SHAHBAZ A ALVI No. C55293 Exp. 12-31-10 CIVIL STATE OF CALIFORNIA

THE STATE OF CALIFORNIA OR ITS OFFICERS OR AGENTS SHALL NOT BE RESPONSIBLE FOR THE ACCURACY OR COMPLETENESS OF ELECTRONIC COPIES OF THIS PLAN SHEET.

Caltrans Metric

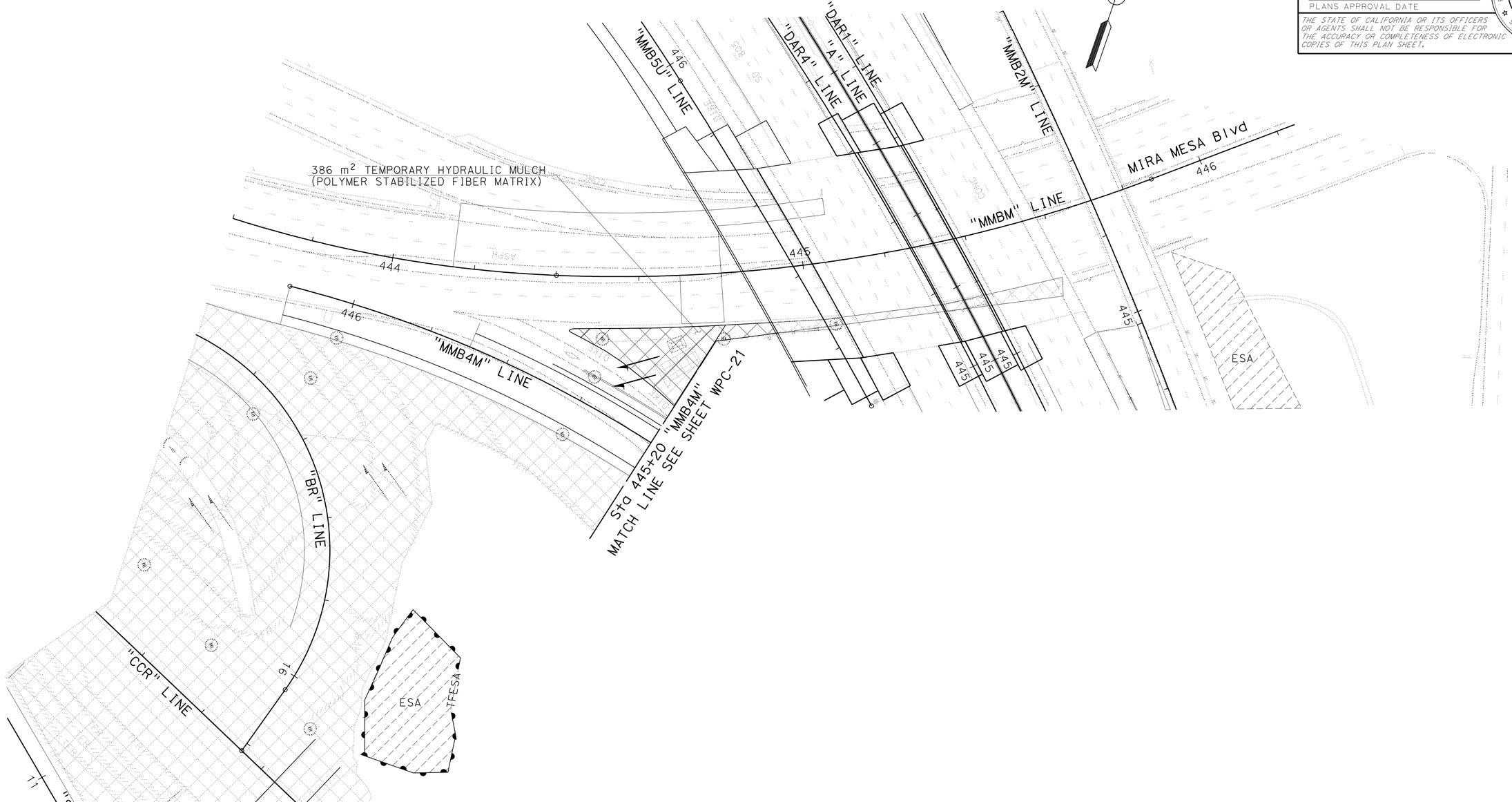

THIS PLAN ACCURATE FOR TEMPORARY WATER POLLUTION CONTROL WORK ONLY

ALL DIMENSIONS ARE IN METERS UNLESS OTHERWISE SHOWN

TEMPORARY WATER POLLUTION CONTROL PLAN
STAGE 2A

SCALE 1:500

WPC-23

STATE OF CALIFORNIA - DEPARTMENT OF TRANSPORTATION
Caltrans PROJECT DEVELOPMENT

FUNCTIONAL SUPERVISOR: MAJID KHARRATI
CALCULATED-DESIGNED BY: THEO AQUINO
CHECKED BY: SHAHBAZ A ALVI
REVISED BY
DATE REVISED

LAST REVISION 06-01-09 | DATE PLOTTED => 29-SEP-2010 | TIME PLOTTED => 13:47

Dist	COUNTY	ROUTE	KILOMETER POST TOTAL PROJECT	SHEET No.	TOTAL SHEETS
11	SD	5,805	R49.9/R51.7, 42.6/46.5	119	886

REGISTERED CIVIL ENGINEER 05-13-09 DATE

9-27-10
PLANS APPROVAL DATE

REGISTERED PROFESSIONAL ENGINEER SHAHBAZ A ALVI No. C55293 Exp. 12-31-10 CIVIL STATE OF CALIFORNIA

THE STATE OF CALIFORNIA OR ITS OFFICERS OR AGENTS SHALL NOT BE RESPONSIBLE FOR THE ACCURACY OR COMPLETENESS OF ELECTRONIC COPIES OF THIS PLAN SHEET.

Caltrans Metric

NOTE:

FOR COMPLETE RIGHT OF WAY AND ACCURATE ACCESS DATA, SEE RIGHT OF WAY RECORD MAPS AT DISTRICT OFFICE.

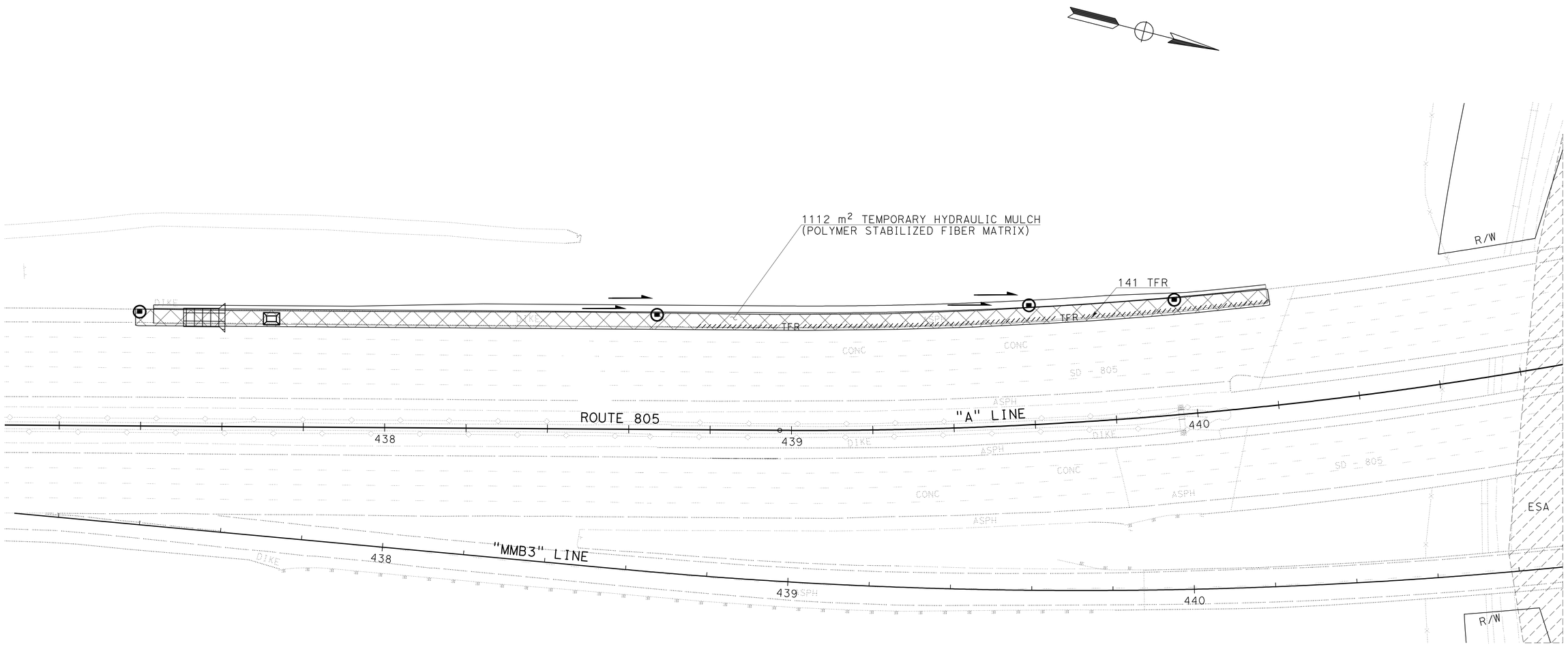

TEMPORARY WATER POLLUTION CONTROL PLAN
STAGE 2A

SCALE 1:500

WPC-24

THIS PLAN ACCURATE FOR TEMPORARY WATER POLLUTION CONTROL WORK ONLY

ALL DIMENSIONS ARE IN METERS UNLESS OTHERWISE SHOWN

REVISED BY	DATE REVISED

CALCULATED-DESIGNED BY: THEO AQUINO
CHECKED BY: SHAHBAZ A ALVI

FUNCTIONAL SUPERVISOR: MAJID KHARRATI

STATE OF CALIFORNIA - DEPARTMENT OF TRANSPORTATION
Caltrans PROJECT DEVELOPMENT

LAST REVISION 06-01-09 | DATE PLOTTED => 29-SEP-2010 | TIME PLOTTED => 13:48

Dist	COUNTY	ROUTE	KILOMETER POST TOTAL PROJECT	SHEET No.	TOTAL SHEETS
11	SD	5,805	R49.9/R51.7, 42.6/46.5	120	886

REGISTERED CIVIL ENGINEER 05-13-09 DATE

9-27-10
PLANS APPROVAL DATE

REGISTERED PROFESSIONAL ENGINEER SHAHBAZ A ALVI No. C55293 Exp. 12-31-10 CIVIL STATE OF CALIFORNIA

THE STATE OF CALIFORNIA OR ITS OFFICERS OR AGENTS SHALL NOT BE RESPONSIBLE FOR THE ACCURACY OR COMPLETENESS OF ELECTRONIC COPIES OF THIS PLAN SHEET.

Caltrans Metric

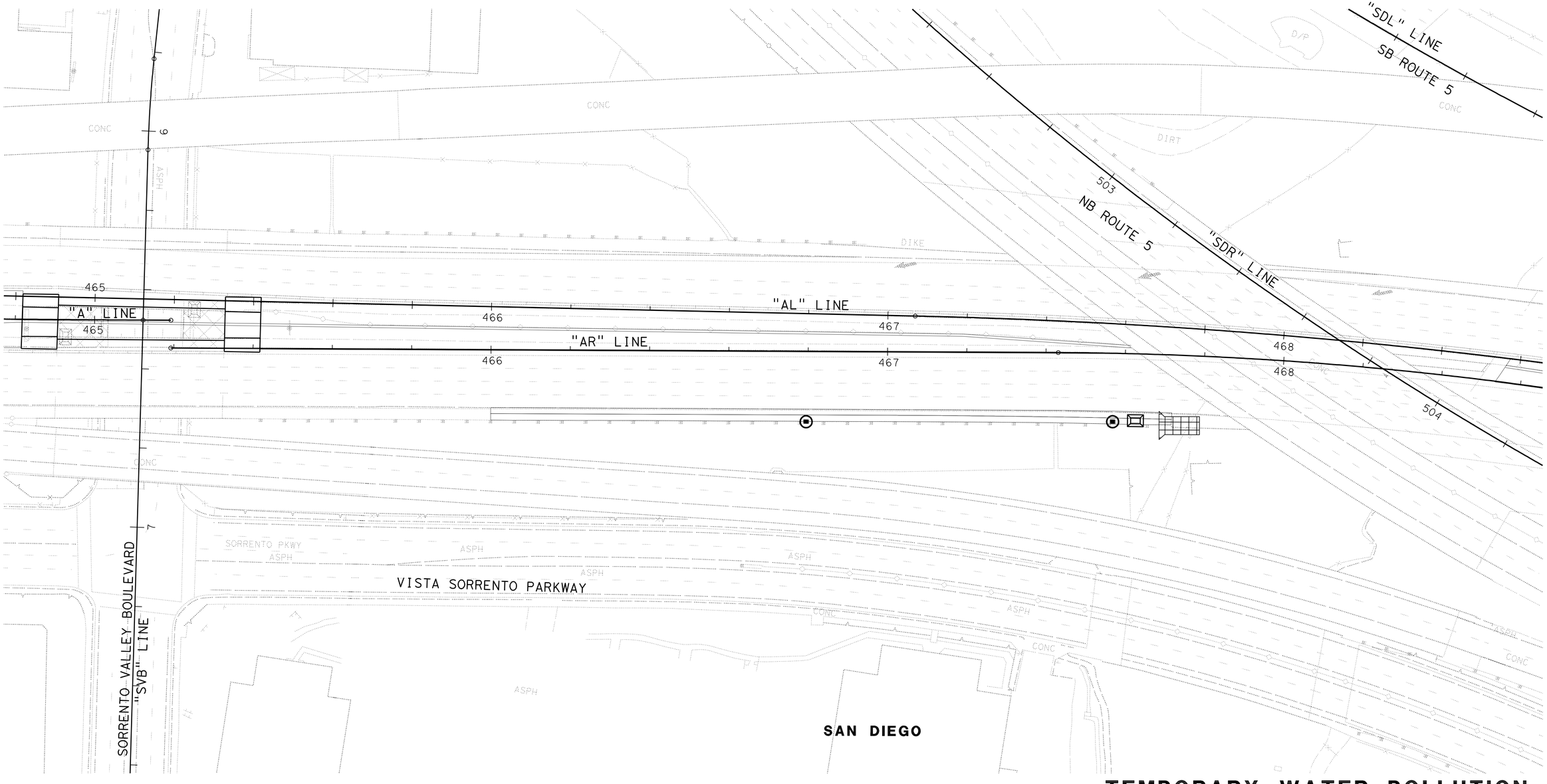

TEMPORARY WATER POLLUTION CONTROL PLAN
STAGE 2A

SCALE 1:500

WPC-25

THIS PLAN ACCURATE FOR TEMPORARY WATER POLLUTION CONTROL WORK ONLY

ALL DIMENSIONS ARE IN METERS UNLESS OTHERWISE SHOWN

STATE OF CALIFORNIA - DEPARTMENT OF TRANSPORTATION
Caltrans PROJECT DEVELOPMENT

FUNCTIONAL SUPERVISOR: MAJID KHARRATI
CALCULATED-DESIGNED BY: THEO AQUINO
CHECKED BY: SHAHBAZ A ALVI
REVISED BY
DATE REVISED

LAST REVISION 06-01-09
DATE PLOTTED => 29-SEP-2010
TIME PLOTTED => 1348

Dist	COUNTY	ROUTE	KILOMETER POST TOTAL PROJECT	SHEET No.	TOTAL SHEETS
11	SD	5,805	R49.9/R51.7, 42.6/46.5	121	886

REGISTERED CIVIL ENGINEER 05-13-09 DATE

9-27-10
PLANS APPROVAL DATE

REGISTERED PROFESSIONAL ENGINEER SHAHBAZ A ALVI No. C55293 Exp. 12-31-10 CIVIL STATE OF CALIFORNIA

THE STATE OF CALIFORNIA OR ITS OFFICERS OR AGENTS SHALL NOT BE RESPONSIBLE FOR THE ACCURACY OR COMPLETENESS OF ELECTRONIC COPIES OF THIS PLAN SHEET.

Caltrans Metric

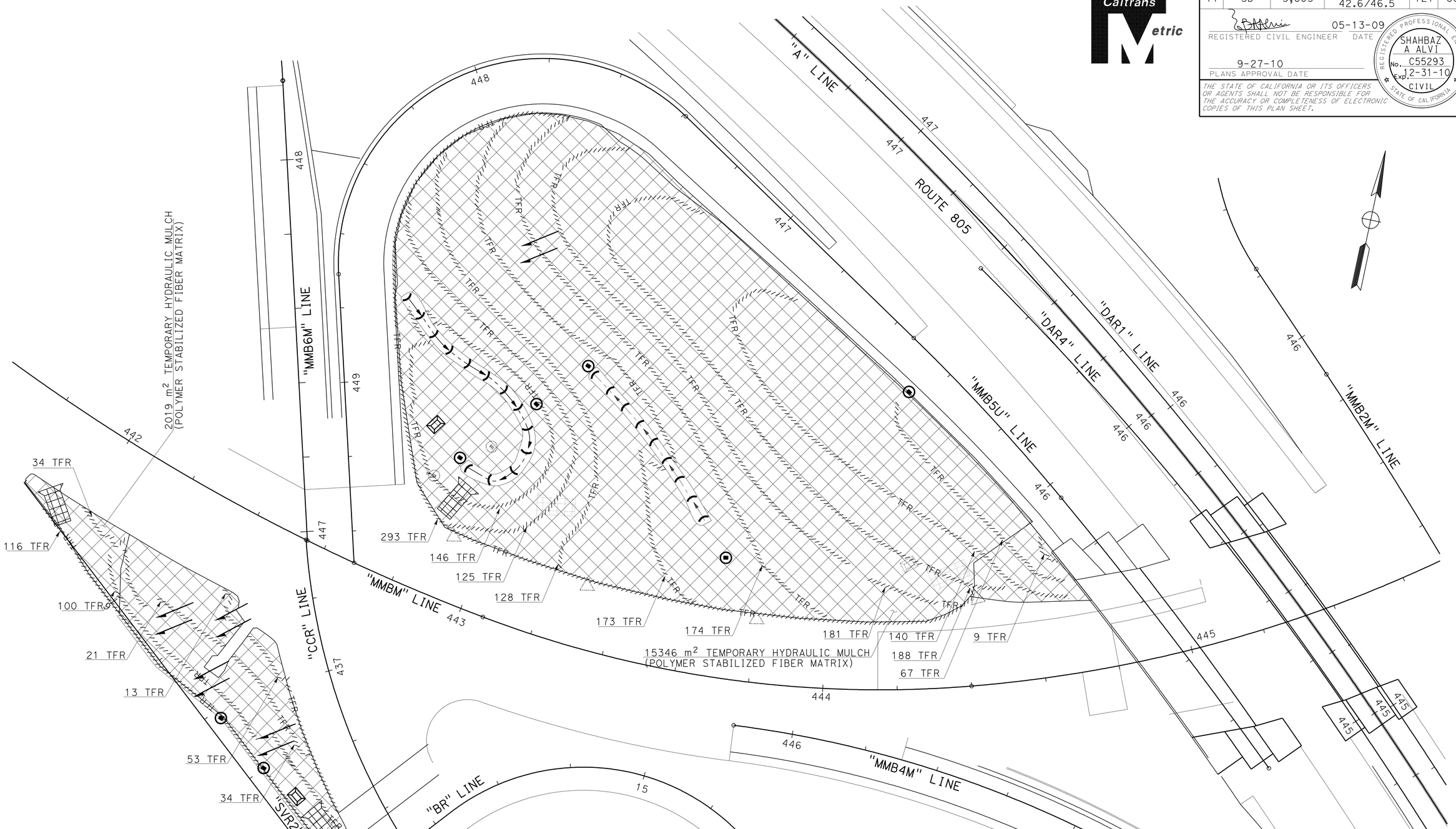

TEMPORARY WATER POLLUTION CONTROL PLAN
STAGE 2B

SCALE 1:500

WPC-26

THIS PLAN ACCURATE FOR TEMPORARY WATER POLLUTION CONTROL WORK ONLY

ALL DIMENSIONS ARE IN METERS UNLESS OTHERWISE SHOWN

STATE OF CALIFORNIA - DEPARTMENT OF TRANSPORTATION
Caltrans PROJECT DEVELOPMENT

FUNCTIONAL SUPERVISOR: MAJID KHARRATI

CALCULATED-DESIGNED BY: THEO AQUINO
CHECKED BY: SHAHBAZ A ALVI

REVISED BY | DATE REVISED

LAST REVISION 06-01-09 | DATE PLOTTED => 29-SEP-2010 | TIME PLOTTED => 13:48

Dist	COUNTY	ROUTE	KILOMETER POST TOTAL PROJECT	SHEET No.	TOTAL SHEETS
11	SD	5,805	R49.9/R51.7, 42.6/46.5	122	886

Caltrans Metric

05-13-09
REGISTERED CIVIL ENGINEER DATE

9-27-10
PLANS APPROVAL DATE

REGISTERED PROFESSIONAL ENGINEER
SHAHBAZ A ALVI
No. C55293
Exp. 12-31-10
CIVIL
STATE OF CALIFORNIA

THE STATE OF CALIFORNIA OR ITS OFFICERS OR AGENTS SHALL NOT BE RESPONSIBLE FOR THE ACCURACY OR COMPLETENESS OF SCANNED COPIES OF THIS PLAN SHEET.

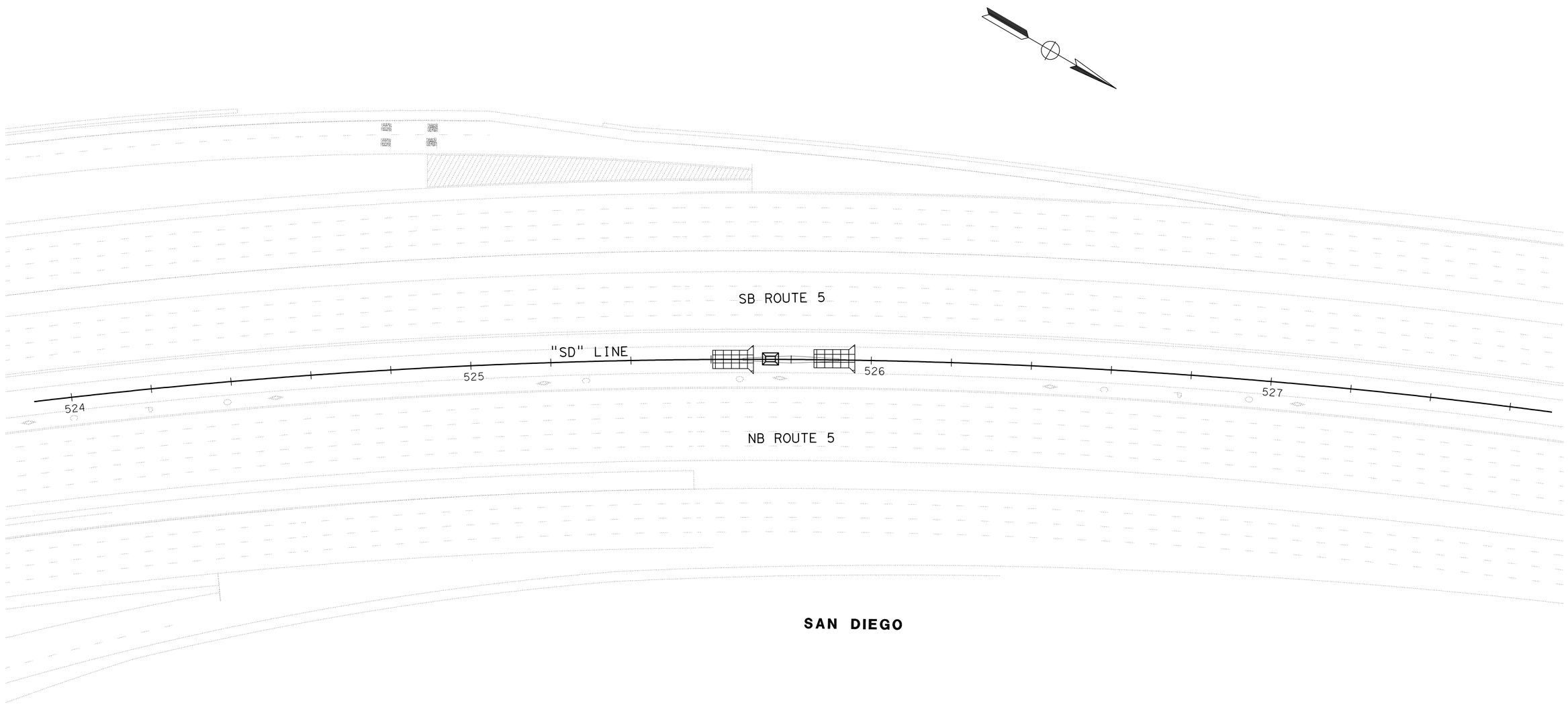

TEMPORARY WATER POLLUTION CONTROL PLAN
STAGE 2B

SCALE 1:500

WPC-27

THIS PLAN ACCURATE FOR TEMPORARY WATER POLLUTION CONTROL WORK ONLY

ALL DIMENSIONS ARE IN METERS UNLESS OTHERWISE SHOWN

REVISED BY | DATE REVISED

THEO AQUINO | SHAHBAZ A ALVI

CALCULATED-DESIGNED BY | CHECKED BY

FUNCTIONAL SUPERVISOR | MAJID KHARRATI

STATE OF CALIFORNIA - DEPARTMENT OF TRANSPORTATION
Caltrans PROJECT DEVELOPMENT

LAST REVISION DATE PLOTTED => 29-SEP-2010
06-01-09 TIME PLOTTED => 13:48

Dist	COUNTY	ROUTE	KILOMETER POST TOTAL PROJECT	SHEET No.	TOTAL SHEETS
11	SD	5,805	R49.9/R51.7, 42.6/46.5	123	886

REGISTERED CIVIL ENGINEER 05-13-09 DATE

9-27-10
PLANS APPROVAL DATE

REGISTERED PROFESSIONAL ENGINEER SHAHBAZ A ALVI No. C55293 Exp. 12-31-10 CIVIL STATE OF CALIFORNIA

THE STATE OF CALIFORNIA OR ITS OFFICERS OR AGENTS SHALL NOT BE RESPONSIBLE FOR THE ACCURACY OR COMPLETENESS OF SCANNED COPIES OF THIS PLAN SHEET.

Caltrans Metric

FLEXIBLE SEDIMENT BARRIER SPACING TABLE

SLOPE OF ROADWAY (PERCENT)	0 to 1	1 to 2	2 to 3	3 to 4	5+
INTERVAL BETWEEN BARRIERS (m)	15.24	10.67	9.14	7.62	6.10
ANGLE FROM FACE OF CURB (DEGREES)	70°	70°	70°	45°	45°
SUGGESTED BARRIER LENGTH (m)	1.82	1.82	1.82	1.82	1.82

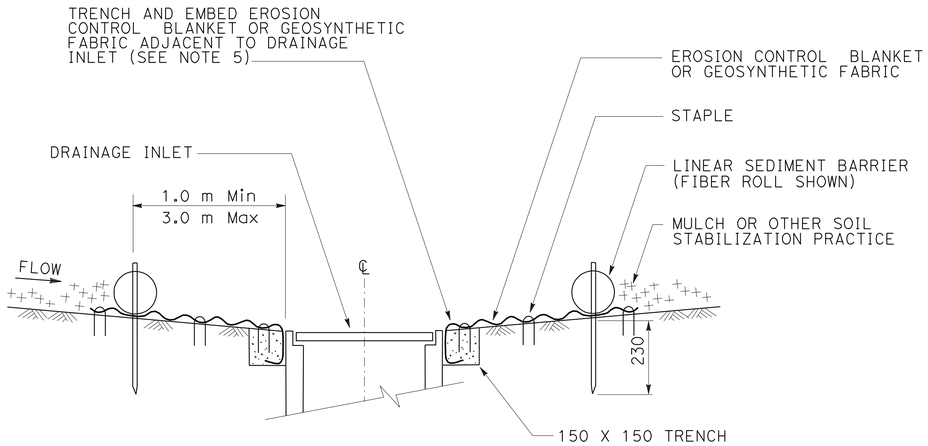

SECTION A-A

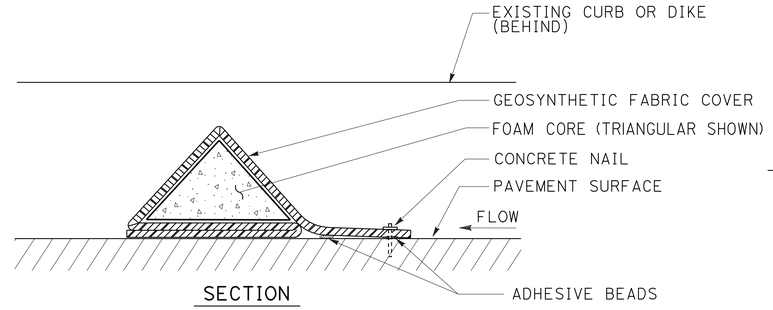

SECTION

FLEXIBLE SEDIMENT BARRIER DETAIL (FOAM BARRIER SHOWN)

NOTES:

1. SEE STANDARD PLAN T51 FOR TEMPORARY SILT FENCE.
2. DIMENSIONS MAY VARY TO FIT FIELD CONDITIONS.
3. INSTALL A MINIMUM OF 3 FLEXIBLE SEDIMENT BARRIERS UPSTREAM OF EACH DRAINAGE INLET TO BE PROTECTED.
4. POSITION EROSION CONTROL BLANKET OR GEOSYNTHETIC FABRIC AT EDGE OF CONCRETE APRON AND SECURE IN TRENCH.
5. EROSION CONTROL BLANKET OR GEOSYNTHETIC FABRIC IS NOT REQUIRED IF THE AREA ADJACENT TO THE DRAINAGE INLET IS VEGETATED.

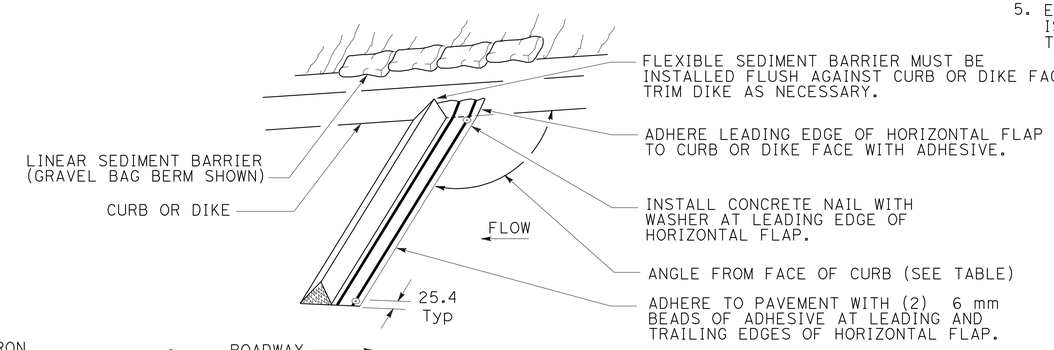

PERSPECTIVE

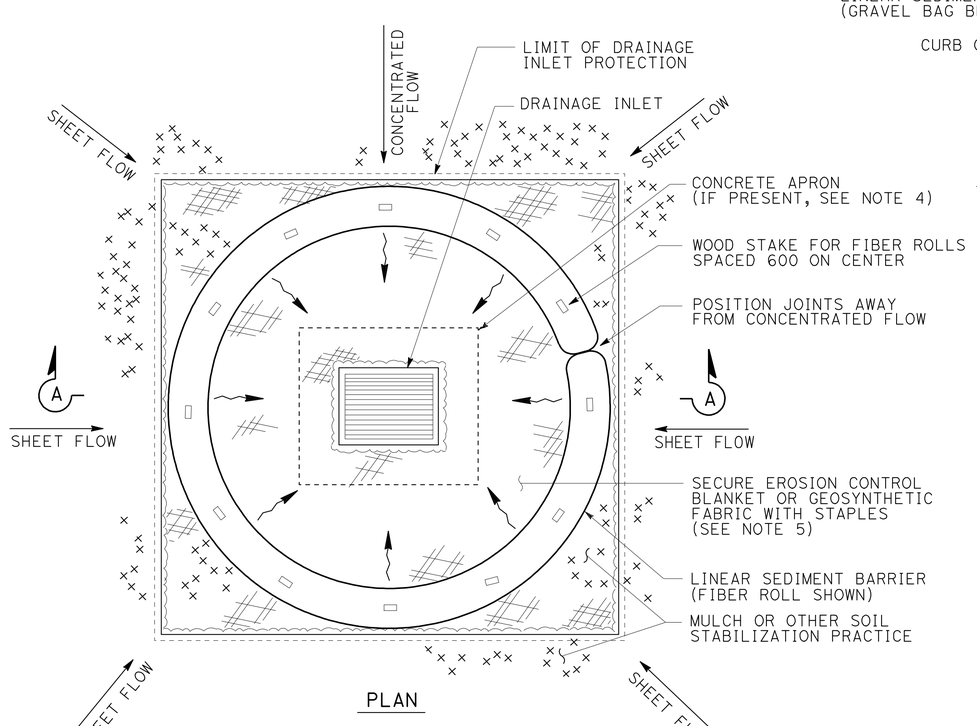

PLAN

TEMPORARY DRAINAGE INLET PROTECTION (TYPE 4A)

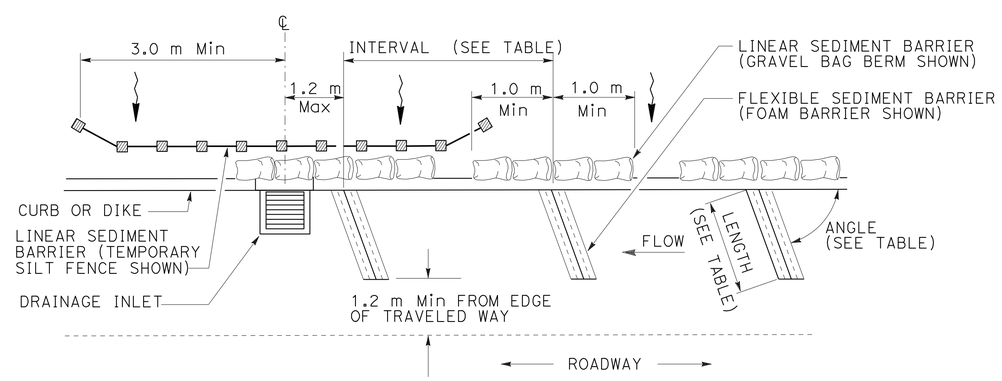

PLAN

TEMPORARY DRAINAGE INLET PROTECTION (TYPE 4B) FLEXIBLE SEDIMENT BARRIER

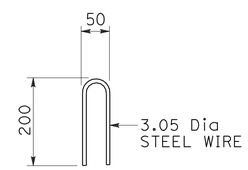

STAPLE DETAIL

TEMPORARY WATER POLLUTION CONTROL DETAILS

NO SCALE

WPCD-1

TEMPORARY DRAINAGE INLET PROTECTION

ALL DIMENSIONS ARE IN MILLIMETERS UNLESS OTHERWISE SHOWN

STATE OF CALIFORNIA - DEPARTMENT OF TRANSPORTATION
Caltrans PROJECT DEVELOPMENT

FUNCTIONAL SUPERVISOR: MAJID KHARRATI
CALCULATED-DESIGNED BY: THEO AQUINO
CHECKED BY: SHAHBAZ A ALVI
REVISED BY / DATE REVISED

LAST REVISION 06-01-09 | DATE PLOTTED => 29-SEP-2010 | TIME PLOTTED => 13:48

Dist	COUNTY	ROUTE	KILOMETER POST TOTAL PROJECT	SHEET No.	TOTAL SHEETS
11	SD	5,805	R49.9/R51.7, 42.6/46.5	124	886

REGISTERED CIVIL ENGINEER 05-13-09 DATE

9-27-10
PLANS APPROVAL DATE

REGISTERED PROFESSIONAL ENGINEER SHAHBAZ A ALVI No. C55293 Exp. 12-31-10 CIVIL STATE OF CALIFORNIA

THE STATE OF CALIFORNIA OR ITS OFFICERS OR AGENTS SHALL NOT BE RESPONSIBLE FOR THE ACCURACY OR COMPLETENESS OF ELECTRONIC COPIES OF THIS PLAN SHEET.

Caltrans Metric

TEMPORARY WATER POLLUTION CONTROL QUANTITY SUMMARY

SHEET	TEMPORARY DRAINAGE INLET PROTECTION		TEMPORARY CONSTRUCTION ENTRANCE	TEMPORARY FIBER ROLL	TEMPORARY HYDRAULIC MULCH (POLYMER STABILIZED FIBER MATRIX)			TEMPORARY CHECK DAM	TEMPORARY CONCRETE WASHOUT FACILITY	TEMPORARY STRAW BALE BARRIER
	(TYPE 4A)	(TYPE 4B)	(TYPE 2)		FIRST RAINY SEASON	SECOND RAINY SEASON	THIRD RAINY SEASON			
	(EA)	(EA)	(EA)	(m)	(m^2)	(m^2)	(m^2)	(m)	(EA)	(m)
WPC-1										115
WPC-2	5	1	3	415	3756	3756	3756		2	376
WPC-3	9		4	633	5917	5917	5917	330	3	
WPC-4	10	1		7	558	558	558	360	1	
WPC-5	6							360	1	
WPC-6	5							370	1	
WPC-7	4							370	1	
WPC-8	4							320	1	
WPC-9	6		1					160	1	
WPC-10			1	496	2219	2219	2219		1	
WPC-11	8	1	2	2591	10056	10056	10056	126	1	378
WPC-12	3			761	3158	3158	3158		1	118
WPC-13	16	4	3	1429	12969	12969	12969		3	
WPC-14	1			58	483	483	483			
WPC-15	21		1	2253	9631	9631	9631		2	
WPC-16	2	1	1	1537	16848	16848	16848		1	
WPC-17					437	437	437			
WPC-18	7		1	571	7591	7591	7591	32	1	
WPC-19	11		1	1285	10879	10879	10879	49	2	
WPC-20				59	255	255	255		2	
WPC-21					273	273	273			
WPC-22			2						1	
WPC-23					386	386	386			
WPC-24	4		1	141	1112	1112	1112		1	
WPC-25	2		1						1	
WPC-26	8	1	3	1995	17365	17365	17365	125	2	
WPC-27			2						1	
SUBTOTAL	132	9	27	14231	103 893	103 893	103 893	2602	31	987
TOTAL	141		27	14231	311 679			2602	31	987

TEMPORARY WATER POLLUTION CONTROL QUANTITIES

WPCQ-1

STATE OF CALIFORNIA - DEPARTMENT OF TRANSPORTATION
Caltrans PROJECT DEVELOPMENT

FUNCTIONAL SUPERVISOR: MAJID KHARRATI
CALCULATED-DESIGNED BY: THEO AQUINO
CHECKED BY: SHAHBAZ A ALVI
REVISED BY
DATE REVISED

LAST REVISION 04-14-10 DATE PLOTTED => 29-SEP-2010 TIME PLOTTED => 13:48

Dist	COUNTY	ROUTE	KILOMETER POST TOTAL PROJECT	SHEET No.	TOTAL SHEETS
11	SD	5,805	R49.9/R51.7, 42.6/46.5	125	886

REGISTERED CIVIL ENGINEER 05-13-09 DATE

9-27-10
PLANS APPROVAL DATE

REGISTERED PROFESSIONAL ENGINEER SHAHBAZ A ALVI No. 55293 Exp. 12-31-10 CIVIL STATE OF CALIFORNIA

THE STATE OF CALIFORNIA OR ITS OFFICERS OR AGENTS SHALL NOT BE RESPONSIBLE FOR THE ACCURACY OR COMPLETENESS OF ELECTRONIC COPIES OF THIS PLAN SHEET.

Caltrans Metric

NOTE: FOR COMPLETE RIGHT OF WAY AND ACCURATE ACCESS DATA, SEE RIGHT OF WAY RECORD MAPS AT DISTRICT OFFICE.

LEGEND:

- FR — FIBER ROLLS
- EROSION CONTROL (TYPE D) (SEED TYPE 1)
- EROSION CONTROL (TYPE D) (SEED TYPE 2)
- EROSION CONTROL HYDRAULIC MULCH (POLYMER STABILIZED FIBER MATRIX) (SEED TYPE 2)
- EROSION CONTROL HYDRAULIC MULCH (POLYMER STABILIZED FIBER MATRIX) (SEED TYPE 1)
- ESA — ENVIRONMENTALLY SENSITIVE AREA
- SURFACE FLOW DIRECTION (1:2 SLOPE OR FLATTER UNLESS OTHERWISE SHOWN)
- DRAINAGE INLET PROTECTION (EROSION CONTROL)
- CHECK DAM (EROSION CONTROL)
- SWALE FLOWLINE

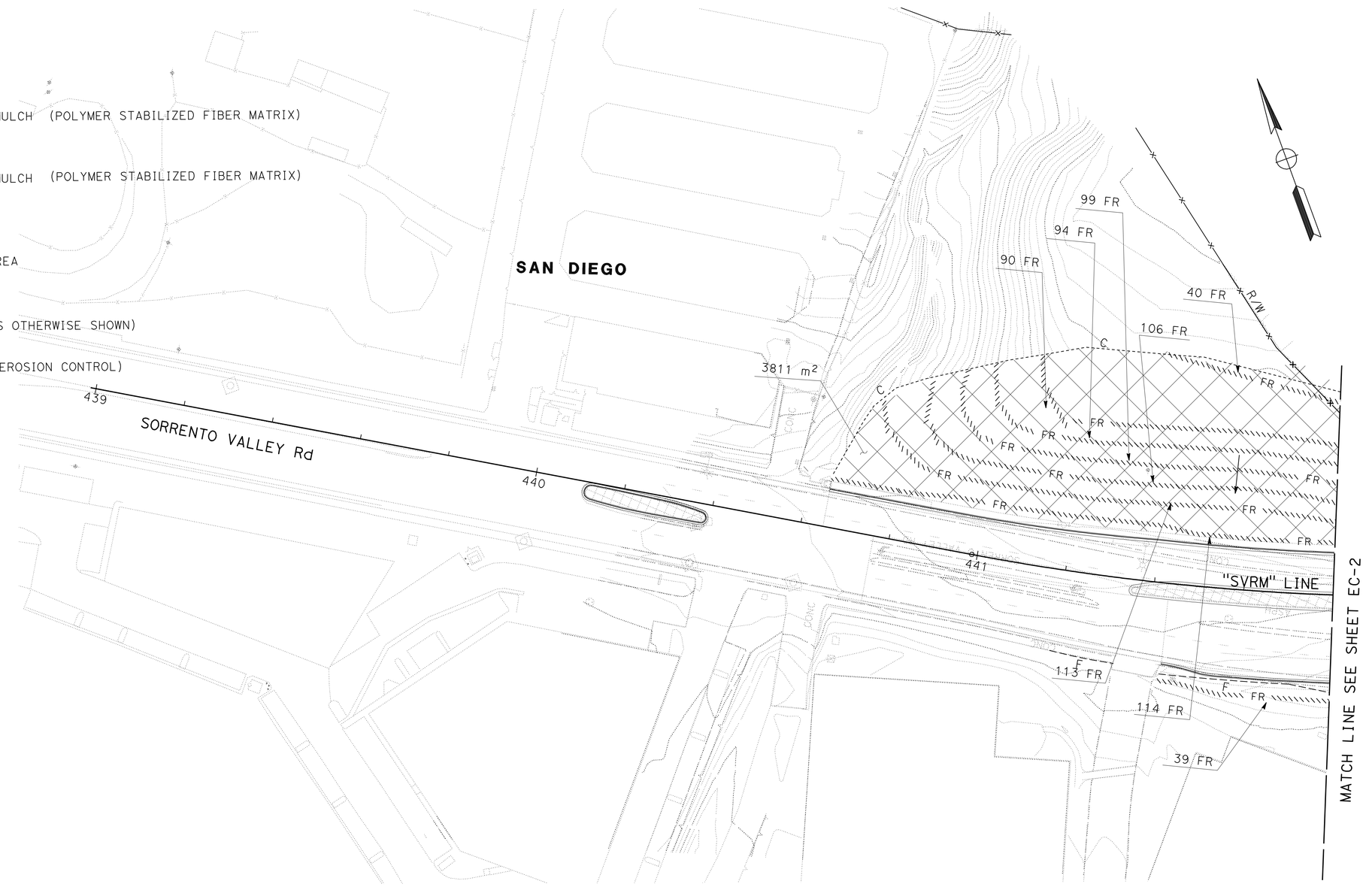

THIS PLAN ACCURATE FOR EROSION CONTROL WORK ONLY.

ALL DIMENSIONS ARE IN METERS UNLESS OTHERWISE SHOWN

EROSION CONTROL PLAN

SCALE 1:500

EC-1

STATE OF CALIFORNIA - DEPARTMENT OF TRANSPORTATION
Caltrans PROJECT DEVELOPMENT

FUNCTIONAL SUPERVISOR: MAJID KHARRATI
CALCULATED-DESIGNED BY: NATE OXINA
CHECKED BY: SHAHBAZ A ALVI
REVISED BY / DATE REVISED

LAST REVISION 05-22-09
DATE PLOTTED => 29-SEP-2010
TIME PLOTTED => 13:48

Dist	COUNTY	ROUTE	KILOMETER POST TOTAL PROJECT	SHEET No.	TOTAL SHEETS
11	SD	5,805	R49.9/R51.7, 42.6/46.5	126	886

REGISTERED CIVIL ENGINEER 05-13-09 DATE

9-27-10
PLANS APPROVAL DATE

REGISTERED PROFESSIONAL ENGINEER SHAHBAZ A ALVI No. 55293 Exp. 12-31-10 CIVIL STATE OF CALIFORNIA

THE STATE OF CALIFORNIA OR ITS OFFICERS OR AGENTS SHALL NOT BE RESPONSIBLE FOR THE ACCURACY OR COMPLETENESS OF ELECTRONIC COPIES OF THIS PLAN SHEET.

Caltrans Metric

NOTE:
FOR COMPLETE RIGHT OF WAY AND ACCURATE ACCESS DATA, SEE RIGHT OF WAY RECORD MAPS AT DISTRICT OFFICE.

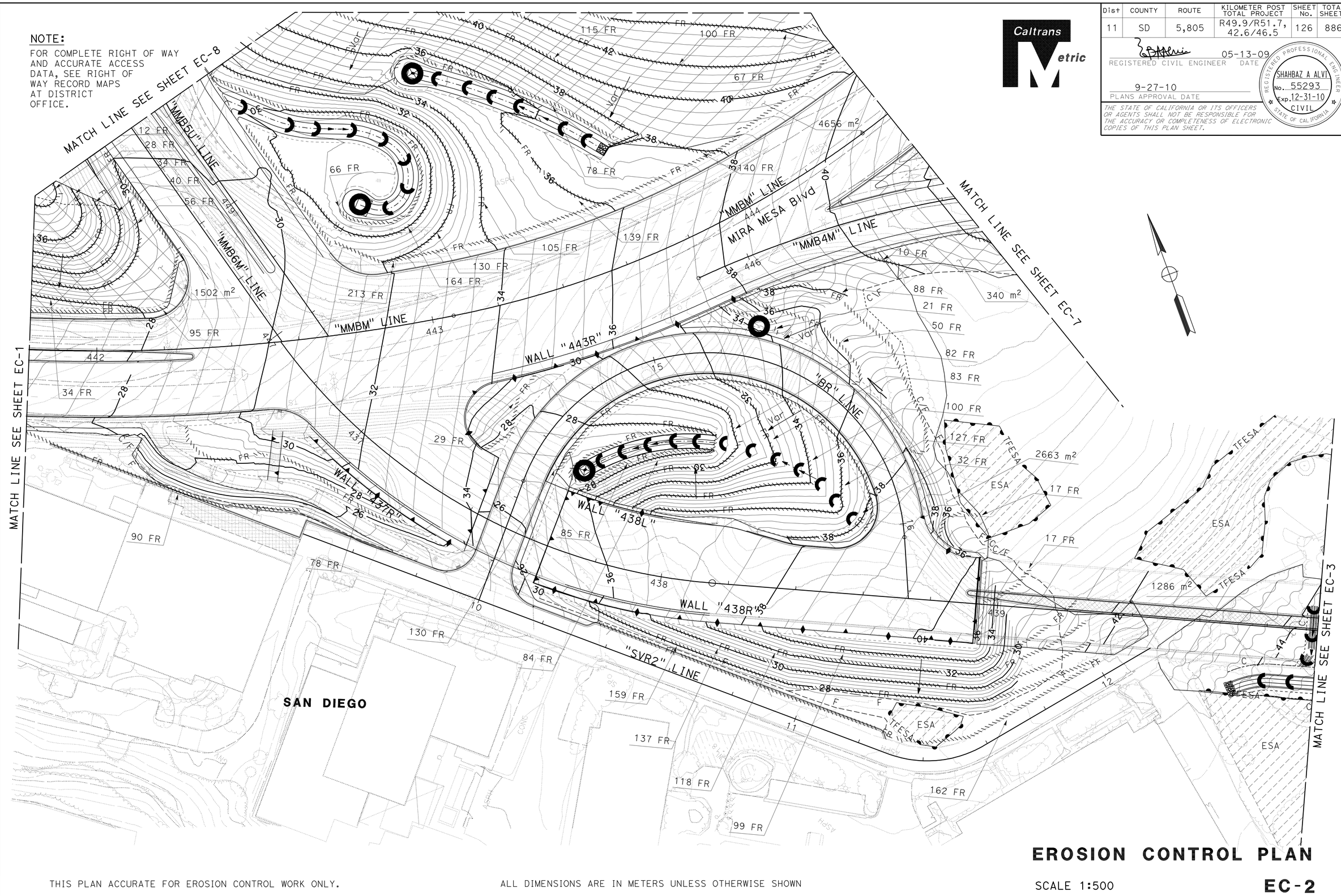

EROSION CONTROL PLAN

SCALE 1:500

EC-2

THIS PLAN ACCURATE FOR EROSION CONTROL WORK ONLY.

ALL DIMENSIONS ARE IN METERS UNLESS OTHERWISE SHOWN

STATE OF CALIFORNIA - DEPARTMENT OF TRANSPORTATION
Caltrans® PROJECT DEVELOPMENT

FUNCTIONAL SUPERVISOR: MAJID KHARRATI
CALCULATED-DESIGNED BY: NATE OXINA
CHECKED BY: SHAHBAZ A ALVI
REVISED BY / DATE REVISED

LAST REVISION 05-22-09 | DATE PLOTTED => 29-SEP-2010 | TIME PLOTTED => 13:49

BORDER LAST REVISED 3/1/2007 | RELATIVE BORDER SCALE IS IN MILLIMETERS 0 20 40 60 80 | USERNAME => trmikesl | DGN FILE => b2t040ge002.dgn | CU 11275 | EA 2T0401

Dist	COUNTY	ROUTE	KILOMETER POST TOTAL PROJECT	SHEET No.	TOTAL SHEETS
11	SD	5,805	R49.9/R51.7, 42.6/46.5	127	886

REGISTERED CIVIL ENGINEER 05-13-09 DATE

9-27-10
PLANS APPROVAL DATE

REGISTERED PROFESSIONAL ENGINEER SHAHBAZ A ALVI No. 55293 Exp. 12-31-10 CIVIL STATE OF CALIFORNIA

THE STATE OF CALIFORNIA OR ITS OFFICERS OR AGENTS SHALL NOT BE RESPONSIBLE FOR THE ACCURACY OR COMPLETENESS OF ELECTRONIC COPIES OF THIS PLAN SHEET.

Caltrans Metric

NOTE:
FOR COMPLETE RIGHT OF WAY AND ACCURATE ACCESS DATA, SEE RIGHT OF WAY RECORD MAPS AT DISTRICT OFFICE.

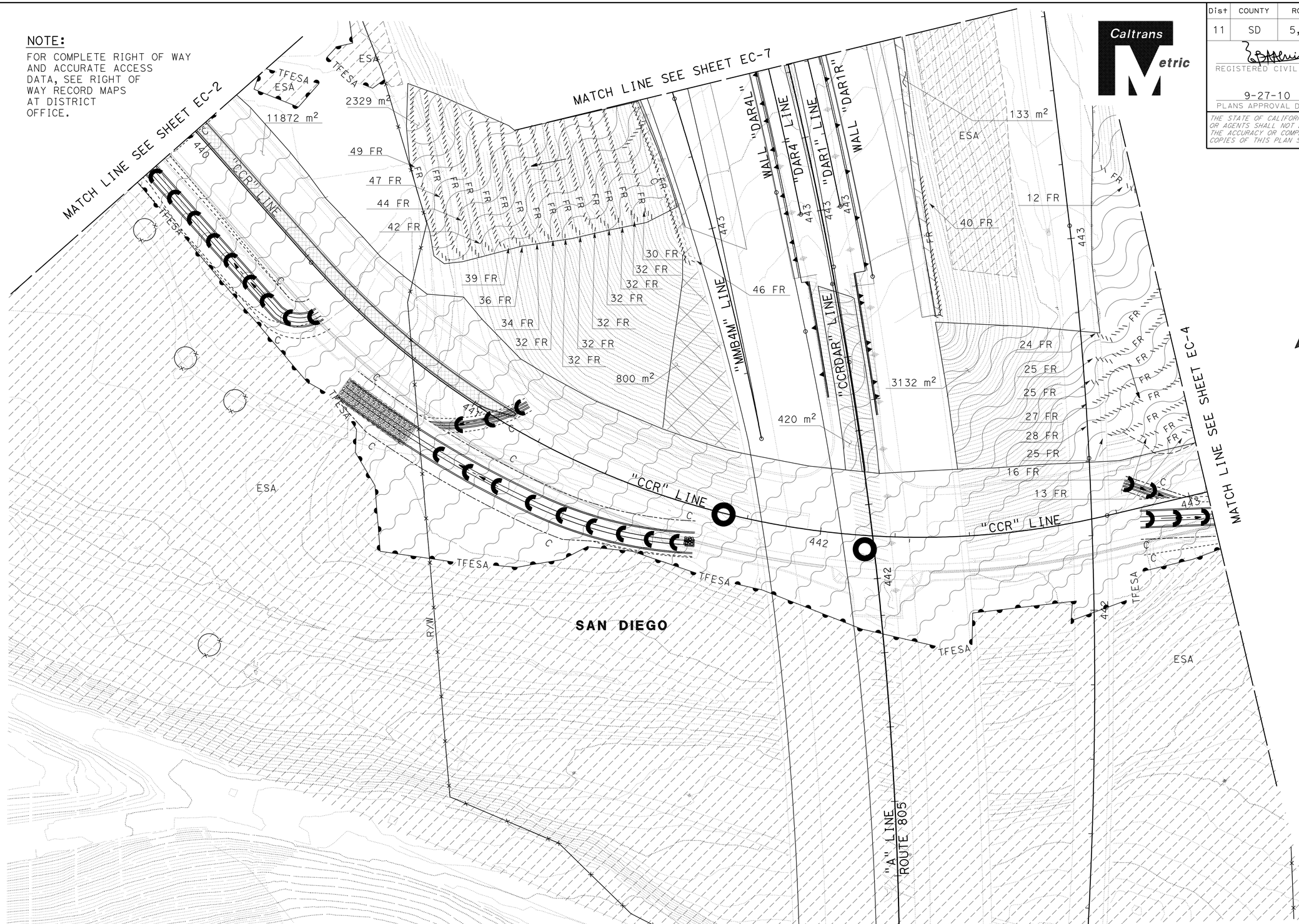

ALL DIMENSIONS ARE IN METERS UNLESS OTHERWISE SHOWN

THIS PLAN ACCURATE FOR EROSION CONTROL WORK ONLY.

EROSION CONTROL PLAN

SCALE 1:500

EC-3

STATE OF CALIFORNIA - DEPARTMENT OF TRANSPORTATION
Caltrans PROJECT DEVELOPMENT

FUNCTIONAL SUPERVISOR: MAJID KHARRATI
CALCULATED-DESIGNED BY: NATE OXINA
CHECKED BY: SHAHBAZ A. ALVI
REVISED BY / DATE REVISED

LAST REVISION 04-14-10
DATE PLOTTED => 29-SEP-2010
TIME PLOTTED => 13:49

NOTE: FOR COMPLETE RIGHT OF WAY AND ACCURATE ACCESS DATA, SEE RIGHT OF WAY RECORD MAPS AT DISTRICT OFFICE.

Dist	COUNTY	ROUTE	KILOMETER POST TOTAL PROJECT	SHEET No.	TOTAL SHEETS
11	SD	5,805	R49.9/R51.7, 42.6/46.5	128	886

REGISTERED CIVIL ENGINEER 05-13-09 DATE

9-27-10
PLANS APPROVAL DATE

REGISTERED PROFESSIONAL ENGINEER SHAHBAZ A ALVI No. 55293 Exp. 12-31-10 CIVIL STATE OF CALIFORNIA

THE STATE OF CALIFORNIA OR ITS OFFICERS OR AGENTS SHALL NOT BE RESPONSIBLE FOR THE ACCURACY OR COMPLETENESS OF ELECTRONIC COPIES OF THIS PLAN SHEET.

Caltrans Metric

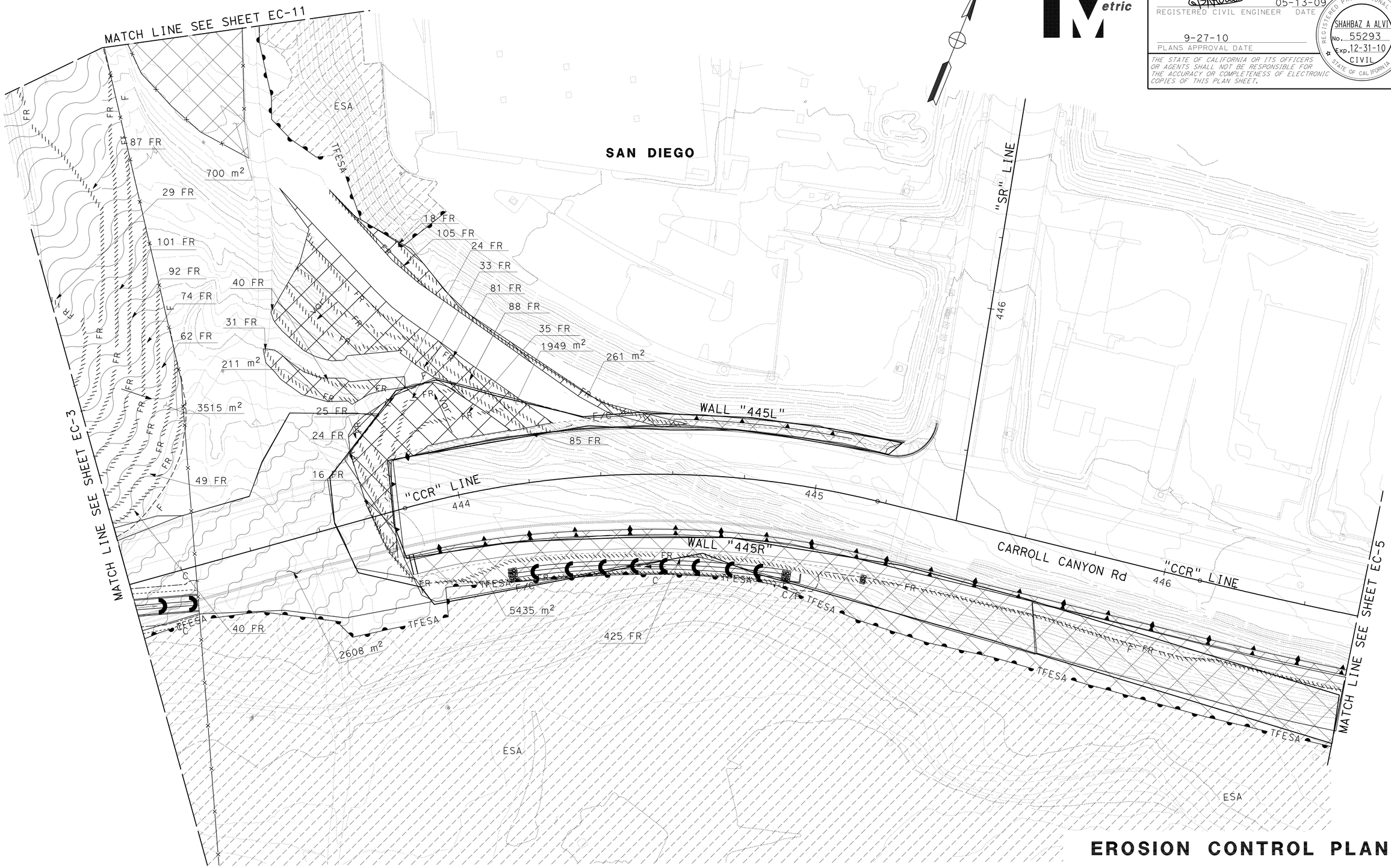

EROSION CONTROL PLAN

SCALE 1:500

EC-4

THIS PLAN ACCURATE FOR EROSION CONTROL WORK ONLY.

ALL DIMENSIONS ARE IN METERS UNLESS OTHERWISE SHOWN

STATE OF CALIFORNIA - DEPARTMENT OF TRANSPORTATION
Caltrans® PROJECT DEVELOPMENT

FUNCTIONAL SUPERVISOR: MAJID KHARRATI
CALCULATED-DESIGNED BY: NATE OXINA
CHECKED BY: SHAHBAZ A ALVI
REVISED BY
DATE REVISED

LAST REVISION 04-14-10
DATE PLOTTED => 29-SEP-2010
TIME PLOTTED => 13:49

NOTE: FOR COMPLETE RIGHT OF WAY AND ACCURATE ACCESS DATA, SEE RIGHT OF WAY RECORD MAPS AT DISTRICT OFFICE.

Dist	COUNTY	ROUTE	KILOMETER POST TOTAL PROJECT	SHEET No.	TOTAL SHEETS
11	SD	5,805	R49.9/R51.7, 42.6/46.5	129	886

REGISTERED CIVIL ENGINEER 05-13-09 DATE

9-27-10
PLANS APPROVAL DATE

REGISTERED PROFESSIONAL ENGINEER SHAHBAZ A ALVI No. 55293 Exp. 12-31-10 CIVIL STATE OF CALIFORNIA

THE STATE OF CALIFORNIA OR ITS OFFICERS OR AGENTS SHALL NOT BE RESPONSIBLE FOR THE ACCURACY OR COMPLETENESS OF ELECTRONIC COPIES OF THIS PLAN SHEET.

Caltrans Metric

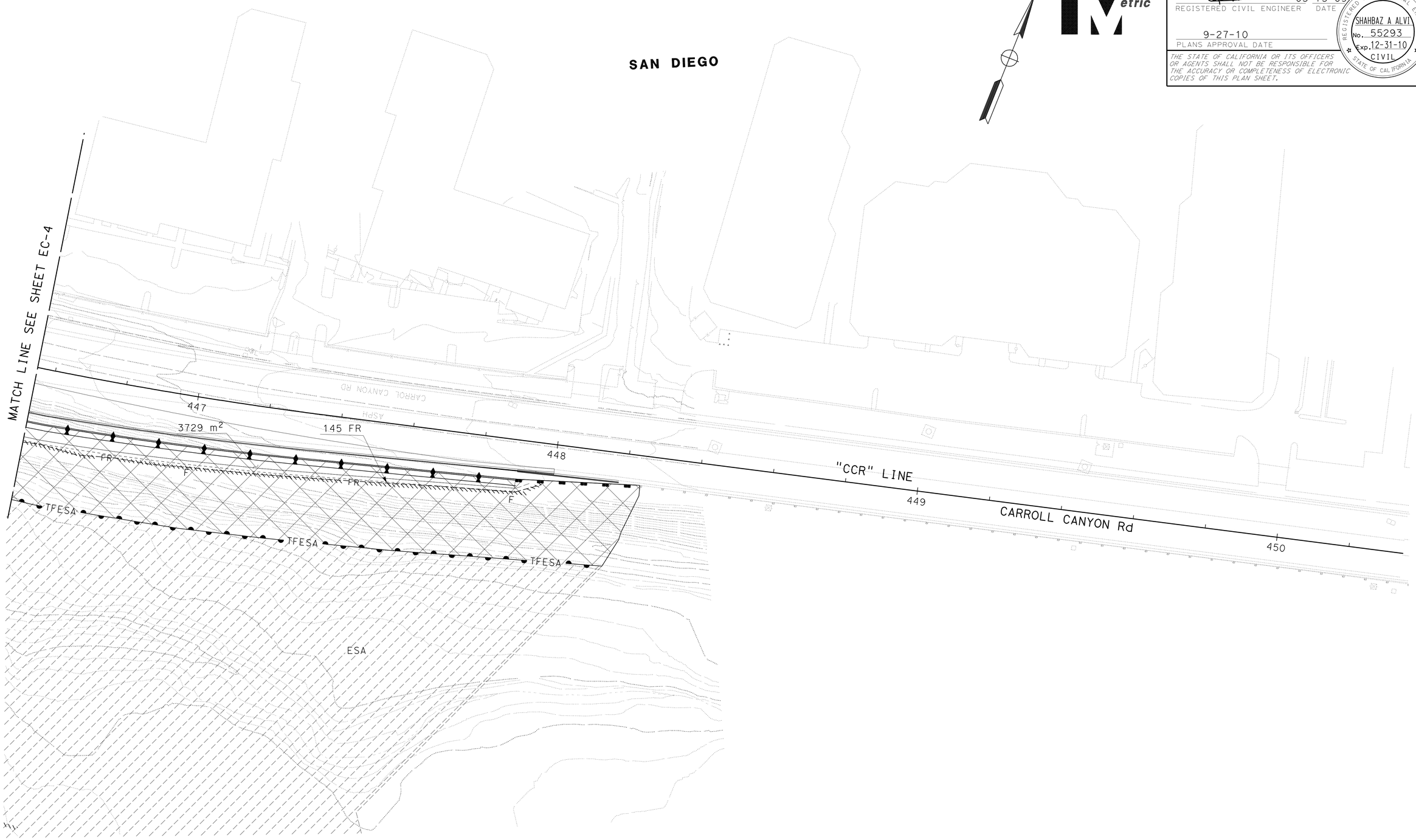

THIS PLAN ACCURATE FOR EROSION CONTROL WORK ONLY.

ALL DIMENSIONS ARE IN METERS UNLESS OTHERWISE SHOWN

EROSION CONTROL PLAN

SCALE 1:500

EC-5

STATE OF CALIFORNIA - DEPARTMENT OF TRANSPORTATION
Caltrans® PROJECT DEVELOPMENT

FUNCTIONAL SUPERVISOR: MAJID KHARRATI
CALCULATED-DESIGNED BY: NATE OXINA
CHECKED BY: SHAHBAZ A ALVI
REVISED BY
DATE REVISED

LAST REVISION 05-23-09
DATE PLOTTED => 29-SEP-2010
TIME PLOTTED => 13:49

NOTE: FOR COMPLETE RIGHT OF WAY AND ACCURATE ACCESS DATA, SEE RIGHT OF WAY RECORD MAPS AT DISTRICT OFFICE.

Dist	COUNTY	ROUTE	KILOMETER POST TOTAL PROJECT	SHEET No.	TOTAL SHEETS
11	SD	5,805	R49.9/R51.7, 42.6/46.5	130	886

REGISTERED CIVIL ENGINEER 05-13-09 DATE

9-27-10
PLANS APPROVAL DATE

REGISTERED PROFESSIONAL ENGINEER SHAHBAZ A ALVI No. 55293 Exp. 12-31-10 CIVIL STATE OF CALIFORNIA

THE STATE OF CALIFORNIA OR ITS OFFICERS OR AGENTS SHALL NOT BE RESPONSIBLE FOR THE ACCURACY OR COMPLETENESS OF ELECTRONIC COPIES OF THIS PLAN SHEET.

Caltrans Metric

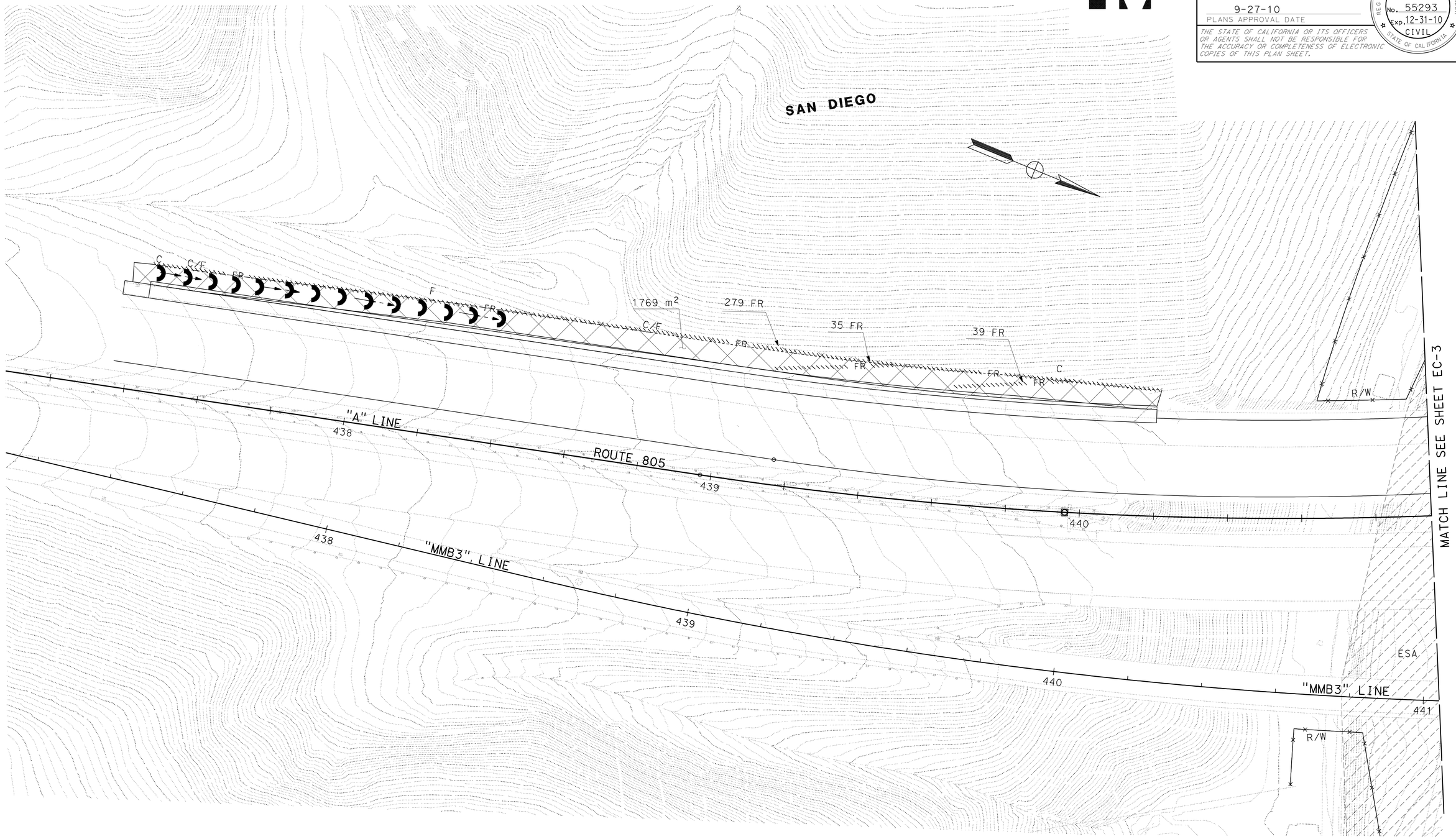

EROSION CONTROL PLAN

SCALE 1:500

EC-6

THIS PLAN ACCURATE FOR EROSION CONTROL WORK ONLY.

ALL DIMENSIONS ARE IN METERS UNLESS OTHERWISE SHOWN

REVISED BY	DATE REVISED

CALCULATED-DESIGNED BY	CHECKED BY
NATE OXINA	SHAHBAZ A ALVI

FUNCTIONAL SUPERVISOR: MAJID KHARRATI

STATE OF CALIFORNIA - DEPARTMENT OF TRANSPORTATION

Caltrans® PROJECT DEVELOPMENT

LAST REVISION 05-23-09 | DATE PLOTTED => 29-SEP-2010 | TIME PLOTTED => 13:49

Dist	COUNTY	ROUTE	KILOMETER POST TOTAL PROJECT	SHEET No.	TOTAL SHEETS
11	SD	5,805	R49.9/R51.7, 42.6/46.5	131	886

REGISTERED CIVIL ENGINEER 05-13-09 DATE

9-27-10
PLANS APPROVAL DATE

REGISTERED PROFESSIONAL ENGINEER SHAHBAZ A ALVI No. 55293 Exp. 12-31-10 CIVIL STATE OF CALIFORNIA

THE STATE OF CALIFORNIA OR ITS OFFICERS OR AGENTS SHALL NOT BE RESPONSIBLE FOR THE ACCURACY OR COMPLETENESS OF ELECTRONIC COPIES OF THIS PLAN SHEET.

Caltrans Metric

NOTE:

FOR COMPLETE RIGHT OF WAY AND ACCURATE ACCESS DATA, SEE RIGHT OF WAY RECORD MAPS AT DISTRICT OFFICE.

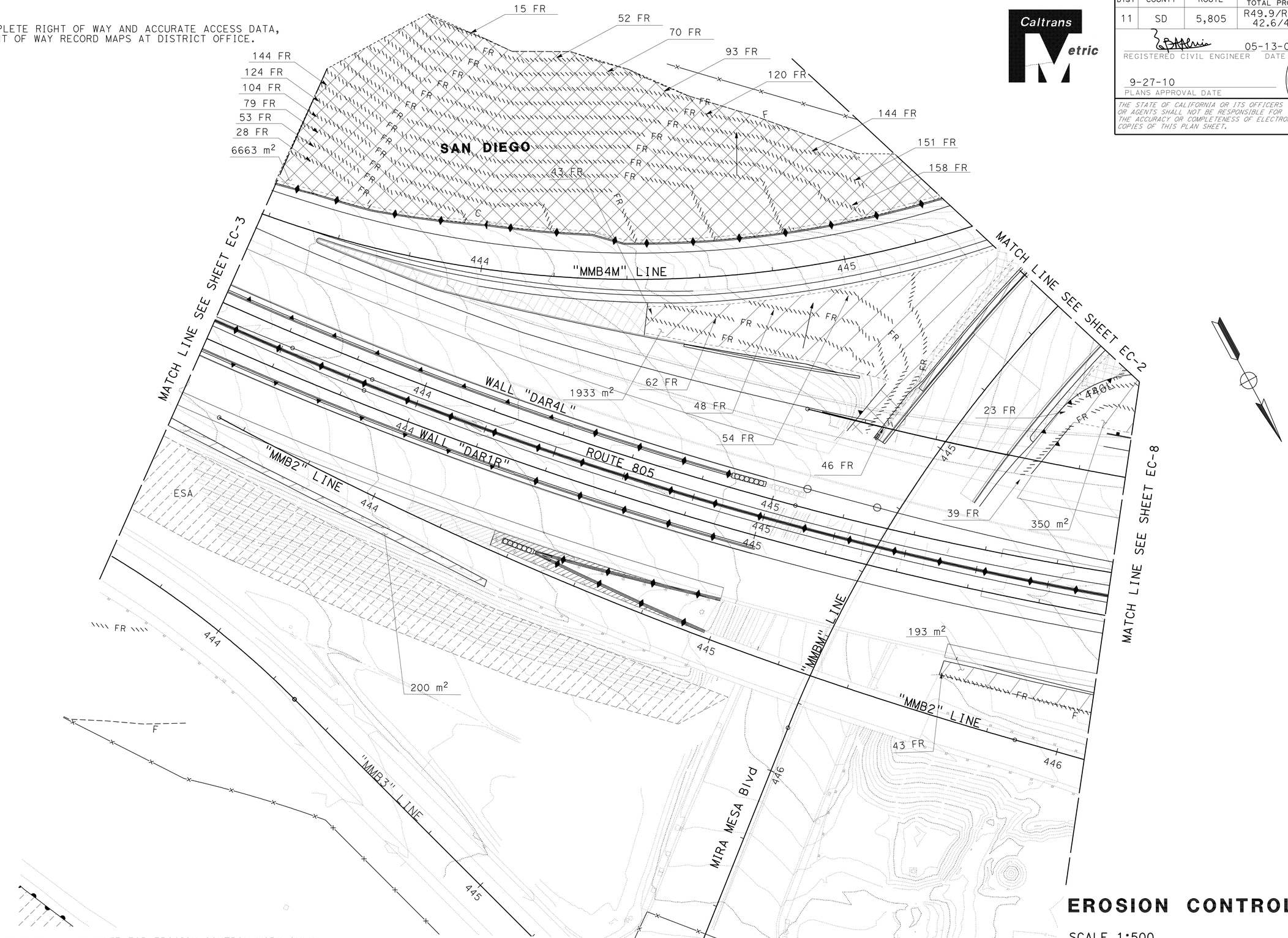

THIS PLAN ACCURATE FOR EROSION CONTROL WORK ONLY.

ALL DIMENSIONS ARE IN METERS UNLESS OTHERWISE SHOWN

EROSION CONTROL PLAN

SCALE 1:500

EC-7

STATE OF CALIFORNIA - DEPARTMENT OF TRANSPORTATION
Caltrans® PROJECT DEVELOPMENT

FUNCTIONAL SUPERVISOR: MAJID KHARRATI
CALCULATED-DESIGNED BY: NATE OXINA
CHECKED BY: SHAHBAZ A ALVI
REVISED BY
DATE REVISED

LAST REVISION 04-14-10
DATE PLOTTED => 29-SEP-2010
TIME PLOTTED => 14:45

Dist	COUNTY	ROUTE	KILOMETER POST TOTAL PROJECT	SHEET No.	TOTAL SHEETS
11	SD	5,805	R49.9/R51.7, 42.6/46.5	132	886

REGISTERED CIVIL ENGINEER 05-13-09 DATE

9-27-10
PLANS APPROVAL DATE

REGISTERED PROFESSIONAL ENGINEER SHAHBAZ A ALVI No. 55293 Exp. 12-31-10 CIVIL STATE OF CALIFORNIA

THE STATE OF CALIFORNIA OR ITS OFFICERS OR AGENTS SHALL NOT BE RESPONSIBLE FOR THE ACCURACY OR COMPLETENESS OF ELECTRONIC COPIES OF THIS PLAN SHEET.

Caltrans Metric

NOTE:
FOR COMPLETE RIGHT OF WAY AND ACCURATE ACCESS DATA, SEE RIGHT OF WAY RECORD MAPS AT DISTRICT OFFICE.

SAN DIEGO

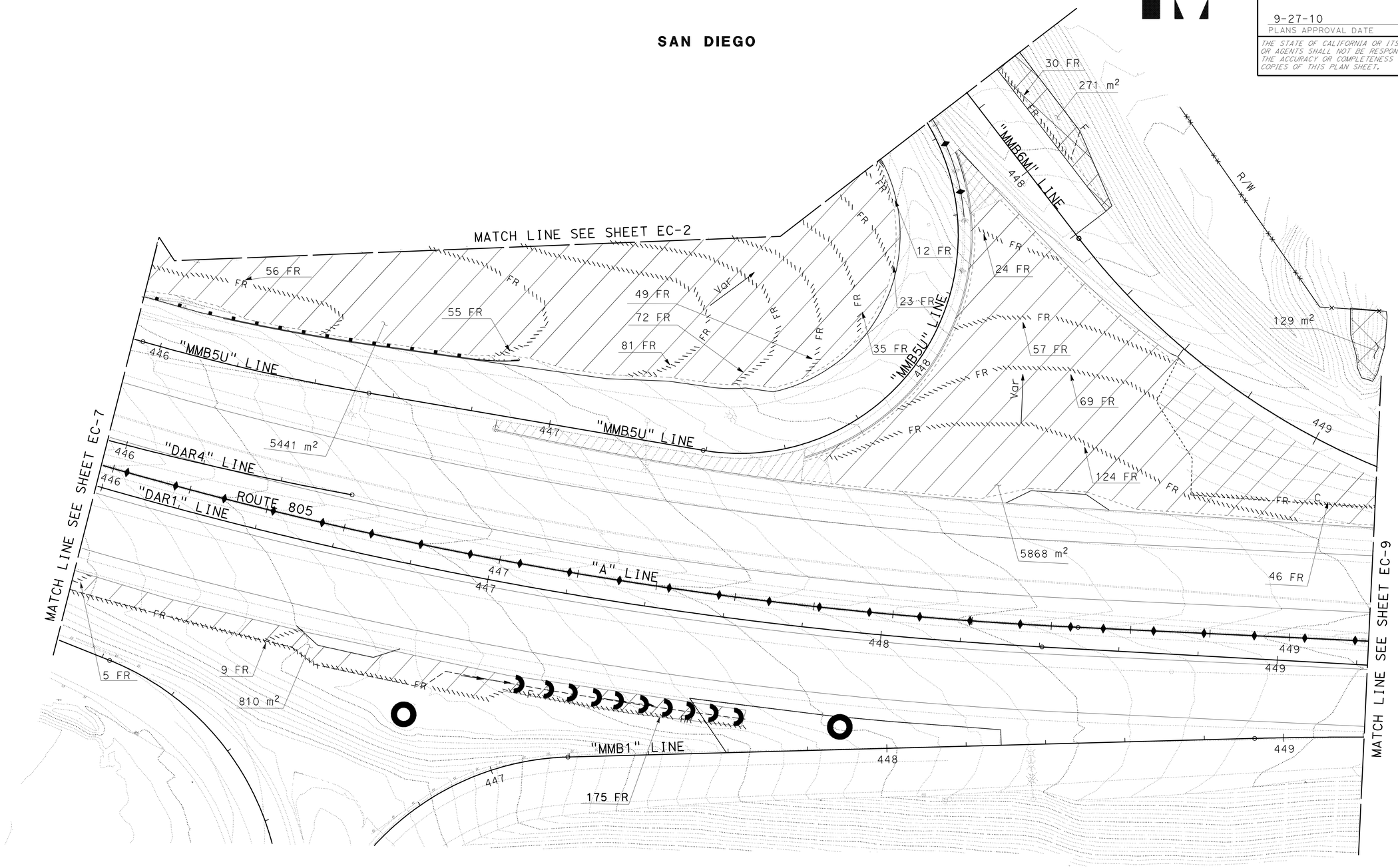

THIS PLAN ACCURATE FOR EROSION CONTROL WORK ONLY.

ALL DIMENSIONS ARE IN METERS UNLESS OTHERWISE SHOWN

EROSION CONTROL PLAN

SCALE 1:500

EC-8

STATE OF CALIFORNIA - DEPARTMENT OF TRANSPORTATION
Caltrans PROJECT DEVELOPMENT

FUNCTIONAL SUPERVISOR: MAJID KHARRATI
CALCULATED-DESIGNED BY: NATE OXINA
CHECKED BY: SHAHBAZ A ALVI
REVISED BY
DATE REVISED

LAST REVISION 05-23-09
DATE PLOTTED => 29-SEP-2010
TIME PLOTTED => 13:50

NOTE: FOR COMPLETE RIGHT OF WAY AND ACCURATE ACCESS DATA, SEE RIGHT OF WAY RECORD MAPS AT DISTRICT OFFICE.

Dist	COUNTY	ROUTE	KILOMETER POST TOTAL PROJECT	SHEET No.	TOTAL SHEETS
11	SD	5,805	R49.9/R51.7, 42.6/46.5	133	886

REGISTERED CIVIL ENGINEER 05-13-09 DATE

9-27-10
PLANS APPROVAL DATE

REGISTERED PROFESSIONAL ENGINEER SHAHBAZ A ALVI No. 55293 Exp. 12-31-10 CIVIL STATE OF CALIFORNIA

THE STATE OF CALIFORNIA OR ITS OFFICERS OR AGENTS SHALL NOT BE RESPONSIBLE FOR THE ACCURACY OR COMPLETENESS OF ELECTRONIC COPIES OF THIS PLAN SHEET.

Caltrans Metric

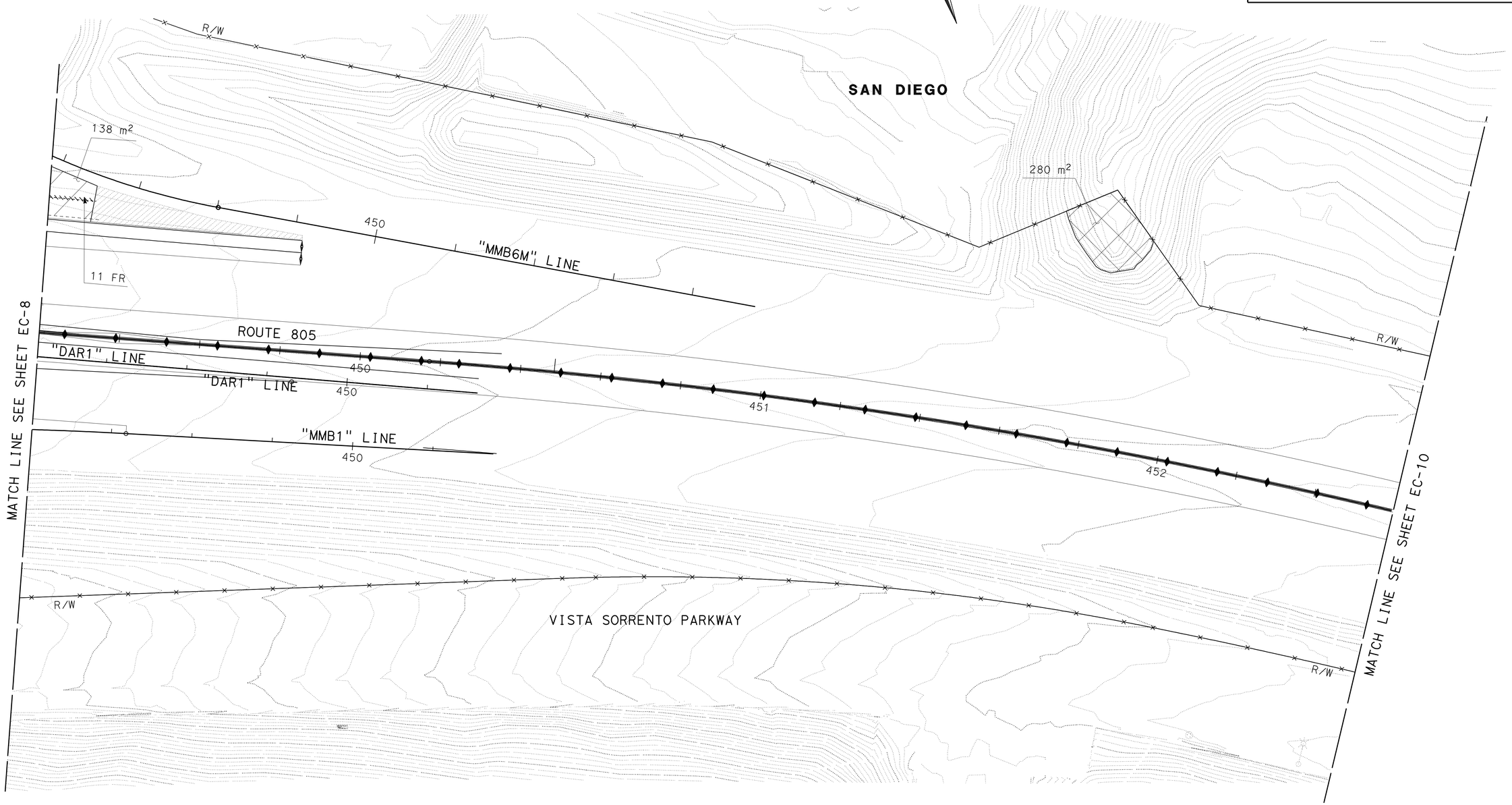

THIS PLAN ACCURATE FOR EROSION CONTROL ONLY.

ALL DIMENSIONS ARE IN METERS UNLESS OTHERWISE SHOWN

EROSION CONTROL PLAN

SCALE 1:500

EC-9

STATE OF CALIFORNIA - DEPARTMENT OF TRANSPORTATION
Caltrans PROJECT DEVELOPMENT

FUNCTIONAL SUPERVISOR: MAJID KHARRATI
CALCULATED-DESIGNED BY: NATE OXINA
CHECKED BY: SHAHBAZ A ALVI
REVISED BY
DATE REVISED

LAST REVISION 05-22-09
DATE PLOTTED => 29-SEP-2010
TIME PLOTTED => 13:50

Dist	COUNTY	ROUTE	KILOMETER POST TOTAL PROJECT	SHEET No.	TOTAL SHEETS
11	SD	5,805	R49.9/R51.7, 42.6/46.5	134	886

REGISTERED CIVIL ENGINEER 05-13-09 DATE

9-27-10
PLANS APPROVAL DATE

REGISTERED PROFESSIONAL ENGINEER SHAHBAZ A ALVI No. 55293 Exp. 12-31-10 CIVIL STATE OF CALIFORNIA

THE STATE OF CALIFORNIA OR ITS OFFICERS OR AGENTS SHALL NOT BE RESPONSIBLE FOR THE ACCURACY OR COMPLETENESS OF ELECTRONIC COPIES OF THIS PLAN SHEET.

Caltrans Metric

NOTE: FOR COMPLETE RIGHT OF WAY AND ACCURATE ACCESS DATA, SEE RIGHT OF WAY RECORD MAPS AT DISTRICT OFFICE.

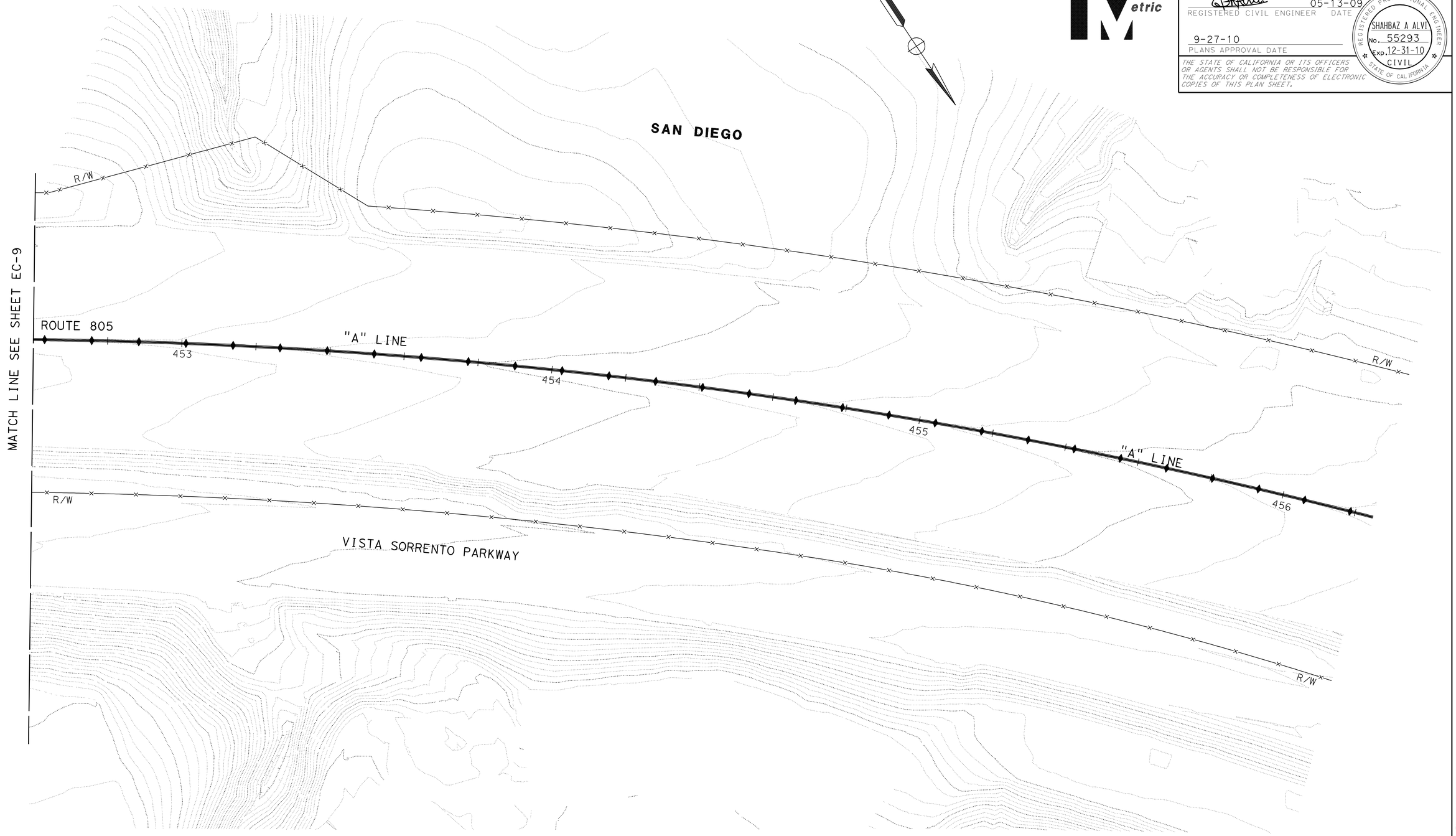

THIS PLAN ACCURATE FOR EROSION CONTROL WORK ONLY.

ALL DIMENSIONS ARE IN METERS UNLESS OTHERWISE SHOWN

EROSION CONTROL PLAN

SCALE 1:500

EC-10

REVISED BY	NATE OXINA
DATE REVISED	SHAHBAZ A ALVI
CALCULATED-DESIGNED BY	
CHECKED BY	
FUNCTIONAL SUPERVISOR	MAJID KHARRATI

STATE OF CALIFORNIA - DEPARTMENT OF TRANSPORTATION
Caltrans PROJECT DEVELOPMENT

LAST REVISION 05-22-09
DATE PLOTTED => 29-SEP-2010
TIME PLOTTED => 13:50

Dist	COUNTY	ROUTE	KILOMETER POST TOTAL PROJECT	SHEET No.	TOTAL SHEETS
11	SD	5,805	R49.9/R51.7, 42.6/46.5	135	886

REGISTERED CIVIL ENGINEER 05-13-09 DATE

9-27-10
PLANS APPROVAL DATE

REGISTERED PROFESSIONAL ENGINEER SHAHBAZ A ALVI No. 55293 Exp. 12-31-10 CIVIL STATE OF CALIFORNIA

THE STATE OF CALIFORNIA OR ITS OFFICERS OR AGENTS SHALL NOT BE RESPONSIBLE FOR THE ACCURACY OR COMPLETENESS OF ELECTRONIC COPIES OF THIS PLAN SHEET.

Caltrans Metric

NOTE:

FOR COMPLETE RIGHT OF WAY AND ACCURATE ACCESS DATA, SEE RIGHT OF WAY RECORD MAPS AT DISTRICT OFFICE.

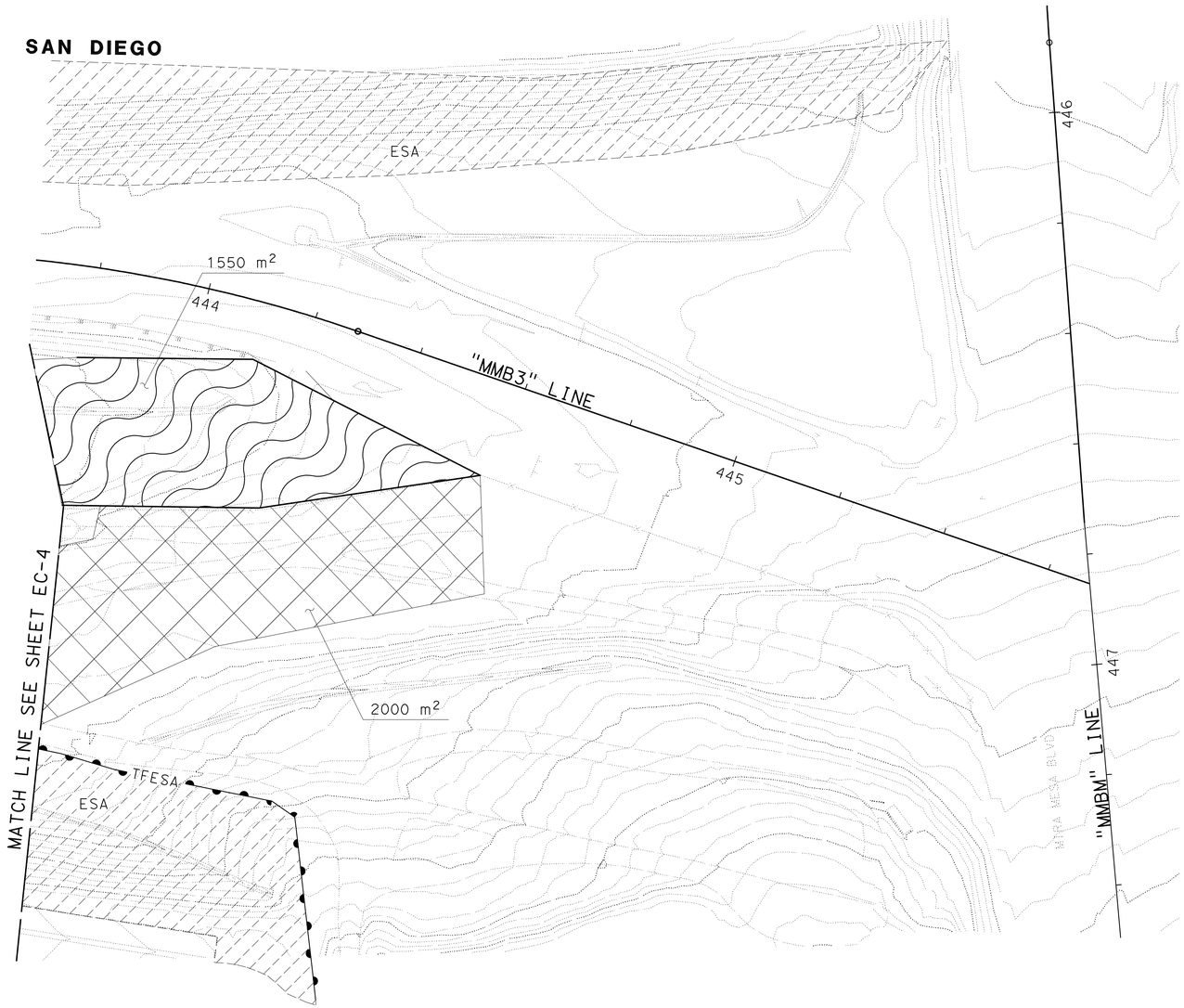

THIS PLAN ACCURATE FOR EROSION CONTROL WORK ONLY.

ALL DIMENSIONS ARE IN METERS UNLESS OTHERWISE SHOWN

EROSION CONTROL PLAN

SCALE 1:500

EC-11

STATE OF CALIFORNIA - DEPARTMENT OF TRANSPORTATION
Caltrans PROJECT DEVELOPMENT

FUNCTIONAL SUPERVISOR: MAJID KHARRATI
CALCULATED-DESIGNED BY: NATE OXINA
CHECKED BY: SHAHBAZ A ALVI
REVISED BY
DATE REVISED

LAST REVISION 05-23-09
DATE PLOTTED => 29-SEP-2010
TIME PLOTTED => 13:50

Dist	COUNTY	ROUTE	KILOMETER POST TOTAL PROJECT	SHEET No.	TOTAL SHEETS
11	SD	5,805	R49.9/R51.7, 42.6/46.5	136	886

REGISTERED CIVIL ENGINEER 05-13-09 DATE

9-27-10
PLANS APPROVAL DATE

REGISTERED PROFESSIONAL ENGINEER SHAHBAZ A ALVI No. 55293 Exp. 12-31-10 CIVIL STATE OF CALIFORNIA

THE STATE OF CALIFORNIA OR ITS OFFICERS OR AGENTS SHALL NOT BE RESPONSIBLE FOR THE ACCURACY OR COMPLETENESS OF ELECTRONIC COPIES OF THIS PLAN SHEET.

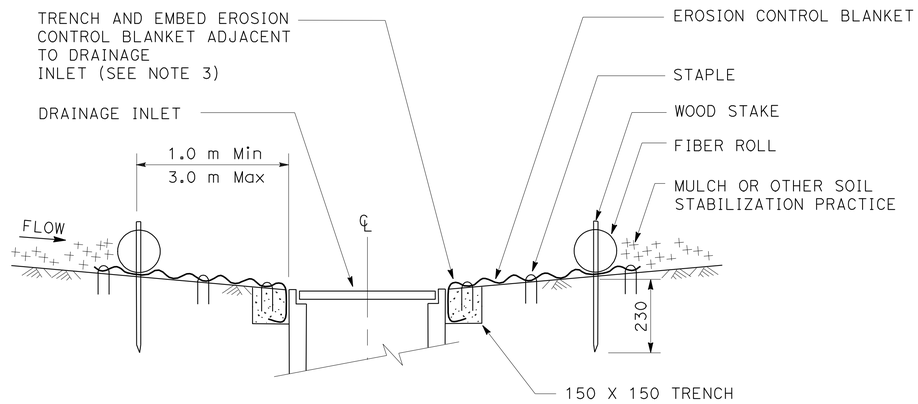

SECTION A-A

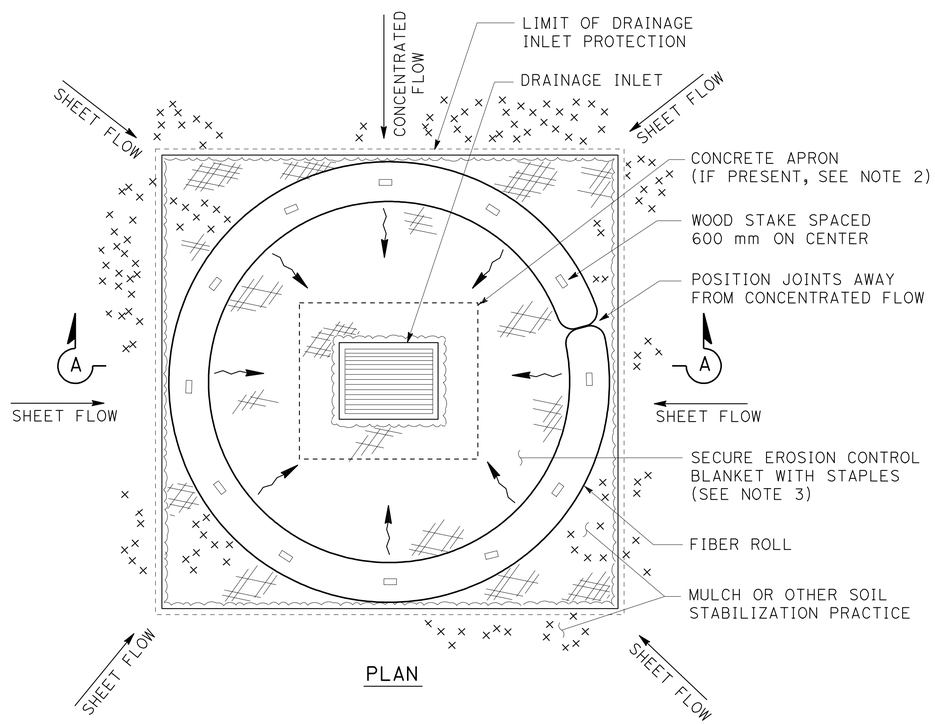

PLAN

DRAINAGE INLET PROTECTION (EROSION CONTROL)

NOTES:

1. DIMENSIONS MAY VARY TO FIT FIELD CONDITIONS.
2. POSITION EROSION CONTROL BLANKET AT EDGE OF CONCRETE APRON AND SECURE IN TRENCH.
3. EROSION CONTROL BLANKET IS NOT REQUIRED IF THE AREA ADJACENT TO THE DRAINAGE INLET IS VEGETATED.

ALL DIMENSIONS ARE IN MILLIMETERS UNLESS OTHERWISE SHOWN

EROSION CONTROL DETAILS

NO SCALE

ECD-1

REVISED BY | DATE REVISED
NATE OXINA | SHAHBAZ A ALVI
CALCULATED-DESIGNED BY | CHECKED BY
FUNCTIONAL SUPERVISOR
MAJID KHARRATI

STATE OF CALIFORNIA - DEPARTMENT OF TRANSPORTATION
Caltrans PROJECT DEVELOPMENT

LAST REVISION 05-23-09 | DATE PLOTTED => 29-SEP-2010 | TIME PLOTTED => 13:50

Dist	COUNTY	ROUTE	KILOMETER POST TOTAL PROJECT	SHEET No.	TOTAL SHEETS
11	SD	5,805	R49.9/R51.7, 42.6/46.5	137	886

REGISTERED CIVIL ENGINEER 05-13-09 DATE

9-27-10
PLANS APPROVAL DATE

REGISTERED PROFESSIONAL ENGINEER SHAHBAZ A ALVI No. 55293 Exp. 12-31-10 CIVIL STATE OF CALIFORNIA

THE STATE OF CALIFORNIA OR ITS OFFICERS OR AGENTS SHALL NOT BE RESPONSIBLE FOR THE ACCURACY OR COMPLETENESS OF ELECTRONIC COPIES OF THIS PLAN SHEET.

Caltrans Metric

NOTE:

1. SPILLWAY DEPTH 'D' SHALL BE MAINTAINED TO PREVENT FLANKING OF CONCENTRATED FLOW AROUND THE ENDS OF EACH CHECK DAM.

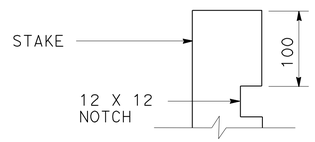

ELEVATION

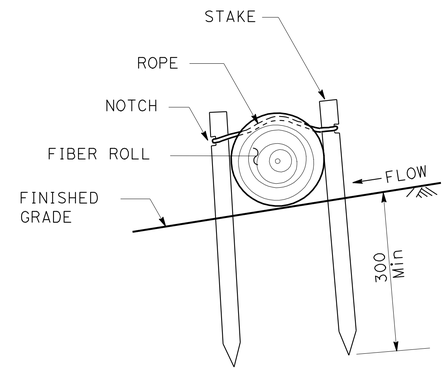

SECTION

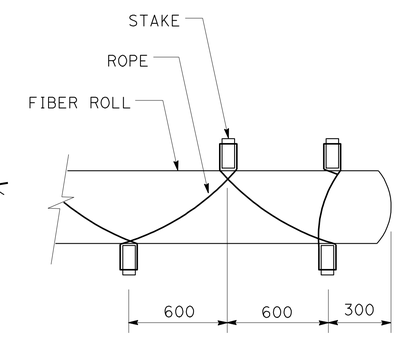

PLAN

STAKE NOTCH DETAIL

STAKING AND LASHING DETAIL

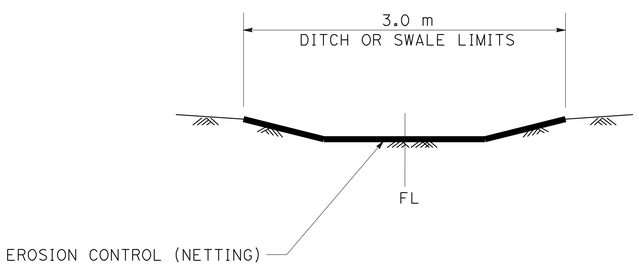

EROSION CONTROL (NETTING)

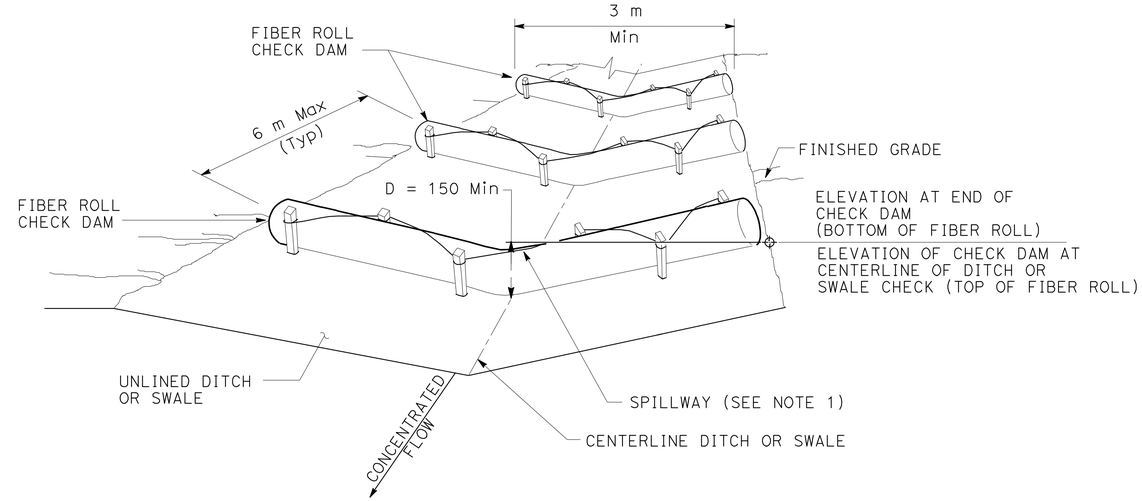

PERSPECTIVE

CHECK DAM (EROSION CONTROL)

ALL DIMENSIONS ARE IN MILLIMETERS UNLESS OTHERWISE SHOWN

EROSION CONTROL DETAILS

NO SCALE

ECD-2

REVISED BY | DATE REVISED

NATE OXINA | SHAHBAZ A ALVI

CALCULATED-DESIGNED BY | CHECKED BY

FUNCTIONAL SUPERVISOR: MAJID KHARRATI

STATE OF CALIFORNIA - DEPARTMENT OF TRANSPORTATION
Caltrans PROJECT DEVELOPMENT

LAST REVISION 05-23-09 | DATE PLOTTED => 29-SEP-2010 | TIME PLOTTED => 13:50

Dist	COUNTY	ROUTE	KILOMETER POST TOTAL PROJECT	SHEET No.	TOTAL SHEETS
11	SD	5,805	R49.9/R51.7, 42.6/46.5	138	886

REGISTERED CIVIL ENGINEER 05-13-09 DATE

9-27-10
PLANS APPROVAL DATE

REGISTERED PROFESSIONAL ENGINEER SHAHBAZ A ALVI No. 55293 Exp. 12-31-10 CIVIL STATE OF CALIFORNIA

THE STATE OF CALIFORNIA OR ITS OFFICERS OR AGENTS SHALL NOT BE RESPONSIBLE FOR THE ACCURACY OR COMPLETENESS OF ELECTRONIC COPIES OF THIS PLAN SHEET.

Caltrans Metric

EROSION CONTROL (NETTING)

SHEET NUMBER	STATION LIMITS	(m^2)
EC-2	7.242 L+ 439+93.542 "CCR" TO 10.908 R+ 439+91.403 "CCR"	57
EC-3	7.483 L+ 441+12.242 "CCR" TO 10.579 R+ 440+94.630 "CCR"	78
EC-3	7.456 L+ 442+83.756 "CCR" TO 0.91 L+ 442+94.206 "CCR"	39
EC-6	28.973 L+ 437+36.06 "A" TO 30.944 L+ 438+39.142 "A"	285
EC-8	22.52 R+ 447+10.039 "DAR1" TO 22.26 R+ 447+68.574 "DAR1"	177
TOTAL		636

EROSION CONTROL SUMMARY OF QUANTITIES

SHEET NUMBER	EROSION CONTROL (TYPE D)		EROSION CONTROL HYDRAULIC MULCH (POLYMER STABILIZED FIBER MATRIX)	
	SEED (TYPE 1) m^2	SEED (TYPE 2) m^2	SEED (TYPE 2) m^2	SEED (TYPE 1) m^2
EC-1	0	0	3811	0
EC-2	4656	1286	1842	2663
EC-3	133	11872	800	5881
EC-4	0	2608	8556	3515
EC-5	0	0	3729	0
EC-6	0	0	1769	0
EC-7	2676	0	6663	0
EC-8	12119	0	400	0
EC-9	138	0	280	0
EC-10	0	0		0
EC-11	0	0	2000	1550
SUBTOTAL	19722	15766	29850	13609
TOTAL	35488		43459	

SHEET NUMBER	FIBER ROLLS (m)	DRAINAGE INLET PROTECTION (EROSION CONTROL) (EACH)	CHECK DAM (EROSION CONTROL) (m)
EC-1	695	0	0
EC-2	3336	4	192
EC-3	826	2	138
EC-4	1564	0	60
EC-5	145	0	0
EC-6	353	0	84
EC-7	1693	0	0
EC-8	922	2	60
EC-9	11	0	0
EC-10	0	0	0
EC-11	0	0	0
TOTAL	9545	8	534

EROSION CONTROL COMPONENT QUANTITIES SUMMARY (N)

TYPE	AREA m^2	STABILIZING EMULSION kg	FIBER kg	COMMERCIAL FERTILIZER (HUMATE) kg	COMPOST m^3	PURE LIVE SEED (TYPE D) (TYPE 1) kg	PURE LIVE SEED (TYPE D) (TYPE 2) kg	PURE LIVE SEED PSFM (SEED TYPE 2) kg	PURE LIVE SEED PSFM (SEED TYPE 1) kg	WOOD FIBER kg	CELLULOSE FIBER kg	TACKIFIER EMULSION L
(TYPE D) SEED (TYPE 1)	19722	394.4	3550.0	986.1	9.9	29.6	0.0	0.0	0.0	0.0	0.0	0.0
(TYPE D) SEED (TYPE 2)	15766	315.3	2837.9	788.3	7.9	0.0	27.6	0.0	0.0	0.0	0.0	0.0
HYDRAULIC MULCH (PSFM) SEED (TYPE 2)	29850	0.0	0.0	1492.5	0.0	0.0	0.0	52.2	0.0	5970	4179	280.6
HYDRAULIC MULCH (PSFM) SEED (TYPE 1)	13609			680.5	6.8	0.0	0.0	0.0	28.6	2721.8	1905.3	127.9

(N) - NOT A SEPARATE PAY ITEM, FOR INFORMATION ONLY.

EROSION CONTROL QUANTITIES

ECQ-1

ALL DIMENSIONS ARE IN METERS UNLESS OTHERWISE SHOWN

STATE OF CALIFORNIA - DEPARTMENT OF TRANSPORTATION
Caltrans PROJECT DEVELOPMENT

FUNCTIONAL SUPERVISOR: MAJID KHARRATI
CALCULATED-DESIGNED BY: NATE OXINA
CHECKED BY: SHAHBAZ A ALVI
REVISED BY
DATE REVISED

LAST REVISION 04-14-10
DATE PLOTTED => 29-SEP-2010
TIME PLOTTED => 13:51

Dist	COUNTY	ROUTE	KILOMETER POST TOTAL PROJECT	SHEET No.	TOTAL SHEETS
11	SD	5,805	R49.9/R51.7, 42.6/46.5	139	886

05-15-09
REGISTERED CIVIL ENGINEER DATE

9-27-10
PLANS APPROVAL DATE

REGISTERED PROFESSIONAL ENGINEER
THANH D BUI
No. C 64571
Exp. 6-30-11
CIVIL
STATE OF CALIFORNIA

THE STATE OF CALIFORNIA OR ITS OFFICERS OR AGENTS SHALL NOT BE RESPONSIBLE FOR THE ACCURACY OR COMPLETENESS OF ELECTRONIC COPIES OF THIS PLAN SHEET.

Caltrans Metric

NOTE:

FOR COMPLETE RIGHT OF WAY AND ACCURATE ACCESS DATA, SEE RIGHT OF WAY RECORD MAPS AT DISTRICT OFFICE.

LEGEND:

DUFF BOUNDARY

ESA — ENVIRONMENTALLY SENSITIVE AREA

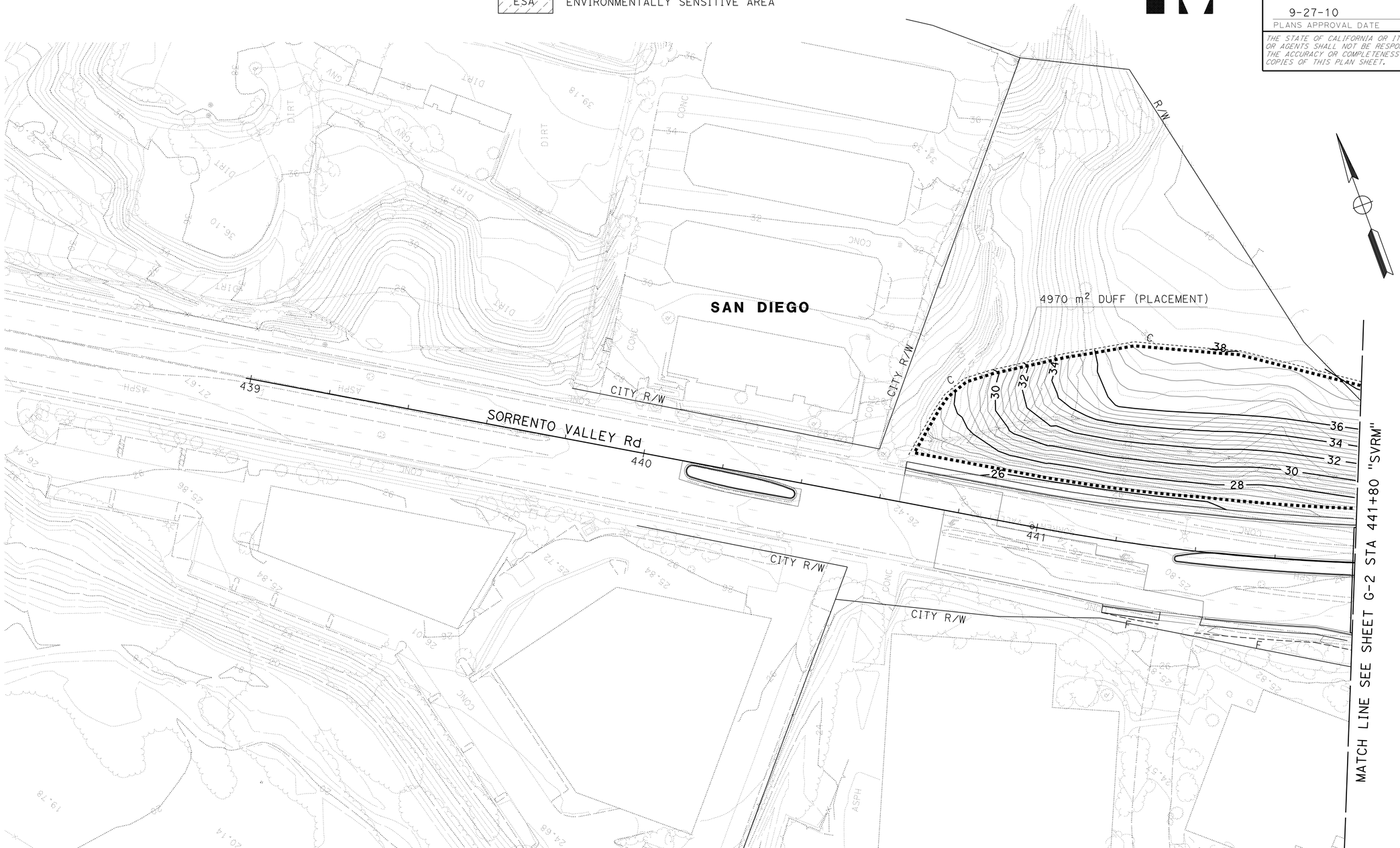

THIS PLAN ACCURATE FOR CONTOUR GRADING WORK ONLY

ALL DIMENSIONS ARE IN METERS UNLESS OTHERWISE SHOWN

CONTOUR GRADING

SCALE 1:500

G-1

STATE OF CALIFORNIA - DEPARTMENT OF TRANSPORTATION
Caltrans PROJECT DEVELOPMENT

FUNCTIONAL SUPERVISOR: MAJID KHARRATI

CALCULATED-DESIGNED BY: THANH D BUI
CHECKED BY: SHAHBAZ A ALVI

REVISED BY | DATE REVISED

LAST REVISION 05-22-09 | DATE PLOTTED => 29-SEP-2010 | TIME PLOTTED => 13:51

NOTE: FOR COMPLETE RIGHT OF WAY AND ACCURATE ACCESS DATA, SEE RIGHT OF WAY RECORD MAPS AT DISTRICT OFFICE.

Dist	COUNTY	ROUTE	KILOMETER POST TOTAL PROJECT	SHEET No.	TOTAL SHEETS
11	SD	5,805	R49.9/R51.7, 42.6/46.5	140	886

REGISTERED CIVIL ENGINEER 05-15-09 DATE

9-27-10
PLANS APPROVAL DATE

REGISTERED PROFESSIONAL ENGINEER THANH D BUI No. C 64571 Exp. 6-30-11 CIVIL STATE OF CALIFORNIA

THE STATE OF CALIFORNIA OR ITS OFFICERS OR AGENTS SHALL NOT BE RESPONSIBLE FOR THE ACCURACY OR COMPLETENESS OF ELECTRONIC COPIES OF THIS PLAN SHEET.

Caltrans Metric

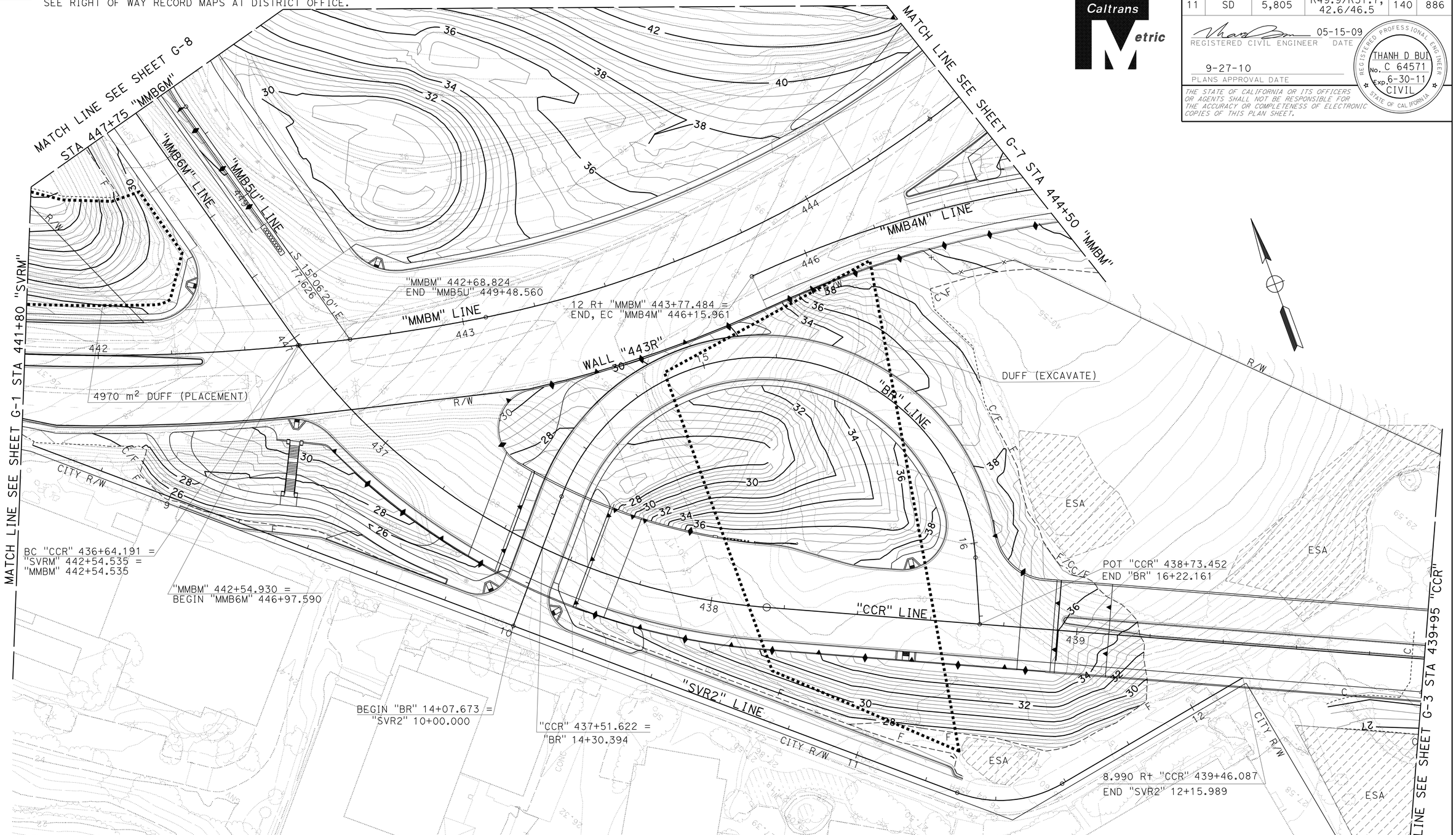

THIS PLAN ACCURATE FOR CONTOUR GRADING WORK ONLY

ALL DIMENSIONS ARE IN METERS UNLESS OTHERWISE SHOWN

CONTOUR GRADING

SCALE 1:500

G-2

REVISED BY	DATE REVISED
THANH D BUI	SHAHBAZ A ALVI
CALCULATED-DESIGNED BY	CHECKED BY
FUNCTIONAL SUPERVISOR	MAJID KHARRATI

STATE OF CALIFORNIA - DEPARTMENT OF TRANSPORTATION

Caltrans PROJECT DEVELOPMENT

LAST REVISION 05-22-09 DATE PLOTTED => 29-SEP-2010 TIME PLOTTED => 13:51

Dist	COUNTY	ROUTE	KILOMETER POST TOTAL PROJECT	SHEET No.	TOTAL SHEETS
11	SD	5,805	R49.9/R51.7, 42.6/46.5	141	886

05-15-09
REGISTERED CIVIL ENGINEER DATE

9-27-10
PLANS APPROVAL DATE

REGISTERED PROFESSIONAL ENGINEER
THANH D BUI
No. C 64571
Exp. 6-30-11
CIVIL
STATE OF CALIFORNIA

THE STATE OF CALIFORNIA OR ITS OFFICERS OR AGENTS SHALL NOT BE RESPONSIBLE FOR THE ACCURACY OR COMPLETENESS OF ELECTRONIC COPIES OF THIS PLAN SHEET.

Caltrans Metric

NOTE:
FOR COMPLETE RIGHT OF WAY AND ACCURATE ACCESS DATA, SEE RIGHT OF WAY RECORD MAPS AT DISTRICT OFFICE.

ALL DIMENSIONS ARE IN METERS UNLESS OTHERWISE SHOWN
THIS PLAN ACCURATE FOR CONTOUR GRADING WORK ONLY

CONTOUR GRADING

SCALE 1:500

G-3

STATE OF CALIFORNIA - DEPARTMENT OF TRANSPORTATION
Caltrans PROJECT DEVELOPMENT

FUNCTIONAL SUPERVISOR: MAJID KHARRATI
CALCULATED-DESIGNED BY: THANH D BUI
CHECKED BY: SHAHBAZ A ALVI
REVISED BY / DATE REVISED

LAST REVISION 04-14-10 | DATE PLOTTED => 29-SEP-2010 | TIME PLOTTED => 13:51

NOTE: FOR COMPLETE RIGHT OF WAY AND ACCURATE ACCESS DATA, SEE RIGHT OF WAY RECORD MAPS AT DISTRICT OFFICE.

Dist	COUNTY	ROUTE	KILOMETER POST TOTAL PROJECT	SHEET No.	TOTAL SHEETS
11	SD	5,805	R49.9/R51.7, 42.6/46.5	142	886

05-15-09
REGISTERED CIVIL ENGINEER DATE

9-27-10
PLANS APPROVAL DATE

REGISTERED PROFESSIONAL ENGINEER
THANH D BUI
No. C 64571
Exp. 6-30-11
CIVIL
STATE OF CALIFORNIA

THE STATE OF CALIFORNIA OR ITS OFFICERS OR AGENTS SHALL NOT BE RESPONSIBLE FOR THE ACCURACY OR COMPLETENESS OF ELECTRONIC COPIES OF THIS PLAN SHEET.

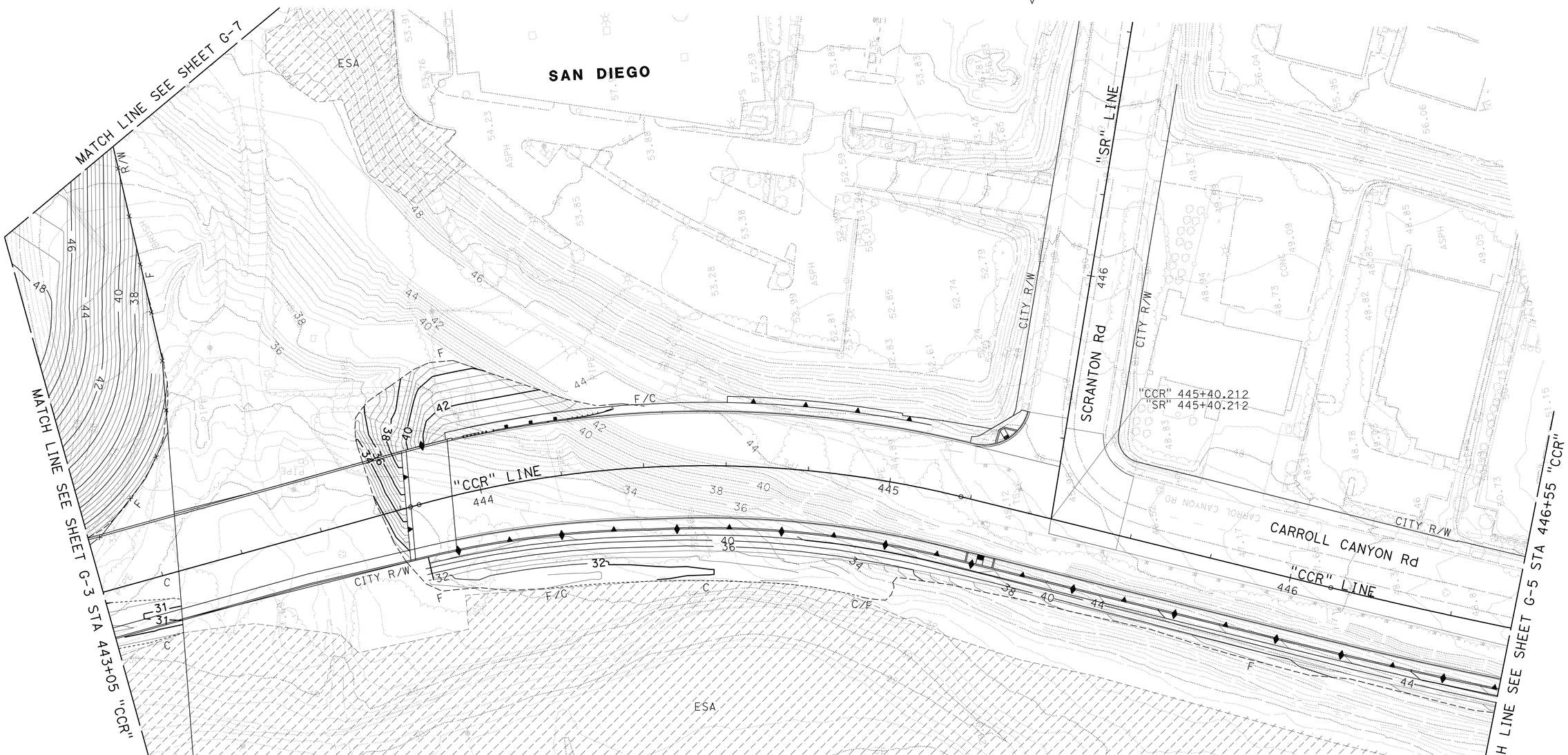

THIS PLAN ACCURATE FOR CONTOUR GRADING WORK ONLY

ALL DIMENSIONS ARE IN METERS UNLESS OTHERWISE SHOWN

CONTOUR GRADING

SCALE 1:500

G-4

REVISED BY	DATE REVISED

CALCULATED-DESIGNED BY: THANH D BUI
CHECKED BY: SHAHBAZ A ALVI

FUNCTIONAL SUPERVISOR: MAJID KHARRATI

STATE OF CALIFORNIA - DEPARTMENT OF TRANSPORTATION
Caltrans PROJECT DEVELOPMENT

LAST REVISION 04-14-10
DATE PLOTTED => 29-SEP-2010
TIME PLOTTED => 13:51

NOTE: FOR COMPLETE RIGHT OF WAY AND ACCURATE ACCESS DATA, SEE RIGHT OF WAY RECORD MAPS AT DISTRICT OFFICE.

Dist	COUNTY	ROUTE	KILOMETER POST TOTAL PROJECT	SHEET No.	TOTAL SHEETS
11	SD	5,805	R49.9/R51.7, 42.6/46.5	143	886

05-15-09
REGISTERED CIVIL ENGINEER DATE

9-27-10
PLANS APPROVAL DATE

REGISTERED PROFESSIONAL ENGINEER
THANH D BUI
No. C 64571
Exp. 6-30-11
CIVIL
STATE OF CALIFORNIA

THE STATE OF CALIFORNIA OR ITS OFFICERS OR AGENTS SHALL NOT BE RESPONSIBLE FOR THE ACCURACY OR COMPLETENESS OF ELECTRONIC COPIES OF THIS PLAN SHEET.

Caltrans Metric

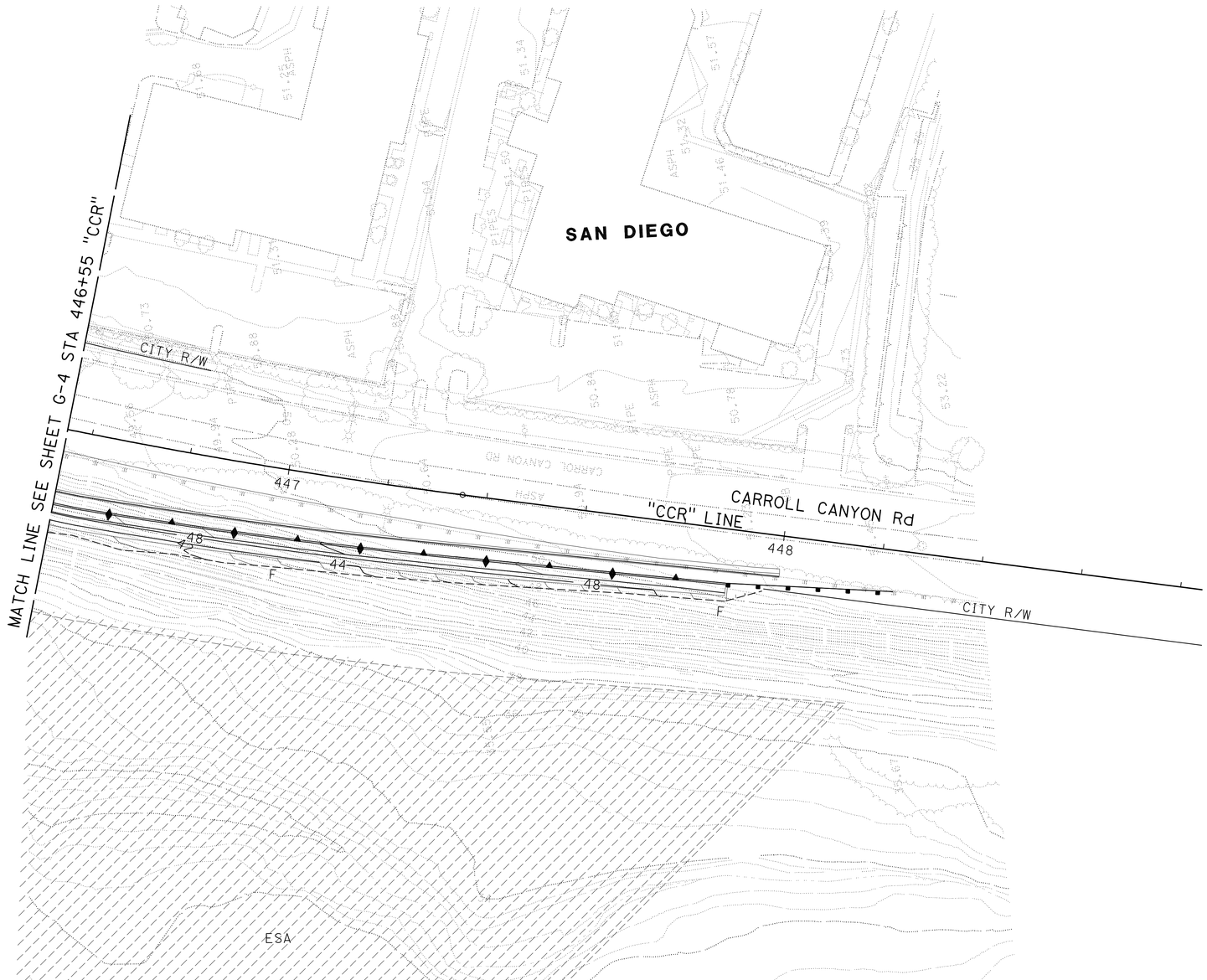

THIS PLAN ACCURATE FOR CONTOUR GRADING WORK ONLY

ALL DIMENSIONS ARE IN METERS UNLESS OTHERWISE SHOWN

CONTOUR GRADING

SCALE 1:500

G-5

REVISED BY	DATE REVISED

CALCULATED-DESIGNED BY: THANH D BUI
CHECKED BY: SHAHBAZ A ALVI

FUNCTIONAL SUPERVISOR: MAJID KHARRATI

STATE OF CALIFORNIA - DEPARTMENT OF TRANSPORTATION
Caltrans PROJECT DEVELOPMENT

LAST REVISION 05-22-09
DATE PLOTTED => 29-SEP-2010
TIME PLOTTED => 13:52

NOTE: FOR COMPLETE RIGHT OF WAY AND ACCURATE ACCESS DATA, SEE RIGHT OF WAY RECORD MAPS AT DISTRICT OFFICE.

Dist	COUNTY	ROUTE	KILOMETER POST TOTAL PROJECT	SHEET No.	TOTAL SHEETS
11	SD	5,805	R49.9/R51.7, 42.6/46.5	144	886

05-15-09
REGISTERED CIVIL ENGINEER DATE

9-27-10
PLANS APPROVAL DATE

REGISTERED PROFESSIONAL ENGINEER
THANH D BUI
No. C 64571
Exp. 6-30-11
CIVIL
STATE OF CALIFORNIA

THE STATE OF CALIFORNIA OR ITS OFFICERS OR AGENTS SHALL NOT BE RESPONSIBLE FOR THE ACCURACY OR COMPLETENESS OF ELECTRONIC COPIES OF THIS PLAN SHEET.

THIS PLAN ACCURATE FOR CONTOUR GRADING WORK ONLY

ALL DIMENSIONS ARE IN METERS UNLESS OTHERWISE SHOWN

CONTOUR GRADING

SCALE 1:500

G-6

STATE OF CALIFORNIA - DEPARTMENT OF TRANSPORTATION
Caltrans PROJECT DEVELOPMENT

FUNCTIONAL SUPERVISOR: MAJID KHARRATI
CALCULATED-DESIGNED BY: THANH D BUI
CHECKED BY: SHAHBAZ A ALVI
REVISED BY / DATE REVISED

LAST REVISION 05-22-09
DATE PLOTTED => 29-SEP-2010
TIME PLOTTED => 13:52

Dist	COUNTY	ROUTE	KILOMETER POST TOTAL PROJECT	SHEET No.	TOTAL SHEETS
11	SD	5,805	R49.9/R51.7, 42.6/46.5	145	886

05-15-09
REGISTERED CIVIL ENGINEER DATE

9-27-10
PLANS APPROVAL DATE

REGISTERED PROFESSIONAL ENGINEER
THANH D BUI
No. C 64571
Exp. 6-30-11
CIVIL
STATE OF CALIFORNIA

THE STATE OF CALIFORNIA OR ITS OFFICERS OR AGENTS SHALL NOT BE RESPONSIBLE FOR THE ACCURACY OR COMPLETENESS OF ELECTRONIC COPIES OF THIS PLAN SHEET.

Caltrans Metric

NOTE: FOR COMPLETE RIGHT OF WAY AND ACCURATE ACCESS DATA, SEE RIGHT OF WAY RECORD MAPS AT DISTRICT OFFICE.

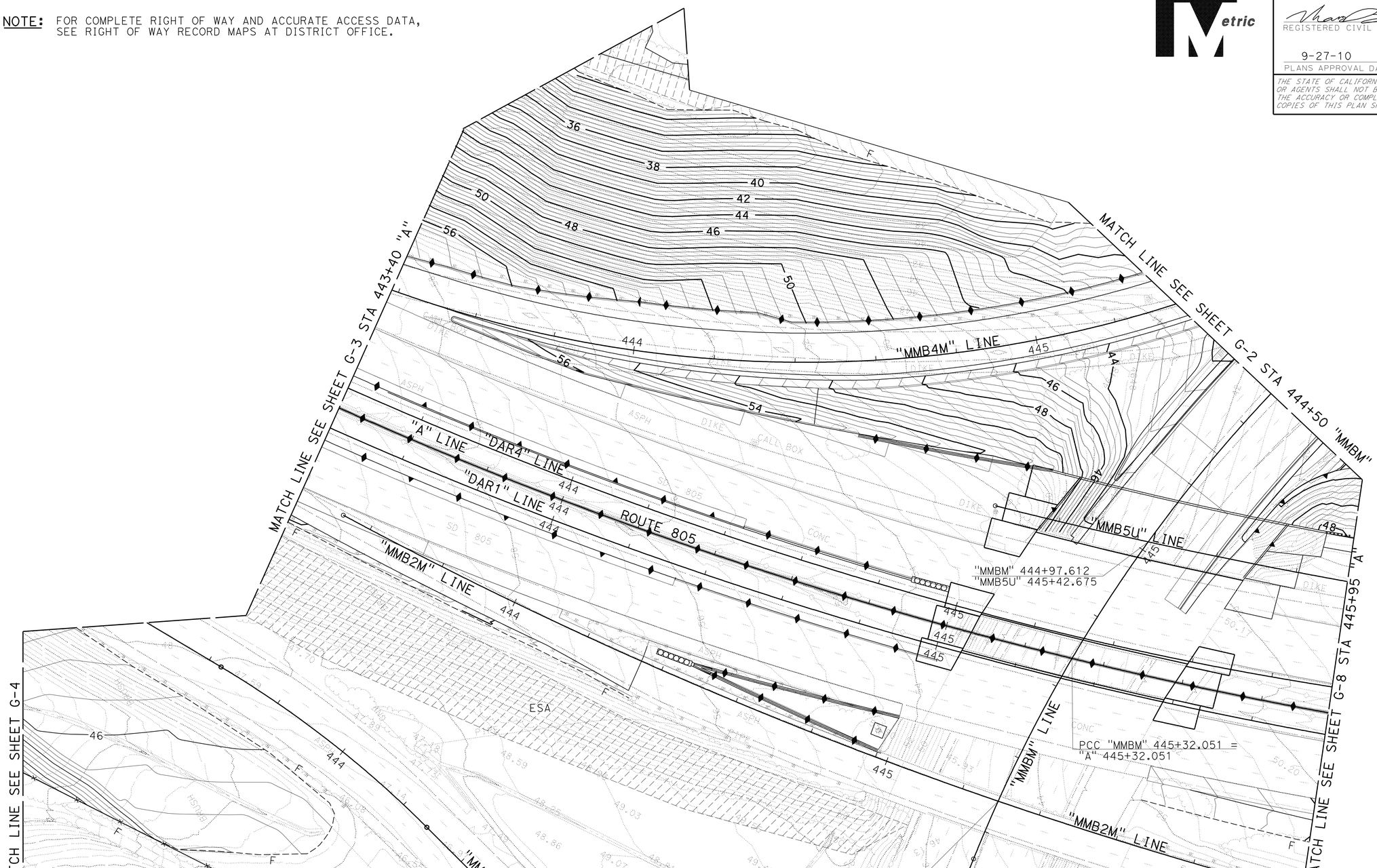

THIS PLAN ACCURATE FOR CONTOUR GRADING WORK ONLY

ALL DIMENSIONS ARE IN METERS UNLESS OTHERWISE SHOWN

CONTOUR GRADING

SCALE 1:500

G-7

STATE OF CALIFORNIA - DEPARTMENT OF TRANSPORTATION
Caltrans PROJECT DEVELOPMENT

FUNCTIONAL SUPERVISOR: MAJID KHARRATI
CALCULATED-DESIGNED BY: THANH D BUI
CHECKED BY: SHAHBAZ A ALVI
REVISED BY
DATE REVISED

LAST REVISION 04-14-10
DATE PLOTTED => 29-SEP-2010
TIME PLOTTED => 14:45

NOTE: FOR COMPLETE RIGHT OF WAY AND ACCURATE ACCESS DATA, SEE RIGHT OF WAY RECORD MAPS AT DISTRICT OFFICE.

Dist	COUNTY	ROUTE	KILOMETER POST TOTAL PROJECT	SHEET No.	TOTAL SHEETS
11	SD	5,805	R49.9/R51.7, 42.6/46.5	146	886

05-15-09
REGISTERED CIVIL ENGINEER DATE

9-27-10
PLANS APPROVAL DATE

REGISTERED PROFESSIONAL ENGINEER
THANH D BUI
No. C 64571
Exp. 6-30-11
CIVIL
STATE OF CALIFORNIA

THE STATE OF CALIFORNIA OR ITS OFFICERS OR AGENTS SHALL NOT BE RESPONSIBLE FOR THE ACCURACY OR COMPLETENESS OF ELECTRONIC COPIES OF THIS PLAN SHEET.

Caltrans Metric

SAN DIEGO

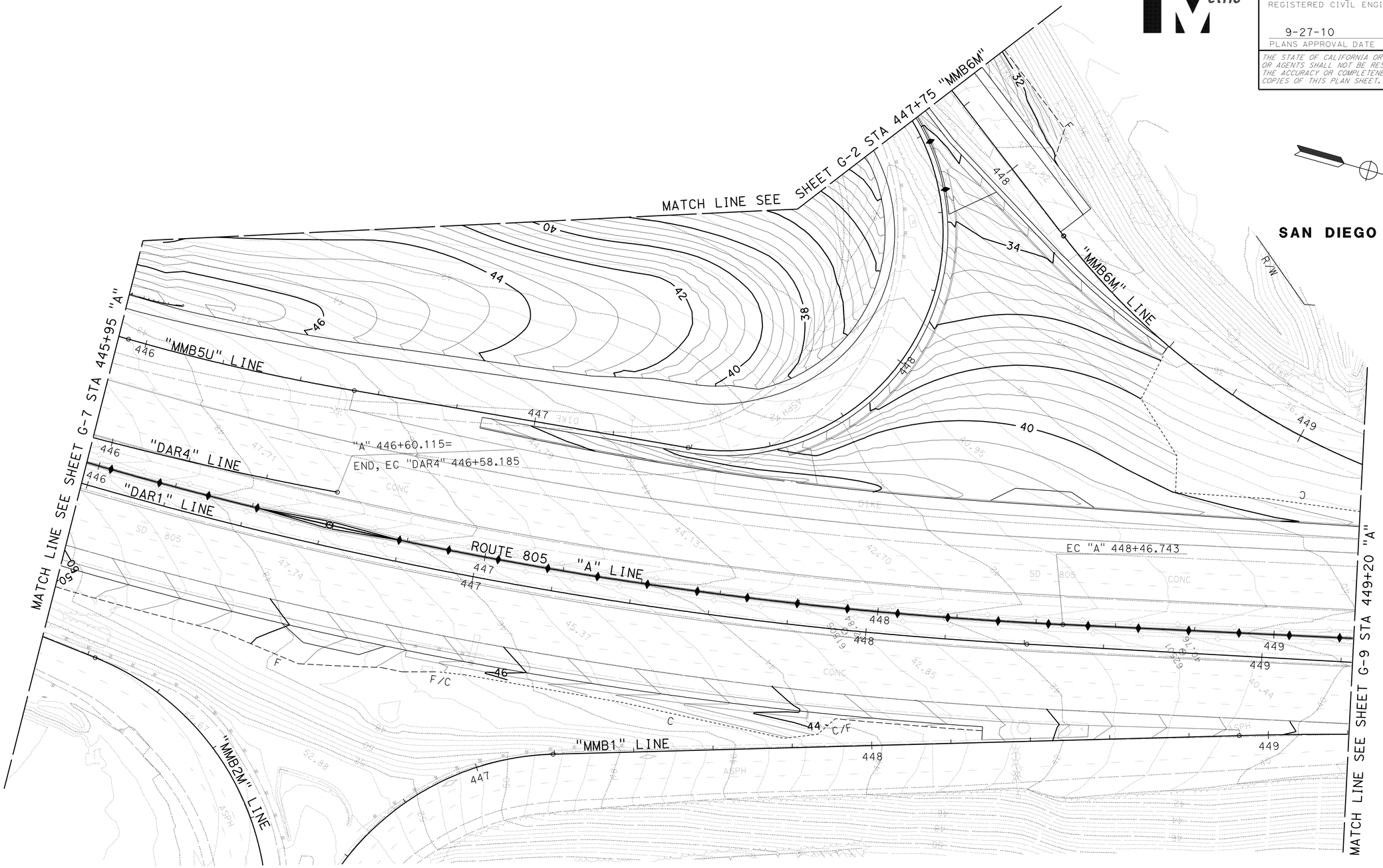

THIS PLAN ACCURATE FOR CONTOUR GRADING WORK ONLY

ALL DIMENSIONS ARE IN METERS UNLESS OTHERWISE SHOWN

CONTOUR GRADING

SCALE 1:500

G-8

STATE OF CALIFORNIA - DEPARTMENT OF TRANSPORTATION
Caltrans PROJECT DEVELOPMENT

FUNCTIONAL SUPERVISOR: MAJID KHARRATI

CALCULATED-DESIGNED BY: THANH D BUI
CHECKED BY: SHAHBAZ A ALVI

REVISED BY | DATE REVISED

LAST REVISION 05-22-09
DATE PLOTTED => 29-SEP-2010
TIME PLOTTED => 13:52

NOTE: FOR COMPLETE RIGHT OF WAY AND ACCURATE ACCESS DATA, SEE RIGHT OF WAY RECORD MAPS AT DISTRICT OFFICE.

Dist	COUNTY	ROUTE	KILOMETER POST TOTAL PROJECT	SHEET No.	TOTAL SHEETS
11	SD	5,805	R49.9/R51.7, 42.6/46.5	147	886

05-15-09
REGISTERED CIVIL ENGINEER DATE

9-27-10
PLANS APPROVAL DATE

REGISTERED PROFESSIONAL ENGINEER
THANH D BUI
No. C 64571
Exp. 6-30-11
CIVIL
STATE OF CALIFORNIA

THE STATE OF CALIFORNIA OR ITS OFFICERS OR AGENTS SHALL NOT BE RESPONSIBLE FOR THE ACCURACY OR COMPLETENESS OF ELECTRONIC COPIES OF THIS PLAN SHEET.

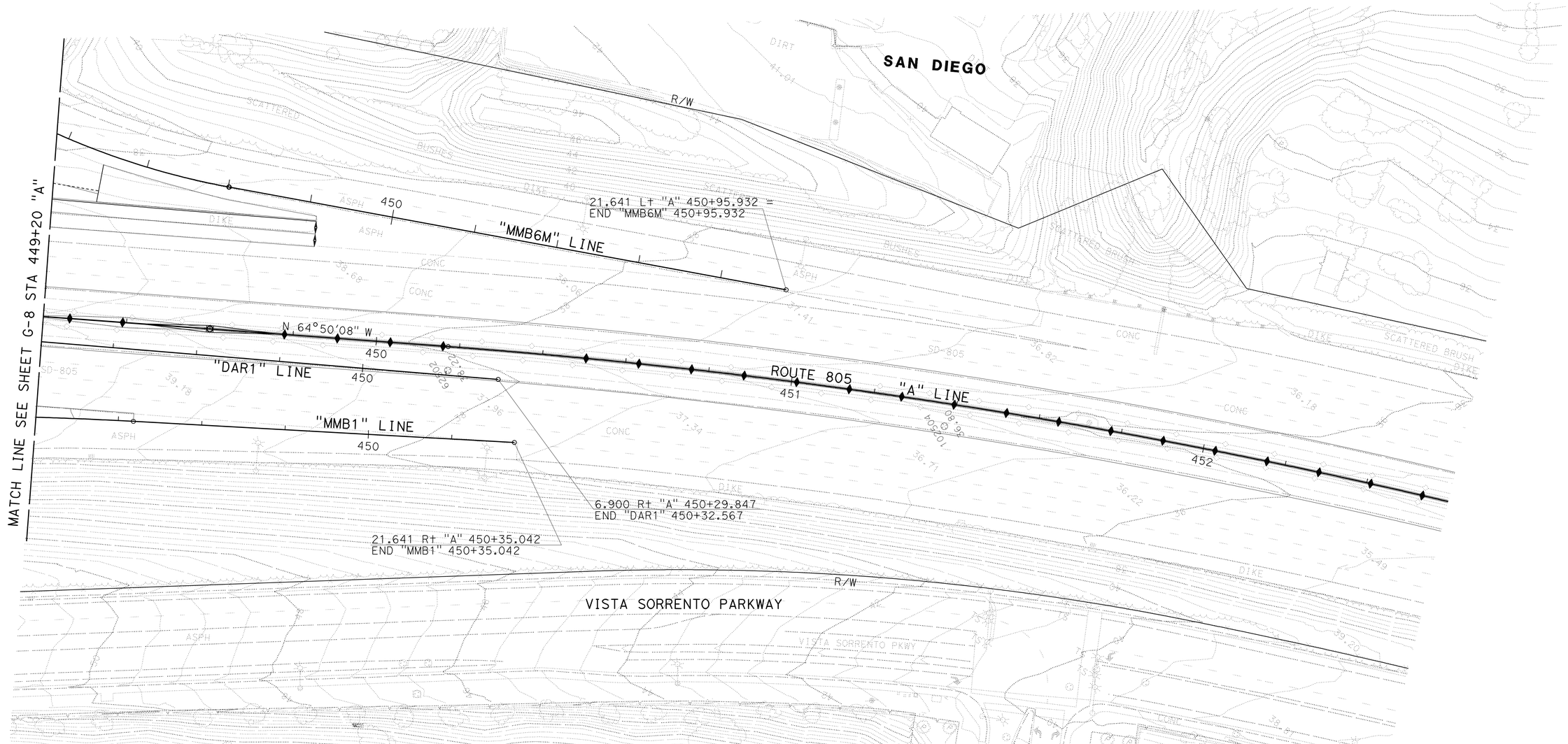

THIS PLAN ACCURATE FOR CONTOUR GRADING WORK ONLY

ALL DIMENSIONS ARE IN METERS UNLESS OTHERWISE SHOWN

CONTOUR GRADING

SCALE 1:500

G-9

STATE OF CALIFORNIA - DEPARTMENT OF TRANSPORTATION
Caltrans PROJECT DEVELOPMENT

FUNCTIONAL SUPERVISOR: MAJID KHARRATI

CALCULATED-DESIGNED BY: THANH D BUI
CHECKED BY: SHAHBAZ A ALVI

REVISED BY / DATE REVISED

LAST REVISION 05-22-09 | DATE PLOTTED => 29-SEP-2010 | TIME PLOTTED => 13:52

Dist	COUNTY	ROUTE	KILOMETER POST TOTAL PROJECT	SHEET No.	TOTAL SHEETS
11	SD	5,805	R49.9/R51.7, 42.6/46.5	148	886

Caltrans Metric

TimVo 05-21-09
REGISTERED CIVIL ENGINEER DATE

9-27-10
PLANS APPROVAL DATE

REGISTERED PROFESSIONAL ENGINEER TIMOTHY V VO No. 65662 Exp. 09-30-09 CIVIL STATE OF CALIFORNIA

THE STATE OF CALIFORNIA OR ITS OFFICERS OR AGENTS SHALL NOT BE RESPONSIBLE FOR THE ACCURACY OR COMPLETENESS OF SCANNED COPIES OF THIS PLAN SHEET.

NOTE:
1. FOR COMPLETE RIGHT OF WAY AND ACCURATE ACCESS DATA, SEE RIGHT OF WAY RECORD MAPS AT DISTRICT OFFICE.

LEGEND:

- DRAINAGE SYSTEM No.
- DRAINAGE UNIT No.
- FLOWLINE
- BSW No. BIOFILTRATION SWALE NUMBER
- GLD GRATED LINE DRAIN
- GC No. GRADED CHANNEL NUMBER (SEE DRAINAGE DETAILS)
- ROCK SLOPE PROTECTION (SEE DRAINAGE DETAILS)
- ESA ENVIRONMENTALLY SENSITIVE AREA

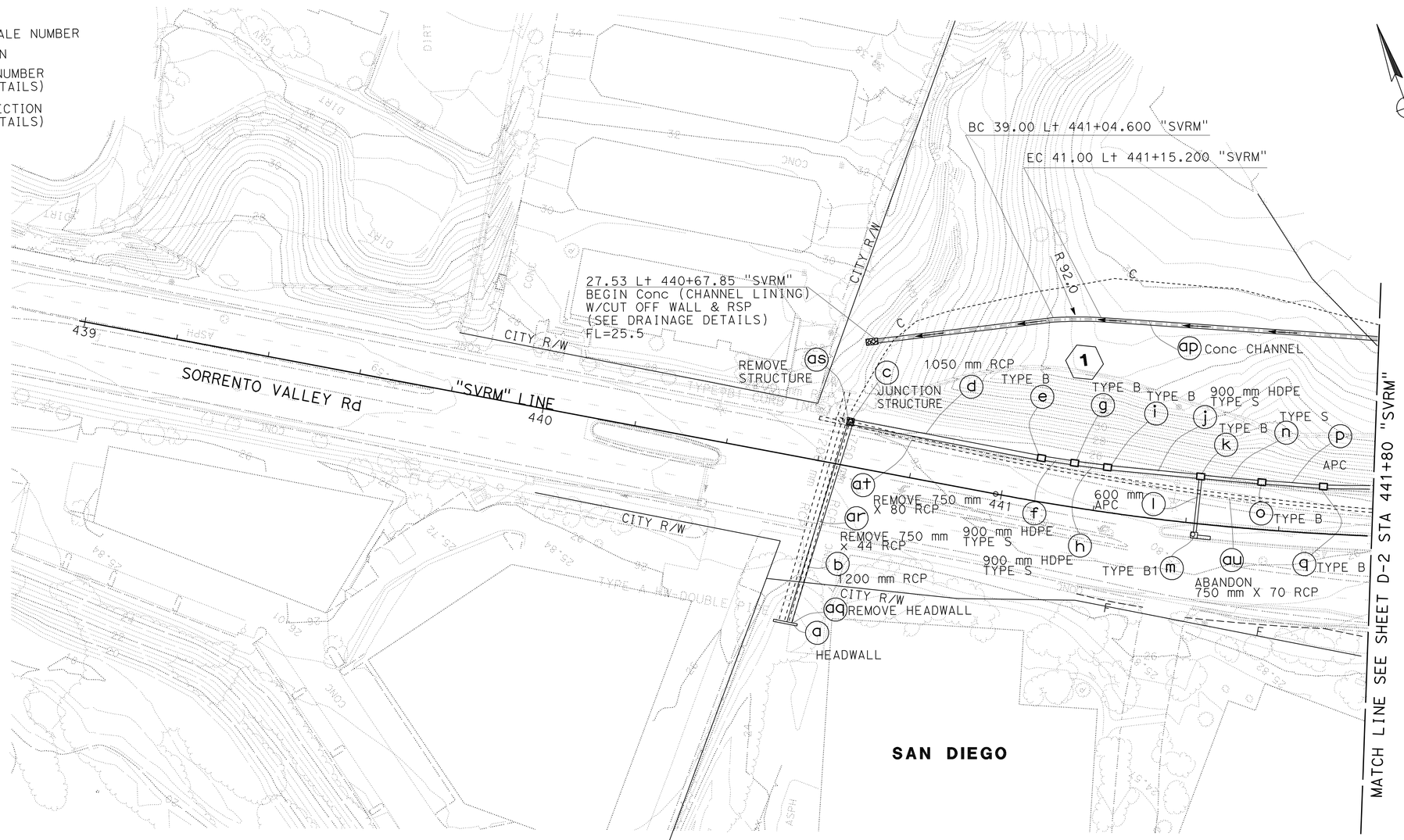

THIS PLAN ACCURATE FOR DRAINAGE WORK ONLY.

ALL DIMENSIONS ARE IN METERS UNLESS OTHERWISE SHOWN

DRAINAGE PLAN D-1

SCALE 1:500

STATE OF CALIFORNIA - DEPARTMENT OF TRANSPORTATION
Caltrans PROJECT DEVELOPMENT

FUNCTIONAL SUPERVISOR: MAJID KHARRATI
CALCULATED-DESIGNED BY: TIMOTHY V VO
CHECKED BY: SHAHBAZ A ALVI
REVISED BY / DATE REVISED

LAST REVISION 05-28-09 | DATE PLOTTED => 29-SEP-2010 | TIME PLOTTED => 13:52

Dist	COUNTY	ROUTE	KILOMETER POST TOTAL PROJECT	SHEET No.	TOTAL SHEETS
11	SD	5,805	R49.9/R51.7, 42.6/46.5	149	886

Caltrans Metric

REGISTERED CIVIL ENGINEER 05-21-09 DATE

9-27-10
PLANS APPROVAL DATE

REGISTERED PROFESSIONAL ENGINEER TIMOTHY V VO No. 65662 Exp. 09-30-09 CIVIL STATE OF CALIFORNIA

THE STATE OF CALIFORNIA OR ITS OFFICERS OR AGENTS SHALL NOT BE RESPONSIBLE FOR THE ACCURACY OR COMPLETENESS OF SCANNED COPIES OF THIS PLAN SHEET.

NOTE:
1. FOR COMPLETE RIGHT OF WAY AND ACCURATE ACCESS DATA, SEE RIGHT OF WAY RECORD MAPS AT DISTRICT OFFICE.

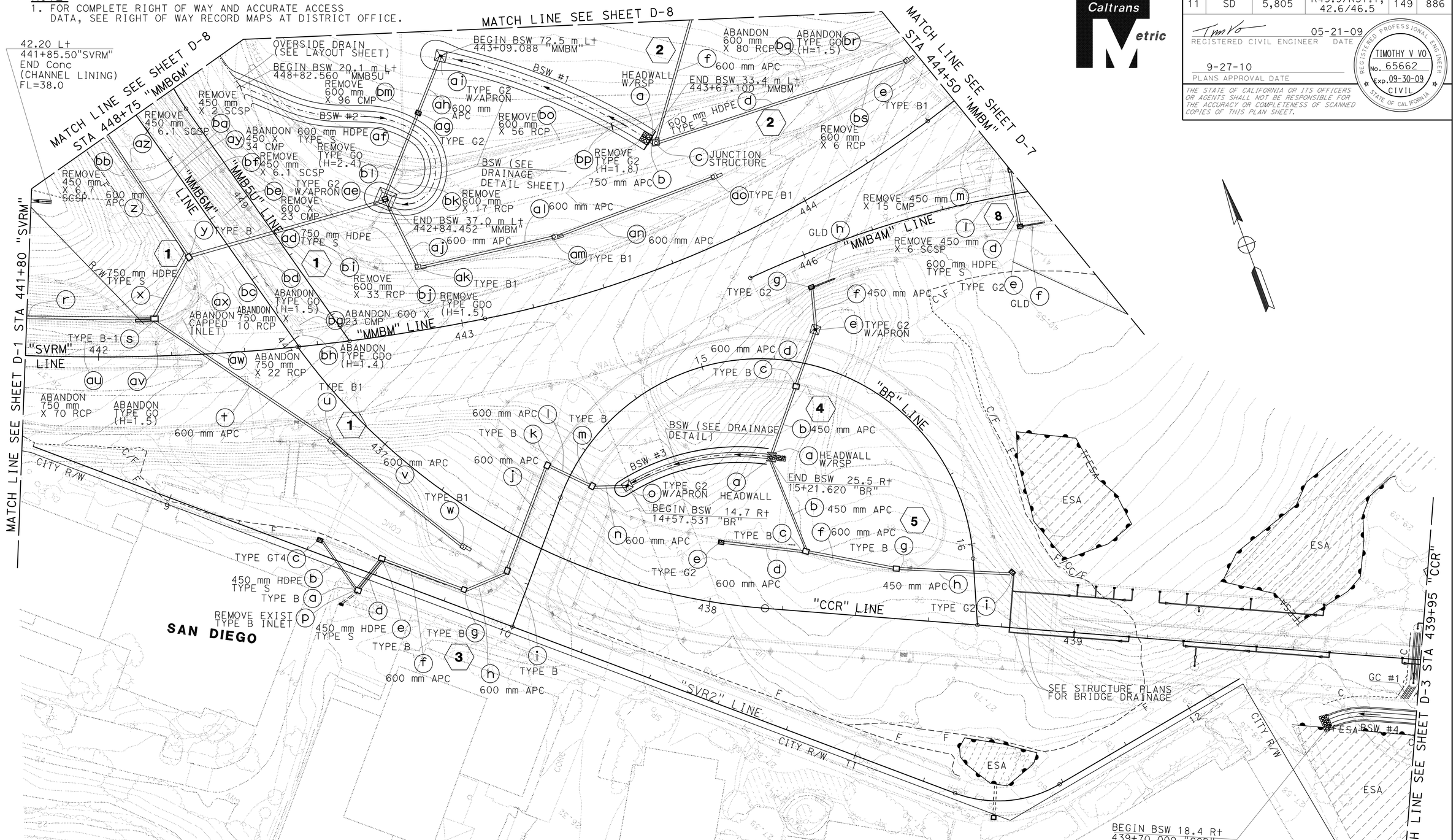

DRAINAGE PLAN
D-2

SCALE 1:500

THIS PLAN ACCURATE FOR DRAINAGE WORK ONLY.

ALL DIMENSIONS ARE IN METERS UNLESS OTHERWISE SHOWN

STATE OF CALIFORNIA - DEPARTMENT OF TRANSPORTATION
Caltrans PROJECT DEVELOPMENT

FUNCTIONAL SUPERVISOR: MAJID KHARRATI
CALCULATED-DESIGNED BY: TIMOTHY V VO
CHECKED BY: SHAHBAZ A ALVI
REVISED BY / DATE REVISED

LAST REVISION 05-28-09 DATE PLOTTED => 29-SEP-2010 TIME PLOTTED => 13:53

BORDER LAST REVISED 4/11/2008
RELATIVE BORDER SCALE IS IN MILLIMETERS 0 20 40 60 80
USERNAME => trmikesl
DGN FILE => b2t0401a002.dgn
CU 11275
EA 2T0401

NOTE:
1. FOR COMPLETE RIGHT OF WAY AND ACCURATE ACCESS DATA, SEE RIGHT OF WAY RECORD MAPS AT DISTRICT OFFICE.

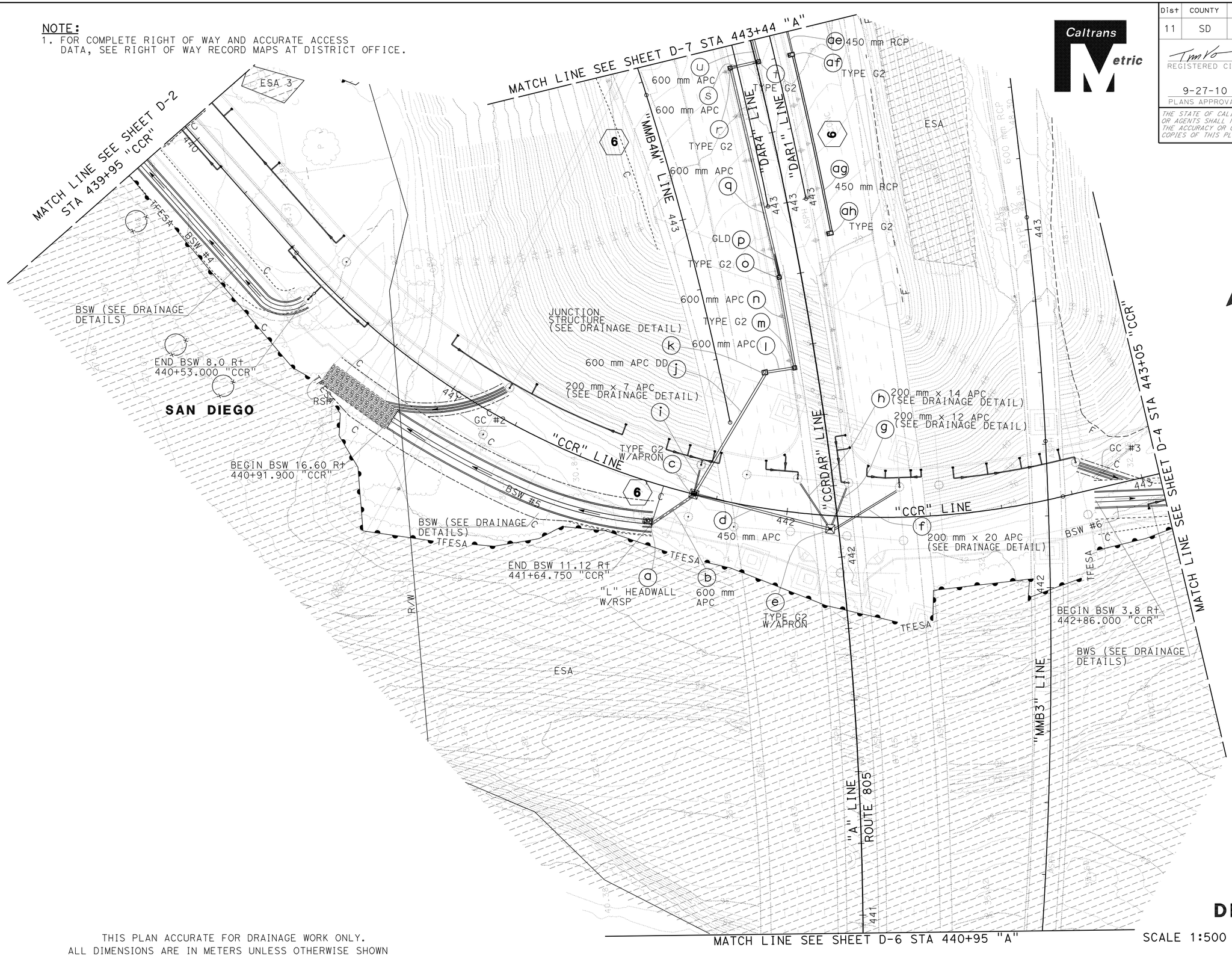

THIS PLAN ACCURATE FOR DRAINAGE WORK ONLY.
ALL DIMENSIONS ARE IN METERS UNLESS OTHERWISE SHOWN

SCALE 1:500

DRAINAGE PLAN
D-3

Dist	COUNTY	ROUTE	KILOMETER POST TOTAL PROJECT	SHEET No.	TOTAL SHEETS
11	SD	5,805	R49.9/R51.7, 42.6/46.5	150	886

Tim Vo 05-21-09
REGISTERED CIVIL ENGINEER DATE

9-27-10
PLANS APPROVAL DATE

REGISTERED PROFESSIONAL ENGINEER TIMOTHY V VO No. 65662 Exp. 09-30-09 CIVIL STATE OF CALIFORNIA

THE STATE OF CALIFORNIA OR ITS OFFICERS OR AGENTS SHALL NOT BE RESPONSIBLE FOR THE ACCURACY OR COMPLETENESS OF SCANNED COPIES OF THIS PLAN SHEET.

Caltrans Metric

REVISED BY | DATE REVISED
TIMOTHY V VO | SHAHBAZ A ALVI
CALCULATED-DESIGNED BY | CHECKED BY
FUNCTIONAL SUPERVISOR | MAJID KHARRATI

STATE OF CALIFORNIA - DEPARTMENT OF TRANSPORTATION
Caltrans PROJECT DEVELOPMENT

LAST REVISION 04-14-10 | DATE PLOTTED => 29-SEP-2010 | TIME PLOTTED => 13:53

Dist	COUNTY	ROUTE	KILOMETER POST TOTAL PROJECT	SHEET No.	TOTAL SHEETS
11	SD	5,805	R49.9/R51.7, 42.6/46.5	151	886

Caltrans Metric

Tim Vo 05-21-09
REGISTERED CIVIL ENGINEER DATE

9-27-10
PLANS APPROVAL DATE

REGISTERED PROFESSIONAL ENGINEER TIMOTHY V VO No. 65662 Exp. 09-30-09 CIVIL STATE OF CALIFORNIA

THE STATE OF CALIFORNIA OR ITS OFFICERS OR AGENTS SHALL NOT BE RESPONSIBLE FOR THE ACCURACY OR COMPLETENESS OF SCANNED COPIES OF THIS PLAN SHEET.

NOTE:
1. FOR COMPLETE RIGHT OF WAY AND ACCURATE ACCESS DATA, SEE RIGHT OF WAY RECORD MAPS AT DISTRICT OFFICE.

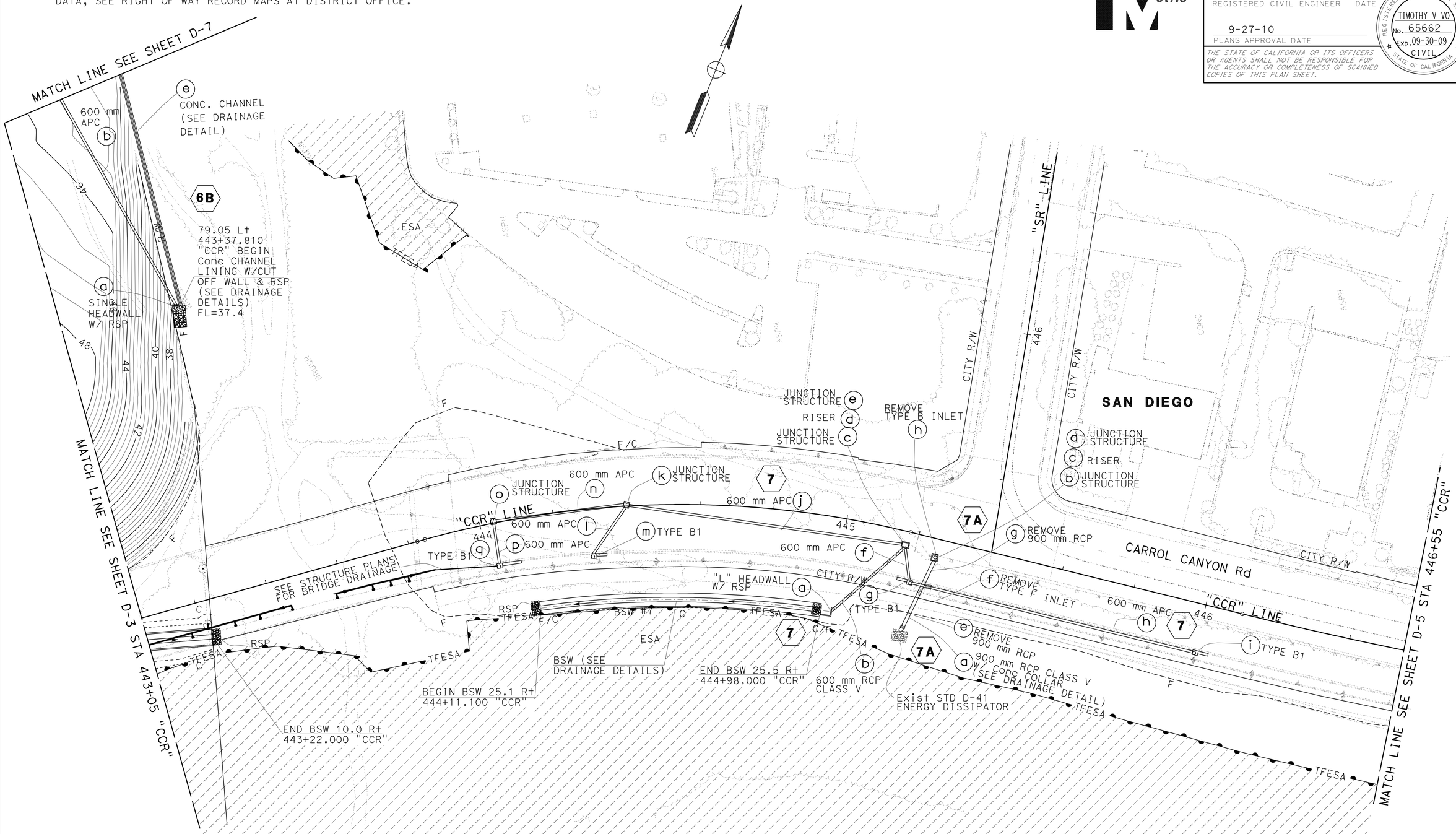

DRAINAGE PLAN
D-4

SCALE 1:500

THIS PLAN ACCURATE FOR DRAINAGE WORK ONLY.

ALL DIMENSIONS ARE IN METERS UNLESS OTHERWISE SHOWN

STATE OF CALIFORNIA - DEPARTMENT OF TRANSPORTATION
Caltrans PROJECT DEVELOPMENT

FUNCTIONAL SUPERVISOR: MAJID KHARRATI
CALCULATED-DESIGNED BY: TIMOTHY V VO
CHECKED BY: SHAHBAZ A ALVI
REVISED BY / DATE REVISED

LAST REVISION 04-14-10
DATE PLOTTED => 29-SEP-2010
TIME PLOTTED => 13:53

Dist	COUNTY	ROUTE	KILOMETER POST TOTAL PROJECT	SHEET No.	TOTAL SHEETS
11	SD	5,805	R49.9/R51.7, 42.6/46.5	152	886

Tim Vo 05-21-09
REGISTERED CIVIL ENGINEER DATE

9-27-10
PLANS APPROVAL DATE

REGISTERED PROFESSIONAL ENGINEER
TIMOTHY V VO
No. 65662
Exp. 09-30-09
CIVIL
STATE OF CALIFORNIA

THE STATE OF CALIFORNIA OR ITS OFFICERS OR AGENTS SHALL NOT BE RESPONSIBLE FOR THE ACCURACY OR COMPLETENESS OF SCANNED COPIES OF THIS PLAN SHEET.

Caltrans Metric

NOTE:
1. FOR COMPLETE RIGHT OF WAY AND ACCURATE ACCESS DATA, SEE RIGHT OF WAY RECORD MAPS AT DISTRICT OFFICE.

THIS PLAN ACCURATE FOR DRAINAGE WORK ONLY.

ALL DIMENSIONS ARE IN METERS UNLESS OTHERWISE SHOWN

SCALE 1:500

DRAINAGE PLAN
D- 5

STATE OF CALIFORNIA - DEPARTMENT OF TRANSPORTATION
Caltrans PROJECT DEVELOPMENT

FUNCTIONAL SUPERVISOR: MAJID KHARRATI
CALCULATED-DESIGNED BY: TIMOTHY V VO
CHECKED BY: SHAHBAZ A ALVI
REVISED BY / DATE REVISED

LAST REVISION 05-28-09 DATE PLOTTED => 29-SEP-2010 TIME PLOTTED => 13:53

Dist	COUNTY	ROUTE	KILOMETER POST TOTAL PROJECT	SHEET No.	TOTAL SHEETS
11	SD	5,805	R49.9/R51.7, 42.6/46.5	153	886

Tim Vo 05-21-09
REGISTERED CIVIL ENGINEER DATE

9-27-10
PLANS APPROVAL DATE

REGISTERED PROFESSIONAL ENGINEER
TIMOTHY V VO
No. 65662
Exp. 09-30-09
CIVIL
STATE OF CALIFORNIA

THE STATE OF CALIFORNIA OR ITS OFFICERS OR AGENTS SHALL NOT BE RESPONSIBLE FOR THE ACCURACY OR COMPLETENESS OF SCANNED COPIES OF THIS PLAN SHEET.

Caltrans Metric

NOTE:
1. FOR COMPLETE RIGHT OF WAY AND ACCURATE ACCESS DATA, SEE RIGHT OF WAY RECORD MAPS AT DISTRICT OFFICE.

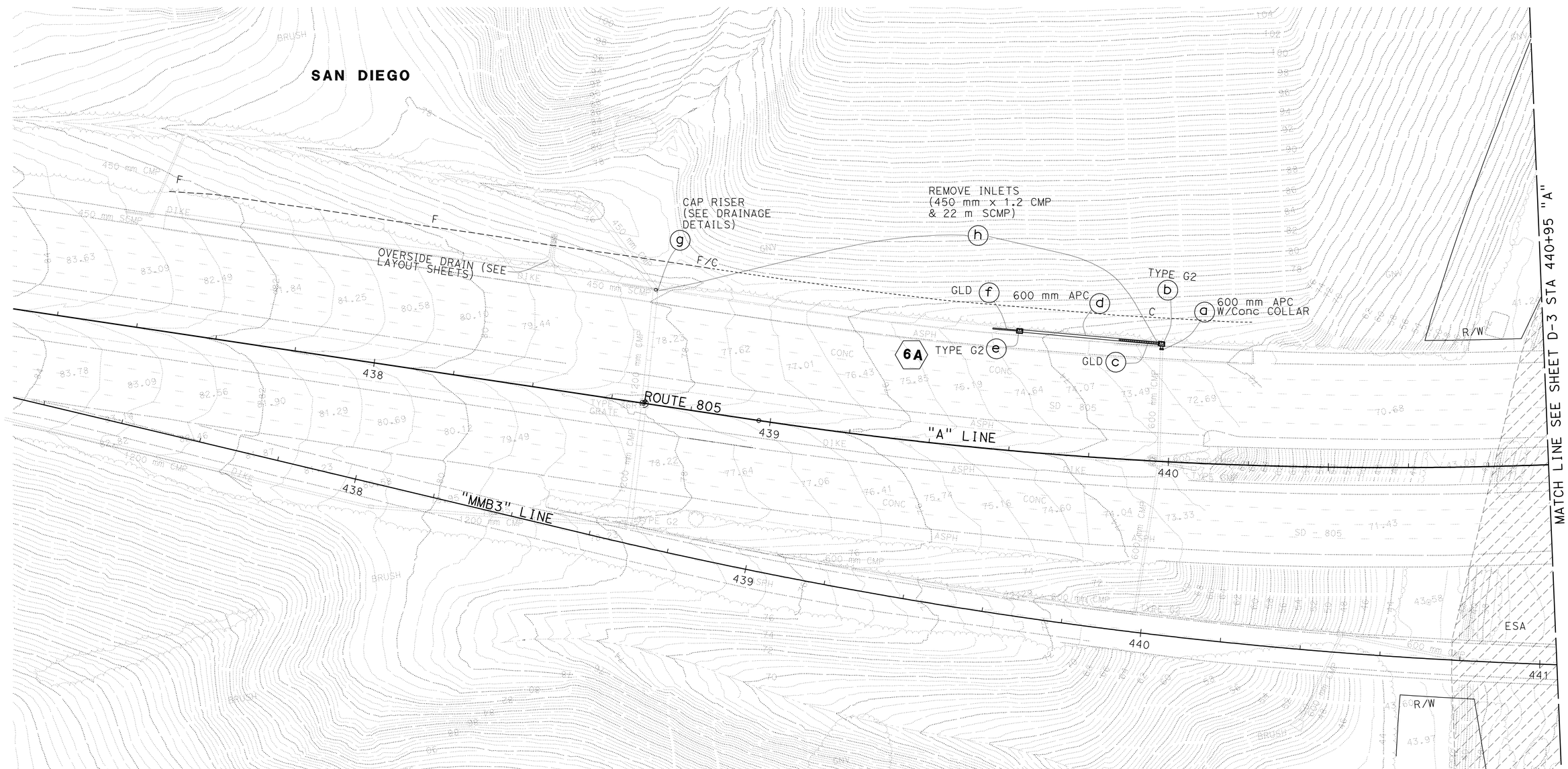

DRAINAGE PLAN

SCALE 1:500

D-6

THIS PLAN ACCURATE FOR DRAINAGE WORK ONLY.

ALL DIMENSIONS ARE IN METERS UNLESS OTHERWISE SHOWN

STATE OF CALIFORNIA - DEPARTMENT OF TRANSPORTATION
Caltrans PROJECT DEVELOPMENT

FUNCTIONAL SUPERVISOR: MAJID KHARRATI
CALCULATED-DESIGNED BY: TIMOTHY V VO
CHECKED BY: SHAHBAZ A ALVI
REVISED BY / DATE REVISED

LAST REVISION 05-28-09
DATE PLOTTED => 29-SEP-2010
TIME PLOTTED => 13:53

Dist	COUNTY	ROUTE	KILOMETER POST TOTAL PROJECT	SHEET No.	TOTAL SHEETS
11	SD	5,805	R49.9/R51.7, 42.6/46.5	154	886

Tim Vo 05-21-09
REGISTERED CIVIL ENGINEER DATE

9-27-10
PLANS APPROVAL DATE

REGISTERED PROFESSIONAL ENGINEER TIMOTHY V VO No. 65662 Exp. 09-30-09 CIVIL STATE OF CALIFORNIA

THE STATE OF CALIFORNIA OR ITS OFFICERS OR AGENTS SHALL NOT BE RESPONSIBLE FOR THE ACCURACY OR COMPLETENESS OF SCANNED COPIES OF THIS PLAN SHEET.

Caltrans Metric

NOTE:
1. FOR COMPLETE RIGHT OF WAY AND ACCURATE ACCESS DATA, SEE RIGHT OF WAY RECORD MAPS AT DISTRICT OFFICE.

THIS PLAN ACCURATE FOR DRAINAGE WORK ONLY.

ALL DIMENSIONS ARE IN METERS UNLESS OTHERWISE SHOWN

SCALE 1:500

DRAINAGE PLAN
D-7

STATE OF CALIFORNIA - DEPARTMENT OF TRANSPORTATION
Caltrans PROJECT DEVELOPMENT

FUNCTIONAL SUPERVISOR: MAJID KHARRATI
CALCULATED-DESIGNED BY: TIMOTHY V VO
CHECKED BY: SHAHBAZ A ALVI
REVISED BY / DATE REVISED

LAST REVISION 04-14-10
DATE PLOTTED => 29-SEP-2010
TIME PLOTTED => 13:54

Dist	COUNTY	ROUTE	KILOMETER POST TOTAL PROJECT	SHEET No.	TOTAL SHEETS
11	SD	5,805	R49.9/R51.7, 42.6/46.5	155	886

REGISTERED CIVIL ENGINEER 5-20-09 DATE

9-27-10
PLANS APPROVAL DATE

REGISTERED PROFESSIONAL ENGINEER SHAHBAZ A ALVI No. 55293 Exp. 12-31-10 CIVIL STATE OF CALIFORNIA

THE STATE OF CALIFORNIA OR ITS OFFICERS OR AGENTS SHALL NOT BE RESPONSIBLE FOR THE ACCURACY OR COMPLETENESS OF SCANNED COPIES OF THIS PLAN SHEET.

Caltrans Metric

NOTE:
1. FOR COMPLETE RIGHT OF WAY AND ACCURATE ACCESS DATA, SEE RIGHT OF WAY RECORD MAPS AT DISTRICT OFFICE.

*: SEE DRAINAGE DETAIL SHEETS

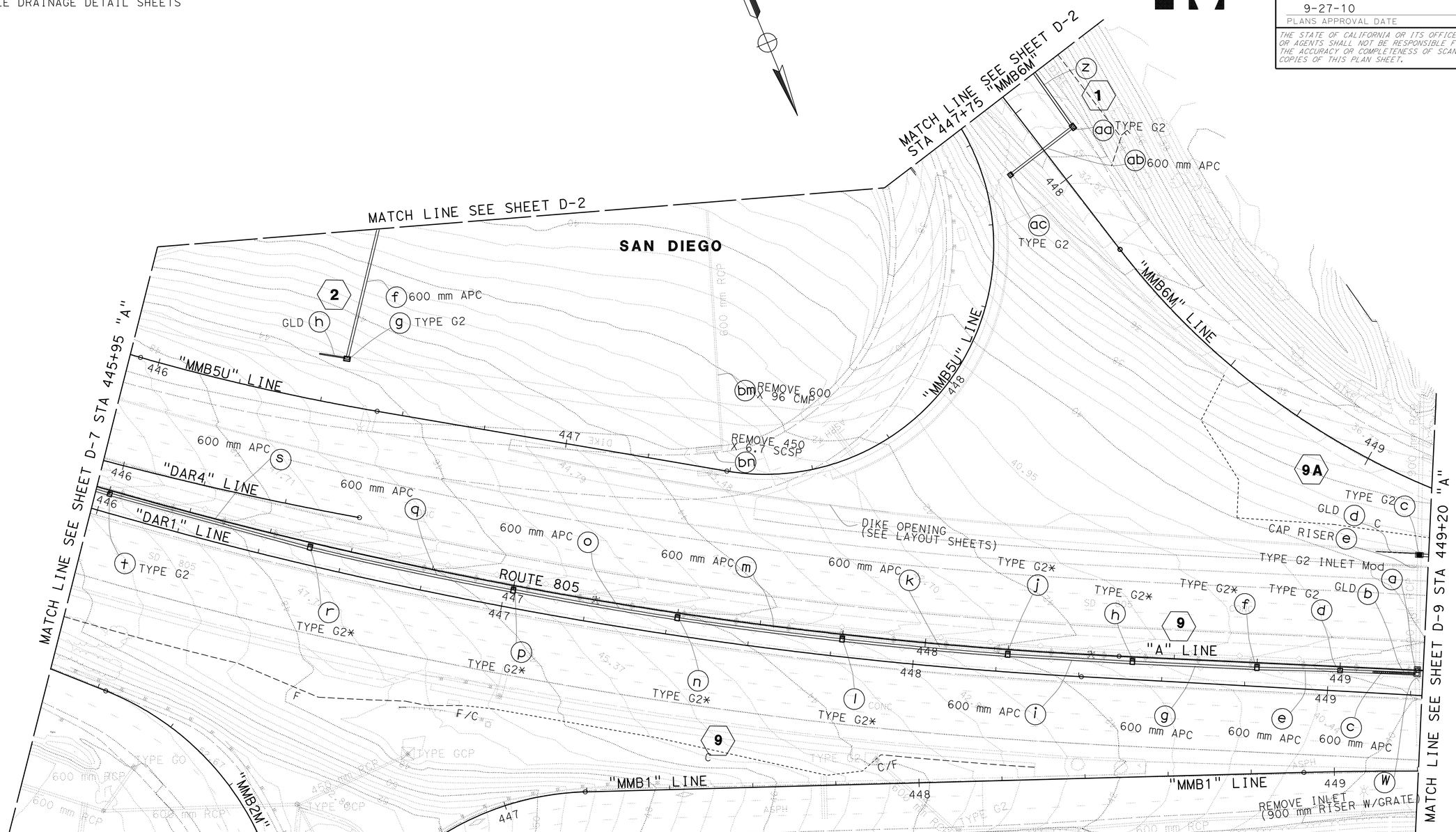

THIS PLAN ACCURATE FOR DRAINAGE WORK ONLY.

ALL DIMENSIONS ARE IN METERS UNLESS OTHERWISE SHOWN

SCALE 1:500

DRAINAGE PLAN
D-8

STATE OF CALIFORNIA - DEPARTMENT OF TRANSPORTATION
Caltrans PROJECT DEVELOPMENT

FUNCTIONAL SUPERVISOR: MAJID KHARRATI
CALCULATED-DESIGNED BY: THEO AQUINO
CHECKED BY: SHAHBAZ A ALVI
REVISED BY
DATE REVISED

LAST REVISION DATE PLOTTED => 29-SEP-2010
05-28-09 TIME PLOTTED => 13:54

Dist	COUNTY	ROUTE	KILOMETER POST TOTAL PROJECT	SHEET No.	TOTAL SHEETS
11	SD	5,805	R49.9/R51.7, 42.6/46.5	156	886

5-20-09
REGISTERED CIVIL ENGINEER DATE

9-27-10
PLANS APPROVAL DATE

REGISTERED PROFESSIONAL ENGINEER
SHAHBAZ A ALVI
No. 55293
Exp. 12-31-10
CIVIL
STATE OF CALIFORNIA

THE STATE OF CALIFORNIA OR ITS OFFICERS OR AGENTS SHALL NOT BE RESPONSIBLE FOR THE ACCURACY OR COMPLETENESS OF SCANNED COPIES OF THIS PLAN SHEET.

Caltrans Metric

NOTE:
1. FOR COMPLETE RIGHT OF WAY AND ACCURATE ACCESS DATA, SEE RIGHT OF WAY RECORD MAPS AT DISTRICT OFFICE.

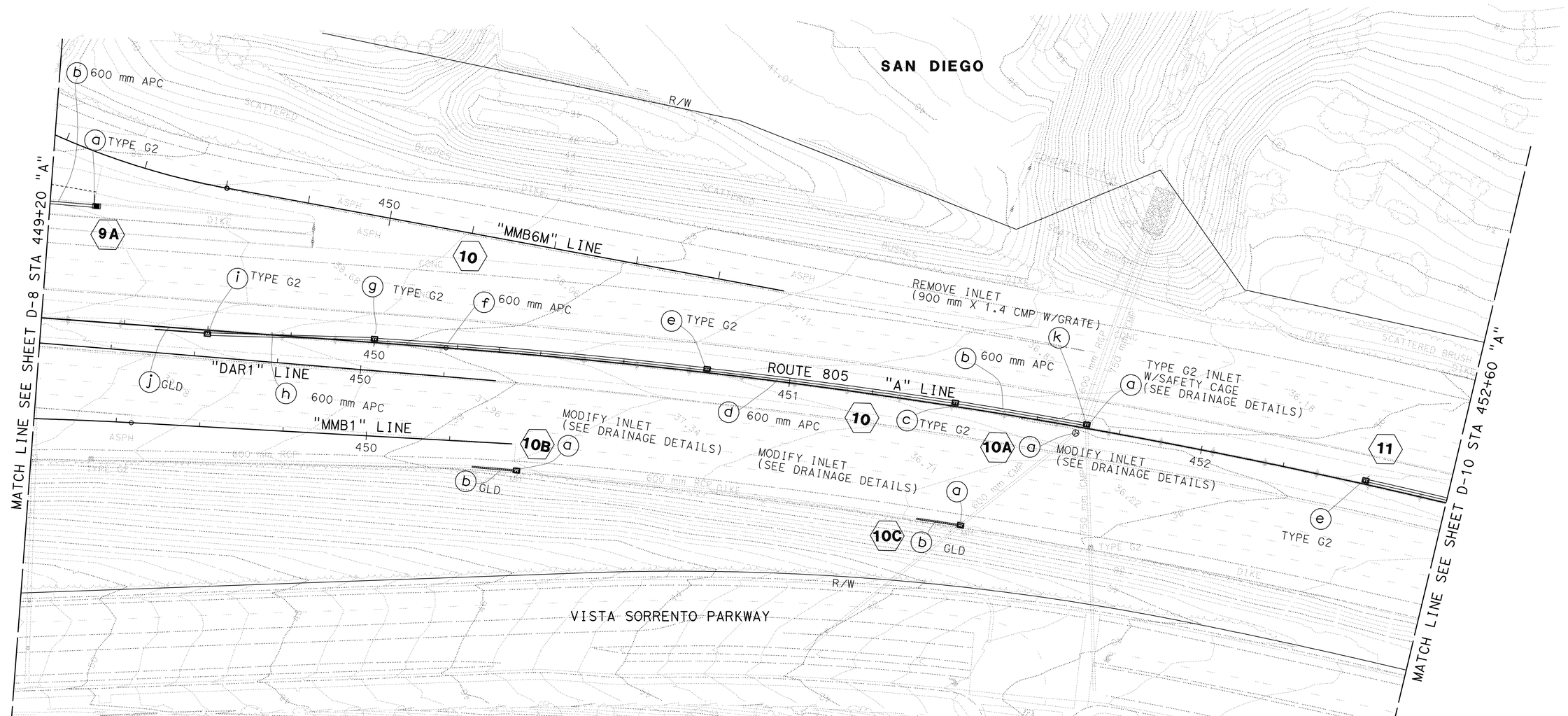

THIS PLAN ACCURATE FOR DRAINAGE WORK ONLY.

ALL DIMENSIONS ARE IN METERS UNLESS OTHERWISE SHOWN

DRAINAGE PLAN
D-9

SCALE 1:500

STATE OF CALIFORNIA - DEPARTMENT OF TRANSPORTATION
Caltrans PROJECT DEVELOPMENT

FUNCTIONAL SUPERVISOR: MAJID KHARRATI
CALCULATED-DESIGNED BY: THEO AQUINO
CHECKED BY: SHAHBAZ A ALVI
REVISED BY
DATE REVISED

LAST REVISION 05-28-09
DATE PLOTTED => 29-SEP-2010
TIME PLOTTED => 13:54

Dist	COUNTY	ROUTE	KILOMETER POST TOTAL PROJECT	SHEET No.	TOTAL SHEETS
11	SD	5,805	R49.9/R51.7, 42.6/46.5	157	886

REGISTERED CIVIL ENGINEER 5-20-09 DATE

9-27-10
PLANS APPROVAL DATE

REGISTERED PROFESSIONAL ENGINEER SHAHBAZ A ALVI No. 55293 Exp. 12-31-10 CIVIL STATE OF CALIFORNIA

THE STATE OF CALIFORNIA OR ITS OFFICERS OR AGENTS SHALL NOT BE RESPONSIBLE FOR THE ACCURACY OR COMPLETENESS OF SCANNED COPIES OF THIS PLAN SHEET.

Caltrans Metric

NOTE:
1. FOR COMPLETE RIGHT OF WAY AND ACCURATE ACCESS DATA, SEE RIGHT OF WAY RECORD MAPS AT DISTRICT OFFICE.

*: SEE DRAINAGE DETAIL SHEETS

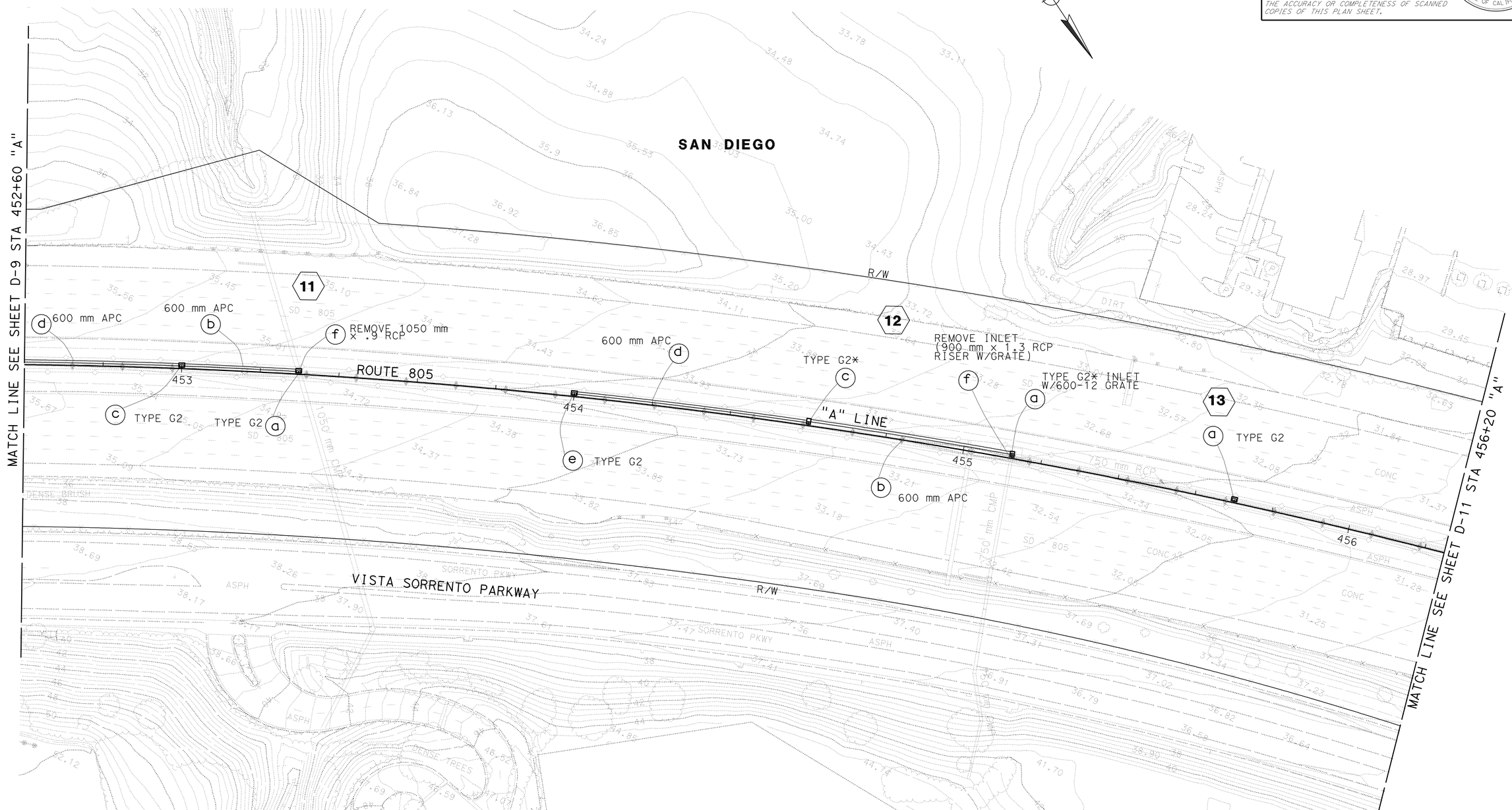

THIS PLAN ACCURATE FOR DRAINAGE WORK ONLY.

ALL DIMENSIONS ARE IN METERS UNLESS OTHERWISE SHOWN

SCALE 1:500

DRAINAGE PLAN
D-10

STATE OF CALIFORNIA - DEPARTMENT OF TRANSPORTATION
Caltrans PROJECT DEVELOPMENT

FUNCTIONAL SUPERVISOR: MAJID KHARRATI
CALCULATED-DESIGNED BY: THEO AQUINO
CHECKED BY: SHAHBAZ A ALVI
REVISED BY / DATE REVISED

LAST REVISION 05-28-09 | DATE PLOTTED => 29-SEP-2010 | TIME PLOTTED => 13:54

BORDER LAST REVISED 4/11/2008 | RELATIVE BORDER SCALE IS IN MILLIMETERS 0 20 40 60 80 | USERNAME => trmikesl | DGN FILE => b2t0401a010.dgn | CU 11275 | EA 2T0401

Dist	COUNTY	ROUTE	KILOMETER POST TOTAL PROJECT	SHEET No.	TOTAL SHEETS
11	SD	5,805	R49.9/R51.7, 42.6/46.5	158	886

REGISTERED CIVIL ENGINEER 5-20-09 DATE

9-27-10
PLANS APPROVAL DATE

REGISTERED PROFESSIONAL ENGINEER SHAHBAZ A ALVI No. 55293 Exp. 12-31-10 CIVIL STATE OF CALIFORNIA

THE STATE OF CALIFORNIA OR ITS OFFICERS OR AGENTS SHALL NOT BE RESPONSIBLE FOR THE ACCURACY OR COMPLETENESS OF SCANNED COPIES OF THIS PLAN SHEET.

Caltrans Metric

NOTE:
1. FOR COMPLETE RIGHT OF WAY AND ACCURATE ACCESS DATA, SEE RIGHT OF WAY RECORD MAPS AT DISTRICT OFFICE.

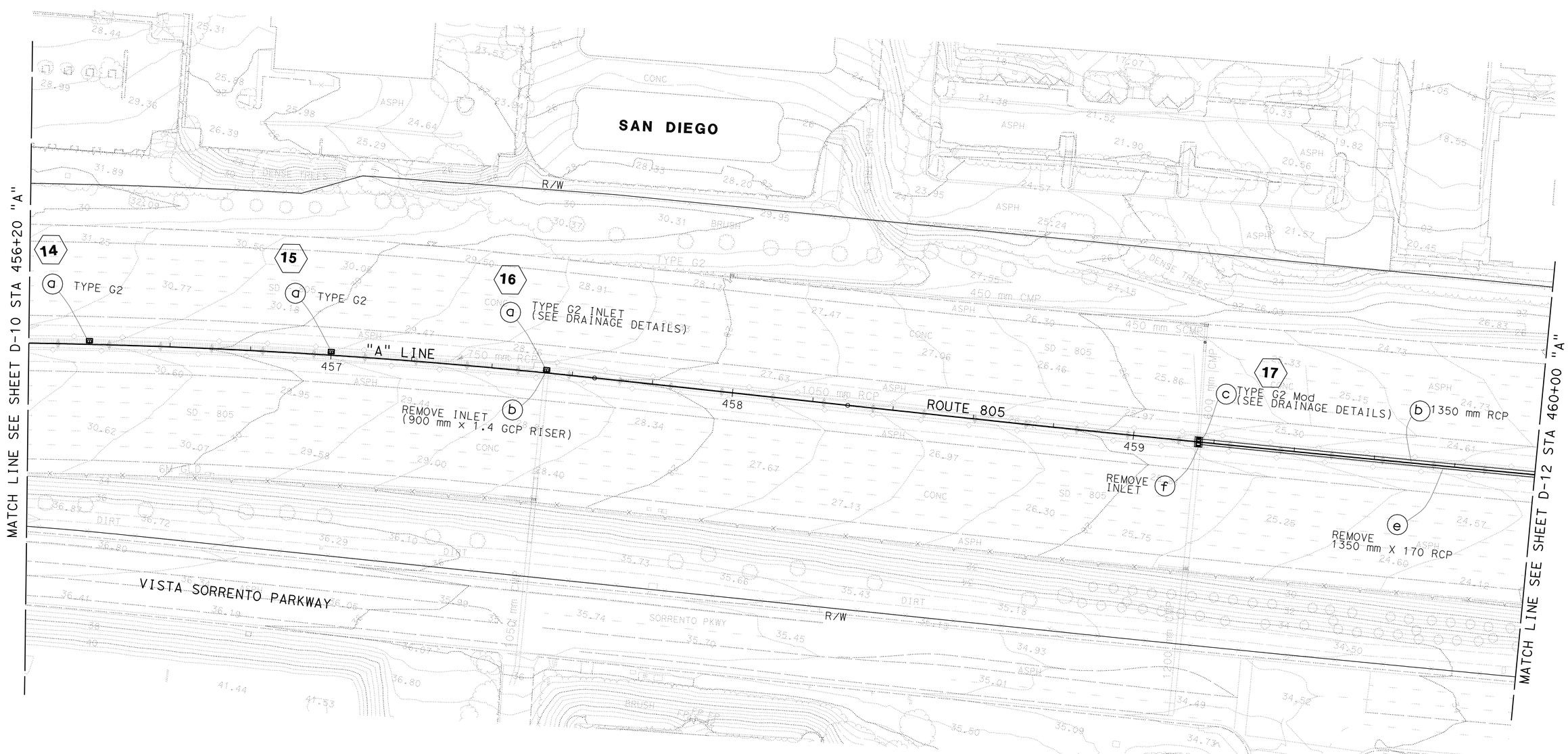

DRAINAGE PLAN
D-11

SCALE 1:500

THIS PLAN ACCURATE FOR DRAINAGE WORK ONLY.

ALL DIMENSIONS ARE IN METERS UNLESS OTHERWISE SHOWN

STATE OF CALIFORNIA - DEPARTMENT OF TRANSPORTATION
Caltrans PROJECT DEVELOPMENT

FUNCTIONAL SUPERVISOR: MAJID KHARRATI

CALCULATED-DESIGNED BY: THEO AQUINO
CHECKED BY: SHAHBAZ A ALVI

REVISED BY | DATE REVISED

LAST REVISION 05-15-09 | DATE PLOTTED => 29-SEP-2010 | TIME PLOTTED => 13:54

BORDER LAST REVISED 4/11/2008

RELATIVE BORDER SCALE IS IN MILLIMETERS 0 20 40 60 80

USERNAME => trmikesl
DGN FILE => b2t0401a011.dgn

CU 11275

EA 2T0401

Dist	COUNTY	ROUTE	KILOMETER POST TOTAL PROJECT	SHEET No.	TOTAL SHEETS
11	SD	5,805	R49.9/R51.7, 42.6/46.5	159	886

REGISTERED CIVIL ENGINEER 5-20-09 DATE

9-27-10
PLANS APPROVAL DATE

REGISTERED PROFESSIONAL ENGINEER SHAHBAZ A ALVI No. 55293 Exp. 12-31-10 CIVIL STATE OF CALIFORNIA

THE STATE OF CALIFORNIA OR ITS OFFICERS OR AGENTS SHALL NOT BE RESPONSIBLE FOR THE ACCURACY OR COMPLETENESS OF SCANNED COPIES OF THIS PLAN SHEET.

Caltrans Metric

NOTE:
1. FOR COMPLETE RIGHT OF WAY AND ACCURATE ACCESS DATA, SEE RIGHT OF WAY RECORD MAPS AT DISTRICT OFFICE.

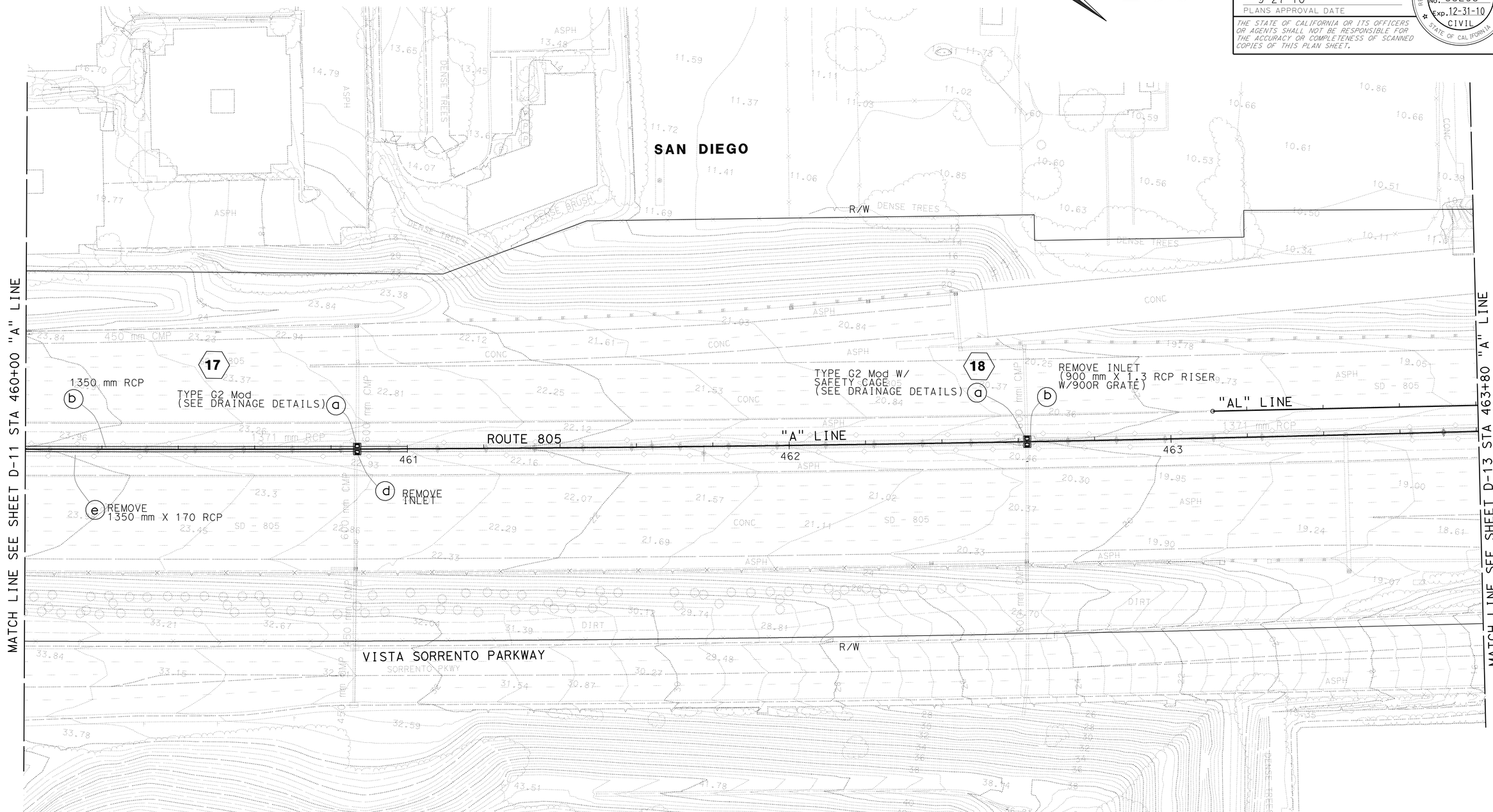

DRAINAGE PLAN
D-12

THIS PLAN ACCURATE FOR DRAINAGE WORK ONLY.

ALL DIMENSIONS ARE IN METERS UNLESS OTHERWISE SHOWN

SCALE 1:500

THEO AQUINO	REVISED BY
SHAHBAZ A ALVI	DATE REVISED
CALCULATED-DESIGNED BY	
CHECKED BY	
FUNCTIONAL SUPERVISOR	
MAJID KHARRATI	

STATE OF CALIFORNIA - DEPARTMENT OF TRANSPORTATION
Caltrans PROJECT DEVELOPMENT

LAST REVISION 05-28-09
DATE PLOTTED => 29-SEP-2010
TIME PLOTTED => 13:55

Dist	COUNTY	ROUTE	KILOMETER POST TOTAL PROJECT	SHEET No.	TOTAL SHEETS
11	SD	5,805	R49.9/R51.7, 42.6/46.5	160	886

REGISTERED CIVIL ENGINEER 5-20-09 DATE

9-27-10
PLANS APPROVAL DATE

REGISTERED PROFESSIONAL ENGINEER SHAHBAZ A ALVI No. 55293 Exp. 12-31-10 CIVIL STATE OF CALIFORNIA

THE STATE OF CALIFORNIA OR ITS OFFICERS OR AGENTS SHALL NOT BE RESPONSIBLE FOR THE ACCURACY OR COMPLETENESS OF SCANNED COPIES OF THIS PLAN SHEET.

Caltrans Metric

NOTE:
1. FOR COMPLETE RIGHT OF WAY AND ACCURATE ACCESS DATA, SEE RIGHT OF WAY RECORD MAPS AT DISTRICT OFFICE.

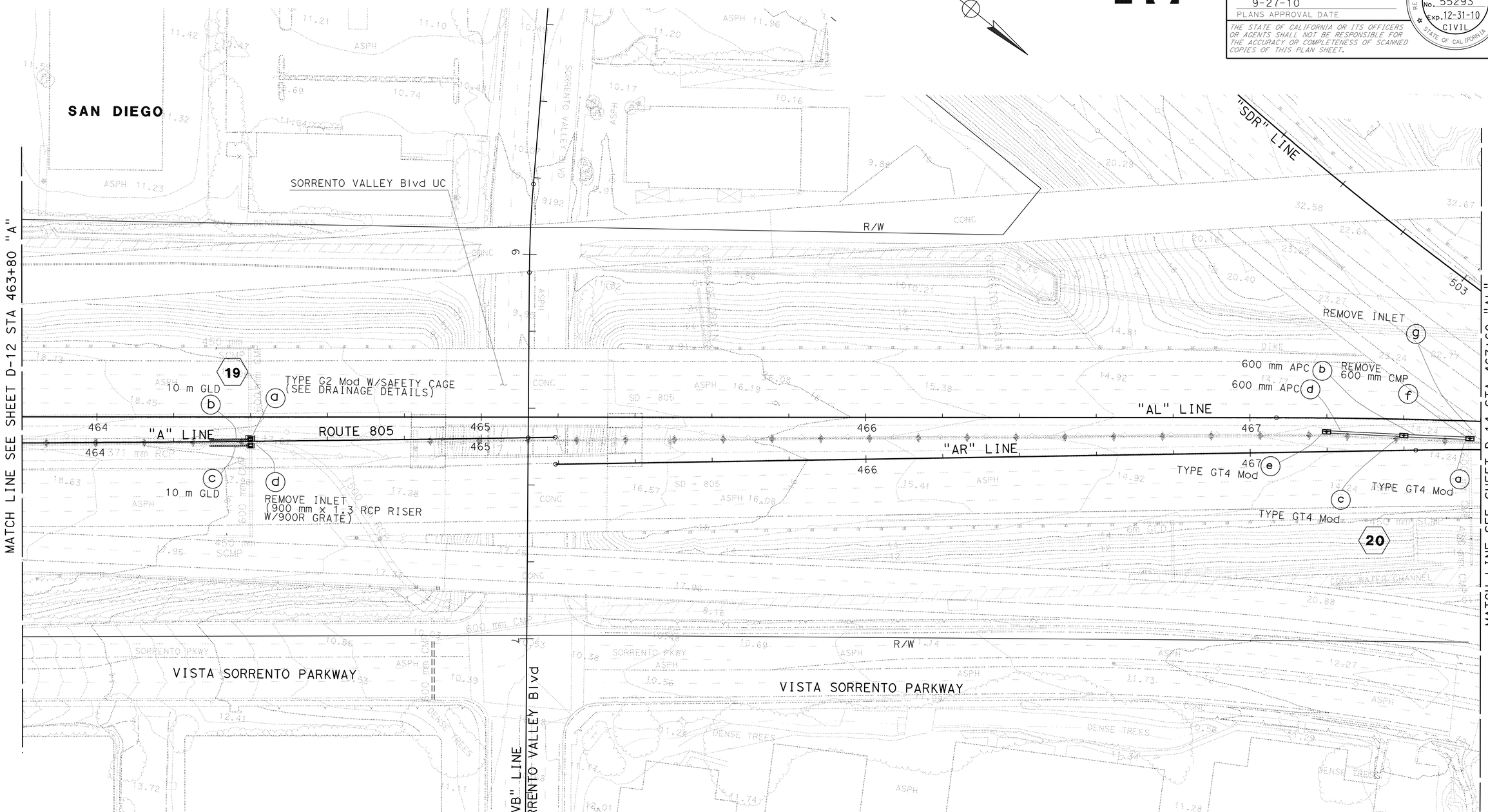

THIS PLAN ACCURATE FOR DRAINAGE WORK ONLY.

ALL DIMENSIONS ARE IN METERS UNLESS OTHERWISE SHOWN

SCALE 1:500

DRAINAGE PLAN
D-13

STATE OF CALIFORNIA - DEPARTMENT OF TRANSPORTATION
Caltrans PROJECT DEVELOPMENT

FUNCTIONAL SUPERVISOR: MAJID KHARRATI
CALCULATED-DESIGNED BY: THEO AQUINO
CHECKED BY: SHAHBAZ A ALVI
REVISED BY / DATE REVISED

LAST REVISION 05-28-09 | DATE PLOTTED => 29-SEP-2010 | TIME PLOTTED => 13:55

BORDER LAST REVISED 4/11/2008

RELATIVE BORDER SCALE IS IN MILLIMETERS 0 20 40 60 80

USERNAME => trmikesl
DGN FILE => b2t0401a013.dgn

CU 11275

EA 2T0401

Dist	COUNTY	ROUTE	KILOMETER POST TOTAL PROJECT	SHEET No.	TOTAL SHEETS
11	SD	5,805	R49.9/R51.7, 42.6/46.5	161	886

REGISTERED CIVIL ENGINEER 5-20-09 DATE

9-27-10
PLANS APPROVAL DATE

REGISTERED PROFESSIONAL ENGINEER SHAHBAZ A ALVI No. 55293 Exp. 12-31-10 CIVIL STATE OF CALIFORNIA

THE STATE OF CALIFORNIA OR ITS OFFICERS OR AGENTS SHALL NOT BE RESPONSIBLE FOR THE ACCURACY OR COMPLETENESS OF SCANNED COPIES OF THIS PLAN SHEET.

Caltrans Metric

NOTE:
1. FOR COMPLETE RIGHT OF WAY AND ACCURATE ACCESS DATA, SEE RIGHT OF WAY RECORD MAPS AT DISTRICT OFFICE.

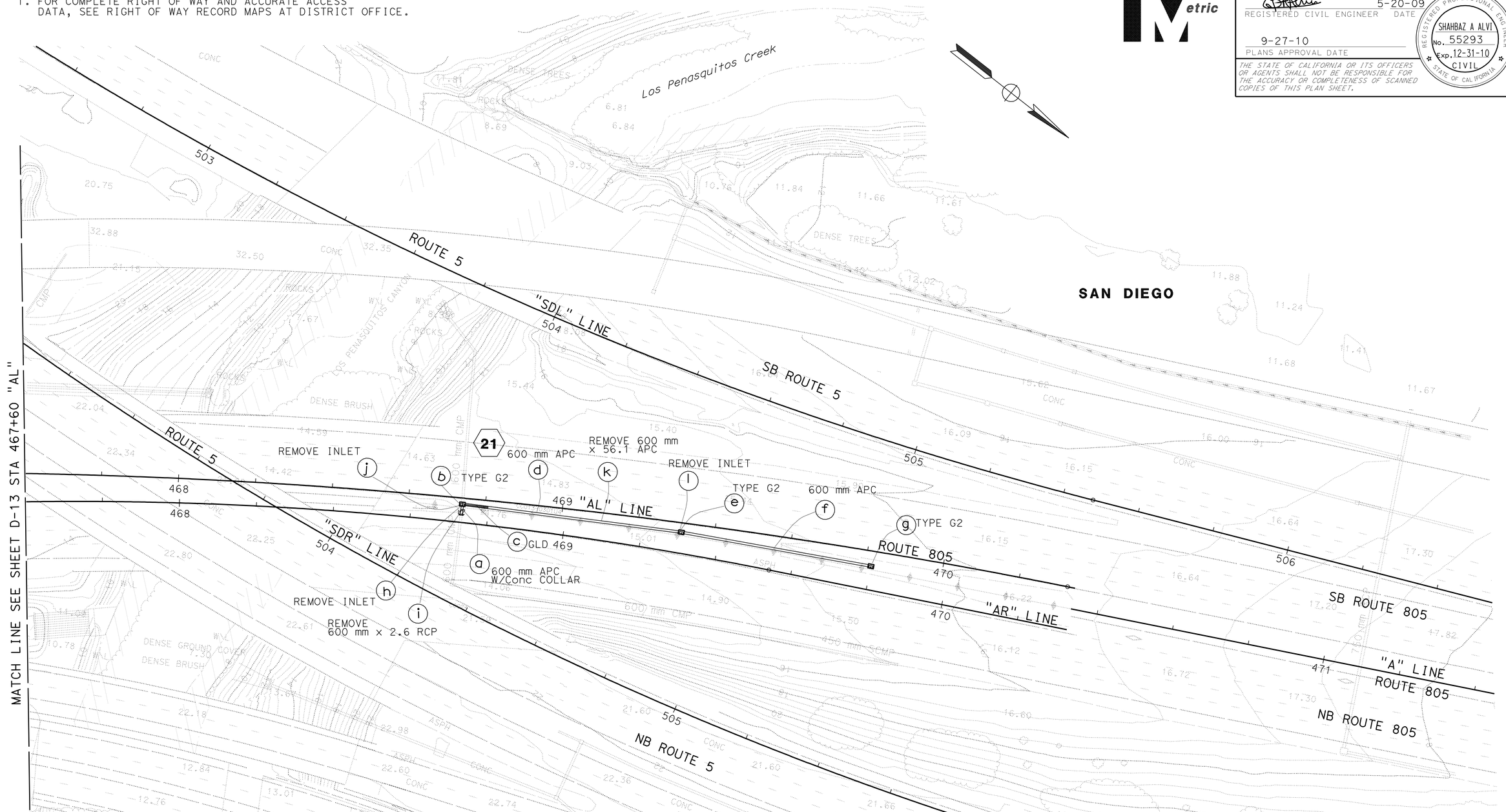

THIS PLAN ACCURATE FOR DRAINAGE WORK ONLY.

ALL DIMENSIONS ARE IN METERS UNLESS OTHERWISE SHOWN

DRAINAGE PLAN
D-14

SCALE 1:500

STATE OF CALIFORNIA - DEPARTMENT OF TRANSPORTATION
Caltrans PROJECT DEVELOPMENT

FUNCTIONAL SUPERVISOR: MAJID KHARRATI
CALCULATED-DESIGNED BY: THEO AQUINO
CHECKED BY: SHAHBAZ A ALVI
REVISED BY / DATE REVISED

LAST REVISION 05-28-09 DATE PLOTTED => 29-SEP-2010 TIME PLOTTED => 13:55

Dist	COUNTY	ROUTE	KILOMETER POST TOTAL PROJECT	SHEET No.	TOTAL SHEETS
11	SD	5,805	R49.9/R51.7, 42.6/46.5	162	886

Caltrans Metric

TmVo 05-21-09
REGISTERED CIVIL ENGINEER DATE

9-27-10
PLANS APPROVAL DATE

REGISTERED PROFESSIONAL ENGINEER TIMOTHY V VO No. 65662 Exp. 09-30-09 CIVIL STATE OF CALIFORNIA

THE STATE OF CALIFORNIA OR ITS OFFICERS OR AGENTS SHALL NOT BE RESPONSIBLE FOR THE ACCURACY OR COMPLETENESS OF SCANNED COPIES OF THIS PLAN SHEET.

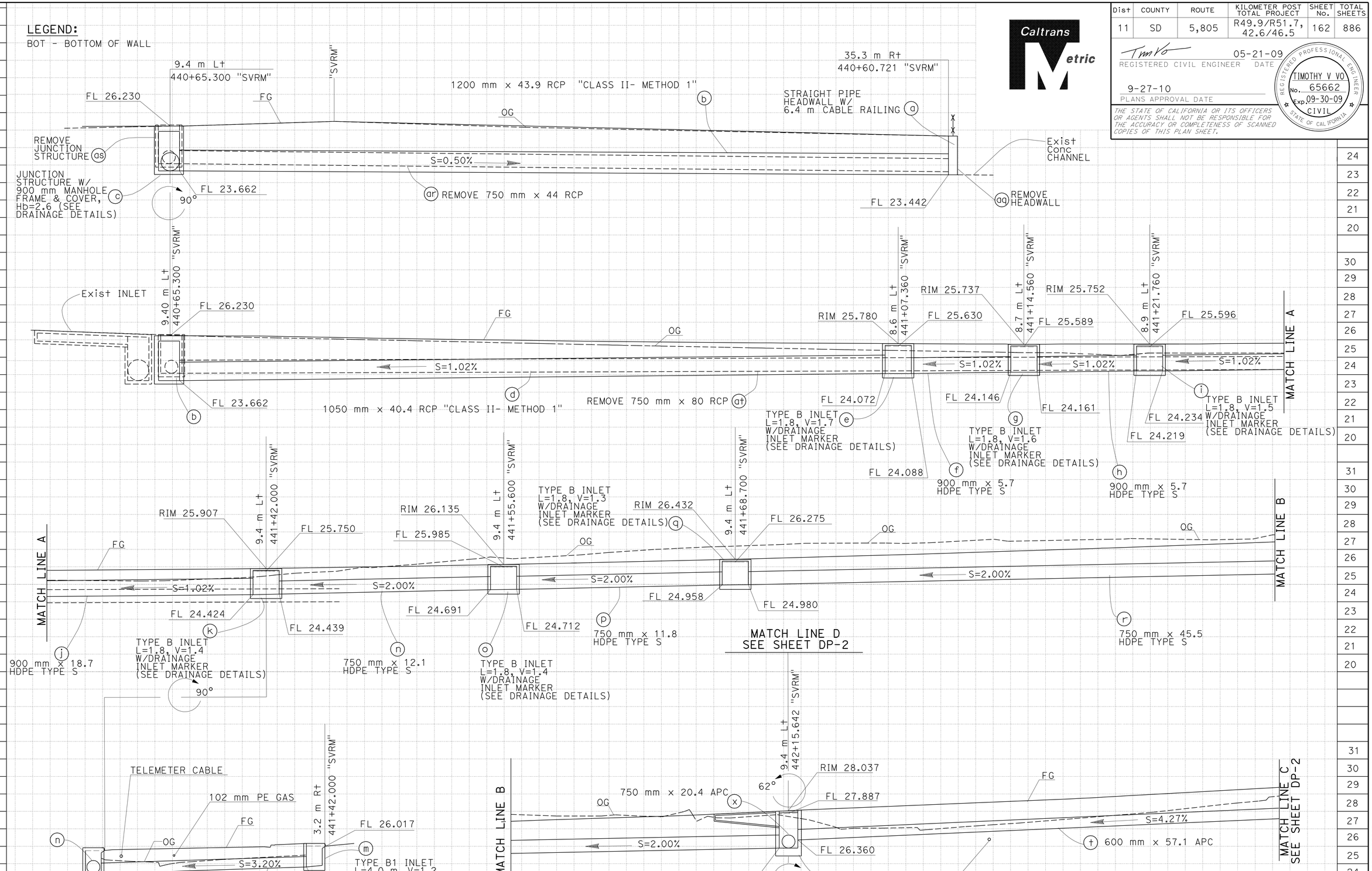

DRAINAGE SYSTEM No. 1

DRAINAGE PROFILES

SCALE 1:100

DP-1

DATE	REVISED BY

CALCULATED-DESIGNED BY	TIMOTHY V VO
CHECKED BY	SHAHBAZ A ALVI
FUNCTIONAL SUPERVISOR	MAJID KHARRATI

STATE OF CALIFORNIA - DEPARTMENT OF TRANSPORTATION
Caltrans PROJECT DEVELOPMENT

LAST REVISION 05-30-09 DATE PLOTTED => 29-SEP-2010 TIME PLOTTED => 13:55

Dist	COUNTY	ROUTE	KILOMETER POST TOTAL PROJECT	SHEET No.	TOTAL SHEETS
11	SD	5,805	R49.9/R51.7, 42.6/46.5	163	886

Caltrans Metric

REGISTERED CIVIL ENGINEER 05-21-09 DATE

PLANS APPROVAL DATE 9-27-10

REGISTERED PROFESSIONAL ENGINEER TIMOTHY V VO No. 65662 Exp. 09-30-09 CIVIL STATE OF CALIFORNIA

THE STATE OF CALIFORNIA OR ITS OFFICERS OR AGENTS SHALL NOT BE RESPONSIBLE FOR THE ACCURACY OR COMPLETENESS OF SCANNED COPIES OF THIS PLAN SHEET.

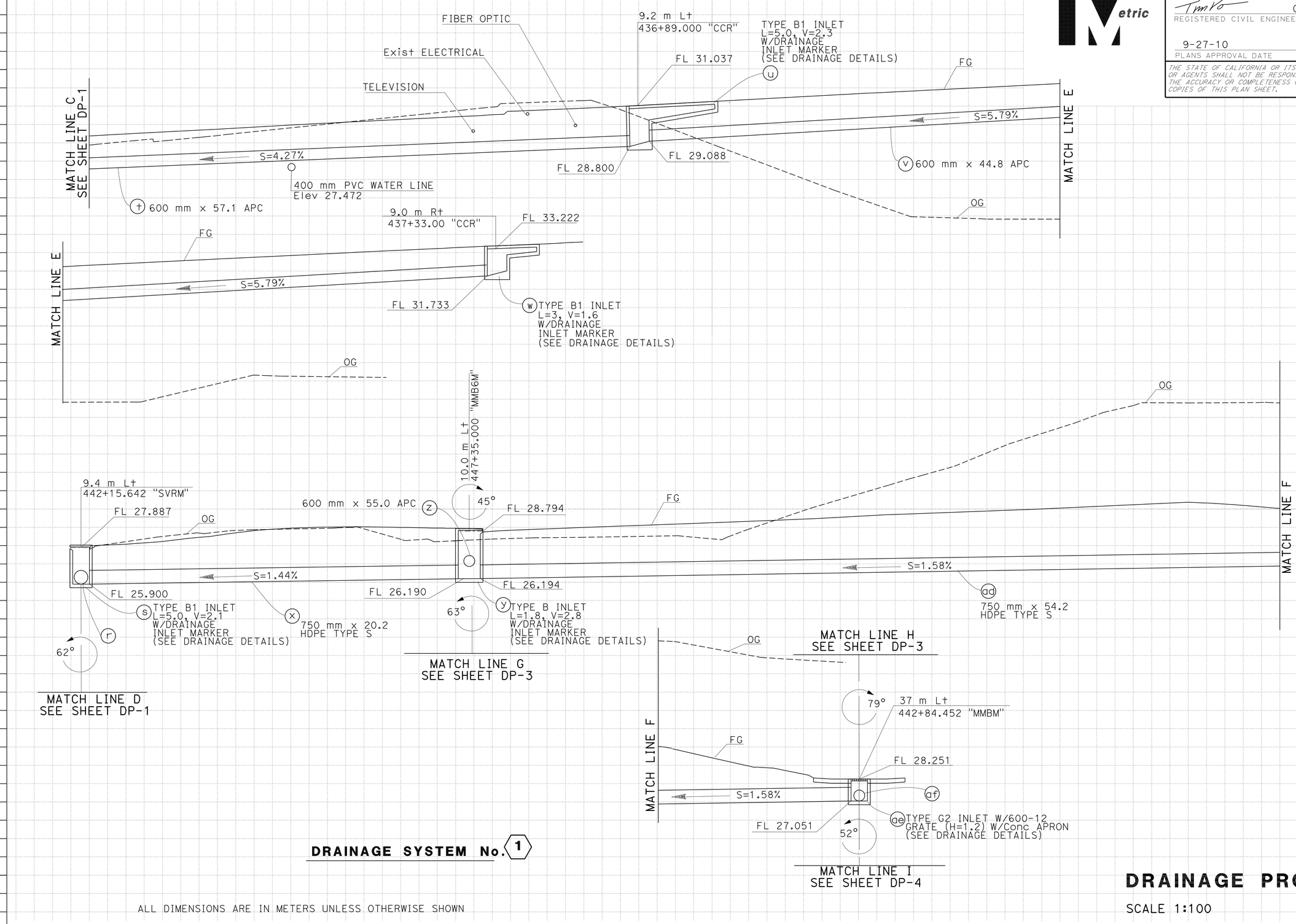

DRAINAGE SYSTEM No. 1

ALL DIMENSIONS ARE IN METERS UNLESS OTHERWISE SHOWN

DRAINAGE PROFILES

SCALE 1:100

DP-2

REVISED BY | DATE REVISED

TIMOTHY V VO | SHAHBAZ A ALVI

CALCULATED-DESIGNED BY | CHECKED BY

FUNCTIONAL SUPERVISOR: MAJID KHARRATI

STATE OF CALIFORNIA - DEPARTMENT OF TRANSPORTATION

Caltrans PROJECT DEVELOPMENT

LAST REVISION 05-30-09 | DATE PLOTTED => 29-SEP-2010 | TIME PLOTTED => 13:55

Dist	COUNTY	ROUTE	KILOMETER POST TOTAL PROJECT	SHEET No.	TOTAL SHEETS
11	SD	5,805	R49.9/R51.7, 42.6/46.5	164	886

Caltrans Metric

Tim Vo 05-21-09
REGISTERED CIVIL ENGINEER DATE

9-27-10
PLANS APPROVAL DATE

REGISTERED PROFESSIONAL ENGINEER TIMOTHY V VO No. 65662 Exp. 09-30-09 CIVIL STATE OF CALIFORNIA

THE STATE OF CALIFORNIA OR ITS OFFICERS OR AGENTS SHALL NOT BE RESPONSIBLE FOR THE ACCURACY OR COMPLETENESS OF SCANNED COPIES OF THIS PLAN SHEET.

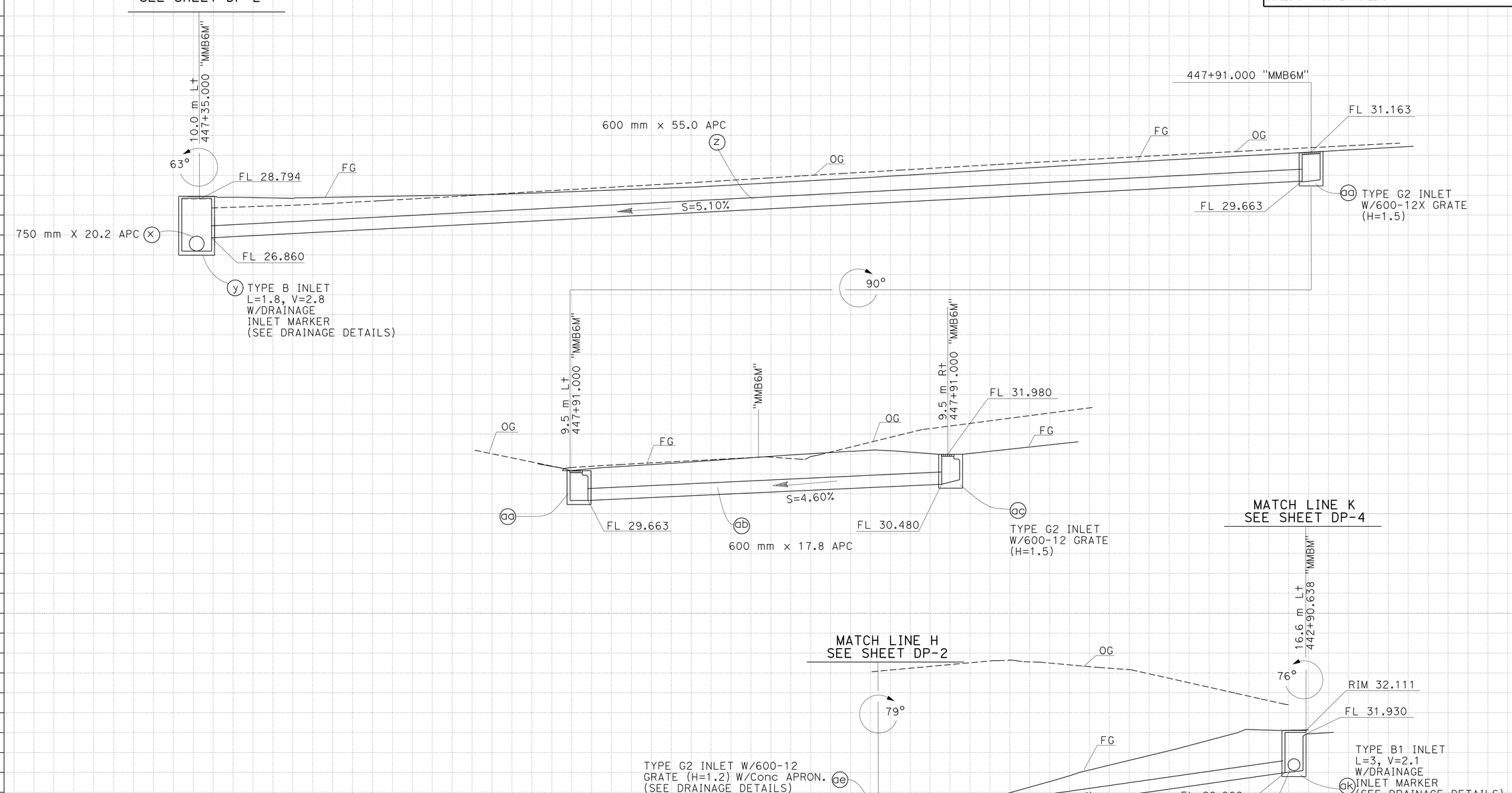

DRAINAGE SYSTEM No. 1

ALL DIMENSIONS ARE IN METERS UNLESS OTHERWISE SHOWN

DRAINAGE PROFILES

SCALE 1:100

DP-3

STATE OF CALIFORNIA - DEPARTMENT OF TRANSPORTATION
Caltrans PROJECT DEVELOPMENT

FUNCTIONAL SUPERVISOR: MAJID KHARRATI
CALCULATED-DESIGNED BY: SHAHBAZ A ALVI
CHECKED BY: TIMOTHY V VO
REVISED BY / DATE REVISED

LAST REVISION 05-30-09 DATE PLOTTED => 29-SEP-2010 TIME PLOTTED => 13:55

Dist	COUNTY	ROUTE	KILOMETER POST TOTAL PROJECT	SHEET No.	TOTAL SHEETS
11	SD	5,805	R49.9/R51.7, 42.6/46.5	165	886

Caltrans Metric

REGISTERED CIVIL ENGINEER 05-21-09 DATE

9-27-10
PLANS APPROVAL DATE

REGISTERED PROFESSIONAL ENGINEER TIMOTHY V VO No. 65662 Exp. 09-30-09 CIVIL STATE OF CALIFORNIA

THE STATE OF CALIFORNIA OR ITS OFFICERS OR AGENTS SHALL NOT BE RESPONSIBLE FOR THE ACCURACY OR COMPLETENESS OF SCANNED COPIES OF THIS PLAN SHEET.

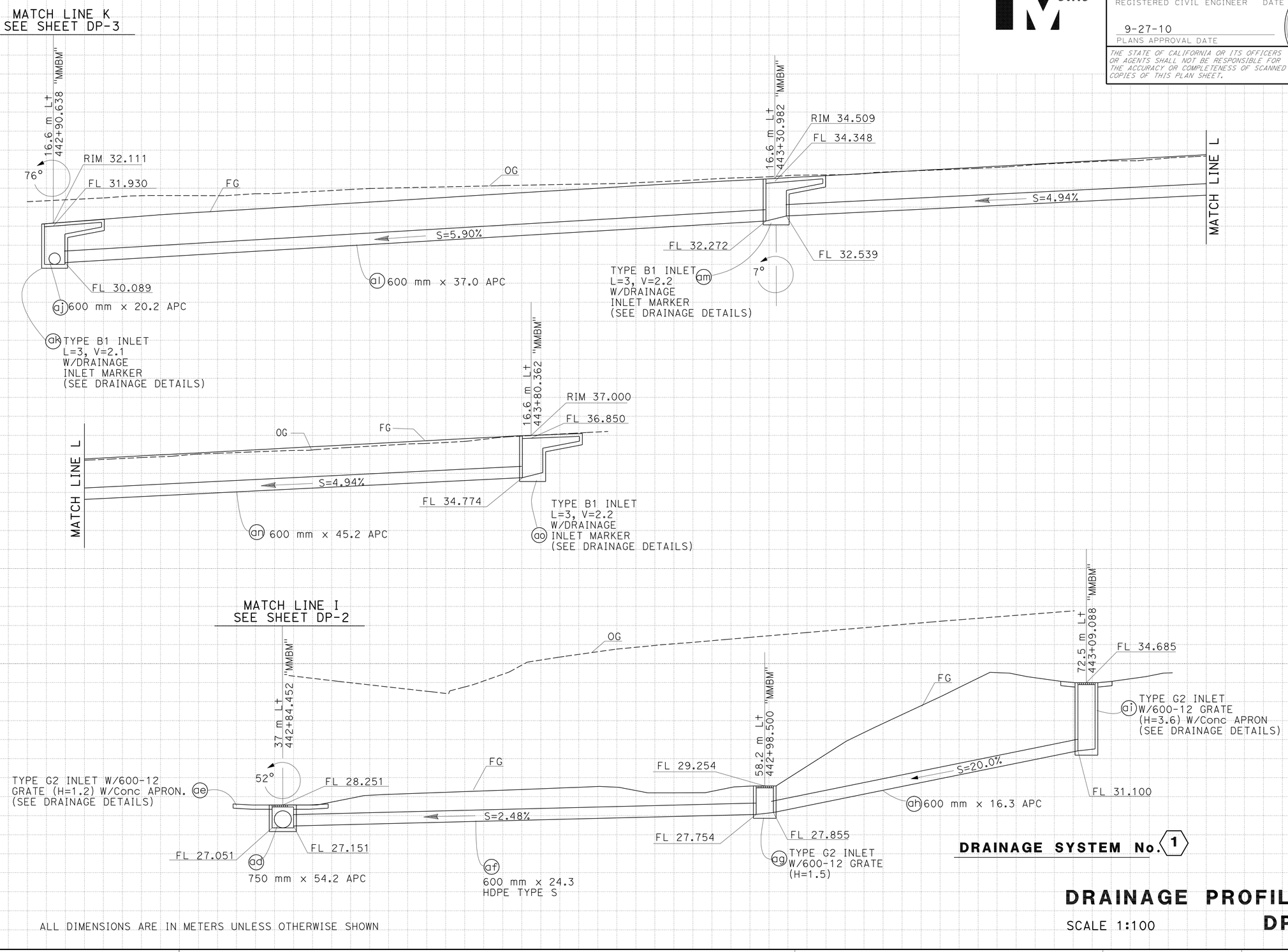

DRAINAGE SYSTEM No. 1

ALL DIMENSIONS ARE IN METERS UNLESS OTHERWISE SHOWN

DRAINAGE PROFILES

SCALE 1:100

DP-4

REVISED BY | DATE REVISED

TIMOTHY V VO | SHAHBAZ A ALVI

CALCULATED-DESIGNED BY | CHECKED BY

FUNCTIONAL SUPERVISOR: MAJID KHARRATI

STATE OF CALIFORNIA - DEPARTMENT OF TRANSPORTATION
Caltrans PROJECT DEVELOPMENT

LAST REVISION 05-30-09 | DATE PLOTTED => 29-SEP-2010 | TIME PLOTTED => 13:56

Dist	COUNTY	ROUTE	KILOMETER POST TOTAL PROJECT	SHEET No.	TOTAL SHEETS
11	SD	5,805	R49.9/R51.7, 42.6/46.5	166	886

Caltrans Metric

REGISTERED CIVIL ENGINEER 05-21-09 DATE

PLANS APPROVAL DATE 9-27-10

REGISTERED PROFESSIONAL ENGINEER TIMOTHY V VO No. 65662 Exp. 09-30-09 CIVIL STATE OF CALIFORNIA

THE STATE OF CALIFORNIA OR ITS OFFICERS OR AGENTS SHALL NOT BE RESPONSIBLE FOR THE ACCURACY OR COMPLETENESS OF SCANNED COPIES OF THIS PLAN SHEET.

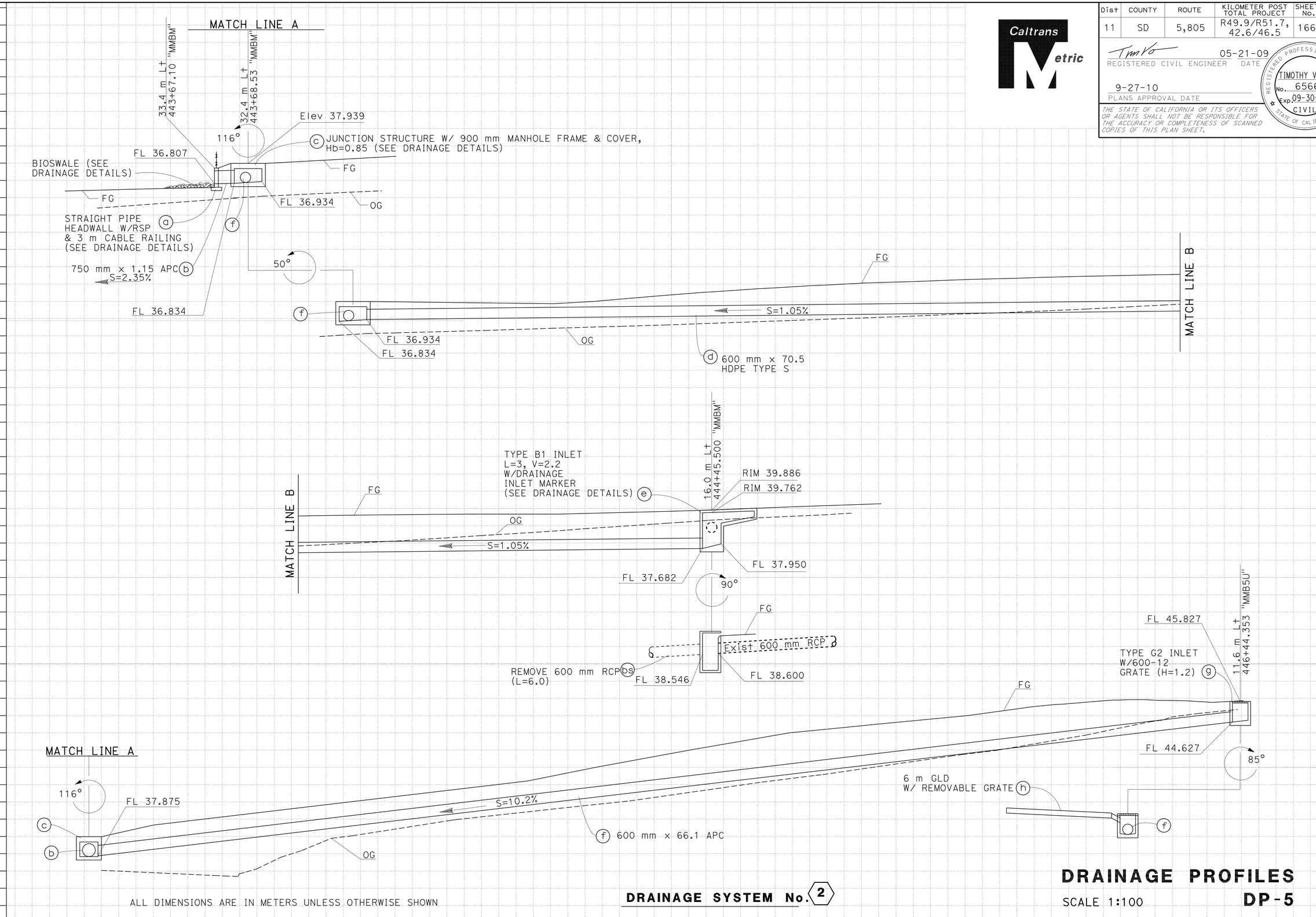

ALL DIMENSIONS ARE IN METERS UNLESS OTHERWISE SHOWN

DRAINAGE SYSTEM No. 2

DRAINAGE PROFILES

SCALE 1:100

DP-5

REVISED BY	DATE REVISED
TIMOTHY V VO	SHAHBAZ A ALVI

CALCULATED-DESIGNED BY / CHECKED BY

FUNCTIONAL SUPERVISOR: MAJID KHARRATI

STATE OF CALIFORNIA - DEPARTMENT OF TRANSPORTATION

Caltrans PROJECT DEVELOPMENT

LAST REVISION 05-30-09 DATE PLOTTED => 29-SEP-2010 TIME PLOTTED => 13:56

Dist	COUNTY	ROUTE	KILOMETER POST TOTAL PROJECT	SHEET No.	TOTAL SHEETS
11	SD	5,805	R49.9/R51.7, 42.6/46.5	167	886

Caltrans Metric

Tim Vo 05-21-09
REGISTERED CIVIL ENGINEER DATE

9-27-10
PLANS APPROVAL DATE

REGISTERED PROFESSIONAL ENGINEER TIMOTHY V VO No. 65662 Exp. 09-30-09 CIVIL STATE OF CALIFORNIA

THE STATE OF CALIFORNIA OR ITS OFFICERS OR AGENTS SHALL NOT BE RESPONSIBLE FOR THE ACCURACY OR COMPLETENESS OF SCANNED COPIES OF THIS PLAN SHEET.

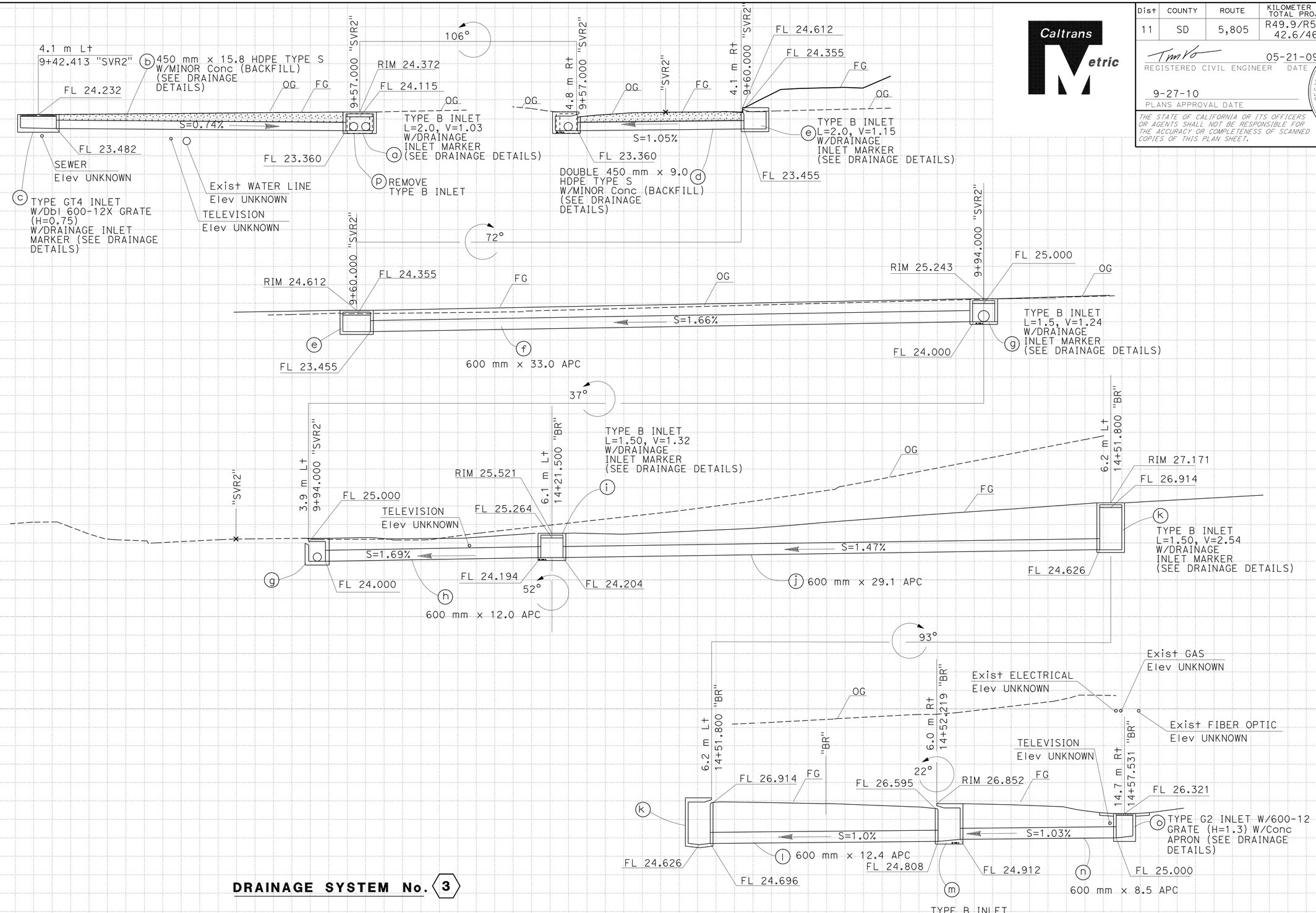

DRAINAGE SYSTEM No. 3

ALL DIMENSIONS ARE IN METERS UNLESS OTHERWISE SHOWN

DRAINAGE PROFILES

SCALE 1:100

DP-6

REVISED BY | DATE REVISED
TIMOTHY V VO | SHAHBAZ A ALVI
CALCULATED-DESIGNED BY | CHECKED BY
FUNCTIONAL SUPERVISOR | MAJID KHARRATI

STATE OF CALIFORNIA - DEPARTMENT OF TRANSPORTATION
Caltrans PROJECT DEVELOPMENT

LAST REVISION 05-30-09 DATE PLOTTED => 29-SEP-2010 TIME PLOTTED => 13:56

Dist	COUNTY	ROUTE	KILOMETER POST TOTAL PROJECT	SHEET No.	TOTAL SHEETS
11	SD	5,805	R49.9/R51.7, 42.6/46.5	168	886

Caltrans Metric

REGISTERED CIVIL ENGINEER 05-21-09 DATE

9-27-10
PLANS APPROVAL DATE

REGISTERED PROFESSIONAL ENGINEER TIMOTHY V VO No. 65662 Exp. 09-30-09 CIVIL STATE OF CALIFORNIA

THE STATE OF CALIFORNIA OR ITS OFFICERS OR AGENTS SHALL NOT BE RESPONSIBLE FOR THE ACCURACY OR COMPLETENESS OF SCANNED COPIES OF THIS PLAN SHEET.

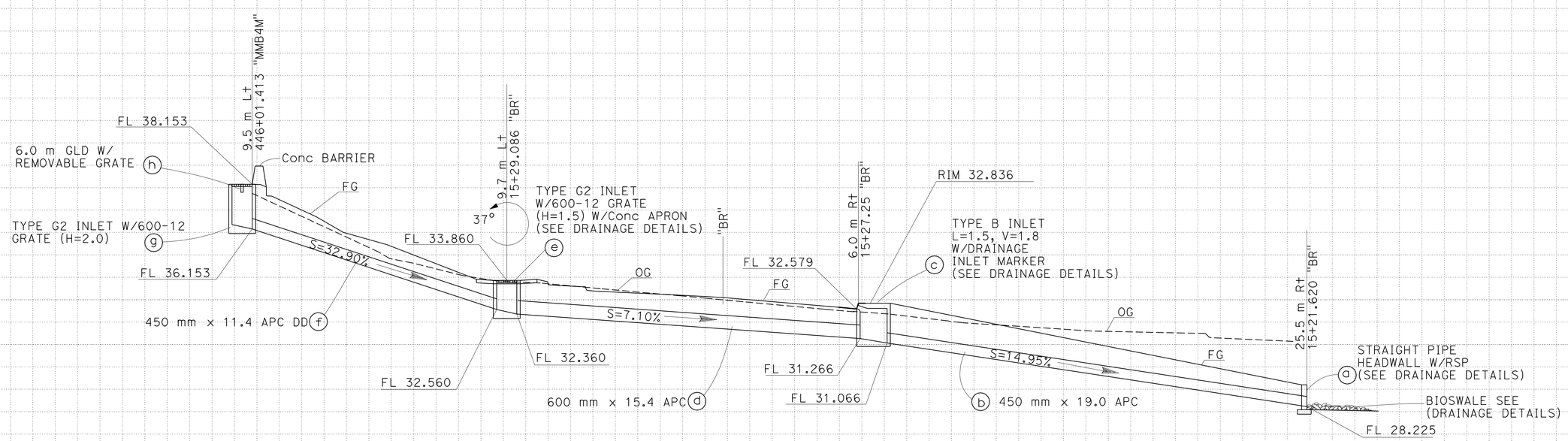

DRAINAGE SYSTEM No. 4

ALL DIMENSIONS ARE IN METERS UNLESS OTHERWISE SHOWN

DRAINAGE PROFILES

SCALE 1:100

DP-7

REVISED BY | DATE REVISED

TIMOTHY V VO | SHAHBAZ A ALVI

CALCULATED-DESIGNED BY | CHECKED BY

FUNCTIONAL SUPERVISOR: MAJID KHARRATI

STATE OF CALIFORNIA - DEPARTMENT OF TRANSPORTATION
Caltrans PROJECT DEVELOPMENT

LAST REVISION 05-30-09 | DATE PLOTTED => 29-SEP-2010 | TIME PLOTTED => 13:56

Dist	COUNTY	ROUTE	KILOMETER POST TOTAL PROJECT	SHEET No.	TOTAL SHEETS
11	SD	5,805	R49.9/R51.7, 42.6/46.5	169	886

Caltrans Metric

REGISTERED CIVIL ENGINEER 05-21-09 DATE

9-27-10
PLANS APPROVAL DATE

REGISTERED PROFESSIONAL ENGINEER TIMOTHY V VO No. 65662 Exp. 09-30-09 CIVIL STATE OF CALIFORNIA

THE STATE OF CALIFORNIA OR ITS OFFICERS OR AGENTS SHALL NOT BE RESPONSIBLE FOR THE ACCURACY OR COMPLETENESS OF SCANNED COPIES OF THIS PLAN SHEET.

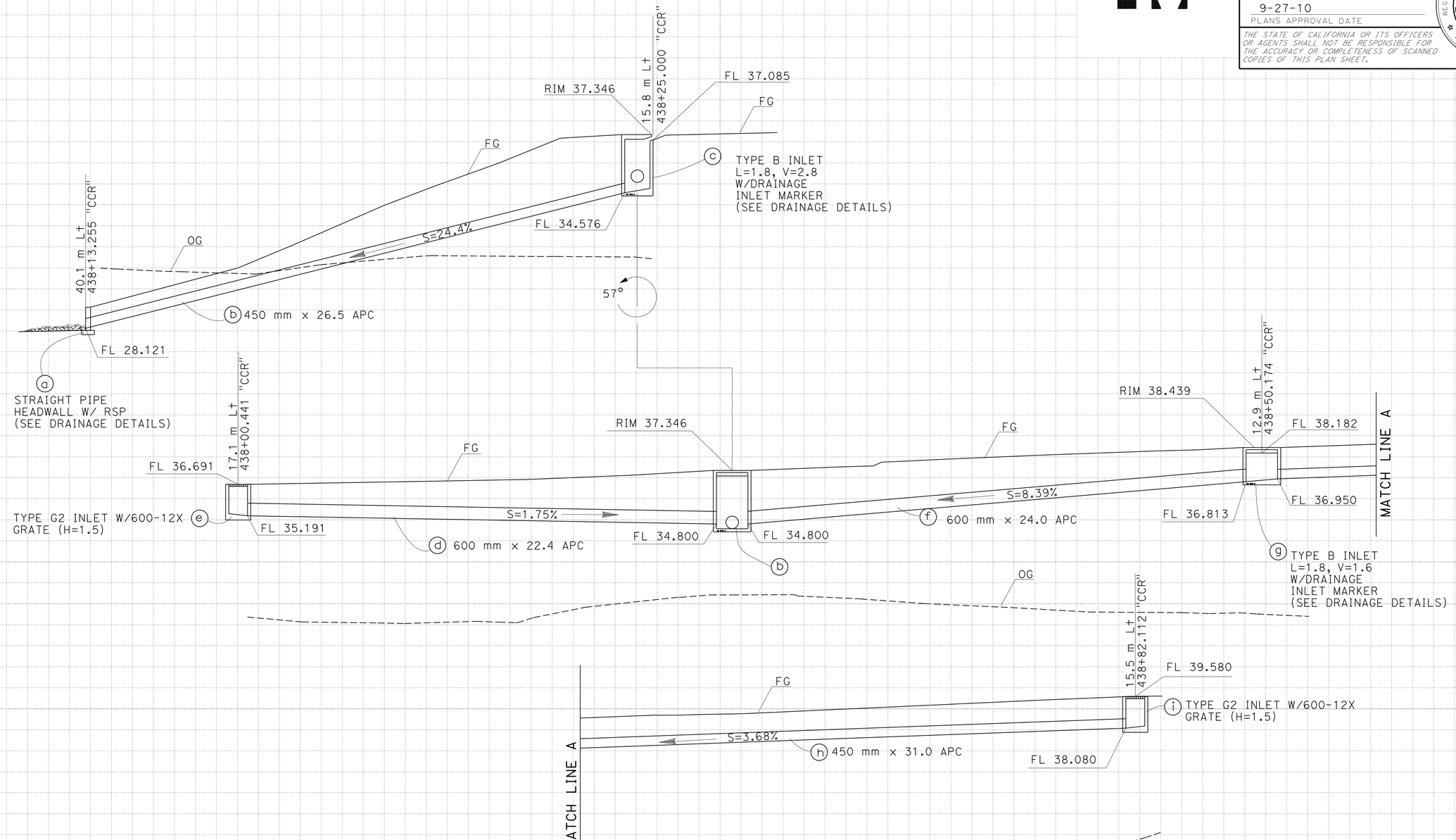

DRAINAGE SYSTEM No. 5

ALL DIMENSIONS ARE IN METERS UNLESS OTHERWISE SHOWN

DRAINAGE PROFILES

SCALE 1:100

DP-8

REVISED BY	DATE REVISED
TIMOTHY V VO	SHAHBAZ A ALVI

CALCULATED-DESIGNED BY / CHECKED BY

FUNCTIONAL SUPERVISOR: MAJID KHARRATI

STATE OF CALIFORNIA - DEPARTMENT OF TRANSPORTATION
Caltrans PROJECT DEVELOPMENT

LAST REVISION 05-30-09 DATE PLOTTED => 29-SEP-2010 TIME PLOTTED => 13:56

Dist	COUNTY	ROUTE	KILOMETER POST TOTAL PROJECT	SHEET No.	TOTAL SHEETS
11	SD	5,805	R49.9/R51.7, 42.6/46.5	170	886

Caltrans Metric

REGISTERED CIVIL ENGINEER 05-21-09 DATE

PLANS APPROVAL DATE 9-27-10

REGISTERED PROFESSIONAL ENGINEER TIMOTHY V VO No. 65662 Exp. 09-30-09 CIVIL STATE OF CALIFORNIA

THE STATE OF CALIFORNIA OR ITS OFFICERS OR AGENTS SHALL NOT BE RESPONSIBLE FOR THE ACCURACY OR COMPLETENESS OF SCANNED COPIES OF THIS PLAN SHEET.

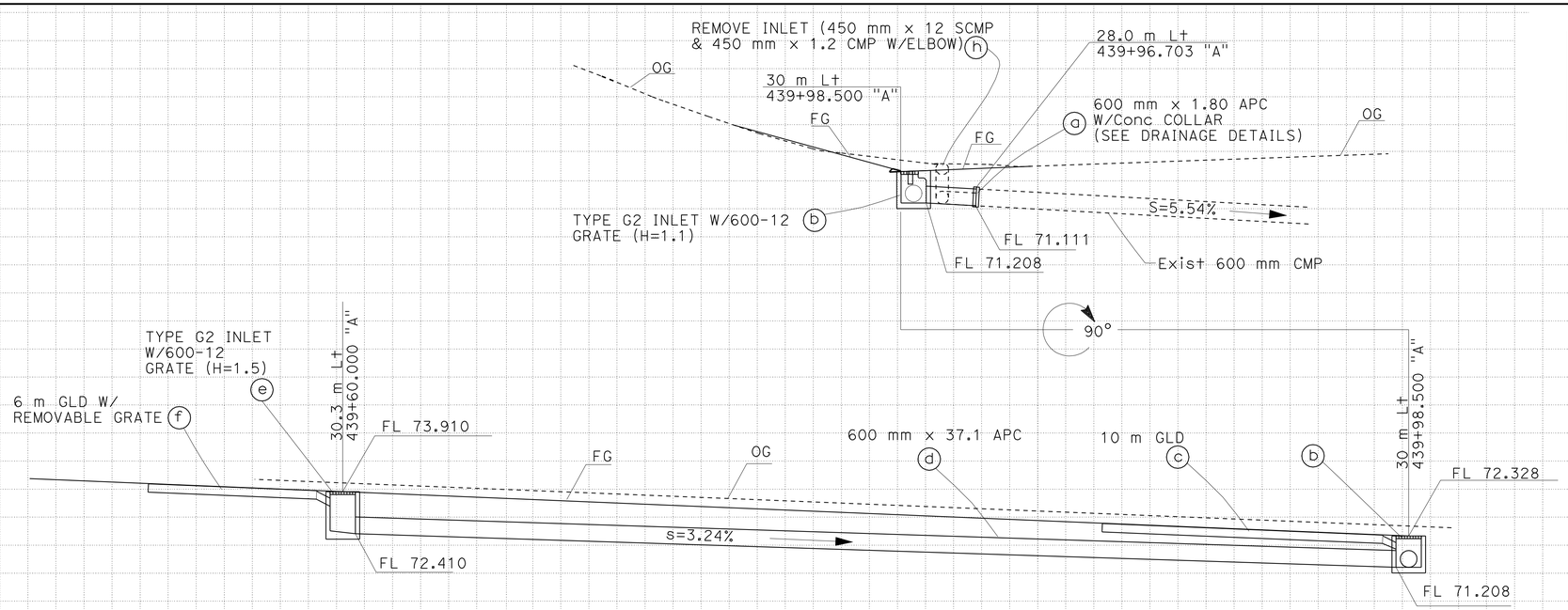

DRAINAGE SYSTEM No. 6A

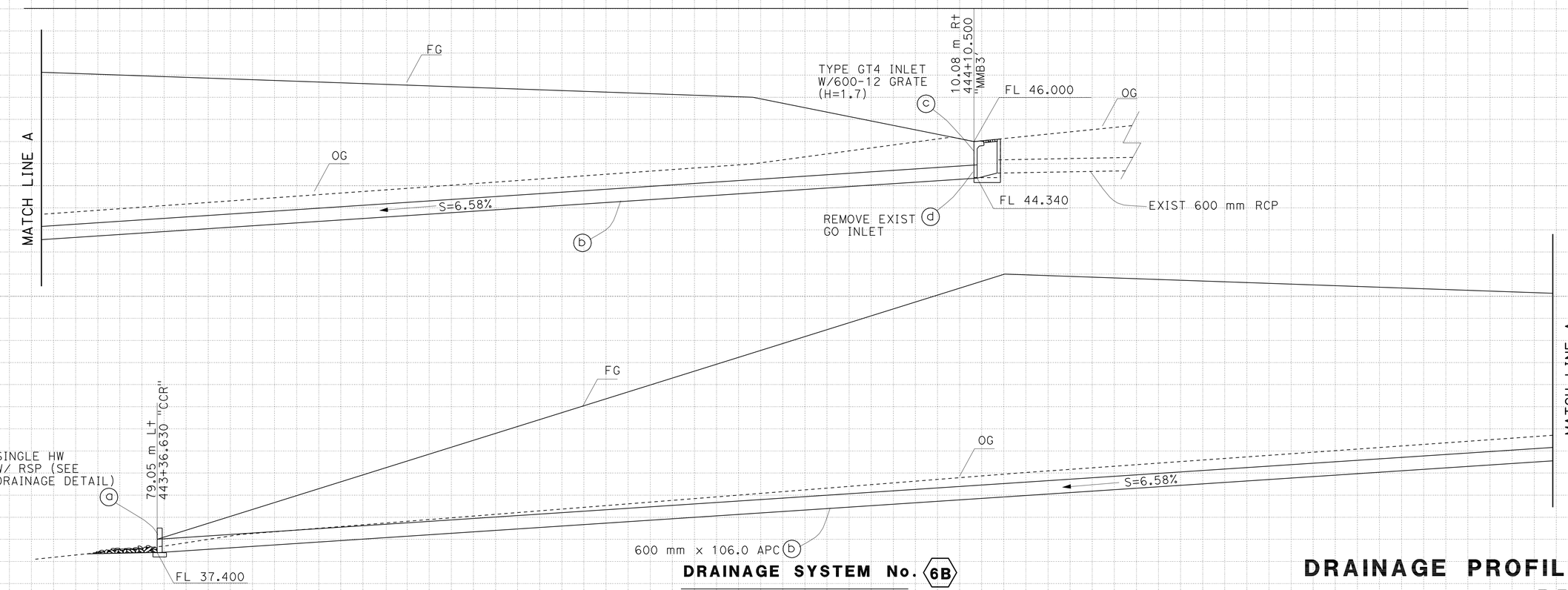

DRAINAGE SYSTEM No. 6B

DRAINAGE PROFILES

SCALE 1:100

DP-9

ALL DIMENSIONS ARE IN METERS UNLESS OTHERWISE SHOWN

REVISED BY | DATE REVISED

TIMOTHY V VO | SHAHBAZ A ALVI

CALCULATED-DESIGNED BY | CHECKED BY

FUNCTIONAL SUPERVISOR: MAJID KHARRATI

STATE OF CALIFORNIA - DEPARTMENT OF TRANSPORTATION

Caltrans PROJECT DEVELOPMENT

LAST REVISION 04-14-10 | DATE PLOTTED => 29-SEP-2010 | TIME PLOTTED => 13:56

Dist	COUNTY	ROUTE	KILOMETER POST TOTAL PROJECT	SHEET No.	TOTAL SHEETS
11	SD	5,805	R49.9/R51.7, 42.6/46.5	171	886

Tim Vo 05-21-09
REGISTERED CIVIL ENGINEER DATE

9-27-10
PLANS APPROVAL DATE

REGISTERED PROFESSIONAL ENGINEER TIMOTHY V VO No. 65662 Exp. 09-30-09 CIVIL STATE OF CALIFORNIA

THE STATE OF CALIFORNIA OR ITS OFFICERS OR AGENTS SHALL NOT BE RESPONSIBLE FOR THE ACCURACY OR COMPLETENESS OF SCANNED COPIES OF THIS PLAN SHEET.

Caltrans Metric

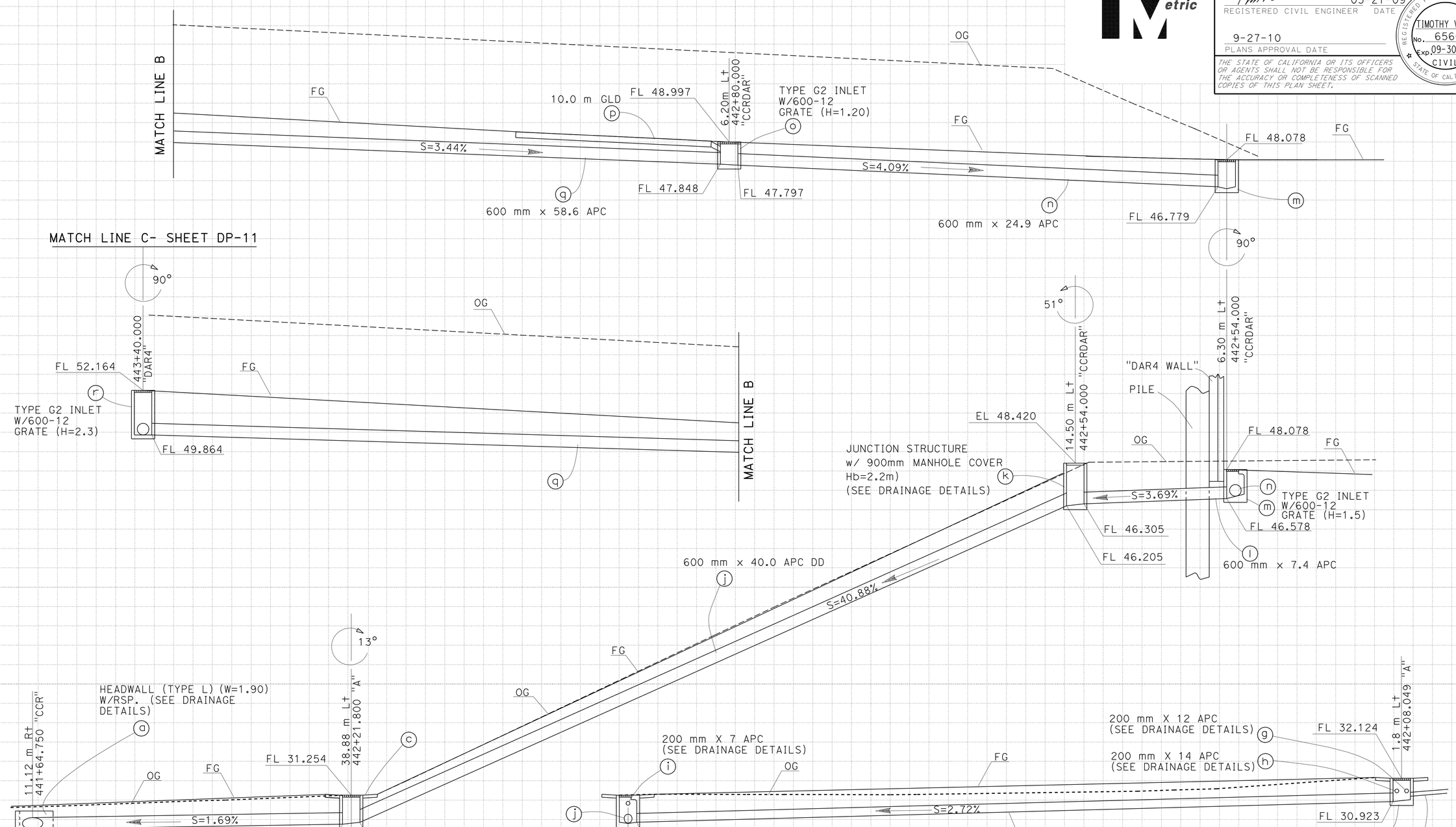

DRAINAGE SYSTEM No. 6

DRAINAGE PROFILES

SCALE 1:100

DP-10

ALL DIMENSIONS ARE IN METERS UNLESS OTHERWISE SHOWN

REVISED BY	DATE REVISED
TIMOTHY V VO	SHAHBAZ A ALVI

CALCULATED-DESIGNED BY / CHECKED BY

FUNCTIONAL SUPERVISOR: MAJID KHARRATI

STATE OF CALIFORNIA - DEPARTMENT OF TRANSPORTATION
Caltrans PROJECT DEVELOPMENT

LAST REVISION 04-14-10 DATE PLOTTED => 29-SEP-2010 TIME PLOTTED => 14:50

Dist	COUNTY	ROUTE	KILOMETER POST TOTAL PROJECT	SHEET No.	TOTAL SHEETS
11	SD	5,805	R49.9/R51.7, 42.6/46.5	172	886

Caltrans Metric

Tim Vo 05-21-09
REGISTERED CIVIL ENGINEER DATE

9-27-10
PLANS APPROVAL DATE

REGISTERED PROFESSIONAL ENGINEER TIMOTHY V VO No. 65662 Exp. 09-30-09 CIVIL STATE OF CALIFORNIA

THE STATE OF CALIFORNIA OR ITS OFFICERS OR AGENTS SHALL NOT BE RESPONSIBLE FOR THE ACCURACY OR COMPLETENESS OF SCANNED COPIES OF THIS PLAN SHEET.

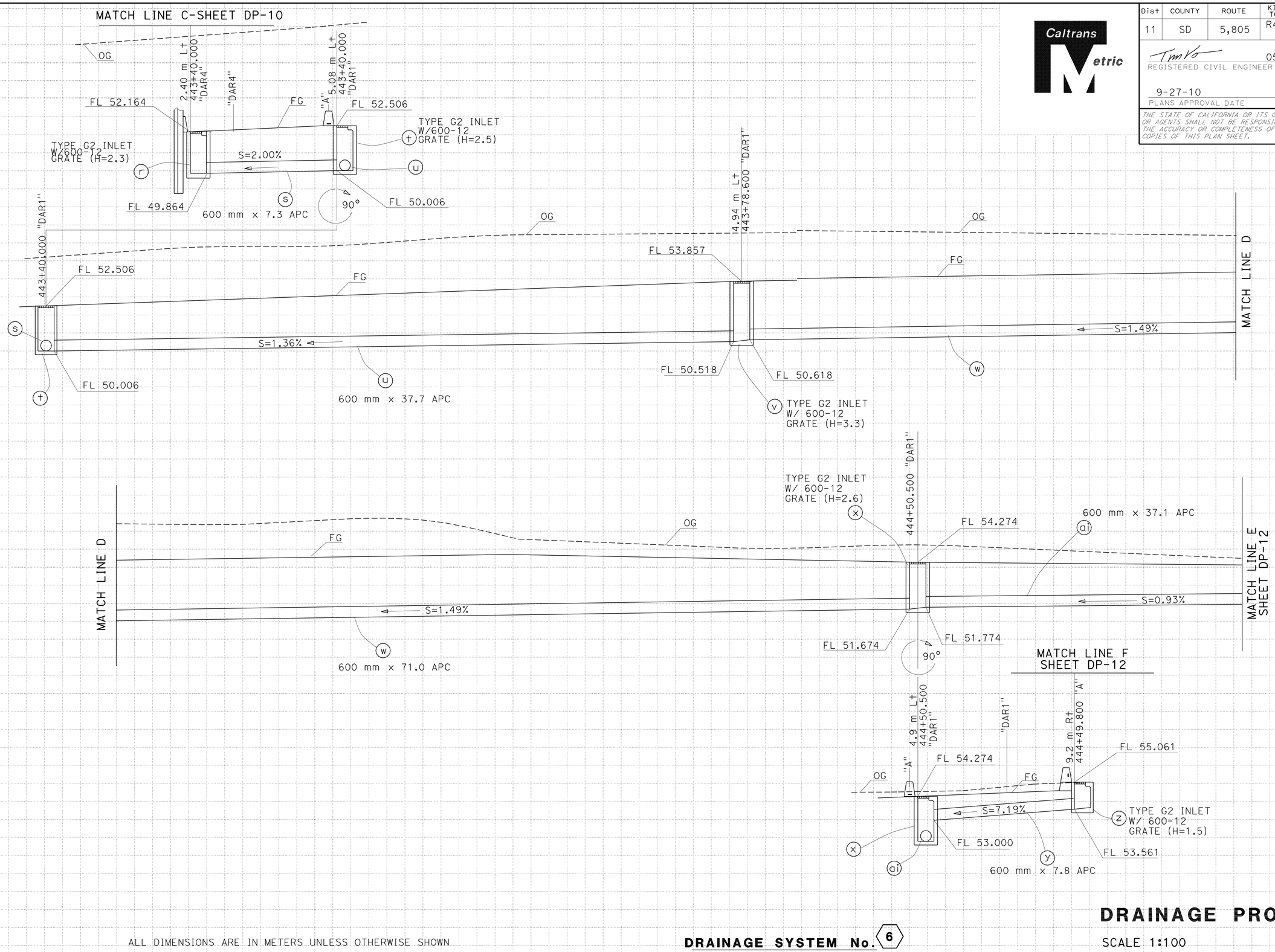

ALL DIMENSIONS ARE IN METERS UNLESS OTHERWISE SHOWN

DRAINAGE SYSTEM No. 6

DRAINAGE PROFILES

SCALE 1:100

DP-11

REVISED BY | DATE REVISED

TIMOTHY V VO | SHAHBAZ A ALVI

CALCULATED-DESIGNED BY | CHECKED BY

FUNCTIONAL SUPERVISOR: MAJID KHARRATI

STATE OF CALIFORNIA - DEPARTMENT OF TRANSPORTATION
Caltrans PROJECT DEVELOPMENT

LAST REVISION 04-14-10 | DATE PLOTTED => 29-SEP-2010 | TIME PLOTTED => 14:50

Dist	COUNTY	ROUTE	KILOMETER POST TOTAL PROJECT	SHEET No.	TOTAL SHEETS
11	SD	5,805	R49.9/R51.7, 42.6/46.5	173	886

Caltrans Metric

Tim Vo 05-21-09
REGISTERED CIVIL ENGINEER DATE

9-27-10
PLANS APPROVAL DATE

REGISTERED PROFESSIONAL ENGINEER TIMOTHY V VO No. 65662 Exp. 09-30-09 CIVIL STATE OF CALIFORNIA

THE STATE OF CALIFORNIA OR ITS OFFICERS OR AGENTS SHALL NOT BE RESPONSIBLE FOR THE ACCURACY OR COMPLETENESS OF SCANNED COPIES OF THIS PLAN SHEET.

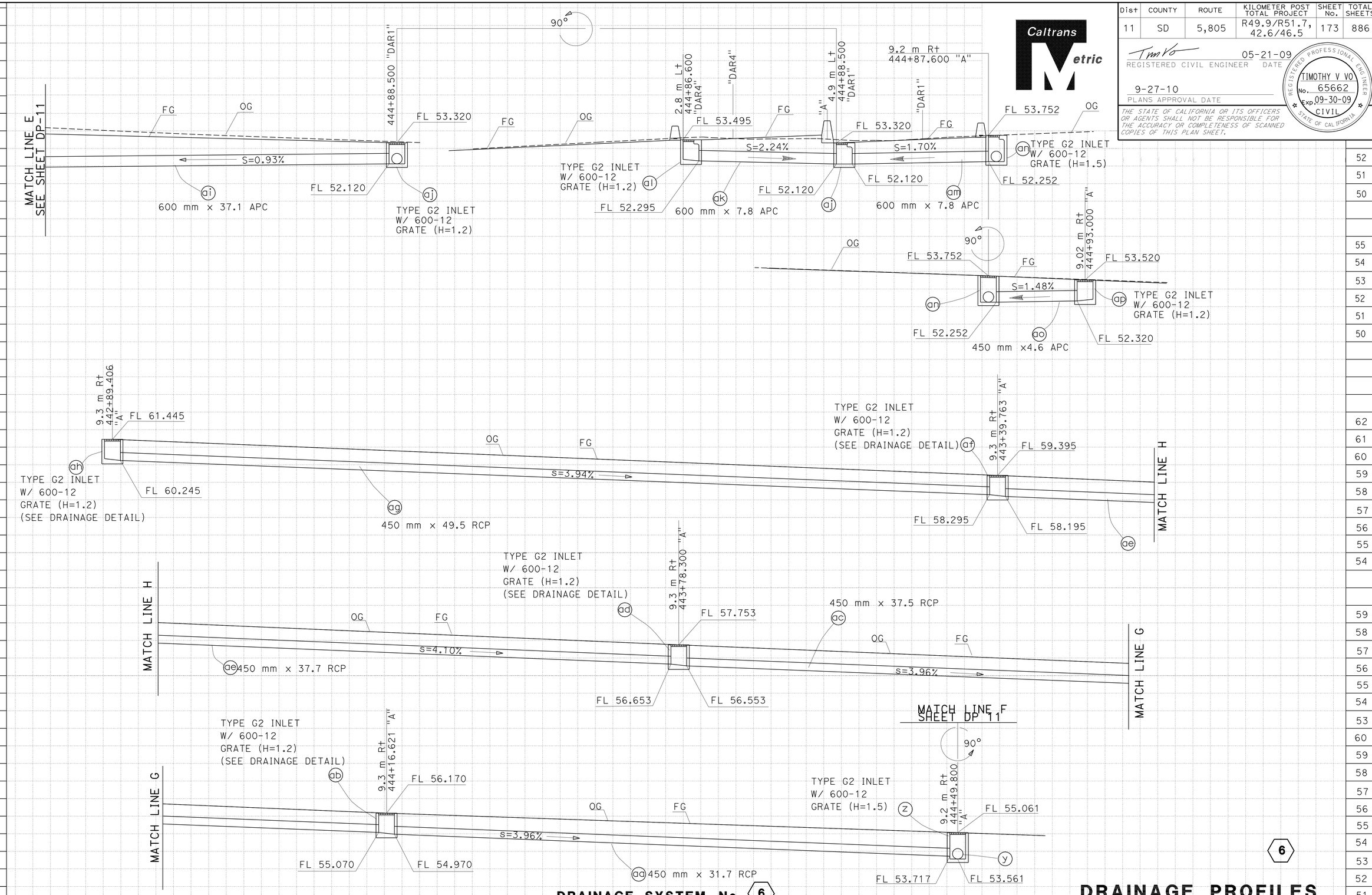

DRAINAGE SYSTEM No. 6

ALL DIMENSIONS ARE IN METERS UNLESS OTHERWISE SHOWN

DRAINAGE PROFILES

SCALE 1:100

DP-12

6

REVISED BY | DATE REVISED
TIMOTHY V VO | SHAHBAZ A ALVI
CALCULATED-DESIGNED BY | CHECKED BY
FUNCTIONAL SUPERVISOR | MAJID KHARRATI

STATE OF CALIFORNIA - DEPARTMENT OF TRANSPORTATION
Caltrans PROJECT DEVELOPMENT

LAST REVISION 04-14-10 | DATE PLOTTED => 29-SEP-2010 | TIME PLOTTED => 14:50

Dist	COUNTY	ROUTE	KILOMETER POST TOTAL PROJECT	SHEET No.	TOTAL SHEETS
11	SD	5,805	R49.9/R51.7, 42.6/46.5	174	886

Tim Vo 05-21-09
REGISTERED CIVIL ENGINEER DATE

9-27-10
PLANS APPROVAL DATE

REGISTERED PROFESSIONAL ENGINEER TIMOTHY V VO No. 65662 Exp. 09-30-09 CIVIL STATE OF CALIFORNIA

THE STATE OF CALIFORNIA OR ITS OFFICERS OR AGENTS SHALL NOT BE RESPONSIBLE FOR THE ACCURACY OR COMPLETENESS OF SCANNED COPIES OF THIS PLAN SHEET.

Caltrans Metric

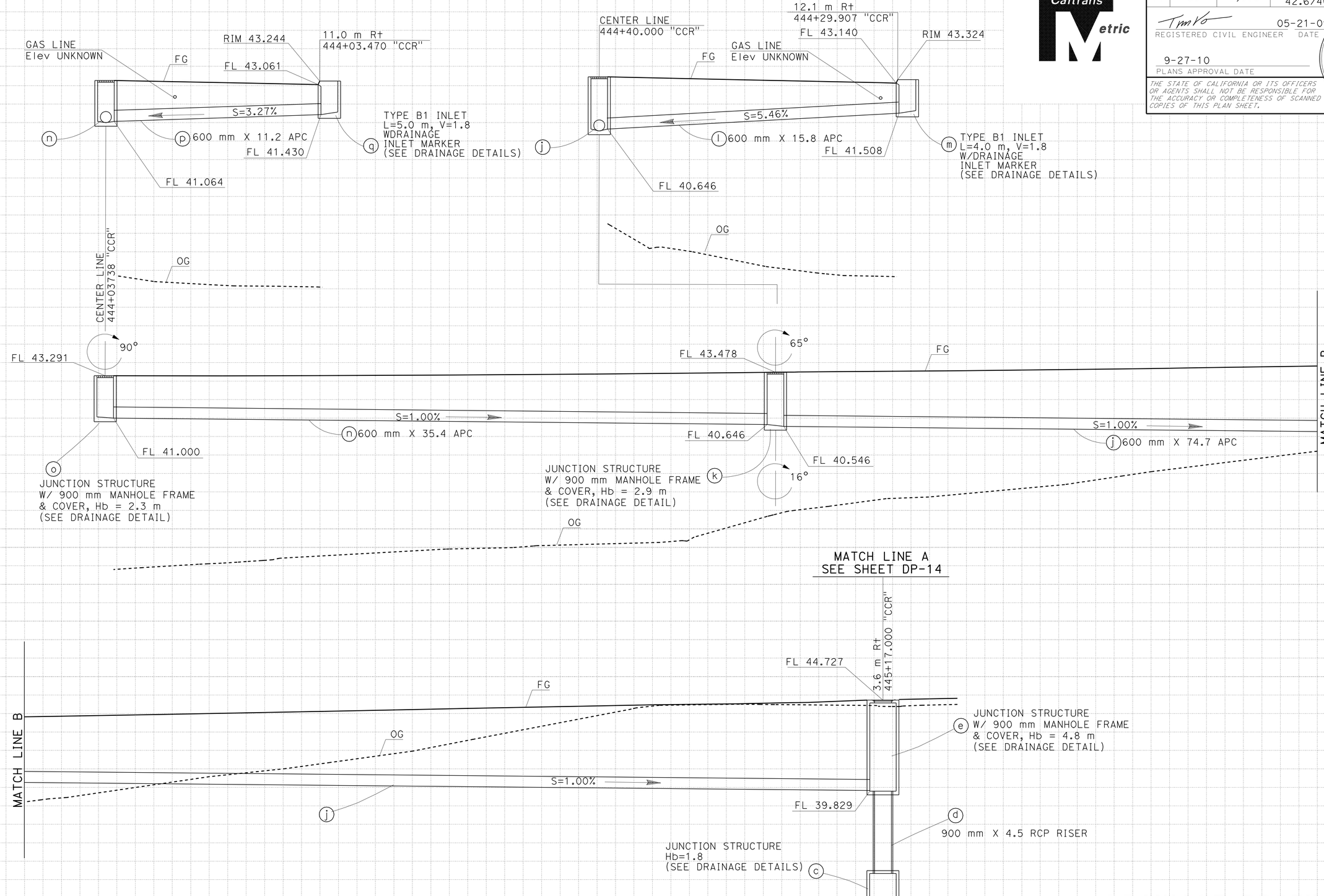

DRAINAGE SYSTEM No. 7

ALL DIMENSIONS ARE IN METERS UNLESS OTHERWISE SHOWN

DRAINAGE PROFILES

SCALE 1:100

DP-13

REVISED BY | DATE REVISED

TIMOTHY V VO | SHAHBAZ A ALVI

CALCULATED-DESIGNED BY | CHECKED BY

FUNCTIONAL SUPERVISOR: MAJID KHARRATI

STATE OF CALIFORNIA - DEPARTMENT OF TRANSPORTATION
Caltrans PROJECT DEVELOPMENT

LAST REVISION 05-30-09 | DATE PLOTTED => 29-SEP-2010 | TIME PLOTTED => 13:56

Dist	COUNTY	ROUTE	KILOMETER POST TOTAL PROJECT	SHEET No.	TOTAL SHEETS
11	SD	5,805	R49.9/R51.7, 42.6/46.5	175	886

Caltrans Metric

REGISTERED CIVIL ENGINEER 05-21-09 DATE

PLANS APPROVAL DATE 9-27-10

REGISTERED PROFESSIONAL ENGINEER TIMOTHY V VO No. 65662 Exp. 09-30-09 CIVIL STATE OF CALIFORNIA

THE STATE OF CALIFORNIA OR ITS OFFICERS OR AGENTS SHALL NOT BE RESPONSIBLE FOR THE ACCURACY OR COMPLETENESS OF SCANNED COPIES OF THIS PLAN SHEET.

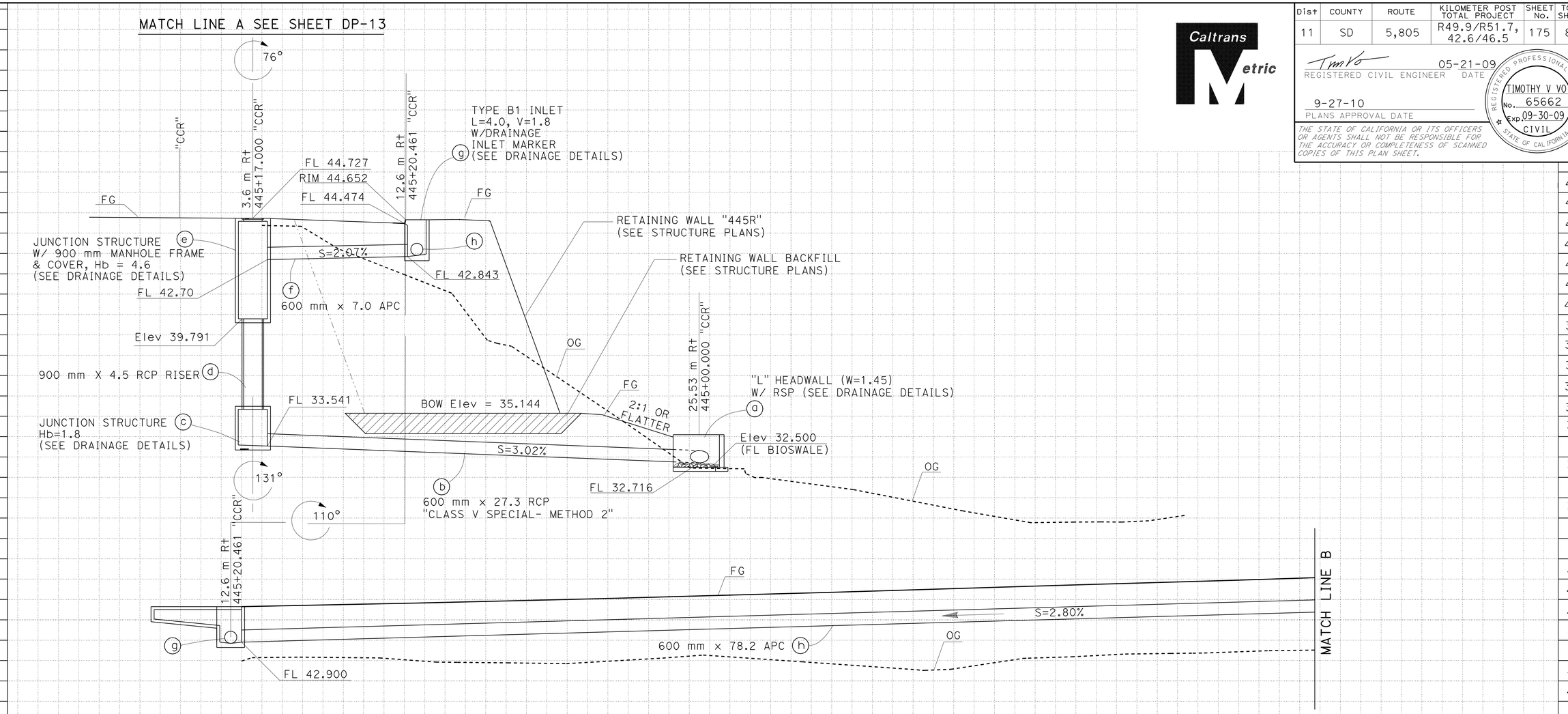

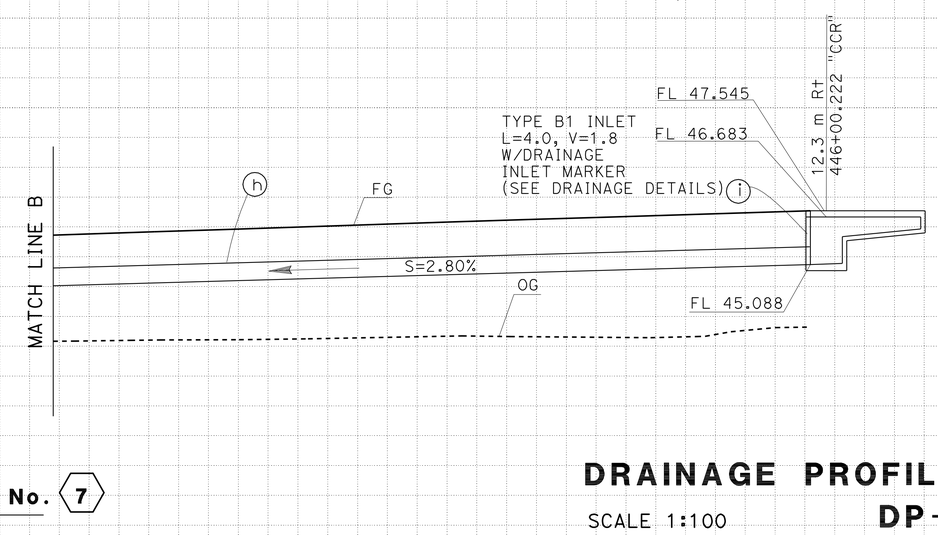

ALL DIMENSIONS ARE IN METERS UNLESS OTHERWISE SHOWN

DRAINAGE SYSTEM No. 7

DRAINAGE PROFILES

SCALE 1:100

DP-14

STATE OF CALIFORNIA - DEPARTMENT OF TRANSPORTATION

Caltrans PROJECT DEVELOPMENT

FUNCTIONAL SUPERVISOR: MAJID KHARRATI

CALCULATED-DESIGNED BY: TIMOTHY V VO

CHECKED BY: SHAHBAZ A ALVI

REVISED BY / DATE REVISED

LAST REVISION 05-30-09 DATE PLOTTED => 29-SEP-2010 TIME PLOTTED => 13:56

BORDER LAST REVISED 4/11/2008

RELATIVE BORDER SCALE IS IN MILLIMETERS 0 20 40 60 80

USERNAME => trmikesl
DGN FILE => b2t040lb014.dgn

CU 11275

EA 2T0401

Dist	COUNTY	ROUTE	KILOMETER POST TOTAL PROJECT	SHEET No.	TOTAL SHEETS
11	SD	5,805	R49.9/R51.7, 42.6/46.5	176	886

Caltrans Metric

Tim Vo 05-21-09
REGISTERED CIVIL ENGINEER DATE

9-27-10
PLANS APPROVAL DATE

REGISTERED PROFESSIONAL ENGINEER TIMOTHY V VO No. 65662 Exp. 09-30-09 CIVIL STATE OF CALIFORNIA

THE STATE OF CALIFORNIA OR ITS OFFICERS OR AGENTS SHALL NOT BE RESPONSIBLE FOR THE ACCURACY OR COMPLETENESS OF SCANNED COPIES OF THIS PLAN SHEET.

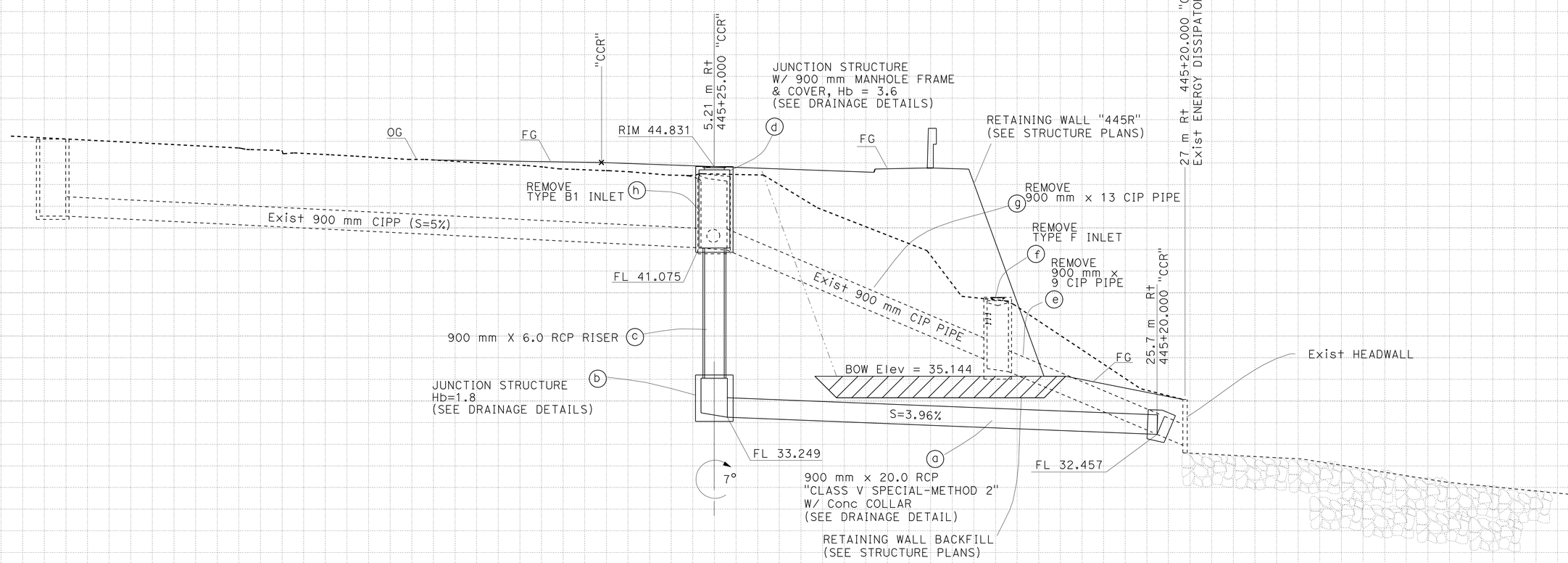

DRAINAGE SYSTEM No. 7A

ALL DIMENSIONS ARE IN METERS UNLESS OTHERWISE SHOWN

DRAINAGE PROFILES

SCALE 1:100

DP-15

REVISED BY | DATE REVISED

TIMOTHY V VO | SHAHBAZ A ALVI

CALCULATED-DESIGNED BY | CHECKED BY

FUNCTIONAL SUPERVISOR: MAJID KHARRATI

STATE OF CALIFORNIA - DEPARTMENT OF TRANSPORTATION
Caltrans PROJECT DEVELOPMENT

LAST REVISION 05-30-09 | DATE PLOTTED => 29-SEP-2010 | TIME PLOTTED => 13:56

Dist	COUNTY	ROUTE	KILOMETER POST TOTAL PROJECT	SHEET No.	TOTAL SHEETS
11	SD	5,805	R49.9/R51.7, 42.6/46.5	177	886

Caltrans Metric

Tim Vo 05-21-09
REGISTERED CIVIL ENGINEER DATE

9-27-10
PLANS APPROVAL DATE

REGISTERED PROFESSIONAL ENGINEER TIMOTHY V VO No. 65662 Exp. 09-30-09 CIVIL STATE OF CALIFORNIA

THE STATE OF CALIFORNIA OR ITS OFFICERS OR AGENTS SHALL NOT BE RESPONSIBLE FOR THE ACCURACY OR COMPLETENESS OF SCANNED COPIES OF THIS PLAN SHEET.

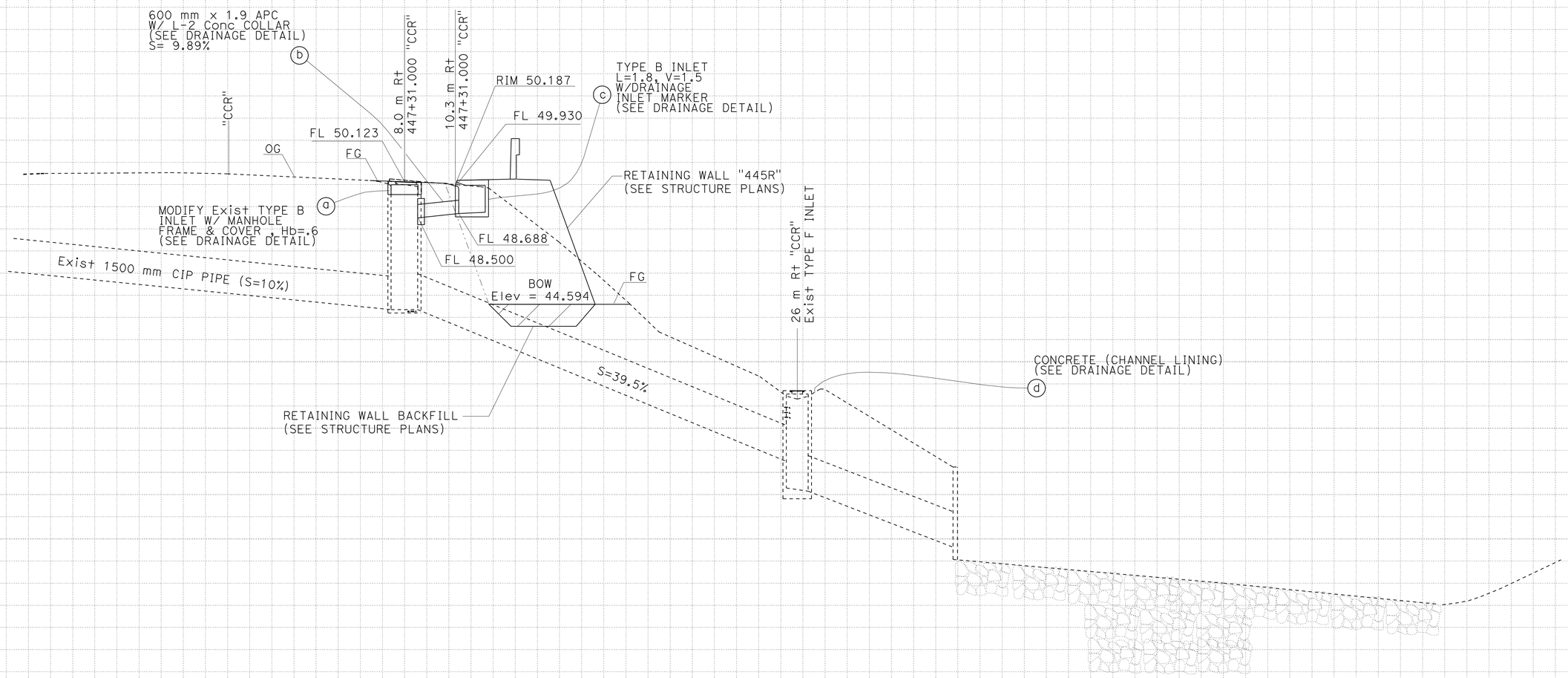

ALL DIMENSIONS ARE IN METERS UNLESS OTHERWISE SHOWN

DRAINAGE SYSTEM No. 7B

DRAINAGE PROFILES

SCALE 1:100

DP-16

STATE OF CALIFORNIA - DEPARTMENT OF TRANSPORTATION
Caltrans PROJECT DEVELOPMENT

FUNCTIONAL SUPERVISOR: MAJID KHARRATI
CALCULATED-DESIGNED BY: TIMOTHY V VO
CHECKED BY: SHAHBAZ A ALVI
REVISED BY / DATE REVISED

LAST REVISION 05-30-09 DATE PLOTTED => 29-SEP-2010 TIME PLOTTED => 13:57

Dist	COUNTY	ROUTE	KILOMETER POST TOTAL PROJECT	SHEET No.	TOTAL SHEETS
11	SD	5,805	R49.9/R51.7, 42.6/46.5	178	886

Caltrans Metric

Tim Vo 05-21-09
REGISTERED CIVIL ENGINEER DATE

9-27-10
PLANS APPROVAL DATE

REGISTERED PROFESSIONAL ENGINEER TIMOTHY V VO No. 65662 Exp. 09-30-09 CIVIL STATE OF CALIFORNIA

THE STATE OF CALIFORNIA OR ITS OFFICERS OR AGENTS SHALL NOT BE RESPONSIBLE FOR THE ACCURACY OR COMPLETENESS OF SCANNED COPIES OF THIS PLAN SHEET.

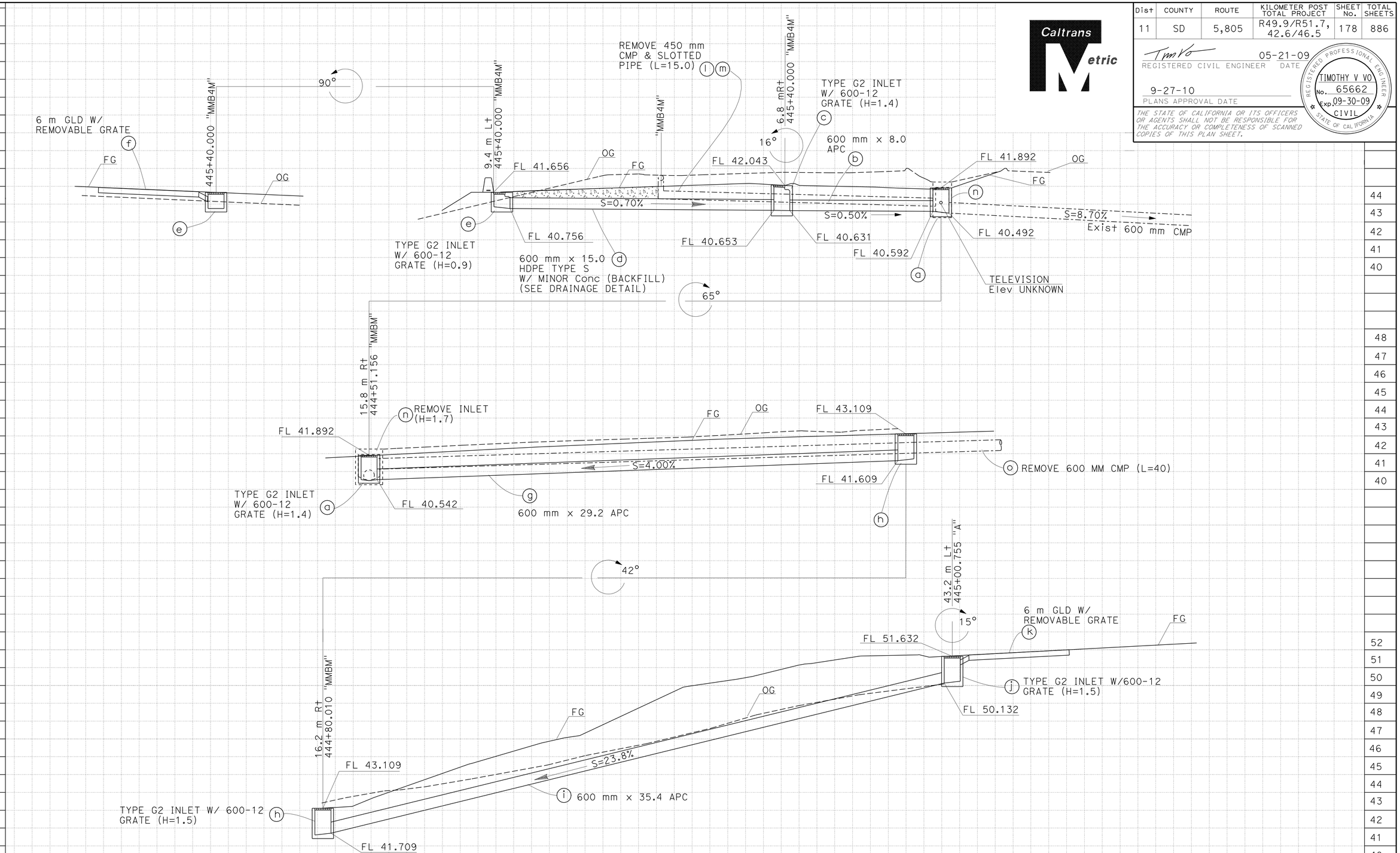

DRAINAGE SYSTEM No. 8

ALL DIMENSIONS ARE IN METERS UNLESS OTHERWISE SHOWN

DRAINAGE PROFILES

SCALE 1:100

DP-17

REVISED BY | DATE REVISED

TIMOTHY V VO | SHAHBAZ A ALVI

CALCULATED-DESIGNED BY | CHECKED BY

FUNCTIONAL SUPERVISOR: MAJID KHARRATI

STATE OF CALIFORNIA - DEPARTMENT OF TRANSPORTATION
Caltrans PROJECT DEVELOPMENT

LAST REVISION 05-30-09 | DATE PLOTTED => 29-SEP-2010 | TIME PLOTTED => 13:57

Dist	COUNTY	ROUTE	KILOMETER POST TOTAL PROJECT	SHEET No.	TOTAL SHEETS
11	SD	5,805	R49.9/R51.7, 42.6/46.5	179	886

REGISTERED CIVIL ENGINEER 05-20-09 DATE

9-27-10
PLANS APPROVAL DATE

REGISTERED PROFESSIONAL ENGINEER SHAHBAZ A ALVI No. 55293 Exp. 12-31-10 CIVIL STATE OF CALIFORNIA

THE STATE OF CALIFORNIA OR ITS OFFICERS OR AGENTS SHALL NOT BE RESPONSIBLE FOR THE ACCURACY OR COMPLETENESS OF SCANNED COPIES OF THIS PLAN SHEET.

Caltrans Metric

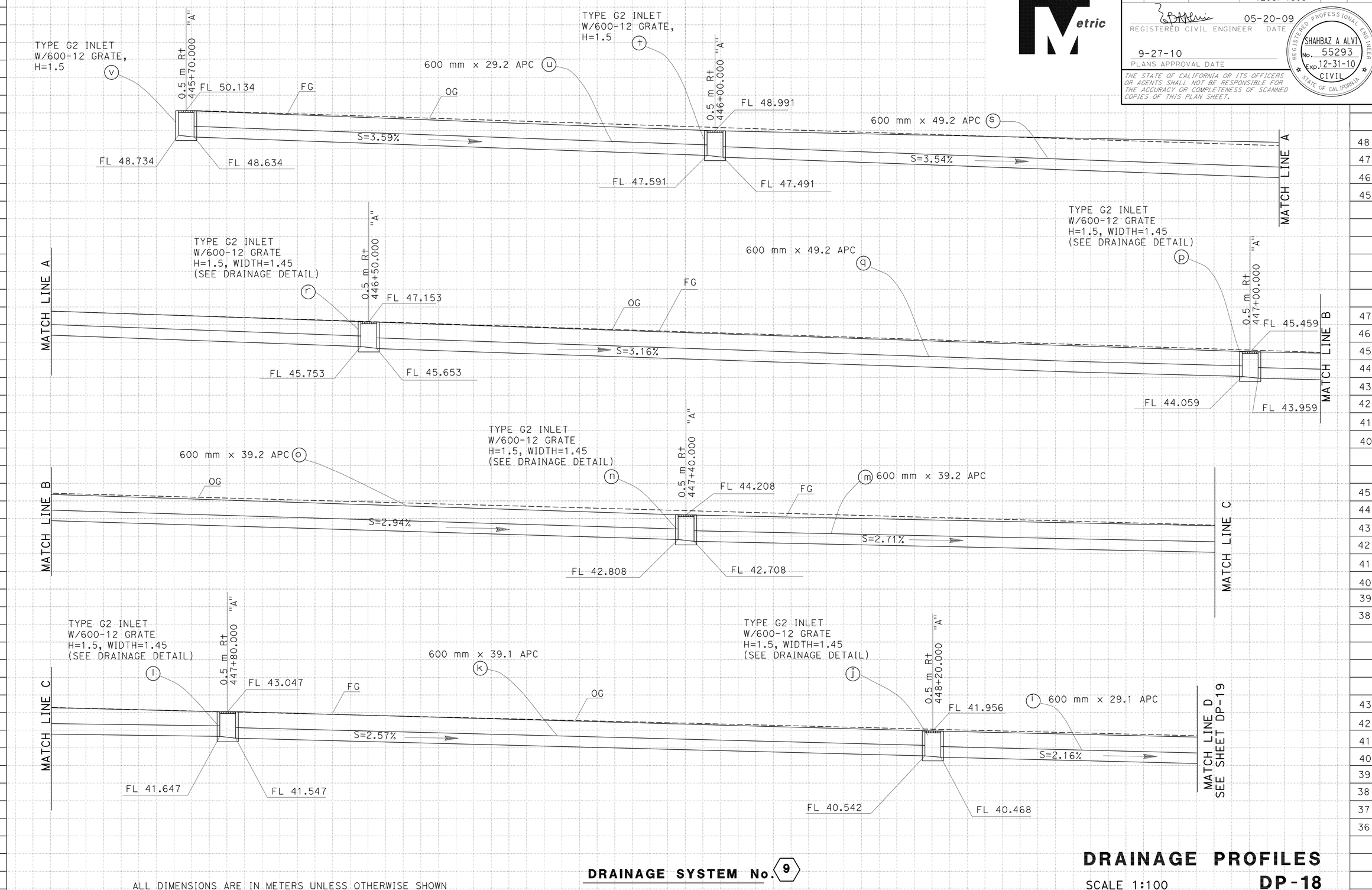

ALL DIMENSIONS ARE IN METERS UNLESS OTHERWISE SHOWN

DRAINAGE SYSTEM No. 9

DRAINAGE PROFILES

SCALE 1:100

DP-18

STATE OF CALIFORNIA - DEPARTMENT OF TRANSPORTATION
Caltrans PROJECT DEVELOPMENT

FUNCTIONAL SUPERVISOR: MAJID KHARRATI
CALCULATED-DESIGNED BY: SHAHBAZ A ALVI
CHECKED BY: THEO AQUINO
REVISED BY / DATE REVISED

LAST REVISION 05-30-09 DATE PLOTTED => 29-SEP-2010 TIME PLOTTED => 13:57

Dist	COUNTY	ROUTE	KILOMETER POST TOTAL PROJECT	SHEET No.	TOTAL SHEETS
11	SD	5,805	R49.9/R51.7, 42.6/46.5	180	886

REGISTERED CIVIL ENGINEER 05-20-09 DATE

9-27-10
PLANS APPROVAL DATE

REGISTERED PROFESSIONAL ENGINEER SHAHBAZ A ALVI No. 55293 Exp. 12-31-10 CIVIL STATE OF CALIFORNIA

THE STATE OF CALIFORNIA OR ITS OFFICERS OR AGENTS SHALL NOT BE RESPONSIBLE FOR THE ACCURACY OR COMPLETENESS OF SCANNED COPIES OF THIS PLAN SHEET.

Caltrans Metric

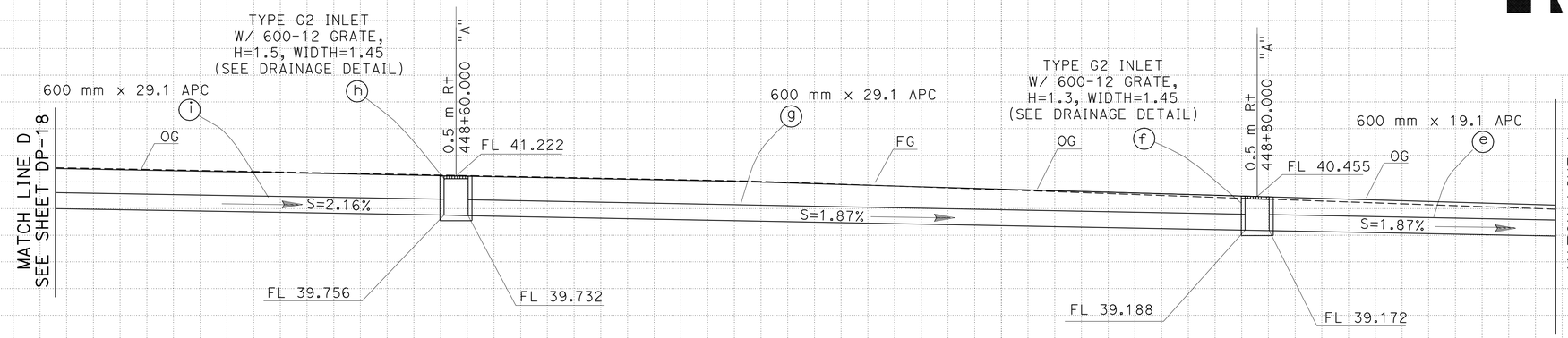

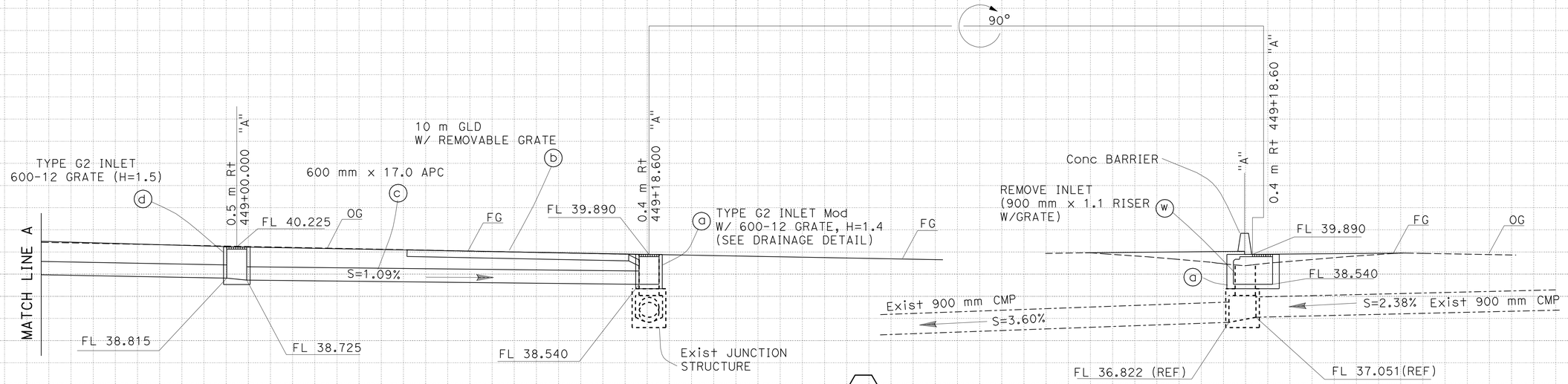

DRAINAGE SYSTEM No. 9

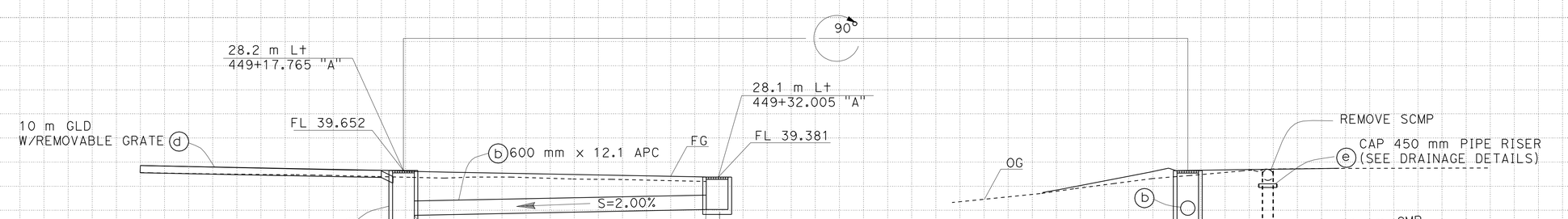

DRAINAGE SYSTEM No. 9A

ALL DIMENSIONS ARE IN METERS UNLESS OTHERWISE SHOWN

DRAINAGE PROFILES

SCALE 1:100

DP-19

REVISED BY | DATE REVISED

THEO AQUINO | SHAHBAZ A ALVI

CALCULATED-DESIGNED BY | CHECKED BY

FUNCTIONAL SUPERVISOR: MAJID KHARRATI

STATE OF CALIFORNIA - DEPARTMENT OF TRANSPORTATION
Caltrans PROJECT DEVELOPMENT

LAST REVISION 05-30-09 | DATE PLOTTED => 29-SEP-2010 | TIME PLOTTED => 13:57

Dist	COUNTY	ROUTE	KILOMETER POST TOTAL PROJECT	SHEET No.	TOTAL SHEETS
11	SD	5,805	R49.9/R51.7, 42.6/46.5	181	886

REGISTERED CIVIL ENGINEER 05-20-09 DATE

9-27-10
PLANS APPROVAL DATE

REGISTERED PROFESSIONAL ENGINEER SHAHBAZ A ALVI No. 55293 Exp. 12-31-10 CIVIL STATE OF CALIFORNIA

THE STATE OF CALIFORNIA OR ITS OFFICERS OR AGENTS SHALL NOT BE RESPONSIBLE FOR THE ACCURACY OR COMPLETENESS OF SCANNED COPIES OF THIS PLAN SHEET.

Caltrans Metric

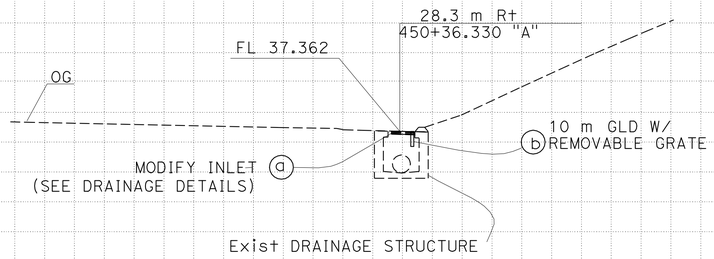

DRAINAGE SYSTEM No. 10B

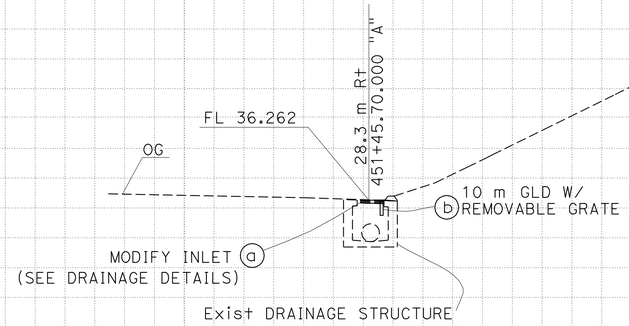

DRAINAGE SYSTEM No. 10C

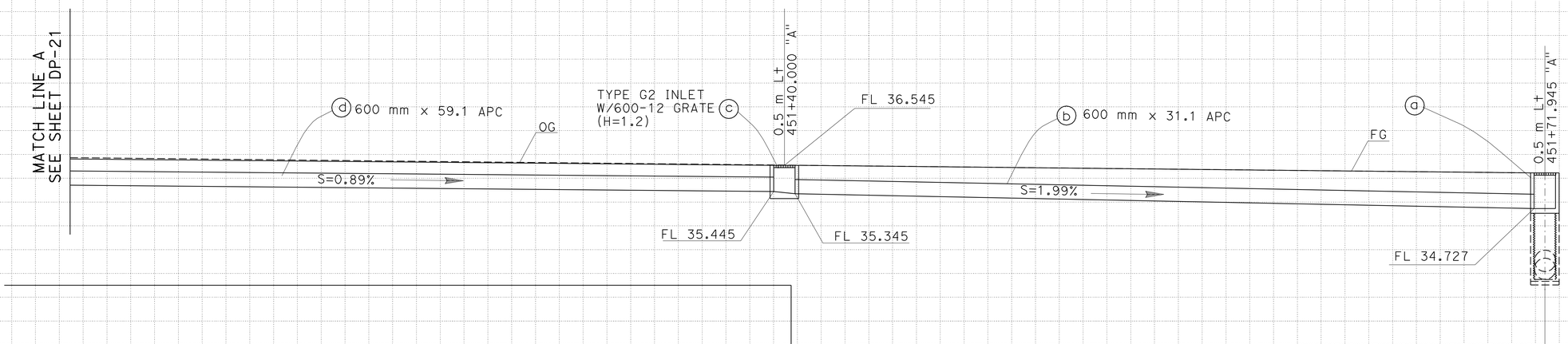

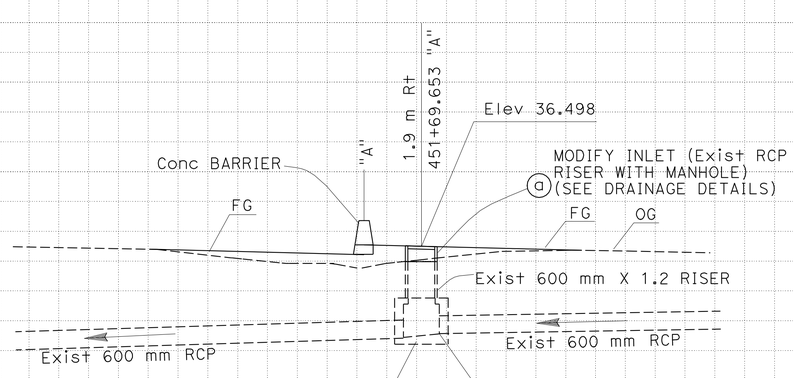

DRAINAGE SYSTEM No. 10A

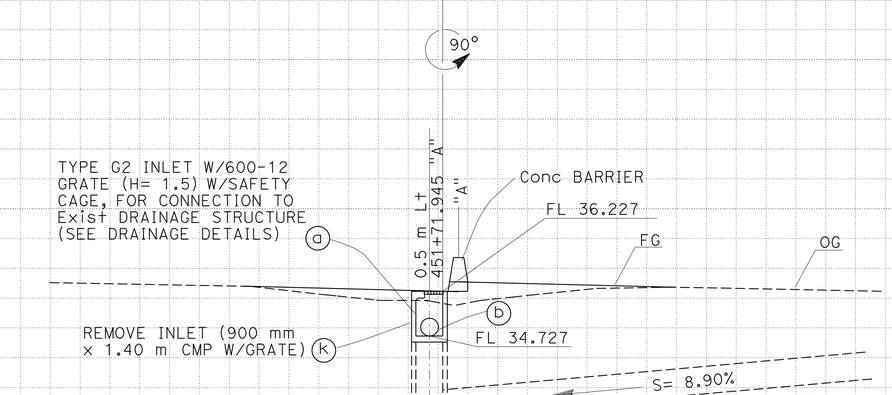

DRAINAGE SYSTEM No. 10

DRAINAGE PROFILES

SCALE 1:100

DP-20

ALL DIMENSIONS ARE IN METERS UNLESS OTHERWISE SHOWN

REVISED BY	DATE REVISED
THEO AQUINO	SHAHBAZ A ALVI
CALCULATED-DESIGNED BY	CHECKED BY
FUNCTIONAL SUPERVISOR	MAJID KHARRATI

STATE OF CALIFORNIA - DEPARTMENT OF TRANSPORTATION
Caltrans PROJECT DEVELOPMENT

LAST REVISION 05-30-09 DATE PLOTTED => 29-SEP-2010 TIME PLOTTED => 13:57

Dist	COUNTY	ROUTE	KILOMETER POST TOTAL PROJECT	SHEET No.	TOTAL SHEETS
11	SD	5,805	R49.9/R51.7, 42.6/46.5	182	886

REGISTERED CIVIL ENGINEER 05-20-09 DATE

9-27-10
PLANS APPROVAL DATE

REGISTERED PROFESSIONAL ENGINEER SHAHBAZ A ALVI No. 55293 Exp. 12-31-10 CIVIL STATE OF CALIFORNIA

THE STATE OF CALIFORNIA OR ITS OFFICERS OR AGENTS SHALL NOT BE RESPONSIBLE FOR THE ACCURACY OR COMPLETENESS OF SCANNED COPIES OF THIS PLAN SHEET.

Caltrans Metric

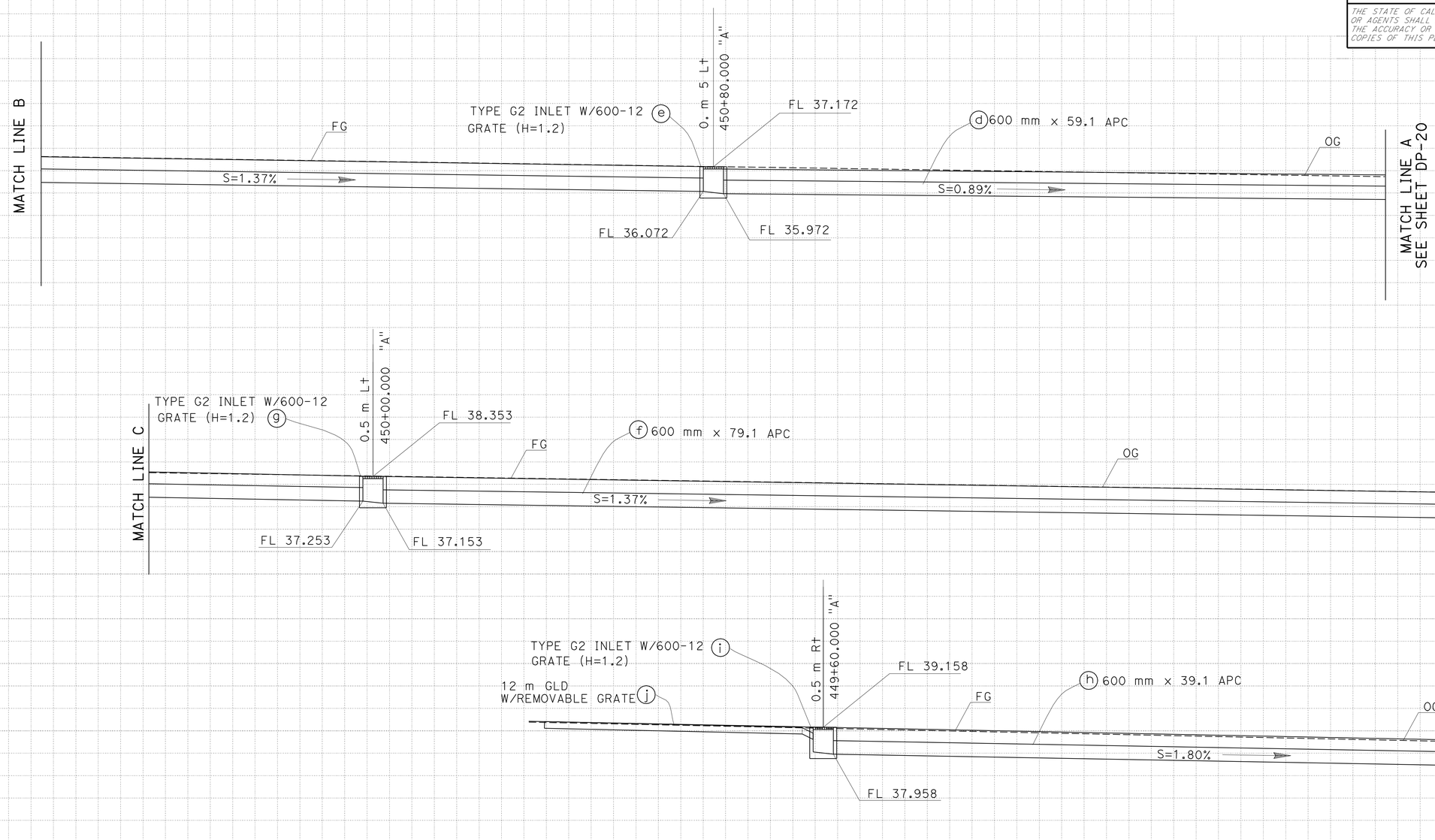

DRAINAGE SYSTEM No. 10

ALL DIMENSIONS ARE IN METERS UNLESS OTHERWISE SHOWN

DRAINAGE PROFILES

SCALE 1:100

DP-21

REVISED BY	DATE REVISED
THEO AQUINO	SHAHBAZ A ALVI

CALCULATED-DESIGNED BY / CHECKED BY

FUNCTIONAL SUPERVISOR: MAJID KHARRATI

STATE OF CALIFORNIA - DEPARTMENT OF TRANSPORTATION
Caltrans PROJECT DEVELOPMENT

LAST REVISION 05-30-09 DATE PLOTTED => 29-SEP-2010 TIME PLOTTED => 13:57

Dist	COUNTY	ROUTE	KILOMETER POST TOTAL PROJECT	SHEET No.	TOTAL SHEETS
11	SD	5,805	R49.9/R51.7, 42.6/46.5	183	886

REGISTERED CIVIL ENGINEER 05-20-09 DATE

9-27-10
PLANS APPROVAL DATE

REGISTERED PROFESSIONAL ENGINEER SHAHBAZ A ALVI No. 55293 Exp. 12-31-10 CIVIL STATE OF CALIFORNIA

THE STATE OF CALIFORNIA OR ITS OFFICERS OR AGENTS SHALL NOT BE RESPONSIBLE FOR THE ACCURACY OR COMPLETENESS OF SCANNED COPIES OF THIS PLAN SHEET.

Caltrans Metric

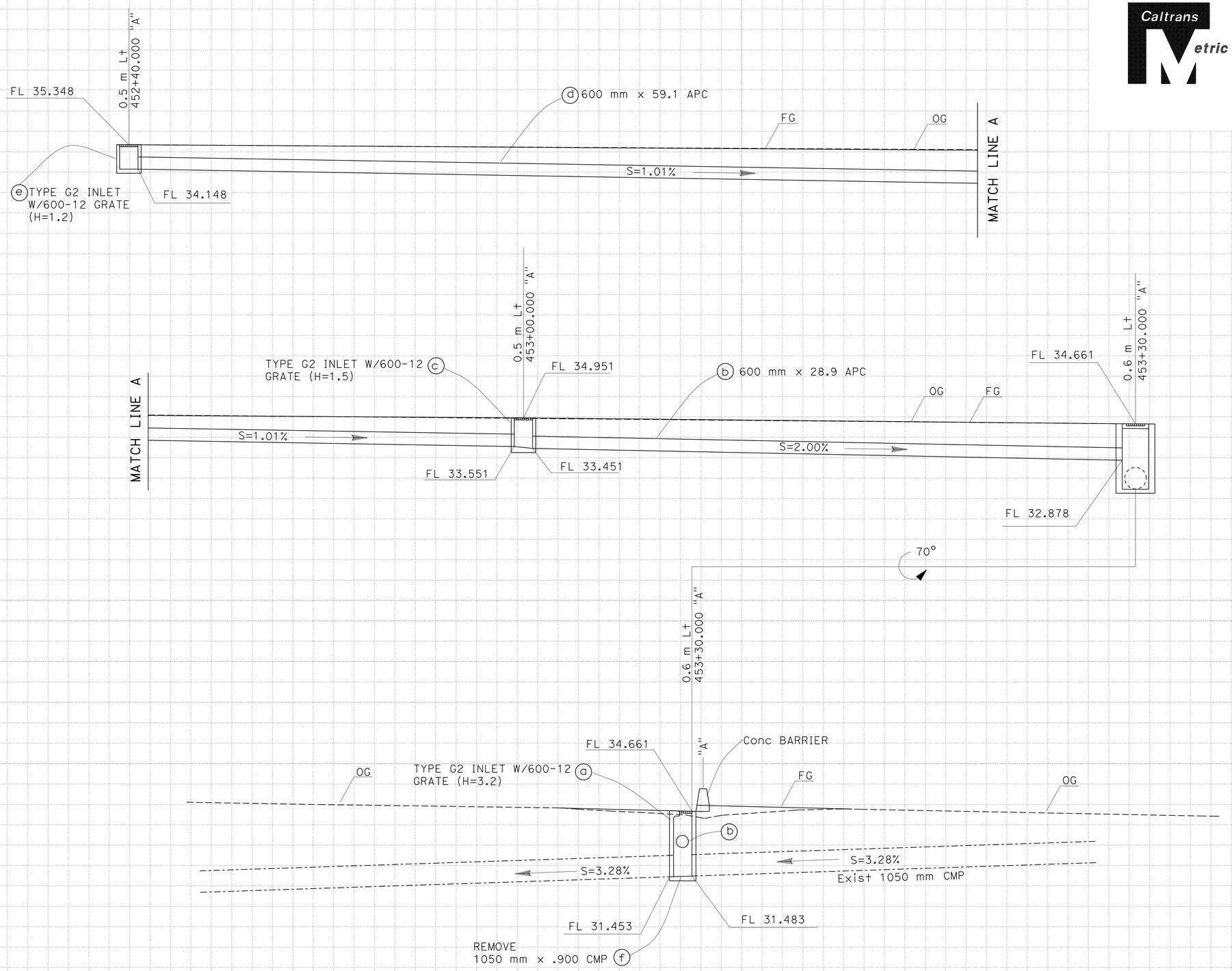

DRAINAGE SYSTEM No. 11

ALL DIMENSIONS ARE IN METERS UNLESS OTHERWISE SHOWN

DRAINAGE PROFILES

SCALE 1:100

DP-22

REVISED BY | DATE REVISED

THEO AQUINO | SHAHBAZ A ALVI

CALCULATED-DESIGNED BY | CHECKED BY

FUNCTIONAL SUPERVISOR: MAJID KHARRATI

STATE OF CALIFORNIA - DEPARTMENT OF TRANSPORTATION
Caltrans PROJECT DEVELOPMENT

LAST REVISION 05-30-09 | DATE PLOTTED => 29-SEP-2010 | TIME PLOTTED => 13:57

Dist	COUNTY	ROUTE	KILOMETER POST TOTAL PROJECT	SHEET No.	TOTAL SHEETS
11	SD	5,805	R49.9/R51.7, 42.6/46.5	184	886

REGISTERED CIVIL ENGINEER 05-20-09 DATE

9-27-10
PLANS APPROVAL DATE

REGISTERED PROFESSIONAL ENGINEER SHAHBAZ A ALVI No. 55293 Exp. 12-31-10 CIVIL STATE OF CALIFORNIA

THE STATE OF CALIFORNIA OR ITS OFFICERS OR AGENTS SHALL NOT BE RESPONSIBLE FOR THE ACCURACY OR COMPLETENESS OF SCANNED COPIES OF THIS PLAN SHEET.

Caltrans Metric

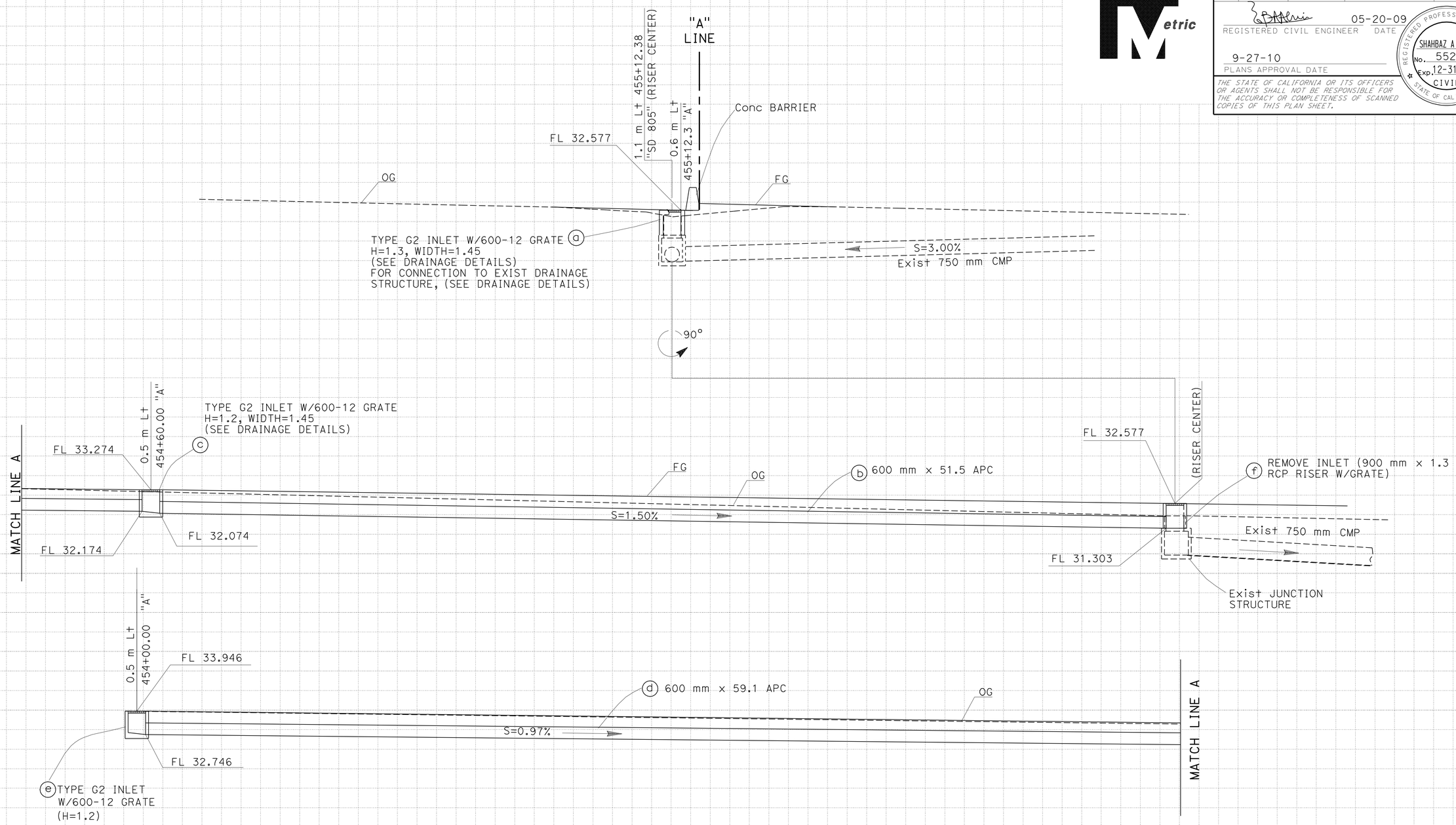

DRAINAGE SYSTEM No. 12

ALL DIMENSIONS ARE IN METERS UNLESS OTHERWISE SHOWN

DRAINAGE PROFILES

SCALE 1:100

DP-23

REVISED BY | DATE REVISED

THEO AQUINO | SHAHBAZ A ALVI

CALCULATED-DESIGNED BY | CHECKED BY

FUNCTIONAL SUPERVISOR: MAJID KHARRATI

STATE OF CALIFORNIA - DEPARTMENT OF TRANSPORTATION
Caltrans PROJECT DEVELOPMENT

LAST REVISION 05-30-09 | DATE PLOTTED => 29-SEP-2010 | TIME PLOTTED => 13:57

Dist	COUNTY	ROUTE	KILOMETER POST TOTAL PROJECT	SHEET No.	TOTAL SHEETS
11	SD	5,805	R49.9/R51.7, 42.6/46.5	185	886

REGISTERED CIVIL ENGINEER 05-20-09 DATE

9-27-10
PLANS APPROVAL DATE

REGISTERED PROFESSIONAL ENGINEER SHAHBAZ A ALVI No. 55293 Exp. 12-31-10 CIVIL STATE OF CALIFORNIA

THE STATE OF CALIFORNIA OR ITS OFFICERS OR AGENTS SHALL NOT BE RESPONSIBLE FOR THE ACCURACY OR COMPLETENESS OF SCANNED COPIES OF THIS PLAN SHEET.

Caltrans Metric

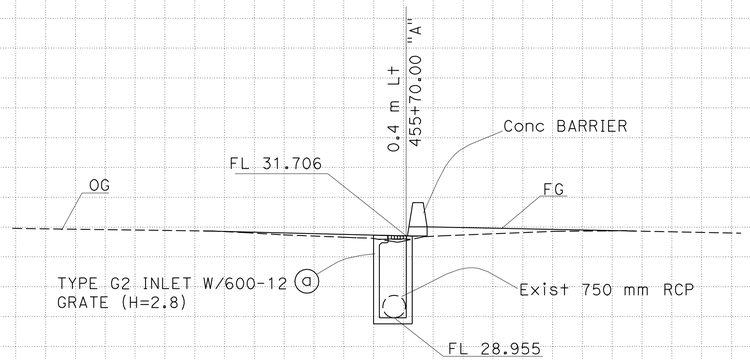

DRAINAGE SYSTEM No. 13

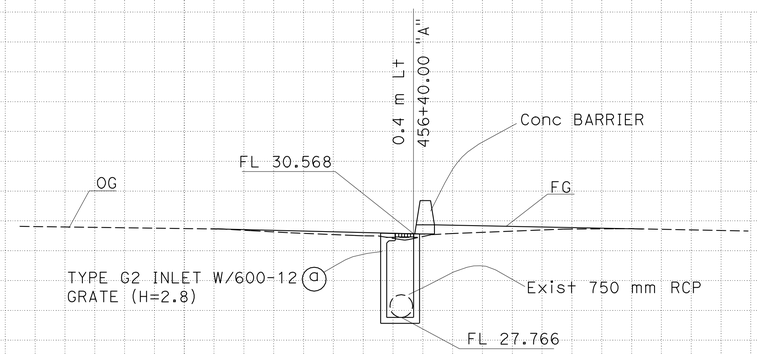

DRAINAGE SYSTEM No. 14

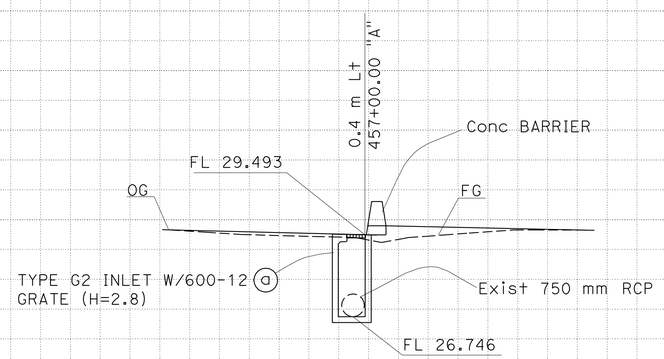

DRAINAGE SYSTEM No. 15

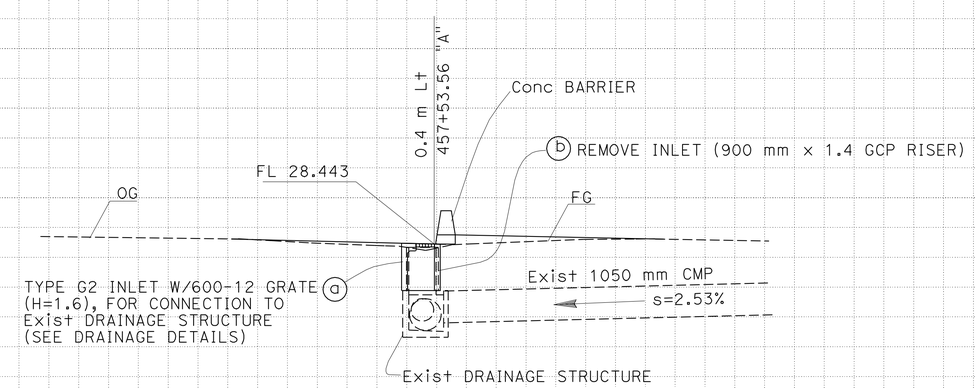

DRAINAGE SYSTEM No. 16

ALL DIMENSIONS ARE IN METERS UNLESS OTHERWISE SHOWN

DRAINAGE PROFILES

SCALE 1:100

DP-24

REVISED BY | DATE REVISED
THEO AQUINO | SHAHBAZ A ALVI
CALCULATED-DESIGNED BY | CHECKED BY
FUNCTIONAL SUPERVISOR | MAJID KHARRATI

STATE OF CALIFORNIA - DEPARTMENT OF TRANSPORTATION
Caltrans PROJECT DEVELOPMENT

LAST REVISION 05-30-09 | DATE PLOTTED => 29-SEP-2010 | TIME PLOTTED => 13:57

Dist	COUNTY	ROUTE	KILOMETER POST TOTAL PROJECT	SHEET No.	TOTAL SHEETS
11	SD	5,805	R49.9/R51.7, 42.6/46.5	186	886

REGISTERED CIVIL ENGINEER 05-20-09 DATE

9-27-10
PLANS APPROVAL DATE

REGISTERED PROFESSIONAL ENGINEER SHAHBAZ A ALVI No. 55293 Exp. 12-31-10 CIVIL STATE OF CALIFORNIA

THE STATE OF CALIFORNIA OR ITS OFFICERS OR AGENTS SHALL NOT BE RESPONSIBLE FOR THE ACCURACY OR COMPLETENESS OF SCANNED COPIES OF THIS PLAN SHEET.

Caltrans Metric

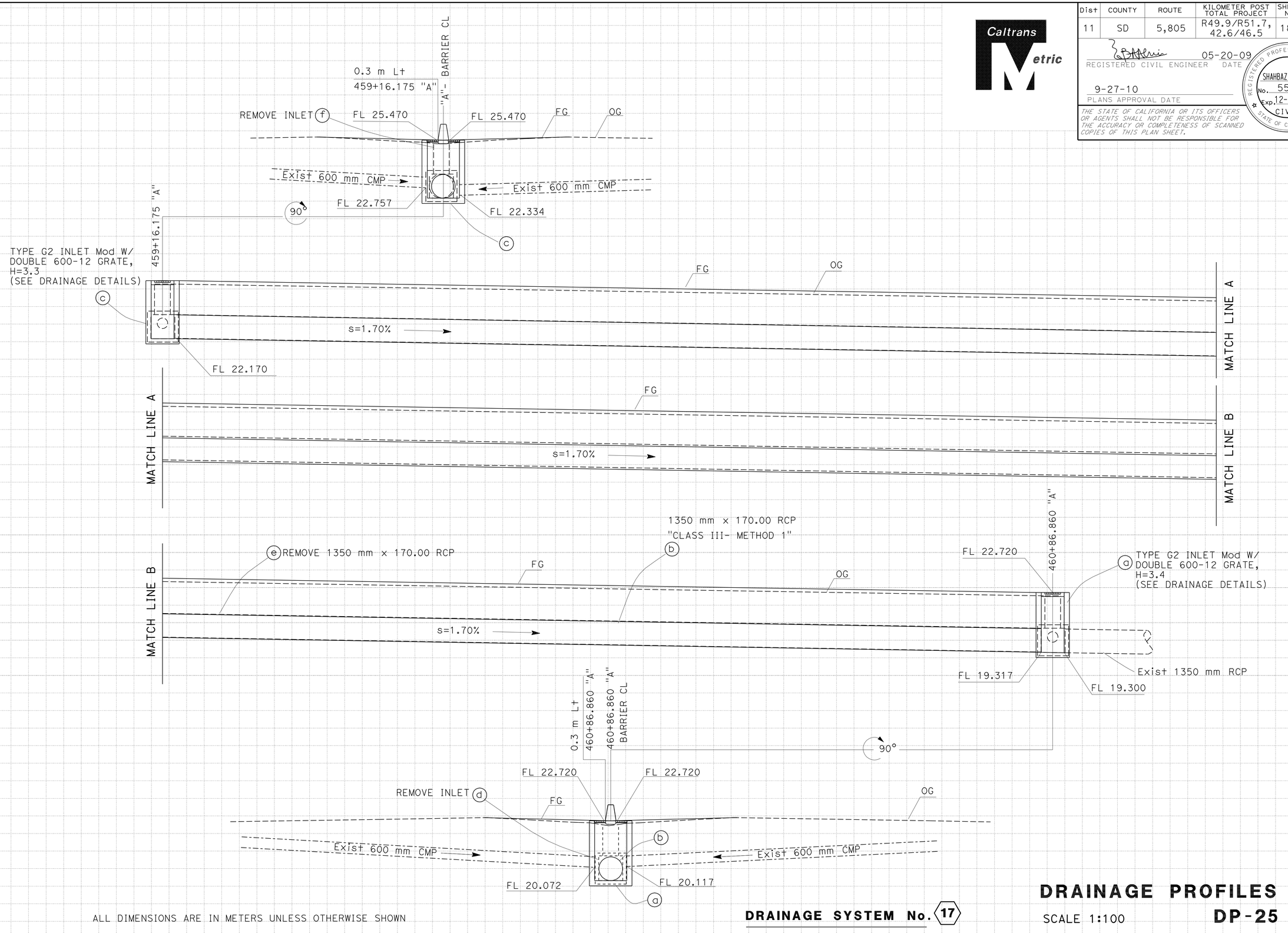

ALL DIMENSIONS ARE IN METERS UNLESS OTHERWISE SHOWN

DRAINAGE SYSTEM No. 17

DRAINAGE PROFILES

SCALE 1:100

DP-25

REVISED BY	DATE REVISED
THEO AQUINO	SHAHBAZ A ALVI

CALCULATED-DESIGNED BY / CHECKED BY

FUNCTIONAL SUPERVISOR: MAJID KHARRATI

STATE OF CALIFORNIA - DEPARTMENT OF TRANSPORTATION
Caltrans PROJECT DEVELOPMENT

LAST REVISION 05-30-09 DATE PLOTTED => 29-SEP-2010 TIME PLOTTED => 13:58

Dist	COUNTY	ROUTE	KILOMETER POST TOTAL PROJECT	SHEET No.	TOTAL SHEETS
11	SD	5,805	R49.9/R51.7, 42.6/46.5	187	886

REGISTERED CIVIL ENGINEER 05-20-09 DATE

9-27-10
PLANS APPROVAL DATE

REGISTERED PROFESSIONAL ENGINEER SHAHBAZ A ALVI No. 55293 Exp. 12-31-10 CIVIL STATE OF CALIFORNIA

THE STATE OF CALIFORNIA OR ITS OFFICERS OR AGENTS SHALL NOT BE RESPONSIBLE FOR THE ACCURACY OR COMPLETENESS OF SCANNED COPIES OF THIS PLAN SHEET.

Caltrans Metric

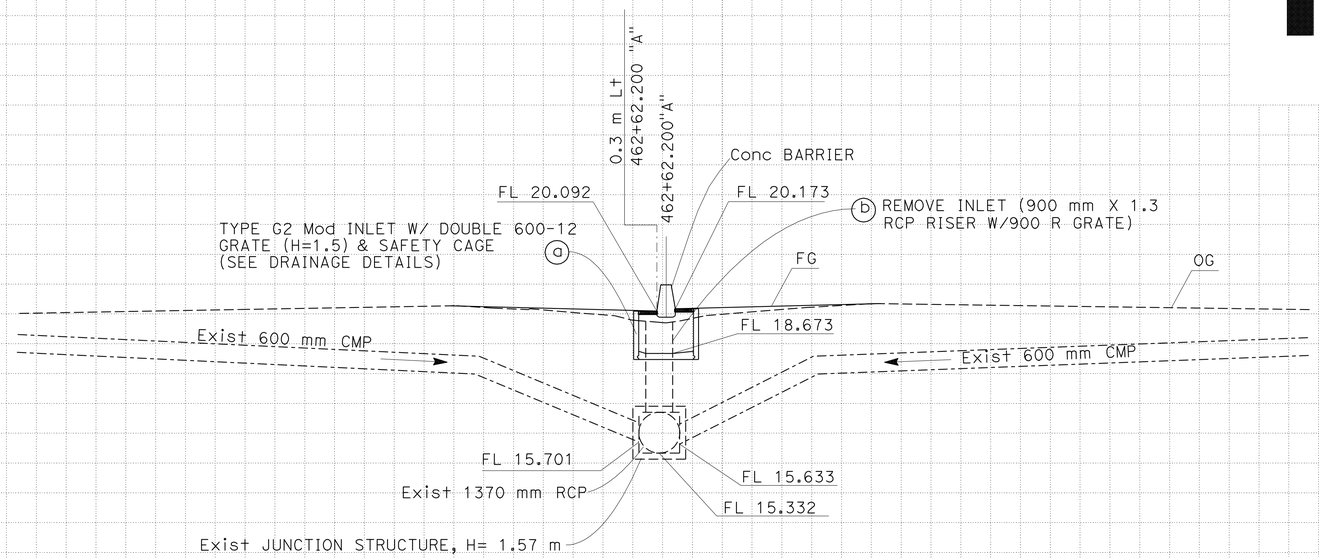

DRAINAGE SYSTEM No. 18

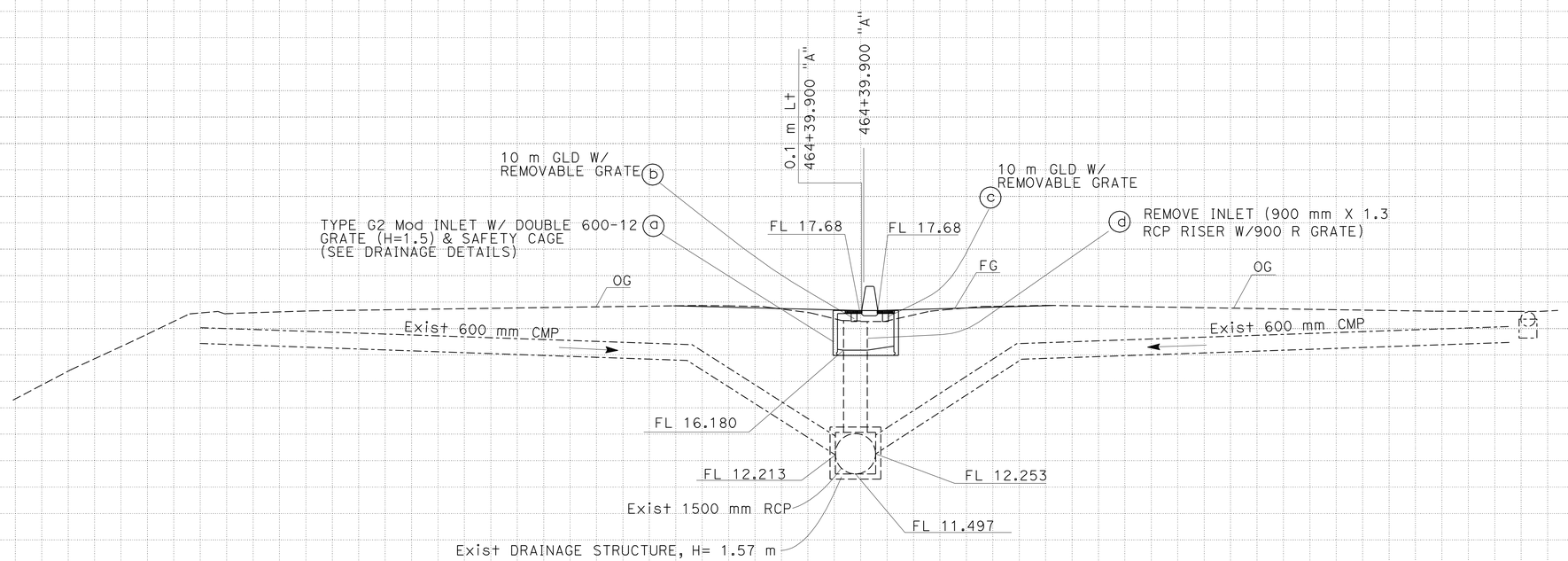

DRAINAGE SYSTEM No. 19

ALL DIMENSIONS ARE IN METERS UNLESS OTHERWISE SHOWN

DRAINAGE PROFILES

SCALE 1:100

DP-26

REVISED BY | DATE REVISED

THEO AQUINO | SHAHBAZ A ALVI

CALCULATED-DESIGNED BY | CHECKED BY

FUNCTIONAL SUPERVISOR: MAJID KHARRATI

STATE OF CALIFORNIA - DEPARTMENT OF TRANSPORTATION
Caltrans PROJECT DEVELOPMENT

LAST REVISION 05-30-09 | DATE PLOTTED => 29-SEP-2010 | TIME PLOTTED => 13:58

Dist	COUNTY	ROUTE	KILOMETER POST TOTAL PROJECT	SHEET No.	TOTAL SHEETS
11	SD	5,805	R49.9/R51.7, 42.6/46.5	188	886

REGISTERED CIVIL ENGINEER 05-20-09 DATE

9-27-10
PLANS APPROVAL DATE

REGISTERED PROFESSIONAL ENGINEER SHAHBAZ A ALVI No. 55293 Exp. 12-31-10 CIVIL STATE OF CALIFORNIA

THE STATE OF CALIFORNIA OR ITS OFFICERS OR AGENTS SHALL NOT BE RESPONSIBLE FOR THE ACCURACY OR COMPLETENESS OF SCANNED COPIES OF THIS PLAN SHEET.

Caltrans Metric

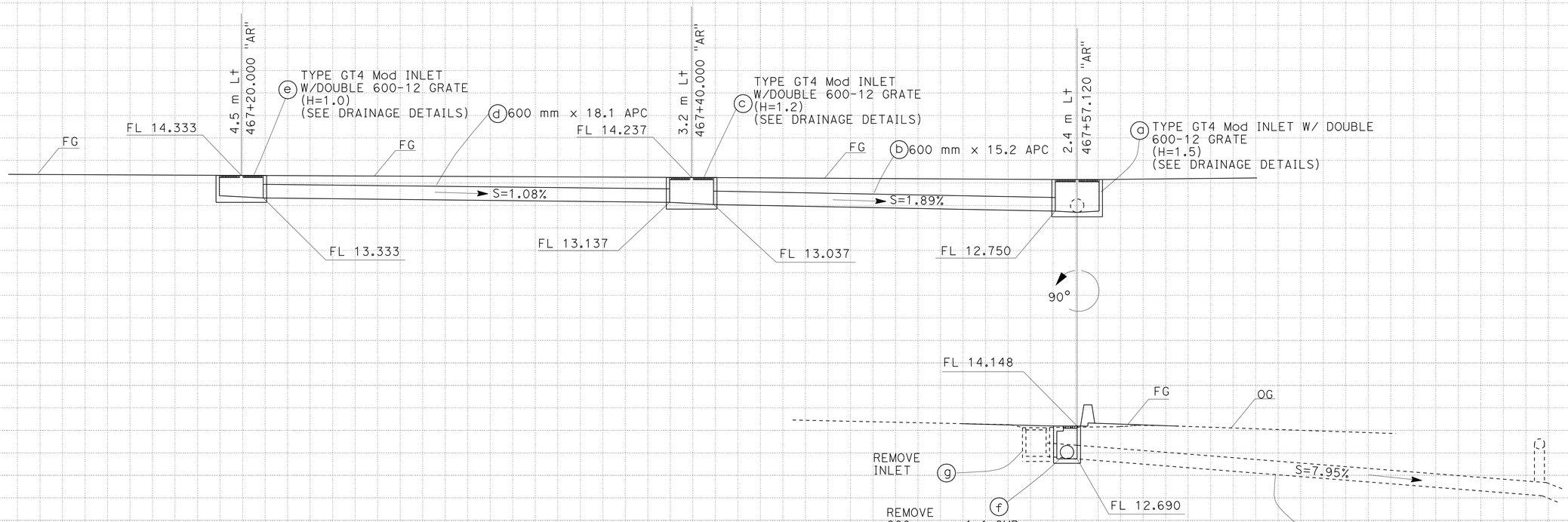

DRAINAGE SYSTEM No. 20

ALL DIMENSIONS ARE IN METERS UNLESS OTHERWISE SHOWN

DRAINAGE PROFILES

SCALE 1:100

DP-27

STATE OF CALIFORNIA - DEPARTMENT OF TRANSPORTATION
Caltrans PROJECT DEVELOPMENT

FUNCTIONAL SUPERVISOR: MAJID KHARRATI
CALCULATED-DESIGNED BY: SHAHBAZ A ALVI
CHECKED BY: THEO AQUINO
REVISED BY / DATE REVISED

LAST REVISION 05-30-09 DATE PLOTTED => 29-SEP-2010 TIME PLOTTED => 13:58

Dist	COUNTY	ROUTE	KILOMETER POST TOTAL PROJECT	SHEET No.	TOTAL SHEETS
11	SD	5,805	R49.9/R51.7, 42.6/46.5	189	886

REGISTERED CIVIL ENGINEER 05-20-09 DATE

9-27-10
PLANS APPROVAL DATE

REGISTERED PROFESSIONAL ENGINEER SHAHBAZ A ALVI No. 55293 Exp. 12-31-10 CIVIL STATE OF CALIFORNIA

THE STATE OF CALIFORNIA OR ITS OFFICERS OR AGENTS SHALL NOT BE RESPONSIBLE FOR THE ACCURACY OR COMPLETENESS OF SCANNED COPIES OF THIS PLAN SHEET.

Caltrans Metric

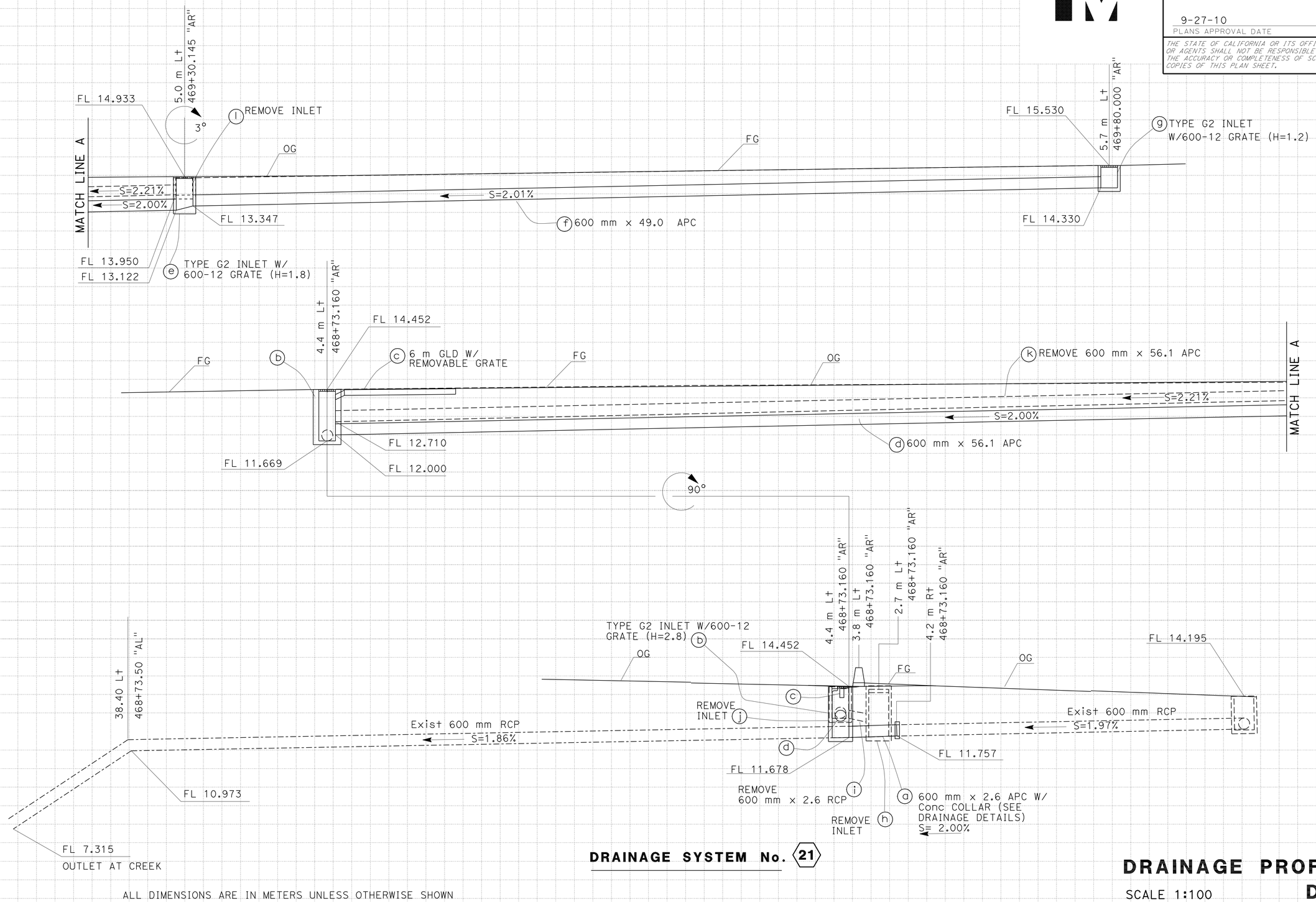

DRAINAGE SYSTEM No. 21

ALL DIMENSIONS ARE IN METERS UNLESS OTHERWISE SHOWN

DRAINAGE PROFILES

SCALE 1:100

DP-28

REVISED BY | DATE REVISED

THEO AQUINO | SHAHBAZ A ALVI

CALCULATED-DESIGNED BY | CHECKED BY

FUNCTIONAL SUPERVISOR | MAJID KHARRATI

STATE OF CALIFORNIA - DEPARTMENT OF TRANSPORTATION

Caltrans® PROJECT DEVELOPMENT

LAST REVISION 05-30-09 | DATE PLOTTED => 29-SEP-2010 | TIME PLOTTED => 13:58

Dist	COUNTY	ROUTE	KILOMETER POST TOTAL PROJECT	SHEET No.	TOTAL SHEETS
11	SD	5,805	R49.9/R51.7, 42.6/46.5	190	886

REGISTERED CIVIL ENGINEER 05-20-09 DATE

9-27-10
PLANS APPROVAL DATE

REGISTERED PROFESSIONAL ENGINEER SHAHBAZ A ALVI No. 55293 Exp. 12-31-10 CIVIL STATE OF CALIFORNIA

THE STATE OF CALIFORNIA OR ITS OFFICERS OR AGENTS SHALL NOT BE RESPONSIBLE FOR THE ACCURACY OR COMPLETENESS OF SCANNED COPIES OF THIS PLAN SHEET.

Caltrans Metric

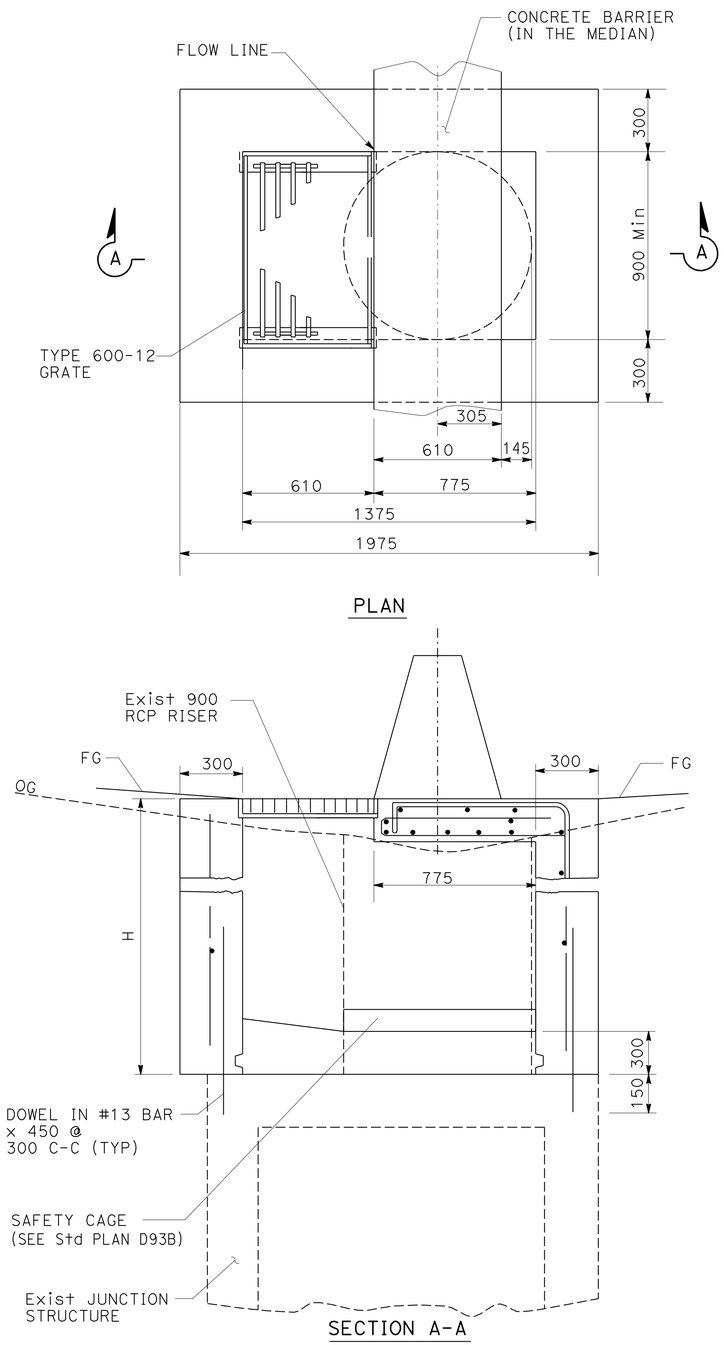

TYPE G2 INLET (Mod) 9 a

NOTE:
FOR ADDITIONAL INFORMATION, SEE Std PLAN D73 "TYPE G2" DRAINAGE INLET.

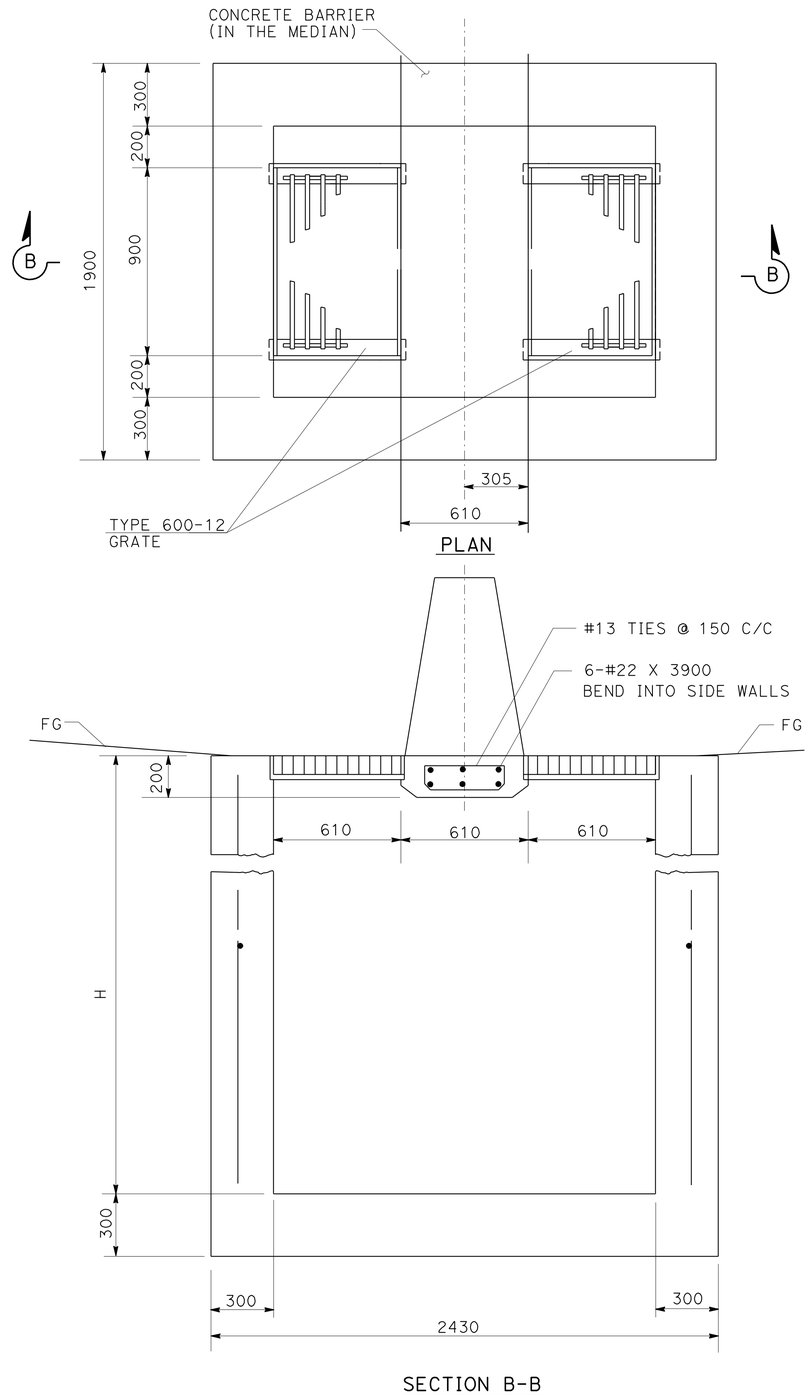

TYPE G2 INLET (Mod)

17 a c

ALL DIMENSIONS ARE IN MILLIMETERS UNLESS OTHERWISE SHOWN

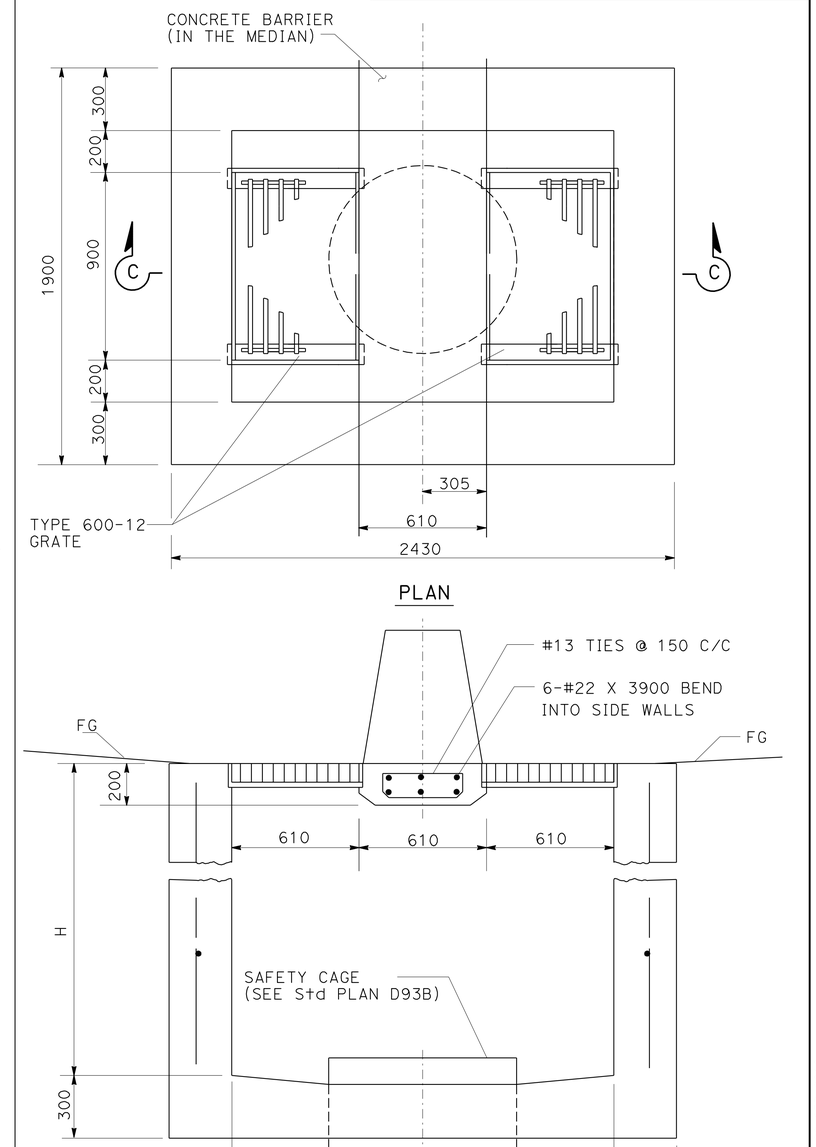

TYPE G2 INLET (Mod) 18 a 19 a

DRAINAGE DETAILS

NO SCALE

DD-1

LAST REVISION	06-01-09
DATE PLOTTED =>	29-SEP-2010
TIME PLOTTED =>	13:58

STATE OF CALIFORNIA - DEPARTMENT OF TRANSPORTATION
Caltrans PROJECT DEVELOPMENT

FUNCTIONAL SUPERVISOR: MAJID KHARRATI
CALCULATED-DESIGNED BY: THEO AQUINO
CHECKED BY: SHAHBAZ A ALVI
REVISED BY / DATE REVISED

BORDER LAST REVISED 4/11/2008 | RELATIVE BORDER SCALE IS IN MILLIMETERS 0 20 40 60 80 | USERNAME => trmikesl | DGN FILE => b2t0401c001.dgn | CU 11275 | EA 2T0401

Dist	COUNTY	ROUTE	KILOMETER POST TOTAL PROJECT	SHEET No.	TOTAL SHEETS
11	SD	5,805	R49.9/R51.7, 42.6/46.5	191	886

REGISTERED CIVIL ENGINEER 05-20-09 DATE

9-27-10
PLANS APPROVAL DATE

REGISTERED PROFESSIONAL ENGINEER SHAHBAZ A ALVI No. 55293 Exp. 12-31-10 CIVIL STATE OF CALIFORNIA

THE STATE OF CALIFORNIA OR ITS OFFICERS OR AGENTS SHALL NOT BE RESPONSIBLE FOR THE ACCURACY OR COMPLETENESS OF SCANNED COPIES OF THIS PLAN SHEET.

Caltrans Metric

NOTES:

1. CHIP OUT EXISTING CONCRETE AND CUT EXISTING BARS TO ALLOW 50 mm CLEAR TO OUTSIDE OF PIPE.
2. MAINTAIN 50 mm Min CLEAR SPACING BETWEEN ALL REINFORCING BARS AND SURFACE OF CONCRETE.
3. TIE NEW BARS TO EXPOSED EXISTING REINFORCING.

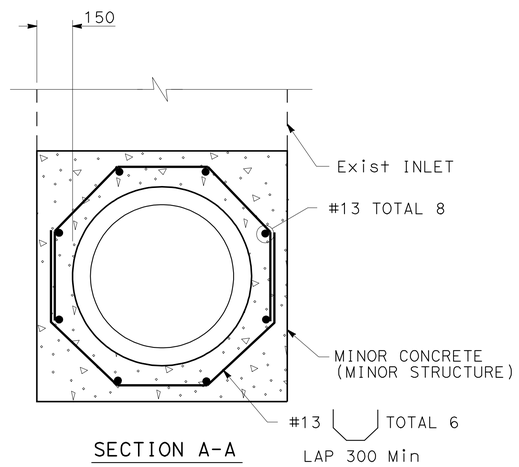

SECTION A-A

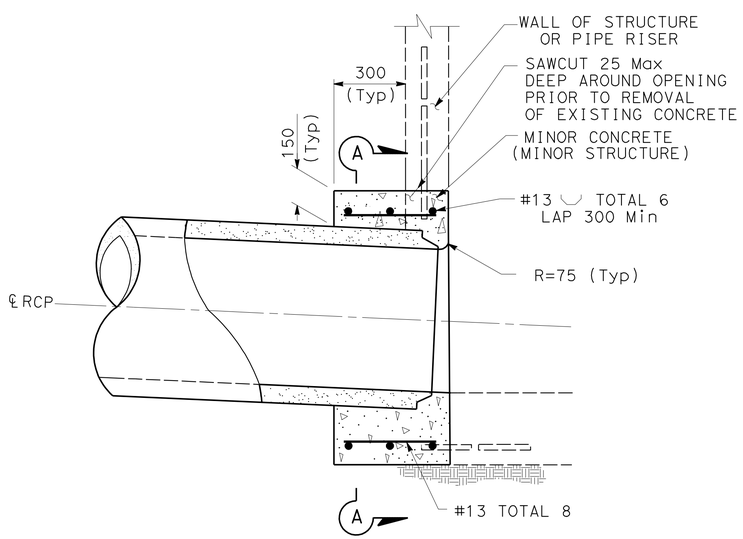

TYPE L-2 COLLAR

7B (b)

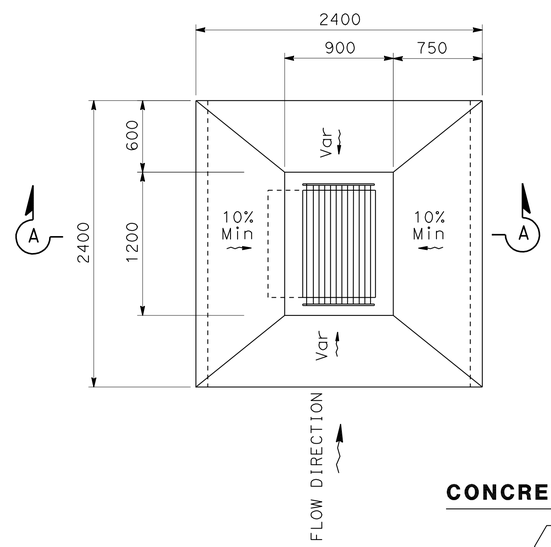

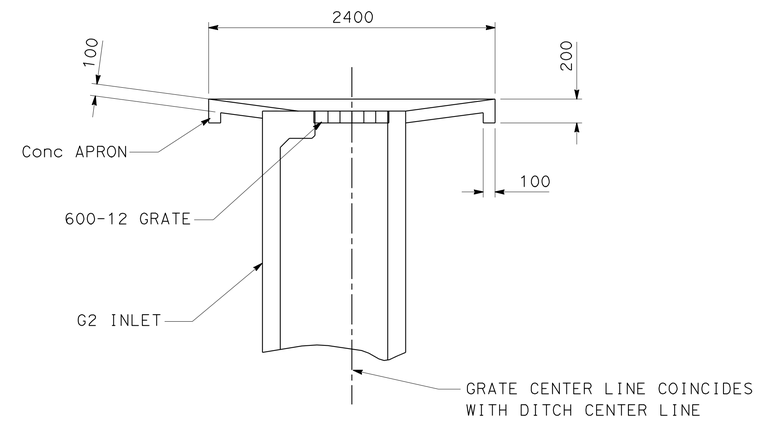

SECTION A-A

CONCRETE APRON FOR G1, G2 INLET

1 (ai) 3 (o) 4 (e) 6 (c) (e)

NO SCALE

ALL DIMENSIONS ARE IN MILLIMETERS UNLESS OTHERWISE SHOWN

DRAINAGE DETAILS

NO SCALE

DD-2

REVISED BY	DATE REVISED

CALCULATED-DESIGNED BY: THEO AQUINO
CHECKED BY: SHAHBAZ A ALVI
FUNCTIONAL SUPERVISOR: MAJID KHARRATI

STATE OF CALIFORNIA - DEPARTMENT OF TRANSPORTATION
Caltrans PROJECT DEVELOPMENT

LAST REVISION 05-28-09 | DATE PLOTTED => 29-SEP-2010 | TIME PLOTTED => 13:58

Dist	COUNTY	ROUTE	KILOMETER POST TOTAL PROJECT	SHEET No.	TOTAL SHEETS
11	SD	5,805	R49.9/R51.7, 42.6/46.5	192	886

REGISTERED CIVIL ENGINEER 05-20-09 DATE

9-27-10
PLANS APPROVAL DATE

REGISTERED PROFESSIONAL ENGINEER SHAHBAZ A ALVI No. 55293 Exp. 12-31-10 CIVIL STATE OF CALIFORNIA

THE STATE OF CALIFORNIA OR ITS OFFICERS OR AGENTS SHALL NOT BE RESPONSIBLE FOR THE ACCURACY OR COMPLETENESS OF SCANNED COPIES OF THIS PLAN SHEET.

Caltrans Metric

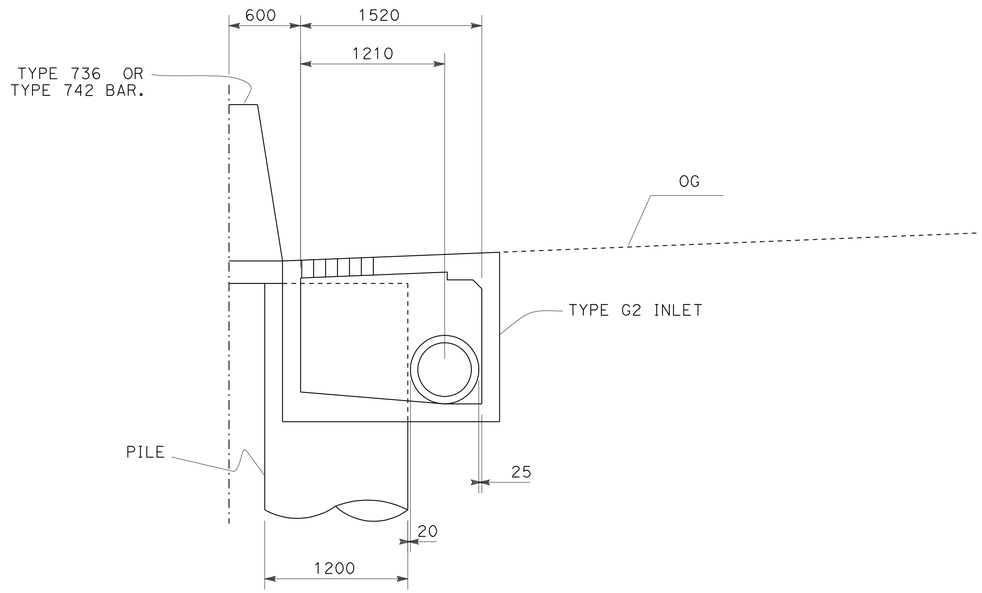

SECTION A-A

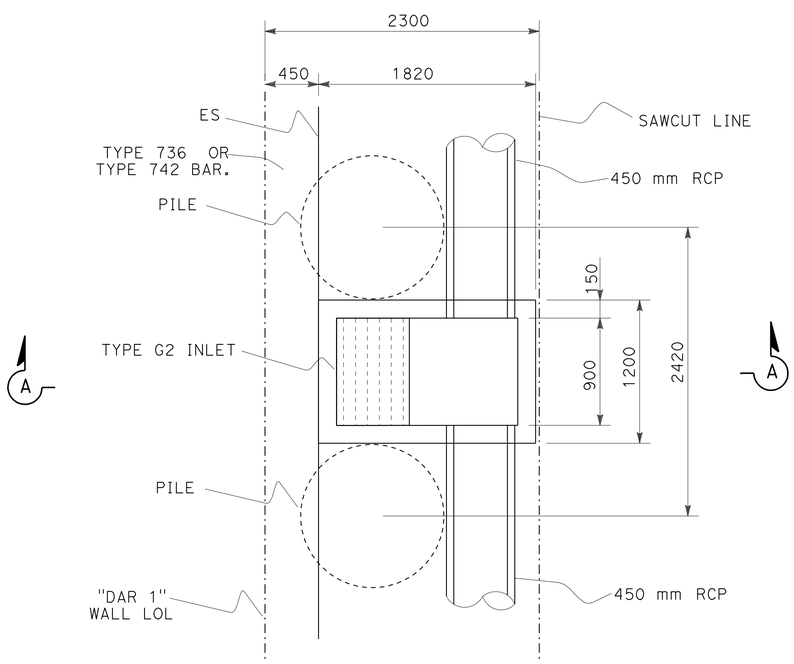

PLAN

G2 INLET LAYOUT ADJACENT TO PILES

6 ab ad af ah

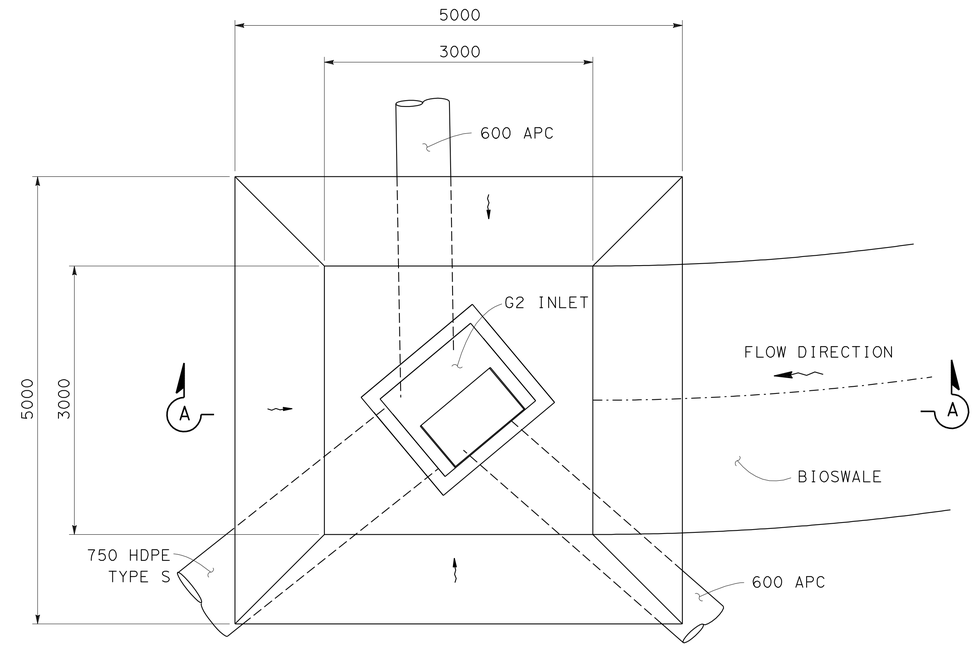

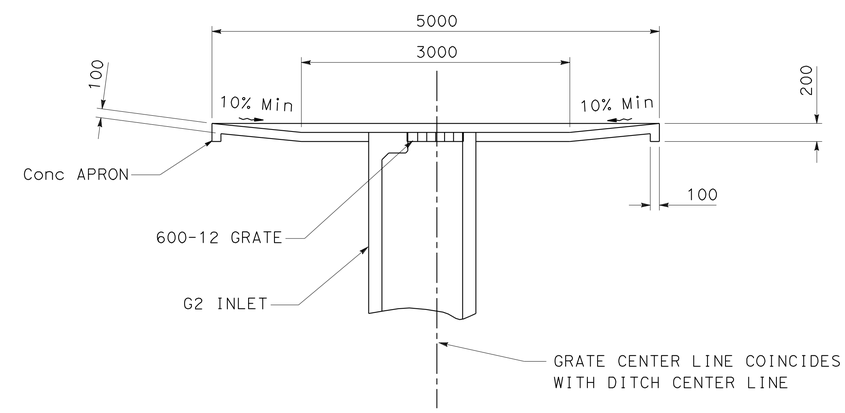

SECTION A-A

CONCRETE APRON FOR G2 INLET

1 ae

DRAINAGE DETAILS
DD-3

NO SCALE

ALL DIMENSIONS ARE IN MILLIMETERS UNLESS OTHERWISE SHOWN

REVISED BY	DATE REVISED

CALCULATED-DESIGNED BY: THEO AQUINO
CHECKED BY: SHAHBAZ A ALVI
FUNCTIONAL SUPERVISOR: MAJID KHARRATI

STATE OF CALIFORNIA - DEPARTMENT OF TRANSPORTATION
Caltrans PROJECT DEVELOPMENT

LAST REVISION 04-14-10 | DATE PLOTTED => 29-SEP-2010 | TIME PLOTTED => 13:58

Dist	COUNTY	ROUTE	KILOMETER POST TOTAL PROJECT	SHEET No.	TOTAL SHEETS
11	SD	5,805	R49.9/R51.7, 42.6/46.5	193	886

REGISTERED CIVIL ENGINEER 05-20-09 DATE

9-27-10
PLANS APPROVAL DATE

REGISTERED PROFESSIONAL ENGINEER SHAHBAZ A ALVI No. 55293 Exp. 12-31-10 CIVIL STATE OF CALIFORNIA

THE STATE OF CALIFORNIA OR ITS OFFICERS OR AGENTS SHALL NOT BE RESPONSIBLE FOR THE ACCURACY OR COMPLETENESS OF SCANNED COPIES OF THIS PLAN SHEET.

Caltrans Metric

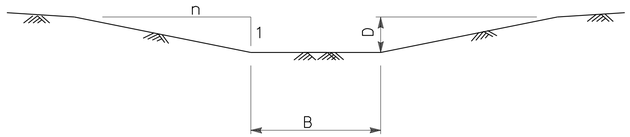

GRADED CHANNEL

GRADED CHANNEL TABLE

GRADED CHANNEL No.	LOCATION BEGIN	LOCATION END	"B" m	"n"	"D" m	LENGTH m	ELEVATION BEGIN	ELEVATION END
#1	7.7 m L+ 439+93.181 "CCR"	14.5 m R+ 439+89.348 "CCR"	0.3	1.5	0.3	8.0	27.800	27.600
#2	14.0 m R+ 440+87.000 "CCR"	7.7 m L+ 441+13.000 "CCR"	0.3	1.5	0.3	32.0	30.335	30.700
#3	7.4 m L+ 442+83.000 "CCR"	0.8 m L+ 442+93.000 "CCR"	0.3	1.5	0.3	11.0	31.552	33.200

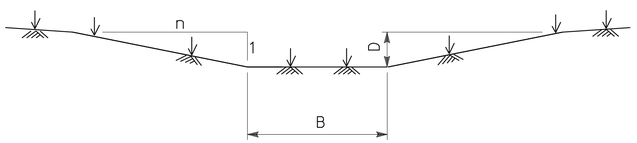

BIOFILTRATION SWALE

BIOFILTRATION SWALE TABLE

BIOFILTRATION SWALE NUMBER	LOCATION BEGIN (m)	LOCATION END (m)	'B' m	'n'	'D' m	LENGTH m	ELEVATION BEGIN	ELEVATION END
#1	72.5 m L+ 443+09.088 "MMBM"	33.4 m L+ 443+67.10 "MMBM"	3	5	0.3	62	34.685	36.807
#2	20.1 m L+ 448+82.560 "MMB5U"	37 m L+ 442+84.452 "MMBM"	3	5	0.3	83	30.000	28.251
#3	14.7 m R+ 14+57.531 "BR"	25.5 m R+ 15+21.620 "BR"	1.2	5	0.3	40	28.121	26.321
#4	18.4 m R+ 439+70.000 "CCR"	8.0 m R+ 440+53.000 "CCR"	1.2	5	0.2	76	26.209	27.078
#5	16.60 m R+ 440+91.900 "CCR"	11.12 m R+ 441+64.750 "CCR"	1.2	4	1.1	79	29.511	30.300
#6	3.8 m R+ 442+86.000 "CCR"	10.0 m R+ 443+22.000 "CCR"	1.2	5	0.3	40	30.712	31.864
#7	25.1 m R+ 444+11.1005 "CCR"	25.5 m R+ 444+98.000 "CCR"	1.2	4	0.5	100	31.500	32.500

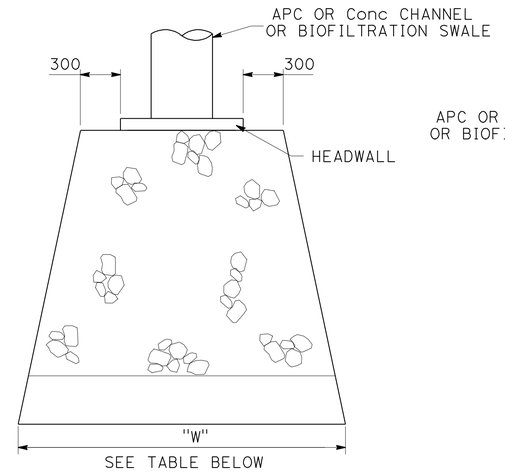

PLAN

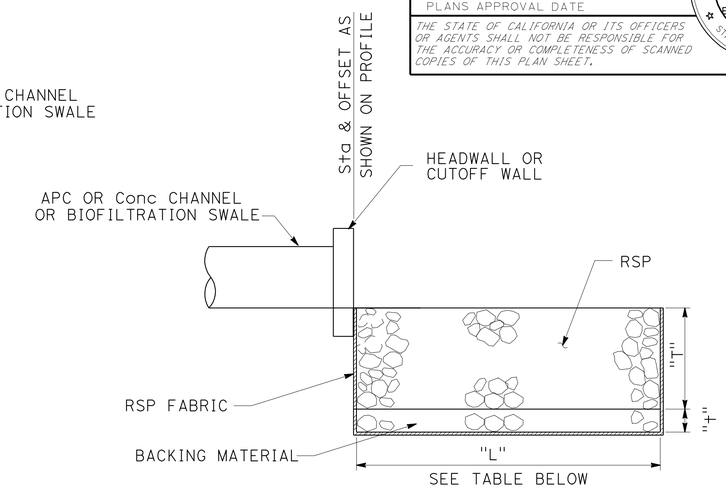

PROFILE

ROCK SLOPE PROTECTION

RSP TABLE

LOCATION	"L" m	"W" m	"T" m	CLASSIFICATION	PLACEMENT	BACKING TYPE	BACKING "t" (mm)	RSP FABRIC TYPE	DESCRIPTION
26.8 m L+ 440+67.000 "SVRM"	4	5	.750	LIGHT	METHOD "B"	N/A	N/A	TYPE B	DOWNSTREAM OF Conc CHANNEL AT DS 1ag
33.41m L+ 443+67.10 "MMBM"	4	5	.750	LIGHT	METHOD "B"	N/A	N/A	TYPE B	UPSTREAM OF BIOSWALE #1
26.00 m R+ 15+21.620 "BR"	6	3	.750	LIGHT	METHOD "B"	N/A	N/A	TYPE B	UPSTREAM OF BIOSWALE #3
18.50 m R+ 439+70.000 "CCR"	4	5	.750	LIGHT	METHOD "B"	N/A	N/A	TYPE B	DOWNSTREAM OF BIOSWALE #4
16.6 m R+ 440+91.900 "CCR"	4	5	.750	LIGHT	METHOD "B"	N/A	N/A	TYPE B	DOWNSTREAM OF BIOSWALE #5
11.0 m R+ 441+64.750 "CCR"	4	5	.750	LIGHT	METHOD "B"	N/A	N/A	TYPE B	UPSTREAM OF BIOSWALE #5
10.0 m R+ 443+22.000 "CCR"	4	5	.750	LIGHT	METHOD "B"	N/A	N/A	TYPE B	DOWNSTREAM OF BIOSWALE #6
25.0 m R+ 444+11.000 "CCR"	4	5	.750	LIGHT	METHOD "B"	N/A	N/A	TYPE B	DOWNSTREAM OF BIOSWALE #7
25.5 m R+ 444+98.000 "CCR"	4	5	.750	LIGHT	METHOD "B"	N/A	N/A	TYPE B	UPSTREAM OF BIOSWALE #7
37.0 m L+ 438+40.000 "A"	2	4	.750	LIGHT	METHOD "B"	N/A	N/A	TYPE B	END OF OVERSIDE DRAIN
79.05 m L+ 443+36.630 "CCR"	6	5	1.000	¼T	METHOD "B"	N/A	N/A	TYPE B	DOWNSTREAM HW AND Conc CHANNEL DS 6B

ALL DIMENSIONS ARE IN MILLIMETERS UNLESS OTHERWISE SHOWN

NO SCALE

DRAINAGE DETAILS
DD-4

REVISED BY | DATE REVISED
THEO AQUINO | SHAHBAZ A ALVI
CALCULATED-DESIGNED BY | CHECKED BY
FUNCTIONAL SUPERVISOR
MAJID KHARRATI

STATE OF CALIFORNIA - DEPARTMENT OF TRANSPORTATION
Caltrans PROJECT DEVELOPMENT

LAST REVISION 04-14-10
DATE PLOTTED => 29-SEP-2010
TIME PLOTTED => 13:58

Dist	COUNTY	ROUTE	KILOMETER POST TOTAL PROJECT	SHEET No.	TOTAL SHEETS
11	SD	5,805	R49.9/R51.7, 42.6/46.5	194	886

REGISTERED CIVIL ENGINEER 05-20-09 DATE

9-27-10
PLANS APPROVAL DATE

REGISTERED PROFESSIONAL ENGINEER SHAHBAZ A ALVI No. 55293 Exp. 12-31-10 CIVIL STATE OF CALIFORNIA

THE STATE OF CALIFORNIA OR ITS OFFICERS OR AGENTS SHALL NOT BE RESPONSIBLE FOR THE ACCURACY OR COMPLETENESS OF SCANNED COPIES OF THIS PLAN SHEET.

Caltrans Metric

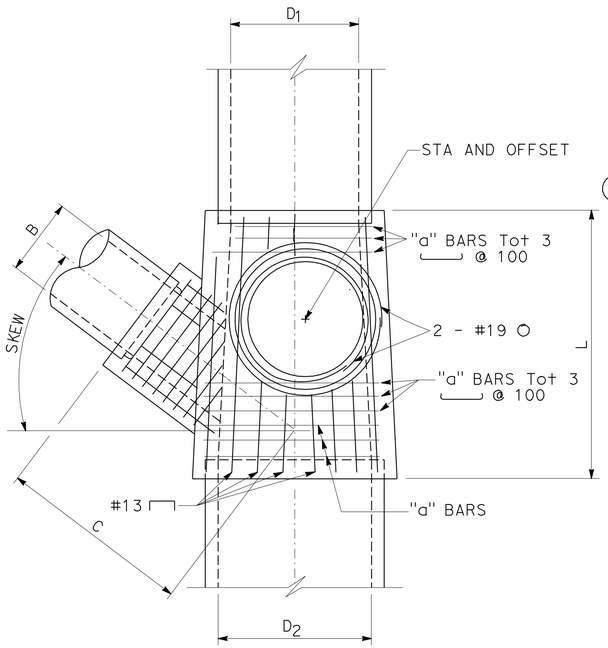

PLAN

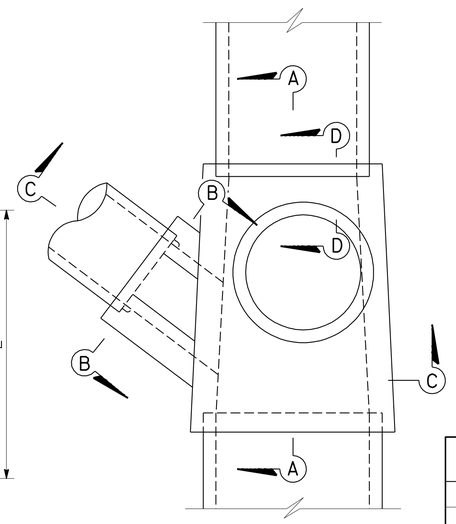

PLAN

DESIGN NOTES:

1. DESIGNED IN CONFORMANCE WITH BRIDGE DESIGN SPECIFICATIONS (1983 AASHTO SPECIFICATIONS WITH REVISIONS BY CALTRANS).
2. LIVE LOAD: HS20-44 TRUCK. EARTH PRESSURES: 22.0 kPa/m VERTICAL, 15.7 kPa/m HORIZONTAL.
3. UNIT STRESSES: f'_c = 25 MPa; f_y = 400 MPa
4. MAXIMUM FILL HEIGHT = 6 m.

W	"a" BARS	BOTTOM SLAB THICKNESS (BS)
1050	#13 @ 100	200
1200	#13 @ 100	200
1350	#16 @ 125	200
1500	#16 @ 115	200
1650	#19 @ 140	200
1800	#19 @ 140	230
1950	#19 @ 115	230
2100	#19 @ 100	240

*WHEN FILL OVER JUNCTION STRUCTURE IS 600 mm OR LESS, TS SHALL BE INCREASED BY 50 mm.

B	"b" BARS TOP & BOTTOM
750	#16 Tot 4
900	#16 Tot 4
1050	#16 Tot 4
1200	#16 Tot 4
1350	#16 Tot 4
1500	#19 Tot 4

Hb	"c" BARS	SIDEWALL THICKNESS (T)
1650 OR LESS	#13 @ 100	200
1950	#16 @ 100	215
2100	#16 @ 100	230
2400	#19 @ 100	240

GENERAL NOTES:

1. THICKNESS OF DECK SHALL VARY AS NECESSARY TO PROVIDE A LEVEL MANHOLE SEAT.
2. REINFORCING STEEL SHALL BE PLACED 50 CLEAR, EXCEPT AS SHOWN.
3. MAXIMUM SKEW OF LATERAL PIPE B IS 45°.
4. LATERAL MAY BE PLACED IN EITHER SIDE WALL.
5. WHERE D1 AND /OR D2 ARE LESS THAN 1050, CLEAR DISTANCE BETWEEN SIDE WALLS SHALL BE 1050. END WALLS SHALL BE 150 THICK WITH #13 @ 300 PLACED BOTH WAYS.
6. SIDE WALLS SHALL BE FLUSH WITH THE INSIDE OF THE INLET AND THE OUTLER PIPES WHEN PIPE DIAMETER ARE 1050 OR MORE.
7. L=1500 MINIMUM
8. WHEN C IS NOT SPECIFIED, BRING THE LATERAL DIRECTLY INTO THE WALL OF THE STRUCTURE.
9. WHEN C IS SPECIFIED, CONTRACTOR MAY, AT HIS OPINION, BRING THE LATERAL DIRECTLY INTO THE WALL FOR USE AS AN INSIDE FORM. A COLLAR CONFORMING WITH THE WALL THICKNESS AND REINFORCEMENT AS SHOWN IN SECTION B-B SHALL BE POURED AROUND THE PIPE.
10. WHEN LATERAL IS EXTENDED DIRECTLY INTO THE WALL, IT SHALL BE MITERED AS NECESSARY TO BE FLUSH WITH WALL.
11. "b" BARS SHALL EXTEND A MINIMUM OF 200 ON EITHER SIDE OF THE OPENING.
12. ADJACENT TO EACH SIDE OF THE OPENING, PLACE ADDITIONAL REINFORCEMENT EQUIVALENT TO HALF THE INTERPURTED MAIN REINFORCEMENT.
13. STEPS SHALL BE AS DETAILED ON STANDARD PLAN D74C.
14. BOTTOMS SHALL HAVE A WOOD TROWEL FINISH.

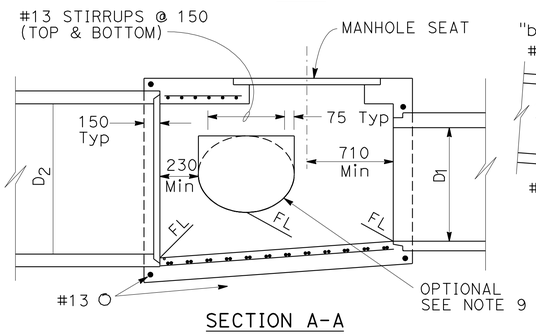

SECTION A-A

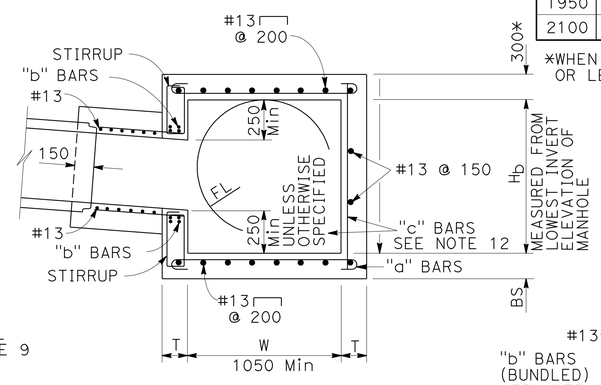

SECTION C-C

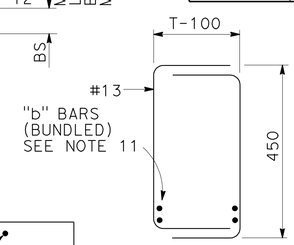

STIRRUPS

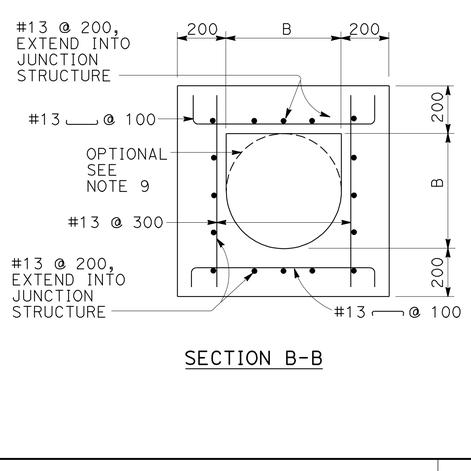

SECTION B-B

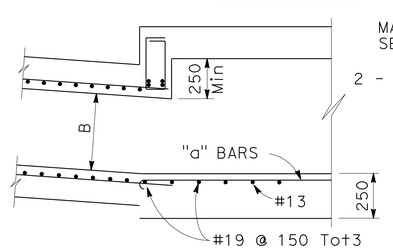

SECTION C-C (OPTIONAL)

MAXIMUM FILL HEIGHT = 2.4 m
FOR REINFORCEMENT AND DETAILS NOT SHOWN, SEE SECTION C-C

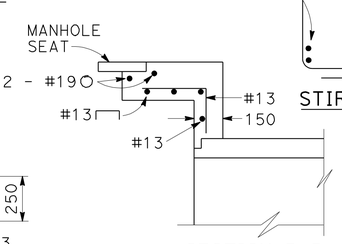

SECTION D-D

JUNCTION STRUCTURE

1 c 2 c 6 k 7 c e k o 7A b d 7B a

ALL DIMENSIONS ARE IN MILLIMETERS UNLESS OTHERWISE SHOWN

DRAINAGE DETAILS

NO SCALE

DD-5

STATE OF CALIFORNIA - DEPARTMENT OF TRANSPORTATION
Caltrans® PROJECT DEVELOPMENT

FUNCTIONAL SUPERVISOR: MAJID KHARRATI
CALCULATED-DESIGNED BY: THEO AQUINO
CHECKED BY: SHAHBAZ A ALVI
REVISED BY / DATE REVISED

LAST REVISION 04-14-10
DATE PLOTTED => 29-SEP-2010
TIME PLOTTED => 13:59

Dist	COUNTY	ROUTE	KILOMETER POST TOTAL PROJECT	SHEET No.	TOTAL SHEETS
11	SD	5,805	R49.9/R51.7, 42.6/46.5	195	886

REGISTERED CIVIL ENGINEER 05-20-09 DATE

9-27-10
PLANS APPROVAL DATE

REGISTERED PROFESSIONAL ENGINEER SHAHBAZ A ALVI No. 55293 Exp. 12-31-10 CIVIL STATE OF CALIFORNIA

THE STATE OF CALIFORNIA OR ITS OFFICERS OR AGENTS SHALL NOT BE RESPONSIBLE FOR THE ACCURACY OR COMPLETENESS OF SCANNED COPIES OF THIS PLAN SHEET.

Caltrans Metric

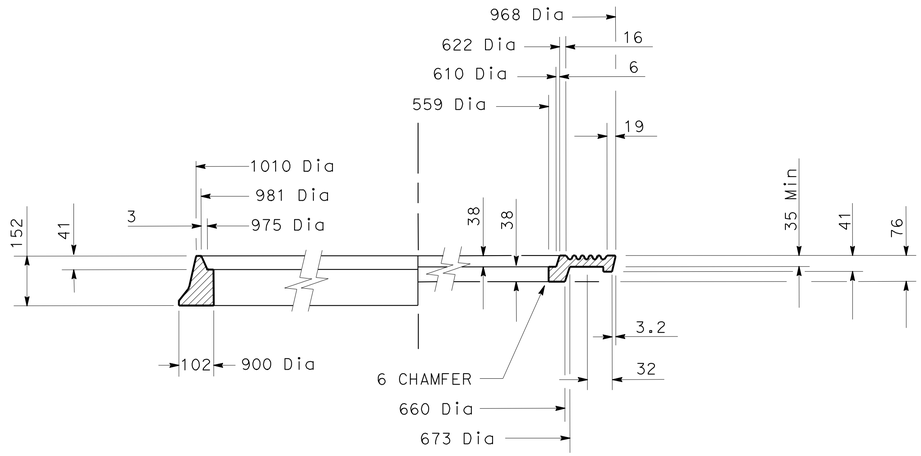

HALF SECTION FRAME AND COVER

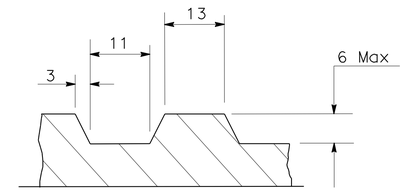

DETAIL A

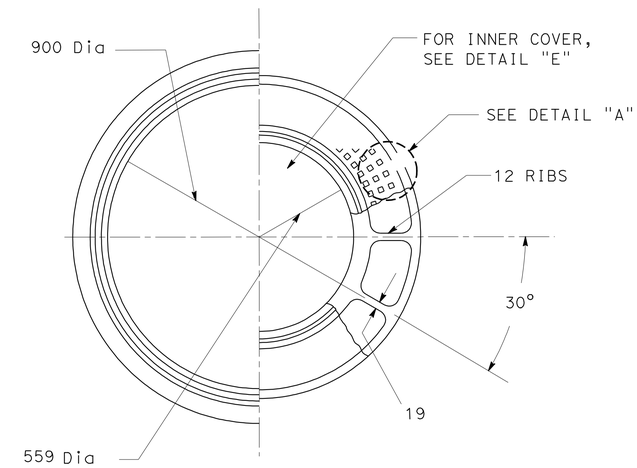

HALF PLAN FRAME AND COVER

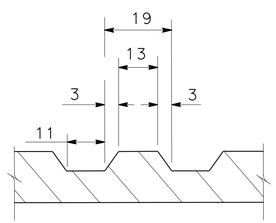

DETAIL B

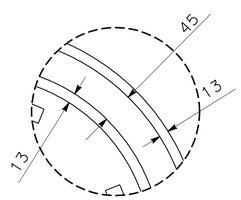

DETAIL C

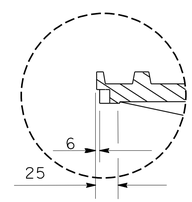

DETAIL D

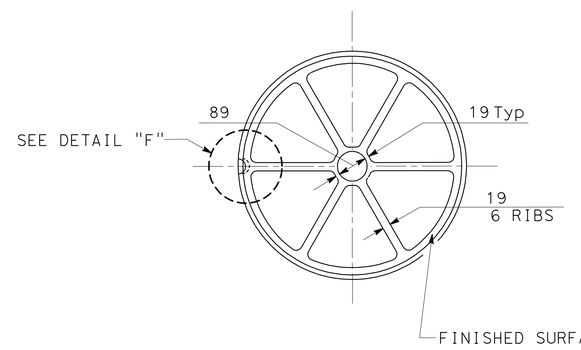

DETAIL E

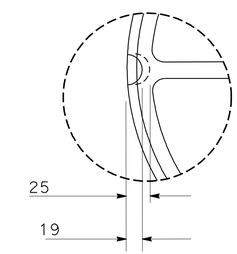

DETAIL F

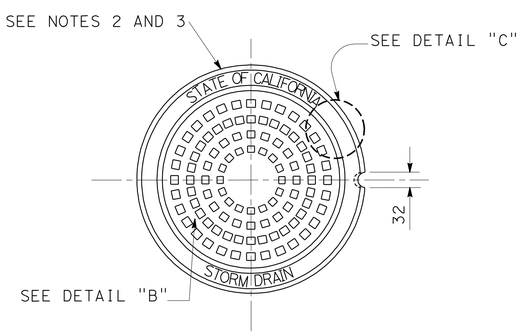

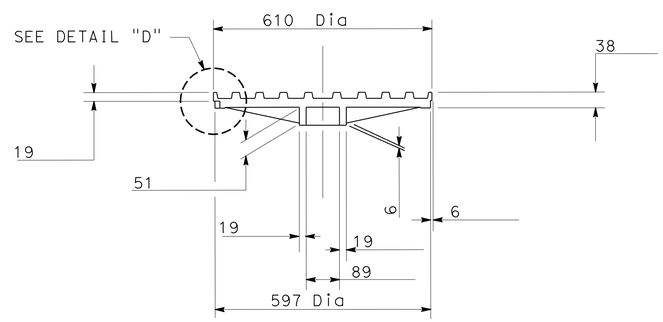

ELEVATION

NOTES:

1. TYPE A CONCENTRIC COVER SHOWN
2. 6.3 mm NEOPRENE O-RING GASKET SHALL BE GLUED INTO MACHINED GROOVE. GLUE SHALL MEET THE REQUIREMENTS OF MIL-M-81288
3. BOLTDOWN PATTERNS:
   a. BETWEEN INNER AND OUTER COVERS INSTALL TWO BOTS AT 180°.
   b. BETWEEN OUTER COVER AND FRAME INSTALL FOUR BOLTS AT 90°.

NOTE:

SEE DRAINAGE DETAILS FOR MANHOLE COVER LOCK.

900 mm MANHOLE FRAME AND TWO CONCENTRIC COVERS
HEAVY DUTY

ALL DIMENSIONS ARE IN MILLIMETERS UNLESS OTHERWISE SHOWN

1 c 2 c 7 e k o 7A d 7B a

DRAINAGE DETAILS
DD-6

NO SCALE

STATE OF CALIFORNIA - DEPARTMENT OF TRANSPORTATION
Caltrans® PROJECT DEVELOPMENT

FUNCTIONAL SUPERVISOR: MAJID KHARRATI
CALCULATED-DESIGNED BY: THEO AQUINO
CHECKED BY: SHAHBAZ A ALVI
REVISED BY / DATE REVISED

LAST REVISION 05-29-09 | DATE PLOTTED => 29-SEP-2010 | TIME PLOTTED => 13:59

Dist	COUNTY	ROUTE	KILOMETER POST TOTAL PROJECT	SHEET No.	TOTAL SHEETS
11	SD	5,805	R49.9/R51.7, 42.6/46.5	196	886

REGISTERED CIVIL ENGINEER 05-20-09 DATE

9-27-10
PLANS APPROVAL DATE

REGISTERED PROFESSIONAL ENGINEER SHAHBAZ A ALVI No. 55293 Exp. 12-31-10 CIVIL STATE OF CALIFORNIA

THE STATE OF CALIFORNIA OR ITS OFFICERS OR AGENTS SHALL NOT BE RESPONSIBLE FOR THE ACCURACY OR COMPLETENESS OF SCANNED COPIES OF THIS PLAN SHEET.

Caltrans Metric

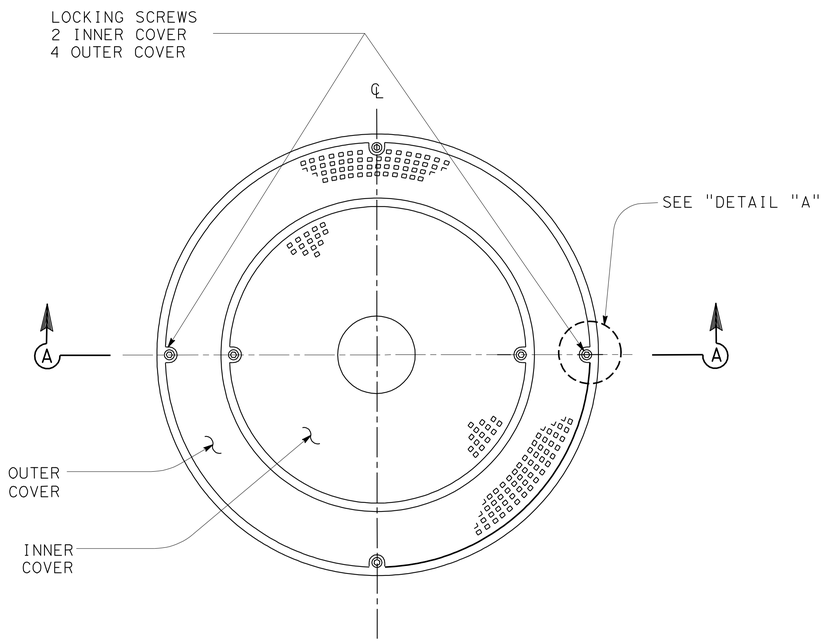

PLAN

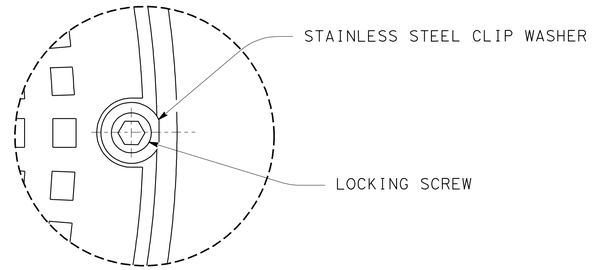

DETAIL A

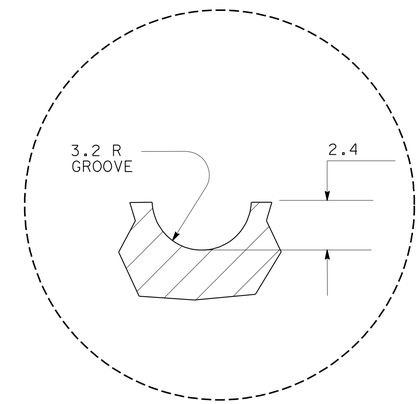

DETAIL C

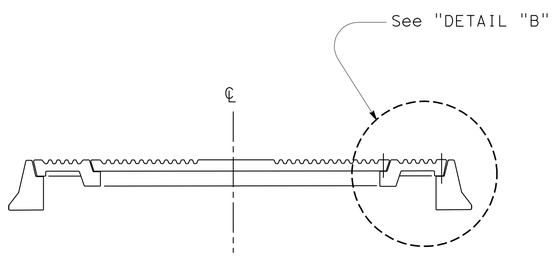

SECTION A-A

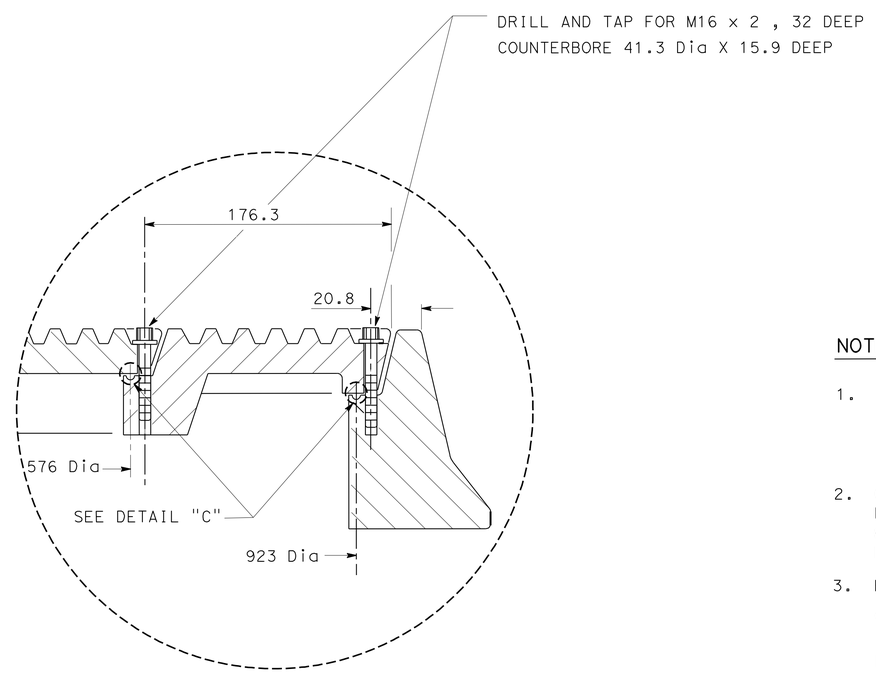

DETAIL B

NOTES:

1. M16 x 2 , 316 STAINLESS STEEL SOCKET HEAD CAP SCREW AND 38.0 mm OD X 17.5 mm ID X 2.0 mm THICK 316 STAINLESS STEEL WASHER.
2. 6.3 mm NEOPRENE O-RING GASKET SHALL BE GLUED INTO MACHINED GROOVE. GLUE SHALL MEET THE REQUIREMENTS OF MIL-M-81288
3. BOLTDOWN PATTERNS:
   a. BETWEEN INNER AND OUTER COVERS INSTALL TWO BOLTS AT 180°.
   b. BETWEEN OUTER COVER AND FRAME INSTALL FOUR BOLTS AT 90°.

MANHOLE COVER LOCK 1 c 2 c 7 e k o 7A d 7B a

ALL DIMENSIONS ARE IN MILLIMETERS UNLESS OTHERWISE SHOWN

DRAINAGE DETAILS
DD-7

NO SCALE

REVISED BY	DATE REVISED

CALCULATED-DESIGNED BY: THEO AQUINO
CHECKED BY: SHAHBAZ A ALVI
FUNCTIONAL SUPERVISOR: MAJID KHARRATI

STATE OF CALIFORNIA - DEPARTMENT OF TRANSPORTATION
Caltrans PROJECT DEVELOPMENT

LAST REVISION 05-29-09 DATE PLOTTED => 29-SEP-2010 TIME PLOTTED => 13:59

Dist	COUNTY	ROUTE	KILOMETER POST TOTAL PROJECT	SHEET No.	TOTAL SHEETS
11	SD	5,805	R49.9/R51.7, 42.6/46.5	197	886

REGISTERED CIVIL ENGINEER 05-20-09 DATE

9-27-10
PLANS APPROVAL DATE

REGISTERED PROFESSIONAL ENGINEER SHAHBAZ A ALVI No. 55293 Exp. 12-31-10 CIVIL STATE OF CALIFORNIA

THE STATE OF CALIFORNIA OR ITS OFFICERS OR AGENTS SHALL NOT BE RESPONSIBLE FOR THE ACCURACY OR COMPLETENESS OF SCANNED COPIES OF THIS PLAN SHEET.

Caltrans Metric

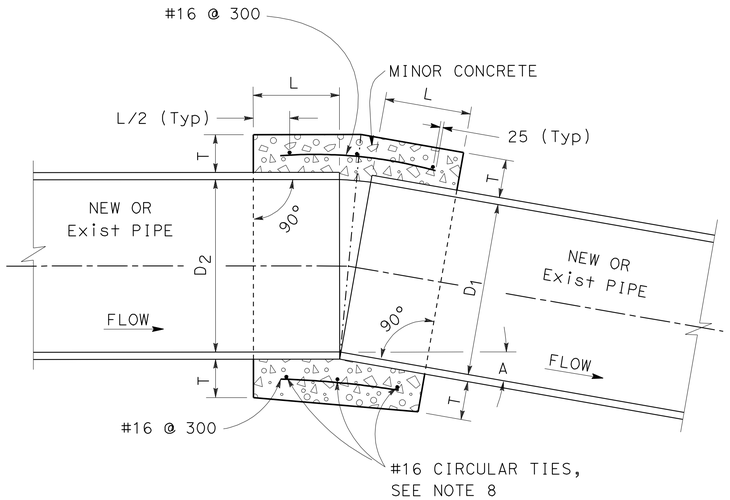

D	L	T
300	300	100
450	300	125
600	300	150
750	450	175
900	450	225
1050	450	225
1200	450	250
1425	450	250
1500	525	275
1650	525	275
1800	600	300

CONCRETE COLLAR 6A a 7A a 21 a

NOTES:

1. A CONCRETE COLLAR IS REQUIRED WHERE THE CHANGE IN GRADE EXCEEDS 10 PERCENT.
2. CONCRETE COLLAR SHALL NOT BE USED FOR A SIZE CHANGE ON THE MAIN LINE.
3. CONNECTOR PIPES
   A. WHERE PIPES OF DIFFERENT DIAMETERS ARE JOINED WITH A CONCRETE COLLAR. L AND T SHALL BE THOSE OF THE LARGER PIPE. $D=D_1$ OR D_2, WHICHEVER IS GREATER.
   B. WHEN D_1 IS EQUAL TO OR LESS THAN D_2, JOIN INVERTS AND WHEN D_1 IS GREAER THAN D_2, JOIN SOFFITS.
4. FOR PIPE LARGER THAN 1800 mm SPECIAL COLLAR DETAILS ARE REQUIRED.
5. FOR PIPE SIZE NOT LISTED USED NEXT SIZE LARGER.
6. REINFORCEMENT SHALL CONFORM TO ASTM A 615 M GRADE 300.
7. WHERE REINFORCING IS REQUIRED THE DIAMETER OF THE CIRCULAR TIES SHALL BE D + (2X WALL THICKNESS) + T.
8. REINFORCING SHALL BE USED WHERE THE PIPE DIAMETER IS GREATER THAN 525 mm AND ON ALL PIPES WHERE THE SPACES BETWEEN THE EXTREME OUTER ENDS IS 75 mm OR LARGER.

   CIRCULAR TIES:

PIPE DIAMETER	No. OF CIRCULAR TIES
525 OR LESS	3
600 TO 750	3
825 TO 1425	4
1500 TO 1800	5

   WHERE THE SPACE BETWEEN PIPE ENDS EXCEEDS 75 mm THE NUMBER OF CIRCULAR TIES SHALL BE INCREASED TO MAINTAIN AN APPROXIMATE SPACING OF 150 mm O.C.
9. WHERE THE PIPE IS 525 mm OR LESS IN DIAMETER AN INTERIOR FORM OF UNSEALED TUBE SHALL BE USED TO PROVIDE A SMOOTH INTERIOR JOINT. THE PAPER FORM ANY BE LEFT IN PLACE (SEE DETAIL A). WHEN THE PIPE IS 600 mm OR LARGER A REMOVABLE INTERIOR FORM SHALL BE USED OR THE INTERIOR JOINT SHALL BE COMPLETELY FILLED WITH MORTAR AND NEATLY POINTED.

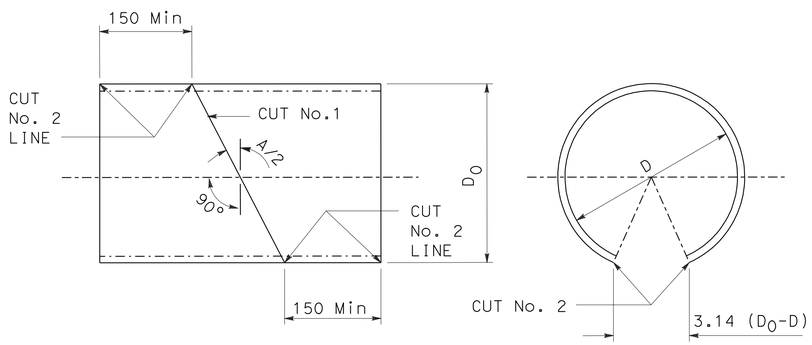

DETAIL "A" (SEE NOTE 9)

TUBE, OR EQUAL INTERIOR FORM

NOTES:

CUT No. 1: SAW THE TUBE AT AN ANGLE OF A/2 WITH THE TRANSVERSE PLANE. REVERSE ONE SECTION AND TAPE BOTH SECTIONS TOGETHER FORMING THE DEFLECTION ANGLE A.

CUT No. 2: SAW THE TUBE LONGITUDINALLY REMOVING A STRIP 3.14 (Do-D) WIDE ON THE SIDE OPPOSITE THE OPEN JOINT, BEND THE ENDS OF THE CUT TOGETHER AND INSERT THE TUBE IN THE PIPE.

ALL DIMENSIONS ARE IN MILLIMETERS UNLESS OTHERWISE SHOWN

DRAINAGE DETAILS
NO SCALE
DD-8

STATE OF CALIFORNIA - DEPARTMENT OF TRANSPORTATION
Caltrans PROJECT DEVELOPMENT
FUNCTIONAL SUPERVISOR MAJID KHARRATI
CALCULATED-DESIGNED BY THEO AQUINO
CHECKED BY SHAHBAZ A ALVI
REVISED BY DATE REVISED

LAST REVISION 05-29-09 DATE PLOTTED => 29-SEP-2010 TIME PLOTTED => 13:59

Dist	COUNTY	ROUTE	KILOMETER POST TOTAL PROJECT	SHEET No.	TOTAL SHEETS
11	SD	5,805	R49.9/R51.7, 42.6/46.5	198	886

REGISTERED CIVIL ENGINEER 05-20-09 DATE

9-27-10
PLANS APPROVAL DATE

REGISTERED PROFESSIONAL ENGINEER SHAHBAZ A ALVI No. 55293 Exp. 12-31-10 CIVIL STATE OF CALIFORNIA

THE STATE OF CALIFORNIA OR ITS OFFICERS OR AGENTS SHALL NOT BE RESPONSIBLE FOR THE ACCURACY OR COMPLETENESS OF SCANNED COPIES OF THIS PLAN SHEET.

Caltrans Metric

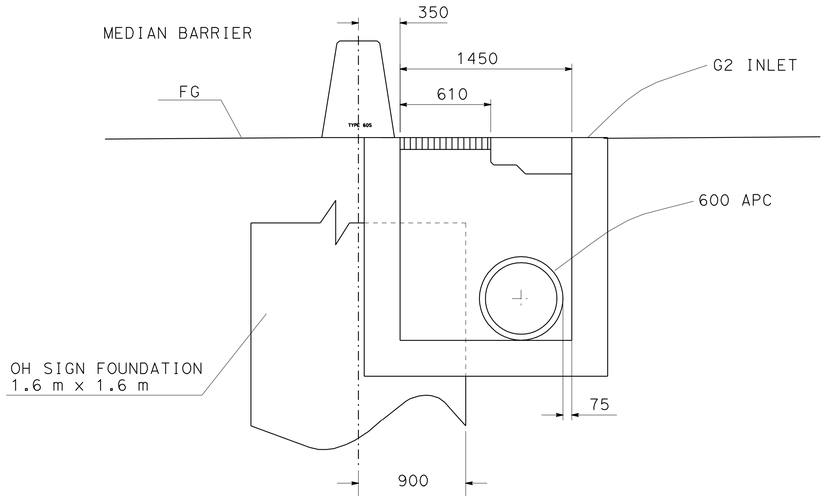

SECTION A-A

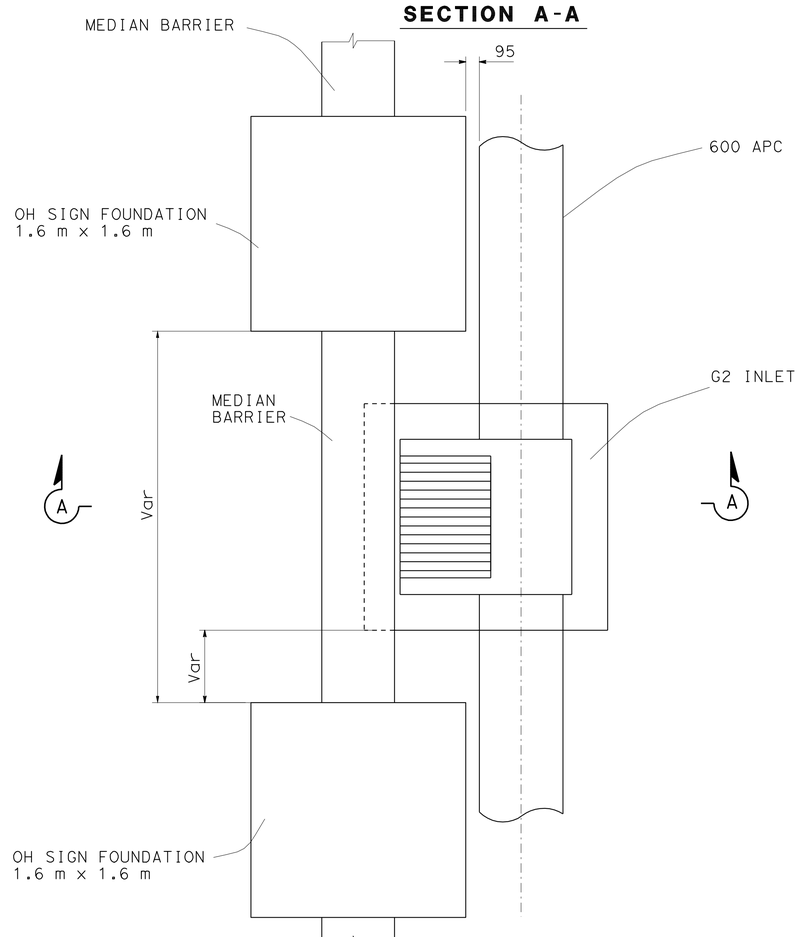

PLAN

G2 INLET LAYOUT ADJACENT TO SIGN STRUCTURE FOUNDATION

9 (f)(h)(j)(l)(n)(p)(r) 12 (a)(c)

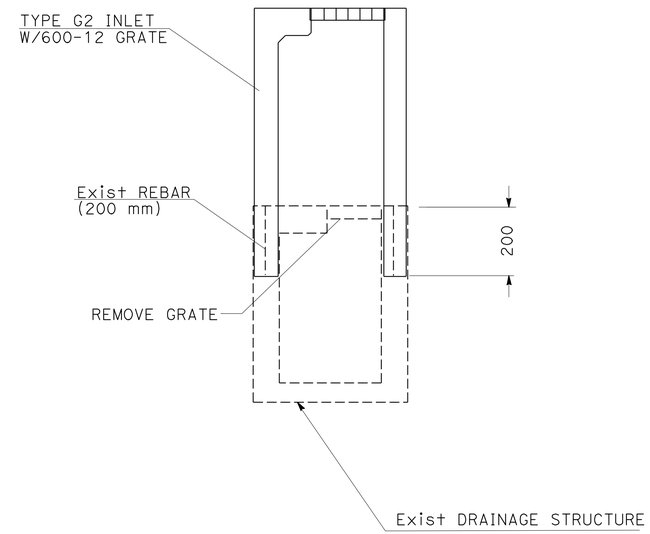

TYPE G2 INLET
CONNECTION TO Exist DRAINAGE STRUCTURE

10 (a) 12 (a) 16 (a)

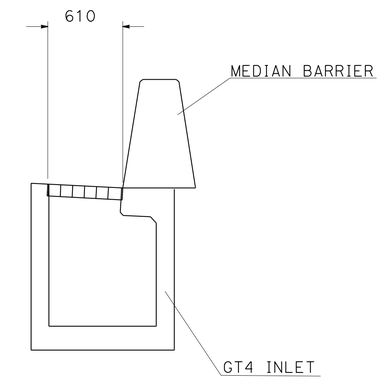

GT4 INLET MODIFIED

20 (a)(c)(e)

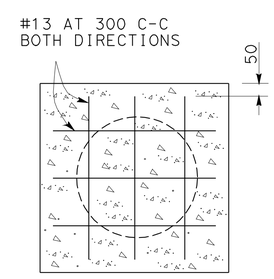

SECTION A-A

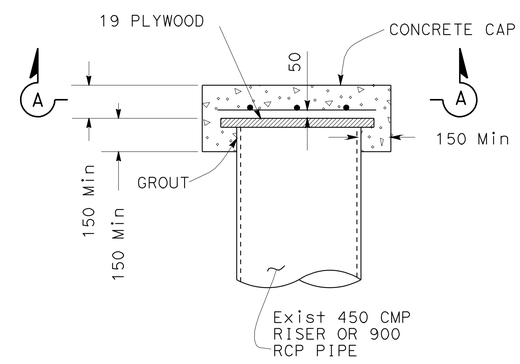

CAP RISER OR PLUG PIPE

6A (g) 7 (f) 9A (e)

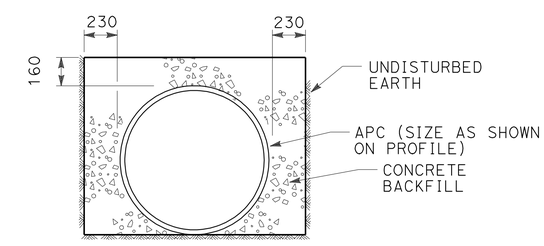

MINOR CONCRETE (BACKFILL)

3 (b)(d) 8 (d)

ALL DIMENSIONS ARE IN MILLIMETERS UNLESS OTHERWISE SHOWN

DRAINAGE DETAILS
DD-9

NO SCALE

STATE OF CALIFORNIA - DEPARTMENT OF TRANSPORTATION
Caltrans PROJECT DEVELOPMENT

FUNCTIONAL SUPERVISOR: MAJID KHARRATI
CALCULATED-DESIGNED BY: THEO AQUINO
CHECKED BY: SHAHBAZ A ALVI
REVISED BY
DATE REVISED

LAST REVISION 05-29-09
DATE PLOTTED => 29-SEP-2010
TIME PLOTTED => 13:59

Dist	COUNTY	ROUTE	KILOMETER POST TOTAL PROJECT	SHEET No.	TOTAL SHEETS
11	SD	5,805	R49.9/R51.7, 42.6/46.5	199	886

REGISTERED CIVIL ENGINEER 05-20-09 DATE

9-27-10
PLANS APPROVAL DATE

REGISTERED PROFESSIONAL ENGINEER SHAHBAZ A ALVI No. 55293 Exp. 12-31-10 CIVIL STATE OF CALIFORNIA

THE STATE OF CALIFORNIA OR ITS OFFICERS OR AGENTS SHALL NOT BE RESPONSIBLE FOR THE ACCURACY OR COMPLETENESS OF SCANNED COPIES OF THIS PLAN SHEET.

Caltrans Metric

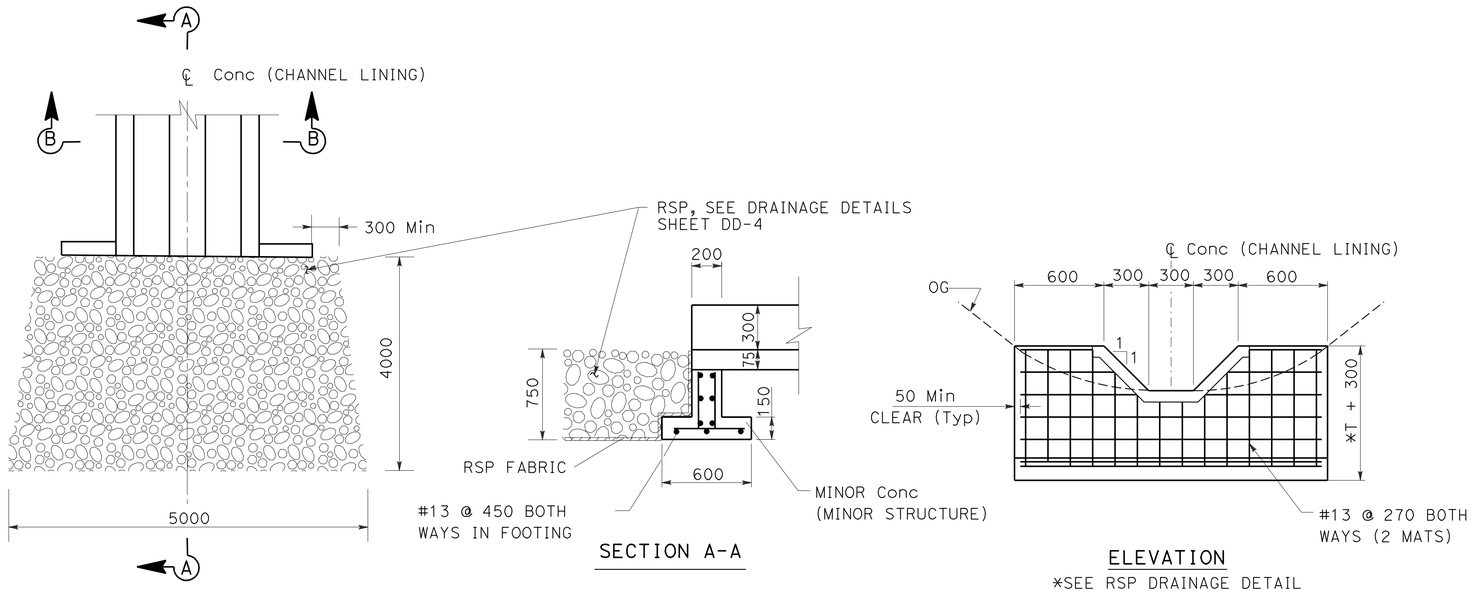

PLAN

SECTION A-A

ELEVATION

*SEE RSP DRAINAGE DETAIL

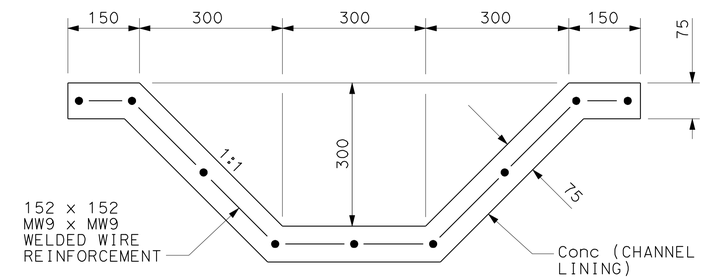

SECTION B-B

Conc CHANNEL LINING

Conc (CHANNEL LINING) W/CUT-OFF WALL AND RSP

1 ap 6B e 7B d

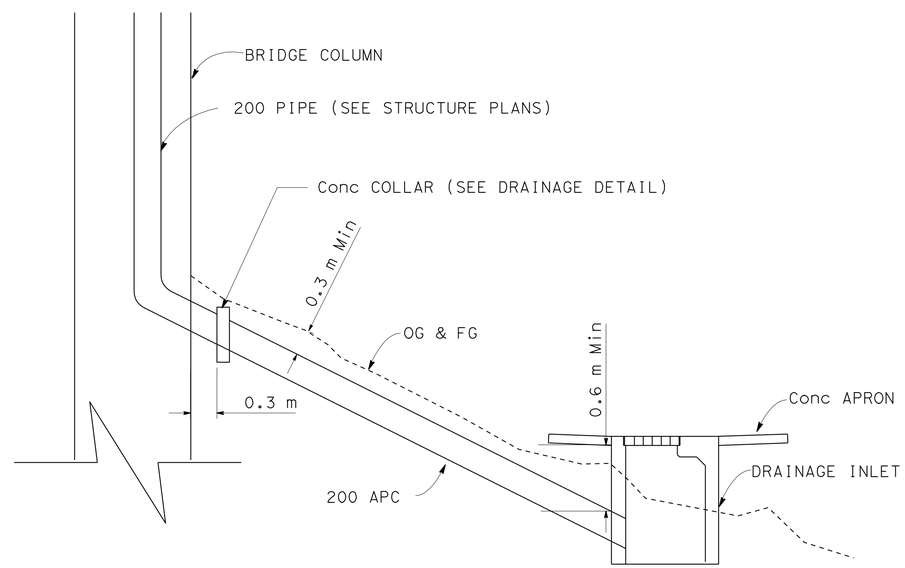

BRIDGE DECK DRAIN OUTLET CONNECTION TO DRAINAGE INLET

6 f g h i

ALL DIMENSIONS ARE IN MILLIMETERS UNLESS OTHERWISE SHOWN

DRAINAGE DETAILS

NO SCALE

DD-10

STATE OF CALIFORNIA - DEPARTMENT OF TRANSPORTATION
Caltrans® PROJECT DEVELOPMENT

FUNCTIONAL SUPERVISOR: MAJID KHARRATI

CALCULATED-DESIGNED BY: THEO AQUINO
CHECKED BY: SHAHBAZ A ALVI

REVISED BY | DATE REVISED

LAST REVISION 04-14-10 | DATE PLOTTED => 29-SEP-2010 | TIME PLOTTED => 13:59

Dist	COUNTY	ROUTE	KILOMETER POST TOTAL PROJECT	SHEET No.	TOTAL SHEETS
11	SD	5,805	R49.9/R51.7, 42.6/46.5	200	886

REGISTERED CIVIL ENGINEER 05-20-09 DATE

9-27-10
PLANS APPROVAL DATE

REGISTERED PROFESSIONAL ENGINEER SHAHBAZ A ALVI No. 55293 Exp. 12-31-10 CIVIL STATE OF CALIFORNIA

THE STATE OF CALIFORNIA OR ITS OFFICERS OR AGENTS SHALL NOT BE RESPONSIBLE FOR THE ACCURACY OR COMPLETENESS OF SCANNED COPIES OF THIS PLAN SHEET.

Caltrans Metric

NOTES: FOR TYPE B INLET OPENING

1. FACE ANGLE SHALL BE CAST INTO STRUCTURE CONTINUOUS FOR THE FULL LENGTH "L".
2. ALL EXPOSED METAL PARTS TO BE HOT-DIPPED GALVANIZED AFTER FARBRICATION.
3. WHEN CURB INLET OPENING HEIGHT (A) EXCEEDS 152 mm INSTALL 25 mm STEEL PROTECTION BAR.
4. INSTALL ADDITIONAL BARS AT 89 mm CLEAR SPACING ABOVE FIRST BAR WHEN OPENING EXCEEDS 330 mm.
5. WHEN CURB INLET OPENING LENGTH EXCEEDS 2.438 m INSTALL 25 mm DIAMETER STEEL SUPPORT BOLTS, SPACED AT NOT MORE THAN 1.524 m.

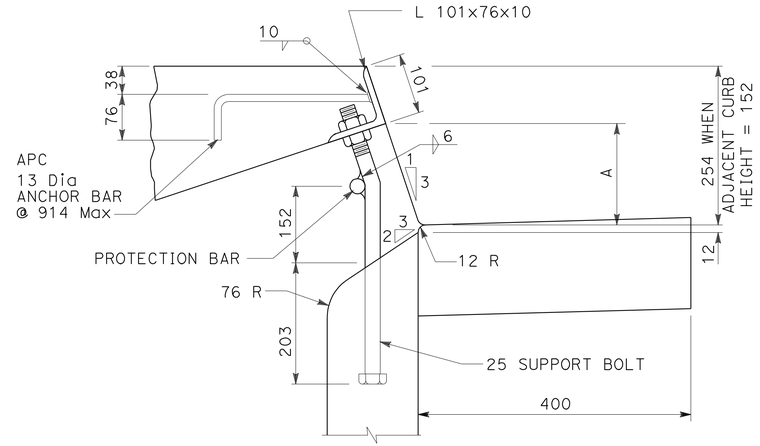

TYPE B & B1 INLET OPENING

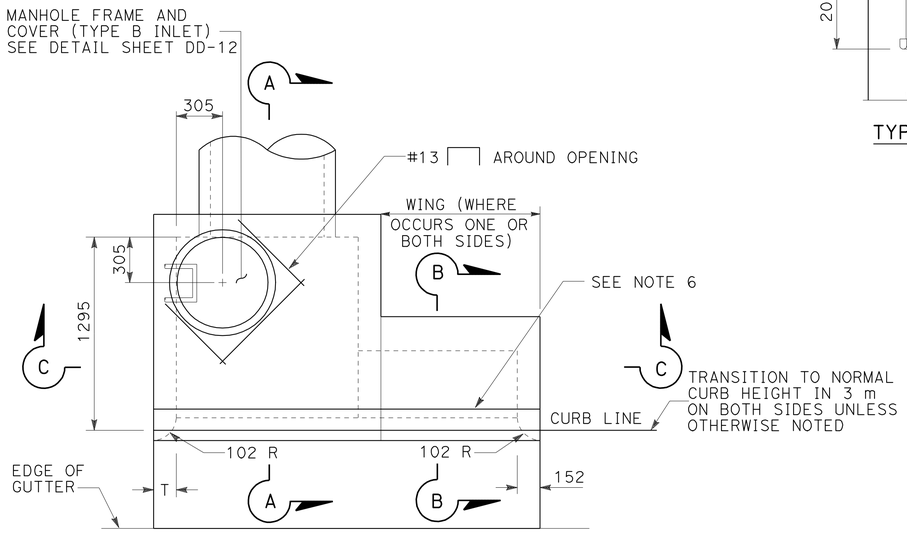

PLAN

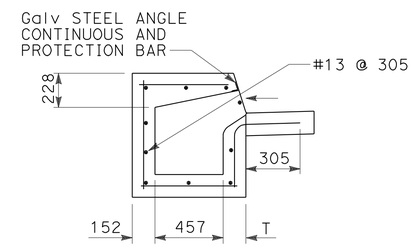

SECTION B-B

NOTES: FOR TYPE B INLET

1. TYPES ARE DESIGNED AS FOLLOWS: (NO WING) B, (ONE WING) B-1, (TWO WINGS) B-2.
2. EXPOSED EDGES OF CONCRETE SHALL BE ROUNDED WITH A RADIUS OF 13 mm
3. WHEN V EXCEEDS 1.2 m STEPS SHALL BE INSTALLED PER STEP DETAIL D74C.
4. CONCRETE GUTTER TO MATCH ADJACENT GUTTERS.
5. AN EXPANSION JOINT SHALL BE PLACED AT THE ENDS OF THE INLET WHERE THE CURB IS TO ADJOIN.
6. PROVIDE 6 mm TOOLED GROOVE IN TOP SLAB IN LINE WITH BACK OF ADJACENT CURB.
7. SURFACE OF TOP SLAB SHALL BE SIDEWALK FINISHED TO DRAIN TOWARD STREET AT A SLOPE OF 2%.
8. MAINTAIN 38 mm CLEAR SPACING BETWEEN REINFORCING AND SURFACE UNLESS OTHERWISE NOTED.
9. Y SHALL BE DETERMINED BY PIPE SIZE USING THE LIMITS SHOWN ON THIS DETAIL UNLESS OTHERWISE SHOWN ON THE PLANS.
10. SEE BOX SECTION REINFORCEMENT TABLE ON SHEET DD-12 FOR ADDITIONAL INFORMATION.

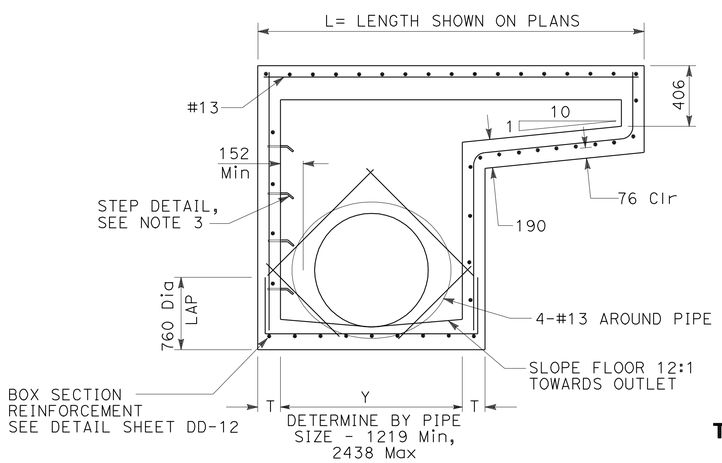

SECTION C-C

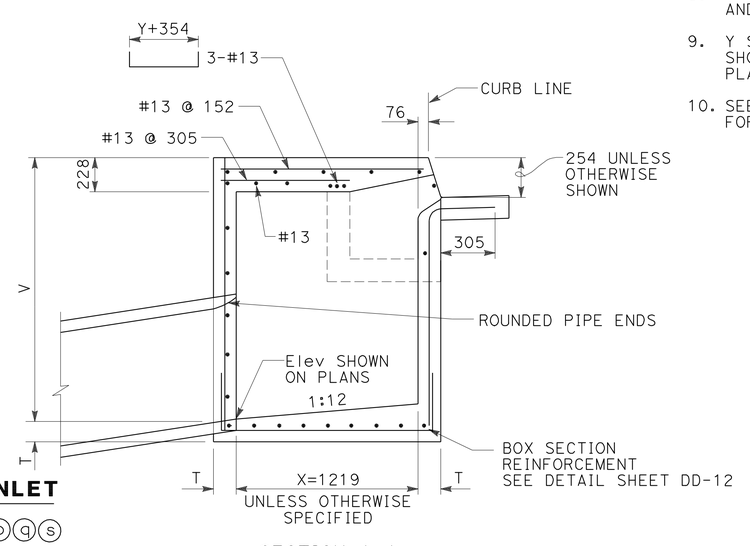

SECTION A-A

TYPE B & B1 INLET

1 e g i k o q s

ALL DIMENSIONS ARE IN MILLIMETERS UNLESS OTHERWISE SHOWN

DRAINAGE DETAILS

NO SCALE

DD-11

REVISED BY	DATE REVISED

THEO AQUINO — SHAHBAZ A ALVI — CALCULATED-DESIGNED BY — CHECKED BY

FUNCTIONAL SUPERVISOR: MAJID KHARRATI

STATE OF CALIFORNIA - DEPARTMENT OF TRANSPORTATION
Caltrans® PROJECT DEVELOPMENT

LAST REVISION 05-29-09 | DATE PLOTTED => 29-SEP-2010 | TIME PLOTTED => 14:00