ACHSSTBG-P094(062)E

Dist	COUNTY	ROUTE	POST MILES TOTAL PROJECT	SHEET No.	TOTAL SHEETS
11	SD	94	59.6/60.2	1	78

STATE OF CALIFORNIA

DEPARTMENT OF TRANSPORTATION

PROJECT PLANS FOR CONSTRUCTION ON

STATE HIGHWAY

IN SAN DIEGO COUNTY NEAR MANZANITA FROM CHURCH ROAD TO 0.1 MILE WEST OF KUMEYAAY ROAD

TO BE SUPPLEMENTED BY STANDARD PLANS DATED 2010

INDEX OF PLANS

SHEET No.	DESCRIPTION
1	TITLE AND LOCATION MAP
2-3	TYPICAL CROSS SECTIONS
4	PROJECT CONTROL
5-6	LAYOUTS
7-8	PROFILES AND SUPERELEVATION DIAGRAMS
9-10	CONSTRUCTION DETAILS
11-13	TEMPORARY WATER POLLUTION CONTROL PLANS AND QUANTITIES
14-24	DRAINAGE AND CONTOUR GRADING PLANS, PROFILES, DETAILS AND QUANTITIES
25-26	UTILITY PLANS
27	CONSTRUCTION AREA SIGNS
28-41	STAGE CONSTRUCTION AND TRAFFIC HANDLING PLANS
42	TRAFFIC HANDLING PLANS
43-44	DETOUR PLANS
45-48	PAVEMENT DELINEATION PLANS, DETAILS AND QUANTITIES
49-50	SIGN QUANTITIES
51	SUMMARY OF QUANTITIES
52-58	LANDSCAPE PLANS
59-78	REVISED STANDARD PLANS

THE STANDARD PLANS LIST APPLICABLE TO THIS CONTRACT IS INCLUDED IN THE NOTICE TO BIDDERS AND SPECIAL PROVISIONS BOOK.

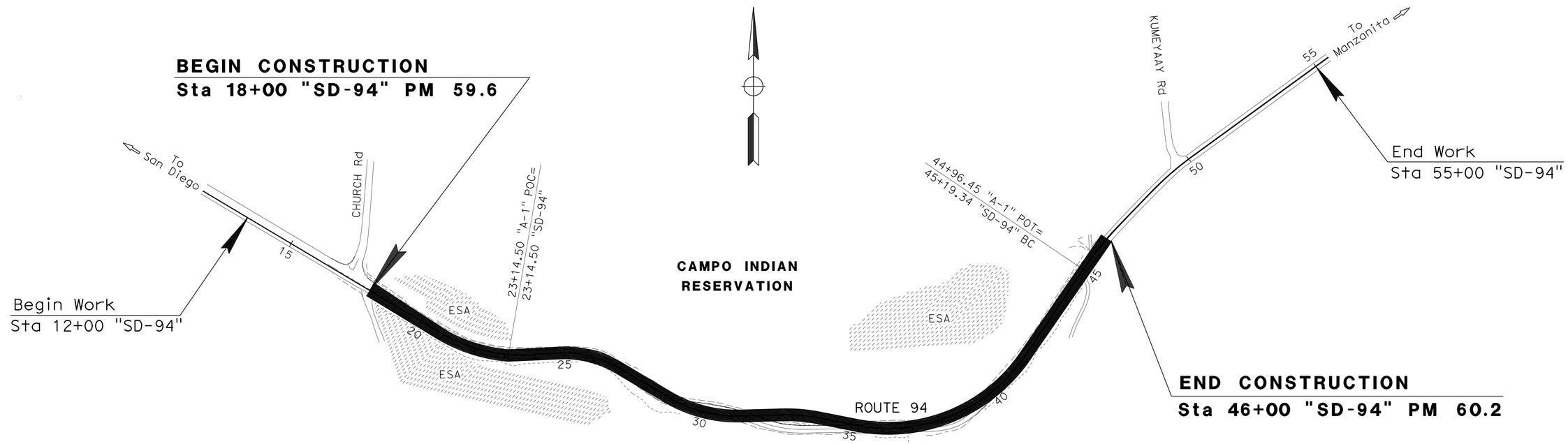

PROJECT MANAGER: CHARLES GRAY

DESIGN MANAGER: JOSE LUIS ROBLES

PROJECT ENGINEER REGISTERED CIVIL ENGINEER — DATE 03-25-16

REGISTERED PROFESSIONAL ENGINEER — JOSE L ROBLES — No. C 64402 — Exp. 06-30-17 — CIVIL — STATE OF CALIFORNIA

May 9, 2016

PLANS APPROVAL DATE

THE STATE OF CALIFORNIA OR ITS OFFICERS OR AGENTS SHALL NOT BE RESPONSIBLE FOR THE ACCURACY OR COMPLETENESS OF SCANNED COPIES OF THIS PLAN SHEET.

THE CONTRACTOR SHALL POSSESS THE CLASS (OR CLASSES) OF LICENSE AS SPECIFIED IN THE "NOTICE TO BIDDERS."

NO SCALE

CONTRACT No.	11-295204
PROJECT ID	1100000392

LAST REVISION 04-18-16 — DATE PLOTTED => 16-MAY-2016 — TIME PLOTTED => 08:30

Dist	COUNTY	ROUTE	POST MILES TOTAL PROJECT	SHEET No.	TOTAL SHEETS
11	SD	94	59.6/60.2	2	78

REGISTERED CIVIL ENGINEER 03-25-16 DATE

05-09-16
PLANS APPROVAL DATE

REGISTERED PROFESSIONAL ENGINEER JOSE L. ROBLES No. C 64402 Exp. 06-30-17 CIVIL STATE OF CALIFORNIA

THE STATE OF CALIFORNIA OR ITS OFFICERS OR AGENTS SHALL NOT BE RESPONSIBLE FOR THE ACCURACY OR COMPLETENESS OF SCANNED COPIES OF THIS PLAN SHEET.

NOTES:

1. DIMENSIONS OF THE PAVEMENT STRUCTURES (STRUCTURAL SECTIONS) ARE SUBJECT TO TOLERANCES SPECIFIED IN THE STANDARD SPECIFICATIONS.
2. SUPERELEVATIONS ARE SHOWN ON THE SUPERELEVATION DIAGRAMS.
3. SEE LAYOUT AND QUANTITY SHEETS FOR ADDITIONAL INFORMATION ON RUMBLE STRIPS, HMA DIKE, AND HIGH FRICTION SURFACE TREATMENT.
4. FOG SEAL COAT MUST BE APPLIED TO ALL HMA SURFACE EXCEPT TRAVELED WAYS.
5. FOR Conc DITCH (SEE DRAINAGE DETAILS FOR SIZE, TYPE AND LOCATION)

DESIGN DESIGNATION

ADT (2020)	560	D	51%
ADT (2040)	810	T	15.7%
DHV	100	V	55 mph
ESAL	301,000	TI_{20}	8.0

PAVEMENT CLIMATE REGION: SOUTH MOUNTAIN

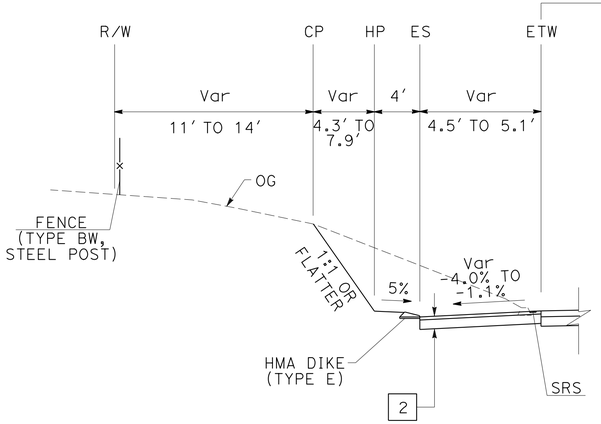

Sta 23+75.00 TO Sta 24+25.00 "A-1" LINE

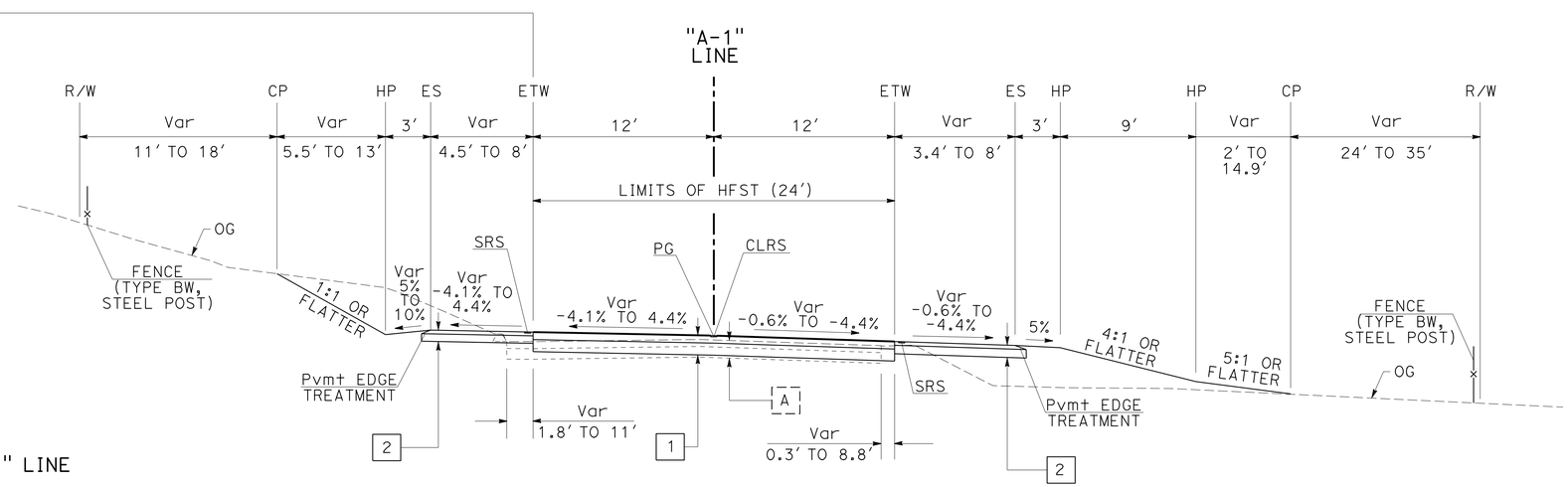

Sta 23+75.00 TO Sta 25+55.00 "A-1" LINE

TYPICAL PAVEMENT STRUCTURE SECTIONS

- [A] — Exist / 0.15' AC-G / 0.44' AC-A / 0.90' AB-CLASS II
- [1] — 0.50' HMA (TYPE A) / 0.80' CLASS 2 AB
- [2] — 0.25' HMA (TYPE A) / 0.50' CLASS 2 AB
- [3] — Var (0.20'-0.30') COLD PLANE AC PAVEMENT / 0.20' Max HMA (TYPE A)
- [4] — 0.30' HMA (TYPE A) / 1.00' CLASS 2 AB

LEGEND

HFST - HIGH FRICTION SURFACE TREATMENT
SRS - Shld RUMBLE STRIP (HMA, GROUND-IN INDENTATIONS)
CLRS - CENTERLINE RUMBLE STRIP (HMA, GROUND-IN INDENTATIONS)
S/C - SAW CUT LINE

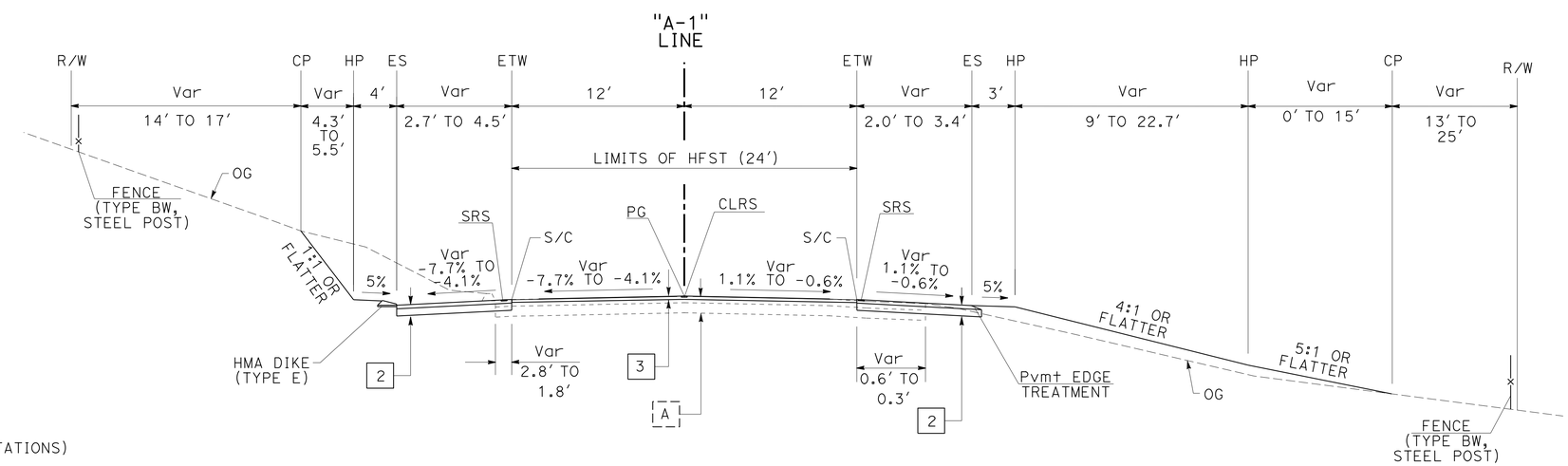

Sta 23+14.50 TO Sta 23+75.00 "A-1" LINE

ROUTE 94

TYPICAL CROSS SECTIONS

NO SCALE

X-1

STATE OF CALIFORNIA - DEPARTMENT OF TRANSPORTATION
Caltrans
TRAFFIC PROJECT DEVELOPMENT

FUNCTIONAL SUPERVISOR: CHARLES GRAY
CALCULATED-DESIGNED BY: KENNY T. NGUYEN
CHECKED BY: JOSE LUIS ROBLES
REVISED BY
DATE REVISED

LAST REVISION 04-18-16
DATE PLOTTED => 12-MAY-2016
TIME PLOTTED => 13:13

Dist	COUNTY	ROUTE	POST MILES TOTAL PROJECT	SHEET No.	TOTAL SHEETS
11	SD	94	59.6/60.2	3	78

REGISTERED CIVIL ENGINEER 03-25-16 DATE

05-09-16
PLANS APPROVAL DATE

REGISTERED PROFESSIONAL ENGINEER JOSE L. ROBLES No. C 64402 Exp. 06-30-17 CIVIL STATE OF CALIFORNIA

THE STATE OF CALIFORNIA OR ITS OFFICERS OR AGENTS SHALL NOT BE RESPONSIBLE FOR THE ACCURACY OR COMPLETENESS OF SCANNED COPIES OF THIS PLAN SHEET.

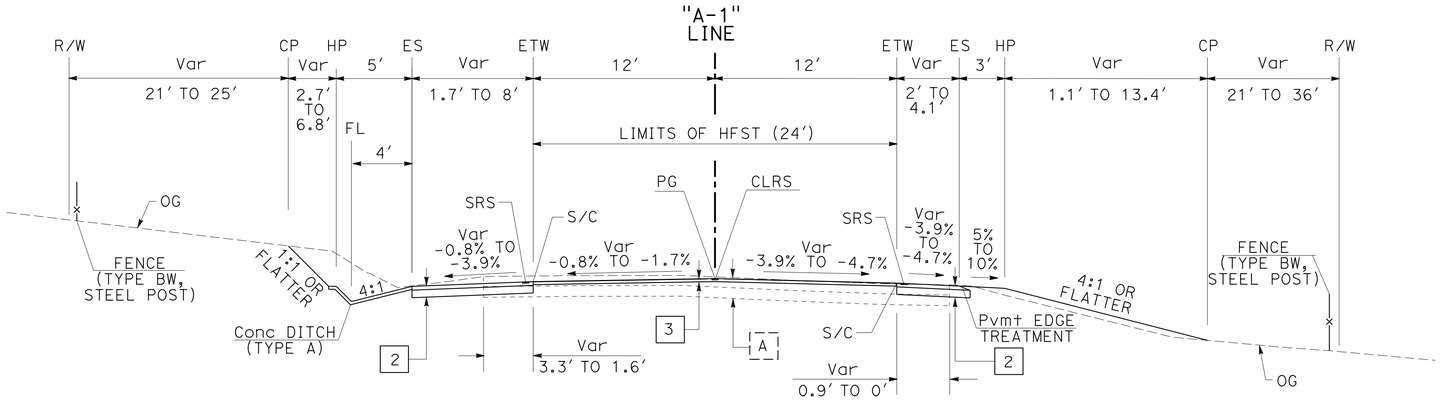

Sta 44+25.00 TO Sta 44+96.45 "A-1" LINE

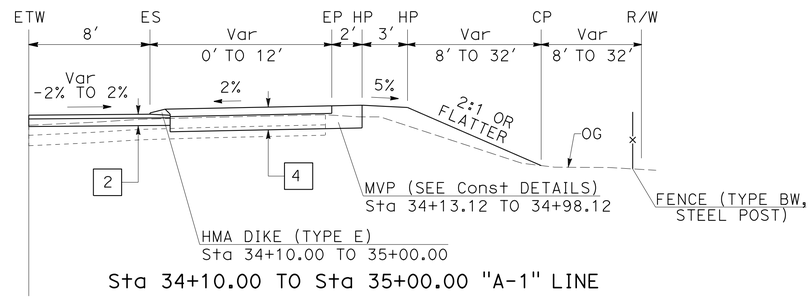

Sta 34+10.00 TO Sta 35+00.00 "A-1" LINE

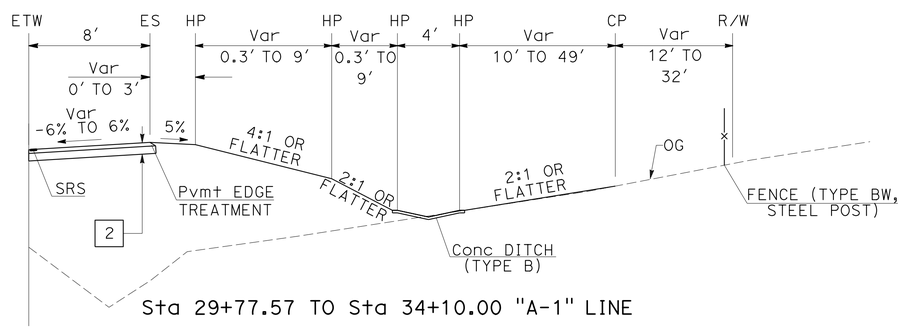

Sta 29+77.57 TO Sta 34+10.00 "A-1" LINE

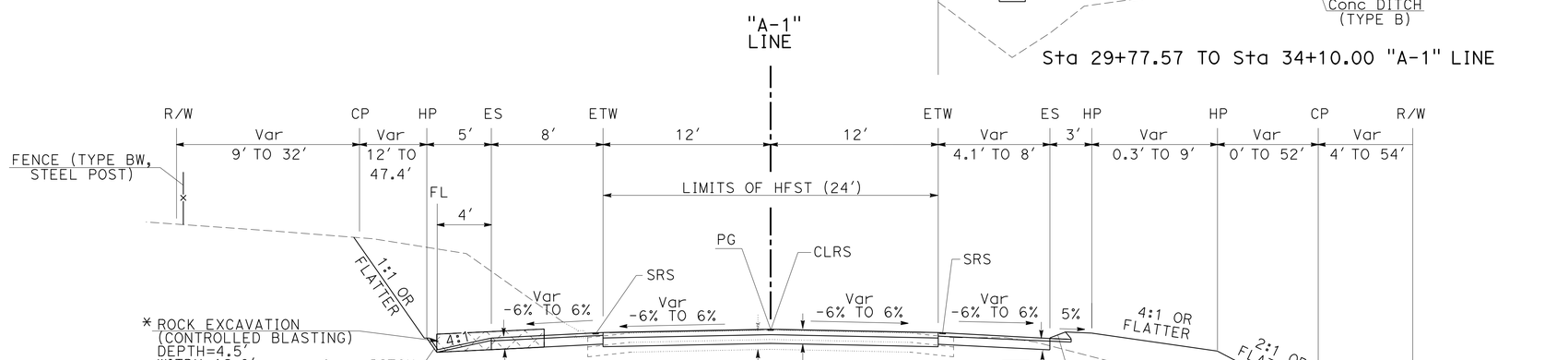

*STA 37+50.00 TO 39+00.00

Sta 25+55.00 TO Sta 44+25.00 "A-1" LINE

ROUTE 94

TYPICAL CROSS SECTIONS

NO SCALE

X-2

STATE OF CALIFORNIA - DEPARTMENT OF TRANSPORTATION
TRAFFIC PROJECT DEVELOPMENT
Caltrans

FUNCTIONAL SUPERVISOR: CHARLES GRAY
CALCULATED-DESIGNED BY: KENNY T. NGUYEN
CHECKED BY: JOSE LUIS ROBLES
REVISED BY / DATE REVISED

LAST REVISION 04-18-16 | DATE PLOTTED => 12-MAY-2016 | TIME PLOTTED => 13:13

Dist	COUNTY	ROUTE	POST MILES TOTAL PROJECT	SHEET No.	TOTAL SHEETS
11	SD	94	59.6/60.2	4	78

PROFESSIONAL LAND SURVEYOR DATE

05-09-16
PLANS APPROVAL DATE

PROFESSIONAL LAND SURVEYOR MARK D. PHELAN L.S.7111 EXP:12-31-16 STATE OF CALIFORNIA

THE STATE OF CALIFORNIA OR ITS OFFICERS OR AGENTS SHALL NOT BE RESPONSIBLE FOR THE ACCURACY OR COMPLETENESS OF SCANNED COPIES OF THIS PLAN SHEET.

NOTES:

1. FOR COMPLETE PROJECT CONTROL DATA, SEE THE SURVEY RECORDS ON FILE IN THE SURVEY DEPARTMENT AT THE DISTRICT OFFICE.

2. BASIS OF BEARINGS

FOR THIS PROJECT IS THE CALIFORNIA COORDINATE SYSTEM OF 1983, HPGN (1991.35 Epoch) ZONE 6. PROJECT CONTROL STATIONS WERE ESTABLISHED ACCORDING TO CRITERIA SET FORTH IN THE FEDERAL GEODETIC CONTROL SUBCOMMITTEE'S "GEOMETRIC GEODETIC ACCURACY STANDARDS AND SPECIFICATIONS FOR USING GPS RELATIVE POSITIONING TECHNIQUES" REPRINTED AUGUST 1, 1989.

3. BASIS OF ELEVATIONS

FOR THIS PROJECT IS THE NORTH AMERICAN VERTICAL DATUM OF 1988 (NAVD88 CGPS).

4. IN THE EVENT GPS MACHINE CONTROL/GUIDANCE IS USED FOR THIS PROJECT, THE CONTRACTOR SHALL CONTACT OR MEET WITH DISTRICT 11'S LAND SURVEY DIVISION TO OBTAIN THE CONTROL NECESSARY TO ESTABLISH A PROJECT CALIBRATION COMPATIBLE FOR ALL USERS.

ABBREVIATIONS:

CADT	CALIFORNIA DEPARTMENT OF TRANSPORTATION
CAL DOT	CALIFORNIA DEPARTMENT OF TRANSPORTATION
IP	IRON PIPE

LEGEND:

(2) 2ND ORDER STATION

(3) 3RD ORDER STATION

CONTROL FOR DESIGN AND CONSTRUCTION

STATION DESIGNATION	ORDER	NORTHING	EASTING	ELEVATION	DESCRIPTION
94-59.65	2ND	1815693.35	6525927.14	3273.68	2¼" CADT DISK IN 2" IP
94 59.80	3RD	1815380.88	6526555.23	3321.15	"CAL DOT" PLUG IN 1" IP
94 59.93	3RD	1815052.97	6527464.14	3378.51	PK & WASHER IN BOULDER
94 60.00	3RD	1815146.11	6527999.95	3410.03	"CAL DOT" PLUG IN 1" IP
94 60.05	3RD	1815324.95	6528204.53	3409.13	"CAL DOT" PLUG IN BOULDER
94 60.15	3RD	1815790.79	6528573.53	3393.37	"CAL DOT" PLUG IN 1" IP

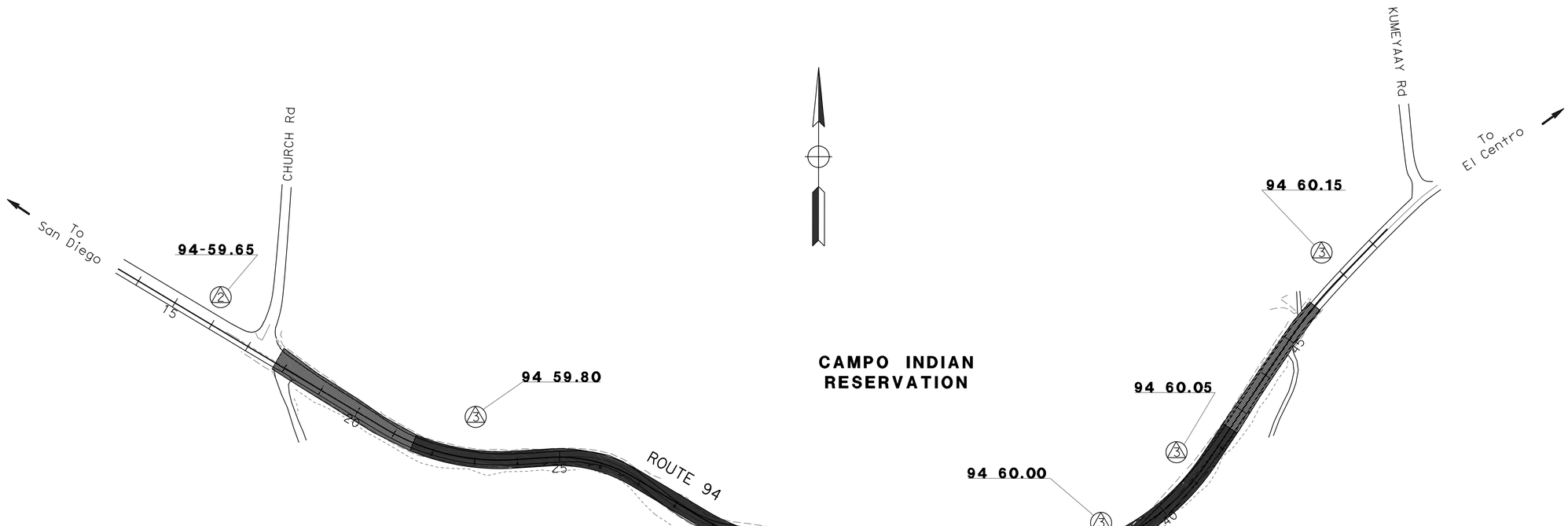

PROJECT CONTROL

PC-1

NO SCALE

APPROVED FOR PROJECT CONTROL INFORMATION ONLY

STATE OF CALIFORNIA - DEPARTMENT OF TRANSPORTATION
Caltrans LAND SURVEYS DIVISION

FUNCTIONAL SUPERVISOR: BRUCE URQUHART
CALCULATED-DESIGNED BY: ROBERT EICHWALD
CHECKED BY: MARK PHELAN
REVISED BY
DATE REVISED

LAST REVISION 04-18-16
DATE PLOTTED => 12-MAY-2016
TIME PLOTTED => 13:13

Dist	COUNTY	ROUTE	POST MILES TOTAL PROJECT	SHEET No.	TOTAL SHEETS
11	SD	94	59.6/60.2	5	78

REGISTERED CIVIL ENGINEER 03-25-16 DATE

05-09-16
PLANS APPROVAL DATE

REGISTERED PROFESSIONAL ENGINEER JOSE L. ROBLES No. C 64402 Exp. 06-30-17 CIVIL STATE OF CALIFORNIA

THE STATE OF CALIFORNIA OR ITS OFFICERS OR AGENTS SHALL NOT BE RESPONSIBLE FOR THE ACCURACY OR COMPLETENESS OF SCANNED COPIES OF THIS PLAN SHEET.

NOTES:

1. FOR ACCURATE RIGHT OF WAY DATA, CONTACT RIGHT OF WAY ENGINEERING AT THE DISTRICT OFFICE.
2. FOR EROSION CONTROL LEGEND, SEQUENCE/APPLICATION INFORMATION, AND QUANTITIES, SEE THE PLANT LIST SHEET.

CAMPO INDIAN RESERVATION

CURVE DATA

No.	R	Δ	T	L
1	525′	34°32′25″	163.22′	316.49′
2	450′	34°30′32″	139.77′	271.03′
3	450′	32°24′32″	130.78′	254.54′

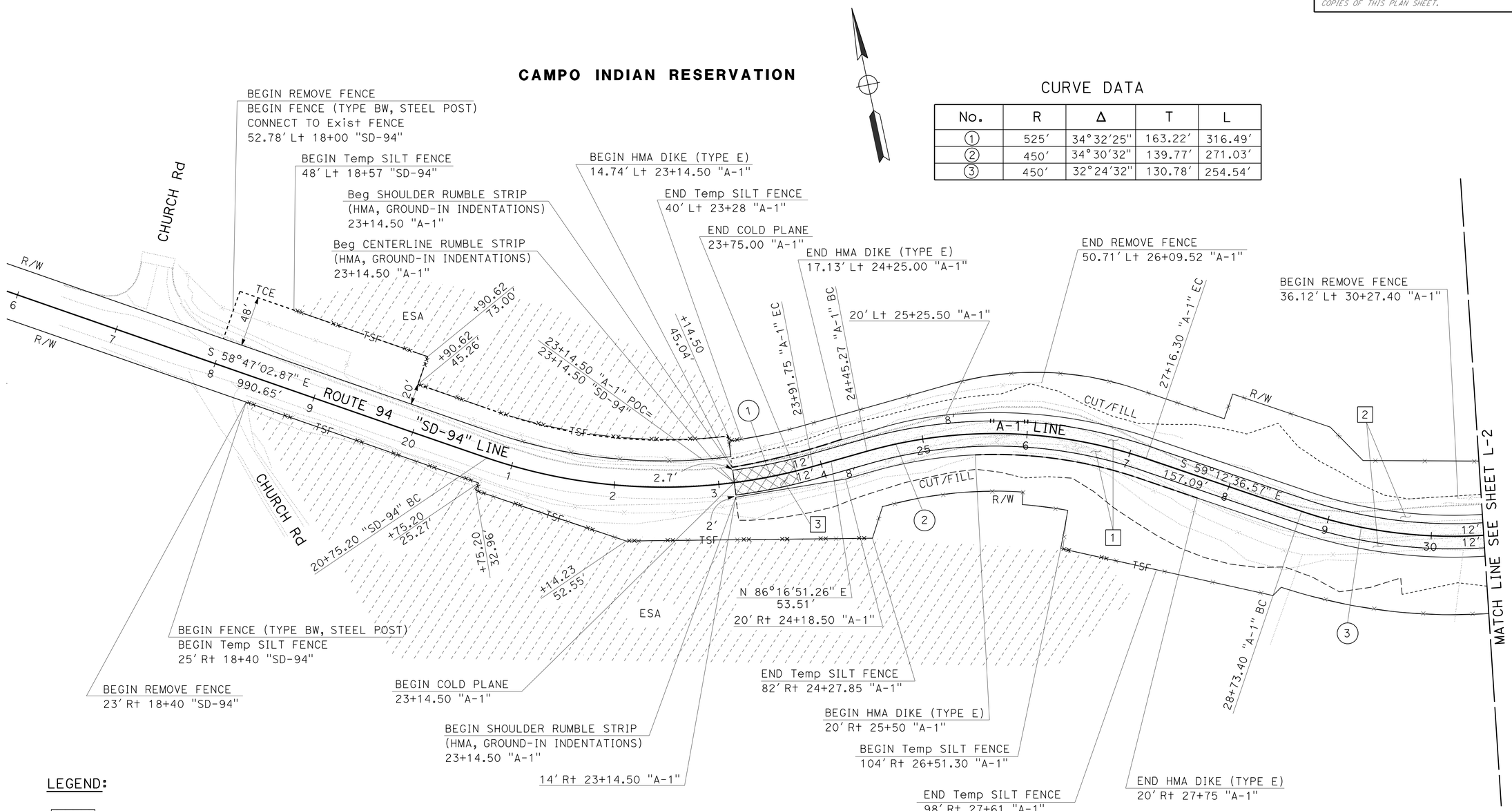

LEGEND:

- HIGH FRICTION SURFACE TREATMENT
- COLD PLANE AC PAVEMENT
- ROCK EXCAVATION (CONTROLLED BLASTING)

SCALE: 1" = 50′

LAYOUT L-1

STATE OF CALIFORNIA - DEPARTMENT OF TRANSPORTATION
TRAFFIC PROJECT DEVELOPMENT
Caltrans

FUNCTIONAL SUPERVISOR: CHARLES GRAY
CALCULATED-DESIGNED BY: KENNY T. NGUYEN
CHECKED BY: JOSE LUIS ROBLES
REVISED BY / DATE REVISED

LAST REVISION 04-18-16
DATE PLOTTED => 12-MAY-2016
TIME PLOTTED => 13:13

Dist	COUNTY	ROUTE	POST MILES TOTAL PROJECT	SHEET No.	TOTAL SHEETS
11	SD	94	59.6/60.2	6	78

REGISTERED CIVIL ENGINEER 03-25-16 DATE

05-09-16
PLANS APPROVAL DATE

REGISTERED PROFESSIONAL ENGINEER JOSE L. ROBLES No. C 64402 Exp. 06-30-17 CIVIL STATE OF CALIFORNIA

THE STATE OF CALIFORNIA OR ITS OFFICERS OR AGENTS SHALL NOT BE RESPONSIBLE FOR THE ACCURACY OR COMPLETENESS OF SCANNED COPIES OF THIS PLAN SHEET.

NOTES:
1. FOR ACCURATE RIGHT OF WAY DATA, CONTACT RIGHT OF WAY ENGINEERING AT THE DISTRICT OFFICE.

CURVE DATA

No.	R	Δ	T	L
3	450′	32°24′32"	130.78′	254.54′
4	450′	12°47′37"	50.45′	100.48′
5	550′	56°23′47"	294.89′	541.37′
6	800′	10°58′48"	76.89′	153.31′
7	1,000′	10°16′22"	89.89′	179.30′

CAMPO INDIAN RESERVATION

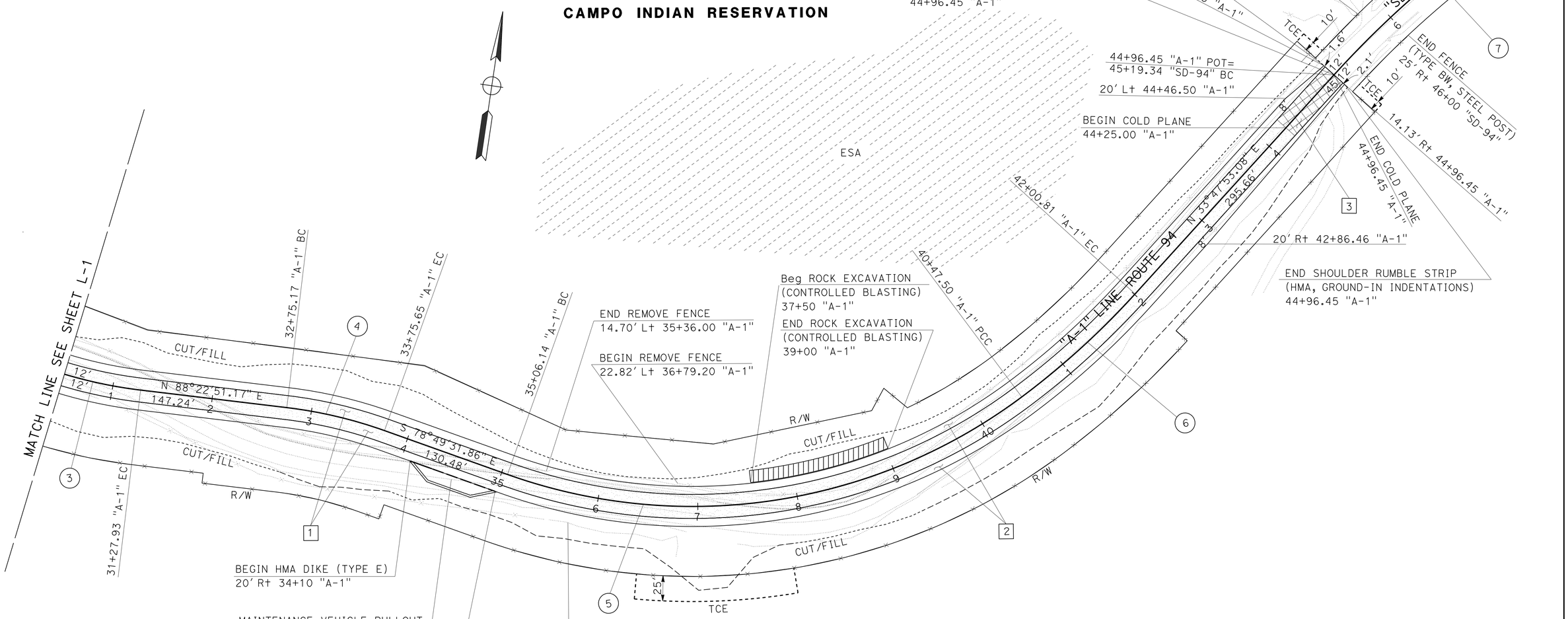

SCALE: 1" = 50′

LAYOUT
L-2

STATE OF CALIFORNIA - DEPARTMENT OF TRANSPORTATION
Caltrans
TRAFFIC PROJECT DEVELOPMENT

FUNCTIONAL SUPERVISOR: CHARLES GRAY
CALCULATED-DESIGNED BY: KENNY T. NGUYEN
CHECKED BY: JOSE LUIS ROBLES
REVISED BY / DATE REVISED

LAST REVISION 04-18-16 | DATE PLOTTED => 12-MAY-2016 | TIME PLOTTED => 13:13

Dist	COUNTY	ROUTE	POST MILES TOTAL PROJECT	SHEET No.	TOTAL SHEETS
11	SD	94	59.6/60.2	7	78

REGISTERED CIVIL ENGINEER 03-25-16 DATE

05-09-16
PLANS APPROVAL DATE

REGISTERED PROFESSIONAL ENGINEER JOSE L. ROBLES No. C 64402 Exp. 06-30-17 CIVIL STATE OF CALIFORNIA

THE STATE OF CALIFORNIA OR ITS OFFICERS OR AGENTS SHALL NOT BE RESPONSIBLE FOR THE ACCURACY OR COMPLETENESS OF SCANNED COPIES OF THIS PLAN SHEET.

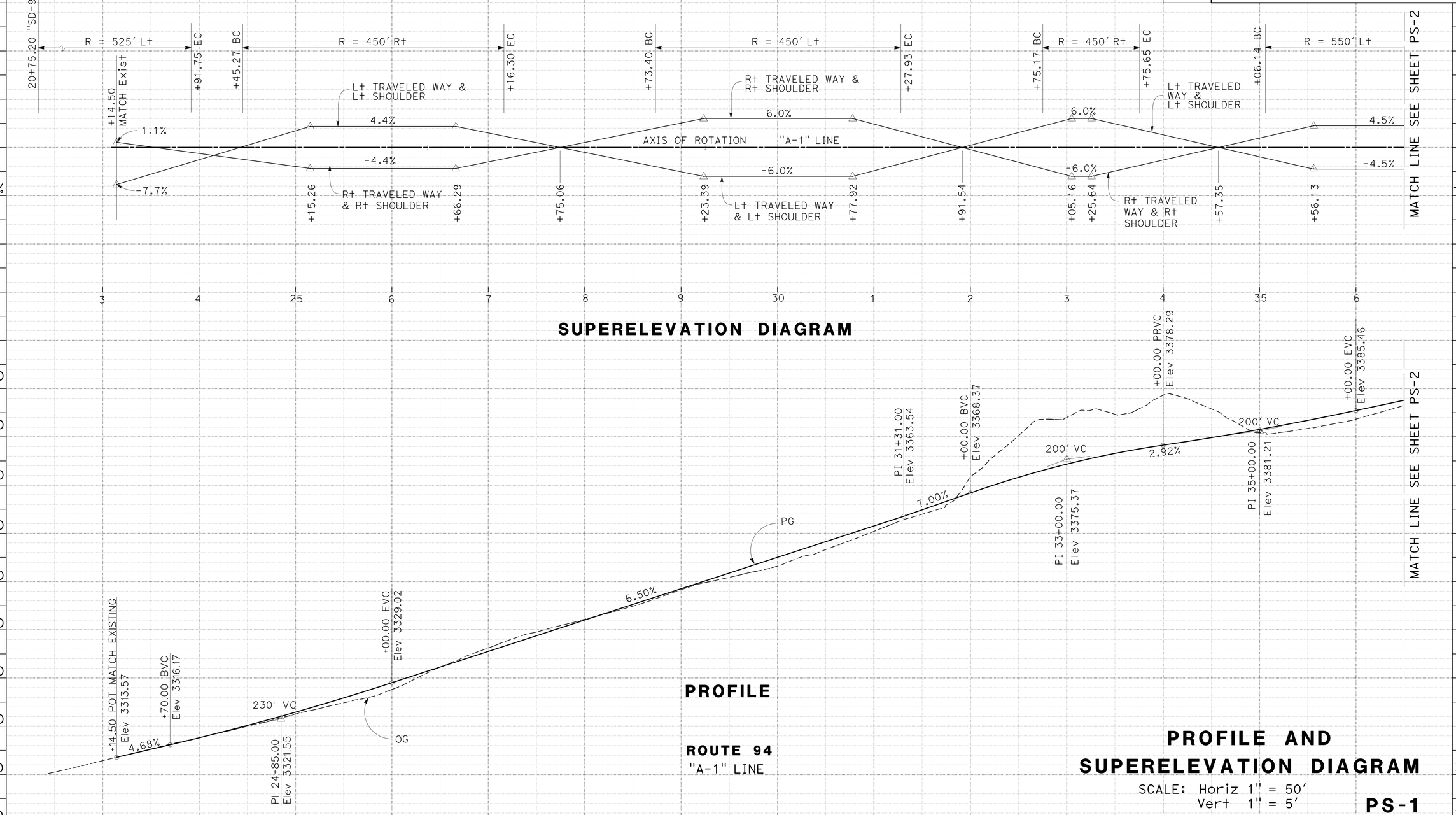

STATION		3	4	25	6	7	8	9	30	1	2	3	4	35	6	TOTAL
CY	Exc		90		10,761											10,885
	Emb		28		2,539											2,647

STATE OF CALIFORNIA - DEPARTMENT OF TRANSPORTATION
Caltrans PROJECT DEVELOPMENT
TRAFFIC

FUNCTIONAL SUPERVISOR: CHARLES GRAY
CALCULATED-DESIGNED BY: KENNY T. NGUYEN
CHECKED BY: JOSE LUIS ROBLES
REVISED BY / DATE REVISED

LAST REVISION 04-18-16
DATE PLOTTED => 12-MAY-2016
TIME PLOTTED => 13:13

Dist	COUNTY	ROUTE	POST MILES TOTAL PROJECT	SHEET No.	TOTAL SHEETS
11	SD	94	59.6/60.2	8	78

REGISTERED CIVIL ENGINEER 03-25-16 DATE

05-09-16
PLANS APPROVAL DATE

REGISTERED PROFESSIONAL ENGINEER
JOSE L. ROBLES
No. C 64402
Exp. 06-30-17
CIVIL
STATE OF CALIFORNIA

THE STATE OF CALIFORNIA OR ITS OFFICERS OR AGENTS SHALL NOT BE RESPONSIBLE FOR THE ACCURACY OR COMPLETENESS OF SCANNED COPIES OF THIS PLAN SHEET.

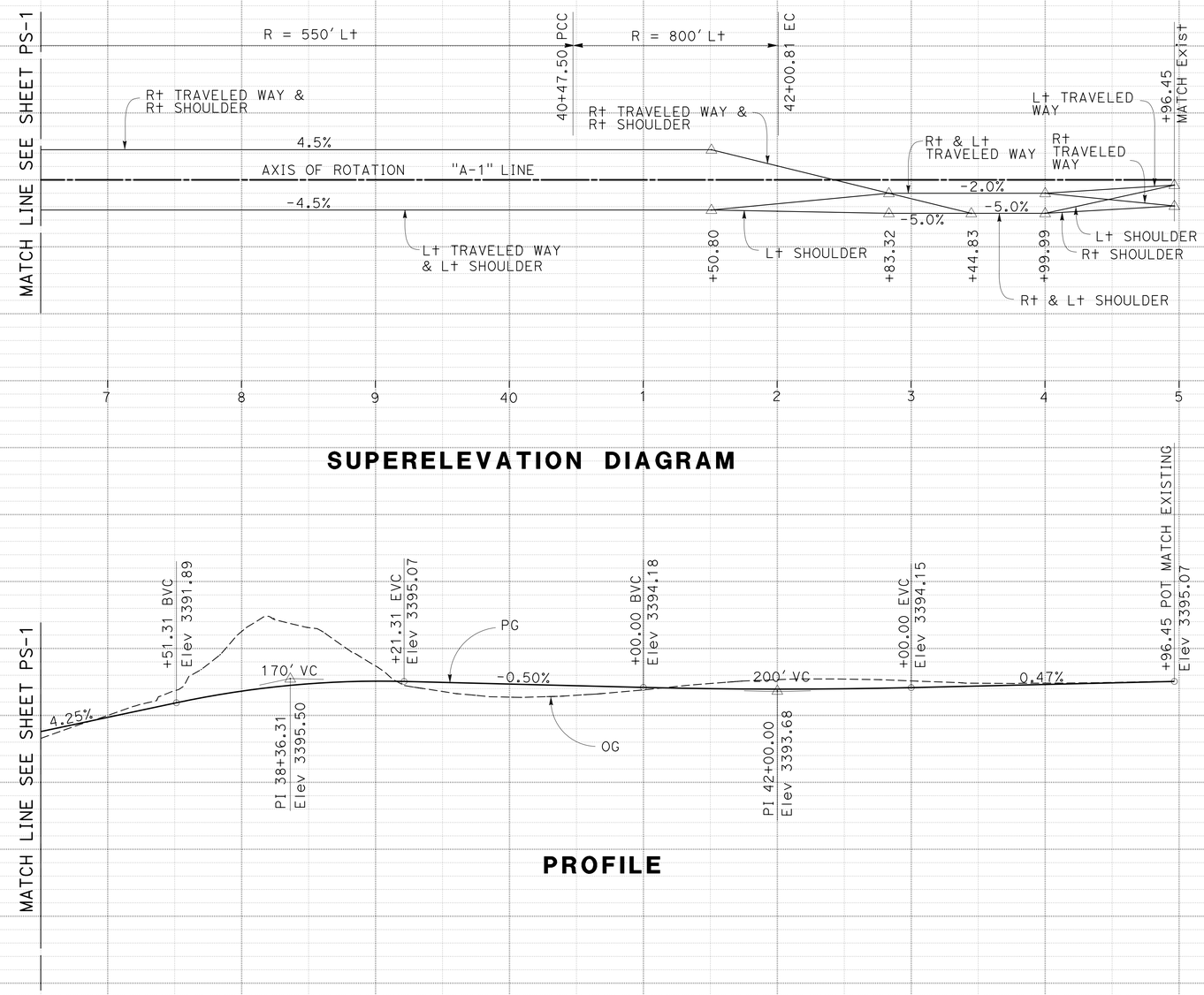

ROUTE 94
"A-1" LINE

PROFILE AND SUPERELEVATION DIAGRAM

SCALE: Horiz 1" = 50'
Vert 1" = 5'

PS-2

STATION		7	8	9	40	1	2	3	4	5	TOTAL
CY	Exc	6861							122		7116
	Emb	1226							6		1299

STATE OF CALIFORNIA - DEPARTMENT OF TRANSPORTATION
Caltrans PROJECT DEVELOPMENT
TRAFFIC

FUNCTIONAL SUPERVISOR: CHARLES GRAY
CALCULATED-DESIGNED BY: KENNY T. NGUYEN
CHECKED BY: JOSE LUIS ROBLES
REVISED BY
DATE REVISED

LAST REVISION 04-18-16
DATE PLOTTED => 12-MAY-2016
TIME PLOTTED => 13:13

Dist	COUNTY	ROUTE	POST MILES TOTAL PROJECT	SHEET No.	TOTAL SHEETS
11	SD	94	59.6/60.2	9	78

REGISTERED CIVIL ENGINEER 03-25-16 DATE

05-09-16
PLANS APPROVAL DATE

REGISTERED PROFESSIONAL ENGINEER JOSE L. ROBLES No. C 64402 Exp. 06-30-17 CIVIL STATE OF CALIFORNIA

THE STATE OF CALIFORNIA OR ITS OFFICERS OR AGENTS SHALL NOT BE RESPONSIBLE FOR THE ACCURACY OR COMPLETENESS OF SCANNED COPIES OF THIS PLAN SHEET.

NOTES:

1. SEE LAYOUT AND QUANTITY SHEETS FOR ADDITIONAL INFORMATION ON MVP AND HMA DIKE.

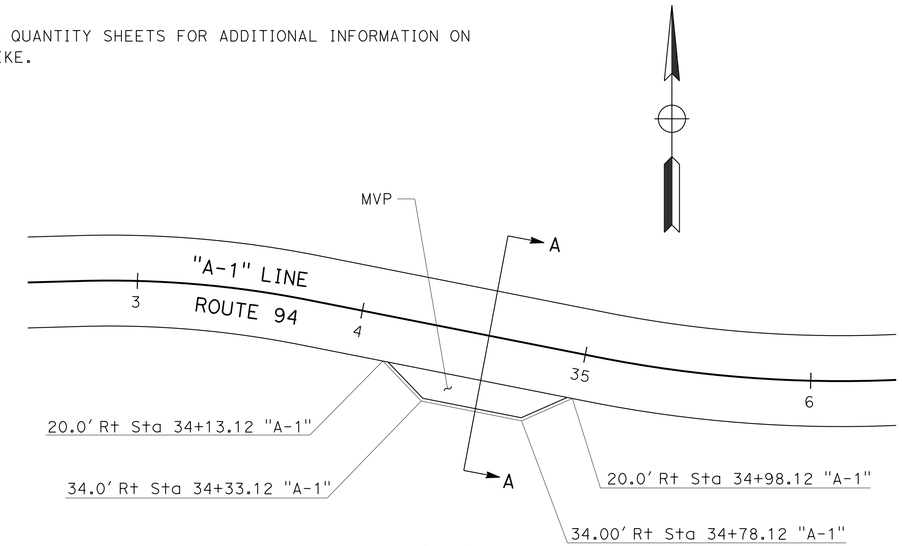

PLAN

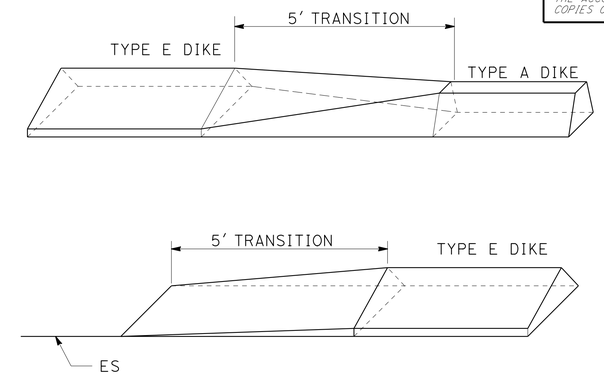

DIKE TRANSITIONS

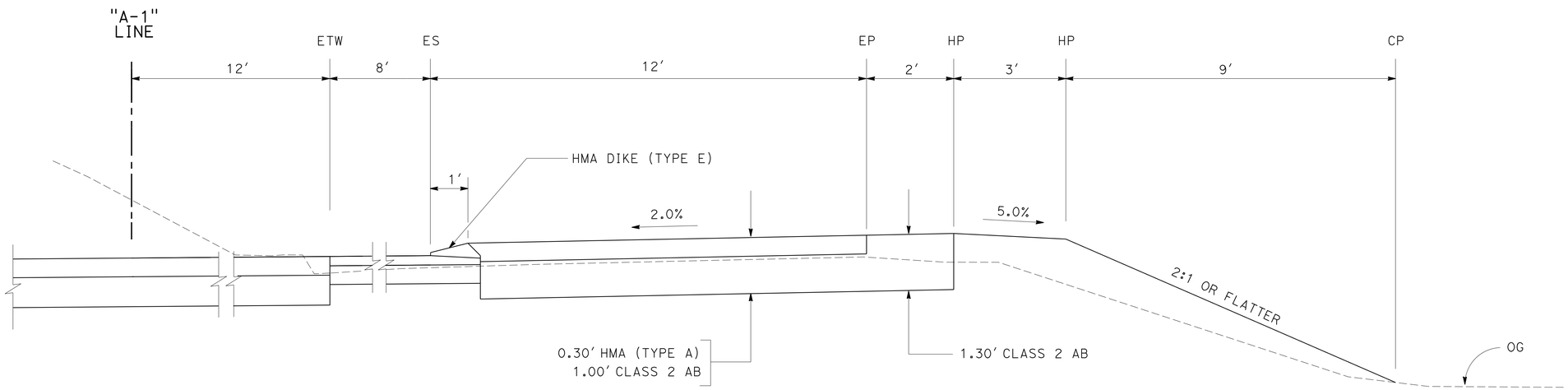

SECTION A-A

MAINTENANCE VEHICLE PULLOUT WITH DIKE (TYPE E)

CONSTRUCTION DETAILS

NO SCALE

C-1

REVISED BY | DATE REVISED
KENNY T. NGUYEN | JOSE LUIS ROBLES
CALCULATED-DESIGNED BY | CHECKED BY
FUNCTIONAL SUPERVISOR
CHARLES GRAY

STATE OF CALIFORNIA - DEPARTMENT OF TRANSPORTATION
Caltrans
TRAFFIC PROJECT DEVELOPMENT

LAST REVISION 04-18-16 | DATE PLOTTED => 12-MAY-2016 TIME PLOTTED => 13:13

Dist	COUNTY	ROUTE	POST MILES TOTAL PROJECT	SHEET No.	TOTAL SHEETS
11	SD	94	59.6/60.2	10	78

REGISTERED CIVIL ENGINEER 03-25-16 DATE

05-09-16
PLANS APPROVAL DATE

REGISTERED PROFESSIONAL ENGINEER JOSE L. ROBLES No. C 64402 Exp. 06-30-17 CIVIL STATE OF CALIFORNIA

THE STATE OF CALIFORNIA OR ITS OFFICERS OR AGENTS SHALL NOT BE RESPONSIBLE FOR THE ACCURACY OR COMPLETENESS OF SCANNED COPIES OF THIS PLAN SHEET.

NOTES:

1. THERMOPLASTIC STRIPE SHALL BE PLACED OVER CENTERLINE RUMBLE STRIP (HMA, GROUND-IN INDENTATIONS).
2. SEE STANDARD PLAN A40B FOR RUMBLE STRIP (HMA, GROUND-IN INDENTATIONS).
3. SEE LAYOUT, PAVEMENT DELINEATION DETAILS, AND QUANTITY SHEETS FOR ADDITIONAL INFORMATION ON RUMBLE STRIPS.

LEGEND:

▯ = CENTERLINE RUMBLE STRIP (HMA, GROUND-IN INDENTATIONS)

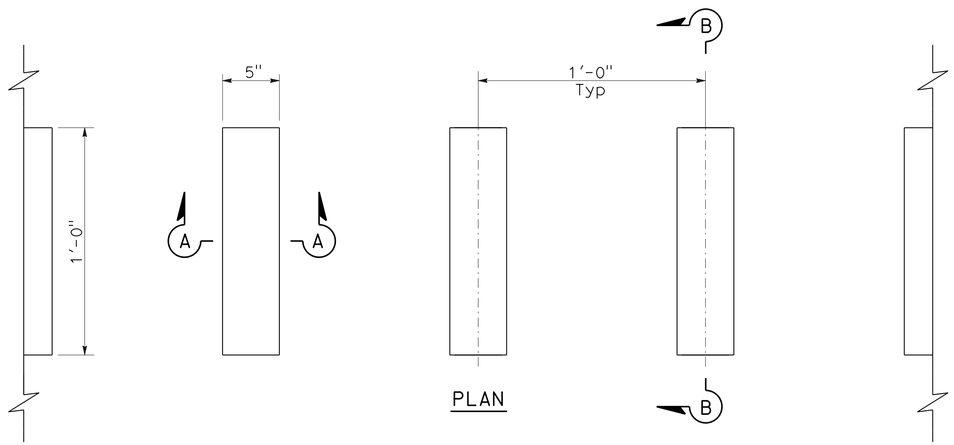

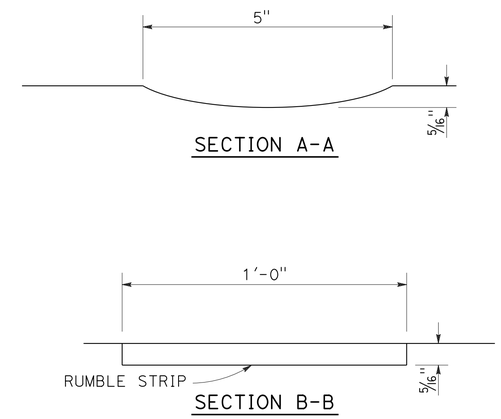

GROUND-IN INDENTATIONS

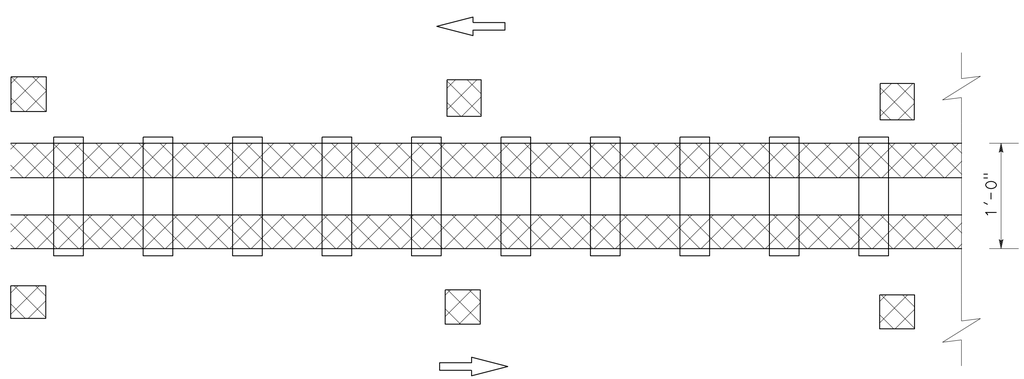

DETAIL 22 (Mod) WITH CENTERLINE RUMBLE STRIP

CONSTRUCTION DETAILS

NO SCALE

C-2

STATE OF CALIFORNIA - DEPARTMENT OF TRANSPORTATION
Caltrans
TRAFFIC PROJECT DEVELOPMENT

FUNCTIONAL SUPERVISOR: CHARLES GRAY
CALCULATED-DESIGNED BY: KENNY T. NGUYEN
CHECKED BY: JOSE LUIS ROBLES
REVISED BY
DATE REVISED

LAST REVISION 04-18-16
DATE PLOTTED => 12-MAY-2016
TIME PLOTTED => 13:13

Dist	COUNTY	ROUTE	POST MILES TOTAL PROJECT	SHEET No.	TOTAL SHEETS
11	SD	94	59.6/60.2	11	78

REGISTERED CIVIL ENGINEER — DATE 03-25-16

05-09-16
PLANS APPROVAL DATE

REGISTERED PROFESSIONAL ENGINEER — JOSE L. ROBLES — No. C 64402 — Exp. 06-30-17 — CIVIL — STATE OF CALIFORNIA

THE STATE OF CALIFORNIA OR ITS OFFICERS OR AGENTS SHALL NOT BE RESPONSIBLE FOR THE ACCURACY OR COMPLETENESS OF SCANNED COPIES OF THIS PLAN SHEET.

NOTE:

1. FOR ACCURATE RIGHT OF WAY DATA, CONTACT RIGHT OF WAY ENGINEERING AT THE DISTRICT OFFICE.

LEGEND:

= Temp HYDRAULIC MULCH

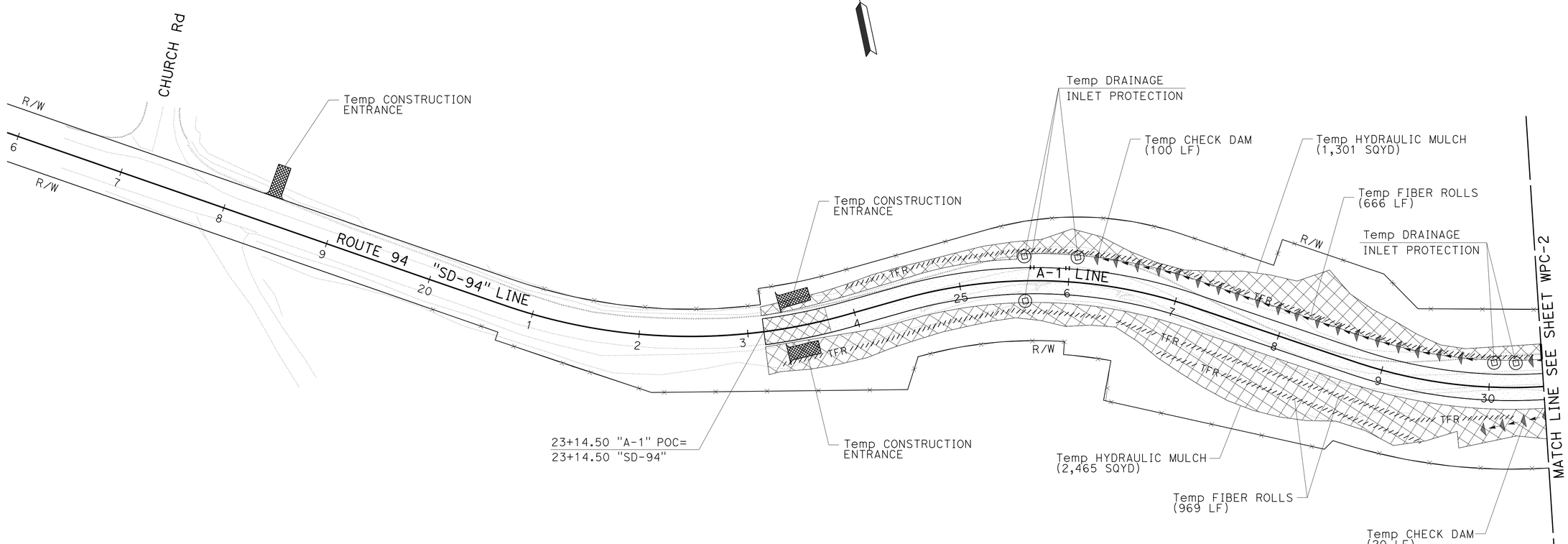

CAMPO INDIAN RESERVATION

TEMPORARY WATER POLLUTION CONTROL PLAN

APPROVED FOR TEMPORARY WATER POLLUTION CONTROL WORK ONLY

SCALE: 1" = 50'

WPC-1

STATE OF CALIFORNIA - DEPARTMENT OF TRANSPORTATION
Caltrans
TRAFFIC PROJECT DEVELOPMENT

FUNCTIONAL SUPERVISOR: CHARLES GRAY
CALCULATED-DESIGNED BY: KENNY T. NGUYEN
CHECKED BY: JOSE LUIS ROBLES
REVISED BY
DATE REVISED

LAST REVISION: DATE PLOTTED => 12-MAY-2016 TIME PLOTTED => 13:13
04-18-16

Dist	COUNTY	ROUTE	POST MILES TOTAL PROJECT	SHEET No.	TOTAL SHEETS
11	SD	94	59.6/60.2	12	78

REGISTERED CIVIL ENGINEER 03-25-16 DATE

05-09-16
PLANS APPROVAL DATE

REGISTERED PROFESSIONAL ENGINEER JOSE L. ROBLES No. C 64402 Exp. 06-30-17 CIVIL STATE OF CALIFORNIA

THE STATE OF CALIFORNIA OR ITS OFFICERS OR AGENTS SHALL NOT BE RESPONSIBLE FOR THE ACCURACY OR COMPLETENESS OF SCANNED COPIES OF THIS PLAN SHEET.

NOTE:
1. FOR ACCURATE RIGHT OF WAY DATA, CONTACT RIGHT OF WAY ENGINEERING AT THE DISTRICT OFFICE.

CAMPO INDIAN RESERVATION

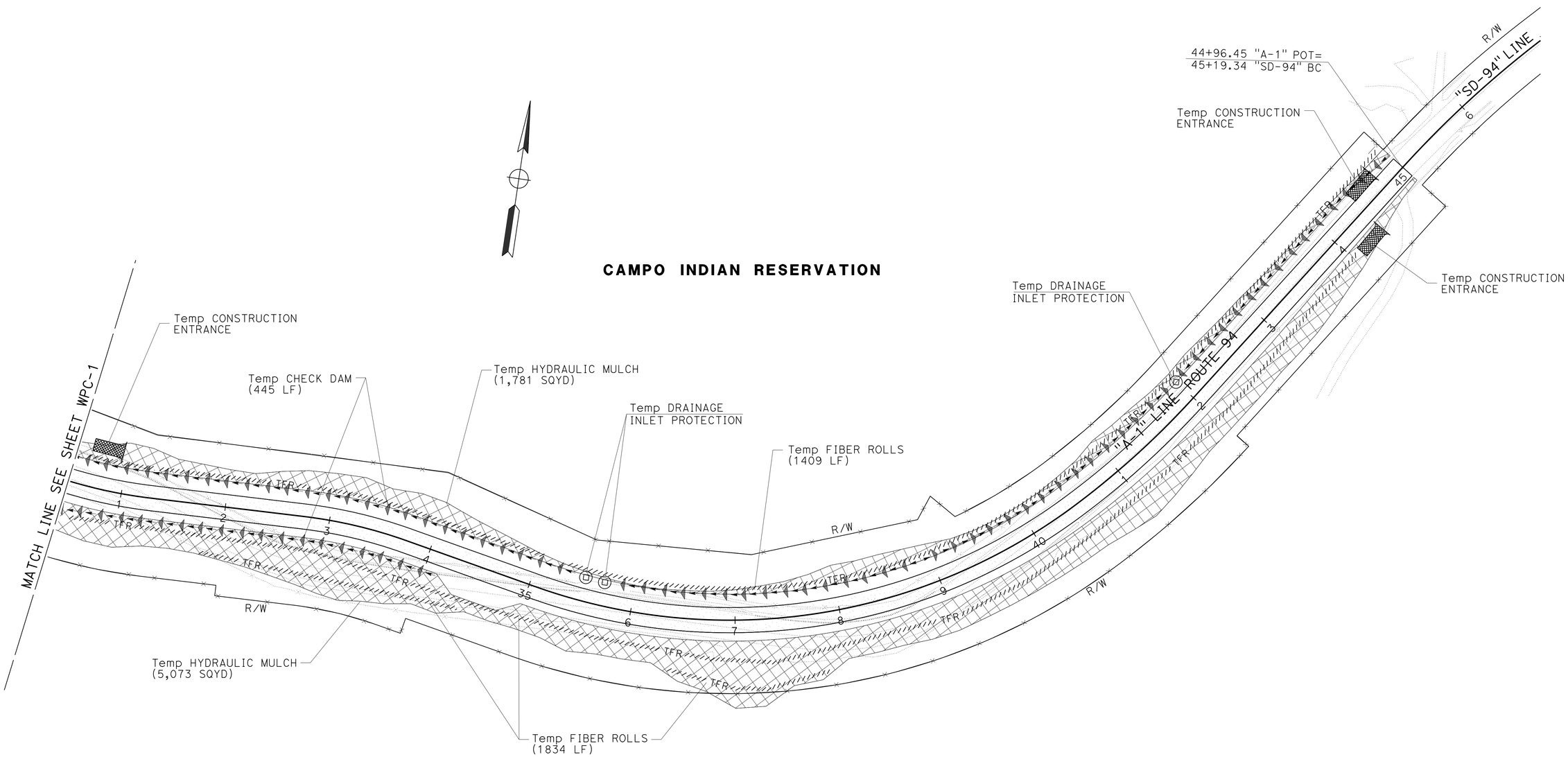

TEMPORARY WATER POLLUTION CONTROL PLAN

APPROVED FOR WATER POLLUTION CONTROL WORK ONLY

SCALE: 1" = 50'

WPC-2

STATE OF CALIFORNIA - DEPARTMENT OF TRANSPORTATION
Caltrans
TRAFFIC PROJECT DEVELOPMENT

FUNCTIONAL SUPERVISOR: CHARLES GRAY
CALCULATED-DESIGNED BY: KENNY T. NGUYEN
CHECKED BY: JOSE LUIS ROBLES
REVISED BY / DATE REVISED

LAST REVISION 04-18-16 | DATE PLOTTED => 12-MAY-2016 | TIME PLOTTED => 13:13

Dist	COUNTY	ROUTE	POST MILES TOTAL PROJECT	SHEET No.	TOTAL SHEETS
11	SD	94	59.6/60.2	13	78

REGISTERED CIVIL ENGINEER 03-25-16 DATE

05-09-16
PLANS APPROVAL DATE

REGISTERED PROFESSIONAL ENGINEER JOSE L. ROBLES No. C 64402 Exp. 06-30-17 CIVIL STATE OF CALIFORNIA

THE STATE OF CALIFORNIA OR ITS OFFICERS OR AGENTS SHALL NOT BE RESPONSIBLE FOR THE ACCURACY OR COMPLETENESS OF SCANNED COPIES OF THIS PLAN SHEET.

TEMPORARY WATER POLLUTION CONTROL QUANTITIES

SHEET	TEMPORARY DRAINAGE INLET PROTECTION (EA)	TEMPORARY CONSTRUCTION ENTRANCE (EA)	TEMPORARY CHECK DAM (LF)	TEMPORARY HYDRAULIC MULCH (SQYD)	TEMPORARY FIBER ROLL (LF)
WPC-1	5	3	120	3,766	1,635
WPC-2	3	3	445	6,854	3,243
TOTAL	8	6	565	10,620	4,878

TEMPORARY WATER POLLUTION CONTROL QUANTITIES

NO SCALE

WPCQ-1

REVISED BY | DATE REVISED

KENNY T. NGUYEN | JOSE LUIS ROBLES

CALCULATED-DESIGNED BY | CHECKED BY

FUNCTIONAL SUPERVISOR

CHARLES GRAY

STATE OF CALIFORNIA - DEPARTMENT OF TRANSPORTATION

Caltrans

TRAFFIC PROJECT DEVELOPMENT

LAST REVISION 04-18-16 | DATE PLOTTED => 12-MAY-2016 | TIME PLOTTED => 13:13

Dist	COUNTY	ROUTE	POST MILES TOTAL PROJECT	SHEET No.	TOTAL SHEETS
11	SD	94	59.6/60.2	14	78

REGISTERED CIVIL ENGINEER 03-25-16 DATE

05-09-16
PLANS APPROVAL DATE

REGISTERED PROFESSIONAL ENGINEER JOSE L. ROBLES No. C 64402 Exp. 06-30-17 CIVIL STATE OF CALIFORNIA

THE STATE OF CALIFORNIA OR ITS OFFICERS OR AGENTS SHALL NOT BE RESPONSIBLE FOR THE ACCURACY OR COMPLETENESS OF SCANNED COPIES OF THIS PLAN SHEET.

NOTES:

1. FOR ACCURATE RIGHT OF WAY DATA, CONTACT RIGHT OF WAY ENGINEERING AT THE DISTRICT OFFICE.
2. ALL DRAINAGE GRATES SHALL HAVE A GRATE CHAIN PER REVISED Std PLAN D77A.

LEGEND:

- FLOW LINE OF DRAINAGE Conc DITCH
- ROCK SLOPE PROTECTION (SEE DRAINAGE DETAILS)
- DUFF COLLECTION AREA
- DUFF LOCATION

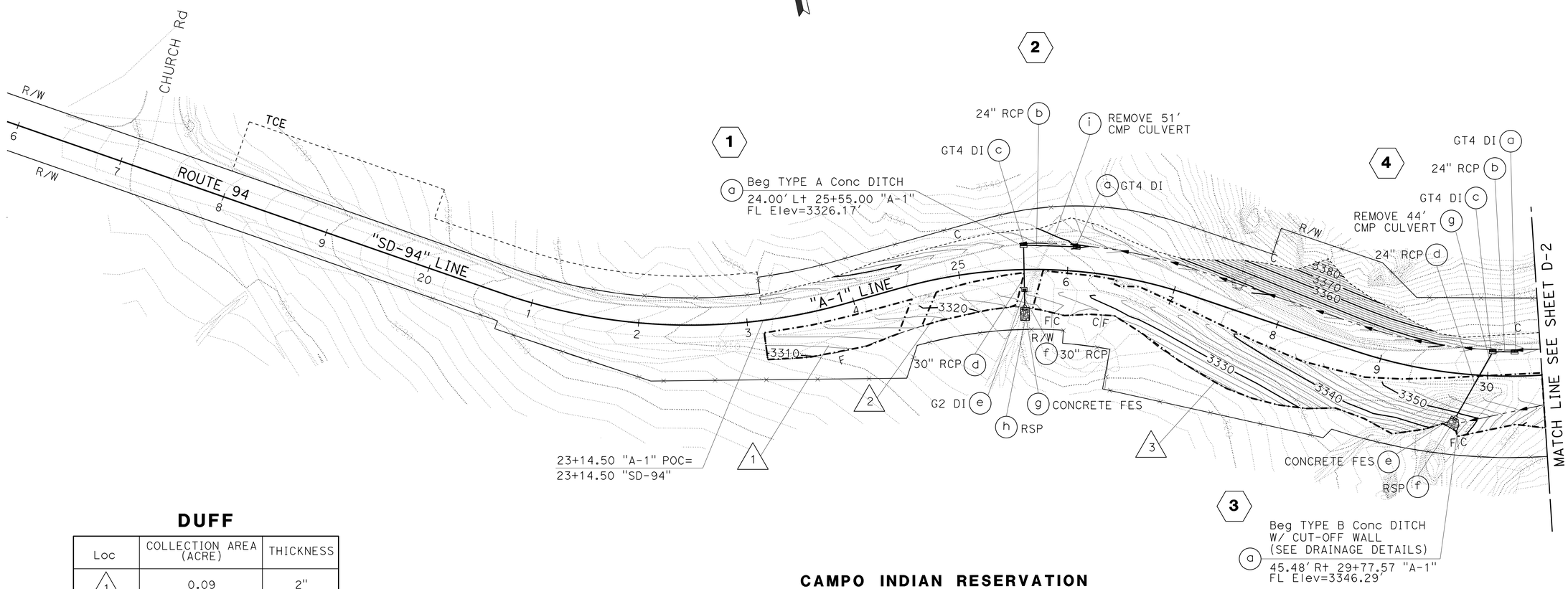

DUFF

Loc	COLLECTION AREA (ACRE)	THICKNESS
1	0.09	2"
2	0.06	2"
3	0.49	2"

CAMPO INDIAN RESERVATION

DRAINAGE AND CONTOUR GRADING PLAN

SCALE: 1" = 50'

D-1

APPROVED FOR DRAINAGE AND CONTOUR GRADING WORK ONLY

STATE OF CALIFORNIA - DEPARTMENT OF TRANSPORTATION
Caltrans
TRAFFIC PROJECT DEVELOPMENT

FUNCTIONAL SUPERVISOR: CHARLES GRAY
CALCULATED-DESIGNED BY: KENNY T. NGUYEN
CHECKED BY: JOSE LUIS ROBLES
REVISED BY
DATE REVISED

LAST REVISION 04-18-16
DATE PLOTTED => 12-MAY-2016
TIME PLOTTED => 13:13

Dist	COUNTY	ROUTE	POST MILES TOTAL PROJECT	SHEET No.	TOTAL SHEETS
11	SD	94	59.6/60.2	15	78

REGISTERED CIVIL ENGINEER 03-25-16 DATE

05-09-16
PLANS APPROVAL DATE

REGISTERED PROFESSIONAL ENGINEER JOSE L. ROBLES No. C 64402 Exp. 06-30-17 CIVIL STATE OF CALIFORNIA

THE STATE OF CALIFORNIA OR ITS OFFICERS OR AGENTS SHALL NOT BE RESPONSIBLE FOR THE ACCURACY OR COMPLETENESS OF SCANNED COPIES OF THIS PLAN SHEET.

NOTES:

1. FOR ACCURATE RIGHT OF WAY DATA, CONTACT RIGHT OF WAY ENGINEERING AT THE DISTRICT OFFICE.

DUFF

Loc	COLLECTION AREA (ACRE)	THICKNESS
4	0.22	2"
5	0.11	2"
6	0.11	2"
7	0.32	2"

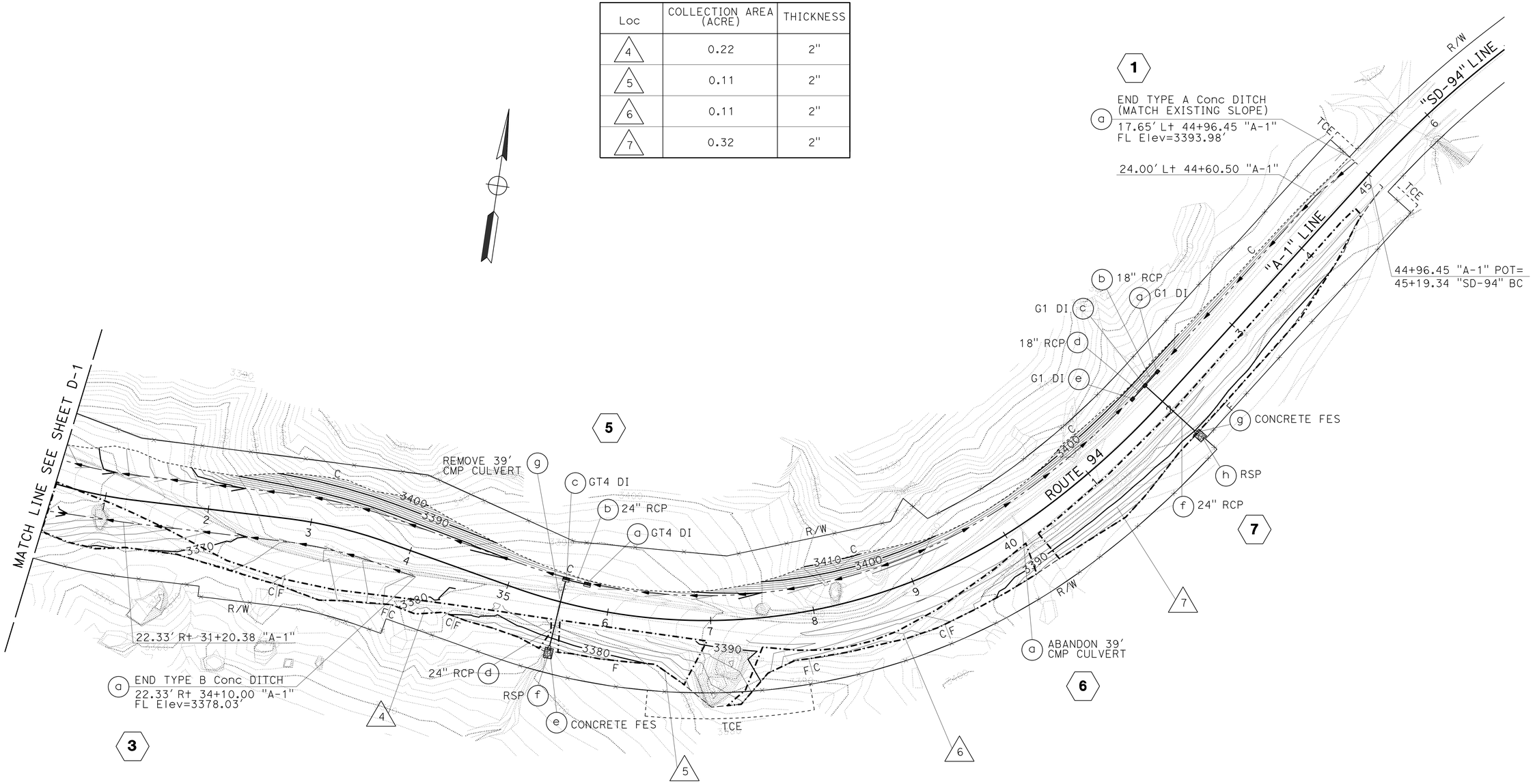

CAMPO INDIAN RESERVATION

DRAINAGE AND CONTOUR GRADING PLAN

SCALE: 1" = 50'

D-2

APPROVED FOR DRAINAGE AND CONTOUR GRADING WORK ONLY

STATE OF CALIFORNIA - DEPARTMENT OF TRANSPORTATION
Caltrans
TRAFFIC PROJECT DEVELOPMENT

FUNCTIONAL SUPERVISOR: CHARLES GRAY
CALCULATED-DESIGNED BY: KENNY T. NGUYEN
CHECKED BY: JOSE LUIS ROBLES
REVISED BY
DATE REVISED

LAST REVISION 04-18-16
DATE PLOTTED => 12-MAY-2016
TIME PLOTTED => 13:13

Dist	COUNTY	ROUTE	POST MILES TOTAL PROJECT	SHEET No.	TOTAL SHEETS
11	SD	94	59.6/60.2	16	78

REGISTERED CIVIL ENGINEER 03-25-16 DATE

05-09-16
PLANS APPROVAL DATE

REGISTERED PROFESSIONAL ENGINEER JOSE L. ROBLES No. C 64402 Exp. 06-30-17 CIVIL STATE OF CALIFORNIA

THE STATE OF CALIFORNIA OR ITS OFFICERS OR AGENTS SHALL NOT BE RESPONSIBLE FOR THE ACCURACY OR COMPLETENESS OF SCANNED COPIES OF THIS PLAN SHEET.

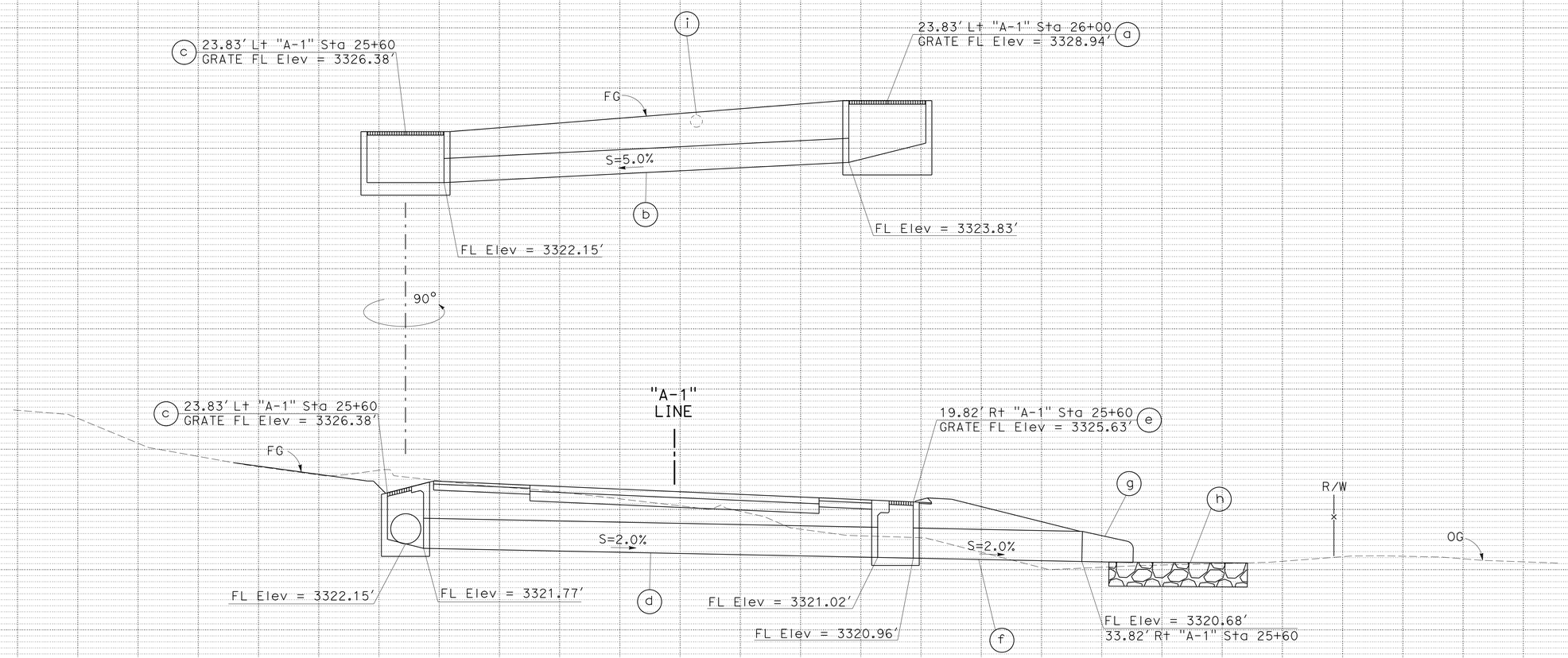

DRAINAGE SYSTEM 2
"A-1" Sta 25+60

a GT4 INLET (NO CURB) WITH TYPE 24-12 GRATE AND FRAME; H=5.11'
b 24" X 33.7' RCP CULVERT
c GT4 INLET (NO CURB) WITH TYPE 24-12 GRATE AND FRAME; H=4.61'
d 30" X 37.7' RCP CULVERT
e G2 INLET WITH TYPE 24-12X GRATE AND FRAME; H=4.67', L=0.5'
f 30" X 14.0' RCP CULVERT
g 30" CONCRETE FES
h RSP WITH RSP FABRIC (SEE DRAINAGE DETAILS)
i REMOVE 12" X 51.0' CMP CULVERT

DRAINAGE PROFILES

SCALE: 1" = 5' Horiz
1" = 5' Vert

DP-1

REVISED BY | DATE REVISED
KENNY T. NGUYEN | JOSE LUIS ROBLES
CALCULATED-DESIGNED BY | CHECKED BY
FUNCTIONAL SUPERVISOR: CHARLES GRAY

STATE OF CALIFORNIA - DEPARTMENT OF TRANSPORTATION
Caltrans
TRAFFIC PROJECT DEVELOPMENT

LAST REVISION 04-18-16 | DATE PLOTTED => 12-MAY-2016 | TIME PLOTTED => 13:13

Dist	COUNTY	ROUTE	POST MILES TOTAL PROJECT	SHEET No.	TOTAL SHEETS
11	SD	94	59.6/60.2	17	78

REGISTERED CIVIL ENGINEER 03-25-16 DATE

05-09-16
PLANS APPROVAL DATE

REGISTERED PROFESSIONAL ENGINEER JOSE L. ROBLES No. C 64402 Exp. 06-30-17 CIVIL STATE OF CALIFORNIA

THE STATE OF CALIFORNIA OR ITS OFFICERS OR AGENTS SHALL NOT BE RESPONSIBLE FOR THE ACCURACY OR COMPLETENESS OF SCANNED COPIES OF THIS PLAN SHEET.

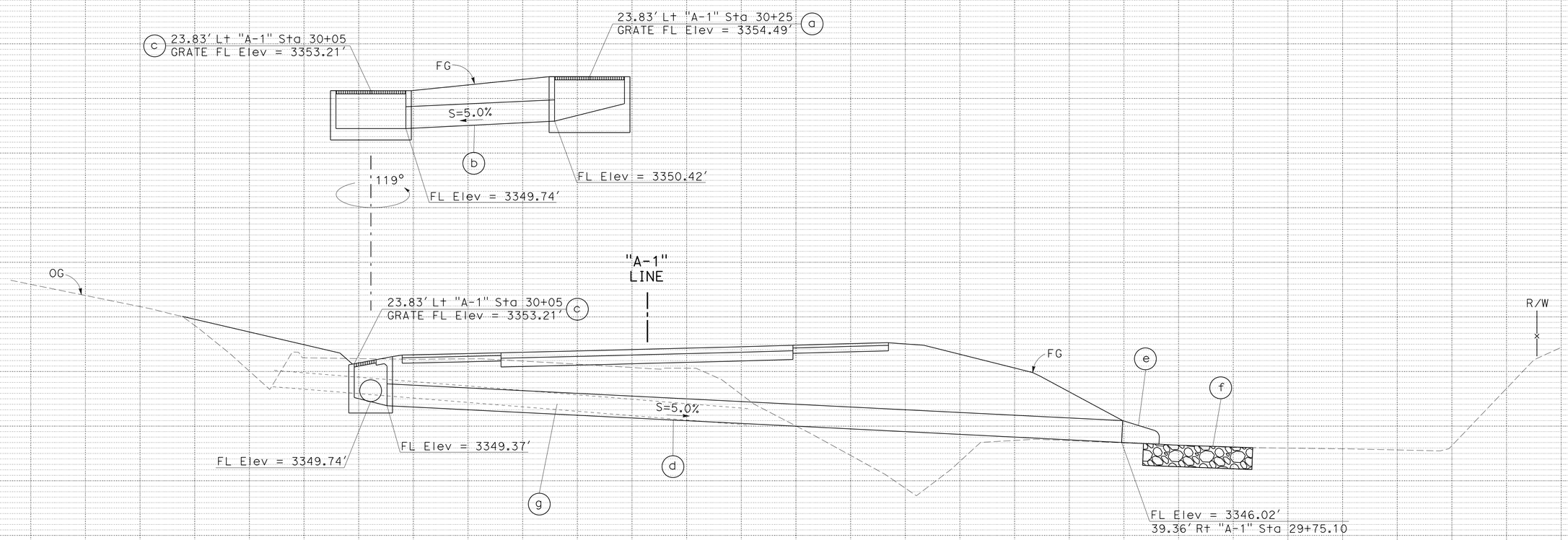

DRAINAGE SYSTEM 4

"A1" Sta 29+92.59

a. GT4 INLET(NO CURB) WITH TYPE 24-12 GRATE AND FRAME; H=4.07'
b. 24" X 13.6' RCP CULVERT
c. GT4 INLET (NO CURB) WITH TYPE 24-12 GRATE AND FRAME; H=3.84'
d. 24" X 67.3' RCP CULVERT
e. 24" CONCRETE FES
f. RSP WITH RSP FABRIC (SEE DRAINAGE DETAILS)
g. REMOVE 18" X 44.0' CMP CULVERT

DRAINAGE PROFILES

SCALE: 1" = 5' Horiz
1" = 5' Vert

DP-2

STATE OF CALIFORNIA - DEPARTMENT OF TRANSPORTATION
Caltrans
TRAFFIC PROJECT DEVELOPMENT

FUNCTIONAL SUPERVISOR: CHARLES GRAY
CALCULATED-DESIGNED BY: KENNY T. NGUYEN
CHECKED BY: JOSE LUIS ROBLES
REVISED BY / DATE REVISED

LAST REVISION 04-18-16 | DATE PLOTTED => 12-MAY-2016 | TIME PLOTTED => 13:13

Dist	COUNTY	ROUTE	POST MILES TOTAL PROJECT	SHEET No.	TOTAL SHEETS
11	SD	94	59.6/60.2	18	78

REGISTERED CIVIL ENGINEER 03-25-16 DATE

05-09-16
PLANS APPROVAL DATE

REGISTERED PROFESSIONAL ENGINEER JOSE L. ROBLES No. C 64402 Exp. 06-30-17 CIVIL STATE OF CALIFORNIA

THE STATE OF CALIFORNIA OR ITS OFFICERS OR AGENTS SHALL NOT BE RESPONSIBLE FOR THE ACCURACY OR COMPLETENESS OF SCANNED COPIES OF THIS PLAN SHEET.

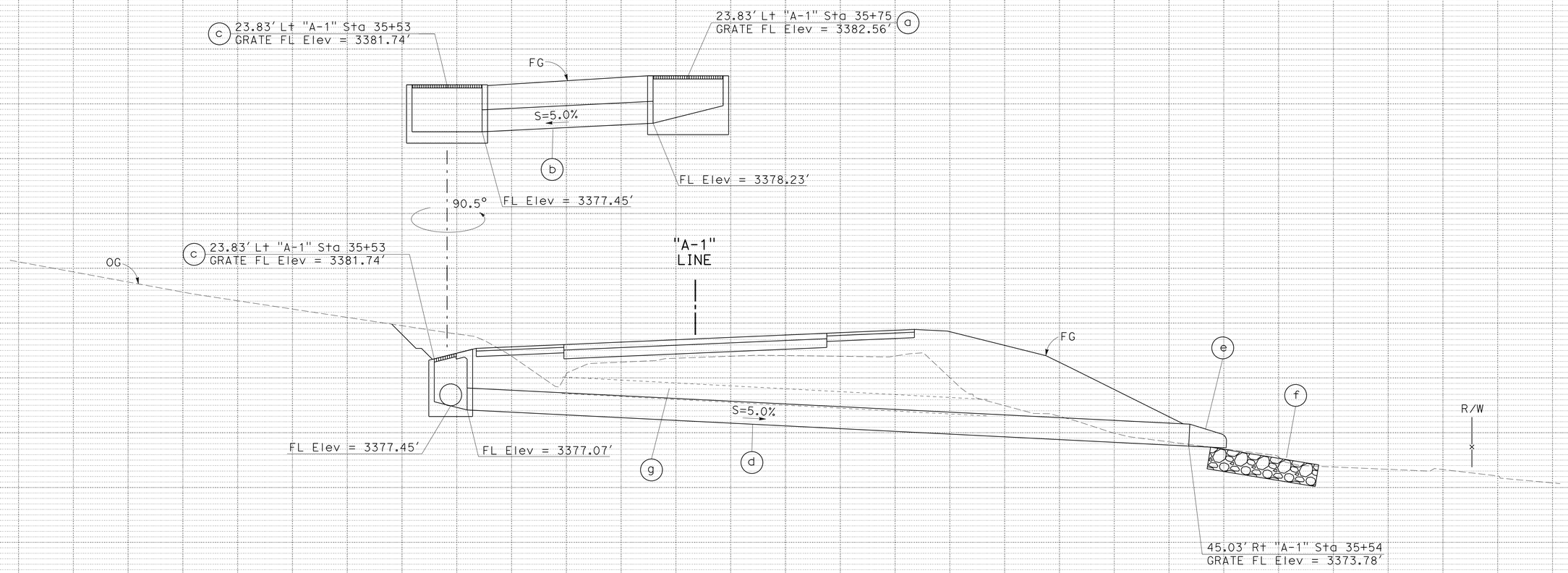

DRAINAGE SYSTEM 5

"A-1" Sta 35+53.37

a GT4 INLET (NO CURB) WITH TYPE 24-12 GRATE AND FRAME; H=4.33'

b 24" X 15.7' RCP CULVERT

c GT4 INLET (NO CURB) WITH TYPE 24-12 GRATE AND FRAME; H=4.67'

d 24" X 66.0' RCP CULVERT

e 24" CONCRETE FES

f RSP WITH RSP FABRIC (SEE DRAINAGE DETAILS)

g REMOVE 18" X 39.0' CMP CULVERT

DRAINAGE PROFILES

SCALE: 1" = 5' Horiz
1" = 5' Vert

DP-3

REVISED BY | DATE REVISED
KENNY T. NGUYEN | JOSE LUIS ROBLES
CALCULATED-DESIGNED BY | CHECKED BY
FUNCTIONAL SUPERVISOR: CHARLES GRAY

STATE OF CALIFORNIA - DEPARTMENT OF TRANSPORTATION
Caltrans
TRAFFIC PROJECT DEVELOPMENT

LAST REVISION 04-18-16
DATE PLOTTED => 12-MAY-2016
TIME PLOTTED => 13:13

Dist	COUNTY	ROUTE	POST MILES TOTAL PROJECT	SHEET No.	TOTAL SHEETS
11	SD	94	59.6/60.2	19	78

REGISTERED CIVIL ENGINEER 03-25-16 DATE

05-09-16
PLANS APPROVAL DATE

REGISTERED PROFESSIONAL ENGINEER JOSE L. ROBLES No. C 64402 Exp. 06-30-17 CIVIL STATE OF CALIFORNIA

THE STATE OF CALIFORNIA OR ITS OFFICERS OR AGENTS SHALL NOT BE RESPONSIBLE FOR THE ACCURACY OR COMPLETENESS OF SCANNED COPIES OF THIS PLAN SHEET.

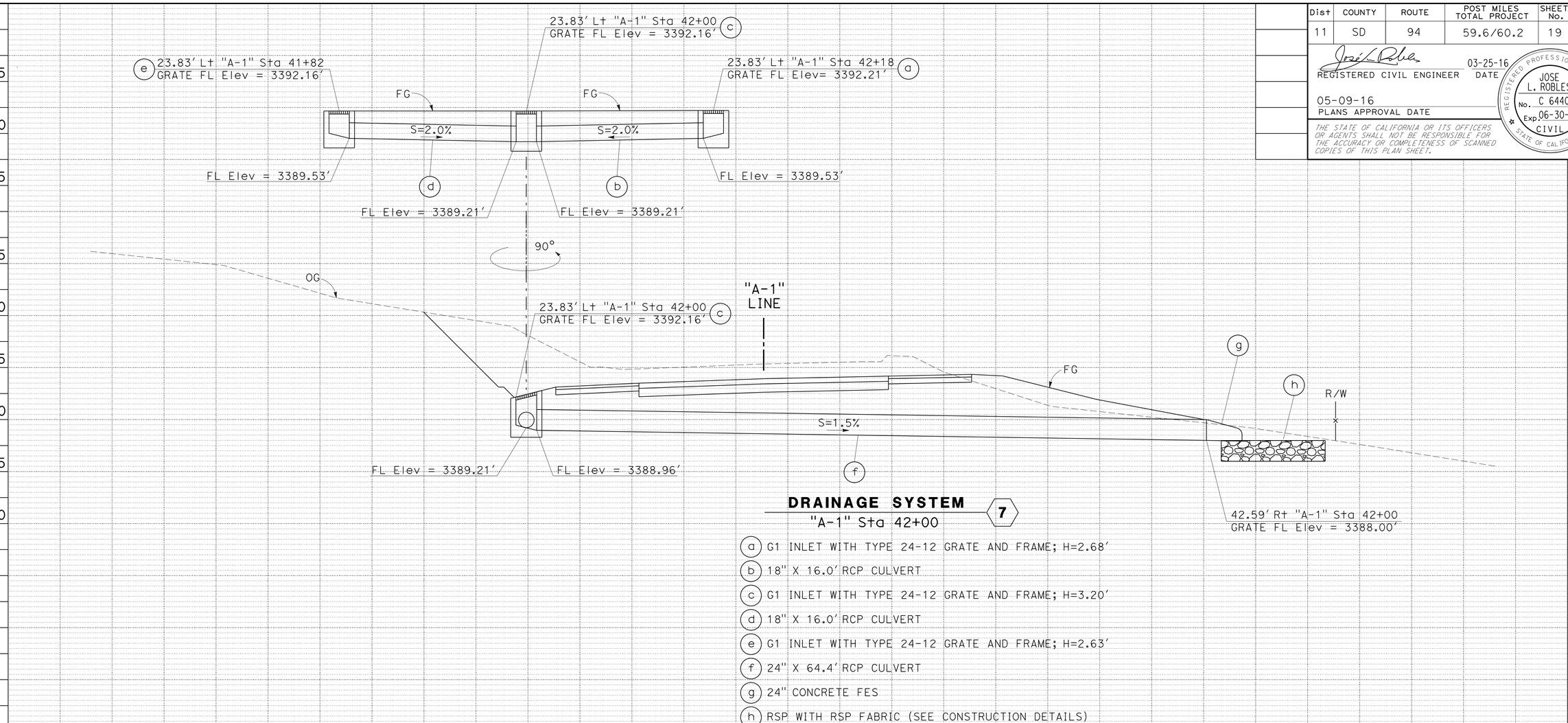

DRAINAGE SYSTEM 7
"A-1" Sta 42+00

(a) G1 INLET WITH TYPE 24-12 GRATE AND FRAME; H=2.68'
(b) 18" X 16.0' RCP CULVERT
(c) G1 INLET WITH TYPE 24-12 GRATE AND FRAME; H=3.20'
(d) 18" X 16.0' RCP CULVERT
(e) G1 INLET WITH TYPE 24-12 GRATE AND FRAME; H=2.63'
(f) 24" X 64.4' RCP CULVERT
(g) 24" CONCRETE FES
(h) RSP WITH RSP FABRIC (SEE CONSTRUCTION DETAILS)

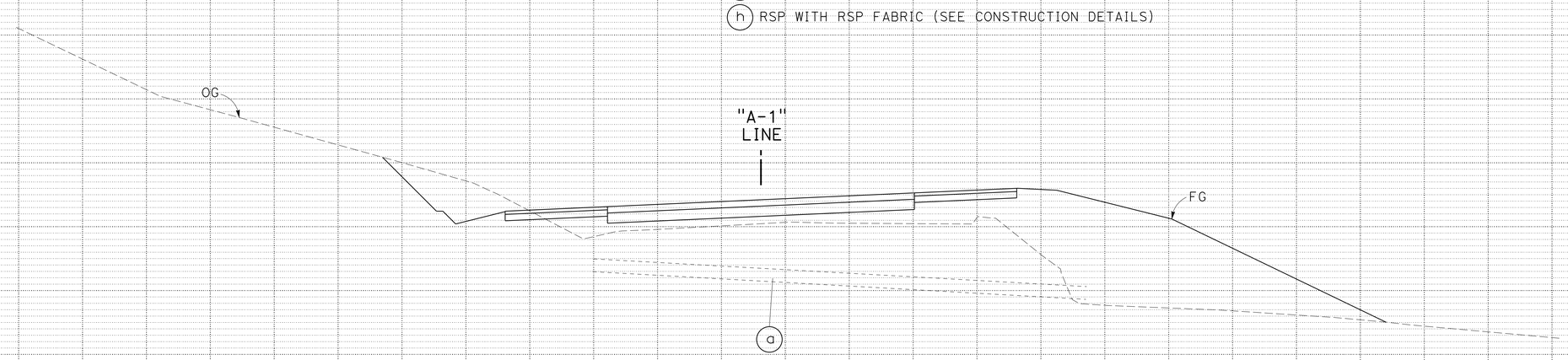

DRAINAGE SYSTEM 6
"A-1" Sta 40+16.10

(a) ABANDON 12" X 39.0' CMP CULVERT

DRAINAGE PROFILES

SCALE: 1" = 5' Horiz
1" = 5' Vert

DP-4

REVISED BY | DATE REVISED
KENNY T. NGUYEN | JOSE LUIS ROBLES
CALCULATED-DESIGNED BY | CHECKED BY
FUNCTIONAL SUPERVISOR
CHARLES GRAY

STATE OF CALIFORNIA - DEPARTMENT OF TRANSPORTATION
Caltrans
TRAFFIC PROJECT DEVELOPMENT

LAST REVISION 04-18-16 | DATE PLOTTED => 12-MAY-2016 | TIME PLOTTED => 13:13

Dist	COUNTY	ROUTE	POST MILES TOTAL PROJECT	SHEET No.	TOTAL SHEETS
11	SD	94	59.6/60.2	20	78

REGISTERED CIVIL ENGINEER 03-25-16 DATE

05-09-16
PLANS APPROVAL DATE

REGISTERED PROFESSIONAL ENGINEER JOSE L. ROBLES No. C 64402 Exp. 06-30-17 CIVIL STATE OF CALIFORNIA

THE STATE OF CALIFORNIA OR ITS OFFICERS OR AGENTS SHALL NOT BE RESPONSIBLE FOR THE ACCURACY OR COMPLETENESS OF SCANNED COPIES OF THIS PLAN SHEET.

NOTES:

1. EXPANSION JOINTS AT 100' SPACING.

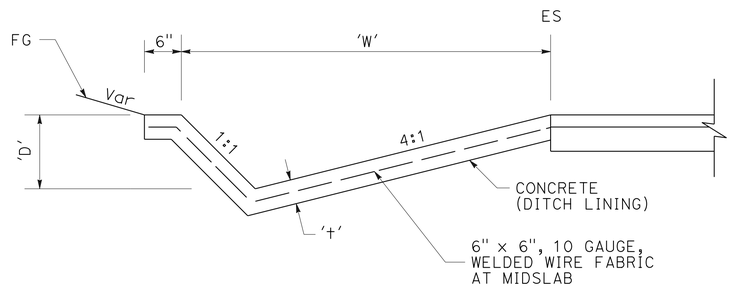

CONCRETE DITCH (TYPE A)

1 a

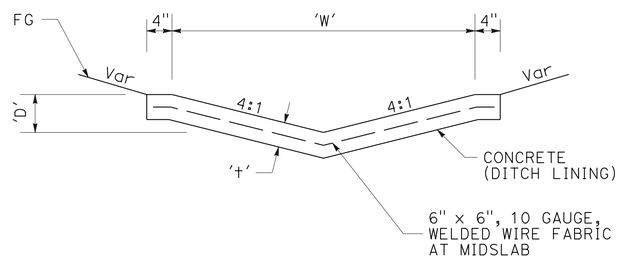

CONCRETE DITCH (TYPE B)

3 a

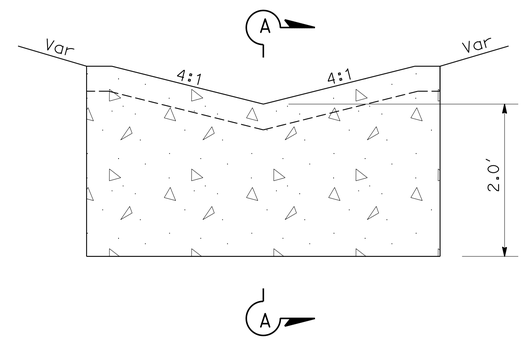

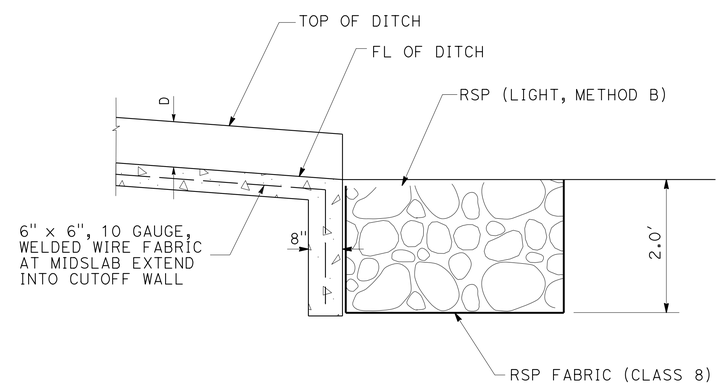

SECTION A-A

DITCH CUT-OFF WALL

3 a

CONCRETE DITCH TABLE

DRAINAGE SYSTEM UNIT No.	DITCH TYPE	LOCATION (STA)	CHANNEL SIZE 'W' FT	'D' FT	'+' FT	MATERIAL	CONCRETE QUANTITY
1 a	A	"A-1" 25+55.00 TO 44+96.45	5.0	1.0	0.33	CONCRETE	0.074 CY/LF
3 a	B	"A-1" 29+77.57 TO 34+10.00	4.0	0.5	0.33	CONCRETE	0.059 CY/LF

DRAINAGE DETAILS

NO SCALE

DD-1

STATE OF CALIFORNIA - DEPARTMENT OF TRANSPORTATION
Caltrans
TRAFFIC PROJECT DEVELOPMENT

FUNCTIONAL SUPERVISOR: CHARLES GRAY
CALCULATED-DESIGNED BY: KENNY T. NGUYEN
CHECKED BY: JOSE LUIS ROBLES
REVISED BY
DATE REVISED

LAST REVISION 04-18-16 | DATE PLOTTED => 12-MAY-2016 | TIME PLOTTED => 13:13

Dist	COUNTY	ROUTE	POST MILES TOTAL PROJECT	SHEET No.	TOTAL SHEETS
11	SD	94	59.6/60.2	21	78

REGISTERED CIVIL ENGINEER 03-25-16 DATE

05-09-16
PLANS APPROVAL DATE

REGISTERED PROFESSIONAL ENGINEER JOSE L. ROBLES No. C 64402 Exp. 06-30-17 CIVIL STATE OF CALIFORNIA

THE STATE OF CALIFORNIA OR ITS OFFICERS OR AGENTS SHALL NOT BE RESPONSIBLE FOR THE ACCURACY OR COMPLETENESS OF SCANNED COPIES OF THIS PLAN SHEET.

NOTE:
PLACEMENT OF ALL RSP SHALL BE METHOD B.

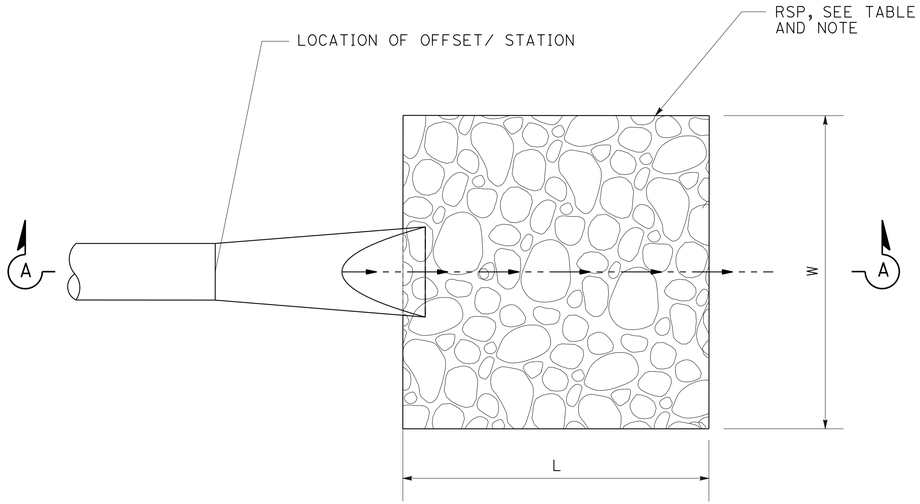

PLAN
RSP AT FES

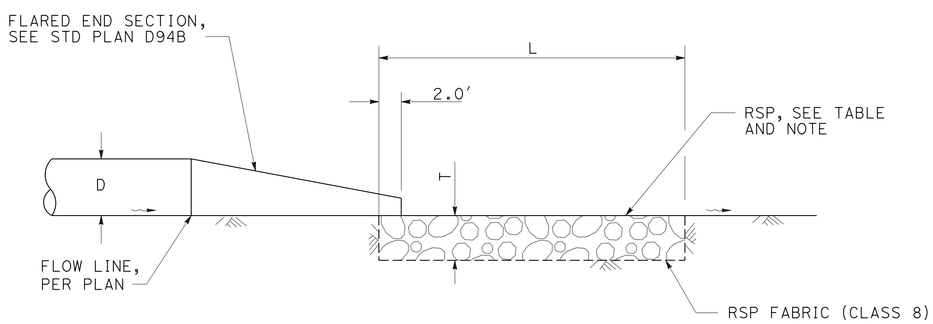

SECTION A-A

ROCK SLOPE PROTECTION

DRAINAGE SYSTEM UNIT No.	STATION/OFFSET	D	L	W	T	RSP CLASS
2 (h)	25+60 "A-1" 37.75' Rt	30"	12.0'	8.0'	2.0'	LIGHT
4 (f)	29+75.10 "A-1" 39.36' Rt	24"	10.0'	10.5'	2.0'	LIGHT
5 (f)	35+54 "A-1" 47.03' Rt	24"	10.0'	8.0'	2.0'	LIGHT
7 (h)	42+00 "A-1" 42.59' Rt	24"	10.0'	8.0'	2.0'	LIGHT

ROCK SLOPE PROTECTION

DRAINAGE DETAILS
NO SCALE
DD-2

STATE OF CALIFORNIA - DEPARTMENT OF TRANSPORTATION
Caltrans
TRAFFIC PROJECT DEVELOPMENT

FUNCTIONAL SUPERVISOR: CHARLES GRAY
CALCULATED-DESIGNED BY: JOSE LUIS ROBLES
CHECKED BY: KENNY T. NGUYEN
REVISED BY / DATE REVISED

LAST REVISION 04-18-16
DATE PLOTTED => 12-MAY-2016
TIME PLOTTED => 13:13

Dist	COUNTY	ROUTE	POST MILES TOTAL PROJECT	SHEET No.	TOTAL SHEETS
11	SD	94	59.6/60.2	22	78

REGISTERED CIVIL ENGINEER 03-25-16 DATE

05-09-16
PLANS APPROVAL DATE

REGISTERED PROFESSIONAL ENGINEER JOSE L. ROBLES No. C 64402 Exp. 06-30-17 CIVIL STATE OF CALIFORNIA

THE STATE OF CALIFORNIA OR ITS OFFICERS OR AGENTS SHALL NOT BE RESPONSIBLE FOR THE ACCURACY OR COMPLETENESS OF SCANNED COPIES OF THIS PLAN SHEET.

NOTES:

1. INLET TYPE CAN BE G1 OR GT4.

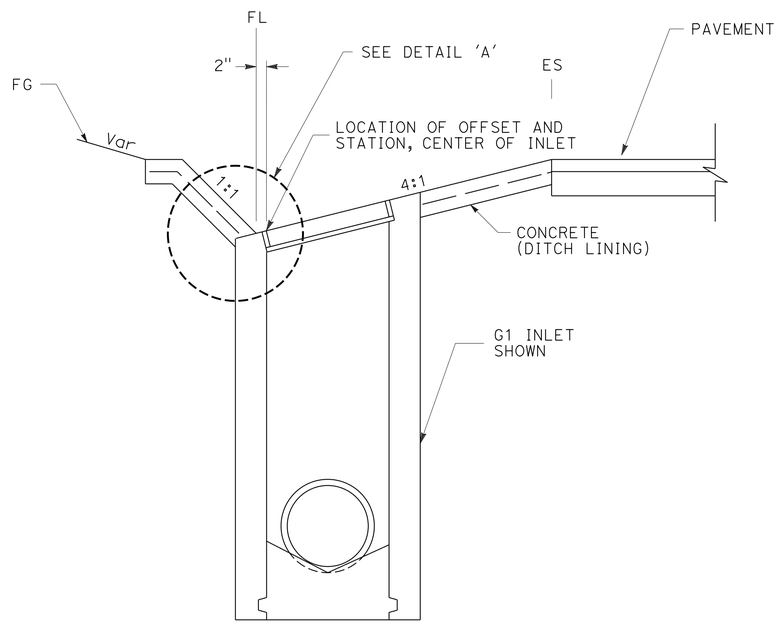

INLET AT CONCRETE DITCH

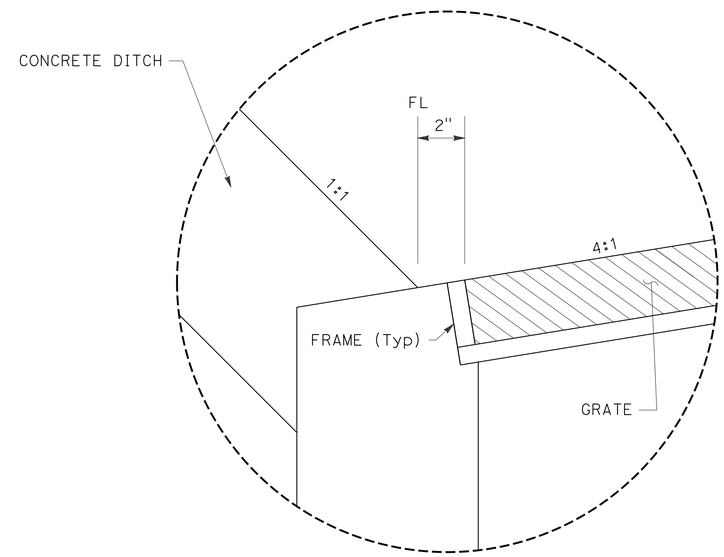

DETAIL 'A'

DRAINAGE DETAILS

NO SCALE

DD-3

STATE OF CALIFORNIA - DEPARTMENT OF TRANSPORTATION
Caltrans
TRAFFIC PROJECT DEVELOPMENT

FUNCTIONAL SUPERVISOR: CHARLES GRAY
CALCULATED-DESIGNED BY: KENNY T. NGUYEN
CHECKED BY: JOSE LUIS ROBLES
REVISED BY
DATE REVISED

LAST REVISION 04-18-16
DATE PLOTTED => 12-MAY-2016
TIME PLOTTED => 13:13

Dist	COUNTY	ROUTE	POST MILES TOTAL PROJECT	SHEET No.	TOTAL SHEETS
11	SD	94	59.6/60.2	23	78

REGISTERED CIVIL ENGINEER 03-25-16 DATE

05-09-16
PLANS APPROVAL DATE

REGISTERED PROFESSIONAL ENGINEER JOSE L. ROBLES No. C 64402 Exp. 06-30-17 CIVIL STATE OF CALIFORNIA

THE STATE OF CALIFORNIA OR ITS OFFICERS OR AGENTS SHALL NOT BE RESPONSIBLE FOR THE ACCURACY OR COMPLETENESS OF SCANNED COPIES OF THIS PLAN SHEET.

NOTES:

1. (N) = NOT A SEPARATE PAY ITEM, FOR INFORMATION ONLY.
2. ALL JOINTS ARE STANDARD JOINT TYPE, UNLESS OTHERWISE NOTED

DRAINAGE QUANTITIES

DRAINAGE PLAN SHEET No.	DRAINAGE SYSTEM No.	DRAINAGE UNIT	ABANDON CULVERT (EA)	SAND BACKFILL (CY (N))	MINOR CONCRETE (MINOR STRUCTURE) (CY)	CONCRETE (DITCH LINING) (CY)	FRAME AND GRATE W/ CHAIN (TYPE 24-12) (N) (EA)	FRAME AND GRATE W/ CHAIN (TYPE 24-12X) (N) (EA)	MISCELLANEOUS IRON AND STEEL (LB)	HEIGHT OF INLET "H" (N) (LF)	MAXIMUM COVER (N) (LF)	30" RCP (LF)	24" RCP (LF)	18" RCP (LF)	30" CONCRETE FES (EA)	24" CONCRETE FES (EA)	RSP (LIGHT, METHOD B) (CY)	RSP FABRIC (CLASS 8) (SQYD)	REMOVE CULVERT (N) (LF)	REMOVE CULVERT (LF)	DESCRIPTION	STATION	DRAINAGE PLAN SHEET No.	DRAINAGE SYSTEM No.	DRAINAGE UNIT
D-1	1	a				143.7															TYPE A CONCRETE DITCH	"A-1" 25+55.00 TO 44+96.45	D-1	1	a
	2	a			3.00		2		658	5.11											GT4 INLET (NO CURB) WITH TYPE 24-12 GRATE AND FRAME	23.83' Lt "A-1" 26+00.00		2	a
		b									3.15		33.7								24" X 33.7' RCP CULVERT				b
		c			2.80		2		658	4.61											GT4 INLET (NO CURB) WITH TYPE 24-12 GRATE AND FRAME	23.83' Lt "A-1" 25+60.00			c
		d									3.17	37.7									30" X 37.7' RCP CULVERT				d
		e			2.25			1	242	4.67											G2 INLET WITH TYPE 24-12X GRATE AND FRAME	19.82' Rt "A-1" 25+60.00			e
		f									2.52	14.0									30" X 14.0' RCP CULVERT				f
		g													1						30" CONCRETE FES				g
		h															7.2	14.3			RSP WITH RSP FABRIC				h
		i																	5	46	REMOVE EXISTING 12" X 51.0' CMP CULVERT				i
	3	a				25.8															TYPE B CONCRETE DITCH WITH CUT OFF WALL	"A-1" 29+77.57 TO 34+10.00		3	a
	4	a			2.60		2		658	4.07											GT4 INLET (NO CURB) WITH TYPE 24-12 GRATE AND FRAME	23.83' Lt "A-1" 30+25.00		4	a
		b									2.14		13.6								24" X 13.6' RCP CULVERT				b
		c			2.51		2		658	3.84											GT4 INLET (NO CURB) WITH TYPE 24-12 GRATE AND FRAME	23.83' Lt "A-1" 30+05.00			c
		d									5.99		67.3								24" X 67.3' RCP CULVERT				d
		e														1					24" CONCRETE FES				e
		f															7.8	16.4			RSP WITH RSP FABRIC				f
		g																	37	7	REMOVE EXISTING 18" X 44.0 CMP CULVERT				g
SUBTOTAL 1					13.16	169.5			2874			51.7	114.6		1	1	15.0	30.7		53					

DRAINAGE QUANTITES
DQ-1

STATE OF CALIFORNIA - DEPARTMENT OF TRANSPORTATION
Caltrans
TRAFFIC PROJECT DEVELOPMENT

FUNCTIONAL SUPERVISOR: CHARLES GRAY
CALCULATED-DESIGNED BY: KENNY T. NGUYEN
CHECKED BY: JOSE LUIS ROBLES
REVISED BY
DATE REVISED

LAST REVISION 04-18-16 | DATE PLOTTED => 12-MAY-2016 | TIME PLOTTED => 13:13

Dist	COUNTY	ROUTE	POST MILES TOTAL PROJECT	SHEET No.	TOTAL SHEETS
11	SD	94	59.6/60.2	24	78

REGISTERED CIVIL ENGINEER 03-25-16 DATE

05-09-16
PLANS APPROVAL DATE

REGISTERED PROFESSIONAL ENGINEER JOSE L. ROBLES No. C 64402 Exp. 06-30-17 CIVIL STATE OF CALIFORNIA

THE STATE OF CALIFORNIA OR ITS OFFICERS OR AGENTS SHALL NOT BE RESPONSIBLE FOR THE ACCURACY OR COMPLETENESS OF SCANNED COPIES OF THIS PLAN SHEET.

NOTES:

1. (N) = NOT A SEPARATE PAY ITEM, FOR INFORMATION ONLY.
2. ALL JOINTS ARE STANDARD JOINT TYPE, UNLESS OTHERWISE NOTED

DRAINAGE QUANTITIES

DRAINAGE PLAN SHEET No.	DRAINAGE SYSTEM No.	DRAINAGE UNIT	ABANDON CULVERT EA	SAND BACKFILL CY (N)	MINOR CONCRETE (MINOR STRUCTURE) CY	CONCRETE (DITCH LINING) CY	FRAME AND GRATE W/ CHAIN (TYPE 24-12) (N) EA	FRAME AND GRATE W/ CHAIN (TYPE 24-12X) (N) EA	MISCELLANEOUS IRON AND STEEL LB	HEIGHT OF INLET "H" (N) LF	MAXIMUM COVER (N) LF	30" RCP LF	24" RCP LF	18" RCP LF	30" CONCRETE FES EA	24" CONCRETE FES EA	RSP (LIGHT, METHOD B) CY	RSP FABRIC (CLASS 8) SQYD	REMOVE CULVERT (N) LF	REMOVE CULVERT LF	DESCRIPTION	STATION	DRAINAGE PLAN SHEET No.	DRAINAGE SYSTEM No.	DRAINAGE UNIT
D-2	5	a			2.70		2		658	4.33											GT4 INLET (NO CURB) WITH TYPE 24-12 GRATE AND FRAME	23.83′ L+ "A1" 35+75	D-2	5	a
		b									2.35		15.7								24" X 15.7′ RCP CULVERT					b
		c			2.83		2		658	4.67											GT4 INLET (NO CURB) WITH TYPE 24-12 GRATE AND FRAME	23.83′ L+ "A1" 35+53				c
		d									7.45		66.0								24" X 66.0′ RCP CULVERT					d
		e														1					24" CONCRETE FES					e
		f															6.0	12.5			RSP WITH RSP FABRIC					f
		g																	39		REMOVE EXISTING 18" X 39.0′ CMP CULVERT					g
	6	a	1	1.14																	ABANDON EXISTING 12" X 39.0′ CMP CULVERT	"A1" 40+16.10		6	a
	7	a			0.88		1		329	2.68											G1 INLET WITH TYPE 24-12 GRATE AND FRAME	23.83′ L+ "A-1" 42+18		7	a
		b									1.44			16.0							18" X 16.0′ RCP CULVERT				b
		c			1.00		1		329	3.20											G1 INLET WITH TYPE 24-12 GRATE AND FRAME	23.83′ L+ "A-1" 42+00			c
		d									1.44			16.0							18" X 16.0′ RCP CULVERT				d
		e			0.87		1		329	2.63											G1 INLET WITH TYPE 24-12 GRATE AND FRAME	23.83′ L+ "A-1" 41+82			e
		f									3.90		64.4								24" X 64.4′ RCP CULVERT				f
		g														1					24" CONCRETE FES				g
		h															6.0	12.5			RSP WITH RSP FABRIC				h
SUBTOTAL 1					13.16	169.5			2874			51.7	114.6		1	1	15.0	30.7		53					
SUBTOTAL 2			1		8.28				2303				146.1	32.0		2	12.0	25.0							
TOTALS			1		21.44	169.5			5177			51.7	260.7	32.0	1	3	27.0	55.7		53					

DRAINAGE QUANTITES
DQ-2

STATE OF CALIFORNIA - DEPARTMENT OF TRANSPORTATION
Caltrans
TRAFFIC PROJECT DEVELOPMENT

FUNCTIONAL SUPERVISOR: CHARLES GRAY
CALCULATED-DESIGNED BY: KENNY T. NGUYEN
CHECKED BY: JOSE LUIS ROBLES
REVISED BY
DATE REVISED

LAST REVISION 04-18-16
DATE PLOTTED => 12-MAY-2016
TIME PLOTTED => 13:13

Dist	COUNTY	ROUTE	POST MILES TOTAL PROJECT	SHEET No.	TOTAL SHEETS
11	SD	94	59.6/60.2	25	78

REGISTERED CIVIL ENGINEER 03-25-16 DATE

05-09-16
PLANS APPROVAL DATE

REGISTERED PROFESSIONAL ENGINEER JOSE L. ROBLES No. C 64402 Exp. 06-30-17 CIVIL STATE OF CALIFORNIA

THE STATE OF CALIFORNIA OR ITS OFFICERS OR AGENTS SHALL NOT BE RESPONSIBLE FOR THE ACCURACY OR COMPLETENESS OF SCANNED COPIES OF THIS PLAN SHEET.

NOTES:

1. FOR ACCURATE RIGHT OF WAY DATA, CONTACT RIGHT OF WAY ENGINEERING AT THE DISTRICT OFFICE.

2. UTILITY OWNERSHIP:

ELECTRICAL - SAN DIEGO GAS & ELECTRIC (SDG&E)
TELEPHONE - AMERICAN TELEPHONE & TELEGRAPH (AT&T)

CAMPO INDIAN RESERVATION

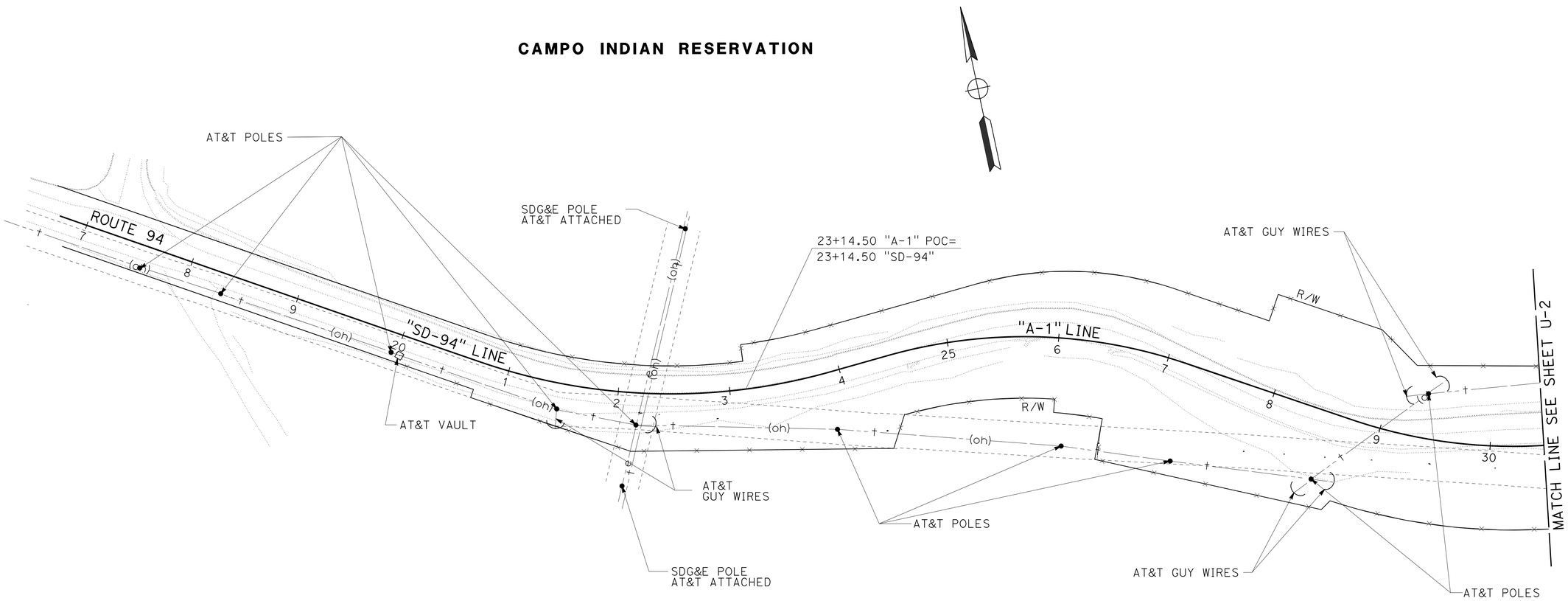

THIS PLAN TO BE USED FOR UTILITY INFORMATION ONLY

SCALE: 1" = 50'

UTILITY PLANS

U-1

STATE OF CALIFORNIA - DEPARTMENT OF TRANSPORTATION
Caltrans
TRAFFIC PROJECT DEVELOPMENT

FUNCTIONAL SUPERVISOR: CHARLES GRAY
CALCULATED-DESIGNED BY: KENNY T. NGUYEN
CHECKED BY: JOSE LUIS ROBLES
REVISED BY
DATE REVISED

LAST REVISION 04-18-16
DATE PLOTTED => 12-MAY-2016
TIME PLOTTED => 13:13

Dist	COUNTY	ROUTE	POST MILES TOTAL PROJECT	SHEET No.	TOTAL SHEETS
11	SD	94	59.6/60.2	26	78

REGISTERED CIVIL ENGINEER 03-25-16 DATE

05-09-16
PLANS APPROVAL DATE

REGISTERED PROFESSIONAL ENGINEER JOSE L. ROBLES No. C 64402 Exp. 06-30-17 CIVIL STATE OF CALIFORNIA

THE STATE OF CALIFORNIA OR ITS OFFICERS OR AGENTS SHALL NOT BE RESPONSIBLE FOR THE ACCURACY OR COMPLETENESS OF SCANNED COPIES OF THIS PLAN SHEET.

NOTES:
1. FOR ACCURATE RIGHT OF WAY DATA, CONTACT RIGHT OF WAY ENGINEERING AT THE DISTRICT OFFICE.

CAMPO INDIAN RESERVATION

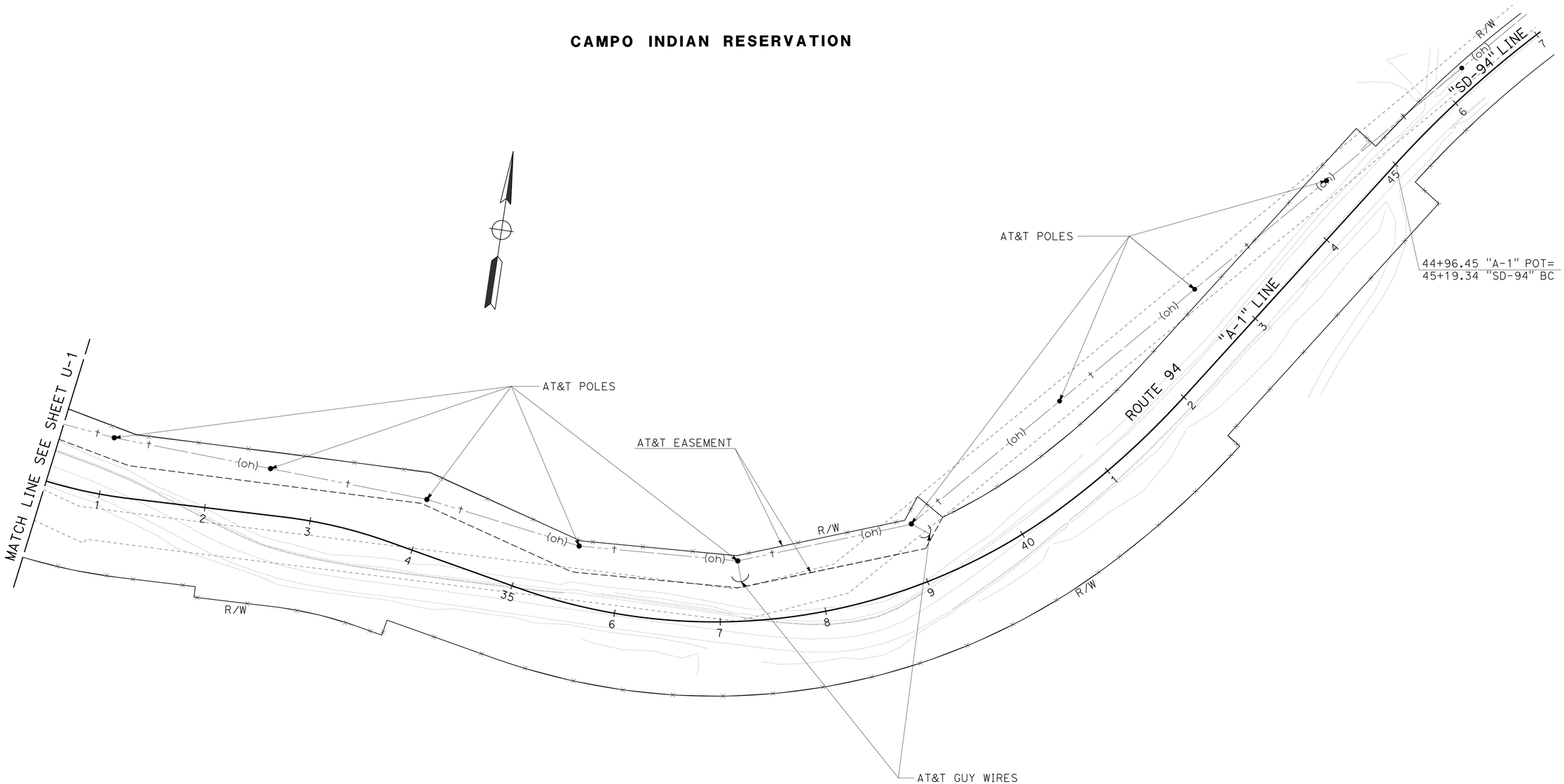

THIS PLAN TO BE USED FOR UTILITY INFORMATION ONLY

SCALE: 1" = 50'

UTILITY PLANS
U-2

STATE OF CALIFORNIA - DEPARTMENT OF TRANSPORTATION
Caltrans
TRAFFIC PROJECT DEVELOPMENT

FUNCTIONAL SUPERVISOR: CHARLES GRAY
CALCULATED-DESIGNED BY: KENNY T. NGUYEN
CHECKED BY: JOSE LUIS ROBLES
REVISED BY
DATE REVISED

LAST REVISION 04-18-16
DATE PLOTTED => 12-MAY-2016
TIME PLOTTED => 13:13

Dist	COUNTY	ROUTE	POST MILES TOTAL PROJECT	SHEET No.	TOTAL SHEETS
11	SD	94	59.6/60.2	27	78

REGISTERED CIVIL ENGINEER 03-25-16 DATE

05-09-16
PLANS APPROVAL DATE

REGISTERED PROFESSIONAL ENGINEER SHAHIN T. ADIBI No. 54839 Exp. 06-30-16 CIVIL STATE OF CALIFORNIA

THE STATE OF CALIFORNIA OR ITS OFFICERS OR AGENTS SHALL NOT BE RESPONSIBLE FOR THE ACCURACY OR COMPLETENESS OF SCANNED COPIES OF THIS PLAN SHEET.

NOTES:

1. EXACT LOCATION OF CONSTRUCTION AREA SIGNS WILL BE DETERMINED BY THE ENGINEER.
2. FEDERAL MANUAL ON UNIFORM TRAFFIC CONTROL DEVICES (MUTCD) SIGN CODES ARE SHOWN UNLESS DESIGNATED BY (CA), INDICATING CALIFORNIA SIGN SPECIFICATIONS ARE USED.
3. EXISTING UTILITIES ARE NOT SHOWN ON THESE PLAN SHEETS. THE CONTRACTOR SHALL VERIFY LOCATIONS OF EXISTING UTILITIES AND ADJUST THE FIELD LOCATION OF THE SIGN POSTS IN CONSULTATION WITH THE ENGINEER.
4. SEE TRAFFIC HANDLING PLANS FOR ADDITIONAL CONSTRUCTION AREA SIGNS.

LEGEND:

(X) = CONSTRUCTION AREA SIGN

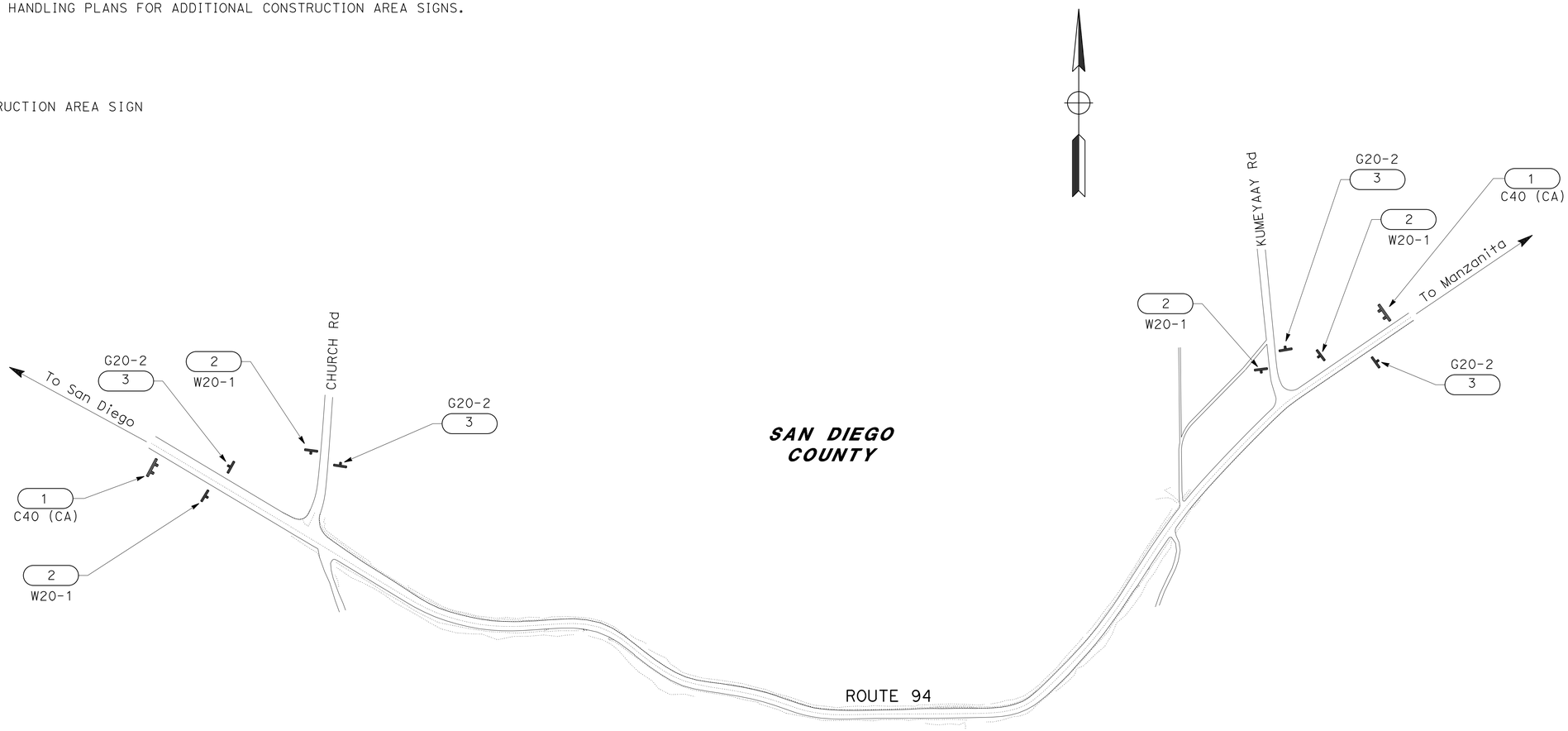

CONSTRUCTION AREA SIGNS

SIGN No.	TYPE	PANEL SIZE (In)	No. OF POST AND SIZE (In)	No. OF SIGNS
1	C40 (CA)	108 X 42	2-4 X 6 (S)	2
2	W20-1	48 X 48	1-4 X 6 (S)	4
3	G20-2	48 X 24	1-4 X 4 (S)	4

(S) DENOTES STATIONARY MOUNTED SIGN

APPROVED FOR CONSTRUCTION AREA SIGN WORK ONLY

CONSTRUCTION AREA SIGNS

NO SCALE

CS-1

STATE OF CALIFORNIA - DEPARTMENT OF TRANSPORTATION
Caltrans
TRAFFIC DESIGN

FUNCTIONAL SUPERVISOR: CAMILLE ABOU FADEL
CALCULATED-DESIGNED BY: ROBERT EDEJER
CHECKED BY: SHAHIN ADIBI
REVISED BY
DATE REVISED

LAST REVISION 04-18-16
DATE PLOTTED => 12-MAY-2016
TIME PLOTTED => 13:13

Dist	COUNTY	ROUTE	POST MILES TOTAL PROJECT	SHEET No.	TOTAL SHEETS
11	SD	94	59.6/60.2	28	78

REGISTERED CIVIL ENGINEER 03-25-16 DATE

05-09-16
PLANS APPROVAL DATE

REGISTERED PROFESSIONAL ENGINEER JOSE L. ROBLES No. C 64402 Exp. 06-30-17 CIVIL STATE OF CALIFORNIA

THE STATE OF CALIFORNIA OR ITS OFFICERS OR AGENTS SHALL NOT BE RESPONSIBLE FOR THE ACCURACY OR COMPLETENESS OF SCANNED COPIES OF THIS PLAN SHEET.

LEGEND:

- XX = CONSTRUCTION AREA SIGN
- T (XX) = TEMPORARY PAVEMENT DELINEATION DETAIL
- R (XX) = REMOVE PAVEMENT DELINEATION DETAIL
- BT (XX) = BEGIN TEMPORARY PAVEMENT DELINEATION DETAIL
- ET (XX) = END TEMPORARY PAVEMENT DELINEATION DETAIL
- BR (XX) = BEGIN REMOVE PAVEMENT DELINEATION DETAIL
- ER (XX) = END REMOVE PAVEMENT DELINEATION DETAIL
- = WORK THIS STAGE
- = WORK AREA
- = WORK TO BE COMPLETED DURING PERMITTED LANE CLOSURE
- = TEMPORARY RAILING (TYPE K)
- = CHANNELIZER (SURFACE MOUNTED)

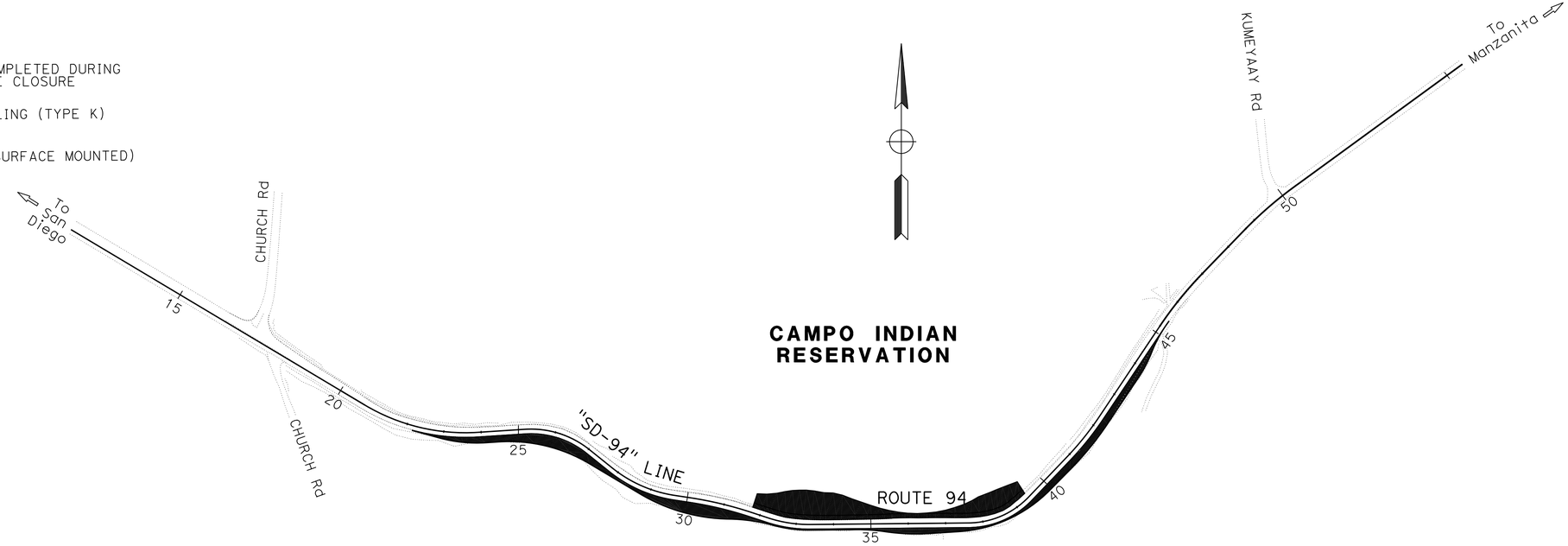

STAGE 1 - CONSTRUCT DETOUR

1. COLD PLANE AND OVERLAY EXISTING RUMBLE STRIP
2. CUT NORTH SIDE SLOPE AREAS AND EXCAVATE UNTIL ENOUGH FILL IS ACHIEVED TO CONSTRUCT DETOUR
3. PAVE Temp HMA DETOUR (SEE DETOUR PLANS)

NOTES:

1. FEDERAL MANUAL ON UNIFORM TRAFFIC CONTROL DEVICES (MUTCD) SIGN CODES ARE SHOWN UNLESS DESIGNATED BY (CA), INDICATING CALIFORNIA MUTCD.
2. EXISTING UTILITIES ARE NOT SHOWN ON THESE PLAN SHEETS. THE CONTRACTOR SHALL VERIFY LOCATIONS OF EXISTING UTILITIES AND ADJUST THE FIELD LOCATION OF THE SIGN POSTS IN CONSULTATION WITH THE ENGINEER.
3. SEE CONSTRUCTION AREA SIGN PLAN FOR ADDITIONAL CONSTRUCTION AREA SIGNS.

APPROVED FOR STAGE CONSTRUCTION AND TRAFFIC HANDLING WORK ONLY

STAGE 1 INDEX

STAGE CONSTRUCTION AND TRAFFIC HANDLING PLAN

NO SCALE

SC- 1

STATE OF CALIFORNIA - DEPARTMENT OF TRANSPORTATION
TRAFFIC PROJECT DEVELOPMENT
Caltrans

FUNCTIONAL SUPERVISOR: CHARLES GRAY
CALCULATED-DESIGNED BY: KIERSTEN V. BOUSQUET
CHECKED BY: JOSE LUIS ROBLES
REVISED BY
DATE REVISED

LAST REVISION 04-18-16 | DATE PLOTTED => 12-MAY-2016 | TIME PLOTTED => 13:13

Dist	COUNTY	ROUTE	POST MILES TOTAL PROJECT	SHEET No.	TOTAL SHEETS
11	SD	94	59.6/60.2	29	78

REGISTERED CIVIL ENGINEER 03-25-16 DATE

05-09-16
PLANS APPROVAL DATE

REGISTERED PROFESSIONAL ENGINEER
JOSE L. ROBLES
No. C 64402
Exp. 06-30-17
CIVIL
STATE OF CALIFORNIA

THE STATE OF CALIFORNIA OR ITS OFFICERS OR AGENTS SHALL NOT BE RESPONSIBLE FOR THE ACCURACY OR COMPLETENESS OF SCANNED COPIES OF THIS PLAN SHEET.

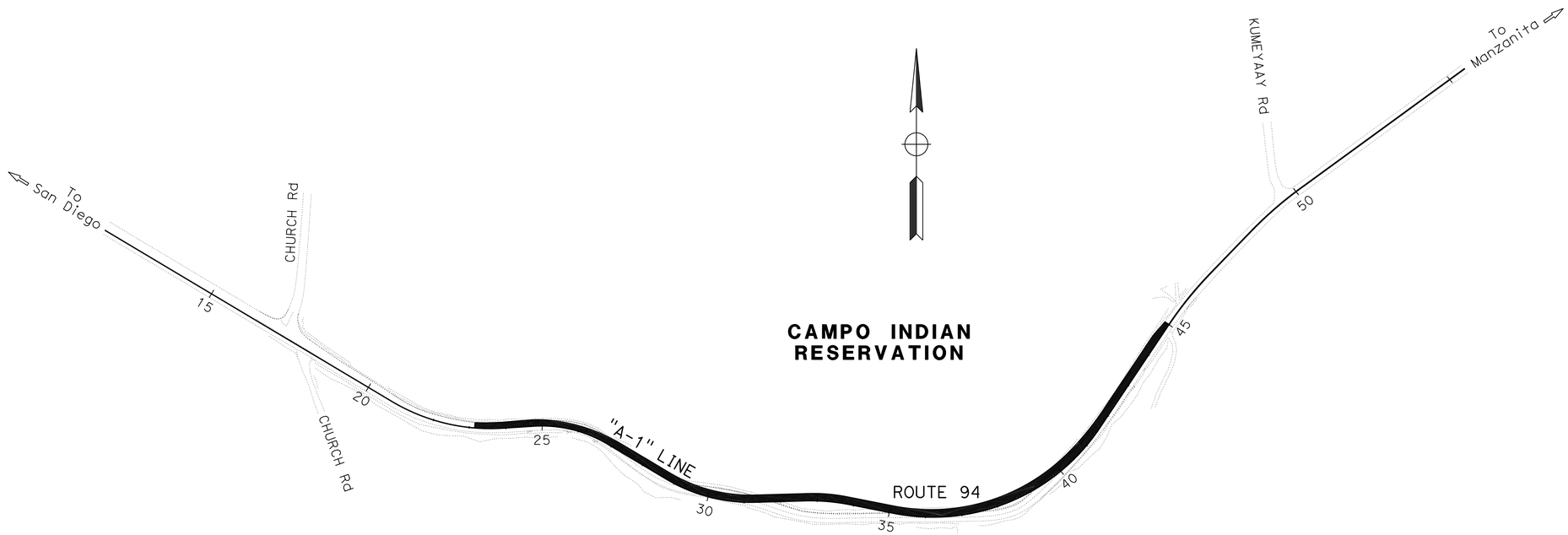

STAGE 2 - CONSTRUCT WB LANE AND SHOULDER

APPROVED FOR STAGE CONSTRUCTION AND TRAFFIC HANDLING WORK ONLY

STAGE 2 INDEX

STAGE CONSTRUCTION AND TRAFFIC HANDLING PLAN

NO SCALE

SC- 2

STATE OF CALIFORNIA - DEPARTMENT OF TRANSPORTATION
Caltrans
TRAFFIC PROJECT DEVELOPMENT

FUNCTIONAL SUPERVISOR: CHARLES GRAY
CALCULATED-DESIGNED BY: KIERSTEN V. BOUSQUET
CHECKED BY: JOSE LUIS ROBLES
REVISED BY
DATE REVISED

LAST REVISION 04-18-16
DATE PLOTTED => 12-MAY-2016
TIME PLOTTED => 13:13

Dist	COUNTY	ROUTE	POST MILES TOTAL PROJECT	SHEET No.	TOTAL SHEETS
11	SD	94	59.6/60.2	30	78

REGISTERED CIVIL ENGINEER 03-25-16 DATE

05-09-16
PLANS APPROVAL DATE

REGISTERED PROFESSIONAL ENGINEER
JOSE L. ROBLES
No. C 64402
Exp. 06-30-17
CIVIL
STATE OF CALIFORNIA

THE STATE OF CALIFORNIA OR ITS OFFICERS OR AGENTS SHALL NOT BE RESPONSIBLE FOR THE ACCURACY OR COMPLETENESS OF SCANNED COPIES OF THIS PLAN SHEET.

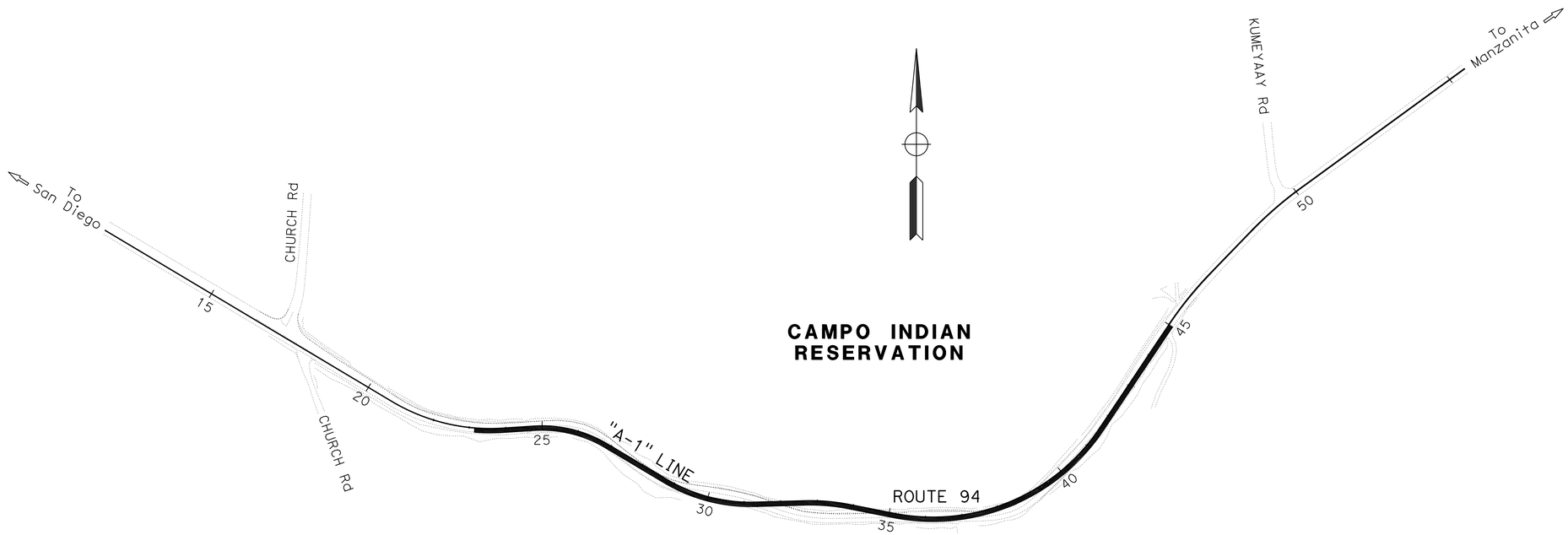

STAGE 3 - CONSTRUCT EB LANE

APPROVED FOR STAGE CONSTRUCTION AND TRAFFIC HANDLING WORK ONLY

STAGE 3 INDEX

STAGE CONSTRUCTION AND TRAFFIC HANDLING PLAN

NO SCALE

SC- 3

STATE OF CALIFORNIA - DEPARTMENT OF TRANSPORTATION
Caltrans
TRAFFIC PROJECT DEVELOPMENT

FUNCTIONAL SUPERVISOR: CHARLES GRAY
CALCULATED-DESIGNED BY: KIERSTEN V. BOUSQUET
CHECKED BY: JOSE LUIS ROBLES
REVISED BY
DATE REVISED

LAST REVISION 04-18-16
DATE PLOTTED => 12-MAY-2016
TIME PLOTTED => 13:13

Dist	COUNTY	ROUTE	POST MILES TOTAL PROJECT	SHEET No.	TOTAL SHEETS
11	SD	94	59.6/60.2	31	78

REGISTERED CIVIL ENGINEER 03-25-16 DATE

05-09-16
PLANS APPROVAL DATE

REGISTERED PROFESSIONAL ENGINEER
JOSE L. ROBLES
No. C 64402
Exp. 06-30-17
CIVIL
STATE OF CALIFORNIA

THE STATE OF CALIFORNIA OR ITS OFFICERS OR AGENTS SHALL NOT BE RESPONSIBLE FOR THE ACCURACY OR COMPLETENESS OF SCANNED COPIES OF THIS PLAN SHEET.

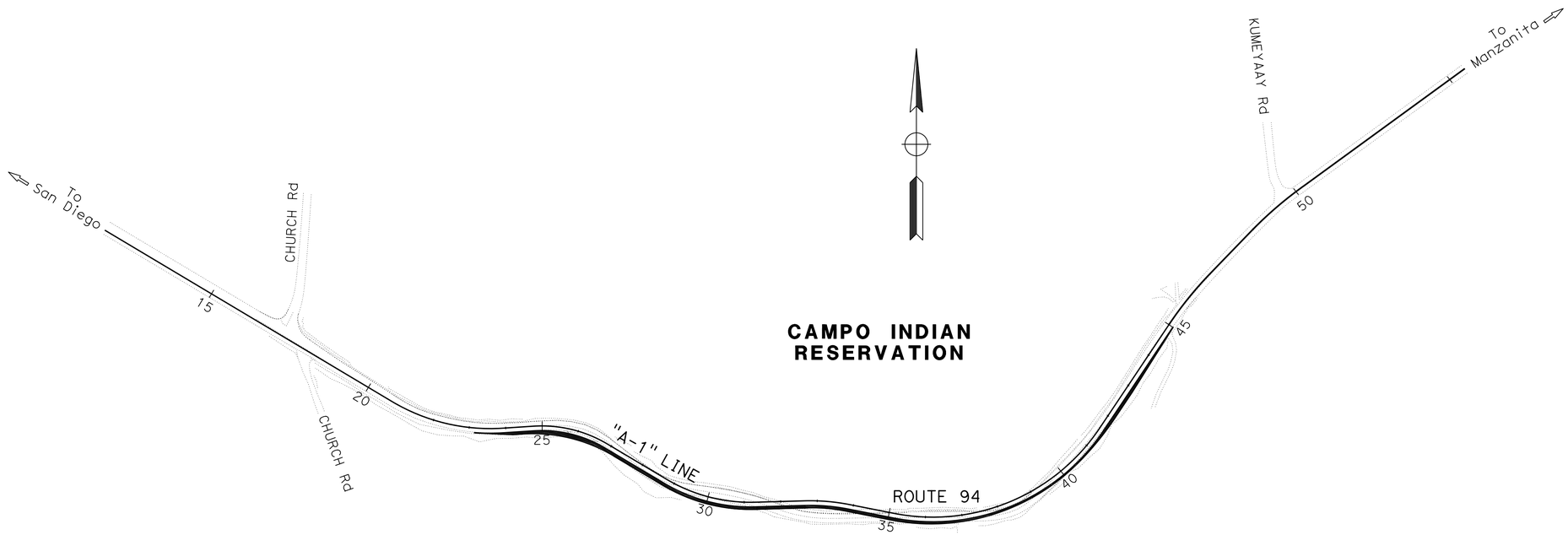

STAGE 4 - CONSTRUCT EB SHOULDER/REMOVE DETOUR

APPROVED FOR STAGE CONSTRUCTION AND TRAFFIC HANDLING WORK ONLY

STAGE 4 INDEX

STAGE CONSTRUCTION AND TRAFFIC HANDLING PLAN

NO SCALE

SC- 4

STATE OF CALIFORNIA - DEPARTMENT OF TRANSPORTATION
Caltrans
TRAFFIC PROJECT DEVELOPMENT

FUNCTIONAL SUPERVISOR: CHARLES GRAY
CALCULATED-DESIGNED BY: KIERSTEN V. BOUSQUET
CHECKED BY: JOSE LUIS ROBLES
REVISED BY
DATE REVISED

LAST REVISION 04-18-16
DATE PLOTTED => 12-MAY-2016
TIME PLOTTED => 13:13

Dist	COUNTY	ROUTE	POST MILES TOTAL PROJECT	SHEET No.	TOTAL SHEETS
11	SD	94	59.6/60.2	32	78

REGISTERED CIVIL ENGINEER 03-25-16 DATE

05-09-16
PLANS APPROVAL DATE

REGISTERED PROFESSIONAL ENGINEER JOSE L. ROBLES No. C 64402 Exp. 06-30-17 CIVIL STATE OF CALIFORNIA

THE STATE OF CALIFORNIA OR ITS OFFICERS OR AGENTS SHALL NOT BE RESPONSIBLE FOR THE ACCURACY OR COMPLETENESS OF SCANNED COPIES OF THIS PLAN SHEET.

NOTES:

1. FOR ACCURATE RIGHT OF WAY DATA, CONTACT RIGHT OF WAY ENGINEERING AT THE DISTRICT OFFICE.
2. * CMS TO READ, "ROAD WORK AHEAD, WINDING ROAD 0.5 MILE".

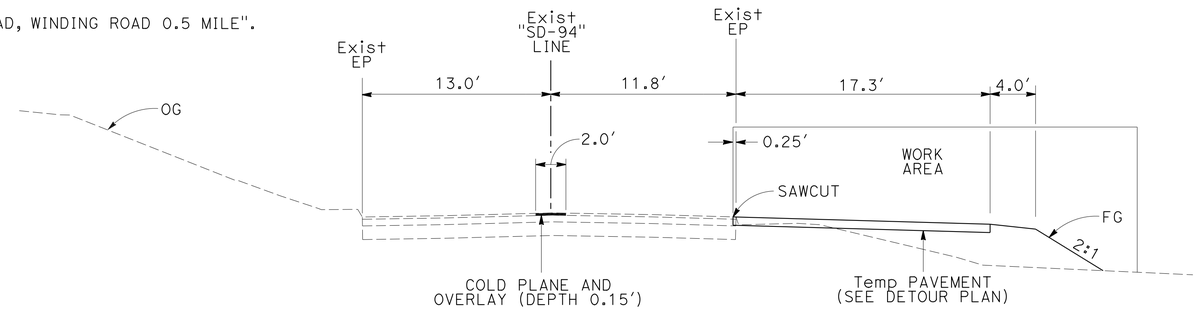

SECTION A-A
NO SCALE

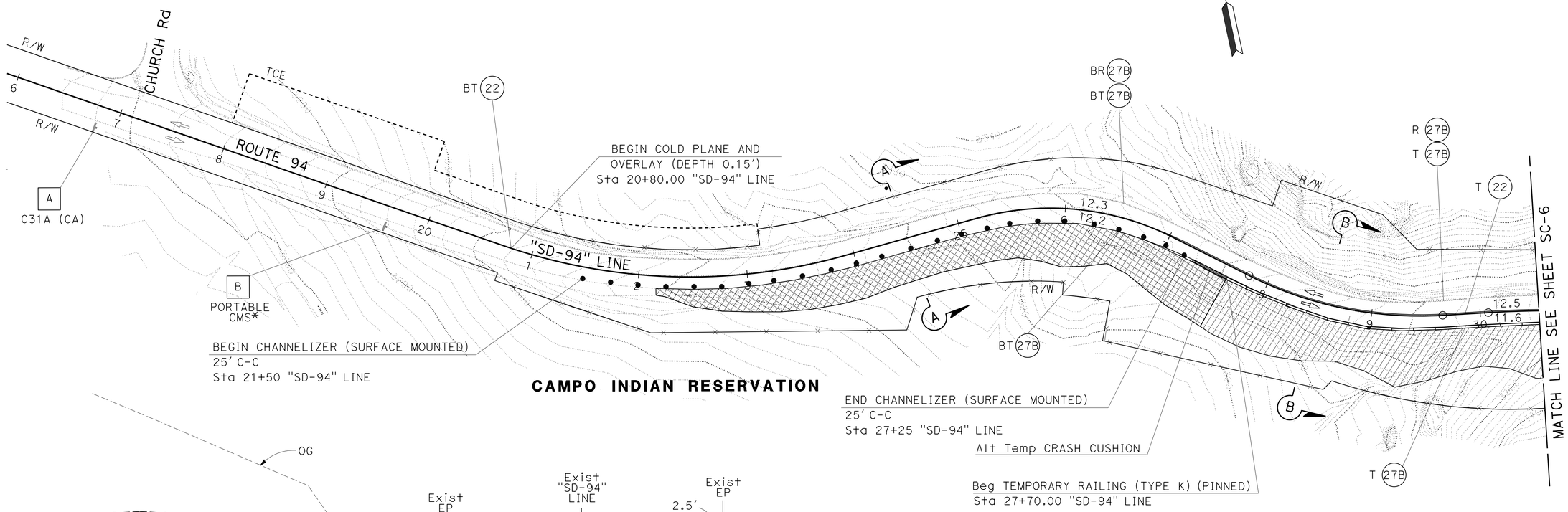

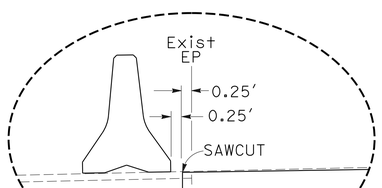

DETAIL 'A'

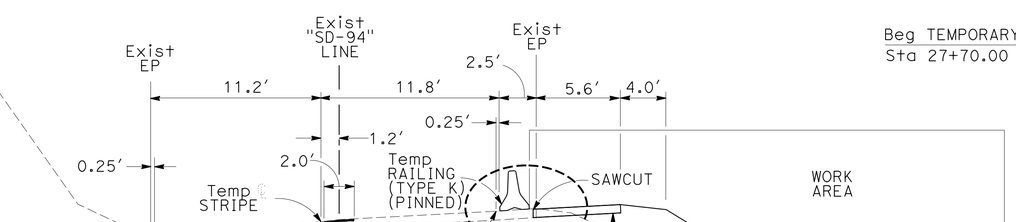

SECTION B-B
NO SCALE

APPROVED FOR STAGE CONSTRUCTION AND TRAFFIC HANDLING WORK ONLY

STAGE 1

STAGE CONSTRUCTION AND TRAFFIC HANDLING PLAN

SCALE: 1" = 50′

SC-5

STATE OF CALIFORNIA - DEPARTMENT OF TRANSPORTATION
Caltrans
TRAFFIC PROJECT DEVELOPMENT

FUNCTIONAL SUPERVISOR: CHARLES GRAY
CALCULATED-DESIGNED BY: JOSE LUIS ROBLES
CHECKED BY: KIERSTEN V. BOUSQUET
REVISED BY / DATE REVISED

LAST REVISION: DATE PLOTTED => 12-MAY-2016 TIME PLOTTED => 13:13
04-18-16

Dist	COUNTY	ROUTE	POST MILES TOTAL PROJECT	SHEET No.	TOTAL SHEETS
11	SD	94	59.6/60.2	33	78

REGISTERED CIVIL ENGINEER 03-25-16 DATE

05-09-16
PLANS APPROVAL DATE

REGISTERED PROFESSIONAL ENGINEER JOSE L. ROBLES No. C 64402 Exp. 06-30-17 CIVIL STATE OF CALIFORNIA

THE STATE OF CALIFORNIA OR ITS OFFICERS OR AGENTS SHALL NOT BE RESPONSIBLE FOR THE ACCURACY OR COMPLETENESS OF SCANNED COPIES OF THIS PLAN SHEET.

NOTES:

1. FOR ACCURATE RIGHT OF WAY DATA, CONTACT RIGHT OF WAY ENGINEERING AT THE DISTRICT OFFICE.
2. * CMS TO READ, "ROAD WORK AHEAD, WINDING ROAD 0.5 MILE".

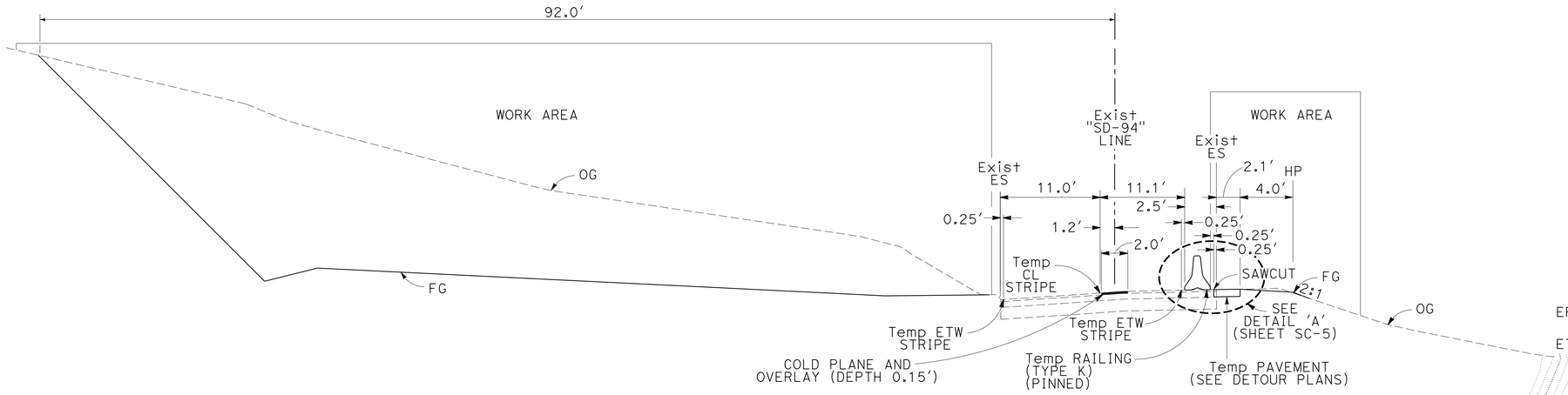

SECTION C-C
NO SCALE

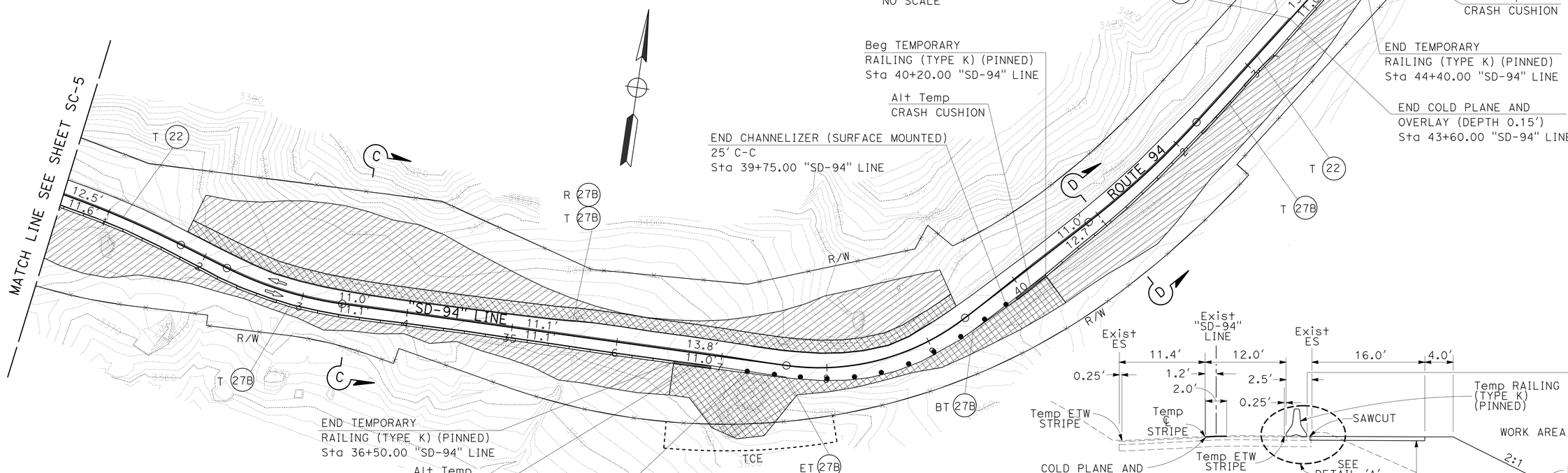

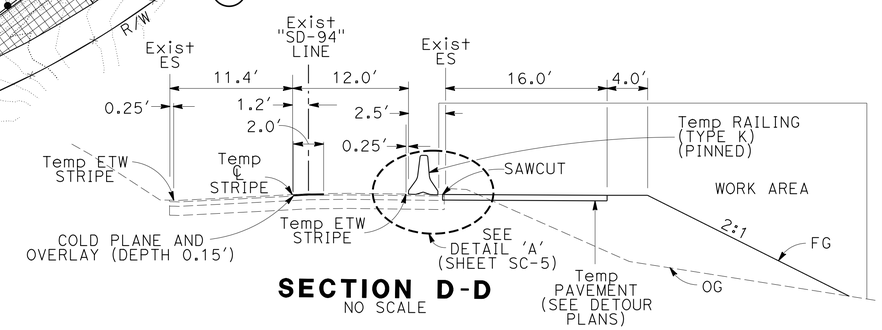

SECTION D-D
NO SCALE

STAGE 1

STAGE CONSTRUCTION AND TRAFFIC HANDLING PLAN

SCALE: 1" = 50'

SC-6

APPROVED FOR STAGE CONSTRUCTION AND TRAFFIC HANDLING WORK ONLY

STATE OF CALIFORNIA - DEPARTMENT OF TRANSPORTATION
Caltrans
TRAFFIC PROJECT DEVELOPMENT

FUNCTIONAL SUPERVISOR: CHARLES GRAY
CALCULATED-DESIGNED BY: KIERSTEN V. BOUSQUET
CHECKED BY: JOSE LUIS ROBLES
REVISED BY / DATE REVISED

LAST REVISION 04-18-16 | DATE PLOTTED => 12-MAY-2016 | TIME PLOTTED => 13:13

Dist	COUNTY	ROUTE	POST MILES TOTAL PROJECT	SHEET No.	TOTAL SHEETS
11	SD	94	59.6/60.2	34	78

REGISTERED CIVIL ENGINEER 03-25-16 DATE

05-09-16
PLANS APPROVAL DATE

REGISTERED PROFESSIONAL ENGINEER JOSE L. ROBLES No. C 64402 Exp. 06-30-17 CIVIL STATE OF CALIFORNIA

THE STATE OF CALIFORNIA OR ITS OFFICERS OR AGENTS SHALL NOT BE RESPONSIBLE FOR THE ACCURACY OR COMPLETENESS OF SCANNED COPIES OF THIS PLAN SHEET.

NOTE:

1. FOR ACCURATE RIGHT OF WAY DATA, CONTACT RIGHT OF WAY ENGINEERING AT THE DISTRICT OFFICE.
2. * CMS TO READ, "ROAD WORK AHEAD, WINDING ROAD 0.5 MILE".

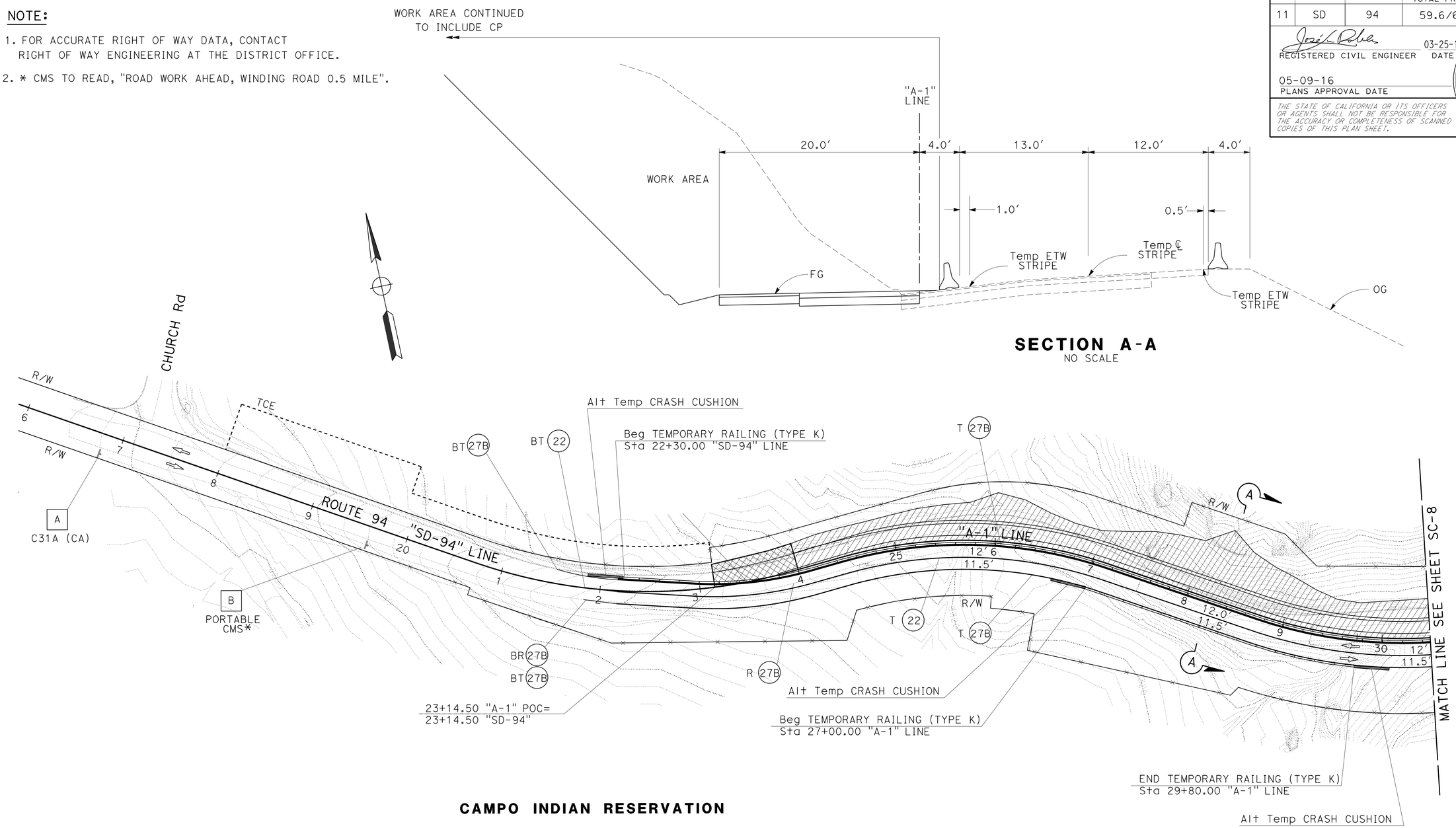

CAMPO INDIAN RESERVATION

APPROVED FOR STAGE CONSTRUCTION AND TRAFFIC HANDLING WORK ONLY

STAGE 2

STAGE CONSTRUCTION AND TRAFFIC HANDLING PLAN

SCALE: 1" = 50'

SC-7

STATE OF CALIFORNIA - DEPARTMENT OF TRANSPORTATION
Caltrans
TRAFFIC PROJECT DEVELOPMENT

FUNCTIONAL SUPERVISOR: CHARLES GRAY
CALCULATED-DESIGNED BY: KIERSTEN V. BOUSQUET
CHECKED BY: JOSE LUIS ROBLES
REVISED BY
DATE REVISED

LAST REVISION 04-18-16 | DATE PLOTTED => 12-MAY-2016 | TIME PLOTTED => 13:13

Dist	COUNTY	ROUTE	POST MILES TOTAL PROJECT	SHEET No.	TOTAL SHEETS
11	SD	94	59.6/60.2	35	78

REGISTERED CIVIL ENGINEER 03-25-16 DATE

05-09-16
PLANS APPROVAL DATE

REGISTERED PROFESSIONAL ENGINEER JOSE L. ROBLES No. C 64402 Exp. 06-30-17 CIVIL STATE OF CALIFORNIA

THE STATE OF CALIFORNIA OR ITS OFFICERS OR AGENTS SHALL NOT BE RESPONSIBLE FOR THE ACCURACY OR COMPLETENESS OF SCANNED COPIES OF THIS PLAN SHEET.

NOTES:

1. FOR ACCURATE RIGHT OF WAY DATA, CONTACT RIGHT OF WAY ENGINEERING AT THE DISTRICT OFFICE.
2. * CMS TO READ, "ROAD WORK AHEAD, WINDING ROAD 0.5 MILE".

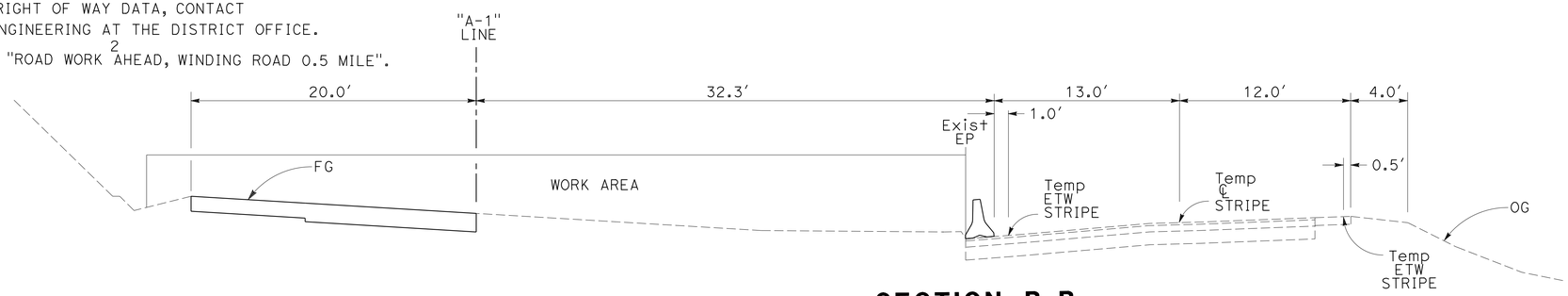

SECTION B-B
NO SCALE

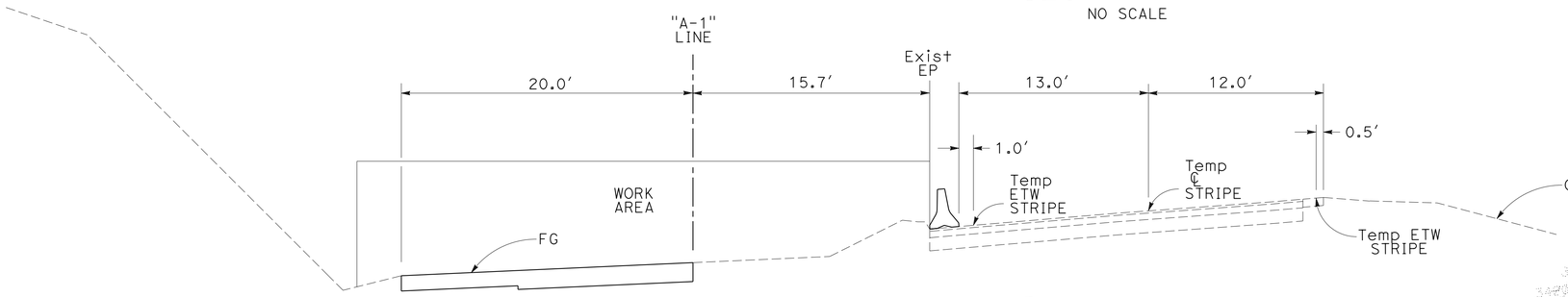

SECTION D-D
NO SCALE

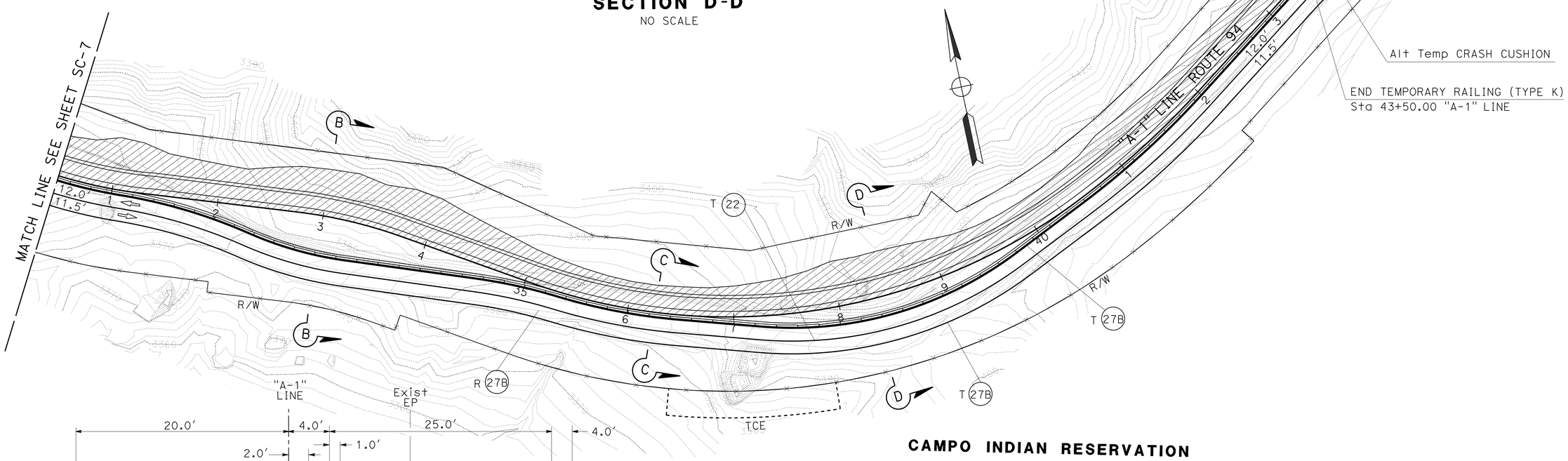

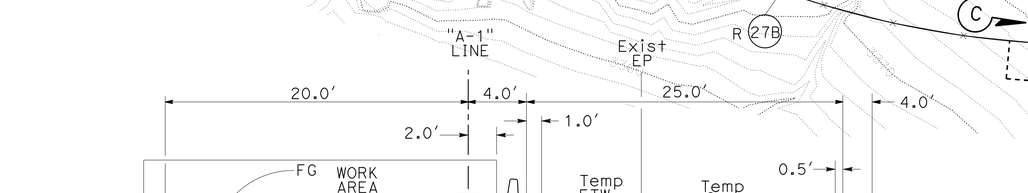

SECTION C-C
NO SCALE

APPROVED FOR STAGE CONSTRUCTION AND TRAFFIC HANDLING WORK ONLY

STAGE 2

STAGE CONSTRUCTION AND TRAFFIC HANDLING PLAN

SCALE: 1" = 50′

SC-8

STATE OF CALIFORNIA - DEPARTMENT OF TRANSPORTATION
Caltrans
TRAFFIC PROJECT DEVELOPMENT

FUNCTIONAL SUPERVISOR: CHARLES GRAY
CALCULATED-DESIGNED BY: KIERSTEN V. BOUSQUET
CHECKED BY: JOSE LUIS ROBLES
REVISED BY
DATE REVISED

LAST REVISION 04-18-16 | DATE PLOTTED => 12-MAY-2016 | TIME PLOTTED => 13:14

Dist	COUNTY	ROUTE	POST MILES TOTAL PROJECT	SHEET No.	TOTAL SHEETS
11	SD	94	59.6/60.2	36	78

REGISTERED CIVIL ENGINEER 03-25-16 DATE

05-09-16
PLANS APPROVAL DATE

REGISTERED PROFESSIONAL ENGINEER JOSE L. ROBLES No. C 64402 Exp. 06-30-17 CIVIL STATE OF CALIFORNIA

THE STATE OF CALIFORNIA OR ITS OFFICERS OR AGENTS SHALL NOT BE RESPONSIBLE FOR THE ACCURACY OR COMPLETENESS OF SCANNED COPIES OF THIS PLAN SHEET.

NOTES:

1. FOR ACCURATE RIGHT OF WAY DATA, CONTACT RIGHT OF WAY ENGINEERING AT THE DISTRICT OFFICE.
2. * CMS TO READ, "ROAD WORK AHEAD, WINDING ROAD 0.5 MILE".

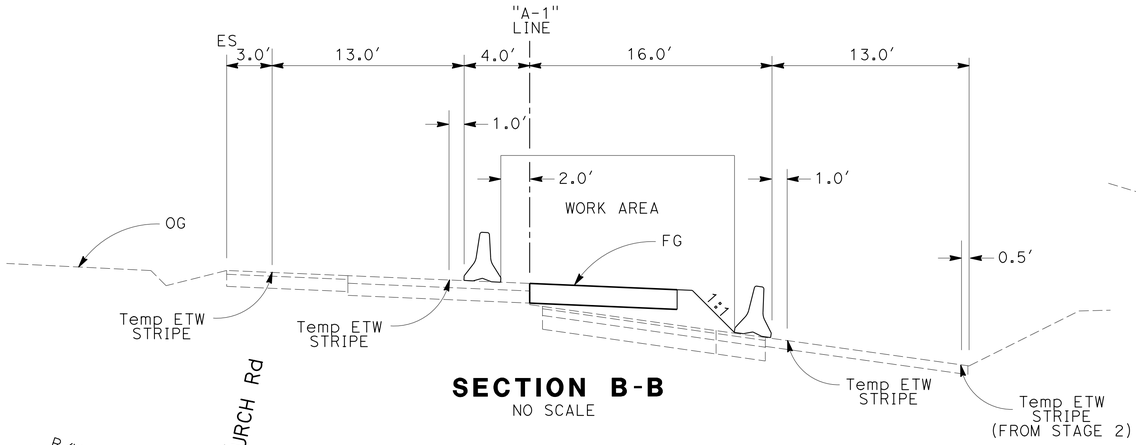

SECTION B-B
NO SCALE

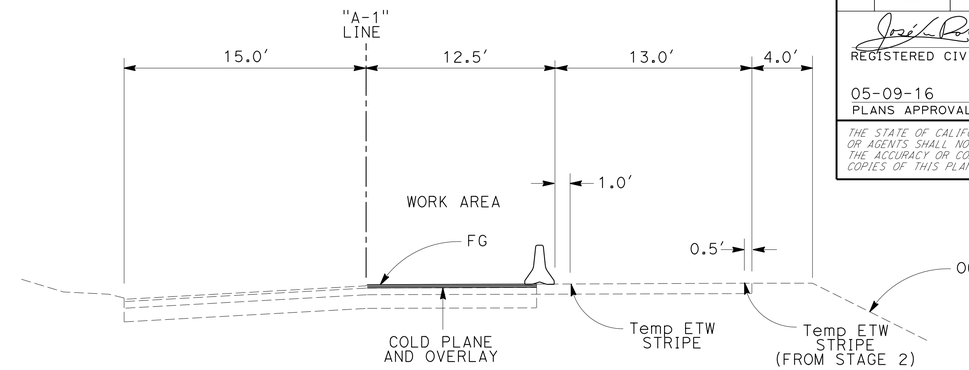

SECTION A-A
NO SCALE

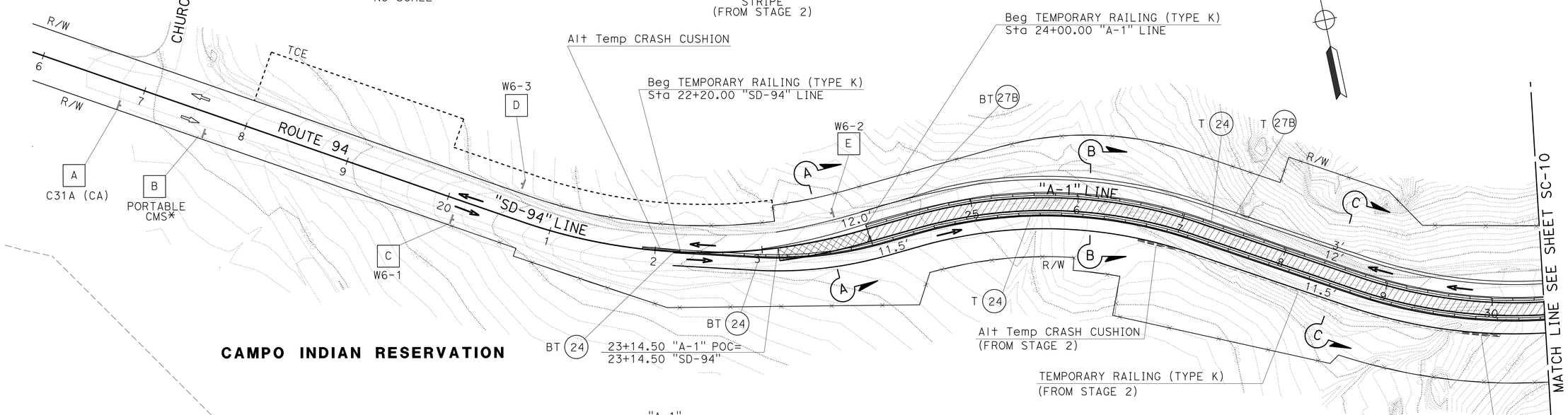

CAMPO INDIAN RESERVATION

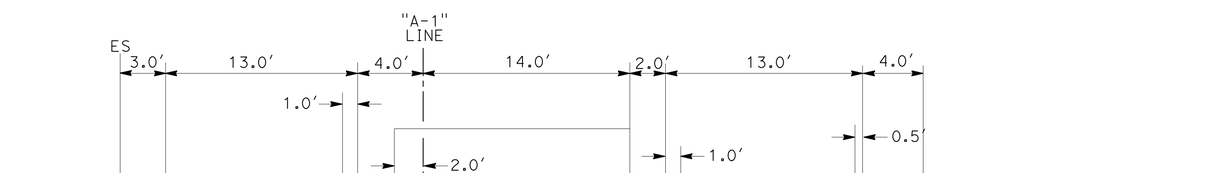

SECTION C-C
NO SCALE

APPROVED FOR STAGE CONSTRUCTION AND TRAFFIC HANDLING WORK ONLY

STAGE 3

STAGE CONSTRUCTION AND TRAFFIC HANDLING PLAN

SCALE: 1" = 50'

SC-9

STATE OF CALIFORNIA - DEPARTMENT OF TRANSPORTATION
Caltrans
TRAFFIC PROJECT DEVELOPMENT

FUNCTIONAL SUPERVISOR: CHARLES GRAY
CALCULATED-DESIGNED BY: JOSE LUIS ROBLES
CHECKED BY: KIERSTEN V. BOUSQUET
REVISED BY
DATE REVISED

LAST REVISION 04-18-16
DATE PLOTTED => 12-MAY-2016
TIME PLOTTED => 13:14

Dist	COUNTY	ROUTE	POST MILES TOTAL PROJECT	SHEET No.	TOTAL SHEETS
11	SD	94	59.6/60.2	37	78

REGISTERED CIVIL ENGINEER 03-25-16 DATE

05-09-16
PLANS APPROVAL DATE

REGISTERED PROFESSIONAL ENGINEER JOSE L. ROBLES No. C 64402 Exp. 06-30-17 CIVIL STATE OF CALIFORNIA

THE STATE OF CALIFORNIA OR ITS OFFICERS OR AGENTS SHALL NOT BE RESPONSIBLE FOR THE ACCURACY OR COMPLETENESS OF SCANNED COPIES OF THIS PLAN SHEET.

NOTES:

1. FOR ACCURATE RIGHT OF WAY DATA, CONTACT RIGHT OF WAY ENGINEERING AT THE DISTRICT OFFICE.
2. * CMS TO READ, "ROAD WORK AHEAD, WINDING ROAD 0.5 MILE".

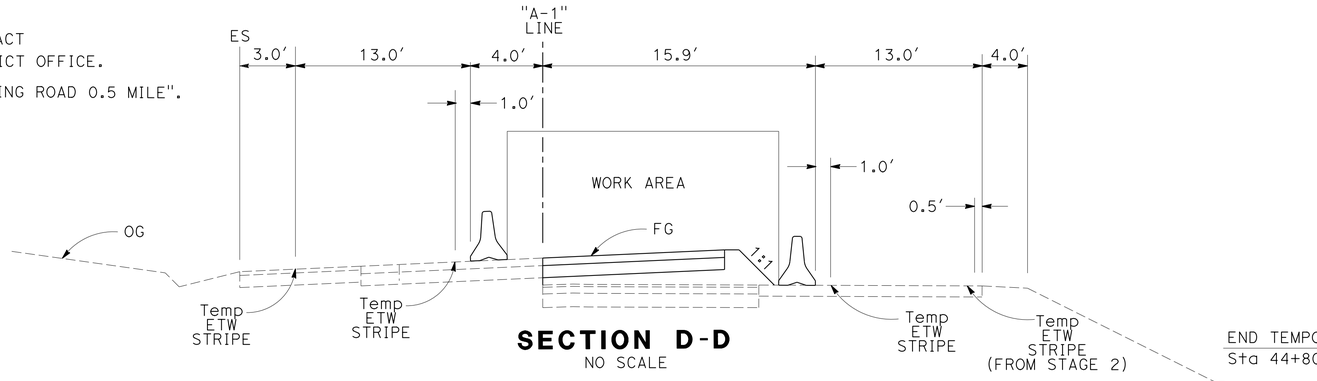

SECTION D-D
NO SCALE

SECTION E-E
NO SCALE

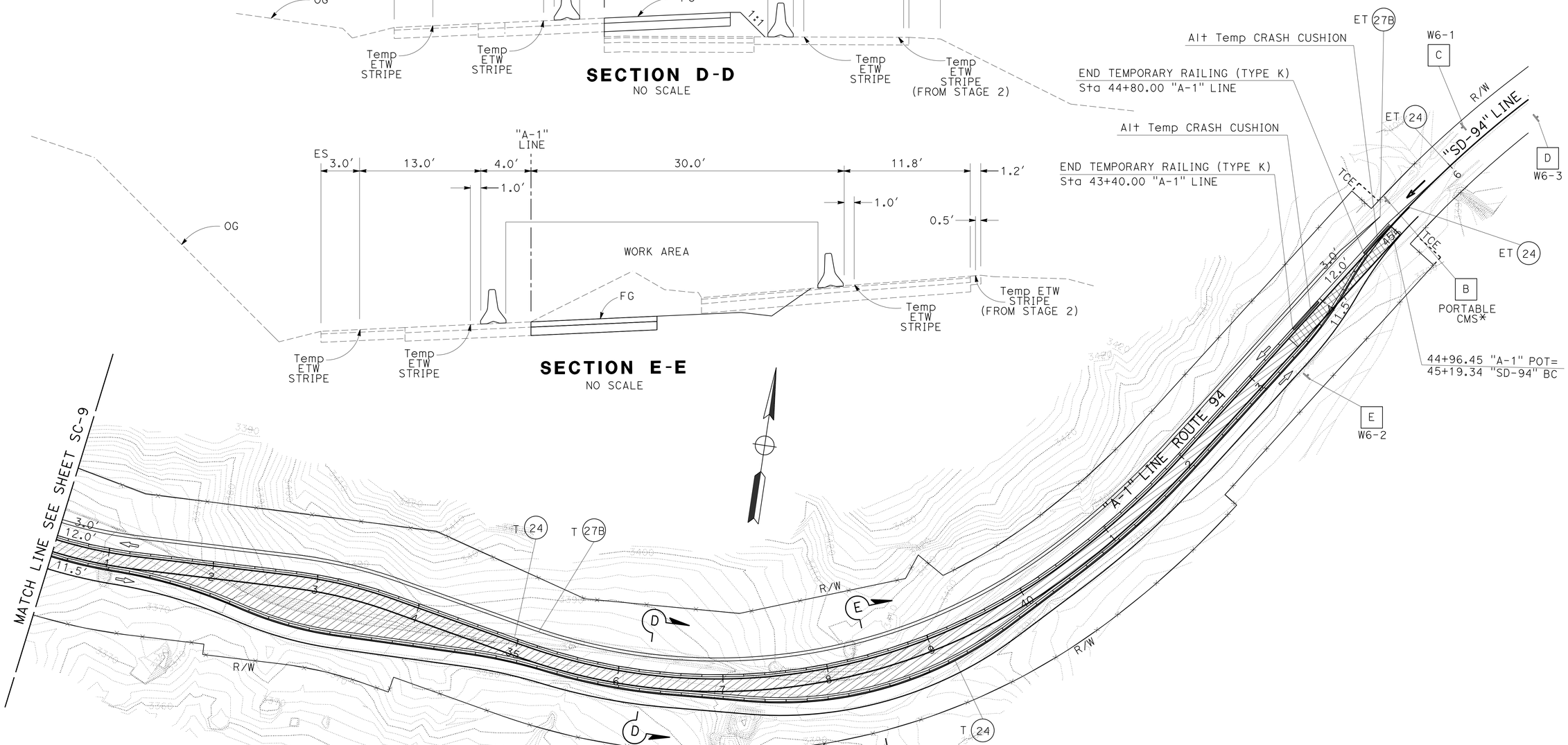

STAGE 3

STAGE CONSTRUCTION AND TRAFFIC HANDLING PLAN

SCALE: 1" = 50′

SC-10

APPROVED FOR STAGE CONSTRUCTION AND TRAFFIC HANDLING WORK ONLY

STATE OF CALIFORNIA - DEPARTMENT OF TRANSPORTATION
Caltrans
TRAFFIC PROJECT DEVELOPMENT

FUNCTIONAL SUPERVISOR: CHARLES GRAY
CALCULATED-DESIGNED BY: KIERSTEN V. BOUSQUET
CHECKED BY: JOSE LUIS ROBLES
REVISED BY
DATE REVISED

LAST REVISION 04-18-16
DATE PLOTTED => 12-MAY-2016
TIME PLOTTED => 13:14

Dist	COUNTY	ROUTE	POST MILES TOTAL PROJECT	SHEET No.	TOTAL SHEETS
11	SD	94	59.6/60.2	38	78

REGISTERED CIVIL ENGINEER 03-25-16 DATE

05-09-16
PLANS APPROVAL DATE

REGISTERED PROFESSIONAL ENGINEER JOSE L. ROBLES No. C 64402 Exp. 06-30-17 CIVIL STATE OF CALIFORNIA

THE STATE OF CALIFORNIA OR ITS OFFICERS OR AGENTS SHALL NOT BE RESPONSIBLE FOR THE ACCURACY OR COMPLETENESS OF SCANNED COPIES OF THIS PLAN SHEET.

NOTES:

1. FOR ACCURATE RIGHT OF WAY DATA, CONTACT RIGHT OF WAY ENGINEERING AT THE DISTRICT OFFICE.
2. * CMS TO READ, "ROAD WORK AHEAD, WINDING ROAD 0.5 MILE".

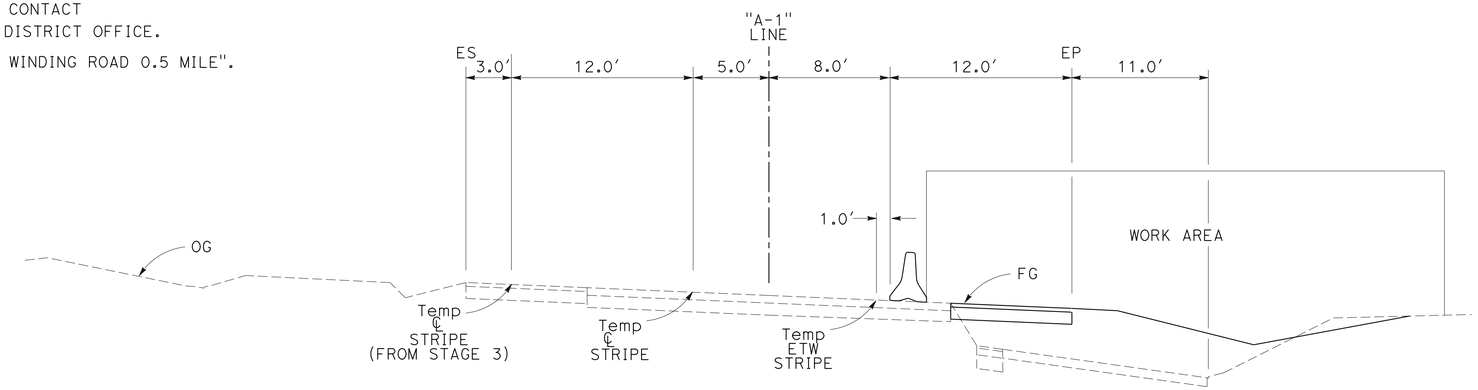

SECTION A-A
NO SCALE

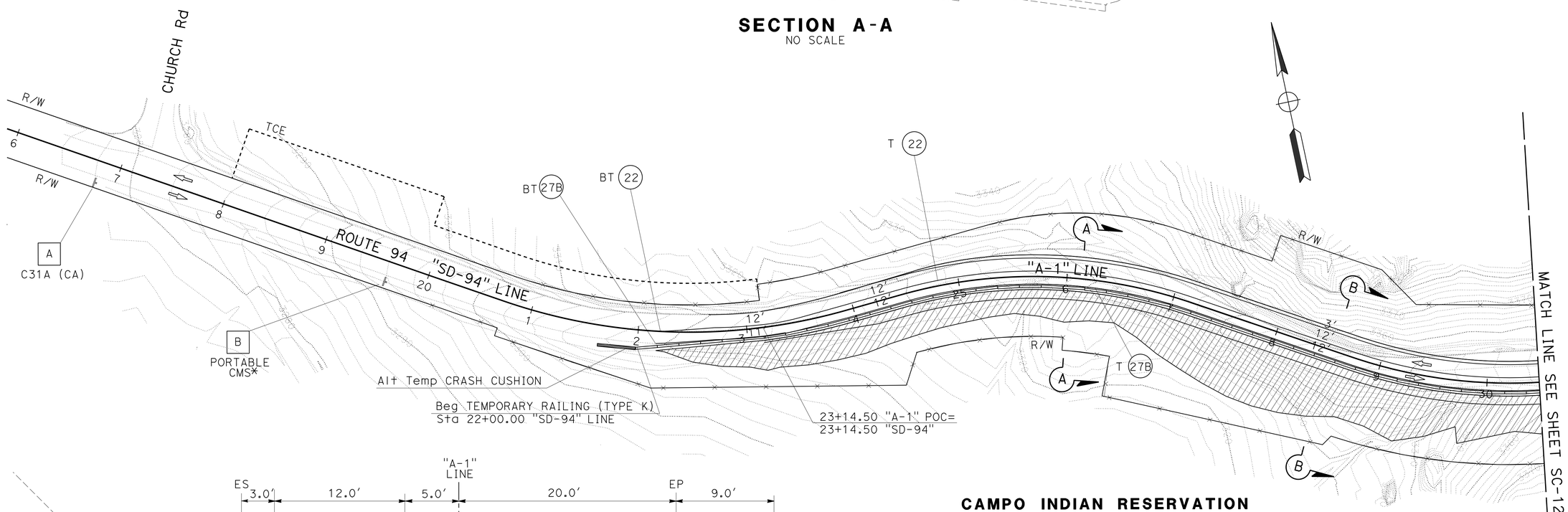

CAMPO INDIAN RESERVATION

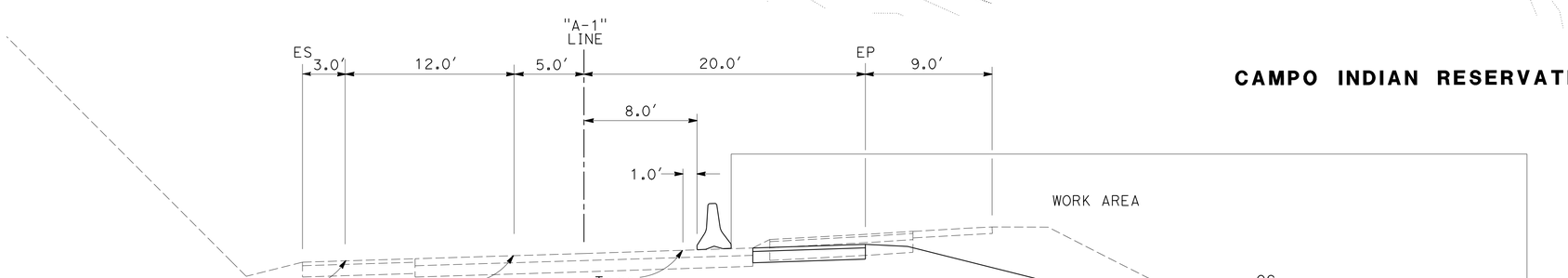

SECTION B-B
NO SCALE

APPROVED FOR STAGE CONSTRUCTION AND TRAFFIC HANDLING WORK ONLY

STAGE 4

STAGE CONSTRUCTION AND TRAFFIC HANDLING PLAN

SCALE: 1" = 50′

SC-11

STATE OF CALIFORNIA - DEPARTMENT OF TRANSPORTATION
Caltrans®
TRAFFIC PROJECT DEVELOPMENT

FUNCTIONAL SUPERVISOR: CHARLES GRAY
CALCULATED-DESIGNED BY: KIERSTEN V. BOUSQUET
CHECKED BY: JOSE LUIS ROBLES
REVISED BY
DATE REVISED

LAST REVISION 04-18-16 | DATE PLOTTED => 12-MAY-2016 | TIME PLOTTED => 13:14

Dist	COUNTY	ROUTE	POST MILES TOTAL PROJECT	SHEET No.	TOTAL SHEETS
11	SD	94	59.6/60.2	39	78

REGISTERED CIVIL ENGINEER 03-25-16 DATE

05-09-16
PLANS APPROVAL DATE

REGISTERED PROFESSIONAL ENGINEER JOSE L. ROBLES No. C 64402 Exp. 06-30-17 CIVIL STATE OF CALIFORNIA

THE STATE OF CALIFORNIA OR ITS OFFICERS OR AGENTS SHALL NOT BE RESPONSIBLE FOR THE ACCURACY OR COMPLETENESS OF SCANNED COPIES OF THIS PLAN SHEET.

NOTES:

1. FOR ACCURATE RIGHT OF WAY DATA, CONTACT RIGHT OF WAY ENGINEERING AT THE DISTRICT OFFICE.
2. * CMS TO READ "ROAD WORK AHEAD, WINDING ROAD 0.5 MILE".

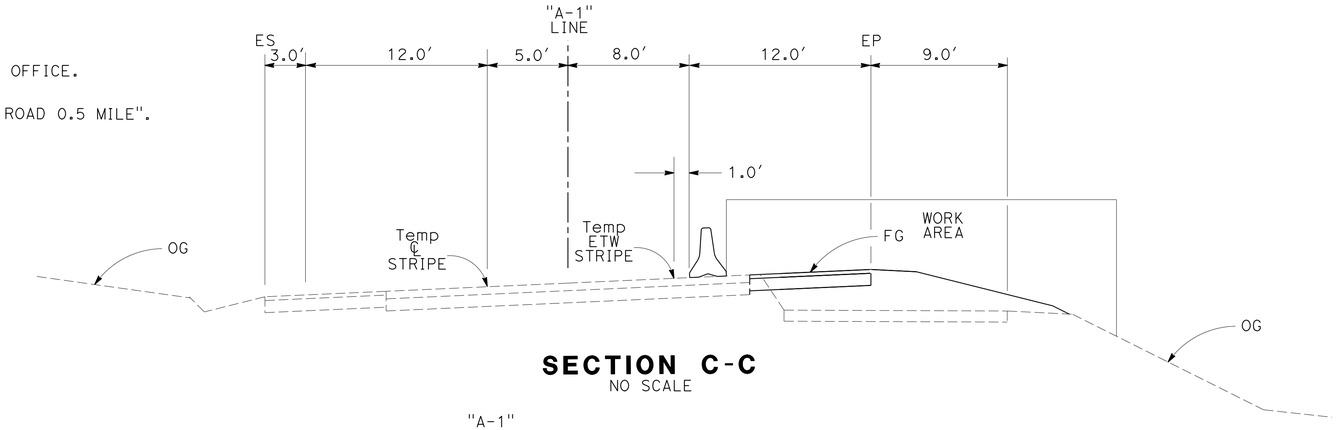

SECTION C-C
NO SCALE

SECTION D-D
NO SCALE

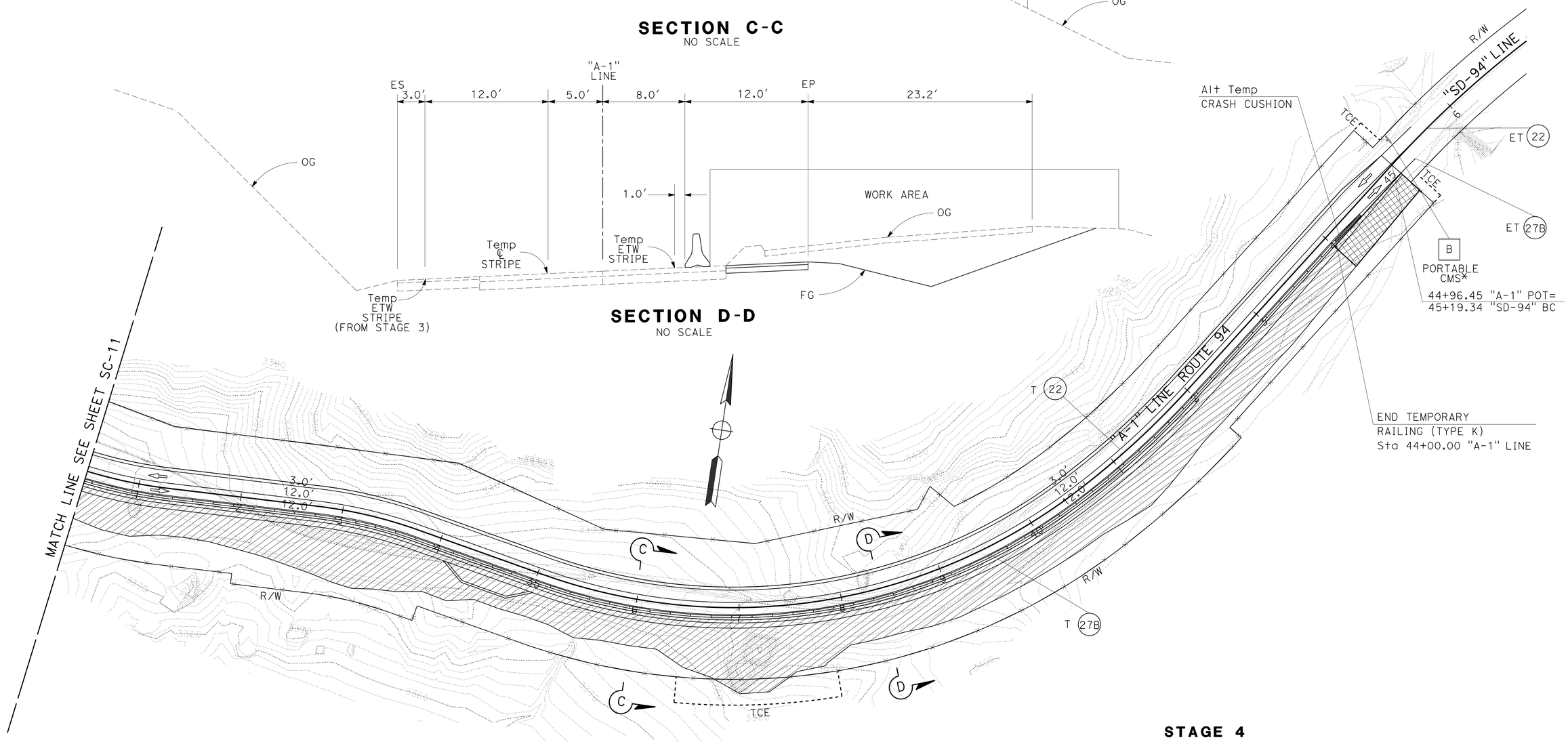

CAMPO INDIAN RESERVATION

APPROVED FOR STAGE CONSTRUCTION AND TRAFFIC HANDLING WORK ONLY

STAGE 4

STAGE CONSTRUCTION AND TRAFFIC HANDLING PLAN

SCALE: 1" = 50'

SC-12

STATE OF CALIFORNIA - DEPARTMENT OF TRANSPORTATION
TRAFFIC PROJECT DEVELOPMENT

FUNCTIONAL SUPERVISOR: CHARLES GRAY
CALCULATED-DESIGNED BY: KIERSTEN V. BOUSQUET
CHECKED BY: JOSE LUIS ROBLES
REVISED BY / DATE REVISED

LAST REVISION 04-18-16
DATE PLOTTED => 12-MAY-2016
TIME PLOTTED => 13:14

Dist	COUNTY	ROUTE	POST MILES TOTAL PROJECT	SHEET No.	TOTAL SHEETS
11	SD	94	59.6/60.2	40	78

REGISTERED CIVIL ENGINEER 03-25-16 DATE

05-09-16
PLANS APPROVAL DATE

REGISTERED PROFESSIONAL ENGINEER JOSE L. ROBLES No. C 64402 Exp. 06-30-17 CIVIL STATE OF CALIFORNIA

THE STATE OF CALIFORNIA OR ITS OFFICERS OR AGENTS SHALL NOT BE RESPONSIBLE FOR THE ACCURACY OR COMPLETENESS OF SCANNED COPIES OF THIS PLAN SHEET.

STAGE CONSTRUCTION PAVEMENT DELINEATION

STAGE	LINE	STATION RANGE		DETAIL No.	REMOVE PAINTED TRAFFIC STRIPE	TEMPORARY PAVEMENT MARKER (RETROREFLECTIVE)	TEMPORARY TRAFFIC STRIPE (PAINT)	
						TYPE D	4" WHITE	4" YELLOW
		BEGIN	END		LF	EA	LF	LF
STAGE 1	SD-94	26+50.00	37+60.00	27B	1110		1110	
	SD-94	20+80.00	43+60.00	22		190		2280
	SD-94	26+50.00	43+60.00	27B			1710	
	SD-94	39+40.00	45+40.00	27B			600	
STAGE 2	SD-94/A-1	21+85.00	45+25.00	27B	2340			
	SD-94/A-1	21+50.00	45+25.00	27B			2375	
	SD-94/A-1	21+85.00	45+25.00	22		196		2340
	SD-94/A-1	21+85.00	45+25.00	27B			2340	
STAGE 3	SD-94/A-1	23+00.00	46+00.00	24				2300
	A-1/SD-94	24+50.00	45+00.00	27B			2050	
	SD-94/A-1	22+15.00	45+25.00	24				2310
STAGE 4	SD-94/A-1	22+15.00	45+15.00	27B			2300	
	SD-94/A-1	22+20.00	45+45.00	22		194		2325
SUBTOTAL					3450	580	12,485	11,555
TOTAL					3450	580	24,040	

STAGE CONSTRUCTION QUANTITIES

SCQ-1

STATE OF CALIFORNIA - DEPARTMENT OF TRANSPORTATION
Caltrans
TRAFFIC PROJECT DEVELOPMENT

FUNCTIONAL SUPERVISOR: CHARLES GRAY
CALCULATED-DESIGNED BY: KENNY T. NGUYEN
CHECKED BY: JOSE LUIS ROBLES
REVISED BY
DATE REVISED

LAST REVISION 04-18-16
DATE PLOTTED => 12-MAY-2016
TIME PLOTTED => 13:14

Dist	COUNTY	ROUTE	POST MILES TOTAL PROJECT	SHEET No.	TOTAL SHEETS
11	SD	94	59.6/60.2	41	78

REGISTERED CIVIL ENGINEER 03-25-16 DATE

05-09-16
PLANS APPROVAL DATE

REGISTERED PROFESSIONAL ENGINEER JOSE L. ROBLES No. C 64402 Exp. 06-30-17 CIVIL STATE OF CALIFORNIA

THE STATE OF CALIFORNIA OR ITS OFFICERS OR AGENTS SHALL NOT BE RESPONSIBLE FOR THE ACCURACY OR COMPLETENESS OF SCANNED COPIES OF THIS PLAN SHEET.

TEMPORARY RAILING (TYPE K)

STAGE	LINE	DIRECTION	STATION BEGIN	STATION END	LENGTH LF	REFLECTOR MARKER (K-RAIL) (N) EA	REMARKS
1	SD-94	EB	27+70.00	36+50.00	880	44	PIN Temp RAILING
1	SD-94	EB	40+20.00	44+40.00	420	21	PIN Temp RAILING
2	SD-94/A-1	WB	22+30.00	43+50.00	2,120	106	
2, 3	A-1	EB	27+00.00	29+80.00	280	14	
3	SD-94/A-1	EB	22+20.00	44+80.00	2,260	113	
3	A-1	WB	24+00.00	43+40.00	1,940	97	
4	SD-94/A-1	EB	22+00.00	44+00.00	2,200	109	
				TOTAL	10,100		

(N) - NOT A SEPARATE PAY ITEM, FOR INFORMATION ONLY

ALTERNATIVE TEMPORARY CRASH CUSHION

STAGE	SHEET No.	LINE	EA
1	SC-5	SD-94	1
1	SC-6	SD-94	3
2	SC-7	SD-94	1
2	SC-7	A-1	2
2	SC-8	A-1	1
3	SC-9	A-1	1
3	SC-10	A-1	2
4	SC-11	A-1	1
4	SC-12	A-1	1
		TOTAL	13

CONSTRUCTION AREA SIGNS

SIGN No.	TYPE	PANEL SIZE (In)	No. OF POST AND SIZE (In)	No. OF SIGNS
A	C31A (CA)	30 X 30	1 - 4"x4" (S)	2
C	W6-1	30 X 30	1 - 4"x4" (S)	2
D	W6-3	30 X 30	1 - 4"x4" (S)	2
E	W6-2	30 X 30	1 - 4"x4" (S)	2
			TOTAL	8**

(S) DENOTES STATIONARY MOUNTED SIGN

** SEE CONSTRUCTION AREA SIGNS AND TRAFFIC HANDLING SHEETS FOR ADDITIONAL QUANTITIES

CHANNELIZER (SURFACE MOUNTED)

STAGE	LINE	DIRECTION	STATION BEGIN	STATION END	EA
1	SD-94/A-1	EB	21+50.00	27+25.00	24
1	SD-94	EB	37+25.00	39+75.00	11
				TOTAL	35

STRUCTURAL SECTION AND EARTHWORK

STAGE CONSTRUCTION	LINE	STATION BEGIN	STATION END	COLD PLANE ASPHALT CONCRETE PAVEMENT SQYD	HMA (TYPE A) TON	TACK COAT TON	ROADWAY EXCAVATION CY	REMARKS
STAGE 1	SD-94	20+80.00	43+60.00	560	56.0	0.12		REMOVE CENTERLINE RUMBLE STRIP 2' LEFT AND RIGHT OF "SD-94" LINE
	SD-94	22+17.04	45+19.33		1,232.5	0.70		CONSTRUCT DETOUR RD
STAGE 4	SD-94/A-1	22+17.04	45+19.33				2,005	REMOVE DETOUR RD AND GRADE SIDE SLOPE
			TOTAL	560*	1,288.5*	0.82*	2,005*	

* SEE SUMMARY OF QUANTITIES SHEET FOR ADDITIONAL QUANTITIES

STAGE CONSTRUCTION QUANTITIES

SCQ-2

STATE OF CALIFORNIA - DEPARTMENT OF TRANSPORTATION
TRAFFIC PROJECT DEVELOPMENT
Caltrans

FUNCTIONAL SUPERVISOR: CHARLES GRAY
CALCULATED-DESIGNED BY: KENNY T. NGUYEN
CHECKED BY: JOSE LUIS ROBLES
REVISED BY
DATE REVISED

LAST REVISION 04-18-16 | DATE PLOTTED => 12-MAY-2016 | TIME PLOTTED => 13:14

Dist	COUNTY	ROUTE	POST MILES TOTAL PROJECT	SHEET No.	TOTAL SHEETS
11	SD	94	59.6/60.2	42	78

REGISTERED CIVIL ENGINEER 03-25-16 DATE

05-09-16
PLANS APPROVAL DATE

REGISTERED PROFESSIONAL ENGINEER SHAHIN T. ADIBI No. 54839 Exp. 06-30-16 CIVIL STATE OF CALIFORNIA

THE STATE OF CALIFORNIA OR ITS OFFICERS OR AGENTS SHALL NOT BE RESPONSIBLE FOR THE ACCURACY OR COMPLETENESS OF SCANNED COPIES OF THIS PLAN SHEET.

NOTES:

1. EXACT LOCATION OF CONSTRUCTION AREA SIGNS WILL BE DETERMINED BY THE ENGINEER.
2. FEDERAL MANUAL ON UNIFORM TRAFFIC CONTROL DEVICES (MUTCD) SIGN CODES ARE SHOWN UNLESS DESIGNATED BY (CA), INDICATING CALIFORNIA MUTCD.
3. EXISTING UTILITIES ARE NOT SHOWN ON THESE PLAN SHEETS. THE CONTRACTOR SHALL VERIFY LOCATIONS OF EXISTING UTILITIES AND ADJUST THE FIELD LOCATION OF THE SIGN POSTS IN CONSULTATION WITH THE ENGINEER.
4. SEE CONSTRUCTION AREA SIGN PLAN FOR ADDITIONAL CONSTRUCTION AREA SIGNS.
5. ROTATE ARROW ON SC9 (CA) PANEL TO REFLECT DIRECTION OF DETOUR.

LEGEND:

X = CONSTRUCTION AREA SIGN
⇨ = DETOUR DIRECTION OF TRAFFIC
SPCL = SPECIAL CONSTRUCTION AREA SIGN
CAPS = CAPITAL LETTERING

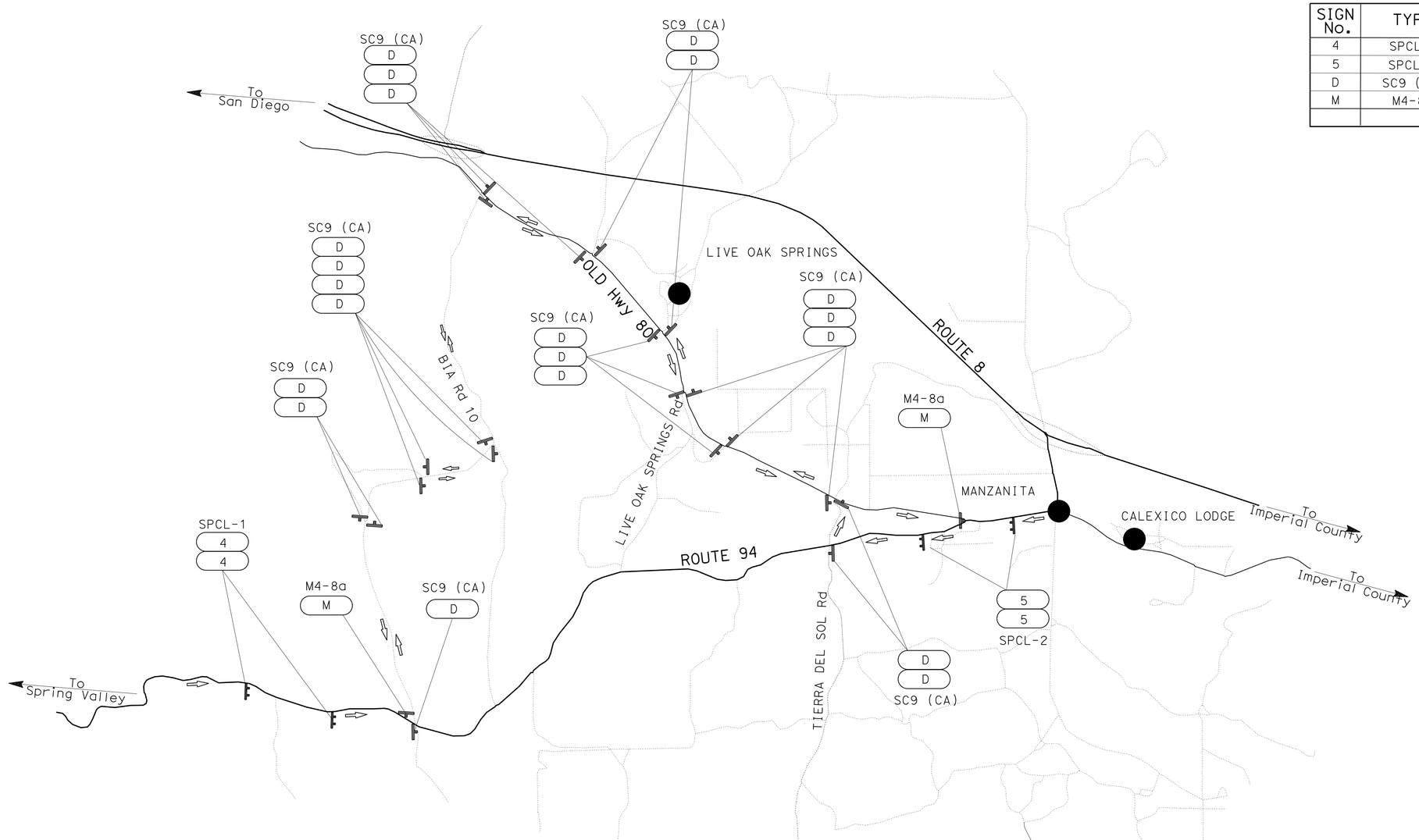

CONSTRUCTION AREA SIGNS

SIGN No.	TYPE	PANEL SIZE (In)	No. OF POST AND SIZE (In)	No. OF SIGNS
4	SPCL-1	72 X 72	PORTABLE	2
5	SPCL-2	72 X 72	PORTABLE	2
D	SC9 (CA)	36 X 36	PORTABLE	20
M	M4-8a	24 X 18	PORTABLE	2

SIGN #4

SPCL-1 8" CAPS

EAST 94
USE
DETOUR

72" 72"

SIGN #5

SPCL-1 8" CAPS

WEST 94
USE
DETOUR

72" 72"

APPROVED FOR TRAFFIC HANDLING WORK ONLY

TRAFFIC HANDLING PLAN

NO SCALE

TH-1

STATE OF CALIFORNIA - DEPARTMENT OF TRANSPORTATION
Caltrans® TRAFFIC DESIGN

FUNCTIONAL SUPERVISOR: CAMILLE ABOU FADEL
CALCULATED-DESIGNED BY: PARVIS NAHAVANDIAN
CHECKED BY: SHAHIN ADIBI
REVISED BY / DATE REVISED

LAST REVISION 04-18-16 | DATE PLOTTED => 12-MAY-2016 | TIME PLOTTED => 13:14

Dist	COUNTY	ROUTE	POST MILES TOTAL PROJECT	SHEET No.	TOTAL SHEETS
11	SD	94	59.6/60.2	43	78

REGISTERED CIVIL ENGINEER 03-25-16 DATE

05-09-16
PLANS APPROVAL DATE

REGISTERED PROFESSIONAL ENGINEER JOSE L. ROBLES No. C 64402 Exp. 06-30-17 CIVIL STATE OF CALIFORNIA

THE STATE OF CALIFORNIA OR ITS OFFICERS OR AGENTS SHALL NOT BE RESPONSIBLE FOR THE ACCURACY OR COMPLETENESS OF SCANNED COPIES OF THIS PLAN SHEET.

NOTES:

1. FOR ACCURATE RIGHT OF WAY DATA, CONTACT RIGHT OF WAY ENGINEERING AT THE DISTRICT OFFICE.

LEGEND:

= DETOUR ROAD(Temp PAVEMENT)

S/C = SAWCUT

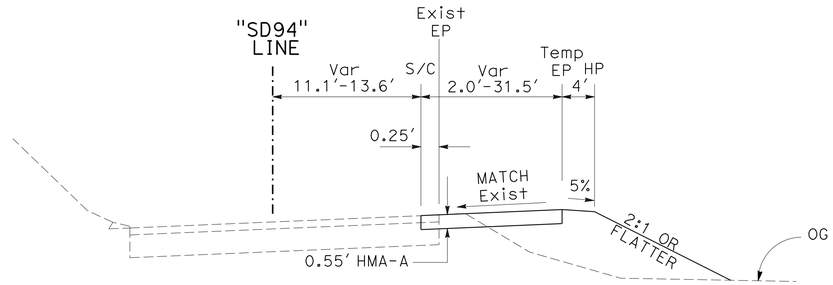

Sta 22+17.04 TO 45+19.33 "SD94" LINE

CAMPO INDIAN RESERVATION

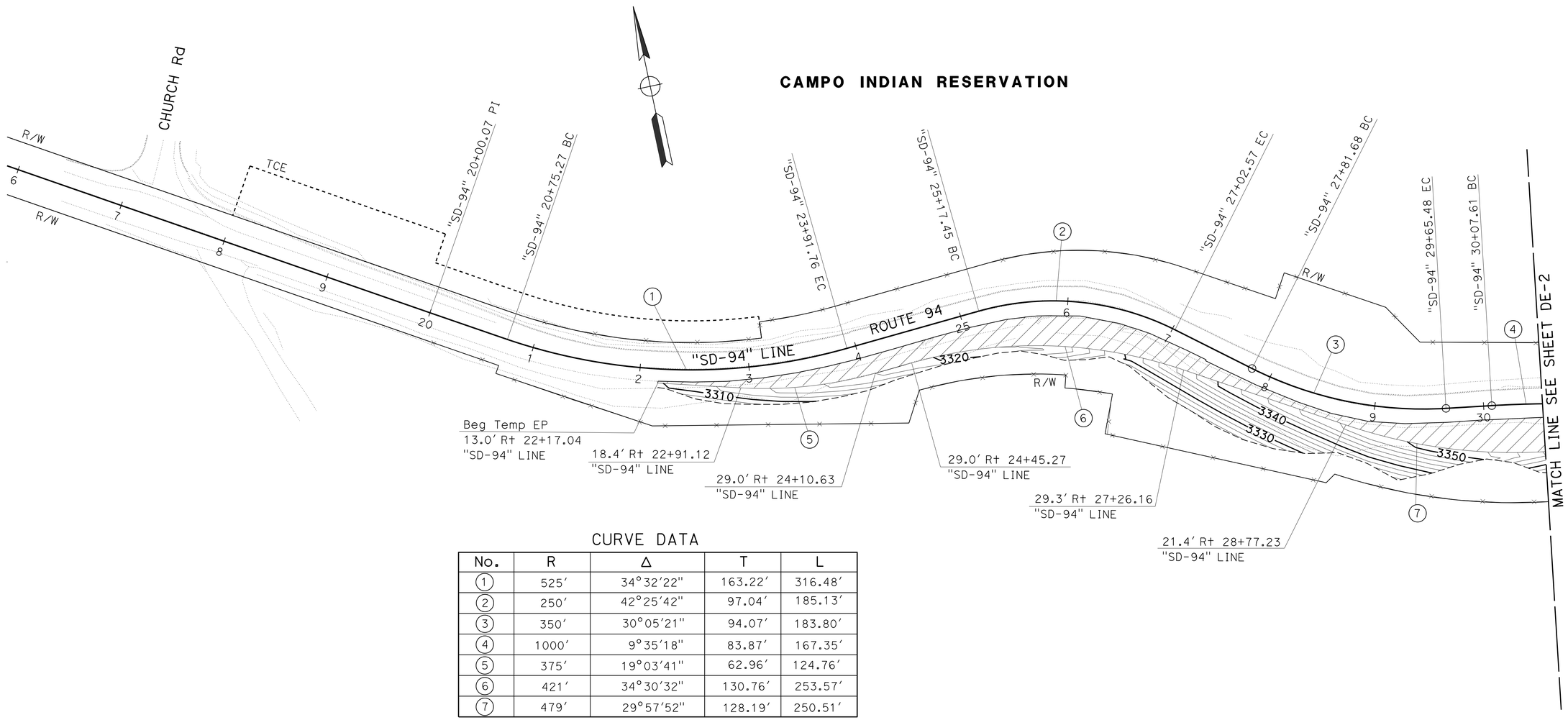

CURVE DATA

No.	R	Δ	T	L
1	525'	34°32'22"	163.22'	316.48'
2	250'	42°25'42"	97.04'	185.13'
3	350'	30°05'21"	94.07'	183.80'
4	1000'	9°35'18"	83.87'	167.35'
5	375'	19°03'41"	62.96'	124.76'
6	421'	34°30'32"	130.76'	253.57'
7	479'	29°57'52"	128.19'	250.51'

APPROVED FOR DETOUR WORK ONLY

SCALE: 1" = 50'

DETOUR PLAN
DE-1

STATE OF CALIFORNIA - DEPARTMENT OF TRANSPORTATION
TRAFFIC PROJECT DEVELOPMENT
Caltrans

FUNCTIONAL SUPERVISOR: CHARLES GRAY
CALCULATED-DESIGNED BY: MAI DO
CHECKED BY: JOSE LUIS ROBLES
REVISED BY / DATE REVISED

LAST REVISION 04-18-16 | DATE PLOTTED => 12-MAY-2016 | TIME PLOTTED => 13:14

Dist	COUNTY	ROUTE	POST MILES TOTAL PROJECT	SHEET No.	TOTAL SHEETS
11	SD	94	59.6/60.2	44	78

REGISTERED CIVIL ENGINEER 03-25-16 DATE

05-09-16
PLANS APPROVAL DATE

REGISTERED PROFESSIONAL ENGINEER JOSE L. ROBLES No. C 64402 Exp. 06-30-17 CIVIL STATE OF CALIFORNIA

THE STATE OF CALIFORNIA OR ITS OFFICERS OR AGENTS SHALL NOT BE RESPONSIBLE FOR THE ACCURACY OR COMPLETENESS OF SCANNED COPIES OF THIS PLAN SHEET.

NOTES:

1. FOR ACCURATE RIGHT OF WAY DATA, CONTACT RIGHT OF WAY ENGINEERING AT THE DISTRICT OFFICE.

CURVE DATA

No.	R	Δ	T	L
8	1000′	9°35′18"	83.87′	167.35′
9	350′	18°45′49"	57.83′	114.62′
10	225′	45°41′26"	94.79′	179.43′
11	800′	9°57′25"	69.69′	139.03′
12	479′	29°57′52"	128.19′	250.51′
13	475′	14°27′18"	60.24′	119.84′
14	365′	15°50′04"	50.76′	100.87′
15	375′	41°38′09"	142.58′	272.51′
16	829′	10°54′16"	79.13′	157.78′
17	450′	10°35′13"	41.69′	83.15′
18	450′	9°36′18"	37.81′	75.44′

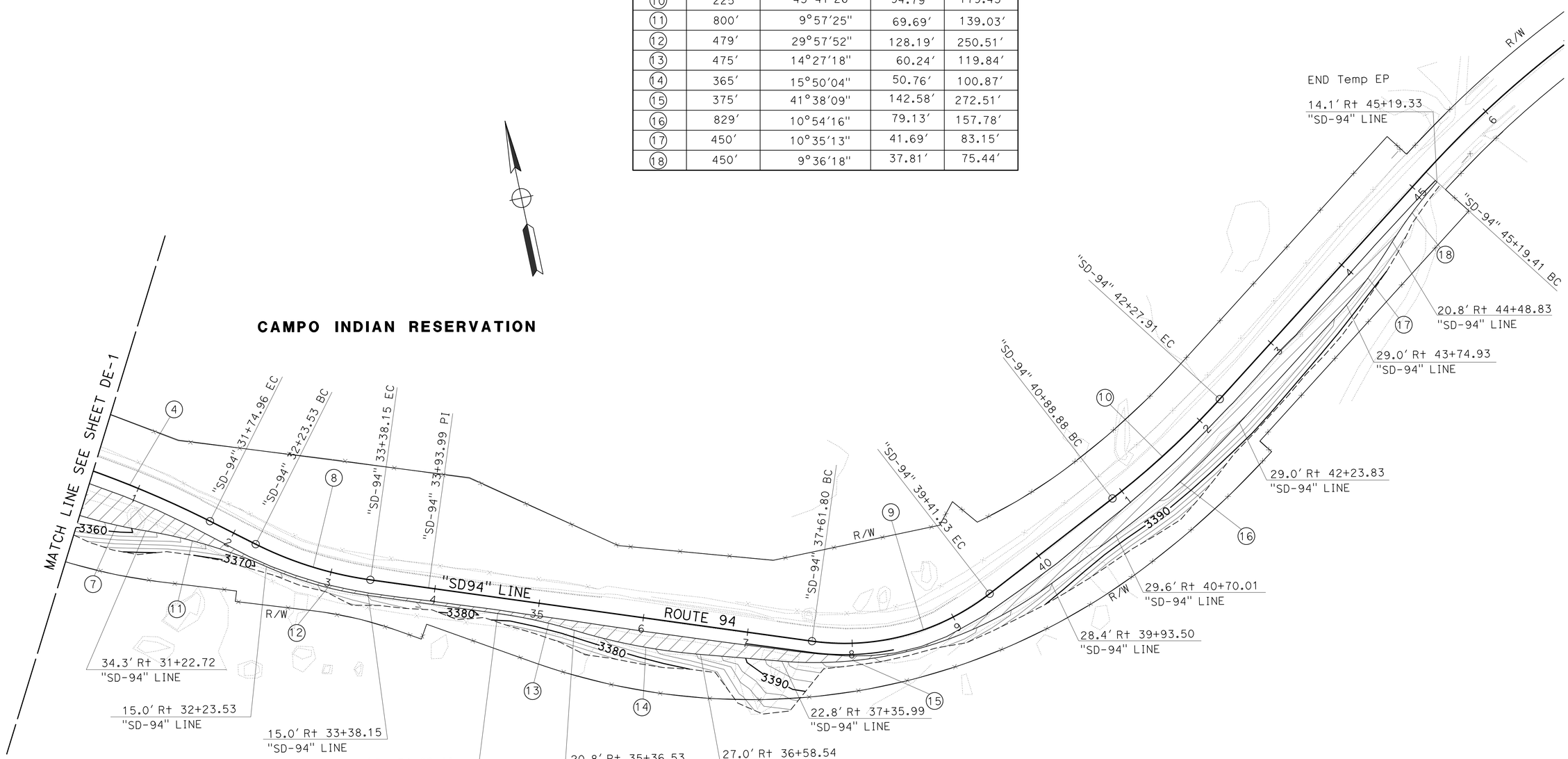

APPROVED FOR DETOUR WORK ONLY

SCALE: 1" = 50′

DETOUR PLAN
DE-2

STATE OF CALIFORNIA - DEPARTMENT OF TRANSPORTATION
Caltrans
TRAFFIC PROJECT DEVELOPMENT

FUNCTIONAL SUPERVISOR: CHARLES GRAY
CALCULATED-DESIGNED BY: MAI DO
CHECKED BY: JOSE LUIS ROBLES
REVISED BY / DATE REVISED

LAST REVISION 04-18-16 | DATE PLOTTED => 12-MAY-2016 | TIME PLOTTED => 13:14

Dist	COUNTY	ROUTE	POST MILES TOTAL PROJECT	SHEET No.	TOTAL SHEETS
11	SD	94	59.6/60.2	45	78

REGISTERED CIVIL ENGINEER 03-25-16 DATE

05-09-16
PLANS APPROVAL DATE

REGISTERED PROFESSIONAL ENGINEER
SHAHIN T. ADIBI
No. 54839
Exp. 06-30-16
CIVIL
STATE OF CALIFORNIA

THE STATE OF CALIFORNIA OR ITS OFFICERS OR AGENTS SHALL NOT BE RESPONSIBLE FOR THE ACCURACY OR COMPLETENESS OF SCANNED COPIES OF THIS PLAN SHEET.

LEGEND:

← BEGIN/END OF TRAFFIC STRIPE DETAIL

←→ CHANGE OF TRAFFIC STRIPE DETAIL

RM (78) REMOVE ROADSIDE SIGN

EP (78) INSTALL ROADSIDE SIGN ON EXISTING POST

CAMPO INDIAN RESERVATION

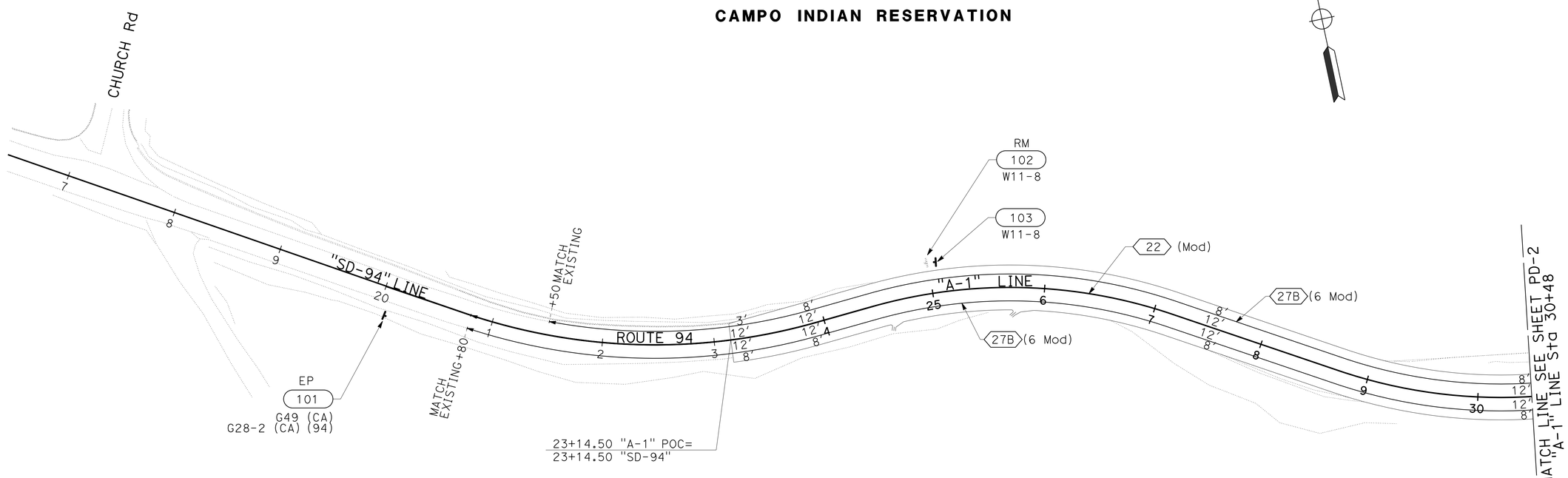

SAN DIEGO COUNTY

PAVEMENT DELINEATION AND SIGN PLAN

SCALE: 1" = 50'

PD-1

APPROVED FOR PAVEMENT DELINEATION AND SIGN WORK ONLY

STATE OF CALIFORNIA - DEPARTMENT OF TRANSPORTATION
Caltrans®
TRAFFIC DESIGN

FUNCTIONAL SUPERVISOR: CAMILLE ABOU FADEL

CALCULATED-DESIGNED BY: ROBERT EDEJER
CHECKED BY: SHAHIN ADIBI

REVISED BY
DATE REVISED

LAST REVISION 04-18-16
DATE PLOTTED => 12-MAY-2016
TIME PLOTTED => 13:14

Dist	COUNTY	ROUTE	POST MILES TOTAL PROJECT	SHEET No.	TOTAL SHEETS
11	SD	94	59.6/60.2	46	78

REGISTERED CIVIL ENGINEER 03-25-16 DATE

05-09-16
PLANS APPROVAL DATE

REGISTERED PROFESSIONAL ENGINEER
SHAHIN T. ADIBI
No. 54839
Exp. 06-30-16
CIVIL
STATE OF CALIFORNIA

THE STATE OF CALIFORNIA OR ITS OFFICERS OR AGENTS SHALL NOT BE RESPONSIBLE FOR THE ACCURACY OR COMPLETENESS OF SCANNED COPIES OF THIS PLAN SHEET.

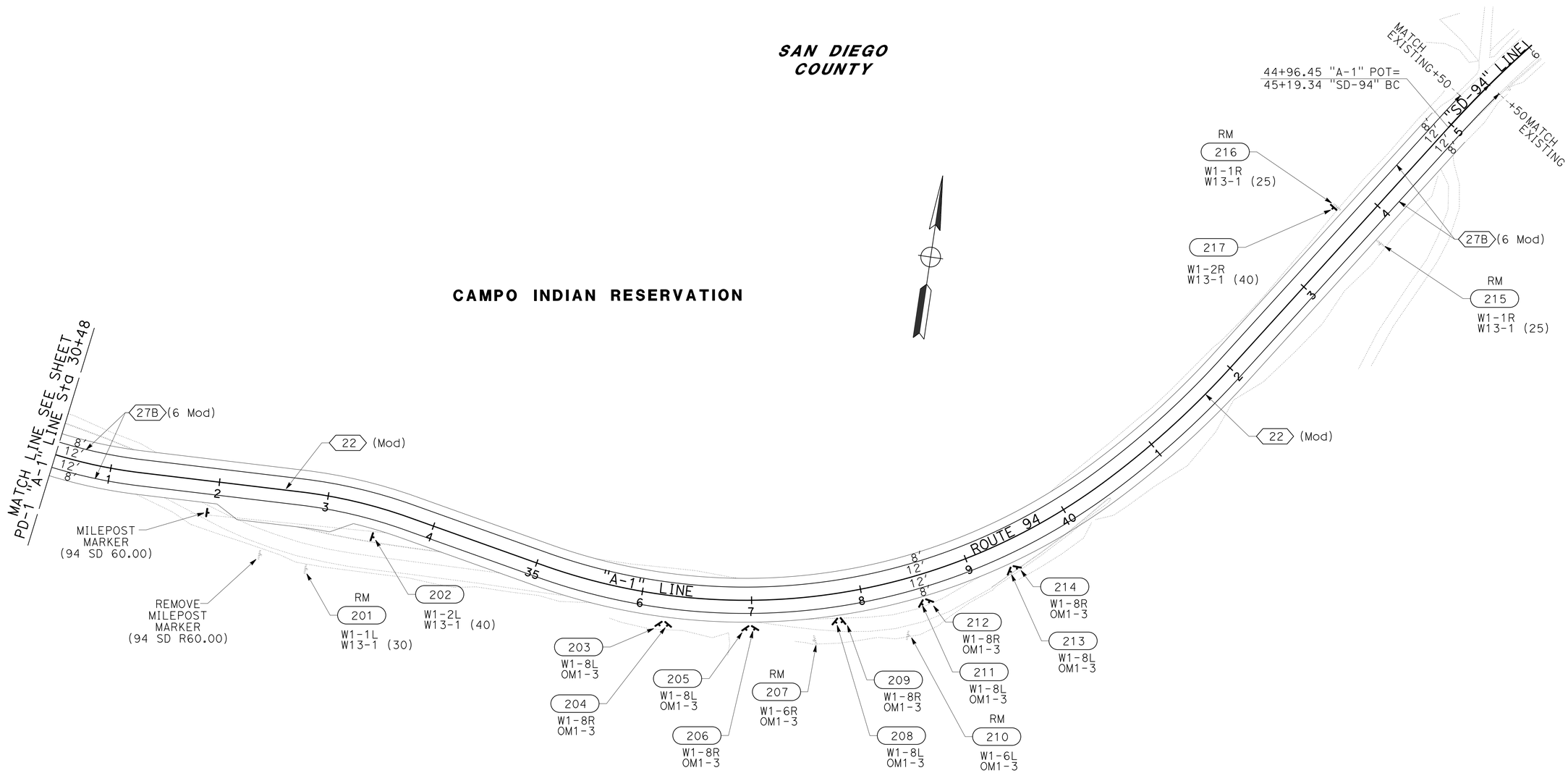

APPROVED FOR PAVEMENT DELINEATION AND SIGN WORK ONLY

PAVEMENT DELINEATION AND SIGN PLAN

SCALE: 1" = 50'

PD-2

REVISED BY	DATE REVISED

CALCULATED-DESIGNED BY	CHECKED BY
ROBERT EDEJER	SHAHIN ADIBI

FUNCTIONAL SUPERVISOR: CAMILLE ABOU FADEL

STATE OF CALIFORNIA - DEPARTMENT OF TRANSPORTATION
Caltrans® TRAFFIC DESIGN

LAST REVISION 04-18-16 | DATE PLOTTED => 12-MAY-2016 | TIME PLOTTED => 13:14

Dist	COUNTY	ROUTE	POST MILES TOTAL PROJECT	SHEET No.	TOTAL SHEETS
11	SD	94	59.6/60.2	47	78

REGISTERED CIVIL ENGINEER 03-25-16 DATE

05-09-16
PLANS APPROVAL DATE

REGISTERED PROFESSIONAL ENGINEER
SHAHIN T. ADIBI
No. 54839
Exp. 06-30-16
CIVIL
STATE OF CALIFORNIA

THE STATE OF CALIFORNIA OR ITS OFFICERS OR AGENTS SHALL NOT BE RESPONSIBLE FOR THE ACCURACY OR COMPLETENESS OF SCANNED COPIES OF THIS PLAN SHEET.

DETAIL 27B (6Mod)

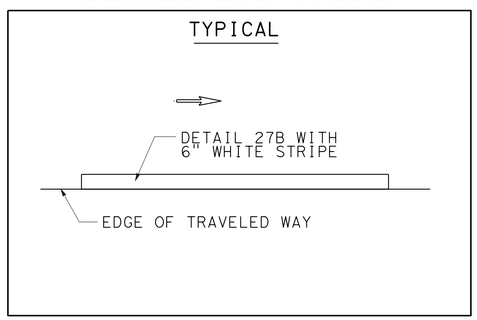

DETAIL 22 (Mod)

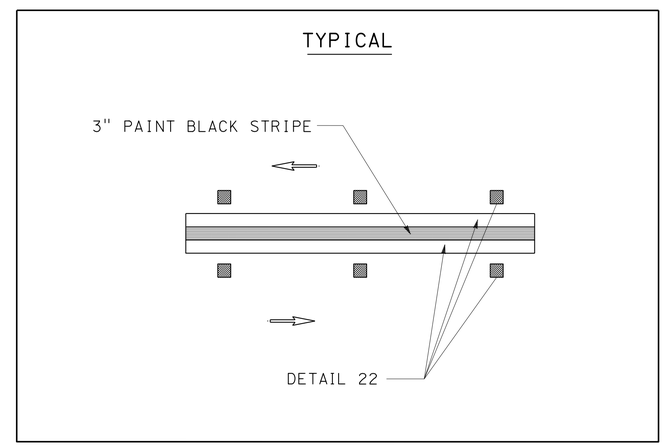

PAVEMENT DELINEATION DETAILS

NO SCALE

PDD-1

STATE OF CALIFORNIA - DEPARTMENT OF TRANSPORTATION
Caltrans® TRAFFIC DESIGN

FUNCTIONAL SUPERVISOR: CAMILLE ABOU FADEL

CALCULATED-DESIGNED BY: ROBERT EDEJER
CHECKED BY: SHAHIN ADIBI

REVISED BY
DATE REVISED

LAST REVISION 04-18-16
DATE PLOTTED => 12-MAY-2016
TIME PLOTTED => 13:14

Dist	COUNTY	ROUTE	POST MILES TOTAL PROJECT	SHEET No.	TOTAL SHEETS
11	SD	94	59.6/60.2	48	78

REGISTERED CIVIL ENGINEER 03-25-16 DATE

05-09-16
PLANS APPROVAL DATE

REGISTERED PROFESSIONAL ENGINEER SHAHIN T. ADIBI No. 54839 Exp. 06-30-16 CIVIL STATE OF CALIFORNIA

THE STATE OF CALIFORNIA OR ITS OFFICERS OR AGENTS SHALL NOT BE RESPONSIBLE FOR THE ACCURACY OR COMPLETENESS OF SCANNED COPIES OF THIS PLAN SHEET.

NOTES:

1. ALL PAVEMENT DELINEATION SHALL BE REPLACED WITH THERMOPLASTIC (ENHANCED WET NIGHT VISIBILITY) TRAFFIC STRIPE.
2. ALL 4" STRIPE SHALL BE REPLACED WITH 6" STRIPE UNLESS INDICATED OTHERWISE.

PAVEMENT DELINEATION QUANTITIES

LOCATION							PAVEMENT MARKER	TRAFFIC STRIPE			REMARKS
SHEET	ROUTE	Dir	FROM STATION	TO STATION	LINE	DETAIL	RETROREFLECTIVE (EA) TYPE D YELLOW	PAINT (LF) (1-COAT)	THERMOPLASTIC (LF) (ENHANCED WET NIGHT VISIBILITY) 4" SOLID	6" SOLID	
PD-1	94	EB	20+80	23+15	"SD-94"	27B (6 Mod)				235	
PD-1	94	CL	20+80	23+15	"SD-94"	22 (Mod)	22	235	235		
PD-1	94	WB	21+50	23+15	"SD-94"	27B (6 Mod)				165	
PD-1	94	EB	23+15	30+48	"A-1"	27B (6 Mod)				733	
PD-1	94	CL	23+15	30+48	"A-1"	22 (Mod)	64	733	733		
PD-1	94	WB	23+15	30+48	"A-1"	27B (6 Mod)				733	
PD-2	94	EB	30+48	44+97	"A-1"	27B (6 Mod)				1,449	
PD-2	94	CL	30+48	44+97	"A-1"	22 (Mod)	123	1,449	1,449		
PD-2	94	WB	30+48	44+97	"A-1"	27B (6 Mod)				1,449	
PD-2	94	EB	44+97	45+50	"SD-94"	27B (6 Mod)				53	
PD-2	94	CL	44+97	45+50	"SD-94"	22 (Mod)	7	53	53		
PD-2	94	WB	44+97	45+25	"SD-94"	27B (6 Mod)				28	
						TOTAL	216	2,470	2,470	4,845	

REMOVE MILEPOST MARKER

ROUTE	SHEET	DIRECTION	POSTMILE	EA
94	PD-2	EB	60.00	1
			TOTAL	1

MILEPOST MARKER

ROUTE	SHEET	DIRECTION	POSTMILE	EA
94	PD-2	EB	R60.00	1
			TOTAL	1

STATE OF CALIFORNIA - DEPARTMENT OF TRANSPORTATION
Caltrans® TRAFFIC DESIGN

FUNCTIONAL SUPERVISOR: CAMILLE ABOU FADEL
CALCULATED-DESIGNED BY: ROBERT EDEJER
CHECKED BY: SHAHIN ADIBI
REVISED BY
DATE REVISED

PAVEMENT DELINEATION QUANTITIES

PDQ-1

LAST REVISION 04-18-16 | DATE PLOTTED => 12-MAY-2016 | TIME PLOTTED => 13:14

Dist	COUNTY	ROUTE	POST MILES TOTAL PROJECT	SHEET No.	TOTAL SHEETS
11	SD	94	59.6/60.2	49	78

REGISTERED CIVIL ENGINEER 03-25-16 DATE

05-09-16
PLANS APPROVAL DATE

REGISTERED PROFESSIONAL ENGINEER SHAHIN T. ADIBI No. 54839 Exp. 06-30-16 CIVIL STATE OF CALIFORNIA

THE STATE OF CALIFORNIA OR ITS OFFICERS OR AGENTS SHALL NOT BE RESPONSIBLE FOR THE ACCURACY OR COMPLETENESS OF SCANNED COPIES OF THIS PLAN SHEET.

ROADSIDE SIGN QUANTITIES

SIGN No.	CODE	SHEET No.	PANEL SIZE (N) HORIZ × VERT INCHES × INCHES	D Ft	C Ft	E Ft	Min POST LENGTH Ft	POST SIZE (N) 4 × 4 INCHES	4 × 6 INCHES	6 × 6 INCHES	ROADSIDE SIGN ONE-POST EA	INSTALL ROADSIDE SIGN PANEL ON EXISTING POST EA	REMOVE ROADSIDE SIGN EA	TREATED WOOD WASTE LB	REMARKS
101	G49 (CA)	PD-1	21 × 9									1			
	G28-2 (CA) (94)		24 × 25												
102	W11-8	PD-1											1	92	L = 16' (ONE-POST)
103	W11-8	PD-1	36 × 36	4.3	7	4.5	15.8		×		1				
201	W1-1L	PD-2											1	92	L = 16' (ONE-POST)
	W13-1 (30)														
202	W1-1L	PD-2	36 × 36	4.3	7	4.5	15.8		×		1				
	W13-1 (40)		24 × 24												
203	W1-8L	PD-2	18 × 24	2	7	3.5	12.5	×			1				
	OM1-3		18 × 18												
204	W1-8R	PD-2	18 × 24	2	7	3.5	12.5	×			1				
	OM1-3		18 × 18												
205	W1-8L	PD-2	18 × 24	2	7	3.5	12.5	×			1				
	OM1-3		18 × 18												
206	W1-8R	PD-2	18 × 24	2	7	3.5	12.5	×			1				
	OM1-3		18 × 18												
207	W1-6R	PD-2											1	46	L = 12' (ONE-POST)
	OM1-3														
208	W1-8L	PD-2	18 × 24	2	7	3.5	12.5	×			1				
	OM1-3		18 × 18												
209	W1-8R	PD-2	18 × 24	2	7	3.5	12.5	×			1				
	OM1-3		18 × 18												
210	W1-6L	PD-2											1	46	L = 12' (ONE-POST)
	OM1-3														
211	W1-8L	PD-2	18 × 24	2	7	3.5	12.5	×			1				
	OM1-3		18 × 18												
212	W1-8R	PD-2	18 × 24	2	7	3.5	12.5	×			1				
	OM1-3		18 × 18												
213	W1-8L	PD-2	18 × 24	2	7	3.5	12.5	×			1				
	OM1-3		18 × 18												
214	W1-8R	PD-2	18 × 24	2	7	3.5	12.5	×			1				
	OM1-3		18 × 18												
215	W1-1R	PD-2											1	92	L = 16' (ONE-POST)
	W13-1 (25)														
216	W1-1R	PD-2											1	92	L = 16' (ONE-POST)
	W13-1 (25)														
217	W1-1R	PD-2	36 × 36	4.3	7	4.5	15.8		×		1				
	W13-1 (40)		24 × 24												
										TOTAL	13	1	6	460*	

(N) - NOT A SEPARATE PAY ITEM. FOR INFORMATION ONLY.

* - SEE SUMMARY OF QUANTITIES FOR ADDITIONAL QUANTITIES.

NOTES:

1. FEDERAL (MUTCD) SIGN CODES ARE SHOWN UNLESS DESIGNATED BY (CA) INDICATING STANDARD CALIFORNIA SIGN SPECIFICATIONS.
2. MINIMUM POST LENGTHS WERE CALCULATED ASSUMING A LEVEL GROUND SURFACE FROM THE EP. ENSURE "C" DIMENSION IS MET. POST LENGTHS MAY VARY DUE TO SITE CONDITIONS.
3. EXACT LOCATIONS OF SIGNS AND POSTS SHALL BE DETERMINED BY THE ENGINEER.
4. REFER TO "FURNISH ROADSIDE SIGN PANEL" CHART FOR FURTHER INFORMATION.
5. REMOVE AND DISPOSE OF EXISTING SIGN PANEL AS SHOWN.

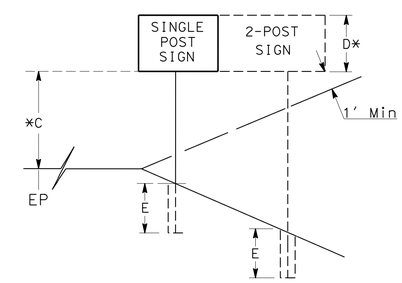

*TO BOTTOM OF LOWER PANEL ON MULTIPLE SIGN INSTALLATIONS.

STATE OF CALIFORNIA - DEPARTMENT OF TRANSPORTATION
Caltrans
TRAFFIC DESIGN

FUNCTIONAL SUPERVISOR: CAMILLE ABOUFADEL
CALCULATED-DESIGNED BY: ROBERT EDEJER
CHECKED BY: SHAHIN ADIBI
REVISED BY
DATE REVISED

SIGN QUANTITIES

SQ-1

LAST REVISION 04-18-16
DATE PLOTTED => 12-MAY-2016
TIME PLOTTED => 13:14

Dist	COUNTY	ROUTE	POST MILES TOTAL PROJECT	SHEET No.	TOTAL SHEETS
11	SD	94	59.6/60.2	50	78

REGISTERED CIVIL ENGINEER 03-25-16 DATE

05-09-16
PLANS APPROVAL DATE

REGISTERED PROFESSIONAL ENGINEER SHAHIN T. ADIBI No. 54839 Exp. 06-30-16 CIVIL STATE OF CALIFORNIA

THE STATE OF CALIFORNIA OR ITS OFFICERS OR AGENTS SHALL NOT BE RESPONSIBLE FOR THE ACCURACY OR COMPLETENESS OF SCANNED COPIES OF THIS PLAN SHEET.

NOTES:

1. FEDERAL (MUTCD) SIGN CODES ARE SHOWN UNLESS DESIGNATED BY (CA) INDICATING STANDARD CALIFORNIA SIGN SPECIFICATIONS.
2. REFER TO "ROADSIDE SIGN QUANTITIES" CHART FOR FURTHER INFORMATION.
3. FY - FLUORESCENT YELLOW.

FURNISH ROADSIDE SIGN PANEL

SIGN No.	CODE	PANEL SIZE Horiz (INCHES)	PANEL SIZE Vert (INCHES)	BACKGROUND SHEETING COLOR	BACKGROUND RETRO-REFLECTIVE ASTM TYPE	LEGEND SHEETING COLOR	LEGEND REFLECTIVE ASTM TYPE	LEGEND BLACK (NON-REFLECTIVE)	SIGN PANEL FURNISH SINGLE SHEET ALUMINUM SIGN FOR RETROREFLECTIVE SHEETING (TYPE XI) (SQFT) UNFRAMED 0.063"	SIGN PANEL RETROREFLECTIVE SHEETING (TYPE XI) (SQFT)	SIGN PANEL PROTECTIVE OVERLAY PREMIUM FILM
101	G49 (CA)	21	9	GREEN	XI	WHITE	XI		1.31	1.31	X
	G28-2 (CA) (94)	24	25	GREEN	XI	WHITE	XI		4.17	4.17	X
103	W11-8	36	36	FY	XI	BLACK		X	9.00	9.00	X
202	W1-1L	36	36	FY	XI	BLACK		X	9.00	9.00	X
	W13-1 (40)	24	24	FY	XI	BLACK		X	4.00	4.00	X
203	W1-8L	18	24	FY	XI	BLACK		X	3.00	3.00	X
	OM1-3	18	18	FY	XI	BLACK		X	2.25	2.25	X
204	W1-8R	18	24	FY	XI	BLACK		X	3.00	3.00	X
	OM1-3	18	18	FY	XI	BLACK		X	2.25	2.25	X
205	W1-8L	18	24	FY	XI	BLACK		X	3.00	3.00	X
	OM1-3	18	18	FY	XI	BLACK		X	2.25	2.25	X
206	W1-8R	18	24	FY	XI	BLACK		X	3.00	3.00	X
	OM1-3	18	18	FY	XI	BLACK		X	2.25	2.25	X
208	W1-8L	18	24	FY	XI	BLACK		X	3.00	3.00	X
	OM1-3	18	18	FY	XI	BLACK		X	2.25	2.25	X
209	W1-8R	18	24	FY	XI	BLACK		X	3.00	3.00	X
	OM1-3	18	18	FY	XI	BLACK		X	2.25	2.25	X
211	W1-8L	18	24	FY	XI	BLACK		X	3.00	3.00	X
	OM1-3	18	18	FY	XI	BLACK		X	2.25	2.25	X
212	W1-8R	18	24	FY	XI	BLACK		X	3.00	3.00	X
	OM1-3	18	18	FY	XI	BLACK		X	2.25	2.25	X
213	W1-8L	18	24	FY	XI	BLACK		X	3.00	3.00	X
	OM1-3	18	18	FY	XI	BLACK		X	2.25	2.25	X
214	W1-8R	18	24	FY	XI	BLACK		X	3.00	3.00	X
	OM1-3	18	18	FY	XI	BLACK		X	2.25	2.25	X
217	W1-1R	36	36	FY	XI	BLACK		X	9.00	9.00	X
	W13-1 (40)	24	24	FY	XI	BLACK		X	4.00	4.00	X
								TOTAL	92.98	92.98	

SIGN QUANTITIES

SQ-2

REVISED BY | DATE REVISED
ROBERT EDEJER | SHAHIN ADIBI
CALCULATED-DESIGNED BY | CHECKED BY
FUNCTIONAL SUPERVISOR
CAMILLE ABOUFADEL

STATE OF CALIFORNIA - DEPARTMENT OF TRANSPORTATION
Caltrans
TRAFFIC DESIGN

LAST REVISION 04-18-16 | DATE PLOTTED => 12-MAY-2016 | TIME PLOTTED => 13:14

Dist	COUNTY	ROUTE	POST MILES TOTAL PROJECT	SHEET No.	TOTAL SHEETS
11	SD	94	59.6/60.2	51	78

REGISTERED CIVIL ENGINEER 03-25-16 DATE

05-09-16
PLANS APPROVAL DATE

REGISTERED PROFESSIONAL ENGINEER JOSE L. ROBLES No. C 64402 Exp. 06-30-17 CIVIL STATE OF CALIFORNIA

THE STATE OF CALIFORNIA OR ITS OFFICERS OR AGENTS SHALL NOT BE RESPONSIBLE FOR THE ACCURACY OR COMPLETENESS OF SCANNED COPIES OF THIS PLAN SHEET.

HMA DIKE

LINE	DIRECTION	STATION BEGIN	STATION END	PLACE HMA DIKE TYPE E LF	MINOR HMA TON	HMA (TYPE A) UNDER DIKE TON	TACK COAT (N) TON
A-1	WB	23+14.50	24+25.00	110.5	2.8	2.8	0.00
	EB	34+10.00	35+00.00	90.0	2.3	2.3	0.00
		25+50.00	27+75.00	225.0	5.6	5.6	0.01
			TOTAL	425.5	10.7	10.7	

RUMBLE STRIP (HMA, GROUND-IN INDENTATIONS)

LINE	LOCATION BEGIN	LOCATION END	DIRECTION	CENTERLINE STA	SHOULDER STA
"A-1"	23+14.50	44+96.45	EB		22
	23+14.50	44+96.45	WB		22
	23+14.50	44+96.47		22	
			TOTAL	22	44

DUFF COLLECTION LOCATION (CLEARING AND GRUBBING)

SHEET	LOCATION No. △	COLLECTION AREA (ACRE) (N)
G-1	1	0.09
	2	0.06
	3	0.49
G-2	4	0.22
	5	0.11
	6	0.11
	7	0.32

HIGH FRICTION SURFACE TREATMENT

LINE	DIRECTION	STATION BEGIN	STATION END	SQYD
"A-1"	EB/WB	23+14.50	44+96.45	5,819
			TOTAL	5,819

TEMPORARY SILT FENCE

DIRECTION	STATION BEGIN	STATION END	LENGTH LF
EB	18+40.00 "SD-94"	24+27.85 "A-1"	588
EB	26+51.30 "A-1"	27+61.00 "A-1"	110
WB	18+57.00 "SD-94"	23+28.00 "A-1"	471
		TOTAL	1,169

FENCE (TYPE BW, STEEL POST)

DIRECTION	STATION BEGIN	STATION END	LENGTH LF
EB	18+40 "SD-94"	46+00.00 "SD-94"	3,204
WB	18+00 "SD-94"	45+79.25 "SD-94"	3,193
		TOTAL	6,397

REMOVE FENCE

DIRECTION	STATION BEGIN	STATION END	LENGTH LF	TREATED WOOD WASTE LB
EB	18+40 "SD-94"	35+75.90 "A-1"	1,735.9	7,270
WB	18+00 "SD-94"	26+09.52 "A-1"	95.1	438
WB	30+27.40 "A-1"	35+36.00 "A-1"	508.6	2,161
WB	36+79.20 "A-1"	45+79.25 "SD-94"	900.1	3,796
		TOTAL	3,239.7	13,665**

PAVEMENT EDGE TREATMENT

LINE	STATION BEGIN	STATION END	HMA (TYPE A) TON	CLASS 2 AB CY
A-1	23+14.50	44+96.45	8.9	17.5
		TOTAL	8.9	17.5

STRUCTURAL SECTION AND EARTHWORK

LINE	STATION BEGIN	STATION END	COLD PLANE ASPHALT CONCRETE PAVEMENT SQYD	HMA (TYPE A) TON	CLASS 2 AB CY	TACK COAT TON	ASPHALTIC EMULSION (FOG SEAL COAT) TON	ROADWAY EXCAVATION CY	ROCK EXCAVATION (CONTROLLED BLASTING) CY	EMBANKMENT (N) CY	REMARKS
A-1	23+14.50	23+75.00	161	28.0	6.5	0.06	0.03	90		28	
A-1	23+75.00	44+25.00		2,437.5	2,086.6	3.03	0.75	17,322	300	3765	
A-1	44+25.00	44+96.45	191	37.2	11.8	0.02	0.02	122		6	
		TOTAL	352*	2,502.7*	2,104.9	3.11*	0.80	17,534*	300		

(N) NOT A SEPARATE PAY ITEM, FOR INFORMATION ONLY.
* SEE STAGE CONSTRUCTION QUANTITIES FOR ADDITIONAL QUANTITIES.
** SEE SIGN QUANTITIES FOR ADDITIONAL QUANTITIES.

SUMMARY OF QUANTITIES

Q-1

REVISED BY | DATE REVISED
KENNY T. NGUYEN | JOSE LUIS ROBLES
CALCULATED-DESIGNED BY | CHECKED BY
FUNCTIONAL SUPERVISOR: CHARLES GRAY
STATE OF CALIFORNIA - DEPARTMENT OF TRANSPORTATION
TRAFFIC PROJECT DEVELOPMENT
Caltrans

LAST REVISION 04-18-16 | DATE PLOTTED => 12-MAY-2016 | TIME PLOTTED => 13:14

Dist	COUNTY	ROUTE	POST MILES TOTAL PROJECT	SHEET No.	TOTAL SHEETS
11	SD	94	59.6/60.2	52	78

LICENSED LANDSCAPE ARCHITECT

05-09-16
PLANS APPROVAL DATE

LICENSED LANDSCAPE ARCHITECT EVAN TORRES NO. 5826 STATE OF CALIFORNIA
Signature 01-31-18
Renewal Date 06-30-16
Date

THE STATE OF CALIFORNIA OR ITS OFFICERS OR AGENTS SHALL NOT BE RESPONSIBLE FOR THE ACCURACY OR COMPLETENESS OF SCANNED COPIES OF THIS PLAN SHEET.

IRRIGATION LEGEND

SYMBOL	DESCRIPTION	SPRAY PATTERN	OPERATING PRESSURE (psi)	PRESSURE COMPENSATING	PLUS/MINUS 5% ② DISCHARGE: GALLONS PER MINUTE (GPM)	DISCHARGE: GALLONS PER HOUR (GPH)	RADIUS (ft)	WIDTH x LENGTH (ft)	FLOW SHUTOFF DEVICE	INLET CONNECTION (NPT INCH)	POSITIVE-LOCKING Adj ARC STOP	BACKSPLASH PREVENTER	DIFFUSER PIN	DISTANCE CONTROL FLAP	Adj DISCHARGE	SPRINKLER ASSEMBLY: RISER: RISER TYPE	RISER: MATERIAL: PLASTIC	RISER: MATERIAL: GALVANIZED	RISER: SIZE (IPS INCH)	RISER: HEIGHT (INCH)	RISER: SWING JOINT (INCH) ⑥	RISER: RISER SUPPORT ⑥	POP-UP: SWING JOINT (INCH) ⑥	POP-UP: INLET CONNECTION (NPT INCH)	POP-UP: SPRINKLER PROTECTOR (TYPE)	POP-UP: POP-UP HEIGHT (INCH)	TREE WELL: SWING JOINT (INCH) ⑥	REMARKS
△	RISER SPRINKLER ASSEMBLY	F	50	-	2.0	-	15	-	-	½	-	-	X	-	-	I	X	-	½	48	½	X	-	-	-	-	-	③ STREAM ROTOR
5	RISER SPRINKLER ASSEMBLY (GEAR DRIVEN)	F	50	-	3.5	-	40	-	-	¾	-	-	X	-	-	I	X	-	¾	48	¾	X	-	-	-	-	-	③
11	RISER SPRINKLER ASSEMBLY (GEAR DRIVEN)	F	50	-	1.8	-	25	-	-	¾	-	-	X	-	-	I	X	-	¾	48	¾	X	-	-	-	-	-	③
		-	-	-	-	-	-	-	-	-	-	-	-	-	-	-	-	-	-	-	-	-	-	-	-	-	-	

X IN BOX DENOTES REQUIREMENT

APPLICABLE WHEN CIRCLED BELOW:

1 - SEE SPECIAL PROVISIONS.
② - IF A PRESSURE COMPENSATING DEVICE IS SPECIFIED, THE DISCHARGE AND RADII SHOWN REFLECT ITS USE.
③ - MUST HAVE AN INTERNAL OR EXTERNAL CHECK VALVE.
4 - NON-ADJUSTABLE DISCHARGE RATE.
5 - REQUIRED ADJACENT TO SHOULDERS, CURBS, SIDEWALKS, AND DIKES.
⑥ - SEE DETAIL.
7 - ADJUSTABLE ARC.

ABBREVIATIONS

F —— FULL CIRCLE
P —— PART CIRCLE
Ft —— FEET/FOOT
GPM —— GALLONS PER MINUTE
GPH —— GALLONS PER HOUR
Adj —— ADJUSTABLE
PL —— PLASTIC
NPT —— NATIONAL PIPE THREAD
IPS —— IRON PIPE SIZE
PSI —— POUNDS PER SQUARE INCH

IRRIGATION NOTES:

1. ALL LATERAL PLASTIC PIPE (SUPPLY LINE) NOT LABELED MUST BE 1 INCH, OR AS SHOWN ON PIPE SIZING CHARTS.

2. ALL SPRINKLER HEADS, VALVES AND PLASTIC PIPE (SUPPLY LINE) SHOWN NEAR MVP LOCATIONS ARE TO BE INSTALLED OUTSIDE OF THE PAVED MVP AREA. VALVES TO BE INSTALLED AT EXITING END OF THE MVP.

3. OPERATE IRRIGATION SYSTEMS MANUALLY.

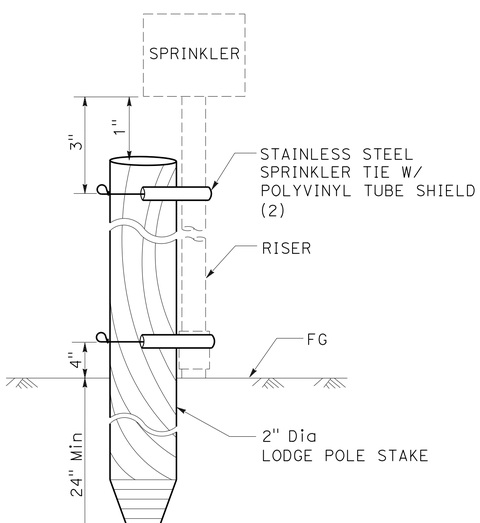

ELEVATION

RISER SUPPORT

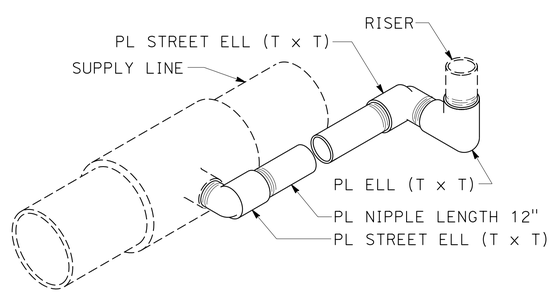

ISOMETRIC

SWING JOINT (Mod)

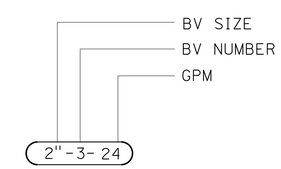

VALVE CODE

IRRIGATION SPRINKLER SCHEDULE

ISS-1

REVISED BY | DATE REVISED
EVAN TORRES | KENNY MAH
CALCULATED-DESIGNED BY | CHECKED BY
SENIOR LANDSCAPE ARCHITECT | TIMOTHY MANN
STATE OF CALIFORNIA - DEPARTMENT OF TRANSPORTATION
Caltrans® LANDSCAPE ARCHITECTURE

LAST REVISION 04-18-16 | DATE PLOTTED => 12-MAY-2016 | TIME PLOTTED => 13:14

Dist	COUNTY	ROUTE	POST MILES TOTAL PROJECT	SHEET No.	TOTAL SHEETS
11	SD	94	59.6/60.2	53	78

LICENSED LANDSCAPE ARCHITECT

05-09-16
PLANS APPROVAL DATE

LICENSED LANDSCAPE ARCHITECT
EVAN TORRES No. 5826
Registered Date 01-31-18
Renewal Date 06-30-16
Date
STATE OF CALIFORNIA

THE STATE OF CALIFORNIA OR ITS OFFICERS OR AGENTS SHALL NOT BE RESPONSIBLE FOR THE ACCURACY OR COMPLETENESS OF SCANNED COPIES OF THIS PLAN SHEET.

NOTE:

FOR ACCURATE RIGHT OF WAY AND ACCESS DATA, CONTACT RIGHT OF WAY ENGINEERING AT THE DISTRICT OFFICE.

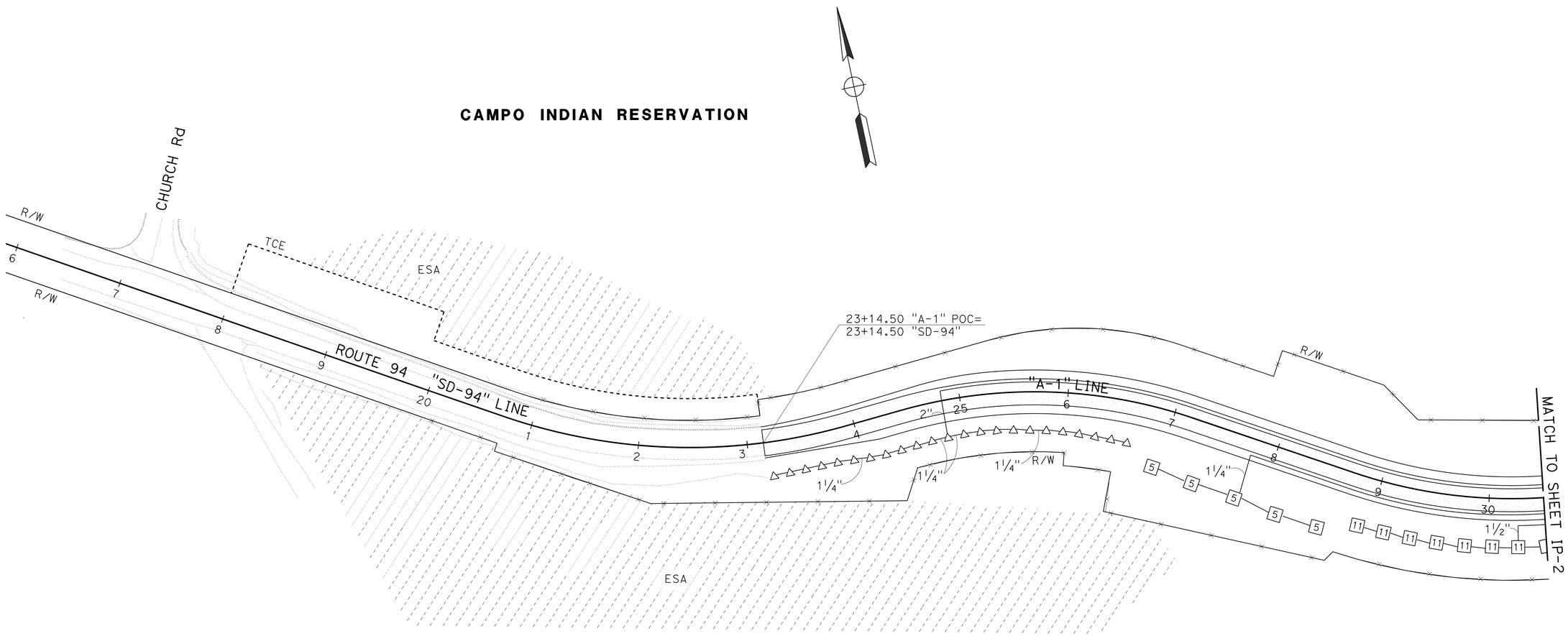

CAMPO INDIAN RESERVATION

APPROVED FOR IRRIGATION WORK ONLY

IRRIGATION PLAN

SCALE: 1" = 50'

IP-1

STATE OF CALIFORNIA - DEPARTMENT OF TRANSPORTATION
Caltrans® LANDSCAPE ARCHITECTURE

SENIOR LANDSCAPE ARCHITECT: TIMOTHY MANN
CALCULATED-DESIGNED BY: EVAN TORRES
CHECKED BY: KENNY MAH
REVISED BY
DATE REVISED

LAST REVISION 04-18-16
DATE PLOTTED => 12-MAY-2016
TIME PLOTTED => 13:14

Dist	COUNTY	ROUTE	POST MILES TOTAL PROJECT	SHEET No.	TOTAL SHEETS
11	SD	94	59.6/60.2	54	78

LICENSED LANDSCAPE ARCHITECT

05-09-16
PLANS APPROVAL DATE

LICENSED LANDSCAPE ARCHITECT EVAN TORRES No. 5826 STATE OF CALIFORNIA
Expiration Date 01-31-18
Renewal Date 06-30-16
Date

THE STATE OF CALIFORNIA OR ITS OFFICERS OR AGENTS SHALL NOT BE RESPONSIBLE FOR THE ACCURACY OR COMPLETENESS OF SCANNED COPIES OF THIS PLAN SHEET.

NOTE:

FOR ACCURATE RIGHT OF WAY AND ACCESS DATA, CONTACT RIGHT OF WAY ENGINEERING AT THE DISTRICT OFFICE.

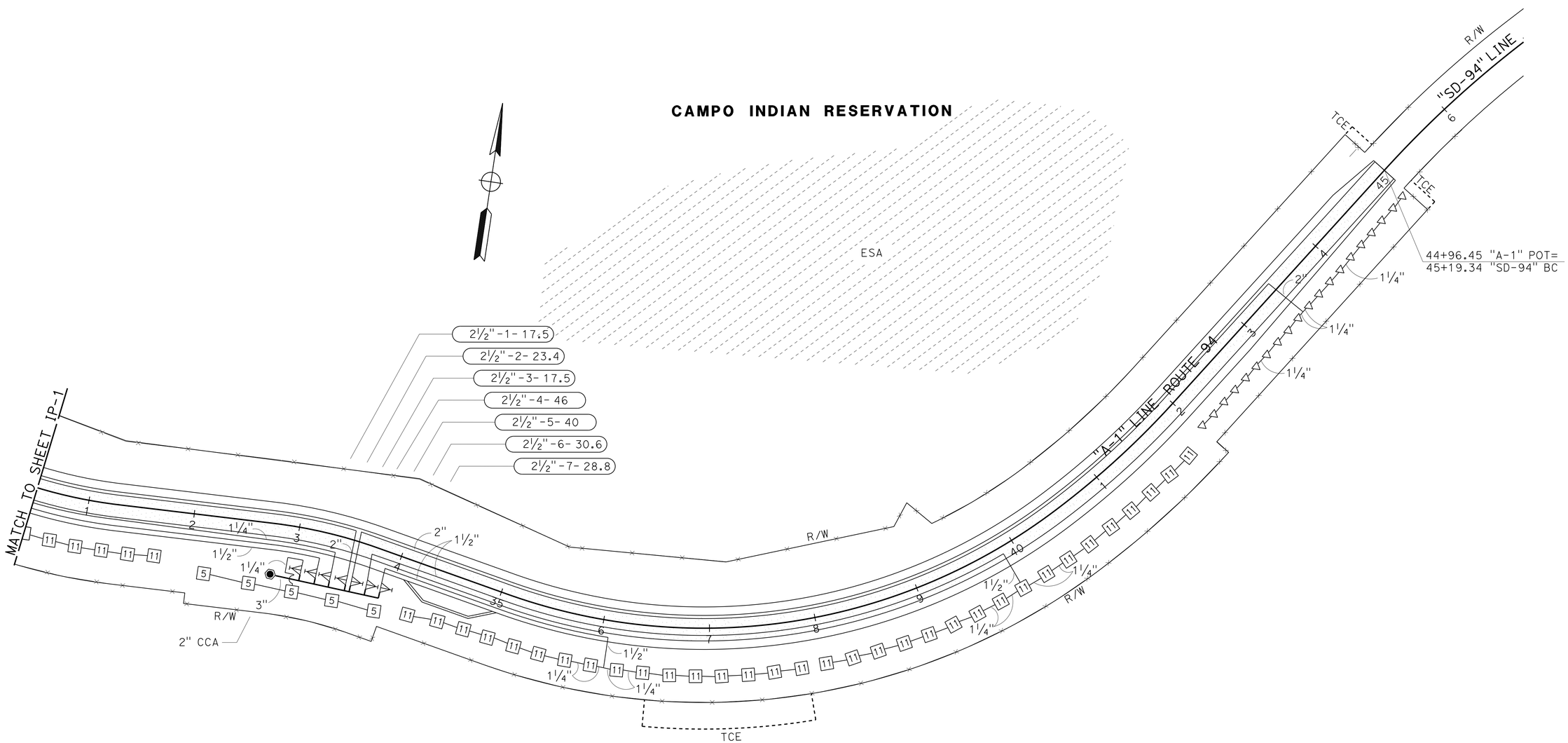

APPROVED FOR IRRIGATION WORK ONLY

IRRIGATION PLAN

SCALE: 1" = 50'

IP-2

STATE OF CALIFORNIA - DEPARTMENT OF TRANSPORTATION
Caltrans® LANDSCAPE ARCHITECTURE

SENIOR LANDSCAPE ARCHITECT: TIMOTHY MANN
CALCULATED-DESIGNED BY: EVAN TORRES
CHECKED BY: KENNY MAH
REVISED BY
DATE REVISED

LAST REVISION 04-18-16
DATE PLOTTED => 12-MAY-2016
TIME PLOTTED => 13:14

Dist	COUNTY	ROUTE	POST MILES TOTAL PROJECT	SHEET No.	TOTAL SHEETS
11	SD	94	59.6/60.2	55	78

LICENSED LANDSCAPE ARCHITECT

05-09-16
PLANS APPROVAL DATE

LICENSED LANDSCAPE ARCHITECT EVAN TORRES NO.5826 STATE OF CALIFORNIA
Registration Date 01-31-18
Renewal Date 06-30-16
Date

THE STATE OF CALIFORNIA OR ITS OFFICERS OR AGENTS SHALL NOT BE RESPONSIBLE FOR THE ACCURACY OR COMPLETENESS OF SCANNED COPIES OF THIS PLAN SHEET.

IRRIGATION QUANTITIES

DESCRIPTION	VALVE NUMBER	BALL VALVE (EA) 2"	BALL VALVE (EA) 2½"	CAM COUPLER ASSEMBLY (EA) 1"	CAM COUPLER ASSEMBLY (EA) 1½"	CAM COUPLER ASSEMBLY (EA) 2"	PLASTIC PIPE (SCHEDULE 40) (SUPPLY LINE) (LF) 1"	PLASTIC PIPE (SCHEDULE 40) (SUPPLY LINE) (LF) 1¼"	PLASTIC PIPE (SCHEDULE 40) (SUPPLY LINE) (LF) 1½"	PLASTIC PIPE (SCHEDULE 40) (SUPPLY LINE) (LF) 2"	PLASTIC PIPE (CLASS 315) (SUPPLY LINE) (LF) 2"	PLASTIC PIPE (CLASS 315) (SUPPLY LINE) (LF) 3"	SPRINKLER ASSEMBLY (EA) RISER GEAR DRIVEN	SPRINKLER ASSEMBLY (EA) RISER
SUBTOTALS PER VALVE ON LATERAL SUPPLY SIDE OF BALL VALVE	1						160	190					5	
	2						300		480				13	
	3						160	780					5	
	4						150	180		1020				23
	5						150	135		870				20
	6						300	100	520				17	
	7						300	75	135				16	
SUBTOTALS PER SHEET ON MAIN SUPPLY SIDE OF BALL VALVE (SHEET NUMBER)	IP-1													
	IP-2		7			1						30		
TOTAL			7			1	1520	1460	1135	1890		30	56	43

IRRIGATION QUANTITIES

IQ-1

STATE OF CALIFORNIA - DEPARTMENT OF TRANSPORTATION
Caltrans LANDSCAPE ARCHITECTURE

SENIOR LANDSCAPE ARCHITECT: TIMOTHY MANN
CALCULATED-DESIGNED BY: EVAN TORRES
CHECKED BY: KENNY MAH
REVISED BY
DATE REVISED

LAST REVISION 04-18-16
DATE PLOTTED => 12-MAY-2016
TIME PLOTTED => 13:14

Dist	COUNTY	ROUTE	POST MILES TOTAL PROJECT	SHEET No.	TOTAL SHEETS
11	SD	94	59.6/60.2	56	78

LICENSED LANDSCAPE ARCHITECT

05-09-16
PLANS APPROVAL DATE

LICENSED LANDSCAPE ARCHITECT EVAN TORRES No. 5826 STATE OF CALIFORNIA
Signature 01-31-18
Renewal Date
06-30-16
Date

THE STATE OF CALIFORNIA OR ITS OFFICERS OR AGENTS SHALL NOT BE RESPONSIBLE FOR THE ACCURACY OR COMPLETENESS OF SCANNED COPIES OF THIS PLAN SHEET.

NOTE:

FOR ACCURATE RIGHT OF WAY AND ACCESS DATA, CONTACT RIGHT OF WAY ENGINEERING AT THE DISTRICT OFFICE.

APPLICABLE WHEN CIRCLED:

1 - QUANTITIES SHOWN ARE "PER PLANT" UNLESS SHOWN AS SQFT OR SQYD APPLICATION RATES

2 - WOOD CHIP MULCH

3 - SUFFICIENT TO RECEIVE ROOT BALL.

PLANT LIST AND SPECIFICATIONS

PLANT GROUP	PLANT No.	SYMBOL	BOTANICAL NAME	COMMON NAME	SIZE	QUANTITY EACH	HOLE SIZE (INCH) Dia	HOLE SIZE (INCH) DEPTH	BASIN TYPE	SOIL AMENDMENT TYPE	SOIL AMENDMENT RATE	IRON SULFATE 1 RATE	FERTILIZER 1 PLANTING	FERTILIZER 1 PLT ESTB	FERTILIZER 1 MEPA	WOOD 1 MULCH BASIN TYPE	WOOD 1 MULCH BASIN CY	STAKING	PLANTING LIMITS MINIMUM DISTANCE (ft) FROM ETW	Pvmt	FENCE	WALL	PAVED DITCH	EARTH DITCH	ON CENTER (ft)	REMARKS
M	1	⊕	QUERCUS BERBERIDIFOLIA	SCRUB OAK	D-40	157	3	3	II	-	-	4 Oz	1 Pkt	8 Oz	-	2	0.03	-	-	8	3	-	-	3	10	SHRUB

SEED

SEED MIX	BOTANICAL NAME (COMMON NAME)	PERCENT GERMINATION (MINIMUM)	POUNDS PURE LIVE SEED PER ACRE (SLOPE MEASUREMENT)
1	ACMISPON GLABER (DEERWEED) [1]	60	6.0
	BACCHARIS SAROTHROIDES (BROOM BACCHARIS) [1]	25	0.5
	ERIGONUM FASCICULATUM (CALIFORNIA BUCKWHEAT) [1]	20	2.5
	ISOCOMA MENZIESII (COAST GOLDENBUSH) [1]	25	2.0
	LASTHENIA CALIFORNICA (GOLDFIELDS) [1]	35	4.0
	LUPINUS BICOLOR (PIGMY LUPINE) [1]	65	4.0
	STIPA PULCHRA (PURPLE NEEDLEGRASS) [1]	60	8.0
	TOTAL		27.0
2	ACMISPON GLABER (DEERWEED)	60	2.0
	ARTEMISIA TRIDENTATA (BIG SAGEBRUSH)	50	2.0
	ASCLEPIAS FASCICULARIS (NARROW-LEAF MILKWEED)	50	1.0
	BACCHARIS SAROTHROIDES (BROOM BACCHARIS) [1]	35	0.5
	ERIGONUM FASCICULATUM (CALIFORNIA BUCKWHEAT) [1]	40	4.0
	ERIOPHYLLUM CONFERTIFLORUM (GOLDEN YARROW)	55	0.5
	ESCHSCHOLZIA CALIFORNICA (CALIFORNIA POPPY)	60	5.0
	LASTHENIA CALIFORNICA (GOLDFIELDS) [1]	40	2.0
	RHUS INTEGRIFOLIA (LEMONADE BERRY)	40	2.0
	STIPA PULCHRA (PURPLE NEEDLE GRASS)	60	8.0
	TOTAL		27.0

[1] SEED PRODUCED IN CALIFORNIA ONLY

DUFF

SHEET NUMBER	ACRE
PP-1	0.48
PP-2	0.92
TOTAL	1.40

WEED GERMINATION

SHEET NUMBER	SQYD
PP-1	3,550
PP-2	6,683
TOTAL	10,233

EROSION CONTROL (TYPE 1) LEGEND

SYMBOL	SEQUENCE	ITEM	MATERIAL DESCRIPTION	MATERIAL TYPE	APPLICATION RATE	REMARKS
	STEP 1	COMPOST	-	-	270 CY/ACRE	-
	STEP 2	INCORPORATE MATERIALS	COMPOST	-	-	INCORPORATE 12" DEPTH
	STEP 3	COMPOST SOCK	-	12" DIA	-	-
	STEP 4	EROSION CONTROL (DRY SEED)	SEED	MIX 1	27 LB/ACRE	-

EROSION CONTROL (TYPE 2) LEGEND

SYMBOL	SEQUENCE	ITEM	MATERIAL DESCRIPTION	MATERIAL TYPE	APPLICATION RATE	REMARKS
	STEP 1	COMPOST	-	MEDIUM	270 CY/ACRE	-
	STEP 2	DUFF	-	-	-	WHERE SHOWN
	STEP 3	INCORPORATE MATERIALS	COMPOST/DUFF	-	-	INCORPORATE 12" DEPTH
	STEP 4	IRRIGATION WORK	-	-	-	
	STEP 5	COMPOST SOCK	-	12" DIA	-	-
	STEP 6	IRRIGATION WORK	-	-	-	-
	STEP 7	WEED GERMINATION	-	-	-	-
	STEP 8	INSTALL SCRUB OAKS	-	-	-	-
	STEP 9	EROSION CONTROL (BONDED FIBER MATRIX)	FIBER	-	4,000 LB/ACRE	APPLICATION RATE IS FOR FIBER AND TACKIFIER COMBINED
			TACKIFIER	-		
			SEED	MIX 2	27 LB/ACRE	-

EROSION CONTROL (TYPE 3) LEGEND

SYMBOL	SEQUENCE	ITEM	MATERIAL DESCRIPTION	MATERIAL TYPE	APPLICATION RATE	REMARKS
	STEP 1	EROSION CONTROL (BFM)	FIBER	-	4,000 LB/ACRE	APPLICATION RATE IS FOR FIBER AND TACKIFIER COMBINED
			TACKIFIER	-		
			SEED	MIX 2	27 LB/ACRE	-
	STEP 2	COMPOST SOCK	-	12" DIA	-	-

EROSION CONTROL SUMMARY OF QUANTITIES

SHEET	DESCRIPTION	COMPOST	INCORPORATE MATERIALS	EROSION CONTROL (DRY SEED)	EROSION CONTROL (BONDED FIBER MATRIX)	COMPOST SOCK
		SQFT	SQFT	SQFT	SQFT	LF
PP-1	EROSION CONTROL (TYPE 1)	2,900	2,900	2,900	-	-
	EROSION CONTROL (TYPE 2)	31,905	31,905	-	31,905	-
	EROSION CONTROL (TYPE 3)	-	-	-	20,925	-
	COMPOST SOCK	-	-	-	-	1,978
PP-2	EROSION CONTROL (TYPE 1)	2,000	2,000	2,000	-	-
	EROSION CONTROL (TYPE 2)	60,152	60,152	-	60,152	-
	EROSION CONTROL (TYPE 3)	-	-	-	7,480	-
	COMPOST SOCK	-	-	-	-	2,433
	TOTAL	96,957	96,957	4,900	120,462	4,411

PLANT LIST AND EROSION CONTROL LEGEND

PL-1

REVISED BY | DATE REVISED
EVAN TORRES | KENNY MAH
CALCULATED-DESIGNED BY | CHECKED BY
SENIOR LANDSCAPE ARCHITECT | TIMOTHY MANN
STATE OF CALIFORNIA - DEPARTMENT OF TRANSPORTATION
Caltrans® LANDSCAPE ARCHITECTURE

LAST REVISION 04-18-16
DATE PLOTTED => 12-MAY-2016
TIME PLOTTED => 13:14

Dist	COUNTY	ROUTE	POST MILES TOTAL PROJECT	SHEET No.	TOTAL SHEETS
11	SD	94	59.6/60.2	57	78

LICENSED LANDSCAPE ARCHITECT

05-09-16
PLANS APPROVAL DATE

LICENSED LANDSCAPE ARCHITECT EVAN TORRES No. 5826 STATE OF CALIFORNIA
Registration Date 01-31-18
Renewal Date 06-30-16
Date

THE STATE OF CALIFORNIA OR ITS OFFICERS OR AGENTS SHALL NOT BE RESPONSIBLE FOR THE ACCURACY OR COMPLETENESS OF SCANNED COPIES OF THIS PLAN SHEET.

NOTE:

FOR ACCURATE RIGHT OF WAY AND ACCESS DATA, CONTACT RIGHT OF WAY ENGINEERING AT THE DISTRICT OFFICE.

LEGEND:

EXISTING QUERCUS AGRIFOLIA

DUFF PLACEMENT

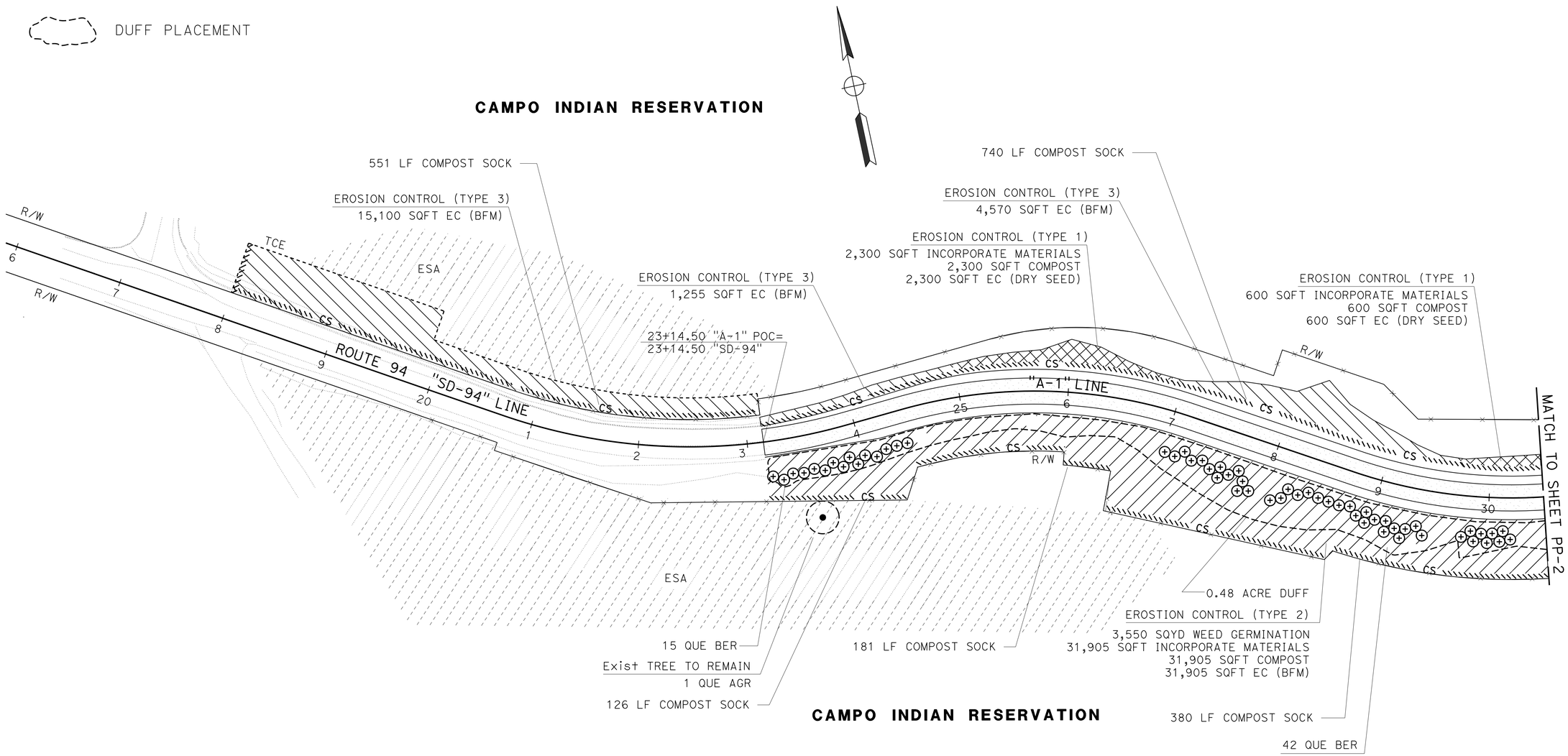

APPROVED FOR PLANTING WORK ONLY

PLANTING PLAN

SCALE: 1" = 50'

PP-1

STATE OF CALIFORNIA - DEPARTMENT OF TRANSPORTATION
Caltrans LANDSCAPE ARCHITECTURE

SENIOR LANDSCAPE ARCHITECT: TIMOTHY MANN

CALCULATED-DESIGNED BY: EVAN TORRES
CHECKED BY: KENNY MAH

REVISED BY | DATE REVISED

LAST REVISION 04-18-16

DATE PLOTTED => 12-MAY-2016
TIME PLOTTED => 13:14

Dist	COUNTY	ROUTE	POST MILES TOTAL PROJECT	SHEET No.	TOTAL SHEETS
11	SD	94	59.6/60.2	58	78

LICENSED LANDSCAPE ARCHITECT

05-09-16
PLANS APPROVAL DATE

LICENSED LANDSCAPE ARCHITECT EVAN TORRES No. 5826 STATE OF CALIFORNIA
Registration Expiration Date 01-31-18
Renewal Date 06-30-16
Date

THE STATE OF CALIFORNIA OR ITS OFFICERS OR AGENTS SHALL NOT BE RESPONSIBLE FOR THE ACCURACY OR COMPLETENESS OF SCANNED COPIES OF THIS PLAN SHEET.

NOTE:

FOR ACCURATE RIGHT OF WAY AND ACCESS DATA, CONTACT RIGHT OF WAY ENGINEERING AT THE DISTRICT OFFICE.

LEGEND

EXISTING QUERCUS AGRIFOLIA

DUFF PLACEMENT

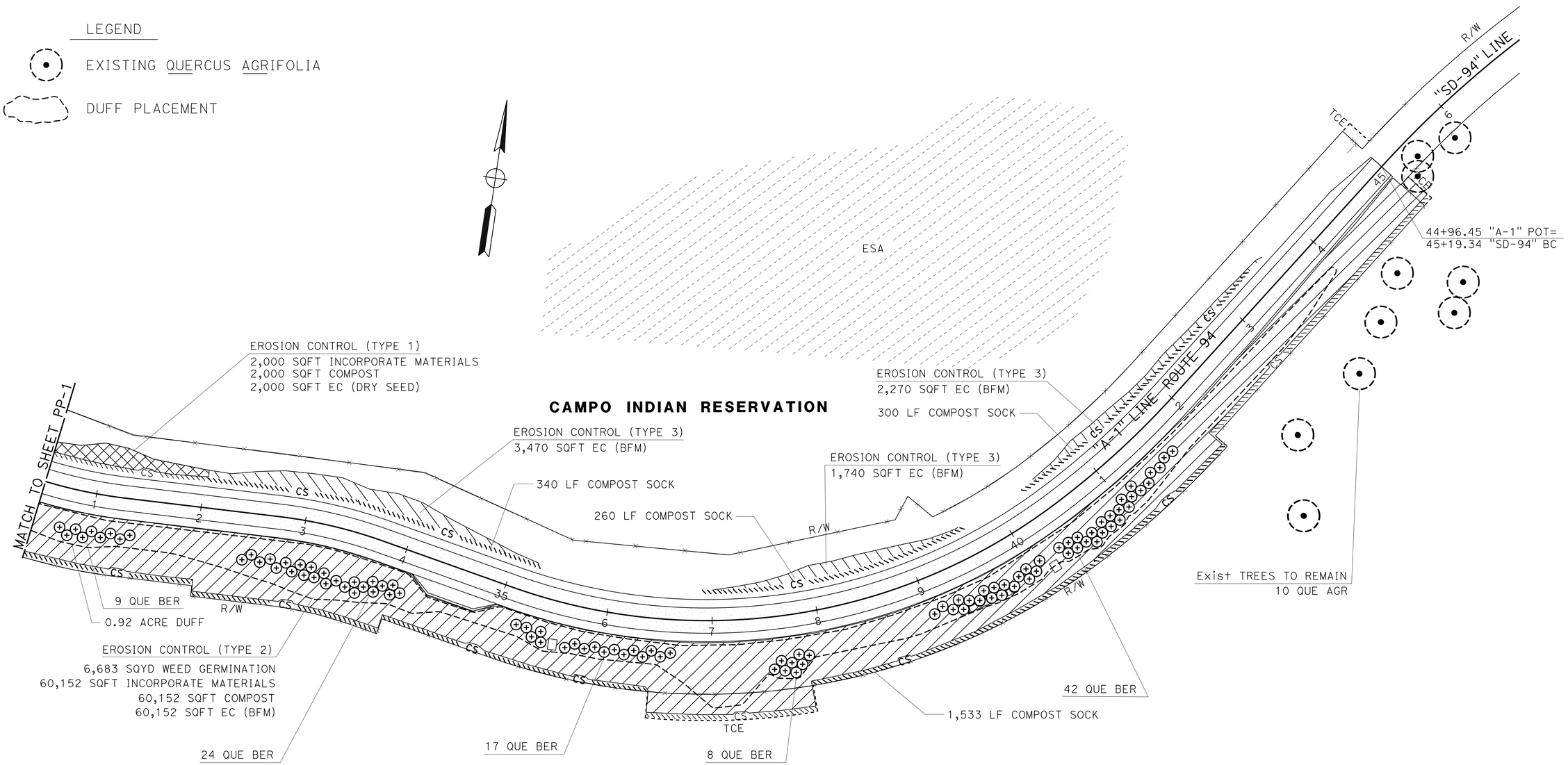

APPROVED FOR PLANTING WORK ONLY

PLANTING PLAN

SCALE: 1" = 50' **PP-2**

STATE OF CALIFORNIA - DEPARTMENT OF TRANSPORTATION
Caltrans® LANDSCAPE ARCHITECTURE

SENIOR LANDSCAPE ARCHITECT: TIMOTHY MANN
CALCULATED-DESIGNED BY: EVAN TORRES
CHECKED BY: KENNY MAH
REVISED BY
DATE REVISED

LAST REVISION 04-18-16
DATE PLOTTED => 12-MAY-2016
TIME PLOTTED => 13:14

M

Maint	MAINTENANCE
Max	MAXIMUM
MB	METAL BEAM
MBB	METAL BEAM BARRIER
MBGR	METAL BEAM GUARD RAILING
Med	MEDIAN
MGS	MIDWEST GUARDRAIL SYSTEM
MH	MANHOLE
Min	MINIMUM
Misc	MISCELLANEOUS
Misc I & S	MISCELLANEOUS IRON AND STEEL
Mkr	MARKER
Mod	MODIFIED,
	MODIFY
Mon	MONUMENT
MP	METAL PLATE
MPGR	METAL PLATE GUARD RAILING
MR	MOVEMENT RATING
MSE	MECHANICALLY STABILIZED EMBANKMENT
Mt	MOUNTAIN, MOUNT
Mtl	MATERIAL
MVP	MAINTENANCE VEHICLE PULLOUT

N

N	NORTH
NB	NORTHBOUND
No.	NUMBER (MUST HAVE PERIOD)
Nos.	NUMBERS (MUST HAVE PERIOD)
NPS	NOMINAL PIPE SIZE
NS	NEAR SIDE
NSP	NEW STANDARD PLAN
NTS	NOT TO SCALE

O

Oblr	OBLITERATE
OC	OVERCROSSING
OD	OUTSIDE DIAMETER
OF	OUTSIDE FACE
OG	ORIGINAL GROUND
OGAC	OPEN GRADED ASPHALT CONCRETE
OGFC	OPEN GRADED FRICTION COURSE
OH	OVERHEAD
OHWM	ORDINARY HIGH WATER MARK
O-O	OUT TO OUT
Opp	OPPOSITE
OSD	OVERSIDE DRAIN

P

P	PAGE
PAP	PERFORATED ALUMINUM PIPE
PB	PULL BOX
PC	POINT OF CURVATURE,
	PRECAST
PCC	POINT OF COMPOUND CURVE,
	PORTLAND CEMENT CONCRETE
PCMS	PORTABLE CHANGEABLE MESSAGE SIGN
PCP	PERFORATED CONCRETE PIPE,
	PRESTRESSED CONCRETE PIPE
PCVC	POINT OF COMPOUND VERTICAL CURVE
PEC	PERMIT TO ENTER AND CONSTRUCT
Ped	PEDESTRIAN
Ped OC	PEDESTRIAN OVERCROSSING
Ped UC	PEDESTRIAN UNDERCROSSING
Perm Mtl	PERMEABLE MATERIAL

P continued

PG	PROFILE GRADE
PI	POINT OF INTERSECTION
PJP	PARTIAL JOINT PENETRATION
Pkwy	PARKWAY
ℙ,PL	PLATE
P/L	PROPERTY LINE
PM	POST MILE,
	TIME FROM NOON TO MIDNIGHT
PN	PAVING NOTCH
POC	POINT OF HORIZONTAL CURVE
POT	POINT OF TANGENT
POVC	POINT OF VERTICAL CURVE
PP	PIPE PILE,
	PLASTIC PIPE,
	POWER POLE
PPL	PREFORMED PERMEABLE LINER
PPP	PERFORATED PLASTIC PIPE
PRC	POINT OF REVERSE CURVE
PRF	PAVEMENT REINFORCING FABRIC
PRVC	POINT OF REVERSE VERTICAL CURVE
PS&E	PLANS, SPECIFICATIONS AND ESTIMATES
PS, P/S	PRESTRESSED
PSP	PERFORATED STEEL PIPE
PT	POINT OF TANGENCY
PVC	POLYVINYL CHLORIDE
Pvmt	PAVEMENT

Q

Qty	QUANTITY

R

R	RADIUS
R & D	REMOVE AND DISPOSE
R & S	REMOVE AND SALVAGE
R/C	RATE OF CHANGE
RCA	REINFORCED CONCRETE ARCH
RCB	REINFORCED CONCRETE BOX
RCP	REINFORCED CONCRETE PIPE
RCPA	REINFORCED CONCRETE PIPE ARCH
Rd	ROAD
Reinf	REINFORCED,
	REINFORCEMENT,
	REINFORCING
Rel	RELOCATE
Repl	REPLACEMENT
Ret	RETAINING
Rev	REVISED, REVISION
Rdwy	ROADWAY
RHMA	RUBBERIZED HOT MIX ASPHALT
Riv	RIVER
RM	ROAD-MIXED
RP	RADIUS POINT,
	REFERENCE POINT
RR	RAILROAD
RSP	ROCK SLOPE PROTECTION,
	REVISED STANDARD PLAN
Rt	RIGHT
Rte	ROUTE
RW	REDWOOD,
	RETAINING WALL
R/W	RIGHT OF WAY
Rwy	RAILWAY

S

S	SOUTH,
	SUPPLEMENT
SAE	STRUCTURE APPROACH EMBANKMENT
Salv	SALVAGE
SAPP	STRUCTURAL ALUMINUM PLATE PIPE
SB	SOUTHBOUND
SC	SAND CUSHION
SCSP	SLOTTED CORRUGATED STEEL PIPE
SD	STORM DRAIN
Sec	SECOND,
	SECTION
Sep	SEPARATION
SG	SUBGRADE
Shld	SHOULDER
Sht	SHEET
Sim	SIMILAR
℄	STATION LINE
SM	SELECTED MATERIAL
Spec	SPECIAL,
	SPECIFICATIONS
SPP	SLOTTED PLASTIC PIPE
SS	SLOPE STAKE
SSBM	STRAP AND SADDLE BRACKET METHOD
SSD	STRUCTURAL SECTION DRAIN
SSPA	STRUCTURAL STEEL PLATE ARCH
SSPP	STRUCTURAL STEEL PLATE PIPE
SSPPA	STRUCTURAL STEEL PLATE PIPE ARCH
SSRP	STEEL SPIRAL RIB PIPE
St	STREET
Sta	STATION
STBB	SINGLE THRIE BEAM BARRIER
Std	STANDARD
Str	STRUCTURE
Surf	SURFACING
SW	SIDEWALK,
	SOUND WALL
Swr	SEWER
Sym	SYMMETRICAL
S4S	SURFACE 4 SIDES

T

T	SEMI-TANGENT
Tan	TANGENT
TBB	THRIE BEAM BARRIER
Tbr	TIMBER
TC	TOP OF CURB
TCB	TRAFFIC CONTROL BOX
TCE	TEMPORARY CONSTRUCTION EASEMENT
Tel	TELEPHONE
Temp	TEMPORARY
TG	TOP OF GRADE
Tot	TOTAL
TP	TELEPHONE POLE
TPB	TREATED PERMEABLE BASE
TPM	TREATED PERMEABLE MATERIAL
Trans	TRANSITION

T continued

TS	TRANSVERSE,
	TRAFFIC SIGNAL,
	TUBULAR STEEL
Typ	TYPICAL

U

UC	UNDERCROSSING
UD	UNDERDRAIN
UG	UNDERGROUND
UON	UNLESS OTHERWISE NOTED
UP	UNDERPASS

V

V	VALVE,
	DESIGN SPEED
Var	VARIABLE,
	VARIES
VC	VERTICAL CURVE
VCP	VITRIFIED CLAY PIPE
Vert	VERTICAL
Via	VIADUCT
Vol	VOLUME

W

W	WEST,
	WIDTH
WB	WESTBOUND
WH	WEEP HOLE
WM	WIRE MESH
WS	WATER SURFACE
WSP	WELDED STEEL PIPE
Wt	WEIGHT
WV	WATER VALVE
WW	WINGWALL
WWLOL	WINGWALL LAYOUT LINE

X

X Sec	CROSS SECTION
Xing	CROSSING

Y

Yr	YEAR
Yrs	YEARS

Dist	COUNTY	ROUTE	POST MILES TOTAL PROJECT	SHEET No.	TOTAL SHEETS
11	SD	94	59.6/60.2	59	78

Grace M. Tsushima
REGISTERED CIVIL ENGINEER

July 19, 2013
PLANS APPROVAL DATE

REGISTERED PROFESSIONAL ENGINEER
Grace M. Tsushima
No. C49814
Exp. 9-30-14
CIVIL
STATE OF CALIFORNIA

THE STATE OF CALIFORNIA OR ITS OFFICERS OR AGENTS SHALL NOT BE RESPONSIBLE FOR THE ACCURACY OR COMPLETENESS OF SCANNED COPIES OF THIS PLAN SHEET.

TO ACCOMPANY PLANS DATED 05-09-16

UNIT OF MEASUREMENT SYMBOLS:

Some of the symbols used in the project plan quantity tables and in the Bid Item List are:

TABLE A

SYMBOL USED	DEFINITIONS
ACRE	ACRE
CF	CUBIC FOOT
CY	CUBIC YARD
EA	EACH
GAL	GALLON
LB	POUND
LF	LINEAR FOOT
SQFT	SQUARE FOOT
SQYD	SQUARE YARD
STA	100 FEET
TAB	TABLET
TON	2,000 POUNDS

Some of the symbols used in the plans other than in the project plan quantity tables are:

TABLE B

SYMBOL USED	DEFINITIONS
ksi	KIPS PER SQUARE INCH
ksf	KIPS PER SQUARE FOOT
psi	POUNDS PER SQUARE INCH
psf	POUNDS PER SQUARE FOOT
lb/ft^3, pcf	POUNDS PER CUBIC FOOT
tsf	TONS PER SQUARE FOOT
mph, MPH *	MILES PER HOUR
ø	NOMINAL DIAMETER
oz	OUNCE
lb	POUND
kip	1,000 POUNDS
cal	CALORIE
ft	FOOT OR FEET
gal	GALLON

* For use on a sign panel only

STATE OF CALIFORNIA
DEPARTMENT OF TRANSPORTATION

ABBREVIATIONS (SHEET 2 OF 2)

NO SCALE

RSP A10B DATED JULY 19, 2013 SUPERSEDES STANDARD PLAN A10B DATED MAY 20, 2011 - PAGE 2 OF THE STANDARD PLANS BOOK DATED 2010.

REVISED STANDARD PLAN RSP A10B

2010 REVISED STANDARD PLAN RSP A10B

6-7-13

Dist	COUNTY	ROUTE	POST MILES TOTAL PROJECT	SHEET No.	TOTAL SHEETS
11	SD	94	59.6/60.2	60	78

REGISTERED CIVIL ENGINEER

July 18, 2014
PLANS APPROVAL DATE

REGISTERED PROFESSIONAL ENGINEER Carl M. Duan No. C59976 Exp. 6-30-16 CIVIL STATE OF CALIFORNIA

THE STATE OF CALIFORNIA OR ITS OFFICERS OR AGENTS SHALL NOT BE RESPONSIBLE FOR THE ACCURACY OR COMPLETENESS OF SCANNED COPIES OF THIS PLAN SHEET.

TO ACCOMPANY PLANS DATED 05-09-16

DESIGN NOTES:

Design: AASHTO LRFD Bridge Design Specifications, 4th edition with California Amendments. ACPA DESIGN DATA 1, October 2007. INDIRECT DESIGN METHOD

Soil: w Fe = 162 pcf Installation Type 1
w Fe = 168 pcf Installation Types 2 & 3
w = Unit weight of soil (pcf)
Fe = Soil-structure interaction factor

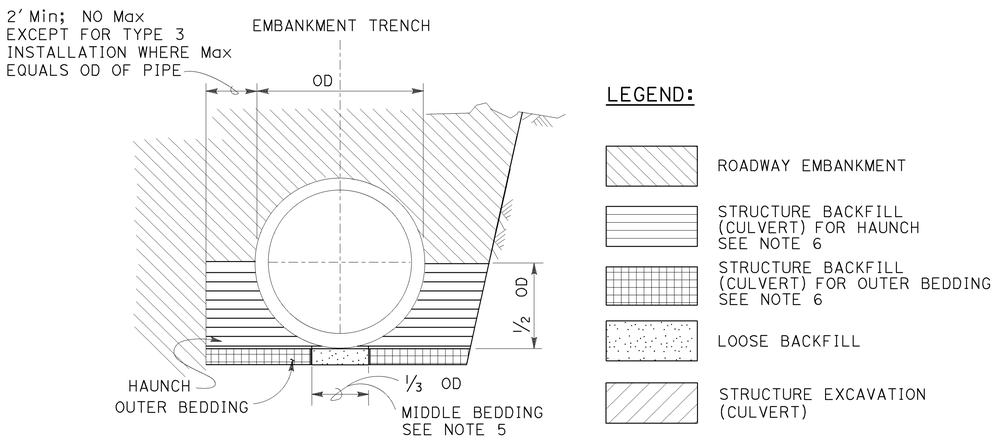

BACKFILL

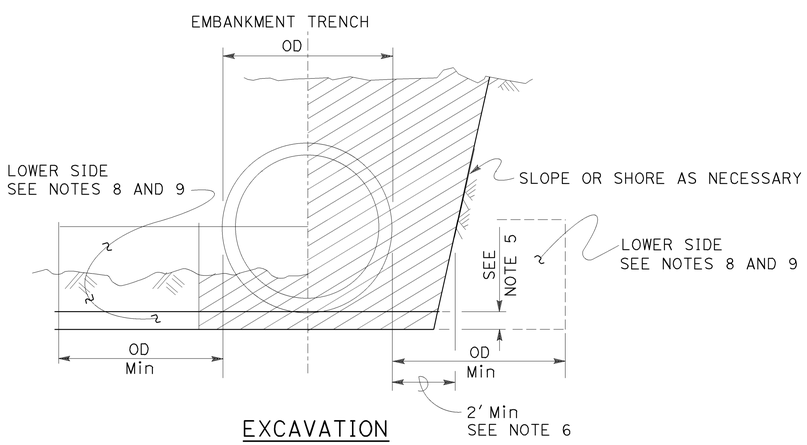

EXCAVATION

INSTALLATION TYPE 1:

The haunch and outer bedding shall be compacted to a minimum 90 percent relative compaction. In addition, the minimum sand equivalent in these areas shall be 30 and the maximum percentage passing the No. 200 sieve size shall be 12.

INSTALLATION TYPE 2:

The haunch and outer bedding shall be compacted to a minimum 90 percent relative compaction. In addition, the minimum sand equivalent in these areas shall be 25.

INSTALLATION TYPE 3:

The haunch and outer bedding shall be compacted to a minimum 85 percent relative compaction. 90 percent relative compaction will be required where the fill over the pipe is less than 4′-0″ or ½ OD. In addition, the minimum sand equivalent in these areas shall be 25 and the material shall not contain rocks, broken concrete, or other solid material exceeding 3″ in greatest dimension.

INSTALLATION TYPE 1

MINIMUM CLASS AND D-LOAD	COVER	
	60″ Dia AND SMALLER	OVER 60″ Dia TO 120″ Dia Max
CLASS II 1000D	14.9′	12.9′
CLASS III 1350D	15.0′ - 21.9′	13.0′ - 18.9′
CLASS III SPECIAL 1700D	22.0′ - 27.9′	19.0′ - 24.9′
CLASS IV 2000D	28.0′ - 32.9′	25.0′ - 29.9′
CLASS IV SPECIAL 2500D	33.0′ - 41.9′	30.0′ - 38.9′
CLASS V 3000D	42.0′ - 49.9′	39.0′ - 46.9′
CLASS V SPECIAL 3600D	50.0′ - 60.0′	47.0′ - 58.0′

INSTALLATION TYPE 2

MINIMUM CLASS AND D-LOAD	COVER	
	60″ Dia AND SMALLER	OVER 60″ Dia TO 120″ Dia Max
CLASS II 1000D	11.9′	9.9′
CLASS III 1350D	12.0′ - 15.9′	10.0′ - 14.9′
CLASS III SPECIAL 1700D	16.0′ - 20.9′	15.0′ - 19.9′
CLASS IV 2000D	21.0′ - 24.9′	20.0′ - 23.9′
CLASS IV SPECIAL 2500D	25.0′ - 31.9′	24.0′ - 30.9′
CLASS V 3000D	32.0′ - 37.9′	31.0′ - 37.9′
CLASS V SPECIAL 3600D	38.0′ - 46.0′	38.0′ - 46.0′

INSTALLATION TYPE 3

MINIMUM CLASS AND D-LOAD	COVER	
	60″ Dia AND SMALLER	OVER 60″ Dia TO 120″ Dia Max
CLASS II 1000D	8.9′	5.9′
CLASS III 1350D	9.0′ - 11.9′	6.0′ - 10.9′
CLASS III SPECIAL 1700D	12.0′ - 15.9′	11.0′ - 13.9′
CLASS IV 2000D	16.0′ - 18.9′	14.0′ - 17.9′
CLASS IV SPECIAL 2500D	19.0′ - 24.9′	18.0′ - 22.9′
CLASS V 3000D	25.0′ - 29.9′	23.0′ - 28.9′
CLASS V SPECIAL 3600D	30.0′ - 36.0′	29.0′ - 35.0′

NOTES:

1. Unless otherwise shown on the plans or specified in the special provision, the Contractor shall have the option of selecting the class of RCP and the type of installation to be used, provided the height of cover does not exceed the value shown for the RCP selected.
   Example: 24″ RCP culvert with maximum cover of 24′-0″ the options are:
   a) Class III Special or stronger with Installation Type 1.
   b) Class IV or stronger with Installation Type 2.
   c) Class IV Special or stronger with Installation Type 3.
   Cover is defined as the maximum vertical distance from top of the pipe to finished grade within the length of any given culvert.
2. The class of RCP and Installation Type selected shall be the same throughout the length of any given culvert.
3. The "length of any culvert" is defined as the culvert between:
   a) Successive drainage structure (inlets, junction boxes, headwalls, etc.).
   b) A drainage structure and the inlet or outlet end of the culvert.
   c) The inlet and outlet end of the culvert when there are no intervening drainage structures.
4. Oval and arch shaped RCP shall not be used.
5. Bedding depth: 1/25 OD Min, not less than 3″.
6. Slurry cement backfill may be substituted for backfill in the outer bedding and haunch areas. If slurry is used, the outer and middle beddings shall be omitted. Prior to installation, the soil under the middle ⅓ of the outside diameter of the pipe shall be softened by scarifying or other means to a minimum depth of 1/25 OD, but not less than 3″. Where slurry cement backfill is used, clear distance to trench wall may be reduced as set forth in the Standard Specifications.
7. Backfill shall be placed full width of excavation except where dimensions are shown for backfill width or thickness. Dimensions shown are minimum.
8. Lower side shall be suitable material as determined by the Engineer. Otherwise it shall be considered unsuitable as set forth in of the Standard Specifications. See Note 9.
9. Where the pipe is placed in a trench, if the trench walls are sloped at 5 vertical to 1 horizontal or steeper for at least 90 percent of the trench height or up to not less than 12″ from the grading plane, the firmness of the soil in the lower side need not be considered.
10. Non-reinforced precast concrete pipe sizes 3′-0″ or smaller may be placed under installation Types 1, 2 or 3.

STATE OF CALIFORNIA
DEPARTMENT OF TRANSPORTATION

EXCAVATION AND BACKFILL CONCRETE PIPE CULVERTS INDIRECT DESIGN METHOD

NO SCALE

RSP A62DA DATED JULY 18, 2014 SUPERSEDES STANDARD PLAN A62DA DATED MAY 20, 2011 - PAGE 24 OF THE STANDARD PLANS BOOK DATED 2010.

REVISED STANDARD PLAN RSP A62DA

2010 REVISED STANDARD PLAN RSP A62DA

5-13-14

Dist	COUNTY	ROUTE	POST MILES TOTAL PROJECT	SHEET No.	TOTAL SHEETS
11	SD	94	59.6/60.2	61	78

Raymond Don Tsztoo
REGISTERED CIVIL ENGINEER

October 19, 2012
PLANS APPROVAL DATE

REGISTERED PROFESSIONAL ENGINEER
Raymond Don Tsztoo
No. C37332
Exp. 6-30-14
CIVIL
STATE OF CALIFORNIA

THE STATE OF CALIFORNIA OR ITS OFFICERS OR AGENTS SHALL NOT BE RESPONSIBLE FOR THE ACCURACY OR COMPLETENESS OF SCANNED COPIES OF THIS PLAN SHEET.

TO ACCOMPANY PLANS DATED 05-09-16

2010 REVISED STANDARD PLAN RSP A86D

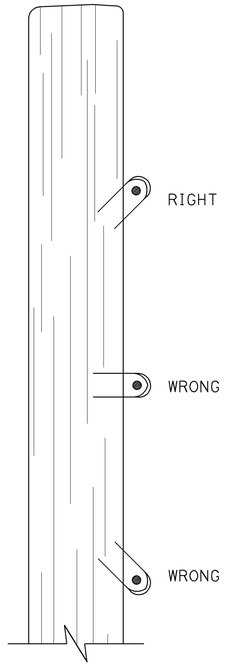

DRIVE STAPLES AT ANGLE

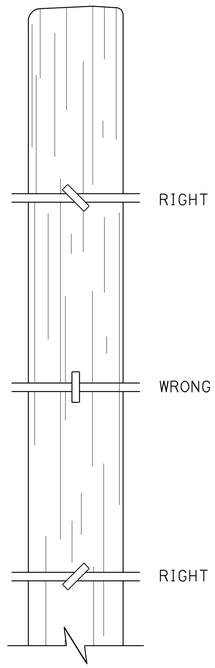

DO NOT DRIVE STAPLES PARALLEL TO SIDE OF POST

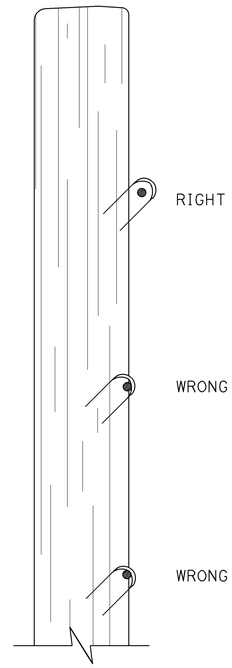

LEAVE WIRE LOOSE IN STAPLE

LINE POST STAPLING DETAILS

(Apply to rectangular/square and round posts)
Do not staple vertical wire in wire mesh.

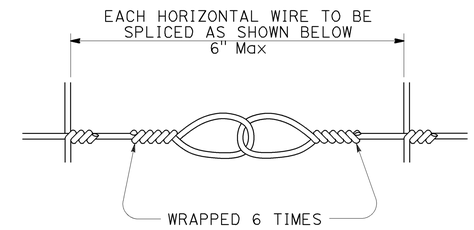

SPLICE DETAIL FOR BARBED WIRE/WIRE MESH FENCE

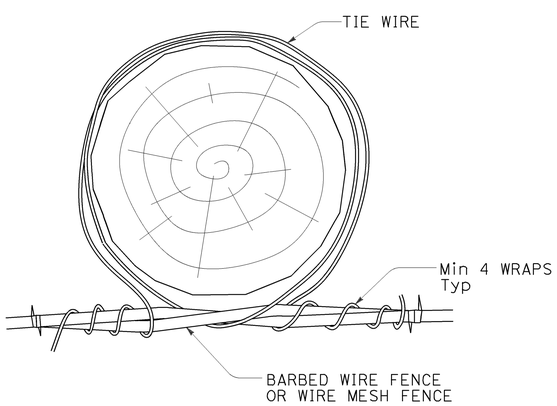

OPTION A

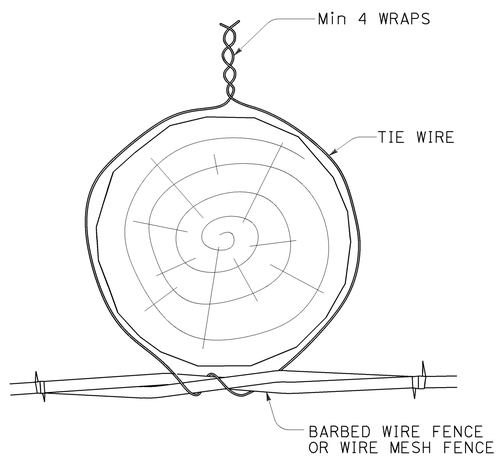

OPTION B

LINE POST WIRE TIE OPTION DETAILS

(Option details also apply to rectangular/square posts)

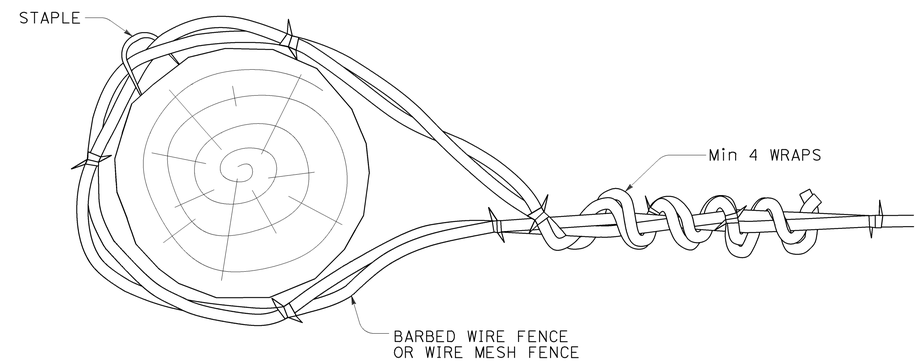

END, LATCH, PULL, AND CORNER POST DETAIL

(Also applies to rectangular/square posts)

STATE OF CALIFORNIA
DEPARTMENT OF TRANSPORTATION

BARBED WIRE AND WIRE MESH FENCE - MISCELLANEOUS DETAILS

NO SCALE

RSP A86D DATED OCTOBER 19, 2012 SUPPLEMENTS THE STANDARD PLANS BOOK DATED 2010.

REVISED STANDARD PLAN RSP A86D

10-9-12

Dist	COUNTY	ROUTE	POST MILES TOTAL PROJECT	SHEET No.	TOTAL SHEETS
11	SD	94	59.6/60.2	62	78

REGISTERED CIVIL ENGINEER

January 15, 2016
PLANS APPROVAL DATE

REGISTERED PROFESSIONAL ENGINEER
Michael Janzen
No. 44788
Exp. 3-31-16
CIVIL
STATE OF CALIFORNIA

THE STATE OF CALIFORNIA OR ITS OFFICERS OR AGENTS SHALL NOT BE RESPONSIBLE FOR THE ACCURACY OR COMPLETENESS OF SCANNED COPIES OF THIS PLAN SHEET.

TO ACCOMPANY PLANS DATED 05-09-16

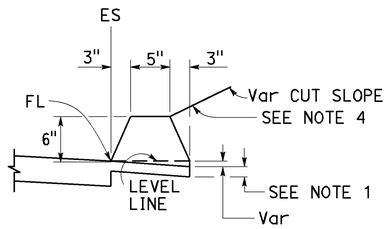

TYPE A
See Notes 3 and 5

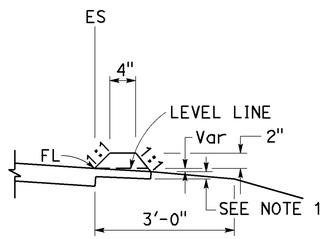

TYPE C

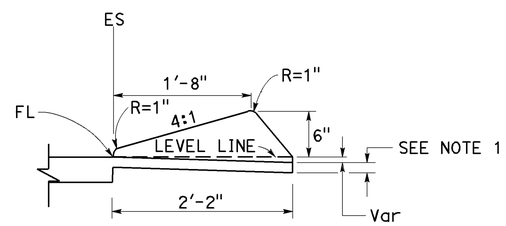

TYPE D

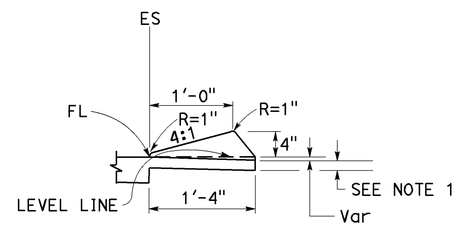

TYPE E

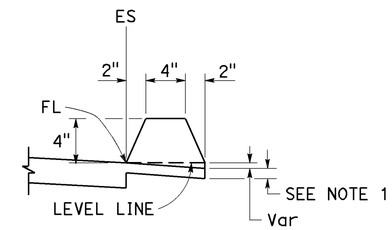

TYPE F
See Note 5

DIKES

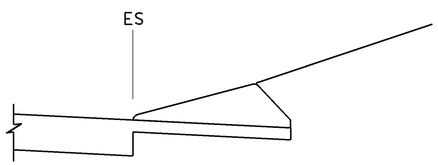

CASE C-1
Cut Slope

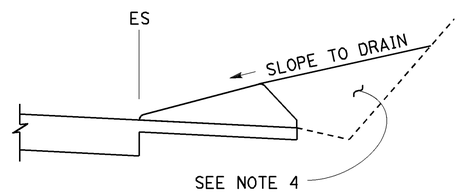

CASE C-2
Cut Slope

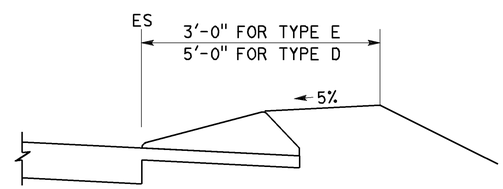

CASE F

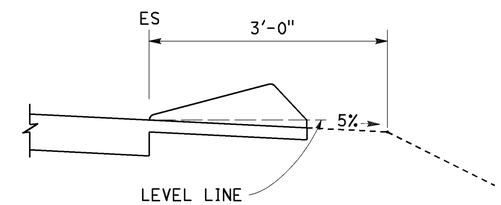

CASE R
See Note 2

TYPE D AND E BACKFILL DETAILS

NOTES:

1. For HMA shoulders only, extend top layer of HMA placed on the shoulder under dike with no joint at the ES. For projects with OGFC shoulders, do not extend OGFC under dike. See project plans for modified dike detail.
2. Case R applies to retrofit only projects where restrictive conditions do not provide enough width for Case F backfill.
3. Type A dike only to be used where restrictive slope conditions do not provide enough width to use Type D or Type E dike.
4. Fill and compact with excavated material to top of dike.
5. Use Type A or F dike, where dike is required with guardrail installations. See Revised Standard Plan RSP A77N4 for dike positioning details. See Revised Standard Plan RSP A77N3 for hinge point offsets with guardrail.

DIKE QUANTITIES

TYPE	CUBIC YARDS PER LINEAR FOOT
A	0.0135
C	0.0038
D	0.0293
E	0.0130
F	0.0066

Quantities based on 5% cross slope.

STATE OF CALIFORNIA
DEPARTMENT OF TRANSPORTATION

HOT MIX ASPHALT DIKES

NO SCALE

RSP A87B DATED JANUARY 15, 2016 SUPERSEDES RSP A87B DATED JULY 19, 2013 AND STANDARD PLAN A87B DATED MAY 20, 2011 - PAGE 120 OF THE STANDARD PLANS BOOK DATED 2010.

REVISED STANDARD PLAN RSP A87B

2010 REVISED STANDARD PLAN RSP A87B

11-17-15

Dist	COUNTY	ROUTE	POST MILES TOTAL PROJECT	SHEET No.	TOTAL SHEETS
11	SD	94	59.6/60.2	63	78

REGISTERED CIVIL ENGINEER

October 30, 2015
PLANS APPROVAL DATE

REGISTERED PROFESSIONAL ENGINEER Srikanth N. Balasubramanian No. C56426 Exp. 6-30-17 CIVIL STATE OF CALIFORNIA

THE STATE OF CALIFORNIA OR ITS OFFICERS OR AGENTS SHALL NOT BE RESPONSIBLE FOR THE ACCURACY OR COMPLETENESS OF SCANNED COPIES OF THIS PLAN SHEET.

TO ACCOMPANY PLANS DATED 05-09-16

ABBREVIATIONS:

TE TAPERED EDGE

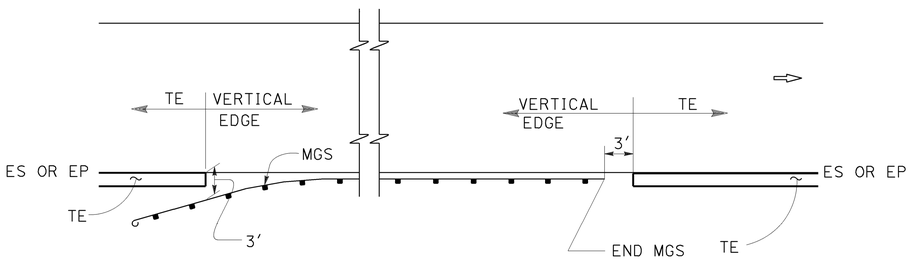

MGS

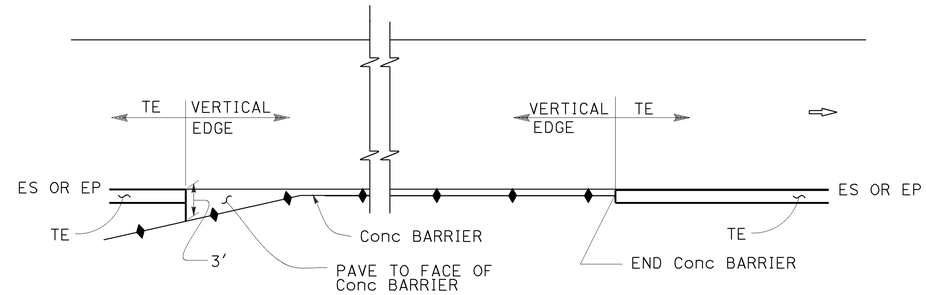

CONCRETE BARRIER

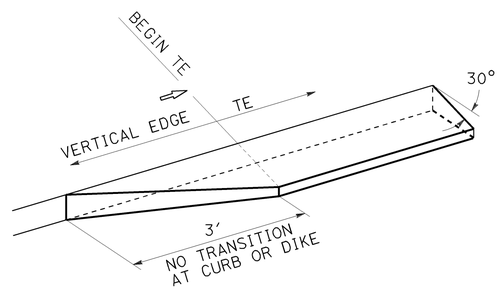

TRANSITION DETAIL FOR CONCRETE ONLY

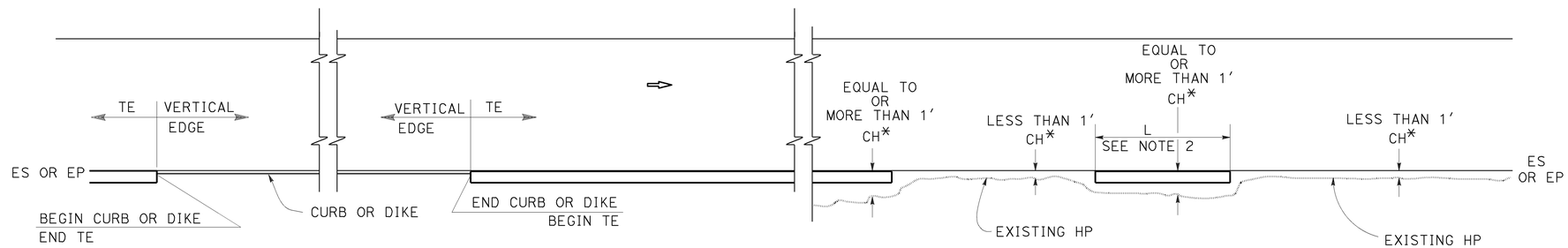

CURB OR DIKE

NARROW SIDE SLOPE

* CH = Distance from ES or EP to existing HP.

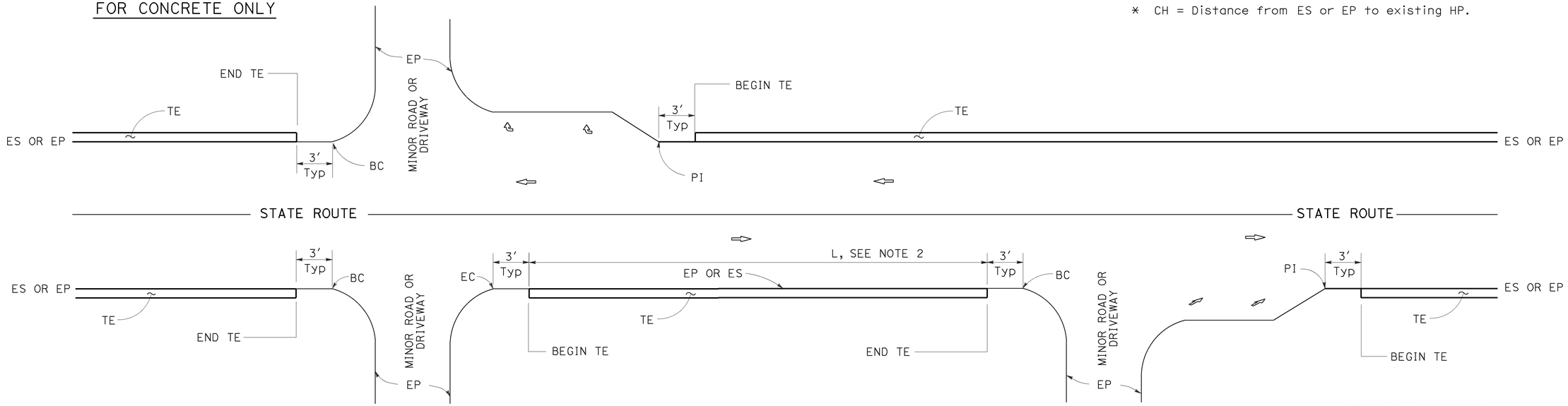

INTERTECTION

DRIVEWAY AND INTERSECTION

MINOR ROADWAY OR DRIVEWAY

STATE OF CALIFORNIA
DEPARTMENT OF TRANSPORTATION

PAVEMENT EDGE TREATMENTS

NO SCALE

NOTES:

1. For details not shown, see Revised Standard Plans RSP P75 and RSP P76.
2. Tapered edge is optional when L is less than 30′.

RSP P74 DATED OCTOBER 30, 2015 SUPERSEDES RSP P74 DATED NOVEMBER 15, 2013 AND RSP P74 DATED JANUARY 20, 2012 THAT SUPPLEMENTS THE STANDARD PLANS BOOK DATED 2010.

REVISED STANDARD PLAN RSP P74

2010 REVISED STANDARD PLAN RSP P74

10-13-15

Dist	COUNTY	ROUTE	POST MILES TOTAL PROJECT	SHEET No.	TOTAL SHEETS
11	SD	94	59.6/60.2	64	78

REGISTERED CIVIL ENGINEER

October 30, 2015
PLANS APPROVAL DATE

REGISTERED PROFESSIONAL ENGINEER Srikanth N. Balasubramanian No. C56426 Exp. 6-30-17 CIVIL STATE OF CALIFORNIA

THE STATE OF CALIFORNIA OR ITS OFFICERS OR AGENTS SHALL NOT BE RESPONSIBLE FOR THE ACCURACY OR COMPLETENESS OF SCANNED COPIES OF THIS PLAN SHEET.

TO ACCOMPANY PLANS DATED 05-09-16

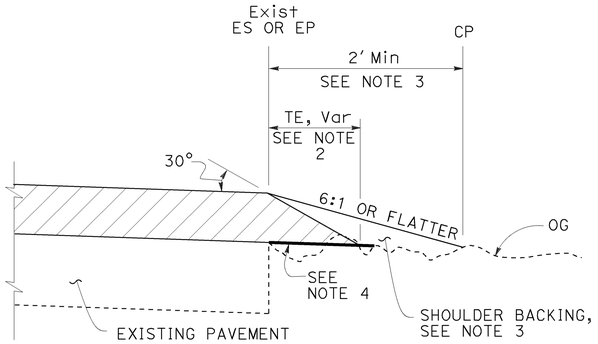

CASE A
Tapered Edge

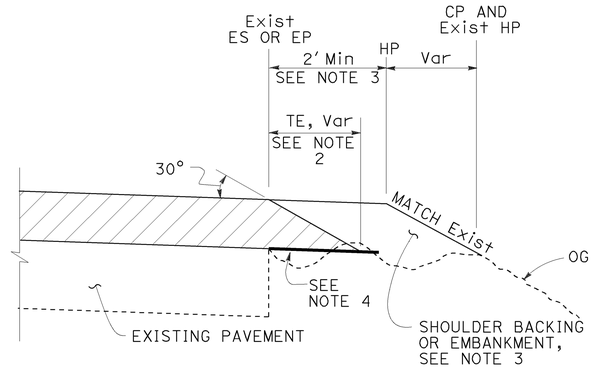

CASE B
Tapered Edge

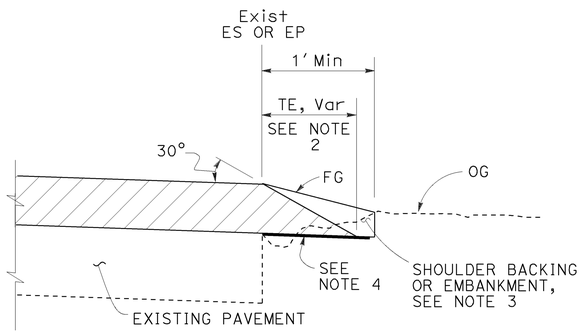

CASE C
Tapered Edge

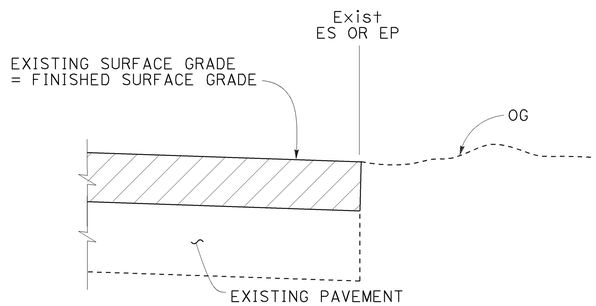

CASE D
Vertical Edge

LEGEND:

- HMA OVERLAY
- HMA OR CONCRETE OVERLAY
- CONCRETE OVERLAY

ABBREVIATIONS:

TE TAPERED EDGE
TT TOTAL THICKNESS OF TE

TABLE A
EDGE TREATMENT FOR VARIOUS OVERLAY THICKNESS AND CONDITIONS

	OVERLAY THICKNESS	
FIELD CONDITION	LESS THAN 0.15'	0.15' OR MORE
Exist SLOPE 6:1 OR FLATTER	CASE E	CASE A
Exist SLOPE 3:1 TO 6:1	CASE E	CASE B
Exist SLOPE STEEPER THAN 3:1	CASE F	CASE F
CUT SECTION (REPLACE, COLD PLANE, MILL PAVEMENT)	CASE D	CASE C

ADDITIONAL HMA OR CONCRETE QUANTITIES FOR TE/SIDE/MILE

TYPICAL CROSS SECTION	TT	TOTAL ADDITIONAL MATERIAL FOR TE/SIDE/MILE		
		HMA (TON)	CONCRETE (CY)*	CONCRETE (CY)**
TT	0.15'	7.7	NA	NA
	0.20'	13.7	NA	NA
	0.30'	30.9	NA	NA
	0.40'	54.9	NA	NA
	0.45'	69.4	NA	NA
TT 0.43'	0.50'	84.2	NA	NA
	0.60'	113.9	NA	NA
	0.70'	143.6	70.9	94.2
	0.80'	173.3	85.6	112.2
	0.90'	203.0	100.3	130.2
	1.00'	232.7	114.9	148.2
	1.10'	262.4	129.6	166.2
	1.20'	292.1	144.3	184.2

* For Detail "A"
** For Optional Detail "A"

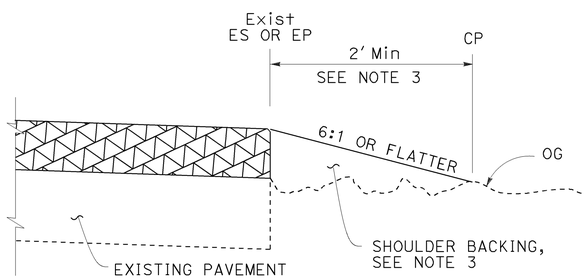

CASE E
Vertical Edge

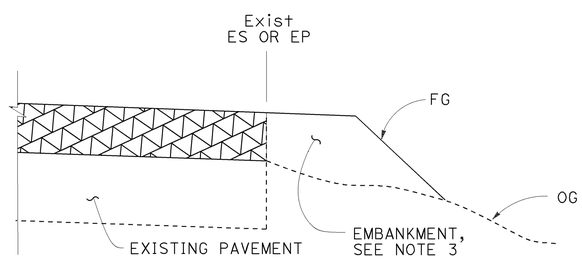

CASE F
Vertical Edge
* See Table A and Revised Std Plan RSP P74

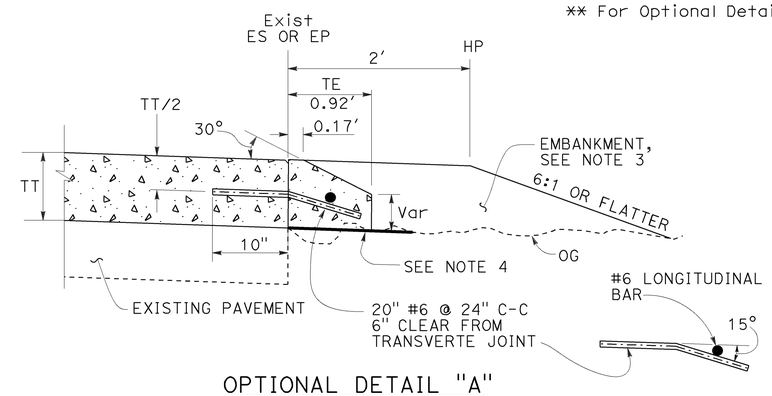

OPTIONAL DETAIL "A"
For concrete overlay
See Note 5

NOTES:

1. For limits of tapered edge and vertical edge treatments, see Revised Standard Plan RSP P74.
2. Details shown for HMA overlay thickness less than 0.43'. See Detail "A" for HMA overlay thickness more than 0.43' or concrete overlay.
3. For locations and limits of shoulder backing or embankment see project plans.
4. Grade existing ground to place tapered edge. 1' minimum width
5. Tapered edge transverse joint must match overlay transverse joint. End of #6 longitudinal bar must be 2" ±½" clear from transverse joint.
6. Tapered edge is not needed in the area of MGS, barrier, right turn lane and acceleration lane. See Revised Standard Plan RSP P74.

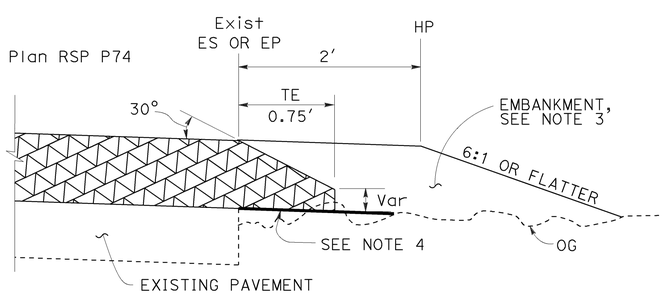

DETAIL "A"
For HMA overlay thickness more than 0.43' or concrete overlay

STATE OF CALIFORNIA
DEPARTMENT OF TRANSPORTATION

PAVEMENT EDGE TREATMENTS-OVERLAYS

NO SCALE

RSP P75 DATED OCTOBER 30, 2015 SUPERSEDES RSP P75 DATED NOVEMBER 15, 2013 AND RSP P75 DATED JANUARY 20, 2012 THAT SUPPLEMENTS THE STANDARD PLANS BOOK DATED 2010.

REVISED STANDARD PLAN RSP P75

2010 REVISED STANDARD PLAN RSP P75

7-2-15

Dist	COUNTY	ROUTE	POST MILES TOTAL PROJECT	SHEET No.	TOTAL SHEETS
11	SD	94	59.6/60.2	65	78

Srikanth Balasubramanian
REGISTERED CIVIL ENGINEER

October 30, 2015
PLANS APPROVAL DATE

REGISTERED PROFESSIONAL ENGINEER
Srikanth N. Balasubramanian
No. C56426
Exp. 6-30-17
CIVIL
STATE OF CALIFORNIA

THE STATE OF CALIFORNIA OR ITS OFFICERS OR AGENTS SHALL NOT BE RESPONSIBLE FOR THE ACCURACY OR COMPLETENESS OF SCANNED COPIES OF THIS PLAN SHEET.

TO ACCOMPANY PLANS DATED 05-09-16

LEGEND:

- HMA PAVEMENT
- HMA OR CONCRETE PAVEMENT
- CONCRETE PAVEMENT

ABBREVIATIONS:

TE TAPERED EDGE
TT TOTAL THICKNESS OF TE
HW HINGE WIDTH, DISTANCE FROM ES OR EP TO HP

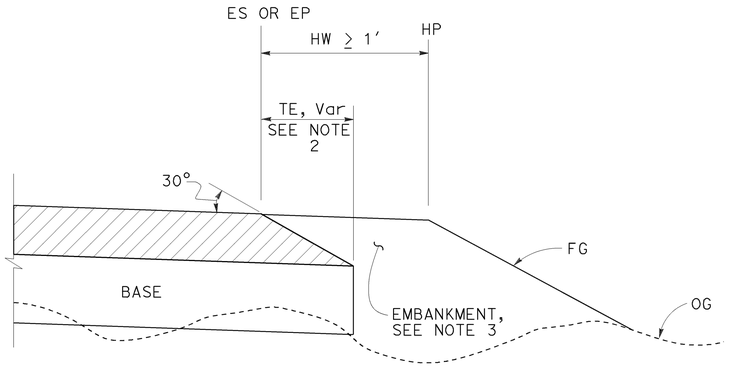

CASE K
Tapered Edge - Fill Section, HW ≥ 1′

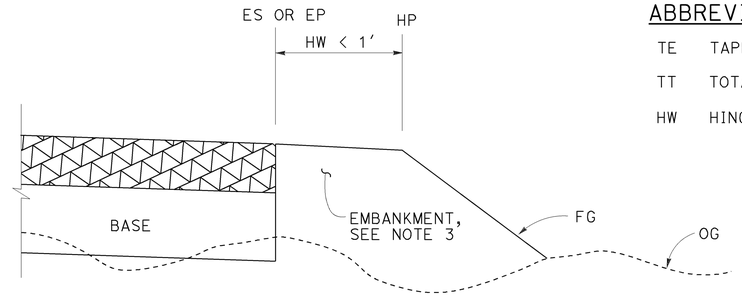

CASE L
Vertical Edge - Fill Section, HW < 1′

FILL SECTION

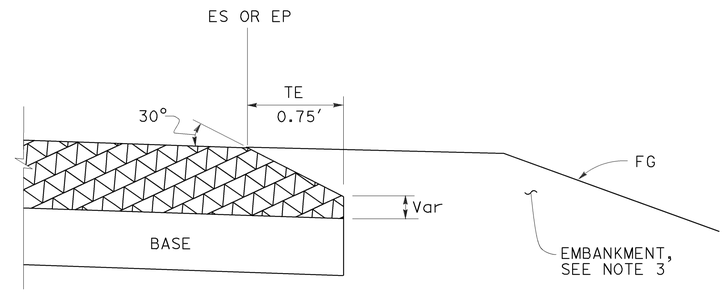

DETAIL "B"
For HMA pavement thickness more than 0.43′ or concrete pavement

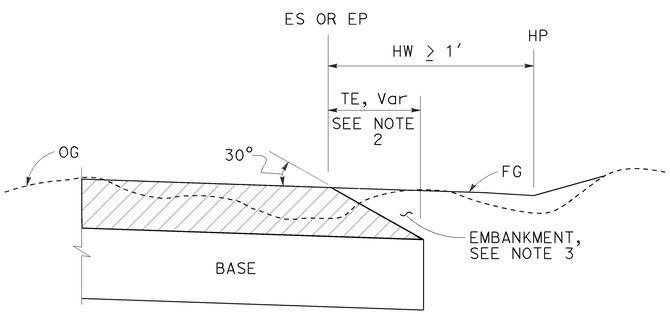

CASE M
Tapered Edge - Cut Section, HW ≥ 1′

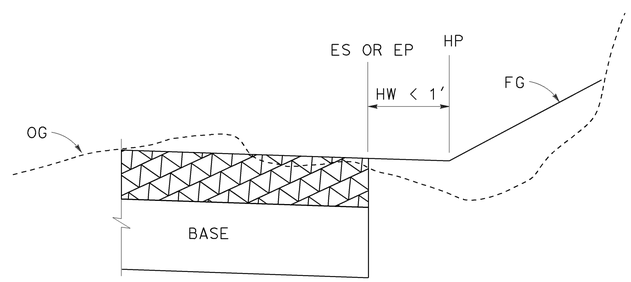

CASE N
Vertical Edge - Cut Section, HW < 1′

CUT SECTION

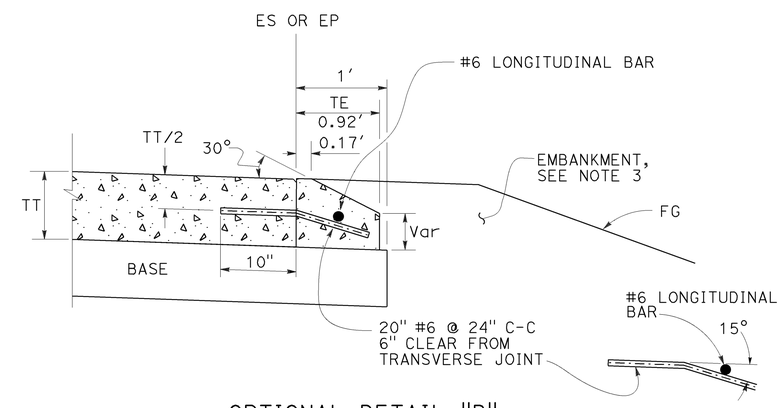

OPTIONAL DETAIL "B"
For concrete pavement
See Note 4

NOTES:

1. For limits of tapered edge and vertical edge treatments, see Revised Standard Plan RSP P74
2. Details shown for HMA pavement thickness less than 0.43′. See Detail "B" for HMA pavement thickness more than 0.43′ or concrete pavement.
3. For locations and limits of embankment see project plans.
4. Tapered edge transverse joint must match pavement transverse joint. End of #6 longitudinal bar must be 2" ±½" clear from transverse joint.
5. Tapered edge is not needed in the area of MGS, barrier, right turn lane and acceleration lane. See Revised Standard Plan RSP P74.

STATE OF CALIFORNIA
DEPARTMENT OF TRANSPORTATION

PAVEMENT EDGE TREATMENTS-NEW CONSTRUCTION

NO SCALE

RSP P76 DATED OCTOBER 30, 2015 SUPERSEDES RSP P76 DATED NOVEMBER 15, 2013 AND RSP P76 DATED JANUARY 20, 2012 THAT SUPPLEMENTS THE STANDARD PLANS BOOK DATED 2010.

REVISED STANDARD PLAN RSP P76

2010 REVISED STANDARD PLAN RSP P76

7-2-15

TO ACCOMPANY PLANS DATED 05-09-16

Dist	COUNTY	ROUTE	POST MILES TOTAL PROJECT	SHEET No.	TOTAL SHEETS
11	SD	94	59.6/60.2	66	78

REGISTERED CIVIL ENGINEER

October 19, 2012
PLANS APPROVAL DATE

REGISTERED PROFESSIONAL ENGINEER Glenn DeCou No. C34547 Exp. 9-30-13 CIVIL STATE OF CALIFORNIA

THE STATE OF CALIFORNIA OR ITS OFFICERS OR AGENTS SHALL NOT BE RESPONSIBLE FOR THE ACCURACY OR COMPLETENESS OF SCANNED COPIES OF THIS PLAN SHEET.

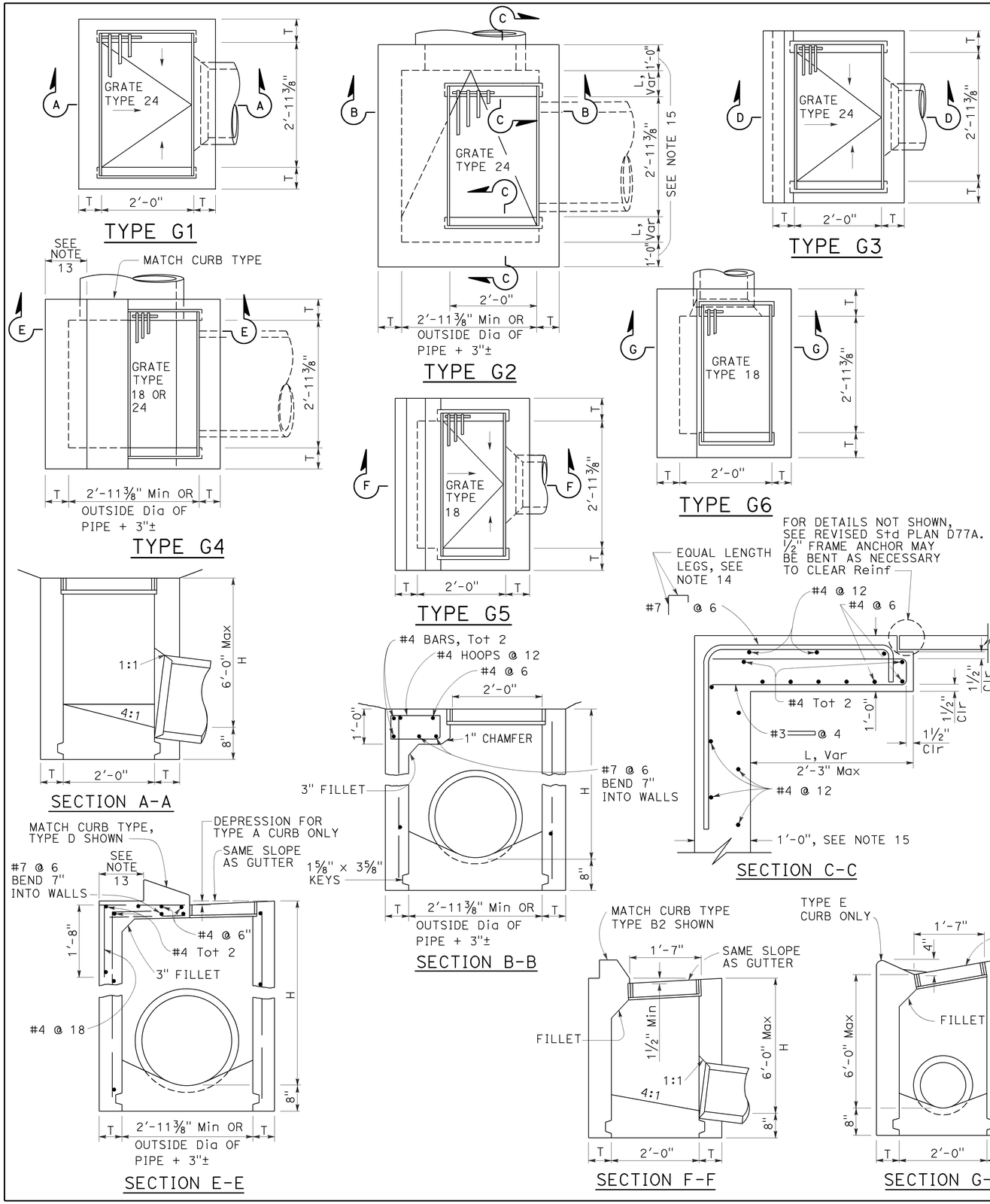

NOTES:

1. "H" is the difference in elevation between the outlet pipe flow line and the normal gutter grade line undepressed.
2. For "T" wall thickness, see Table A below.
3. Wall reinforcing not required when "H" is 8'-0" or less and the unsupported width or length is 7'-0" or less. Walls exceeding these limits shall be reinforced with #4 bars @ 1'-6" ± centers placed 1½" clear to inside of box unless otherwise shown.
4. Inlet bottom reinforcing not required. See Standard Plan D74C for alternative reinforced bottom and alternative half round bottom.
5. Steps-None required where "H" is less than 2'-6". Where "H" is 2'-6" or more, install steps with lowest rung 1'-0" above the floor and highest rung not more than 6" below top of inlet. The distance between steps shall not exceed 1'-0" and shall be uniform throughout the length of the wall. Place steps in the wall without an opening. Steps inserts may be substituted for the bar steps. Step inserts shall comply with State Industrial Safety requirements. See Standard Plan D74C for step details.
6. Details shown apply to both metal and concrete pipe.
7. Pipe(s) can be placed in any wall.
8. Curb section shall match adjacent curb.
9. Basin floors shall have wood trowel finish and a minimum slope of 12:3 from all directions toward outlet pipe.
10. Set inlet so that grate bars are parallel to direction of principal surface flow.
11. See Revised Standard Plans D77A and D77B for grate and frame details and weights of miscellaneous iron and steel.
12. See Standard Plan D78A for gutter depression details.
13. This dimenison will vary with different grates, curbs types, box width and wall thickness.
14. Bar may be rotated as necessary to clear opening. Where "L" is 6" or less, bar may be omitted.
15. Where "L" is 6" or less, wall thickness shall be as shown in Table A.
16. Cast-in-place inlets to be formed around all pipes/stubs intersecting the inlet, and concrete poured in one continuous operation. Precast inlets shall have mortared connections conforming to details for Type GCP Inlet shown on Standard Plan D75B. See Standard Specifications for mortar composition.

TABLE A

CONCRETE QUANTITIES				
TYPE	H=3'-0" TO 8'-0" (T=6")		H=8'-1" TO 20'-0" (T=8")	
	H=3'-0" (CY)	ADDITIONAL PCC PER FOOT (CY)	H=8'-1" (CY)	ADDITIONAL PCC PER FOOT (CY)
G-1	0.95	0.220	See Note A	SEE NOTE A
G-2*	1.31	0.255	3.50	0.357
G-3	1.03	0.220	See Note A	SEE NOTE A
G-4* (TYPE 24)	1.27	0.255	3.48	0.357
G-4* (TYPE 18)	1.30	0.255	3.50	0.357
G-5	1.02	0.220	SEE NOTE A	SEE NOTE A
G-6	1.04	0.220	SEE NOTE A	SEE NOTE A

TABLE BASED ON 8" FLOOR SLAB. NO DEDUCTIONS ARE TO BE MADE TO THESE QUANTITIES BECAUSE OF PIPE OPENINGS, DIFFERENT FLOOR ALTERNATIVES OR DIFFERENT CURB TYPES. * QUANTITIES FOR TYPE G-2 AND G-4 INLETS BASED ON THE MINIMUM INTERIOR DIMENSIONS.

NOTE A:

Maximum allowable height 6'-0".

STATE OF CALIFORNIA
DEPARTMENT OF TRANSPORTATION

DRAINAGE INLETS

NO SCALE

RSP D73 DATED OCTOBER 19, 2012 SUPERSEDES STANDARD PLAN D73 DATED MAY 20, 2011 - PAGE 156 OF THE STANDARD PLANS BOOK DATED 2010.

REVISED STANDARD PLAN RSP D73

2010 REVISED STANDARD PLAN RSP D73

7-19-12

Dist	COUNTY	ROUTE	POST MILES TOTAL PROJECT	SHEET No.	TOTAL SHEETS
11	SD	94	59.6/60.2	67	78

Raymond Don Tsztoo
REGISTERED CIVIL ENGINEER

April 19, 2013
PLANS APPROVAL DATE

REGISTERED PROFESSIONAL ENGINEER Raymond Don Tsztoo No. C37332 Exp. 6-30-14 CIVIL STATE OF CALIFORNIA

THE STATE OF CALIFORNIA OR ITS OFFICERS OR AGENTS SHALL NOT BE RESPONSIBLE FOR THE ACCURACY OR COMPLETENESS OF SCANNED COPIES OF THIS PLAN SHEET.

TO ACCOMPANY PLANS DATED 05-09-16

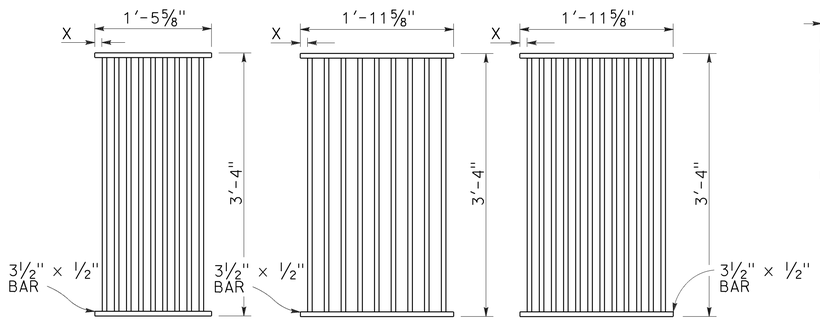

TYPE 18-9

1⅜" Clear spacing. Use within the roadbed on highways where bicycles and pedestrians are excluded.

TYPE 24-9

2" Clear spacing. Use in locations off the roadbed on all types of highways.

TYPE 24-12

1⅜" Clear spacing. Use within the roadbed on highways where bicycles and pedestrians are excluded.

RECTANGULAR GRATE DETAILS

(See table below)

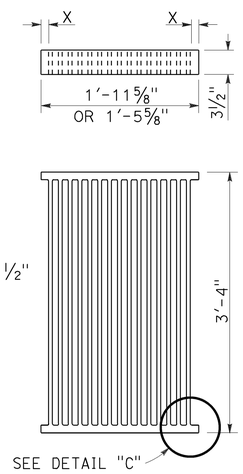

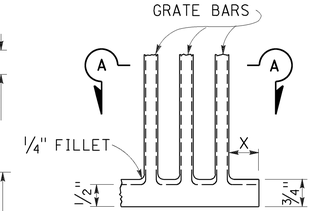

DETAIL "C"

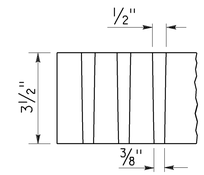

SECTION A-A

ALTERNATIVE CAST DUCTILE IRON GRATE OR CAST CARBON STEEL GRATE

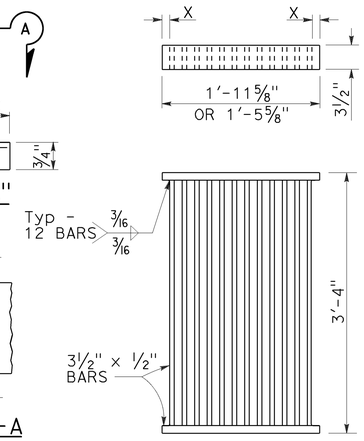

ALTERNATIVE WELDED GRATE

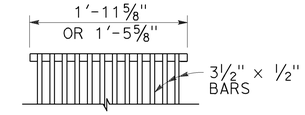

CAST END BLOCK

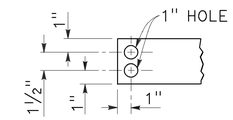

END OF BAR

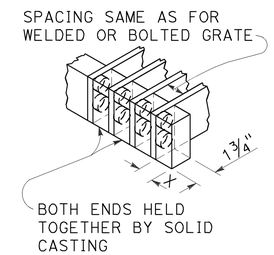

ALTERNATIVE CAST DUCTILE IRON OR CAST CARBON STEEL END BLOCK GRATE

NOTES:

1. Grate type numbers refer to approximate width of grate in inches and number of bars, respectively.
2. Contractor has the option of using cast ductile iron, cast carbon steel, welded, bolted, or cast end block grate.
3. Rounded top of bars optional on all grates.
4. Pipe inlets with a grate shall be placed so that bars parallel direction of principle surface flow.
5. Complete joint penetration butt welds may be substituted for the fillet welds on all anchors.
6. Standard square, hexagon, round or equivalent headed anchors may be substituted for the right angle hooks on the anchors shown on this plan.
7. Grate and frame weights are based on welded grates (weights of face angles, steps, protection bars, etc. are not included).
8. Connect chain to grate and frame only at locations shown on the plans. When chain is required, do not use cast ductile iron grates.

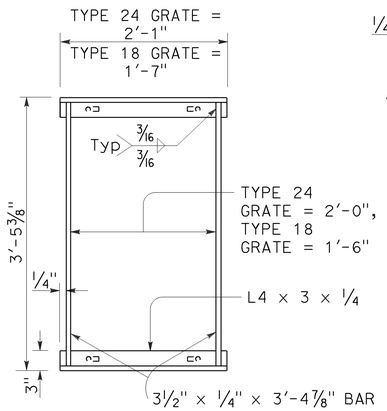

TYPICAL FRAME

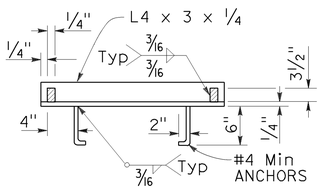

CROSS SECTION

(Thru frame)

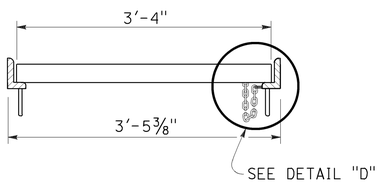

LONGITUDINAL SECTION

(Thru frame and grate)

RECTANGULAR FRAME DETAILS

(For all rectangular grates)

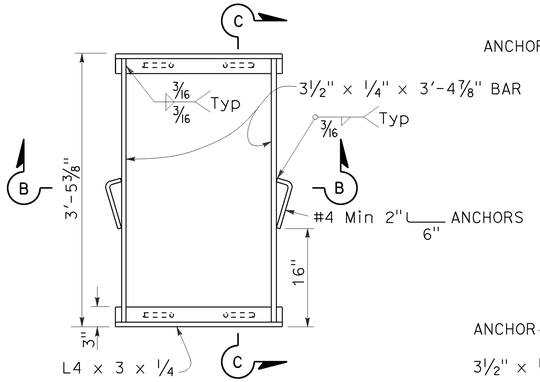

TYPICAL FRAME

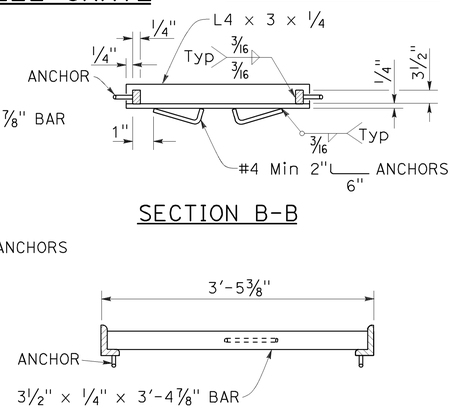

SECTION B-B

SECTION C-C

ALTERNATIVE ANCHOR FOR RECTANGULAR FRAME

(For details not shown, See Rectangular Frame Details)

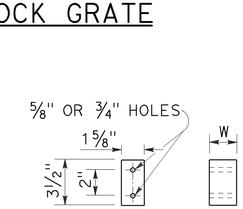

BAR SPACER

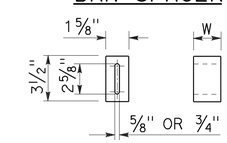

ALTERNATIVE SPACER

W = 1⅜" or 2"

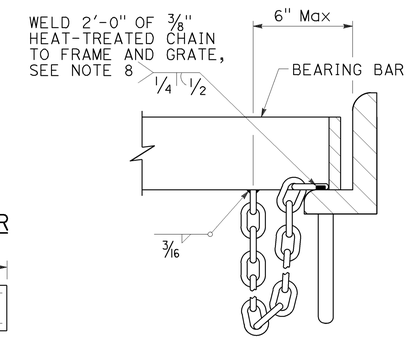

DETAIL "D"

(Steel grates only)

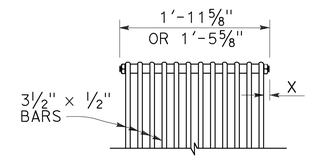

BOLTED END BLOCK

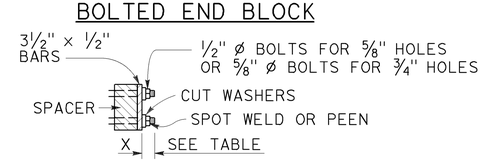

BOLTING DETAIL

ALTERNATIVE BOLTED GRATE

GRATE BAR SPACING TABLE

TYPE	No. OF BARS	CLEAR BAR SPACING	X
18-9	9	1⅜"	1 1/16"
24-9	9	2"	1 9/16"
24-12	12	1⅜"	1¼"

INLET TYPE	COVER TYPE	WEIGHT LB
OS	PLATE	174
OL-7	PLATE	170
OL-10	PLATE	170
OL-14	PLATE	170
OL-21	PLATE	170
OCP	PLATE	112
OCPI	PLATE	112
OCPI	REDWOOD	42
OMP	PLATE	177
OMPI	PLATE	177

INLET TYPE	GRATE TYPE	No. OF GRATES	WEIGHT LB
GDO	24-12	2	634
GOL-7	24-12	1	326
GOL-10	24-12	1	326
GO,G1,G2,G3,G4 (TYPE 24)	24-9	1	263
	24-12	1	326
G4 (TYPE 18),G5,G6	18-9	1	249
GT1	18-9	2	498
GT2	18-9	2	498
GT3	24-12	2	652
GT4	24-12	2	652
TRASH RACK			22
GRATE CHAIN			3

BASIS FOR Misc IRON & STEEL FINAL PAY WEIGHTS FOR DRAINAGE INLETS

(See Note 7)

STATE OF CALIFORNIA
DEPARTMENT OF TRANSPORTATION

GRATE DETAILS No. 1

NO SCALE

RSP D77A DATED APRIL 19, 2013 SUPERSEDES RSP D77A DATED JULY 20, 2012 AND STANDARD PLAN D77A DATED MAY 20, 2011 - PAGE 164 OF THE STANDARD PLANS BOOK DATED 2010.

REVISED STANDARD PLAN RSP D77A

2010 REVISED STANDARD PLAN RSP D77A

4-4-13

Dist	COUNTY	ROUTE	POST MILES TOTAL PROJECT	SHEET No.	TOTAL SHEETS
11	SD	94	59.6/60.2	68	78

Raymond Don Tsztoo
REGISTERED CIVIL ENGINEER

April 19, 2013
PLANS APPROVAL DATE

REGISTERED PROFESSIONAL ENGINEER Raymond Don Tsztoo No. C37332 Exp. 6-30-14 CIVIL STATE OF CALIFORNIA

THE STATE OF CALIFORNIA OR ITS OFFICERS OR AGENTS SHALL NOT BE RESPONSIBLE FOR THE ACCURACY OR COMPLETENESS OF SCANNED COPIES OF THIS PLAN SHEET.

TO ACCOMPANY PLANS DATED 05-09-16

2010 REVISED STANDARD PLAN RSP D77B

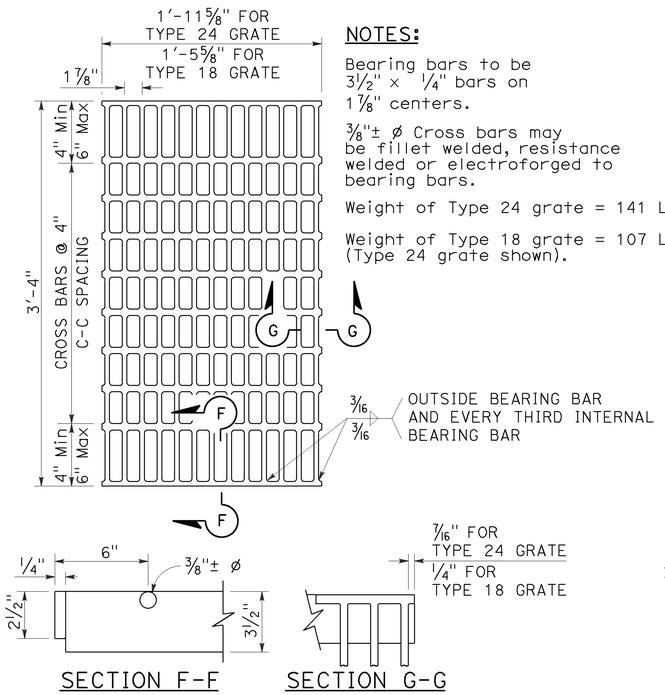

NOTES:

Bearing bars to be 3½" × ¼" bars on 1⅞" centers.

⅜"± ø Cross bars may be fillet welded, resistance welded or electroforged to bearing bars.

Weight of Type 24 grate = 141 LBS.

Weight of Type 18 grate = 107 LBS. (Type 24 grate shown).

TYPE 18-10 AND 24-13 GRATE

(Welded Steel)

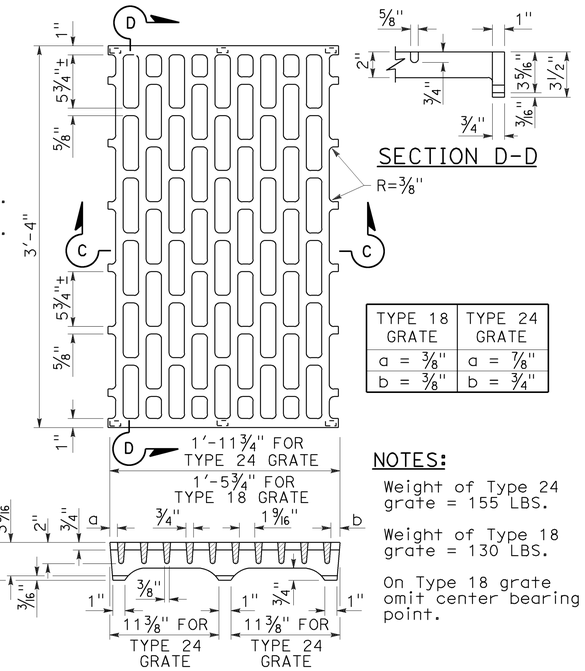

TYPE 18 GRATE	TYPE 24 GRATE
a = ⅜"	a = ⅞"
b = ⅜"	b = ¾"

NOTES:

Weight of Type 24 grate = 155 LBS.

Weight of Type 18 grate = 130 LBS.

On Type 18 grate omit center bearing point.

TYPE 18-8C AND 24-10C GRATE

(Cast ductile iron)

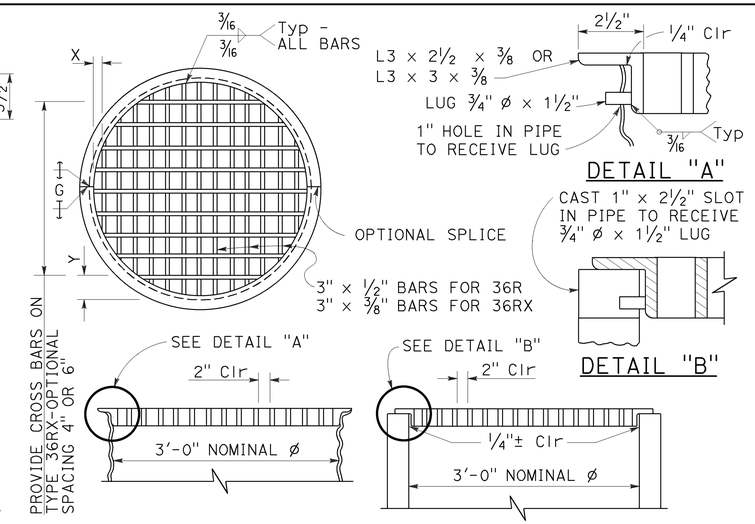

TYPE 36R AND 36RX GRATE DETAILS

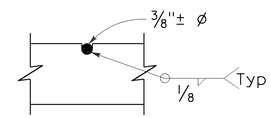

⅜"± ø Cross bars may be fillet welded, resistance welded or electroforged to bearing bars.

CROSS BAR DETAIL TYPE 36RX GRATE (WELDED STEEL)

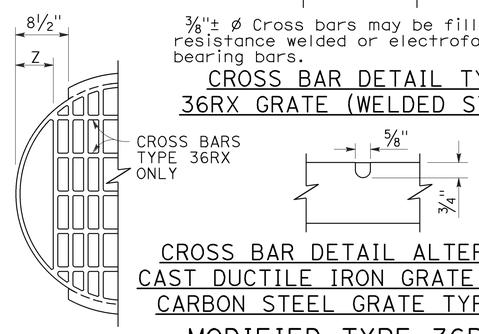

CROSS BAR DETAIL ALTERNATIVE CAST DUCTILE IRON GRATE OR CAST CARBON STEEL GRATE TYPE 36RX

MODIFIED TYPE 36R AND 36RX GRATE FOR ODI INLET

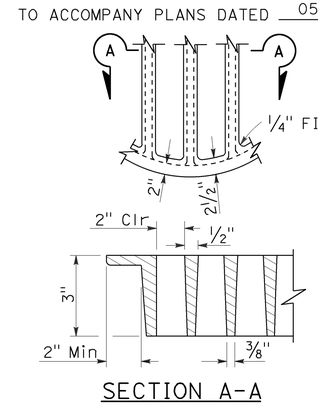

SECTION A-A

ALTERNATIVE CAST DUCTILE IRON GRATE OR CAST CARBON STEEL GRATE TYPE 36R AND 36RX

BASIS FOR Misc IRON AND STEEL FINAL PAY WEIGHTS FOR DRAINAGE INLETS

INLET TYPE	GRATE TYPE	No. OF GRATES	WEIGHT LB
GDO (SEE NOTE 4)	24-10C	2	391
	24-10S	2	456
	24-12X	2	473
	24-13	2	374
GO,GOL,G1,G2, G3,G4 (TYPE 24)	24-10C	1	202
	24-10S	1	229
	24-12X	1	239
	24-13	1	188
G4 (TYPE 18) G5,G6	18-8S	1	187
	18-9X	1	187
	18-10	1	149
GT1,GT2	18-8S	2	374
	18-9X	2	374
	18-10	2	298
GT3,GT4	24-10C	2	404
	24-10S	2	458
	24-12X	2	478
	24-13	2	376
ODI	36RX (Mod)	1	196
GMP,GCP,GCPI	36RX	1	215
ODI	36R (Mod)	1	220
GMP,GCP,GCPI	36R	1	236
TRASH RACK			22
GRATE CHAIN			3

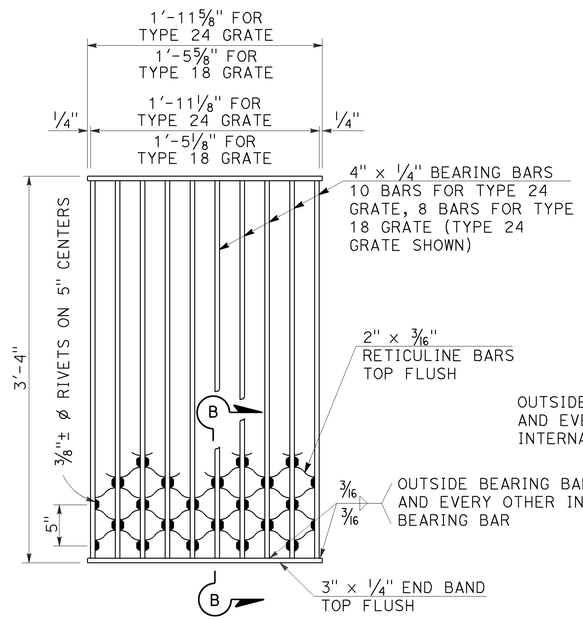

NOTES:

Weight of Type 24 grate = 182 LBS.
Weight of Type 18 grate = 145 LBS.

TYPE 18-8S AND 24-10S GRATE

(Welded Steel) Reticuline type

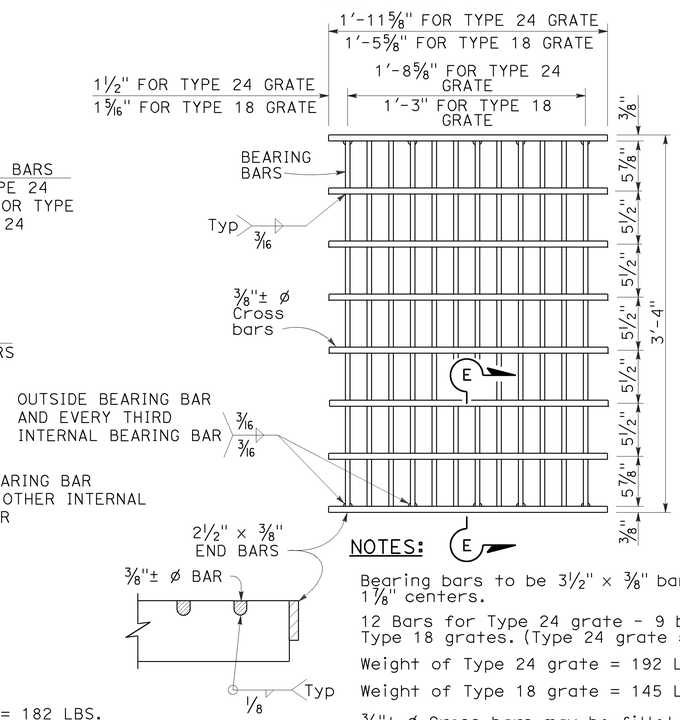

NOTES:

Bearing bars to be 3½" × ⅜" bars on 1⅞" centers.

12 Bars for Type 24 grate - 9 bars for Type 18 grates. (Type 24 grate shown).

Weight of Type 24 grate = 192 LBS.

Weight of Type 18 grate = 145 LBS.

⅜"± ø Cross bars may be fillet welded, resistance welded or electroforged to bearing bars.

TYPE 18-9X AND 24-12X GRATE

(Welded Steel)

NOTES:

1. When alternative grates are allowed - Final pay based on alternative with the lesser weight.
2. Use frame shown on Standard Plan D74A, D74B or RSP D77A as appropriate.
3. When Type 24-10S, 24-12X or 24-13 grates are used with GDO Inlets, a ¼" × 3½" × 3'-4⅞" steel bar shall be welded across the center of inlet frame to separate the individual grates.
4. See Revised Standard Plan RSP D77A for connecting chain to welded grate and frame. When chain is required, do not use cast ductile iron grate.

GRATE BAR SPACING TABLE

TYPE	No. OF BARS	CLEAR BAR SPACING	X	Y 4" SPACING	Y 6" SPACING	Z
36R	13	2"	2⅛"	-	-	-
36RX (STEEL)	15	2"	9/16"	3¾"	5¾"	-
36RX (CAST)	13	2"	2⅛"	3¾"	5¾"	-
36R Mod	12	2"	2⅛"	-	-	5"
36RX Mod (STEEL)	13	2"	9/16"	3¾"	5¾"	5 11/16"
36RX Mod (CAST)	12	2"	2⅛"	3¾"	5¾"	5"

STATE OF CALIFORNIA
DEPARTMENT OF TRANSPORTATION

GRATE DETAILS No. 2

NO SCALE

RSP D77B DATED APRIL 19, 2013 SUPERSEDES RSP D77B DATED JULY 20, 2012 AND STANDARD PLAN D77B DATED MAY 20, 2011 - PAGE 165 OF THE STANDARD PLANS BOOK DATED 2010.

REVISED STANDARD PLAN RSP D77B

4-4-13

Dist	COUNTY	ROUTE	POST MILES TOTAL PROJECT	SHEET No.	TOTAL SHEETS
11	SD	94	59.6/60.2	69	78

Gregory A. Balzer
LICENSED LANDSCAPE ARCHITECT

July 19, 2013
PLANS APPROVAL DATE

THE STATE OF CALIFORNIA OR ITS OFFICERS OR AGENTS SHALL NOT BE RESPONSIBLE FOR THE ACCURACY OR COMPLETENESS OF SCANNED COPIES OF THIS PLAN SHEET.

LICENSED LANDSCAPE ARCHITECT — Gregory A. Balzer 2576 — 02-28-15 Renewal Date — 7-19-13 Date — STATE OF CALIFORNIA

TO ACCOMPANY PLANS DATED 05-09-16

A

AB	AGGREGATE BASE
ABS	ACRYLONITRILE-BUTADIENE-STYRENE
AC	ASPHALT CONCRETE
ACC	ARMOR-CLAD CONDUCTORS
Adj	ADJACENT/ADJUSTABLE
AIC	AUXILIARY IRRIGATION CONTROLLER
Alt	ALTERNATIVE
AMEND	AMENDMENT
ARV	AIR RELEASE VALVE
AUTO	AUTOMATIC
AUX	AUXILIARY
AVB	ATMOSPHERIC VACUUM BREAKER

B

B&B	BALLED AND BURLAPPED
B/B	BRASS/BRONZE
B/B/PL	BRASS/BRONZE/PLASTIC
B/PL	BRASS/PLASTIC
BFM	BONDED FIBER MATRIX
Bit Ctd	BITUMINOUS COATED
BP	BOOSTER PUMP
BPA	BACKFLOW PREVENTER ASSEMBLY
BPE	BACKFLOW PREVENTER ENCLOSURE
BV	BALL VALVE

C

C	CONDUIT
CAP	CORRUGATED ALUMINUM PIPE
CARV	COMBINATION AIR RELEASE VALVE
CB	COUPLING BAND
CCA	CAM COUPLER ASSEMBLY
CEC	CONTROLLER ENCLOSURE CABINET
CHDPE	CORRUGATED HIGH DENSITY POLYETHYLENE
CL	CHAIN LINK
CNC	CONTROL AND NEUTRAL CONDUCTORS
Conc	CONCRETE
CP	COPPER PIPE
CS	COMPOST SOCK
CSP	CORRUGATED STEEL PIPE
CST	CENTER STRIP
CV	CHECK VALVE

D

Dia	DIAMETER
DIP	DUCTILE IRON PIPE
DIT	DRIP IRRIGATION TUBING
DG	DECOMPOSED GRANITE
DN	DIAMETER NOMINAL
DVA	DRIP VALVE ASSEMBLY

E

EC	EROSION CONTROL
ECTC	EROSION CONTROL TECHNOLOGY COUNCIL
Elect	ELECTRIC/ELECTRICAL
Elev	ELEVATION
ELL	ELBOW
ENCL	ENCLOSURE
EP	EDGE OF PAVEMENT
ES	EDGE OF SHOULDER
EST	END STRIP
ESTB	ESTABLISHMENT
ETW	EDGE OF TRAVELED WAY

F

F	FULL CIRCLE
F/P	FULL/PART CIRCLE
FCV	FLOW CONTROL VALVE
FERT	FERTILIZER
FG	FINISHED GRADE
FH	FLEXIBLE HOSE
FIPT	FEMALE IRON PIPE THREAD
FIS	FERTILIZER INJECTOR SYSTEM
FL	FLOW LINE
FR	FIBER ROLL
FS	FLOW SENSOR
FSC	FLOW SENSOR CABLE
FV	FLUSH VALVE

G

Galv	GALVANIZED
GARV	GARDEN VALVE
GARVA	GARDEN VALVE ASSEMBLY
GM	GRAVEL MULCH
GPH	GALLONS PER HOUR
GPM	GALLONS PER MINUTE
GSP	GALVANIZED STEEL PIPE
GV	GATE VALVE

H

H	HALF CIRCLE
HDPE	HIGH DENSITY POLYETHYLENE
HP	HORSEPOWER/HINGE POINT
HPL	HIGH PRESSURE LINE
Hwy	HIGHWAY

I

IC	IRRIGATION CONTROLLER
ICC	IRRIGATION CONTROLLER(S) IN CONTROLLER ENCLOSURE CABINET
ID	INSIDE DIAMETER
IFS	IRRIGATION FILTRATION SYSTEM
IPS	IRON PIPE SIZE
IPT	IRON PIPE THREAD
Irr	IRRIGATION

L

L	LENGTH

M

Max	MAXIMUM
MBGR	METAL BEAM GUARD RAILING
MCV	MANUAL CONTROL VALVE
MIC	MASTER IRRIGATION CONTROLLER
Min	MINIMUM
MIPT	MALE IRON PIPE THREAD
Misc	MISCELLANEOUS
Mtl	MATERIAL
MVP	MAINTENANCE VEHICLE PULLOUT

N

NCN	NO COMMON NAME
NL	NOZZLE LINE
No.	NUMBER
NPT	NATIONAL PIPE THREAD

O

O/C	ON CENTER
OD	OUTSIDE DIAMETER
OL	OVERLAP

P

P	PART CIRCLE
PB	PULL BOX
PCC	PORTLAND CEMENT CONCRETE
PE	POLYETHYLENE
Pkt	PACKET
PL	PLASTIC
PLS	PURE LIVE SEED
PLT	PLANT/PLANTING
PLT ESTB	PLANT ESTABLISHMENT
PM	POST MILE
PR	PRESSURE RATED
PRLV	PRESSURE RELIEF VALVE
PRV	PRESSURE REGULATING VALVE
PVC	POLYVINYL CHLORIDE
Pvmt	PAVEMENT

Q

Q	QUARTER CIRCLE
QCV	QUICK COUPLING VALVE

R

R	RADIUS
RCP	REINFORCED CONCRETE PIPE
RCV	REMOTE CONTROL VALVE
RCVM	REMOTE CONTROL VALVE (MASTER)
RCVMF	REMOTE CONTROL VALVE (MASTER) W/FLOW SENSOR
RCVP	REMOTE CONTROL VALVE W/PRESSURE REGULATOR
RCW	RECYCLED WATER
RECP	ROLLED EROSION CONTROL PRODUCT
REQ	REQUIRED
RICS	REMOTE IRRIGATION CONTROL SYSTEM
R/W	RIGHT OF WAY

S

S	SLIP
SCH	SCHEDULE
SF	STATE-FURNISHED
Shld	SHOULDER
Sq	SQUARE
SST	SIDE STRIP
Sta	STATION
Std	STANDARD
SW	SIDEWALK/SOUND WALL

T

T	THIRD CIRCLE/THREAD
TLS	TRUCK LOADING STANDPIPE
TQ	THREE QUARTER CIRCLE
TRM	TURF REINFORCEMENT MAT
TT	TWO-THIRDS CIRCLE
TWSA	TREE WELL SPRINKLER ASSEMBLY
Typ	TYPICAL

U

UG	UNDERGROUND

W

W	WIDTH
W/	WITH
WM	WATER METER
WS	WYE STRAINER
WSA	WYE STRAINER ASSEMBLY
WSP	WELDED STEEL PIPE
WWM	WELDED WIRE MESH

NOTE:

For additional abbreviations, see Standard Plans A10A and A10B.

STATE OF CALIFORNIA
DEPARTMENT OF TRANSPORTATION

LANDSCAPE AND EROSION CONTROL ABBREVIATIONS

NO SCALE

RSP H1 DATED JULY 19, 2013 SUPERSEDES STANDARD PLAN H1 DATED MAY 20, 2011 - PAGE 218 OF THE STANDARD PLANS BOOK DATED 2010.

REVISED STANDARD PLAN RSP H1

2010 REVISED STANDARD PLAN RSP H1

Dist	COUNTY	ROUTE	POST MILES TOTAL PROJECT	SHEET No.	TOTAL SHEETS
11	SD	94	59.6/60.2	70	78

LICENSED LANDSCAPE ARCHITECT

November 15, 2013
PLANS APPROVAL DATE

LICENSED LANDSCAPE ARCHITECT Gregory A. Balzer 2576 STATE OF CALIFORNIA
02-28-15 (Renewal) Date
11-15-13 Date

THE STATE OF CALIFORNIA OR ITS OFFICERS OR AGENTS SHALL NOT BE RESPONSIBLE FOR THE ACCURACY OR COMPLETENESS OF SCANNED COPIES OF THIS PLAN SHEET.

TO ACCOMPANY PLANS DATED 05-09-16

EXISTING	NEW	ITEM DESCRIPTION
		WATER METER (WM)
		BACKFLOW PREVENTER ASSEMBLY (BPA)
		BACKFLOW PREVENTER ENCLOSURE (BPE)
		BOOSTER PUMP (BP)
		TRUCK LOADING STANDPIPE (TLS)
	FS	FLOW SENSOR (FS)
		MASTER IRRIGATION CONTROLLER (MIC)
		AUXILIARY IRRIGATION CONTROLLER (AIC)
		IRRIGATION CONTROLLER (IC) IRRIGATION CONTROLLER (IC) (BATTERY) IRRIGATION CONTROLLER (IC) (SOLAR) IRRIGATION CONTROLLER (IC) (TWO WIRE) IRRIGATION CONTROLLER(S) IN CONTROLLER ENCLOSURE CABINET (ICC)
acc	ACC	ARMOR-CLAD CONDUCTORS (ACC)
cnc	CNC	CONTROL AND NEUTRAL CONDUCTORS (CNC)
		IRRIGATION CONDUIT
		EXTEND IRRIGATION CONDUIT
dip	DIP	DUCTILE IRON PIPE (SUPPLY LINE) (MAIN) (DIP)
		GALVANIZED STEEL PIPE (SUPPLY LINE) (MAIN) (GSP)
		GALVANIZED STEEL PIPE (SUPPLY LINE) (LATERAL) (GSP)
		PLASTIC PIPE (SUPPLY LINE) (MAIN)
		PLASTIC PIPE (SUPPLY LINE) (LATERAL)
cp	CP	COPPER PIPE (SUPPLY LINE)
dit	DIT	DRIP IRRIGATION TUBING
		REMOTE CONTROL VALVE (RCV) REMOTE CONTROL VALVE (MASTER) (RCVM) REMOTE CONTROL VALVE (MASTER) W/FLOW METER (RCVMF)
P	P	REMOTE CONTROL VALVE W/PRESSURE REGULATOR (RCVP)
		EXISTING MANUAL CONTROL VALVE (MCV)
V	V	DRIP VALVE ASSEMBLY (DVA)
Y	Y	WYE STRAINER ASSEMBLY (WSA)

EXISTING	NEW	ITEM DESCRIPTION
		GATE VALVE (GV)
		BALL VALVE (BV)
		QUICK COUPLING VALVE (QCV)
		CAM COUPLER ASSEMBLY (CCA)
		GARDEN VALVE ASSEMBLY (GARVA)
		PRESSURE REGULATING VALVE (PRV)
		PRESSURE RELIEF VALVE (PRLV)
		FLOW CONTROL VALVE (FCV)
		COMBINATION AIR RELEASE VALVE (CARV)
		CHECK VALVE (CV)
		FLUSH VALVE (FV)
		EXISTING NOZZLE LINE W/TURNING UNION
		EXISTING IRRIGATION SYSTEM
		EXISTING IRRIGATION SYSTEM TO BE REMOVED
		CHAIN LINK GATE
		QUICK COUPLING VALVE W/SPRINKLER PROTECTOR
3	3	SPRINKLER W/SPRINKLER PROTECTOR
	C	CONNECT TO EXISTING SYSTEM
		CAP
		CAP EXISTING
	\\\FR\\\	FIBER ROLL
	\\\CS\\\	COMPOST SOCK

RCV SIZE
IRRIGATION CONTROLLER
CONTROLLER STATION
VALVE IN PARALLEL (IF APPLICABLE)
GPM
QUANTITY OF SPRINKLERS (WHEN SHOWN)

* 2½"-A-2b-40-60

VALVE CODE

* VALVE CODES FOR EXISTING VALVES ARE SHOWN IN A DASHED ENCLOSURE.

STATE OF CALIFORNIA
DEPARTMENT OF TRANSPORTATION

LANDSCAPE AND EROSION CONTROL SYMBOLS

NO SCALE

RSP H2 DATED NOVEMBER 15, 2013 SUPERSEDES RSP H2 DATED JULY 19, 2013 AND STANDARD PLAN H2 DATED MAY 20, 2011 - PAGE 219 OF THE STANDARD PLANS BOOK DATED 2010.

REVISED STANDARD PLAN RSP H2

2010 REVISED STANDARD PLAN RSP H2

10-9-13

Dist	COUNTY	ROUTE	POST MILES TOTAL PROJECT	SHEET No.	TOTAL SHEETS
11	SD	94	59.6/60.2	71	78

Gregory A. Balzer
LICENSED LANDSCAPE ARCHITECT

July 19, 2013
PLANS APPROVAL DATE

LICENSED LANDSCAPE ARCHITECT
Gregory A. Balzer 2576
Gregory A. Balzer
Original Date
2-28-15
Renewal Date
7-19-13
Date
STATE OF CALIFORNIA

THE STATE OF CALIFORNIA OR ITS OFFICERS OR AGENTS SHALL NOT BE RESPONSIBLE FOR THE ACCURACY OR COMPLETENESS OF SCANNED COPIES OF THIS PLAN SHEET.

TO ACCOMPANY PLANS DATED 05-09-16

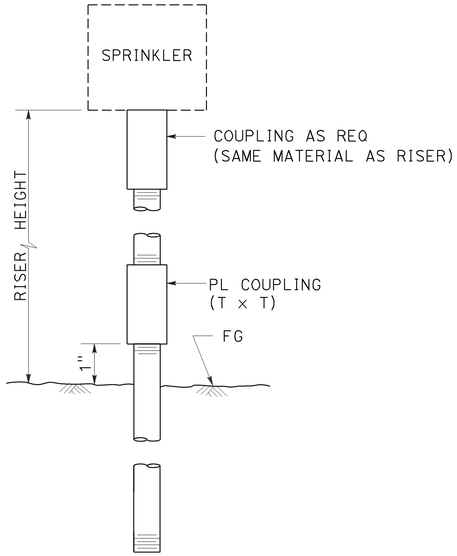

ELEVATION

RISER SPRINKLER ASSEMBLY TYPE I

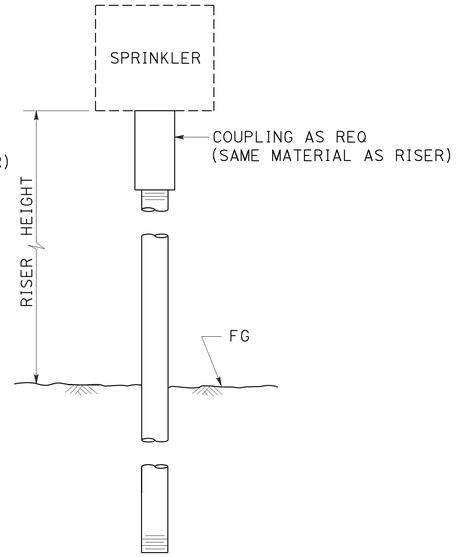

ELEVATION

RISER SPRINKLER ASSEMBLY TYPE II

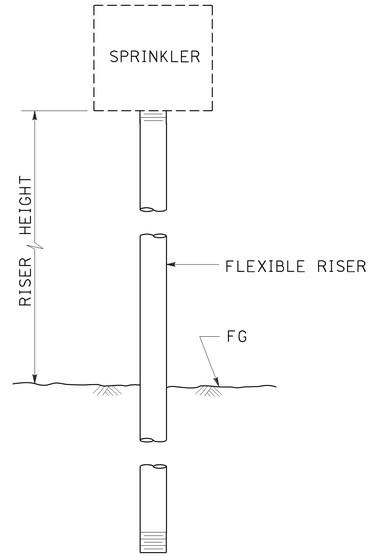

ELEVATION

RISER SPRINKLER ASSEMBLY TYPE III

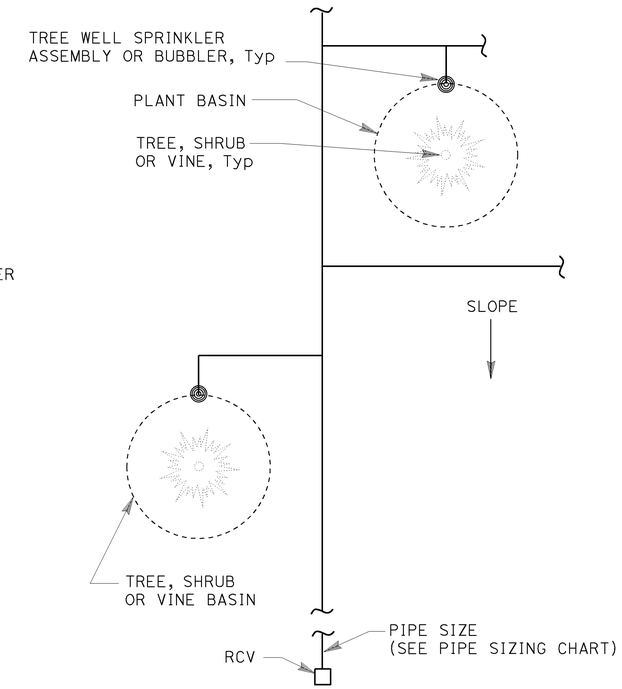

PLAN

NOTES:

1. Install tree well sprinkler assembly on up-hill side of plant when on slope.
2. Install bubbler within basin.

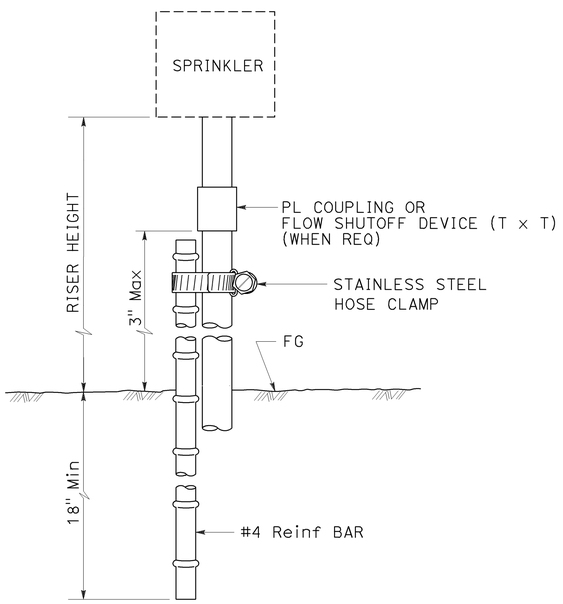

ELEVATION

RISER SPRINKLER ASSEMBLY TYPE IV

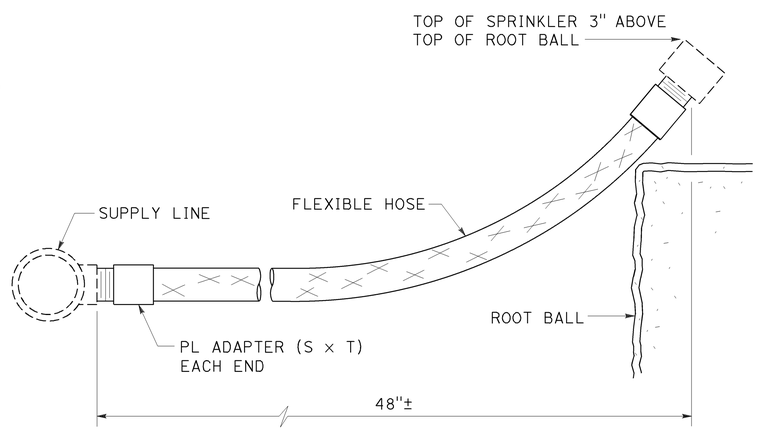

ELEVATION

RISER SPRINKLER ASSEMBLY TYPE V

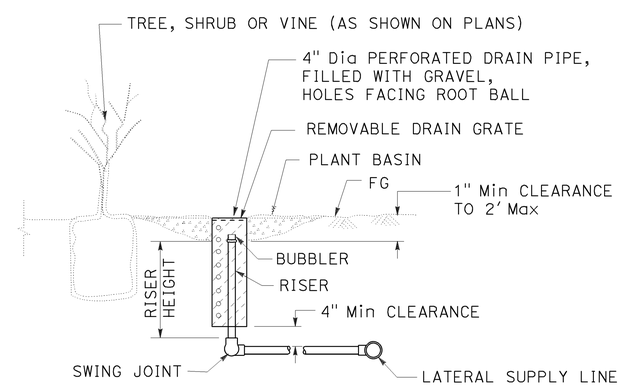

SECTION

TREE WELL SPRINKLER ASSEMBLY

STATE OF CALIFORNIA
DEPARTMENT OF TRANSPORTATION

LANDSCAPE DETAILS

NO SCALE

RSP H5 DATED JULY 19, 2013 SUPERSEDES STANDARD PLAN H5
DATED MAY 20, 2011 - PAGE 222 OF THE STANDARD PLANS BOOK DATED 2010.

REVISED STANDARD PLAN RSP H5

2010 REVISED STANDARD PLAN RSP H5

6-28-13

Dist	COUNTY	ROUTE	POST MILES TOTAL PROJECT	SHEET No.	TOTAL SHEETS
11	SD	94	59.6/60.2	72	78

Gregory A. Balzer
LICENSED LANDSCAPE ARCHITECT

July 19, 2013
PLANS APPROVAL DATE

THE STATE OF CALIFORNIA OR ITS OFFICERS OR AGENTS SHALL NOT BE RESPONSIBLE FOR THE ACCURACY OR COMPLETENESS OF SCANNED COPIES OF THIS PLAN SHEET.

LICENSED LANDSCAPE ARCHITECT
Gregory A. Balzer 2576
Gregory A. Balzer
Registration Date
2-28-15
Renewal Date
7-19-13
Date
STATE OF CALIFORNIA

TO ACCOMPANY PLANS DATED 05-09-16

2010 REVISED STANDARD PLAN RSP H6

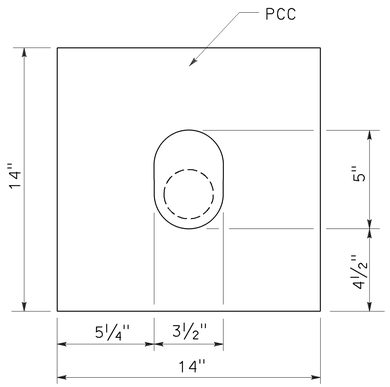

PLAN

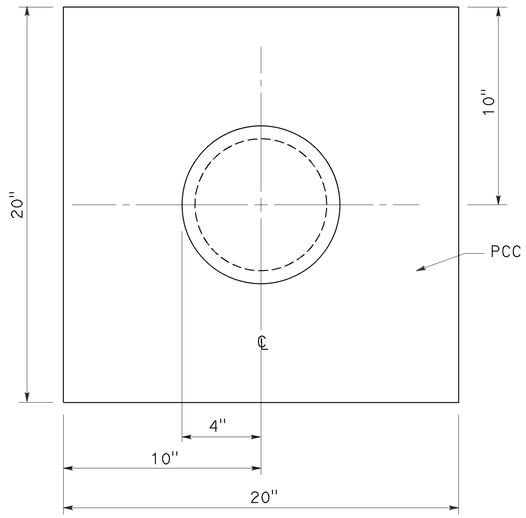

PLAN

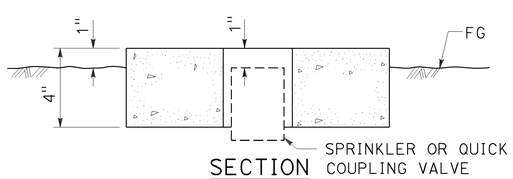

SECTION

SPRINKLER PROTECTOR TYPE I

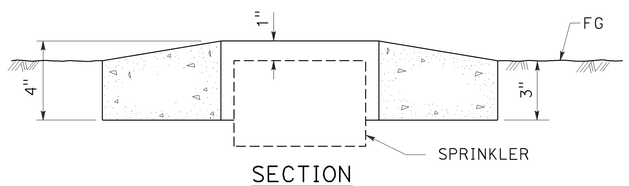

SECTION

SPRINKLER PROTECTOR TYPE II

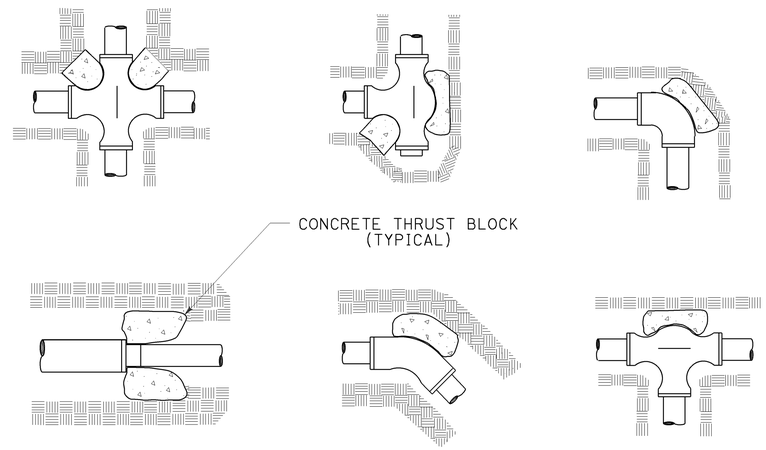

TYPICAL THRUST BLOCKS

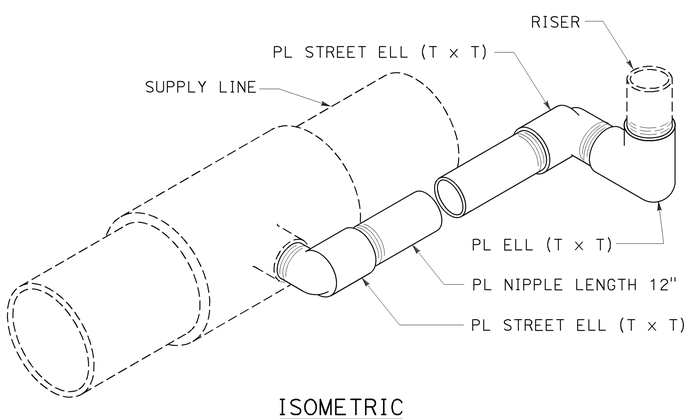

ISOMETRIC

POP-UP SPRINKLER ASSEMBLY TYPE I

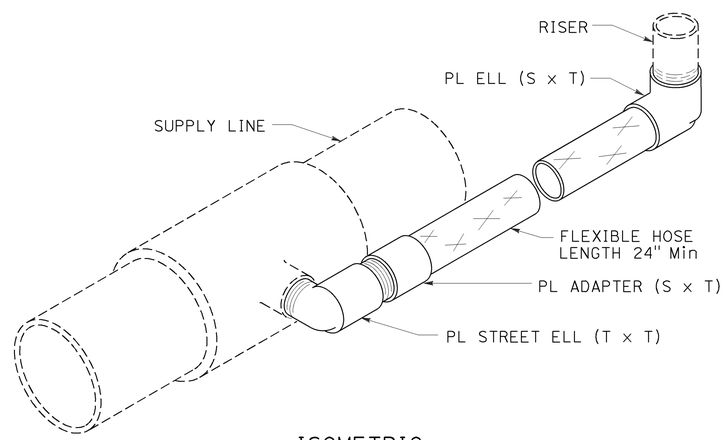

ISOMETRIC

POP-UP SPRINKLER ASSEMBLY TYPE II

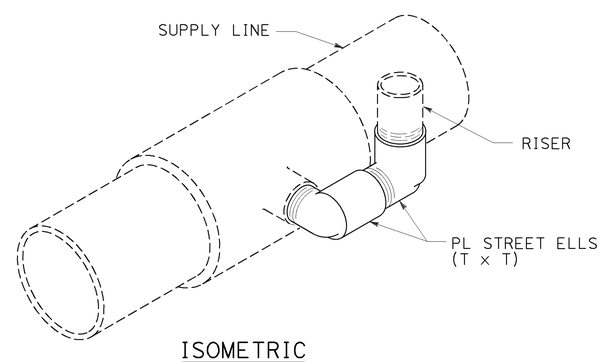

ISOMETRIC

POP-UP SPRINKLER ASSEMBLY TYPE III

STATE OF CALIFORNIA
DEPARTMENT OF TRANSPORTATION

LANDSCAPE DETAILS

NO SCALE

RSP H6 DATED JULY 19, 2013 SUPERSEDES STANDARD PLAN H6
DATED MAY 20, 2011 - PAGE 223 OF THE STANDARD PLANS BOOK DATED 2010.

REVISED STANDARD PLAN RSP H6

6-28-13

Dist	COUNTY	ROUTE	POST MILES TOTAL PROJECT	SHEET No.	TOTAL SHEETS
11	SD	94	59.6/60.2	73	78

LICENSED LANDSCAPE ARCHITECT

July 19, 2013
PLANS APPROVAL DATE

THE STATE OF CALIFORNIA OR ITS OFFICERS OR AGENTS SHALL NOT BE RESPONSIBLE FOR THE ACCURACY OR COMPLETENESS OF SCANNED COPIES OF THIS PLAN SHEET.

LICENSED LANDSCAPE ARCHITECT Gregory A. Balzer 2576 Expiration Date 2-28-15 Renewal Date 7-19-13 Date STATE OF CALIFORNIA

TO ACCOMPANY PLANS DATED 05-09-16

2010 REVISED STANDARD PLAN RSP H7

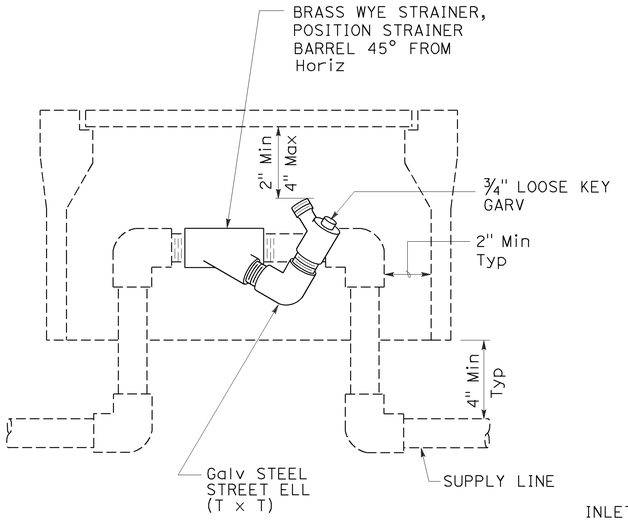

ELEVATION
WYE STRAINER ASSEMBLY

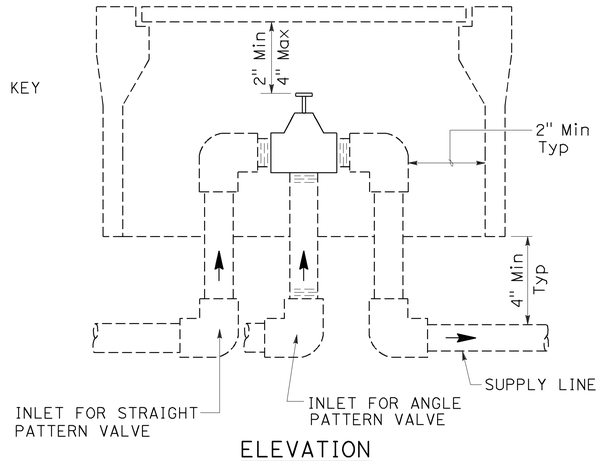

ELEVATION
VALVE

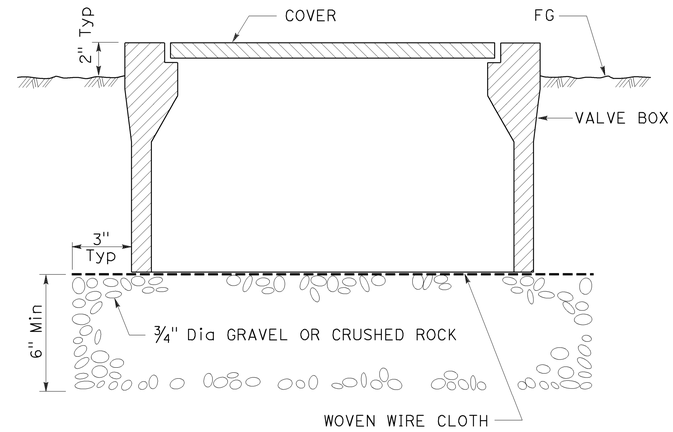

SECTION
VALVE BOX

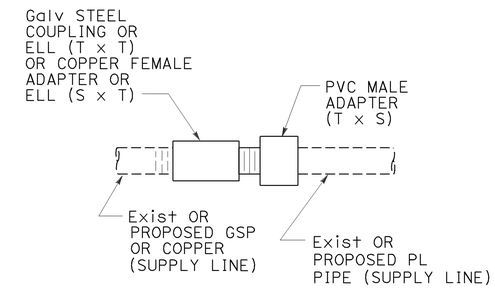

GALVANIZED OR COPPER PIPE CONNECTION TO PLASTIC PIPE

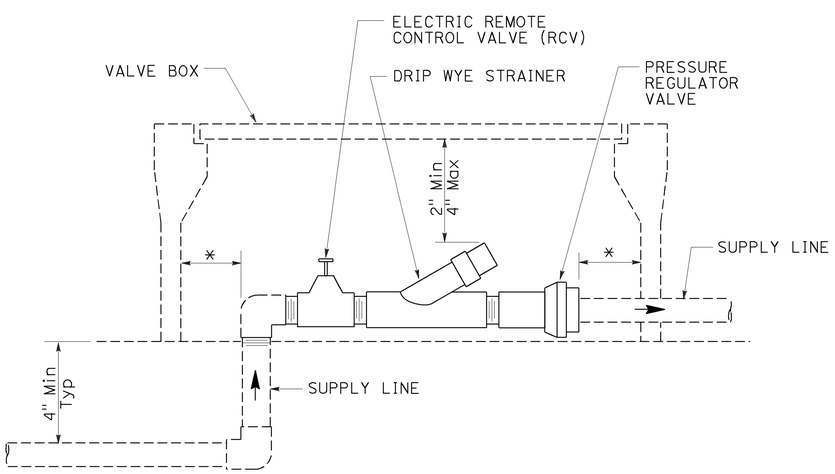

* 2" CLEARANCE ON ALL SIDES

ELEVATION
DRIP VALVE ASSEMBLY

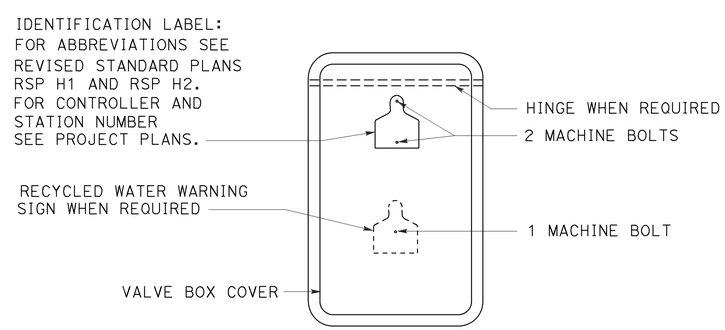

PLAN

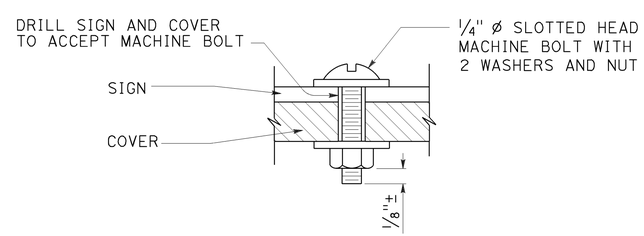

SECTION
VALVE BOX IDENTIFICATION

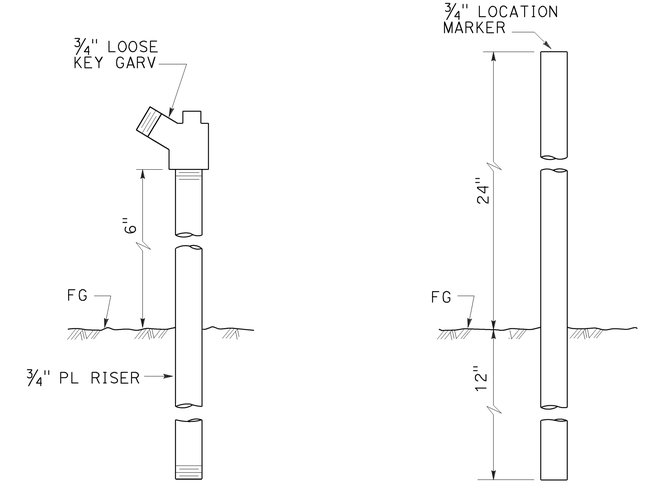

ELEVATION
GARDEN VALVE ASSEMBLY

ELEVATION
LOCATION MARKER

GARDEN VALVE ASSEMBLY

STATE OF CALIFORNIA
DEPARTMENT OF TRANSPORTATION

LANDSCAPE DETAILS

NO SCALE

RSP H7 DATED JULY 19, 2013 SUPERSEDES STANDARD PLAN H7
DATED MAY 20, 2011 - PAGE 224 OF THE STANDARD PLANS BOOK DATED 2010.

REVISED STANDARD PLAN RSP H7

6-20-13

Dist	COUNTY	ROUTE	POST MILES TOTAL PROJECT	SHEET No.	TOTAL SHEETS
11	SD	94	59.6/60.2	74	78

LICENSED LANDSCAPE ARCHITECT

April 15, 2016
PLANS APPROVAL DATE

LICENSED LANDSCAPE ARCHITECT
Michael V. Ferrara 3899
Signature
9-30-17
Renewal Date
Date
STATE OF CALIFORNIA

THE STATE OF CALIFORNIA OR ITS OFFICERS OR AGENTS SHALL NOT BE RESPONSIBLE FOR THE ACCURACY OR COMPLETENESS OF SCANNED COPIES OF THIS PLAN SHEET.

TO ACCOMPANY PLANS DATED 05-09-16

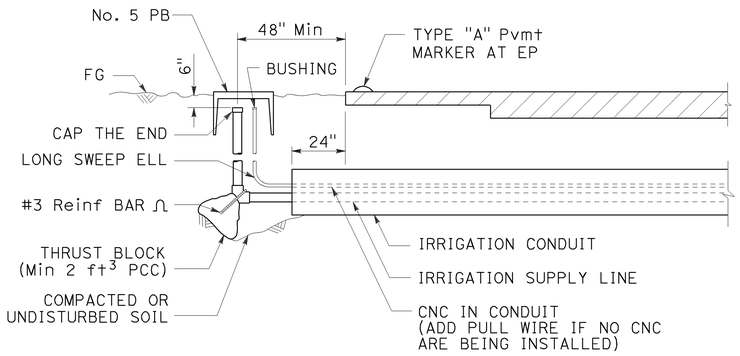

SECTION

IRRIGATION CONDUIT

UNDER TRAVELED WAY

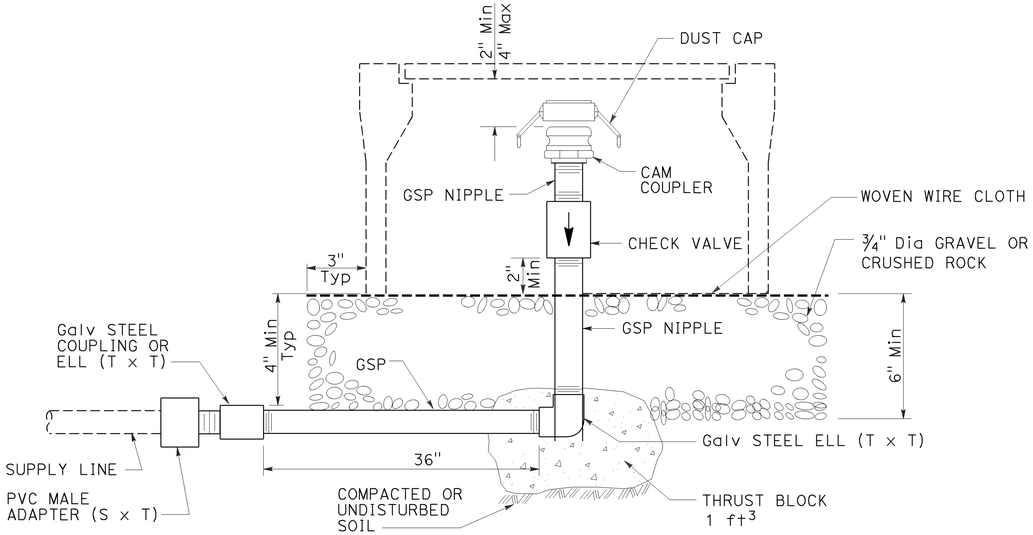

ELEVATION

CAM COUPLER ASSEMBLY

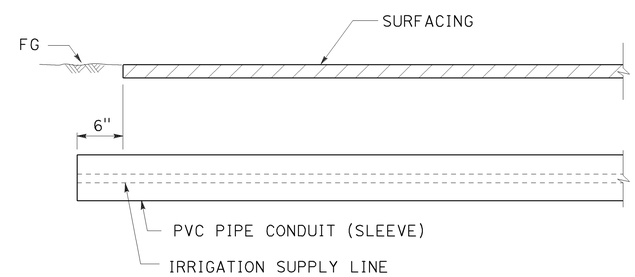

SECTION

PVC PIPE CONDUIT (SLEEVE)

UNDER SIDEWALKS, DRIVEWAYS AND PATHS

STATE OF CALIFORNIA
DEPARTMENT OF TRANSPORTATION

LANDSCAPE DETAILS

NO SCALE

RSP H9 DATED APRIL 15, 2016 SUPERSEDES RSP H9 DATED JULY 19, 2013 AND STANDARD PLAN H9 DATED MAY 20, 2011 - PAGE 226 OF THE STANDARD PLANS BOOK DATED 2010.

REVISED STANDARD PLAN RSP H9

2010 REVISED STANDARD PLAN RSP H9

3-24-16

Dist	COUNTY	ROUTE	POST MILES TOTAL PROJECT	SHEET No.	TOTAL SHEETS
11	SD	94	59.6/60.2	75	78

Gregory A. Balzer
LICENSED LANDSCAPE ARCHITECT

July 19, 2013
PLANS APPROVAL DATE

LICENSED LANDSCAPE ARCHITECT
Gregory A. Balzer 2576
Expiration Date
2-28-15
Renewal Date
7-19-13
Date
STATE OF CALIFORNIA

THE STATE OF CALIFORNIA OR ITS OFFICERS OR AGENTS SHALL NOT BE RESPONSIBLE FOR THE ACCURACY OR COMPLETENESS OF SCANNED COPIES OF THIS PLAN SHEET.

TO ACCOMPANY PLANS DATED 05-09-16

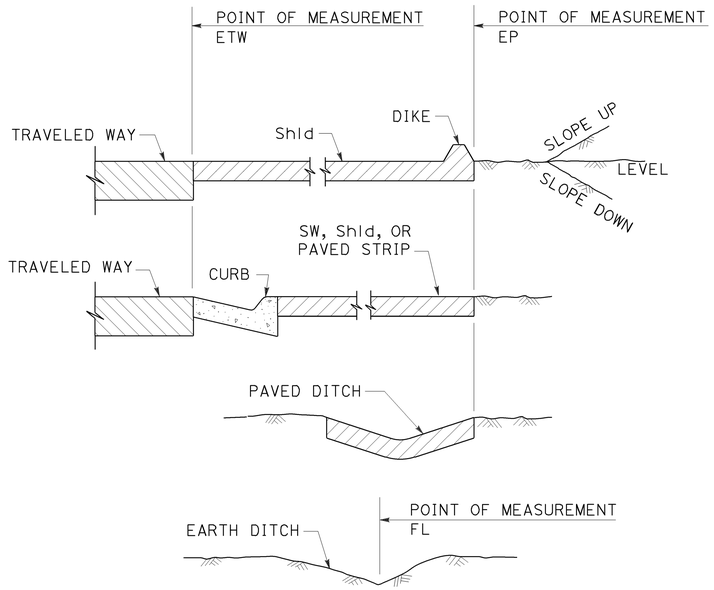

SECTION
POINTS OF MEASUREMENT

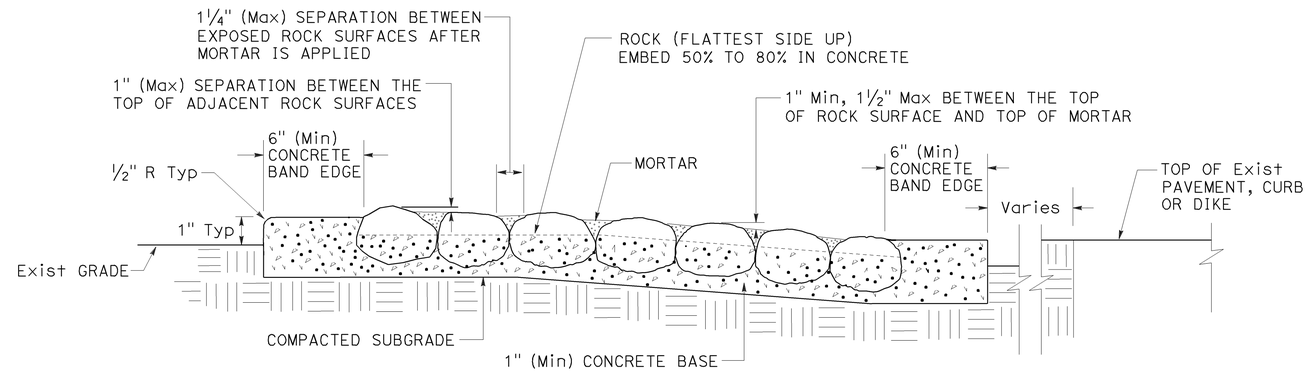

SECTION
ROCK BLANKET

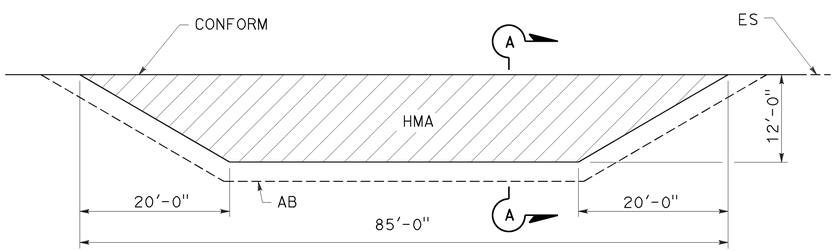

PLAN

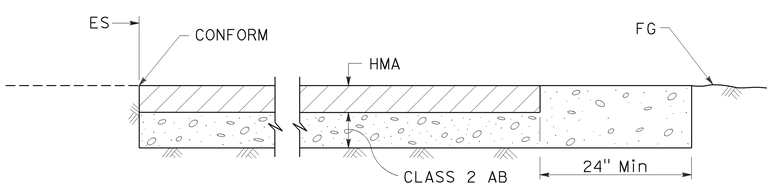

SECTION A-A
MAINTENANCE VEHICLE PULLOUT

STATE OF CALIFORNIA
DEPARTMENT OF TRANSPORTATION

LANDSCAPE DETAILS

NO SCALE

RSP H9A DATED JULY 19, 2013 SUPPLEMENTS THE STANDARD PLANS BOOK DATED 2010.

REVISED STANDARD PLAN RSP H9A

2010 REVISED STANDARD PLAN RSP H9A

6-21-13

Dist	COUNTY	ROUTE	POST MILES TOTAL PROJECT	SHEET No.	TOTAL SHEETS
11	SD	94	59.6/60.2	76	78

REGISTERED CIVIL ENGINEER

July 19, 2013
PLANS APPROVAL DATE

REGISTERED PROFESSIONAL ENGINEER
Gurinderpal Bhullar
No. C48815
Exp. 9-30-14
CIVIL
STATE OF CALIFORNIA

THE STATE OF CALIFORNIA OR ITS OFFICERS OR AGENTS SHALL NOT BE RESPONSIBLE FOR THE ACCURACY OR COMPLETENESS OF SCANNED COPIES OF THIS PLAN SHEET.

TO ACCOMPANY PLANS DATED 05-09-16

2010 REVISED STANDARD PLAN RSP T9

TABLE 1

TAPER LENGTH CRITERIA AND CHANNELIZING DEVICE SPACING

SPEED (S)	MINIMUM TAPER LENGTH * FOR WIDTH OF OFFSET 12 FEET (W)				MAXIMUM CHANNELIZING DEVICE SPACING		
					X	Y	Z **
	TANGENT 2L	MERGING L	SHIFTING L/2	SHOULDER L/3	TAPER	TANGENT	CONFLICT
mph	ft	ft	ft	ft	ft	ft	ft
20	160	80	40	27	20	40	10
25	250	125	63	42	25	50	12
30	360	180	90	60	30	60	15
35	490	245	123	82	35	70	17
40	640	320	160	107	40	80	20
45	1080	540	270	180	45	90	22
50	1200	600	300	200	50	100	25
55	1320	660	330	220	55	110	27
60	1440	720	360	240	60	120	30
65	1560	780	390	260	65	130	32
70	1680	840	420	280	70	140	35

* - For other offsets, use the following merging taper length formula for L:
For speed of 40 mph or less, $L = WS^2/60$
For speed of 45 mph or more, $L = WS$

Where: L = Taper length in feet
W = Width of offset in feet
S = Posted speed limit, off-peak 85th-percentile speed prior to work starting, or the anticipated operating speed in mph

** - Use for taper and tangent sections where there are no pavement markings or where there is a conflict between existing pavement markings and channelizers (CA).

TABLE 2

LONGITUDINAL BUFFER SPACE AND FLAGGER STATION SPACING

SPEED *	Min D **	DOWNGRADE Min D ***		
		-3%	-6%	-9%
mph	ft	ft	ft	ft
20	115	116	120	126
25	155	158	165	173
30	200	205	215	227
35	250	257	271	287
40	305	315	333	354
45	360	378	400	427
50	425	446	474	507
55	495	520	553	593
60	570	598	638	686
65	645	682	728	785
70	730	771	825	891

* - Speed is posted speed limit, off-peak 85th-percentile speed prior to work starting, or the anticipated operating speed in mph

** - Longitudinal buffer space or flagger station spacing

*** - Use on sustained downgrade steeper than -3 percent and longer than 1 mile.

TABLE 3

ADVANCE WARNING SIGN SPACING

ROAD TYPE	DISTANCE BETWEEN SIGNS *		
	A	B	C
	ft	ft	ft
URBAN - 25 mph OR LESS	100	100	100
URBAN - MORE THAN 25 mph TO 40 mph	250	250	250
URBAN - MORE THAN 40 mph	350	350	350
RURAL	500	500	500
EXPRESSWAY / FREEWAY	1000	1500	2640

* - The distances are approximate, are intended for guidance purposes only, and should be applied with engineering judgment. These distances should be adjusted by the Engineer for field conditions, if necessary, by increasing or decreasing the recommmended distances.

STATE OF CALIFORNIA
DEPARTMENT OF TRANSPORTATION

TRAFFIC CONTROL SYSTEM TABLES FOR LANE AND RAMP CLOSURES

NO SCALE

RSP T9 DATED JULY 19, 2013 SUPERSEDES RSP T9 DATED APRIL 19, 2013 THAT SUPPLEMENTS THE STANDARD PLANS BOOK DATED 2010.

REVISED STANDARD PLAN RSP T9

Dist	COUNTY	ROUTE	POST MILES TOTAL PROJECT	SHEET No.	TOTAL SHEETS
11	SD	94	59.6/60.2	77	78

Devinder Singh
REGISTERED CIVIL ENGINEER

October 30, 2015
PLANS APPROVAL DATE

REGISTERED PROFESSIONAL ENGINEER
Devinder Singh
No. C50470
Exp. 6-30-17
CIVIL
STATE OF CALIFORNIA

THE STATE OF CALIFORNIA OR ITS OFFICERS OR AGENTS SHALL NOT BE RESPONSIBLE FOR THE ACCURACY OR COMPLETENESS OF SCANNED COPIES OF THIS PLAN SHEET.

TO ACCOMPANY PLANS DATED 05-09-16

2010 REVISED STANDARD PLAN RSP T13

NOTES:

See Revised Standard Plan RSP T9 for tables.

Use cone spacing X for taper segment, Y for tangent segment or Z for conflict situations, as approriate, per Table 1, unless X, Y, or Z cone spacing is shown on this sheet.

Unless otherwise specified in the special provisions, all temporary warning signs shall have black legend on fluorescent orange background.

California codes are designated by (CA). Otherwise, Federal (MUTCD) codes are shown.

TYPICAL LANE CLOSURE WITH REVERSIBLE CONTROL

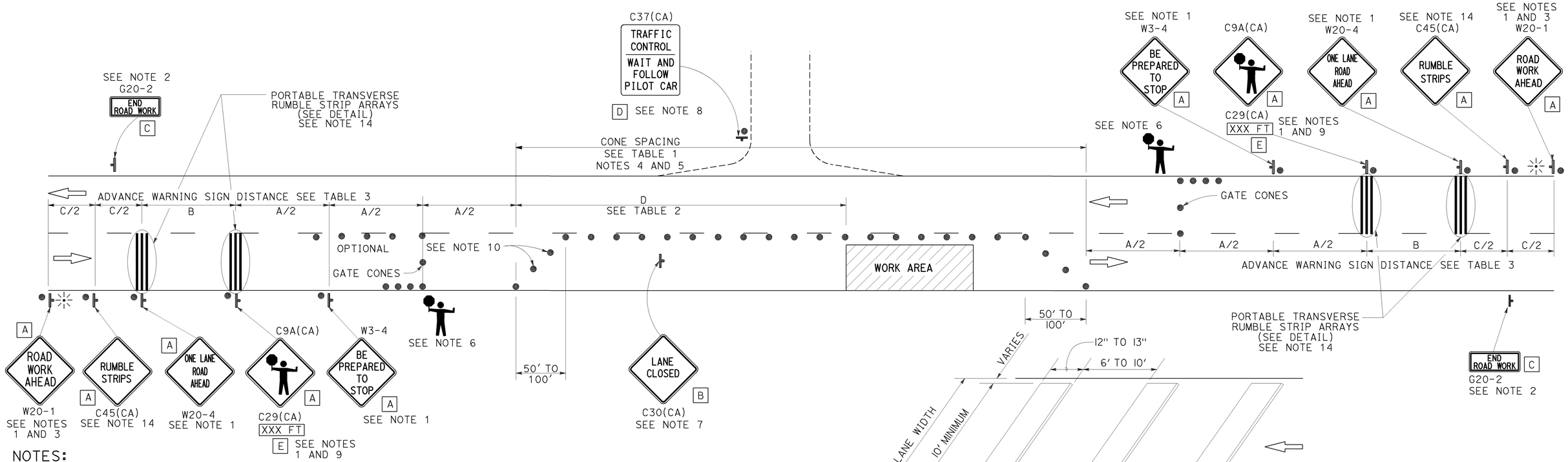

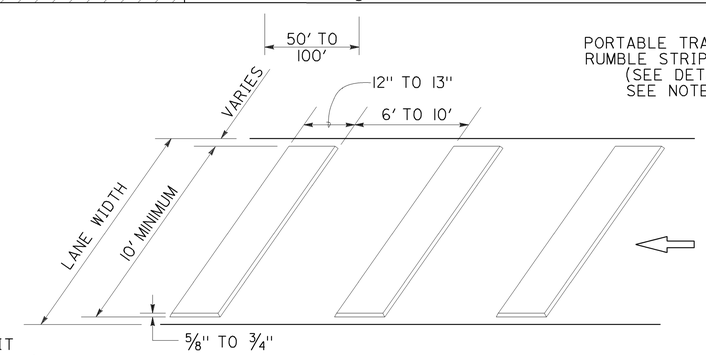

PORTABLE TRANSVERSE RUMBLE STRIP ARRAY DETAIL

NOTES:

1. Each advance warning sign in each direction of travel shall be equipped with at least two flags for daytime closure. Each flag shall be at least 16" x 16" in size and shall be orange or fluorescent red-orange in color. Flashing beacons shall be placed at the locations indicated for lane closure during hours of darkness.
2. A G20-2 "END ROAD WORK" sign, as appropriate, shall be placed at the end of the lane control unless the end of work area is obvious, or ends within a larger project's limits.
3. If the W20-1 sign would follow within 2000' of a stationary W20-1 or G20-1 "ROAD WORK NEXT _____ MILES", use a W20-4 sign for the first advance warning sign.
4. All cones used for lane closures during the hours of darkness shall be fitted with retroreflective bands (or sleeves) as specified in the specifications.
5. Portable delineators, placed at one-half the spacing indicated for traffic cones, may be used instead of cones for daytime closures only.
6. Additional advance flaggers may be required. Flagger should stand in a conspicuous place, be visible to approaching traffic as well as approaching vehicles after the first vehicle has stopped. During the hours of darkness, the flagging-station and flagger shall be illuminated and clearly visible to approaching traffic. The illumination footprint of the lighting on the ground shall be at least 20' in diameter. Place a minimum of four cones at 50' intervals in advance of flagger station as shown.
7. Place C30(CA) "LANE CLOSED" sign at 500' to 1000' intervals throughout extended work areas. They are optional if the work area is visible from the flagger station.
8. When a pilot car is used, place a C37(CA) "TRAFFIC CONTROL-WAIT AND FOLLOW PILOT CAR" sign with black legend on white background at all intersections, driveways and alleys without a flagger within traffic control area. Signs shall be clean and visible at all times. Where traffic can not be effectively self-regulated, at least one flagger shall be used at each intersection within traffic control area.
9. An optional C29(CA) sign may be placed below the C9A(CA) sign.
10. Either traffic cones or barricades shall be placed on the taper. Barricades shall be Type I, II, or III.
11. The color of the portable transverse rumble strips shall be black or orange. Use 2 arrays, each array shall consist of 3 rumble strips.
12. Portable transverse rumble strips shall not be placed on sharp horizontal or vertical curves nor shall they be placed through pedestrian crossings.
13. If the portable transverse rumble strips become out of alignment (skewed) by more than 6 inches, measured from one end to the other, they shall be readjusted to bring the placement back to the original location.
14. Portable transverse rumble strips are not required if any one of the following conditions is satisfied:
    A. Work duration occupies a location for four hours or less
    B. Posted speed limit is below 45 MPH
    C. Work is of emergency nature
    D. Work zone is in snow or icy weather conditions

LEGEND

- TRAFFIC CONE
- TEMPORARY TRAFFIC CONTROL SIGN
- PORTABLE FLASHING BEACON
- FLAGGER

SIGN PANEL SIZE (Min)

A	48" x 48"
B	30" x 30"
C	36" x 18"
D	36" x 42"
E	20" x 7"

STATE OF CALIFORNIA
DEPARTMENT OF TRANSPORTATION

TRAFFIC CONTROL SYSTEM FOR LANE CLOSURE ON TWO LANE CONVENTIONAL HIGHWAYS

NO SCALE

RSP T13 DATED OCTOBER 30, 2015 SUPERSEDES RSP T13 DATED OCTOBER 17, 2014, RSP T13 DATED JULY 18, 2014 AND RSP T13 DATED APRIL 19, 2013 AND STANDARD PLAN T13 DATED MAY 20, 2011 - PAGE 241 OF THE STANDARD PLANS BOOK DATED 2010.

REVISED STANDARD PLAN RSP T13

10-13-15

Dist	COUNTY	ROUTE	POST MILES TOTAL PROJECT	SHEET No.	TOTAL SHEETS
11	SD	94	59.6/60.2	78	78

REGISTERED CIVIL ENGINEER

April 19, 2013
PLANS APPROVAL DATE

REGISTERED PROFESSIONAL ENGINEER
Gurinderpal Bhullar
No. C48815
Exp. 9-30-14
CIVIL
STATE OF CALIFORNIA

THE STATE OF CALIFORNIA OR ITS OFFICERS OR AGENTS SHALL NOT BE RESPONSIBLE FOR THE ACCURACY OR COMPLETENESS OF SCANNED COPIES OF THIS PLAN SHEET.

TO ACCOMPANY PLANS DATED 05-09-16

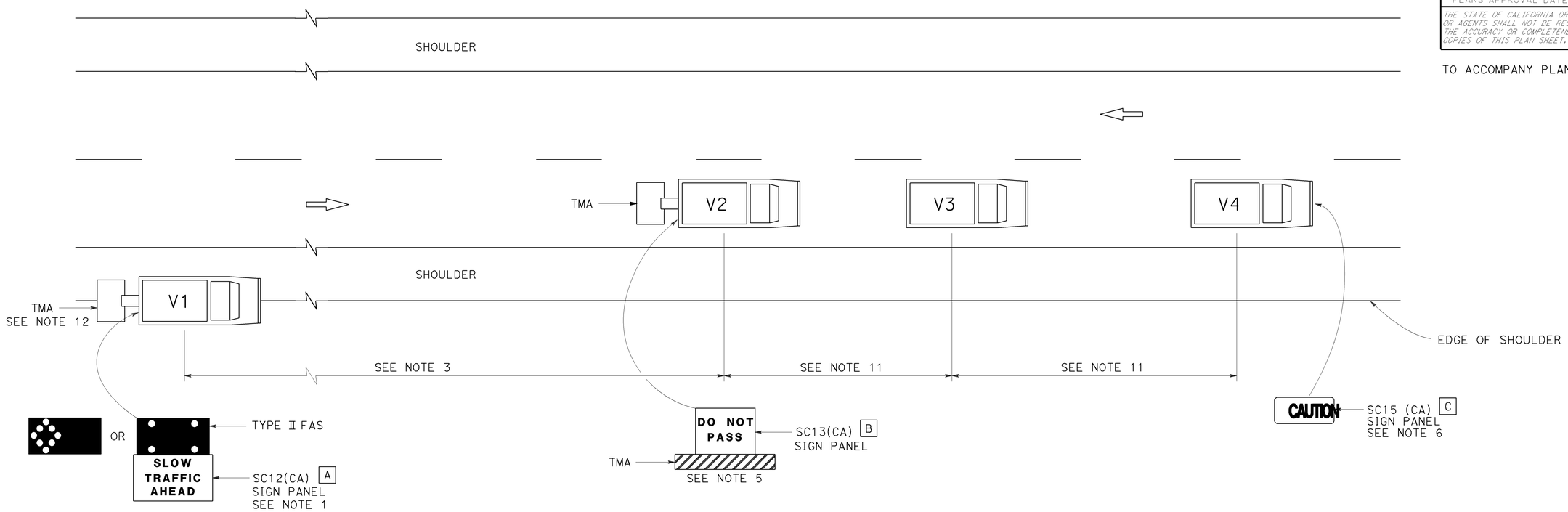

LEGEND

V1	SIGN VEHICLE
V2	SHADOW VEHICLE
V3	WORK/APPLICATION VEHICLE
V4	SIGN VEHICLE
TMA	TRUCK-MOUNTED ATTENUATOR
	FLASHING ARROW SIGN (FAS) IN FLASHING CAUTION MODE
	FLASHING ARROW SIGN (FAS) IN ALTERNATING DIAMOND CAUTION

SIGN PANEL SIZE (Min)

A	72" x 42"
B	54" x 42"
C	54" x 24"

NOTES:

1. Either a changeable message sign or a SC12(CA) "SLOW TRAFFIC AHEAD" sign shall be mounted on the rear of sign vehicle V1. The changeable message sign shall be sequenced to show the "CAUTION" message first, follow by the "SLOW TRAFFIC AHEAD" message. A Type II flashing arrow sign may be used with the SC12(CA) sign panel.
2. Sign vehicle V1 should be positioned where highly visible when shoulders are not available.
3. If traffic queues develop, sign vehicle V1 should be positioned upstream from the end of queue.
4. Vehicle-mounted sign panels shall have Type III or above retroreflective sheeting, black on white, or black on fluorescent orange, with 6" minimum series D letters per Caltrans sign specifications.
5. Shadow vehicle shall be equipped with a truck-mounted attenuator. The sign panel shown shall be mounted on the rear of shadow vehicle V2. The message "LANE CLOSED" may be used in place of the "DO NOT PASS" message.
6. The sign panel shown shall be mounted on the front of sign vehicle V4, facing opposing traffic.
7. All vehicles shall be equipped with flashing or rotating amber lights.
8. Sign vehicle V4 will not be required when the work and vehicles V2 and V3 are 2′ or more from the centerline of the highway during the work or application operations.
9. All vehicles used for lane closures shall be equipped with two-way radios and the vehicle operators shall maintain communication during the work or application operation.
10. This plan shall not be used where workers would be on foot in the work area. Use a stationary type lane closure (Revised Standard Plan T13) for this condition.
11. Minimize spacing between vehicles V2 and V3 and vehicles V3 and V4 to deter road users from driving in between them.
12. If sign vehicle V1 encroaches into the traffic lane due to insufficient shoulder width, sign vehicle V1 shall be equipped with a truck-mounted attenuator. Sign vehicle V1 shall stay as close to the edge of shoulder as practicable.

STATE OF CALIFORNIA
DEPARTMENT OF TRANSPORTATION

TRAFFIC CONTROL SYSTEM FOR MOVING LANE CLOSURE ON TWO LANE HIGHWAYS

NO SCALE

RSP T17 DATED APRIL 19, 2013 SUPERSEDES STANDARD PLAN T17
DATED MAY 20, 2011 - PAGE 245 OF THE STANDARD PLANS BOOK DATED 2010.

REVISED STANDARD PLAN RSP T17

2010 REVISED STANDARD PLAN RSP T17

12-18-12