Dist	COUNTY	ROUTE	POST MILES TOTAL PROJECT	SHEET No.	TOTAL SHEETS
11	SD	8	5.4/10.6, R20.0/R21.6	101	213

LICENSED LANDSCAPE ARCHITECT

05-31-16
PLANS APPROVAL DATE

LICENSED LANDSCAPE ARCHITECT
KENNETH L. MAH No. 3448
Expiration Date 02-28-18
Renewal Date 05-20-16
Date
STATE OF CALIFORNIA

THE STATE OF CALIFORNIA OR ITS OFFICERS OR AGENTS SHALL NOT BE RESPONSIBLE FOR THE ACCURACY OR COMPLETENESS OF SCANNED COPIES OF THIS PLAN SHEET.

IRRIGATION QUANTITIES

DESCRIPTION	IRRIGATION CONTROLLER	VALVE NUMBER	IRRIGATION CONTROLLER (EA) 12 STATION	16 STATION	24 STATION	40 STATION	48 STATION	TWO WIRE	CEC (N) SINGLE	CEC (N) DOUBLE	COPPER PIPE (SUPPLY LINE) (LF) 2"	3"	WM (EA) 2"	BPA (EA) 2"	(N) ENCLOSURE	PRV (EA) 2"	REMOTE CONTROL VALVE (MASTER) (EA) 1½"	2"	3"	FLOW SENSOR (EA) 1½"	2"	3"	GATE VALVE (EA) 1½"	2"	3"	BALL VALVE (EA) 1"	1½"	REMOTE CONTROL VALVE (EA) 1"	1½"	2"	PLASTIC PIPE (SCHEDULE 40) (SUPPLY LINE) (LF) 1"	1¼"	1½"	2"	PLASTIC PIPE (CLASS 315) (SUPPLY LINE) (LF) 2½"	3"	TEMPORARY IRRIGATION SUPPLY LINE (LF) 2"	3"	SPRINKLER ASSEMBLY (EA) TREE WELL	RISER GEAR DRIVEN	POP-UP GEAR DRIVEN	RISER	POP-UP
SUBTOTALS PER VALVE ON LATERAL SUPPLY SIDE OF CONTROL VALVE	MIC '5'	41																													48	50									3		
	AIC '5(13)'	25																															30	48		68					1		
SUBTOTALS PER SHEET ON MAIN SUPPLY SIDE OF CONTROL VALVE	SHEET NUMBER	IPP-1																							1											339		120					
		IP-1																																		98							
TOTAL																									1						48	50	30	48		505		120			4		

IRRIGATION QUANTITIES

IQ-1

STATE OF CALIFORNIA - DEPARTMENT OF TRANSPORTATION
Caltrans® LANDSCAPE ARCHITECTURE

SENIOR LANDSCAPE ARCHITECT: TIM MANN
CALCULATED-DESIGNED BY: KENNY MAH
CHECKED BY: RUDY MEDINA
REVISED BY
DATE REVISED

LAST REVISION 05-27-16
DATE PLOTTED => 09-JUN-2016
TIME PLOTTED => 09:34

Dist	COUNTY	ROUTE	POST MILES TOTAL PROJECT	SHEET No.	TOTAL SHEETS
11	SD	8	5.4/10.6, R20.0/R21.6	102	213

Héctor A. Santamaría 05-31-16
REGISTERED ELECTRICAL ENGINEER DATE

05-31-16
PLANS APPROVAL DATE

REGISTERED PROFESSIONAL ENGINEER HECTOR A. SANTAMARIA No. 18207 Exp. 12-31-17 ELECTRICAL STATE OF CALIFORNIA

THE STATE OF CALIFORNIA OR ITS OFFICERS OR AGENTS SHALL NOT BE RESPONSIBLE FOR THE ACCURACY OR COMPLETENESS OF SCANNED COPIES OF THIS PLAN SHEET.

NOTE:

FOR ACCURATE RIGHT OF WAY DATA, CONTACT RIGHT OF WAY ENGINEERING AT THE DISTRICT OFFICE.

NOTE (SHEET E-1 TO E-19):

FOR TRENCHING AND BACKFILL DETAIL, SEE E-66.

ABBREVATIONS:

SDG&E = SAN DIEGO GAS AND ELECTRIC
TSO = THIS SHEET ONLY
OCC = OUTDOOR CATEGORY 6A CABLE
MDCS = MULTIDUCT CONDUIT SYSTEM
MTS = METROPOLITAN TRANSIT SYSTEM
S = SIGN
AVC = AUTOMATIC VEHICLE CLASSIFICATION
FDU = FIBER DISTRIBUTION UNIT
TSP = TELEPHONE SERVICE POINT

LEGEND:

N C = NO CHANGE
V = NEW FO VAULT
V S = EXISTING FO VAULT
V S = NEW SPLICE FO VAULT
V S = EXISTING SPLICE FO VAULT
HUB = EXISTING COMMUNICATION HUB
TSP = EXISTING TELEPHONE SERVICE POINT
1 - INSTALL COMPONENTS OF THE COMMUNICATION HUB SWITCH, FDU, AND FIBER OPTIC CABLES

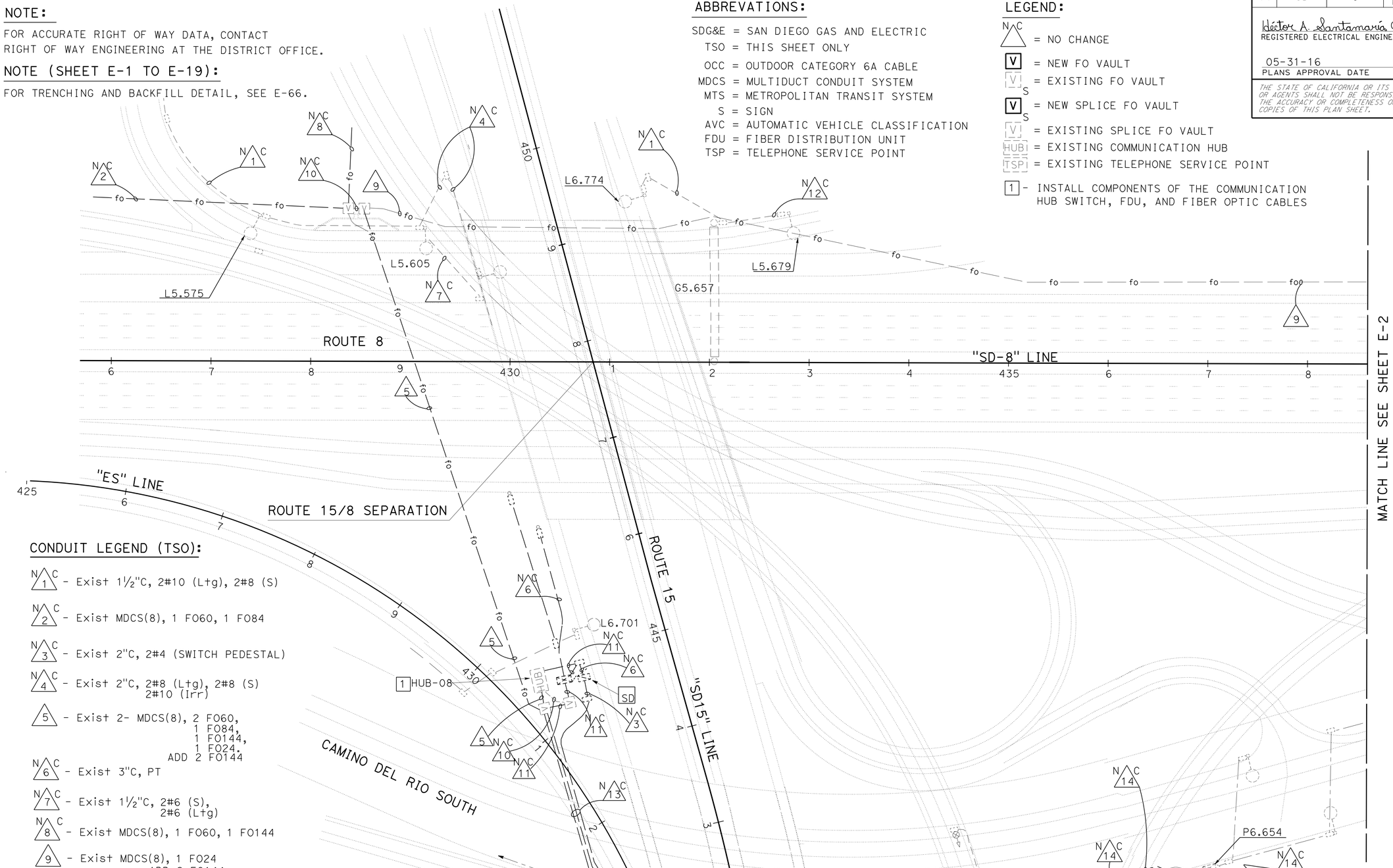

CONDUIT LEGEND (TSO):

N C 1 - Exist 1½"C, 2#10 (Ltg), 2#8 (S)
N C 2 - Exist MDCS(8), 1 FO60, 1 FO84
N C 3 - Exist 2"C, 2#4 (SWITCH PEDESTAL)
N C 4 - Exist 2"C, 2#8 (Ltg), 2#8 (S) 2#10 (Irr)
5 - Exist 2- MDCS(8), 2 FO60, 1 FO84, 1 FO144, 1 FO24. ADD 2 FO144
N C 6 - Exist 3"C, PT
N C 7 - Exist 1½"C, 2#6 (S), 2#6 (Ltg)
N C 8 - Exist MDCS(8), 1 FO60, 1 FO144
9 - Exist MDCS(8), 1 FO24 ADD 2 FO144
N C 10 - Exist MDCS(8), PT
N C 11 - Exist 2"C, PT
N C 12 - Exist 1½"C, 2#8(Ltg)
N C 13 - Exist 2-1"C, PT - Exist 2"C, 2#4 (SWITCH PEDESTAL)
N C 14 - Exist 1"C, PT
N C 15 - Exist 1½"C, 2#10(Ltg)

FIBER OPTIC SYSTEM

SCALE: 1" = 50'

E-1

STATE OF CALIFORNIA - DEPARTMENT OF TRANSPORTATION
Caltrans® TRAFFIC ELECTRICAL

FUNCTIONAL SUPERVISOR: RAJPREET SINGH
CALCULATED-DESIGNED BY: HECTOR SANTAMARIA
CHECKED BY: LOUIE LA COMPTE
REVISED BY
DATE REVISED

LAST REVISION DATE PLOTTED => 09-JUN-2016
06-08-17 TIME PLOTTED => 09:34

Dist	COUNTY	ROUTE	POST MILES TOTAL PROJECT	SHEET No.	TOTAL SHEETS
11	SD	8	5.4/10.6, R20.0/R21.6	103	213

Héctor A. Santamaría 05-31-16
REGISTERED ELECTRICAL ENGINEER DATE

05-31-16
PLANS APPROVAL DATE

REGISTERED PROFESSIONAL ENGINEER HECTOR A. SANTAMARIA No. 18207 Exp. 12-31-17 ELECTRICAL STATE OF CALIFORNIA

THE STATE OF CALIFORNIA OR ITS OFFICERS OR AGENTS SHALL NOT BE RESPONSIBLE FOR THE ACCURACY OR COMPLETENESS OF SCANNED COPIES OF THIS PLAN SHEET.

NOTE:
FOR ACCURATE RIGHT OF WAY DATA, CONTACT RIGHT OF WAY ENGINEERING AT THE DISTRICT OFFICE.

CONDUIT LEGEND (TSO):

- N 1 C - Exist 1½"C, 2#10 (Ltg), 2#8 (TMS), 2#12 (TDC)
- 2 - Exist MDCS(8), 1 FO24. ADD 2 FO144
- N 3 C - Exist 1"C, 1 FO12 - Exist 2"C, 2#6 (CCTV)
- N 4 C - Exist 3"C, CAMERA CABLES
- N 5 C - Exist 3"C, 16 DLC, 2#8 (TMS)
- 6 - Exist MDCS(8), 1 FO24. ADD 2 FO144 - Exist 2"C, 2#6 (CCTV)
- N 7 C - Exist 1"C, 1 FO12
- N 8 C - Exist 2"C, 2#6 (CCTV)
- N 9 C - Exist 1½"C, 2#8 (Ltg), 2#10 (Ltg), 2#12 (FB)
- N 10 C - Exist 3"C, 2#10(Ltg), 2#8(S), 2#4 (FB), 2#12(TDC), 2#6 (CCTV), 2#8(TMS)
- N 11 C - Exist 2"C, CABLES BY SDG&E

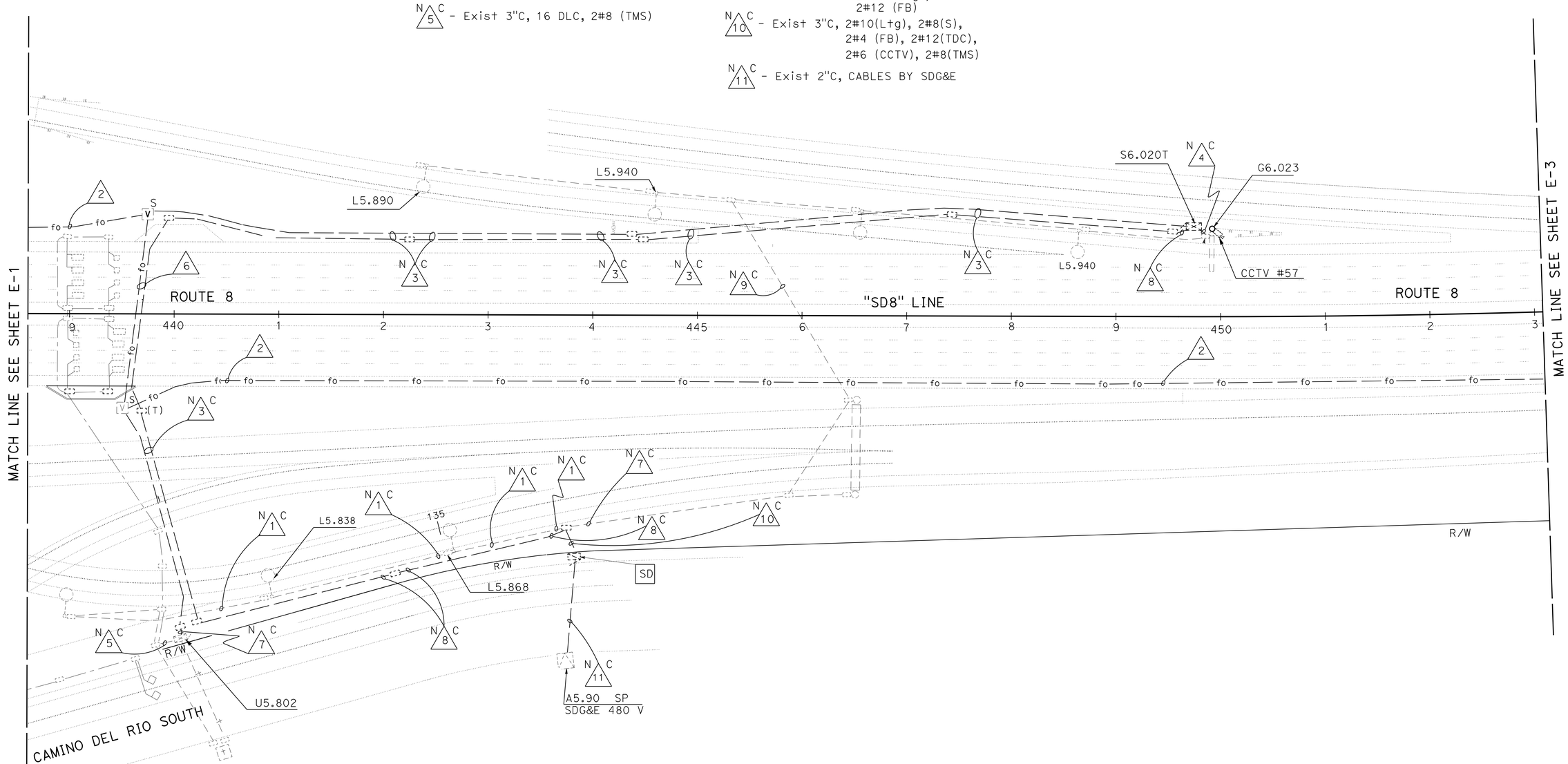

FIBER OPTIC SYSTEM

APPROVED FOR ELECTRICAL WORK ONLY

SCALE: 1" = 50'

E-2

STATE OF CALIFORNIA - DEPARTMENT OF TRANSPORTATION
Caltrans® TRAFFIC ELECTRICAL

FUNCTIONAL SUPERVISOR: RAJPREET SINGH
CALCULATED-DESIGNED BY: HECTOR SANTAMARIA
CHECKED BY: LOUIE LA COMPTE
REVISED BY
DATE REVISED

LAST REVISION 06-06-16
DATE PLOTTED => 09-JUN-2016
TIME PLOTTED => 09:35

Dist	COUNTY	ROUTE	POST MILES TOTAL PROJECT	SHEET No.	TOTAL SHEETS
11	SD	8	5.4/10.6, R20.0/R21.6	104	213

Héctor A. Santamaría 05-31-16
REGISTERED ELECTRICAL ENGINEER DATE

05-31-16
PLANS APPROVAL DATE

REGISTERED PROFESSIONAL ENGINEER HECTOR A. SANTAMARIA No. 18207 Exp. 12-31-17 ELECTRICAL STATE OF CALIFORNIA

THE STATE OF CALIFORNIA OR ITS OFFICERS OR AGENTS SHALL NOT BE RESPONSIBLE FOR THE ACCURACY OR COMPLETENESS OF SCANNED COPIES OF THIS PLAN SHEET.

NOTE:
FOR ACCURATE RIGHT OF WAY DATA, CONTACT RIGHT OF WAY ENGINEERING AT THE DISTRICT OFFICE.

CONDUIT LEGEND (TSO):

1 - MDCS(8), 2 FO144
2 - 2"C, 1 FO12
N C 3 - Exist MDCS(4), 2 FO12, 2 PT
4 - Exist MDCS(8), 1 FO24. ADD 2 FO144
5 - Exist 1½"C, 1 SIC. ADD 1 FO4
6 - 3"C, 1 FO4
7 - 3"C, 2 FO4
- 3"C, 2 CAMERA CABLE HARNESS

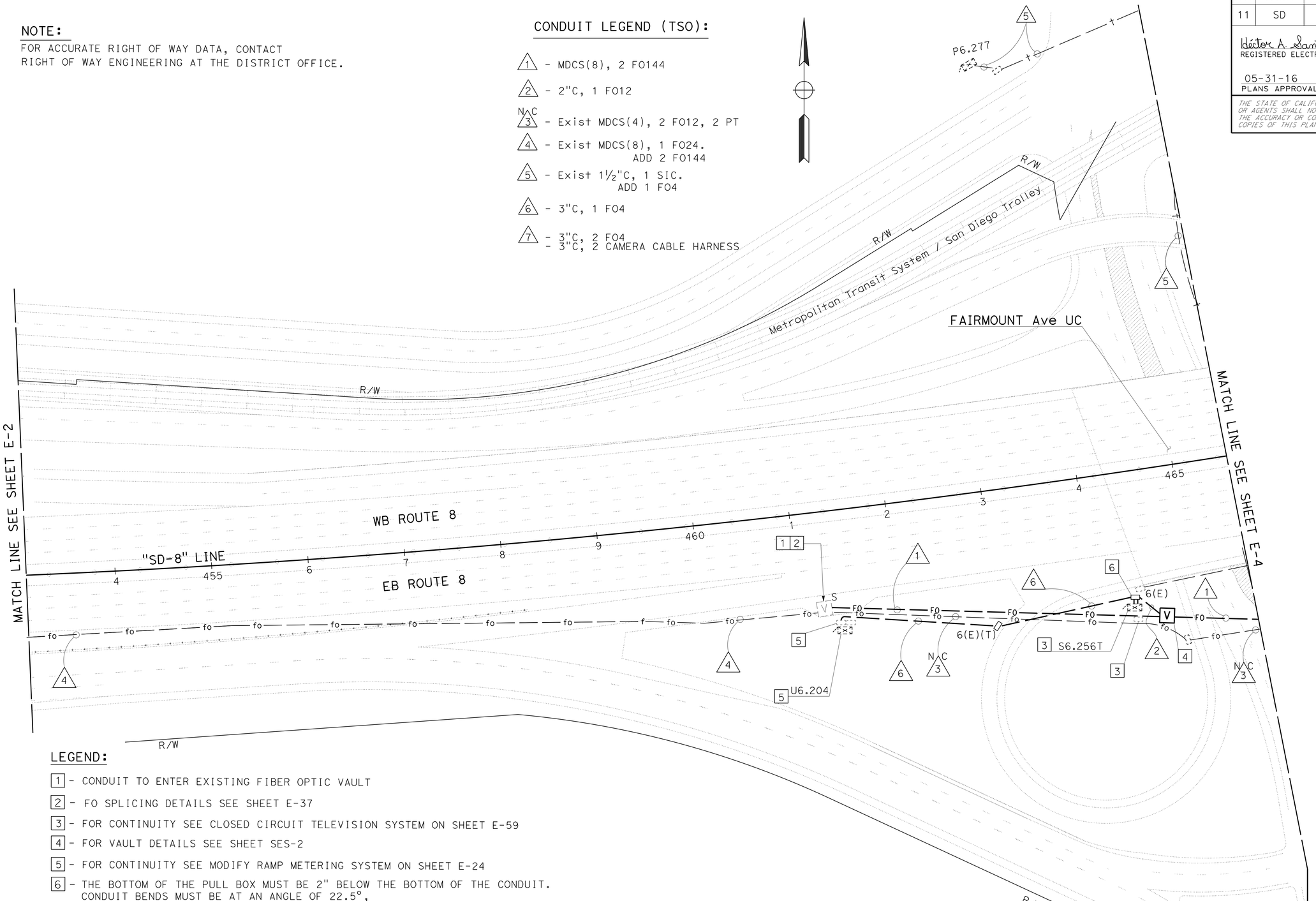

LEGEND:

1 - CONDUIT TO ENTER EXISTING FIBER OPTIC VAULT
2 - FO SPLICING DETAILS SEE SHEET E-37
3 - FOR CONTINUITY SEE CLOSED CIRCUIT TELEVISION SYSTEM ON SHEET E-59
4 - FOR VAULT DETAILS SEE SHEET SES-2
5 - FOR CONTINUITY SEE MODIFY RAMP METERING SYSTEM ON SHEET E-24
6 - THE BOTTOM OF THE PULL BOX MUST BE 2" BELOW THE BOTTOM OF THE CONDUIT. CONDUIT BENDS MUST BE AT AN ANGLE OF 22.5°, PULL BOX MUST BE MARKED "FIBER OPTIC"

APPROVED FOR ELECTRICAL WORK ONLY

FIBER OPTIC SYSTEM

SCALE: 1" = 50'

E-3

STATE OF CALIFORNIA - DEPARTMENT OF TRANSPORTATION
Caltrans® TRAFFIC ELECTRICAL

FUNCTIONAL SUPERVISOR: RAJPREET SINGH
CALCULATED-DESIGNED BY: HECTOR SANTAMARIA
CHECKED BY: LOUIE LA COMPTE
REVISED BY
DATE REVISED

LAST REVISION 06-07-16
DATE PLOTTED => 09-JUN-2016
TIME PLOTTED => 09:35

Dist	COUNTY	ROUTE	POST MILES TOTAL PROJECT	SHEET No.	TOTAL SHEETS
11	SD	8	5.4/10.6, R20.0/R21.6	105	213

Héctor A. Santamaría 05-31-16
REGISTERED ELECTRICAL ENGINEER DATE

05-31-16
PLANS APPROVAL DATE

REGISTERED PROFESSIONAL ENGINEER
HECTOR A. SANTAMARIA
No. 18207
Exp. 12-31-17
ELECTRICAL
STATE OF CALIFORNIA

THE STATE OF CALIFORNIA OR ITS OFFICERS OR AGENTS SHALL NOT BE RESPONSIBLE FOR THE ACCURACY OR COMPLETENESS OF SCANNED COPIES OF THIS PLAN SHEET.

NOTE: FOR ACCURATE RIGHT OF WAY DATA, CONTACT RIGHT OF WAY ENGINEERING AT THE DISTRICT OFFICE.

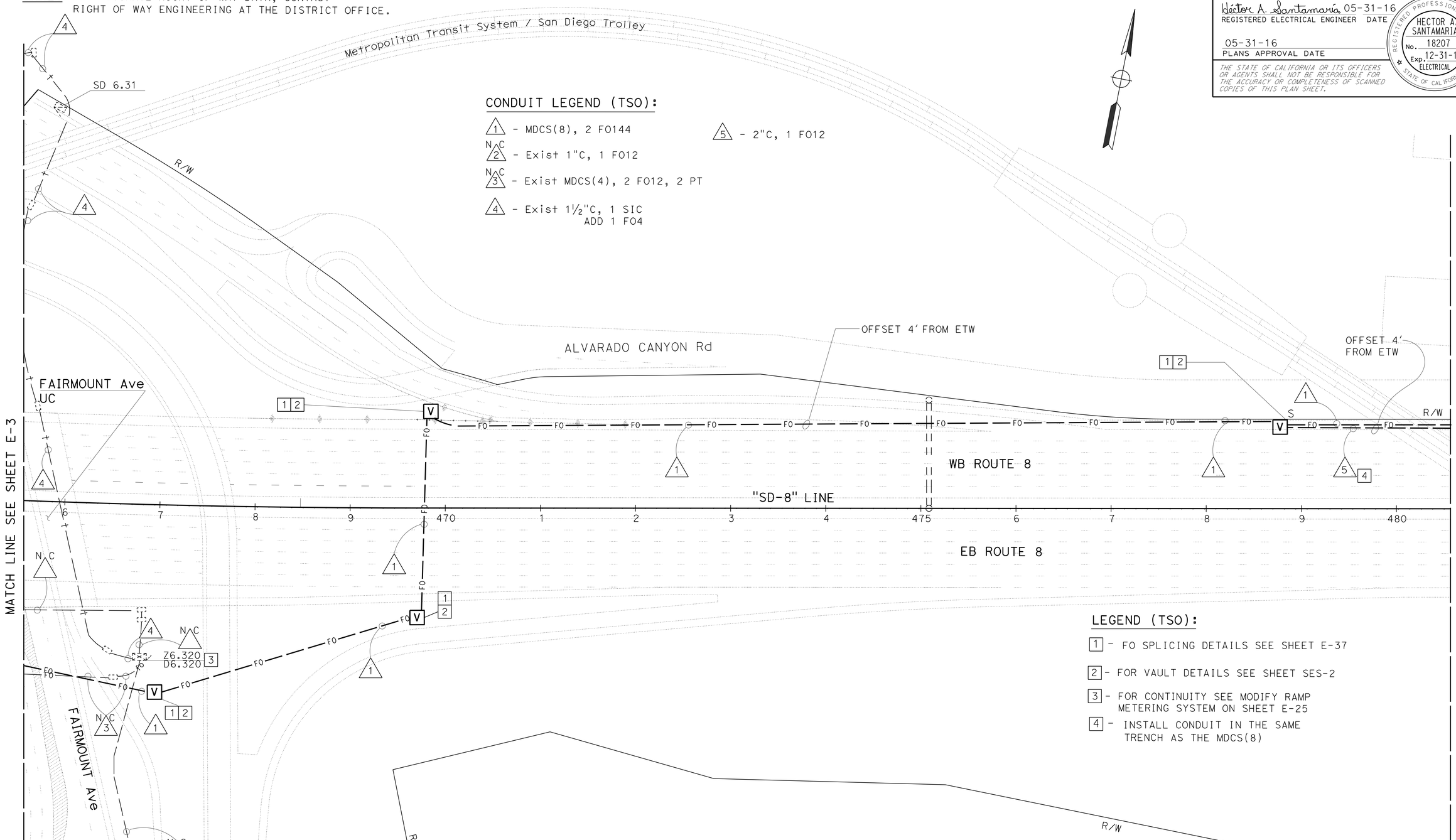

CONDUIT LEGEND (TSO):

1 - MDCS(8), 2 FO144

N C 2 - Exist 1"C, 1 FO12

N C 3 - Exist MDCS(4), 2 FO12, 2 PT

4 - Exist 1½"C, 1 SIC
ADD 1 FO4

5 - 2"C, 1 FO12

LEGEND (TSO):

1 - FO SPLICING DETAILS SEE SHEET E-37

2 - FOR VAULT DETAILS SEE SHEET SES-2

3 - FOR CONTINUITY SEE MODIFY RAMP METERING SYSTEM ON SHEET E-25

4 - INSTALL CONDUIT IN THE SAME TRENCH AS THE MDCS(8)

APPROVED FOR ELECTRICAL WORK ONLY

SCALE: 1" = 50'

FIBER OPTIC SYSTEM

E-4

STATE OF CALIFORNIA - DEPARTMENT OF TRANSPORTATION
Caltrans® TRAFFIC ELECTRICAL

FUNCTIONAL SUPERVISOR: RAJPREET SINGH
CALCULATED-DESIGNED BY: HECTOR SANTAMARIA
CHECKED BY: LOUIE LA COMPTE
REVISED BY
DATE REVISED

LAST REVISION 06-06-16
DATE PLOTTED => 09-JUN-2016
TIME PLOTTED => 09:35

BORDER LAST REVISED 7/2/2010
USERNAME => s127400
DGN FILE => 1114000046ua004.dgn
RELATIVE BORDER SCALE IS IN INCHES 0 1 2 3
UNIT 2833
PROJECT NUMBER & PHASE 11140000461

Dist	COUNTY	ROUTE	POST MILES TOTAL PROJECT	SHEET No.	TOTAL SHEETS
11	SD	8	5.4/10.6, R20.0/R21.6	106	213

Héctor A. Santamaría 05-31-16
REGISTERED ELECTRICAL ENGINEER DATE

05-31-16
PLANS APPROVAL DATE

REGISTERED PROFESSIONAL ENGINEER HECTOR A. SANTAMARIA No. 18207 Exp. 12-31-17 ELECTRICAL STATE OF CALIFORNIA

THE STATE OF CALIFORNIA OR ITS OFFICERS OR AGENTS SHALL NOT BE RESPONSIBLE FOR THE ACCURACY OR COMPLETENESS OF SCANNED COPIES OF THIS PLAN SHEET.

NOTE:
FOR ACCURATE RIGHT OF WAY DATA, CONTACT RIGHT OF WAY ENGINEERING AT THE DISTRICT OFFICE.

LEGEND (TSO):

1 - FOR CONTINUITY SEE MODIFY RAMP METERING SYSTEM ON SHEET E-26

2 - THE BOTTOM OF THE PULL BOX MUST BE 2" BELOW THE BOTTOM OF THE CONDUIT. CONDUIT BENDS MUST BE AT AN ANGLE OF 22.5°, PULL BOX MUST BE MARKED "FIBER OPTIC"

3 - FOR VAULT DETAILS SEE SHEET SES-2

4 - CONDUIT MUST ENTER THE EXISTING MODEL 334 CONTROLLER CABINET FOUNDATION TO THE ADJACENT PULL BOX BY ROTOR DRILLING A 2.5" HOLE AT 45°

5 - INSTALL CONDUIT IN THE SAME TRENCH AS THE MDCS(8)

6 - FO SPLICING DETAILS SEE SHEET E-38

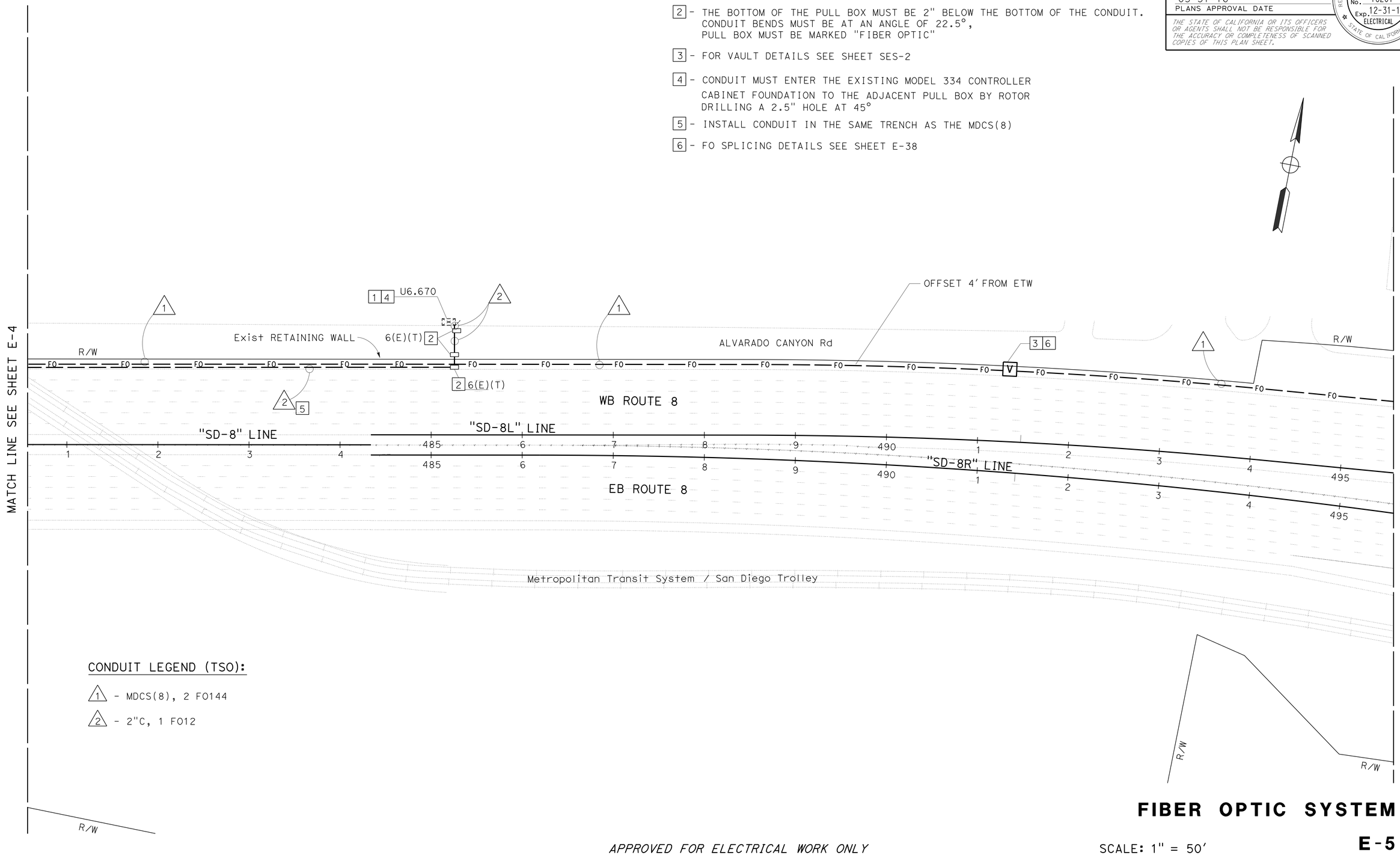

CONDUIT LEGEND (TSO):

1 - MDCS(8), 2 FO144

2 - 2"C, 1 FO12

FIBER OPTIC SYSTEM

APPROVED FOR ELECTRICAL WORK ONLY

SCALE: 1" = 50'

E-5

STATE OF CALIFORNIA - DEPARTMENT OF TRANSPORTATION
Caltrans TRAFFIC ELECTRICAL

FUNCTIONAL SUPERVISOR: RAJPREET SINGH
CALCULATED-DESIGNED BY: HECTOR SANTAMARIA
CHECKED BY: LOUIE LA COMPTE
REVISED BY
DATE REVISED

LAST REVISION 06-06-16
DATE PLOTTED => 09-JUN-2016
TIME PLOTTED => 09:35

Dist	COUNTY	ROUTE	POST MILES TOTAL PROJECT	SHEET No.	TOTAL SHEETS
11	SD	8	5.4/10.6, R20.0/R21.6	107	213

Héctor A. Santamaría 05-31-16
REGISTERED ELECTRICAL ENGINEER DATE

05-31-16
PLANS APPROVAL DATE

REGISTERED PROFESSIONAL ENGINEER HECTOR A. SANTAMARIA No. 18207 Exp. 12-31-17 ELECTRICAL STATE OF CALIFORNIA

THE STATE OF CALIFORNIA OR ITS OFFICERS OR AGENTS SHALL NOT BE RESPONSIBLE FOR THE ACCURACY OR COMPLETENESS OF SCANNED COPIES OF THIS PLAN SHEET.

NOTE:

FOR ACCURATE RIGHT OF WAY DATA, CONTACT RIGHT OF WAY ENGINEERING AT THE DISTRICT OFFICE.

CONDUIT LEGEND(TSO):

- 1 - MDCS(8), 2 FO144
- 2 - 2"C, 1 FO12
- N C 3 - Exist 1½"C, 3 DLC
- N C 4 - Exist 2"C, PT
- N C 5 - Exist 1½"C, 1 DLC
- N C 6 - Exist 2½"C, PT
- 7 - Exist 2½"C, 8#14(Sig), 7 DLC, 2#14(FB). ADD 1 OCC
- N C 8 - Exist 2½"C, 5 DLC
- N C 9 - Exist 1½"C, 2#14(FB), 1 DLC
- N C 10 - Exist 1½"C, 1 DLC
- N C 11 - Exist 2"C, 9#14(Sig), 2 DLC, 2#6(RM)
- N C 12 - Exist 2½"C, 13#14(Sig), 4 DLC, 2#6(RM)
- N C 13 - Exist 1"C, 1 SIC
- N C 14 - Exist 1"C, 2#12(TDC)
- 15 - Exist 2"C, 1 SIC. ADD 2 OCC
- 16 - Exist 2"C, 1-9CSC, 1 SIC. ADD 1 OCC
- N C 17 - Exist 2"C, 10 DLC
- 18 - 2"C, 1 OCC

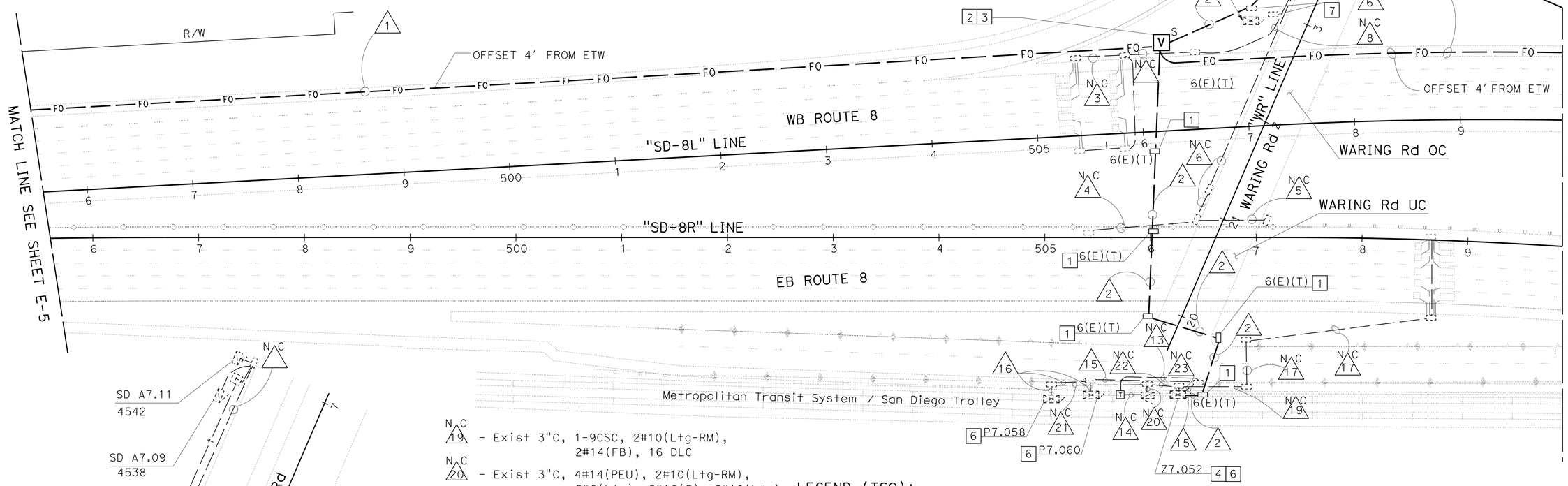

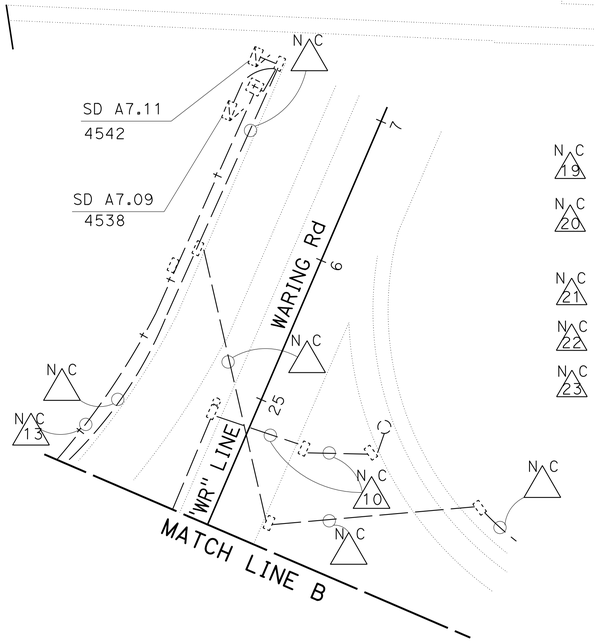

- N C 19 - Exist 3"C, 1-9CSC, 2#10(Ltg-RM), 2#14(FB), 16 DLC
- N C 20 - Exist 3"C, 4#14(PEU), 2#10(Ltg-RM), 2#8(Ltg), 2#10(S), 2#10(Ltg), 2#8(RM), 2#4(S)
- N C 21 - Exist 1"C, 2#10(Ltg)
- N C 22 - Exist 2"C, 2#8(RM), 2#10(Ltg-RM)
- N C 23 - Exist 3"C, 2-9CSC, 2#14(FB), 2#8(RM), 17 DLC

LEGEND (TSO):

1 - THE BOTTOM OF THE PULL BOX MUST BE 2" BELOW THE BOTTOM OF THE CONDUIT. CONDUIT BENDS MUST BE AT AN ANGLE OF 22.5°, PULL BOX MUST BE MARKED "FIBER OPTIC"

2 - FO SPLICING DETAILS SEE SHEET E-38

3 - FOR VAULT DETAILS SEE SHEET SES-2

4 - CONDUIT MUST ENTER THE EXISTING MODEL 334 CONTROLLER CABINET FOUNDATION TO THE ADJACENT PULL BOX BY ROTOR DRILLING A 2.5" HOLE AT 45°

5 - FOR CABINET DETAILS SEE SHEET E-48

6 - FOR CABINET DETAILS SEE SHEET E-49

7 - FOR CONTINUITY SEE CLOSED CIRCUIT TELEVISION SYSTEM ON SHEET E-60

FIBER OPTIC SYSTEM

APPROVED FOR ELECTRICAL WORK ONLY

SCALE: 1" = 50'

E-6

STATE OF CALIFORNIA - DEPARTMENT OF TRANSPORTATION
Caltrans® TRAFFIC ELECTRICAL

FUNCTIONAL SUPERVISOR: RAJPREET SINGH
CALCULATED-DESIGNED BY: HECTOR SANTAMARIA
CHECKED BY: LOUIE LA COMPTE
REVISED BY
DATE REVISED

LAST REVISION 06-06-16
DATE PLOTTED => 09-JUN-2016
TIME PLOTTED => 09:35

Dist	COUNTY	ROUTE	POST MILES TOTAL PROJECT	SHEET No.	TOTAL SHEETS
11	SD	8	5.4/10.6, R20.0/R21.6	108	213

Héctor A. Santamaría 05-31-16
REGISTERED ELECTRICAL ENGINEER DATE

05-31-16
PLANS APPROVAL DATE

REGISTERED PROFESSIONAL ENGINEER HECTOR A. SANTAMARIA No. 18207 Exp. 12-31-17 ELECTRICAL STATE OF CALIFORNIA

THE STATE OF CALIFORNIA OR ITS OFFICERS OR AGENTS SHALL NOT BE RESPONSIBLE FOR THE ACCURACY OR COMPLETENESS OF SCANNED COPIES OF THIS PLAN SHEET.

NOTE:

FOR ACCURATE RIGHT OF WAY DATA, CONTACT RIGHT OF WAY ENGINEERING AT THE DISTRICT OFFICE.

CONDUIT LEGEND:

1 - MDCS(8), 2 FO144

2 - 1"C, 1 FO12

LEGEND (TSO):

1 - FOR VAULT DETAILS SEE SHEET SES-2

2 - FOR CONTINUITY SEE CLOSED CIRCUIT TELEVISION SYSTEM ON SHEET E-61

3 - FOR SPLICING DETAILS SEE SHEET E-38

4 - FOR CABINET DETAILS SEE SHEET E-45

5 - INSTALL CONDUIT IN THE SAME TRENCH AS THE MDCS(8)

6 - FOR CABINET DETAILS SEE SHEET E-51

7 - CONDUIT MUST ENTER THE EXISTING MODEL 334 CONTROLLER CABINET FOUNDATION TO THE ADJACENT PULL BOX BY ROTOR DRILLING A 2.5" HOLE AT 45°

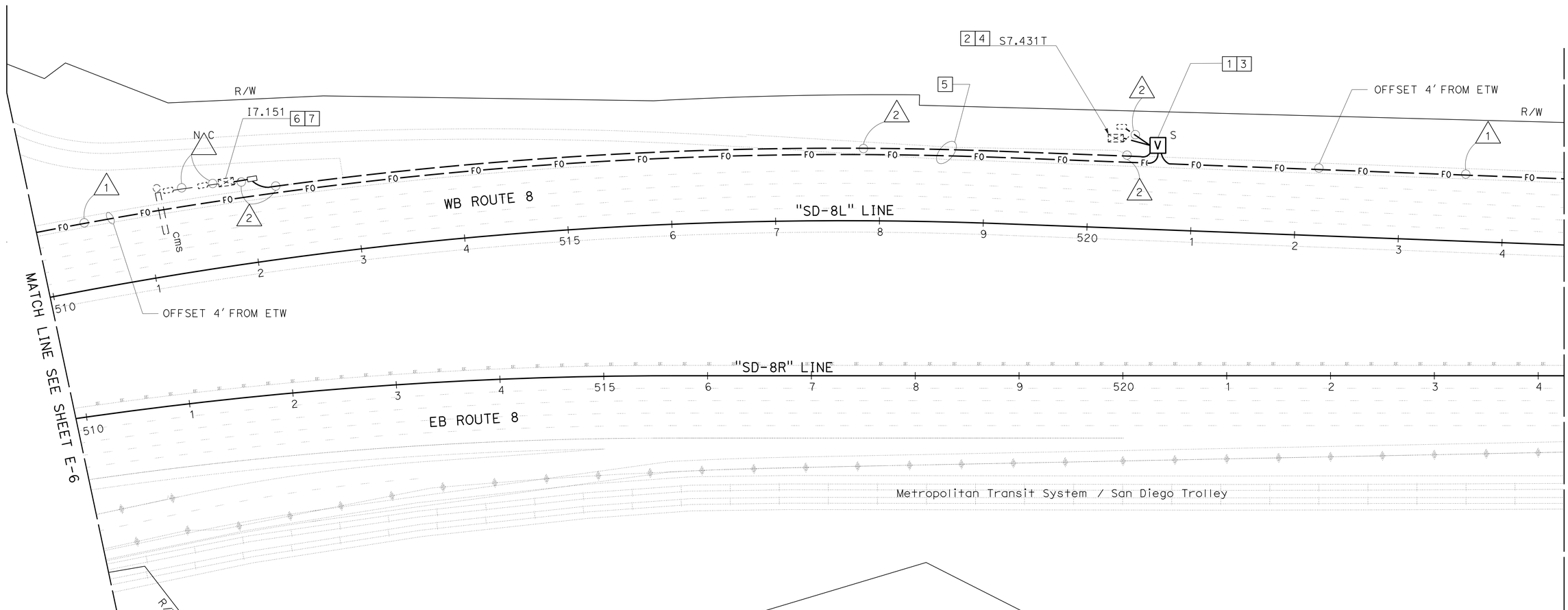

FIBER OPTIC SYSTEM

APPROVED FOR ELECTRICAL WORK ONLY

SCALE: 1" = 50'

E-7

STATE OF CALIFORNIA - DEPARTMENT OF TRANSPORTATION
Caltrans® TRAFFIC ELECTRICAL

FUNCTIONAL SUPERVISOR: RAJPREET SINGH
CALCULATED-DESIGNED BY: HECTOR SANTAMARIA
CHECKED BY: LOUIE LA COMPTE
REVISED BY
DATE REVISED

LAST REVISION 06-06-16
DATE PLOTTED => 09-JUN-2016
TIME PLOTTED => 09:35

Dist	COUNTY	ROUTE	POST MILES TOTAL PROJECT	SHEET No.	TOTAL SHEETS
11	SD	8	5.4/10.6, R20.0/R21.6	109	213

Héctor A. Santamaría 05-31-16
REGISTERED ELECTRICAL ENGINEER DATE

05-31-16
PLANS APPROVAL DATE

REGISTERED PROFESSIONAL ENGINEER HECTOR A. SANTAMARIA No. 18207 Exp. 12-31-17 ELECTRICAL STATE OF CALIFORNIA

THE STATE OF CALIFORNIA OR ITS OFFICERS OR AGENTS SHALL NOT BE RESPONSIBLE FOR THE ACCURACY OR COMPLETENESS OF SCANNED COPIES OF THIS PLAN SHEET.

NOTES (TSO):

FOR ACCURATE RIGHT OF WAY DATA, CONTACT RIGHT OF WAY ENGINEERING AT THE DISTRICT OFFICE.

CONDUIT LEGEND:

1 - MDCS(8), 2 FO144

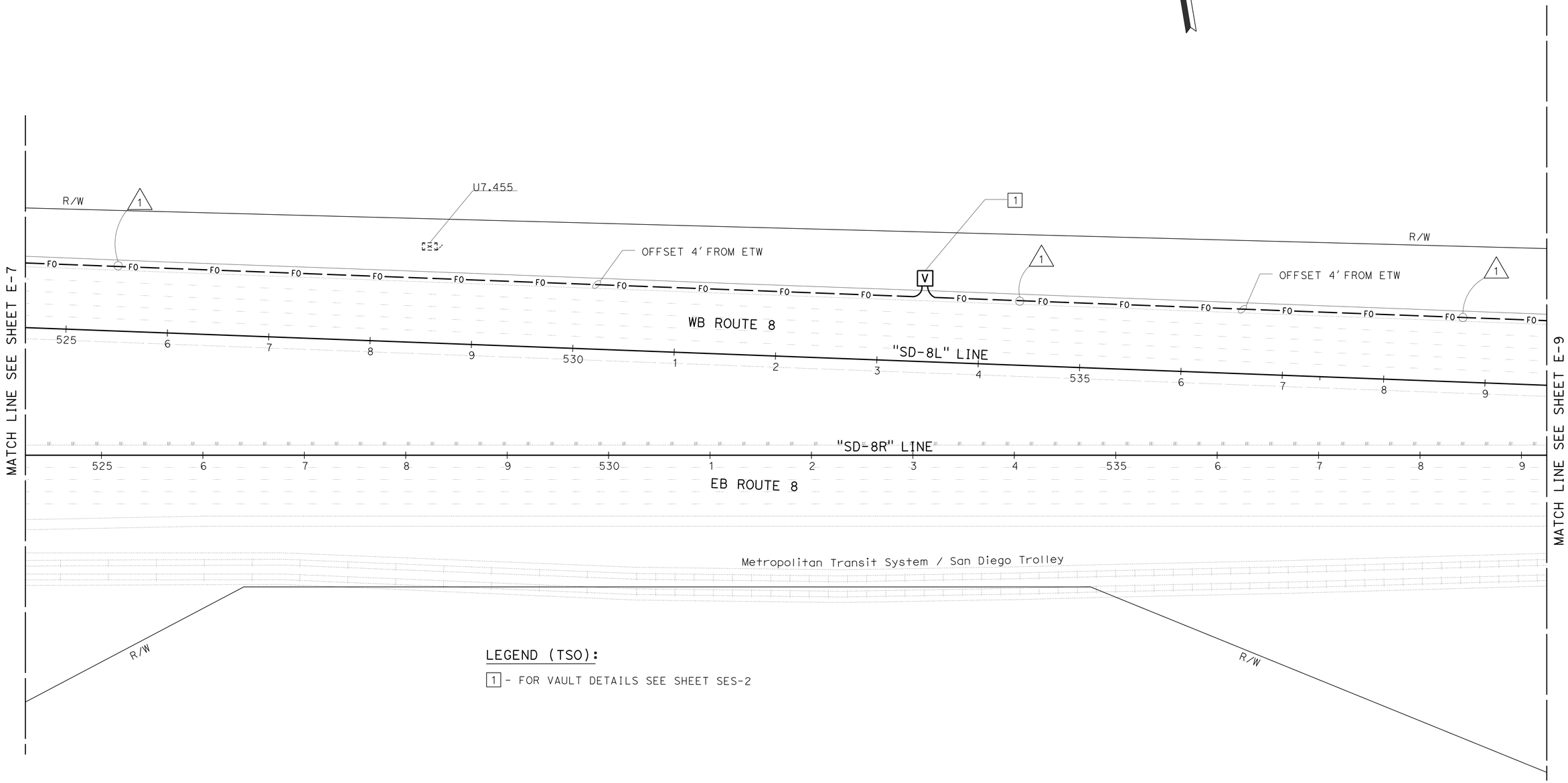

LEGEND (TSO):

1 - FOR VAULT DETAILS SEE SHEET SES-2

APPROVED FOR ELECTRICAL WORK ONLY

FIBER OPTIC SYSTEM

SCALE: 1" = 50'

E-8

STATE OF CALIFORNIA - DEPARTMENT OF TRANSPORTATION
Caltrans TRAFFIC ELECTRICAL

FUNCTIONAL SUPERVISOR: RAJPREET SINGH
CALCULATED-DESIGNED BY: HECTOR SANTAMARIA
CHECKED BY: LOUIE LA COMPTE
REVISED BY
DATE REVISED

LAST REVISION DATE PLOTTED => 09-JUN-2016
06-01-16 TIME PLOTTED => 09:35

Dist	COUNTY	ROUTE	POST MILES TOTAL PROJECT	SHEET No.	TOTAL SHEETS
11	SD	8	5.4/10.6, R20.0/R21.6	110	213

Héctor A. Santamaría 05-31-16
REGISTERED ELECTRICAL ENGINEER DATE

05-31-16
PLANS APPROVAL DATE

REGISTERED PROFESSIONAL ENGINEER
HECTOR A. SANTAMARIA
No. 18207
Exp. 12-31-17
ELECTRICAL
STATE OF CALIFORNIA

THE STATE OF CALIFORNIA OR ITS OFFICERS OR AGENTS SHALL NOT BE RESPONSIBLE FOR THE ACCURACY OR COMPLETENESS OF SCANNED COPIES OF THIS PLAN SHEET.

NOTE:

FOR ACCURATE RIGHT OF WAY DATA, CONTACT RIGHT OF WAY ENGINEERING AT THE DISTRICT OFFICE.

CONDUIT LEGEND:

1 - MDCS(8), 2 FO144

N C 2 - Exist 1½"C, 2#8(Ltg)

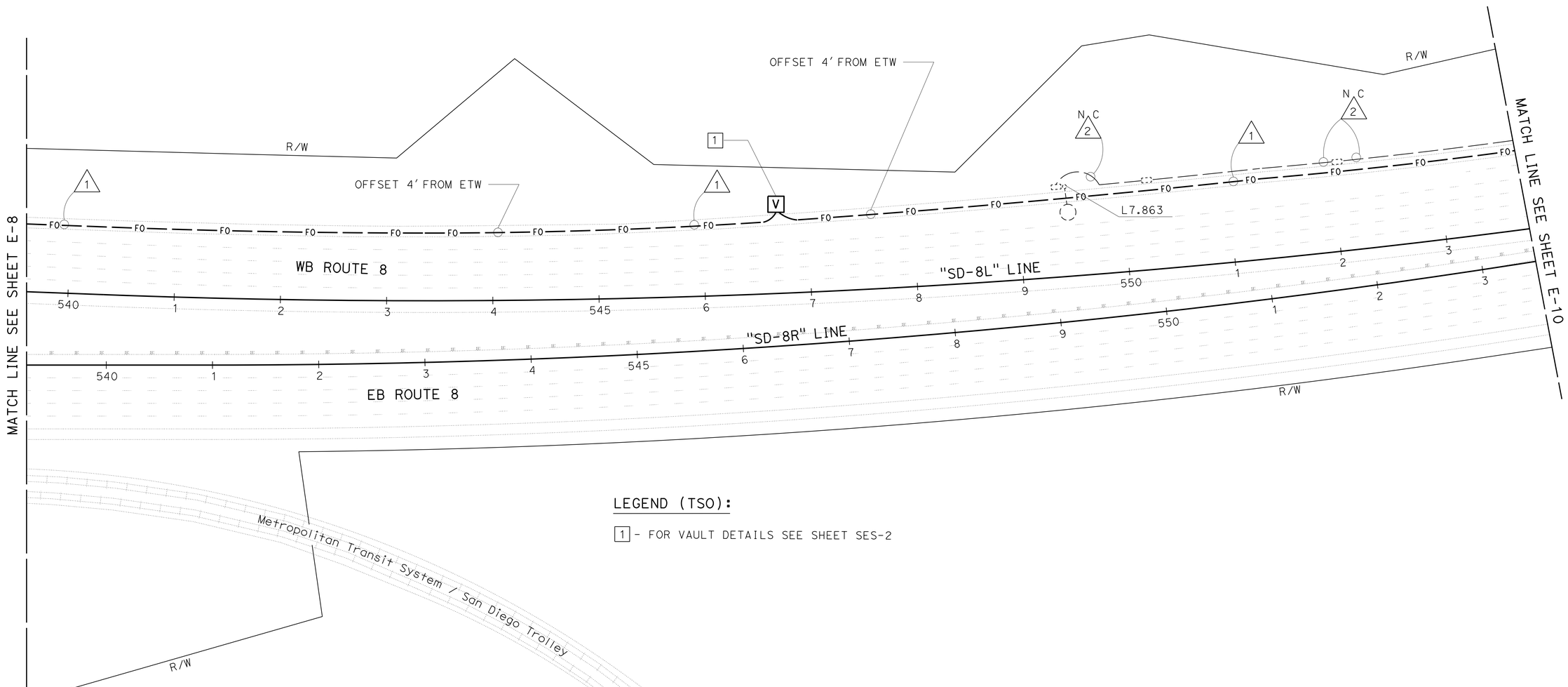

LEGEND (TSO):

1 - FOR VAULT DETAILS SEE SHEET SES-2

APPROVED FOR ELECTRICAL WORK ONLY

SCALE: 1" = 50'

FIBER OPTIC SYSTEM

E-9

STATE OF CALIFORNIA - DEPARTMENT OF TRANSPORTATION
Caltrans® TRAFFIC ELECTRICAL

FUNCTIONAL SUPERVISOR: RAJPREET SINGH
CALCULATED-DESIGNED BY: HECTOR SANTAMARIA
CHECKED BY: LOUIE LA COMPTE
REVISED BY
DATE REVISED

LAST REVISION 06-01-16
DATE PLOTTED => 09-JUN-2016
TIME PLOTTED => 09:35

Dist	COUNTY	ROUTE	POST MILES TOTAL PROJECT	SHEET No.	TOTAL SHEETS
11	SD	8	5.4/10.6, R20.0/R21.6	111	213

Héctor A. Santamaría 05-31-16
REGISTERED ELECTRICAL ENGINEER DATE

05-31-16
PLANS APPROVAL DATE

REGISTERED PROFESSIONAL ENGINEER
HECTOR A. SANTAMARIA
No. 18207
Exp. 12-31-17
ELECTRICAL
STATE OF CALIFORNIA

THE STATE OF CALIFORNIA OR ITS OFFICERS OR AGENTS SHALL NOT BE RESPONSIBLE FOR THE ACCURACY OR COMPLETENESS OF SCANNED COPIES OF THIS PLAN SHEET.

NOTE:

FOR ACCURATE RIGHT OF WAY DATA, CONTACT RIGHT OF WAY ENGINEERING AT THE DISTRICT OFFICE

LEGEND (TSO):

1 - FOR VAULT DETAILS SEE SHEET SES-2

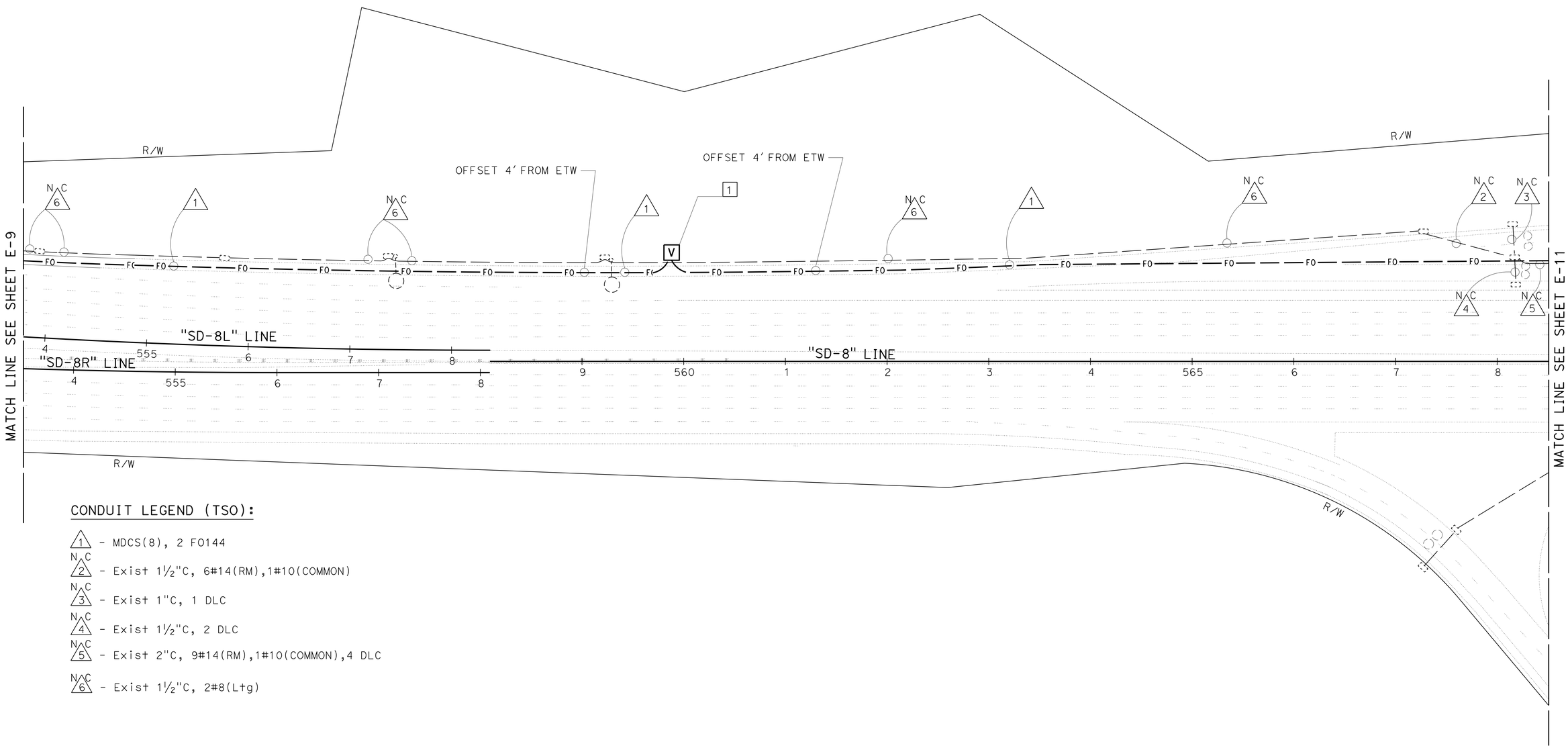

CONDUIT LEGEND (TSO):

1 - MDCS(8), 2 FO144

N C 2 - Exist 1½"C, 6#14(RM),1#10(COMMON)

N C 3 - Exist 1"C, 1 DLC

N C 4 - Exist 1½"C, 2 DLC

N C 5 - Exist 2"C, 9#14(RM),1#10(COMMON),4 DLC

N C 6 - Exist 1½"C, 2#8(Lt g)

FIBER OPTIC SYSTEM

APPROVED FOR ELECTRICAL WORK ONLY

SCALE: 1" = 50'

E-10

STATE OF CALIFORNIA - DEPARTMENT OF TRANSPORTATION
Caltrans
TRAFFIC ELECTRICAL

FUNCTIONAL SUPERVISOR: RAJPREET SINGH
CALCULATED-DESIGNED BY: HECTOR SANTAMARIA
CHECKED BY: LOUIE LA COMPTE
REVISED BY
DATE REVISED

LAST REVISION 06-01-16
DATE PLOTTED => 09-JUN-2016
TIME PLOTTED => 09:35

Dist	COUNTY	ROUTE	POST MILES TOTAL PROJECT	SHEET No.	TOTAL SHEETS
11	SD	8	5.4/10.6, R20.0/R21.6	112	213

Héctor A. Santamaría 05-31-16
REGISTERED ELECTRICAL ENGINEER DATE

05-31-16
PLANS APPROVAL DATE

REGISTERED PROFESSIONAL ENGINEER HECTOR A. SANTAMARIA No. 18207 Exp. 12-31-17 ELECTRICAL STATE OF CALIFORNIA

THE STATE OF CALIFORNIA OR ITS OFFICERS OR AGENTS SHALL NOT BE RESPONSIBLE FOR THE ACCURACY OR COMPLETENESS OF SCANNED COPIES OF THIS PLAN SHEET.

CONDUIT LEGEND (TSO):

1 - MDCS(8), 2 FO144

2 - 2"C, 1 FO12

3 - MDCS(2), 2 FO12

N C 4 - Exist 2"C, 9#14(RM),1#10(COMMON),4 DLC

N C 5 - Exist 2½"C, 9#14(RM),1#10(COMMON),9 DLC

N C 6 - Exist 1½"C, 2#8(RM)

N C 7 - Exist 1½"C, 2#14(S),2#10(COMMON) 2#8(RM)

10 - 2"C, 1 OCC

N C 11 - 2-2"C, 2#14(RM),2#10(COMMON) 2#8(RM POWER)

NOTE:

FOR ACCURATE RIGHT OF WAY DATA, CONTACT RIGHT OF WAY ENGINEERING AT THE DISTRICT OFFICE.

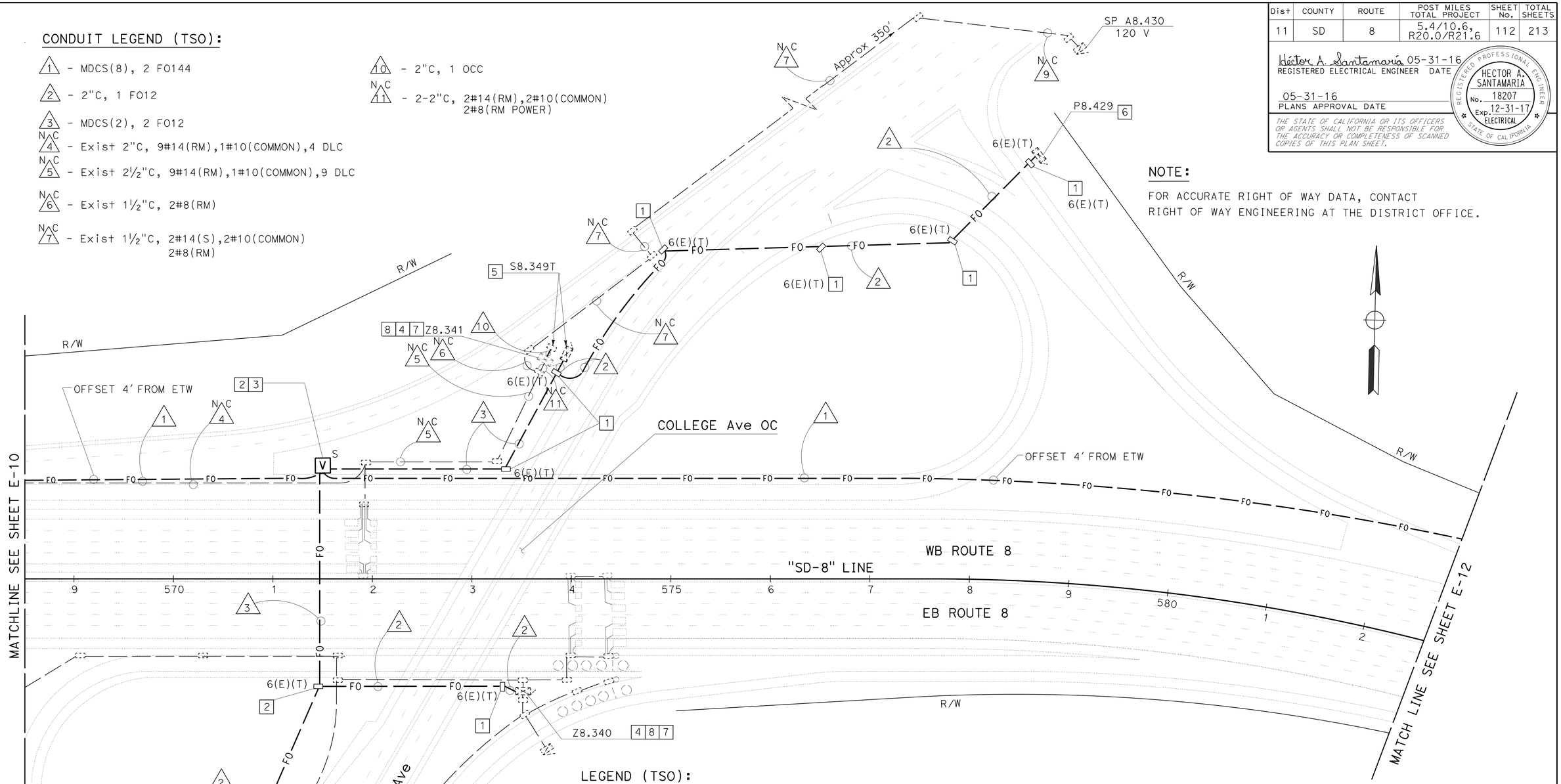

LEGEND (TSO):

1 - THE BOTTOM OF THE PULL BOX MUST BE 2" BELOW THE BOTTOM OF THE CONDUIT. CONDUIT BENDS MUST BE AT AN ANGLE OF 22.5°, PULL BOX MUST BE MARKED "FIBER OPTIC"

2 - FO SPLICING DETAILS SEE SHEET E-39

3 - FOR VAULT DETAILS SEE SHEET SES-2

4 - CONDUIT MUST ENTER THE EXISTING MODEL 334 CONTROLLER CABINET FOUNDATION TO THE ADJACENT PULL BOX BY ROTOR DRILLING A 2.5" HOLE AT 45°

5 - FOR CONTINUITY SEE CLOSED CIRCUIT TELEVISION SYSTEM ON SHEET E-62

6 - FOR CABINET DETAILS SEE SHEET E-53

7 - RS EXISTING MODEL 170 CONTROLLER AND INSTALL MODEL 2070E CONTROLLER

8 - FOR CABINET DETAILS SEE SHEET E-52

APPROVED FOR ELECTRICAL WORK ONLY

FIBER OPTIC SYSTEM

SCALE: 1" = 50'

E-11

STATE OF CALIFORNIA - DEPARTMENT OF TRANSPORTATION
Caltrans® TRAFFIC ELECTRICAL

FUNCTIONAL SUPERVISOR: RAJPREET SINGH
CALCULATED-DESIGNED BY: HECTOR SANTAMARIA
CHECKED BY: LOUIE LA COMPTE
REVISED BY / DATE REVISED

LAST REVISION 06-06-16
DATE PLOTTED => 09-JUN-2016
TIME PLOTTED => 09:35

Dist	COUNTY	ROUTE	POST MILES TOTAL PROJECT	SHEET No.	TOTAL SHEETS
11	SD	8	5.4/10.6, R20.0/R21.6	113	213

Héctor A. Santamaría 05-31-16
REGISTERED ELECTRICAL ENGINEER DATE

05-31-16
PLANS APPROVAL DATE

REGISTERED PROFESSIONAL ENGINEER
HECTOR A. SANTAMARIA
No. 18207
Exp. 12-31-17
ELECTRICAL
STATE OF CALIFORNIA

THE STATE OF CALIFORNIA OR ITS OFFICERS OR AGENTS SHALL NOT BE RESPONSIBLE FOR THE ACCURACY OR COMPLETENESS OF SCANNED COPIES OF THIS PLAN SHEET.

NOTE:

FOR ACCURATE RIGHT OF WAY DATA, CONTACT RIGHT OF WAY ENGINEERING AT THE DISTRICT OFFICE.

CONDUIT LEGEND (TSO):

△1 - MDCS(8), 2 FO144

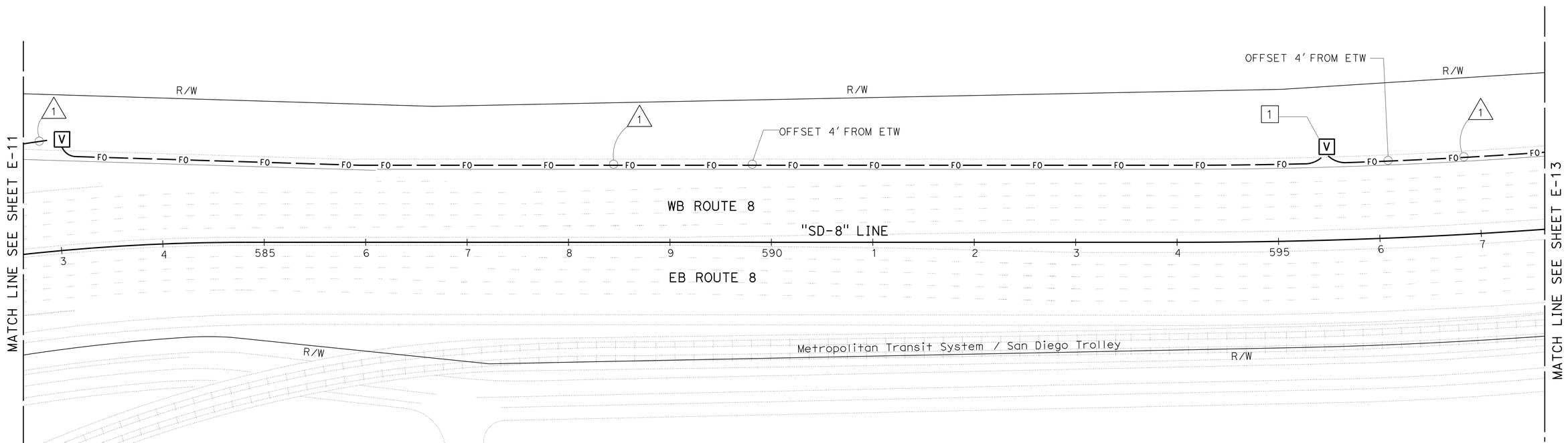

LEGEND (TSO):

1 - FOR VAULT DETAILS SEE SHEET SES-2

APPROVED FOR ELECTRICAL WORK ONLY

SCALE: 1" = 50'

FIBER OPTIC SYSTEM

E-12

STATE OF CALIFORNIA - DEPARTMENT OF TRANSPORTATION
Caltrans® TRAFFIC ELECTRICAL

FUNCTIONAL SUPERVISOR: RAJPREET SINGH
CALCULATED-DESIGNED BY: HECTOR SANTAMARIA
CHECKED BY: LOUIE LA COMPTE
REVISED BY
DATE REVISED

LAST REVISION 06-01-16
DATE PLOTTED => 09-JUN-2016
TIME PLOTTED => 09:35

Dist	COUNTY	ROUTE	POST MILES TOTAL PROJECT	SHEET No.	TOTAL SHEETS
11	SD	8	5.4/10.6, R20.0/R21.6	114	213

Héctor A. Santamaría 05-31-16
REGISTERED ELECTRICAL ENGINEER DATE

05-31-16
PLANS APPROVAL DATE

REGISTERED PROFESSIONAL ENGINEER HECTOR A. SANTAMARIA No. 18207 Exp. 12-31-17 ELECTRICAL STATE OF CALIFORNIA

THE STATE OF CALIFORNIA OR ITS OFFICERS OR AGENTS SHALL NOT BE RESPONSIBLE FOR THE ACCURACY OR COMPLETENESS OF SCANNED COPIES OF THIS PLAN SHEET.

NOTE:

FOR ACCURATE RIGHT OF WAY DATA, CONTACT RIGHT OF WAY ENGINEERING AT THE DISTRICT OFFICE.

LEGEND (TSO):

1 - FOR VAULT DETAILS SEE SHEET SES-2

CONDUIT LEGEND (TSO):

1 - MDCS(8), 2 FO144

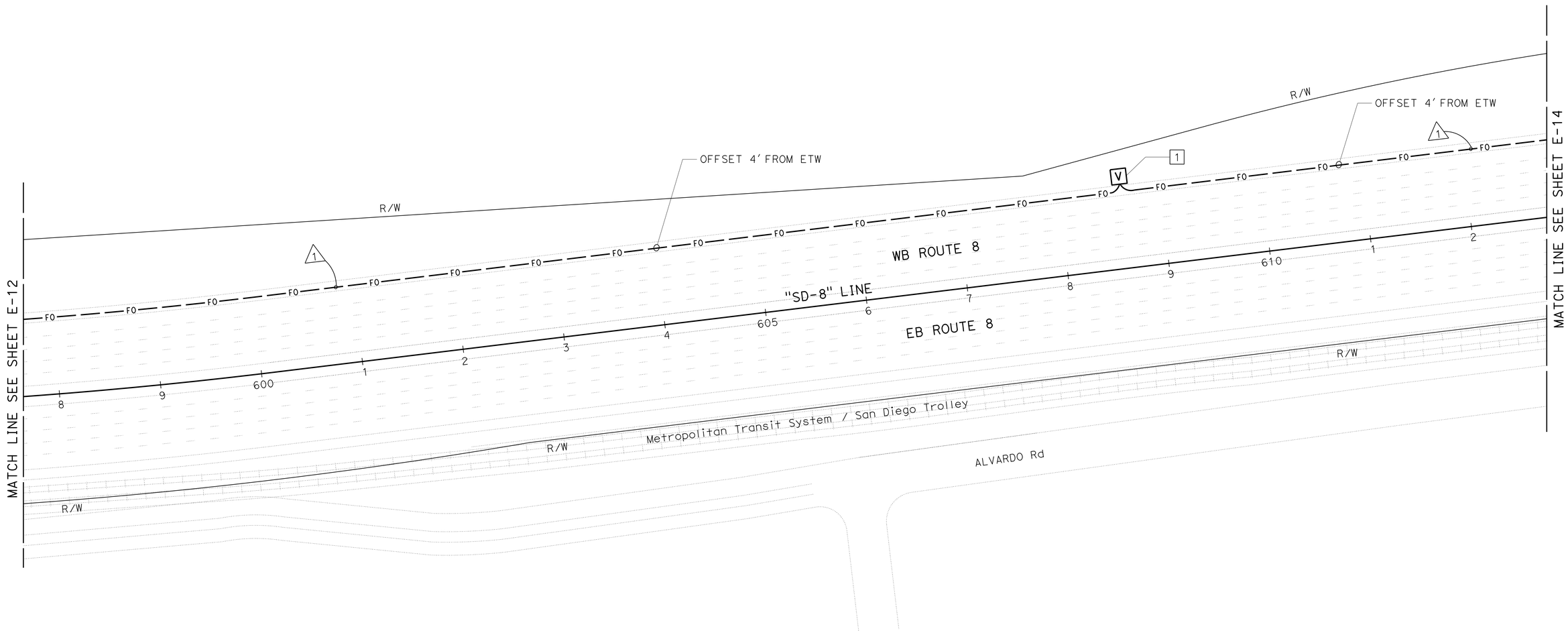

FIBER OPTIC SYSTEM

APPROVED FOR ELECTRICAL WORK ONLY

SCALE: 1" = 50'

E-13

STATE OF CALIFORNIA - DEPARTMENT OF TRANSPORTATION
Caltrans® **TRAFFIC ELECTRICAL**

FUNCTIONAL SUPERVISOR: RAJPREET SINGH
CALCULATED-DESIGNED BY: HECTOR SANTAMARIA
CHECKED BY: LOUIE LA COMPTE
REVISED BY
DATE REVISED

LAST REVISION 06-01-16 | DATE PLOTTED => 09-JUN-2016 | TIME PLOTTED => 09:35

Dist	COUNTY	ROUTE	POST MILES TOTAL PROJECT	SHEET No.	TOTAL SHEETS
11	SD	8	5.4/10.6, R20.0/R21.6	115	213

Héctor A. Santamaría 05-31-16
REGISTERED ELECTRICAL ENGINEER DATE

05-31-16
PLANS APPROVAL DATE

REGISTERED PROFESSIONAL ENGINEER
HECTOR A. SANTAMARIA
No. 18207
Exp. 12-31-17
ELECTRICAL
STATE OF CALIFORNIA

THE STATE OF CALIFORNIA OR ITS OFFICERS OR AGENTS SHALL NOT BE RESPONSIBLE FOR THE ACCURACY OR COMPLETENESS OF SCANNED COPIES OF THIS PLAN SHEET.

NOTE:

FOR ACCURATE RIGHT OF WAY DATA, CONTACT RIGHT OF WAY ENGINEERING AT THE DISTRICT OFFICE.

CONDUIT LEGEND (TSO):

1 - MDCS(8), 2 FO144

2 - 2"C, 1 FO12

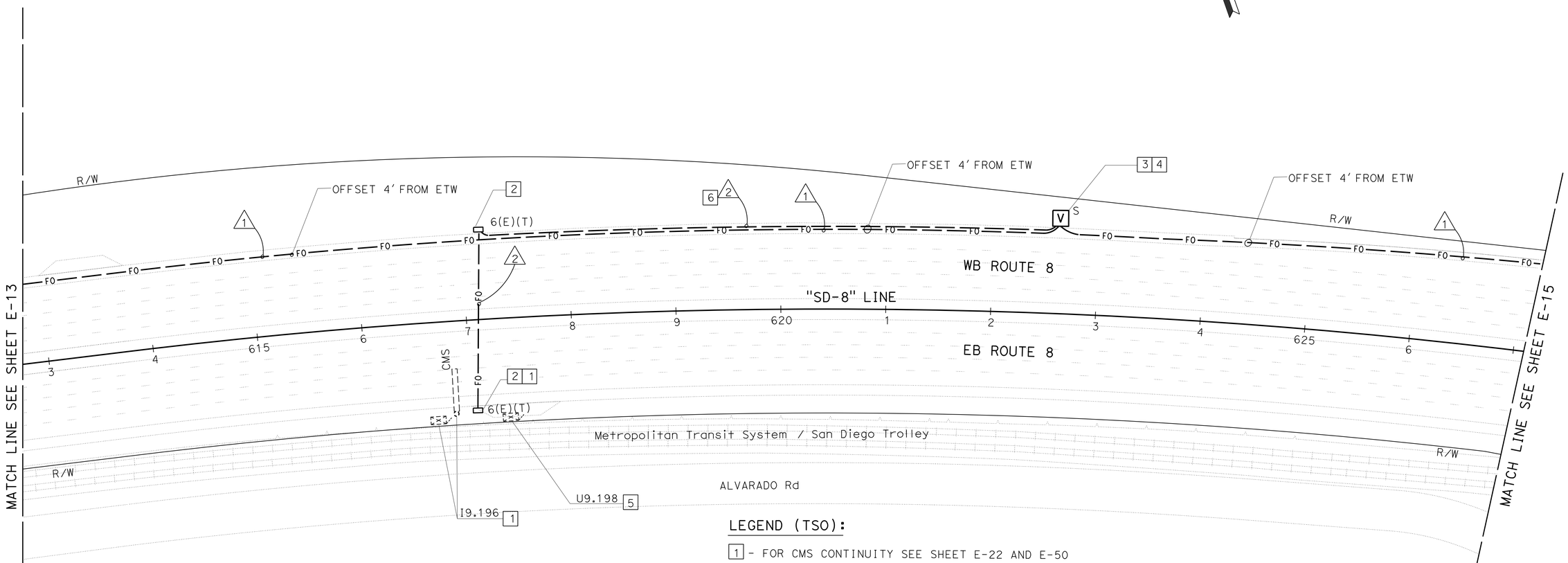

LEGEND (TSO):

1 - FOR CMS CONTINUITY SEE SHEET E-22 AND E-50

2 - THE BOTTOM OF THE PULL BOX MUST BE 2" BELOW THE BOTTOM OF THE CONDUIT. CONDUIT BENDS MUST BE AT AN ANGLE OF 22.5°, PULL BOX MUST BE MARKED "FIBER OPTIC"

3 - FO SPLICING DETAILS SEE SHEET E-40

4 - FOR VAULT DETAILS SEE SHEET SES-2

5 - FOR AUTOMATIC VEHICLE CLASSIFICATION SYSTEM CONTINUITY SEE SHEET E-27 AND E-50

6 - INSTALL CONDUIT IN THE SAME TRENCH AS THE MDCS(8)

FIBER OPTIC SYSTEM

APPROVED FOR ELECTRICAL WORK ONLY

SCALE: 1" = 50'

E-14

STATE OF CALIFORNIA - DEPARTMENT OF TRANSPORTATION
Caltrans
TRAFFIC ELECTRICAL

FUNCTIONAL SUPERVISOR: RAJPREET SINGH
CALCULATED-DESIGNED BY: HECTOR SANTAMARIA
CHECKED BY: LOUIE LA COMPTE
REVISED BY
DATE REVISED

LAST REVISION 06-07-16
DATE PLOTTED => 09-JUN-2016
TIME PLOTTED => 09:35

Dist	COUNTY	ROUTE	POST MILES TOTAL PROJECT	SHEET No.	TOTAL SHEETS
11	SD	8	5.4/10.6, R20.0/R21.6	116	213

Héctor A. Santamaría 05-31-16
REGISTERED ELECTRICAL ENGINEER DATE

05-31-16
PLANS APPROVAL DATE

REGISTERED PROFESSIONAL ENGINEER HECTOR A. SANTAMARIA No. 18207 Exp. 12-31-17 ELECTRICAL STATE OF CALIFORNIA

THE STATE OF CALIFORNIA OR ITS OFFICERS OR AGENTS SHALL NOT BE RESPONSIBLE FOR THE ACCURACY OR COMPLETENESS OF SCANNED COPIES OF THIS PLAN SHEET.

NOTE:

FOR ACCURATE RIGHT OF WAY DATA, CONTACT RIGHT OF WAY ENGINEERING AT THE DISTRICT OFFICE.

CONDUIT LEGEND (TSO):

1 - MDCS(8), 2 FO144
2 - 2"C, 1 FO12
3 - 2"C, 2 FO12
N C 4 - Exist 2"C, SERVICE CONDUCTORS
5 - 2"C, 2 FO12
N C 6 - Exist 2½"C, 2#14(FB1), 2#8(RM)
N C 7 - Exist 2"C, 2 12CSC, 1 VIDEO CABLE HARNESS, 3 DLC
8 - 2"C, 1 OCC
9 - 2"C, 1 FO4
10 - 3"C, 1 FO12, 3"C, 1 FO4

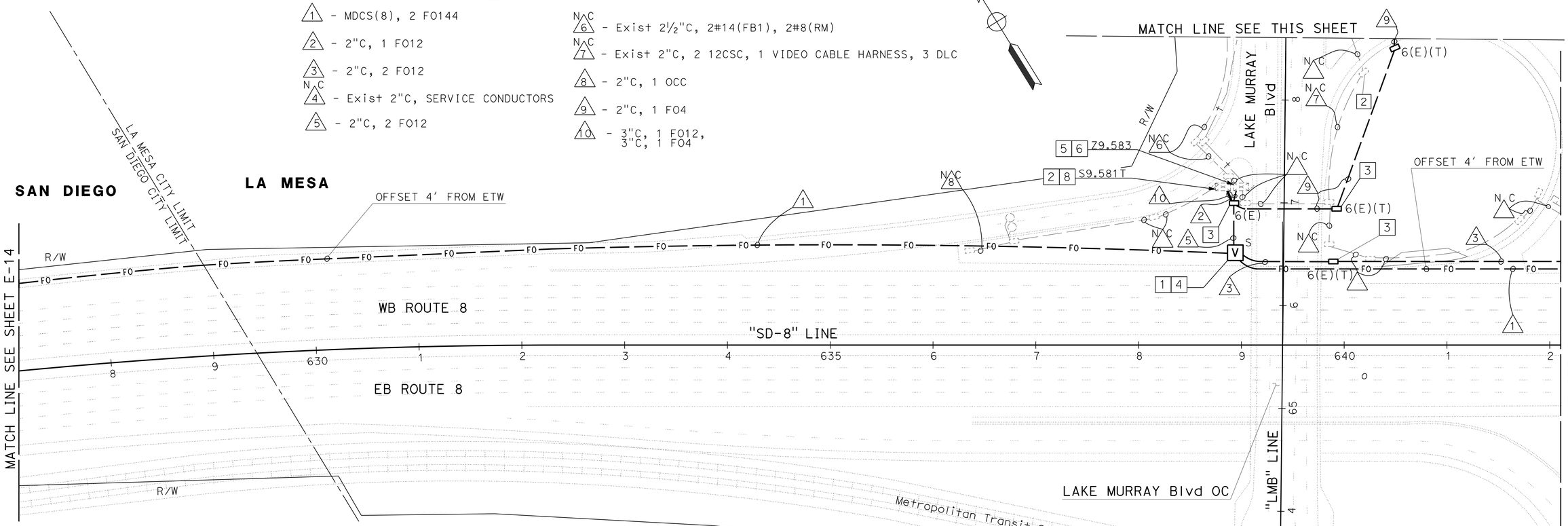

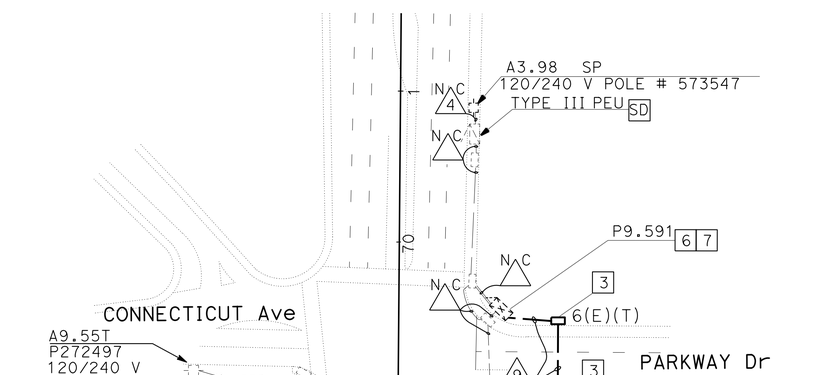

LEGEND (TSO):

1 - FO SPLICING DETAILS SEE SHEET E-41
2 - FOR CONTINUITY SEE CLOSED CIRCUIT TELEVISION SYSTEM ON SHEET E-63
3 - THE BOTTOM OF THE PULL BOX MUST BE 2" BELOW THE BOTTOM OF THE CONDUIT. CONDUIT BENDS MUST BE AT AN ANGLE OF 22.5°, PULL BOX MUST BE MARKED "FIBER OPTIC"
4 - FOR VAULT DETAILS SEE SHEET SES-2
5 - FOR CONTINUITY SEE MODIFY TRAFFIC MONITORING STATION ON SHEET E-28
6 - CONDUIT MUST ENTER THE EXISTING MODEL 334 CONTROLLER CABINET FOUNDATION TO THE ADJACENT PULL BOX BY ROTOR DRILLING A 2.5" HOLE AT 45°
7 - FOR CABINET DETAILS SEE SHEET E-52
8 - PLACED THE CCTV CABINET ENCLOSURE NEXT TO RAMP METERING (Z9.583) FOUNDATION
9 - FOR CABINET DETAILS SEE SHEET E-53

APPROVED FOR ELECTRICAL WORK ONLY

SCALE: 1" = 50'

FIBER OPTIC SYSTEM

E-15

STATE OF CALIFORNIA - DEPARTMENT OF TRANSPORTATION
Caltrans® TRAFFIC ELECTRICAL

FUNCTIONAL SUPERVISOR: RAJPREET SINGH
CALCULATED-DESIGNED BY: HECTOR SANTAMARIA
CHECKED BY: LOUIE LA COMPTE
REVISED BY
DATE REVISED

LAST REVISION 06-06-16
DATE PLOTTED => 09-JUN-2016
TIME PLOTTED => 09:35

Dist	COUNTY	ROUTE	POST MILES TOTAL PROJECT	SHEET No.	TOTAL SHEETS
11	SD	8	5.4/10.6, R20.0/R21.6	117	213

Héctor A. Santamaría 05-31-16
REGISTERED ELECTRICAL ENGINEER DATE

05-31-16
PLANS APPROVAL DATE

REGISTERED PROFESSIONAL ENGINEER HECTOR A. SANTAMARIA No. 18207 Exp. 12-31-17 ELECTRICAL STATE OF CALIFORNIA

THE STATE OF CALIFORNIA OR ITS OFFICERS OR AGENTS SHALL NOT BE RESPONSIBLE FOR THE ACCURACY OR COMPLETENESS OF SCANNED COPIES OF THIS PLAN SHEET.

NOTE:

FOR ACCURATE RIGHT OF WAY DATA, CONTACT RIGHT OF WAY ENGINEERING AT THE DISTRICT OFFICE.

LEGEND (TSO):

1 - THE BOTTOM OF PULL BOX MUST BE 2" BELOW THE BOTTOM OF CONDUIT. CONDUIT BENDS MUST BE AT AN ANGLE OF 22.5°, PULL BOX MUST BE MARKED "FIBER OPTIC"

2 - FOR VAULT DETAILS SEE SHEET SES-2

3 - FOR CONTINUITY SEE MODIFY RAMP METERING SYSTEM ON SHEET E-28

4 - CONDUIT MUST ENTER THE EXISTING MODEL 334 CONTROLLER CABINET FOUNDATION TO THE ADJACENT PULL BOX BY ROTOR DRILLING A 2.5" HOLE AT 45°

5 - FOR CABINET DETAIL SEE SHEET E-53

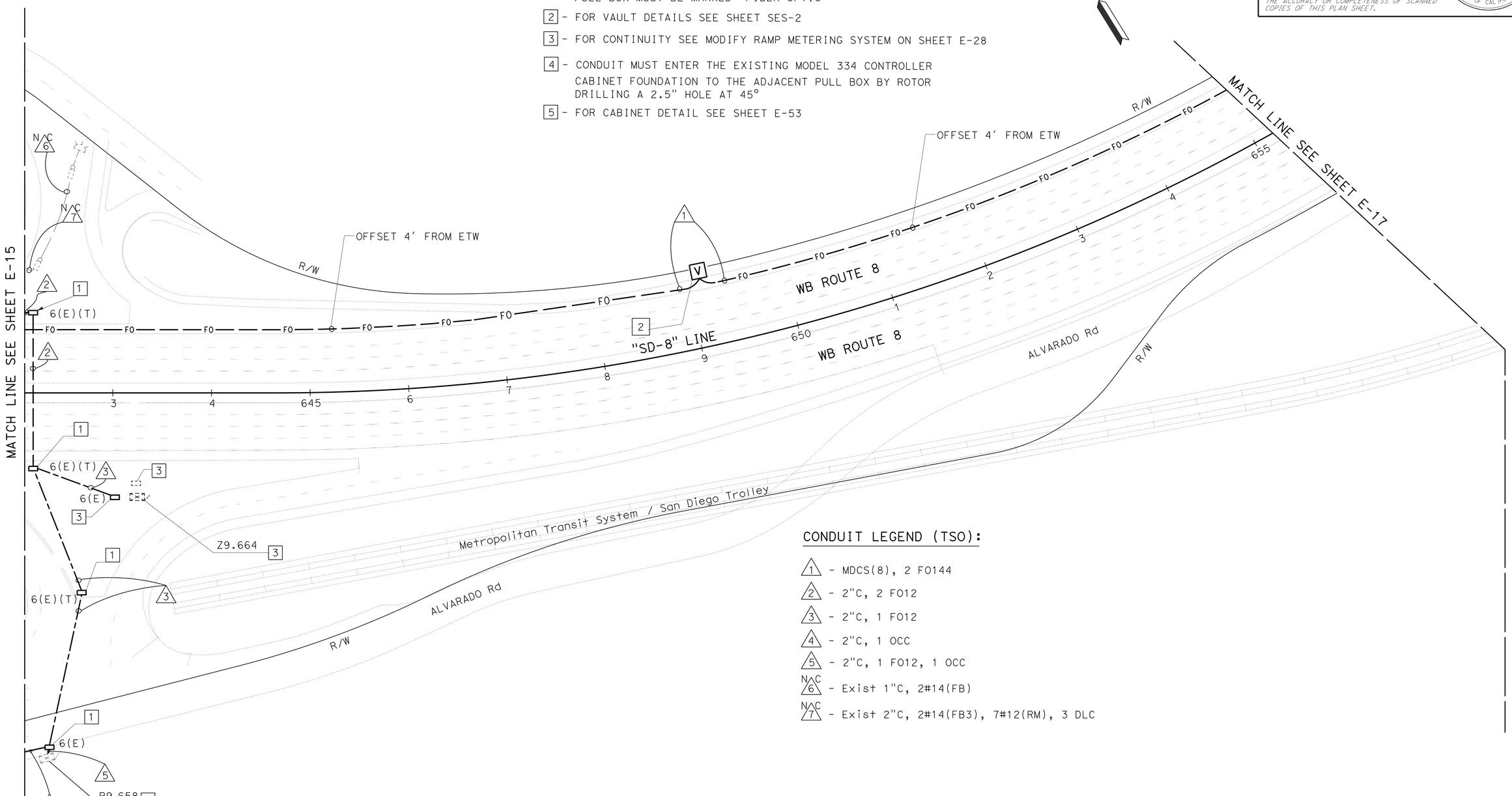

CONDUIT LEGEND (TSO):

1 - MDCS(8), 2 FO144

2 - 2"C, 2 FO12

3 - 2"C, 1 FO12

4 - 2"C, 1 OCC

5 - 2"C, 1 FO12, 1 OCC

N/C 6 - Exist 1"C, 2#14(FB)

N/C 7 - Exist 2"C, 2#14(FB3), 7#12(RM), 3 DLC

FIBER OPTIC SYSTEM

APPROVED FOR ELECTRICAL WORK ONLY

SCALE: 1" = 50'

E-16

STATE OF CALIFORNIA - DEPARTMENT OF TRANSPORTATION
Caltrans® TRAFFIC ELECTRICAL

FUNCTIONAL SUPERVISOR: RAJPREET SINGH
CALCULATED-DESIGNED BY: HECTOR SANTAMARIA
CHECKED BY: LOUIE LA COMPTE
REVISED BY
DATE REVISED

LAST REVISION 06-06-16
DATE PLOTTED => 09-JUN-2016
TIME PLOTTED => 09:35

Dist	COUNTY	ROUTE	POST MILES TOTAL PROJECT	SHEET No.	TOTAL SHEETS
11	SD	8	5.4/10.6, R20.0/R21.6	118	213

Héctor A. Santamaría 05-31-16
REGISTERED ELECTRICAL ENGINEER DATE

05-31-16
PLANS APPROVAL DATE

REGISTERED PROFESSIONAL ENGINEER
HECTOR A. SANTAMARIA
No. 18207
Exp. 12-31-17
ELECTRICAL
STATE OF CALIFORNIA

THE STATE OF CALIFORNIA OR ITS OFFICERS OR AGENTS SHALL NOT BE RESPONSIBLE FOR THE ACCURACY OR COMPLETENESS OF SCANNED COPIES OF THIS PLAN SHEET.

NOTE:

FOR ACCURATE RIGHT OF WAY DATA, CONTACT RIGHT OF WAY ENGINEERING AT THE DISTRICT OFFICE.

CONDUIT LEGEND (TSO):

1 - MDCS(8), 2 FO144

2 - 1"C, 1 FO12

LEGEND (TSO):

1 - FOR VAULT DETAILS SEE SHEET SES-2

2 - FOR CONTINUITY SEE MODIFY TRAFFIC MONITORING STATION ON SHEET E-29

3 - THE BOTTOM OF THE PULL BOX MUST BE 2" BELOW THE BOTTOM OF THE CONDUIT. CONDUIT BENDS MUST BE AT AN ANGLE OF 22.5°, PULL BOX MUST BE MARKED "FIBER OPTIC"

4 - INSTALL THE CONDUIT IN THE SAME TRENCH AS THE MDCS(8)

5 - FO SPLICING DETAILS SEE SHEET E-41

6 - CONDUIT MUST ENTER THE EXISTING MODEL 334 CONTROLLER CABINET FOUNDATION TO THE ADJACENT PULL BOX BY ROTOR DRILLING A 2.5" HOLE AT 45°

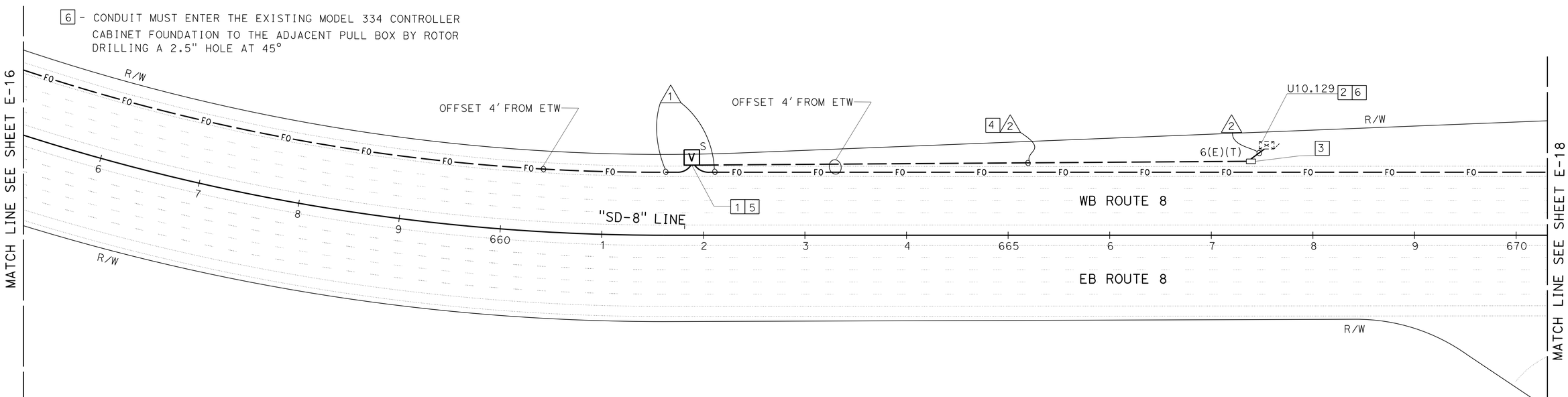

FIBER OPTIC SYSTEM

APPROVED FOR ELECTRICAL WORK ONLY

SCALE: 1" = 50'

E-17

STATE OF CALIFORNIA - DEPARTMENT OF TRANSPORTATION
Caltrans® TRAFFIC ELECTRICAL

FUNCTIONAL SUPERVISOR: RAJPREET SINGH
CALCULATED-DESIGNED BY: HECTOR SANTAMARIA
CHECKED BY: LOUIE LA COMPTE
REVISED BY
DATE REVISED

LAST REVISION 06-06-16
DATE PLOTTED => 09-JUN-2016
TIME PLOTTED => 09:35

Dist	COUNTY	ROUTE	POST MILES TOTAL PROJECT	SHEET No.	TOTAL SHEETS
11	SD	8	5.4/10.6, R20.0/R21.6	119	213

Héctor A. Santamaría 05-31-16
REGISTERED ELECTRICAL ENGINEER DATE

05-31-16
PLANS APPROVAL DATE

REGISTERED PROFESSIONAL ENGINEER HECTOR A. SANTAMARIA No. 18207 Exp. 12-31-17 ELECTRICAL STATE OF CALIFORNIA

THE STATE OF CALIFORNIA OR ITS OFFICERS OR AGENTS SHALL NOT BE RESPONSIBLE FOR THE ACCURACY OR COMPLETENESS OF SCANNED COPIES OF THIS PLAN SHEET.

NOTE:

FOR ACCURATE RIGHT OF WAY DATA, CONTACT RIGHT OF WAY ENGINEERING AT THE DISTRICT OFFICE.

LEGEND (TSO):

1 - FOR VAULT DETAILS SEE SHEET SES-2

CONDUIT LEGEND (TSO):

1 - MDCS(8), 2 FO144

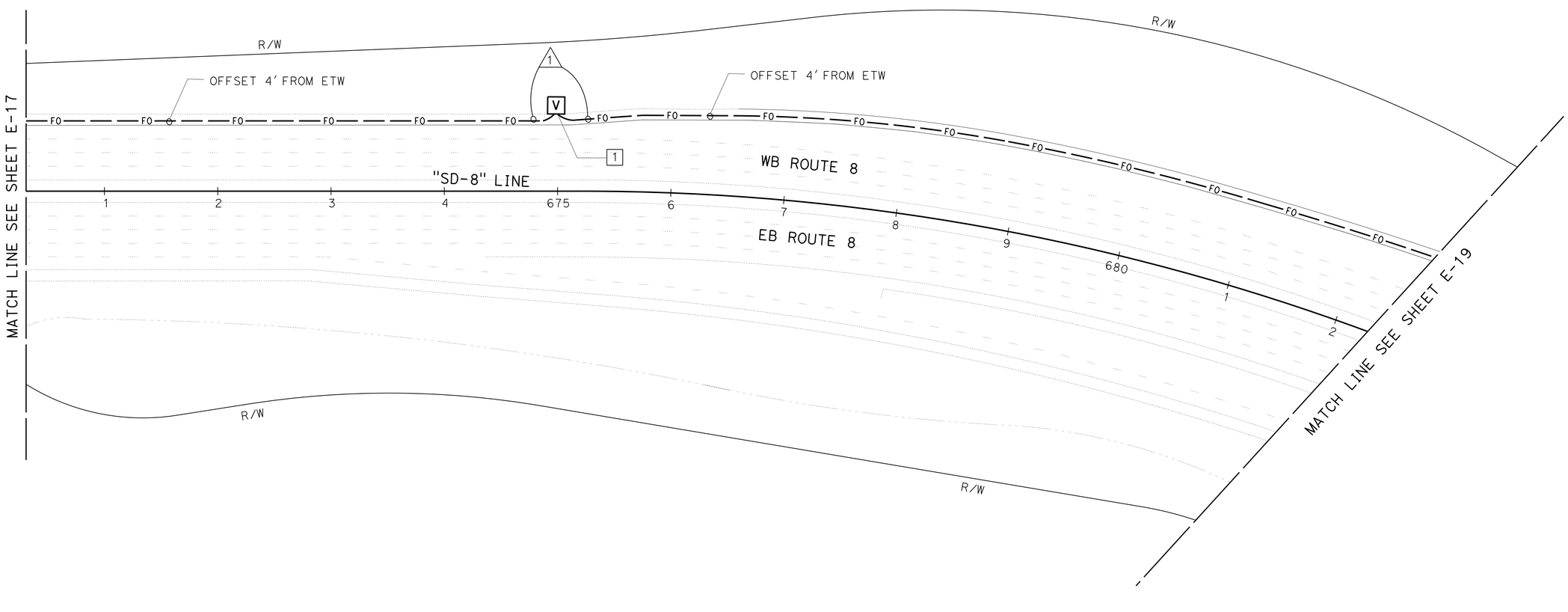

FIBER OPTIC SYSTEM

APPROVED FOR ELECTRICAL WORK ONLY

SCALE: 1" = 50'

E-18

STATE OF CALIFORNIA - DEPARTMENT OF TRANSPORTATION
Caltrans® **TRAFFIC ELECTRICAL**

FUNCTIONAL SUPERVISOR: RAJPREET SINGH
CALCULATED-DESIGNED BY: HECTOR SANTAMARIA
CHECKED BY: LOUIE LA COMPTE
REVISED BY
DATE REVISED

LAST REVISION 06-01-16
DATE PLOTTED => 09-JUN-2016
TIME PLOTTED => 09:35

Dist	COUNTY	ROUTE	POST MILES TOTAL PROJECT	SHEET No.	TOTAL SHEETS
11	SD	8	5.4/10.6, R20.0/R21.6	120	213

Héctor A. Santamaría 05-31-16
REGISTERED ELECTRICAL ENGINEER DATE

05-31-16
PLANS APPROVAL DATE

REGISTERED PROFESSIONAL ENGINEER HECTOR A. SANTAMARIA No. 18207 Exp. 12-31-17 ELECTRICAL STATE OF CALIFORNIA

THE STATE OF CALIFORNIA OR ITS OFFICERS OR AGENTS SHALL NOT BE RESPONSIBLE FOR THE ACCURACY OR COMPLETENESS OF SCANNED COPIES OF THIS PLAN SHEET.

NOTE:

FOR ACCURATE RIGHT OF WAY DATA, CONTACT RIGHT OF WAY ENGINEERING AT THE DISTRICT OFFICE.

CONDUIT LEGEND (TSO):

1 - MDCS(8), 2 FO144

2 - 2"C, 1 FO12

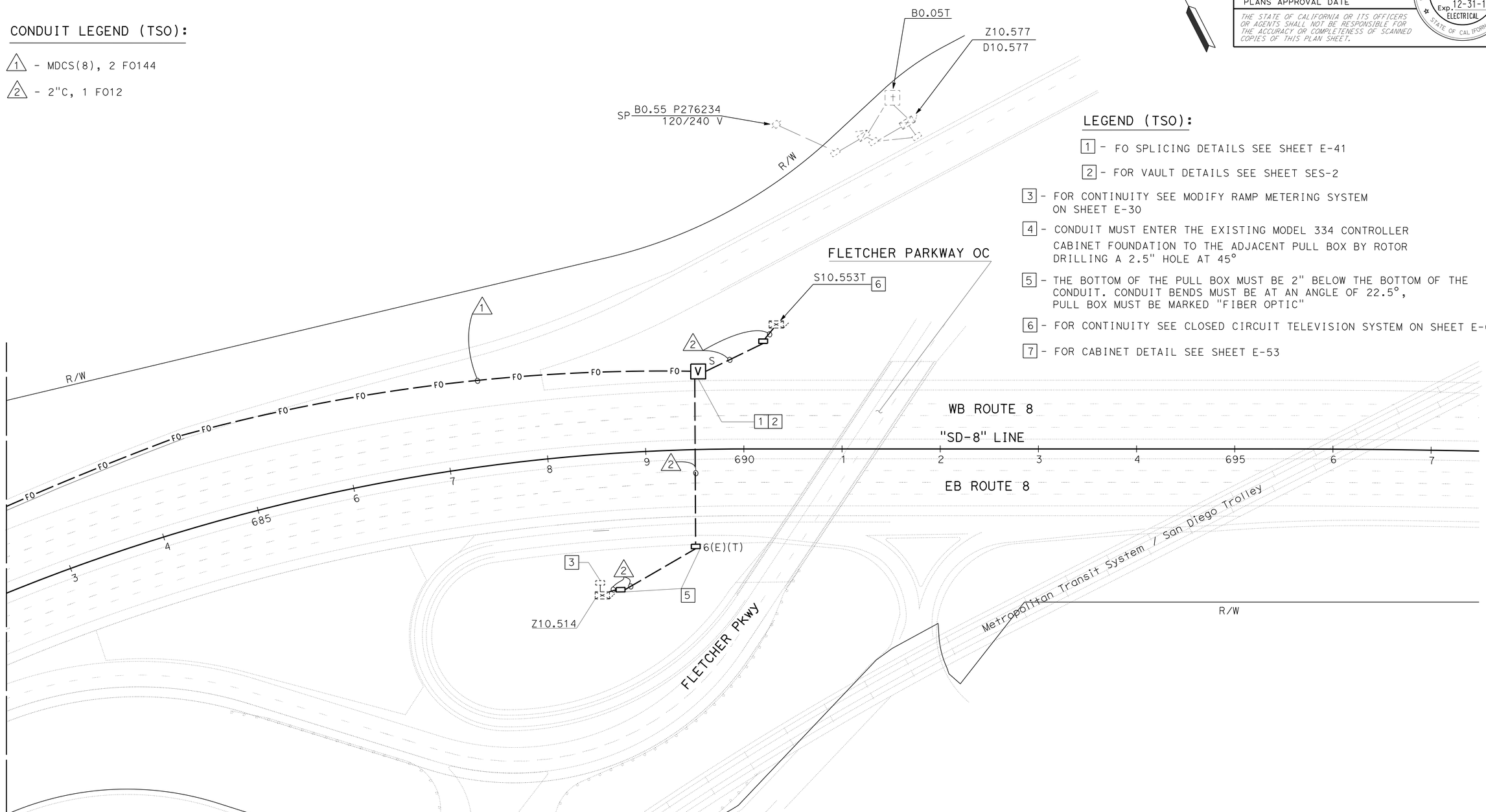

LEGEND (TSO):

1 - FO SPLICING DETAILS SEE SHEET E-41

2 - FOR VAULT DETAILS SEE SHEET SES-2

3 - FOR CONTINUITY SEE MODIFY RAMP METERING SYSTEM ON SHEET E-30

4 - CONDUIT MUST ENTER THE EXISTING MODEL 334 CONTROLLER CABINET FOUNDATION TO THE ADJACENT PULL BOX BY ROTOR DRILLING A 2.5" HOLE AT 45°

5 - THE BOTTOM OF THE PULL BOX MUST BE 2" BELOW THE BOTTOM OF THE CONDUIT. CONDUIT BENDS MUST BE AT AN ANGLE OF 22.5°, PULL BOX MUST BE MARKED "FIBER OPTIC"

6 - FOR CONTINUITY SEE CLOSED CIRCUIT TELEVISION SYSTEM ON SHEET E-64

7 - FOR CABINET DETAIL SEE SHEET E-53

FIBER OPTIC SYSTEM

APPROVED FOR ELECTRICAL WORK ONLY

SCALE: 1" = 50'

E-19

STATE OF CALIFORNIA - DEPARTMENT OF TRANSPORTATION
Caltrans® **TRAFFIC ELECTRICAL**

FUNCTIONAL SUPERVISOR: RAJPREET SINGH
CALCULATED-DESIGNED BY: HECTOR SANTAMARIA
CHECKED BY: LOUIE LA COMPTE
REVISED BY
DATE REVISED

LAST REVISION 06-07-16
DATE PLOTTED => 09-JUN-2016
TIME PLOTTED => 09:35

Dist	COUNTY	ROUTE	POST MILES TOTAL PROJECT	SHEET No.	TOTAL SHEETS
11	SD	8	5.4/10.6, R20.0/R21.6	121	213

Héctor A. Santamaría 05-31-16
REGISTERED ELECTRICAL ENGINEER DATE

05-31-16
PLANS APPROVAL DATE

REGISTERED PROFESSIONAL ENGINEER HECTOR A. SANTAMARIA No. 18207 Exp. 12-31-17 ELECTRICAL STATE OF CALIFORNIA

THE STATE OF CALIFORNIA OR ITS OFFICERS OR AGENTS SHALL NOT BE RESPONSIBLE FOR THE ACCURACY OR COMPLETENESS OF SCANNED COPIES OF THIS PLAN SHEET.

NOTE:

FOR ACCURATE RIGHT OF WAY DATA, CONTACT RIGHT OF WAY ENGINEERING AT THE DISTRICT OFFICE.

LEGEND:

1 - RC TYPE III-BR SERVICE EQUIPMENT ENCLOSURE, 120/240 V

2 - TYPE III-BF SERVICE EQUIPMENT ENCLOSURE
SEE WIRING DIAGRAM ON THIS SHEET
REUSE EXISTING CONDUCTORS TO CONNECT

3 - TYPE CCTV 35 DETAILS SEE SHEET SES-1
INSTALL CCTV POLE BEHIND BRIDGE BARRIER

4 - FOR CABINET DETAIL SEE SHEET E-44

5 - CAMERA CABLE HARNESS DETAIL SEE SHEET E-43 AND E-44

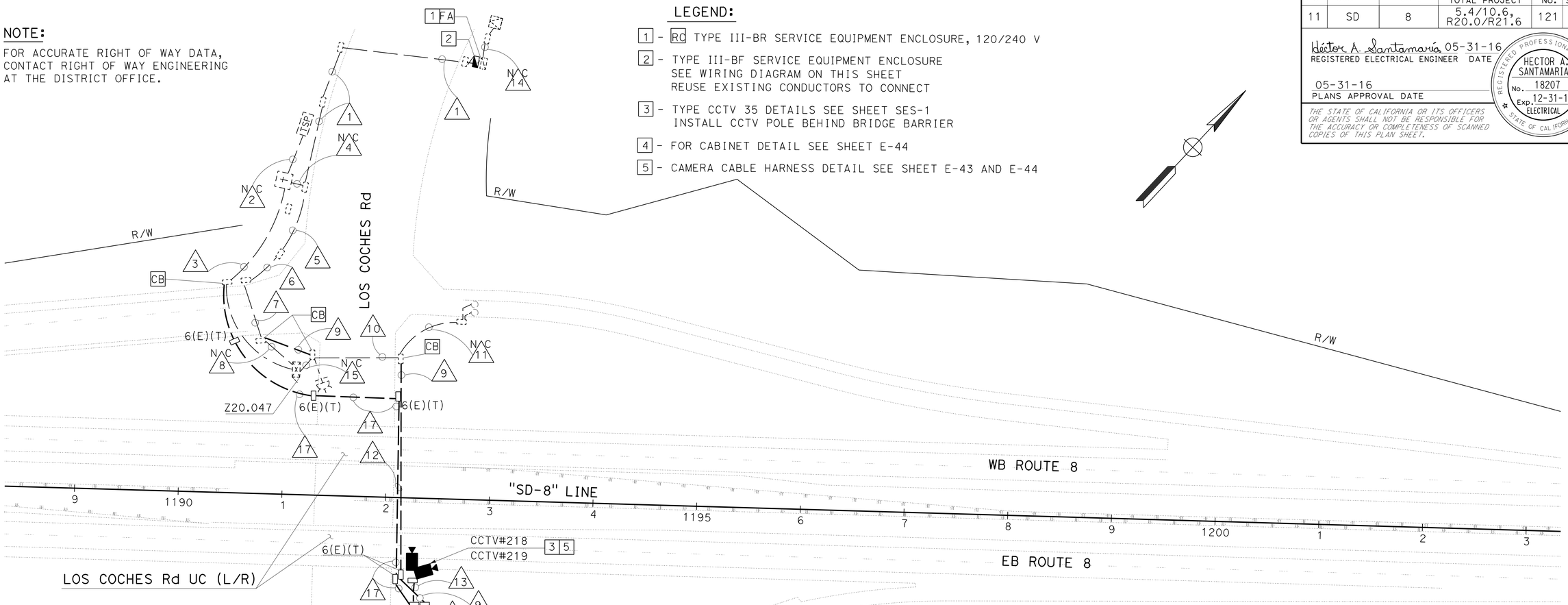

CIRCUIT BREAKERS

MAIN - 2P - 100 A
A - 1P - 30 A SPARE
B - 1P - 30 A
C - 1P - 30 A
D - 1P - 15 A
E - 1P - 15 A SPARE
F - 1P - 15 A
G, H - 2P - 30 A

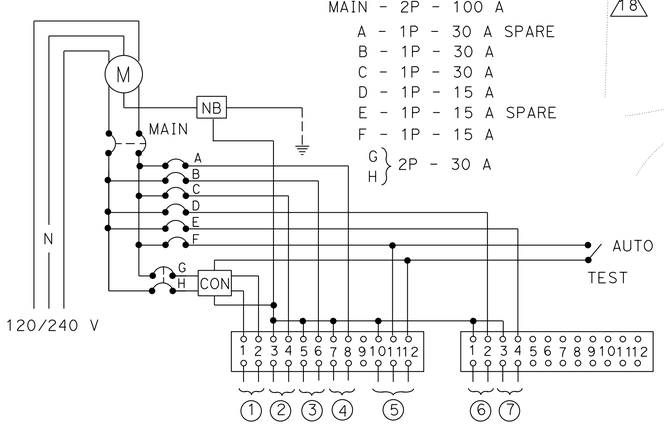

WIRING DIAGRAM

TYPE III-BF SERVICE EQUIPMENT ENCLOSURE SEE RSP ES-2C AND RSP ES-2E

1 - LIGHTING
2 - RM
3 - CCTV
4 - SPARE
5 - PEU
6 - TDC
7 - SPARE

CONDUIT LEGEND:

1 - Exist 2"C, 2#8(RM), 2#8(Ltg), 3#14(PEU), 2#10(TDC). ADD 2#6(CCTV)

NC 2 - Exist 1"C, 1 SIC

3 - Exist 1½"C, 1 OCC. ADD 1 OCC(CCTV)

NC 4 - Exist 1½"C, 2#10(TDC)

5 - Exist 2"C, 2#8(RM), 2#8(Ltg), 3#14(PEU). ADD 2#6(CCTV)

6 - Exist 2"C, 2#8(RM), 2#8(Ltg), 3#14(FB). ADD 2#6(CCTV)

7 - Exist 2"C, 2#8(RM), 2#8(Ltg), 2#14(FB), 1 DLC. ADD 2#6(CCTV)

NC 8 - Exist 3"C, 2#8(RM), 2 9CSC, 2#14(FB), 11 DLC

9 - 2"C, 2#6(CCTV)

10 - Exist 1½"C, 2#14(FB), 2 DLC. ADD 2#6(CCTV)

NC 11 - Exist 1½"C, 2#14(FB), 2 DLC

12 - 2"C, 2#6(CCTV)
- 2"C, 1 OCC(CCTV)

13 - 3"C, 2 CAMERA CABLE HARNESS

NC 14 - Exist 2"C, SERVICE CONDUCTORS

NC 15 - Exist 1½"C, 2#14(FB), 2 DLC

16 - 2-3"C, 2#6(CCTV), PT

17 - 2"C, 1 OCC(CCTV)

18 - 3"C, 1 OCC(CCTV)
- 3"C, 2 CAMERA CABLE HARNESS

CLOSED CIRCUIT TELEVISION SYSTEM

APPROVED FOR ELECTRICAL WORK ONLY

SCALE: 1" = 50'

E-20

STATE OF CALIFORNIA - DEPARTMENT OF TRANSPORTATION
Caltrans® TRAFFIC ELECTRICAL

FUNCTIONAL SUPERVISOR: RAJPREET SINGH
CALCULATED-DESIGNED BY: LOUIE LA COMPTE
CHECKED BY: HECTOR SANTAMARIA
REVISED BY / DATE REVISED

LAST REVISION 06-06-16
DATE PLOTTED => 09-JUN-2016
TIME PLOTTED => 09:35

Dist	COUNTY	ROUTE	POST MILES TOTAL PROJECT	SHEET No.	TOTAL SHEETS
11	SD	8	5.4/10.6, R20.0/R21.6	122	213

Héctor A. Santamaría 05-31-16
REGISTERED ELECTRICAL ENGINEER DATE

05-31-16
PLANS APPROVAL DATE

REGISTERED PROFESSIONAL ENGINEER HECTOR A. SANTAMARIA No. 18207 Exp. 12-31-17 ELECTRICAL STATE OF CALIFORNIA

THE STATE OF CALIFORNIA OR ITS OFFICERS OR AGENTS SHALL NOT BE RESPONSIBLE FOR THE ACCURACY OR COMPLETENESS OF SCANNED COPIES OF THIS PLAN SHEET.

NOTE:

FOR ACCURATE RIGHT OF WAY DATA, CONTACT RIGHT OF WAY ENGINEERING AT THE DISTRICT OFFICE.

LEGEND:

1 - TYPE III-BF SERVICE EQUIPMENT ENCLOSURE SEE WIRING DIAGRAM DETAIL ON THIS SHEET

2 - TYPE H CONDUIT RISER PER SDG&E REQUIREMENTS

3 - INSTALL TELEPHONE DEMARCATION CABINET, TYPE B

4 - TYPE CCTV 35 DETAILS SEE SHEET SES-1

5 - FOR CABINET DETAILS SEE SHEET E-44

6 - FOR CAMERA CABLE HARNESS DETAILS SEE SHEET E-43 AND E-44

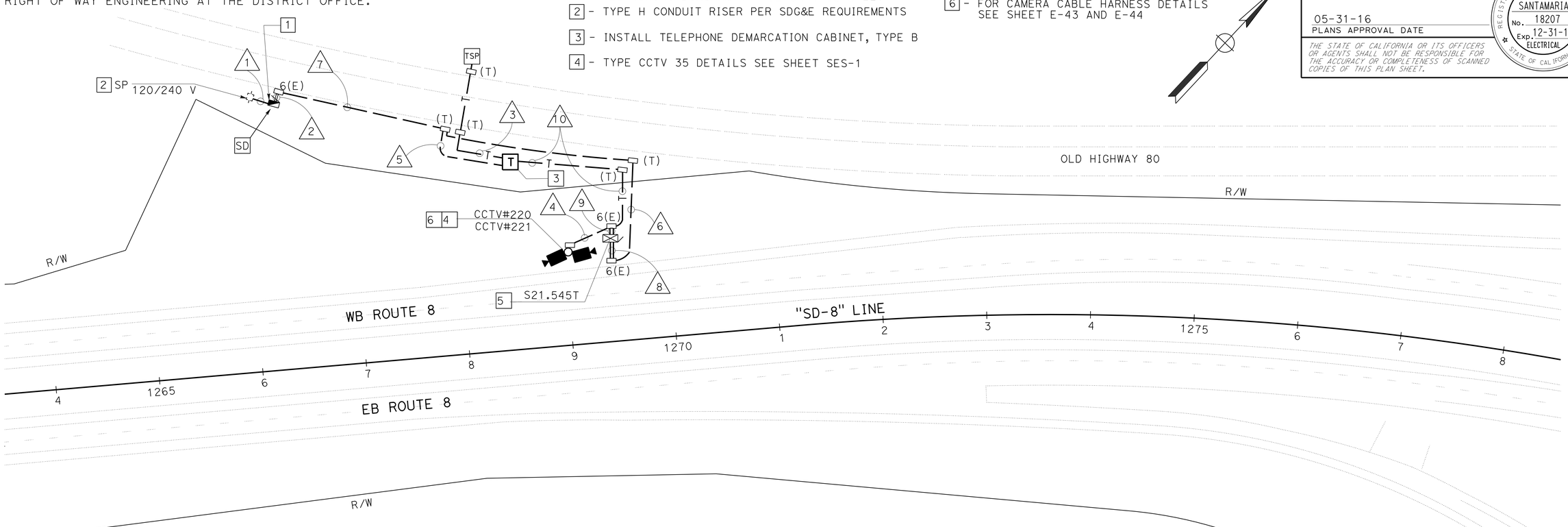

CIRCUIT BREAKERS

MAIN - 2P - 100 A
A - 1P - 30 A SPARE
B - 1P - 30 A SPARE
C - 1P - 30 A
D - 1P - 15 A
E - 1P - 15 A SPARE
F - 1P - 15 A
G, H - 2P - 30 A SPARE

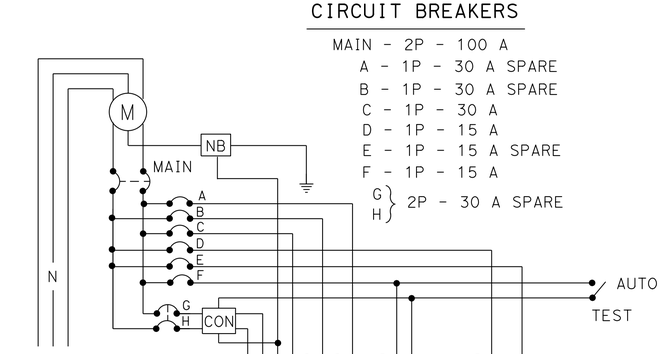

WIRING DIAGRAM

TYPE III-BF SERVICE EQUIPMENT ENCLOSURE SEE RSP ES-2C AND RSP ES-2E

1 - SPARE
2 - CCTV
3 - SPARE
4 - SPARE
5 - PEU
6 - TDC
7 - SPARE

CONDUIT LEGEND:

1 - 2"C, CONDUCTORS BY SDG&E
2 - 2-3"C, 2#8(CCTV), 2#12(TDC), PT
3 - 2"C, CONDUCTORS BY AT&T
4 - 3"C, 2 CAMERA CABLE HARNESS
5 - 2"C, 2#12(TDC)
6 - 2"C, 2#8(CCTV)
7 - 3"C, 2#8(CCTV), 2#12(TDC)
8 - 2-3"C, 2#8(CCTV), PT
9 - 2-3"C, 1 OCC, 2 CAMERA CABLE HARNESS
10 - 2"C, 1 OCC

CLOSED CIRCUIT TELEVISION SYSTEM

APPROVED FOR ELECTRICAL WORK ONLY

SCALE: 1" = 50'

E-21

STATE OF CALIFORNIA - DEPARTMENT OF TRANSPORTATION
Caltrans TRAFFIC ELECTRICAL

FUNCTIONAL SUPERVISOR: RAJPREET SINGH
CALCULATED-DESIGNED BY: HECTOR SANTAMARIA
CHECKED BY: LOUIE LA COMPTE
REVISED BY
DATE REVISED

LAST REVISION 06-08-16
DATE PLOTTED => 09-JUN-2016
TIME PLOTTED => 09:35

Dist	COUNTY	ROUTE	POST MILES TOTAL PROJECT	SHEET No.	TOTAL SHEETS
11	SD	8	5.4/10.6, R20.0/R21.6	123	213

Héctor A. Santamaría 05-31-16
REGISTERED ELECTRICAL ENGINEER DATE

05-31-16
PLANS APPROVAL DATE

REGISTERED PROFESSIONAL ENGINEER HECTOR A. SANTAMARIA No. 18207 Exp. 12-31-15 ELECTRICAL STATE OF CALIFORNIA

THE STATE OF CALIFORNIA OR ITS OFFICERS OR AGENTS SHALL NOT BE RESPONSIBLE FOR THE ACCURACY OR COMPLETENESS OF SCANNED COPIES OF THIS PLAN SHEET.

NOTE:

FOR ACCURATE RIGHT OF WAY DATA, CONTACT RIGHT OF WAY ENGINEERING AT THE DISTRICT OFFICE.

LEGEND:

1 - DEPARTMENT-FURNISHED CMS. SEE SIGN SHEETS

2 - SEE WIRING DIAGRAM ON THIS SHEET

3 - FOR FIBER CONTINUITY SEE SHEET E-14

4 - FOR AUTOMATIC VEHICLE CLASSIFICATION SYSTEM SEE SHEET E-27

5 - FOR CABINET DETAIL SEE SHEET E-50 AND E-68

CONDUIT LEGEND:

1 - 3"C, PT (CONDUCTORS BY SDG&E)

2 - 3"C, 2#8(CMS SIGN), 2#8(CMS CABINET)
- 3"C, 2#8(AVC)

3 - 3"C, 2#8(CMS SIGN), 2#8(CMS CABINET), 2#8(AVC)

4 - 2"C, 2#8(CMS CABINET), 2#8(CMS SIGN)

5 - 2"C, 2#8(CMS SIGN)

6 - 2"C, 3 OCC

7 - 2"C, 2#8(AVC)

8 2-3"C, 2#8(AVC), PT

9 - 2-3"C, PT

10 - 3"C, PT

11 - 2"C, 1 FO12
- 2"C, 3 OCC

12 - 2-3"C, 2#8(CMS CABINET), PT

13 - 2"C, 1 FO12

CIRCUIT BREAKERS

MAIN - 2P - 100 A
A - 1P - 30 A
B - 1P - 30 A
C - 1P - 30 A
D - 1P - 15 A SPARE
E - 1P - 15 A SPARE
F, G } 2P - 30 A SPARE

① - SPARE
② - SIGN(CMS)
③ - CABINET(CMS)
④ - PEU
⑤ - AVC
⑥ - SPARE

WIRING DIAGRAM

TYPE III-BF SERVICE EQUIPMENT ENCLOSURE SEE RSP ES-2C AND RSP ES-2E

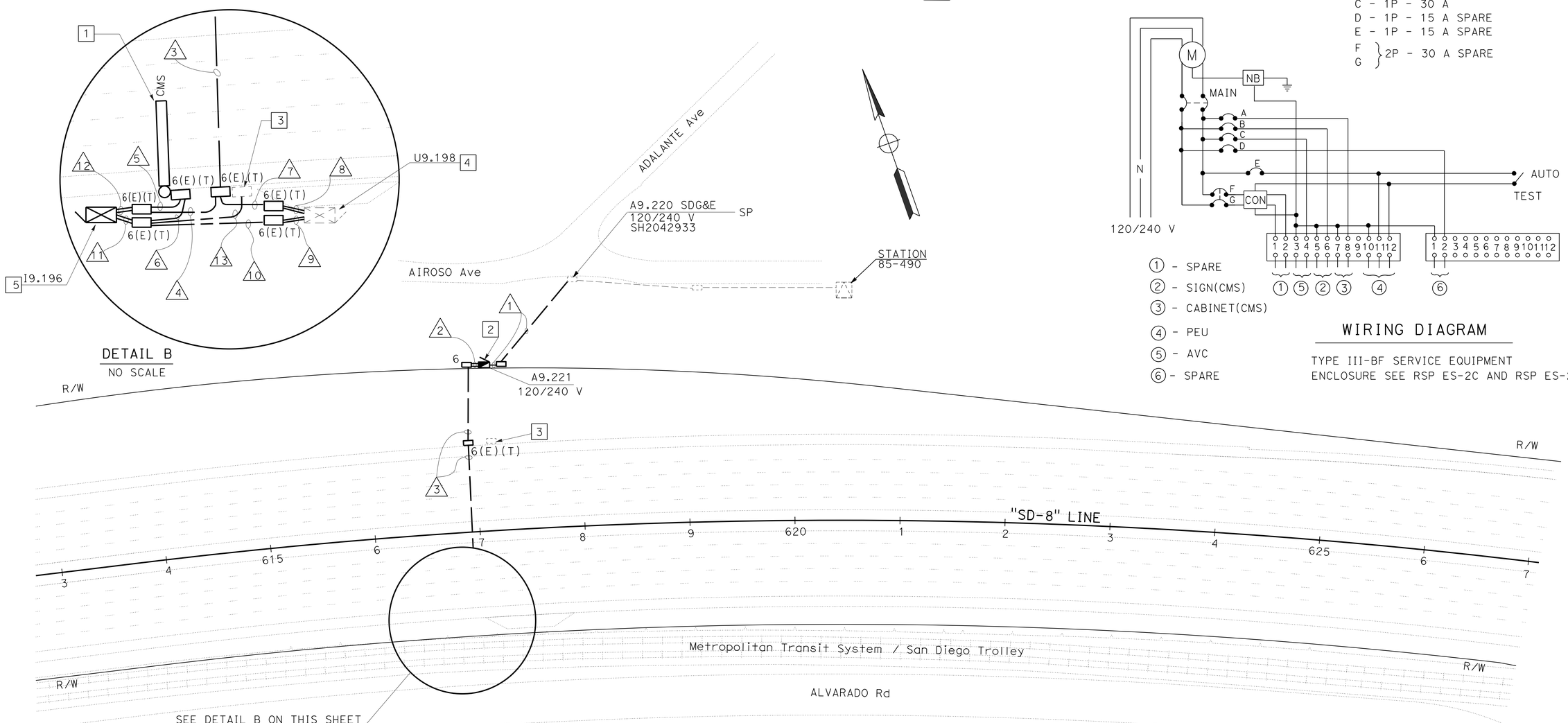

DETAIL B
NO SCALE

CHANGEABLE MESSAGE SIGN SYSTEM

APPROVED FOR ELECTRICAL WORK ONLY

SCALE: 1" = 50'

E-22

STATE OF CALIFORNIA - DEPARTMENT OF TRANSPORTATION
Caltrans® TRAFFIC ELECTRICAL

FUNCTIONAL SUPERVISOR: RAJPREET SINGH
CALCULATED-DESIGNED BY: HECTOR SANTAMARIA
CHECKED BY: LOUIE LA COMPTE
REVISED BY
DATE REVISED

LAST REVISION 06-06-16
DATE PLOTTED => 09-JUN-2016
TIME PLOTTED => 09:35

Dist	COUNTY	ROUTE	POST MILES TOTAL PROJECT	SHEET No.	TOTAL SHEETS
11	SD	8	5.4/10.6, R20.0/R21.6	124	213

Héctor A. Santamaría 05-31-16
REGISTERED ELECTRICAL ENGINEER DATE

05-31-16
PLANS APPROVAL DATE

REGISTERED PROFESSIONAL ENGINEER HECTOR A. SANTAMARIA No. 18207 Exp. 12-31-17 ELECTRICAL STATE OF CALIFORNIA

THE STATE OF CALIFORNIA OR ITS OFFICERS OR AGENTS SHALL NOT BE RESPONSIBLE FOR THE ACCURACY OR COMPLETENESS OF SCANNED COPIES OF THIS PLAN SHEET.

NOTE:

FOR ACCURATE RIGHT OF WAY DATA, CONTACT RIGHT OF WAY ENGINEERING AT THE DISTRICT OFFICE.

CONDUIT LEGEND:

1. - 3"C, PT, (CONDUCTORS BY SDG&E)
2. - 3"C, 2#8(FEBT CMS), 2#8(FWBT CMS), - 3"C, 2#10(TDC), 2#8(CMS CABINET)
3. - 2"C, 2#8(FEBT CMS), 2#8(FWBT CMS), 2#8(CMS CABINET)
4. - 2"C, 1 OCC(FEBT CMS), 1 FO4(FEBT CMS), 1 OCC(FWBT CMS), 1 FO4(FWBT CMS),
5. - 2"C, PT (CONDUCTORS BY AT&T)
6. - 2"C, 2#10(TDC)
7. - 2-3"C, 2#8(CMS CABINET), PT
8. - 2"C, 2#8(FEBT CMS), 2#8(FWBT CMS)
9. - 3"C, 3 OCC(FEBT CMS), 3 OCC(FWBT CMS) - 3"C, 1 OCC(FEBT CMS), 1 FO4(FEBT CMS), 1 OCC(FWBT CMS), 1 FO4(FWBT CMS)
10. - 2"C, 3 OCC(FEBT CMS), 3 OCC(FWBT CMS)
11. - 2"C, 2#8(CMS CABINET)

CIRCUIT BREAKERS

MAIN - 2P - 200 A
A - 1P - 30 A
B - 1P - 30 A
C - 1P - 20 A
D - 1P - 20 A
E - 1P - 15 A
F - 1P - 15 A SPARE
G, H - 2P - 30 A SPARE

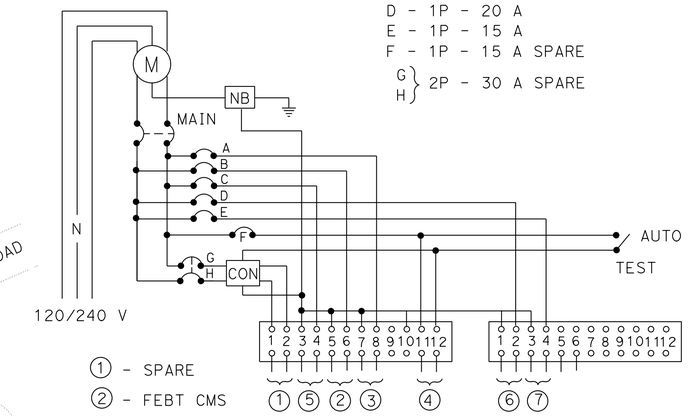

1. - SPARE
2. - FEBT CMS
3. - FWBT CMS
4. - SPARE
5. - CMS CABINET
6. - SPARE
7. - TDC

WIRING DIAGRAM

TYPE III-BF SERVICE EQUIPMENT
ENCLOSURE SEE RSP ES-2C AND RSP ES-2E

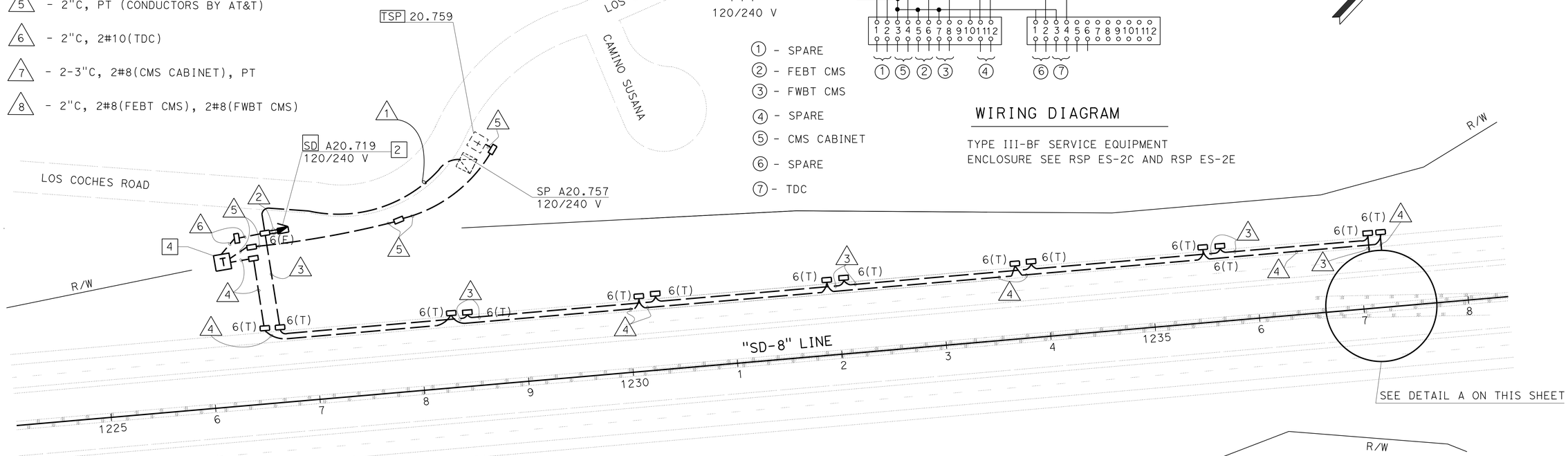

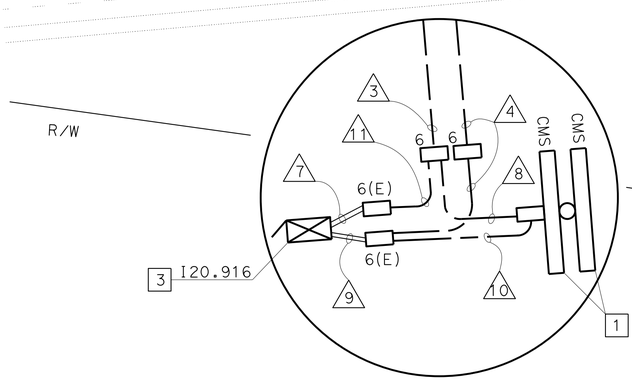

DETAIL A
NO SCALE

LEGEND:

1. - DEPARTMENT-FURNISHED CMS. SEE SIGN SHEETS
2. - SEE WIRING DIAGRAM ON THIS SHEET
3. - FOR CABINET DETAILS SEE SHEET E-50
4. - INSTALL TELEPHONE DEMARCATION CABINET, TYPE B
6. - FOR CABINET DETAILS SEE SHEET E-50 AND E-69

CHANGEABLE MESSAGE SIGN SYSTEM

SCALE: 1" = 50'

E-23

APPROVED FOR ELECTRICAL WORK ONLY

STATE OF CALIFORNIA - DEPARTMENT OF TRANSPORTATION
Caltrans TRAFFIC ELECTRICAL

FUNCTIONAL SUPERVISOR: RAJPREET SINGH
CALCULATED-DESIGNED BY: HECTOR SANTAMARIA
CHECKED BY: LOUIE LA COMPTE
REVISED BY / DATE REVISED

LAST REVISION 06-08-16
DATE PLOTTED => 09-JUN-2016
TIME PLOTTED => 09:35

Dist	COUNTY	ROUTE	POST MILES TOTAL PROJECT	SHEET No.	TOTAL SHEETS
11	SD	8	5.4/10.6, R20.0/R21.6	125	213

Héctor A. Santamaría 05-31-16
REGISTERED ELECTRICAL ENGINEER DATE

05-31-16
PLANS APPROVAL DATE

REGISTERED PROFESSIONAL ENGINEER HECTOR A. SANTAMARIA No. 18207 Exp. 12-31-17 ELECTRICAL STATE OF CALIFORNIA

THE STATE OF CALIFORNIA OR ITS OFFICERS OR AGENTS SHALL NOT BE RESPONSIBLE FOR THE ACCURACY OR COMPLETENESS OF SCANNED COPIES OF THIS PLAN SHEET.

NOTE:

FOR ACCURATE RIGHT OF WAY DATA, CONTACT RIGHT OF WAY ENGINEERING AT THE DISTRICT OFFICE.

CIRCUIT BREAKERS

MAIN - 2P - 100 A
A - 1P - 30 A SPARE
B - 1P - 30 A
C - 1P - 30 A
D - 1P - 15 A
E - 1P - 15 A SPARE
F - 1P - 15 A
G, H } 2P - 30 A

WIRING DIAGRAM

TYPE III-BF SERVICE EQUIPMENT ENCLOSURE SEE RSP ES-2C AND RSP ES-2E

1 - LIGHTING
2 - TMS
3 - CCTV
4 - SPARE
5 - PEU
6 - TDC
7 - SPARE

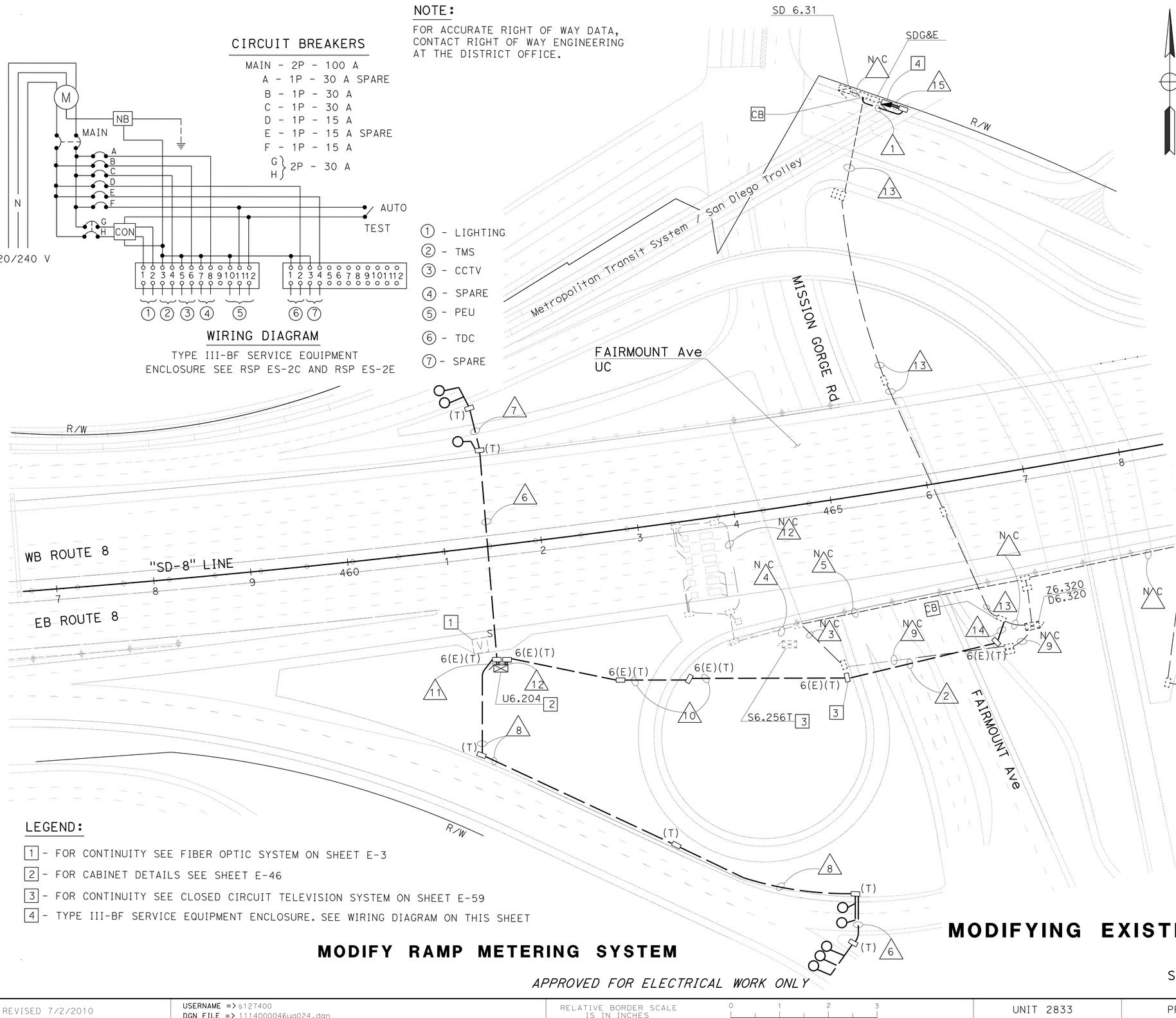

CONDUIT LEGEND (TSO):

1 - 3"C, 2#8(TMS), 2#8(CCTV)
2 - 3"C, 2#8(TMS), 2#8(CCTV)
N C 3 - Exist 2"C, 6 DLC
N C 4 - Exist 2"C, 14 DLC
N C 5 - Exist 3"C, 7#14(Sig), 8 DLC
6 - 2"C, 3 DLC
7 - 2"C, 2 DLC
8 - 2"C, 5 DLC
N C 9 - Exist 2"C, 6 DLC
10 - 2"C, 2#8(TMS)
11 - 3"C, 8 DLC
- 3"C, 1 FO4
12 - 3"C,2#8(TMS)
- 3"C, PT
13 - Exist 1½"C, 2#4(RM)
ADD 2#8(TMS), 2#8(CCTV)
14 - 2"C, 2#8(TMS), 2#8(CCTV)
15 - 3"C, 2#8(TMS), 2#8(CCTV)
- 3"C, PT

LEGEND:

1 - FOR CONTINUITY SEE FIBER OPTIC SYSTEM ON SHEET E-3
2 - FOR CABINET DETAILS SEE SHEET E-46
3 - FOR CONTINUITY SEE CLOSED CIRCUIT TELEVISION SYSTEM ON SHEET E-59
4 - TYPE III-BF SERVICE EQUIPMENT ENCLOSURE. SEE WIRING DIAGRAM ON THIS SHEET

MODIFY RAMP METERING SYSTEM

APPROVED FOR ELECTRICAL WORK ONLY

MODIFYING EXISTING ELECTRICAL SYSTEM

SCALE: 1" = 50'

E-24

STATE OF CALIFORNIA - DEPARTMENT OF TRANSPORTATION
Caltrans® TRAFFIC ELECTRICAL

FUNCTIONAL SUPERVISOR: RAJPREET SINGH
CALCULATED-DESIGNED BY: HECTOR SANTAMARIA
CHECKED BY: LOUIE LA COMPTE
REVISED BY / DATE REVISED

LAST REVISION 06-08-16 | DATE PLOTTED => 09-JUN-2016 | TIME PLOTTED => 09:35

Dist	COUNTY	ROUTE	POST MILES TOTAL PROJECT	SHEET No.	TOTAL SHEETS
11	SD	8	5.4/10.6, R20.0/R21.6	126	213

Héctor A. Santamaría 05-31-16
REGISTERED ELECTRICAL ENGINEER DATE

05-31-16
PLANS APPROVAL DATE

REGISTERED PROFESSIONAL ENGINEER
HECTOR A. SANTAMARIA
No. 18207
Exp. 12-31-17
ELECTRICAL
STATE OF CALIFORNIA

THE STATE OF CALIFORNIA OR ITS OFFICERS OR AGENTS SHALL NOT BE RESPONSIBLE FOR THE ACCURACY OR COMPLETENESS OF SCANNED COPIES OF THIS PLAN SHEET.

NOTE:

FOR ACCURATE RIGHT OF WAY DATA, CONTACT RIGHT OF WAY ENGINEERING AT THE DISTRICT OFFICE.

CONDUIT LEGEND:

NC 1 - Exist 3"C, 7#14(Sig), 7#10(Sig), 10 DLC, 2#4(FB)

NC 2 - Exist 2"C, 7#10(Sig), 2#4(FB), 2 DLC

NC 3 - Exist 3"C, 7#14(Sig), 8 DLC

NC 4 - Exist 1½"C, 2#4(FB), 1 DLC

NC 5 - Exist 1½"C, 1 DLC

6 - Exist 2"C, 12 DLC.
ADD 1 DLC

7 - 2"C, 1 DLC

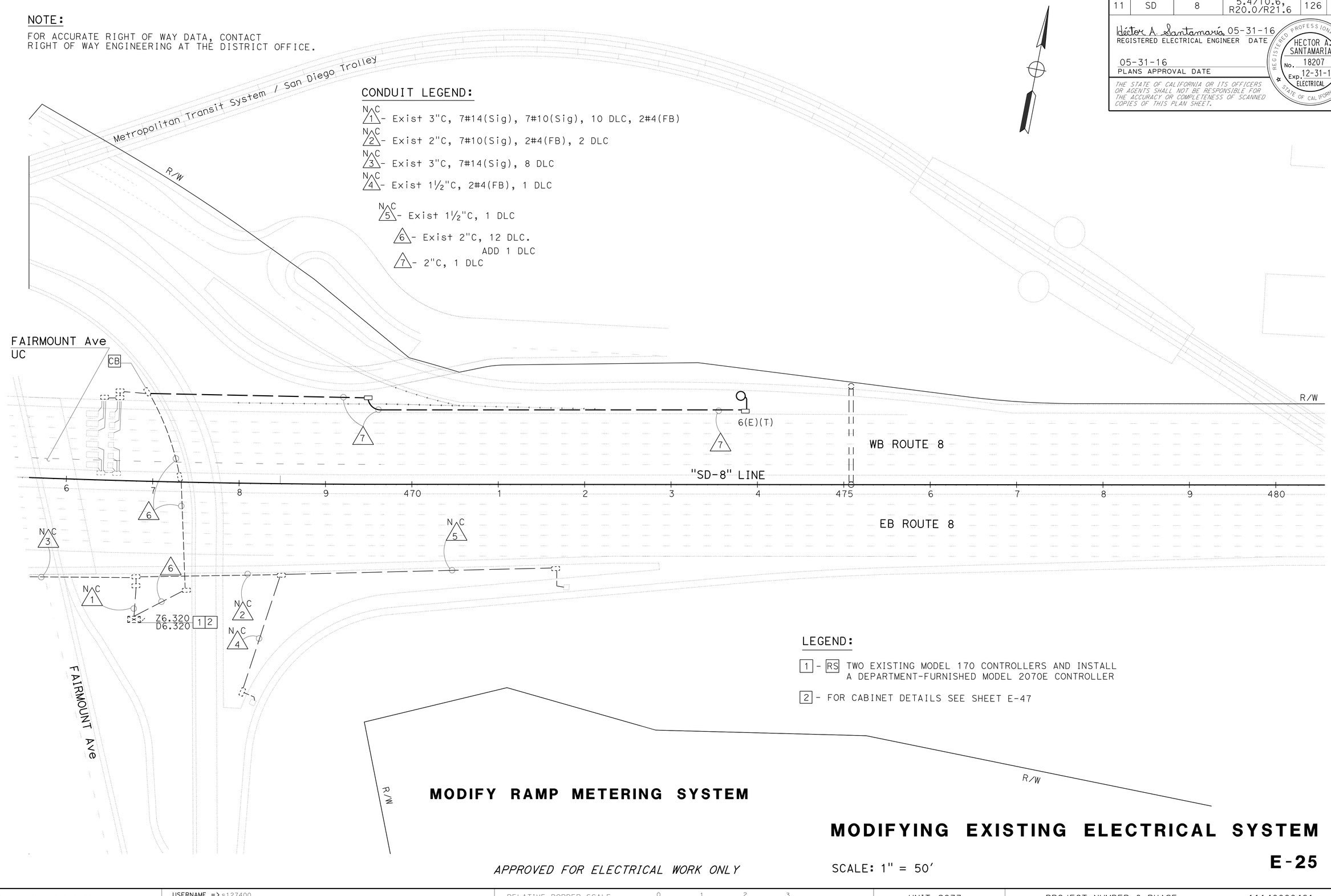

LEGEND:

1 - RS TWO EXISTING MODEL 170 CONTROLLERS AND INSTALL A DEPARTMENT-FURNISHED MODEL 2070E CONTROLLER

2 - FOR CABINET DETAILS SEE SHEET E-47

MODIFY RAMP METERING SYSTEM

APPROVED FOR ELECTRICAL WORK ONLY

MODIFYING EXISTING ELECTRICAL SYSTEM

SCALE: 1" = 50'

E-25

STATE OF CALIFORNIA - DEPARTMENT OF TRANSPORTATION
Caltrans® **TRAFFIC ELECTRICAL**

FUNCTIONAL SUPERVISOR: RAJPREET SINGH
CALCULATED-DESIGNED BY: HECTOR SANTAMARIA
CHECKED BY: LOUIE LA COMPTE
REVISED BY
DATE REVISED

LAST REVISION 06-08-16
DATE PLOTTED => 09-JUN-2016
TIME PLOTTED => 09:35

Dist	COUNTY	ROUTE	POST MILES TOTAL PROJECT	SHEET No.	TOTAL SHEETS
11	SD	8	5.4/10.6, R20.0/R21.6	127	213

Héctor A. Santamaría 05-31-16
REGISTERED ELECTRICAL ENGINEER DATE

05-31-16
PLANS APPROVAL DATE

REGISTERED PROFESSIONAL ENGINEER
HECTOR A. SANTAMARIA
No. 18207
Exp. 12-31-17
ELECTRICAL
STATE OF CALIFORNIA

THE STATE OF CALIFORNIA OR ITS OFFICERS OR AGENTS SHALL NOT BE RESPONSIBLE FOR THE ACCURACY OR COMPLETENESS OF SCANNED COPIES OF THIS PLAN SHEET.

NOTE:

FOR ACCURATE RIGHT OF WAY DATA, CONTACT RIGHT OF WAY ENGINEERING AT THE DISTRICT OFFICE.

CONDUIT LEGEND:

1 - Exist 2"C, 24 DLC.
RC 24 DLC.
ADD 24 DLC

2 - Exist 1½"C, 3 DLC.
RC 3 DLC.
ADD 3 DLC

3 - Exist 2"C, 18 DLC.
RC 18 DLC.
ADD 18 DLC

4 - Exist 1½"C, 15 DLC.
RC 15 DLC.
ADD 15 DLC

5 - Exist 2½"C, 12 DLC.
RC 12 DLC.
ADD 12 DLC

6 - Exist 2½"C, 6 DLC.
RC 6 DLC.
ADD 6 DLC

7 - Exist 2½"C, 9 DLC.
RC 9 DLC.
ADD 9 DLC

LEGEND:

1 - FOR CONTINUITY SEE FIBER OPTIC SYSTEM ON SHEET E-5

2 - RS TWO EXISTING MODEL 170 CONTROLLERS AND INSTALL A DEPARTMENT-FURNISHED MODEL 2070E CONTROLLER

3 - FOR CABINET DETAILS SEE SHEET E-48

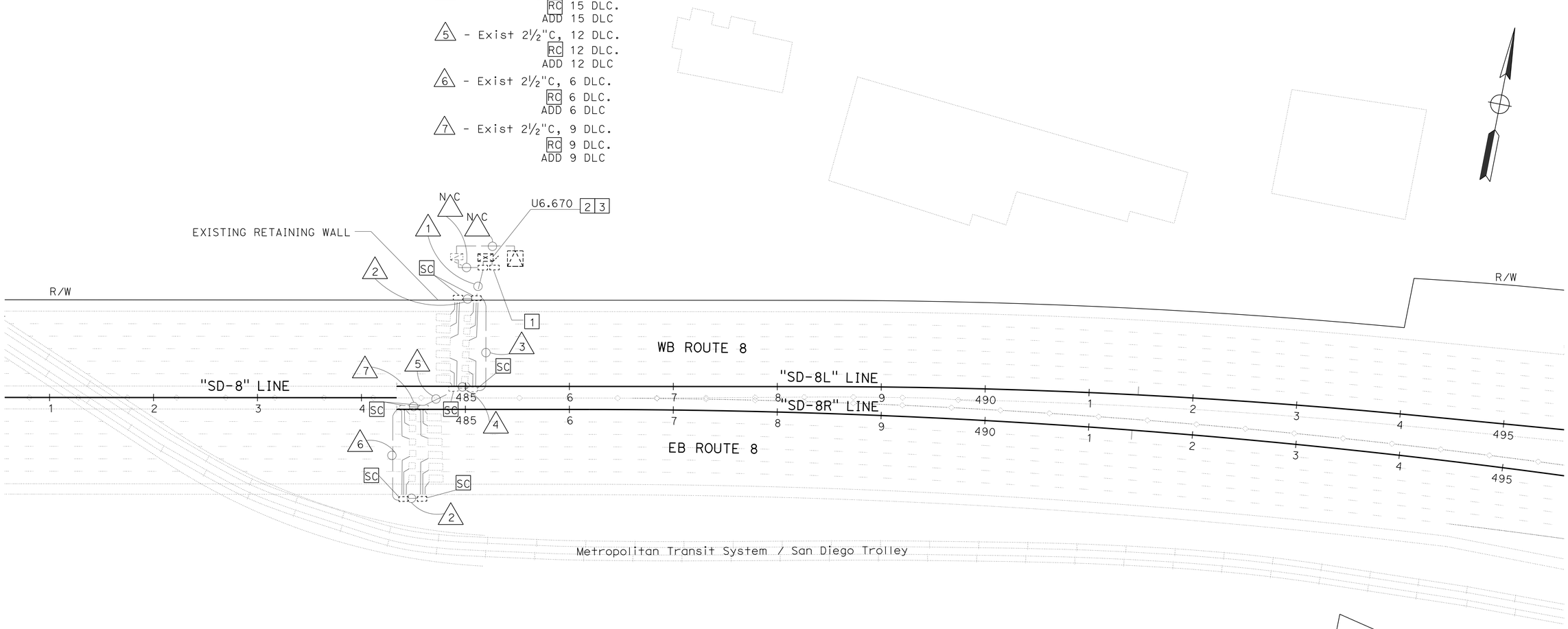

MODIFY RAMP METERING SYSTEM

R/W

R/W

R/W

APPROVED FOR ELECTRICAL WORK ONLY

MODIFYING EXISTING ELECTRICAL SYSTEM

SCALE: 1" = 50'

E-26

STATE OF CALIFORNIA - DEPARTMENT OF TRANSPORTATION
Caltrans® TRAFFIC ELECTRICAL

FUNCTIONAL SUPERVISOR: RAJPREET SINGH
CALCULATED-DESIGNED BY: HECTOR SANTAMARIA
CHECKED BY: LOUIE LA COMPTE
REVISED BY
DATE REVISED

LAST REVISION 06-07-16
DATE PLOTTED => 09-JUN-2016
TIME PLOTTED => 09:35

Dist	COUNTY	ROUTE	POST MILES TOTAL PROJECT	SHEET No.	TOTAL SHEETS
11	SD	8	5.4/10.6, R20.0/R21.6	128	213

Héctor A. Santamaría 05-31-16
REGISTERED ELECTRICAL ENGINEER DATE

05-31-16
PLANS APPROVAL DATE

REGISTERED PROFESSIONAL ENGINEER
HECTOR A. SANTAMARIA
No. 18207
Exp. 12-31-17
ELECTRICAL
STATE OF CALIFORNIA

THE STATE OF CALIFORNIA OR ITS OFFICERS OR AGENTS SHALL NOT BE RESPONSIBLE FOR THE ACCURACY OR COMPLETENESS OF SCANNED COPIES OF THIS PLAN SHEET.

NOTE:

FOR ACCURATE RIGHT OF WAY DATA, CONTACT RIGHT OF WAY ENGINEERING AT THE DISTRICT OFFICE.

CONDUIT LEGEND:

N C 1 - Exist 2"C, 2#8(AVC)

2 - 3"C, 7 DLC, 14 PIEZOELECTRIC CABLE

3 - 3"C, 5 DLC, 10 PIEZOELECTRIC CABLE

4 - 3"C, 3 DLC, 6 PIEZOELECTRIC CABLE

5 - 3"C, 10 DLC, 20 PIEZOELECTRIC CABLE

6 - 3"C, 10 DLC, 20 PIEZOELECTRIC CABLE
- 3"C, PT

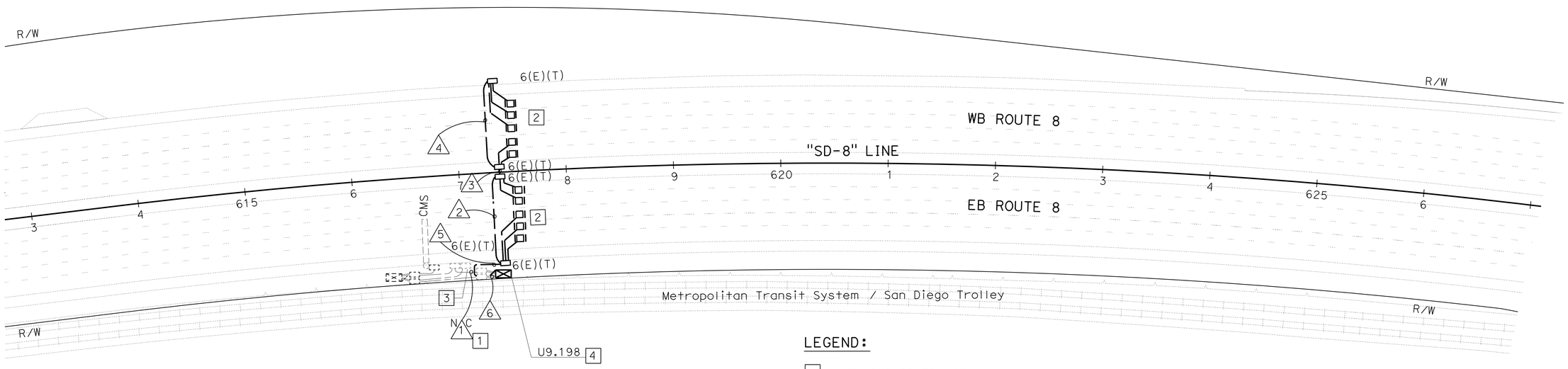

LEGEND:

1 - FOR CMS CONTINUITY SEE SHEET E-22

2 - PIEZOELECTRIC INSTALLATION SEE DETAILS ON SHEET E-58

3 - FOR FIBER OPTIC SYSTEM CONTINUITY SEE SHEET E-14

4 - FOR CABINET DETAILS SEE SHEET E-50. LABEL THE SIDE OF THE CABINET FACING THE ROADWAY AND THE FRONT DOOR, CS808

AUTOMATIC VEHICLE CLASSIFICATION SYSTEM

APPROVED FOR ELECTRICAL WORK ONLY

SCALE: 1" = 50'

E-27

REVISED BY | DATE REVISED

HECTOR SANTAMARIA | LOUIE LA COMPTE

CALCULATED-DESIGNED BY | CHECKED BY

FUNCTIONAL SUPERVISOR: RAJPREET SINGH

STATE OF CALIFORNIA - DEPARTMENT OF TRANSPORTATION
Caltrans® TRAFFIC ELECTRICAL

LAST REVISION 06-02-16 | DATE PLOTTED => 09-JUN-2016 | TIME PLOTTED => 09:35

Dist	COUNTY	ROUTE	POST MILES TOTAL PROJECT	SHEET No.	TOTAL SHEETS
11	SD	8	5.4/10.6, R20.0/R21.6	129	213

Héctor A. Santamaría 05-31-16
REGISTERED ELECTRICAL ENGINEER DATE

05-31-16
PLANS APPROVAL DATE

REGISTERED PROFESSIONAL ENGINEER HECTOR A. SANTAMARIA No. 18207 Exp. 12-31-17 ELECTRICAL STATE OF CALIFORNIA

THE STATE OF CALIFORNIA OR ITS OFFICERS OR AGENTS SHALL NOT BE RESPONSIBLE FOR THE ACCURACY OR COMPLETENESS OF SCANNED COPIES OF THIS PLAN SHEET.

LEGEND:

1 - FOR CONTINUITY SEE FIBER OPTIC SYSTEM ON SHEET E-15 AND E-16
2 - INSTALL DEPARTMENT-FURNISHED MODEL 2070E CONTROLLER ASSEMBLY
3 - FOR CABINET DETAILS SEE SHEET E-53
4 - RS EXISTING MODEL 170 CONTROLLER AND INSTALL MODEL 2070E CONTROLLER
5 - FOR CONTINUITY SEE CLOSED CIRCUIT TELEVISION SYSTEM ON SHEET E-63
6 - FOR CABINET DETAILS SEE SHEET E-52

CONDUIT LEGEND:

1 - 2"C, 8 DLC
2 - 2"C, 11 DLC
3 - Exist 1½"C, 4 DLC. RC 4 DLC. ADD 4 DLC
4 - 2"C, 1 DLC
5 - 2"C 2 DLC
6 - Exist 2"C, 12 DLC. RC 8 DLC
7 - Exist 1½"C, 10 DLC. RC 8 DLC
8 - Exist 1½"C, 2 DLC. RC 2 DLC. ADD 2 DLC
9 - Exist 2"C, 8 DLC. RC 8 DLC
10 - Exist 1"C, 1 DLC
11 - 3"C, 1 FO12. - 3"C, 11 DLC
12 - Exist 2"C, 2#14(FB3), 7#12(RM), 3 DLC
13 - Exist 2"C, 2#14(FB3), 7#12(RM), 15 DLC. RC 8 DLC
14 - Exist 2"C, 2#14(FB3), 7#12(RM), 2#14(FB2), 16 DLC. RC 8 DLC
15 - 2-3"C, 2#6(TMS), PT

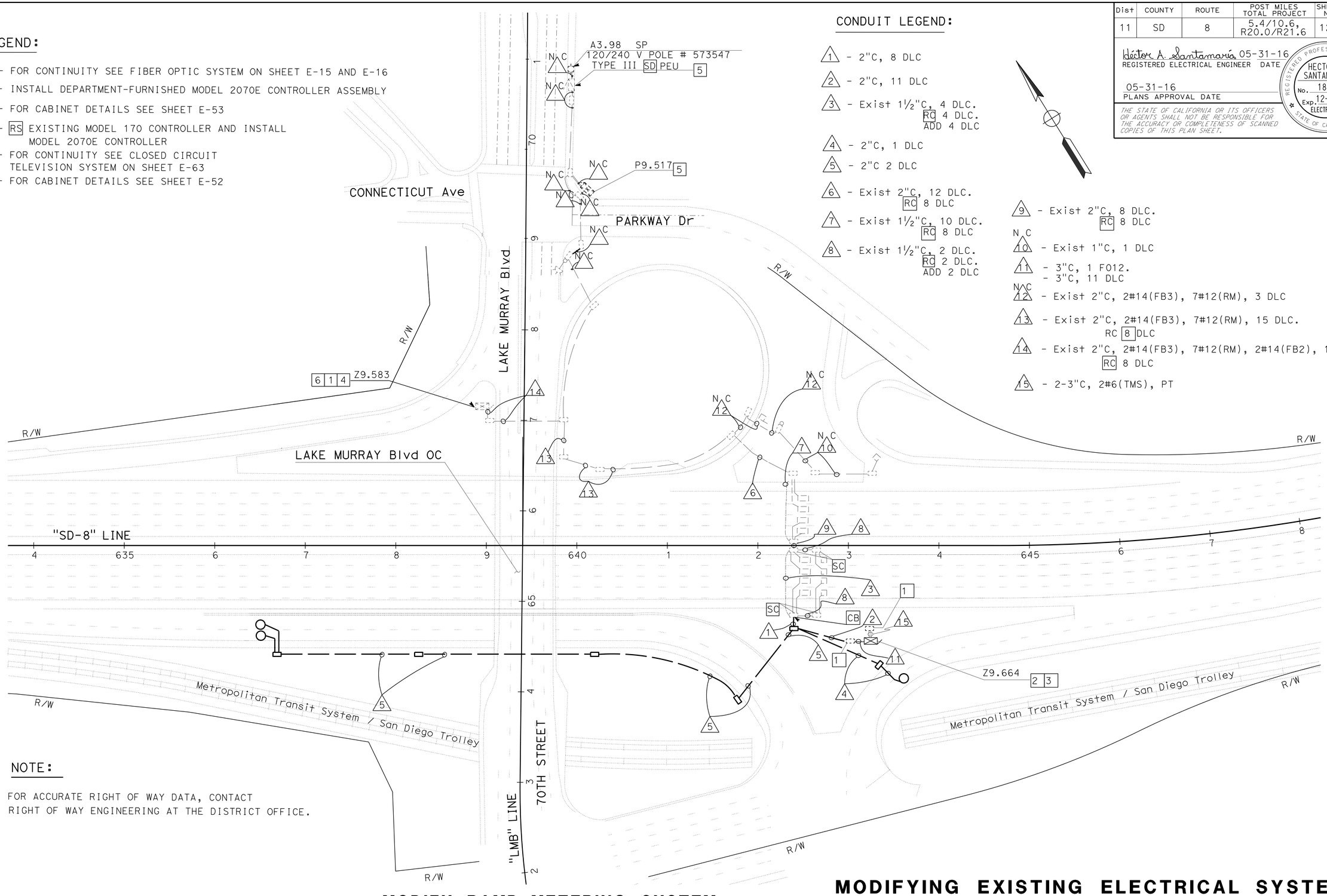

NOTE:

FOR ACCURATE RIGHT OF WAY DATA, CONTACT RIGHT OF WAY ENGINEERING AT THE DISTRICT OFFICE.

MODIFY RAMP METERING SYSTEM

MODIFYING EXISTING ELECTRICAL SYSTEM

APPROVED FOR ELECTRICAL WORK ONLY

SCALE: 1" = 50'

E-28

STATE OF CALIFORNIA - DEPARTMENT OF TRANSPORTATION
Caltrans TRAFFIC ELECTRICAL

FUNCTIONAL SUPERVISOR: RAJPREET SINGH
CALCULATED-DESIGNED BY: HECTOR SANTAMARIA
CHECKED BY: LOUIE LA COMPTE
REVISED BY / DATE REVISED

LAST REVISION 06-02-16 | DATE PLOTTED => 09-JUN-2016 | TIME PLOTTED => 09:35

Dist	COUNTY	ROUTE	POST MILES TOTAL PROJECT	SHEET No.	TOTAL SHEETS
11	SD	8	5.4/10.6, R20.0/R21.6	130	213

Héctor A. Santamaría 05-31-16
REGISTERED ELECTRICAL ENGINEER DATE

05-31-16
PLANS APPROVAL DATE

REGISTERED PROFESSIONAL ENGINEER HECTOR A. SANTAMARIA No. 18207 Exp. 12-31-17 ELECTRICAL STATE OF CALIFORNIA

THE STATE OF CALIFORNIA OR ITS OFFICERS OR AGENTS SHALL NOT BE RESPONSIBLE FOR THE ACCURACY OR COMPLETENESS OF SCANNED COPIES OF THIS PLAN SHEET.

NOTE:

FOR ACCURATE RIGHT OF WAY DATA, CONTACT
RIGHT OF WAY ENGINEERING AT THE DISTRICT OFFICE.

LEGEND:

1 - RS TWO EXISTING MODEL 170 CONTROLLERS AND INSTALL A DEPARTMENT-FURNISHED MODEL 2070E CONTROLLER

2 - FOR CONTINUITY SEE FIBER OPTIC SYSTEM SYSTEM ON SHEET E-17

3 - FOR CABINET DETAILS SEE SHEET E-48

CONDUIT LEGEND:

NC 1 - Exist 1½"C, 2 DLC
NC 2 - Exist 2"C, 4 DLC
NC 3 - Exist 2"C, 10 DLC
NC 4 - Exist 1½"C, 3 DLC
NC 5 - Exist 2½"C, 14 DLC
NC 6 - Exist 2½" C, 18 DLC
NC 7 - Exist 3"C, 2#8(TMS), 18 DLC
NC 8 - Exist1"C, 2#12 (TDC)
NC 9 - Exist 1½"C, 2#8(TMS), 2#12 (TDC)
NC 10 - Exist 2"C, CONDUCTORS BY SDG&E
NC 11 - Exist 1"C, 1 SIC
NC 12 - Exist 1½"C, 1 SIC
NC 13 - Exist 1½"C, CONDUCTORS BY PACBELL

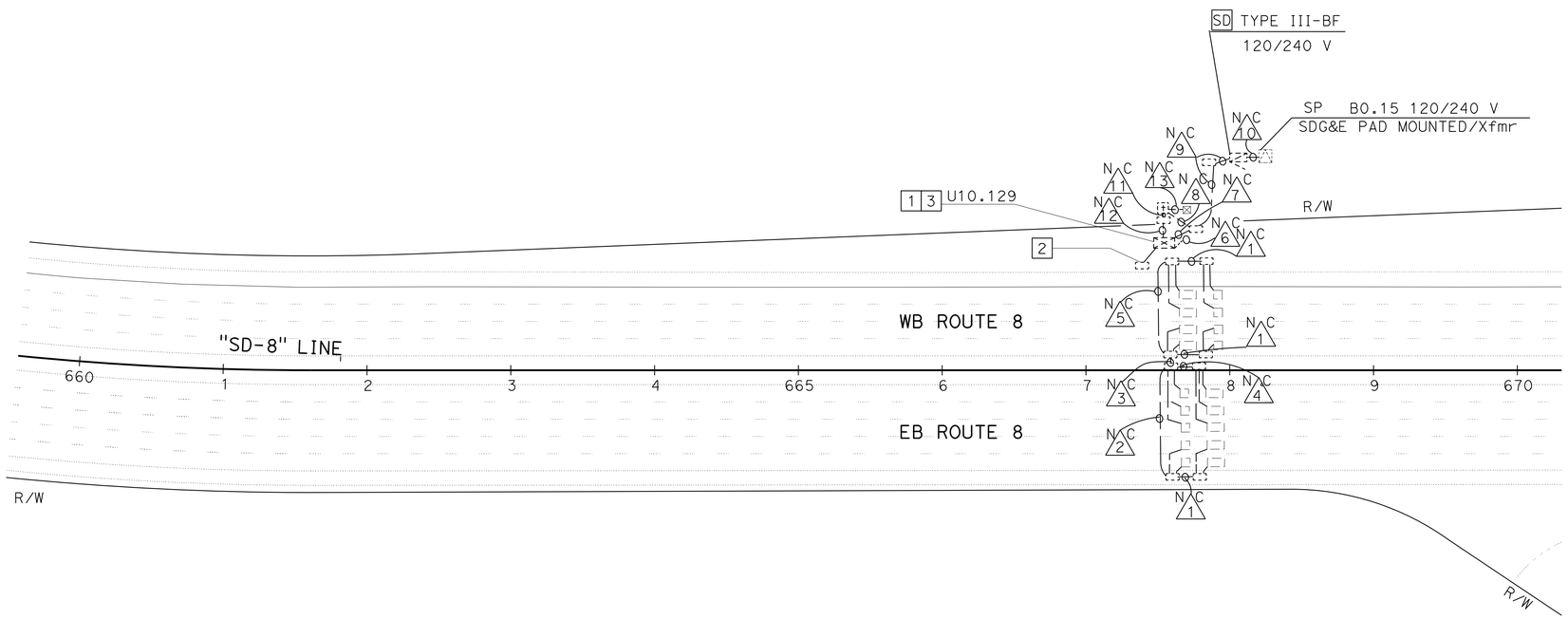

MODIFY RAMP METERING SYSTEM

MODIFYING EXISTING ELECTRICAL SYSTEM

APPROVED FOR ELECTRICAL WORK ONLY

SCALE: 1" = 50'

E-29

STATE OF CALIFORNIA - DEPARTMENT OF TRANSPORTATION
Caltrans® TRAFFIC ELECTRICAL

FUNCTIONAL SUPERVISOR: RAJPREET SINGH
CALCULATED-DESIGNED BY: HECTOR SANTAMARIA
CHECKED BY: LOUIE LA COMPTE
REVISED BY / DATE REVISED

LAST REVISION 06-07-16
DATE PLOTTED => 09-JUN-2016
TIME PLOTTED => 09:35

Dist	COUNTY	ROUTE	POST MILES TOTAL PROJECT	SHEET No.	TOTAL SHEETS
11	SD	8	5.4/10.6, R20.0/R21.6	131	213

Héctor A. Santamaría 05-31-16
REGISTERED ELECTRICAL ENGINEER DATE

05-31-16
PLANS APPROVAL DATE

REGISTERED PROFESSIONAL ENGINEER HECTOR A. SANTAMARIA No. 18207 Exp. 12-31-17 ELECTRICAL STATE OF CALIFORNIA

THE STATE OF CALIFORNIA OR ITS OFFICERS OR AGENTS SHALL NOT BE RESPONSIBLE FOR THE ACCURACY OR COMPLETENESS OF SCANNED COPIES OF THIS PLAN SHEET.

CONDUIT LEGEND:

1 - 2"C, 1 DLC
2 - 2"C, 2 DLC
3 - 2"C, 11 DLC
4 - 2"C, 8 DLC
5 - Exist 2"C, 2 DLC. RC 2 DLC. ADD 2 DLC
6 - Exist 2"C, 4 DLC. RC 4 DLC. ADD 4 DLC
7 - Exist 2"C, 8 DLC. RC 8 DLC
8 - Exist 3"C, 12 DLC. RC 8 DLC
9 - Exist 3"C, 14 DLC. RC 8 DLC
10 - Exist 3"C, 16 DLC. RC 8 DLC
11 - Exist 3"C, 1 9CSC, 18 DLC. RC 8 DLC
12 - Exist 3"C, 20 DLC, 2 9CSC, 1 12CSC, 2#8(Ltg). RC 8 DLC
13 - Exist 3"C, 22 DLC, 2 9CSC, 1 12CSC, 2#8(Ltg). RC 8 DLC
14 - Exist 2"C, 10 DLC. RC 8 DLC
15 - 2"C, 2#6(RM-EAST)
16 - 2-3"C, 2#6(RM-EAST), PT
17 - 2-3"C, 11 DLC, PT

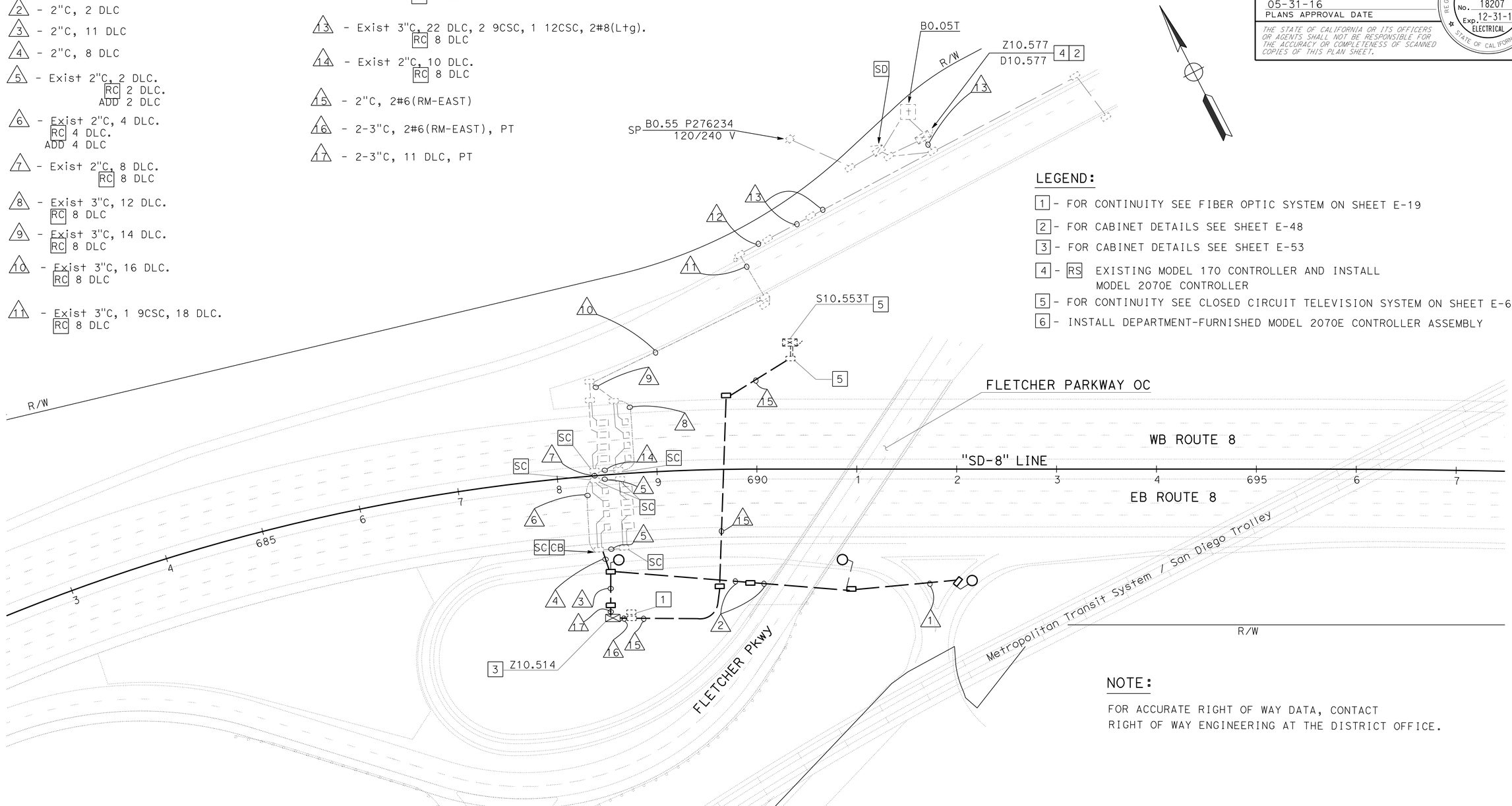

LEGEND:

1 - FOR CONTINUITY SEE FIBER OPTIC SYSTEM ON SHEET E-19
2 - FOR CABINET DETAILS SEE SHEET E-48
3 - FOR CABINET DETAILS SEE SHEET E-53
4 - RS EXISTING MODEL 170 CONTROLLER AND INSTALL MODEL 2070E CONTROLLER
5 - FOR CONTINUITY SEE CLOSED CIRCUIT TELEVISION SYSTEM ON SHEET E-64
6 - INSTALL DEPARTMENT-FURNISHED MODEL 2070E CONTROLLER ASSEMBLY

NOTE:

FOR ACCURATE RIGHT OF WAY DATA, CONTACT RIGHT OF WAY ENGINEERING AT THE DISTRICT OFFICE.

MODIFY RAMP METERING SYSTEM

APPROVED FOR ELECTRICAL WORK ONLY

MODIFYING EXISTING ELECTRICAL SYSTEM

SCALE: 1" = 50'

E-30

STATE OF CALIFORNIA - DEPARTMENT OF TRANSPORTATION
Caltrans® TRAFFIC ELECTRICAL

FUNCTIONAL SUPERVISOR: RAJPREET SINGH
CALCULATED-DESIGNED BY: HECTOR SANTAMARIA
CHECKED BY: LOUIE LA COMPTE
REVISED BY / DATE REVISED

LAST REVISION 06-08-16 | DATE PLOTTED => 09-JUN-2016 | TIME PLOTTED => 09:35

Dist	COUNTY	ROUTE	POST MILES TOTAL PROJECT	SHEET No.	TOTAL SHEETS
11	SD	8	5.4/10.6, R20.0/R21.6	132	213

Héctor A. Santamaría 05-31-16
REGISTERED ELECTRICAL ENGINEER DATE

05-31-16
PLANS APPROVAL DATE

REGISTERED PROFESSIONAL ENGINEER HECTOR A. SANTAMARIA No. 18207 Exp. 12-31-17 ELECTRICAL STATE OF CALIFORNIA

THE STATE OF CALIFORNIA OR ITS OFFICERS OR AGENTS SHALL NOT BE RESPONSIBLE FOR THE ACCURACY OR COMPLETENESS OF SCANNED COPIES OF THIS PLAN SHEET.

LEGEND:

SPLICE CABLES SEE FO SPLICE DETAILS

CUT END OF FO CABLE AND TERMINATE IN A SPLICE CLOSURE

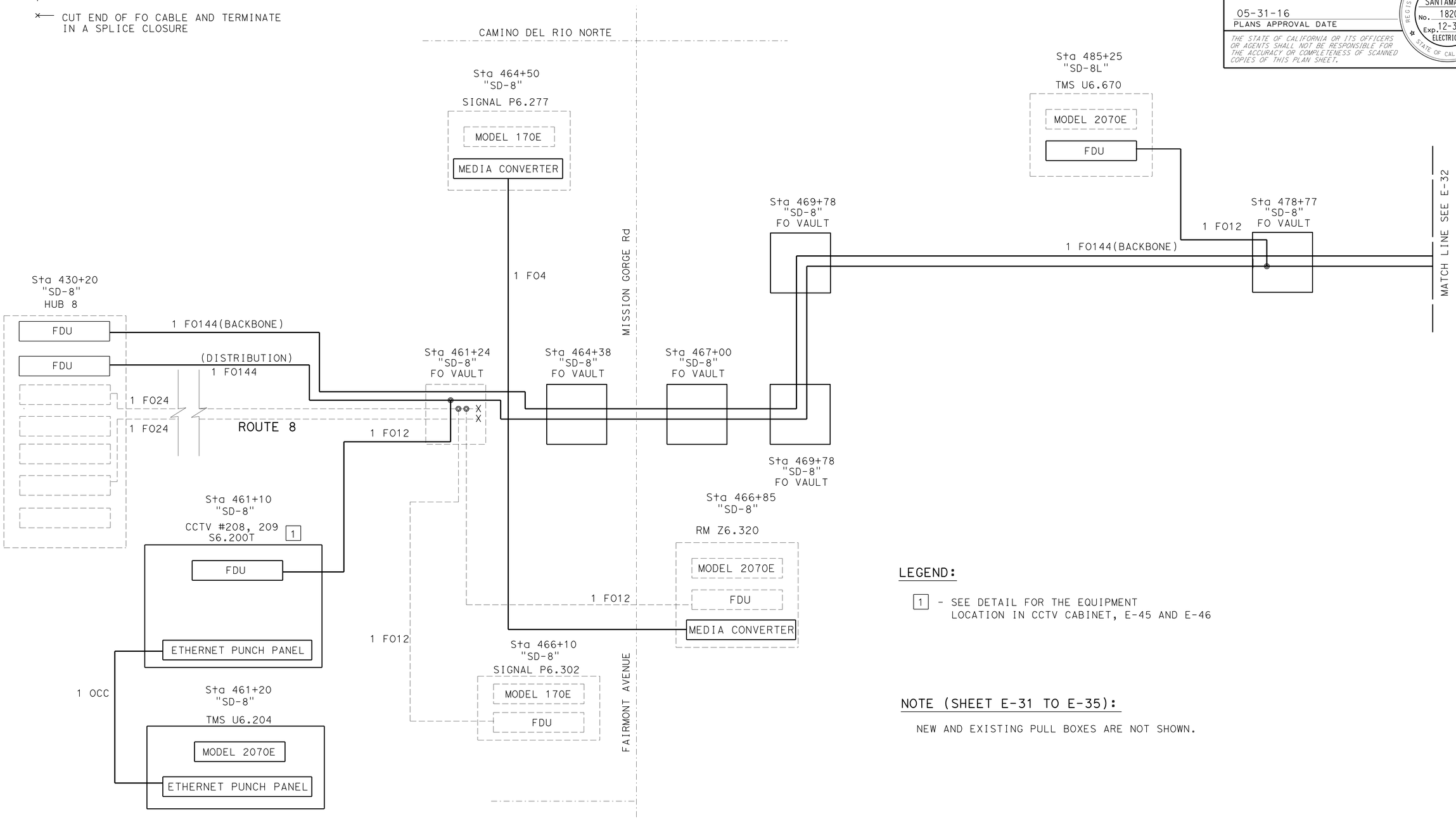

LEGEND:

1 - SEE DETAIL FOR THE EQUIPMENT LOCATION IN CCTV CABINET, E-45 AND E-46

NOTE (SHEET E-31 TO E-35):

NEW AND EXISTING PULL BOXES ARE NOT SHOWN.

COMMUNICATION DIAGRAM

ELECTRICAL DETAILS

E-31

STATE OF CALIFORNIA - DEPARTMENT OF TRANSPORTATION
Caltrans
TRAFFIC ELECTRICAL

FUNCTIONAL SUPERVISOR: RAJPREET SINGH
CALCULATED-DESIGNED BY: HECTOR SANTAMARIA
CHECKED BY: LOUIE LA COMPTE
REVISED BY
DATE REVISED

LAST REVISION 05-23-16
DATE PLOTTED => 09-JUN-2016
TIME PLOTTED => 09:35

Dist	COUNTY	ROUTE	POST MILES TOTAL PROJECT	SHEET No.	TOTAL SHEETS
11	SD	8	5.4/10.6, R20.0/R21.6	133	213

Héctor A. Santamaría 05-31-16
REGISTERED ELECTRICAL ENGINEER DATE

05-31-16
PLANS APPROVAL DATE

REGISTERED PROFESSIONAL ENGINEER
HECTOR A. SANTAMARIA
No. 18207
Exp. 12-31-17
ELECTRICAL
STATE OF CALIFORNIA

THE STATE OF CALIFORNIA OR ITS OFFICERS OR AGENTS SHALL NOT BE RESPONSIBLE FOR THE ACCURACY OR COMPLETENESS OF SCANNED COPIES OF THIS PLAN SHEET.

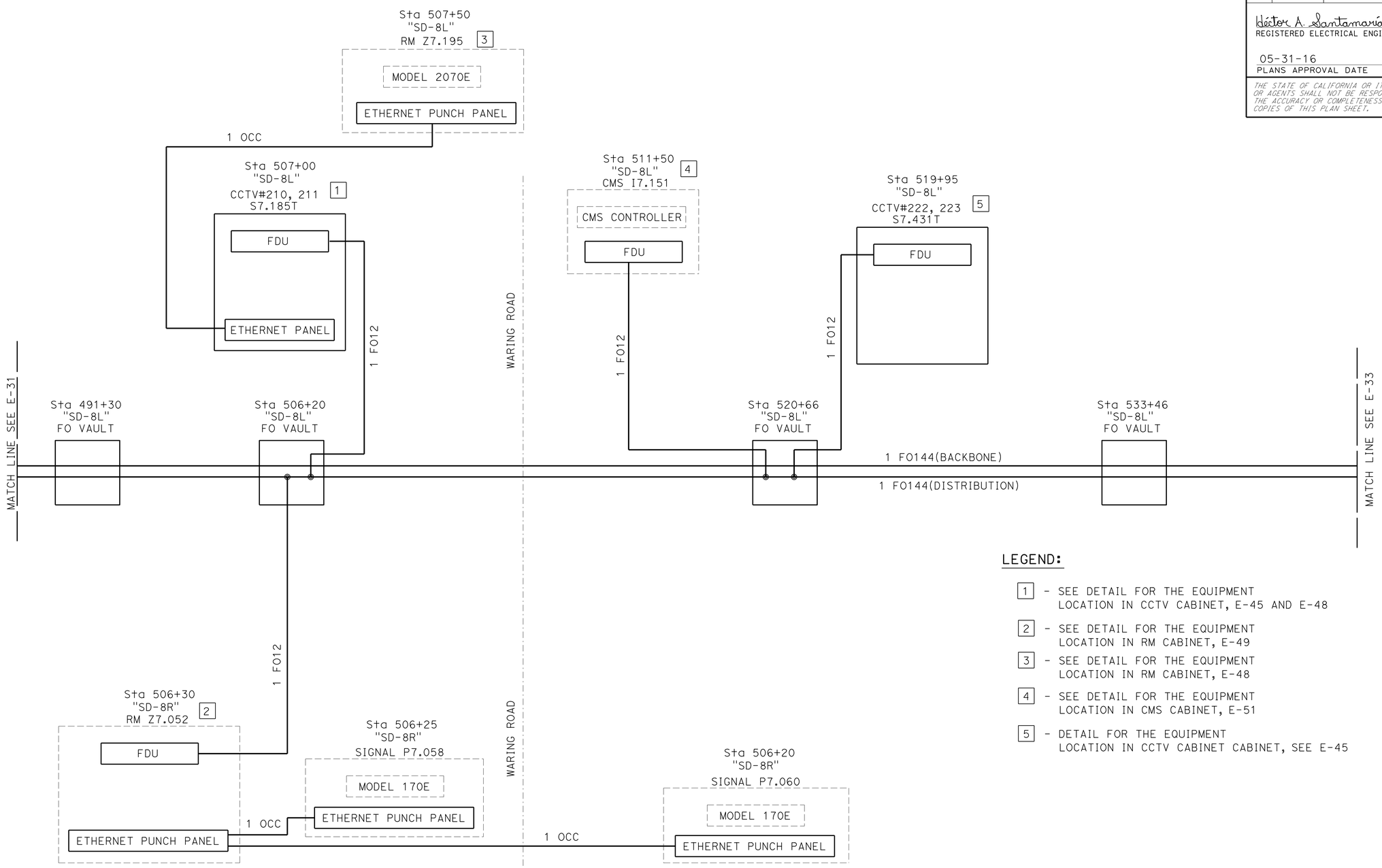

LEGEND:

1 - SEE DETAIL FOR THE EQUIPMENT LOCATION IN CCTV CABINET, E-45 AND E-48

2 - SEE DETAIL FOR THE EQUIPMENT LOCATION IN RM CABINET, E-49

3 - SEE DETAIL FOR THE EQUIPMENT LOCATION IN RM CABINET, E-48

4 - SEE DETAIL FOR THE EQUIPMENT LOCATION IN CMS CABINET, E-51

5 - DETAIL FOR THE EQUIPMENT LOCATION IN CCTV CABINET CABINET, SEE E-45

COMMUNICATION DIAGRAM

ELECTRICAL DETAILS

E-32

REVISED BY	DATE REVISED

CALCULATED-DESIGNED BY	HECTOR SANTAMARIA
CHECKED BY	LOUIE LA COMPTE
FUNCTIONAL SUPERVISOR	RAJPREET SINGH

STATE OF CALIFORNIA - DEPARTMENT OF TRANSPORTATION
Caltrans
TRAFFIC ELECTRICAL

LAST REVISION 05-23-16
DATE PLOTTED => 09-JUN-2016
TIME PLOTTED => 09:35

Dist	COUNTY	ROUTE	POST MILES TOTAL PROJECT	SHEET No.	TOTAL SHEETS
11	SD	8	5.4/10.6, R20.0/R21.6	134	213

Héctor A. Santamaría 05-31-16
REGISTERED ELECTRICAL ENGINEER DATE

05-31-16
PLANS APPROVAL DATE

REGISTERED PROFESSIONAL ENGINEER
HECTOR A. SANTAMARIA
No. 18207
Exp. 12-31-17
ELECTRICAL
STATE OF CALIFORNIA

THE STATE OF CALIFORNIA OR ITS OFFICERS OR AGENTS SHALL NOT BE RESPONSIBLE FOR THE ACCURACY OR COMPLETENESS OF SCANNED COPIES OF THIS PLAN SHEET.

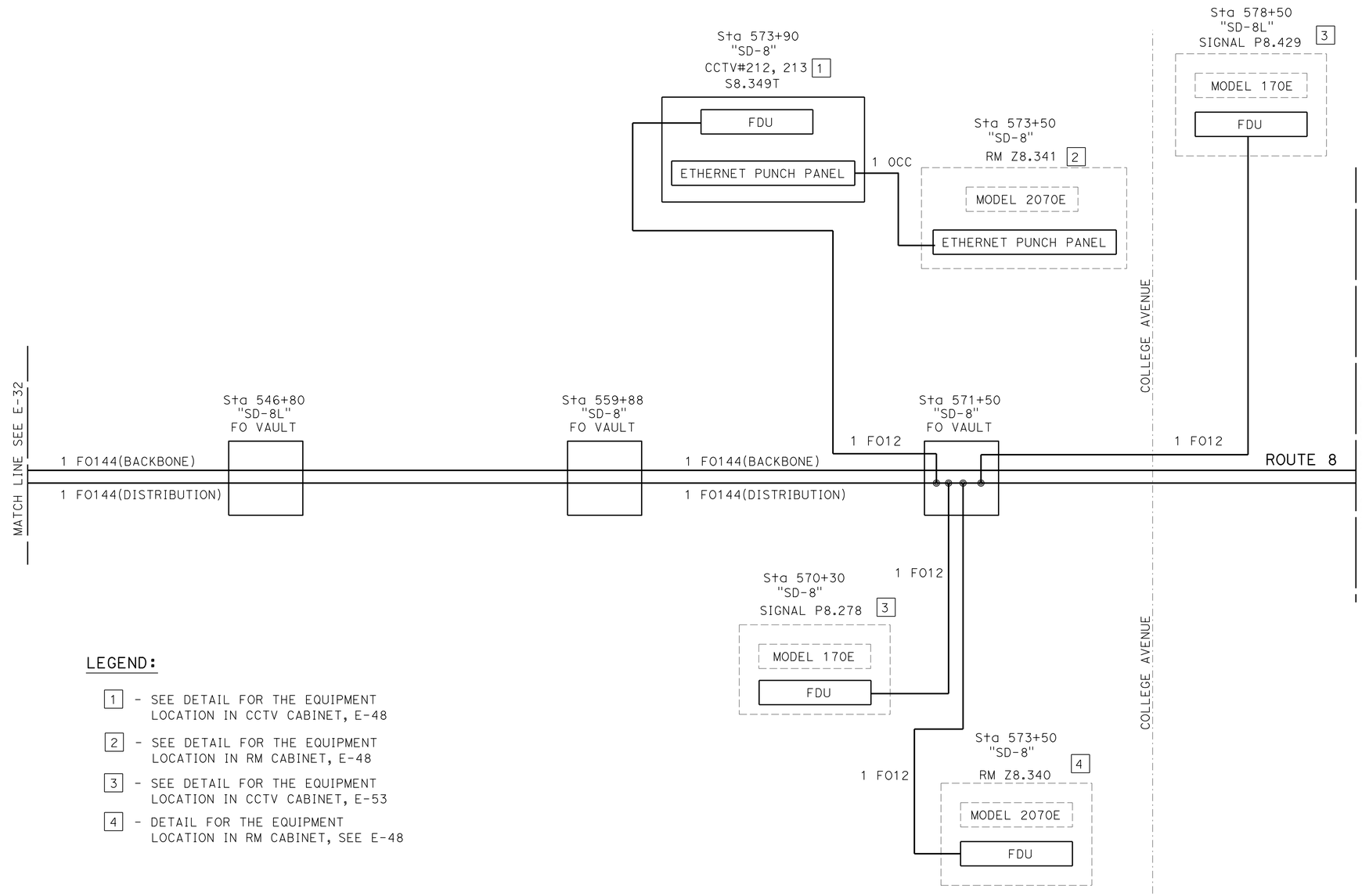

LEGEND:

1 - SEE DETAIL FOR THE EQUIPMENT LOCATION IN CCTV CABINET, E-48

2 - SEE DETAIL FOR THE EQUIPMENT LOCATION IN RM CABINET, E-48

3 - SEE DETAIL FOR THE EQUIPMENT LOCATION IN CCTV CABINET, E-53

4 - DETAIL FOR THE EQUIPMENT LOCATION IN RM CABINET, SEE E-48

COMMUNICATION DIAGRAM

ELECTRICAL DETAILS

E-33

REVISED BY	DATE REVISED

CALCULATED-DESIGNED BY	HECTOR SANTAMARIA
CHECKED BY	LOUIE LA COMPTE
FUNCTIONAL SUPERVISOR	RAJPREET SINGH

STATE OF CALIFORNIA - DEPARTMENT OF TRANSPORTATION
Caltrans® TRAFFIC ELECTRICAL

LAST REVISION 05-23-16
DATE PLOTTED => 09-JUN-2016
TIME PLOTTED => 09:35

Dist	COUNTY	ROUTE	POST MILES TOTAL PROJECT	SHEET No.	TOTAL SHEETS
11	SD	8	5.4/10.6, R20.0/R21.6	135	213

Héctor A. Santamaría 05-31-16
REGISTERED ELECTRICAL ENGINEER DATE

05-31-16
PLANS APPROVAL DATE

REGISTERED PROFESSIONAL ENGINEER HECTOR A. SANTAMARIA No. 18207 Exp. 12-31-17 ELECTRICAL STATE OF CALIFORNIA

THE STATE OF CALIFORNIA OR ITS OFFICERS OR AGENTS SHALL NOT BE RESPONSIBLE FOR THE ACCURACY OR COMPLETENESS OF SCANNED COPIES OF THIS PLAN SHEET.

NOTE (TSO):

FOR EQUIPMENT CONNECTIVITY IN MODEL 334L CONTROLLER CABINET SEE ELECTRICAL DETAILS "COMPONENT DIAGRAM".

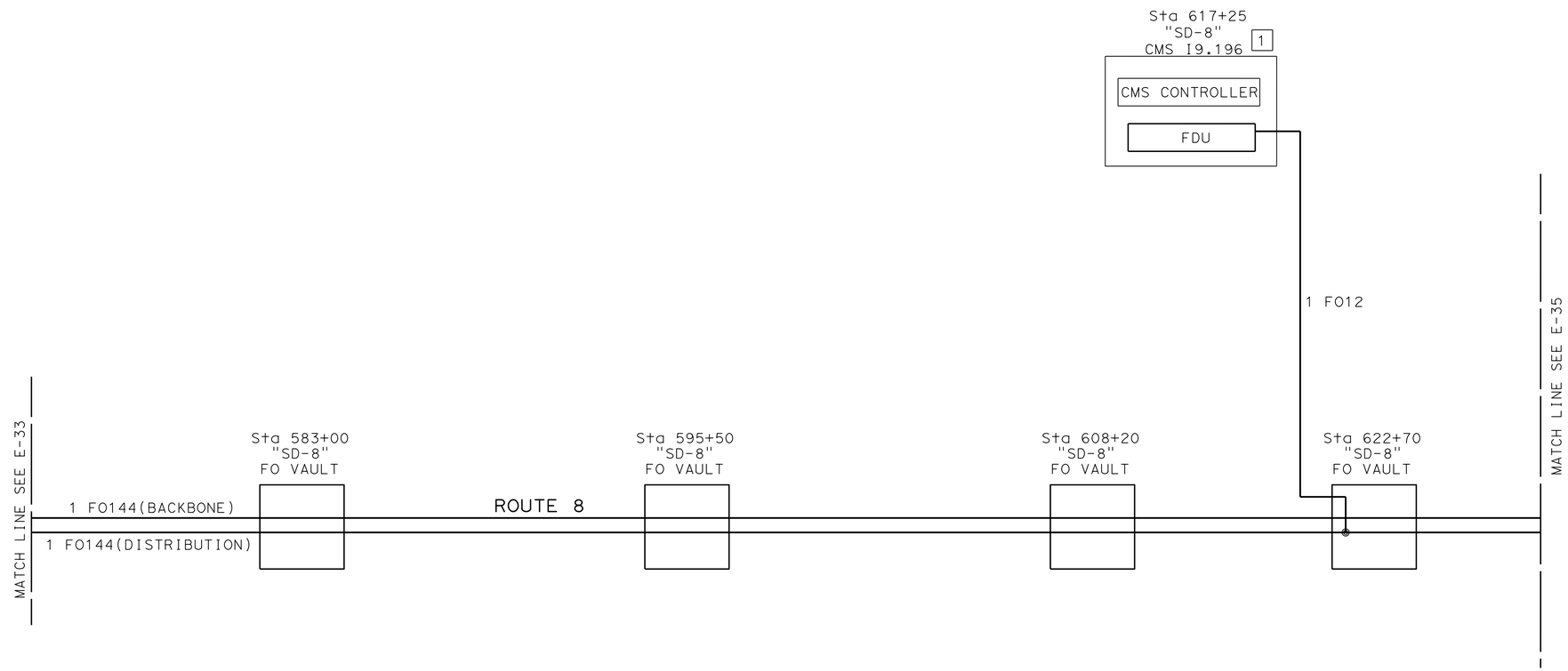

LEGEND:

1 - SEE DETAIL FOR THE EQUIPMENT LOCATION IN CMS CABINET, E-50 AND E-51

COMMUNICATION DIAGRAM

ELECTRICAL DETAILS

E-34

REVISED BY | DATE REVISED

HECTOR SANTAMARIA | LOUIE LA COMPTE

CALCULATED-DESIGNED BY | CHECKED BY

FUNCTIONAL SUPERVISOR: RAJPREET SINGH

STATE OF CALIFORNIA - DEPARTMENT OF TRANSPORTATION
Caltrans® TRAFFIC ELECTRICAL

LAST REVISION 05-23-16 | DATE PLOTTED => 09-JUN-2016 | TIME PLOTTED => 09:35

Dist	COUNTY	ROUTE	POST MILES TOTAL PROJECT	SHEET No.	TOTAL SHEETS
11	SD	8	5.4/10.6, R20.0/R21.6	136	213

Héctor A. Santamaría 05-31-16
REGISTERED ELECTRICAL ENGINEER DATE

05-31-16
PLANS APPROVAL DATE

REGISTERED PROFESSIONAL ENGINEER HECTOR A. SANTAMARIA No. 18207 Exp. 12-31-17 ELECTRICAL STATE OF CALIFORNIA

THE STATE OF CALIFORNIA OR ITS OFFICERS OR AGENTS SHALL NOT BE RESPONSIBLE FOR THE ACCURACY OR COMPLETENESS OF SCANNED COPIES OF THIS PLAN SHEET.

NOTE:

FOR EQUIPMENT CONNECTIVITY IN MODEL 334L CONTROLLER CABINET SEE ELECTRICAL DETAILS "COMPONENT DIAGRAM".

LEGEND (TSO):

[6] - SEE DETAIL CCTV-RM FOR THE EQUIPMENT LOCATION IN CCTV CABINET, E-48

—X - CUT THE END OF THE FO CABLE AND TERMINATE IN A FO SPLICE CLOSURE

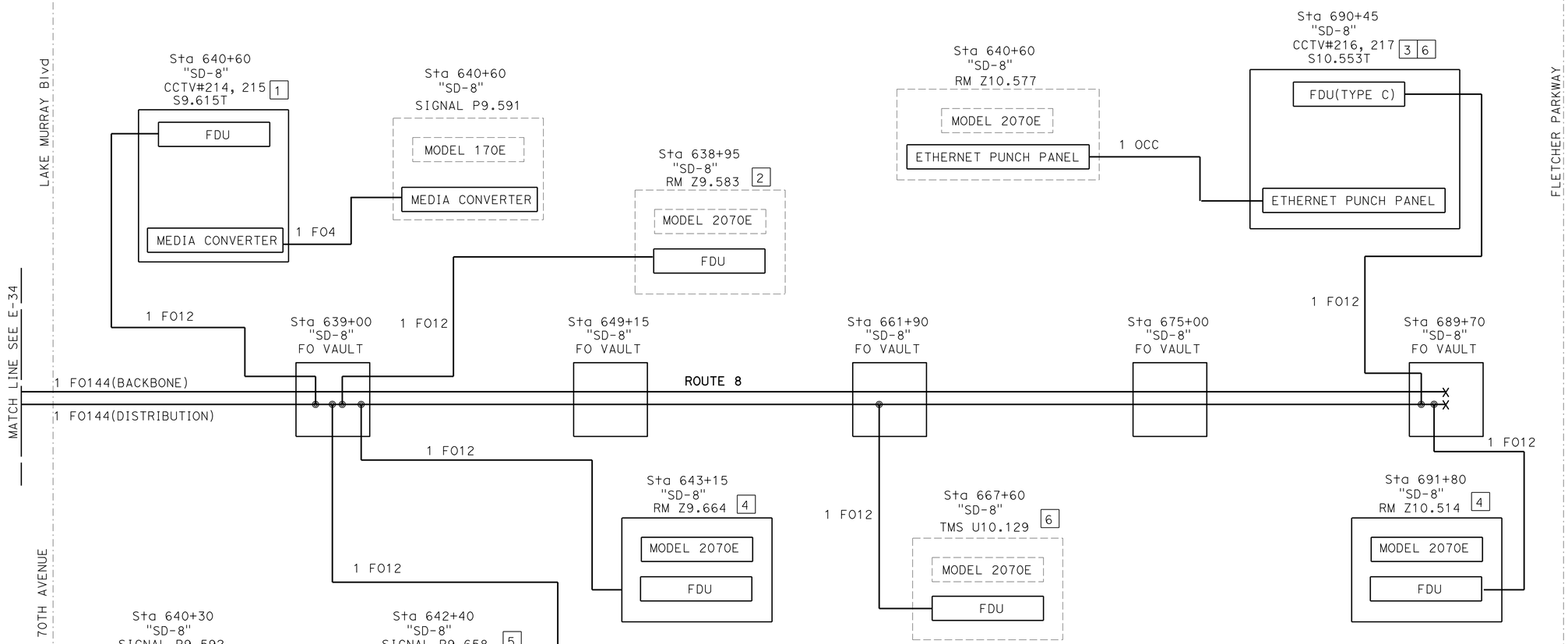

LEGEND:

[1] - SEE DETAIL FOR THE EQUIPMENT LOCATION IN CCTV CABINET, E-45 AND E-52

[2] - SEE DETAIL FOR THE EQUIPMENT LOCATION IN RM CABINET, E-52

[3] - SEE DETAIL FOR THE EQUIPMENT LOCATION IN CCTV CABINET, E-48

[4] - DETAIL FOR THE EQUIPMENT LOCATION IN RM CABINET SEE E-53

[5] - DETAIL FOR THE EQUIPMENT LOCATION IN SIGNAL CABINET SEE E-53

[6] - SEE DETAIL FOR THE EQUIPMENT LOCATION IN TMS CABINET, E-48

COMMUNICATION DIAGRAM

ELECTRICAL DETAILS

E-35

REVISED BY | DATE REVISED
HECTOR SANTAMARIA | LOUIE LA COMPTE
CALCULATED-DESIGNED BY | CHECKED BY
FUNCTIONAL SUPERVISOR | RAJPREET SINGH

STATE OF CALIFORNIA - DEPARTMENT OF TRANSPORTATION
Caltrans® TRAFFIC ELECTRICAL

LAST REVISION 06-08-16 | DATE PLOTTED => 09-JUN-2016 | TIME PLOTTED => 09:35

Dist	COUNTY	ROUTE	POST MILES TOTAL PROJECT	SHEET No.	TOTAL SHEETS
11	SD	8	5.4/10.6, R20.0/R21.6	137	213

Héctor A. Santamaría 05-31-16
REGISTERED ELECTRICAL ENGINEER DATE

05-31-16
PLANS APPROVAL DATE

REGISTERED PROFESSIONAL ENGINEER HECTOR A. SANTAMARIA No. 18207 Exp. 12-31-17 ELECTRICAL STATE OF CALIFORNIA

THE STATE OF CALIFORNIA OR ITS OFFICERS OR AGENTS SHALL NOT BE RESPONSIBLE FOR THE ACCURACY OR COMPLETENESS OF SCANNED COPIES OF THIS PLAN SHEET.

COLOR CODES FOR BUFFER TUBES AND FIBERS:

1. BLUE (BL)
2. ORANGE (OR)
3. GREEN (GR)
4. BROWN (BR)
5. SLATE (SL)
6. WHITE (WT)
7. RED (RD)
8. BLACK (BK)
9. YELLOW (YL)
10. VIOLET (VL)
11. ROSE (RS)
12. AQUA (AQ)

NOTES (TSO):

1. FO144 (DISTRIBUTION) SHOWN ONLY.
2. TERMINATE FO144 ON FDU, SEE SHEET E-42 FOR FIBER TERMINATION LAYOUT.

LEGEND:

- SPLICE OF TWO FIBER
- CUT THE END OF THE FIBER NOT SPLICED AND TERMINATE IN A FO SPLICE CLOSURE
- SC FEMALE CONNECTOR ON AN FDU PANEL
- SC MALE CONNECTOR ON AN SMFO PATCHCORD

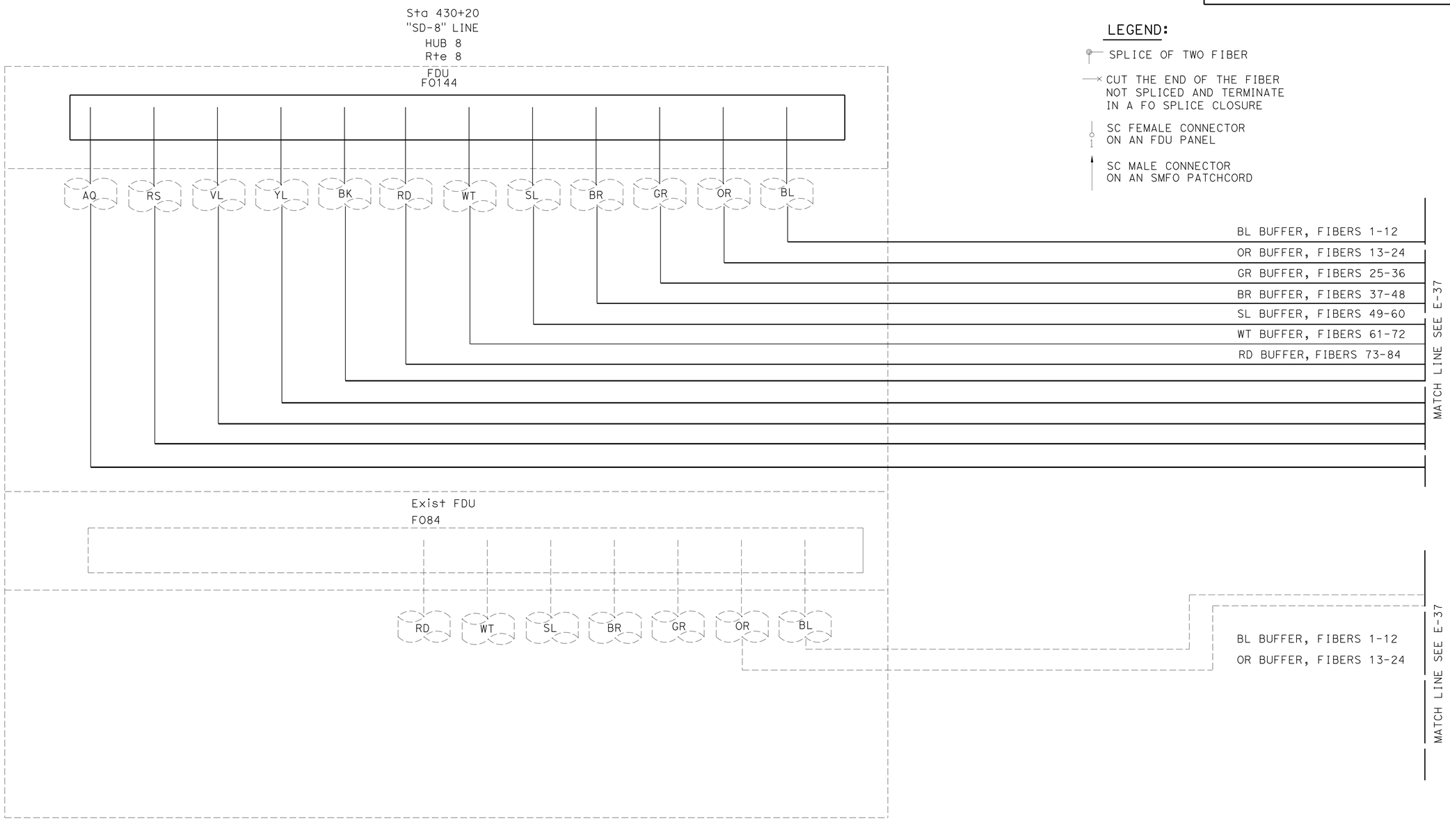

FIBER OPTIC SPLICING

ELECTRICAL DETAILS

E-36

STATE OF CALIFORNIA - DEPARTMENT OF TRANSPORTATION
Caltrans TRAFFIC ELECTRICAL

FUNCTIONAL SUPERVISOR: RAJPREET SINGH
CALCULATED-DESIGNED BY: HECTOR SANTAMARIA
CHECKED BY: LOUIE LA COMPTE
REVISED BY
DATE REVISED

LAST REVISION 06-08-16
DATE PLOTTED => 09-JUN-2016
TIME PLOTTED => 09:35

Dist	COUNTY	ROUTE	POST MILES TOTAL PROJECT	SHEET No.	TOTAL SHEETS
11	SD	8	5.4/10.6, R20.0/R21.6	138	213

Héctor A. Santamaría 05-31-16
REGISTERED ELECTRICAL ENGINEER DATE

05-31-16
PLANS APPROVAL DATE

REGISTERED PROFESSIONAL ENGINEER HECTOR A. SANTAMARIA No. 18207 Exp. 12-31-17 ELECTRICAL STATE OF CALIFORNIA

THE STATE OF CALIFORNIA OR ITS OFFICERS OR AGENTS SHALL NOT BE RESPONSIBLE FOR THE ACCURACY OR COMPLETENESS OF SCANNED COPIES OF THIS PLAN SHEET.

NOTE (TSO):

THE F0144 (DISTRIBUTION) IS ONLY SHOWN.

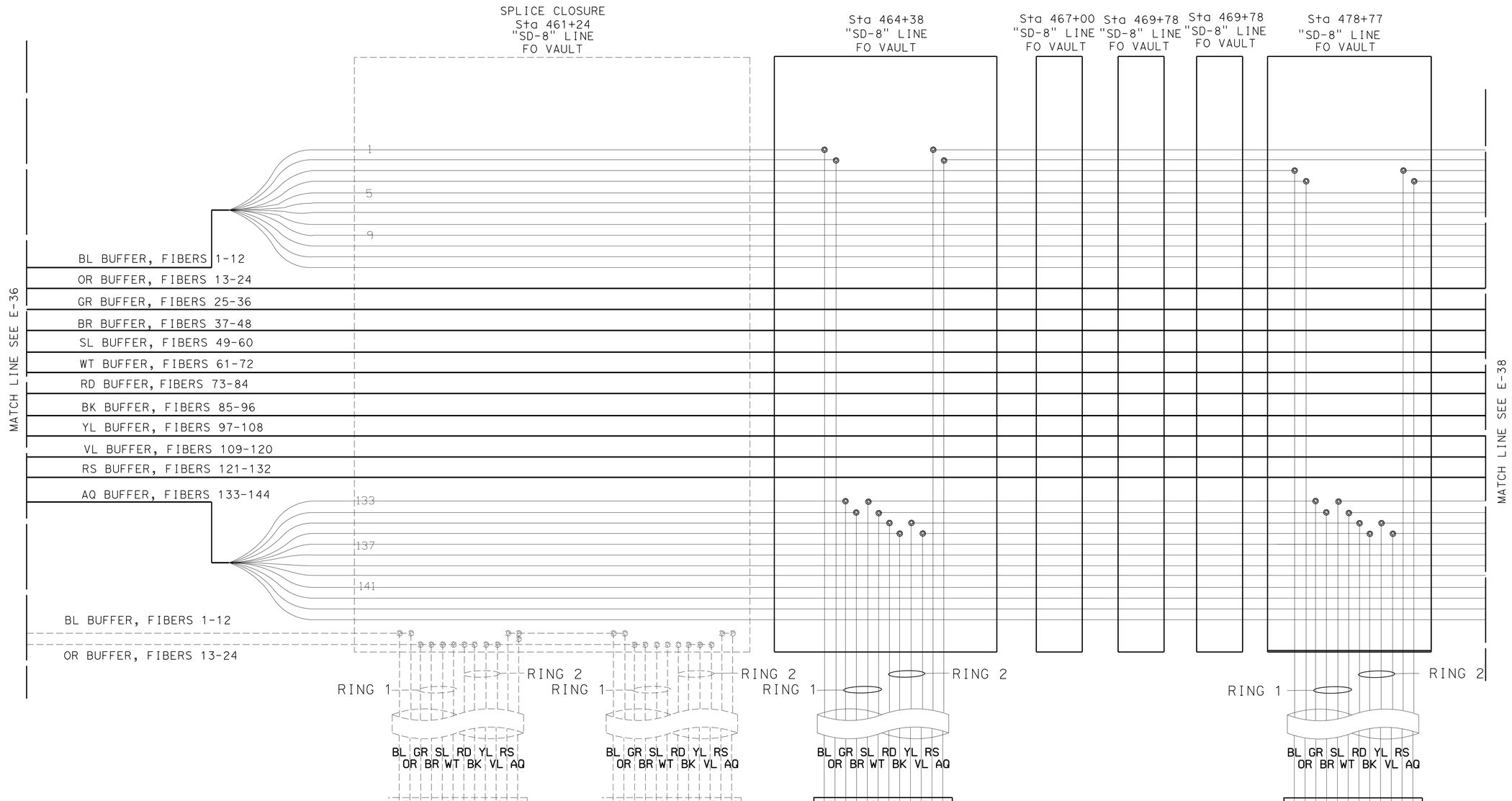

FIBER OPTIC SPLICING

ELECTRICAL DETAILS

E-37

REVISED BY	DATE REVISED

HECTOR SANTAMARIA
LOUIE LA COMPTE
CALCULATED-DESIGNED BY
CHECKED BY
FUNCTIONAL SUPERVISOR
RAJPREET SINGH

STATE OF CALIFORNIA - DEPARTMENT OF TRANSPORTATION
Caltrans® TRAFFIC ELECTRICAL

LAST REVISION 05-26-16
DATE PLOTTED => 09-JUN-2016
TIME PLOTTED => 09:35

Dist	COUNTY	ROUTE	POST MILES TOTAL PROJECT	SHEET No.	TOTAL SHEETS
11	SD	8	5.4/10.6, R20.0/R21.6	139	213

Héctor A. Santamaría 05-31-16
REGISTERED ELECTRICAL ENGINEER DATE

05-31-16
PLANS APPROVAL DATE

REGISTERED PROFESSIONAL ENGINEER
HECTOR A. SANTAMARIA
No. 18207
Exp. 12-31-17
ELECTRICAL
STATE OF CALIFORNIA

THE STATE OF CALIFORNIA OR ITS OFFICERS OR AGENTS SHALL NOT BE RESPONSIBLE FOR THE ACCURACY OR COMPLETENESS OF SCANNED COPIES OF THIS PLAN SHEET.

NOTE (TSO):

THE FO144 (DISTRIBUTION) IS ONLY SHOWN.

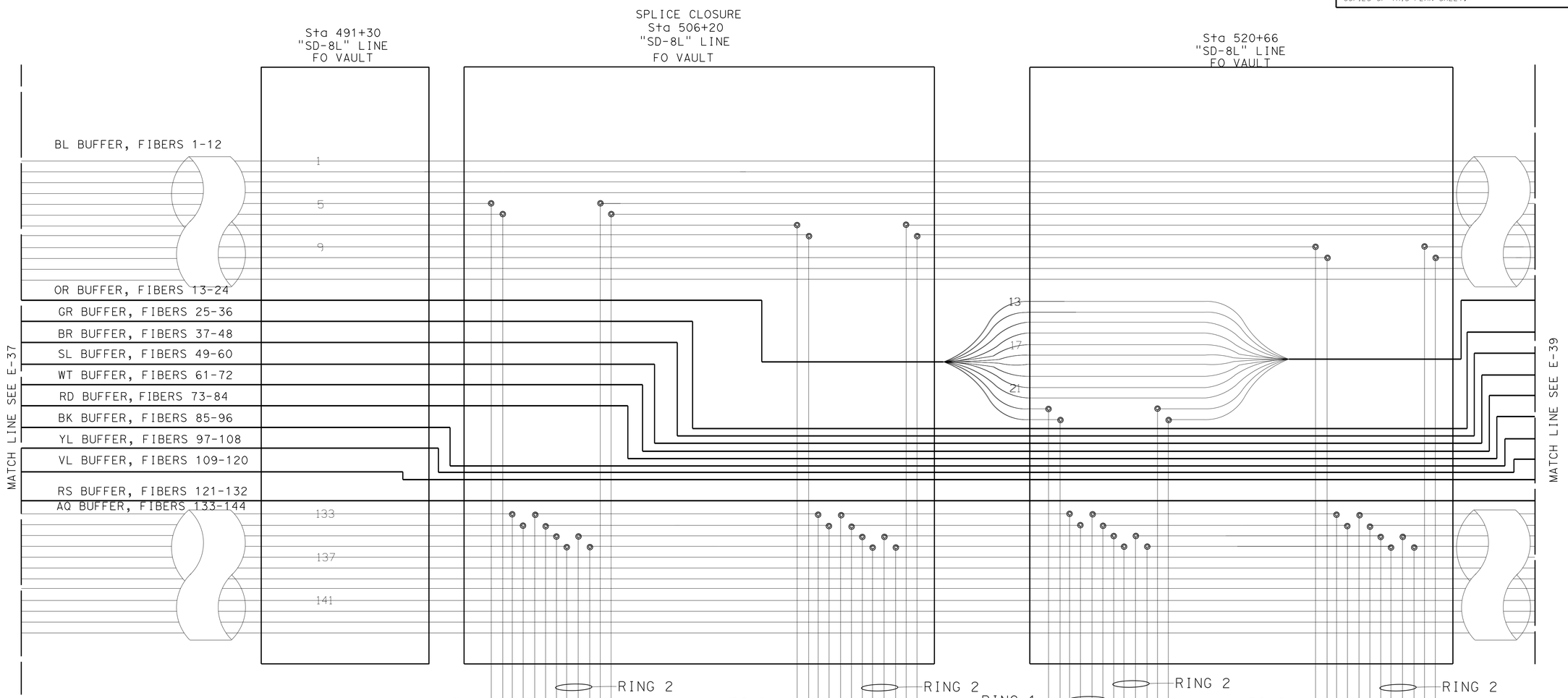

FIBER OPTIC SPLICING

ELECTRICAL DETAILS
E-38

REVISED BY | DATE REVISED
HECTOR SANTAMARIA | LOUIE LA COMPTE
CALCULATED-DESIGNED BY | CHECKED BY
FUNCTIONAL SUPERVISOR
RAJPREET SINGH

STATE OF CALIFORNIA - DEPARTMENT OF TRANSPORTATION
Caltrans
TRAFFIC ELECTRICAL

LAST REVISION 05-23-16 | DATE PLOTTED => 09-JUN-2016 | TIME PLOTTED => 09:35

Dist	COUNTY	ROUTE	POST MILES TOTAL PROJECT	SHEET No.	TOTAL SHEETS
11	SD	8	5.4/10.6, R20.0/R21.6	140	213

Héctor A. Santamaría 05-31-16
REGISTERED ELECTRICAL ENGINEER DATE

05-31-16
PLANS APPROVAL DATE

REGISTERED PROFESSIONAL ENGINEER HECTOR A. SANTAMARIA No. 18207 Exp. 12-31-17 ELECTRICAL STATE OF CALIFORNIA

THE STATE OF CALIFORNIA OR ITS OFFICERS OR AGENTS SHALL NOT BE RESPONSIBLE FOR THE ACCURACY OR COMPLETENESS OF SCANNED COPIES OF THIS PLAN SHEET.

NOTE (TSO):

THE F0144 (DISTRIBUTION) IS ONLY SHOWN.

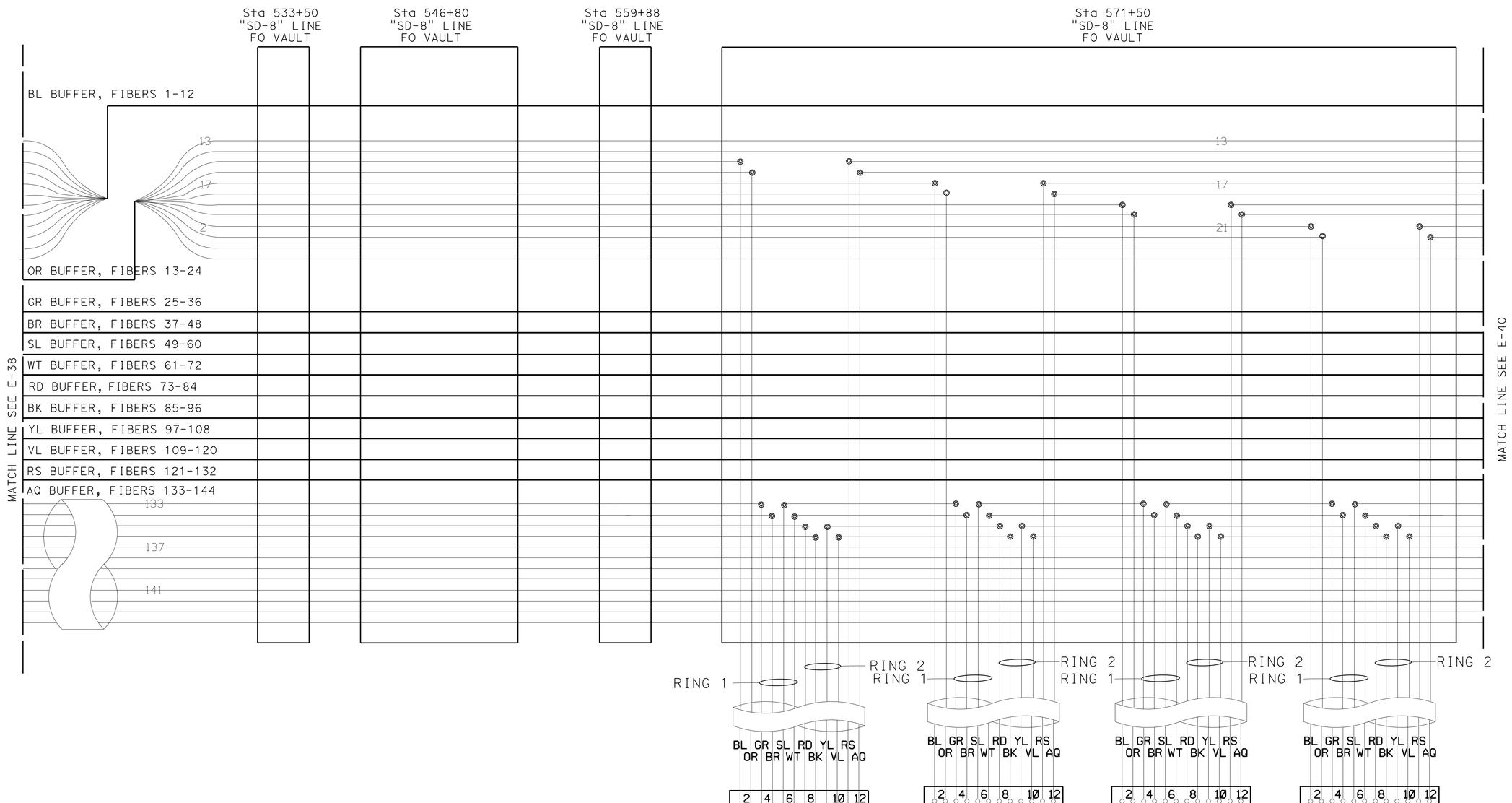

FIBER OPTIC SPLICING

ELECTRICAL DETAILS

E-39

STATE OF CALIFORNIA - DEPARTMENT OF TRANSPORTATION
Caltrans® TRAFFIC ELECTRICAL

FUNCTIONAL SUPERVISOR: RAJPREET SINGH
CALCULATED-DESIGNED BY: HECTOR SANTAMARIA
CHECKED BY: LOUIE LA COMPTE
REVISED BY
DATE REVISED

LAST REVISION 05-23-16
DATE PLOTTED => 09-JUN-2016
TIME PLOTTED => 09:35

Dist	COUNTY	ROUTE	POST MILES TOTAL PROJECT	SHEET No.	TOTAL SHEETS
11	SD	8	5.4/10.6, R20.0/R21.6	141	213

Héctor A. Santamaría 05-31-16
REGISTERED ELECTRICAL ENGINEER DATE

05-31-16
PLANS APPROVAL DATE

REGISTERED PROFESSIONAL ENGINEER
HECTOR A. SANTAMARIA
No. 18207
Exp. 12-31-17
ELECTRICAL
STATE OF CALIFORNIA

THE STATE OF CALIFORNIA OR ITS OFFICERS OR AGENTS SHALL NOT BE RESPONSIBLE FOR THE ACCURACY OR COMPLETENESS OF SCANNED COPIES OF THIS PLAN SHEET.

NOTE (TSO):

THE FO144 (DISTRIBUTION) IS ONLY SHOWN.

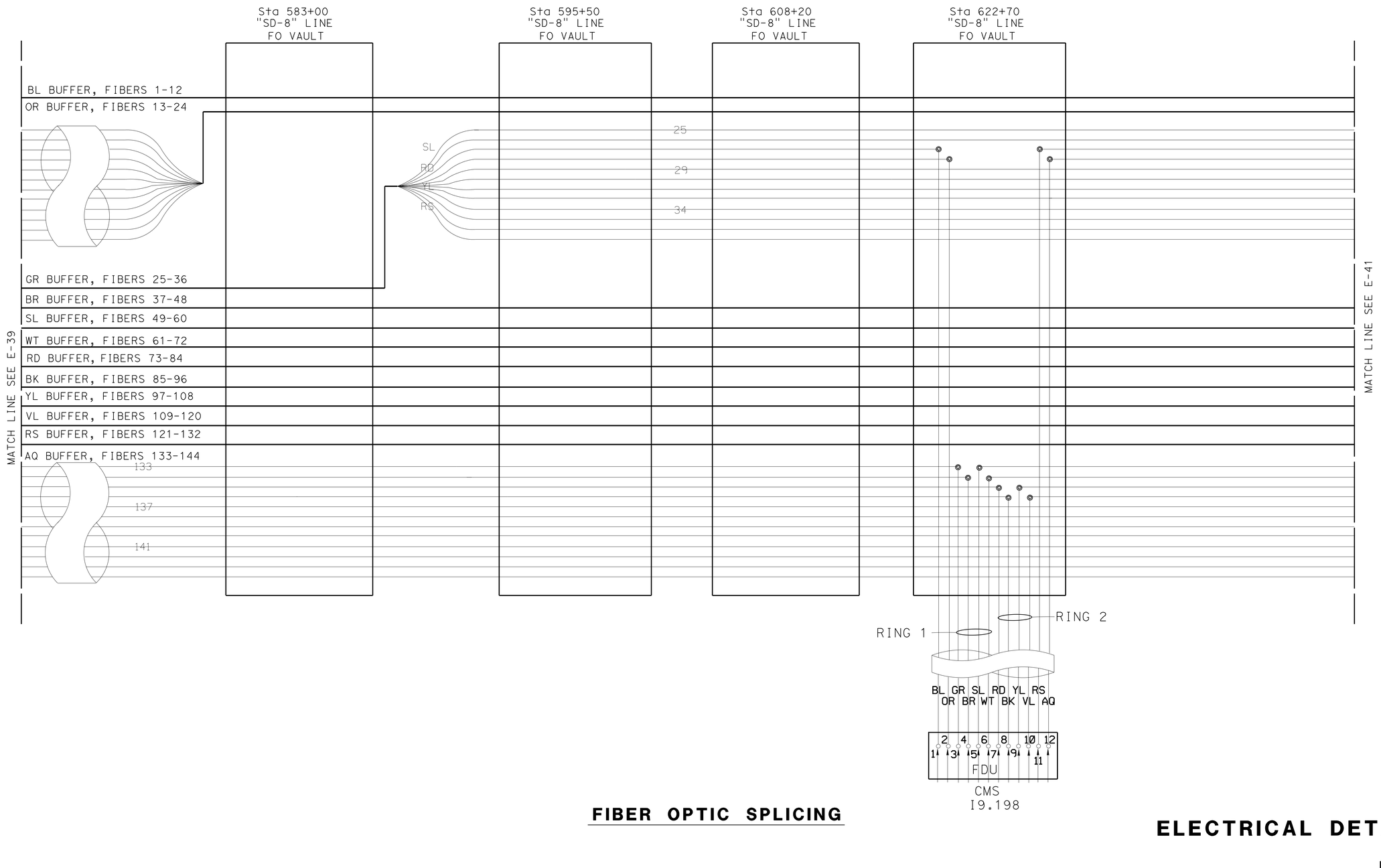

FIBER OPTIC SPLICING

ELECTRICAL DETAILS

E-40

STATE OF CALIFORNIA - DEPARTMENT OF TRANSPORTATION
Caltrans® TRAFFIC ELECTRICAL

FUNCTIONAL SUPERVISOR: RAJPREET SINGH
CALCULATED-DESIGNED BY: HECTOR SANTAMARIA
CHECKED BY: LOUIE LA COMPTE
REVISED BY
DATE REVISED

LAST REVISION 05-23-16
DATE PLOTTED => 09-JUN-2016
TIME PLOTTED => 09:35

Dist	COUNTY	ROUTE	POST MILES TOTAL PROJECT	SHEET No.	TOTAL SHEETS
11	SD	8	5.4/10.6, R20.0/R21.6	142	213

Héctor A. Santamaría 05-31-16
REGISTERED ELECTRICAL ENGINEER DATE

05-31-16
PLANS APPROVAL DATE

REGISTERED PROFESSIONAL ENGINEER HECTOR A. SANTAMARIA No. 18207 Exp. 12-31-17 ELECTRICAL STATE OF CALIFORNIA

THE STATE OF CALIFORNIA OR ITS OFFICERS OR AGENTS SHALL NOT BE RESPONSIBLE FOR THE ACCURACY OR COMPLETENESS OF SCANNED COPIES OF THIS PLAN SHEET.

NOTES (TSO):

1. THE FO144 (DISTRIBUTION) IS ONLY SHOWN.
2. TERMINATE EACH FO144 IN A SPLICE CLOSURE.

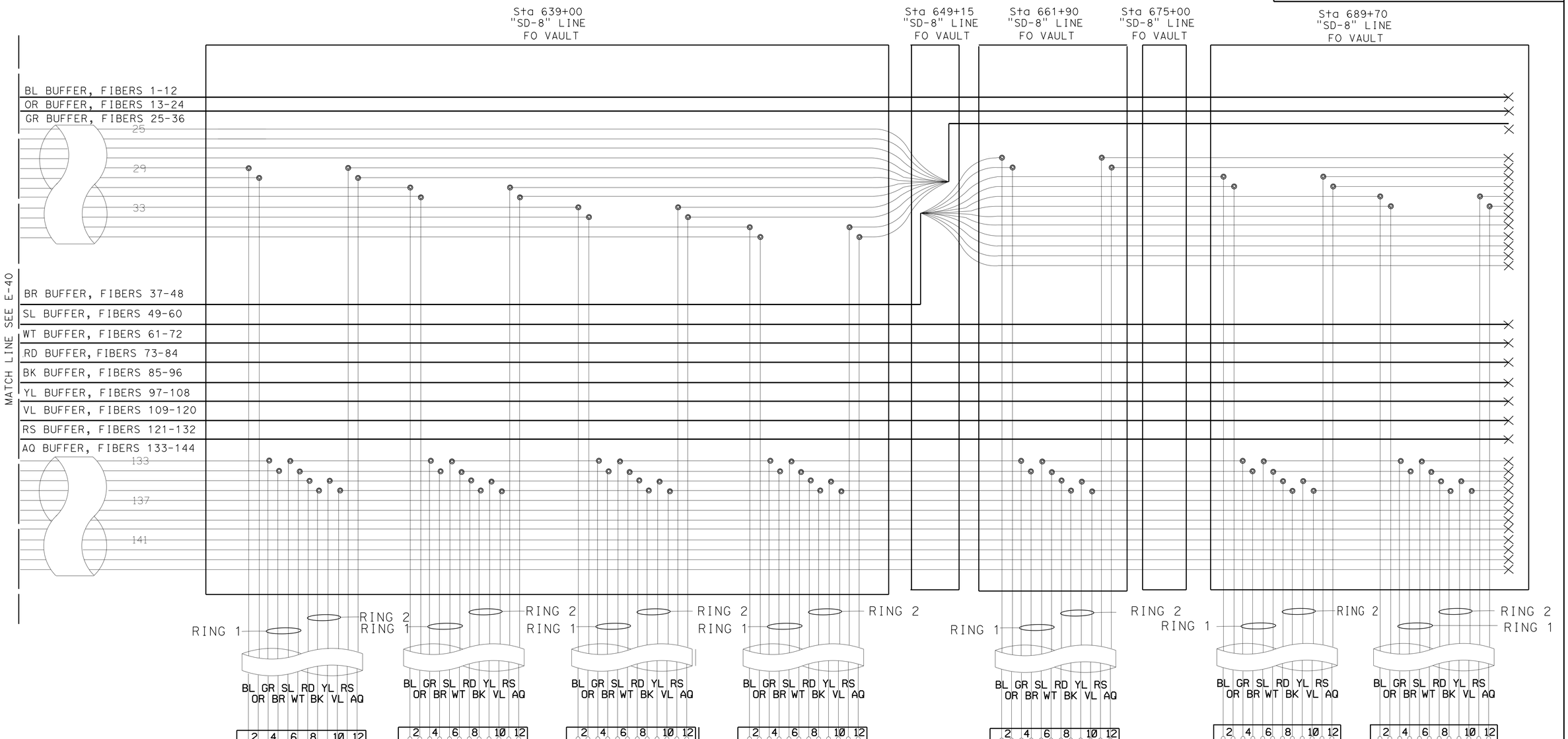

FIBER OPTIC SPLICING

ELECTRICAL DETAILS

E-41

STATE OF CALIFORNIA - DEPARTMENT OF TRANSPORTATION
Caltrans® TRAFFIC ELECTRICAL

FUNCTIONAL SUPERVISOR: RAJPREET SINGH
CALCULATED-DESIGNED BY: HECTOR SANTAMARIA
CHECKED BY: LOUIE LA COMPTE
REVISED BY
DATE REVISED

LAST REVISION 05-26-16
DATE PLOTTED => 09-JUN-2016
TIME PLOTTED => 09:35

Dist	COUNTY	ROUTE	POST MILES TOTAL PROJECT	SHEET No.	TOTAL SHEETS
11	SD	8	5.4/10.6, R20.0/R21.6	143	213

Héctor A. Santamaría 05-31-16
REGISTERED ELECTRICAL ENGINEER DATE

05-31-16
PLANS APPROVAL DATE

REGISTERED PROFESSIONAL ENGINEER HECTOR A. SANTAMARIA No. 18207 Exp. 12-31-17 ELECTRICAL STATE OF CALIFORNIA

THE STATE OF CALIFORNIA OR ITS OFFICERS OR AGENTS SHALL NOT BE RESPONSIBLE FOR THE ACCURACY OR COMPLETENESS OF SCANNED COPIES OF THIS PLAN SHEET.

NOTE:

TERMINATE 2 F0144 ON 2 FDU.

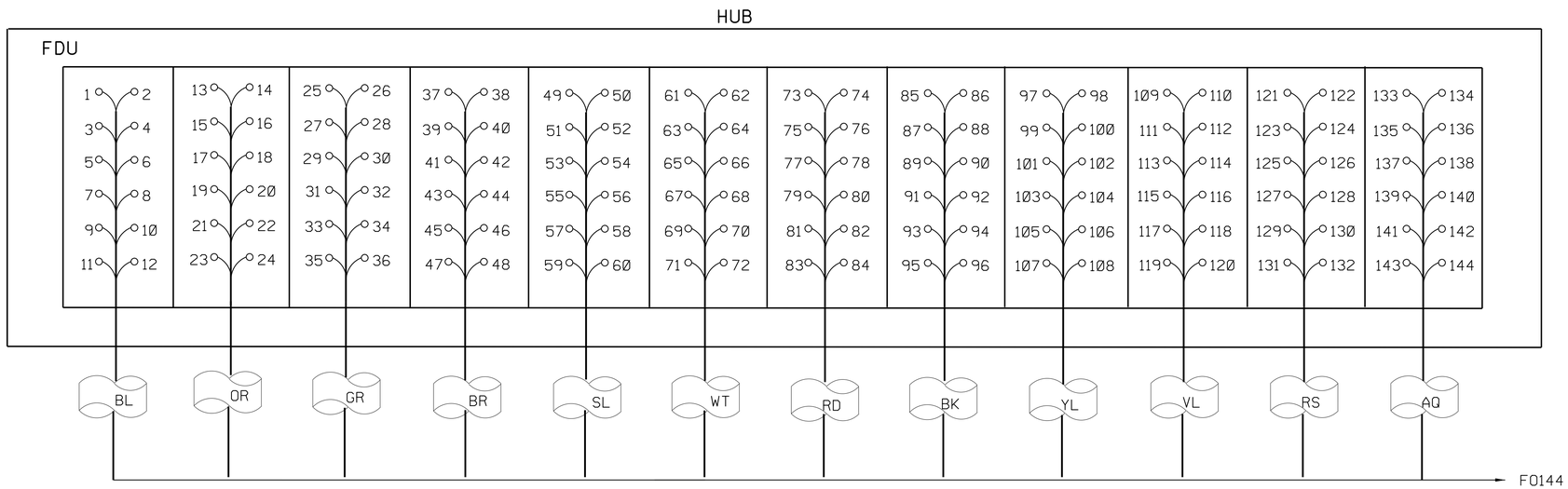

FDU TO FIBER CABLE TERMINATION DETAIL

ELECTRICAL DETAILS

E-42

STATE OF CALIFORNIA - DEPARTMENT OF TRANSPORTATION
Caltrans® TRAFFIC ELECTRICAL

FUNCTIONAL SUPERVISOR: RAJPREET SINGH
CALCULATED-DESIGNED BY: HECTOR SANTAMARIA
CHECKED BY: LOUIE LA COMPTE
REVISED BY
DATE REVISED

LAST REVISION 05-23-16
DATE PLOTTED => 09-JUN-2016
TIME PLOTTED => 09:35

Dist	COUNTY	ROUTE	POST MILES TOTAL PROJECT	SHEET No.	TOTAL SHEETS
11	SD	8	5.4/10.6, R20.0/R21.6	144	213

Héctor A. Santamaría 05-31-16
REGISTERED ELECTRICAL ENGINEER DATE

05-31-16
PLANS APPROVAL DATE

REGISTERED PROFESSIONAL ENGINEER HECTOR A. SANTAMARIA No. 18207 Exp. 12-31-17 ELECTRICAL STATE OF CALIFORNIA

THE STATE OF CALIFORNIA OR ITS OFFICERS OR AGENTS SHALL NOT BE RESPONSIBLE FOR THE ACCURACY OR COMPLETENESS OF SCANNED COPIES OF THIS PLAN SHEET.

LEGEND:

1 - SEE CAMERA CABLE HARNESS CROSS SECTION ON THIS SHEET

2 - STRAIN RELIEF CABLE GRIP SUITABLE FOR CABLE WEIGHT AND DIAMETER

3 - PROTECT AND INSULATE CABLES AND CONDUCTORS USING HEAT-SHRINK TUBING NO SPLICES ALLOWED

4 - GROUND CAMERA CABLE IN THE CCTV CABINET

5 - MINIMUM 3' OF SLACK IN CCTV CABINETS

6 - OUTSIDE JACKET OR SLEEVING REQUIRED

7 - CONNECT TO ADAPTER, SEE ADAPTER DETAILS ON SHEET E-44

8 - PLACE WATER TIGHT CABLE ENTRY SEAL AND WATER TIGHT SEAL RING REQUIRED FOR THE CONNECTOR

9 - CAMERA CONTROL CABLE 22 AWG OR LARGER

10 - TO VIDEO ENCODER IN THE CCTV CABINET, VIDEO INPUT

NOTES:

1. THE CONTRACTOR MUST VERIFY THE LENGTH OF CAMERA CABLE AT EACH LOCATION AS SHOWN IN ELECTRICAL PLANS. A SLACK OF 8' IS REQUIRED AT EACH LOCATION.
2. SEE ELECTRICAL DETAIL FOR TYPICAL CCTV SYSTEM COMPONENT CONNECTION DETAIL.
3. REMOVE AC PLUG WHEN 24 V(ac) IS REQUIRED FOR CAMERA POWER. CONNECT CONDUCTORS TO A POWER SUPPLY.

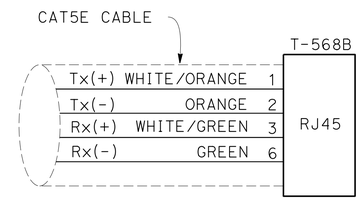

ETHERNET-RJ45 DETAIL

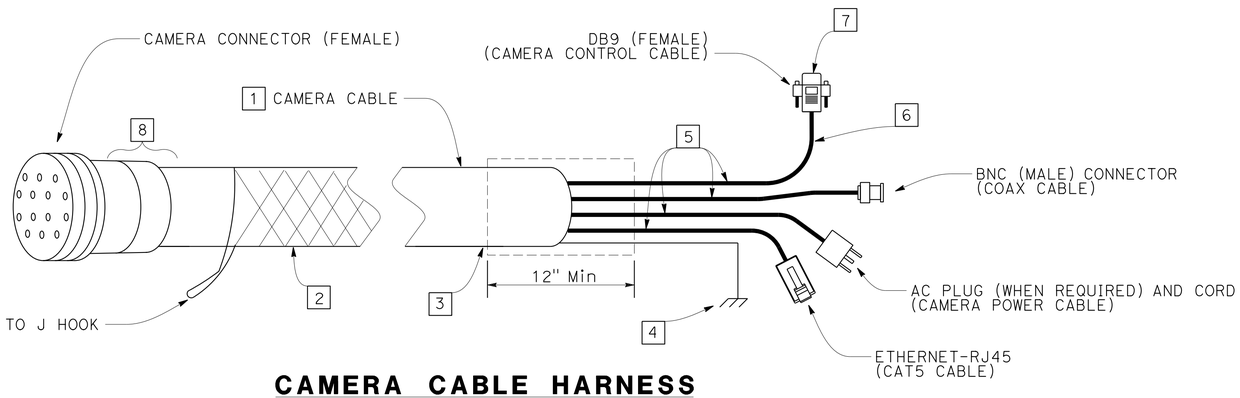

CAMERA CABLE HARNESS

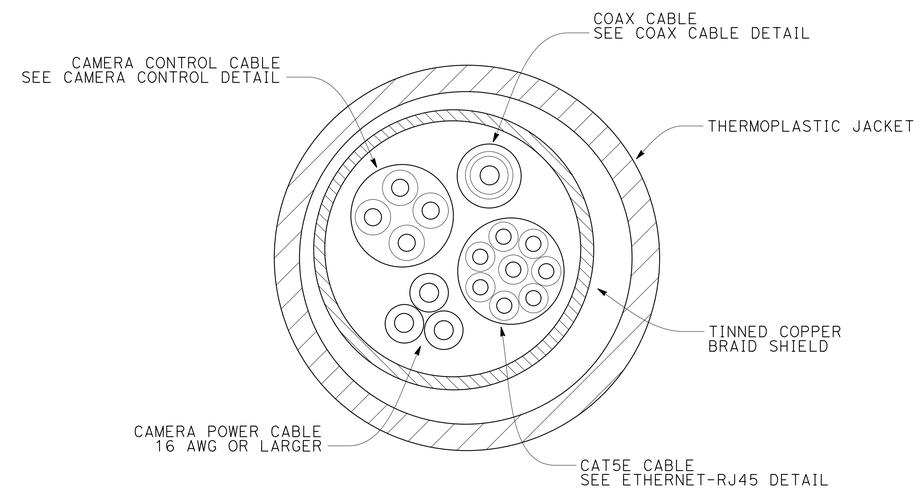

CAMERA CABLE HARNESS CROSS SECTION

TABLE A

PIN ASSIGNMENT

PIN	FUNCTION	COLOR
1	CONTROL RX(-)	RED
2	CONTROL RX(+)	BLUE
3	CONTROL TX(-)	ORANGE
4	CONTROL TX(+)	YELLOW
6	GROUND (SHIELD)	
8	VIDEO SIGNAL COAX INNER CORE	
9	VIDEO SIGNAL COAX SHIELD	
10	POWER, GROUND	GREEN
13	POWER, AC LOW	WHITE
14	POWER, AC HIGH	BLACK
5	ETHERNET Tx(+)	Wht/Org
7	ETHERNET Tx(-)	ORANGE
11	ETHERNET Rx(+)	Wht/Grn
12	ETHERNET Rx(-)	GREEN

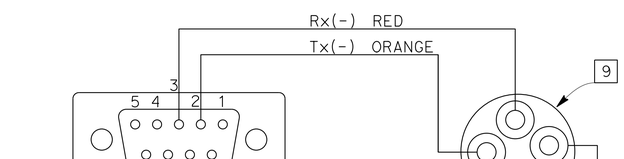

CAMERA CONTROL CABLE DETAIL

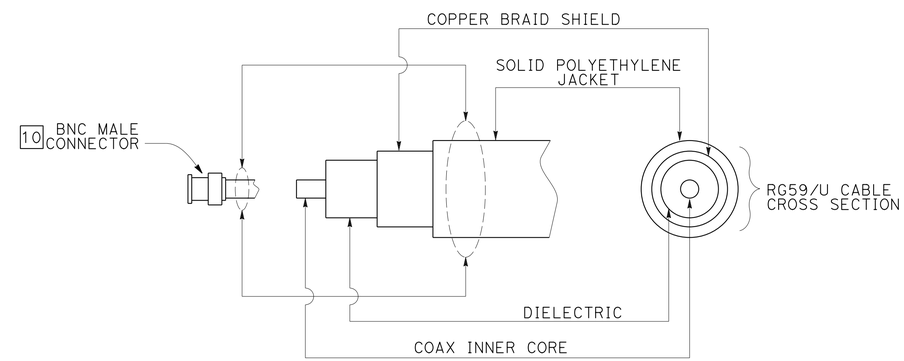

COAX CABLE DETAIL

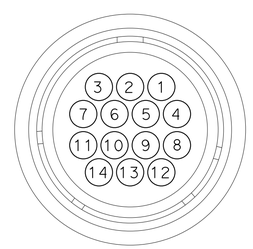

CAMERA CONNECTOR (FEMALE) CONTACT ARRANGEMENTS

SEE TABLE A FOR PIN ASSIGNMENT

ELECTRICAL DETAILS

NO SCALE

E-43

STATE OF CALIFORNIA - DEPARTMENT OF TRANSPORTATION
Caltrans TRAFFIC ELECTRICAL

FUNCTIONAL SUPERVISOR: RAJPREET SINGH
CALCULATED-DESIGNED BY: HECTOR SANTAMARIA
CHECKED BY: LOUIE LA COMPTE
REVISED BY
DATE REVISED

LAST REVISION 05-23-16
DATE PLOTTED => 09-JUN-2016
TIME PLOTTED => 09:35

Dist	COUNTY	ROUTE	POST MILES TOTAL PROJECT	SHEET No.	TOTAL SHEETS
11	SD	8	5.4/10.6, R20.0/R21.6	145	213

Héctor A. Santamaría 05-31-16
REGISTERED ELECTRICAL ENGINEER DATE

05-31-16
PLANS APPROVAL DATE

REGISTERED PROFESSIONAL ENGINEER HECTOR A. SANTAMARIA No. 18207 Exp. 12-31-15 ELECTRICAL STATE OF CALIFORNIA

THE STATE OF CALIFORNIA OR ITS OFFICERS OR AGENTS SHALL NOT BE RESPONSIBLE FOR THE ACCURACY OR COMPLETENESS OF SCANNED COPIES OF THIS PLAN SHEET.

LEGEND:

1 - CAMERA CONTROL CABLE 22 AWG OR LARGER, OUTSIDE JACKET OR SLEEVING REQUIRED. SEE ADAPTER DETAIL

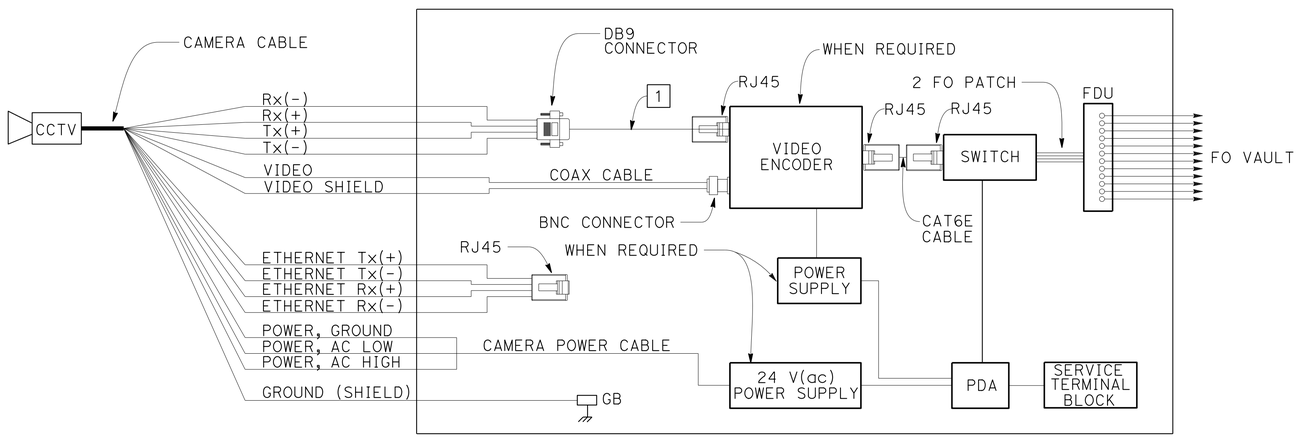

CCTV CONNECTIVITY DETAIL

(TYPICAL)

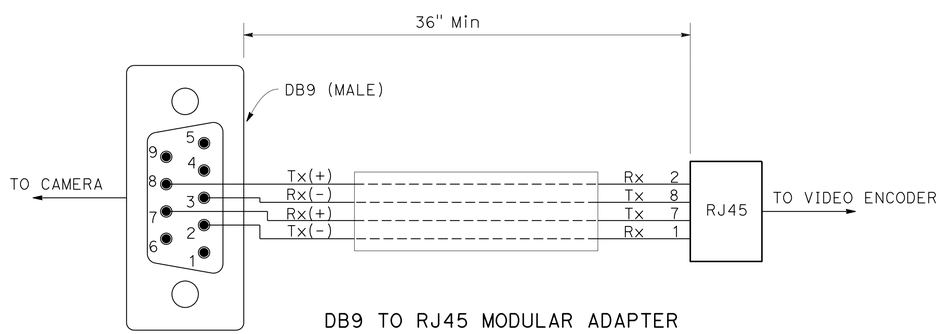

DB9 TO RJ45 MODULAR ADAPTER

ADAPTER DETAIL (WHEN REQUIRED)

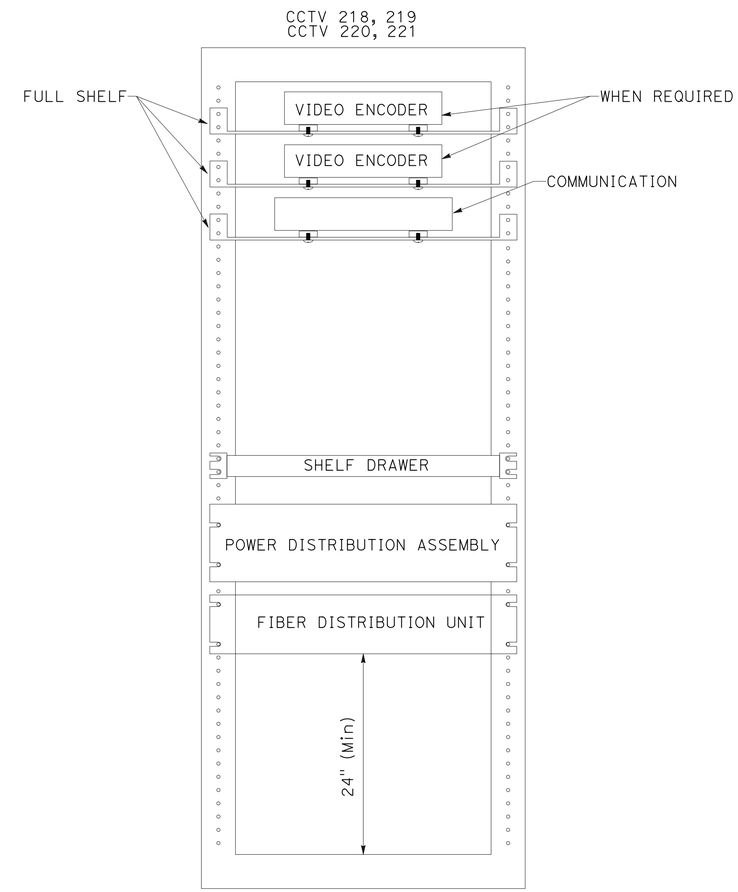

CABINET DETAIL

ELECTRICAL DETAILS

NO SCALE

E-44

STATE OF CALIFORNIA - DEPARTMENT OF TRANSPORTATION
Caltrans® TRAFFIC ELECTRICAL

FUNCTIONAL SUPERVISOR: RAJPREET SINGH
CALCULATED-DESIGNED BY: HECTOR SANTAMARIA
CHECKED BY: LOUIE LA COMPTE
REVISED BY
DATE REVISED

LAST REVISION 05-23-15 | DATE PLOTTED => 09-JUN-2016 | TIME PLOTTED => 09:35

Dist	COUNTY	ROUTE	POST MILES TOTAL PROJECT	SHEET No.	TOTAL SHEETS
11	SD	8	5.4/10.6, R20.0/R21.6	146	213

Héctor A. Santamaría 05-31-16
REGISTERED ELECTRICAL ENGINEER DATE

05-31-16
PLANS APPROVAL DATE

REGISTERED PROFESSIONAL ENGINEER HECTOR A. SANTAMARIA No. 18207 Exp. 12-31-17 ELECTRICAL STATE OF CALIFORNIA

THE STATE OF CALIFORNIA OR ITS OFFICERS OR AGENTS SHALL NOT BE RESPONSIBLE FOR THE ACCURACY OR COMPLETENESS OF SCANNED COPIES OF THIS PLAN SHEET.

LEGEND:

1 - WHEN REQUIRED

NOTE:

THE CONTRACTOR MUST VERIFY ALL CONTROLLING FIELD DIMENSIONS BEFORE ORDERING OR FABRICATING MATERIAL.

CCTV 208, 209
CCTV 210, 211
CCTV 212, 213
CCTV 214, 215
CCTV 216, 217

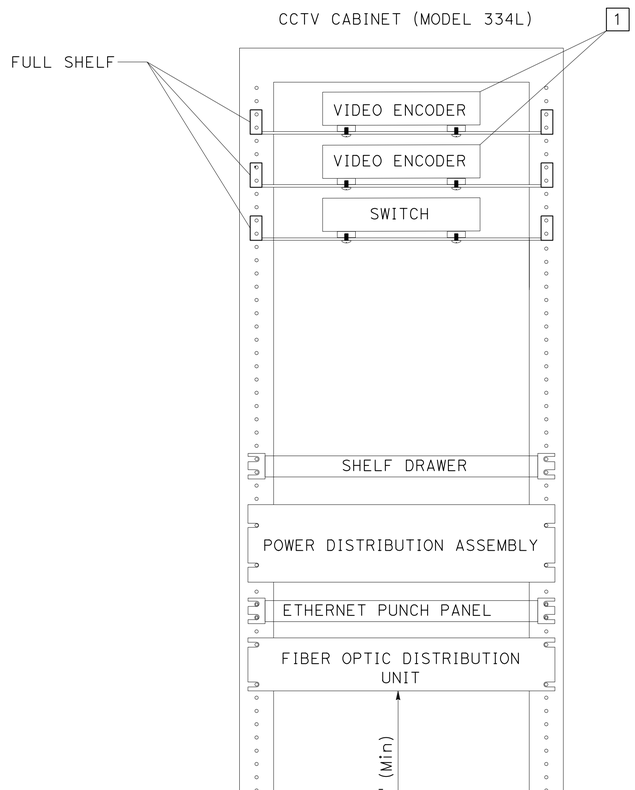

CCTV SYSTEM CABINET WITH ETHERNET PUNCH PANEL

DETAIL A (TYPICAL)

CCTV 222, 223

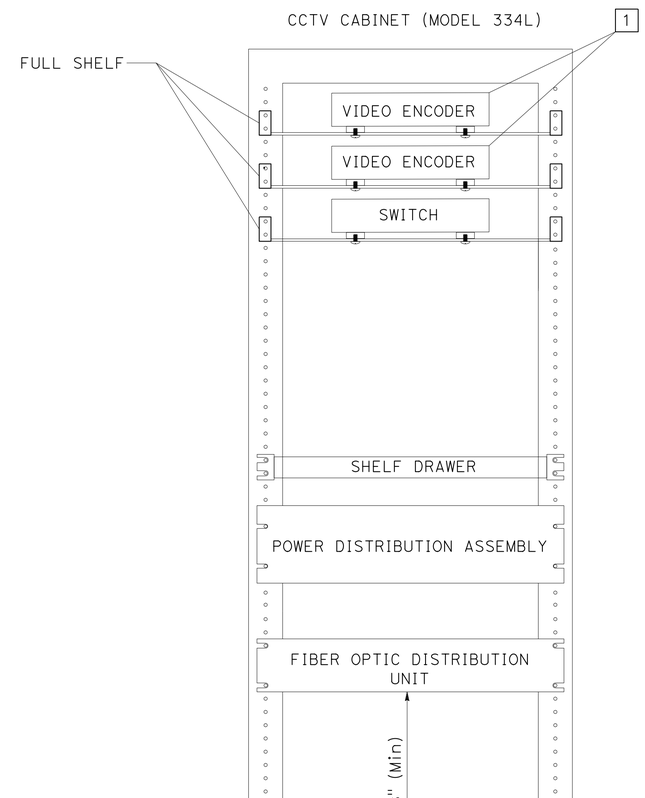

CCTV SYSTEM CABINET DETAIL WITHOUT PUNCH BLOCK

DETAIL B (TYPICAL)

ELECTRICAL DETAILS

NO SCALE

E-45

STATE OF CALIFORNIA - DEPARTMENT OF TRANSPORTATION
Caltrans® TRAFFIC ELECTRICAL

FUNCTIONAL SUPERVISOR: RAJPREET SINGH
CALCULATED-DESIGNED BY: HECTOR SANTAMARIA
CHECKED BY: LOUIE LA COMPTE
REVISED BY
DATE REVISED

LAST REVISION 05-23-16
DATE PLOTTED => 09-JUN-2016
TIME PLOTTED => 09:35

Dist	COUNTY	ROUTE	POST MILES TOTAL PROJECT	SHEET No.	TOTAL SHEETS
11	SD	8	5.4/10.6, R20.0/R21.6	147	213

Héctor A. Santamaría 05-31-16
REGISTERED ELECTRICAL ENGINEER DATE

05-31-16
PLANS APPROVAL DATE

REGISTERED PROFESSIONAL ENGINEER HECTOR A. SANTAMARIA No. 18207 Exp. 12-31-15 ELECTRICAL STATE OF CALIFORNIA

THE STATE OF CALIFORNIA OR ITS OFFICERS OR AGENTS SHALL NOT BE RESPONSIBLE FOR THE ACCURACY OR COMPLETENESS OF SCANNED COPIES OF THIS PLAN SHEET.

LEGEND:

1 - LABEL CABLE END IN EACH CABINET. THE LABEL NAME MUST CORRESPOND TO THE TERMINATION IN THE SIGNAL CABINET

2 - WHEN REQUIRED

- SMALL-FACTOR PLUGGABLE TRANSCEIVER

- ETHERNET PORT

NOTE:

THE CONTRACTOR MUST VERIFY ALL CONTROLLING FIELD DIMENSIONS BEFORE ORDERING AND INSTALLING EQUIPMENT.

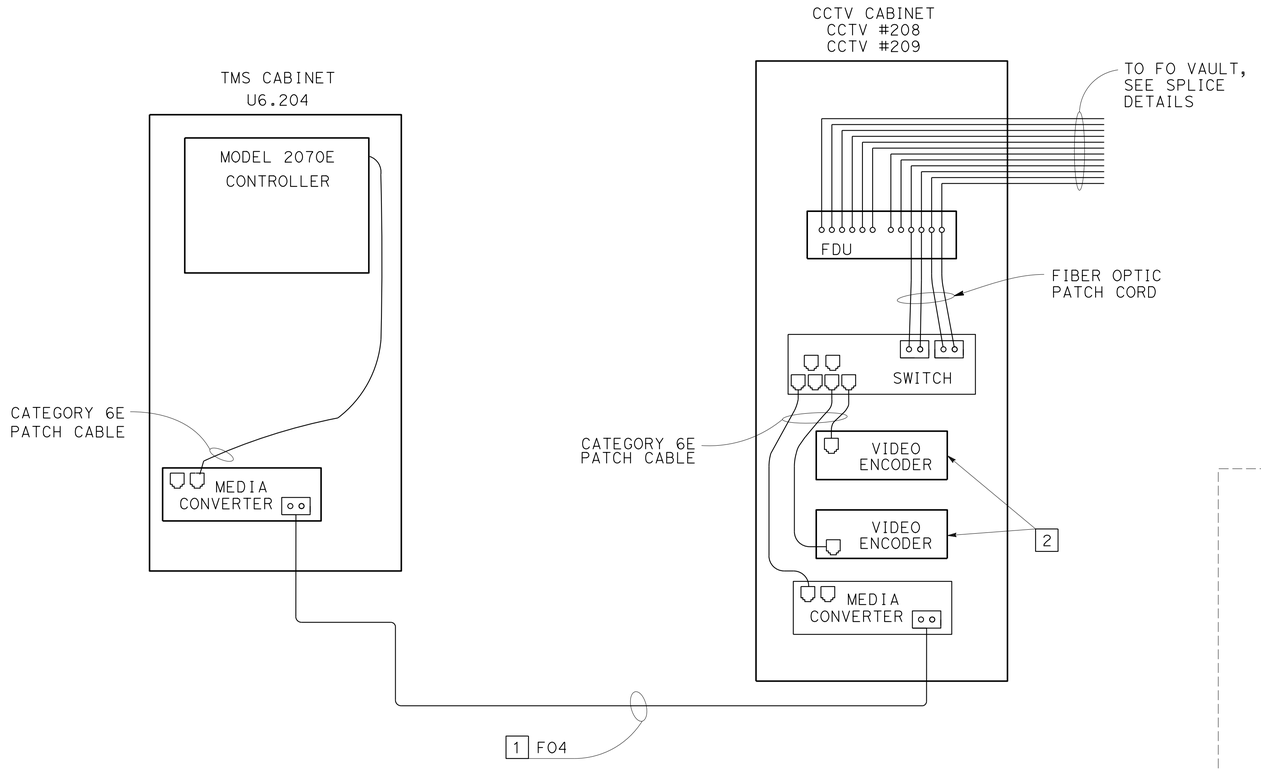

DETAIL CCTV-TMS
(TYPICAL)

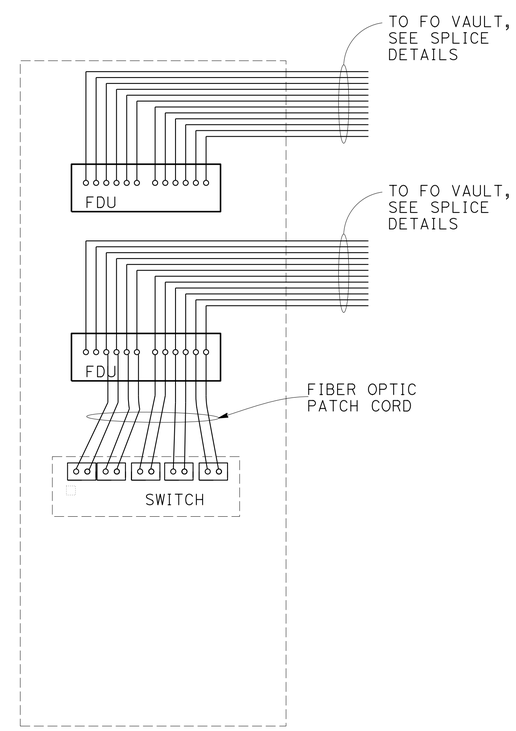

DETAIL HUB 8
(TYPICAL)

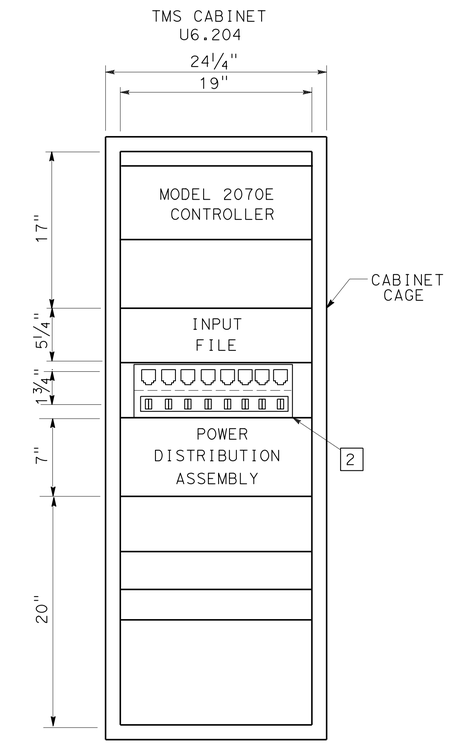

DETAIL TMS
(TYPICAL)

ELECTRICAL DETAILS

NO SCALE

E-46

REVISED BY	DATE REVISED	HECTOR SANTAMARIA	LOUIE LA COMPTE	CALCULATED-DESIGNED BY	CHECKED BY	FUNCTIONAL SUPERVISOR	RAJPREET SINGH

STATE OF CALIFORNIA - DEPARTMENT OF TRANSPORTATION
Caltrans® TRAFFIC ELECTRICAL

LAST REVISION 05-26-16 | DATE PLOTTED => 09-JUN-2016 | TIME PLOTTED => 09:35

Dist	COUNTY	ROUTE	POST MILES TOTAL PROJECT	SHEET No.	TOTAL SHEETS
11	SD	8	5.4/10.6, R20.0/R21.6	148	213

Héctor A. Santamaría 05-31-16
REGISTERED ELECTRICAL ENGINEER DATE

05-31-16
PLANS APPROVAL DATE

REGISTERED PROFESSIONAL ENGINEER
HECTOR A. SANTAMARIA
No. 18207
Exp. 12-31-15
ELECTRICAL
STATE OF CALIFORNIA

THE STATE OF CALIFORNIA OR ITS OFFICERS OR AGENTS SHALL NOT BE RESPONSIBLE FOR THE ACCURACY OR COMPLETENESS OF SCANNED COPIES OF THIS PLAN SHEET.

LEGEND:

1 - RS 2 EXISTING 170E CONTROLLERS AND INSTALL 1 MODEL 2070E CONTROLLER

2 - LABEL CABLE END IN EACH CONTROLLER CABINET, THE LABEL MUST CORRESPOND TO THE TERMINATION IN THE SIGNAL CONTROLLER CABINET

3 - INSTALL SECU IN MODEL 170E CONTROLLER SLOT

- SMALL-FACTOR PLUGGABLE TRANSCEIVER

- ETHERNET PORT

NOTE:

THE CONTRACTOR MUST VERIFY ALL CONTROLLLING FIELD DIMENSIONS BEFORE ORDERING AND INSTALLING EQUIPMENT.

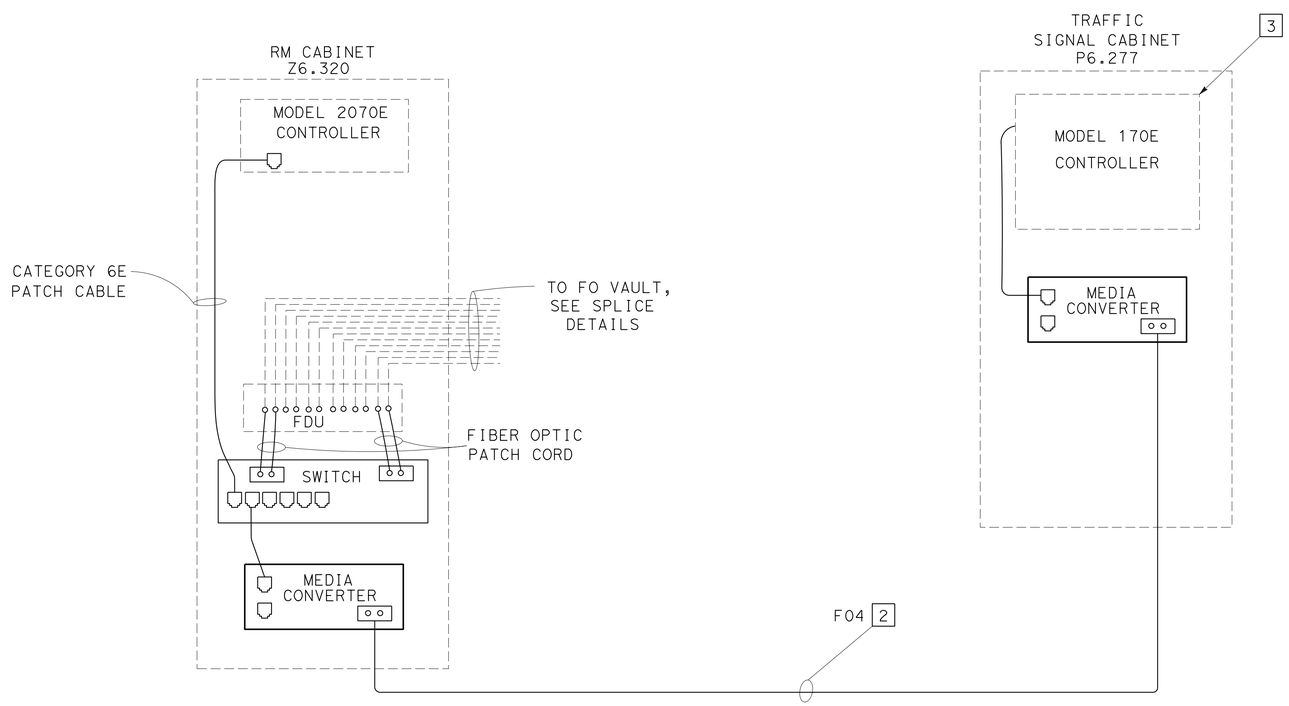

DETAIL M-SIG
(TYPICAL)

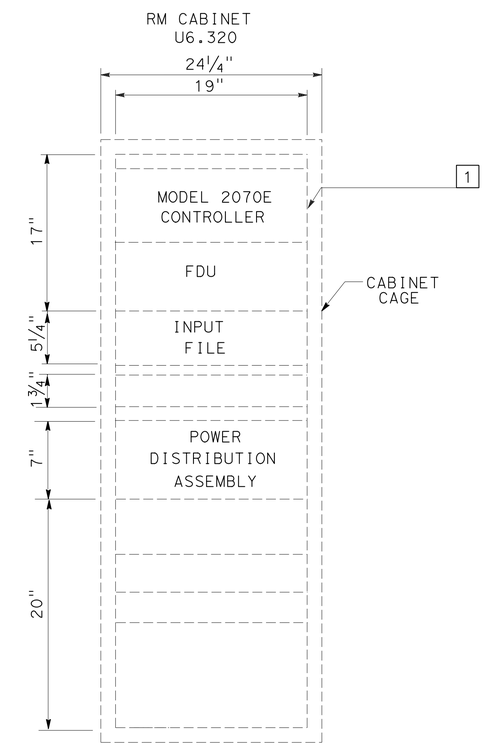

DETAIL RM
(TYPICAL)

ELECTRICAL DETAILS

NO SCALE

E-47

STATE OF CALIFORNIA - DEPARTMENT OF TRANSPORTATION
Caltrans® TRAFFIC ELECTRICAL

FUNCTIONAL SUPERVISOR: RAJPREET SINGH
CALCULATED-DESIGNED BY: HECTOR SANTAMARIA
CHECKED BY: LOUIE LA COMPTE
REVISED BY
DATE REVISED

LAST REVISION 06-08-16
DATE PLOTTED => 09-JUN-2016
TIME PLOTTED => 09:35

Dist	COUNTY	ROUTE	POST MILES TOTAL PROJECT	SHEET No.	TOTAL SHEETS
11	SD	8	5.4/10.6, R20.0/R21.6	149	213

Héctor A. Santamaría 05-31-16
REGISTERED ELECTRICAL ENGINEER DATE

05-31-16
PLANS APPROVAL DATE

REGISTERED PROFESSIONAL ENGINEER HECTOR A. SANTAMARIA No. 18207 Exp. 12-31-15 ELECTRICAL STATE OF CALIFORNIA

THE STATE OF CALIFORNIA OR ITS OFFICERS OR AGENTS SHALL NOT BE RESPONSIBLE FOR THE ACCURACY OR COMPLETENESS OF SCANNED COPIES OF THIS PLAN SHEET.

LEGEND:

1 - SHELF REQUIRED FOR EQUIPMENT

2 - REMOVE BLANK PANEL AND REPLACE WITH FDU

3 - ETHERNET PUNCH PANEL WITH RJ45 CONNECTION, TERMINATE OCC PER ANSI/TIA 568 DIAGRAM T568B, PLACE THE ETHERNET PATCH PANEL IN THE REAR OF CONTROLLER CABINET

4 - LABEL CABLE END IN EACH CONTROLLER CABINET THE LABEL MUST CORRESPOND TO THE TERMINATION IN THE SIGNAL CONTROLLER CABINET

5 - WHEN REQUIRED

- SMALL-FACTOR PLUGGABLE TRANSCEIVER

- ETHERNET PORT

NOTE:

THE CONTRACTOR MUST VERIFY ALL CONTROLLING FIELD DIMENSIONS BEFORE ORDERING AND INSTALLING EQUIPMENT.

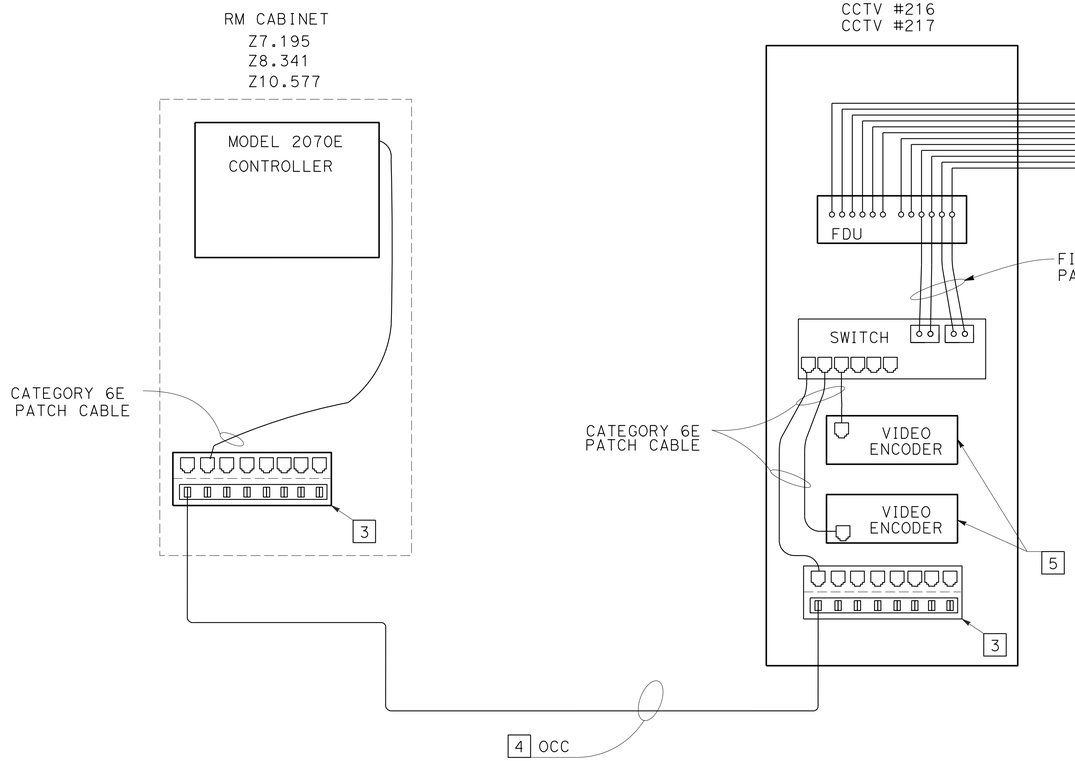

DETAIL CCTV-RM
(TYPICAL)

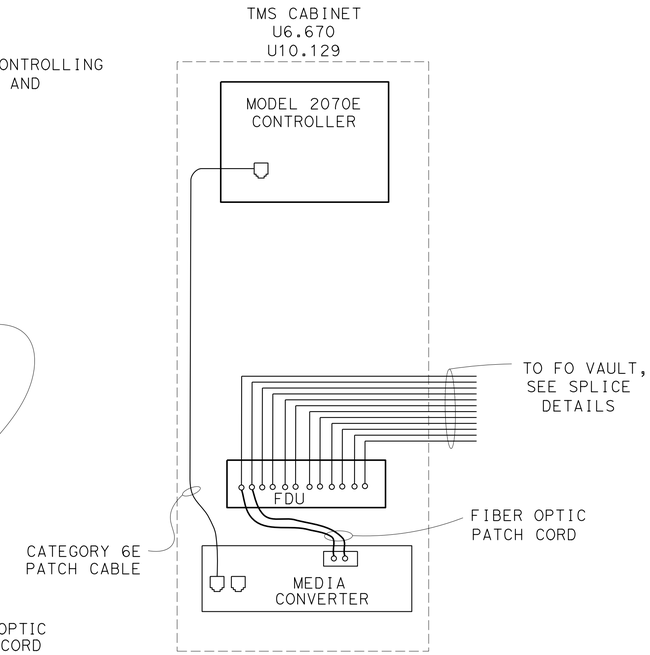

TMS CABINET
COMPONENT DIAGRAM

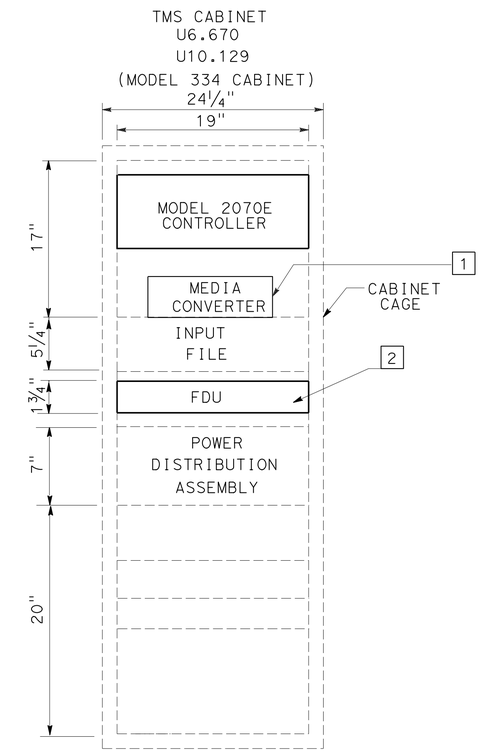

DETAIL TMS
(TYPICAL)

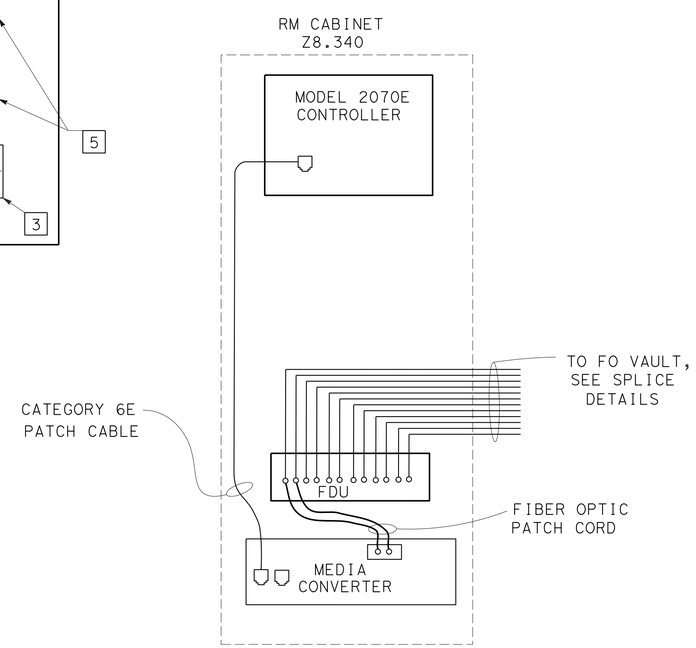

RM CABINET
COMPONENT DIAGRAM

ELECTRICAL DETAILS

NO SCALE

E-48

REVISED BY	DATE REVISED

CALCULATED-DESIGNED BY	CHECKED BY
HECTOR SANTAMARIA	LOUIE LA COMPTE

FUNCTIONAL SUPERVISOR: RAJPREET SINGH

STATE OF CALIFORNIA - DEPARTMENT OF TRANSPORTATION
Caltrans® TRAFFIC ELECTRICAL

LAST REVISION 05-24-16 | DATE PLOTTED => 09-JUN-2016 | TIME PLOTTED => 09:35

Dist	COUNTY	ROUTE	POST MILES TOTAL PROJECT	SHEET No.	TOTAL SHEETS
11	SD	8	5.4/10.6, R20.0/R21.6	150	213

Héctor A. Santamaría 05-31-16
REGISTERED ELECTRICAL ENGINEER DATE

05-31-16
PLANS APPROVAL DATE

REGISTERED PROFESSIONAL ENGINEER HECTOR A. SANTAMARIA No. 18207 Exp. 12-31-15 ELECTRICAL STATE OF CALIFORNIA

THE STATE OF CALIFORNIA OR ITS OFFICERS OR AGENTS SHALL NOT BE RESPONSIBLE FOR THE ACCURACY OR COMPLETENESS OF SCANNED COPIES OF THIS PLAN SHEET.

LEGEND:

1 - RS EXISTING MODEL 170 CONTROLLERS AND INSTALL MODEL 2070L CONTROLLER

2 - LABEL CABLE END IN EACH CONTROLLER CABINET. THE LABEL MUST CORRESPOND TO THE TERMINATION IN THE SIGNAL CONTROLLER CABINET.

3 - ETHERNET PUNCH PANEL WITH RJ45 CONNECTION. TERMINATE OCC PER ANSI/TIA 568 DIAGRAM T568B. PLACE THE ETHERNET PATCH PANEL IN THE REAR OF CONTROLLER CABINET

4 - INSTALL SECU IN MODEL 170E CONTROLLER SLOT

- SMALL-FACTOR PLUGGABLE TRANSCEIVER

- ETHERNET PORT

NOTE:

THE CONTRACTOR MUST VERIFY ALL CONTROLLLING FIELD DIMENSIONS BEFORE ORDERING AND INSTALLING EQUIPMENT.

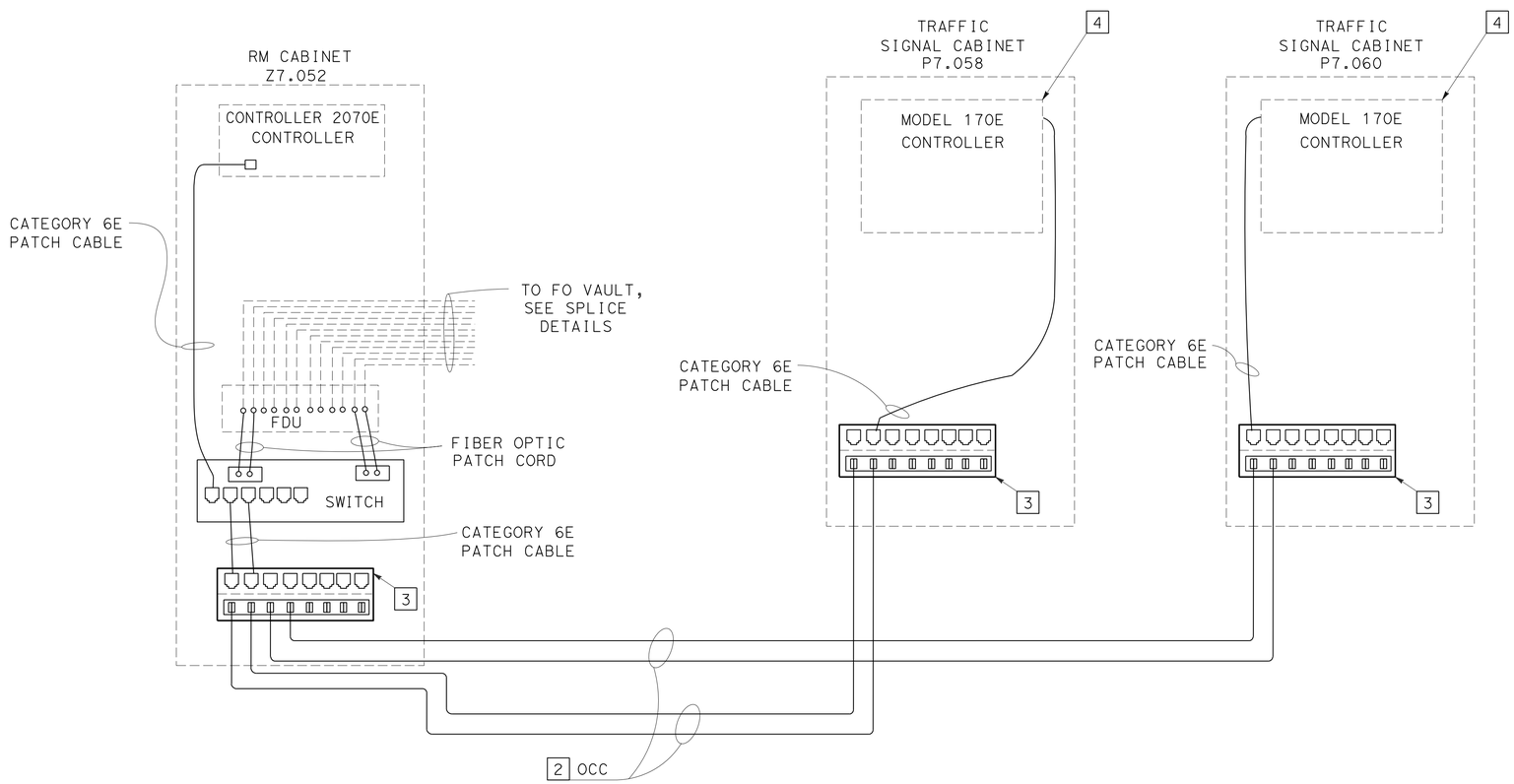

DETAIL RM-SIG
(TYPICAL)

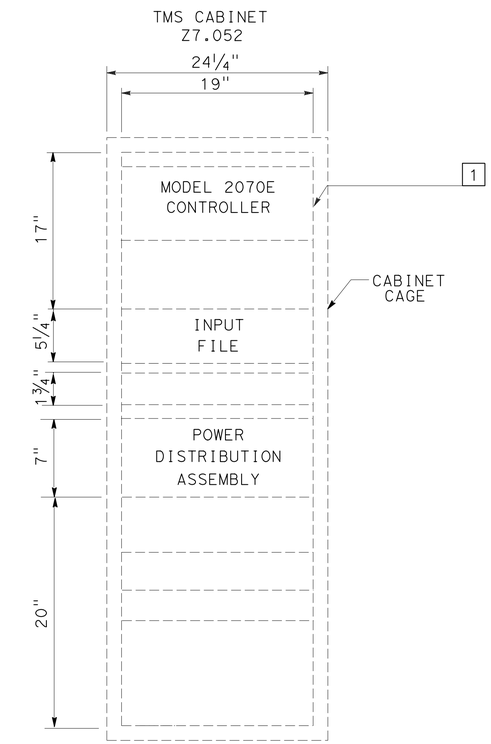

DETAIL RM
(TYPICAL)

ELECTRICAL DETAILS

NO SCALE

E-49

STATE OF CALIFORNIA - DEPARTMENT OF TRANSPORTATION
Caltrans® TRAFFIC ELECTRICAL

FUNCTIONAL SUPERVISOR: RAJPREET SINGH
CALCULATED-DESIGNED BY: HECTOR SANTAMARIA
CHECKED BY: LOUIE LA COMPTE
REVISED BY
DATE REVISED

LAST REVISION 05-24-16
DATE PLOTTED => 09-JUN-2016
TIME PLOTTED => 09:35

Dist	COUNTY	ROUTE	POST MILES TOTAL PROJECT	SHEET No.	TOTAL SHEETS
11	SD	8	5.4/10.6, R20.0/R21.6	151	213

Héctor A. Santamaría 05-31-16
REGISTERED ELECTRICAL ENGINEER DATE

05-31-16
PLANS APPROVAL DATE

REGISTERED PROFESSIONAL ENGINEER
HECTOR A. SANTAMARIA
No. 18207
Exp. 12-31-15
ELECTRICAL
STATE OF CALIFORNIA

THE STATE OF CALIFORNIA OR ITS OFFICERS OR AGENTS SHALL NOT BE RESPONSIBLE FOR THE ACCURACY OR COMPLETENESS OF SCANNED COPIES OF THIS PLAN SHEET.

NOTE:

THE CONTRACTOR MUST VERIFY ALL CONTROLLLING FIELD DIMENSIONS BEFORE ORDERING AND INSTALLING EQUIPMENT.

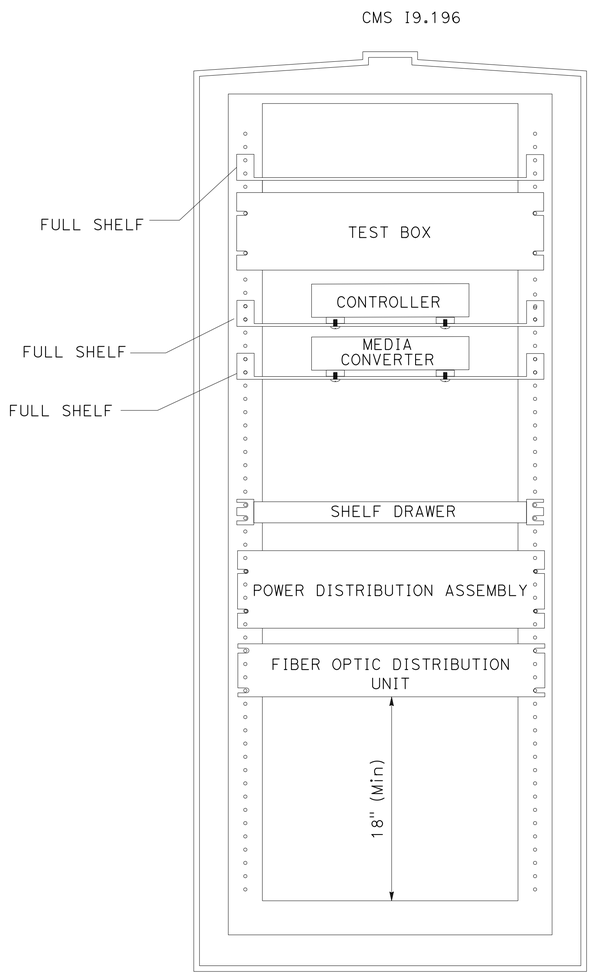

DETAIL SINGLE CMS
(TYPICAL)

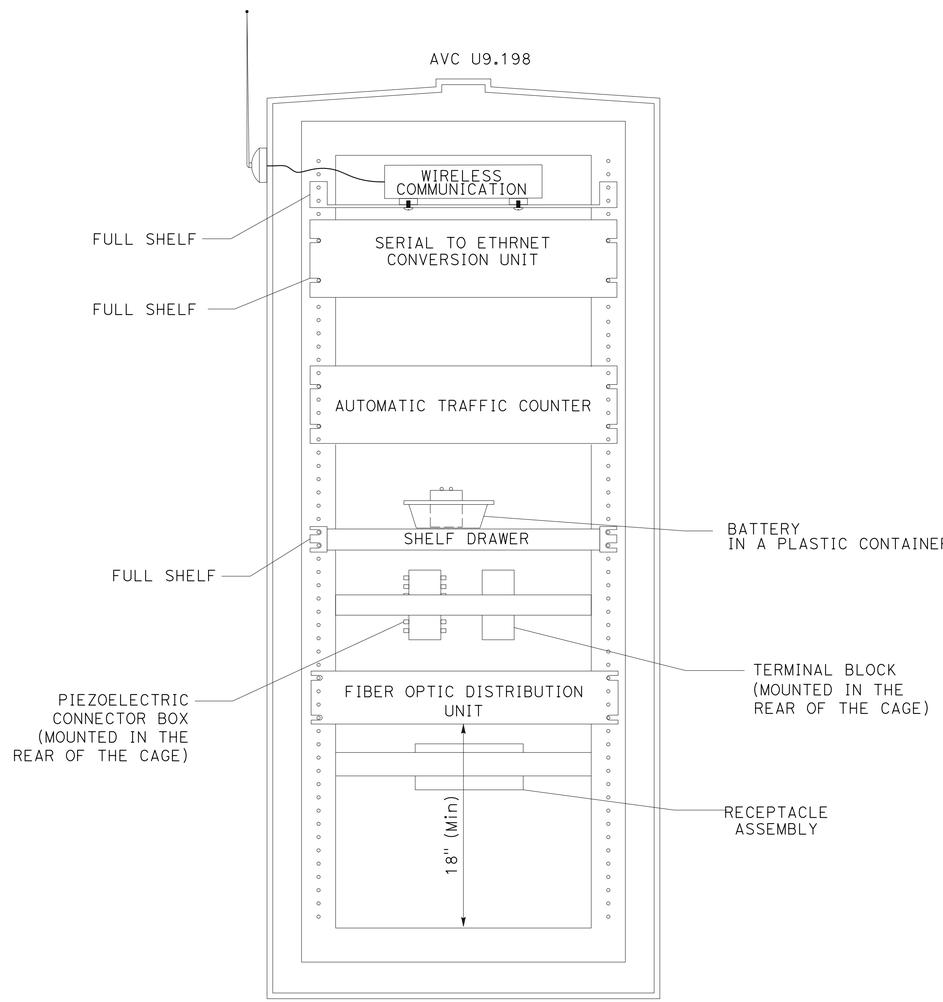

DETAIL AVC
(TYPICAL)

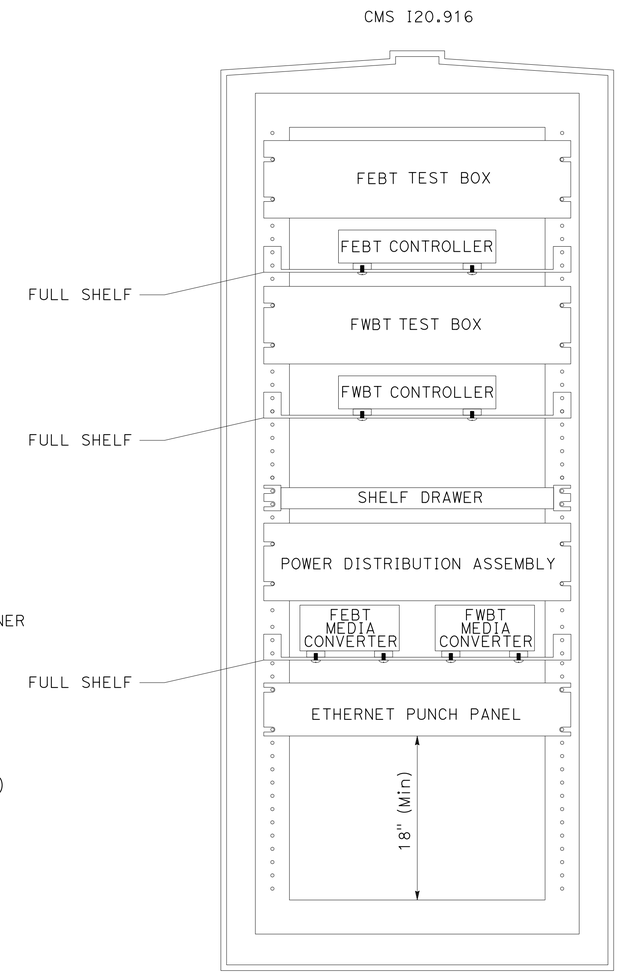

DETAIL DOUBLE CMS
(TYPICAL)

ELECTRICAL DETAILS

NO SCALE

E-50

STATE OF CALIFORNIA - DEPARTMENT OF TRANSPORTATION
Caltrans® TRAFFIC ELECTRICAL

FUNCTIONAL SUPERVISOR: RAUPREET SINGH
CALCULATED-DESIGNED BY: HECTOR SANTAMARIA
CHECKED BY: LOUIE LA COMPTE
REVISED BY
DATE REVISED

LAST REVISION 06-08-16
DATE PLOTTED => 09-JUN-2016
TIME PLOTTED => 09:35

Dist	COUNTY	ROUTE	POST MILES TOTAL PROJECT	SHEET No.	TOTAL SHEETS
11	SD	8	5.4/10.6, R20.0/R21.6	152	213

Héctor A. Santamaría 05-31-16
REGISTERED ELECTRICAL ENGINEER DATE

05-31-16
PLANS APPROVAL DATE

REGISTERED PROFESSIONAL ENGINEER
HECTOR A. SANTAMARIA
No. 18207
Exp. 12-31-15
ELECTRICAL
STATE OF CALIFORNIA

THE STATE OF CALIFORNIA OR ITS OFFICERS OR AGENTS SHALL NOT BE RESPONSIBLE FOR THE ACCURACY OR COMPLETENESS OF SCANNED COPIES OF THIS PLAN SHEET.

LEGEND:

1 - INSTALL 1 FULL SHELF AND THE MEDIA CONVERTER

2 - REMOVE BLANK PANEL AND REPLACE WITH FDU

3 - INSTALL SECU IN MODEL 170E CONTROLLER SLOT

- SMALL-FACTOR PLUGGABLE TRANSCEIVER

- ETHERNET PORT

NOTE:

THE CONTRACTOR MUST VERIFY ALL CONTROLLLING FIELD DIMENSIONS BEFORE ORDERING AND INSTALLING EQUIPMENT.

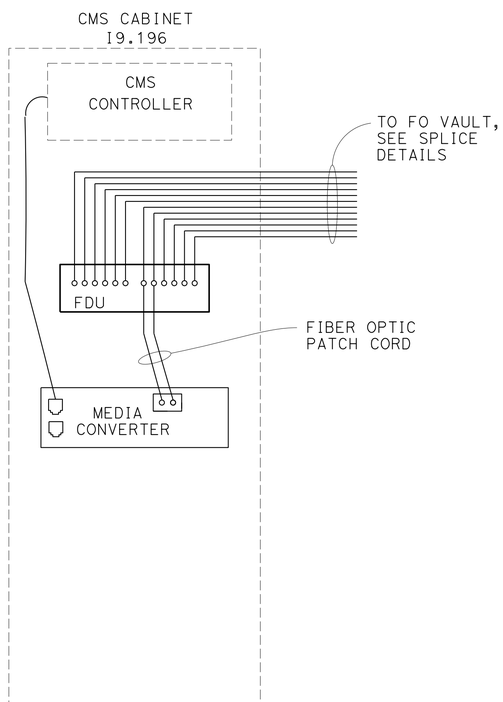

DETAIL CMS

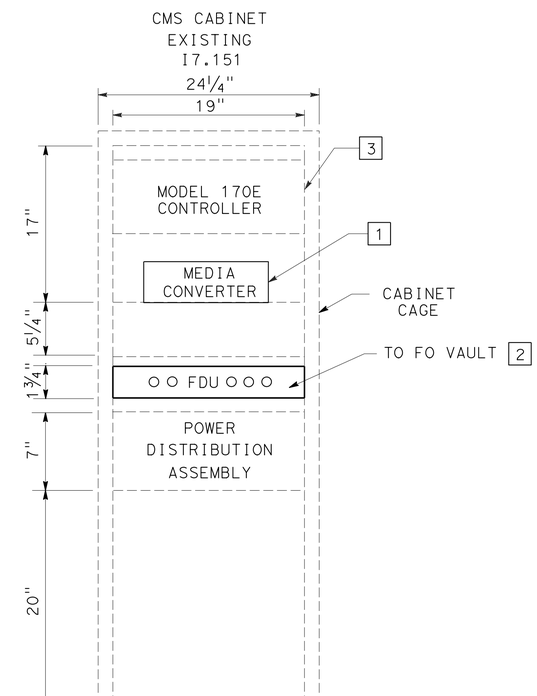

DETAIL CMS (TYPICAL)

ELECTRICAL DETAILS

NO SCALE

E-51

STATE OF CALIFORNIA - DEPARTMENT OF TRANSPORTATION
Caltrans® TRAFFIC ELECTRICAL

FUNCTIONAL SUPERVISOR: RAJPREET SINGH
CALCULATED-DESIGNED BY: HECTOR SANTAMARIA
CHECKED BY: LOUIE LA COMPTE
REVISED BY
DATE REVISED

LAST REVISION 05-24-16
DATE PLOTTED => 09-JUN-2016
TIME PLOTTED => 09:35

Dist	COUNTY	ROUTE	POST MILES TOTAL PROJECT	SHEET No.	TOTAL SHEETS
11	SD	8	5.4/10.6, R20.0/R21.6	153	213

Héctor A. Santamaría 05-31-16
REGISTERED ELECTRICAL ENGINEER DATE

05-31-16
PLANS APPROVAL DATE

REGISTERED PROFESSIONAL ENGINEER HECTOR A. SANTAMARIA No. 18207 Exp. 12-31-15 ELECTRICAL STATE OF CALIFORNIA

THE STATE OF CALIFORNIA OR ITS OFFICERS OR AGENTS SHALL NOT BE RESPONSIBLE FOR THE ACCURACY OR COMPLETENESS OF SCANNED COPIES OF THIS PLAN SHEET.

LEGEND:

1 - 1 FULL SHELF REQUIRED FOR EQUIPMENT

2 - REMOVE BLANK PANEL AND REPLACE WITH FDU

3 - INSTALL MODEL 2070E CONTROLLER

4 - LABEL CABLE END IN EACH CONTROLLER CABINET, THE LABEL MUST CORRESPOND TO THE TERMINATION IN THE SIGNAL CONTROLLER CABINET

5 - INSTALL SECU IN MODEL 170E CONTROLLER SLOT

6 - WHEN REQUIRED

- SMALL-FACTOR PLUGGABLE TRANSCEIVER

- ETHERNET PORT

NOTE:

THE CONTRACTOR MUST VERIFY ALL CONTROLLLING FIELD DIMENSIONS BEFORE ORDERING AND INSTALLING EQUIPMENT.

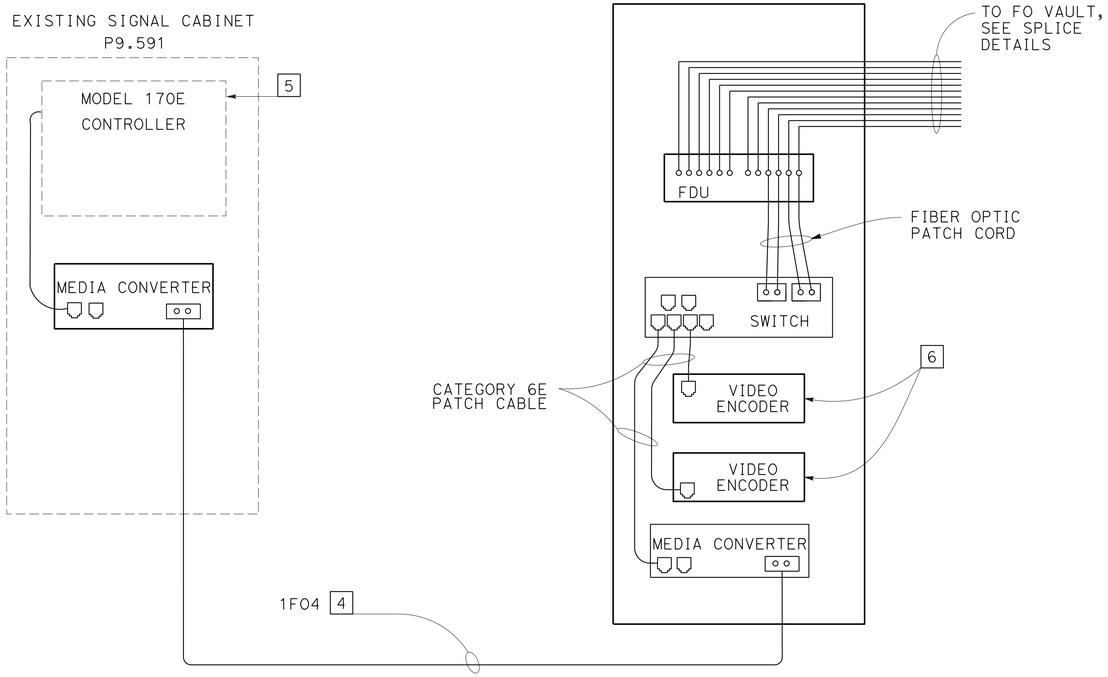

DETAIL "CCTV-SIGNAL"
(TYPICAL)

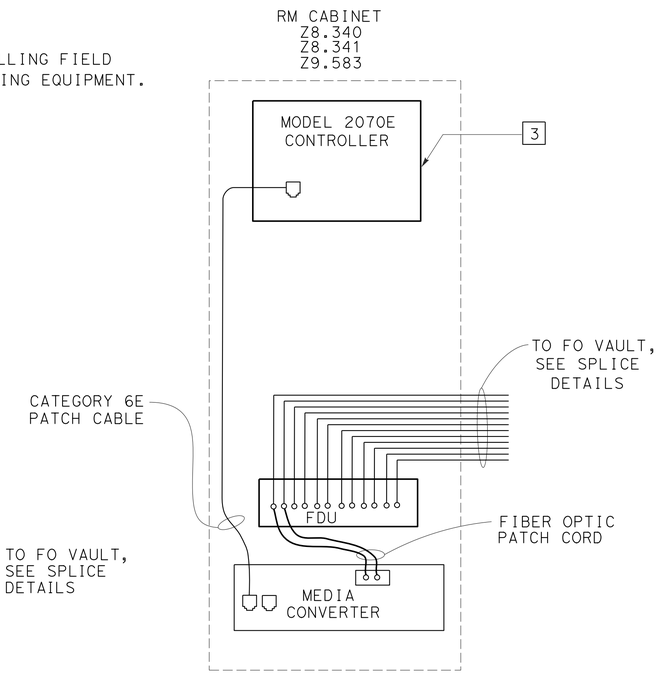

RM CABINET
COMPONENT DIAGRAM

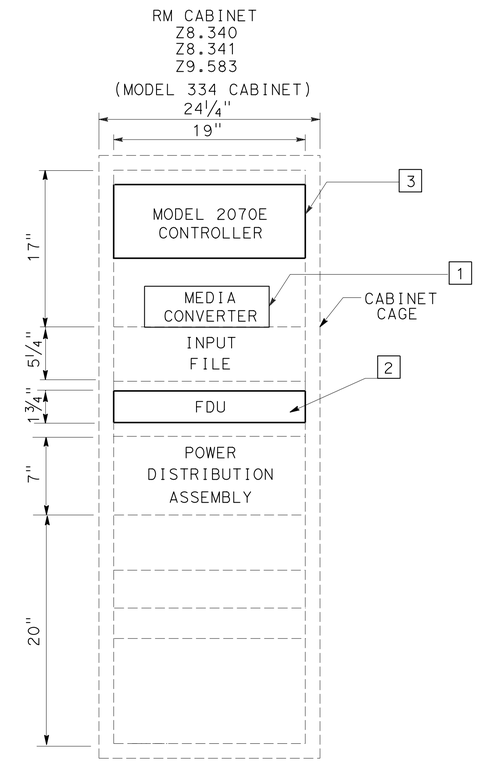

DETAIL RM
(TYPICAL)

ELECTRICAL DETAILS

NO SCALE

E-52

STATE OF CALIFORNIA - DEPARTMENT OF TRANSPORTATION
Caltrans® TRAFFIC ELECTRICAL

FUNCTIONAL SUPERVISOR: RAJPREET SINGH
CALCULATED-DESIGNED BY: HECTOR SANTAMARIA
CHECKED BY: LOUIE LA COMPTE
REVISED BY
DATE REVISED

LAST REVISION 06-08-16
DATE PLOTTED => 09-JUN-2016
TIME PLOTTED => 09:35

Dist	COUNTY	ROUTE	POST MILES TOTAL PROJECT	SHEET No.	TOTAL SHEETS
11	SD	8	5.4/10.6, R20.0/R21.6	154	213

Héctor A. Santamaría 05-31-16
REGISTERED ELECTRICAL ENGINEER DATE

05-31-16
PLANS APPROVAL DATE

REGISTERED PROFESSIONAL ENGINEER HECTOR A. SANTAMARIA No. 18207 Exp. 12-31-15 ELECTRICAL STATE OF CALIFORNIA

THE STATE OF CALIFORNIA OR ITS OFFICERS OR AGENTS SHALL NOT BE RESPONSIBLE FOR THE ACCURACY OR COMPLETENESS OF SCANNED COPIES OF THIS PLAN SHEET.

LEGEND:

1 - 1 FULL SHELF REQUIRED FOR EQUIPMENT

2 - REMOVE BLANK PANEL AND REPLACE WITH FDU

3 - INSTALL SECU IN MODEL 170E CONTROLLER SLOT

4 - ETHERNET PUNCH PANEL WITH RJ45 CONNECTION, TERMINATE OCC PER ANSI/TIA 568 DIAGRAM T568B, PLACE THE ETHERNET PATCH PANEL IN THE REAR OF THE CONTROLLER CABINET

5 - LABEL CABLE END IN EACH CONTROLLER CABINET. THE LABEL MUST CORRESPOND TO THE TERMINATION IN THE SIGNAL CONTROLLER CABINET

- SMALL-FACTOR PLUGGABLE TRANSCEIVER

- ETHERNET PORT

NOTE:

THE CONTRACTOR MUST VERIFY ALL CONTROLLLING FIELD DIMENSIONS BEFORE ORDERING AND INSTALLING EQUIPMENT.

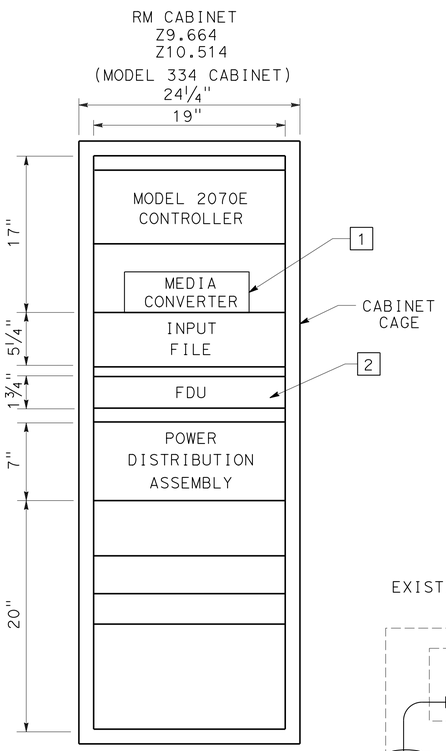

DETAIL RM (TYPICAL)

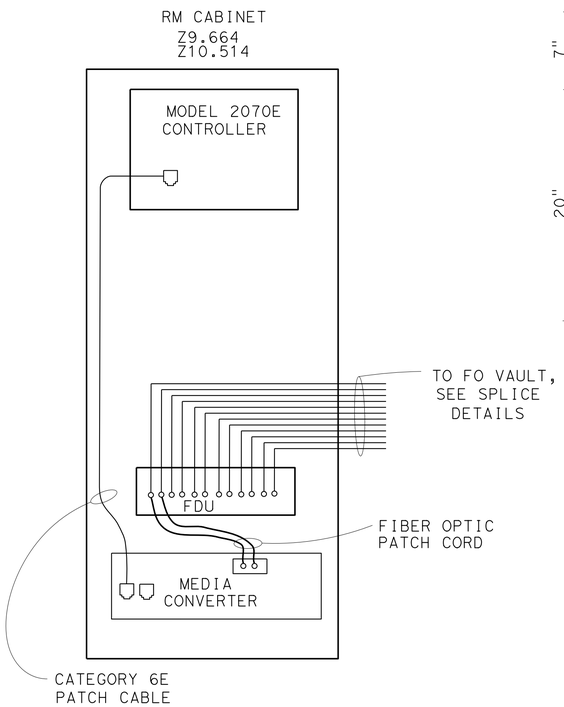

RM CABINET COMPONENT DIAGRAM

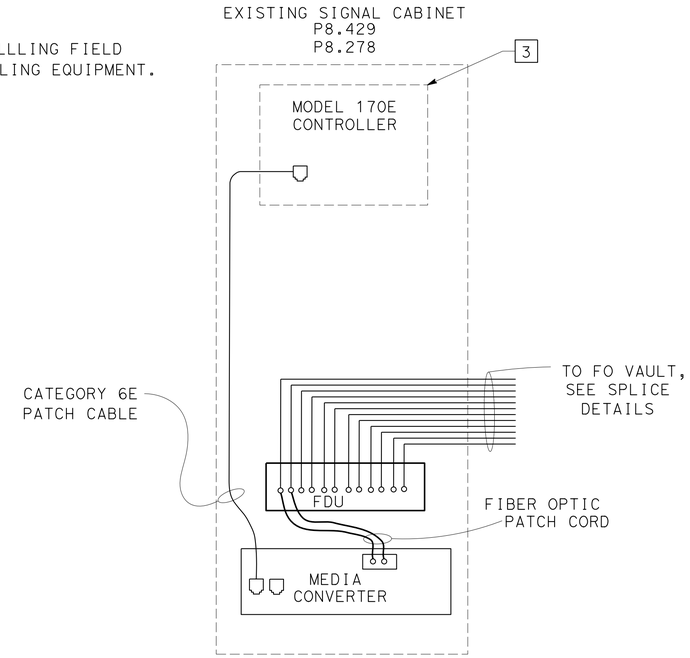

SIGNAL CABINET COMPONENT DIAGRAM

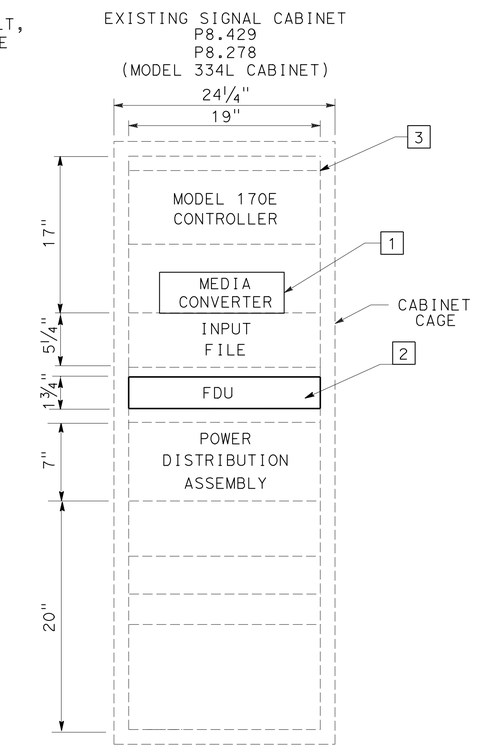

DETAIL SIGNAL (TYPICAL)

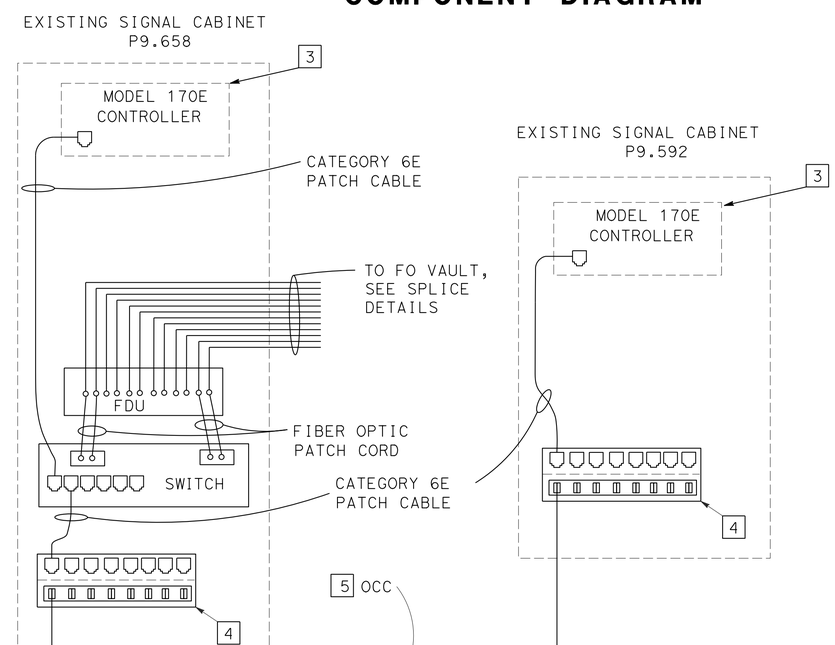

DETAIL SIGNAL-SIGNAL CABINET (TYPICAL)

ELECTRICAL DETAILS

NO SCALE

E-53

STATE OF CALIFORNIA - DEPARTMENT OF TRANSPORTATION
Caltrans® TRAFFIC ELECTRICAL

FUNCTIONAL SUPERVISOR: RAJPREET SINGH
CALCULATED-DESIGNED BY: HECTOR SANTAMARIA
CHECKED BY: LOUIE LA COMPTE
REVISED BY
DATE REVISED

LAST REVISION 06-08-16
DATE PLOTTED => 09-JUN-2016
TIME PLOTTED => 09:35

Dist	COUNTY	ROUTE	POST MILES TOTAL PROJECT	SHEET No.	TOTAL SHEETS
11	SD	8	5.4/10.6, R20.0/R21.6	155	213

Héctor A. Santamaría 05-31-16
REGISTERED ELECTRICAL ENGINEER DATE

05-31-16
PLANS APPROVAL DATE

REGISTERED PROFESSIONAL ENGINEER
HECTOR A. SANTAMARIA
No. 18207
Exp. 12-31-15
ELECTRICAL
STATE OF CALIFORNIA

THE STATE OF CALIFORNIA OR ITS OFFICERS OR AGENTS SHALL NOT BE RESPONSIBLE FOR THE ACCURACY OR COMPLETENESS OF SCANNED COPIES OF THIS PLAN SHEET.

CABINET P6.302
(Exist SIGNAL)
FDU POSITION NUMBER

1	2	3	4	5	6	7	8	9	10	11	12
HUB 8		RING 1				RING 2				SPLICE ENCLOSURE Exist FO VAULT Sta 461+24 "SD-8" LINE	
		HUB 8		Exist RM Z6.320		HUB 8		Exist RM Z6.320			
1	2	13	14	3	4	15	16	7	8	1	2

CABINET Z6.320
(Exist RM)
FDU POSITION NUMBER

1	2	3	4	5	6	7	8	9	10	11	12
SPLICE ENCLOSURE FO VAULT Sta 461+24 "SD-8" LINE		RING 1				RING 2				SPLICE ENCLOSURE FO VAULT Sta 461+24 "SD-8" LINE	
		Exist SIGNAL P6.202				Exist SIGNAL P6.202					
3	4	13	14	X	X	15	16	X	X	3	4

CABINET S6.256T
(CCTV#208,#209)
FDU POSITION NUMBER

1	2	3	4	5	6	7	8	9	10	11	12
HUB 8		RING 1				RING 2				SPLICE ENCLOSURE FO VAULT Sta 478+77 "SD-8" LINE	
		HUB 8		Exist TMS U6.670		HUB 8		Exist TMS U6.670			
1	2	133	134	3	4	135	136	7	8	1	2

CABINET U6.670
Exist TMS
FDU POSITION NUMBER

1	2	3	4	5	6	7	8	9	10	11	12
SPLICE ENCLOSURE FO VAULT Sta 461+24 "SD-8" LINE		RING 1				RING 2				SPLICE ENCLOSURE FO VAULT Sta 478+77 "SD-8" LINE	
		CCTV #208, #209 S6.256T		CCTV #210, #211 S7.185T		CCTV #208, #209 S6.256T		CCTV #210, #211 S7.185T			
3	4	5	6	3	4	9	10	7	8	3	4

CABINET S7.185T
(CCTV#210,#211)
FDU POSITION NUMBER

1	2	3	4	5	6	7	8	9	10	11	12
SPLICE ENCLOSURE FO VAULT Sta 478+77 "SD-8" LINE		RING 1				RING 2				SPLICE ENCLOSURE FO VAULT Sta 506+20 "SD-8" LINE	
		Exist TMS U6.670		Exist RM Z7.052		Exist TMS U6.670		Exist RM Z7.052			
5	6	5	6	3	4	9	10	7	8	5	6

CABINET Z7.052
(Exist RM)
FDU POSITION NUMBER

1	2	3	4	5	6	7	8	9	10	11	12
SPLICE ENCLOSURE FO VAULT Sta 506+20 "SD-8" LINE		RING 1				RING 2				SPLICE ENCLOSURE FO VAULT Sta 520+66 "SD-8" LINE	
		CCTV #210, #211 S7.185T		Exist CMS-21 I7.151		CCTV #210, #211 S7.185T		Exist CMS-21 I7.151			
7	8	5	6	3	4	9	10	7	8	7	8

ELECTRICAL DETAILS

E-54

STATE OF CALIFORNIA - DEPARTMENT OF TRANSPORTATION
Caltrans® TRAFFIC ELECTRICAL

FUNCTIONAL SUPERVISOR: RAJPREET SINGH
CALCULATED-DESIGNED BY: HECTOR SANTAMARIA
CHECKED BY: LOUIE LA COMPTE
REVISED BY
DATE REVISED

LAST REVISION 05-24-16
DATE PLOTTED => 09-JUN-2016
TIME PLOTTED => 09:35

Dist	COUNTY	ROUTE	POST MILES TOTAL PROJECT	SHEET No.	TOTAL SHEETS
11	SD	8	5.4/10.6, R20.0/R21.6	156	213

Héctor A. Santamaría 05-31-16
REGISTERED ELECTRICAL ENGINEER DATE

05-31-16
PLANS APPROVAL DATE

REGISTERED PROFESSIONAL ENGINEER
HECTOR A. SANTAMARIA
No. 18207
Exp. 12-31-15
ELECTRICAL
STATE OF CALIFORNIA

THE STATE OF CALIFORNIA OR ITS OFFICERS OR AGENTS SHALL NOT BE RESPONSIBLE FOR THE ACCURACY OR COMPLETENESS OF SCANNED COPIES OF THIS PLAN SHEET.

CABINET I7.151
(Exist CMS-21)
FDU POSITION NUMBER

1	2	3	4	5	6	7	8	9	10	11	12
SPLICE ENCLOSURE FO VAULT Sta 506+20 "SD-8" LINE		RING 1				RING 2				SPLICE ENCLOSURE FO VAULT Sta 533+46 "SD-8" LINE	
		Exist RM Z7.052		CCTV #222, #223 S7.431T		Exist RM Z7.052		CCTV #222, #223 S7.431T			
23	24	5	6	3	4	9	10	7	8	23	24

CABINET S8.349T
(CCTV #212, #213)
FDU POSITION NUMBER

1	2	3	4	5	6	7	8	9	10	11	12
SPLICE ENCLOSURE FO VAULT Sta 571+50 "SD-8" LINE		RING 1				RING 2				SPLICE ENCLOSURE FO VAULT Sta 571+50 "SD-8" LINE	
		Exist SIGNAL P8.429		Exist SIGNAL P8.278		Exist SIGNAL P8.429		Exist SIGNAL P8.278			
17	18	5	6	3	4	9	10	7	8	17	18

CABINET S7.431T
(CCTV #222, #223)
FDU POSITION NUMBER

1	2	3	4	5	6	7	8	9	10	11	12
SPLICE ENCLOSURE FO VAULT Sta 520+66 "SD-8" LINE		RING 1				RING 2				SPLICE ENCLOSURE FO VAULT Sta 571+50 "SD-8" LINE	
		Exist CMS-21 I7.151		Exist SIGNAL P8.429		Exist CMS-21 I7.151		Exist SIGNAL P8.429			
9	10	5	6	3	4	9	10	7	8	9	10

CABINET P8.278
(Exist SIGNAL)
FDU POSITION NUMBER

1	2	3	4	5	6	7	8	9	10	11	12
SPLICE ENCLOSURE FO VAULT Sta 571+50 "I-8" LINE		RING 1				RING 2				SPLICE ENCLOSURE FO VAULT Sta 571+50 "SD-8" LINE	
		Exist RM U8.341		TMS U9.198		Exist RM U8.341		TMS U9.198			
19	20	5	6	3	4	9	10	7	8	19	20

CABINET P8.429
(Exist SIGNAL)
FDU POSITION NUMBER

1	2	3	4	5	6	7	8	9	10	11	12
SPLICE ENCLOSURE FO VAULT Sta 519+95 "SD-8" LINE		RING 1				RING 2				SPLICE ENCLOSURE FO VAULT Sta 571+50 "SD-8" LINE	
		CCTV #222, #223 S7.431T		CCTV #212, #213 S8.349T		CCTV #222, #223 S7.431T		CCTV #212, #213 S8.349T			
15	16	5	6	3	4	9	10	7	8	15	16

ELECTRICAL DETAILS

E-55

REVISED BY | DATE REVISED
HECTOR SANTAMARIA | LOUIE LA COMPTE
CALCULATED-DESIGNED BY | CHECKED BY
FUNCTIONAL SUPERVISOR | RAJPREET SINGH

STATE OF CALIFORNIA - DEPARTMENT OF TRANSPORTATION
Caltrans® TRAFFIC ELECTRICAL

LAST REVISION 05-24-16
DATE PLOTTED => 09-JUN-2016
TIME PLOTTED => 09:35

Dist	COUNTY	ROUTE	POST MILES TOTAL PROJECT	SHEET No.	TOTAL SHEETS
11	SD	8	5.4/10.6, R20.0/R21.6	157	213

Héctor A. Santamaría 05-31-16
REGISTERED ELECTRICAL ENGINEER DATE

05-31-16
PLANS APPROVAL DATE

REGISTERED PROFESSIONAL ENGINEER
HECTOR A. SANTAMARIA
No. 18207
Exp. 12-31-15
ELECTRICAL
STATE OF CALIFORNIA

THE STATE OF CALIFORNIA OR ITS OFFICERS OR AGENTS SHALL NOT BE RESPONSIBLE FOR THE ACCURACY OR COMPLETENESS OF SCANNED COPIES OF THIS PLAN SHEET.

CABINET Z8.340
(Exist RM)
FDU POSITION NUMBER

1	2	3	4	5	6	7	8	9	10	11	12
SPLICE ENCLOSURE FO VAULT Sta 571+50 "SD-8" LINE		RING 1				RING 2				SPLICE ENCLOSURE FO VAULT Sta 622+70 "SD-8" LINE	
		Exist SIGNAL P8.278		CMS I9.198		Exist SIGNAL P8.278		CMS I9.198			
21	22	5	6	3	4	9	10	7	8	21	22

CABINET S9.581T
(CCTV#214, #215)
FDU POSITION NUMBER

1	2	3	4	5	6	7	8	9	10	11	12
SPLICE ENCLOSURE FO VAULT Sta 622+70 "SD-8" LINE		RING 1				RING 2				SPLICE ENCLOSURE FO VAULT Sta 639+00 "SD-8" LINE	
		CMS I9.198		Exist RM Z9.583		CMS I9.198		Exist RM Z9.583			
29	30	5	6	3	4	9	10	7	8	29	30

CABINET I9.198
(CMS)
FDU POSITION NUMBER

1	2	3	4	5	6	7	8	9	10	11	12
SPLICE ENCLOSURE FO VAULT Sta 571+50 "SD-8" LINE		RING 1				RING 2				SPLICE ENCLOSURE FO VAULT Sta 639+00 "SD-8" LINE	
		Exist RM Z8.340		CCTV #214, #215 S9.615T		Exist RM I9.198		CCTV #214, #215 S9.615T			
27	28	5	6	3	4	9	10	7	8	27	28

CABINET Z9.583
(Exist RM)
FDU POSITION NUMBER

1	2	3	4	5	6	7	8	9	10	11	12
SPLICE ENCLOSURE FO VAULT Sta 639+00 "SD-8" LINE		RING 1				RING 2				SPLICE ENCLOSURE FO VAULT Sta 639+00 "SD-8" LINE	
		CCTV #214, #215 S9.615T		Exist SIGNAL P9.658		CCTV #214, #215 S9.615T		Exist SIGNAL P9.658			
31	32	5	6	3	4	9	10	7	8	31	32

ELECTRICAL DETAILS

E-56

REVISED BY | DATE REVISED
HECTOR SANTAMARIA | LOUIE LA COMPTE
CALCULATED-DESIGNED BY | CHECKED BY
FUNCTIONAL SUPERVISOR
RAJPREET SINGH

STATE OF CALIFORNIA - DEPARTMENT OF TRANSPORTATION
Caltrans® TRAFFIC ELECTRICAL

LAST REVISION 05-26-16 | DATE PLOTTED => 09-JUN-2016 | TIME PLOTTED => 09:35

Dist	COUNTY	ROUTE	POST MILES TOTAL PROJECT	SHEET No.	TOTAL SHEETS
11	SD	8	5.4/10.6, R20.0/R21.6	158	213

Héctor A. Santamaría 05-31-16
REGISTERED ELECTRICAL ENGINEER DATE

05-31-16
PLANS APPROVAL DATE

REGISTERED PROFESSIONAL ENGINEER
HECTOR A. SANTAMARIA
No. 18207
Exp. 12-31-15
ELECTRICAL
STATE OF CALIFORNIA

THE STATE OF CALIFORNIA OR ITS OFFICERS OR AGENTS SHALL NOT BE RESPONSIBLE FOR THE ACCURACY OR COMPLETENESS OF SCANNED COPIES OF THIS PLAN SHEET.

CABINET P9.658
(Exist SIGNAL)
FDU POSITION NUMBER

1	2	3	4	5	6	7	8	9	10	11	12
SPLICE ENCLOSURE FO VAULT Sta 639+00 "SD-8" LINE		RING 1				RING 2				SPLICE ENCLOSURE FO VAULT Sta 639+00 "SD-8" LINE	
		Exist RM Z9.583		Exist RM Z9.664		Exist RM Z9.583		Exist RM Z9.664			
33	34	5	6	3	4	9	10	7	8	33	34

CABINET Z9.664
(Exist RM)
FDU POSITION NUMBER

1	2	3	4	5	6	7	8	9	10	11	12
SPLICE ENCLOSURE FO VAULT Sta 639+00 "SD-8" LINE		RING 1				RING 2				SPLICE ENCLOSURE FO VAULT Sta 667+50 "SD-8" LINE	
		Exist SIGNAL P9.658		Exist TMS U10.129		Exist SIGNAL P9.658		Exist TMS U10.129			
35	36	5	6	3	4	9	10	7	8	35	36

CABINET U10.129
(Exist TMS)
FDU POSITION NUMBER

1	2	3	4	5	6	7	8	9	10	11	12
SPLICE ENCLOSURE FO VAULT Sta 639+00 "SD-8" LINE		RING 1				RING 2				SPLICE ENCLOSURE FO VAULT Sta 689+70 "SD-8" LINE	
		Exist RM Z9.664		CCTV #216, #217 S9.615T		Exist RM Z9.664		CCTV #216, #217 S9.615T			
37	38	5	6	3	4	9	10	7	8	37	38

CABINET S10.553T
(CCTV#216, #217)
FDU POSITION NUMBER

1	2	3	4	5	6	7	8	9	10	11	12
SPLICE ENCLOSURE FO VAULT Sta 667+50 "SD-8" LINE		RING 1				RING 2				SPLICE ENCLOSURE FO VAULT Sta 689+70 "SD-8" LINE	
		Exist TMS U9.160		RM Z10.514		Exist TMS U9.160		RM Z10.514			
39	40	5	6	3	4	9	10	7	8	39	40

CABINET Z10.514
(RM)
FDU POSITION NUMBER

1	2	3	4	5	6	7	8	9	10	11	12
SPLICE ENCLOSURE FO VAULT Sta 689+70 "SD-8" LINE		RING 1				RING 2				SPLICE ENCLOSURE FO VAULT Sta 689+70 "SD-8" LINE	
		CCTV #214, #215 S9.615T		Exist SIGNAL P9.658		CCTV #214, #215 S9.615T		Exist SIGNAL P9.658			
41	42	5	6	X	X	9	10	X	X	41	42

ELECTRICAL DETAILS

E-57

STATE OF CALIFORNIA - DEPARTMENT OF TRANSPORTATION
Caltrans TRAFFIC ELECTRICAL

FUNCTIONAL SUPERVISOR: RAJPREET SINGH
CALCULATED-DESIGNED BY: HECTOR SANTAMARIA
CHECKED BY: LOUIE LA COMPTE
REVISED BY
DATE REVISED

LAST REVISION 05-24-16
DATE PLOTTED => 09-JUN-2016
TIME PLOTTED => 09:36

Dist	COUNTY	ROUTE	POST MILES TOTAL PROJECT	SHEET No.	TOTAL SHEETS
11	SD	8	5.4/10.6, R20.0/R21.6	159	213

Héctor A. Santamaría 05-31-16
REGISTERED ELECTRICAL ENGINEER DATE

05-31-16
PLANS APPROVAL DATE

REGISTERED PROFESSIONAL ENGINEER
HECTOR A. SANTAMARIA
No. 18207
Exp. 12-31-15
ELECTRICAL
STATE OF CALIFORNIA

THE STATE OF CALIFORNIA OR ITS OFFICERS OR AGENTS SHALL NOT BE RESPONSIBLE FOR THE ACCURACY OR COMPLETENESS OF SCANNED COPIES OF THIS PLAN SHEET.

NOTES:

1. PIEZOELECTRIC SENSOR CONNECTION TO THE PIEZOELECTRIC CABLE MUST BE BELOW THE LANE LINE OR ETW.
2. REFER TO REVISED STANDARD PLAN RSP ES-5D FOR CONDUIT TERMINATION.
3. THE VALUE OF A′ IS THE DISTANCE OF THE LOOP FROM EITHER THE LANE LINE OR ETW.

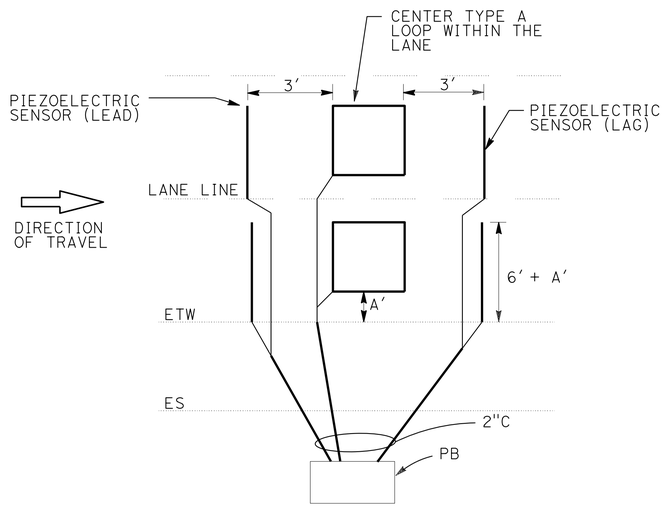

PIEZOELECTRIC-LOOP-PIEZOELECTRIC DETECTOR INSTALLATION

DETAIL A

(SEE NOTE 3)

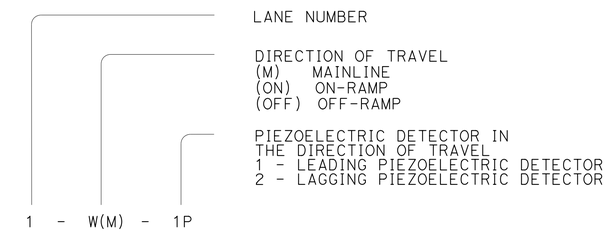

PIEZOELECTRIC DETECTOR IDENTIFICATION

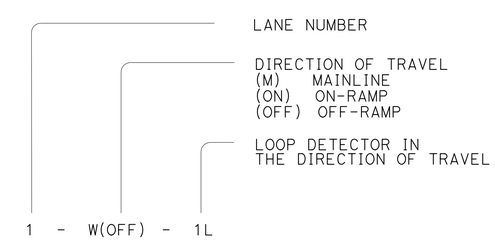

LOOP DETECTOR IDENTIFICATION

ELECTRICAL DETAILS

NO SCALE

E-58

STATE OF CALIFORNIA - DEPARTMENT OF TRANSPORTATION
Caltrans® TRAFFIC ELECTRICAL

FUNCTIONAL SUPERVISOR: RAJPREET SINGH
CALCULATED-DESIGNED BY: HECTOR SANTAMARIA
CHECKED BY: LOUIE LA COMPTE
REVISED BY
DATE REVISED

LAST REVISION 05-24-16
DATE PLOTTED => 09-JUN-2016
TIME PLOTTED => 09:36

Dist	COUNTY	ROUTE	POST MILES TOTAL PROJECT	SHEET No.	TOTAL SHEETS
11	SD	8	5.4/10.6, R20.0/R21.6	160	213

Héctor A. Santamaría 05-31-16
REGISTERED ELECTRICAL ENGINEER DATE

05-31-16
PLANS APPROVAL DATE

REGISTERED PROFESSIONAL ENGINEER
HECTOR A. SANTAMARIA
No. 18207
Exp. 12-31-17
ELECTRICAL
STATE OF CALIFORNIA

THE STATE OF CALIFORNIA OR ITS OFFICERS OR AGENTS SHALL NOT BE RESPONSIBLE FOR THE ACCURACY OR COMPLETENESS OF SCANNED COPIES OF THIS PLAN SHEET.

NOTE:

FOR ACCURATE RIGHT OF WAY DATA, CONTACT RIGHT OF WAY ENGINEERING AT THE DISTRICT OFFICE.

LEGEND:

1 - CAMERA CABLE HARNESS DETAILS SEE SHEET E-43 AND E-44

2 - TYPE CCTV 35 DETAILS SEE SHEET SES-1

3 - FOR CONTINUITY SEE MODIFY TRAFFIC MONITORING STATION ON SHEET E-24

4 - FOR CABINET DETAILS SEE SHEET E-46

5 - FOR CONTINUITY SEE FIBER OPTIC SYSTEM ON SHEET E-3

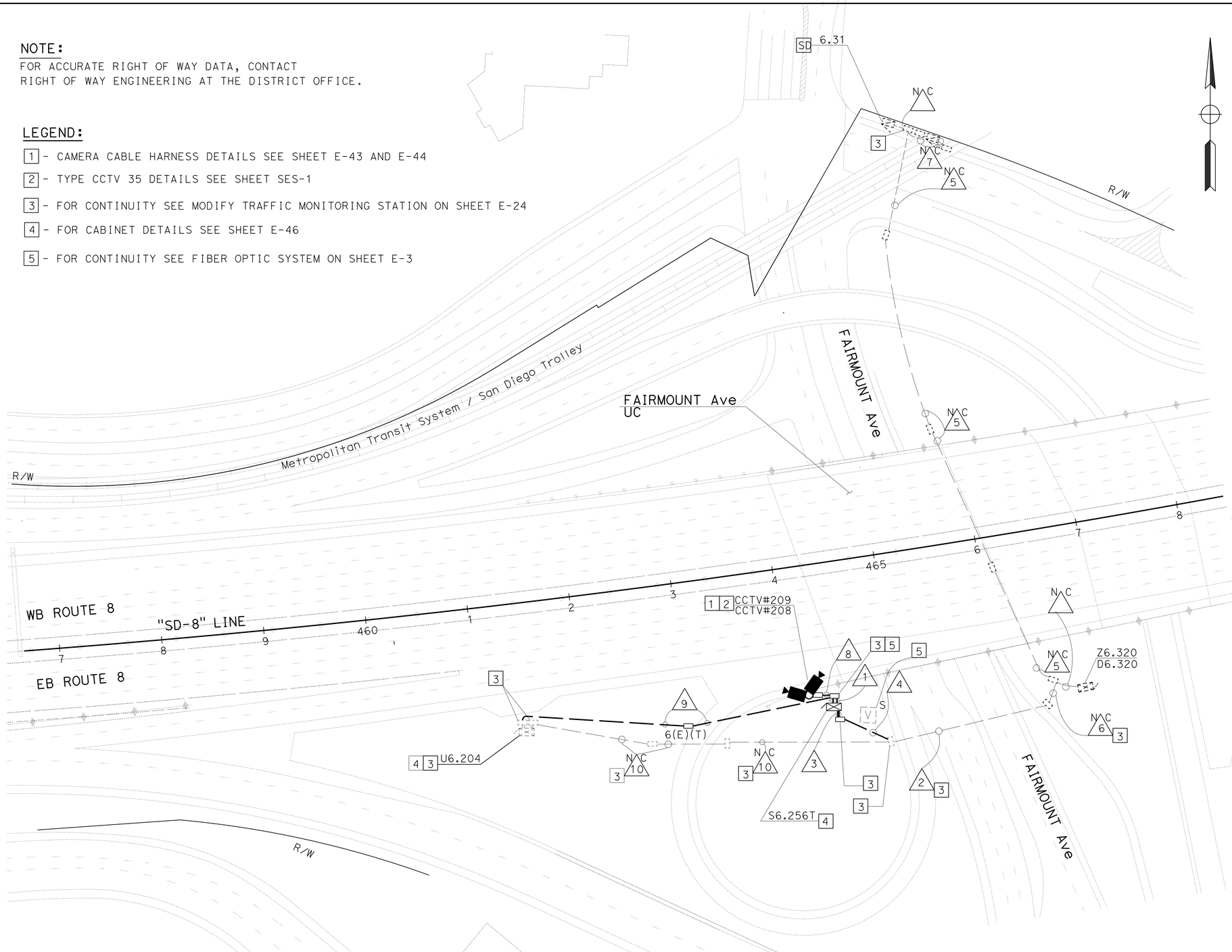

CONDUIT LEGEND:

1 - 3"C, 2 CAMERA CABLE HARNESS

NC 2 - Exist 2"C, 2#8(TMS), 2#8 (CCTV)

3 - 2-3"C, 2#8(CCTV), PT

4 - 2"C, 2#8(CCTV)

NC 5 - Exist 1½"C, 2#4(RM), 2#8(TMS), 2#8(CCTV)

NC 6 - Exist 2"C, 2#8(TMS), 2#8(CCTV)

NC 7 - Exist 3"C, 2#8(TMS), 2#8(CCTV)

8 - 3"C, 1 FO4
- 3"C, 2 CAMERA CABLE HARNESS

9 - 2"C, 1 FO4

NC 10 - Exist 2"C, 2#8(TMS)

CLOSED CIRCUIT TELEVISION SYSTEM

APPROVED FOR ELECTRICAL WORK ONLY

SCALE: 1" = 50'

E-59

STATE OF CALIFORNIA - DEPARTMENT OF TRANSPORTATION
Caltrans® TRAFFIC ELECTRICAL

FUNCTIONAL SUPERVISOR: RAJPREET SINGH
CALCULATED-DESIGNED BY: HECTOR SANTAMARIA
CHECKED BY: LOUIE LA COMPTE
REVISED BY
DATE REVISED

LAST REVISION 06-08-16
DATE PLOTTED => 09-JUN-2016
TIME PLOTTED => 09:36

BORDER LAST REVISED 7/2/2010
USERNAME => s127400
DGN FILE => 1114000046ua059.dgn
RELATIVE BORDER SCALE IS IN INCHES 0 1 2 3
UNIT 2833
PROJECT NUMBER & PHASE 11140000461

Dist	COUNTY	ROUTE	POST MILES TOTAL PROJECT	SHEET No.	TOTAL SHEETS
11	SD	8	5.4/10.6, R20.0/R21.6	161	213

Héctor A. Santamaría 05-31-16
REGISTERED ELECTRICAL ENGINEER DATE

05-31-16
PLANS APPROVAL DATE

REGISTERED PROFESSIONAL ENGINEER HECTOR A. SANTAMARIA No. 18207 Exp. 12-31-17 ELECTRICAL STATE OF CALIFORNIA

THE STATE OF CALIFORNIA OR ITS OFFICERS OR AGENTS SHALL NOT BE RESPONSIBLE FOR THE ACCURACY OR COMPLETENESS OF SCANNED COPIES OF THIS PLAN SHEET.

NOTE:

FOR ACCURATE RIGHT OF WAY DATA, CONTACT RIGHT OF WAY ENGINEERING AT THE DISTRICT OFFICE.

CONDUIT LEGEND:

1 - 3"C, 2 CAMERA CABLE HARDNESS

2 - 2"C, 2#8(CCTV)

3 - Exist 1½"C, 2#14(Sig), 2#6(RM).
ADD 2#8(CCTV)

4 - 3"C, 2 CAMERA CABLE HARNESS
- 3"C, 2 OCC(RM)

5 - Exist 1½"C, 2#8(Ltg), 2#8(S)

6 - Exist 1½"C, 2#8(Ltg), 2#8(S),
2#8(Sig), 2#6(RM).
ADD 2#8(CCTV)

7 - 2-3"C, 2#8(CCTV), PT

8 - Exist 2½"C, 13#14(Sig), 4 DLC, 2#6(RM)

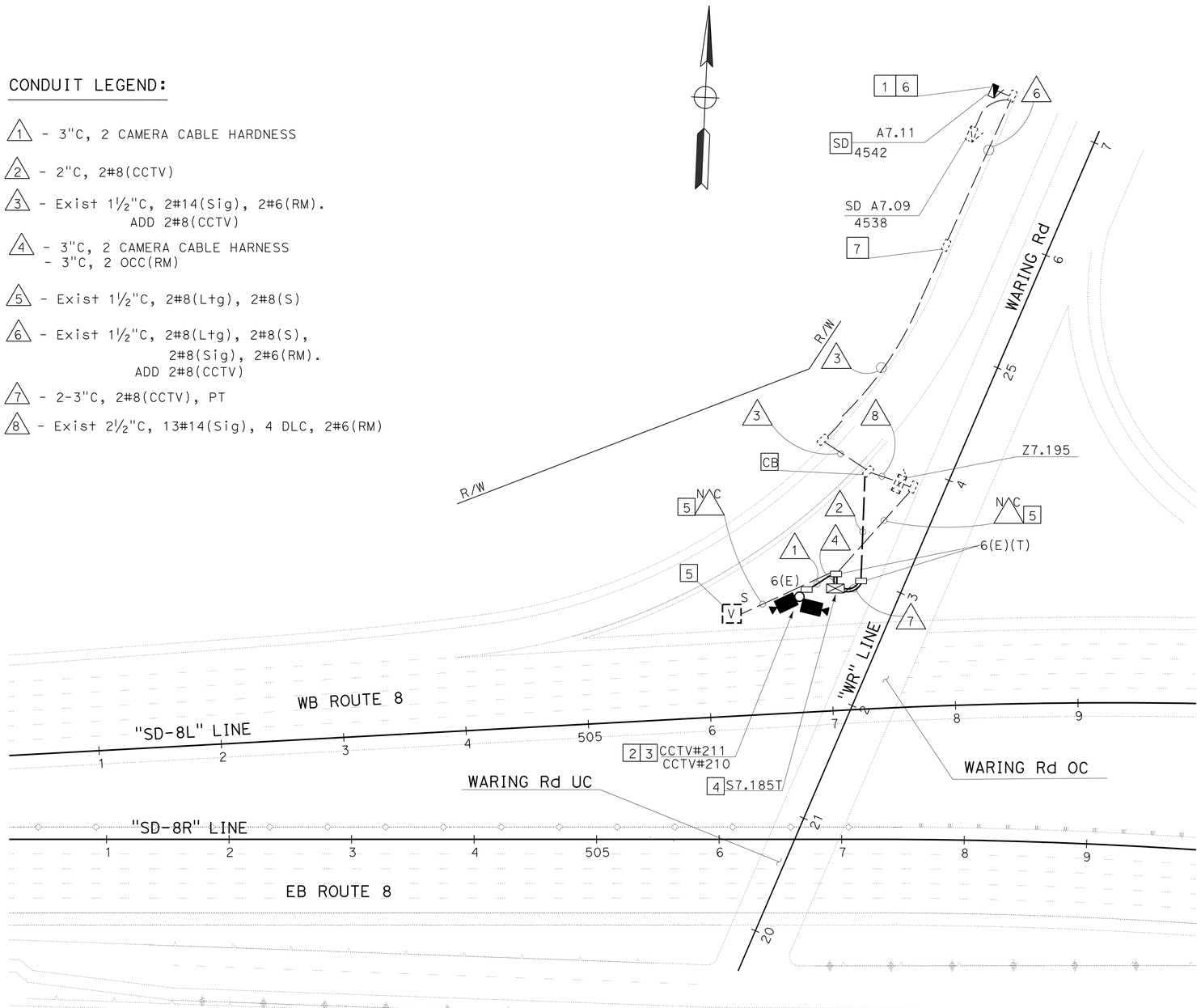

LEGEND:

1 - TYPE III-BF 120/240 V SERVICE EQUIPMENT ENCLOSURE (#4542)
2P-100 A CB MAIN
1P- 30 A CB CMS CONTROLLER
2P- 60 A CB CMS
2P- 30 A CB SIGNAL
2P- 30 A CB LIGHTING
1P- 30 A CB RM
1P- 15 A CB TDC
1P- 15 A CB SPARE
1P- 30 A CB CCTV 222, 223
1P- 30 A CB CCTV 210, 223
1P- 30 A CB TMS

2 - CAMERA CABLE HARNESS DETAILS ON SHEET E-43 AND E-44

3 - TYPE CCTV 35 DETAILS SEE SHEET SES-1

4 - FOR CABINET DETAILS SEE SHEET E-48

5 - FOR CONTINUITY SEE FIBER OPTIC SYSTEM ON SHEET E-6

6 - RC SERVICE EQUIPMENT ENCLOSURE AND REPLACE WITH A NEW SERVICE EQUIPMENT ENCLOSURE ON THE SAME FOUNDATION

7 - FOR CONTINUITY SEE CLOSED CIRCUIT TELEVISION SYSTEM ON SHEET E-61

APPROVED FOR ELECTRICAL WORK ONLY

SCALE: 1" = 50'

CLOSED CIRCUIT TELEVISION SYSTEM

E-60

STATE OF CALIFORNIA - DEPARTMENT OF TRANSPORTATION
Caltrans TRAFFIC ELECTRICAL

FUNCTIONAL SUPERVISOR: RAJPREET SINGH
CALCULATED-DESIGNED BY: HECTOR SANTAMARIA
CHECKED BY: LOUIE LA COMPTE
REVISED BY / DATE REVISED

LAST REVISION DATE PLOTTED => 09-JUN-2016
06-08-16 TIME PLOTTED => 09:36

Dist	COUNTY	ROUTE	POST MILES TOTAL PROJECT	SHEET No.	TOTAL SHEETS
11	SD	8	5.4/10.6, R20.0/R21.6	162	213

Héctor A. Santamaría 05-31-16
REGISTERED ELECTRICAL ENGINEER DATE

05-31-16
PLANS APPROVAL DATE

REGISTERED PROFESSIONAL ENGINEER HECTOR A. SANTAMARIA No. 18207 Exp. 12-31-17 ELECTRICAL STATE OF CALIFORNIA

THE STATE OF CALIFORNIA OR ITS OFFICERS OR AGENTS SHALL NOT BE RESPONSIBLE FOR THE ACCURACY OR COMPLETENESS OF SCANNED COPIES OF THIS PLAN SHEET.

NOTES:

FOR ACCURATE RIGHT OF WAY DATA, CONTACT RIGHT OF WAY ENGINEERING AT THE DISTRICT OFFICE.

CONDUIT NOTES:

1. - 3"C, 2 CAMERA CABLE HARNESS
2. - Exist 1½"C, 2#8(S). ADD 2#6(CCTV)
3. - Exist 1½"C, 2#8(Ltg), 2#8(S). ADD 2#6(CCTV)
4. - 2"C, 2#6(CCTV)
5. - 3"C, 2 CAMERA CABLE HARNESS - 3"C, 1 FO12
6. - Exist 1½"C, 2#8(Ltg), 2#8(S), 2#8(Sig), 2#6(RM), 2#6(CCTV). ADD 2#6(CCTV)
7. - 2-3"C, 2#6(CCTV), PT

LEGEND:

1 - FOR CONTINUITY SEE FIBER OPTIC SYSTEM ON SHEET E-7

2 - FOR CONTINUITY SEE CLOSED CIRCUIT TELEVISION SYSTEM SHEET E-60

3 - TYPE CCTV 35 DETAILS, SEE SHEET SES-1

4 - FOR CAMERA CABLE HARNESS DETAILS, SEE SHEET E-43 AND E-44

5 - FOR CABINET DETAILS, SEE SHEET E-45

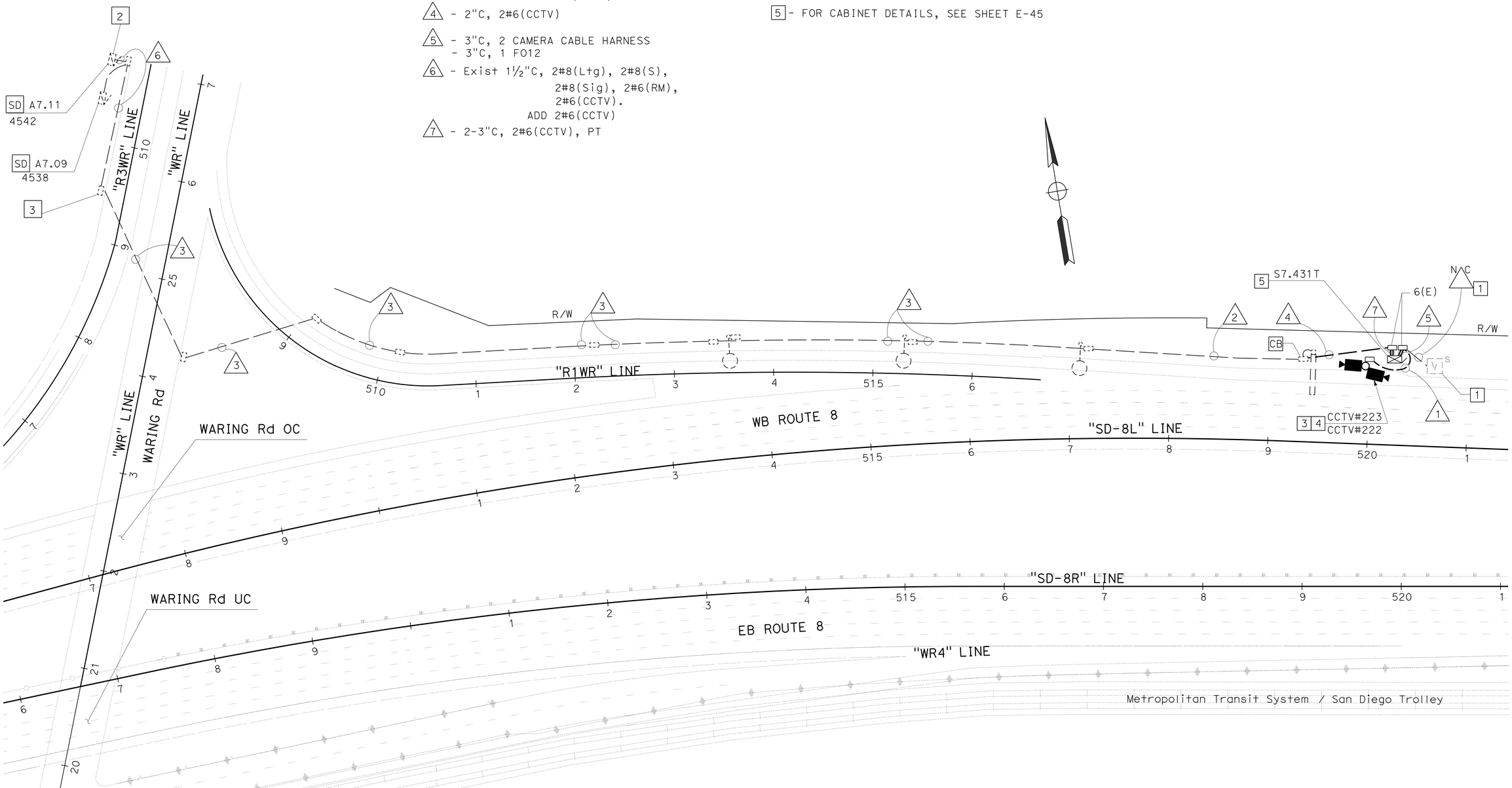

APPROVED FOR ELECTRICAL WORK ONLY

CLOSED CIRCUIT TELEVISION SYSTEM

SCALE: 1" = 50'

E-61

STATE OF CALIFORNIA - DEPARTMENT OF TRANSPORTATION
Caltrans® TRAFFIC ELECTRICAL

FUNCTIONAL SUPERVISOR: RAJPREET SINGH
CALCULATED-DESIGNED BY: HECTOR SANTAMARIA
CHECKED BY: LOUIE LA COMPTE
REVISED BY
DATE REVISED

LAST REVISION 02-12-16
DATE PLOTTED => 09-JUN-2016
TIME PLOTTED => 09:36

Dist	COUNTY	ROUTE	POST MILES TOTAL PROJECT	SHEET No.	TOTAL SHEETS
11	SD	8	5.4/10.6, R20.0/R21.6	163	213

Héctor A. Santamaría 05-31-16
REGISTERED ELECTRICAL ENGINEER DATE

05-31-16
PLANS APPROVAL DATE

REGISTERED PROFESSIONAL ENGINEER HECTOR A. SANTAMARIA No. 18207 Exp. 12-31-15 ELECTRICAL STATE OF CALIFORNIA

THE STATE OF CALIFORNIA OR ITS OFFICERS OR AGENTS SHALL NOT BE RESPONSIBLE FOR THE ACCURACY OR COMPLETENESS OF SCANNED COPIES OF THIS PLAN SHEET.

CONDUIT LEGEND:

1 - 3"C, 2 CAMERA CABLE HARNESS

2 - 2-3"C, 2#8(CCTV), PT

3 - Exist 1½"C, 2#14(RM),2#10(COMMON), 2#8(RM). ADD 2#8(CCTV)

4 - Exist 1"C, 2#14(S),2#10(COMMON), 2#8(RM). ADD 2#8(CCTV)

5 - Exist 1"C, 2#8(RM), 2#14(S), 2#10(COMMON). ADD 2#8(CCTV)

6 - 2"C, 2#8(CCTV)

7 - 3"C, 1 OCC(RM), 1 FO12
- 3"C, 2 CAMERA CABLE HARNESS

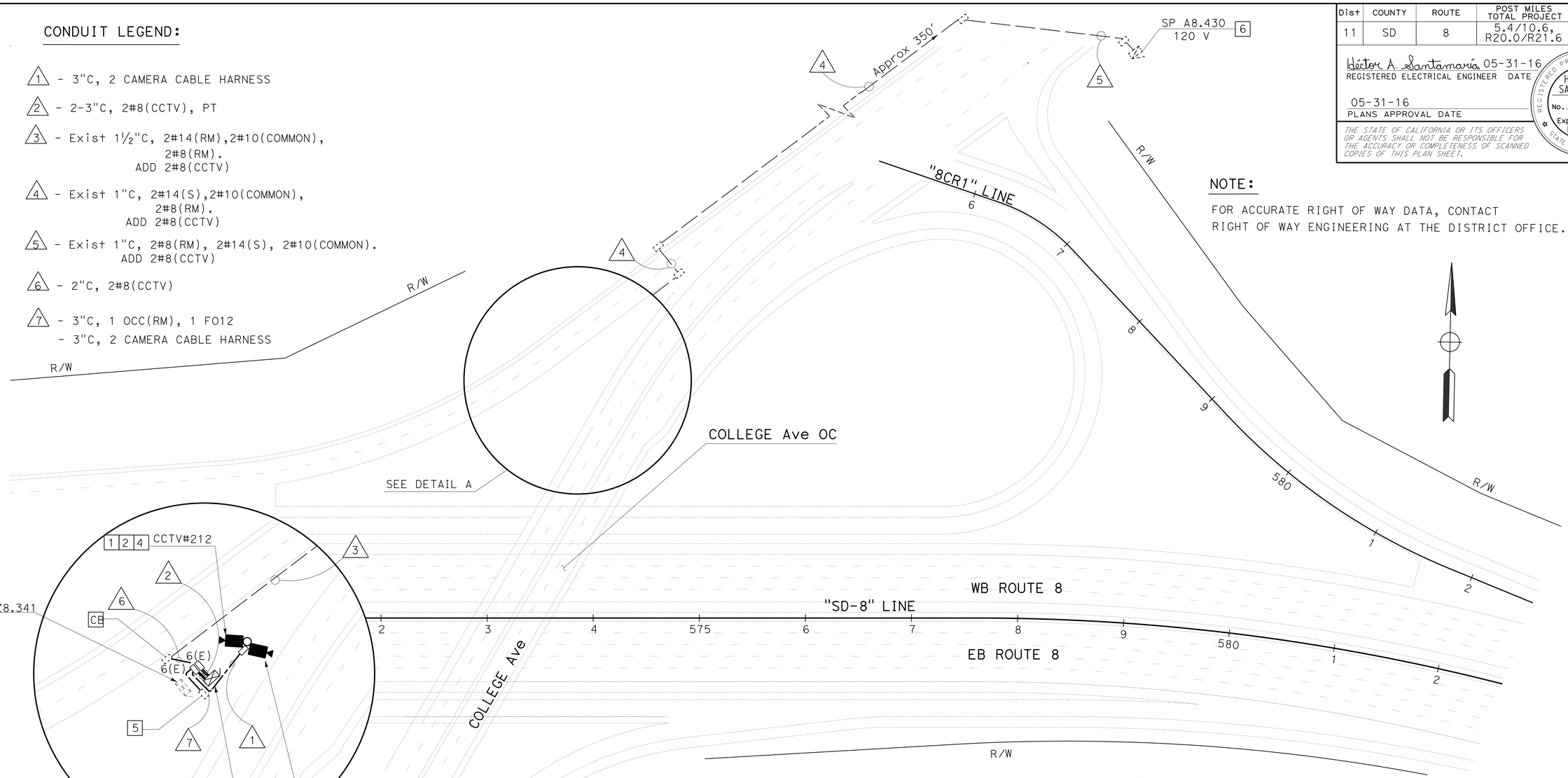

DETAIL A
NO SCALE

NOTE:

FOR ACCURATE RIGHT OF WAY DATA, CONTACT RIGHT OF WAY ENGINEERING AT THE DISTRICT OFFICE.

LEGEND:

1 - CAMERA CABLE HARNESS DETAILS, SEE SHEET E-43 AND E-45

2 - TYPE CCTV 35 DETAILS SEE SHEET SES-1

3 - FOR CABINET DETAILS SEE SHEET E-48

4 - INSTALL CCTV POLE NEXT TO EXISTING CONCRETE PAD. CCTV CABINET NEXT TO Exist RAMP METERING (Z8.341) CABINET

5 - FOR CONTINUITY SEE FIBER OPTIC SYSTEM ON SHEET E-11

6 - Exist TYPE III 120/240 V SERVICE EQUIPMENT ENCLOSURE
MAIN-2P-100 A
1P-50 A CB (SIGNAL)
1P-50 A CB (SIGNAL)
1P-15 A CB (SPARE)
1P-15 A CB (PEU)
2P-30 A CB (LIGHTING)
2P-30 A CB (LIGHTING)

ADD A 1P-30 A CB AND LABEL "CCTV"
REMOVE A 1P-15A CB AND REPLACE WITH A 1P-30 A CB AND LABEL "TMS"

7 - FOR CIRCUIT CONTINUITY SEE MODIFY TRAFFIC MONITORING STATION ON SHEET E-11

CLOSED CIRCUIT TELEVISION SYSTEM

APPROVED FOR ELECTRICAL WORK ONLY

SCALE: 1" = 50'

E-62

STATE OF CALIFORNIA - DEPARTMENT OF TRANSPORTATION
Caltrans® TRAFFIC ELECTRICAL

FUNCTIONAL SUPERVISOR: RAJPREET SINGH
CALCULATED-DESIGNED BY: HECTOR SANTAMARIA
CHECKED BY: LOUIE LA COMPTE
REVISED BY / DATE REVISED

LAST REVISION 05-31-17
DATE PLOTTED => 09-JUN-2016
TIME PLOTTED => 09:36

Dist	COUNTY	ROUTE	POST MILES TOTAL PROJECT	SHEET No.	TOTAL SHEETS
11	SD	8	5.4/10.6, R20.0/R21.6	164	213

Héctor A. Santamaría 05-31-16
REGISTERED ELECTRICAL ENGINEER DATE

05-31-16
PLANS APPROVAL DATE

REGISTERED PROFESSIONAL ENGINEER HECTOR A. SANTAMARIA No. 18207 Exp. 12-31-17 ELECTRICAL STATE OF CALIFORNIA

THE STATE OF CALIFORNIA OR ITS OFFICERS OR AGENTS SHALL NOT BE RESPONSIBLE FOR THE ACCURACY OR COMPLETENESS OF SCANNED COPIES OF THIS PLAN SHEET.

NOTE:

FOR ACCURATE RIGHT OF WAY DATA, CONTACT RIGHT OF WAY ENGINEERING AT THE DISTRICT OFFICE.

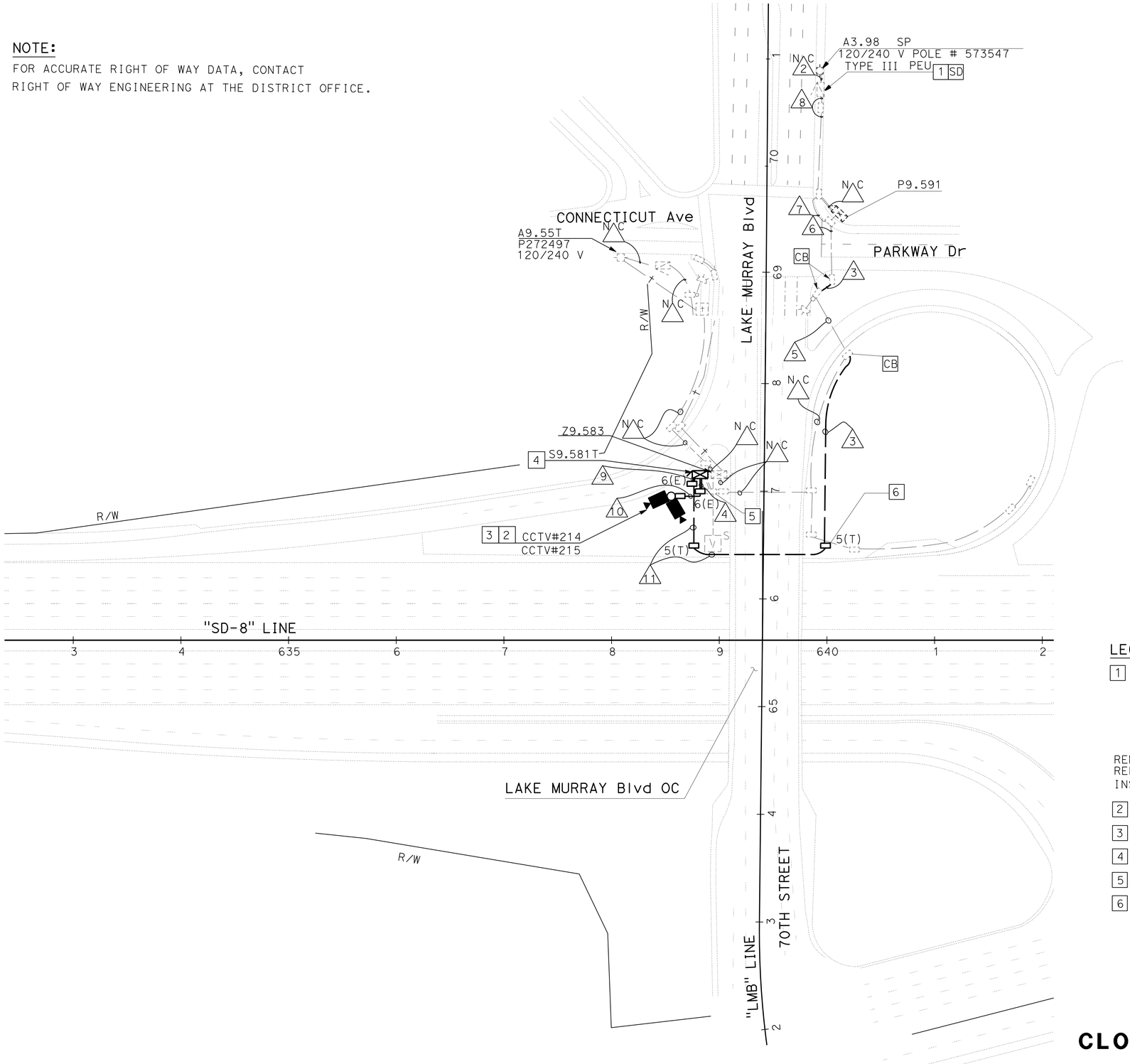

CONDUIT LEGEND:

1 - 3"C, 2 CAMERA CABLE HARNESS

N C 2 - Exist 2"C, SERVICE CONDUCTORS

3 - 2"C, 2#8(CCTV), 2#6(TMS)

4 - 2-3"C, 2 CAMERA CABLE HARNESS, PT

5 - Exist 1½"C, 2#14(FB2).
ADD 2#8(CCTV), 2#6(TMS)

6 - Exist 2"C, 2 12CSC, 1 VIDEO HARNESS, 2#8(Ltg), 3 DLC.
ADD 2#8(CCTV), 2#6(TMS)

7 - Exist 2"C, 2#8(Ltg).
ADD 2#8(CCTV), 2#6(TMS)

8 - Exist 2"C, 2#8(Ltg), 2#8(SIGNAL POWER).
ADD 2#8(CCTV), 2#6(TMS)

9 - 2-3"C, 2#8(CCTV), PT

10 - 3"C, 2 CAMERA CABLE

11 - 2"C, 2#8(CCTV)

LEGEND:

1 -Exist TYPE 120/240 V SERVICE EQUIPMENT ENCLOSURE
2P-100 A CB MAIN
1P- 15 A CB SPARE
1P- 50 A CB SIGNAL
1P- 15 A CB PEU
2P- 30 A CB LIGHTING

REMOVE EXISTING 1P-15 A CB(SPARE) AND
REPLACE WITH 1P-30 A CB AND LABEL "CCTV"
INSTALL 1P-30 A CB AND LABEL "TMS"

2 - TYPE CCTV 35 DETAILS SEE SHEET SES-1

3 - CAMERA CABLE HARNESS DETAILS SEE SHEET E-43 AND E-44

4 - FOR CABINET DETAILS SEE SHEET E-52

5 - FOR CONTINUITY SEE FIBER OPTIC SYSTEM ON SHEET E-15

6 - FOR CONTINUITY SEE MODIFY RAMP METERING SYSTEM ON SHEET E-28

APPROVED FOR ELECTRICAL WORK ONLY

SCALE: 1" = 50'

CLOSED CIRCUIT TELEVISION SYSTEM

E-63

STATE OF CALIFORNIA - DEPARTMENT OF TRANSPORTATION
Caltrans® TRAFFIC ELECTRICAL

FUNCTIONAL SUPERVISOR: RAJPREET SINGH
CALCULATED-DESIGNED BY: HECTOR SANTAMARIA
CHECKED BY: LOUIE LA COMPTE
REVISED BY
DATE REVISED

LAST REVISION 05-28-16
DATE PLOTTED => 09-JUN-2016
TIME PLOTTED => 09:36

Dist	COUNTY	ROUTE	POST MILES TOTAL PROJECT	SHEET No.	TOTAL SHEETS
11	SD	8	5.4/10.6, R20.0/R21.6	165	213

Héctor A. Santamaría 05-31-16
REGISTERED ELECTRICAL ENGINEER DATE

05-31-16
PLANS APPROVAL DATE

REGISTERED PROFESSIONAL ENGINEER
HECTOR A. SANTAMARIA
No. 18207
Exp. 12-31-17
ELECTRICAL
STATE OF CALIFORNIA

THE STATE OF CALIFORNIA OR ITS OFFICERS OR AGENTS SHALL NOT BE RESPONSIBLE FOR THE ACCURACY OR COMPLETENESS OF SCANNED COPIES OF THIS PLAN SHEET.

NOTE:

FOR ACCURATE RIGHT OF WAY DATA, CONTACT RIGHT OF WAY ENGINEERING AT THE DISTRICT OFFICE.

CONDUIT LEGEND:

1 - 3"C, 2 CAMERA CABLE HARNESS

2 - 2"C, 2#6(CCTV)

3 - Exist 3"C, 3#14(PEU), 3#8(S), 2#8(RM), 2#8(Ltg), 2#8(S), 2#12(ICC)
ADD 2#6(CCTV)

4 - 2-3"C, 2#6(CCTV), PT

5 - 2"C, 1 FO4

6 - 2"C, 2#6(CCTV)

7 - 3"C, 2 CAMERA CABLE HARNESS
- 3"C, 1 FO12, 1 FO4

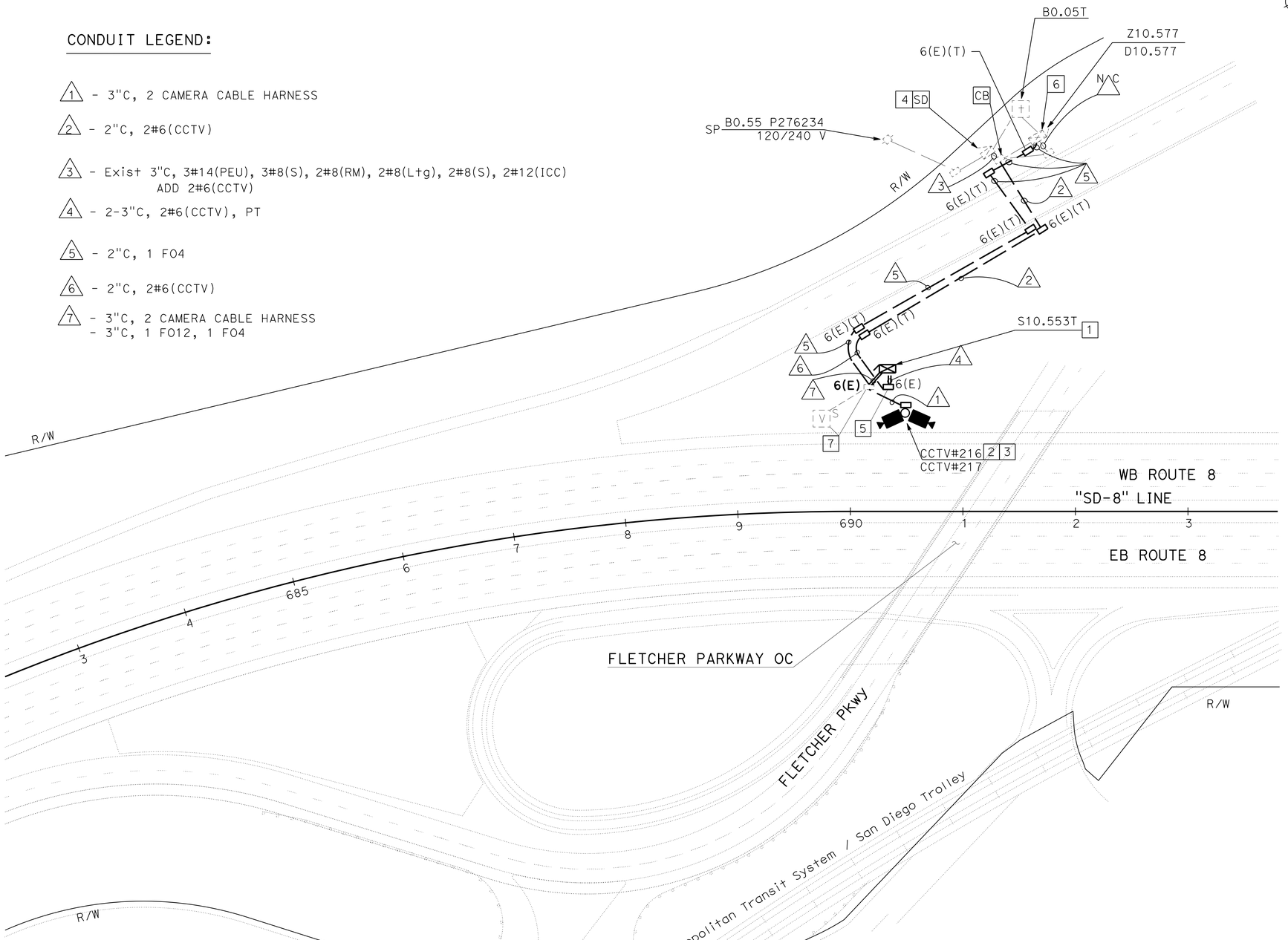

LEGEND:

1 - CCTV CABINET SEE DETAILS, SEE SHEET E-48

2 - TYPE CCTV 35 DETAILS, SEE SHEET SES-1

3 - CAMERA CABLE DETAILS, SEE SHEET E-43 AND E-44

4 - Exist TYPE III 120/240 V SERVICE EQUIPMENT ENCLOSURE

MAIN-2P-100 A
1P-30 A RAMP METER
1P-15 A TDC
1P-15 A ICC
1P-15 A PEU
2P-30 A LIS (UNKNOWN)
2P-30 A Ltg
1P-30 A WRONG WAY WARNING SYSTEM

RE-LABEL WRONG WAY WARNING SYSTEM-SPARE WITH "CCTV"

ADD A 1P-30 A CB AND LABEL "TMS-EAST"

5 - FOR CONTINUITY, SEE MODIFY RAMP METERING SYSTEM ON SHEET E-30

6 - CONDUIT MUST ENTER THE EXISTING MODEL 334 CONTROLLER CABINET FOUNDATION TO THE ADJACENT PULL BOX BY ROTOR DRILLING A 2.5" HOLE AT 45°

7 - FOR CONTINUITY, SEE FIBER OPTIC SYSTEM ON SHEET E-19

APPROVED FOR ELECTRICAL WORK ONLY

CLOSED CIRCUIT TELEVISION SYSTEM

SCALE: 1" = 50'

E-64

REVISED BY	DATE REVISED	HECTOR SANTAMARIA	LOUIE LA COMPTE	CALCULATED-DESIGNED BY	CHECKED BY	FUNCTIONAL SUPERVISOR	RAJPREET SINGH

STATE OF CALIFORNIA - DEPARTMENT OF TRANSPORTATION
Caltrans® TRAFFIC ELECTRICAL

LAST REVISION 05-27-16 | DATE PLOTTED => 09-JUN-2016 | TIME PLOTTED => 09:36

Dist	COUNTY	ROUTE	POST MILES TOTAL PROJECT	SHEET No.	TOTAL SHEETS
11	SD	8	5.4/10.6, R20.0/R21.6	166	213

Héctor A. Santamaría 05-31-16
REGISTERED ELECTRICAL ENGINEER DATE

05-31-16
PLANS APPROVAL DATE

REGISTERED PROFESSIONAL ENGINEER
HECTOR A. SANTAMARIA
No. 18207
Exp. 12-31-15
ELECTRICAL
STATE OF CALIFORNIA

THE STATE OF CALIFORNIA OR ITS OFFICERS OR AGENTS SHALL NOT BE RESPONSIBLE FOR THE ACCURACY OR COMPLETENESS OF SCANNED COPIES OF THIS PLAN SHEET.

CONDUIT LEGEND:

N C 1 - Exist 2"C, 9#14(S), 1#10(COMMON), 4 DLC

N C 2 - Exist 2½"C, 9#14(S), 1#10(COMMON), 9 DLC

N C 3 - Exist 1½"C, 2#8(RM)

N C 4 - Exist 1½"C, 2#14(RM), 2#10(COMMON), 2#8(RM)

N C 5 - Exist 1"C, 2#14(RM), 2#10(COMMON), 2#8(RM)

N C 6 - Exist 1"C, 2#8(RM)

7 - 2"C, 1 OCC

N C 8 - 2-2"C, 2#14(RM), 2#10(COMMON), 2#8(RM)

NOTE:

FOR ACCURATE RIGHT OF WAY DATA, CONTACT RIGHT OF WAY ENGINEERING AT THE DISTRICT OFFICE.

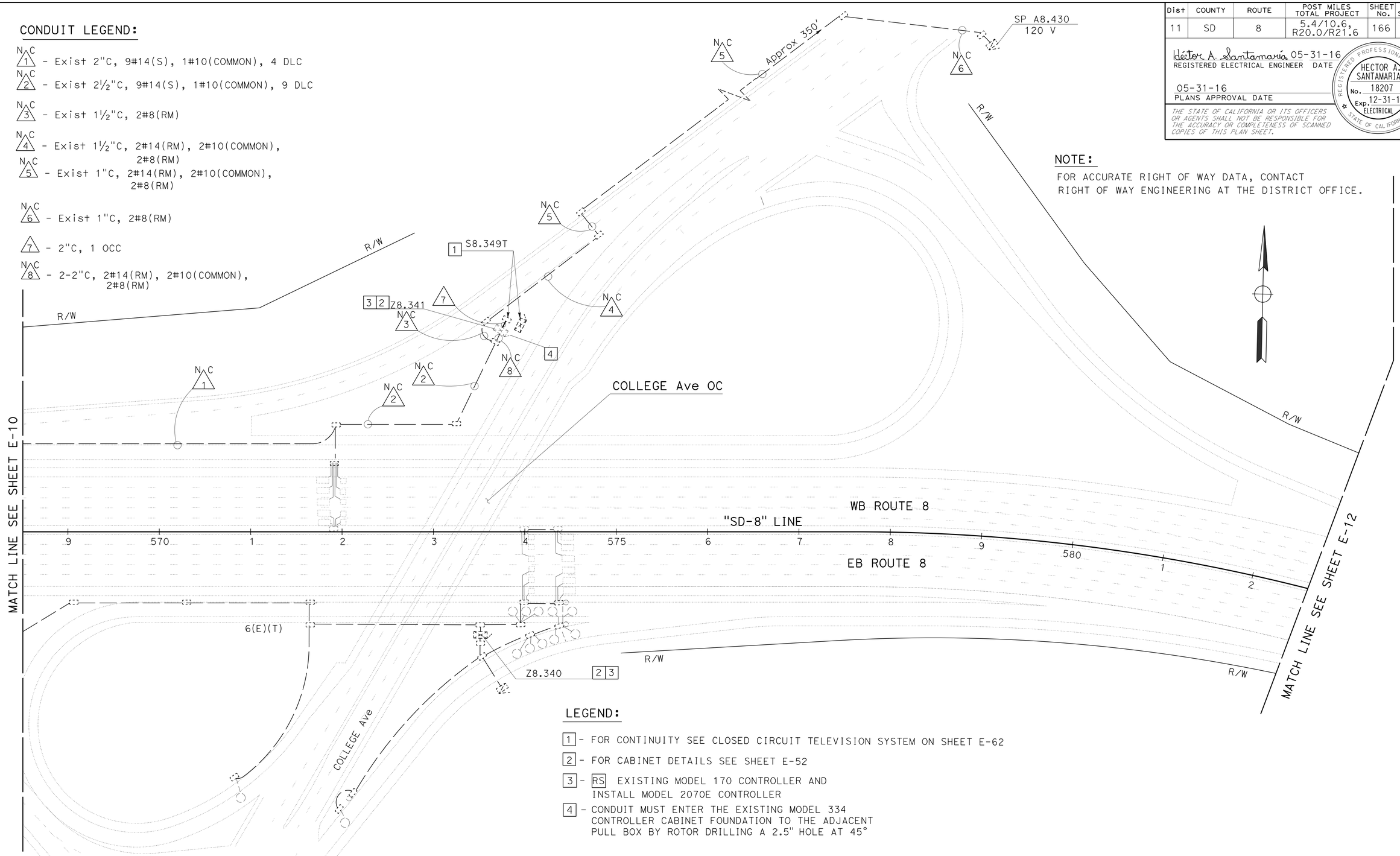

LEGEND:

1 - FOR CONTINUITY SEE CLOSED CIRCUIT TELEVISION SYSTEM ON SHEET E-62

2 - FOR CABINET DETAILS SEE SHEET E-52

3 - RS EXISTING MODEL 170 CONTROLLER AND INSTALL MODEL 2070E CONTROLLER

4 - CONDUIT MUST ENTER THE EXISTING MODEL 334 CONTROLLER CABINET FOUNDATION TO THE ADJACENT PULL BOX BY ROTOR DRILLING A 2.5" HOLE AT 45°

MODIFY RAMP METERING SYSTEM

APPROVED FOR ELECTRICAL WORK ONLY

SCALE: 1" = 50'

MODIFYING EXISTING ELECTRICAL SYSTEMS

E-65

STATE OF CALIFORNIA - DEPARTMENT OF TRANSPORTATION
Caltrans® TRAFFIC ELECTRICAL

FUNCTIONAL SUPERVISOR: RAJPREET SINGH
CALCULATED-DESIGNED BY: HECTOR SANTAMARIA
CHECKED BY
REVISED BY
DATE REVISED

LAST REVISION 05-27-16
DATE PLOTTED => 09-JUN-2016
TIME PLOTTED => 09:36

Dist	COUNTY	ROUTE	POST MILES TOTAL PROJECT	SHEET No.	TOTAL SHEETS
11	SD	8	5.4/10.6, R20.0/R21.6	167	213

Héctor A. Santamaría 05-31-16
REGISTERED ELECTRICAL ENGINEER DATE

05-31-16
PLANS APPROVAL DATE

REGISTERED PROFESSIONAL ENGINEER
HECTOR A. SANTAMARIA
No. 18207
Exp. 12-31-17
ELECTRICAL
STATE OF CALIFORNIA

THE STATE OF CALIFORNIA OR ITS OFFICERS OR AGENTS SHALL NOT BE RESPONSIBLE FOR THE ACCURACY OR COMPLETENESS OF SCANNED COPIES OF THIS PLAN SHEET.

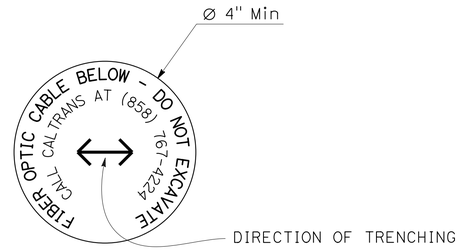

DETAIL A
FO DISK MARKER

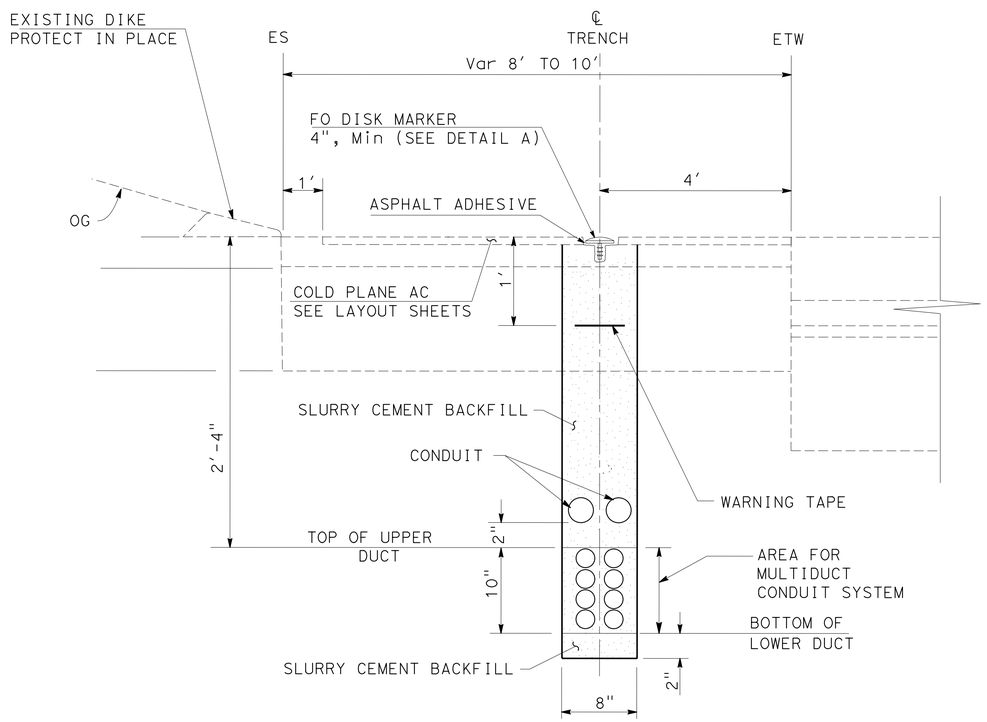

TRENCH IN EXISTING AC SHOULDER
FOR MULTIDUCT CONDUIT SYSTEM

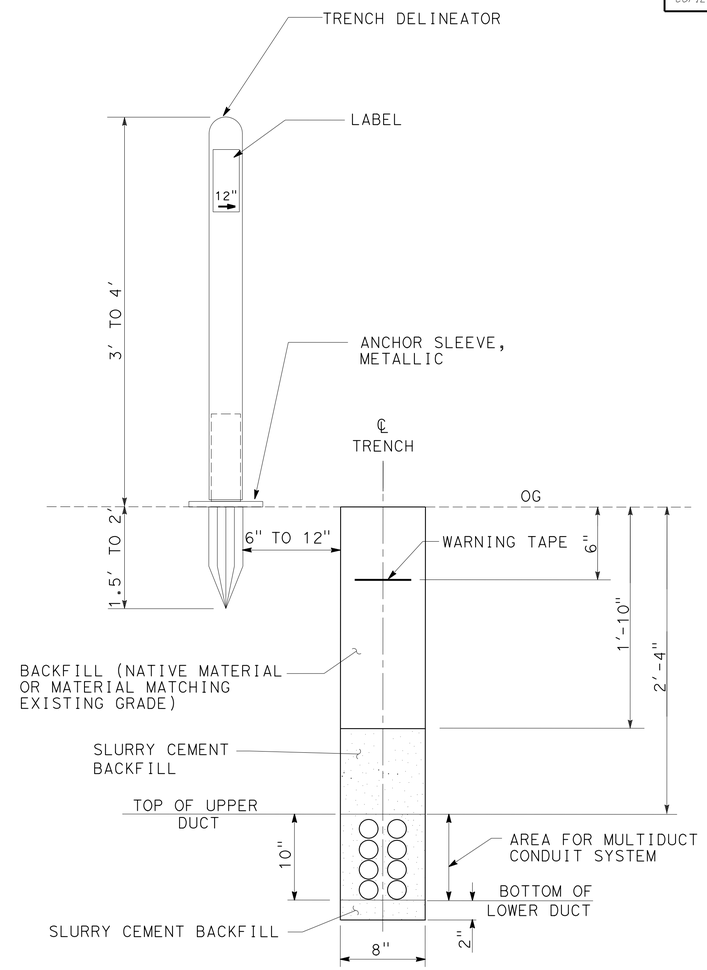

TRENCH IN DIRT
FOR MULTIDUCT CONDUIT SYSTEM

ELECTRICAL DETAILS

NO SCALE

E-66

STATE OF CALIFORNIA - DEPARTMENT OF TRANSPORTATION
Caltrans® **TRAFFIC ELECTRICAL**

FUNCTIONAL SUPERVISOR: RAJPREET SINGH
CALCULATED-DESIGNED BY: HECTOR SANTAMARIA
CHECKED BY: LOUIE LA COMPTE
REVISED BY
DATE REVISED

LAST REVISION 05-26-16
DATE PLOTTED => 09-JUN-2016
TIME PLOTTED => 09:36

Dist	COUNTY	ROUTE	POST MILES TOTAL PROJECT	SHEET No.	TOTAL SHEETS
11	SD	8	5.4/10.6, R20.0/R21.6	168	213

Héctor A. Santamaría 05-31-16
REGISTERED ELECTRICAL ENGINEER DATE

05-31-16
PLANS APPROVAL DATE

REGISTERED PROFESSIONAL ENGINEER
HECTOR A. SANTAMARIA
No. 18207
Exp. 12-31-15
ELECTRICAL
STATE OF CALIFORNIA

THE STATE OF CALIFORNIA OR ITS OFFICERS OR AGENTS SHALL NOT BE RESPONSIBLE FOR THE ACCURACY OR COMPLETENESS OF SCANNED COPIES OF THIS PLAN SHEET.

NOTE:

FOR ACCURATE RIGHT OF WAY DATA, CONTACT
RIGHT OF WAY ENGINEERING AT THE DISTRICT OFFICE.

LEGEND(TSO):

1 - RS EXISTING MODEL 170 CONTROLLERS AND INSTALL MODEL 2070E CONTROLLER
2 - FOR CABINET DETAILS SEE SHEET E-49

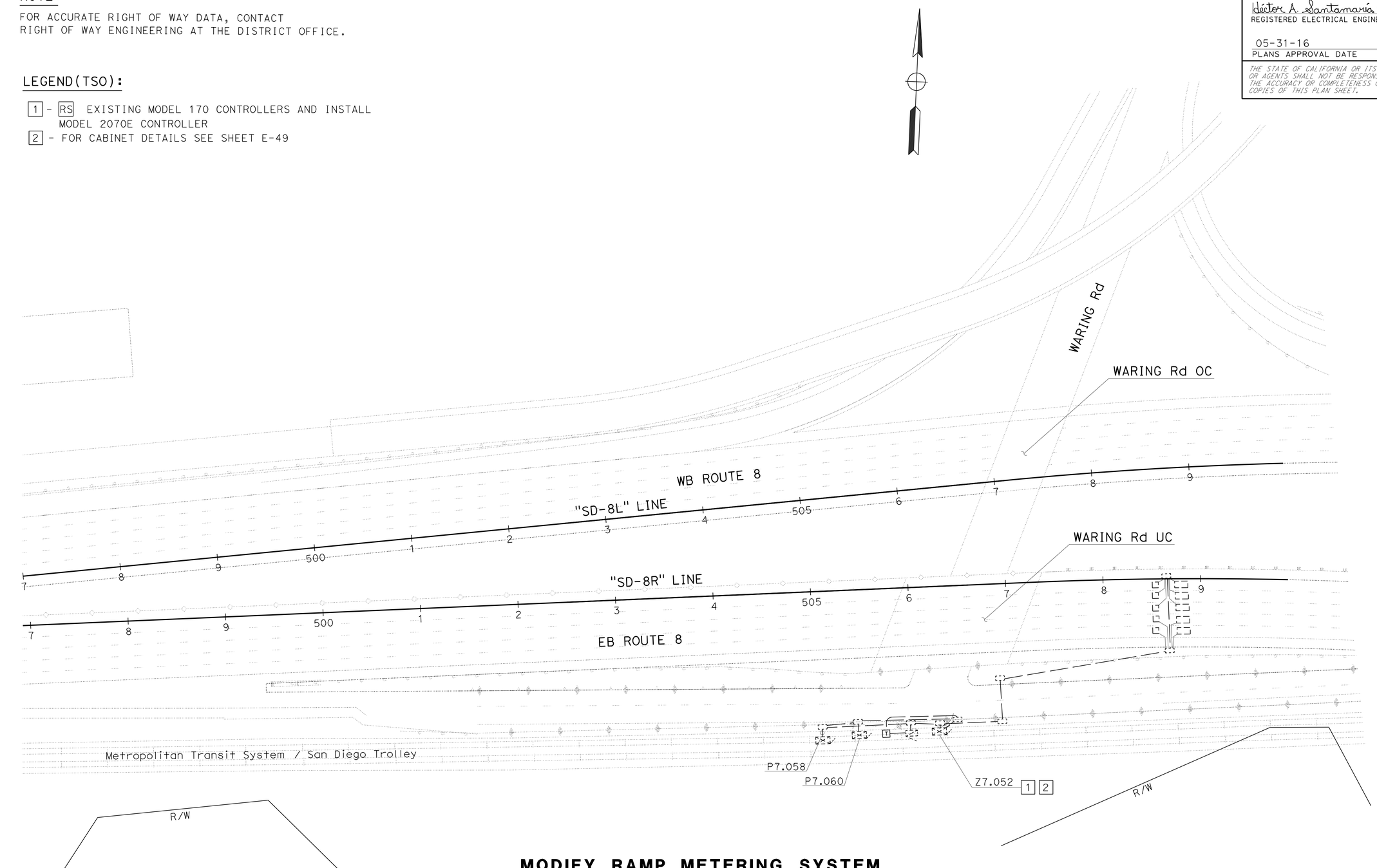

MODIFY RAMP METERING SYSTEM

APPROVED FOR ELECTRICAL WORK ONLY

MODIFYING EXISTING ELECTRICAL SYSTEM

SCALE: 1" = 50'

E-67

STATE OF CALIFORNIA - DEPARTMENT OF TRANSPORTATION
Caltrans® TRAFFIC ELECTRICAL

FUNCTIONAL SUPERVISOR: RAJPREET SINGH
CALCULATED-DESIGNED BY: HECTOR SANTAMARIA
CHECKED BY: LOUIE LA COMPTE
REVISED BY
DATE REVISED

LAST REVISION 05-26-16 | DATE PLOTTED => 09-JUN-2016 | TIME PLOTTED => 09:36

Dist	COUNTY	ROUTE	POST MILES TOTAL PROJECT	SHEET No.	TOTAL SHEETS
11	SD	8	5.4/10.6, R20.0/R21.6	169	213

Héctor A. Santamaría 05-31-16
REGISTERED ELECTRICAL ENGINEER DATE

05-31-16
PLANS APPROVAL DATE

REGISTERED PROFESSIONAL ENGINEER HECTOR A. SANTAMARIA No. 18207 Exp. 12-31-17 ELECTRICAL STATE OF CALIFORNIA

THE STATE OF CALIFORNIA OR ITS OFFICERS OR AGENTS SHALL NOT BE RESPONSIBLE FOR THE ACCURACY OR COMPLETENESS OF SCANNED COPIES OF THIS PLAN SHEET.

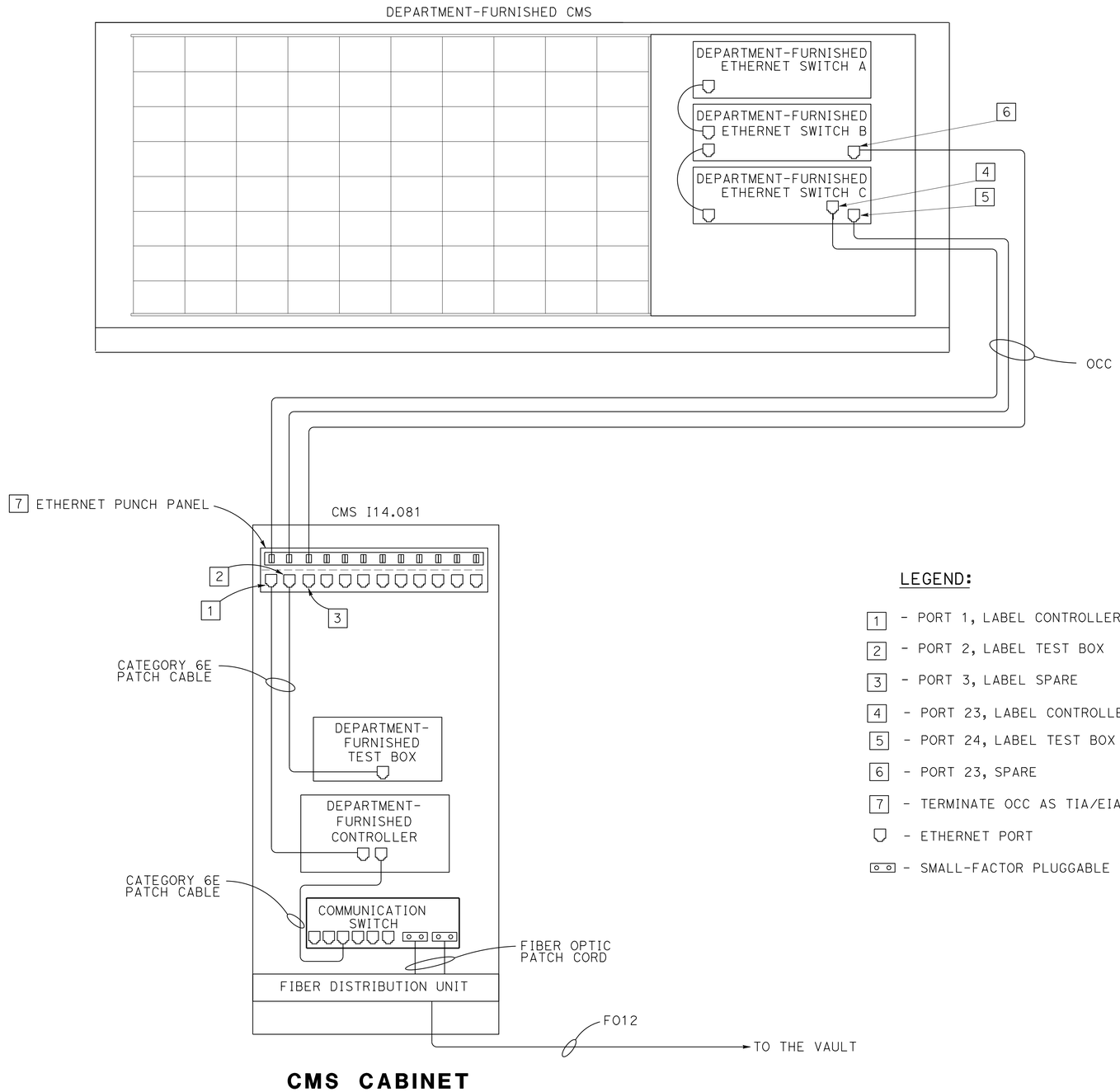

CMS CABINET

LEGEND:

- 1 - PORT 1, LABEL CONTROLLER
- 2 - PORT 2, LABEL TEST BOX
- 3 - PORT 3, LABEL SPARE
- 4 - PORT 23, LABEL CONTROLLER
- 5 - PORT 24, LABEL TEST BOX
- 6 - PORT 23, SPARE
- 7 - TERMINATE OCC AS TIA/EIA 568B
- ETHERNET PORT
- SMALL-FACTOR PLUGGABLE TRANSCEIVER

ELECTRICAL DETAILS

NO SCALE

E-68

REVISED BY	DATE REVISED

CALCULATED-DESIGNED BY	HECTOR SANTAMARIA
CHECKED BY	LOUIE LA COMPTE
FUNCTIONAL SUPERVISOR	RAJPREET SINGH

STATE OF CALIFORNIA - DEPARTMENT OF TRANSPORTATION
Caltrans® TRAFFIC ELECTRICAL

LAST REVISION 05-26-16 DATE PLOTTED => 09-JUN-2016 TIME PLOTTED => 09:36

Dist	COUNTY	ROUTE	POST MILES TOTAL PROJECT	SHEET No.	TOTAL SHEETS
11	SD	8	5.4/10.6, R20.0/R21.6	170	213

Héctor A. Santamaría 05-31-16
REGISTERED ELECTRICAL ENGINEER DATE

05-31-16
PLANS APPROVAL DATE

REGISTERED PROFESSIONAL ENGINEER
HECTOR A. SANTAMARIA
No. 18207
Exp. 12-31-17
ELECTRICAL
STATE OF CALIFORNIA

THE STATE OF CALIFORNIA OR ITS OFFICERS OR AGENTS SHALL NOT BE RESPONSIBLE FOR THE ACCURACY OR COMPLETENESS OF SCANNED COPIES OF THIS PLAN SHEET.

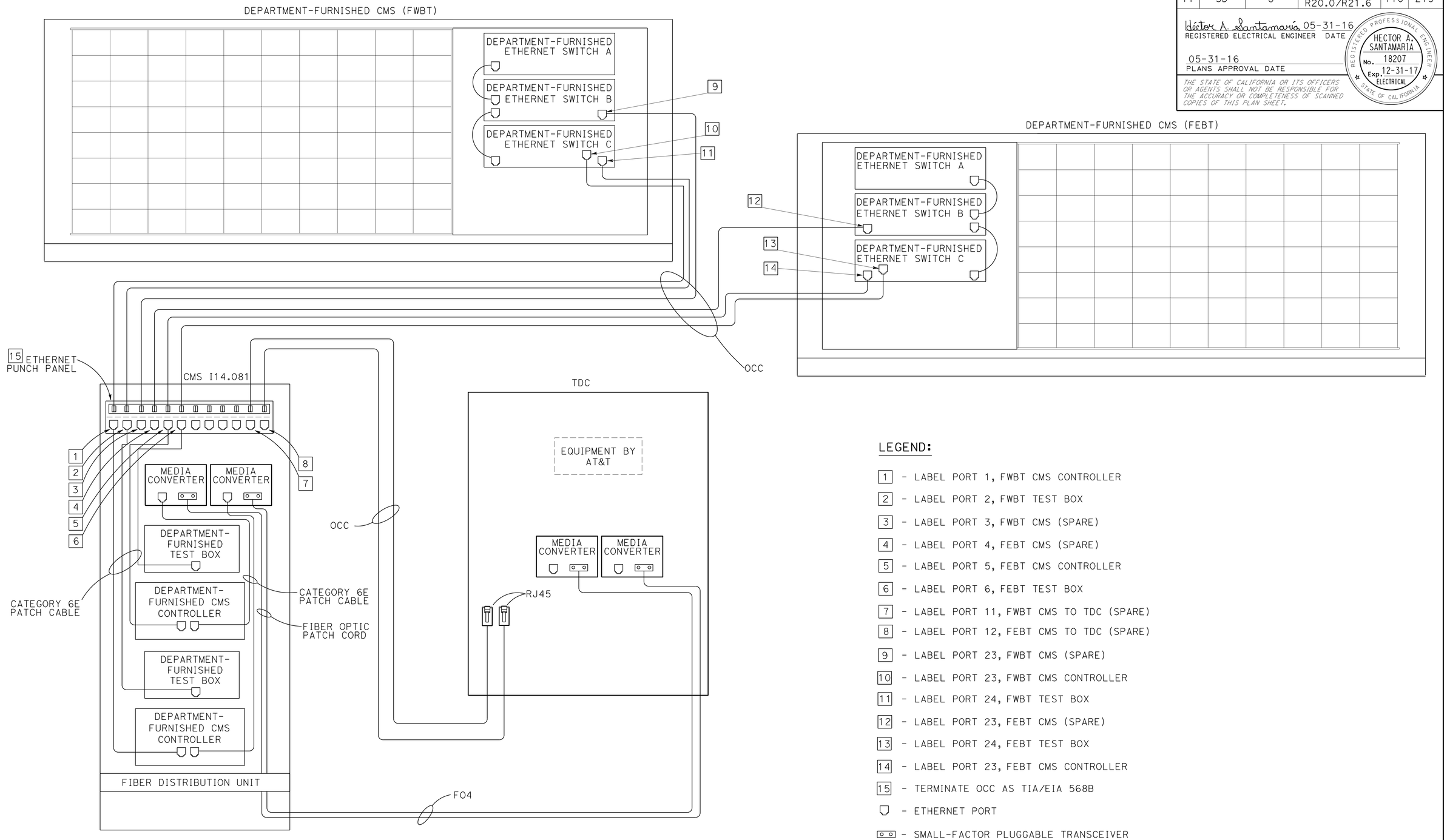

LEGEND:

- 1 - LABEL PORT 1, FWBT CMS CONTROLLER
- 2 - LABEL PORT 2, FWBT TEST BOX
- 3 - LABEL PORT 3, FWBT CMS (SPARE)
- 4 - LABEL PORT 4, FEBT CMS (SPARE)
- 5 - LABEL PORT 5, FEBT CMS CONTROLLER
- 6 - LABEL PORT 6, FEBT TEST BOX
- 7 - LABEL PORT 11, FWBT CMS TO TDC (SPARE)
- 8 - LABEL PORT 12, FEBT CMS TO TDC (SPARE)
- 9 - LABEL PORT 23, FWBT CMS (SPARE)
- 10 - LABEL PORT 23, FWBT CMS CONTROLLER
- 11 - LABEL PORT 24, FWBT TEST BOX
- 12 - LABEL PORT 23, FEBT CMS (SPARE)
- 13 - LABEL PORT 24, FEBT TEST BOX
- 14 - LABEL PORT 23, FEBT CMS CONTROLLER
- 15 - TERMINATE OCC AS TIA/EIA 568B
- ETHERNET PORT
- SMALL-FACTOR PLUGGABLE TRANSCEIVER

ELECTRICAL DETAILS

NO SCALE

E-69

STATE OF CALIFORNIA - DEPARTMENT OF TRANSPORTATION
Caltrans® TRAFFIC ELECTRICAL

FUNCTIONAL SUPERVISOR: RAJPREET SINGH
CALCULATED-DESIGNED BY: HECTOR SANTAMARIA
CHECKED BY: LOUIE LA COMPTE
REVISED BY
DATE REVISED

LAST REVISION 05-28-16
DATE PLOTTED => 09-JUN-2016
TIME PLOTTED => 09:36

DIST	COUNTY	ROUTE	POST MILES TOTAL PROJECT	SHEET No	TOTAL SHEETS
11	SD	8	5.4/10.6, R20.0/R21.6	171	213

REGISTERED CIVIL ENGINEER 9-17-15 DATE

05-31-16
PLANS APPROVAL DATE

The State of California or its officers or agents shall not be responsible for the accuracy or completeness of electronic copies of this plan sheet.

REGISTERED PROFESSIONAL ENGINEER JEFFREY B. WOODY No. C41260 Exp. 3/31/17 CIVIL STATE OF CALIFORNIA

NOTES:

1. During pole installation, the post shall be raked as necessary with the use of leveling nuts to provide a plumb pole axis.
2. Wind Loadings (3-second gust): 100 mph
3. Unit Stresses (Structural Steel):
   a. fy = 55,000 psi (tapered steel tube and anchor bolts)
   b. fy = 50,000 psi (unless otherwise noted)
4. Unit Stresses (Reinforced Concrete):
   a. f'c = 3,625 psi
   b. fy = 60,000 psi
5. Mounting area to be perpendicular to traffic.
6. For details not shown, see "2010 Standard Plans".

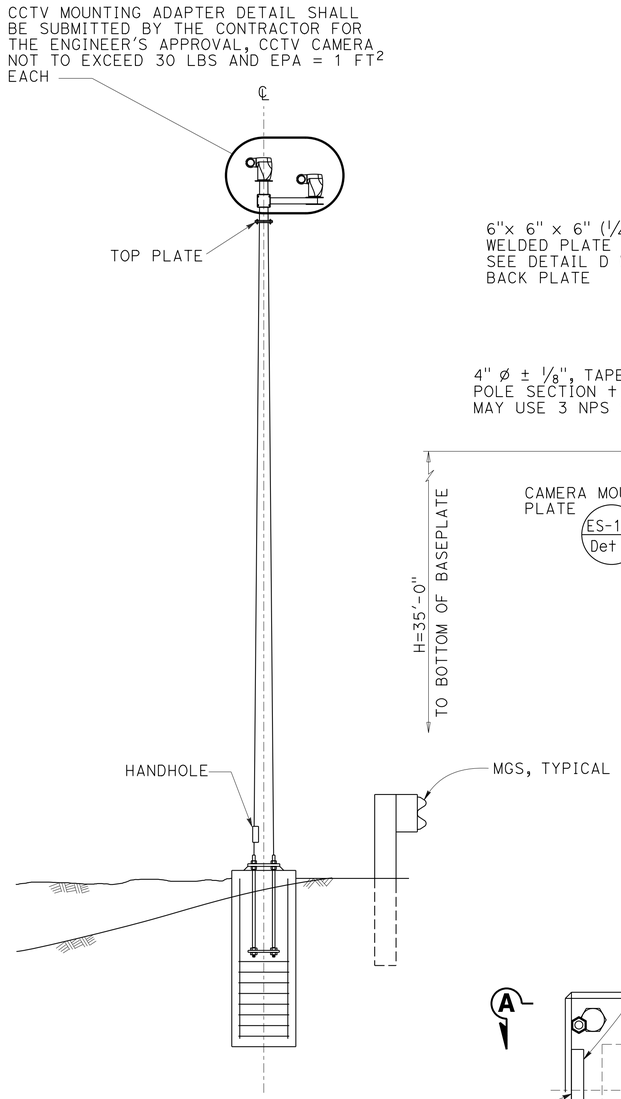

ELEVATION
CCTV 35

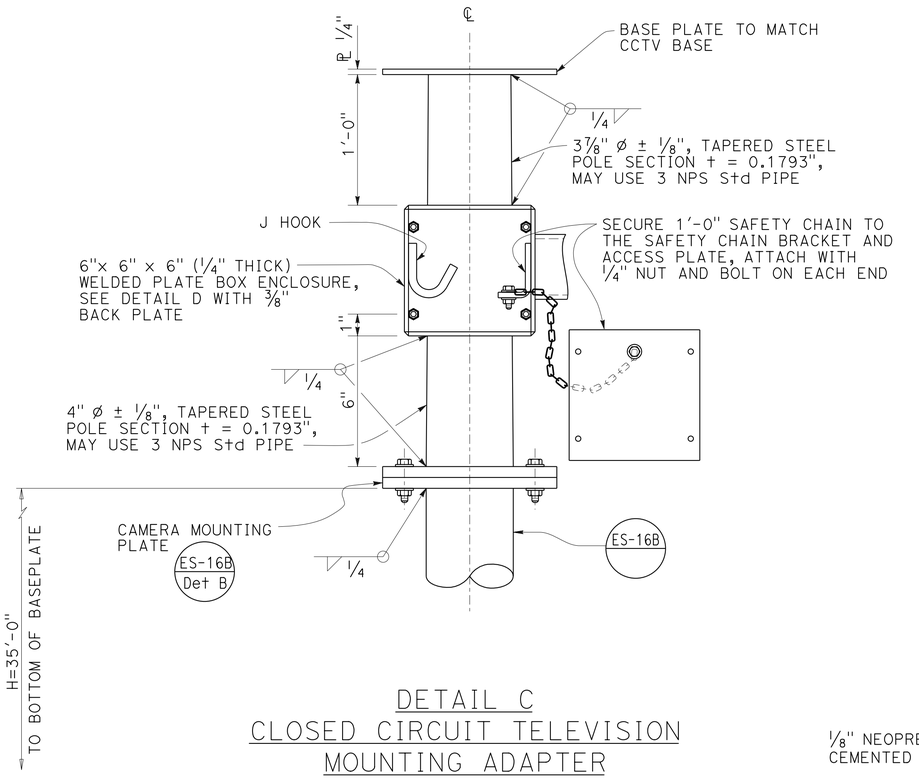

DETAIL C
CLOSED CIRCUIT TELEVISION
MOUNTING ADAPTER

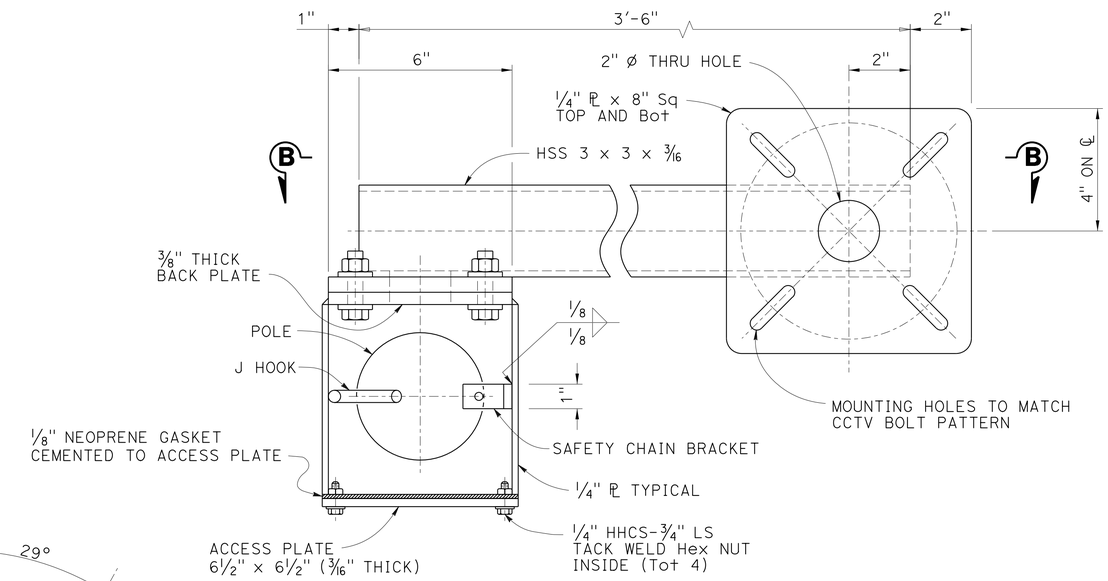

SECTION A-A

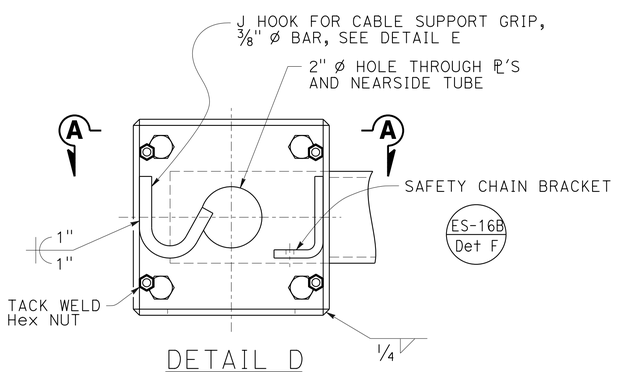

DETAIL D
BOX ENCLOSURE

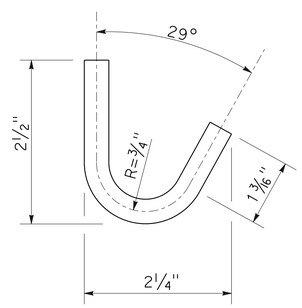

DETAIL E
J HOOK

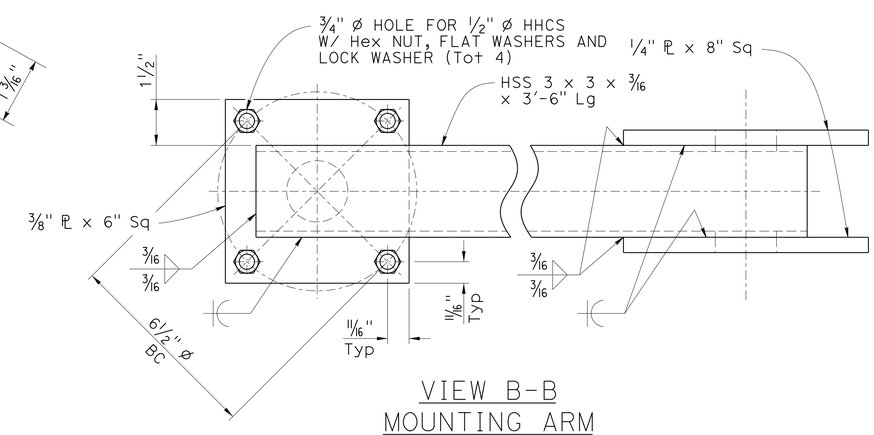

VIEW B-B
MOUNTING ARM

NOTE:
THE CONTRACTOR MUST VERIFY ALL CONTROLLING FIELD DIMENSIONS BEFORE ORDERING OR FABRICATING ANY MATERIAL.

NO SCALE

BRANCH CHIEF	JEFF WOODY	DESIGN	BY JEFF WOODY	CHECKED A. HOUGH
		DETAILS	BY M. CLEVERLEY	CHECKED JEFF WOODY
		QUANTITIES	BY X	CHECKED X

STATE OF CALIFORNIA
DEPARTMENT OF TRANSPORTATION

DIVISION OF ENGINEERING SERVICES
DESIGN AND TECHNICAL SERVICES
SPECIAL DESIGNS BRANCH
A

BRIDGE NO.
POST MILE

CLOSED CIRCUIT TELEVISION SYSTEM
CANTILEVERED ARM DETAILS

SES-1

(ENGLISH) SPECIAL DESIGNS BRANCH BORDER SHEET (REV. 4-1-14)

ORIGINAL SCALE IN INCHES FOR REDUCED PLANS 0 1 2 3

UNIT: 3619
PROJECT NUMBER & PHASE: 1114000046-1
CONTRACT NO.: 11-237964

DISREGARD PRINTS BEARING EARLIER REVISION DATES

REVISION DATES | SHEET | OF

FILE => /2015_sd/11-237961/11-237961_ses-01.dgn

USERNAME => s127400 DATE PLOTTED => 09-JUN-2016 TIME PLOTTED => 09:36

DIST	COUNTY	ROUTE	POST MILES TOTAL PROJECT	SHEET No	TOTAL SHEETS
11	SD	8	5.4/10.6, R20.0/R21.6	172	213

REGISTERED CIVIL ENGINEER 9-17-15 DATE

05-31-16
PLANS APPROVAL DATE

REGISTERED PROFESSIONAL ENGINEER JEFFREY B. WOODY No. C41260 Exp. 3/31/17 CIVIL STATE OF CALIFORNIA

The State of California or its officers or agents shall not be responsible for the accuracy or completeness of electronic copies of this plan sheet.

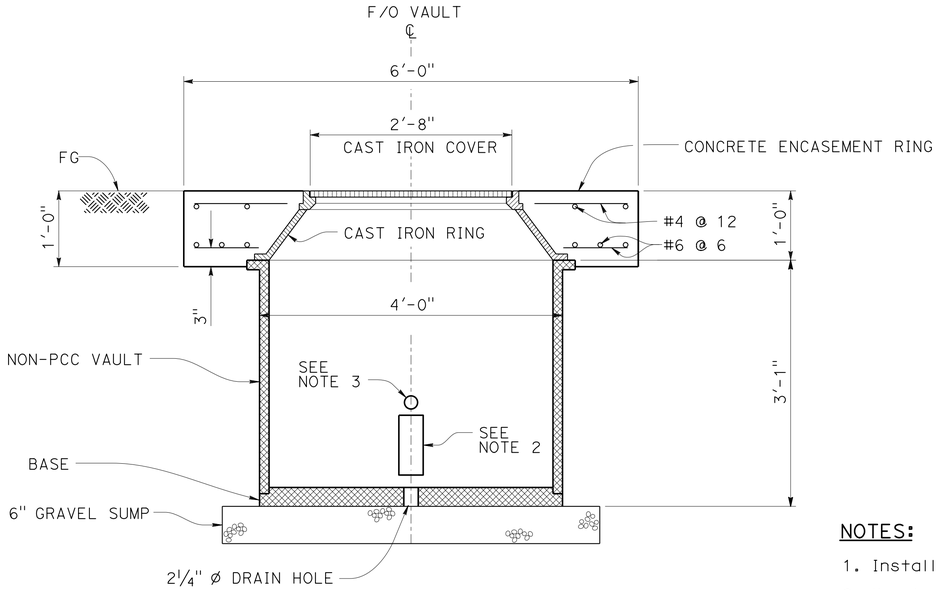

SECTION A-A

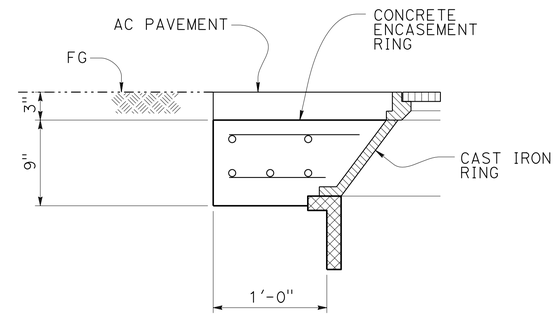

DETAIL A

(VAULT INSIDE OF PULLOUT)

NOTES:

1. Install per manufacturer's recommendation.
2. Knockout for Multi-Duct Conduit System (MDCS) (8) provide two equally spaced around vault.
3. 2" knockout (total 4) equally spaced around vault.

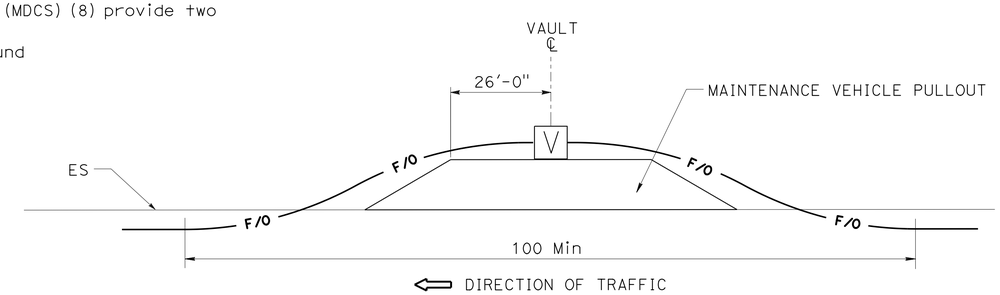

FIBER OPTIC VAULT INSTALLATION DETAIL (TYPICAL)

(OUTSIDE OF PULLOUT)

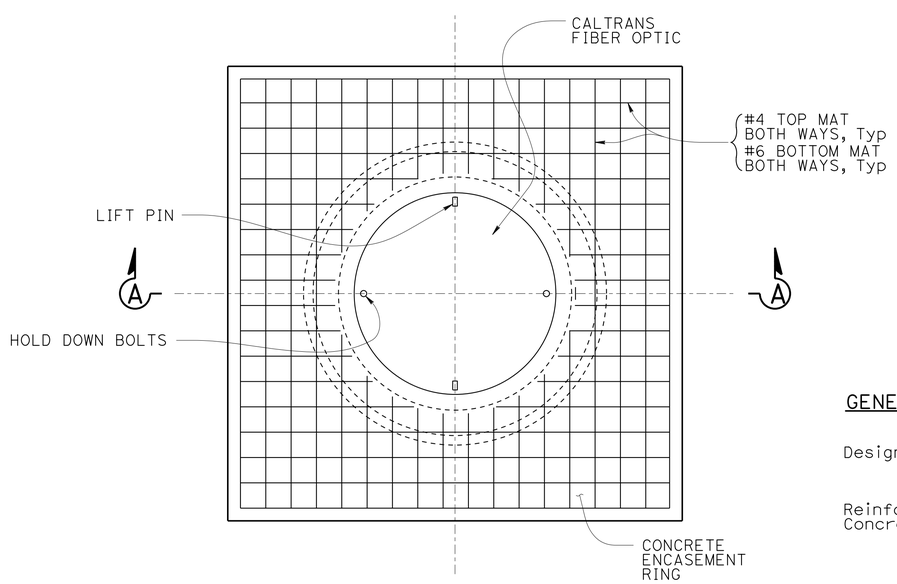

PLAN

GENERAL NOTES:

Design : CALTRANS BRIDGE DESIGN SPECIFICATIONS APRIL 2000 (LFD)

Reinforced Concrete : fy = 60 ksi (Yield strength of reinforcement)
f'c = 36 ksi (Concrete compressive strength at 28 days)
n = 8

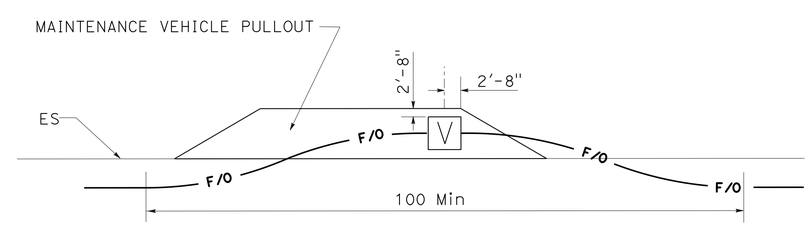

FIBER OPTIC VAULT INSTALLATION DETAIL (TYPICAL)

(INSIDE OF PULLOUT)

NOTE: SEE DETAIL "A"

NOTE:
THE CONTRACTOR MUST VERIFY ALL CONTROLLING FIELD DIMENSIONS BEFORE ORDERING OR FABRICATING ANY MATERIAL.

NO SCALE

BRANCH CHIEF	JEFF WOODY	DESIGN	BY JEFF WOODY	CHECKED A.HOUGH
		DETAILS	BY M.CLEVERLEY	CHECKED JEFF WOODY
		QUANTITIES	BY X	CHECKED X

STATE OF CALIFORNIA
DEPARTMENT OF TRANSPORTATION

DIVISION OF ENGINEERING SERVICES
DESIGN AND TECHNICAL SERVICES
SPECIAL DESIGNS BRANCH A

BRIDGE NO.
POST MILE

FIBER OPTIC COMMUNICATION SYSTEM
FIBER OPTIC VAULT DETAILS

SES-2

(ENGLISH) SPECIAL DESIGNS BRANCH BORDER SHEET (REV. 4-1-14)

ORIGINAL SCALE IN INCHES FOR REDUCED PLANS 0 1 2 3

UNIT: 3619
PROJECT NUMBER & PHASE: 1114000046-1 CONTRACT NO.: 11-237964

DISREGARD PRINTS BEARING EARLIER REVISION DATES

REVISION DATES SHEET OF

FILE => /2015_sd/11-237961/11-237961_ses-02.dgn

USERNAME => s127400 DATE PLOTTED => 09-JUN-2016 TIME PLOTTED => 09:36

M

Maint	MAINTENANCE
Max	MAXIMUM
MB	METAL BEAM
MBB	METAL BEAM BARRIER
MBGR	METAL BEAM GUARD RAILING
Med	MEDIAN
MGS	MIDWEST GUARDRAIL SYSTEM
MH	MANHOLE
Min	MINIMUM
Misc	MISCELLANEOUS
Misc I & S	MISCELLANEOUS IRON AND STEEL
Mkr	MARKER
Mod	MODIFIED,
	MODIFY
Mon	MONUMENT
MP	METAL PLATE
MPGR	METAL PLATE GUARD RAILING
MR	MOVEMENT RATING
MSE	MECHANICALLY STABILIZED EMBANKMENT
Mt	MOUNTAIN, MOUNT
Mtl	MATERIAL
MVP	MAINTENANCE VEHICLE PULLOUT

N

N	NORTH
NB	NORTHBOUND
No.	NUMBER (MUST HAVE PERIOD)
Nos.	NUMBERS (MUST HAVE PERIOD)
NPS	NOMINAL PIPE SIZE
NS	NEAR SIDE
NSP	NEW STANDARD PLAN
NTS	NOT TO SCALE

O

Oblr	OBLITERATE
OC	OVERCROSSING
OD	OUTSIDE DIAMETER
OF	OUTSIDE FACE
OG	ORIGINAL GROUND
OGAC	OPEN GRADED ASPHALT CONCRETE
OGFC	OPEN GRADED FRICTION COURSE
OH	OVERHEAD
OHWM	ORDINARY HIGH WATER MARK
O-O	OUT TO OUT
Opp	OPPOSITE
OSD	OVERSIDE DRAIN

P

P	PAGE
PAP	PERFORATED ALUMINUM PIPE
PB	PULL BOX
PC	POINT OF CURVATURE,
	PRECAST
PCC	POINT OF COMPOUND CURVE,
	PORTLAND CEMENT CONCRETE
PCMS	PORTABLE CHANGEABLE MESSAGE SIGN
PCP	PERFORATED CONCRETE PIPE,
	PRESTRESSED CONCRETE PIPE
PCVC	POINT OF COMPOUND VERTICAL CURVE
PEC	PERMIT TO ENTER AND CONSTRUCT
Ped	PEDESTRIAN
Ped OC	PEDESTRIAN OVERCROSSING
Ped UC	PEDESTRIAN UNDERCROSSING
Perm Mtl	PERMEABLE MATERIAL

P continued

PG	PROFILE GRADE
PI	POINT OF INTERSECTION
PJP	PARTIAL JOINT PENETRATION
Pkwy	PARKWAY
ℙ,PL	PLATE
P/L	PROPERTY LINE
PM	POST MILE,
	TIME FROM NOON TO MIDNIGHT
PN	PAVING NOTCH
POC	POINT OF HORIZONTAL CURVE
POT	POINT OF TANGENT
POVC	POINT OF VERTICAL CURVE
PP	PIPE PILE,
	PLASTIC PIPE,
	POWER POLE
PPL	PREFORMED PERMEABLE LINER
PPP	PERFORATED PLASTIC PIPE
PRC	POINT OF REVERSE CURVE
PRF	PAVEMENT REINFORCING FABRIC
PRVC	POINT OF REVERSE VERTICAL CURVE
PS&E	PLANS, SPECIFICATIONS AND ESTIMATES
PS, P/S	PRESTRESSED
PSP	PERFORATED STEEL PIPE
PT	POINT OF TANGENCY
PVC	POLYVINYL CHLORIDE
Pvmt	PAVEMENT

Q

Qty	QUANTITY

R

R	RADIUS
R & D	REMOVE AND DISPOSE
R & S	REMOVE AND SALVAGE
R/C	RATE OF CHANGE
RCA	REINFORCED CONCRETE ARCH
RCB	REINFORCED CONCRETE BOX
RCP	REINFORCED CONCRETE PIPE
RCPA	REINFORCED CONCRETE PIPE ARCH
Rd	ROAD
Reinf	REINFORCED,
	REINFORCEMENT,
	REINFORCING
Rel	RELOCATE
Repl	REPLACEMENT
Ret	RETAINING
Rev	REVISED, REVISION
Rdwy	ROADWAY
RHMA	RUBBERIZED HOT MIX ASPHALT
Riv	RIVER
RM	ROAD-MIXED
RP	RADIUS POINT,
	REFERENCE POINT
RR	RAILROAD
RSP	ROCK SLOPE PROTECTION,
	REVISED STANDARD PLAN
Rt	RIGHT
Rte	ROUTE
RW	REDWOOD,
	RETAINING WALL
R/W	RIGHT OF WAY
Rwy	RAILWAY

S

S	SOUTH,
	SUPPLEMENT
SAE	STRUCTURE APPROACH EMBANKMENT
Salv	SALVAGE
SAPP	STRUCTURAL ALUMINUM PLATE PIPE
SB	SOUTHBOUND
SC	SAND CUSHION
SCSP	SLOTTED CORRUGATED STEEL PIPE
SD	STORM DRAIN
Sec	SECOND,
	SECTION
Sep	SEPARATION
SG	SUBGRADE
Shld	SHOULDER
Sht	SHEET
Sim	SIMILAR
℄	STATION LINE
SM	SELECTED MATERIAL
Spec	SPECIAL,
	SPECIFICATIONS
SPP	SLOTTED PLASTIC PIPE
SS	SLOPE STAKE
SSBM	STRAP AND SADDLE BRACKET METHOD
SSD	STRUCTURAL SECTION DRAIN
SSPA	STRUCTURAL STEEL PLATE ARCH
SSPP	STRUCTURAL STEEL PLATE PIPE
SSPPA	STRUCTURAL STEEL PLATE PIPE ARCH
SSRP	STEEL SPIRAL RIB PIPE
St	STREET
Sta	STATION
STBB	SINGLE THRIE BEAM BARRIER
Std	STANDARD
Str	STRUCTURE
Surf	SURFACING
SW	SIDEWALK,
	SOUND WALL
Swr	SEWER
Sym	SYMMETRICAL
S4S	SURFACE 4 SIDES

T

T	SEMI-TANGENT
Tan	TANGENT
TBB	THRIE BEAM BARRIER
Tbr	TIMBER
TC	TOP OF CURB
TCB	TRAFFIC CONTROL BOX
TCE	TEMPORARY CONSTRUCTION EASEMENT
Tel	TELEPHONE
Temp	TEMPORARY
TG	TOP OF GRADE
Tot	TOTAL
TP	TELEPHONE POLE
TPB	TREATED PERMEABLE BASE
TPM	TREATED PERMEABLE MATERIAL
Trans	TRANSITION

T continued

TS	TRANSVERSE,
	TRAFFIC SIGNAL,
	TUBULAR STEEL
Typ	TYPICAL

U

UC	UNDERCROSSING
UD	UNDERDRAIN
UG	UNDERGROUND
UON	UNLESS OTHERWISE NOTED
UP	UNDERPASS

V

V	VALVE,
	DESIGN SPEED
Var	VARIABLE,
	VARIES
VC	VERTICAL CURVE
VCP	VITRIFIED CLAY PIPE
Vert	VERTICAL
Via	VIADUCT
Vol	VOLUME

W

W	WEST,
	WIDTH
WB	WESTBOUND
WH	WEEP HOLE
WM	WIRE MESH
WS	WATER SURFACE
WSP	WELDED STEEL PIPE
Wt	WEIGHT
WV	WATER VALVE
WW	WINGWALL
WWLOL	WINGWALL LAYOUT LINE

X

X Sec	CROSS SECTION
Xing	CROSSING

Y

Yr	YEAR
Yrs	YEARS

Dist	COUNTY	ROUTE	POST MILES TOTAL PROJECT	SHEET No.	TOTAL SHEETS
11	SD	8	5.4/10.6, R20.0/R21.6	173	213

Grace M. Tsushima
REGISTERED CIVIL ENGINEER

July 19, 2013
PLANS APPROVAL DATE

REGISTERED PROFESSIONAL ENGINEER Grace M. Tsushima No. C49814 Exp. 9-30-14 CIVIL STATE OF CALIFORNIA

THE STATE OF CALIFORNIA OR ITS OFFICERS OR AGENTS SHALL NOT BE RESPONSIBLE FOR THE ACCURACY OR COMPLETENESS OF SCANNED COPIES OF THIS PLAN SHEET.

TO ACCOMPANY PLANS DATED 05-31-16

UNIT OF MEASUREMENT SYMBOLS:

Some of the symbols used in the project plan quantity tables and in the Bid Item List are:

TABLE A

SYMBOL USED	DEFINITIONS
ACRE	ACRE
CF	CUBIC FOOT
CY	CUBIC YARD
EA	EACH
GAL	GALLON
LB	POUND
LF	LINEAR FOOT
SQFT	SQUARE FOOT
SQYD	SQUARE YARD
STA	100 FEET
TAB	TABLET
TON	2,000 POUNDS

Some of the symbols used in the plans other than in the project plan quantity tables are:

TABLE B

SYMBOL USED	DEFINITIONS
ksi	KIPS PER SQUARE INCH
ksf	KIPS PER SQUARE FOOT
psi	POUNDS PER SQUARE INCH
psf	POUNDS PER SQUARE FOOT
lb/ft^3, pcf	POUNDS PER CUBIC FOOT
tsf	TONS PER SQUARE FOOT
mph, MPH *	MILES PER HOUR
ø	NOMINAL DIAMETER
oz	OUNCE
lb	POUND
kip	1,000 POUNDS
cal	CALORIE
ft	FOOT OR FEET
gal	GALLON

* For use on a sign panel only

STATE OF CALIFORNIA
DEPARTMENT OF TRANSPORTATION

ABBREVIATIONS (SHEET 2 OF 2)

NO SCALE

RSP A10B DATED JULY 19, 2013 SUPERSEDES STANDARD PLAN A10B DATED MAY 20, 2011 - PAGE 2 OF THE STANDARD PLANS BOOK DATED 2010.

REVISED STANDARD PLAN RSP A10B

2010 REVISED STANDARD PLAN RSP A10B

6-7-13

Dist	COUNTY	ROUTE	POST MILES TOTAL PROJECT	SHEET No.	TOTAL SHEETS
11	SD	8	5.4/10.6, R20.0/R21.6	174	213

REGISTERED CIVIL ENGINEER

July 19, 2013
PLANS APPROVAL DATE

REGISTERED PROFESSIONAL ENGINEER Roberta L. McLaughlin No. C40375 Exp. 3-31-15 CIVIL STATE OF CALIFORNIA

THE STATE OF CALIFORNIA OR ITS OFFICERS OR AGENTS SHALL NOT BE RESPONSIBLE FOR THE ACCURACY OR COMPLETENESS OF SCANNED COPIES OF THIS PLAN SHEET.

TO ACCOMPANY PLANS DATED 05-31-16

EXIT RAMP NEUTRAL AREA (GORE) TREATMENT

DETAIL 36

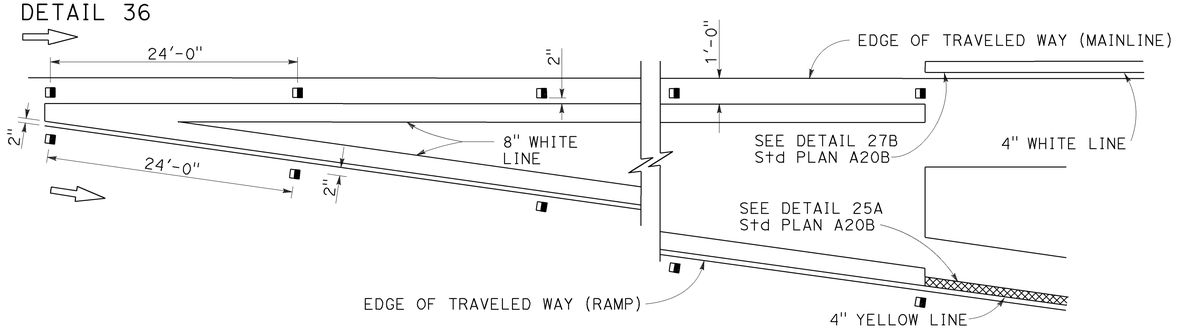

ENTRANCE RAMP NEUTRAL AREA (MERGE) TREATMENT

DETAIL 36A

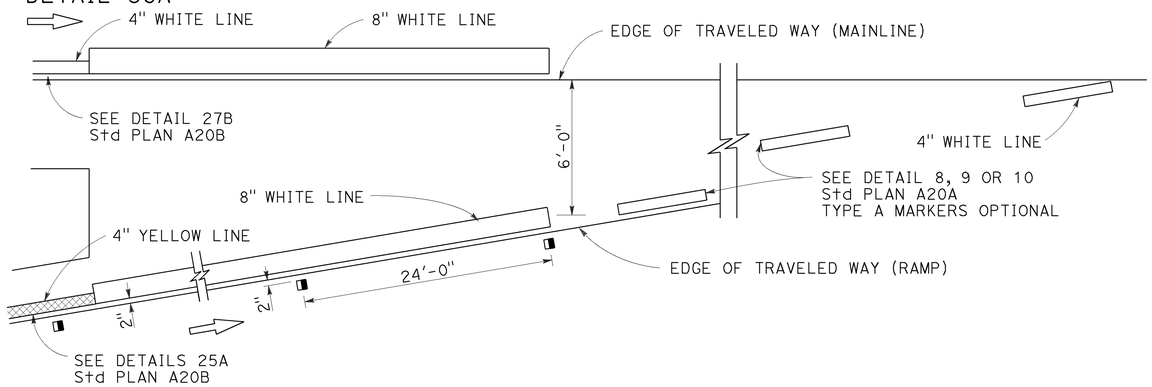

ENTRANCE RAMP NEUTRAL AREA (ACCELERATION LANE) TREATMENT

DETAIL 36B

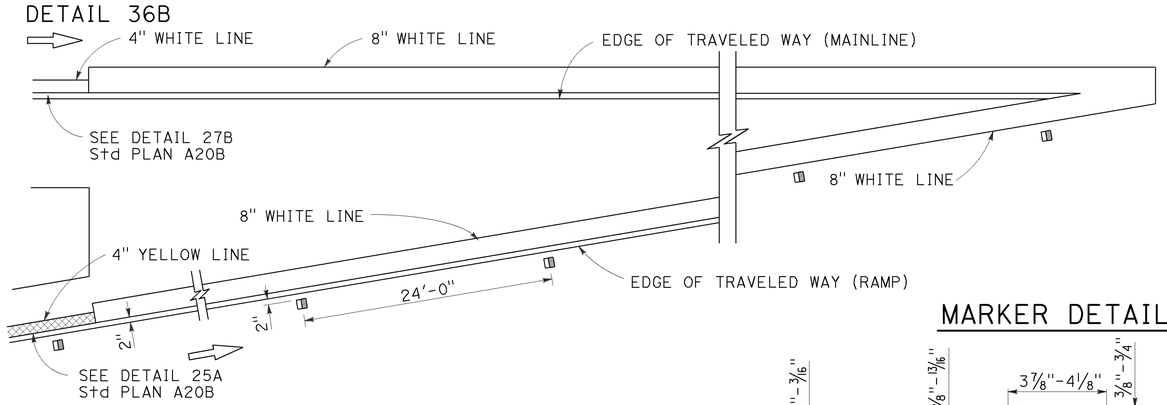

LANE DROP AT EXIT RAMPS

DETAIL 37

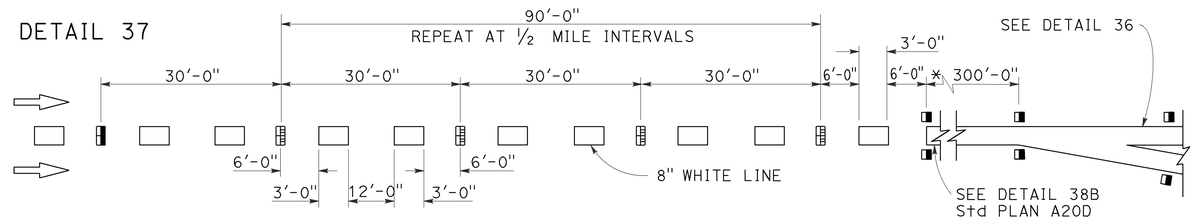

DETAIL 37A

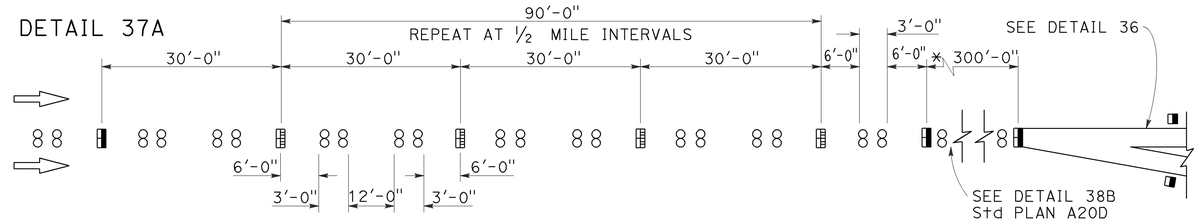

* The solid channelizing line shown may be omitted on short auxiliary lanes where weaving length is critical.

LANE DROP AT INTERSECTIONS

DETAIL 37B

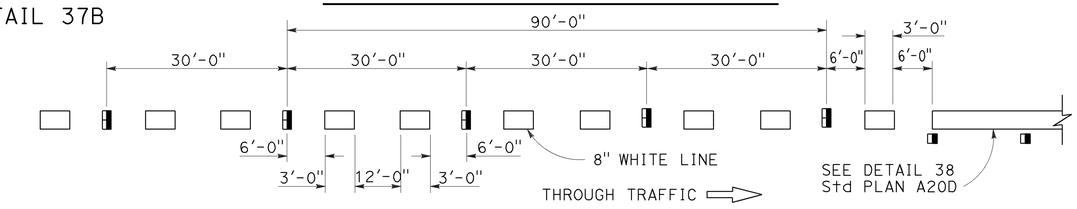

DETAIL 37C

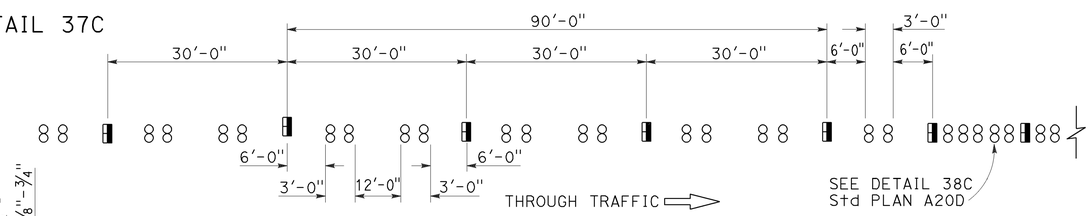

MARKER DETAILS

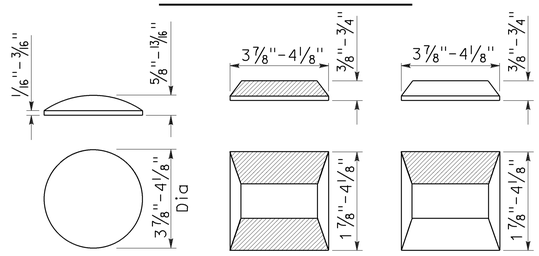

RETROREFLECTIVE FACE

LEGEND:

MARKERS

- ○ TYPE A WHITE NON-REFLECTIVE
- TYPE C RED-CLEAR RETROREFLECTIVE
- TYPE G ONE-WAY CLEAR RETROREFLECTIVE

STATE OF CALIFORNIA
DEPARTMENT OF TRANSPORTATION

PAVEMENT MARKERS AND TRAFFIC LINE TYPICAL DETAILS

NO SCALE

RSP A20C DATED JULY 19, 2013 SUPERSEDES STANDARD PLAN A20C DATED MAY 20, 2011 - PAGE 11 OF THE STANDARD PLANS BOOK DATED 2010.

REVISED STANDARD PLAN RSP A20C

2010 REVISED STANDARD PLAN RSP A20C

4-29-13

Dist	COUNTY	ROUTE	POST MILES TOTAL PROJECT	SHEET No.	TOTAL SHEETS
11	SD	8	5.4/10.6, R20.0/R21.6	175	213

Randell D. Hiatt
REGISTERED CIVIL ENGINEER

October 30, 2015
PLANS APPROVAL DATE

REGISTERED PROFESSIONAL ENGINEER
Randell D. Hiatt
No. C50200
Exp. 6-30-17
CIVIL
STATE OF CALIFORNIA

THE STATE OF CALIFORNIA OR ITS OFFICERS OR AGENTS SHALL NOT BE RESPONSIBLE FOR THE ACCURACY OR COMPLETENESS OF SCANNED COPIES OF THIS PLAN SHEET.

TO ACCOMPANY PLANS DATED 05-31-16

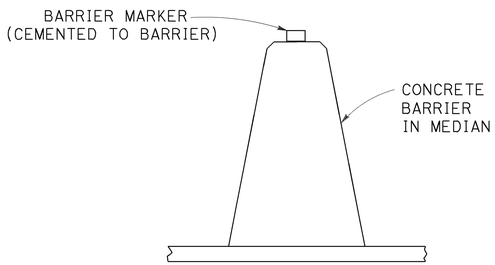

CONCRETE BARRIER TYPE 60 DELINEATION

See Note 5

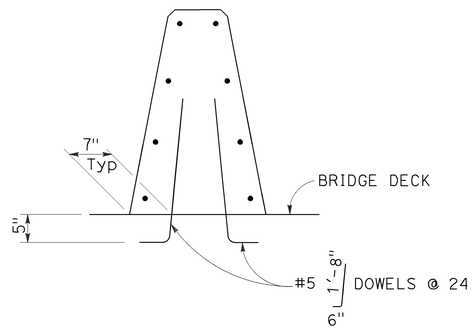

CONCRETE BARRIER TYPE 60A

Details similar to Type 60 except as noted.

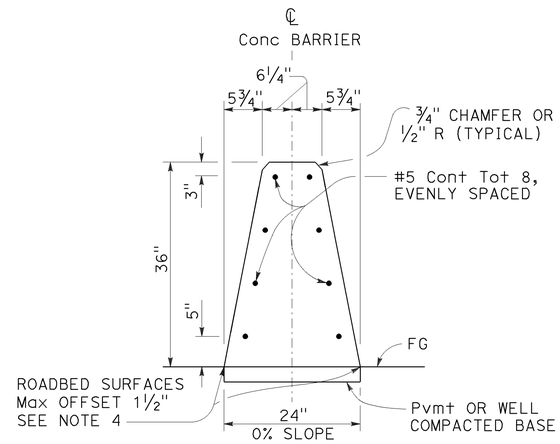

CONCRETE BARRIER TYPE 60

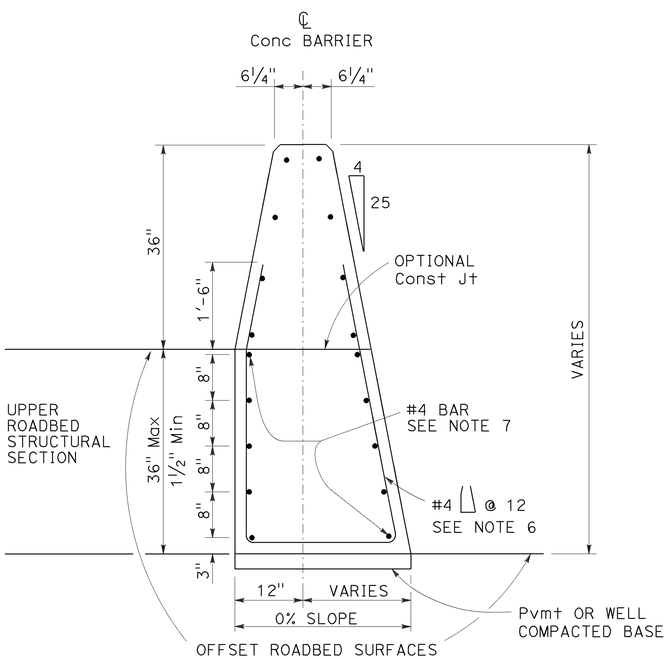

CONCRETE BARRIER TYPE 60C

Details similar to Type 60 except as noted.
Use concrete barrier end anchor when necessary.
36" roadbed surfaces offset shown.

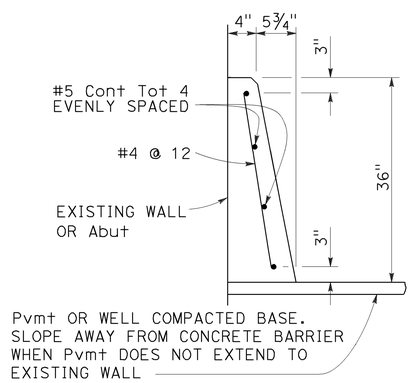

CONCRETE BARRIER TYPE 60D

NOTES:

1. See Standard Plan A76B for details of Concrete Barrier Type 60 end anchors, connection to structures and transitions to Concrete Barrier Type 50 and Concrete Barrier Type 60S.
2. See Revised Standard Plan RSP A76C for Concrete Barrier Type 60 transitions at bridge column and sign pedestals.
3. Where glare screen is required on Concrete Barrier Type 60, use Concrete Barrier Type 60G.
4. Where roadbed offset is greater than 1½", see Concrete Barrier Type 60C.
5. See Project Plans for barrier delineation locations.
6. Reinforcing stirrup not required for roadbed offsets less than 1'-0".
7. For roadbed surfaces offset greater than 1½" and less than or equal to 3", no reinforcement required. For roadbed surfaces offset greater than 3" and less than or equal to 8", use two #4 Reinf at 3" above the lower roadbed surface. For roadbed surfaces offset greater than 8" and less than or equal to 12", use two #4 Reinf at 3" above the lower roadbed surface and two #4 Reinf at 8" above the lower roadbed surface. For roadbed surfaces offset greater than 12" and less than or equal to 36", use two #4 Reinf at 3" above the lower roadbed surface and two #4 Reinf at every 8" increment vertical spacing above the first two #4 Reinf.

STATE OF CALIFORNIA
DEPARTMENT OF TRANSPORTATION

CONCRETE BARRIER TYPE 60

NO SCALE

RSP A76A DATED OCTOBER 30, 2015 SUPERSEDES STANDARD PLAN A76A DATED MAY 20, 2011 - PAGE 34 OF THE STANDARD PLANS BOOK DATED 2010.

REVISED STANDARD PLAN RSP A76A

2010 REVISED STANDARD PLAN RSP A76A

10-7-15

Dist	COUNTY	ROUTE	POST MILES TOTAL PROJECT	SHEET No.	TOTAL SHEETS
11	SD	8	5.4/10.6, R20.0/R21.6	176	213

Randell D. Hiatt
REGISTERED CIVIL ENGINEER

October 30, 2015
PLANS APPROVAL DATE

REGISTERED PROFESSIONAL ENGINEER Randell D. Hiatt No. C50200 Exp. 6-30-17 CIVIL STATE OF CALIFORNIA

THE STATE OF CALIFORNIA OR ITS OFFICERS OR AGENTS SHALL NOT BE RESPONSIBLE FOR THE ACCURACY OR COMPLETENESS OF SCANNED COPIES OF THIS PLAN SHEET.

TO ACCOMPANY PLANS DATED 05-31-16

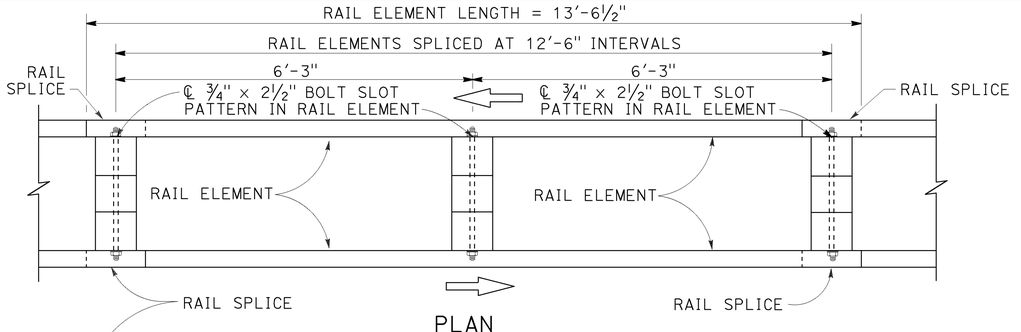

PLAN

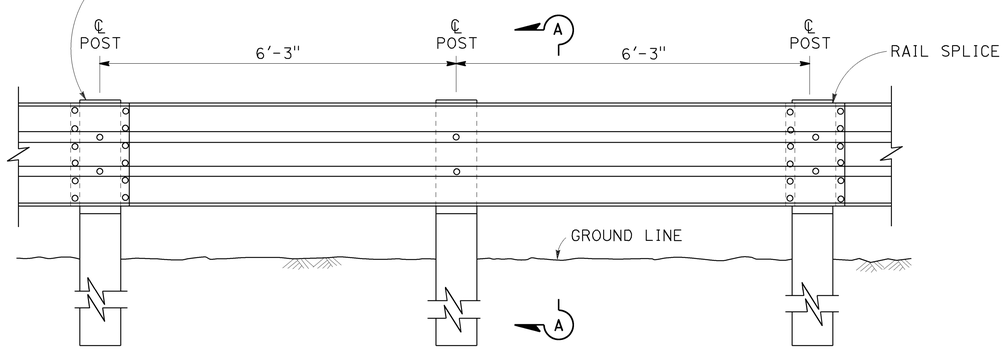

ELEVATION

DOUBLE THRIE BEAM BARRIER

(Wood post and blocks)
See Note 1

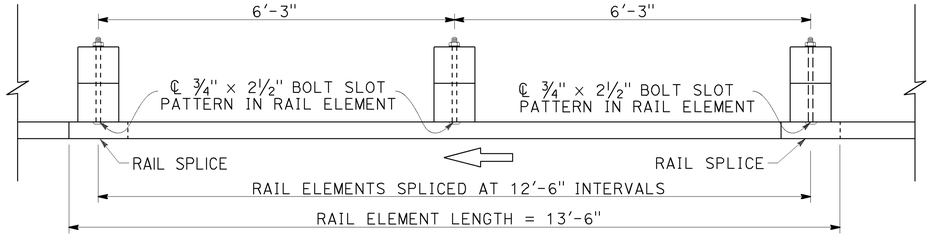

PLAN

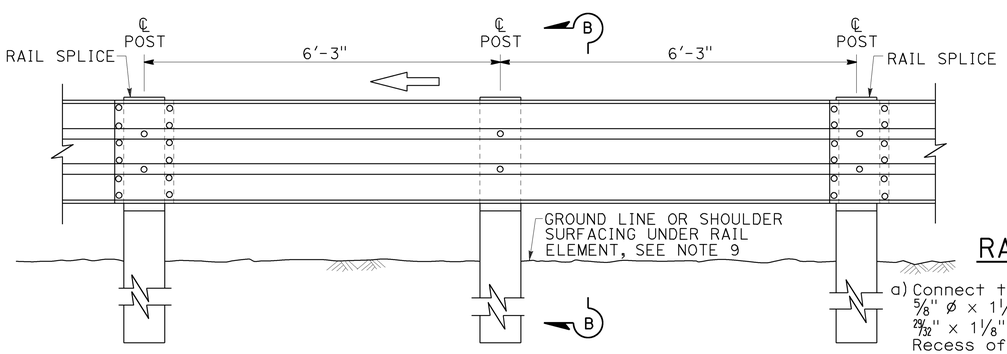

ELEVATION

SINGLE THRIE BEAM BARRIER

(Wood post and blocks)
See Note 1

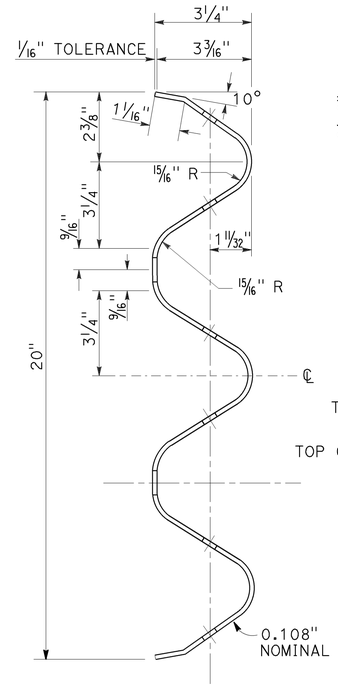

SECTION THRU RAIL ELEMENT

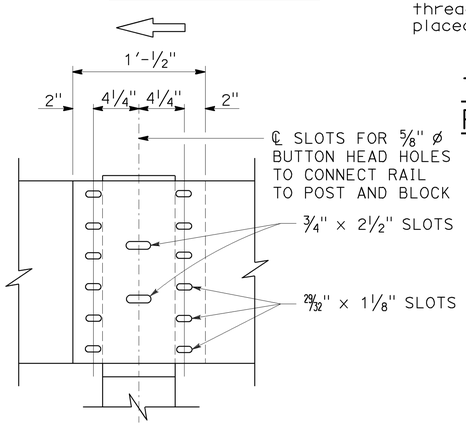

ELEVATION

RAIL ELEMENT SPLICE DETAIL

a) Connect the overlapped ends of the thrie beam rail elements with ⅝" ø x 1¼" button head oval shoulder bolts inserted into the 29/32" x 1⅛" slots and bolted together with ⅝" ø recessed hex nuts. Recess of hex nut points toward rail element. A total of 12 bolts and nuts are to be used at each rail splice connection.

b) The ends of the rail elements are to be overlapped in the direction of traffic (see details).

c) Where end cap is to be attached to the end of a rail element, a total of 4 of the above described splice bolts and nuts are to be used. Where a return cap is to be attached to the ends of rail elements, a total of 8 of the above described splice bolts and nuts are to be used.

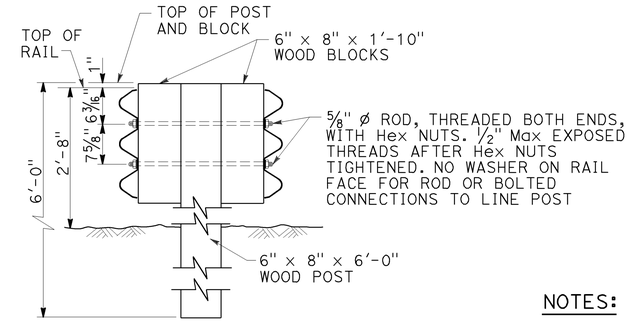

SECTION A-A

TYPICAL WOOD LINE POST INSTALLATION

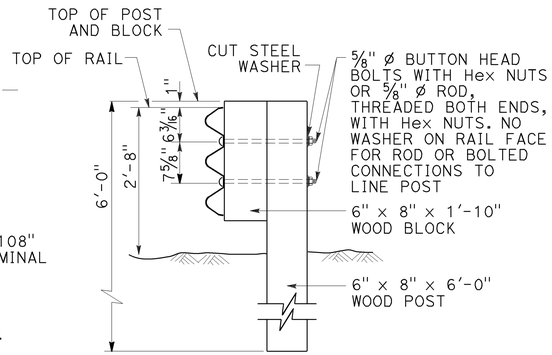

Where bolts are used, install so that the threaded end of the bolts and nuts are placed away from traffic side of rail.

SECTION B-B

TYPICAL WOOD LINE POST INSTALLATION

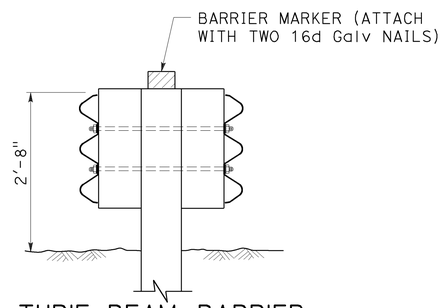

THRIE BEAM BARRIER DELINEATION

See Note 8

NOTES:

1. For details of steel post thrie beam barrier, see Standard Plan A78B.
2. For details of standard hardware, posts and blocks used to construct thrie beam barrier, see Standard Plan A78C1 and Revised Standard Plan RSP A78C2.
3. Thrie beam barrier post spacing to be 6'-3" center to center, except as otherwise noted.
4. Top of barrier rail to be 2'-8" above ground line or shoulder surfacing under the rail element.
5. For barrier end treatments and barrier connections, see Standard Plans A78E3 and A78G, and Revised Standard Plans RSP A78E1, RSP A78E2 RSP A77Q1, RSP A77Q2 and RSP A78H.
6. For connection to Concrete Barrier (Type 60), see Standard Plans A78I.
7. For details of thrie beam barrier on bridge see Standard Plan A78D2. For details of thrie beam barrier at fixed object, see Revised Standard Plan RSP A78D1.
8. See Project Plans for barrier delineation locations. Spacing of barrier markers to match spacing of raised pavement markers on adjacent median edgeline pavement delineation.
9. Install posts in soil.

STATE OF CALIFORNIA
DEPARTMENT OF TRANSPORTATION

THRIE BEAM BARRIER STANDARD BARRIER RAILING SECTION (WOOD POST WITH WOOD BLOCK)

NO SCALE

RSP A78A DATED OCTOBER 30, 2015 SUPERSEDES RSP A78A DATED JULY 19, 2013 AND STANDARD PLAN A78A DATED MAY 20, 2011 - PAGE 89 OF THE STANDARD PLANS BOOK DATED 2010.

REVISED STANDARD PLAN RSP A78A

2010 REVISED STANDARD PLAN RSP A78A

9-28-15

Dist	COUNTY	ROUTE	POST MILES TOTAL PROJECT	SHEET No.	TOTAL SHEETS
11	SD	8	5.4/10.6, R20.0/R21.6	177	213

Randell D. Hiatt
REGISTERED CIVIL ENGINEER

July 19, 2013
PLANS APPROVAL DATE

REGISTERED PROFESSIONAL ENGINEER
Randell D. Hiatt
No. C50200
Exp. 6-30-15
CIVIL
STATE OF CALIFORNIA

THE STATE OF CALIFORNIA OR ITS OFFICERS OR AGENTS SHALL NOT BE RESPONSIBLE FOR THE ACCURACY OR COMPLETENESS OF SCANNED COPIES OF THIS PLAN SHEET.

TO ACCOMPANY PLANS DATED 05-31-16

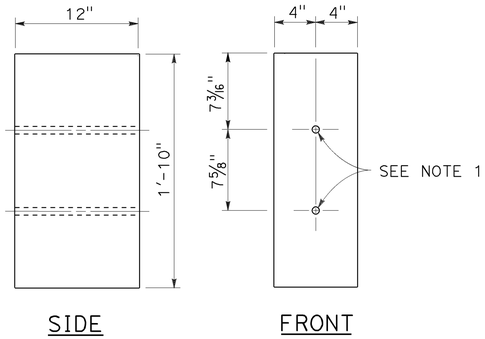

8" x 12"
WOOD BLOCK

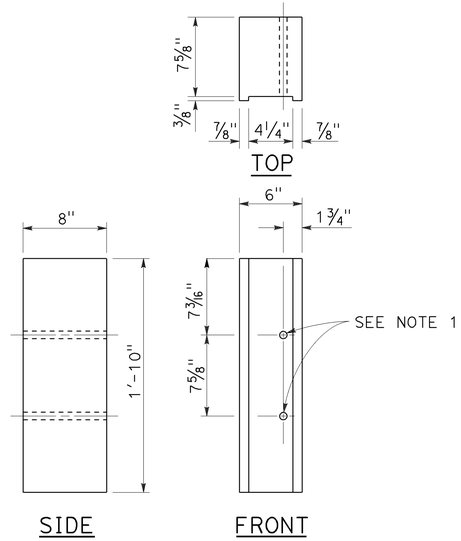

6" x 8"
NOTCHED WOOD BLOCK
See Notes 3 and 5

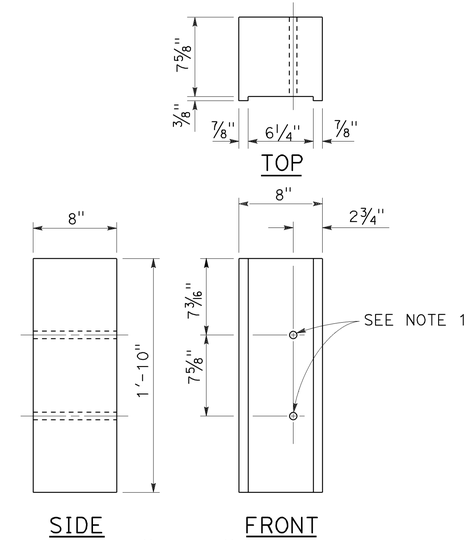

8" x 8"
NOTCHED WOOD BLOCK
See Notes 4 and 5

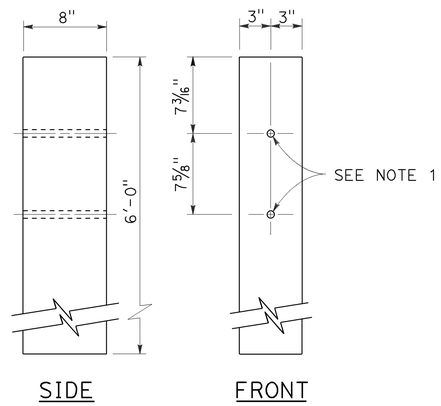

6" x 8"
WOOD POST

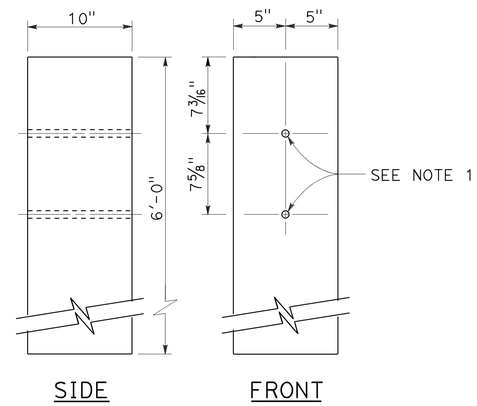

10" x 10"
WOOD POST

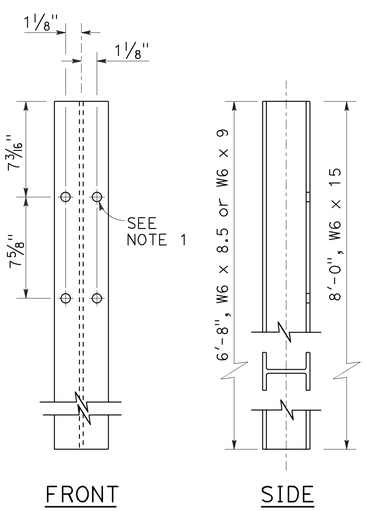

STEEL POST
W6 x 9 or W6 x 8.5 and W6 x 15

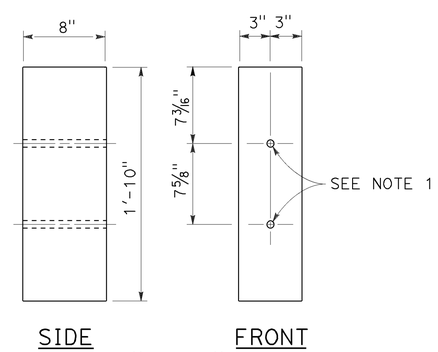

6" x 8"
WOOD BLOCK

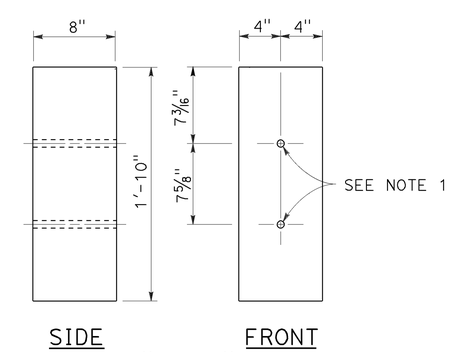

8" x 8"
WOOD BLOCK

NOTES:

1. All holes in steel post to be 13/16" Dia maximum. Holes in wood posts and wood blocks to be 3/4" Dia ±1/16".
2. Dimensions shown for wood post are nominal.
3. For use with W6 x 8.5 or W6 x 9 steel post.
4. For use with W6 x 15 steel post.
5. Notched face of block faces steel post.

STATE OF CALIFORNIA
DEPARTMENT OF TRANSPORTATION

THRIE BEAM BARRIER POST AND BLOCK DETAILS

NO SCALE

RSP A78C2 DATED JULY 19, 2013 SUPERSEDES STANDARD PLAN A78C2 DATED MAY 20, 2011 - PAGE 92 OF THE STANDARD PLANS BOOK DATED 2010.

REVISED STANDARD PLAN RSP A78C2

2010 REVISED STANDARD PLAN RSP A78C2

7-3-13

Dist	COUNTY	ROUTE	POST MILES TOTAL PROJECT	SHEET No.	TOTAL SHEETS
11	SD	8	5.4/10.6, R20.0/R21.6	178	213

Randell D. Hiatt
REGISTERED CIVIL ENGINEER

July 19, 2013
PLANS APPROVAL DATE

REGISTERED PROFESSIONAL ENGINEER
Randell D. Hiatt
No. C50200
Exp. 6-30-15
CIVIL
STATE OF CALIFORNIA

THE STATE OF CALIFORNIA OR ITS OFFICERS OR AGENTS SHALL NOT BE RESPONSIBLE FOR THE ACCURACY OR COMPLETENESS OF SCANNED COPIES OF THIS PLAN SHEET.

TO ACCOMPANY PLANS DATED 05-31-16

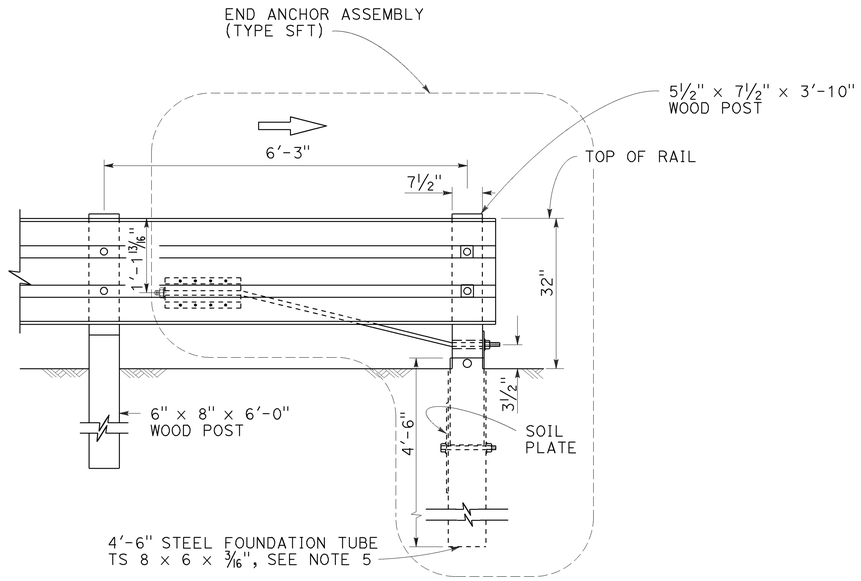

END ANCHOR FOR TRAFFIC DEPARTURE END OF SINGLE THRIE BEAM BARRIER

(For one-way roadways)
See Note 1

NOTES:

1. For additional details of End Anchor Assembly (Type SFT), see Revised Standard Plan RSP A77S1.
2. The "W" beam to thrie beam section is only required where the terminal system connection to the thrie beam barrier is a "W" beam rail.
3. In-line Terminal System End Treatments are used where site conditions will not accommodate a flared end treatment. The type of terminal system to be used will be shown on the Project Plans. Do not use a Caltrans approved 31" end treatment.
4. A Caltrans approved crash cushion should be used in place of a terminal system end treatment where the backside of the railing would be exposed to traffic.
5. A 6'-0" length steel foundation tube, TS 8 x 6 x 3/16, without a soil plate, may be furnished and installed in place of the 4'-6" length steel foundation tube and soil plate shown. Minimum embedment of the 6'-0" length tube shall be 5'-9". A 5/8" Ø hex head bolt and nut shall be installed in the hole in the 6'-0" length tube to keep the wood postfrom dropping into the tube.

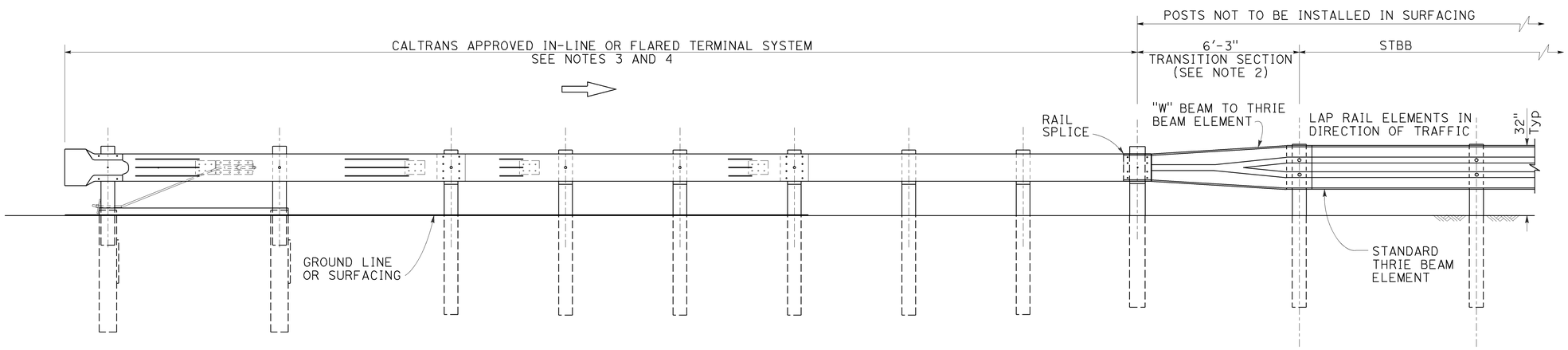

ELEVATION

END TREATMENT FOR TRAFFIC APPROACH END OF SINGLE THRIE BEAM BARRIER

STATE OF CALIFORNIA
DEPARTMENT OF TRANSPORTATION

SINGLE THRIE BEAM BARRIER END ANCHOR ASSEMBLY AND TERMINAL SYSTEM END TREATMENT

NO SCALE

RSP A78E1 DATED JULY 19, 2013 SUPERSEDES STANDARD PLAN A78E1
DATED MAY 20, 2011 - PAGE 99 OF THE STANDARD PLANS BOOK DATED 2010.

REVISED STANDARD PLAN RSP A78E1

2010 REVISED STANDARD PLAN RSP A78E1

7-16-13

Dist	COUNTY	ROUTE	POST MILES TOTAL PROJECT	SHEET No.	TOTAL SHEETS
11	SD	8	5.4/10.6, R20.0/R21.6	179	213

REGISTERED CIVIL ENGINEER

January 15, 2016
PLANS APPROVAL DATE

REGISTERED PROFESSIONAL ENGINEER Michael Janzen No. 44788 Exp. 3-31-16 CIVIL STATE OF CALIFORNIA

THE STATE OF CALIFORNIA OR ITS OFFICERS OR AGENTS SHALL NOT BE RESPONSIBLE FOR THE ACCURACY OR COMPLETENESS OF SCANNED COPIES OF THIS PLAN SHEET.

TO ACCOMPANY PLANS DATED 05-31-16

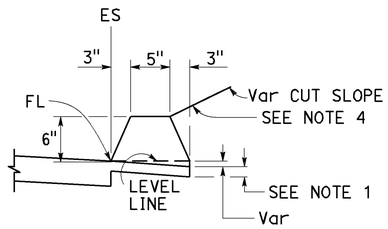

TYPE A
See Notes 3 and 5

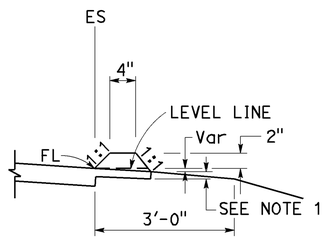

TYPE C

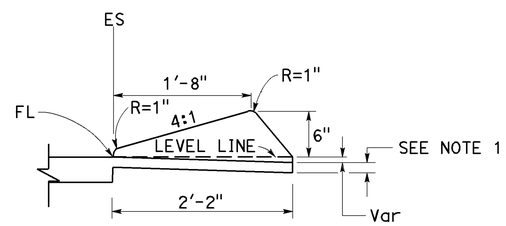

TYPE D

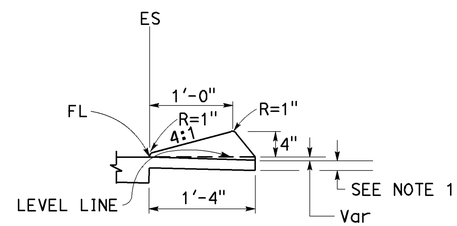

TYPE E

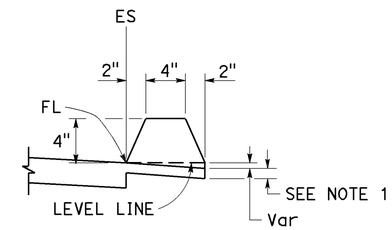

TYPE F
See Note 5

DIKES

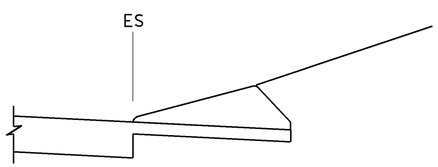

CASE C-1
Cut Slope

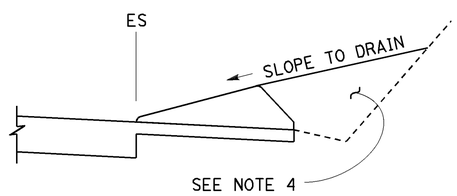

CASE C-2
Cut Slope

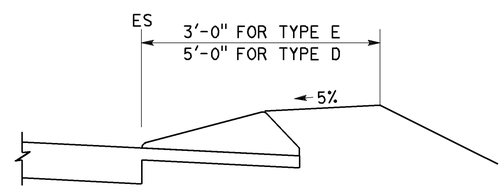

CASE F

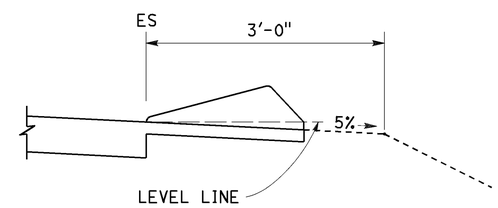

CASE R
See Note 2

TYPE D AND E BACKFILL DETAILS

NOTES:

1. For HMA shoulders only, extend top layer of HMA placed on the shoulder under dike with no joint at the ES. For projects with OGFC shoulders, do not extend OGFC under dike. See project plans for modified dike detail.
2. Case R applies to retrofit only projects where restrictive conditions do not provide enough width for Case F backfill.
3. Type A dike only to be used where restrictive slope conditions do not provide enough width to use Type D or Type E dike.
4. Fill and compact with excavated material to top of dike.
5. Use Type A or F dike, where dike is required with guardrail installations. See Revised Standard Plan RSP A77N4 for dike positioning details. See Revised Standard Plan RSP A77N3 for hinge point offsets with guardrail.

DIKE QUANTITIES

TYPE	CUBIC YARDS PER LINEAR FOOT
A	0.0135
C	0.0038
D	0.0293
E	0.0130
F	0.0066

Quantities based on 5% cross slope.

STATE OF CALIFORNIA
DEPARTMENT OF TRANSPORTATION

HOT MIX ASPHALT DIKES

NO SCALE

RSP A87B DATED JANUARY 15, 2016 SUPERSEDES RSP A87B DATED JULY 19, 2013 AND STANDARD PLAN A87B DATED MAY 20, 2011 - PAGE 120 OF THE STANDARD PLANS BOOK DATED 2010.

REVISED STANDARD PLAN RSP A87B

2010 REVISED STANDARD PLAN RSP A87B

11-17-15

Dist	COUNTY	ROUTE	POST MILES TOTAL PROJECT	SHEET No.	TOTAL SHEETS
11	SD	8	5.4/10.6, R20.0/R21.6	180	213

Gregory A. Balzer
LICENSED LANDSCAPE ARCHITECT

July 19, 2013
PLANS APPROVAL DATE

THE STATE OF CALIFORNIA OR ITS OFFICERS OR AGENTS SHALL NOT BE RESPONSIBLE FOR THE ACCURACY OR COMPLETENESS OF SCANNED COPIES OF THIS PLAN SHEET.

LICENSED LANDSCAPE ARCHITECT — Gregory A. Balzer 2576 — 02-28-15 Renewal Date — 7-19-13 Date — STATE OF CALIFORNIA

TO ACCOMPANY PLANS DATED 05-31-16

A

AB	AGGREGATE BASE
ABS	ACRYLONITRILE-BUTADIENE-STYRENE
AC	ASPHALT CONCRETE
ACC	ARMOR-CLAD CONDUCTORS
Adj	ADJACENT/ADJUSTABLE
AIC	AUXILIARY IRRIGATION CONTROLLER
Alt	ALTERNATIVE
AMEND	AMENDMENT
ARV	AIR RELEASE VALVE
AUTO	AUTOMATIC
AUX	AUXILIARY
AVB	ATMOSPHERIC VACUUM BREAKER

B

B&B	BALLED AND BURLAPPED
B/B	BRASS/BRONZE
B/B/PL	BRASS/BRONZE/PLASTIC
B/PL	BRASS/PLASTIC
BFM	BONDED FIBER MATRIX
Bit Ctd	BITUMINOUS COATED
BP	BOOSTER PUMP
BPA	BACKFLOW PREVENTER ASSEMBLY
BPE	BACKFLOW PREVENTER ENCLOSURE
BV	BALL VALVE

C

C	CONDUIT
CAP	CORRUGATED ALUMINUM PIPE
CARV	COMBINATION AIR RELEASE VALVE
CB	COUPLING BAND
CCA	CAM COUPLER ASSEMBLY
CEC	CONTROLLER ENCLOSURE CABINET
CHDPE	CORRUGATED HIGH DENSITY POLYETHYLENE
CL	CHAIN LINK
CNC	CONTROL AND NEUTRAL CONDUCTORS
Conc	CONCRETE
CP	COPPER PIPE
CS	COMPOST SOCK
CSP	CORRUGATED STEEL PIPE
CST	CENTER STRIP
CV	CHECK VALVE

D

Dia	DIAMETER
DIP	DUCTILE IRON PIPE
DIT	DRIP IRRIGATION TUBING
DG	DECOMPOSED GRANITE
DN	DIAMETER NOMINAL
DVA	DRIP VALVE ASSEMBLY

E

EC	EROSION CONTROL
ECTC	EROSION CONTROL TECHNOLOGY COUNCIL
Elect	ELECTRIC/ELECTRICAL
Elev	ELEVATION
ELL	ELBOW
ENCL	ENCLOSURE
EP	EDGE OF PAVEMENT
ES	EDGE OF SHOULDER
EST	END STRIP
ESTB	ESTABLISHMENT
ETW	EDGE OF TRAVELED WAY

F

F	FULL CIRCLE
F/P	FULL/PART CIRCLE
FCV	FLOW CONTROL VALVE
FERT	FERTILIZER
FG	FINISHED GRADE
FH	FLEXIBLE HOSE
FIPT	FEMALE IRON PIPE THREAD
FIS	FERTILIZER INJECTOR SYSTEM
FL	FLOW LINE
FR	FIBER ROLL
FS	FLOW SENSOR
FSC	FLOW SENSOR CABLE
FV	FLUSH VALVE

G

Galv	GALVANIZED
GARV	GARDEN VALVE
GARVA	GARDEN VALVE ASSEMBLY
GM	GRAVEL MULCH
GPH	GALLONS PER HOUR
GPM	GALLONS PER MINUTE
GSP	GALVANIZED STEEL PIPE
GV	GATE VALVE

H

H	HALF CIRCLE
HDPE	HIGH DENSITY POLYETHYLENE
HP	HORSEPOWER/HINGE POINT
HPL	HIGH PRESSURE LINE
Hwy	HIGHWAY

I

IC	IRRIGATION CONTROLLER
ICC	IRRIGATION CONTROLLER(S) IN CONTROLLER ENCLOSURE CABINET
ID	INSIDE DIAMETER
IFS	IRRIGATION FILTRATION SYSTEM
IPS	IRON PIPE SIZE
IPT	IRON PIPE THREAD
Irr	IRRIGATION

L

L	LENGTH

M

Max	MAXIMUM
MBGR	METAL BEAM GUARD RAILING
MCV	MANUAL CONTROL VALVE
MIC	MASTER IRRIGATION CONTROLLER
Min	MINIMUM
MIPT	MALE IRON PIPE THREAD
Misc	MISCELLANEOUS
Mtl	MATERIAL
MVP	MAINTENANCE VEHICLE PULLOUT

N

NCN	NO COMMON NAME
NL	NOZZLE LINE
No.	NUMBER
NPT	NATIONAL PIPE THREAD

O

O/C	ON CENTER
OD	OUTSIDE DIAMETER
OL	OVERLAP

P

P	PART CIRCLE
PB	PULL BOX
PCC	PORTLAND CEMENT CONCRETE
PE	POLYETHYLENE
Pkt	PACKET
PL	PLASTIC
PLS	PURE LIVE SEED
PLT	PLANT/PLANTING
PLT ESTB	PLANT ESTABLISHMENT
PM	POST MILE
PR	PRESSURE RATED
PRLV	PRESSURE RELIEF VALVE
PRV	PRESSURE REGULATING VALVE
PVC	POLYVINYL CHLORIDE
Pvmt	PAVEMENT

Q

Q	QUARTER CIRCLE
QCV	QUICK COUPLING VALVE

R

R	RADIUS
RCP	REINFORCED CONCRETE PIPE
RCV	REMOTE CONTROL VALVE
RCVM	REMOTE CONTROL VALVE (MASTER)
RCVMF	REMOTE CONTROL VALVE (MASTER) W/FLOW SENSOR
RCVP	REMOTE CONTROL VALVE W/PRESSURE REGULATOR
RCW	RECYCLED WATER
RECP	ROLLED EROSION CONTROL PRODUCT
REQ	REQUIRED
RICS	REMOTE IRRIGATION CONTROL SYSTEM
R/W	RIGHT OF WAY

S

S	SLIP
SCH	SCHEDULE
SF	STATE-FURNISHED
Shld	SHOULDER
Sq	SQUARE
SST	SIDE STRIP
Sta	STATION
Std	STANDARD
SW	SIDEWALK/SOUND WALL

T

T	THIRD CIRCLE/THREAD
TLS	TRUCK LOADING STANDPIPE
TQ	THREE QUARTER CIRCLE
TRM	TURF REINFORCEMENT MAT
TT	TWO-THIRDS CIRCLE
TWSA	TREE WELL SPRINKLER ASSEMBLY
Typ	TYPICAL

U

UG	UNDERGROUND

W

W	WIDTH
W/	WITH
WM	WATER METER
WS	WYE STRAINER
WSA	WYE STRAINER ASSEMBLY
WSP	WELDED STEEL PIPE
WWM	WELDED WIRE MESH

NOTE:

For additional abbreviations, see Standard Plans A10A and A10B.

STATE OF CALIFORNIA
DEPARTMENT OF TRANSPORTATION

LANDSCAPE AND EROSION CONTROL ABBREVIATIONS

NO SCALE

RSP H1 DATED JULY 19, 2013 SUPERSEDES STANDARD PLAN H1 DATED MAY 20, 2011 - PAGE 218 OF THE STANDARD PLANS BOOK DATED 2010.

REVISED STANDARD PLAN RSP H1

2010 REVISED STANDARD PLAN RSP H1

Dist	COUNTY	ROUTE	POST MILES TOTAL PROJECT	SHEET No.	TOTAL SHEETS
11	SD	8	5.4/10.6, R20.0/R21.6	181	213

LICENSED LANDSCAPE ARCHITECT

November 15, 2013
PLANS APPROVAL DATE

LICENSED LANDSCAPE ARCHITECT Gregory A. Balzer 2576 STATE OF CALIFORNIA
02-28-15 (Renewal) Date
11-15-13 Date

THE STATE OF CALIFORNIA OR ITS OFFICERS OR AGENTS SHALL NOT BE RESPONSIBLE FOR THE ACCURACY OR COMPLETENESS OF SCANNED COPIES OF THIS PLAN SHEET.

TO ACCOMPANY PLANS DATED 05-31-16

2010 REVISED STANDARD PLAN RSP H2

EXISTING	NEW	ITEM DESCRIPTION
		WATER METER (WM)
		BACKFLOW PREVENTER ASSEMBLY (BPA)
		BACKFLOW PREVENTER ENCLOSURE (BPE)
		BOOSTER PUMP (BP)
		TRUCK LOADING STANDPIPE (TLS)
	FS	FLOW SENSOR (FS)
		MASTER IRRIGATION CONTROLLER (MIC)
		AUXILIARY IRRIGATION CONTROLLER (AIC)
		IRRIGATION CONTROLLER (IC) IRRIGATION CONTROLLER (IC) (BATTERY) IRRIGATION CONTROLLER (IC) (SOLAR) IRRIGATION CONTROLLER (IC) (TWO WIRE) IRRIGATION CONTROLLER(S) IN CONTROLLER ENCLOSURE CABINET (ICC)
acc	ACC	ARMOR-CLAD CONDUCTORS (ACC)
cnc	CNC	CONTROL AND NEUTRAL CONDUCTORS (CNC)
		IRRIGATION CONDUIT
		EXTEND IRRIGATION CONDUIT
dip	DIP	DUCTILE IRON PIPE (SUPPLY LINE) (MAIN) (DIP)
		GALVANIZED STEEL PIPE (SUPPLY LINE) (MAIN) (GSP)
		GALVANIZED STEEL PIPE (SUPPLY LINE) (LATERAL) (GSP)
		PLASTIC PIPE (SUPPLY LINE) (MAIN)
		PLASTIC PIPE (SUPPLY LINE) (LATERAL)
cp	CP	COPPER PIPE (SUPPLY LINE)
dit	DIT	DRIP IRRIGATION TUBING
		REMOTE CONTROL VALVE (RCV) REMOTE CONTROL VALVE (MASTER) (RCVM) REMOTE CONTROL VALVE (MASTER) W/FLOW METER (RCVMF)
P	P	REMOTE CONTROL VALVE W/PRESSURE REGULATOR (RCVP)
		EXISTING MANUAL CONTROL VALVE (MCV)
V	V	DRIP VALVE ASSEMBLY (DVA)
Y	Y	WYE STRAINER ASSEMBLY (WSA)

EXISTING	NEW	ITEM DESCRIPTION
		GATE VALVE (GV)
		BALL VALVE (BV)
		QUICK COUPLING VALVE (QCV)
		CAM COUPLER ASSEMBLY (CCA)
		GARDEN VALVE ASSEMBLY (GARVA)
		PRESSURE REGULATING VALVE (PRV)
		PRESSURE RELIEF VALVE (PRLV)
		FLOW CONTROL VALVE (FCV)
		COMBINATION AIR RELEASE VALVE (CARV)
		CHECK VALVE (CV)
		FLUSH VALVE (FV)
		EXISTING NOZZLE LINE W/TURNING UNION
		EXISTING IRRIGATION SYSTEM
		EXISTING IRRIGATION SYSTEM TO BE REMOVED
		CHAIN LINK GATE
		QUICK COUPLING VALVE W/SPRINKLER PROTECTOR
3	3	SPRINKLER W/SPRINKLER PROTECTOR
	C	CONNECT TO EXISTING SYSTEM
		CAP
		CAP EXISTING
	\\\FR\\\	FIBER ROLL
	\\\CS\\\	COMPOST SOCK

RCV SIZE
IRRIGATION CONTROLLER
CONTROLLER STATION
VALVE IN PARALLEL (IF APPLICABLE)
GPM
QUANTITY OF SPRINKLERS (WHEN SHOWN)

* 2½"-A-2b-40-60

VALVE CODE

* VALVE CODES FOR EXISTING VALVES ARE SHOWN IN A DASHED ENCLOSURE.

STATE OF CALIFORNIA
DEPARTMENT OF TRANSPORTATION

LANDSCAPE AND EROSION CONTROL SYMBOLS

NO SCALE

RSP H2 DATED NOVEMBER 15, 2013 SUPERSEDES RSP H2 DATED JULY 19, 2013 AND STANDARD PLAN H2 DATED MAY 20, 2011 - PAGE 219 OF THE STANDARD PLANS BOOK DATED 2010.

REVISED STANDARD PLAN RSP H2

10-9-13

Dist	COUNTY	ROUTE	POST MILES TOTAL PROJECT	SHEET No.	TOTAL SHEETS
11	SD	8	5.4/10.6, R20.0/R21.6	182	213

LICENSED LANDSCAPE ARCHITECT

July 19, 2013
PLANS APPROVAL DATE

THE STATE OF CALIFORNIA OR ITS OFFICERS OR AGENTS SHALL NOT BE RESPONSIBLE FOR THE ACCURACY OR COMPLETENESS OF SCANNED COPIES OF THIS PLAN SHEET.

LICENSED LANDSCAPE ARCHITECT — Gregory A. Balzer — 2576 — 02-28-15 Renewal Date — 7-19-13 Date — STATE OF CALIFORNIA

TO ACCOMPANY PLANS DATED 05-31-16

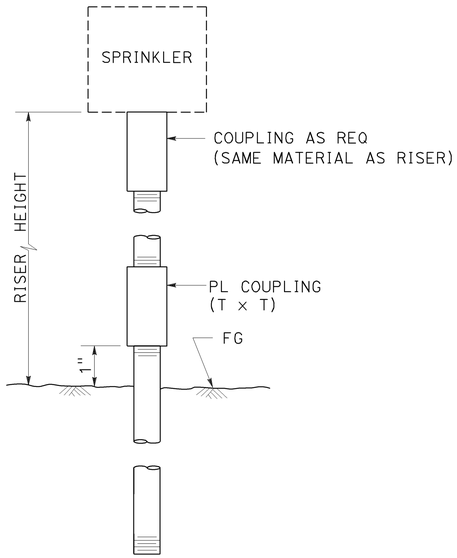

ELEVATION

RISER SPRINKLER ASSEMBLY TYPE I

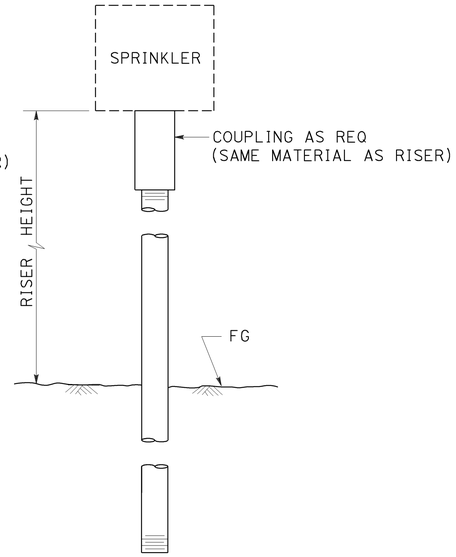

ELEVATION

RISER SPRINKLER ASSEMBLY TYPE II

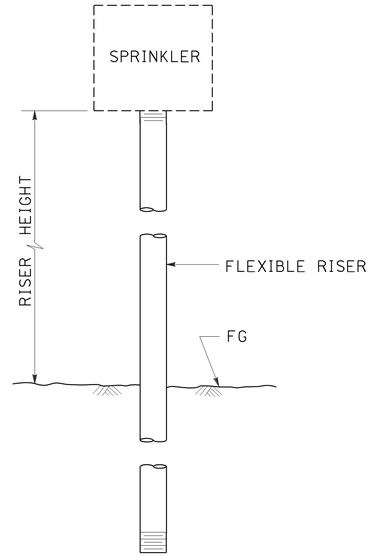

ELEVATION

RISER SPRINKLER ASSEMBLY TYPE III

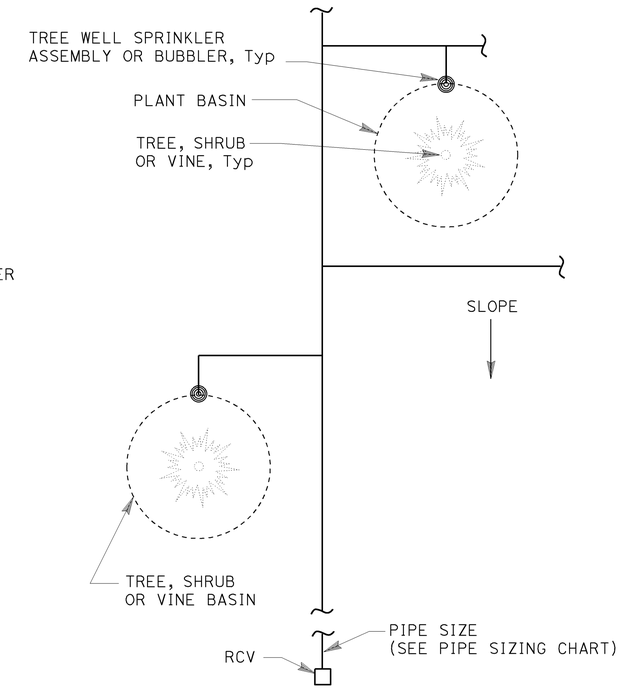

PLAN

NOTES:

1. Install tree well sprinkler assembly on up-hill side of plant when on slope.
2. Install bubbler within basin.

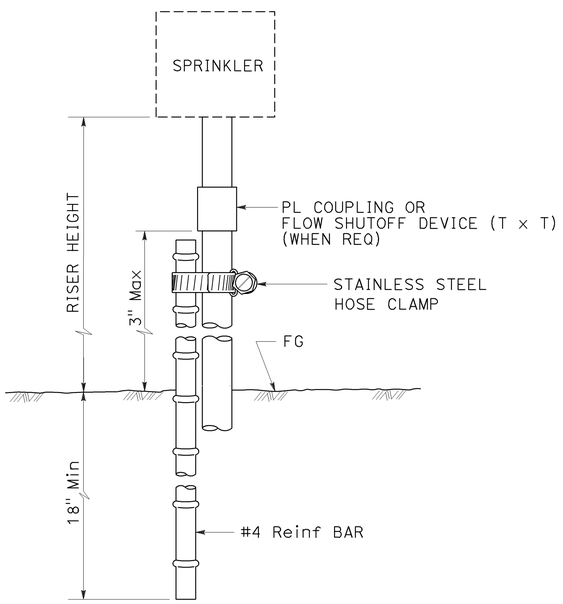

ELEVATION

RISER SPRINKLER ASSEMBLY TYPE IV

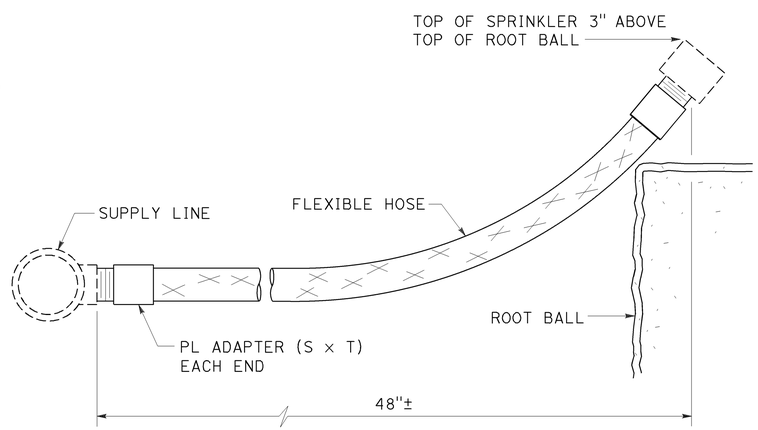

ELEVATION

RISER SPRINKLER ASSEMBLY TYPE V

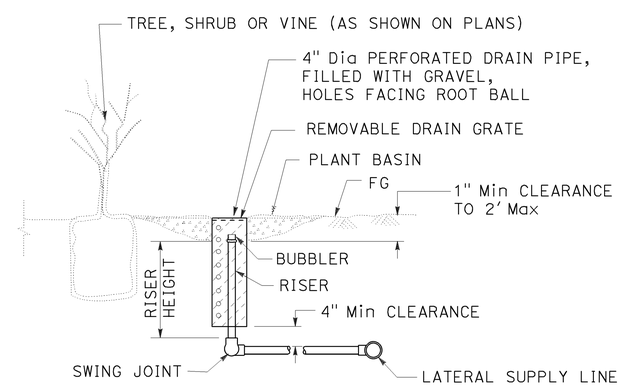

SECTION

TREE WELL SPRINKLER ASSEMBLY

STATE OF CALIFORNIA
DEPARTMENT OF TRANSPORTATION

LANDSCAPE DETAILS

NO SCALE

RSP H5 DATED JULY 19, 2013 SUPERSEDES STANDARD PLAN H5
DATED MAY 20, 2011 - PAGE 222 OF THE STANDARD PLANS BOOK DATED 2010.

REVISED STANDARD PLAN RSP H5

2010 REVISED STANDARD PLAN RSP H5

6-28-13

Dist	COUNTY	ROUTE	POST MILES TOTAL PROJECT	SHEET No.	TOTAL SHEETS
11	SD	8	5.4/10.6, R20.0/R21.6	183	213

Gregory A. Balzer
LICENSED LANDSCAPE ARCHITECT

July 19, 2013
PLANS APPROVAL DATE

THE STATE OF CALIFORNIA OR ITS OFFICERS OR AGENTS SHALL NOT BE RESPONSIBLE FOR THE ACCURACY OR COMPLETENESS OF SCANNED COPIES OF THIS PLAN SHEET.

LICENSED LANDSCAPE ARCHITECT Gregory A. Balzer 2576 STATE OF CALIFORNIA
02-28-15 Renewal Date
7-19-13 Date

TO ACCOMPANY PLANS DATED 05-31-16

2010 REVISED STANDARD PLAN RSP H6

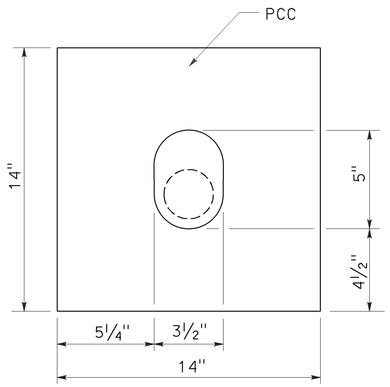

PLAN

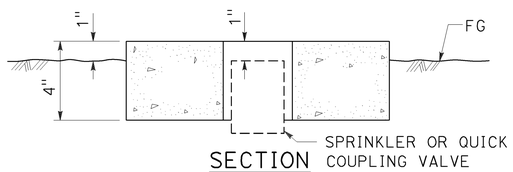

SECTION

SPRINKLER PROTECTOR TYPE I

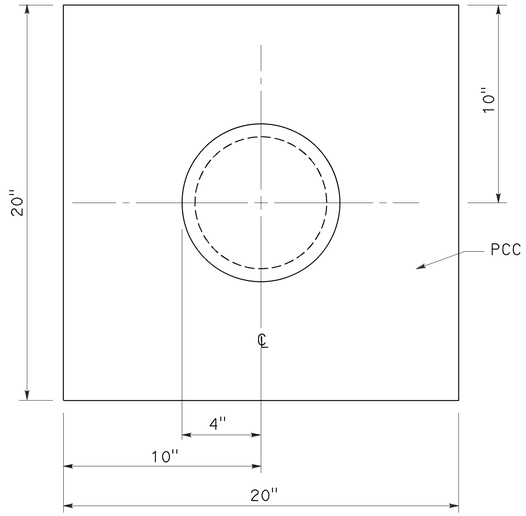

PLAN

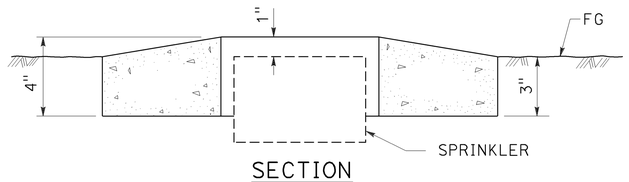

SECTION

SPRINKLER PROTECTOR TYPE II

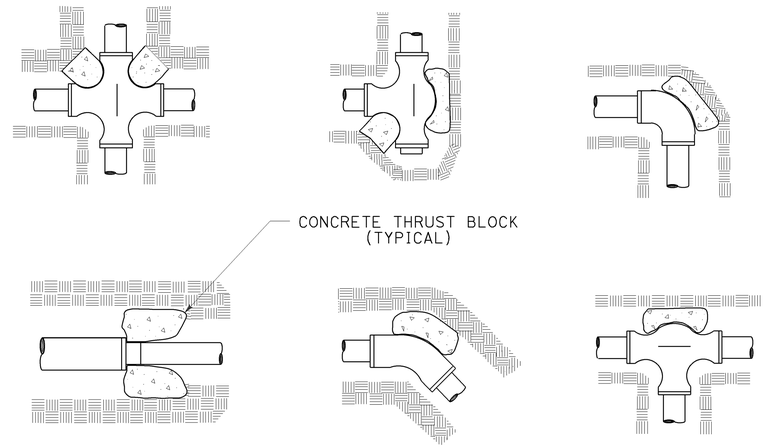

TYPICAL THRUST BLOCKS

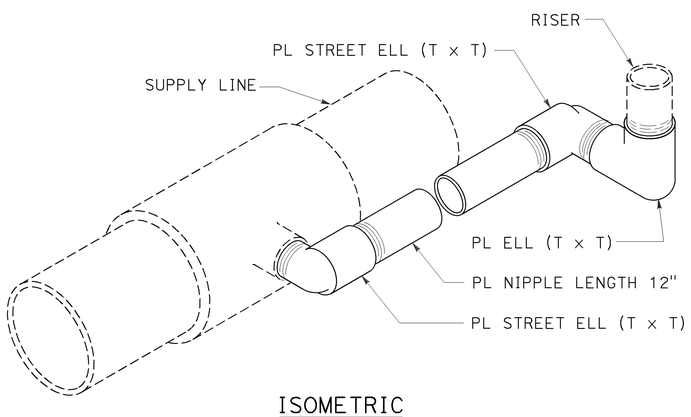

ISOMETRIC

POP-UP SPRINKLER ASSEMBLY TYPE I

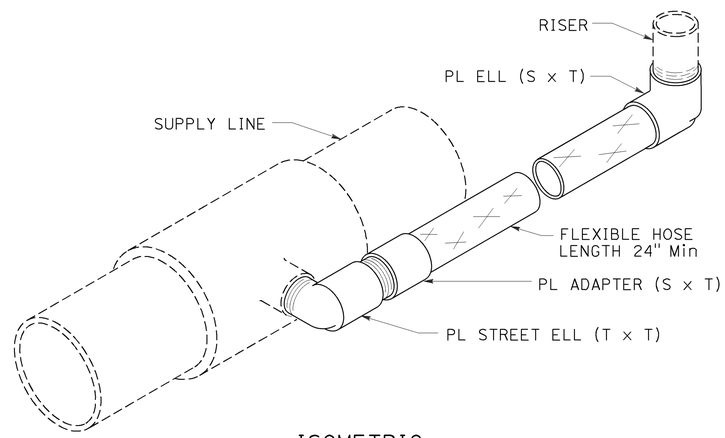

ISOMETRIC

POP-UP SPRINKLER ASSEMBLY TYPE II

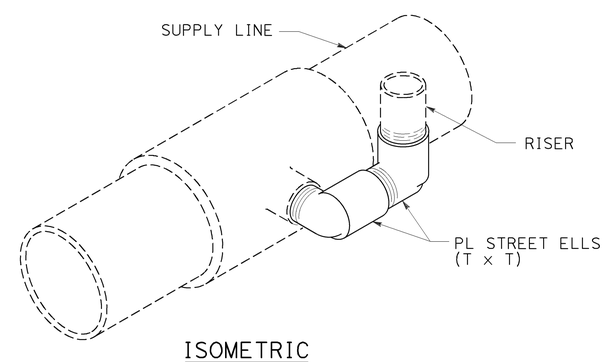

ISOMETRIC

POP-UP SPRINKLER ASSEMBLY TYPE III

STATE OF CALIFORNIA
DEPARTMENT OF TRANSPORTATION

LANDSCAPE DETAILS

NO SCALE

RSP H6 DATED JULY 19, 2013 SUPERSEDES STANDARD PLAN H6
DATED MAY 20, 2011 - PAGE 223 OF THE STANDARD PLANS BOOK DATED 2010.

REVISED STANDARD PLAN RSP H6

6-28-13

Dist	COUNTY	ROUTE	POST MILES TOTAL PROJECT	SHEET No.	TOTAL SHEETS
11	SD	8	5.4/10.6, R20.0/R21.6	184	213

LICENSED LANDSCAPE ARCHITECT

July 19, 2013
PLANS APPROVAL DATE

THE STATE OF CALIFORNIA OR ITS OFFICERS OR AGENTS SHALL NOT BE RESPONSIBLE FOR THE ACCURACY OR COMPLETENESS OF SCANNED COPIES OF THIS PLAN SHEET.

LICENSED LANDSCAPE ARCHITECT — Gregory A. Balzer — 2376 — 02-28-15 Renewal Date — 7-19-13 Date — STATE OF CALIFORNIA

TO ACCOMPANY PLANS DATED 05-31-16

2010 REVISED STANDARD PLAN RSP H7

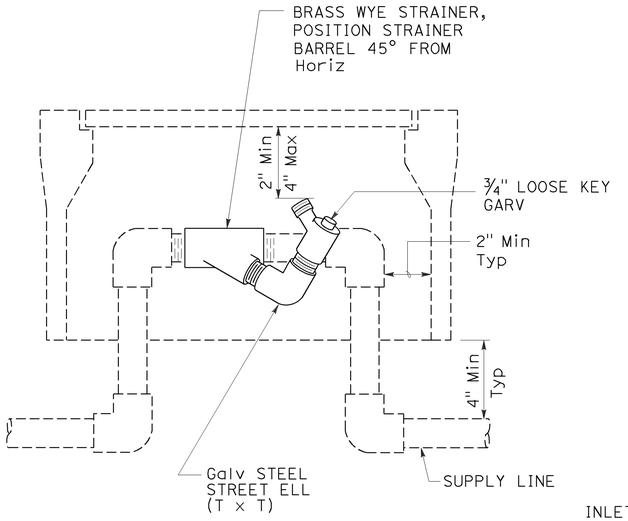

ELEVATION
WYE STRAINER ASSEMBLY

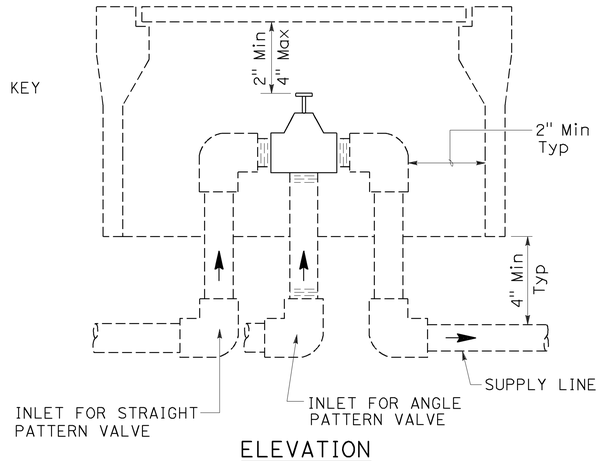

ELEVATION
VALVE

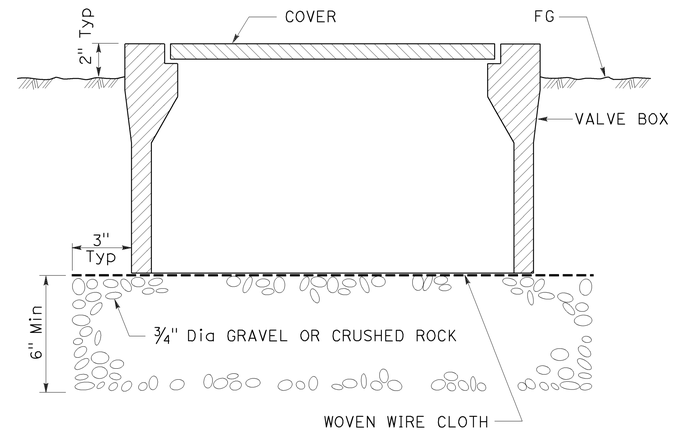

SECTION
VALVE BOX

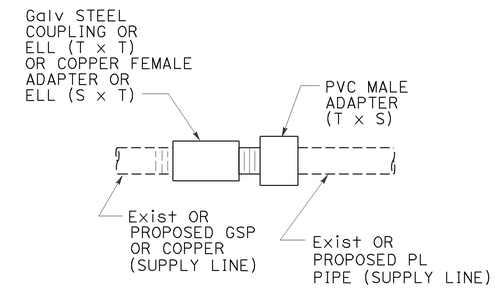

GALVANIZED OR COPPER PIPE CONNECTION TO PLASTIC PIPE

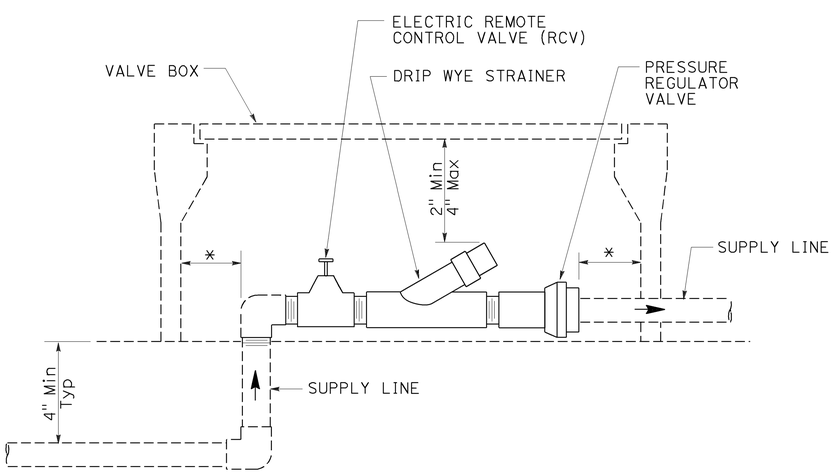

* 2" CLEARANCE ON ALL SIDES

ELEVATION
DRIP VALVE ASSEMBLY

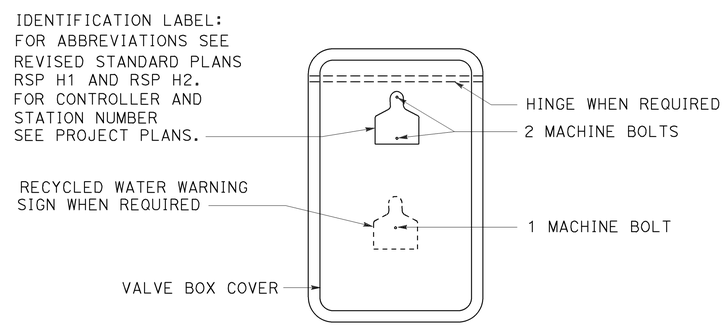

PLAN

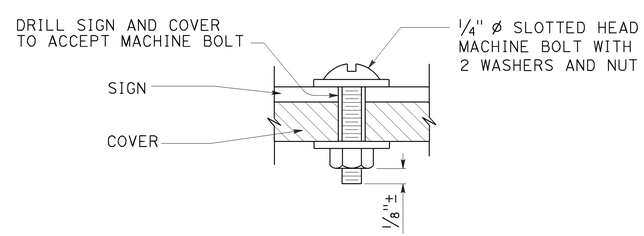

SECTION
VALVE BOX IDENTIFICATION

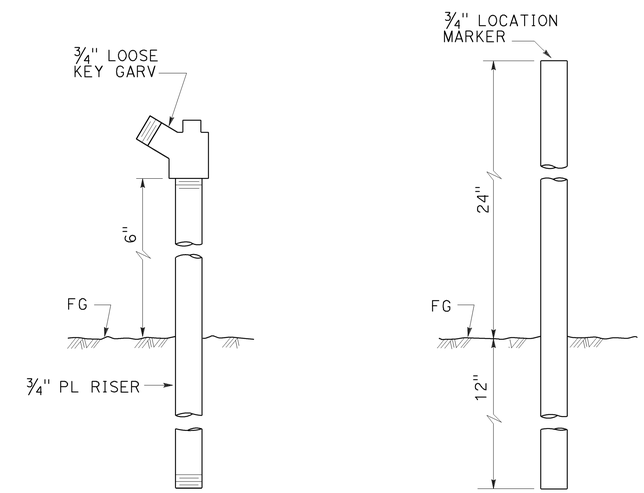

ELEVATION
GARDEN VALVE ASSEMBLY

ELEVATION
LOCATION MARKER

GARDEN VALVE ASSEMBLY

STATE OF CALIFORNIA
DEPARTMENT OF TRANSPORTATION

LANDSCAPE DETAILS

NO SCALE

RSP H7 DATED JULY 19, 2013 SUPERSEDES STANDARD PLAN H7
DATED MAY 20, 2011 - PAGE 224 OF THE STANDARD PLANS BOOK DATED 2010.

REVISED STANDARD PLAN RSP H7

6-20-13

Dist	COUNTY	ROUTE	POST MILES TOTAL PROJECT	SHEET No.	TOTAL SHEETS
11	SD	8	5.4/10.6, R20.0/R21.6	185	213

LICENSED LANDSCAPE ARCHITECT

July 19, 2013
PLANS APPROVAL DATE

THE STATE OF CALIFORNIA OR ITS OFFICERS OR AGENTS SHALL NOT BE RESPONSIBLE FOR THE ACCURACY OR COMPLETENESS OF SCANNED COPIES OF THIS PLAN SHEET.

LICENSED LANDSCAPE ARCHITECT
Gregory A. Balzer 2576
Registration
2-28-15
Renewal Date
7-19-13
Date
STATE OF CALIFORNIA

TO ACCOMPANY PLANS DATED 05-31-16

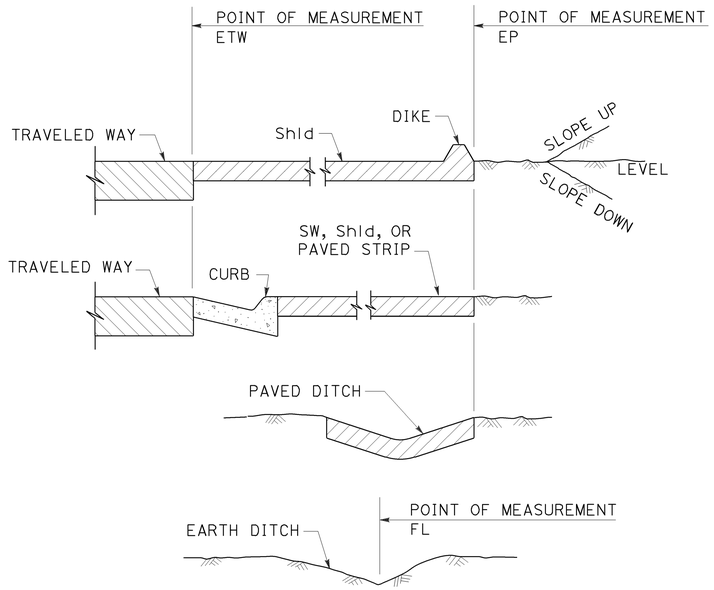

SECTION
POINTS OF MEASUREMENT

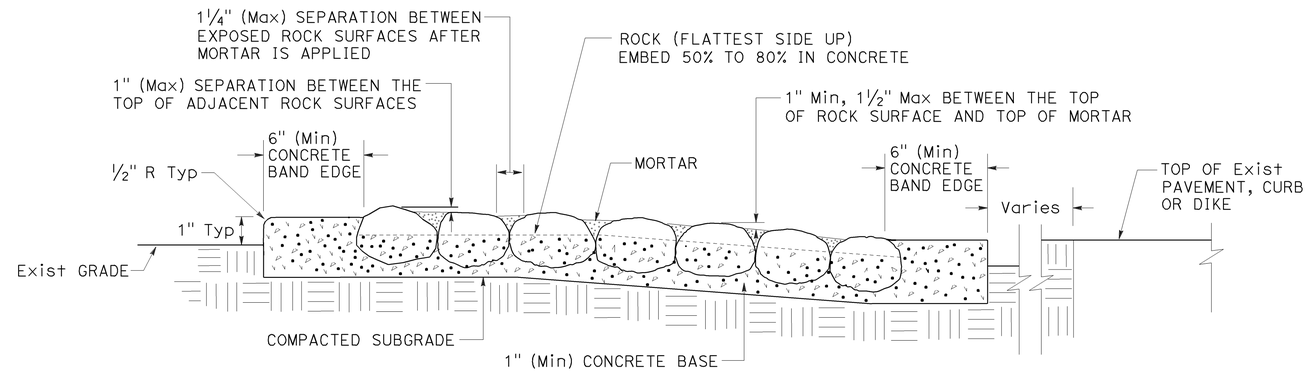

SECTION
ROCK BLANKET

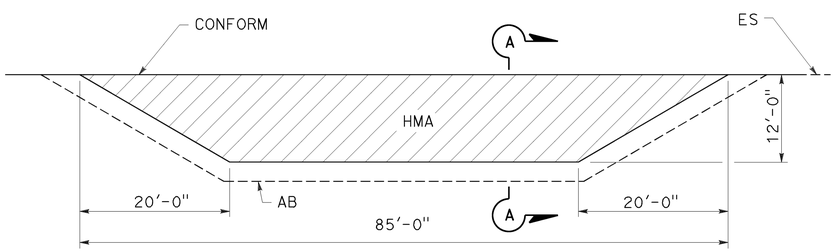

PLAN

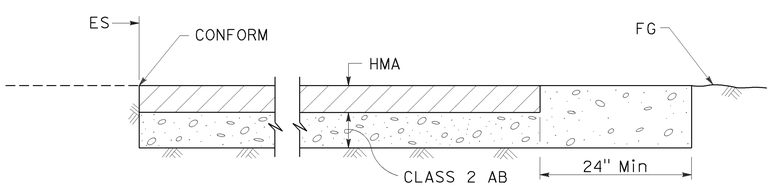

SECTION A-A
MAINTENANCE VEHICLE PULLOUT

STATE OF CALIFORNIA
DEPARTMENT OF TRANSPORTATION

LANDSCAPE DETAILS

NO SCALE

RSP H9A DATED JULY 19, 2013 SUPPLEMENTS THE STANDARD PLANS BOOK DATED 2010.

REVISED STANDARD PLAN RSP H9A

2010 REVISED STANDARD PLAN RSP H9A

6-21-13

Dist	COUNTY	ROUTE	POST MILES TOTAL PROJECT	SHEET No.	TOTAL SHEETS
11	SD	8	5.4/10.6, R20.0/R21.6	186	213

REGISTERED CIVIL ENGINEER

July 19, 2013
PLANS APPROVAL DATE

REGISTERED PROFESSIONAL ENGINEER Gurinderpal Bhullar No. C48815 Exp. 9-30-14 CIVIL STATE OF CALIFORNIA

THE STATE OF CALIFORNIA OR ITS OFFICERS OR AGENTS SHALL NOT BE RESPONSIBLE FOR THE ACCURACY OR COMPLETENESS OF SCANNED COPIES OF THIS PLAN SHEET.

TO ACCOMPANY PLANS DATED 05-31-16

TABLE 1

TAPER LENGTH CRITERIA AND CHANNELIZING DEVICE SPACING

SPEED (S)	MINIMUM TAPER LENGTH * FOR WIDTH OF OFFSET 12 FEET (W)				MAXIMUM CHANNELIZING DEVICE SPACING		
					X	Y	Z **
	TANGENT 2L	MERGING L	SHIFTING L/2	SHOULDER L/3	TAPER	TANGENT	CONFLICT
mph	ft	ft	ft	ft	ft	ft	ft
20	160	80	40	27	20	40	10
25	250	125	63	42	25	50	12
30	360	180	90	60	30	60	15
35	490	245	123	82	35	70	17
40	640	320	160	107	40	80	20
45	1080	540	270	180	45	90	22
50	1200	600	300	200	50	100	25
55	1320	660	330	220	55	110	27
60	1440	720	360	240	60	120	30
65	1560	780	390	260	65	130	32
70	1680	840	420	280	70	140	35

* - For other offsets, use the following merging taper length formula for L:
For speed of 40 mph or less, $L = WS^2/60$
For speed of 45 mph or more, $L = WS$

Where: L = Taper length in feet
W = Width of offset in feet
S = Posted speed limit, off-peak 85th-percentile speed prior to work starting, or the anticipated operating speed in mph

** - Use for taper and tangent sections where there are no pavement markings or where there is a conflict between existing pavement markings and channelizers (CA).

TABLE 2

LONGITUDINAL BUFFER SPACE AND FLAGGER STATION SPACING

SPEED *	Min D **	DOWNGRADE Min D ***		
		-3%	-6%	-9%
mph	ft	ft	ft	ft
20	115	116	120	126
25	155	158	165	173
30	200	205	215	227
35	250	257	271	287
40	305	315	333	354
45	360	378	400	427
50	425	446	474	507
55	495	520	553	593
60	570	598	638	686
65	645	682	728	785
70	730	771	825	891

* - Speed is posted speed limit, off-peak 85th-percentile speed prior to work starting, or the anticipated operating speed in mph

** - Longitudinal buffer space or flagger station spacing

*** - Use on sustained downgrade steeper than -3 percent and longer than 1 mile.

TABLE 3

ADVANCE WARNING SIGN SPACING

ROAD TYPE	DISTANCE BETWEEN SIGNS *		
	A	B	C
	ft	ft	ft
URBAN - 25 mph OR LESS	100	100	100
URBAN - MORE THAN 25 mph TO 40 mph	250	250	250
URBAN - MORE THAN 40 mph	350	350	350
RURAL	500	500	500
EXPRESSWAY / FREEWAY	1000	1500	2640

* - The distances are approximate, are intended for guidance purposes only, and should be applied with engineering judgment. These distances should be adjusted by the Engineer for field conditions, if necessary, by increasing or decreasing the recommmended distances.

STATE OF CALIFORNIA
DEPARTMENT OF TRANSPORTATION

TRAFFIC CONTROL SYSTEM TABLES FOR LANE AND RAMP CLOSURES

NO SCALE

RSP T9 DATED JULY 19, 2013 SUPERSEDES RSP T9 DATED APRIL 19, 2013 THAT SUPPLEMENTS THE STANDARD PLANS BOOK DATED 2010.

REVISED STANDARD PLAN RSP T9

2010 REVISED STANDARD PLAN RSP T9

4-30-13

Dist	COUNTY	ROUTE	POST MILES TOTAL PROJECT	SHEET No.	TOTAL SHEETS
11	SD	8	5.4/10.6, R20.0/R21.6	187	213

REGISTERED CIVIL ENGINEER

April 19, 2013
PLANS APPROVAL DATE

REGISTERED PROFESSIONAL ENGINEER Gurinderpal Bhullar No. C48815 Exp. 9-30-14 CIVIL STATE OF CALIFORNIA

THE STATE OF CALIFORNIA OR ITS OFFICERS OR AGENTS SHALL NOT BE RESPONSIBLE FOR THE ACCURACY OR COMPLETENESS OF SCANNED COPIES OF THIS PLAN SHEET.

TO ACCOMPANY PLANS DATED 05-31-16

NOTES:

See Revised Standard Plan RSP T9 for tables.

Use cone spacing X for taper segment, Y for tangent segment or Z for conflict situations, as approriate, per Table 1, unless X, Y, or Z cone spacing is shown on this sheet.

Unless otherwise specified in the special provisions, all temporary warning signs shall have black legend on fluorescent orange background.

California codes are designated by (CA). Otherwise, Federal (MUTCD) codes are shown.

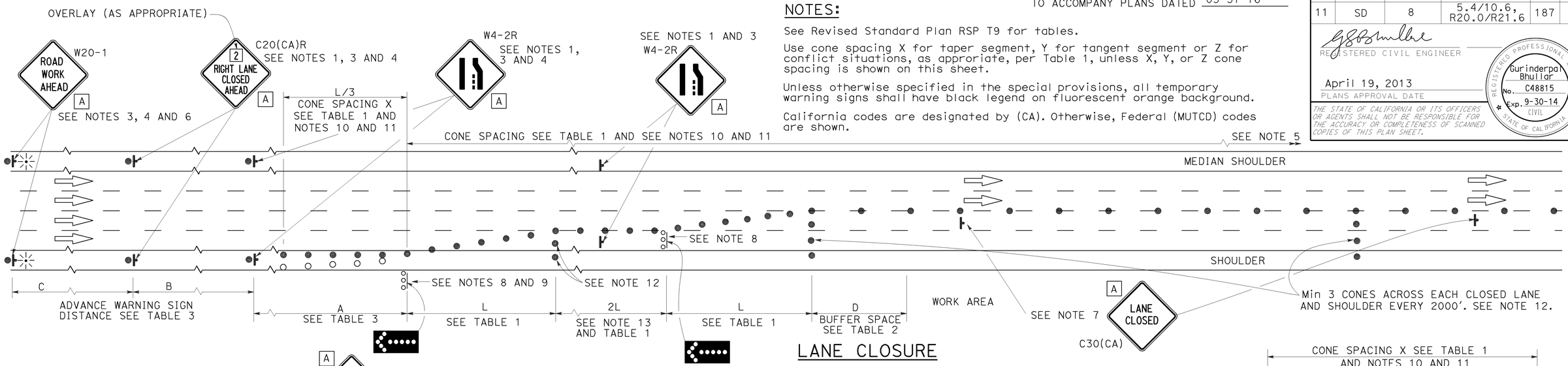

LANE CLOSURE

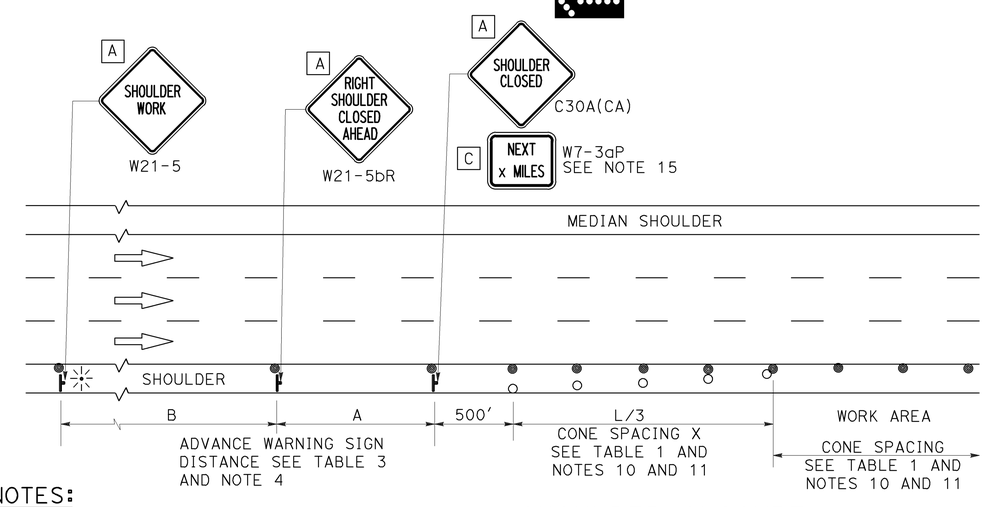

SHOULDER CLOSURE

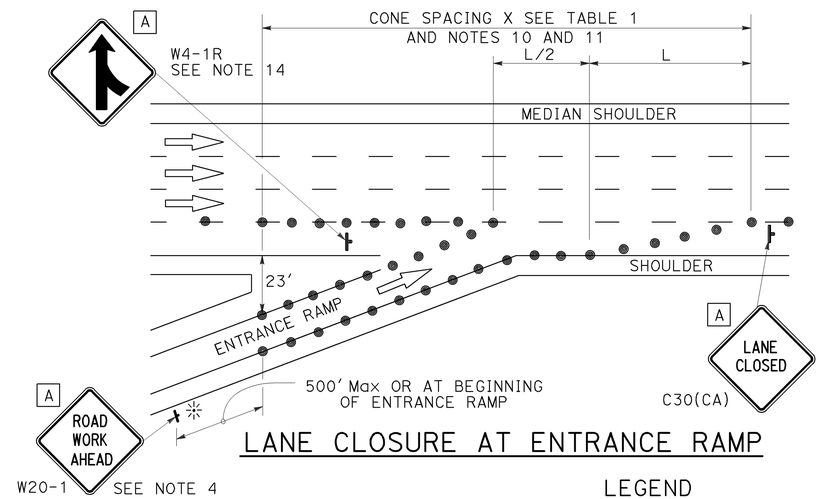

LANE CLOSURE AT ENTRANCE RAMP

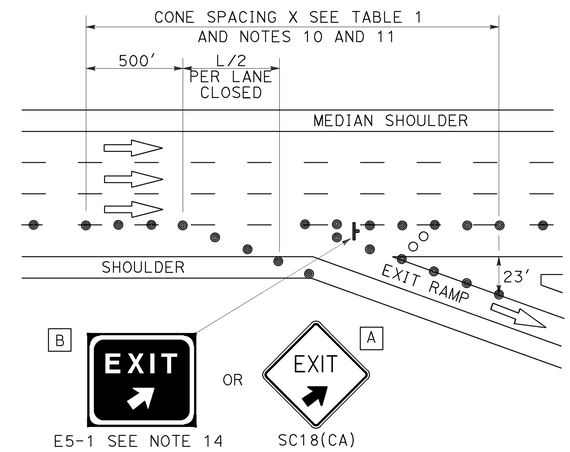

LANE CLOSURE AT EXIT RAMP

NOTES:

1. Median lane closures shall conform to the details as shown except that C20(CA)L and W4-2L signs shall be used.
2. At least one person shall be assigned to provide full time maintenance of traffic control devices for lane closures.
3. Duplicate sign installations are not required:
   a) On opposite shoulder if at least one-half of the available lanes remain open to traffic.
   b) In the median if the width of the median shoulder is less than 8' and the outside lanes are to be closed.
4. Each advance warning sign on each side of the roadway shall be equipped with at least two flags for daytime closure. Each flag shall be at least 16" x 16" in size and shall be orange or fluorescent red-orange in color. Flashing beacons shall be placed at the locations indicated for lane closure during hours of darkness.
5. A G20-2 "END ROAD WORK" sign, with minimum size of 48" x 24" as appropriate, shall be placed at the end of the lane closure unless the end of work area is obvious or ends within a larger project's limits.
6. If the W20-1 sign would follow within 2000' of a stationary W20-1 or G20-1 "ROAD WORK NEXT _____ MILES", use a C20(CA) sign for the first advance warning sign.
7. Place a C30(CA) sign every 2000' throughout length of lane closure.
8. One flashing arrow sign for each lane closed. The flashing arrow signs shall be Type I.
9. A minimum 1500' of sight distance shall be provided where possible for vehicles approaching the first flashing arrow sign. Lane closures shall not begin at top of crest vertical curve or on a horizontal curve.
10. All cones used for lane closures during the hours of darkness shall be fitted with retroreflective bands (or sleeves) as specified in the specifications.
11. Portable delineators, placed at one-half the spacing indicated for traffic cones may be used instead of cones for daytime closures only.
12. Unless otherwise specified in the special provisions, a minimum of 3 cones shall be placed transversely across each closed lane and shoulder at each location where a taper across a traffic lane ends and every 2000' as shown on the "Lane Closure" detail. Two Type II barricades may be used instead of the 3 cones. The transverse alignment of the cones or barricades on the closed shoulder may be shifted from the transverse alignment to provide access to the work.
13. Unless otherwise specified in the special provisions, the 2L tangent shown along lane lines shall be used between the L tapers required for each closed traffic lane.
14. Unless otherwise specified in the special provisions, the E5-1 or SC18(CA) and W4-1 signs shall be used as shown.
15. A W7-3aP "NEXT____ MILES" plaque must be used if theshoulder closure extends beyond the distance that can be perceived by road users.

LEGEND

- TRAFFIC CONE
- TRAFFIC CONE (OPTIONAL TAPER)
- TEMPORARY TRAFFIC CONTROL SIGN
- FLASHING ARROW SIGN (FAS)
- FAS SUPPORT OR TRAILER
- PORTABLE FLASHING BEACON

SIGN PANEL SIZE (Min)

A	48" x 48"
B	72" x 60"
C	36" x 30"

STATE OF CALIFORNIA
DEPARTMENT OF TRANSPORTATION

TRAFFIC CONTROL SYSTEM FOR LANE CLOSURE ON FREEWAYS AND EXPRESSWAYS

NO SCALE

RSP T10 DATED APRIL 19, 2013 SUPERSEDES STANDARD PLAN T10 DATED MAY 20, 2011 - PAGE 237 OF THE STANDARD PLANS BOOK DATED 2010.

REVISED STANDARD PLAN RSP T10

2010 REVISED STANDARD PLAN RSP T10

12-18-12

Dist	COUNTY	ROUTE	POST MILES TOTAL PROJECT	SHEET No.	TOTAL SHEETS
11	SD	8	5.4/10.6, R20.0/R21.6	188	213

Devinder Singh
REGISTERED CIVIL ENGINEER

October 30, 2015
PLANS APPROVAL DATE

REGISTERED PROFESSIONAL ENGINEER
Devinder Singh
No. C50470
Exp. 6-30-17
CIVIL
STATE OF CALIFORNIA

THE STATE OF CALIFORNIA OR ITS OFFICERS OR AGENTS SHALL NOT BE RESPONSIBLE FOR THE ACCURACY OR COMPLETENESS OF SCANNED COPIES OF THIS PLAN SHEET.

TO ACCOMPANY PLANS DATED 05-31-16

2010 REVISED STANDARD PLAN RSP T13

NOTES:

See Revised Standard Plan RSP T9 for tables.

Use cone spacing X for taper segment, Y for tangent segment or Z for conflict situations, as approriate, per Table 1, unless X, Y, or Z cone spacing is shown on this sheet.

Unless otherwise specified in the special provisions, all temporary warning signs shall have black legend on fluorescent orange background.

California codes are designated by (CA). Otherwise, Federal (MUTCD) codes are shown.

TYPICAL LANE CLOSURE WITH REVERSIBLE CONTROL

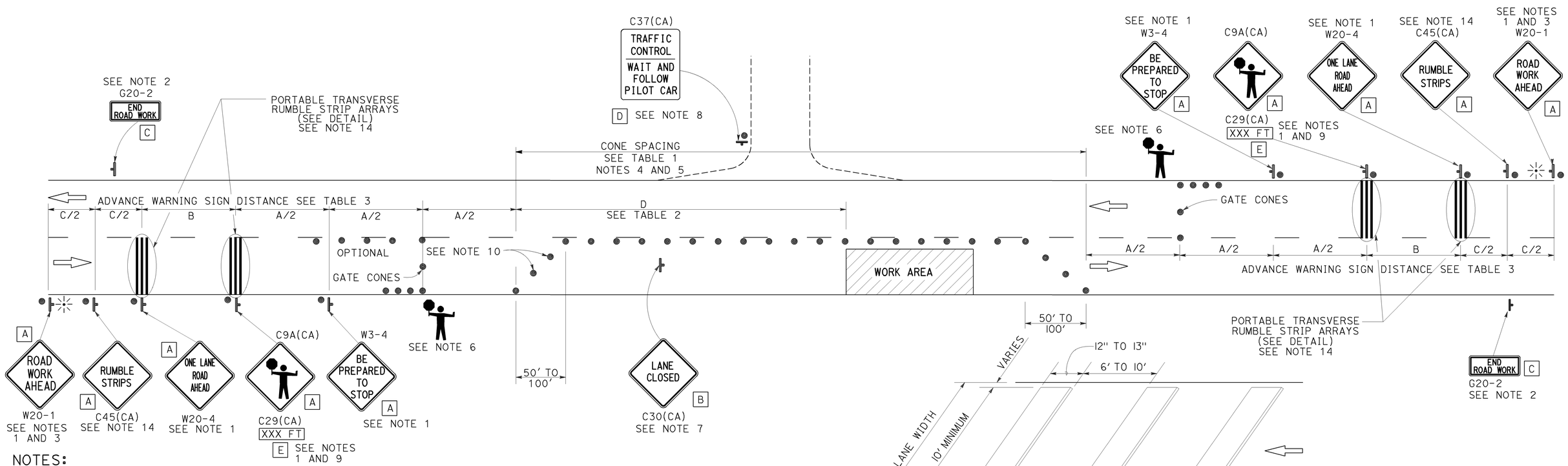

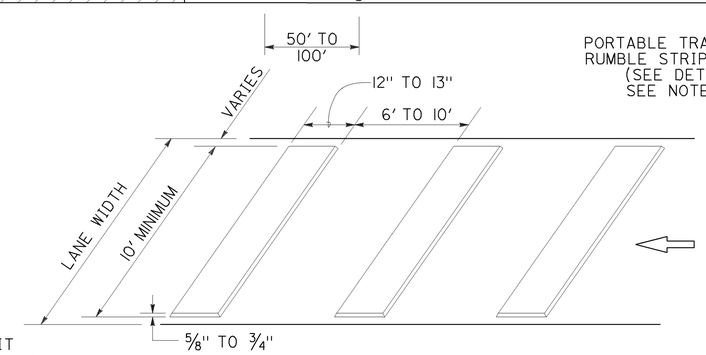

PORTABLE TRANSVERSE RUMBLE STRIP ARRAY DETAIL

NOTES:

1. Each advance warning sign in each direction of travel shall be equipped with at least two flags for daytime closure. Each flag shall be at least 16" x 16" in size and shall be orange or fluorescent red-orange in color. Flashing beacons shall be placed at the locations indicated for lane closure during hours of darkness.
2. A G20-2 "END ROAD WORK" sign, as appropriate, shall be placed at the end of the lane control unless the end of work area is obvious, or ends within a larger project's limits.
3. If the W20-1 sign would follow within 2000' of a stationary W20-1 or G20-1 "ROAD WORK NEXT _____ MILES", use a W20-4 sign for the first advance warning sign.
4. All cones used for lane closures during the hours of darkness shall be fitted with retroreflective bands (or sleeves) as specified in the specifications.
5. Portable delineators, placed at one-half the spacing indicated for traffic cones, may be used instead of cones for daytime closures only.
6. Additional advance flaggers may be required. Flagger should stand in a conspicuous place, be visible to approaching traffic as well as approaching vehicles after the first vehicle has stopped. During the hours of darkness, the flagging-station and flagger shall be illuminated and clearly visible to approaching traffic. The illumination footprint of the lighting on the ground shall be at least 20' in diameter. Place a minimum of four cones at 50' intervals in advance of flagger station as shown.
7. Place C30(CA) "LANE CLOSED" sign at 500' to 1000' intervals throughout extended work areas. They are optional if the work area is visible from the flagger station.
8. When a pilot car is used, place a C37(CA) "TRAFFIC CONTROL-WAIT AND FOLLOW PILOT CAR" sign with black legend on white background at all intersections, driveways and alleys without a flagger within traffic control area. Signs shall be clean and visible at all times. Where traffic can not be effectively self-regulated, at least one flagger shall be used at each intersection within traffic control area.
9. An optional C29(CA) sign may be placed below the C9A(CA) sign.
10. Either traffic cones or barricades shall be placed on the taper. Barricades shall be Type I, II, or III.
11. The color of the portable transverse rumble strips shall be black or orange. Use 2 arrays, each array shall consist of 3 rumble strips.
12. Portable transverse rumble strips shall not be placed on sharp horizontal or vertical curves nor shall they be placed through pedestrian crossings.
13. If the portable transverse rumble strips become out of alignment (skewed) by more than 6 inches, measured from one end to the other, they shall be readjusted to bring the placement back to the original location.
14. Portable transverse rumble strips are not required if any one of the following conditions is satisfied:
    A. Work duration occupies a location for four hours or less
    B. Posted speed limit is below 45 MPH
    C. Work is of emergency nature
    D. Work zone is in snow or icy weather conditions

SIGN PANEL SIZE (Min)

A	48" x 48"
B	30" x 30"
C	36" x 18"
D	36" x 42"
E	20" x 7"

LEGEND

- TRAFFIC CONE
- TEMPORARY TRAFFIC CONTROL SIGN
- PORTABLE FLASHING BEACON
- FLAGGER

STATE OF CALIFORNIA
DEPARTMENT OF TRANSPORTATION

TRAFFIC CONTROL SYSTEM FOR LANE CLOSURE ON TWO LANE CONVENTIONAL HIGHWAYS

NO SCALE

RSP T13 DATED OCTOBER 30, 2015 SUPERSEDES RSP T13 DATED OCTOBER 17, 2014, RSP T13 DATED JULY 18, 2014 AND RSP T13 DATED APRIL 19, 2013 AND STANDARD PLAN T13 DATED MAY 20, 2011 - PAGE 241 OF THE STANDARD PLANS BOOK DATED 2010.

REVISED STANDARD PLAN RSP T13

10-13-15

Dist	COUNTY	ROUTE	POST MILES TOTAL PROJECT	SHEET No.	TOTAL SHEETS
11	SD	8	5.4/10.6, R20.0/R21.6	189	213

REGISTERED CIVIL ENGINEER

April 19, 2013
PLANS APPROVAL DATE

REGISTERED PROFESSIONAL ENGINEER Gurinderpal Bhullar No. C48815 Exp. 9-30-14 CIVIL STATE OF CALIFORNIA

THE STATE OF CALIFORNIA OR ITS OFFICERS OR AGENTS SHALL NOT BE RESPONSIBLE FOR THE ACCURACY OR COMPLETENESS OF SCANNED COPIES OF THIS PLAN SHEET.

TO ACCOMPANY PLANS DATED 05-31-16

TYPICAL RAMP CLOSURES

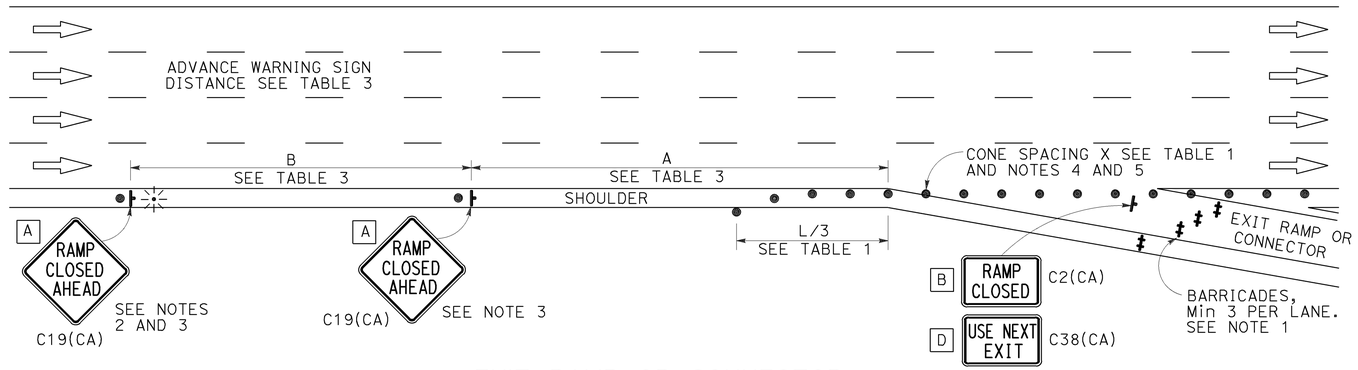

EXIT RAMP OR CONNECTOR

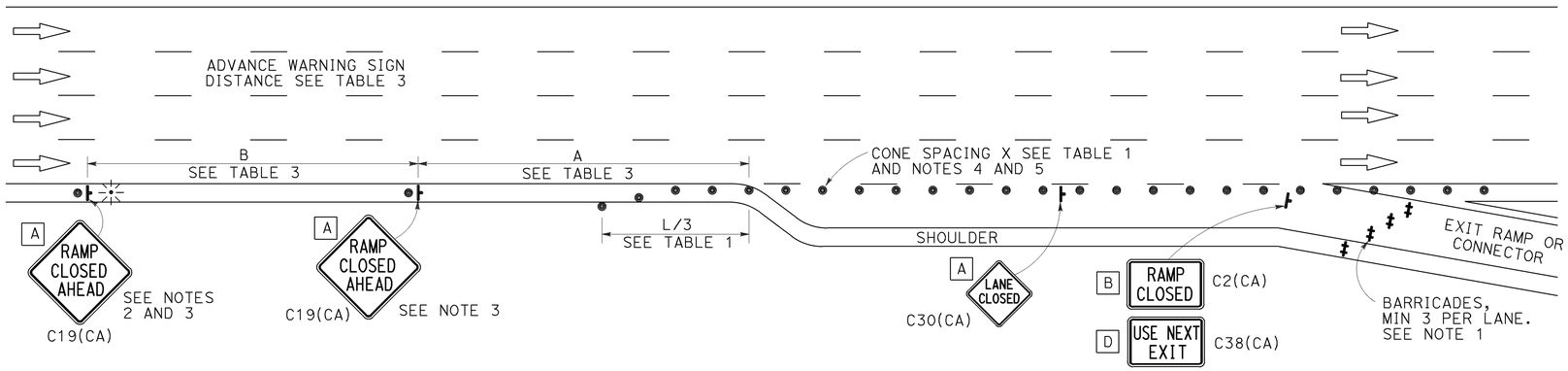

EXIT RAMP OR CONNECTOR WITH ADDITIONAL LANE

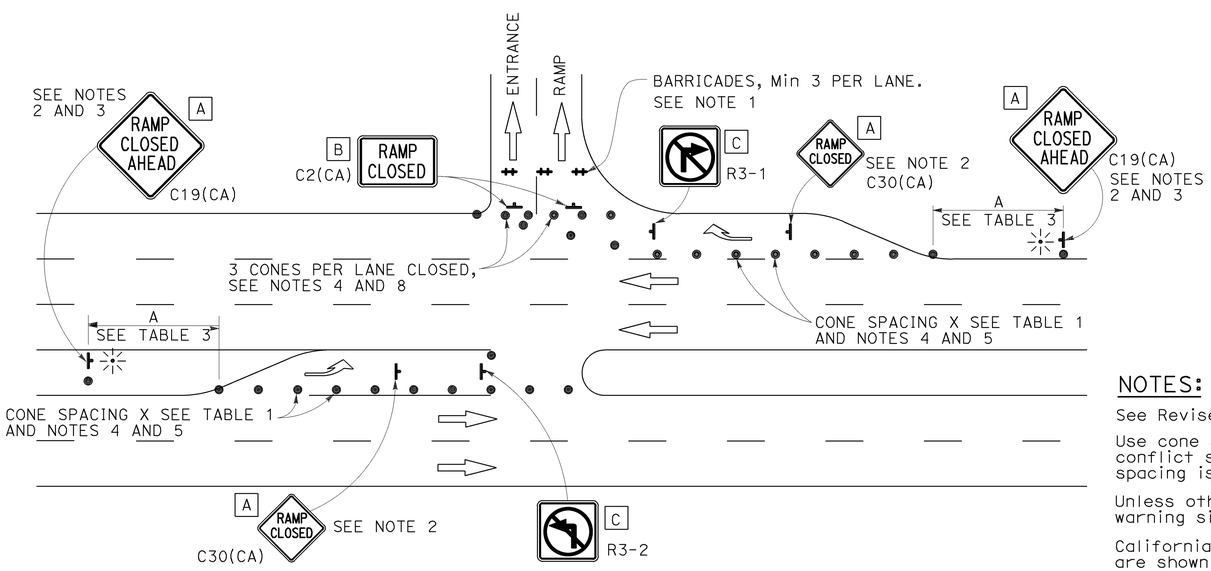

ENTRANCE RAMP WITH TURNING POCKETS

SIGN PANEL SIZE (Min)

- A 48" × 48"
- B 48" × 30"
- C 36" × 36"
- D 48" × 36"

LEGEND

- TRAFFIC CONE
- TEMPORARY TRAFFIC CONTROL SIGN
- BARRICADES
- PORTABLE FLASHING BEACON

NOTES:

1. Barricades shall be Type I, II, or III for closures lasting one week or less and Type III for closures lasting longer than one week.
2. In addition to placing the C19(CA) "RAMP CLOSED AHEAD" and C30(CA) "RAMP CLOSED" signs, black on orange overlay plates with the word "CLOSED" may be mounted, as directed by the Engineer, on all guide signs that refer to the closed ramp. The letter size on the overlay shall be the same as the guide sign.
3. Each advance C19(CA) "RAMP CLOSED AHEAD" sign shall be equipped with at least two flags for daytime closure. Each flag shall be at least 16" × 16" in size and shall be orange or fluorescent red-orange in color. A flashing beacon shall be placed on top of the first C19(CA) sign during hours of darkness.
4. All cones used for ramp closures during the hours of darkness shall be fitted with retroreflective bands (or sleeves) as specified in the specifications.
5. Portable delineators, placed at one-half the spacing indicated for traffic cones, may be used instead of cones for daytime ramp closures only.
6. At least one person shall be assigned to provide full time maintenance of traffic control devices, unless otherwise directed by the Engineer.
7. The existing "EXIT" signs shall be covered during ramp closures.
8. A minimum of 3 cones shall be placed transversely across each closed lane and shoulder.

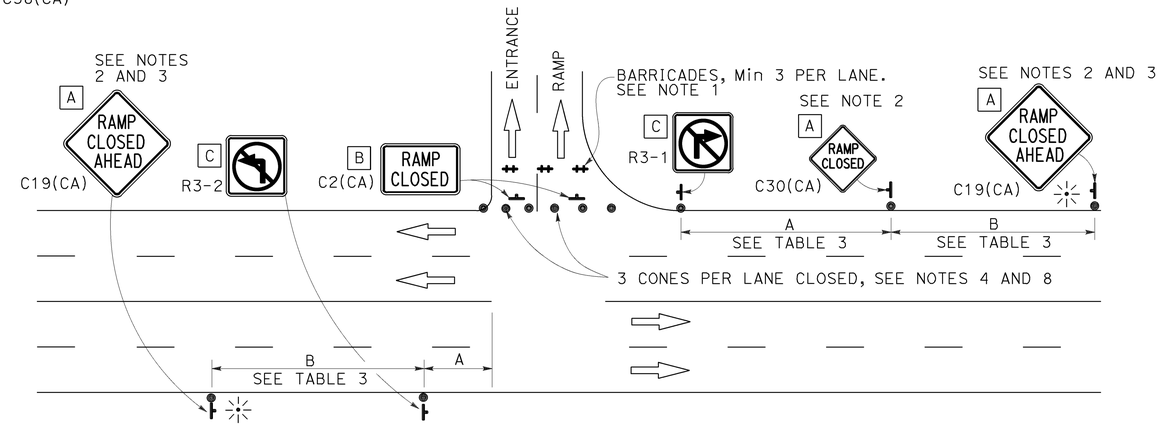

ENTRANCE RAMP WITHOUT TURNING POCKETS

NOTES:

See Revised Standard Plan RSP T9 for tables.

Use cone spacing X for taper segment, Y for tangent segment or Z for conflict situations, as approriate, per Table 1, unless X, Y, or Z cone spacing is shown on this sheet.

Unless otherwise specified in the special provisions, all temporary warning signs shall have black legend on fluorescent orange background.

California codes are designated by (CA). Otherwise, Federal (MUTCD) codes are shown.

STATE OF CALIFORNIA
DEPARTMENT OF TRANSPORTATION

TRAFFIC CONTROL SYSTEM FOR RAMP CLOSURE

NO SCALE

RSP T14 DATED APRIL 19, 2013 SUPERSEDES STANDARD PLAN T14 DATED MAY 20, 2011 - PAGE 242 OF THE STANDARD PLANS BOOK DATED 2010.

REVISED STANDARD PLAN RSP T14

2010 REVISED STANDARD PLAN RSP T14

12-18-12

Dist	COUNTY	ROUTE	POST MILES TOTAL PROJECT	SHEET No.	TOTAL SHEETS
11	SD	8	5.4/10.6, R20.0/R21.6	190	213

REGISTERED CIVIL ENGINEER

July 19, 2013
PLANS APPROVAL DATE

REGISTERED PROFESSIONAL ENGINEER
Stanley P. Johnson
No. C57793
Exp. 3-31-14
CIVIL
STATE OF CALIFORNIA

THE STATE OF CALIFORNIA OR ITS OFFICERS OR AGENTS SHALL NOT BE RESPONSIBLE FOR THE ACCURACY OR COMPLETENESS OF SCANNED COPIES OF THIS PLAN SHEET.

TO ACCOMPANY PLANS DATED 05-31-16

INSTRUCTIONS TO FABRICATOR

PROJECT PLANS SHOW:

1. Sign structure location.
2. Length of structure frame.
3. Panel size and locations on structure.
4. Walkway length for two post signs.
5. Post type and height to bottom of frame.
6. Base plate elevation.
7. Footing elevation or location of pile foundation.
8. Photoelectric unit location if required.

REFER TO THE FOLLOWING STANDARD PLANS FOR DETAILS NOT SHOWN ON PROJECT PLANS:

Sheet No.	SHEET NAME
S1	Overhead Signs-Truss, Instructions and Examples
S2	Overhead Signs-Truss, Single Post Type, Post Types II to IX
S3	Overhead Signs-Truss, Single Post Type, Base Plate and Anchorage Details
S4	Overhead Signs-Truss, Single Post Type, Structural Frame Members Details No. 1
S5	Overhead Signs-Truss, Single Post Type, Structural Frame Members Details No. 2
S6	Overhead Signs-Truss, Gusset Plate Details
S8	Overhead Signs-Truss, Single Post Type, Round Pedestal Pile Foundation
S9	Overhead Signs-Truss, Two Post Type, Post Types I-S through VII-S
S10	Overhead Signs-Truss, Two Post Type, Base Plate and Anchorage Details
S11	Overhead Signs-Truss, Two Post Type, Structural Frame Members
S12	Overhead Signs-Truss, Structural Frame Details
S13	Overhead Signs-Truss, Frame Juncture Details
S15	Overhead Signs-Truss, Two Post Type, Round Pedestal Pile Foundation
S16	Overhead Signs, Walkway Details No. 1
S17	Overhead Signs, Walkway Details No. 2
S17A	Overhead Signs, Walkway Details No. 3
S18	Overhead Signs, Walkway Safety Railing Details
S19	Overhead Signs-Truss, Sign Mounting Details, Laminated Panel-Type A
S20	Overhead Signs, Steel Frames, Removable Sign Panel Frames
S21	Overhead Signs, Removable Sign Panel Frames, Mounting Details
S22	Overhead Signs-Truss, Removable Sign Panel Frames, 9'-2" and 10'-0" Sign Panels

WALKWAY BRACKETS:

Space all walkway brackets maintaining uniform spacing where possible. Maximum spacing shall not exceed 5'-6".

LIGHTING FIXTURE SUPPORTS:

Where distance from walkway bracket to end of sign panel exceeds 1'-4", extend lighting fixture supports to next walkway bracket. See Example No. 2.

WALKWAY AND SAFETY RAILING:

Walkway to be continuous for entire length of frame for single post signs. For two post signs, see Project Plans. Safety railing to protect entire walkway, but continuous for no more than 11'-0" in one unit.

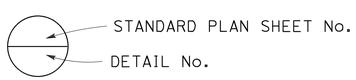

NOTES:

1. Signs are shown and dimensioned looking in the direction of traffic. Double faced signs are shown and dimensioned looking ahead along stationing.
2. Mandatory dimension limit.

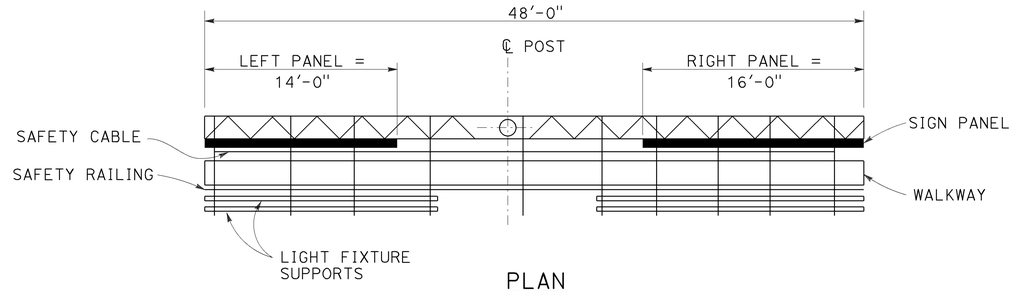

PLAN

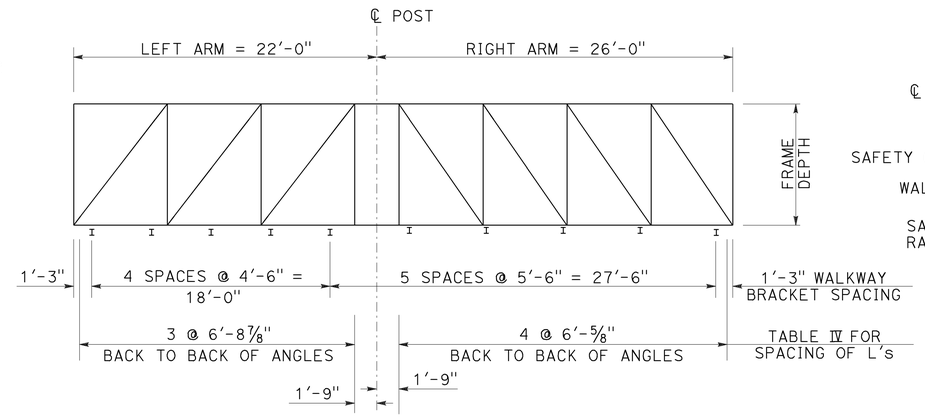

ELEVATION

UNBALANCED SINGLE POST TYPE

Example No. 1

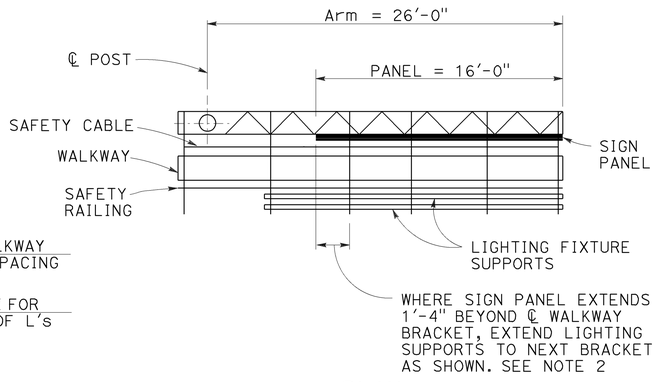

PLAN

CANTILEVER SINGLE POST TYPE

Example No. 2

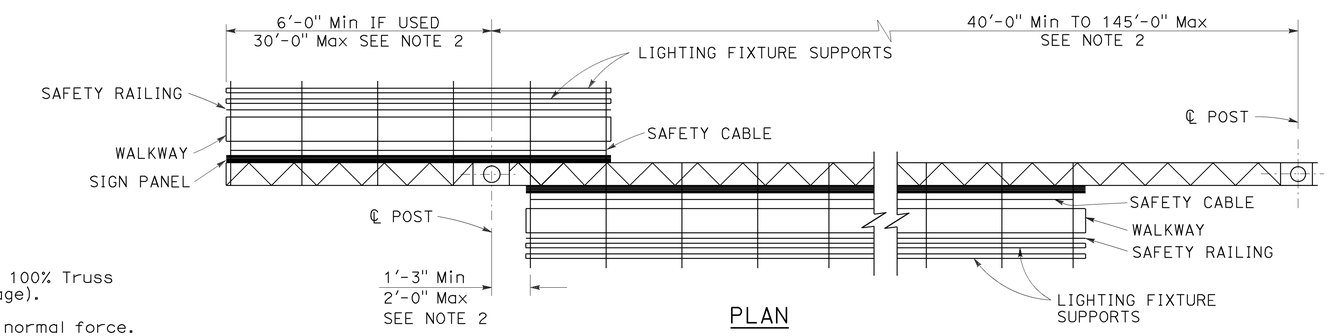

PLAN

TWO POST TYPE WITH CANTILEVER (PART DOUBLE-FACED)

Example No. 3

GENERAL NOTES:

LOADING:

WIND LOADING:

Normal to face of sign: 40.3 psf on 100% Truss surface area (i.e. 100% panel coverage).

Transverse to face of sign: 20% of normal force.

WALKWAY LOADING:

Dead load +500 LB concentrated live load.

UNIT STRESSES:

STRUCTURAL STEEL: fy = 36,000 psi
REINFORCED CONCRETE: fy = 60,000 psi
f'c = 3600 psi
FOOTING SOIL PRESSURE: 2.5 ksf (spread footing)

MINIMUM CLEARANCE

Vertical roadway clearance 18'-0" (bottom of walkway system)

WELDING:

All welding continuous unless otherwise noted on the plans.

STATE OF CALIFORNIA
DEPARTMENT OF TRANSPORTATION

OVERHEAD SIGNS-TRUSS INSTRUCTIONS AND EXAMPLES

NO SCALE

RSP S1 DATED JULY 19, 2013 SUPERSEDES STANDARD PLAN S1 DATED MAY 20, 2011 - PAGE 334 OF THE STANDARD PLANS BOOK DATED 2010.

REVISED STANDARD PLAN RSP S1

2010 REVISED STANDARD PLAN RSP S1

7-11-13

Dist	COUNTY	ROUTE	POST MILES TOTAL PROJECT	SHEET No.	TOTAL SHEETS
11	SD	8	5.4/10.6, R20.0/R21.6	191	213

REGISTERED CIVIL ENGINEER

July 19, 2013
PLANS APPROVAL DATE

REGISTERED PROFESSIONAL ENGINEER Stanley P. Johnson No. C57793 Exp. 3-31-14 CIVIL STATE OF CALIFORNIA

THE STATE OF CALIFORNIA OR ITS OFFICERS OR AGENTS SHALL NOT BE RESPONSIBLE FOR THE ACCURACY OR COMPLETENESS OF SCANNED COPIES OF THIS PLAN SHEET.

TO ACCOMPANY PLANS DATED 05-31-16

TABLE XV

POST TYPE	PIPE NPS	PIPE THICKNESS	CAP PLATE SIZE FOR CHORD L's 5 x 5	CAP PLATE SIZE FOR CHORD L's 6 x 6	ROUND PEDESTAL PEDESTAL SIZE Dia	ROUND PEDESTAL VERTICAL J-BARS EQUALLY SPACED TOTAL	ROUND PEDESTAL VERTICAL J-BARS BAR SIZE	ROUND PEDESTAL SPIRAL BAR SIZE	ROUND PEDESTAL SPIRAL PITCH	SQUARE PEDESTAL PEDESTAL SIZE SQUARE	SQUARE PEDESTAL VERTICAL J-BARS EQUALLY SPACED TOTAL	SQUARE PEDESTAL VERTICAL J-BARS BAR SIZE	SQUARE PEDESTAL VERTICAL J-BARS # OF BARS EA FACE	SQUARE PEDESTAL HOOP BAR SIZE	SQUARE PEDESTAL HOOP SPACING	SPREAD FOOTING (SEE NOTE 2)	SPREAD FOOTING REINFORCEMENT WIDTH TOP	SPREAD FOOTING REINFORCEMENT WIDTH BOTTOM	SPREAD FOOTING REINFORCEMENT LONGITUDINAL TOP	SPREAD FOOTING REINFORCEMENT LONGITUDINAL BOTTOM	SPREAD FOOTING REINFORCEMENT FOOTING STIRRUPS
II	14	1/2"	2'-0" x 2'-0" x 1"	2'-2" x 2'-2" x 1"	5'-3"	16	#10	#5	3 1/2"	5'-3"	16	#10	5	#5	3 1/2"	12'-0" x 14'-0" x 2'-6"	14-#6	14-#7	13-#9	13-#9	#5 @ 12
III	16		2'-2" x 2'-2" x 1"	2'-4" x 2'-4" x 1"												12'-0" x 14'-0" x 2'-6"	15-#6	15-#7			
IV	18		2'-4" x 2'-4" x 1"	2'-6" x 2'-6" x 1"												12'-0" x 14'-0" x 2'-6"	15-#6	15-#7			
V	20		2'-6" x 2'-6" x 1"	2'-8" x 2'-8" x 1"												13'-0" x 14'-0" x 2'-6"	15-#6	15-#7	14-#9	14-#9	
VI	24		2'-10" x 2'-10" x 1"	3'-0" x 3'-0" x 1"	5'-9"		#11			5'-9"		#11				13'-0" x 16'-0" x 2'-6"	17-#7	17-#7		14-#11	
VII	24	3/4"														13'-0" x 17'-0" x 2'-6"	18-#7	18-#7			
VIII	24	31/32"														13'-0" x 18'-0" x 2'-6"	19-#7	19-#7			
IX	24	31/32"														13'-0" x 18'-0" x 2'-6"	19-#7	19-#7			

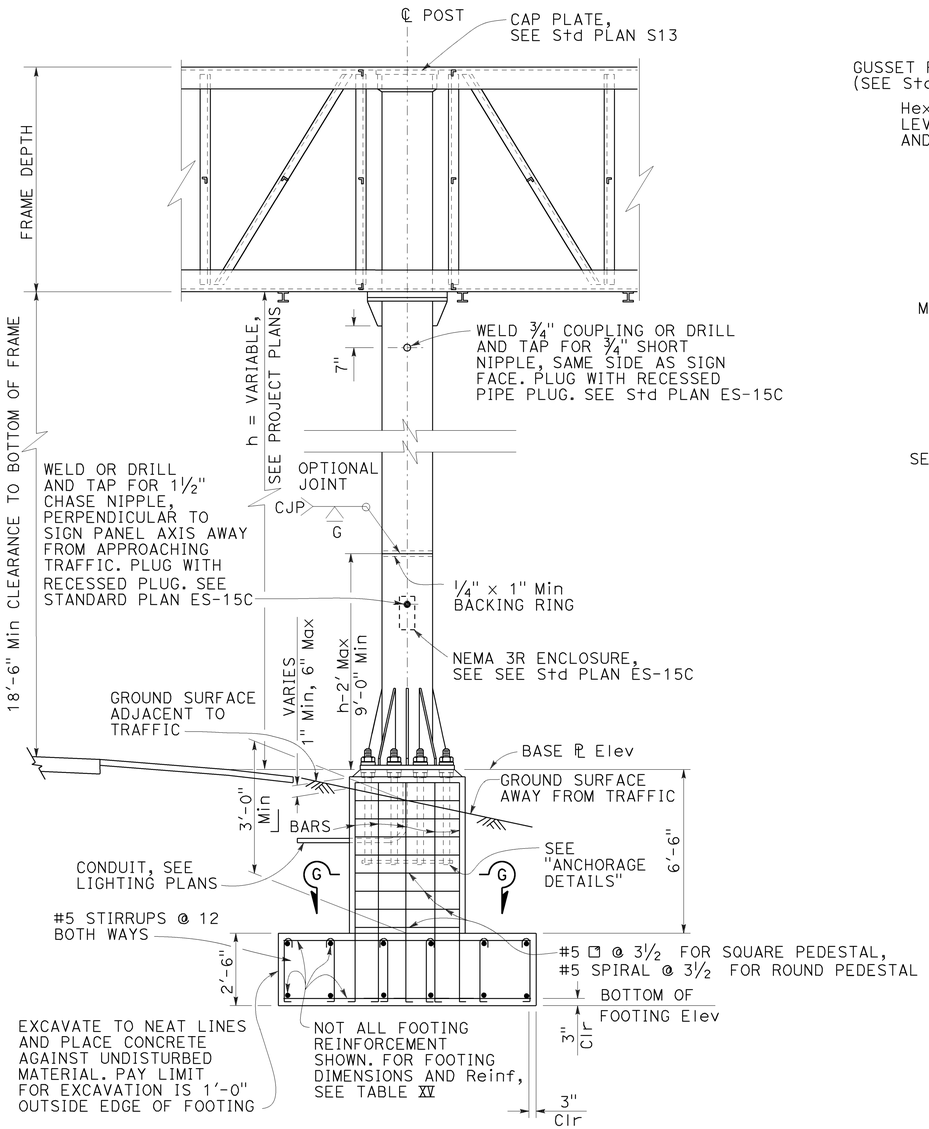

ELEVATION
See Note 5

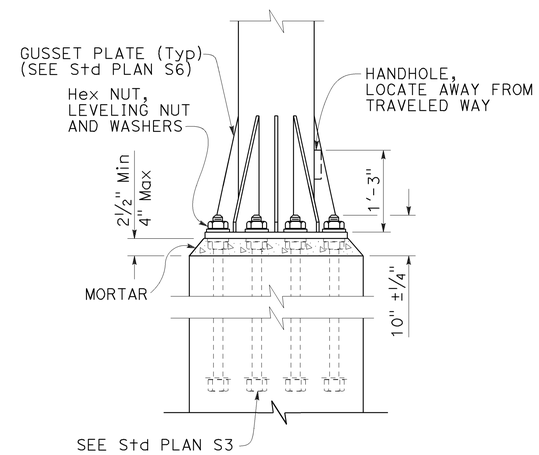

ELEVATION

ANCHORAGE DETAILS

NOTES:

1. For "General Notes", see Revised Standard Plan RSP S1.
2. Longer side of footing (longitudinal) shall be normal to axis of sign.
3. Backfill shall be in place prior to erection of post.
4. Thread upper 10" of anchor bolts and galvanize upper 1'-0".
5. Spread footing with square pedestal foundation shown, use Pile Foundation when shown on the Project Plans. For pile foundation details, see Standard Plan S8.
6. Anchor plates may be retained with hexagon nut or formed head as alternatives to details shown.
7. On single post sign structures, the post shall be raked out of plumb, with the use of the leveling nuts to make the bottom of the sign frame level.
8. At final position of post all top and bottom nuts shall be tightened against base plate.
9. When foundation is located on a steep slope with exposed face of concrete adjacent to traffic, see "Detail C" on Standard Plan S8, as applicable.
10. Slope protection required when indicated on the Project Plans.

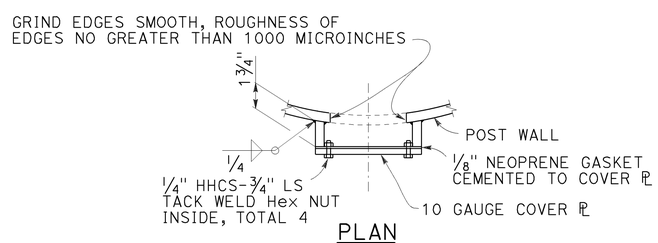

PLAN

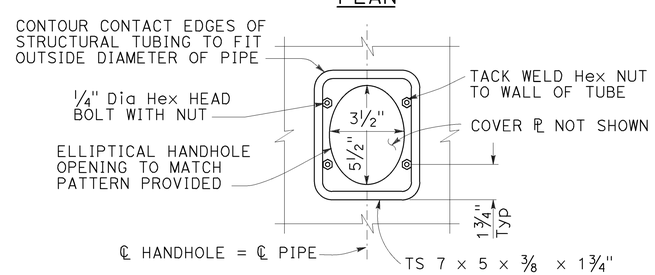

ELEVATION

TYPICAL DETAILS OF HANDHOLE AND COVER

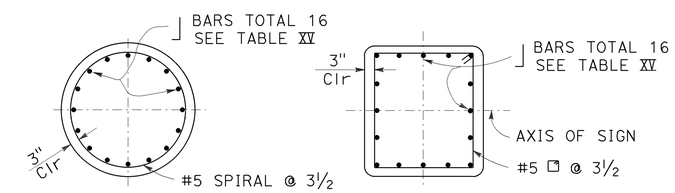

SECTION G-G
ROUND PEDESTAL

SECTION G-G
SQUARE PEDESTAL

STATE OF CALIFORNIA
DEPARTMENT OF TRANSPORTATION

OVERHEAD SIGNS-TRUSS SINGLE POST TYPE POST TYPES II THROUGH IX

NO SCALE

RSP S2 DATED JULY 19, 2013 SUPERSEDES STANDARD PLAN S2
DATED MAY 20, 2011 - PAGE 335 OF THE STANDARD PLANS BOOK DATED 2010.

REVISED STANDARD PLAN RSP S2

2010 REVISED STANDARD PLAN RSP S2

7-11-13

Dist	COUNTY	ROUTE	POST MILES TOTAL PROJECT	SHEET No.	TOTAL SHEETS
11	SD	8	5.4/10.6, R20.0/R21.6	192	213

REGISTERED CIVIL ENGINEER

October 30, 2015
PLANS APPROVAL DATE

REGISTERED PROFESSIONAL ENGINEER Jeffrey B. Woody No. C41260 Exp. 3-31-17 CIVIL STATE OF CALIFORNIA

THE STATE OF CALIFORNIA OR ITS OFFICERS OR AGENTS SHALL NOT BE RESPONSIBLE FOR THE ACCURACY OR COMPLETENESS OF SCANNED COPIES OF THIS PLAN SHEET.

TO ACCOMPANY PLANS DATED 05-31-16

2010 REVISED STANDARD PLAN RSP S17

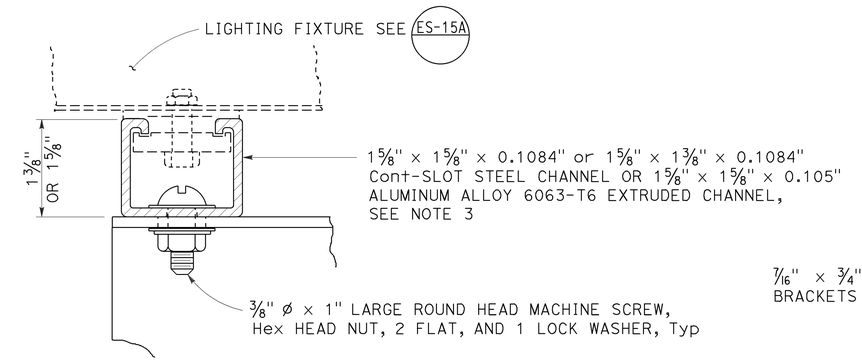

LIGHTING FIXTURE MOUNTING CHANNEL DETAILS 1

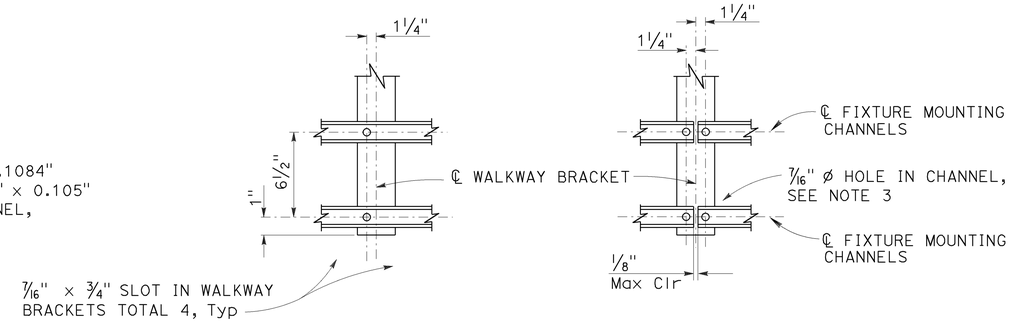

TYPICAL CONNECTION CONNECTION AT SPLICE

LIGHTING FIXTURE MOUNTING CHANNEL DETAILS 2

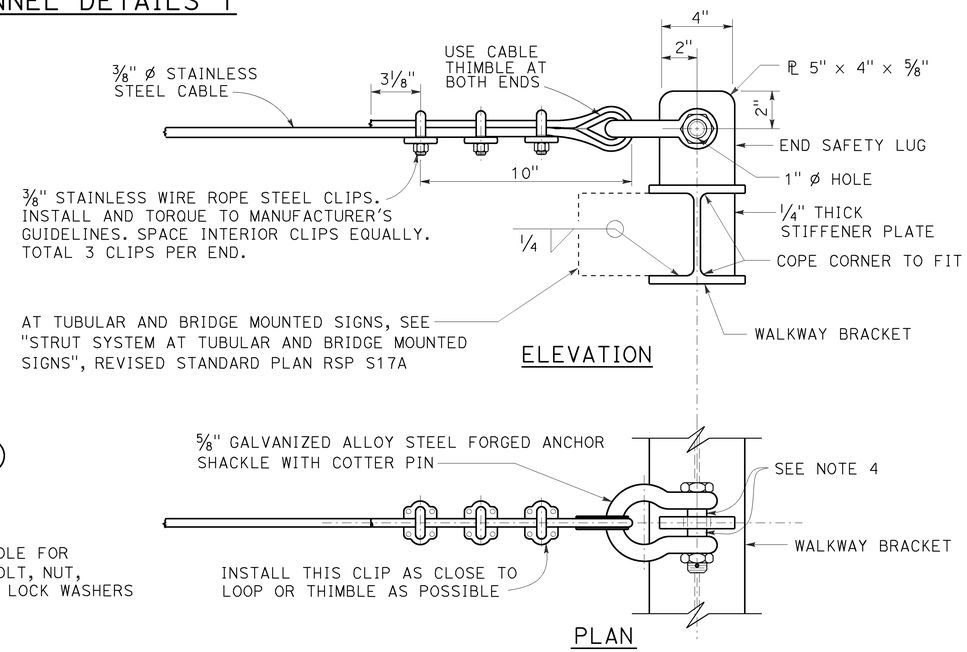

ELEVATION

PLAN

END SAFETY CABLE DETAIL

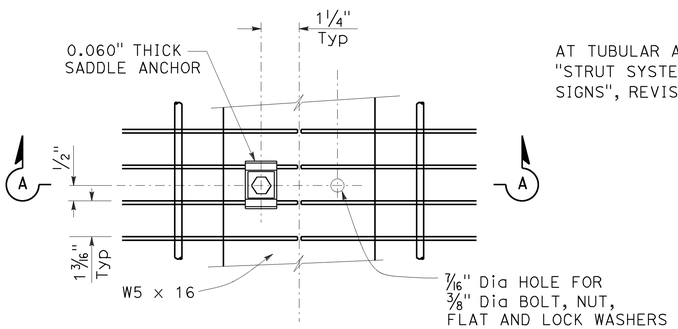

PLAN

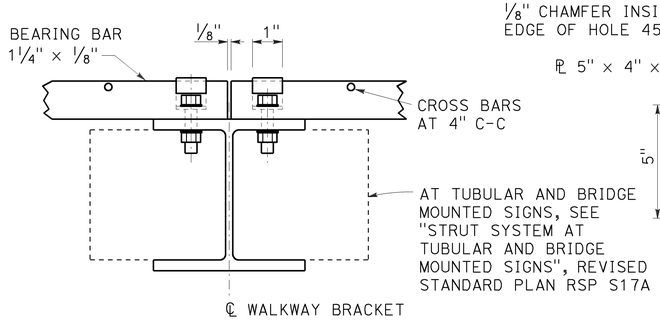

SECTION A-A

WALKWAY GRATING DETAILS

Shown at splice

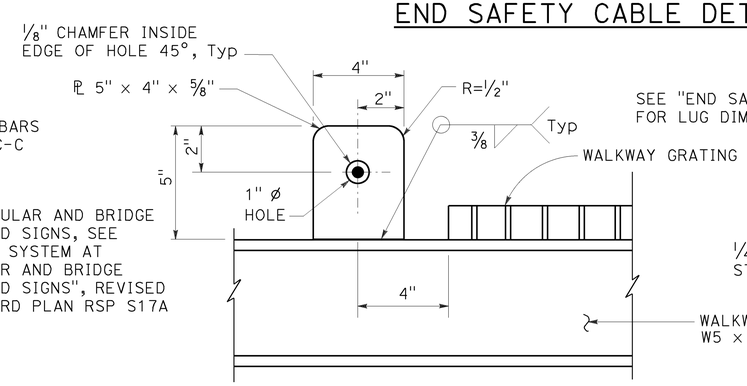

INTERIOR SAFETY LUG DETAIL

(At every walkway bracket between exterior walkway brackets)

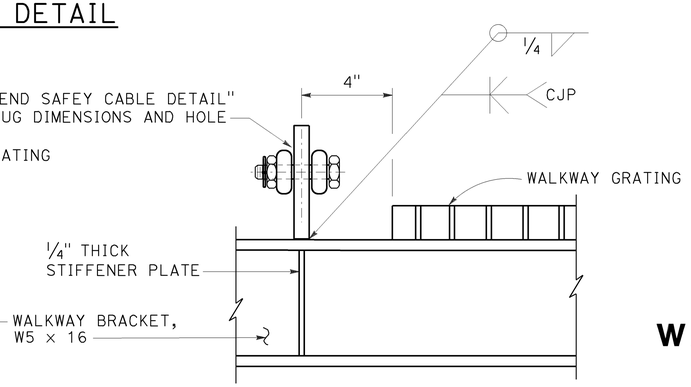

END SAFETY LUG DETAIL

(At exterior walkway brackets)

NOTES:

1. Welded type grating shall have 1 1/4" x 1/8" bearing bars at 1 3/16" centers with 1/4" diameter (or equal) cross bars at 4" centers. If mechanical lock grating is used, it shall be equal in strength to the welded type. Alternate hold-down clips may be submitted for approval.
2. Walkway grating and light fixture mounting channels to be continuous (no splices) over as many walkway brackets as practical and consistent with fabrication, ease of handling and assembly.
3. Contractor may substitute 1 5/8" x 1 5/8" x .1084" cont-slot steel channel with pre-punched slots not larger than 13/32" x 3". Slots shall be at bottom of channel and shall be parallel to channel. Slots shall be spaced not closer than 4" center to center.
4. Place an equal amount of washers on each side to align cable with end lug without restricting shakle bolt rotation or contacting cable.

STATE OF CALIFORNIA
DEPARTMENT OF TRANSPORTATION

OVERHEAD SIGNS WALKWAY DETAILS No. 2

NO SCALE

RSP S17 DATED OCTOBER 30, 2015 SUPERSEDES STANDARD PLAN S17 DATED MAY 20, 2011 - PAGE 350 OF THE STANDARD PLANS BOOK DATED 2010.

REVISED STANDARD PLAN RSP S17

8-14-15

Dist	COUNTY	ROUTE	POST MILES TOTAL PROJECT	SHEET No.	TOTAL SHEETS
11	SD	8	5.4/10.6, R20.0/R21.6	193	213

REGISTERED CIVIL ENGINEER

October 30, 2015
PLANS APPROVAL DATE

REGISTERED PROFESSIONAL ENGINEER
Stanley P. Johnson
No. C57793
Exp. 3-31-16
CIVIL
STATE OF CALIFORNIA

THE STATE OF CALIFORNIA OR ITS OFFICERS OR AGENTS SHALL NOT BE RESPONSIBLE FOR THE ACCURACY OR COMPLETENESS OF SCANNED COPIES OF THIS PLAN SHEET.

TO ACCOMPANY PLANS DATED 05-31-16

2010 REVISED STANDARD PLAN RSP S17A

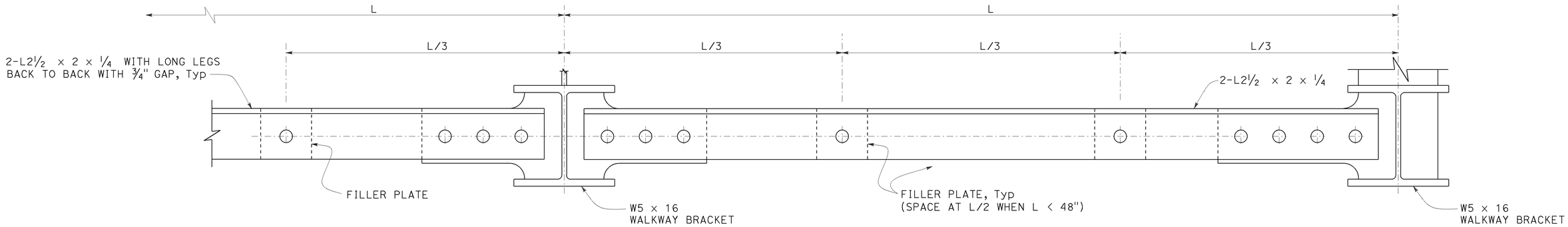

STRUT SYSTEM AT TUBULAR AND BRIDGE MOUNTED SIGNS

(Continuous between end safety lug locations)

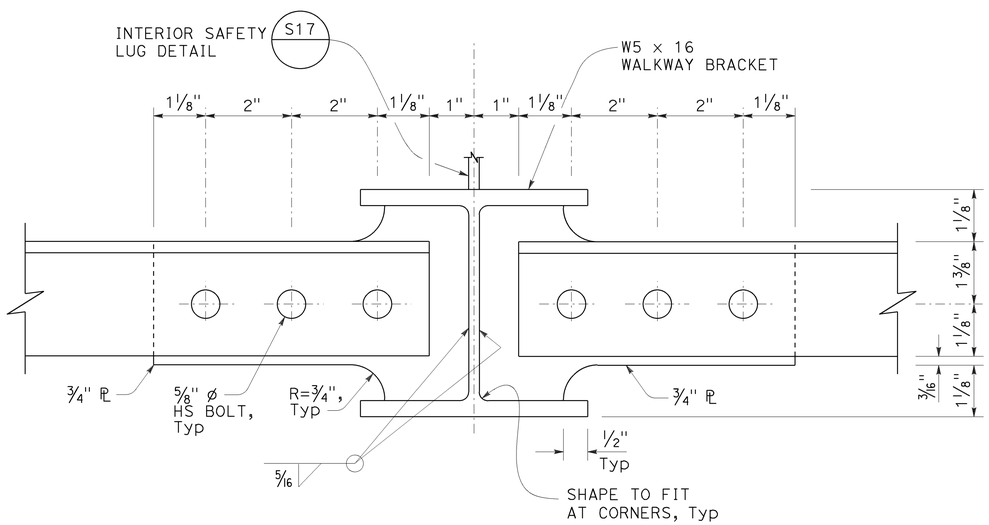

INTERIOR SAFETY LUG LOCATION

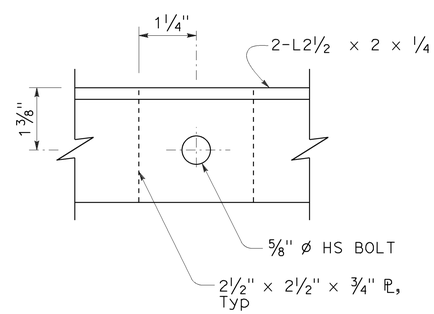

FILLER PLATE

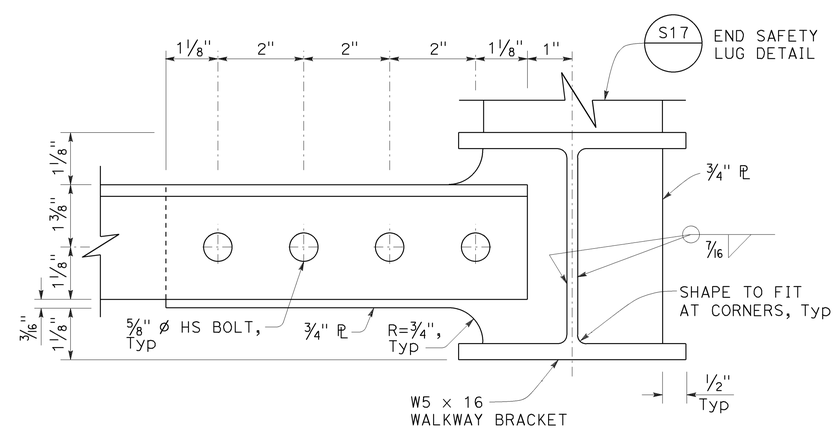

END SAFETY LUG LOCATION

STATE OF CALIFORNIA
DEPARTMENT OF TRANSPORTATION

OVERHEAD SIGNS
WALKWAY DETAILS No. 3

NO SCALE

RSP S17A DATED OCTOBER 30, 2015 SUPERSEDES STANDARD PLAN S17A
DATED MAY 20, 2011 - PAGE 351 OF THE STANDARD PLANS BOOK DATED 2010.

REVISED STANDARD PLAN RSP S17A

9-25-15

Dist	COUNTY	ROUTE	POST MILES TOTAL PROJECT	SHEET No.	TOTAL SHEETS
11	SD	8	5.4/10.6, R20.0/R21.6	194	213

REGISTERED CIVIL ENGINEER

July 19, 2013
PLANS APPROVAL DATE

REGISTERED PROFESSIONAL ENGINEER Stanley P. Johnson No. C57793 Exp. 3-31-14 CIVIL STATE OF CALIFORNIA

THE STATE OF CALIFORNIA OR ITS OFFICERS OR AGENTS SHALL NOT BE RESPONSIBLE FOR THE ACCURACY OR COMPLETENESS OF SCANNED COPIES OF THIS PLAN SHEET.

TO ACCOMPANY PLANS DATED 05-31-16

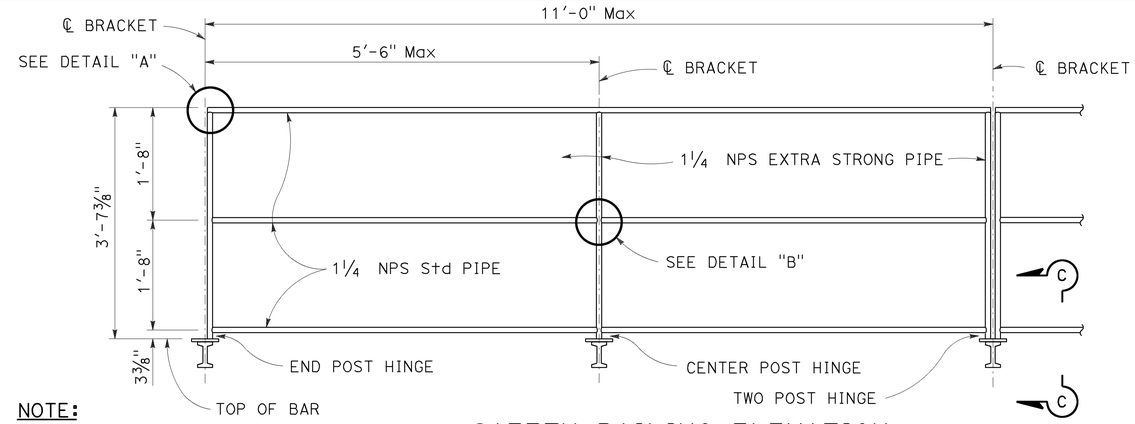

NOTE:
Chain assembly behind (see detail this page)

SAFETY RAILING ELEVATION

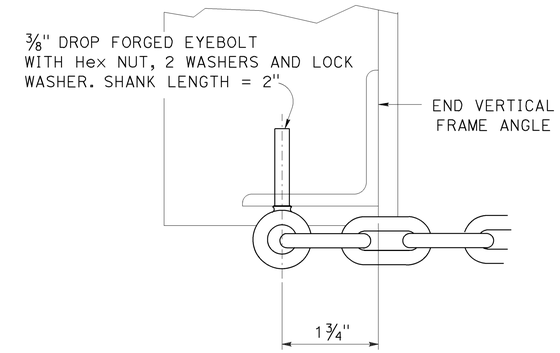

NOTE:
See Standard Plans S101 and S105 and S109 for walkway bracket spacing.

SECTION D-D

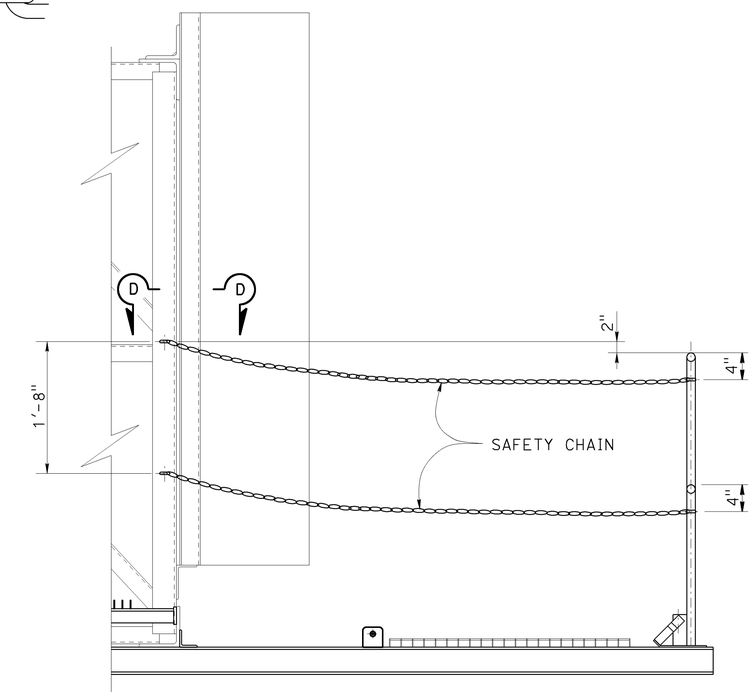

CHAIN ASSEMBLY

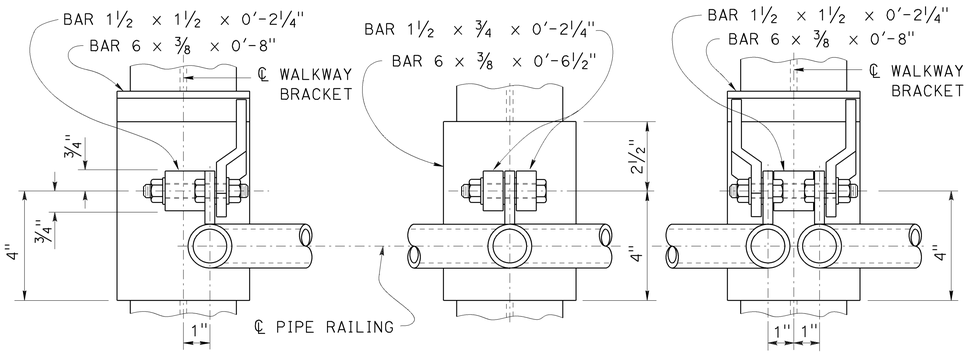

END POST — CENTER POST — TWO POST

WELDED HINGE - PLAN

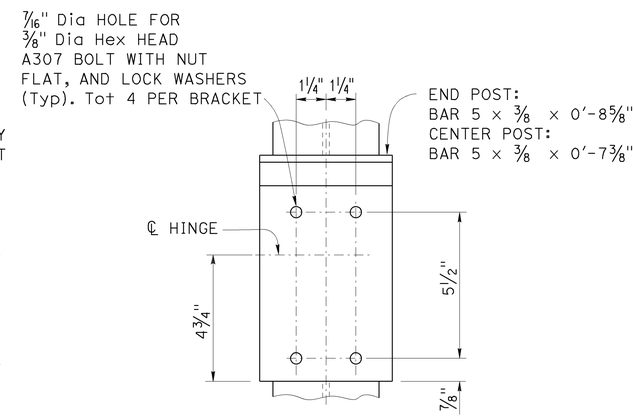

TYPICAL BOLTED (ALTERNATIVE)

HINGED CONNECTION

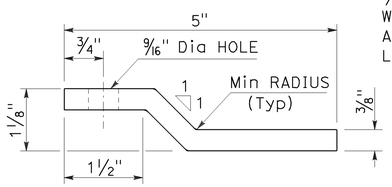

PLAN - KICKER BAR

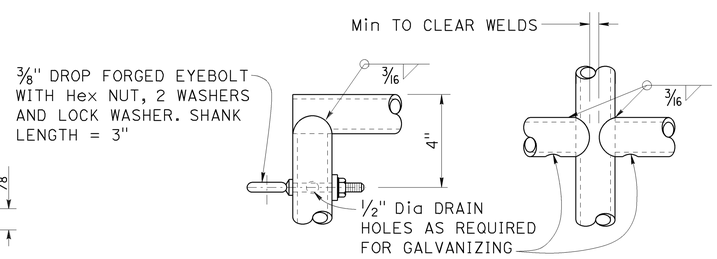

DETAIL "A" — DETAIL "B"

NOTE:
Alternative venting methods may be used if approved by the Engineer.

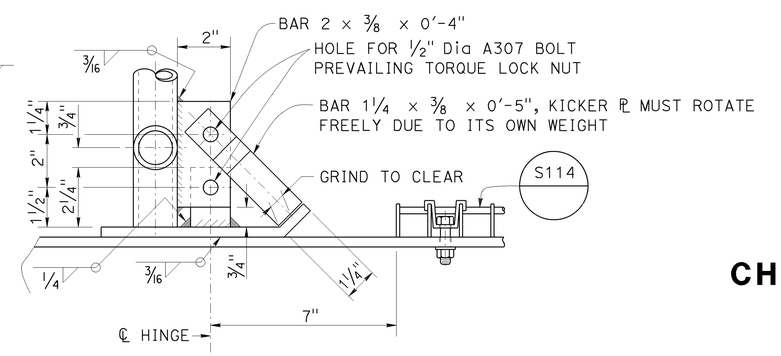

SECTION C-C
ELEVATION VIEW

STATE OF CALIFORNIA
DEPARTMENT OF TRANSPORTATION

OVERHEAD SIGN-TRUSS SINGLE POST TYPE WALKWAY SAFETY RAILING DETAILS CHANGEABLE MESSAGE SIGNS MODEL 500 AND 510

NO SCALE

RSP S140 DATED JULY 19, 2013 SUPERSEDES STANDARD PLAN S140 DATED MAY 20, 2011 - PAGE 422 OF THE STANDARD PLANS BOOK DATED 2010.

REVISED STANDARD PLAN RSP S140

2010 REVISED STANDARD PLAN RSP S140

7-11-13

Dist	COUNTY	ROUTE	POST MILES TOTAL PROJECT	SHEET No.	TOTAL SHEETS
11	SD	8	5.4/10.6, R20.0/R21.6	195	213

REGISTERED CIVIL ENGINEER

July 19, 2013
PLANS APPROVAL DATE

REGISTERED PROFESSIONAL ENGINEER
Stanley P. Johnson
No. C57793
Exp. 3-31-14
CIVIL
STATE OF CALIFORNIA

THE STATE OF CALIFORNIA OR ITS OFFICERS OR AGENTS SHALL NOT BE RESPONSIBLE FOR THE ACCURACY OR COMPLETENESS OF SCANNED COPIES OF THIS PLAN SHEET.

TO ACCOMPANY PLANS DATED 05-31-16

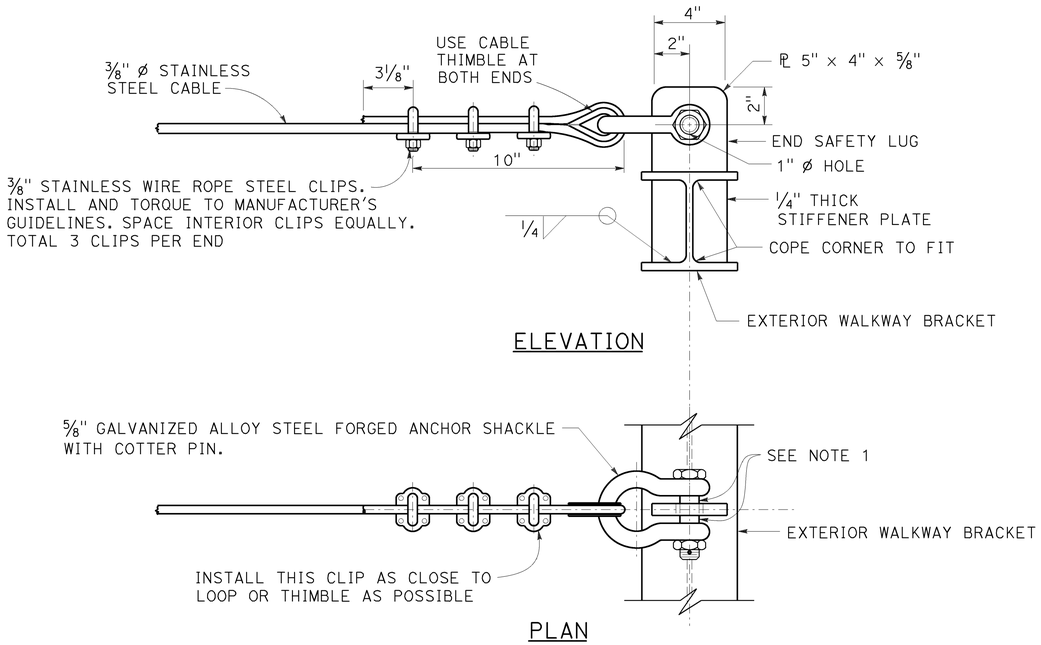

END SAFETY CABLE DETAIL

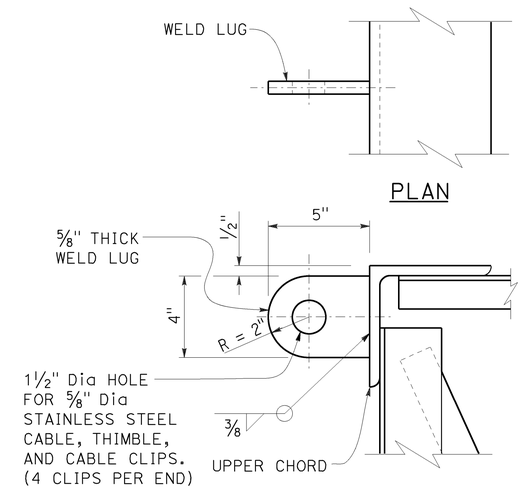

BACKSIDE WELD LUG DETAIL

NOTE: Backside weld lug shall be installed only for projects requiring backside walkways.

NOTES:

1. Place an equal amount of washers on each side to align cable with end lug without restricting shakle bolt rotation or contacting cable.
2. For walkway grating details, see Standard Plan S114.

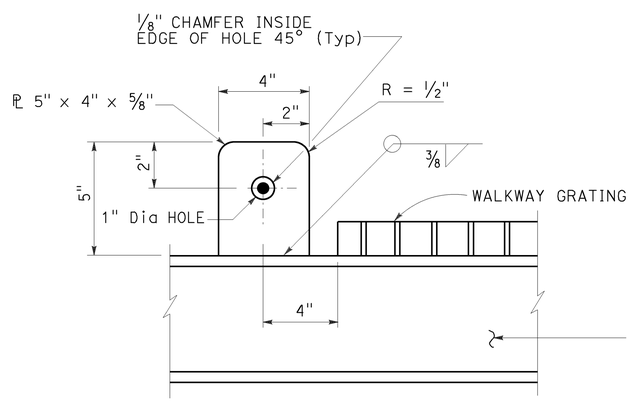

INTERIOR SAFETY LUG DETAIL

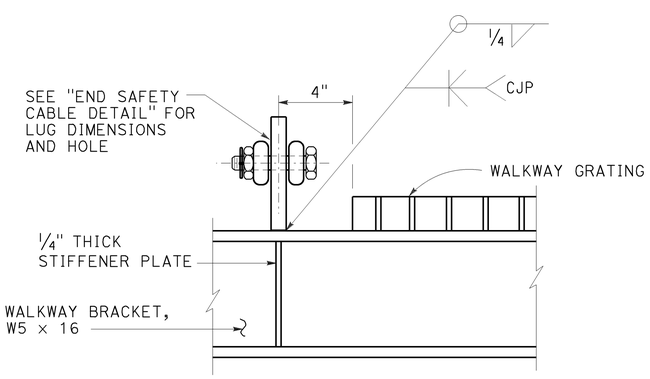

END SAFETY LUG DETAIL

STATE OF CALIFORNIA
DEPARTMENT OF TRANSPORTATION

OVERHEAD SIGN-TRUSS SINGLE POST TYPE SAFETY CABLE ANCHORAGE DETAILS CHANGEABLE MESSAGE SIGNS MODEL 500 AND 510

NO SCALE

RSP S141 DATED JULY 19, 2013 SUPERSEDES STANDARD PLAN S141
DATED MAY 20, 2011 - PAGE 423 OF THE STANDARD PLANS BOOK DATED 2010.

REVISED STANDARD PLAN RSP S141

2010 REVISED STANDARD PLAN RSP S141

7-11-13

Dist	COUNTY	ROUTE	POST MILES TOTAL PROJECT	SHEET No.	TOTAL SHEETS
11	SD	8	5.4/10.6, R20.0/R21.6	196	213

Theresa Gabriel
REGISTERED ELECTRICAL ENGINEER

October 30, 2015
PLANS APPROVAL DATE

REGISTERED PROFESSIONAL ENGINEER Theresa Aziz Gabriel No. E15129 Exp. 6-30-16 ELECTRICAL STATE OF CALIFORNIA

THE STATE OF CALIFORNIA OR ITS OFFICERS OR AGENTS SHALL NOT BE RESPONSIBLE FOR THE ACCURACY OR COMPLETENESS OF SCANNED COPIES OF THIS PLAN SHEET.

TO ACCOMPANY PLANS DATED 05-31-16

LEGEND:

- AB — ABANDON. IF APPLIED TO CONDUIT, REMOVE CONDUCTORS
- BC — INSTALL PULL BOX IN EXISTING CONDUIT RUN
- BP — PEDESTRIAN BARRICADE, TYPE AS INDICATED ON PLAN
- CB — INSTALL CONDUIT INTO EXISTING PULL BOX
- CC — CONNECT NEW AND EXISTING CONDUIT. REMOVE EXISTING CONDUCTORS AND INSTALL CONDUCTORS AS INDICATED
- CF — CONDUIT TO REMAIN FOR FUTURE USE. REMOVE CONDUCTORS. INSTALL PULL TAPE
- DH — DETECTOR HANDHOLE
- FA — FOUNDATION TO BE ABANDONED
- IS — INSTALL SIGN ON SIGNAL MAST ARM
- NS — NO SLIP BASE ON STANDARD
- PEC — PHOTOELECTRIC CONTROL
- PEU — PHOTOELECTRIC UNIT
- RC — EQUIPMENT OR MATERIAL TO BE REMOVED AND BECOME THE PROPERTY OF THE CONTRACTOR
- RE — REMOVE ELECTROLIER, FUSES AND BALLAST. TAPE ENDS OF CONDUCTORS
- RL — RELOCATE EQUIPMENT
- RR — REMOVE AND REUSE EQUIPMENT
- RS — REMOVE AND SALVAGE EQUIPMENT
- SC — SPLICE NEW TO EXISTING CONDUCTORS
- SD — SERVICE DISCONNECT
- TSP — TELEPHONE SERVICE POINT

ABBREVIATIONS

AC+	UNDERGROUNDED CONDUCTOR
APS	ACCESSIBLE PEDESTRIAN SIGNAL
Batt	BATTERY
BBS	BATTERY BACKUP SYSTEM
BC	BOLT CIRCLE
Blk	BLACK
BP	BYPASS
BPB	BICYCLE PUSH BUTTON
C	CONDUIT
CB	CIRCUIT BREAKER
CCTV	CLOSED CIRCUIT TELEVISION
Ckt	CIRCUIT
CMS	CHANGEABLE MESSAGE SIGN
Ctid	CALTRANS IDENTIFICATION
Comm	COMMUNICATION
Cntl	CONTROL
DF	DEPARTMENT-FURNISHED
DLC	LOOP DETECTOR LEAD-IN CABLE
EMS	EXTINGUISHABLE MESSAGE SIGN
EVUC	EMERGENCY VEHICLE UNIT CABLE
EVUD	EMERGENCY VEHICLE UNIT DETECTOR
FB	FLASHING BEACON
FBCA	FLASHING BEACON CONTROL ASSEMBLY
FBS	FLASHING BEACON WITH SLIP BASE
FO	FIBER OPTIC
G	EQUIPMENT GROUNDING CONDUCTOR
GB	GROUND BUS
GFCI	GROUND FAULT CIRCUIT INTERRUPTER
Grn	GREEN
HAR	HIGHWAY ADVISORY RADIO
Hex	HEXAGONAL
HPS	HIGH PRESSURE SODIUM
IISNS	INTERNALLY ILLUMINATED STREET NAME SIGN
ISL	INDUCTION SIGN LIGHTING
LED	LIGHT EMITTING DIODE
LMA	LUMINAIRE MAST ARM
LPS	LOW PRESSURE SODIUM
Ltg	LIGHTING
Lum	LUMINAIRE
M	METERED
MAT	MAST ARM MOUNTING TOP ATTACHMENT
MAS	MAST ARM MOUNTING SIDE ATTACHMENT
MBPS	MANUAL BYPASS SWITCH
M/M	MULTIPLE TO MULTIPLE TRANSFORMER
Mtg	MOUNTING
MV	MERCURY VAPOR LIGHTING FIXTURE
MVDS	MICROWAVE VEHICLE DETECTION SYSTEM
N	NEUTRAL (GROUNDED CONDUCTOR)
NB	NEUTRAL BUS
NC	NORMALLY CLOSE
NO	NORMALLY OPEN
P	CIRCUIT BREAKER'S POLE
PB	PULL BOX
PBA	PUSH BUTTON ASSEMBLY
PEC	PHOTOELECTRIC CONTROL
Ped	PEDESTRIAN
PEU	PHOTOELECTRIC UNIT
PT	CONDUIT WITH PULL TAPE
PTR	POWER TRANSFER RELAY
RE	RELOCATED EQUIPMENT
RM	RAMP METERING
RWIS	ROADSIDE WEATHER INFORMATION SYSTEM
SB	SLIP BASE
SIC	SIGNAL INTERCONNECT CABLE
Sig	SIGNAL
SMA	SIGNAL MAST ARM
SNS	STREET NAME SIGN
SP	SERVICE POINT
TB	TERMINAL BOARD
TDC	TELEPHONE DEMARCATION CABINET
Temp	TEMPERATURE
TMS	TRAFFIC MONITORING STATION
TOS	TRAFFIC OPERATIONS SYSTEM
UPS	UNINTERRUPTABLE POWER SUPPLY
UPSC	UNINTERRUPTABLE POWER SUPPLY CONTROLLER
Veh	VEHICLE
VIVDS	VIDEO IMAGE VEHICLE DETECTION SYSTEM
Wht	WHITE
WIM	WEIGH-IN-MOTION
Xfmr	TRANSFORMER

SOFFIT AND WALL-MOUNTED LUMINAIRES

- PENDANT SOFFIT LUMINAIRE, 70 W HPS UNLESS OTHERWISE SPECIFIED
- FLUSH-MOUNTED SOFFIT LUMINAIRE, 70 W HPS UNLESS OTHERWISE SPECIFIED
- WALL-MOUNTED LUMINAIRE, 70 W HPS UNLESS OTHERWISE SPECIFIED
- EXISTING SOFFIT OR WALL-MOUNTED LUMINAIRE TO REMAIN UNMODIFIED
- (M) EXISTING SOFFIT OR WALL-MOUNTED LUMINAIRE TO BE MODIFIED AS SPECIFIED

NOTE:
Arrow indicates "street side" of luminaire.

COMMONLY USED SYMBOLS FOR UNITED STATES CUSTOMARY UNITS OF MEASUREMENT:

SYMBOL	DEFINITIONS
Ω	OHMS
min	MINUTE
s	SECOND
bps	BITS PER SECOND
Bps	BYTES PER SECOND
A	AMPERE
V	VOLT
V(dc)	VOLT (DIRECT CURRENT)
V(ac)	VOLT (ALTERNATING CURRENT)
FC	FOOT - CANDLE
W	WATTS
VA	VOLT-AMPERE
M	MEGA
k	KILO
m	MILLI
μ	MICRO
P	PICO
Hz	HERTZ

MISCELLANEOUS ELECTROLIERS

NEW	EXISTING	
		LUMINAIRE ON WOOD POLE
		NON-STANDARD ELECTROLIER (SEE PROJECT LEGEND)
		CITY ELECTROLIER
		ELECTROLIER FOUNDATION (FUTURE INSTALLATION)

NOTES:

1. LED luminaires shall be 235 W when installed on Type 21, 21D, 30, 31 and 32 Standards, unless otherwise specified. LED luminaires shall be 165 W when installed on other type standards or poles, unless otherwise specified.
2. Luminaires shall be the cutoff type, ANSI Type III medium cutoff lighting distribution, unless otherwise specified.

STANDARD ELECTROLIER

NEW	EXISTING	STANDARD TYPE
		15
		15D
		15 STRUCTURE
		15D STRUCTURE
		21
		21D
		21 STRUCTURE
		21D STRUCTURE
		30
		31
		32

STATE OF CALIFORNIA
DEPARTMENT OF TRANSPORTATION

ELECTRICAL SYSTEMS (LEGEND AND ABBREVIATIONS)

NO SCALE

RSP ES-1A DATED OCTOBER 30, 2015 SUPERSEDES RSP ES-1A DATED JULY 19, 2013 AND STANDARD PLAN ES-1A DATED MAY 20, 2011 - PAGE 425 OF THE STANDARD PLANS BOOK DATED 2010.

REVISED STANDARD PLAN RSP ES-1A

2010 REVISED STANDARD PLAN RSP ES-1A

9-29-15

Dist	COUNTY	ROUTE	POST MILES TOTAL PROJECT	SHEET No.	TOTAL SHEETS
11	SD	8	5.4/10.6, R20.0/R21.6	197	213

Theresa Gabriel
REGISTERED ELECTRICAL ENGINEER

October 30, 2015
PLANS APPROVAL DATE

REGISTERED PROFESSIONAL ENGINEER Theresa Aziz Gabriel No. E15129 Exp. 6-30-16 ELECTRICAL STATE OF CALIFORNIA

THE STATE OF CALIFORNIA OR ITS OFFICERS OR AGENTS SHALL NOT BE RESPONSIBLE FOR THE ACCURACY OR COMPLETENESS OF SCANNED COPIES OF THIS PLAN SHEET.

TO ACCOMPANY PLANS DATED 05-31-16

CONDUIT

NEW	EXISTING	
		LIGHTING CONDUIT, UNLESS OTHERWISE INDICATED OR NOTED
		TRAFFIC SIGNAL CONDUIT
C	c	COMMUNICATION CONDUIT
T	t	TELEPHONE CONDUIT
F	f	FIRE ALARM CONDUIT
FO	fo	FIBER OPTIC CONDUIT
		CONDUIT TERMINATION
R	r	CONDUIT RISER ATTACHED TO THE STRUCTURE OR SERVICE POLE

SERVICE EQUIPMENT

NEW	EXISTING	
OH	oh	OVERHEAD LINES
U	U	WOOD POLE, "U" INDICATES UTILITY OWNED
		POLE GUY WITH ANCHOR
		UTILITY TRANSFORMER - GROUND MOUNTED
III	III	SERVICE EQUIPMENT ENCLOSURE TYPE. DOOR INDICATES FRONT OF ENCLOSURE
T	t	TELEPHONE DEMARCATION CABINET

POLE-MOUNTED SERVICE DESIGNATION

TYPE H SERVICE, 28'-10" — TYPE OF INSTALLATION AND POLE HEIGHT ABOVE GRADE

FLASHING BEACON

NEW	EXISTING	
R	R	FLASHING BEACON (ONE VEHICLE SIGNAL HEAD WITH BACKPLATE AND VISOR) "R" INDICATES RED INDICATION, "Y" INDICATES YELLOW INDICATION
Y Y	Y Y	FLASHING BEACON WITH TYPE 15-FBS STANDARD AND A SIGN.
R R	R R	FLASHING BEACON WITH TYPES 9, 9A OR 9B SIGN UNLESS OTHERWISE SPECIFIED OR INDICATED

SIGNAL EQUIPMENT

NEW	EXISTING	
		PEDESTRIAN SIGNAL HEAD
		PUSH BUTTON ASSEMBLY POST
		PEDESTRIAN BARRICADE
		VEHICLE SIGNAL HEAD (WITH BACKPLATE AND 3-SECTIONS: RED, YELLOW AND GREEN)
		VEHICLE SIGNAL HEAD WITH ANGLE VISOR
PV	PV	MODIFICATIONS OF BASIC SYMBOL: "L" INDICATES ALL NON-ARROW SECTIONS LOUVERED "LG" INDICATES LOUVERED GREEN SECTION ONLY "PV" INDICATES ALL 12" SECTIONS PROGRAMMED VISIBILITY "8" INDICATES ALL 8" SECTIONS (ONLY WHEN SPECIFIED)
		VEHICLE SIGNAL HEAD CONSISTING OF RED, YELLOW AND GREEN LEFT ARROW SECTIONS
		VEHICLE SIGNAL HEAD CONSISTING OF RED AND YELLOW SECTIONS WITH AN UP GREEN ARROW SECTION
		VEHICLE SIGNAL HEAD (5 SECTION) CONSISTING OF RED, YELLOW AND GREEN SECTIONS WITH YELLOW AND GREEN RIGHT ARROW SECTIONS
		TYPE 15TS STANDARD WITH VEHICLE SIGNAL HEAD AND LUMINAIRE
		TYPE 21TS STANDARD WITH VEHICLE SIGNAL HEAD AND LUMINAIRE
		STANDARD WITH LUMINAIRE AND SIGNAL MAST ARMS AND ATTACHED VEHICLE SIGNAL HEADS
		TYPE 1 STANDARD WITH ATTACHED VEHICLE SIGNAL HEADS
		STANDARD WITH A SIGNAL MAST ARM, ATTACHED VEHICLE SIGNAL HEADS AND INTERNALLY ILLUMINATED STREET NAME SIGN
		CONTROLLER ASSEMBLY. DOOR INDICATES FRONT OF CABINET

SIGNAL EQUIPMENT Cont

NEW	EXISTING	
		GUARD POST
		TYPE 1 STANDARD WITH RAMP METERING SIGN
		OPTICAL DETECTOR FOR THE EMERGENCY VEHICLE DETECTION

NOTES:

1. All signal sections shall be 12" unless shown otherwise.
2. Signal heads shall be provided with backplates unless shown otherwise.

ILLUMINATED OVERHEAD SIGN

NEW	EXISTING	
		SINGLE POST, SINGLE ILLUMINATED SIGN, BALANCED BUTTERFLY
		SINGLE POST, DOUBLE ILLUMINATED SIGN, BALANCED BUTTERFLY
		SINGLE POST, SINGLE ILLUMINATED SIGN, FULL CANTILEVER
		DOUBLE POST, SINGLE ILLUMINATED SIGN
		SINGLE ILLUMINATED SIGN MOUNTED ON STRUCTURE
		DOUBLE POST, SINGLE ILLUMINATED SIGN WITH ELECTROLIER

STATE OF CALIFORNIA
DEPARTMENT OF TRANSPORTATION

ELECTRICAL SYSTEMS (LEGEND AND ABBREVIATIONS)

NO SCALE

RSP ES-1B DATED OCTOBER 30, 2015 SUPERSEDES RSP ES-1B DATED JULY 19, 2013 AND STANDARD PLAN ES-1B DATED MAY 20, 2011 - PAGE 426 OF THE STANDARD PLANS BOOK DATED 2010.

REVISED STANDARD PLAN RSP ES-1B

2010 REVISED STANDARD PLAN RSP ES-1B

8-19-15

Dist	COUNTY	ROUTE	POST MILES TOTAL PROJECT	SHEET No.	TOTAL SHEETS
11	SD	8	5.4/10.6, R20.0/R21.6	198	213

Theresa Gabriel
REGISTERED ELECTRICAL ENGINEER

April 15, 2016
PLANS APPROVAL DATE

REGISTERED PROFESSIONAL ENGINEER
Theresa Aziz Gabriel
No. E15129
Exp. 6-30-16
ELECTRICAL
STATE OF CALIFORNIA

THE STATE OF CALIFORNIA OR ITS OFFICERS OR AGENTS SHALL NOT BE RESPONSIBLE FOR THE ACCURACY OR COMPLETENESS OF SCANNED COPIES OF THIS PLAN SHEET.

TO ACCOMPANY PLANS DATED 05-31-16

EQUIPMENT IDENTIFICATION

ILLUMINATED SIGN IDENTIFICATION:

SIGN No. 12345
10 ISL SCI 1.0

- SIGN EQUIPMENT IDENTIFICATION CHARACTERS - PLACE ON POST OR STRUCTURE
- TRANSFORMER RATING (kVA)
- LIGHTING CONTROL TYPE
- NUMBER AND TYPE OF FIXTURES

} DO NOT PLACE ON STANDARD OR STRUCTURE

ELECTROLIER OR EQUIPMENT IDENTIFICATION:

L2745 - 15'-0"

- MAST ARM LENGTH, IF SHOWN. DO NOT PLACE ON STANDARD OR STRUCTURE
- EQUIPMENT IDENTIFICATION CHARACTERS - PLACE ON STANDARD OR STRUCTURE. EXISTING EQUIPMENT IDENTIFICATION CHARACTERS ARE SHOWN IN PARENTHESIS

CONDUIT AND CONDUCTOR IDENTIFICATION:

1½"C, 2#10, 15#14, 2 DLC, 12P#18 (PAIR)

- NUMBER AND SIZE OF CONDUCTORS AND CABLES
- SIZE OF CONDUIT IN INCHES

ø1, ø2, ø2P, etc.	TRAFFIC PHASE IDENTIFICATION FOR SIGNALS, DETECTORS AND PHASE DIAGRAMS
1 2 3	LEGEND NUMBERS
A B C	EQUIPMENT, SIGNAL POLES, INSTALLATION OR ITEMS
1 2 3	CONDUIT RUN NUMBERS

SIGNAL AND LIGHTING STANDARD (TYPICAL DESIGNATION):

19A - 3 - 100

- WIND VELOCITY = 100 mph
- CASE 3 ARM LOADING
- STANDARD TYPE
- STANDARD PLAN SHEET NUMBER
- DETAIL, NUMBER, SECTION, TYPE OR ELEVATION

MISCELLANEOUS EQUIPMENT

NEW	EXISTING	
CMS	cms	CHANGEABLE MESSAGE SIGN
		CLOSED CIRCUIT TELEVISION CAMERA
		HIGHWAY ADVISORY RADIO POLE AND ANTENNA
EMS	ems	LED EXTINGUISHABLE MESSAGE SIGN
M V	m v	DETECTION DEVICE M = MICROWAVE SENSOR V = VIDEO IMAGE SENSOR

WIRING DIAGRAM LEGEND

----	EXTERNAL CONDUCTOR
	CONDUCTOR OR BUS
	TIE POINT
	CONTACTOR COIL
	CONTACTOR, NO CONTACT
	TERMINAL BLOCKS
	CONTACTOR, NC CONTACT
	ENCLOSURE BOND
	GROUNDING ELECTRODE
	CIRCUIT BREAKER
	RECEPTACLE

PULL BOXES

NEW	EXISTING	
		PULL BOX, No. 5 UNLESS OTHERWISE INDICATED OR NOTED
3	9A(21)	PULL BOX, ADDITIONAL DESIGNATIONS OR DESCRIPTIONS

3 No. 3½ PULL BOX
5 No. 5 PULL BOX
6 No. 6 PULL BOX
7 No. 7 PULL BOX (CEILING)
8 No. 8 PULL BOX
9 No. 9 PULL BOX (STRUCTURE)
9A No. 9A PULL BOX (STRUCTURE)

(C) COMMUNICATIONS PULL BOX
(E) PULL BOX WITH EXTENSION
(S) SPRINKLER CONTROL PULL BOX
(21) ANCHOR BOLTS AND CONDUIT FOR FUTURE INSTALLATION OF TYPE 21 STANDARD
(T) TRAFFIC PULL BOX

VEHICLE DETECTORS

5 J 9 U

- VEHICLE DETECTOR DESIGNATION
- U = UPPER
  L = LOWER
- SLOT NUMBER IN INPUT FILE
- INPUT FILE (I OR J)
- PHASE

NEW	EXISTING	
		TYPE A LOOP DETECTOR. OUTLINE OF SAW CUT SHOWN
		TYPE B LOOP DETECTOR. OUTLINE OF SAW CUT SHOWN
		TYPE C LOOP DETECTOR. OUTLINE OF SAW CUT SHOWN
		TYPE D LOOP DETECTOR. OUTLINE OF SAW CUT SHOWN
		TYPE E LOOP DETECTOR. OUTLINE OF SAW CUT SHOWN
		TYPE Q LOOP DETECTOR. OUTLINE OF SAW CUT SHOWN
DH	dh	DETECTOR HANDHOLE
		MICROWAVE OR VIDEO DETECTION ZONE

STATE OF CALIFORNIA
DEPARTMENT OF TRANSPORTATION

ELECTRICAL SYSTEMS (LEGEND AND ABBREVIATIONS)

NO SCALE

RSP ES-1C DATED APRIL 15, 2016 SUPERSEDES RSP ES-1C DATED OCTOBER 30, 2015 AND RSP ES-1C DATED JULY 19, 2013 AND STANDARD PLAN ES-1C DATED MAY 20, 2011 - PAGE 427 OF THE STANDARD PLANS BOOK DATED 2010.

REVISED STANDARD PLAN RSP ES-1C

2010 REVISED STANDARD PLAN RSP ES-1C

1-22-16

Dist	COUNTY	ROUTE	POST MILES TOTAL PROJECT	SHEET No.	TOTAL SHEETS
11	SD	8	5.4/10.6, R20.0/R21.6	199	213

Theresa Gabriel
REGISTERED ELECTRICAL ENGINEER

October 30, 2015
PLANS APPROVAL DATE

REGISTERED PROFESSIONAL ENGINEER
Theresa Aziz Gabriel
No. E15129
Exp. 6-30-16
ELECTRICAL
STATE OF CALIFORNIA

THE STATE OF CALIFORNIA OR ITS OFFICERS OR AGENTS SHALL NOT BE RESPONSIBLE FOR THE ACCURACY OR COMPLETENESS OF SCANNED COPIES OF THIS PLAN SHEET.

TO ACCOMPANY PLANS DATED 05-31-16

2010 REVISED STANDARD PLAN RSP ES-2C

NOTES:

1. The plan shows the approximate location of devices within the enclosure. Components may be rearranged, however, the "working" clearances within the service equipment enclosure shall be maintained.

2. In unpaved areas a raised portland cement concrete pad 2'-0" x 4" x width of foundation shall be constructed in front of new service equipment enclosure installation. Pad shall be set to elevation of foundation.

3. Plug-in circuit breakers may be mounted in the vertical or horizontal position. Cable-in/cable-out circuit breakers shall be mounted in the vertical position.

4. Type III-AF and Type III-BF service equipment enclosures shall have the meter viewing windows located on the front side of the service equipment enclosures.

5. Type III-AR and Type III-BR service equipment enclosure shall be similarly constructed as Type III-AF and Type III-BF respectively, except the meter viewing windows shall be located on the back side of the service equipment enclosures.

STATE OF CALIFORNIA
DEPARTMENT OF TRANSPORTATION

ELECTRICAL SYSTEMS (SERVICE EQUIPMENT ENCLOSURE NOTES TYPE III SERIES)

NO SCALE

RSP ES-2C DATED OCTOBER 30, 2015 SUPERSEDES STANDARD PLAN ES-2C DATED MAY 20, 2011 - PAGE 430 OF THE STANDARD PLANS BOOK DATED 2010.

REVISED STANDARD PLAN RSP ES-2C

Dist	COUNTY	ROUTE	POST MILES TOTAL PROJECT	SHEET No.	TOTAL SHEETS
11	SD	8	5.4/10.6, R20.0/R21.6	200	213

Theresa Gabriel
REGISTERED ELECTRICAL ENGINEER

October 30, 2015
PLANS APPROVAL DATE

REGISTERED PROFESSIONAL ENGINEER Theresa Aziz Gabriel No. E15129 Exp. 6-30-16 ELECTRICAL STATE OF CALIFORNIA

THE STATE OF CALIFORNIA OR ITS OFFICERS OR AGENTS SHALL NOT BE RESPONSIBLE FOR THE ACCURACY OR COMPLETENESS OF SCANNED COPIES OF THIS PLAN SHEET.

TO ACCOMPANY PLANS DATED 05-31-16

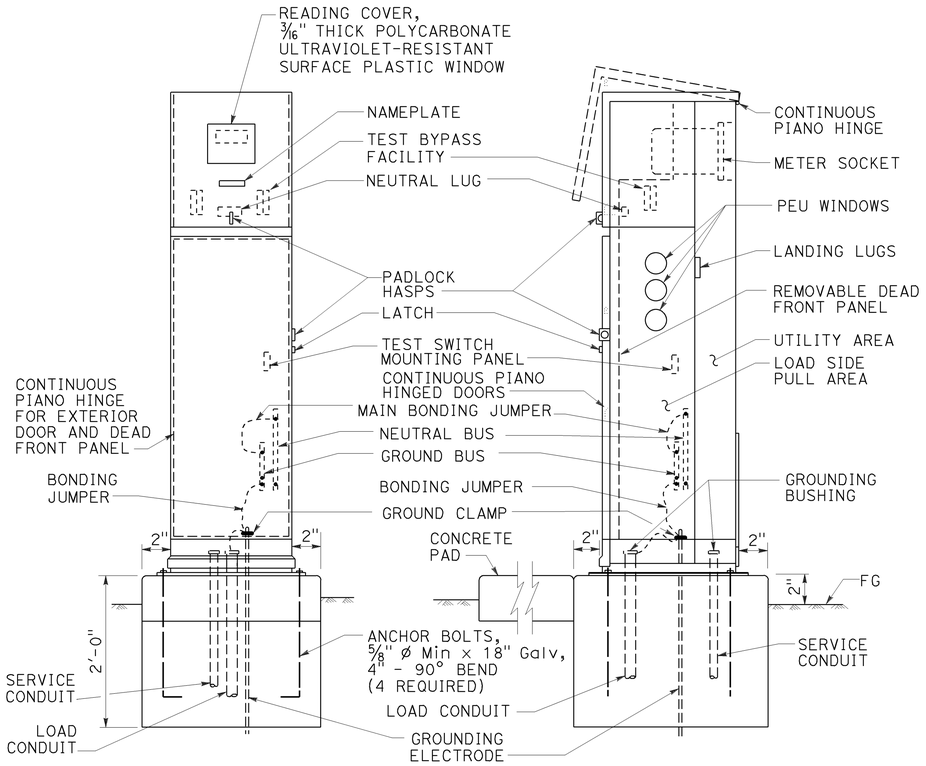

TYPE III-BF SERVICE EQUIPMENT ENCLOSURE (TYPICAL)

DETAIL A

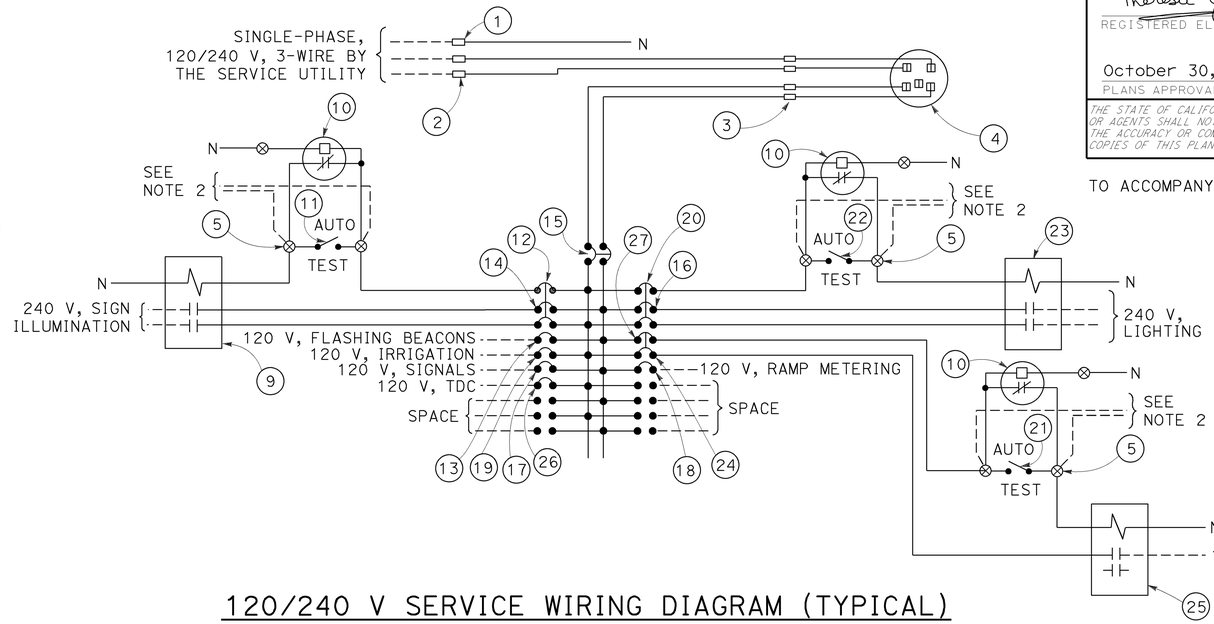

120/240 V SERVICE WIRING DIAGRAM (TYPICAL)

DETAIL C

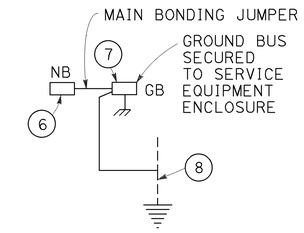

DETAIL D

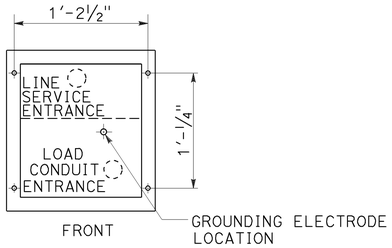

BASE FOR TYPE III-B SERVICE EQUIPMENT ENCLOSURE

DETAIL B

TYPE III-B SERVICE EQUIPMENT ENCLOSURE LEGEND (120/240 V)

ITEM	COMPONENT	NAMEPLATE DESCRIPTION	ITEM	COMPONENT	NAMEPLATE DESCRIPTION
1	NEUTRAL LUG		14	30 A, 240 V, 2P, CB	SIGN ILLUMINATION
2	LANDING LUG		15	100 A, 240 V, 2P, CB	MAIN BREAKER
3	TEST BYPASS FACILITY		16	30 A, 240 V, 2P, CB	LIGHTING
4	METER SOCKET AND SUPPORT		17	50 A, 120 V, 1P, CB	SIGNALS
5	TERMINAL BLOCKS		18	30 A, 120 V, 1P, CB	RAMP METERING
6	NEUTRAL BUS		19	20 A, 120 V, 1P, CB	IRRIGATION
7	GROUND BUS		20	15 A, 120 V, 1P, CB	LIGHTING CONTROL
8	GROUNDING ELECTRODE		21	15 A, 1P, TEST SWITCH	IISNS TEST SWITCH
9	30 A, 2P, NO CONTACTOR	SIGN ILLUMINATION	22	15 A, 1P, TEST SWITCH	LIGHTING TEST SWITCH
10	PHOTOELECTRIC UNIT (NOTE 4)	PEU	23	60 A, 2P, NO CONTACTOR	LIGHTING
11	15 A, 1P, TEST SWITCH	SIGN ILLUMINATION TEST SWITCH	24	15 A, 120 V, 1P, CB	IISNS
12	15 A, 120 V, 1P, CB	SIGN ILLUMINATION CONTROL	25	30 A, 2P, NO CONTACTOR	IISNS
13	15 A, 120 V, 1P, CB	FLASHING BEACON	26	20 A, 120 V, IP, CB	TELEPHONE DEMARCATION CABINET
			27	15 A, 120 V, 1P, CB	IISNS CONTROL

NOTES:

1. Unless otherwise indicated on the plans, service equipment items shall be provided for each service equipment enclosure as shown.
2. Connect to remote test switch mounted on lighting standards, sign post or structure when required.
3. Items 1 and 6 shall be isolated from the service equipment enclosure.
4. Type V photoelectric control shall be used unless otherwise indicated on the plans.
5. Item 12, 20 and 27 shall be ganged operated CB.

STATE OF CALIFORNIA
DEPARTMENT OF TRANSPORTATION

ELECTRICAL SYSTEMS (SERVICE EQUIPMENT ENCLOSURE AND TYPICAL WIRING DIAGRAM, TYPE III-B SERIES)

NO SCALE

RSP ES-2E DATED OCTOBER 30, 2015 SUPERSEDES STANDARD PLAN ES-2E DATED MAY 20, 2011 - PAGE 432 OF THE STANDARD PLANS BOOK DATED 2010.

REVISED STANDARD PLAN RSP ES-2E

2010 REVISED STANDARD PLAN RSP ES-2E

8-20-15

Dist	COUNTY	ROUTE	POST MILES TOTAL PROJECT	SHEET No.	TOTAL SHEETS
11	SD	8	5.4/10.6, R20.0/R21.6	201	213

Theresa Gabriel
REGISTERED ELECTRICAL ENGINEER

April 15, 2016
PLANS APPROVAL DATE

REGISTERED PROFESSIONAL ENGINEER Theresa Aziz Gabriel No. E15129 Exp. 6-30-16 ELECTRICAL STATE OF CALIFORNIA

THE STATE OF CALIFORNIA OR ITS OFFICERS OR AGENTS SHALL NOT BE RESPONSIBLE FOR THE ACCURACY OR COMPLETENESS OF SCANNED COPIES OF THIS PLAN SHEET.

TO ACCOMPANY PLANS DATED 05-31-16

2010 REVISED STANDARD PLAN RSP ES-3C

NOTES:

1. Controller units, plug-mounted equipment, shelf-mounted equipment and wall-mounted equipment shall be located to permit safe and easy removal or replacement without removing any other piece of equipment.
2. Cabinet fan may be installed at an alternate location near the top of the cabinet when approved by the Engineer.
3. Where telephone interconnect is required, a minimum of 5" clear vertical space shall be provided inside the cabinet for the equipment.
4. Telephone interconnect conductors shall be enclosed in a ¾"C or larger conduit through the foundation. Type 4 conduit shall be used to separate telephone and power conductors in cabinets.

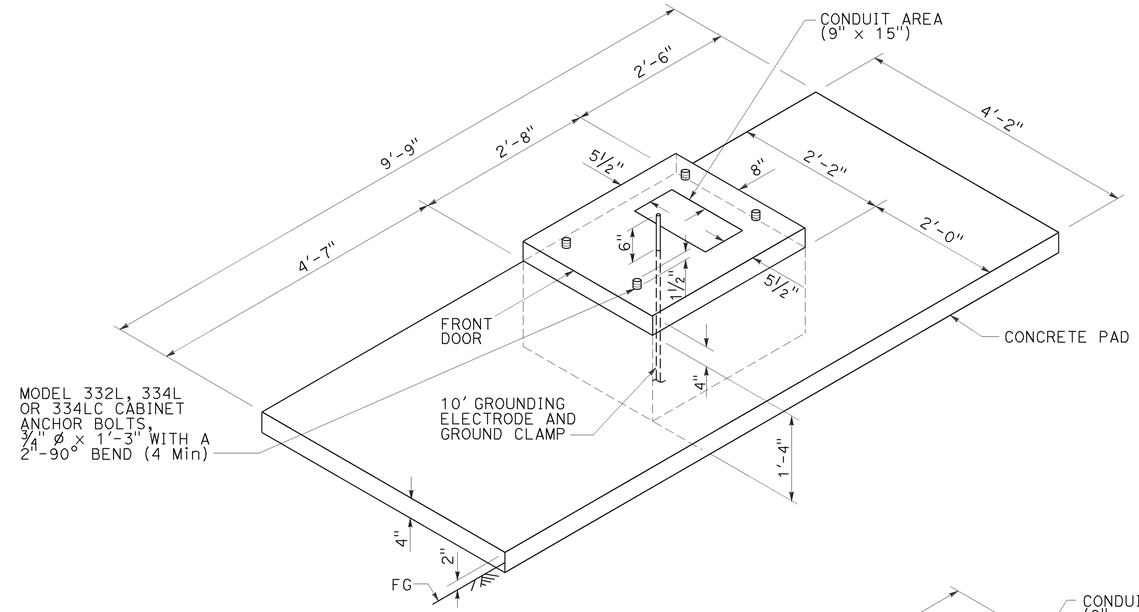

FOUNDATION AND PAD DETAIL

Model 332L, 334L and 334LC

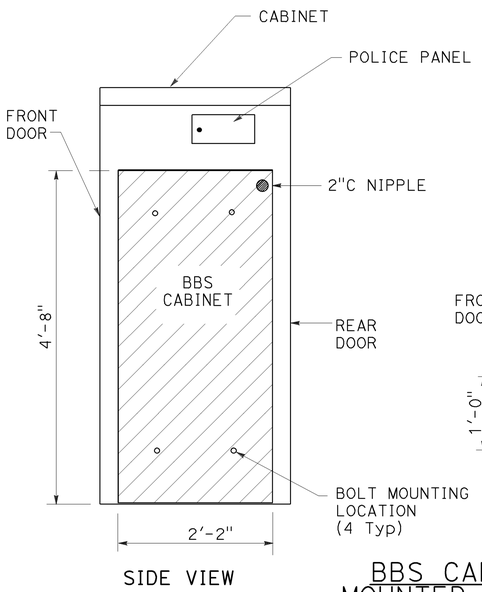

SIDE VIEW

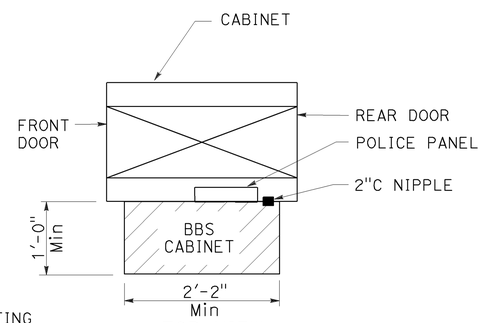

TOP VIEW

BBS CABINET MOUNTED TO THE MODEL 332L CABINET

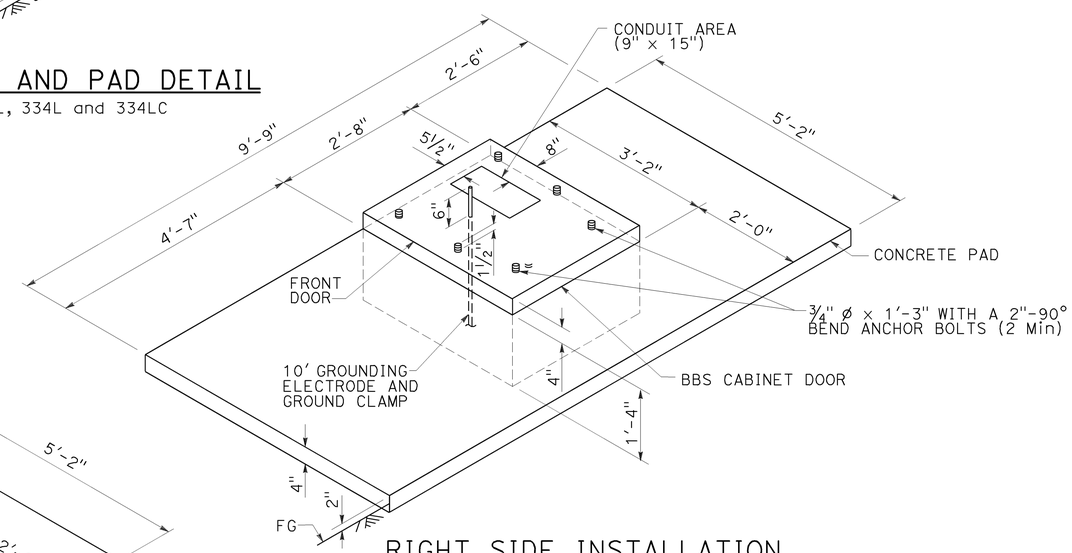

RIGHT SIDE INSTALLATION

DETAIL B

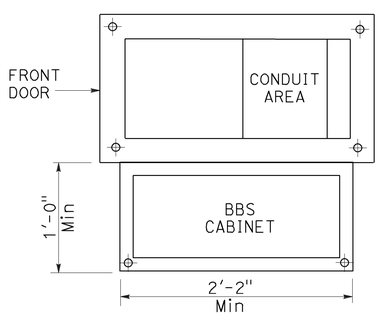

BASE PLAN FOR BBS MOUNTED TO THE MODEL 332L CABINET

(FOR DIMENSIONS AND DETAILS NOT SHOWN, SEE CABINET HOUSING DETAILS OF THE TRANSPORTATION ELECTRICAL EQUIPMENT SPECIFICATION (TEES))

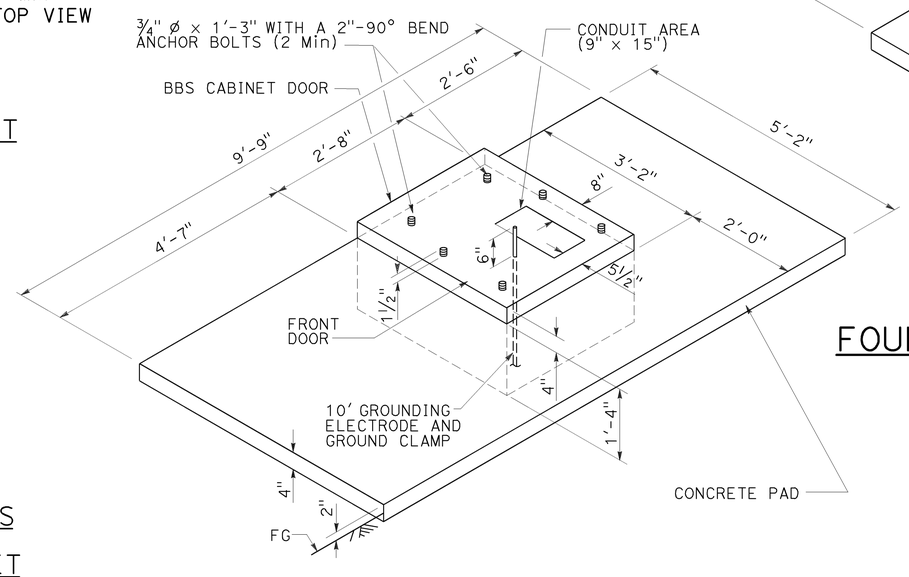

LEFT SIDE INSTALLATION

DETAIL A

MODIFIED MODEL 332L CABINET FOUNDATION DETAIL FOR BATTERY BACKUP SYSTEM

STATE OF CALIFORNIA
DEPARTMENT OF TRANSPORTATION

ELECTRICAL SYSTEMS (CONTROLLER CABINET FOUNDATION AND PAD DETAILS)

NO SCALE

RSP ES-3C DATED APRIL 15, 2016 SUPERSEDES RSP ES-3C DATED OCTOBER 30, 2015 AND STANDARD PLAN ES-3C DATED MAY 20, 2011 - PAGE 437 OF THE STANDARD PLANS BOOK DATED 2010.

REVISED STANDARD PLAN RSP ES-3C

1-12-16

Dist	COUNTY	ROUTE	POST MILES TOTAL PROJECT	SHEET No.	TOTAL SHEETS
11	SD	8	5.4/10.6, R20.0/R21.6	202	213

Theresa Gabriel
REGISTERED ELECTRICAL ENGINEER

April 15, 2016
PLANS APPROVAL DATE

REGISTERED PROFESSIONAL ENGINEER Theresa Aziz Gabriel No. E15129 Exp. 6-30-16 ELECTRICAL STATE OF CALIFORNIA

THE STATE OF CALIFORNIA OR ITS OFFICERS OR AGENTS SHALL NOT BE RESPONSIBLE FOR THE ACCURACY OR COMPLETENESS OF SCANNED COPIES OF THIS PLAN SHEET.

TO ACCOMPANY PLANS DATED 05-31-16

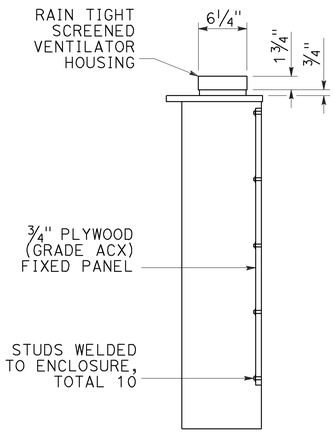

SECTION A-A

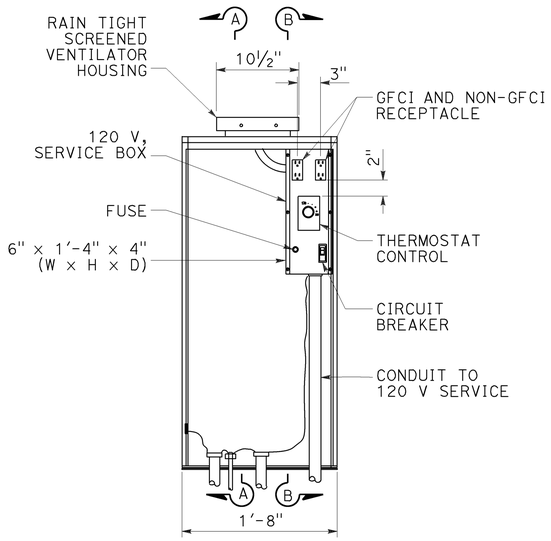

FRONT VIEW

INTERIOR DETAIL A

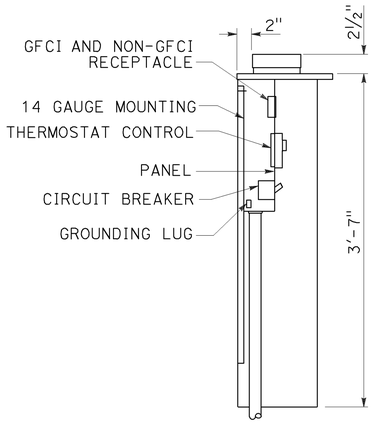

SECTION B-B

NOTE:

1. Dimensions are nominal.

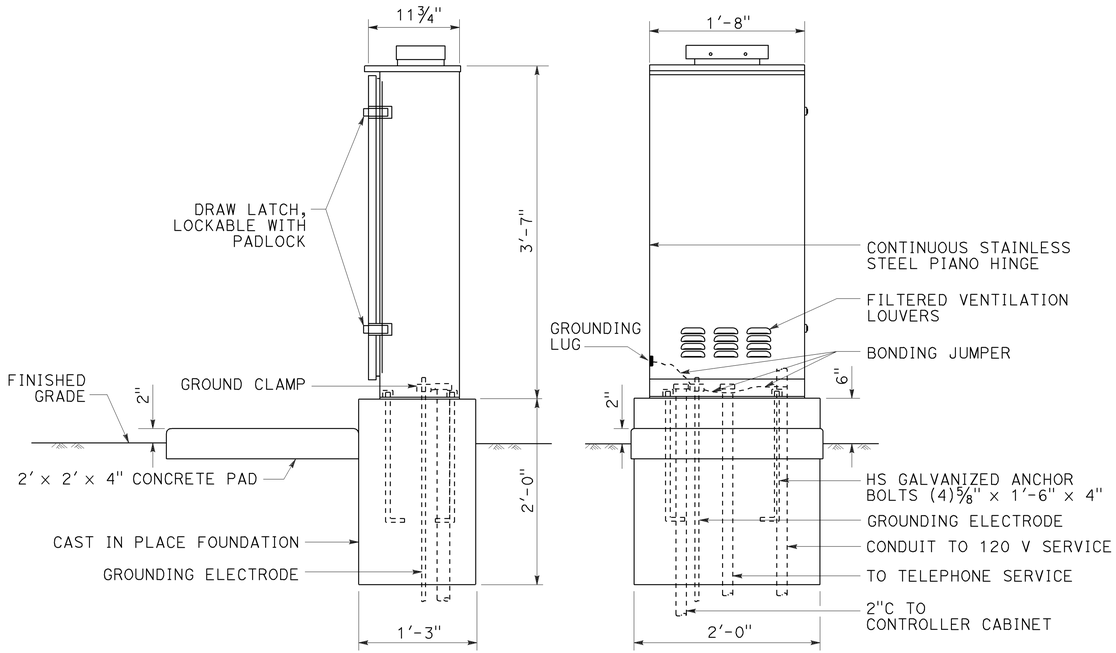

SIDE VIEW FRONT VIEW

EXTERIOR DETAIL B

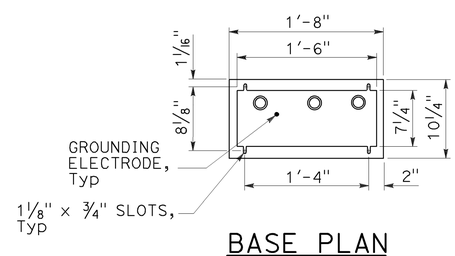

BASE PLAN

DETAIL C

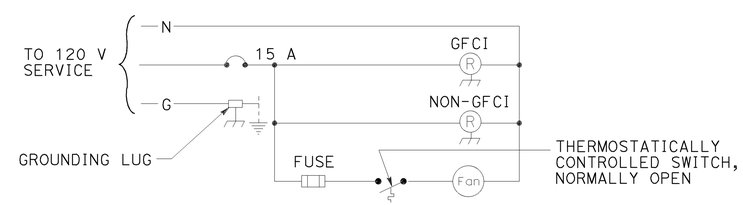

WIRING DIAGRAM

DETAIL D

STATE OF CALIFORNIA
DEPARTMENT OF TRANSPORTATION

ELECTRICAL SYSTEMS (TELEPHONE DEMARCATION CABINET, TYPE B)

NO SCALE

RSP ES-3E DATED APRIL 15, 2016 SUPERSEDES RSP ES-3E DATED OCTOBER 30, 2015 AND STANDARD PLAN ES-3E DATED MAY 20, 2011 - PAGE 439 OF THE STANDARD PLANS BOOK DATED 2010.

REVISED STANDARD PLAN RSP ES-3E

2010 REVISED STANDARD PLAN RSP ES-3E

1-12-16

Dist	COUNTY	ROUTE	POST MILES TOTAL PROJECT	SHEET No.	TOTAL SHEETS
11	SD	8	5.4/10.6, R20.0/R21.6	203	213

Theresa Gabriel
REGISTERED ELECTRICAL ENGINEER

April 15, 2016
PLANS APPROVAL DATE

REGISTERED PROFESSIONAL ENGINEER Theresa Aziz Gabriel No. E15129 Exp. 6-30-16 ELECTRICAL STATE OF CALIFORNIA

THE STATE OF CALIFORNIA OR ITS OFFICERS OR AGENTS SHALL NOT BE RESPONSIBLE FOR THE ACCURACY OR COMPLETENESS OF SCANNED COPIES OF THIS PLAN SHEET.

TO ACCOMPANY PLANS DATED 05-31-16

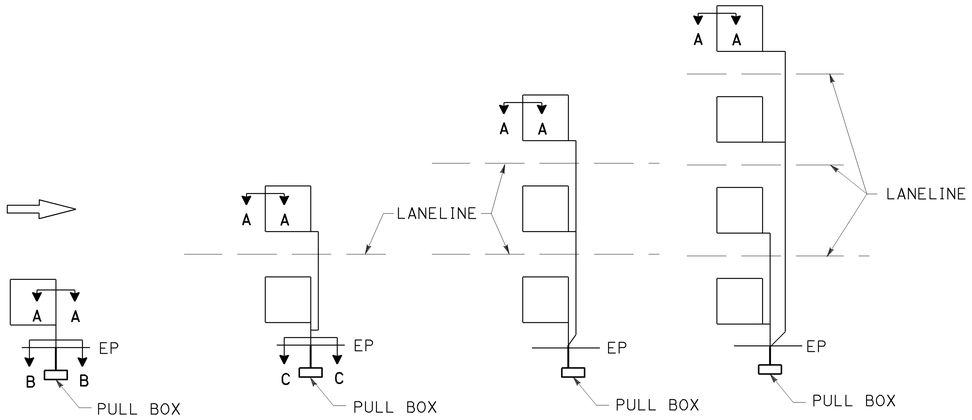

SAW CUT DETAILS

Type A loop detector configurations illustrated

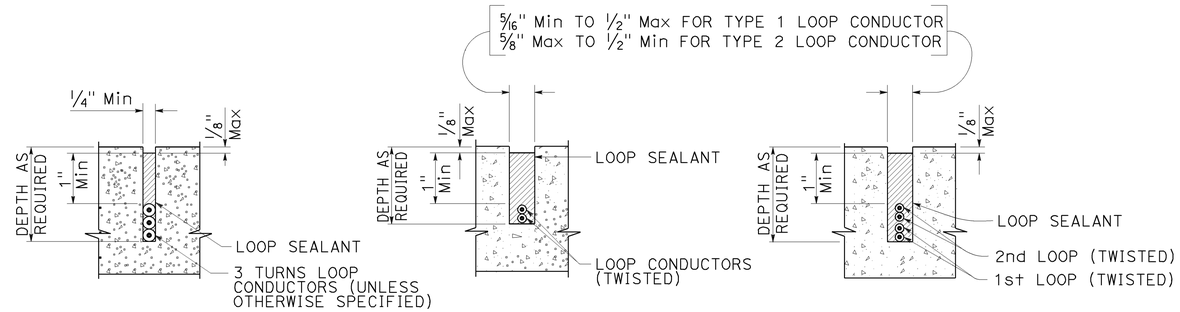

SECTION A-A SECTION B-B SECTION C-C

SLOT DETAILS - TYPE 1 AND TYPE 2 LOOP CONDUCTOR

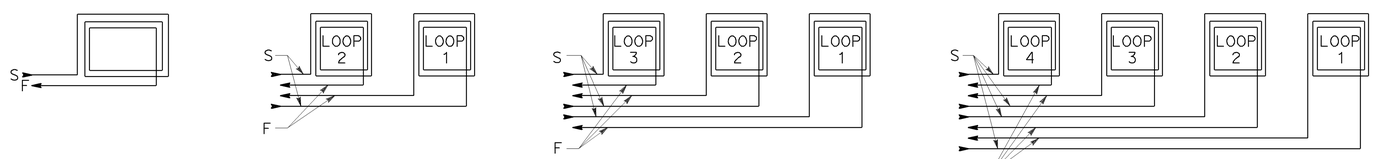

WINDING DETAILS

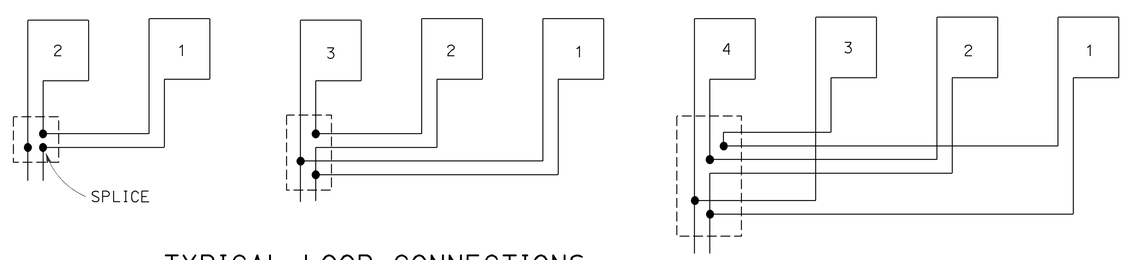

TYPICAL LOOP CONNECTIONS

Dashed lines represent the pull box

ABBREVIATIONS:

S - START
F - FINISH

STATE OF CALIFORNIA
DEPARTMENT OF TRANSPORTATION

ELECTRICAL SYSTEMS (LOOP DETECTORS)

NO SCALE

RSP ES-5A DATED APRIL 15, 2016 SUPERSEDES RSP ES-5A DATED OCTOBER 30, 2015 AND STANDARD PLAN ES-5A DATED MAY 20, 2011 - PAGE 448 OF THE STANDARD PLANS BOOK DATED 2010.

REVISED STANDARD PLAN RSP ES-5A

2010 REVISED STANDARD PLAN RSP ES-5A

1-12-16

Dist	COUNTY	ROUTE	POST MILES TOTAL PROJECT	SHEET No.	TOTAL SHEETS
11	SD	8	5.4/10.6, R20.0/R21.6	204	213

Theresa Gabriel
REGISTERED ELECTRICAL ENGINEER

April 15, 2016
PLANS APPROVAL DATE

REGISTERED PROFESSIONAL ENGINEER
Theresa Aziz Gabriel
No. E15129
Exp. 6-30-16
ELECTRICAL
STATE OF CALIFORNIA

THE STATE OF CALIFORNIA OR ITS OFFICERS OR AGENTS SHALL NOT BE RESPONSIBLE FOR THE ACCURACY OR COMPLETENESS OF SCANNED COPIES OF THIS PLAN SHEET.

TO ACCOMPANY PLANS DATED 05-31-16

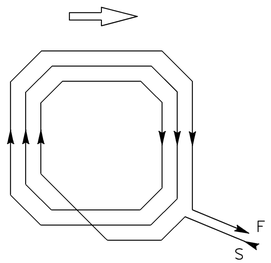

WINDING DETAIL

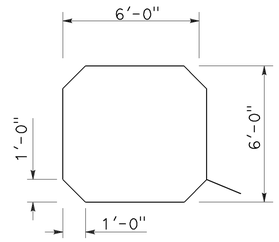

SAW CUT DETAIL

TYPE A LOOP DETECTOR CONFIGURATION

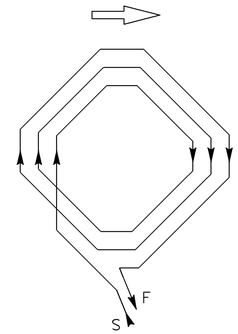

WINDING DETAIL

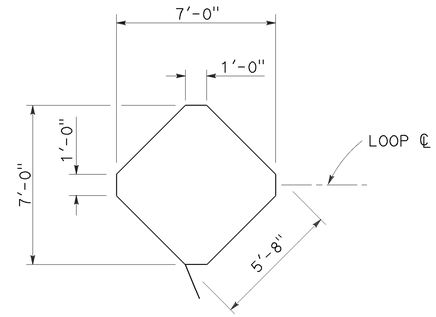

SAW CUT DETAIL

TYPE B LOOP DETECTOR CONFIGURATION

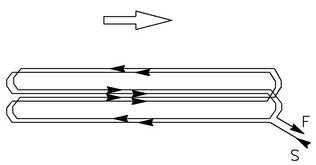

WINDING DETAIL

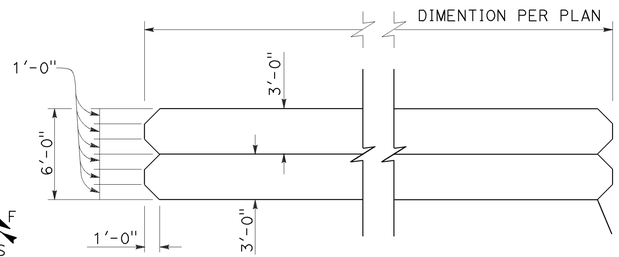

SAW CUT DETAIL

TYPE C LOOP DETECTOR CONFIGURATION

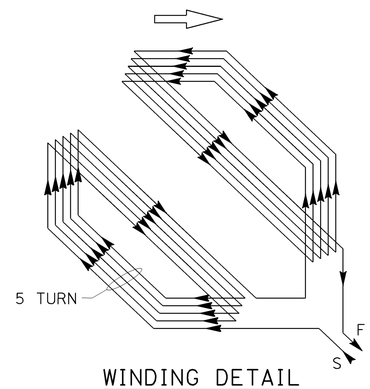

WINDING DETAIL

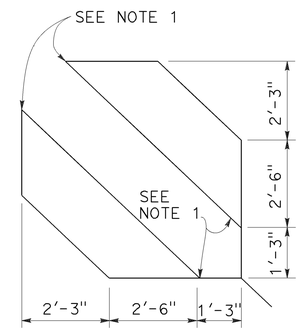

SAW CUT DETAIL

TYPE D LOOP DETECTOR CONFIGURATION

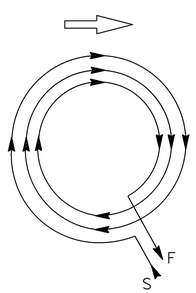

WINDING DETAIL

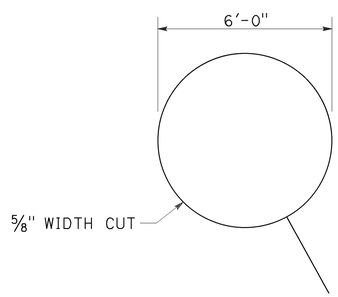

SAW CUT DETAIL

TYPE E LOOP DETECTOR CONFIGURATION

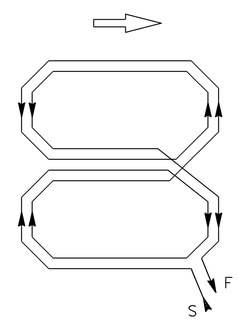

WINDING DETAIL

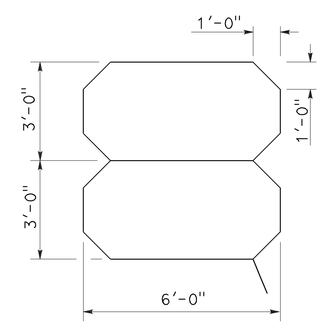

SAW CUT DETAIL

TYPE Q LOOP DETECTOR CONFIGURATION

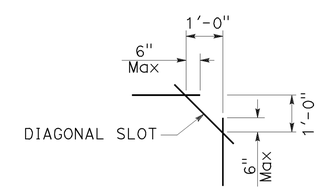

PLAN VIEW OF DIAGONAL SLOT AT CORNERS

NOTES:

1. Round corners of acute angle saw cuts to prevent damage to conductors.
2. Typical distance separating loops from edge to edge is 10' for Type A, B, D and E installation in single lane.
3. Use Type D loops for limit line detection and bicycle lanes.

STATE OF CALIFORNIA
DEPARTMENT OF TRANSPORTATION

ELECTRICAL SYSTEMS (DETECTORS)

NO SCALE

RSP ES-5B DATED APRIL 15, 2016 SUPERSEDES RSP ES-5B DATED OCTOBER 30, 2015 AND RSP ES-5B DATED JULY 19, 2013 AND STANDARD PLAN ES-5B DATED MAY 20, 2011 - PAGE 449 OF THE STANDARD PLANS BOOK DATED 2010.

REVISED STANDARD PLAN RSP ES-5B

2010 REVISED STANDARD PLAN RSP ES-5B

1-22-16

Dist	COUNTY	ROUTE	POST MILES TOTAL PROJECT	SHEET No.	TOTAL SHEETS
11	SD	8	5.4/10.6, R20.0/R21.6	205	213

Theresa Gabriel
REGISTERED ELECTRICAL ENGINEER

October 30, 2015
PLANS APPROVAL DATE

REGISTERED PROFESSIONAL ENGINEER Theresa Aziz Gabriel No. E15129 Exp. 6-30-16 ELECTRICAL STATE OF CALIFORNIA

THE STATE OF CALIFORNIA OR ITS OFFICERS OR AGENTS SHALL NOT BE RESPONSIBLE FOR THE ACCURACY OR COMPLETENESS OF SCANNED COPIES OF THIS PLAN SHEET.

TO ACCOMPANY PLANS DATED 05-31-16

2010 REVISED STANDARD PLAN RSP ES-5D

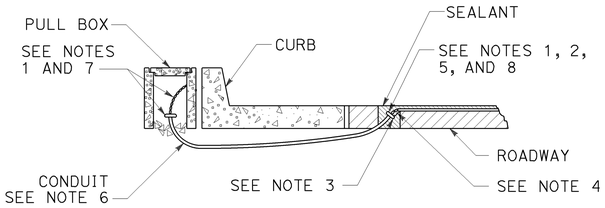

TYPE A
CURB TERMINATION DETAIL

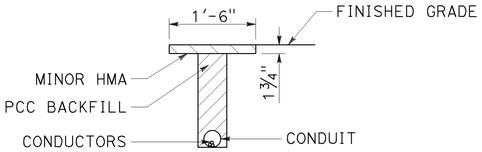

"T" TRENCH
DETAIL T

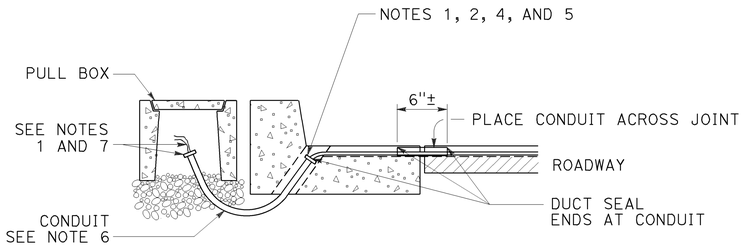

CROSS SECTION

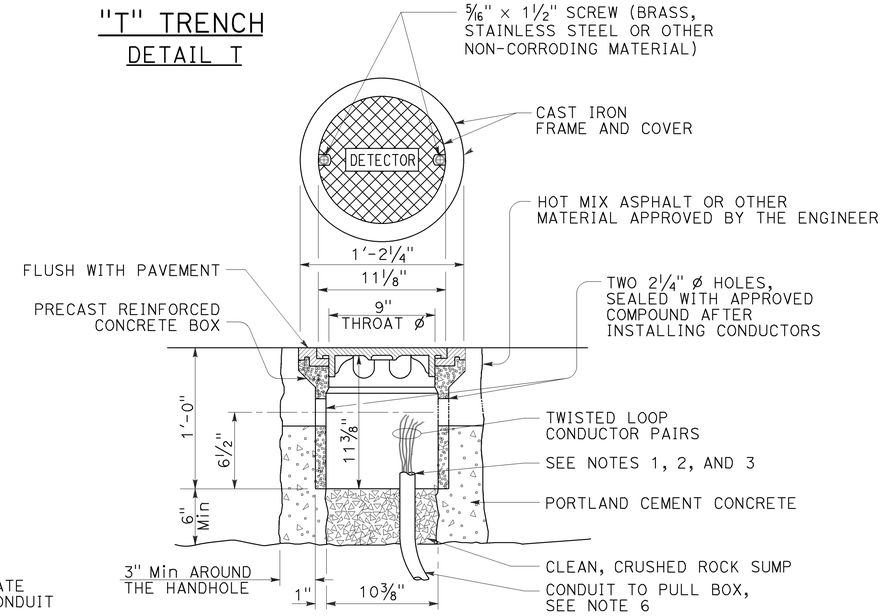

DETECTOR HANDHOLE DETAIL

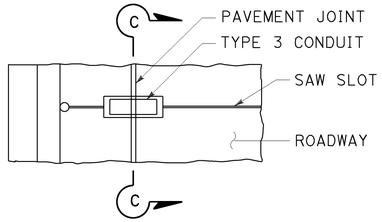

PLAN VIEW

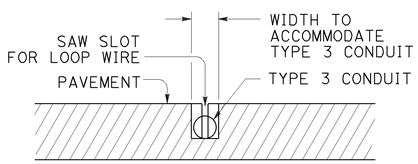

SECTION C-C

TYPE B
CURB TERMINATION DETAIL

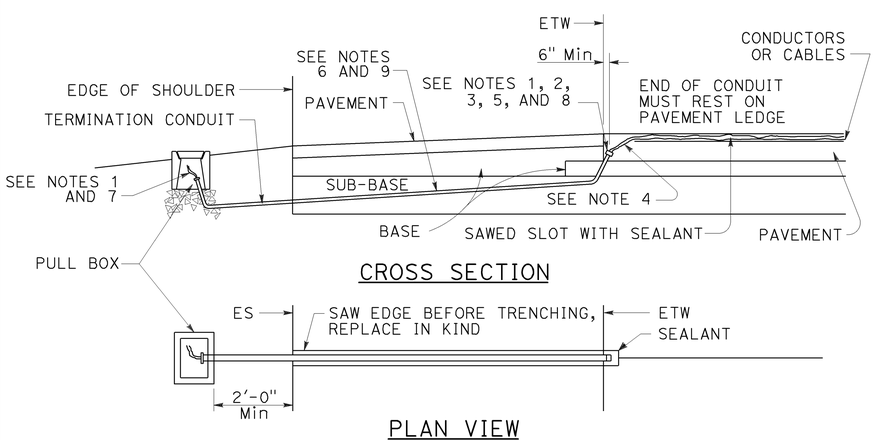

CROSS SECTION

PLAN VIEW

SHOULDER TERMINATION DETAILS

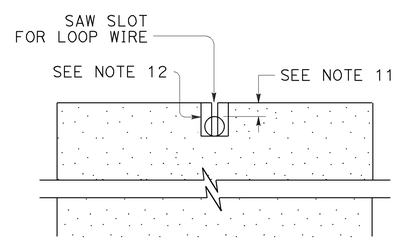

SECTION A-A

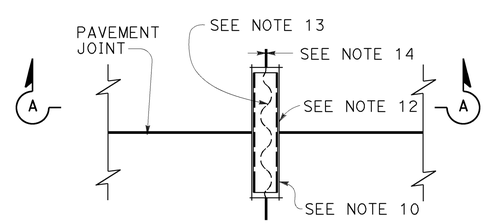

PLAN VIEW

TYPICAL LOOP LEAD-IN DETAIL
AT PAVEMENT JOINT

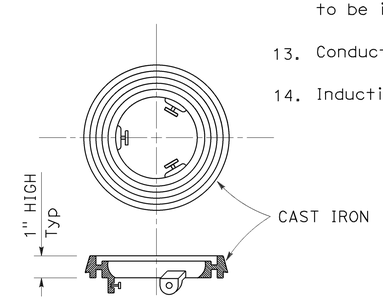

LOCKING GRADE RING

NOTES:

1. Bushing shall be used at end of conduit.
2. Tape detector conductors or cables 3" each side of bushings.
3. Install duct seal compound to each end of termination conduit before installing sealant.
4. Round all sharp edges where detector conductors or cables have to pass.
5. End of conduit shall be 3⅛" below roadway surface.
6.

Conduit size	Loop conductors
1"C minimum	1 to 2 pairs
1½"C minimum	3 to 4 pairs
2"C minimum	5 or more pairs

7. Splice detector conductors or cables to detector lead-in-cable.
8. Location of detector handhole when shown on plans.
9. When the shoulder and traveled way are paved with the same material and there is no joint between them, the conduit shall extend only 2'-0" into the shoulder pavement.
10. ¾"C, Type 3 conduit 6" long minimum, plug both ends with duct compound to keep out sealant.
11. ½" Minimum between top of conduit and pavement surface.
12. Sawcut shall not exceed 1" in width and ⅛" longer than conduit to be installed.
13. Conductors with ½" minimum slack inside conduit.
14. Inductive loop detector saw slot.

STATE OF CALIFORNIA
DEPARTMENT OF TRANSPORTATION

ELECTRICAL SYSTEMS (CURB AND SHOULDER TERMINATION, TRENCH, AND HANDHOLE DETAILS)

NO SCALE

RSP ES-5D DATED OCTOBER 30, 2015 SUPERSEDES RSP ES-5D DATED JULY 19, 2013 AND STANDARD PLAN ES-5D DATED MAY 20, 2011 - PAGE 451 OF THE STANDARD PLANS BOOK DATED 2010.

REVISED STANDARD PLAN RSP ES-5D

8-19-15

Dist	COUNTY	ROUTE	POST MILES TOTAL PROJECT	SHEET No.	TOTAL SHEETS
11	SD	8	5.4/10.6, R20.0/R21.6	206	213

REGISTERED CIVIL ENGINEER

October 30, 2015
PLANS APPROVAL DATE

REGISTERED PROFESSIONAL ENGINEER Stanley P. Johnson No. C57793 Exp. 3-31-16 CIVIL STATE OF CALIFORNIA

THE STATE OF CALIFORNIA OR ITS OFFICERS OR AGENTS SHALL NOT BE RESPONSIBLE FOR THE ACCURACY OR COMPLETENESS OF SCANNED COPIES OF THIS PLAN SHEET.

TO ACCOMPANY PLANS DATED 05-31-16

2010 REVISED STANDARD PLAN RSP ES-7M

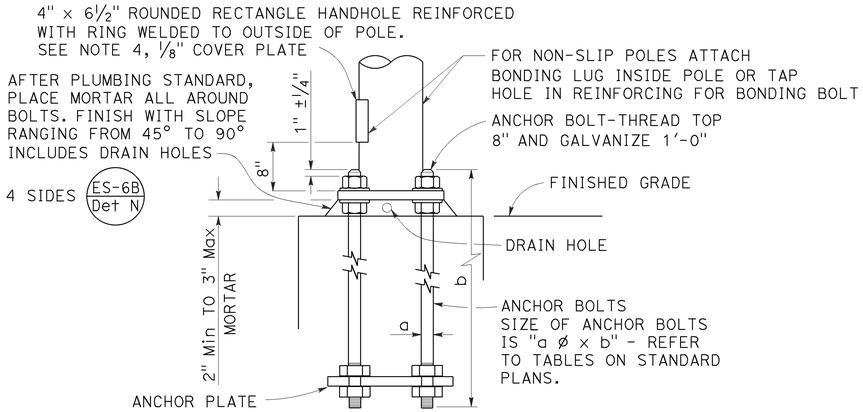

HANDHOLE AND ANCHORAGE
DETAIL A

IDENTIFICATION NUMBER

1. Attach a stamped metal tag with pole's identification number above the handhole. ¼" high number, minimum.
2. Attach a stamped metal tag with mast arm's identification number to the bottom of the signal mast arm near the pole plate. ¼" high number, minimum.

Type — Load case (Use SL for special load case) — Design wind velocity (mph) — Signal mast arm length (ft) { Near handhole: Maximum signal mast arm length for pole type; Near pole plate: Installed signal mast arm length } — Standard plan year — Only for poles or mast arms using Detail F — Only for poles or mast arms using ES-7D

26A - 3 - 100 - 45 - 10 - F or FB

SAMPLE IDENTIFICATION NUMBER

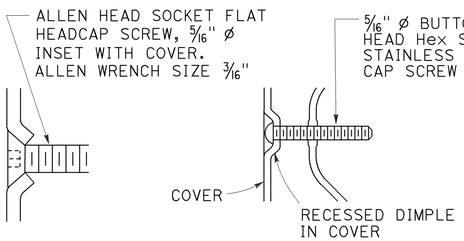

TYPICAL DETAIL
DETAIL B-1

ALTERNATIVE DETAIL
DETAIL B-2

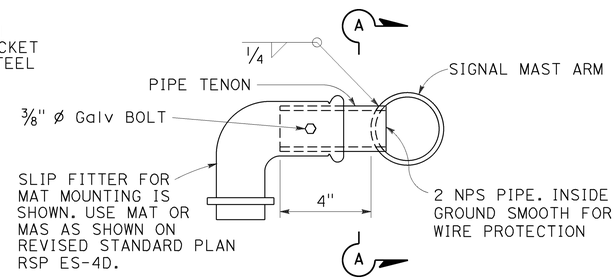

SIDE TENON
DETAIL S-1

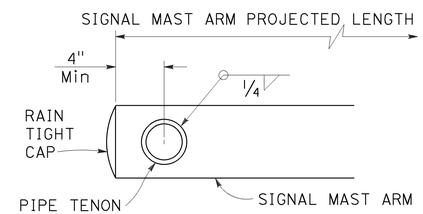

SECTION A-A

PIPE TENONS
DETAIL S

NOTES:

1. Provide a Hex nut, leveling nut and 2 washers for each bolt.
2. Luminaire mast arms shall be round, tapered steel tubes, taper of 0.1375" to 0.143-inch per foot with an end section 2⅜" OD for mounting hardware. Extensions of 2 NPS Standard pipe and 7" long may be used at the option of the manufacturer. When low pressure sodium luminaires are required, the extension shall be 1'-3".
3. Signal mast arms shall be round, tapered steel tubes, maximum taper 0.143-inch per foot.
4. Handhole reinforcement ring shall be ¼" x 2" for 0.1196" to 0.2391" thick poles, ⅜" x 2" for 0.3125" thick poles.
5. Handholes shall be located on the downstream side of traffic.
6. Detail F, fatigue resistant weld, is required at socket welded signal mast arm plate and pole base plate.
7. Cap screws shall be tightened by the turn-of-nut method ⅓ turn from a snug tight condition. No washer will be required.
8. Outside diameter, wall thickness, and corresponding section properties of poles and mast arms as shown in the Standard Plans are minimums. Unless otherwise specified, alternative sections shall require approval by the Engineer.
9. Wind Loading (3 seconds gust): 100 mph
10. Unit Stresses (Structural steel):
    fy = 55,000 psi (tapered steel tube and anchor bolts)
    fy = 50,000 psi (unless otherwise noted)
11. Unit Stresses (Reinforced concrete):
    f'c = 3,625 psi
    fy = 60,000 psi

WELD SIZE	WALL THICKNESS
3/16"	0.1196"
¼"	0.1793"
5/16"	0.2391"
⅜"	0.3125"

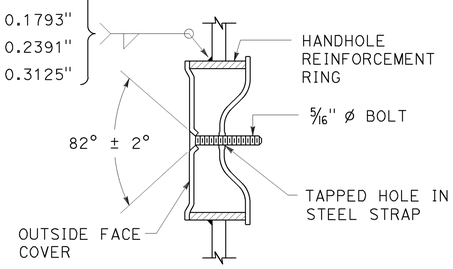

TAMPER RESISTANT HANDHOLE COVER
DETAIL B

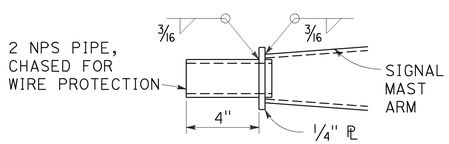

TIP TENON
DETAIL TL

This detail supersedes Detail S when so designated

WELD SIZE	WALL THICKNESS
⅛"	0.1196"
3/16"	0.1793"
¼"	0.2391"

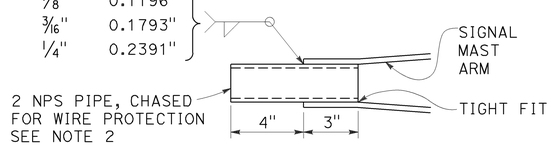

TIP TENON
DETAIL TS

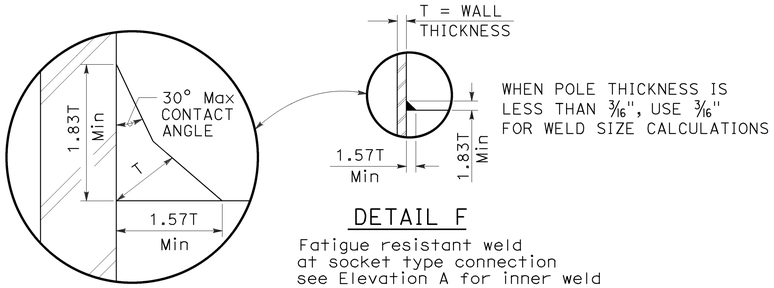

DETAIL F

Fatigue resistant weld at socket type connection see Elevation A for inner weld

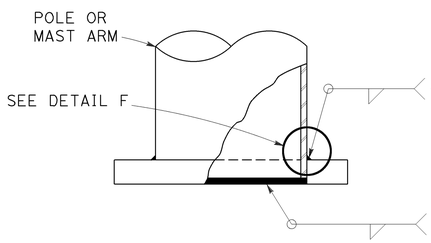

WELD SIZE	WALL THICKNESS
¼"	0.1196"
5/16"	0.1793"
⅜"	0.2391"
7/16"	0.3125"

⅛"	0.1196"
3/16"	0.1793"
¼"	0.2391"
5/16"	0.3125"

ELEVATION A

STATE OF CALIFORNIA
DEPARTMENT OF TRANSPORTATION

ELECTRICAL SYSTEMS (SIGNAL AND LIGHTING STANDARD, DETAIL No. 1)

NO SCALE

RSP ES-7M DATED OCTOBER 30, 2015 SUPERSEDES STANDARD PLAN ES-7M DATED MAY 20, 2011 - PAGE 474 OF THE STANDARD PLANS BOOK DATED 2010.

REVISED STANDARD PLAN RSP ES-7M

9-1-15

Dist	COUNTY	ROUTE	POST MILES TOTAL PROJECT	SHEET No.	TOTAL SHEETS
11	SD	8	5.4/10.6, R20.0/R21.6	207	213

REGISTERED CIVIL ENGINEER

October 30, 2015
PLANS APPROVAL DATE

REGISTERED PROFESSIONAL ENGINEER Stanley P. Johnson No. C57793 Exp. 3-31-16 CIVIL STATE OF CALIFORNIA

THE STATE OF CALIFORNIA OR ITS OFFICERS OR AGENTS SHALL NOT BE RESPONSIBLE FOR THE ACCURACY OR COMPLETENESS OF SCANNED COPIES OF THIS PLAN SHEET.

TO ACCOMPANY PLANS DATED 05-31-16

2010 REVISED STANDARD PLAN RSP ES-7N

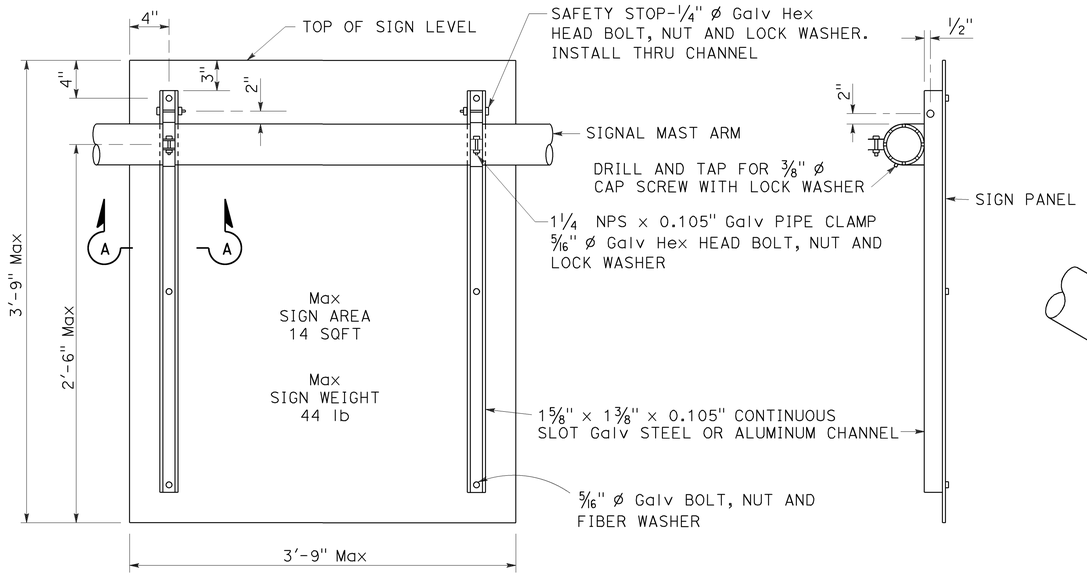

REAR VIEW

SIDE VIEW

SIGN MOUNTING DETAILS
DETAIL U

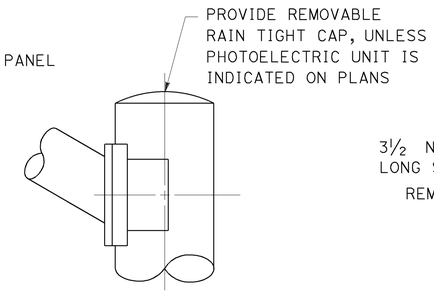

STANDARD TOP
DETAIL B-1

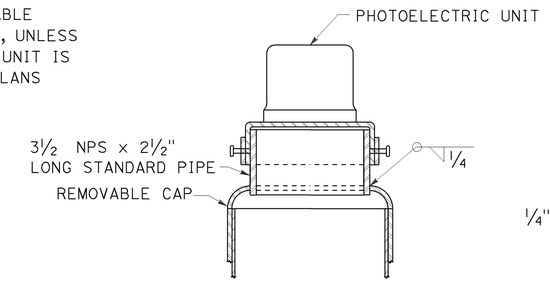

MOUNTING ADAPTER FOR PHOTOELECTRIC UNIT
DETAIL B-2

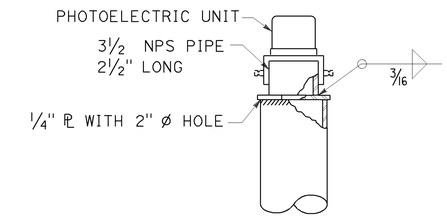

ALTERNATIVE MOUNTING ADAPTER
DETAIL B-3

POLE TOP DETAILS
DETAIL B

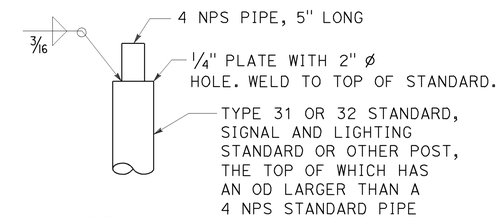

DETAIL C-1

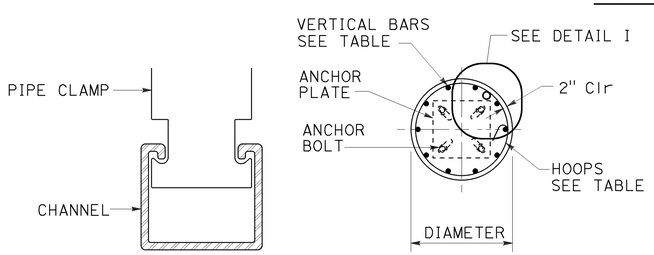

SECTION A-A

SECTION B-B

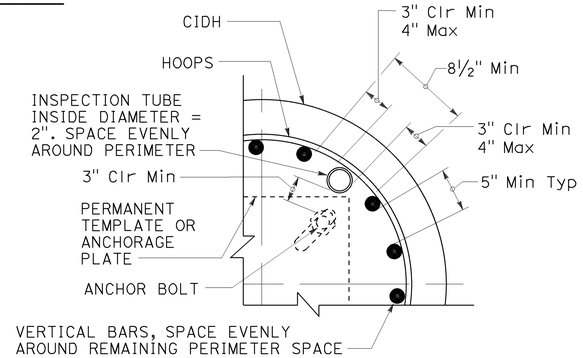

INSPECTION TUBE PLACEMENT
DETAIL I

CIDH REINFORCING AND INSPECTION TUBE SCHEDULE			
CIDH DIAMETER	VERTICAL BARS	HOOPS (WELDED)	INSPECTION TUBE
2 ft	8-#5	#4 AT 6	2
2.5 ft	10-#6		4*
3 ft	12-#7	#5 AT 6	
3.5 ft	14-#8		4
4 ft	18-#9	2-#4 AT 7	5
5 ft	22-#10	2-#5 AT 7	6
6 ft	26-#11	2-#6 AT 7	7

* FOR SLIP BASE VERSIONS WITH 3 ANCHOR BOLTS USE 3 INSPECTION TUBES.

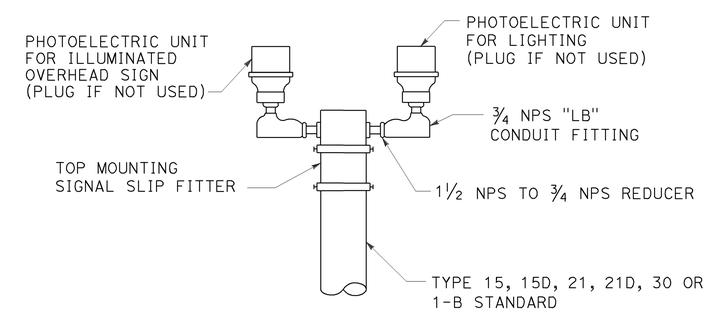

DETAIL C-2

DUAL PHOTOELECTRIC UNIT MOUNTING DETAIL
DETAIL C

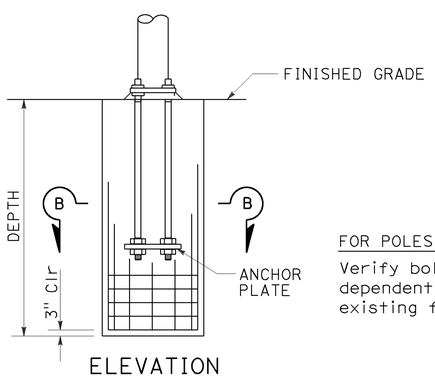

ELEVATION

FOR POLES TO BE INSTALLED ON EXISTING FOUNDATION:
Verify bolt circles, anchor bolt sizes and dependent dimensions for poles to be installed on existing foundations before fabricating the poles.

CAST-IN-DRILLED-HOLE PILE FOUNDATION, REINFORCED PILE
DETAIL A

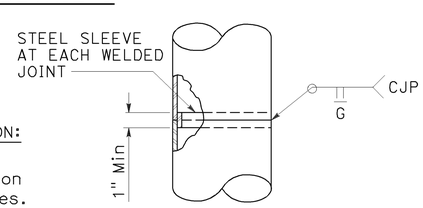

FOR UNIFORM TUBE THICKNESS
DETAIL T-1

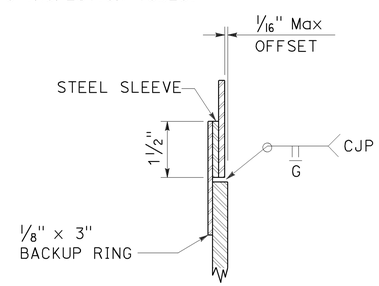

AT TUBE THICKNESS CHANGE
DETAIL T-2

POLE SPLICES
DETAIL T

STATE OF CALIFORNIA
DEPARTMENT OF TRANSPORTATION

ELECTRICAL SYSTEMS (SIGNAL AND LIGHTING STANDARD, DETAIL No. 2)

NO SCALE

RSP ES-7N DATED OCTOBER 30, 2015 SUPERSEDES STANDARD PLAN ES-7N DATED MAY 20, 2011 - PAGE 475 OF THE STANDARD PLANS BOOK DATED 2010.

REVISED STANDARD PLAN RSP ES-7N

9-1-15

DIST	COUNTY	ROUTE	POST MILES TOTAL PROJECT	SHEET NO.	TOTAL SHEETS
11	SD	8	5.4/10.6, R20.0/R21.6	208	213

Theresa Gabriel
REGISTERED ELECTRICAL ENGINEER

April 15, 2016
PLANS APPROVAL DATE

REGISTERED PROFESSIONAL ENGINEER Theresa Aziz Gabriel No. E15129 Exp. 6-30-16 ELECTRICAL STATE OF CALIFORNIA

THE STATE OF CALIFORNIA OR ITS OFFICERS OR AGENTS SHALL NOT BE RESPONSIBLE FOR THE ACCURACY OR COMPLETENESS OF SCANNED COPIES OF THIS PLAN SHEET.

TO ACCOMPANY PLANS DATED 05-31-16

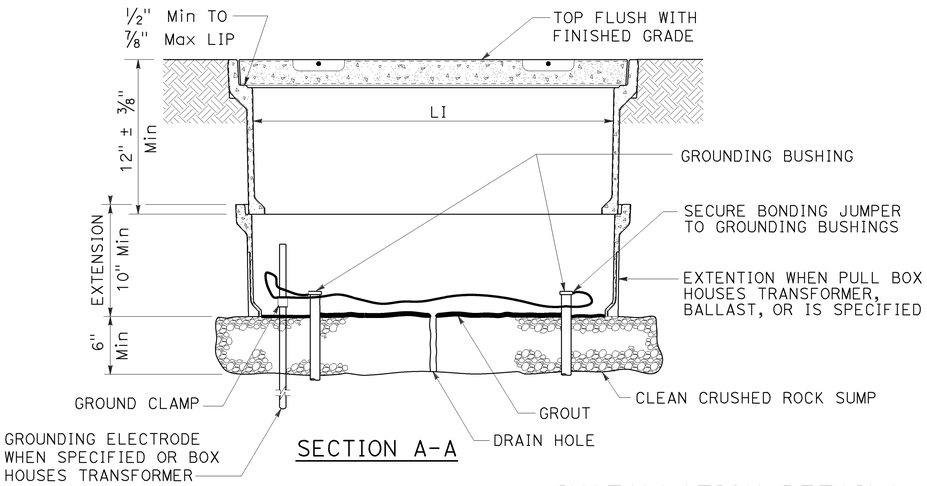

SECTION A-A

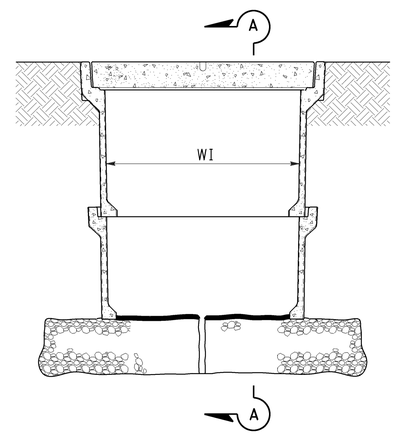

SIDE VIEW

INSTALLATION DETAILS

DETAIL A

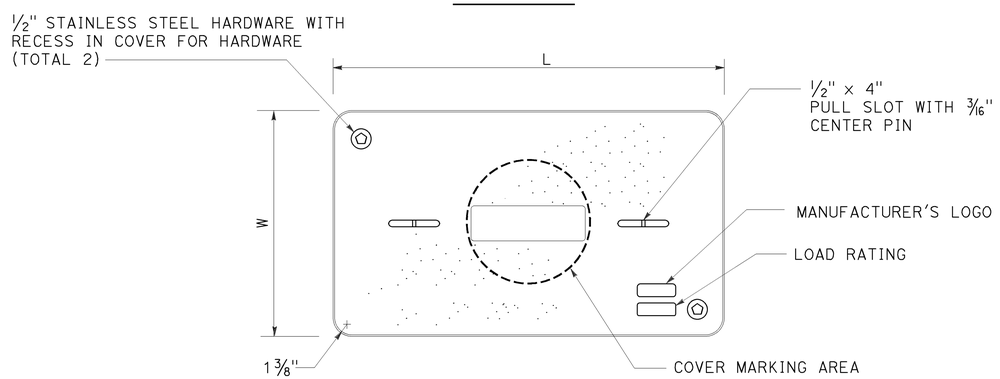

COVER TOP VIEW

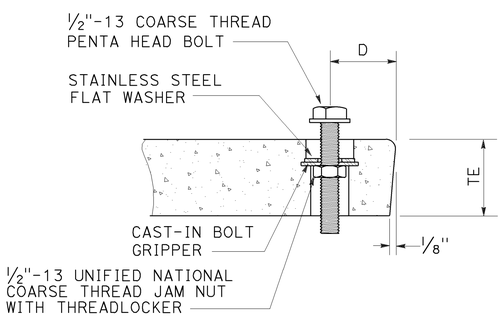

TYPICAL COVER CAPTIVE BOLT

OR SIMILAR

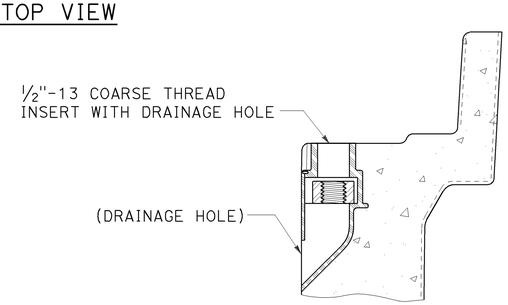

TYPICAL THREADED INSERT

OR SIMILAR

NOTES:

1. The nominal dimensions of the opening in which the cover sets shall be the same as the cover dimensions except the length and width dimensions shall be 1/8" greater.
2. Covers and boxes shall be interchangeable with California standard male and female gages. When interchanged with a standard male or female gage, the top surfaces shall be flush within 1/8". Top outside radius of covers and pull boxes shall have a 1/8" radius.
3. Dimensions for the cover for non-traffic pull box are nominal values.

DIMENSION TABLE

PULL BOX	PULL BOX					COVER				
	MINIMUM DEPTH BOX	MINIMUM DEPTH EXTENSION	MINIMUM WEIGHT	LI Min	WI Min	TE	D	L	W	MINIMUM WEIGHT
No. 3 1/2	12"	N/A	40 lb	1' - 3"	9"	1 3/4"	1 3/4"	1'-3 1/4" - 1'-3 3/8"	10" - 10 1/8"	30 lb
No. 5	12"	10"	55 lb	1' - 8"	11"	2"	1 3/4"	1'-11 1/4"	1'-1 3/4"	60 lb
No. 6	12"	10"	70 lb	2' - 4 1/4"	1' - 3 1/4"	2"	2"	2'-6 1/2"	1'-5 1/2"	85 lb

STATE OF CALIFORNIA
DEPARTMENT OF TRANSPORTATION

ELECTRICAL SYSTEMS (NON-TRAFFIC PULL BOX)

NO SCALE

RSP ES-8A DATED APRIL 15, 2016 SUPERSEDES RSP ES-8A DATED OCTOBER 30, 2015 AND RSP ES-8A DATED JULY 19, 2013 AND RSP ES-8A DATED JANUARY 20, 2012 THAT SUPPLEMENTS THE STANDARD PLANS BOOK DATED 2010.

REVISED STANDARD PLAN RSP ES-8A

2010 REVISED STANDARD PLAN RSP ES-8A

1-22-16

DIST	COUNTY	ROUTE	POST MILES TOTAL PROJECT	SHEET NO.	TOTAL SHEETS
11	SD	8	5.4/10.6, R20.0/R21.6	209	213

Theresa Gabriel
REGISTERED ELECTRICAL ENGINEER

April 15, 2016
PLANS APPROVAL DATE

REGISTERED PROFESSIONAL ENGINEER
Theresa Aziz Gabriel
No. E15129
Exp. 6-30-16
ELECTRICAL
STATE OF CALIFORNIA

THE STATE OF CALIFORNIA OR ITS OFFICERS OR AGENTS SHALL NOT BE RESPONSIBLE FOR THE ACCURACY OR COMPLETENESS OF SCANNED COPIES OF THIS PLAN SHEET.

TO ACCOMPANY PLANS DATED 05-31-16

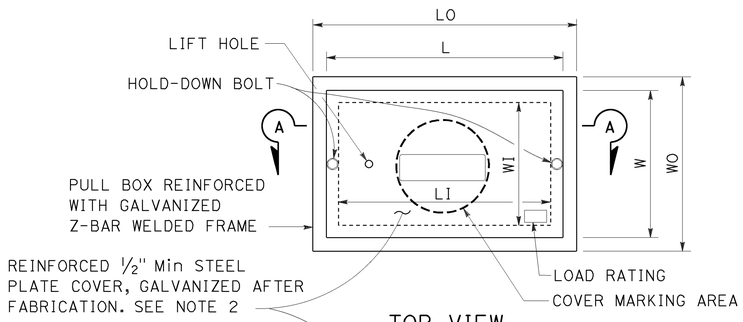

TOP VIEW

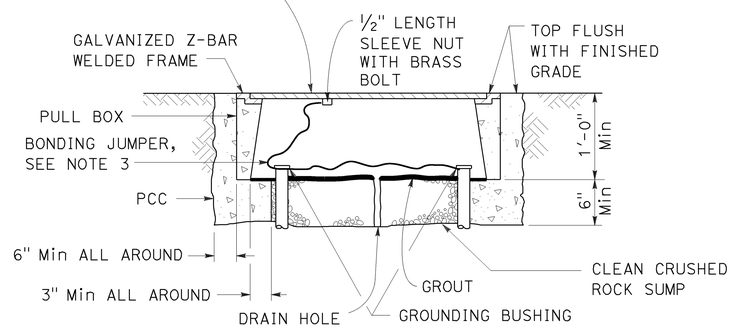

SECTION A-A

No. 3½(T), No. 5(T) AND No. 6(T) TRAFFIC PULL BOX

NOTES:

1. Traffic pull box shall be provided with steel cover and special concrete footing. Steel cover shall have embossed non-skid pattern.
2. Steel reinforcing shall be as regularly used in the standard products of the respective manufacturer.
3. Bonding jumper for metal covers shall be 3' long, minimum.
4. The nominal dimensions of the opening in which the cover sets shall be the same as the cover dimensions except the length and width dimensions shall be ⅛" greater.
5. Covers and boxes shall be interchangeable with California standard male and female gages. When interchanged with a standard male or female gage, the top surfaces shall be flush within ⅛".

DIMENSION TABLE

PULL BOX	PULL BOX						COVER	
	MINIMUM * THICKNESS	MINIMUM DEPTH BOX AND EXTENSION	LO	LI	WO	WI	L **	W **
No. 3½(T)	1½"	1'-0"	1'-10" - 1'-11"	1'-5" - 1'-6½"	1'-3" - 1'-4"	10" - 1'-0"	1'-8" -1'-8½"	1'-1" - 1'-2"
No. 5(T)	1¾"	1'-0"	2'-5" - 2'-6"	2'-0" - 2'-1"	1'-6" - 1'-7"	1'-1" - 1'-2"	2'-3" - 2'-3½"	1'-4" - 1'-4½"
No. 6(T)	2"	1'-0"	2'-11" - 3'-1"	2'-6" - 2'-7"	1'-10" - 2'-0"	1'-5" - 1'-6"	2'-9" - 2'-9½"	1'-8" - 1'-8½"

* EXCLUDING CONDUIT WEB ** TOP DIMENSION

STATE OF CALIFORNIA
DEPARTMENT OF TRANSPORTATION

ELECTRICAL SYSTEMS (TRAFFIC PULL BOX)

NO SCALE

RSP ES-8B DATED APRIL 15, 2016 SUPERSEDES RSP ES-8B DATED OCTOBER 30, 2015 AND RSP ES-8B DATED JULY 19, 2013 AND RSP ES-8B DATED JANUARY 20, 2012 THAT SUPPLEMENTS THE STANDARD PLANS BOOK DATED 2010.

REVISED STANDARD PLAN RSP ES-8B

2010 REVISED STANDARD PLAN RSP ES-8B

1-22-16

Dist	COUNTY	ROUTE	POST MILES TOTAL PROJECT	SHEET No.	TOTAL SHEETS
11	SD	8	5.4/10.6, R20.0/R21.6	210	213

REGISTERED CIVIL ENGINEER

July 19, 2013
PLANS APPROVAL DATE

REGISTERED PROFESSIONAL ENGINEER
Stanley P. Johnson
No. C57793
Exp. 3-31-14
CIVIL
STATE OF CALIFORNIA

THE STATE OF CALIFORNIA OR ITS OFFICERS OR AGENTS SHALL NOT BE RESPONSIBLE FOR THE ACCURACY OR COMPLETENESS OF SCANNED COPIES OF THIS PLAN SHEET.

TO ACCOMPANY PLANS DATED 05-31-16

STANDARD TYPE	SETBACK (DIMENSION A)
32	30'-0" (Min)
31	20'-0" (Min)
15, 15D, 15-SB, 21, 21D, 30	ARM LENGTH (Min)

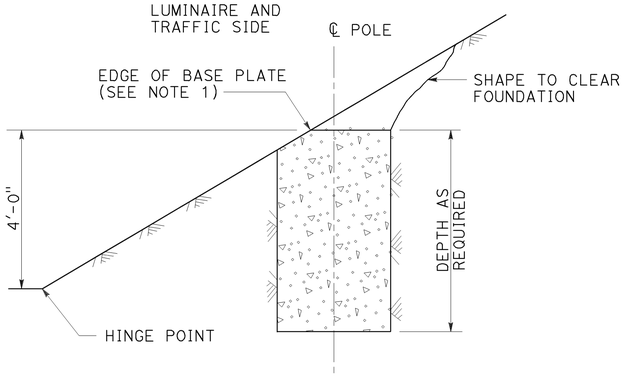

CUT SLOPES
STEEPER THAN 4:1,
LESS THAN 2:1
DETAIL A-1
See Note 2 and 3

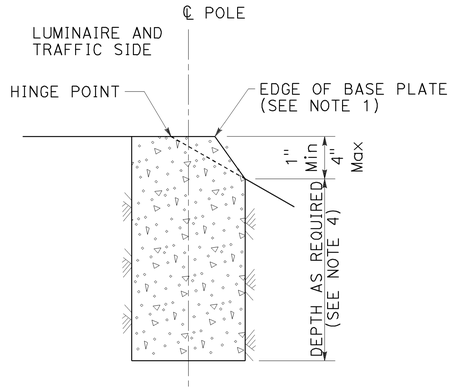

FILL SLOPES
STEEPER THAN 4:1,
LESS THAN 2:1
DETAIL A-2
See Note 2 and 3

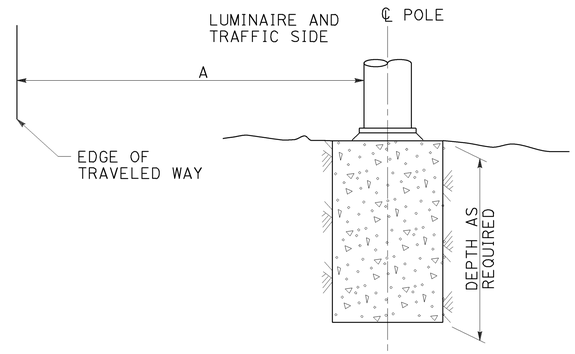

FLAT SECTIONS, CUT OR FILL SLOPES
4:1 OR FLATTER
DETAIL A-3
See Note 2

FOUNDATIONS ADJACENT TO ALL ROADWAYS EXCEPT
IN SIDEWALK, MEDIAN AND ISLAND AREAS
DETAIL A

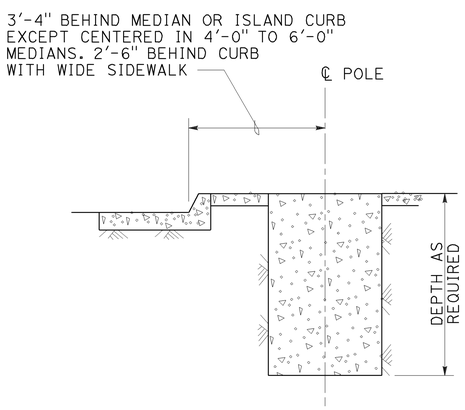

MEDIAN, ISLAND
OR WIDE SIDEWALK
DETAIL B-1
7' Wide and wider

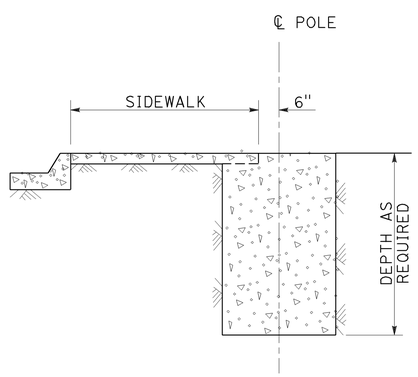

NARROW SIDEWALK
DETAIL B-2
Less than 7' wide

FOUNDATIONS IN SIDEWALK, MEDIAN AND ISLAND AREAS
DETAIL B

NOTES:

1. Where a portion of the foundation is above grade, the top edges shall have a 1" chamfer.
2. Slopes shall be horizontal to vertical ratio (Horizontal : Vertical).
3. Horizontal setbacks on cut and fill slopes steeper than 4:1 shall not exceed the distance shown for flat sections.
4. CIDH embedment depth shall be increased beyond standard depths by the diameter of the CIDH.

STATE OF CALIFORNIA
DEPARTMENT OF TRANSPORTATION

ELECTRICAL SYSTEMS (FOUNDATION INSTALLATIONS)

NO SCALE

RSP ES-11 DATED JULY 19, 2013 SUPERSEDES STANDARD PLAN ES-11
DATED MAY 20, 2011 - PAGE 488 OF THE STANDARD PLANS BOOK DATED 2010.

REVISED STANDARD PLAN RSP ES-11

2010 REVISED STANDARD PLAN RSP ES-11

7-9-13

Dist	COUNTY	ROUTE	POST MILES TOTAL PROJECT	SHEET No.	TOTAL SHEETS
11	SD	8	5.4/10.6, R20.0/R21.6	211	213

Theresa Gabriel
REGISTERED ELECTRICAL ENGINEER

April 15, 2016
PLANS APPROVAL DATE

REGISTERED PROFESSIONAL ENGINEER Theresa Aziz Gabriel No. E15129 Exp. 6-30-16 ELECTRICAL STATE OF CALIFORNIA

THE STATE OF CALIFORNIA OR ITS OFFICERS OR AGENTS SHALL NOT BE RESPONSIBLE FOR THE ACCURACY OR COMPLETENESS OF SCANNED COPIES OF THIS PLAN SHEET.

TO ACCOMPANY PLANS DATED 05-31-16

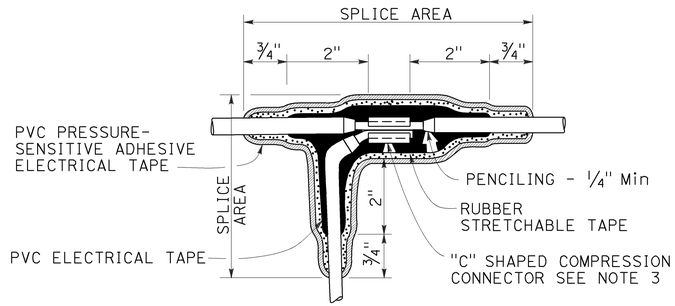

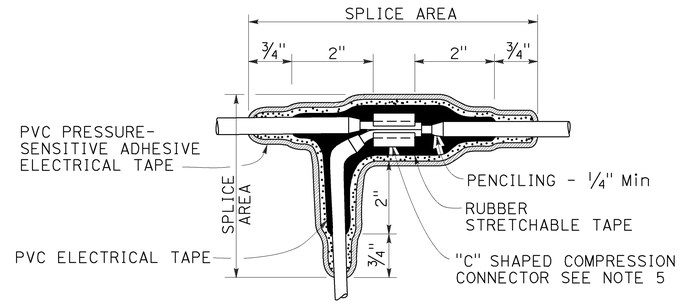

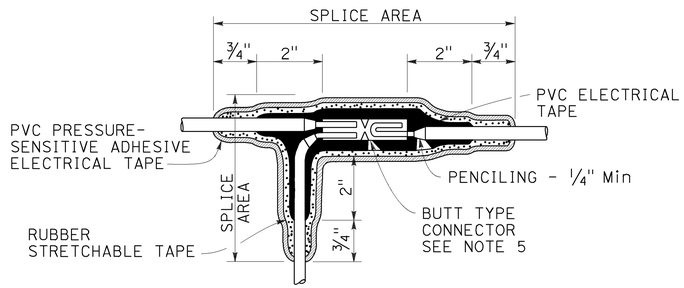

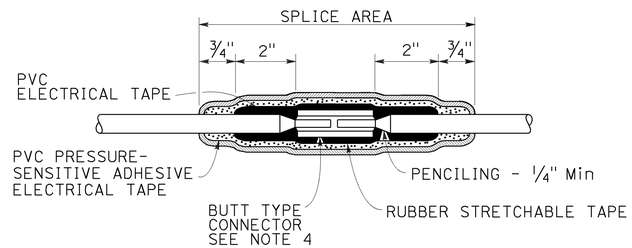

TYPICAL SPLICE INSULATION METHOD B

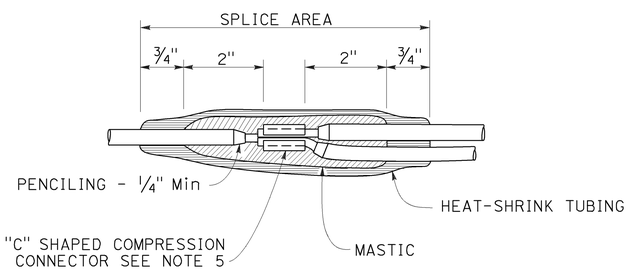

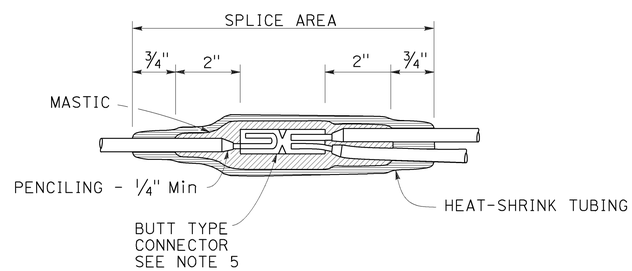

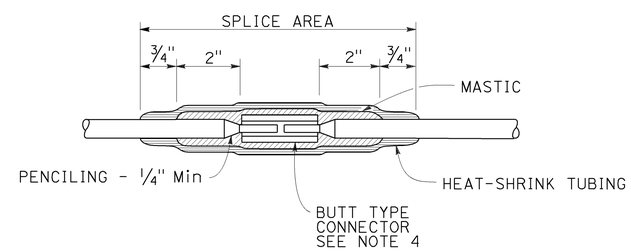

TYPICAL SPLICE INSULATION HEAT-SHRINK TUBING

NOTES:

1. Dimensions are minimum.
2. Rubber tapes shall be rolled after application.
3. Between 1 free-end and 1 through conductor.
4. Between 2 free-end conductors.
5. Between 3 free-end conductors.

STATE OF CALIFORNIA
DEPARTMENT OF TRANSPORTATION

ELECTRICAL SYSTEMS (SPLICE INSULATION METHODS DETAILS)

NO SCALE

RSP ES-13A DATED APRIL 15, 2016 SUPERSEDES RSP ES-13A DATED OCTOBER 30, 2015 AND STANDARD PLAN ES-13A DATED MAY 20, 2011 - PAGE 491 OF THE STANDARD PLANS BOOK DATED 2010.

REVISED STANDARD PLAN RSP ES-13A

2010 REVISED STANDARD PLAN RSP ES-13A

1-22-16

Dist	COUNTY	ROUTE	POST MILES TOTAL PROJECT	SHEET No.	TOTAL SHEETS
11	SD	8	5.4/10.6, R20.0/R21.6	212	213

Theresa Gabriel
REGISTERED ELECTRICAL ENGINEER

April 15, 2016
PLANS APPROVAL DATE

REGISTERED PROFESSIONAL ENGINEER
Theresa Aziz Gabriel
No. E15129
Exp. 6-30-16
ELECTRICAL
STATE OF CALIFORNIA

THE STATE OF CALIFORNIA OR ITS OFFICERS OR AGENTS SHALL NOT BE RESPONSIBLE FOR THE ACCURACY OR COMPLETENESS OF SCANNED COPIES OF THIS PLAN SHEET.

TO ACCOMPANY PLANS DATED 05-31-16

CIRCUIT VOLTAGE	FUSE VOLTAGE RATING	FUSE CURRENT RATING						
		HPS LAMP BALLAST		LOW PRESSURE SODIUM BALLAST	INDUCTION SIGN LIGHTING	SINGLE PHASE (TWO WIRE) TRANSFORMERS (PRIMARY SIDE)		
		70 W	100 W	180 W	85 W	1 kVA	2 kVA	3 kVA
120 V	250 V	5 A	5 A	5 A	5 A	10 A	20 A	30 A
240 V	250 V	5 A	5 A	5 A	5 A	6 A	10 A	20 A
480 V	500-600 V	5 A	5 A	3 A	1 A (SEE NOTE 2)	3 A	6 A	10 A

NOTES:

1. Primary lines of multiple ballasts shall be provided with fused connectors. Fuse ratings shall be as noted above.
2. See Revised Standard Plan RSP ES-15D, Type SC3 control.

FUSE RATINGS FOR FUSED CONNECTORS

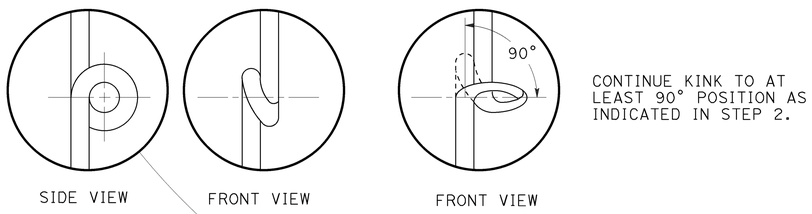

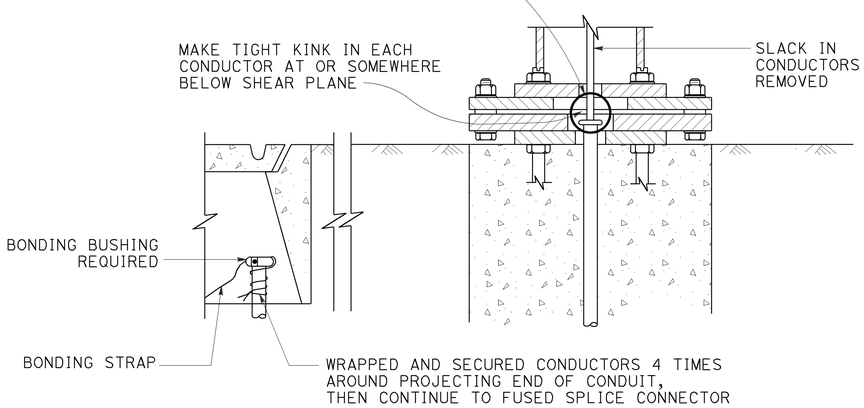

KINKING DETAIL FOR SLIP BASE STANDARDS

DETAIL A

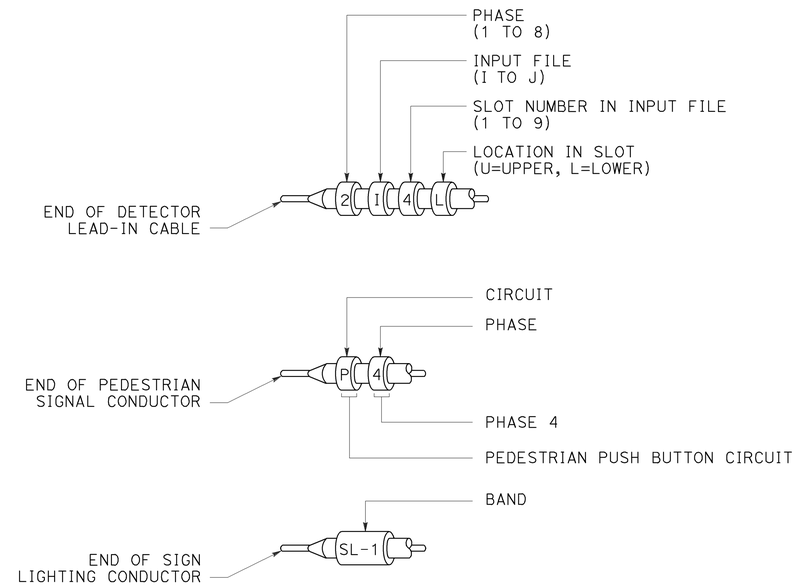

TYPICAL BANDING DETAILS

DETAIL B

STATE OF CALIFORNIA
DEPARTMENT OF TRANSPORTATION

ELECTRICAL SYSTEMS (FUSE RATING, KINKING AND BANDING DETAIL)

NO SCALE

RSP ES-13B DATED APRIL 15, 2016 SUPERSEDES STANDARD PLAN ES-13B DATED MAY 20, 2011 - PAGE 492 OF THE STANDARD PLANS BOOK DATED 2010.

REVISED STANDARD PLAN RSP ES-13B

2010 REVISED STANDARD PLAN RSP ES-13B

1-12-16

Dist	COUNTY	ROUTE	POST MILES TOTAL PROJECT	SHEET No.	TOTAL SHEETS
11	SD	8	5.4/10.6, R20.0/R21.6	213	213

REGISTERED CIVIL ENGINEER

October 30, 2015
PLANS APPROVAL DATE

REGISTERED PROFESSIONAL ENGINEER Stanley P. Johnson No. C57793 Exp. 3-31-16 CIVIL STATE OF CALIFORNIA

THE STATE OF CALIFORNIA OR ITS OFFICERS OR AGENTS SHALL NOT BE RESPONSIBLE FOR THE ACCURACY OR COMPLETENESS OF SCANNED COPIES OF THIS PLAN SHEET.

TO ACCOMPANY PLANS DATED 05-31-16

POLE TYPE	POLE DATA				BASE PLATE DATA				CIDH	
	HEIGHT "h"	Min OD		THICKNESS	"C"	THICKNESS	ANCHOR BOLT SIZE	BC = BOLT CIRCLE	Dia	"d"
		BASE	TOP							
CCTV 25	25′	7⅜"	3¾"	0.1793"	1′-1"	1"	1½" ø x 36"	11½"	2′-6"	7′-0"
CCTV 30	30′	8"			1′-1½"			1′-0"		7′-6"
CCTV 35	35′	8⅝"			1′-2"			1′-1"		8′-0"
CCTV 40	40′	9⅜"			1′-3"			1′-1½"		8′-6"
CCTV 45	45′	10"						1′-2"		

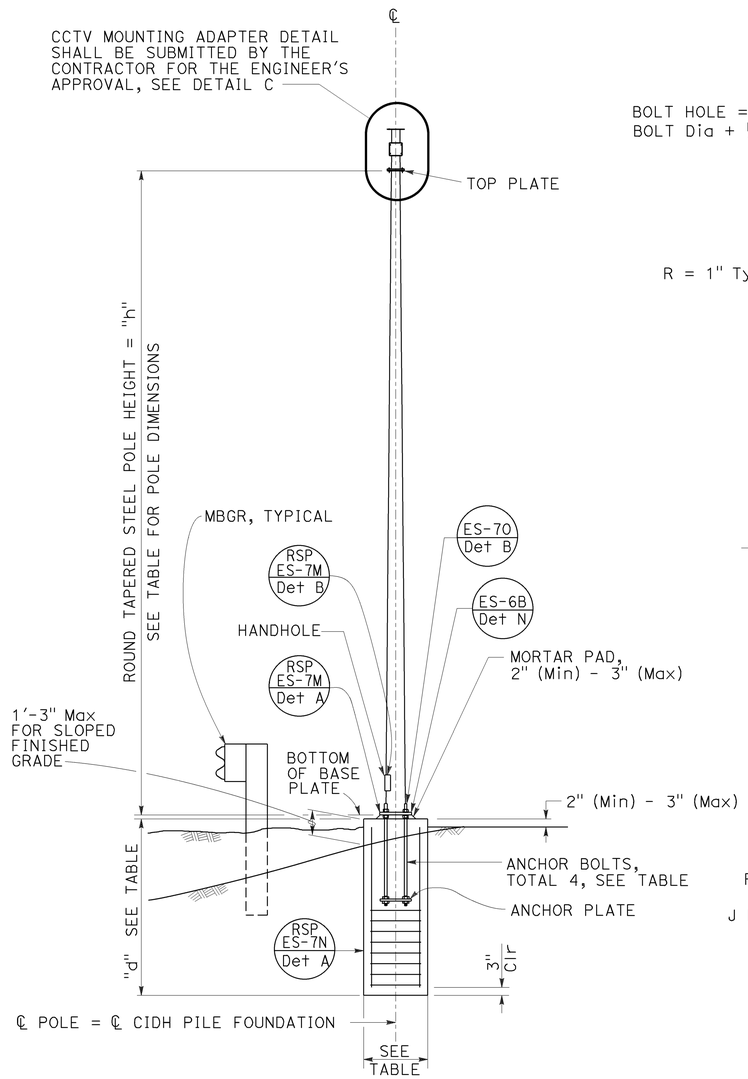

ELEVATION A

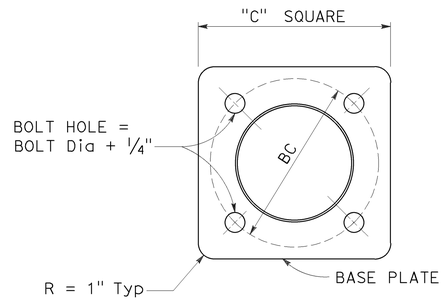

BASE PLATE

DETAIL A

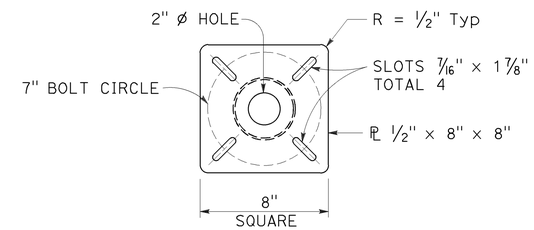

TOP PLATE

DETAIL B

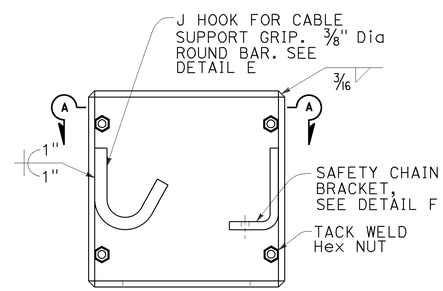

BOX ENCLOSURE

DETAIL D

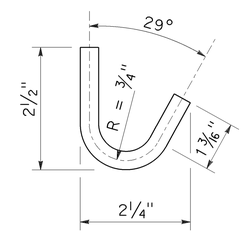

J HOOK

DETAIL E

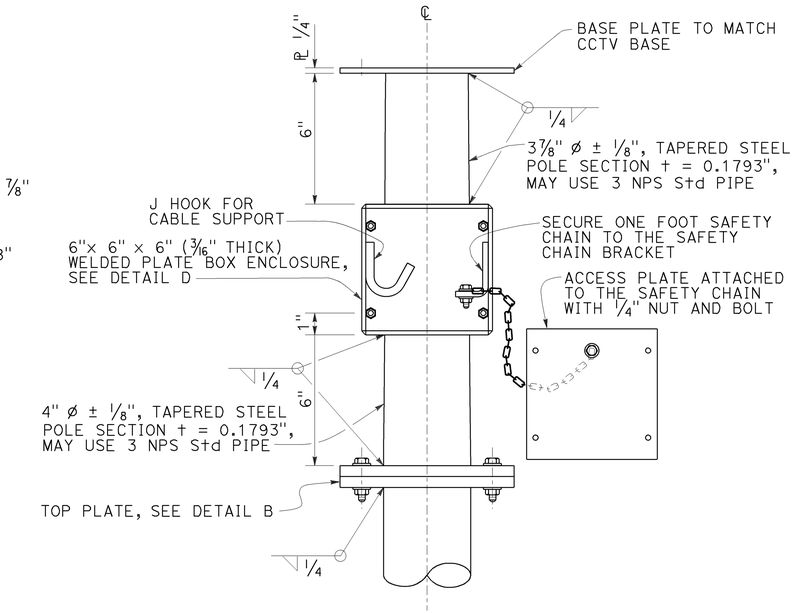

CLOSED CIRCUIT TELEVISION MOUNTING ADAPTER

DETAIL C

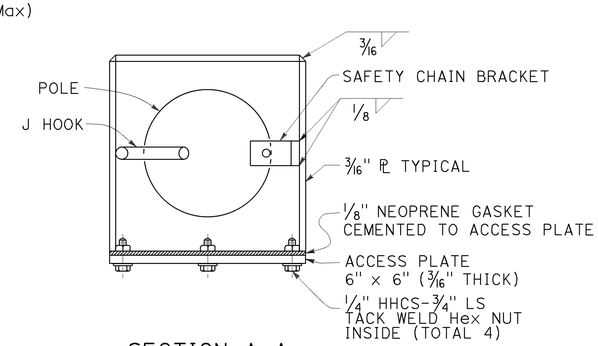

SECTION A-A

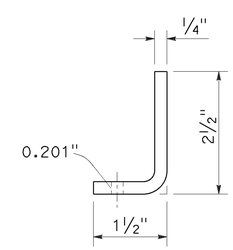

SAFETY CHAIN BRACKET

DETAIL F

NOTES:

1. Verify controlling field dimensions before ordering or fabricating any material.
2. During pole installation, the post shall be raked as necessary with the use of leveling nuts to provide a plumb pole axis.
3. Wind Loadings (3-second gust): 100 mph
4. Unit Stresses (Structural Steel):
   a. fy = 55,000 psi (tapered steel tube and anchor bolts)
   b. fy = 50,000 psi (unless otherwise noted)
5. Unit Stresses (Reinforced Concrete):
   a. f′c = 3,625 psi
   b. fy = 60,000 psi

STATE OF CALIFORNIA
DEPARTMENT OF TRANSPORTATION

ELECTRICAL SYSTEMS (CLOSED CIRCUIT TELEVISION, 25' TO 45' POLE)

NO SCALE

RSP ES-16B DATED OCTOBER 30, 2015 SUPERSEDES STANDARD PLAN ES-16B DATED MAY 20, 2011 - PAGE 501 OF THE STANDARD PLANS BOOK DATED 2010.

REVISED STANDARD PLAN RSP ES-16B

2010 REVISED STANDARD PLAN RSP ES-16B

9-1-15