NOTE:

FOR ACCURATE RIGHT OF WAY AND ACCESS DATA,
CONTACT RIGHT OF WAY ENGINEERING AT THE DISTRICT OFFICE.

Dist	COUNTY	ROUTE	KILOMETER POST TOTAL PROJECT	SHEET No.	TOTAL SHEETS
11	SD	905,805	R8.4/R9.8, 3.1/4.2	201	364

LICENSED LANDSCAPE ARCHITECT

10-18-10
PLANS APPROVAL DATE

LICENSED LANDSCAPE ARCHITECT
DAVID G. STRICKLAND No. 4023
SIGNATURE
3/31/12
REVIEW DATE
07/27/10
DATE
STATE OF CALIFORNIA

THE STATE OF CALIFORNIA OR ITS OFFICERS OR AGENTS SHALL NOT BE RESPONSIBLE FOR THE ACCURACY OR COMPLETENESS OF ELECTRONIC COPIES OF THIS PLAN SHEET.

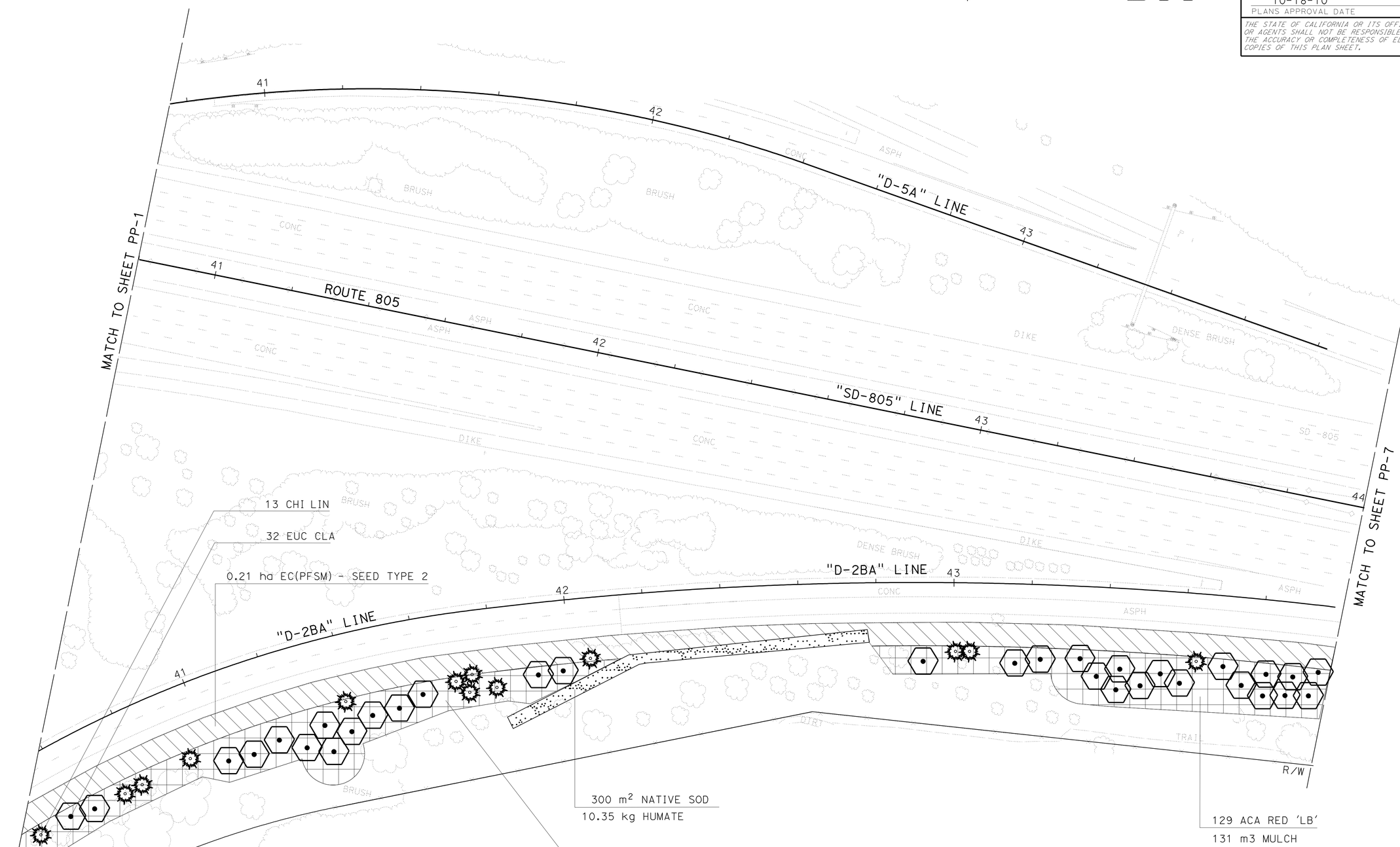

THIS PLAN ACCURATE FOR PLANTING WORK ONLY.

ALL DIMENSIONS ARE IN METERS
UNLESS OTHERWISE SHOWN.

PLANTING PLAN

SCALE 1:500

PP-6

STATE OF CALIFORNIA - DEPARTMENT OF TRANSPORTATION
Caltrans LANDSCAPE ARCHITECTURE

SENIOR LANDSCAPE ARCHITECT: STEPHEN ALVAREZ
CALCULATED-DESIGNED BY: DANIELLE ZHANG
CHECKED BY: DAVID STRICKLAND
REVISED BY: X
DATE REVISED: MM/DD/YY

LAST REVISION 07-23-10
DATE PLOTTED => 26-OCT-2010
TIME PLOTTED => 11:18

NOTE:

FOR ACCURATE RIGHT OF WAY AND ACCESS DATA,
CONTACT RIGHT OF WAY ENGINEERING AT THE DISTRICT OFFICE.

Dist	COUNTY	ROUTE	KILOMETER POST TOTAL PROJECT	SHEET No.	TOTAL SHEETS
11	SD	905,805	R8.4/R9.8, 3.1/4.2	202	364

LICENSED LANDSCAPE ARCHITECT

10-18-10
PLANS APPROVAL DATE

LICENSED LANDSCAPE ARCHITECT
DAVID G. STRICKLAND No. 3623
SIGNATURE
3/31/12
EXPIRATION DATE
07/27/10
DATE
STATE OF CALIFORNIA

THE STATE OF CALIFORNIA OR ITS OFFICERS OR AGENTS SHALL NOT BE RESPONSIBLE FOR THE ACCURACY OR COMPLETENESS OF ELECTRONIC COPIES OF THIS PLAN SHEET.

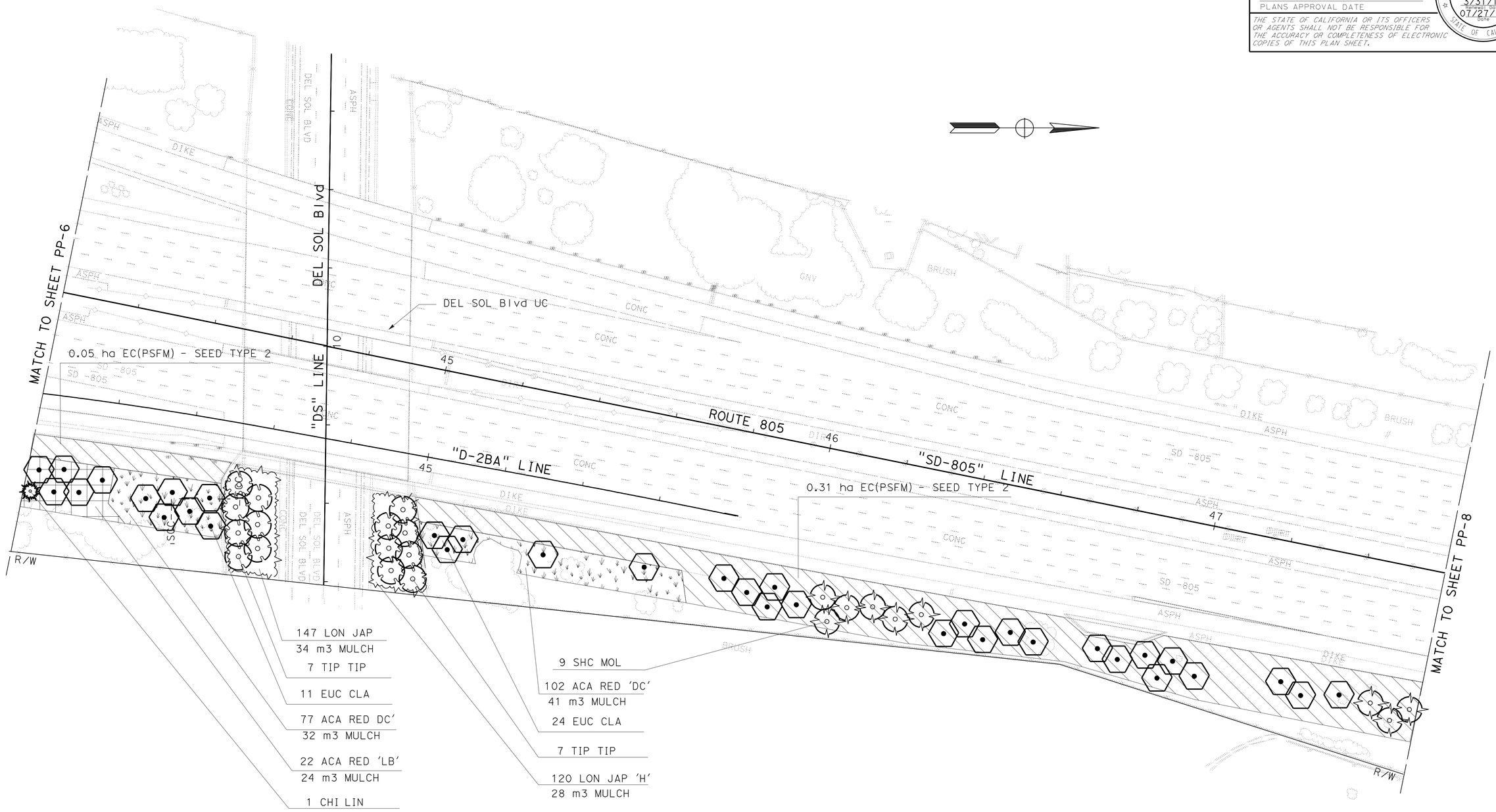

THIS PLAN ACCURATE FOR PLANTING WORK ONLY.

ALL DIMENSIONS ARE IN METERS
UNLESS OTHERWISE SHOWN.

PLANTING PLAN

SCALE 1:500 **PP-7**

STATE OF CALIFORNIA - DEPARTMENT OF TRANSPORTATION
Caltrans
LANDSCAPE ARCHITECTURE

SENIOR LANDSCAPE ARCHITECT: STEPHEN ALVAREZ
CALCULATED-DESIGNED BY: DANIELLE ZHANG
CHECKED BY: DAVID STRICKLAND
REVISED BY: X
DATE REVISED: MM/DD/YY

LAST REVISION 07-23-10
DATE PLOTTED => 26-OCT-2010
TIME PLOTTED => 11:18

NOTE:

FOR ACCURATE RIGHT OF WAY AND ACCESS DATA,
CONTACT RIGHT OF WAY ENGINEERING AT THE DISTRICT OFFICE.

Dist	COUNTY	ROUTE	KILOMETER POST TOTAL PROJECT	SHEET No.	TOTAL SHEETS
11	SD	905,805	R8.4/R9.8, 3.1/4.2	203	364

LICENSED LANDSCAPE ARCHITECT

10-18-10
PLANS APPROVAL DATE

LICENSED LANDSCAPE ARCHITECT
DAVID G. STRICKLAND No. 5623
SIGNATURE
3/31/12
EXPIRATION DATE
07/27/10
DATE
STATE OF CALIFORNIA

THE STATE OF CALIFORNIA OR ITS OFFICERS OR AGENTS SHALL NOT BE RESPONSIBLE FOR THE ACCURACY OR COMPLETENESS OF ELECTRONIC COPIES OF THIS PLAN SHEET.

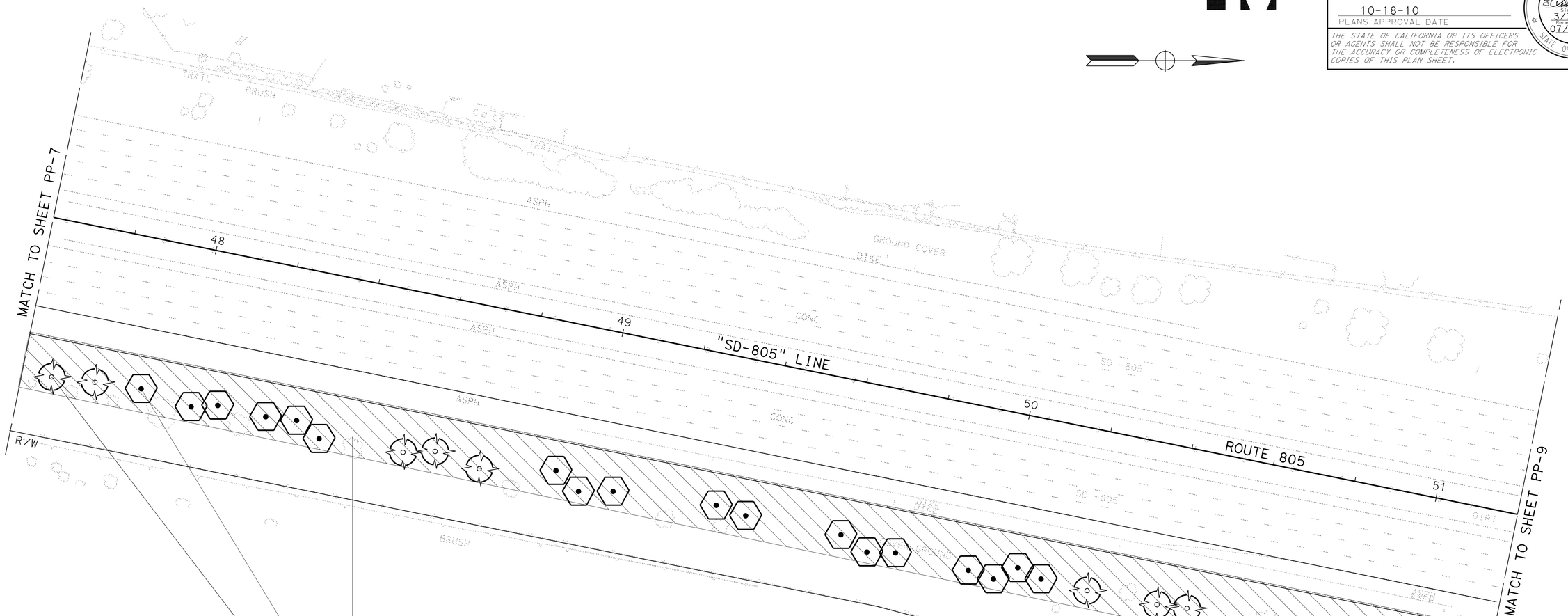

THIS PLAN ACCURATE FOR PLANTING WORK ONLY.

ALL DIMENSIONS ARE IN METERS
UNLESS OTHERWISE SHOWN.

PLANTING PLAN

SCALE 1:500

PP-8

X	REVISED BY
MM/DD/YY	DATE REVISED
DANIELLE ZHANG	CALCULATED-DESIGNED BY
DAVID STRICKLAND	CHECKED BY
STEPHEN ALVAREZ	SENIOR LANDSCAPE ARCHITECT

STATE OF CALIFORNIA - DEPARTMENT OF TRANSPORTATION
Caltrans LANDSCAPE ARCHITECTURE

LAST REVISION 07-23-10
DATE PLOTTED => 26-OCT-2010
TIME PLOTTED => 11:18

NOTE:

FOR ACCURATE RIGHT OF WAY AND ACCESS DATA,
CONTACT RIGHT OF WAY ENGINEERING AT THE DISTRICT OFFICE.

Dist	COUNTY	ROUTE	KILOMETER POST TOTAL PROJECT	SHEET No.	TOTAL SHEETS
11	SD	905,805	R8.4/R9.8, 3.1/4.2	204	364

LICENSED LANDSCAPE ARCHITECT

10-18-10
PLANS APPROVAL DATE

LICENSED LANDSCAPE ARCHITECT
DAVID G. STRICKLAND No. 5423
Signature
3/31/12
Renewal Date
07/27/10
Date
STATE OF CALIFORNIA

THE STATE OF CALIFORNIA OR ITS OFFICERS OR AGENTS SHALL NOT BE RESPONSIBLE FOR THE ACCURACY OR COMPLETENESS OF ELECTRONIC COPIES OF THIS PLAN SHEET.

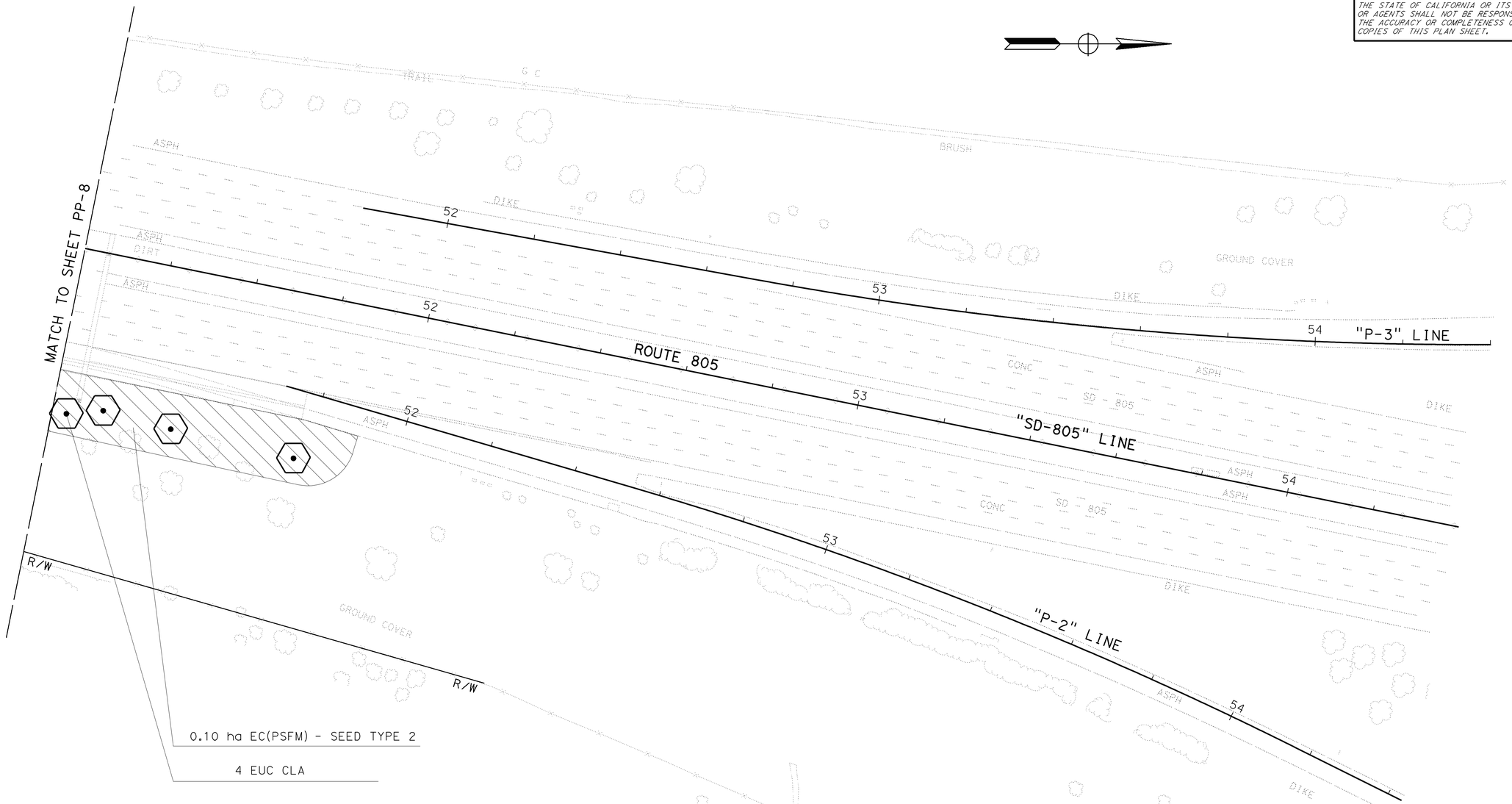

THIS PLAN ACCURATE FOR PLANTING WORK ONLY.

ALL DIMENSIONS ARE IN METERS
UNLESS OTHERWISE SHOWN.

PLANTING PLAN

SCALE 1:500 **PP-9**

X	REVISED BY	DANIELLE ZHANG	CALCULATED-DESIGNED BY
MM/DD/YY	DATE REVISED	DAVID STRICKLAND	CHECKED BY

SENIOR LANDSCAPE ARCHITECT
STEPHEN ALVAREZ

STATE OF CALIFORNIA - DEPARTMENT OF TRANSPORTATION
Caltrans LANDSCAPE ARCHITECTURE

LAST REVISION 07-23-10
DATE PLOTTED => 26-OCT-2010
TIME PLOTTED => 11:18

NOTE:

FOR ACCURATE RIGHT OF WAY AND ACCESS DATA,
CONTACT RIGHT OF WAY ENGINEERING AT THE DISTRICT OFFICE.

Dist	COUNTY	ROUTE	KILOMETER POST TOTAL PROJECT	SHEET No.	TOTAL SHEETS
11	SD	905,805	R8.4/R9.8, 3.1/4.2	205	364

LICENSED LANDSCAPE ARCHITECT

10-18-10
PLANS APPROVAL DATE

LICENSED LANDSCAPE ARCHITECT
DAVID G. STRICKLAND No. 4023
SIGNATURE
3/31/12
RENEWAL DATE
07/27/10
DATE
STATE OF CALIFORNIA

THE STATE OF CALIFORNIA OR ITS OFFICERS OR AGENTS SHALL NOT BE RESPONSIBLE FOR THE ACCURACY OR COMPLETENESS OF ELECTRONIC COPIES OF THIS PLAN SHEET.

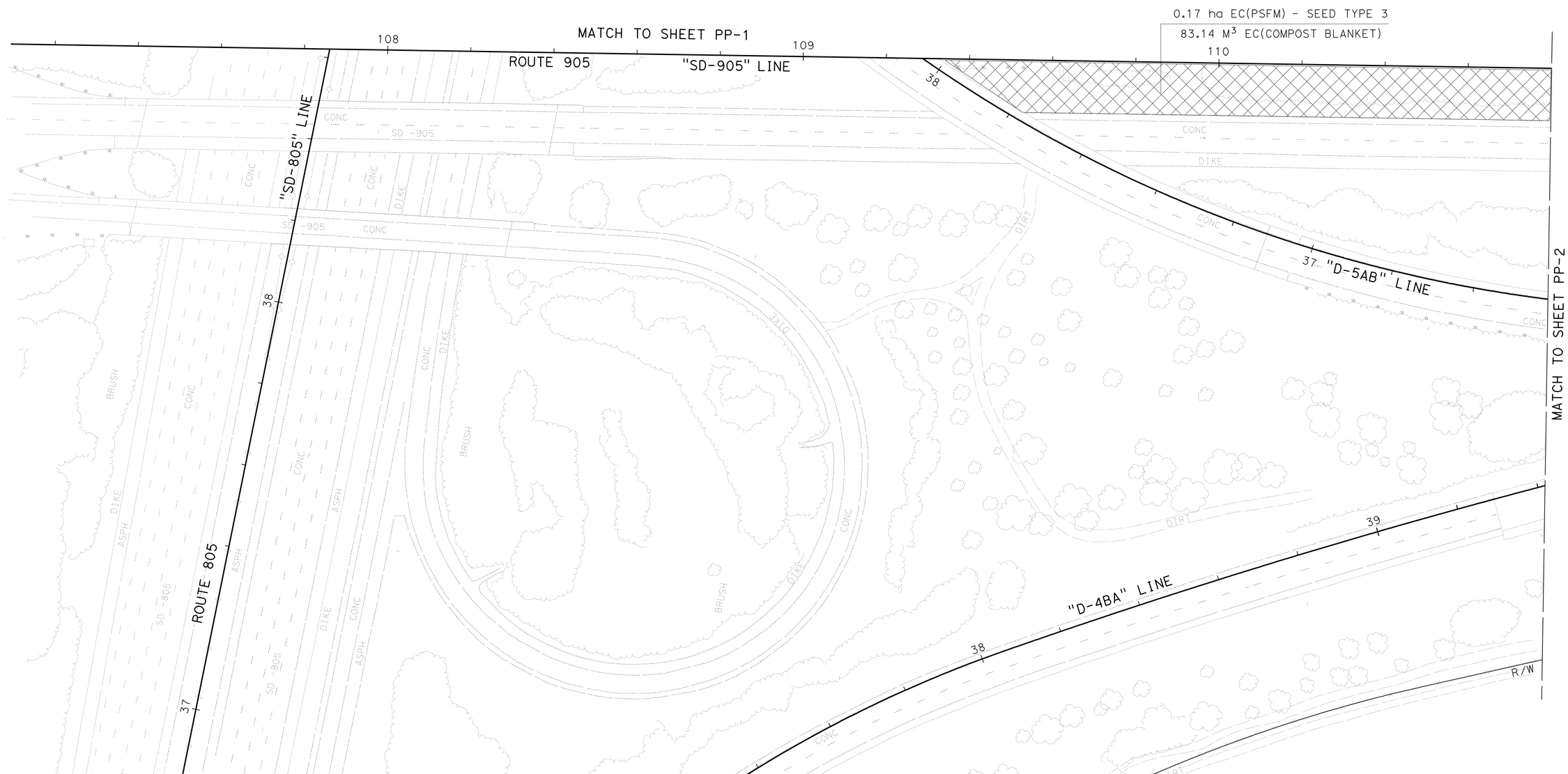

THIS PLAN ACCURATE FOR PLANTING WORK ONLY.

ALL DIMENSIONS ARE IN METERS
UNLESS OTHERWISE SHOWN.

PLANTING PLAN

SCALE 1:500 **PP-10**

STATE OF CALIFORNIA - DEPARTMENT OF TRANSPORTATION
Caltrans LANDSCAPE ARCHITECTURE

SENIOR LANDSCAPE ARCHITECT: STEPHEN ALVAREZ
CALCULATED-DESIGNED BY: DANIELLE ZHANG
CHECKED BY: DAVID STRICKLAND
REVISED BY: X
DATE REVISED: MM/DD/YY

LAST REVISION 07-23-10
DATE PLOTTED => 26-OCT-2010
TIME PLOTTED => 11:18

Dist	COUNTY	ROUTE	KILOMETER POST TOTAL PROJECT	SHEET No.	TOTAL SHEETS
11	SD	905,805	R8.4/R9.8, 3.1/4.2	206	364

LICENSED LANDSCAPE ARCHITECT

10-18-10
PLANS APPROVAL DATE

LICENSED LANDSCAPE ARCHITECT DAVID G. STRICKLAND No. 4023 STATE OF CALIFORNIA
REGISTRATION EXPIRES 3/31/12
REGISTRATION DATE 07/27/10
DATE

THE STATE OF CALIFORNIA OR ITS OFFICERS OR AGENTS SHALL NOT BE RESPONSIBLE FOR THE ACCURACY OR COMPLETENESS OF ELECTRONIC COPIES OF THIS PLAN SHEET.

Caltrans Metric

NOTE:

1. FOR ACCURATE RIGHT OF WAY AND ACCESS DATA, CONTACT RIGHT OF WAY ENGINEERING AT THE DISTRICT OFFICE.
2. AREA SOUTH OF DEL SOL blvd: Exist 3" WATER METER (POTABLE), 3" BPA AND BOOSTER PUMP ARE LOCATED IN THE NW QUADRANT AT MARCWADE STREET.
3. AREA SOUTH OF DEL SOL blvd: Exist 3" WATER METER (POTABLE) AND 3" BPA ARE LOCATED IN THE SW QUADRANT.
4. AREA NORTH OF DEL SOL blvd: Exist 2-2" WATER METER (POTABLE) AND 3" BPA ARE LOCATED IN THE NW QUADRANT OF Rte 805 AND PALM Ave.
5. AREA NORTH OF DEL SOL blvd: Exist IC's 'A,C & I' ARE LOCATED IN THE SW QUADRANT OF Rte 805 AND PALM Ave.
6. AREA NORTH OF DEL SOL blvd: Exist IC's 'D,F & K' ARE LOCATED IN THE SE QUADRANT OF Rte 805 AND PALM Ave.
7. Exist DRIP EMITTER LINES FROM REMOVED VALVES ARE REMOVED.
8. Exist IRR CROSSOVERS ARE 200 mm ACP WITH 75 mm PVC WATERLINE.

REMOVE IRRIGATION FACILITIES

IRRIGATION DESCRIPTION	EA
IMPACT/ROTOR HEAD	9
CONTROL & GATE VALVES	3

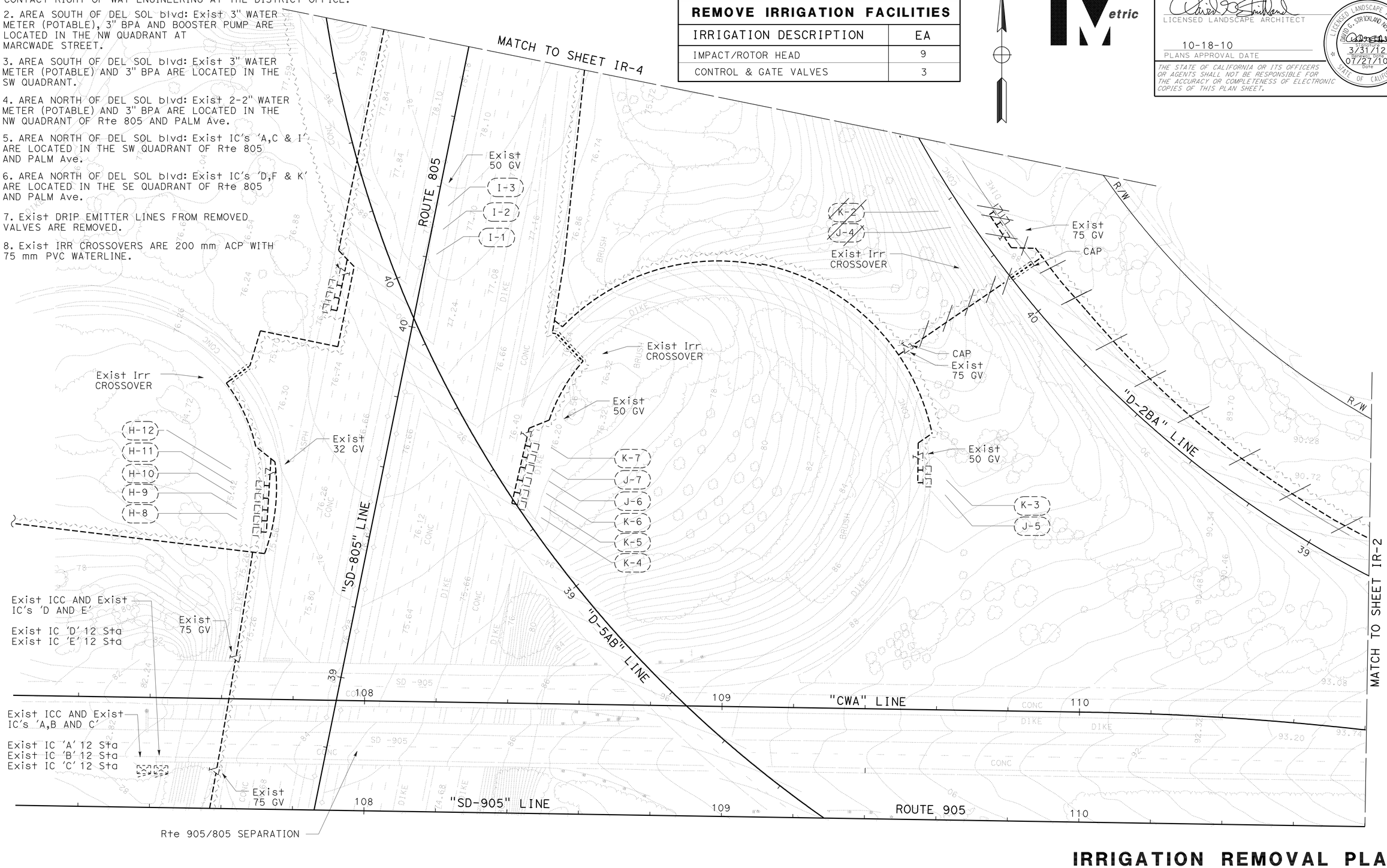

THIS PLAN ACCURATE FOR IRRIGATION REMOVAL WORK ONLY.

ALL IRRIGATION EQUIPMENT SIZES ARE IN MILLIMETERS (DIAMETER NOMINAL) UNLESS OTHERWISE SHOWN.

IRRIGATION REMOVAL PLAN

SCALE 1:500

IR-1

REVISED BY	DATE REVISED MM/DD/YY
JOEL HORTIZUELA	X
DAVID STRICKLAND	

CALCULATED-DESIGNED BY
CHECKED BY

SENIOR LANDSCAPE ARCHITECT
STEPHEN ALVAREZ

STATE OF CALIFORNIA - DEPARTMENT OF TRANSPORTATION
Caltrans LANDSCAPE ARCHITECTURE

LAST REVISION 07-23-10
DATE PLOTTED => 26-OCT-2010
TIME PLOTTED => 11:18

NOTE:

FOR ACCURATE RIGHT OF WAY AND ACCESS DATA,
CONTACT RIGHT OF WAY ENGINEERING AT THE DISTRICT OFFICE.

REMOVE IRRIGATION FACILITIES	
IRRIGATION DESCRIPTION	EA
IMPACT/ROTOR HEAD	19
CONTROL & GATE VALVES	20

Caltrans Metric

Dist	COUNTY	ROUTE	KILOMETER POST TOTAL PROJECT	SHEET No.	TOTAL SHEETS
11	SD	905,805	R8.4/R9.8, 3.1/4.2	207	364

LICENSED LANDSCAPE ARCHITECT

10-18-10
PLANS APPROVAL DATE

LICENSED LANDSCAPE ARCHITECT DAVID G. STRICKLAND No. 3623 SIGNATURE 3/31/12 EXPIRATION DATE 07/27/10 DATE STATE OF CALIFORNIA

THE STATE OF CALIFORNIA OR ITS OFFICERS OR AGENTS SHALL NOT BE RESPONSIBLE FOR THE ACCURACY OR COMPLETENESS OF ELECTRONIC COPIES OF THIS PLAN SHEET.

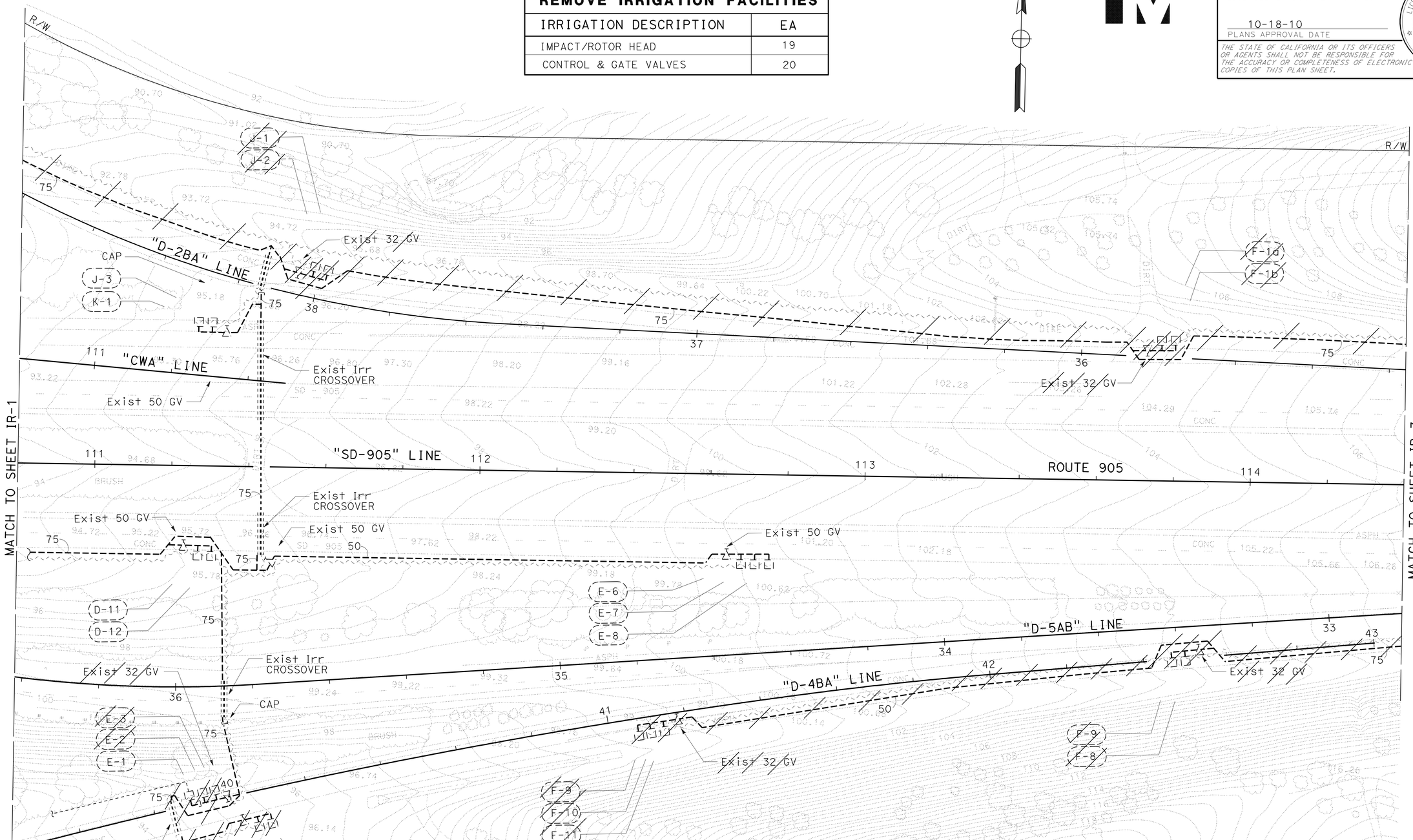

THIS PLAN ACCURATE FOR IRRIGATION REMOVAL WORK ONLY.

ALL IRRIGATION EQUIPMENT SIZES ARE IN MILLIMETERS (DIAMETER NOMINAL) UNLESS OTHERWISE SHOWN.

IRRIGATION REMOVAL PLAN

SCALE 1:500

IR-2

STATE OF CALIFORNIA - DEPARTMENT OF TRANSPORTATION
Caltrans LANDSCAPE ARCHITECTURE

SENIOR LANDSCAPE ARCHITECT: STEPHEN ALVAREZ
CALCULATED-DESIGNED BY: JOEL HORTIZUELA
CHECKED BY: DAVID STRICKLAND
REVISED BY: X
DATE REVISED: MM/DD/YY

LAST REVISION DATE PLOTTED => 26-OCT-2010
07-23-10 TIME PLOTTED => 11:18

NOTE:

FOR ACCURATE RIGHT OF WAY AND ACCESS DATA,
CONTACT RIGHT OF WAY ENGINEERING AT THE DISTRICT OFFICE.

Dist	COUNTY	ROUTE	KILOMETER POST TOTAL PROJECT	SHEET No.	TOTAL SHEETS
11	SD	905,805	R8.4/R9.8, 3.1/4.2	208	364

LICENSED LANDSCAPE ARCHITECT

10-18-10
PLANS APPROVAL DATE

LICENSED LANDSCAPE ARCHITECT DAVID G. STRICKLAND No. 3623 STATE OF CALIFORNIA
EXPIRATION DATE 3/31/12
RENEWAL DATE 07/27/10
DATE

THE STATE OF CALIFORNIA OR ITS OFFICERS OR AGENTS SHALL NOT BE RESPONSIBLE FOR THE ACCURACY OR COMPLETENESS OF ELECTRONIC COPIES OF THIS PLAN SHEET.

Caltrans Metric

REMOVE IRRIGATION FACILITIES	
IRRIGATION DESCRIPTION	EA
IMPACT/ROTOR HEAD	-
CONTROL & GATE VALVES	8

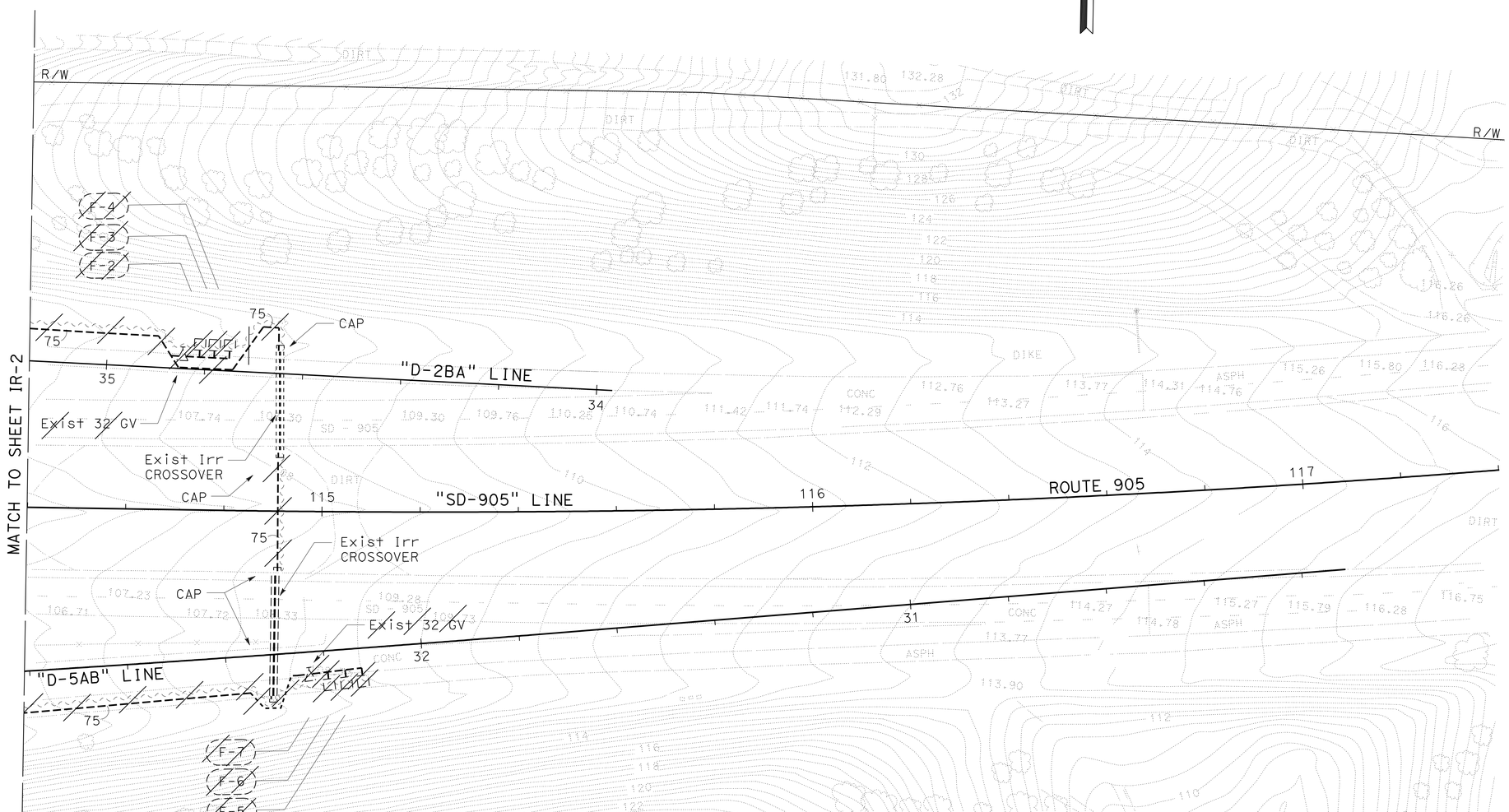

THIS PLAN ACCURATE FOR IRRIGATION REMOVAL WORK ONLY.

ALL IRRIGATION EQUIPMENT SIZES ARE IN MILLIMETERS (DIAMETER NOMINAL) UNLESS OTHERWISE SHOWN.

IRRIGATION REMOVAL PLAN

SCALE 1:500

IR-3

STATE OF CALIFORNIA - DEPARTMENT OF TRANSPORTATION
Caltrans LANDSCAPE ARCHITECTURE

SENIOR LANDSCAPE ARCHITECT: STEPHEN ALVAREZ
CALCULATED-DESIGNED BY: JOEL HORTIZUELA
CHECKED BY: DAVID STRICKLAND
REVISED BY: X
DATE REVISED: MM/DD/YY

LAST REVISION 07-23-10
DATE PLOTTED => 26-OCT-2010
TIME PLOTTED => 11:18

Dist	COUNTY	ROUTE	KILOMETER POST TOTAL PROJECT	SHEET No.	TOTAL SHEETS
11	SD	905,805	R8.4/R9.8, 3.1/4.2	209	364

LICENSED LANDSCAPE ARCHITECT

10-18-10
PLANS APPROVAL DATE

LICENSED LANDSCAPE ARCHITECT DAVID C. STRICKLAND No. 3023 EXPIRES 3/31/12 REVISED OCTO 07/27/10 DATE STATE OF CALIFORNIA

THE STATE OF CALIFORNIA OR ITS OFFICERS OR AGENTS SHALL NOT BE RESPONSIBLE FOR THE ACCURACY OR COMPLETENESS OF ELECTRONIC COPIES OF THIS PLAN SHEET.

Caltrans Metric

NOTE:

FOR ACCURATE RIGHT OF WAY AND ACCESS DATA,
CONTACT RIGHT OF WAY ENGINEERING AT THE DISTRICT OFFICE.

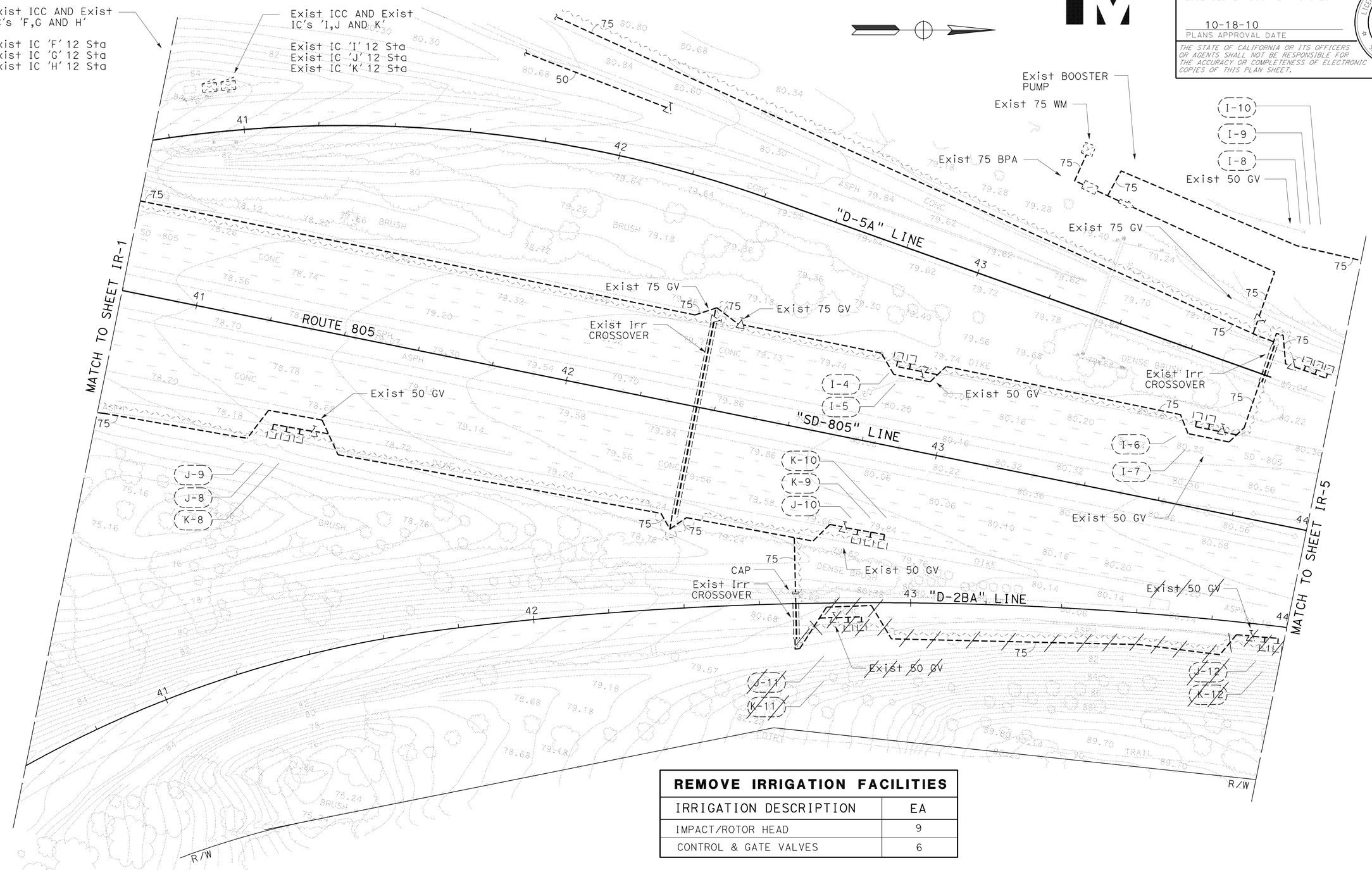

REMOVE IRRIGATION FACILITIES	
IRRIGATION DESCRIPTION	EA
IMPACT/ROTOR HEAD	9
CONTROL & GATE VALVES	6

THIS PLAN ACCURATE FOR IRRIGATION REMOVAL WORK ONLY.

ALL IRRIGATION EQUIPMENT SIZES ARE IN MILLIMETERS (DIAMETER NOMINAL) UNLESS OTHERWISE SHOWN.

IRRIGATION REMOVAL PLAN

SCALE 1:500

IR-4

STATE OF CALIFORNIA - DEPARTMENT OF TRANSPORTATION
Caltrans LANDSCAPE ARCHITECTURE

SENIOR LANDSCAPE ARCHITECT: STEPHEN ALVAREZ
CALCULATED-DESIGNED BY: JOEL HORTIZUELA
CHECKED BY: DAVID STRICKLAND
REVISED BY: X
DATE REVISED: MM/DD/YY

LAST REVISION 07-23-10
DATE PLOTTED => 26-OCT-2010
TIME PLOTTED => 11:18

NOTE:

FOR ACCURATE RIGHT OF WAY AND ACCESS DATA,
CONTACT RIGHT OF WAY ENGINEERING AT THE DISTRICT OFFICE.

Dist	COUNTY	ROUTE	KILOMETER POST TOTAL PROJECT	SHEET No.	TOTAL SHEETS
11	SD	905,805	R8.4/R9.8, 3.1/4.2	210	364

LICENSED LANDSCAPE ARCHITECT

10-18-10
PLANS APPROVAL DATE

LICENSED LANDSCAPE ARCHITECT DAVID G. STRICKLAND No. 4023 EXPIRATION DATE 3/31/12 REVISED DATE 07/27/10 DATE STATE OF CALIFORNIA

THE STATE OF CALIFORNIA OR ITS OFFICERS OR AGENTS SHALL NOT BE RESPONSIBLE FOR THE ACCURACY OR COMPLETENESS OF ELECTRONIC COPIES OF THIS PLAN SHEET.

Caltrans Metric

REMOVE IRRIGATION FACILITIES

IRRIGATION DESCRIPTION	EA
IMPACT/ROTOR HEAD	42
CONTROL & GATE VALVES	10

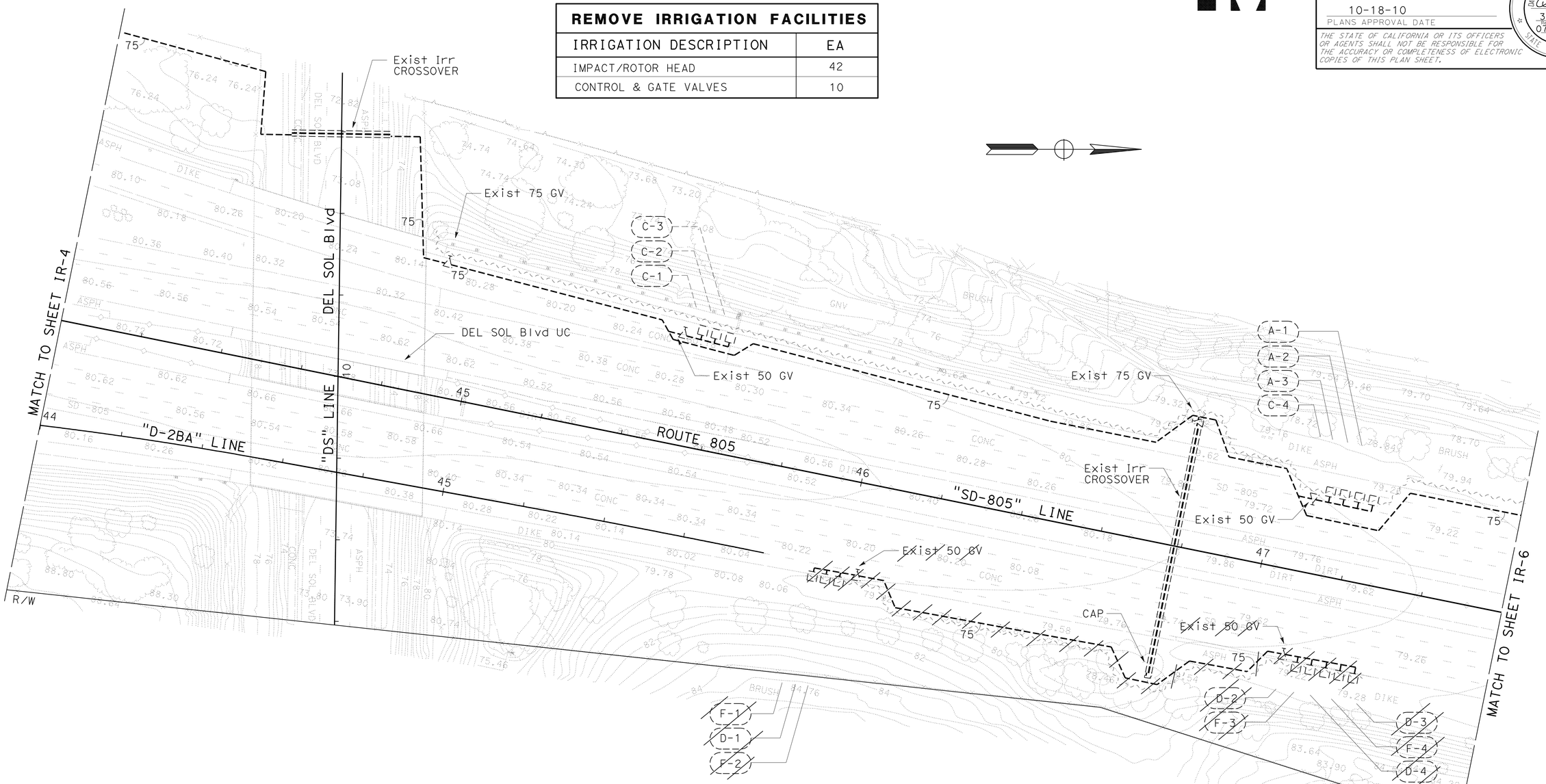

THIS PLAN ACCURATE FOR IRRIGATION REMOVAL WORK ONLY.

ALL IRRIGATION EQUIPMENT SIZES ARE IN MILLIMETERS (DIAMETER NOMINAL) UNLESS OTHERWISE SHOWN.

IRRIGATION REMOVAL PLAN

SCALE 1:500

IR-5

CALCULATED-DESIGNED BY	JOEL HORTIZUELA	SENIOR LANDSCAPE ARCHITECT	STEPHEN ALVAREZ
CHECKED BY	DAVID STRICKLAND	REVISED BY	X
		DATE REVISED	MM/DD/YY

STATE OF CALIFORNIA - DEPARTMENT OF TRANSPORTATION
Caltrans LANDSCAPE ARCHITECTURE

LAST REVISION 07-23-10
DATE PLOTTED => 26-OCT-2010
TIME PLOTTED => 11:19

Dist	COUNTY	ROUTE	KILOMETER POST TOTAL PROJECT	SHEET No.	TOTAL SHEETS
11	SD	905,805	R8.4/R9.8, 3.1/4.2	211	364

LICENSED LANDSCAPE ARCHITECT

10-18-10
PLANS APPROVAL DATE

LICENSED LANDSCAPE ARCHITECT DAVID G. STRICKLAND No. 4623 SIGNATURE 3/31/12 RENEWAL DATE 07/27/10 DATE STATE OF CALIFORNIA

THE STATE OF CALIFORNIA OR ITS OFFICERS OR AGENTS SHALL NOT BE RESPONSIBLE FOR THE ACCURACY OR COMPLETENESS OF ELECTRONIC COPIES OF THIS PLAN SHEET.

Caltrans Metric

NOTE:

FOR ACCURATE RIGHT OF WAY AND ACCESS DATA,
CONTACT RIGHT OF WAY ENGINEERING AT THE DISTRICT OFFICE.

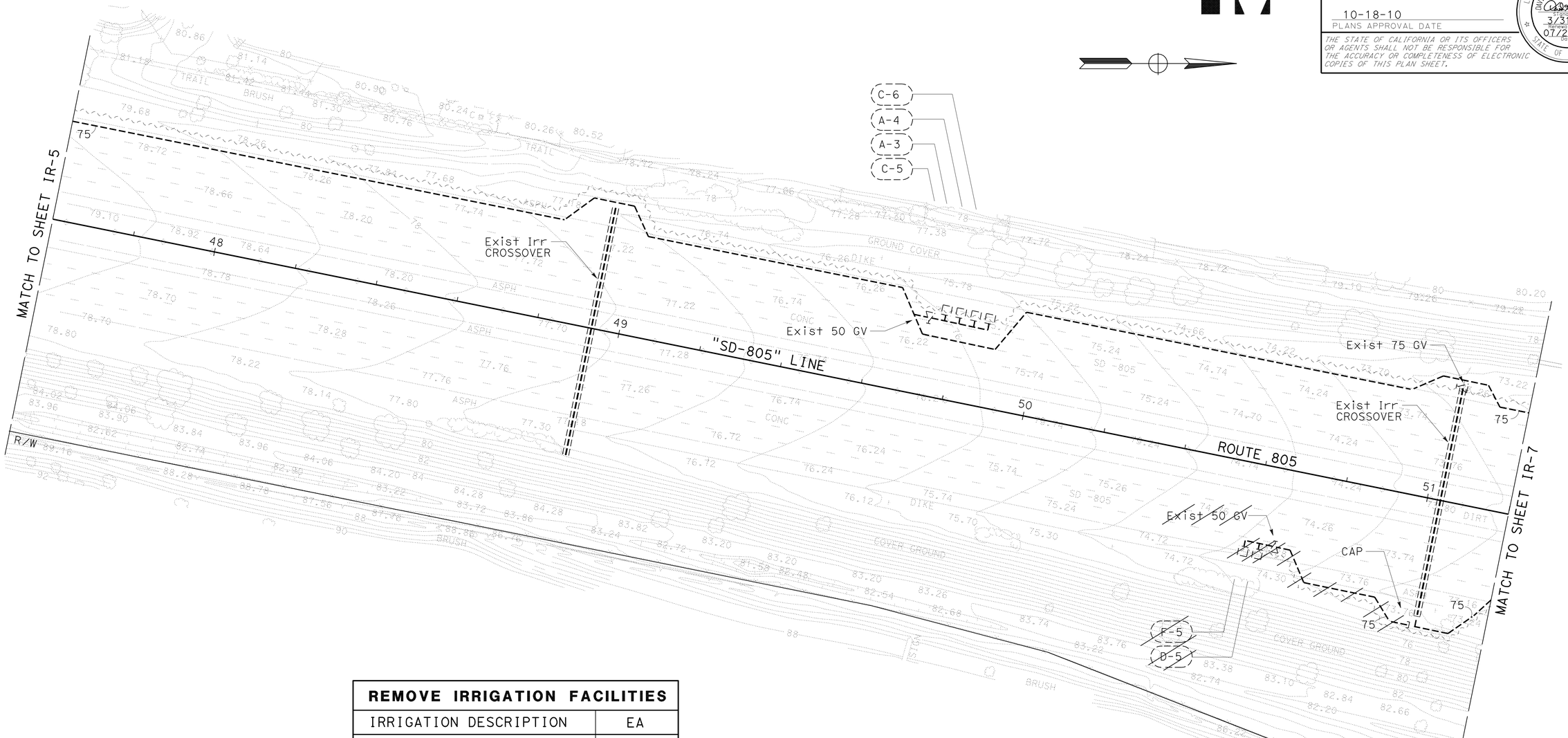

REMOVE IRRIGATION FACILITIES	
IRRIGATION DESCRIPTION	EA
IMPACT/ROTOR HEAD	24
CONTROL & GATE VALVES	3

THIS PLAN ACCURATE FOR IRRIGATION REMOVAL WORK ONLY.

ALL IRRIGATION EQUIPMENT SIZES ARE IN MILLIMETERS (DIAMETER NOMINAL) UNLESS OTHERWISE SHOWN.

IRRIGATION REMOVAL PLAN

SCALE 1:500

IR-6

REVISED BY	DATE REVISED MM/DD/YY
X	

JOEL HORTIZUELA
DAVID STRICKLAND
CALCULATED-DESIGNED BY
CHECKED BY
SENIOR LANDSCAPE ARCHITECT
STEPHEN ALVAREZ

STATE OF CALIFORNIA - DEPARTMENT OF TRANSPORTATION
Caltrans LANDSCAPE ARCHITECTURE

LAST REVISION 07-23-10
DATE PLOTTED => 26-OCT-2010
TIME PLOTTED => 11:19

NOTE:

FOR ACCURATE RIGHT OF WAY AND ACCESS DATA,
CONTACT RIGHT OF WAY ENGINEERING AT THE DISTRICT OFFICE.

Dist	COUNTY	ROUTE	KILOMETER POST TOTAL PROJECT	SHEET No.	TOTAL SHEETS
11	SD	905,805	R8.4/R9.8, 3.1/4.2	212	364

LICENSED LANDSCAPE ARCHITECT

10-18-10
PLANS APPROVAL DATE

LICENSED LANDSCAPE ARCHITECT DAVID G. STRICKLAND No. 3023 EXPIRATION DATE 3/31/12 RENEWAL DATE 07/27/10 STATE OF CALIFORNIA

THE STATE OF CALIFORNIA OR ITS OFFICERS OR AGENTS SHALL NOT BE RESPONSIBLE FOR THE ACCURACY OR COMPLETENESS OF ELECTRONIC COPIES OF THIS PLAN SHEET.

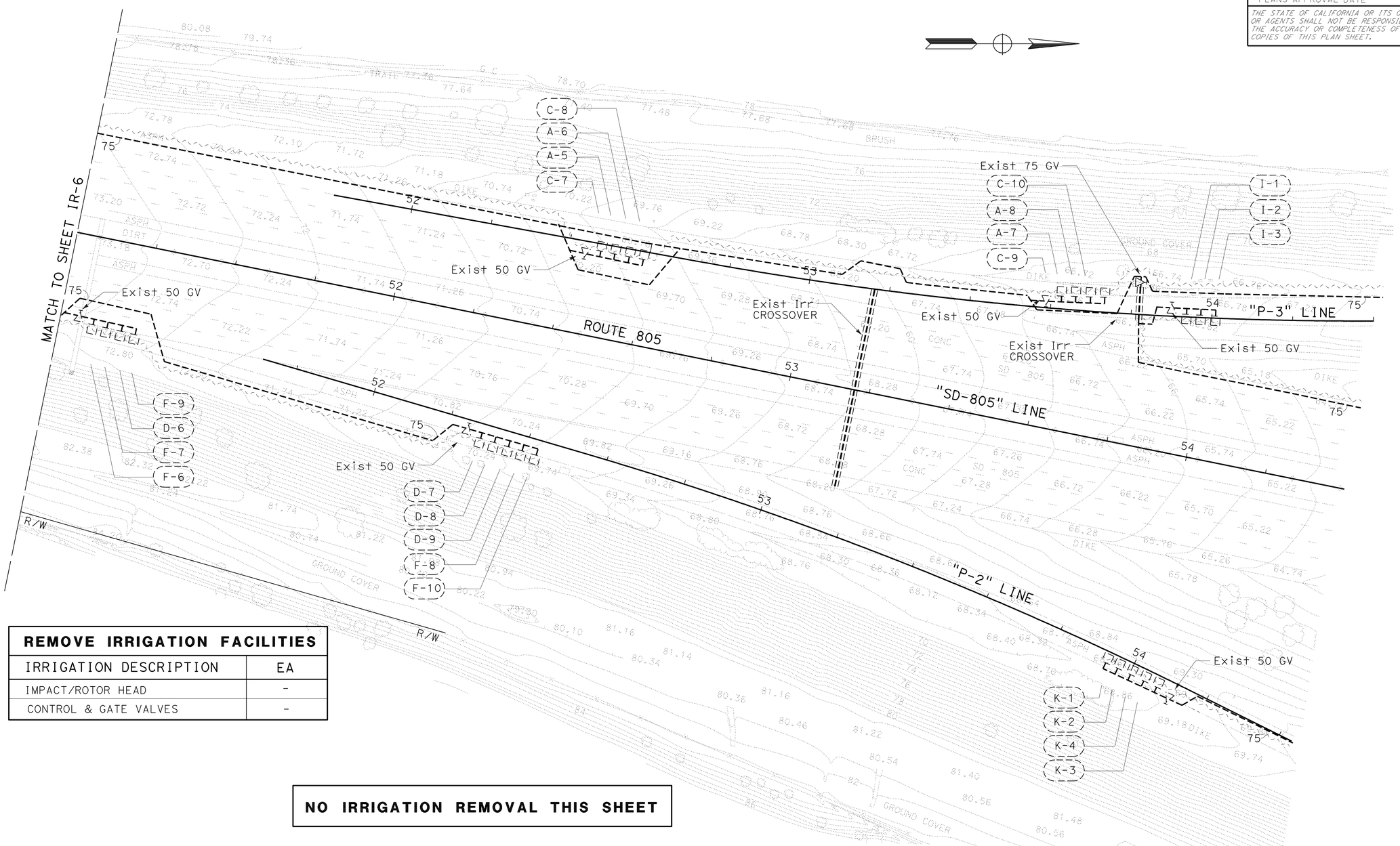

REMOVE IRRIGATION FACILITIES	
IRRIGATION DESCRIPTION	EA
IMPACT/ROTOR HEAD	-
CONTROL & GATE VALVES	-

NO IRRIGATION REMOVAL THIS SHEET

THIS PLAN ACCURATE FOR IRRIGATION REMOVAL WORK ONLY.

ALL IRRIGATION EQUIPMENT SIZES ARE IN MILLIMETERS (DIAMETER NOMINAL) UNLESS OTHERWISE SHOWN.

IRRIGATION REMOVAL PLAN

SCALE 1:500

IR-7

STATE OF CALIFORNIA - DEPARTMENT OF TRANSPORTATION
Caltrans LANDSCAPE ARCHITECTURE

SENIOR LANDSCAPE ARCHITECT: STEPHEN ALVAREZ
CALCULATED-DESIGNED BY: JOEL HORTIZUELA
CHECKED BY: DAVID STRICKLAND
REVISED BY: X
DATE REVISED: MM/DD/YY

LAST REVISION 07-23-10
DATE PLOTTED => 20-OCT-2010
TIME PLOTTED => 14:02

Dist	COUNTY	ROUTE	KILOMETER POST TOTAL PROJECT	SHEET No.	TOTAL SHEETS
11	SD	905,805	R8.4/R9.8, 3.1/4.2	213	364

LICENSED LANDSCAPE ARCHITECT

10-18-10
PLANS APPROVAL DATE

LICENSED LANDSCAPE ARCHITECT DAVID G. STRICKLAND No. 3223 STATE OF CALIFORNIA
EXPIRATION DATE 3/31/12
RENEWAL DATE 07/27/10
DATE

THE STATE OF CALIFORNIA OR ITS OFFICERS OR AGENTS SHALL NOT BE RESPONSIBLE FOR THE ACCURACY OR COMPLETENESS OF ELECTRONIC COPIES OF THIS PLAN SHEET.

Caltrans Metric

NOTES:

1. FOR ACCURATE RIGHT OF WAY AND ACCESS DATA, CONTACT RIGHT OF WAY ENGINEERING AT THE DISTRICT OFFICE.
2. AREA SOUTH OF DEL SOL blvd: Exist 3" WATER METER (POTABLE), 3" BPA AND BOOSTER PUMP ARE LOCATED IN THE NW QUADRANT AT MARCWADE STREET.
3. AREA SOUTH OF DEL SOL blvd: Exist 3" WATER METER (POTABLE) AND 3" BPA ARE LOCATED IN THE SW QUADRANT.
4. AREA NORTH OF DEL SOL blvd: Exist 2-2" WATER METER (POTABLE) AND 3" BPA ARE LOCATED IN THE NW QUADRANT OF Rte 805 AND PALM Ave.
5. AREA NORTH OF DEL SOL blvd: Exist IC's 'A,C & I' ARE LOCATED IN THE SW QUADRANT OF Rte 805 AND PALM Ave.
6. AREA NORTH OF DEL SOL blvd: Exist IC's 'D,F & K' ARE LOCATED IN THE SE QUADRANT OF Rte 805 AND PALM Ave.
7. Exist IRR CROSSOVERS ARE 200 mm ACP WITH 75 mm PVC WATERLINE.

PROPOSED IRRIGATION SYSTEM USING RECYCLED WATER
Exist IRRIGATION SYSTEM USING POTABLE WATER

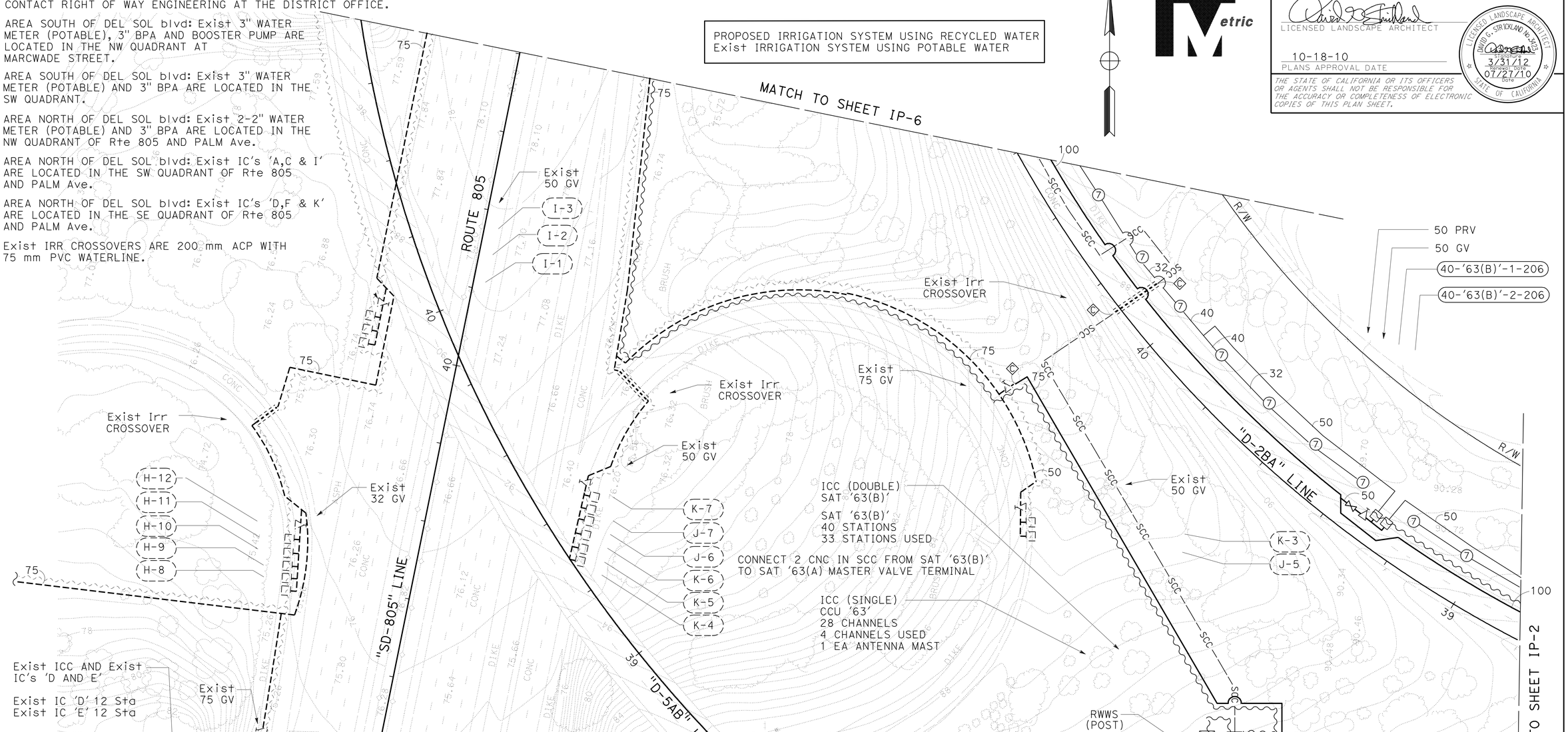

IRRIGATION PLAN

SCALE 1:500

IP-1

THIS PLAN ACCURATE FOR IRRIGATION WORK ONLY.

ALL IRRIGATION EQUIPMENT SIZES ARE IN MILLIMETERS (DIAMETER NOMINAL) UNLESS OTHERWISE SHOWN.

X	REVISED BY	DATE REVISED	MM/DD/YY
JOEL HORTIZUELA	DAVID STRICKLAND		
CALCULATED-DESIGNED BY	CHECKED BY		
SENIOR LANDSCAPE ARCHITECT	STEPHEN ALVAREZ		

STATE OF CALIFORNIA - DEPARTMENT OF TRANSPORTATION
Caltrans LANDSCAPE ARCHITECTURE

LAST REVISION 07-23-10 | DATE PLOTTED => 20-OCT-2010 | TIME PLOTTED => 14:03

Dist	COUNTY	ROUTE	KILOMETER POST TOTAL PROJECT	SHEET No.	TOTAL SHEETS
11	SD	905,805	R8.4/R9.8, 3.1/4.2	214	364

LICENSED LANDSCAPE ARCHITECT

10-18-10
PLANS APPROVAL DATE

LICENSED LANDSCAPE ARCHITECT DAVID G. STRICKLAND No. 5623 STATE OF CALIFORNIA
EXPIRATION DATE 3/31/12
RENEWAL DATE 07/27/10
DATE

THE STATE OF CALIFORNIA OR ITS OFFICERS OR AGENTS SHALL NOT BE RESPONSIBLE FOR THE ACCURACY OR COMPLETENESS OF ELECTRONIC COPIES OF THIS PLAN SHEET.

Caltrans Metric

NOTE:

FOR ACCURATE RIGHT OF WAY AND ACCESS DATA,
CONTACT RIGHT OF WAY ENGINEERING AT THE DISTRICT OFFICE.

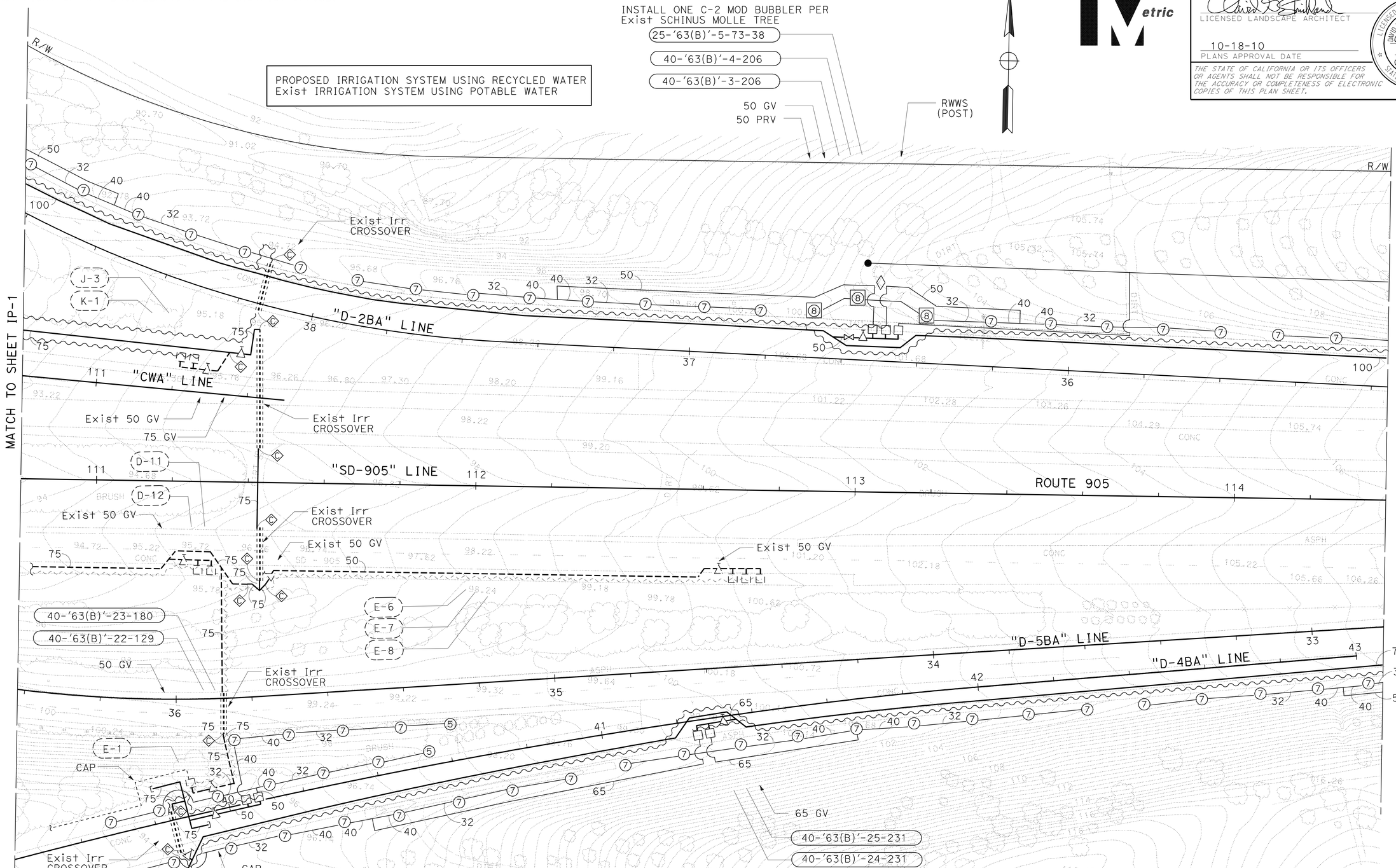

THIS PLAN ACCURATE FOR IRRIGATION WORK ONLY.

ALL IRRIGATION EQUIPMENT SIZES ARE IN MILLIMETERS (DIAMETER NOMINAL) UNLESS OTHERWISE SHOWN.

IRRIGATION PLAN

SCALE 1:500

IP-2

REVISED BY	DATE REVISED MM/DD/YY
JOEL HORTIZUELA	X
DAVID STRICKLAND	

CALCULATED-DESIGNED BY
CHECKED BY

SENIOR LANDSCAPE ARCHITECT
STEPHEN ALVAREZ

STATE OF CALIFORNIA - DEPARTMENT OF TRANSPORTATION
Caltrans LANDSCAPE ARCHITECTURE

LAST REVISION 07-23-10
DATE PLOTTED => 20-OCT-2010
TIME PLOTTED => 14:03

Dist	COUNTY	ROUTE	KILOMETER POST TOTAL PROJECT	SHEET No.	TOTAL SHEETS
11	SD	905,805	R8.4/R9.8, 3.1/4.2	215	364

LICENSED LANDSCAPE ARCHITECT

10-18-10
PLANS APPROVAL DATE

LICENSED LANDSCAPE ARCHITECT DAVID G. STRICKLAND No. 5223 SIGNATURE 3/31/12 EXPIRATION DATE 07/27/10 DATE STATE OF CALIFORNIA

THE STATE OF CALIFORNIA OR ITS OFFICERS OR AGENTS SHALL NOT BE RESPONSIBLE FOR THE ACCURACY OR COMPLETENESS OF ELECTRONIC COPIES OF THIS PLAN SHEET.

Caltrans Metric

NOTE:

FOR ACCURATE RIGHT OF WAY AND ACCESS DATA,
CONTACT RIGHT OF WAY ENGINEERING AT THE DISTRICT OFFICE.

PROPOSED IRRIGATION SYSTEM USING RECYCLED WATER
Exist IRRIGATION SYSTEM USING POTABLE WATER

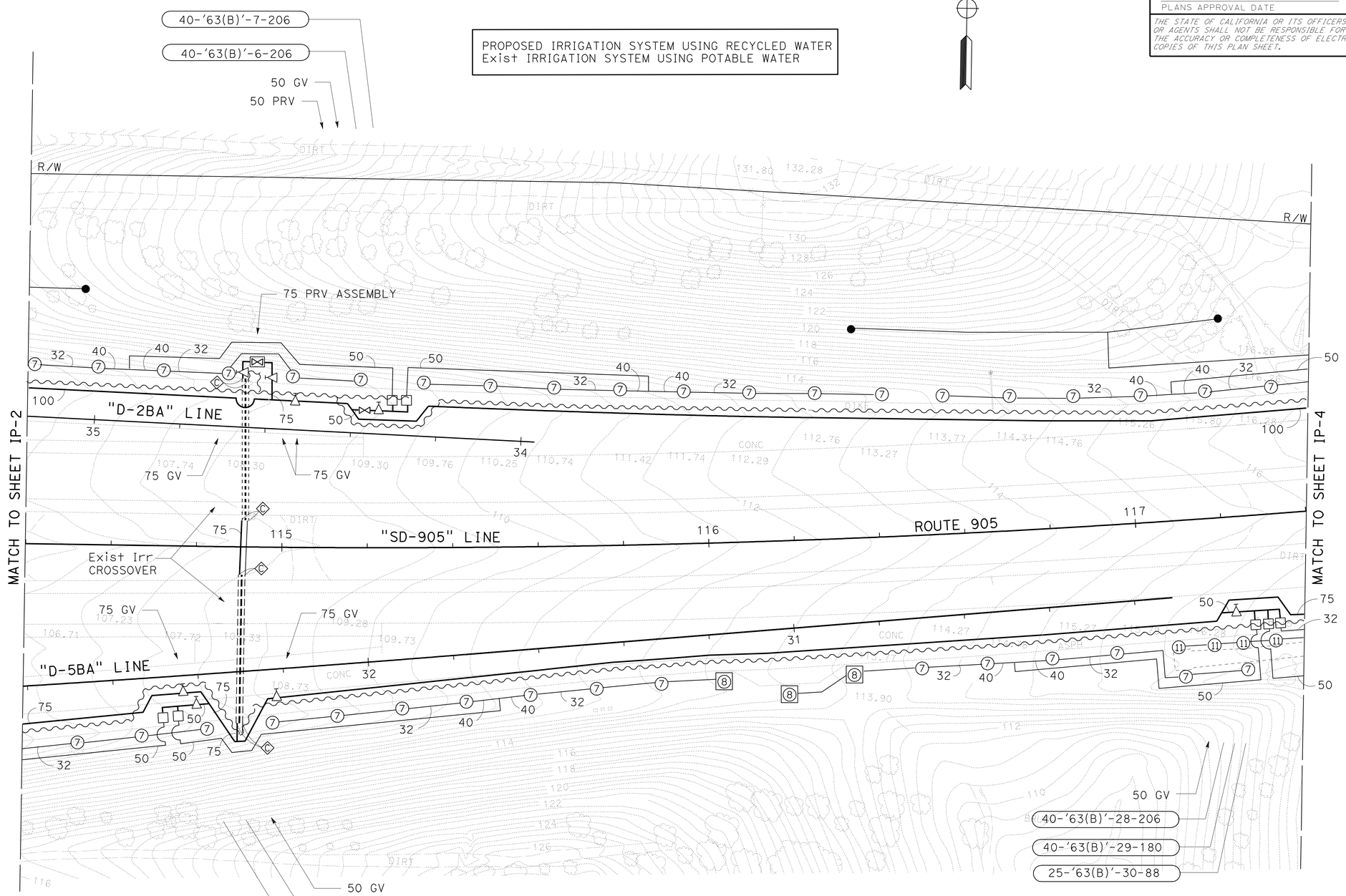

THIS PLAN ACCURATE FOR IRRIGATION WORK ONLY.

ALL IRRIGATION EQUIPMENT SIZES ARE IN MILLIMETERS (DIAMETER NOMINAL) UNLESS OTHERWISE SHOWN.

IRRIGATION PLAN

SCALE 1:500

IP-3

STATE OF CALIFORNIA - DEPARTMENT OF TRANSPORTATION
Caltrans LANDSCAPE ARCHITECTURE

SENIOR LANDSCAPE ARCHITECT: STEPHEN ALVAREZ
CALCULATED-DESIGNED BY: JOEL HORTIZUELA
CHECKED BY: DAVID STRICKLAND
REVISED BY: X
DATE REVISED: MM/DD/YY

LAST REVISION 07-23-10
DATE PLOTTED => 20-OCT-2010
TIME PLOTTED => 14:03

Dist	COUNTY	ROUTE	KILOMETER POST TOTAL PROJECT	SHEET No.	TOTAL SHEETS
11	SD	905,805	R8.4/R9.8, 3.1/4.2	216	364

LICENSED LANDSCAPE ARCHITECT

10-18-10
PLANS APPROVAL DATE

LICENSED LANDSCAPE ARCHITECT DAVID G. STRICKLAND No. 3231 STATE OF CALIFORNIA
3/31/12 REGISTRATION EXPIRES
07/27/10 DATE

THE STATE OF CALIFORNIA OR ITS OFFICERS OR AGENTS SHALL NOT BE RESPONSIBLE FOR THE ACCURACY OR COMPLETENESS OF ELECTRONIC COPIES OF THIS PLAN SHEET.

Caltrans Metric

NOTE:

FOR ACCURATE RIGHT OF WAY AND ACCESS DATA,
CONTACT RIGHT OF WAY ENGINEERING AT THE DISTRICT OFFICE.

PROPOSED IRRIGATION SYSTEM USING RECYCLED WATER
Exist IRRIGATION SYSTEM USING POTABLE WATER

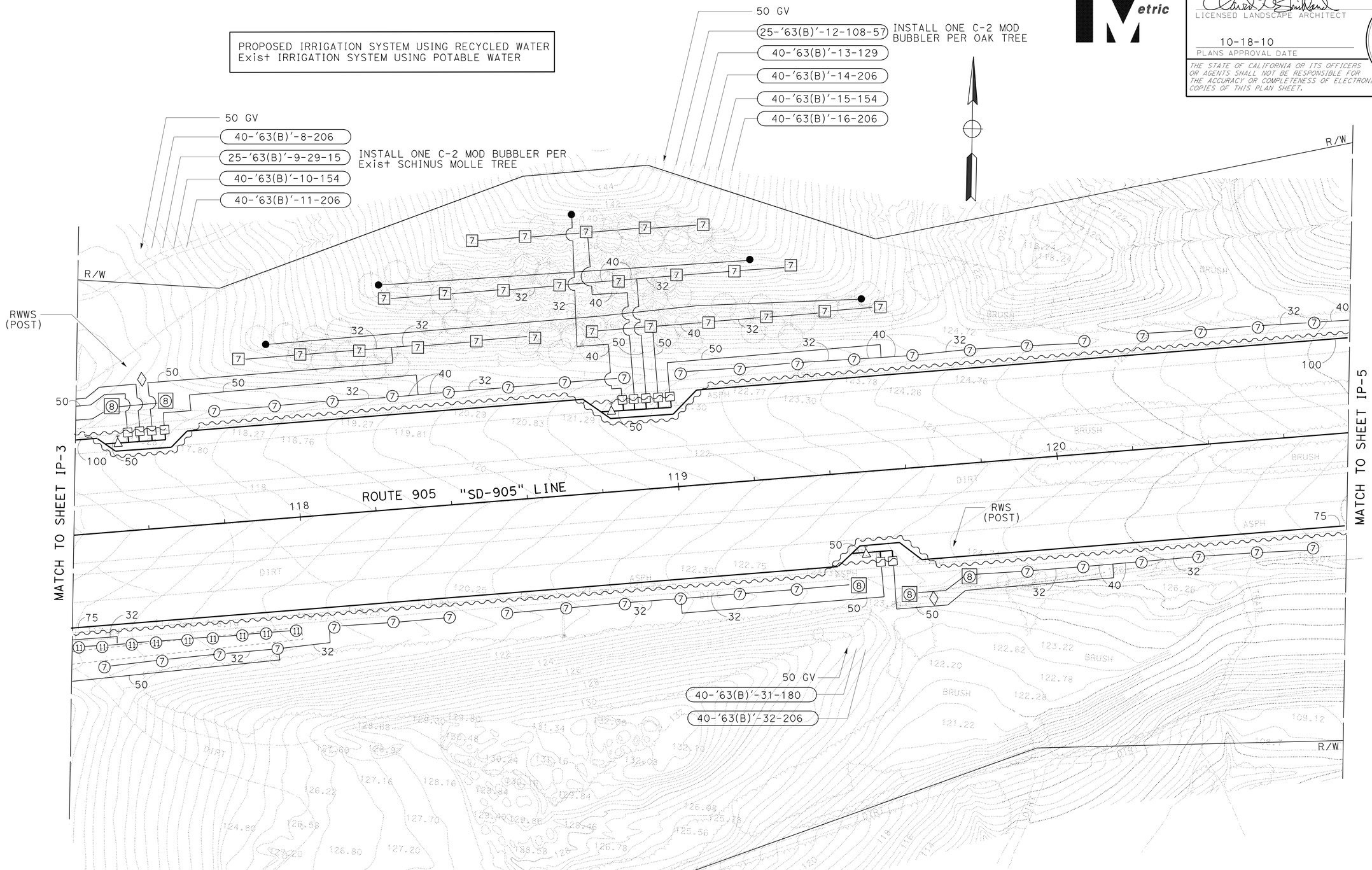

THIS PLAN ACCURATE FOR IRRIGATION WORK ONLY.

ALL IRRIGATION EQUIPMENT SIZES ARE IN MILLIMETERS
(DIAMETER NOMINAL) UNLESS OTHERWISE SHOWN.

IRRIGATION PLAN

SCALE 1:500

IP-4

STATE OF CALIFORNIA - DEPARTMENT OF TRANSPORTATION
Caltrans LANDSCAPE ARCHITECTURE

SENIOR LANDSCAPE ARCHITECT: STEPHEN ALVAREZ
CALCULATED-DESIGNED BY: JOEL HORTIZUELA
CHECKED BY: DAVID STRICKLAND
REVISED BY: X
DATE REVISED: MM/DD/YY

LAST REVISION 07-23-10
DATE PLOTTED => 20-OCT-2010
TIME PLOTTED => 14:46

Dist	COUNTY	ROUTE	KILOMETER POST TOTAL PROJECT	SHEET No.	TOTAL SHEETS
11	SD	905,805	R8.4/R9.8, 3.1/4.2	217	364

LICENSED LANDSCAPE ARCHITECT

10-18-10
PLANS APPROVAL DATE

LICENSED LANDSCAPE ARCHITECT DAVID G. STRICKLAND No. 3231 — EXPIRATION DATE 3/31/12 — REGISTRATION DATE 07/27/10 — DATE — STATE OF CALIFORNIA

THE STATE OF CALIFORNIA OR ITS OFFICERS OR AGENTS SHALL NOT BE RESPONSIBLE FOR THE ACCURACY OR COMPLETENESS OF ELECTRONIC COPIES OF THIS PLAN SHEET.

Caltrans Metric

NOTE:

FOR ACCURATE RIGHT OF WAY AND ACCESS DATA,
CONTACT RIGHT OF WAY ENGINEERING AT THE DISTRICT OFFICE.

PROPOSED IRRIGATION SYSTEM USING RECYCLED WATER
Exist IRRIGATION SYSTEM USING POTABLE WATER

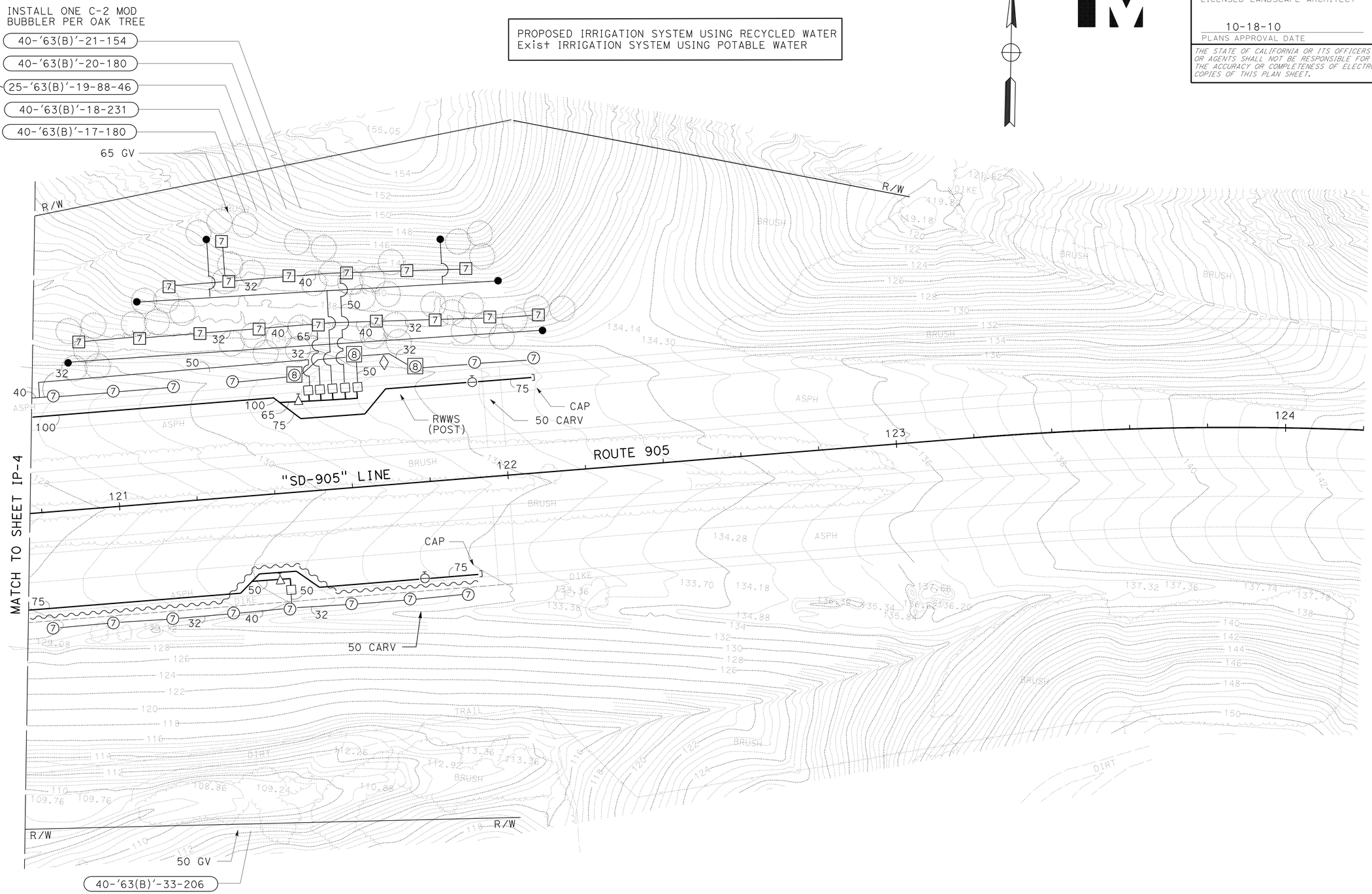

THIS PLAN ACCURATE FOR IRRIGATION WORK ONLY.

ALL IRRIGATION EQUIPMENT SIZES ARE IN MILLIMETERS (DIAMETER NOMINAL) UNLESS OTHERWISE SHOWN.

IRRIGATION PLAN

SCALE 1:500

IP-5

REVISED BY	DATE REVISED MM/DD/YY
JOEL HORTIZUELA	X
DAVID STRICKLAND	

CALCULATED-DESIGNED BY
CHECKED BY

SENIOR LANDSCAPE ARCHITECT
STEPHEN ALVAREZ

STATE OF CALIFORNIA - DEPARTMENT OF TRANSPORTATION
Caltrans LANDSCAPE ARCHITECTURE

LAST REVISION 07-23-10
DATE PLOTTED => 20-OCT-2010
TIME PLOTTED => 14:46

Dist	COUNTY	ROUTE	KILOMETER POST TOTAL PROJECT	SHEET No.	TOTAL SHEETS
11	SD	905,805	R8.4/R9.8, 3.1/4.2	218	364

LICENSED LANDSCAPE ARCHITECT

10-18-10
PLANS APPROVAL DATE

LICENSED LANDSCAPE ARCHITECT DAVID G. STRICKLAND No. 3023 STATE OF CALIFORNIA
REGISTERED PROFESSIONAL ENGINEER 3/31/12
REGISTERED OWNER 07/27/10 DATE

THE STATE OF CALIFORNIA OR ITS OFFICERS OR AGENTS SHALL NOT BE RESPONSIBLE FOR THE ACCURACY OR COMPLETENESS OF ELECTRONIC COPIES OF THIS PLAN SHEET.

Caltrans Metric

NOTE:

FOR ACCURATE RIGHT OF WAY AND ACCESS DATA, CONTACT RIGHT OF WAY ENGINEERING AT THE DISTRICT OFFICE.

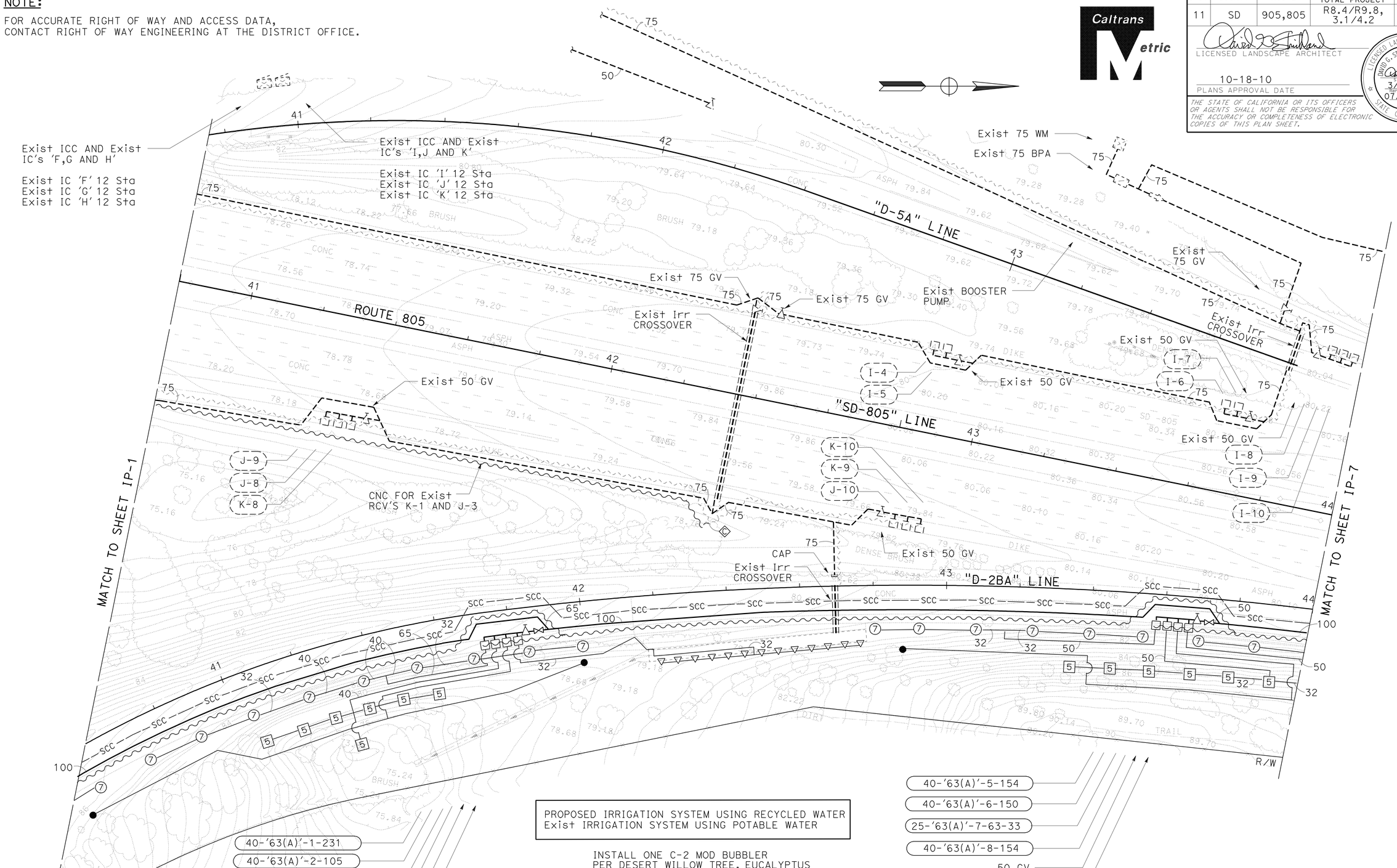

PROPOSED IRRIGATION SYSTEM USING RECYCLED WATER
Exist IRRIGATION SYSTEM USING POTABLE WATER

INSTALL ONE C-2 MOD BUBBLER PER DESERT WILLOW TREE, EUCALYPTUS TREE AND CALIFORNIA PEPPER TREE

THIS PLAN ACCURATE FOR IRRIGATION WORK ONLY.

ALL IRRIGATION EQUIPMENT SIZES ARE IN MILLIMETERS (DIAMETER NOMINAL) UNLESS OTHERWISE SHOWN.

IRRIGATION PLAN

SCALE 1:500

IP-6

REVISED BY	DATE REVISED MM/DD/YY
JOEL HORTIZUELA	DAVID STRICKLAND

CALCULATED-DESIGNED BY / CHECKED BY

SENIOR LANDSCAPE ARCHITECT STEPHEN ALVAREZ

STATE OF CALIFORNIA - DEPARTMENT OF TRANSPORTATION
Caltrans LANDSCAPE ARCHITECTURE

LAST REVISION 07-23-10 | DATE PLOTTED => 20-OCT-2010 | TIME PLOTTED => 14:47

Dist	COUNTY	ROUTE	KILOMETER POST TOTAL PROJECT	SHEET No.	TOTAL SHEETS
11	SD	905,805	R8.4/R9.8, 3.1/4.2	219	364

LICENSED LANDSCAPE ARCHITECT

10-18-10
PLANS APPROVAL DATE

LICENSED LANDSCAPE ARCHITECT DAVID G. STRICKLAND No. 4623 STATE OF CALIFORNIA
SIGNATURE 3/31/12 EXPIRATION DATE 07/27/10 DATE

THE STATE OF CALIFORNIA OR ITS OFFICERS OR AGENTS SHALL NOT BE RESPONSIBLE FOR THE ACCURACY OR COMPLETENESS OF ELECTRONIC COPIES OF THIS PLAN SHEET.

Caltrans Metric

NOTE:

FOR ACCURATE RIGHT OF WAY AND ACCESS DATA, CONTACT RIGHT OF WAY ENGINEERING AT THE DISTRICT OFFICE.

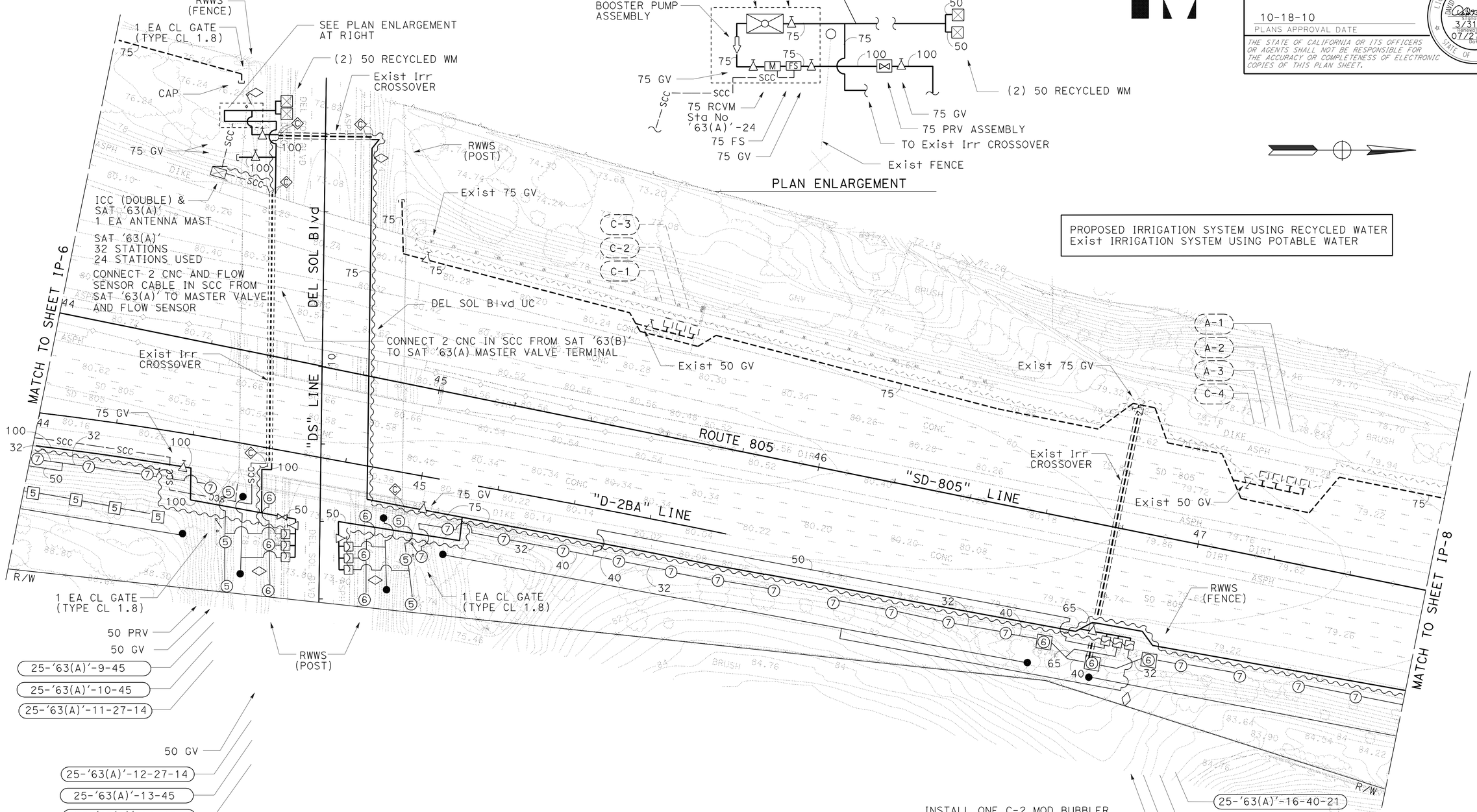

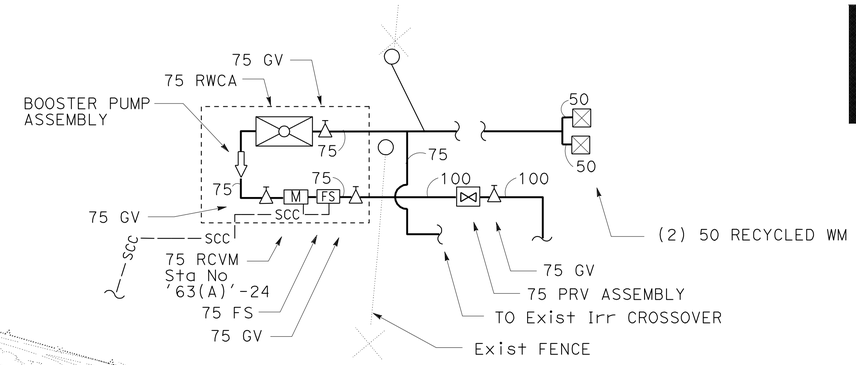

PLAN ENLARGEMENT

PROPOSED IRRIGATION SYSTEM USING RECYCLED WATER
Exist IRRIGATION SYSTEM USING POTABLE WATER

THIS PLAN ACCURATE FOR IRRIGATION WORK ONLY.

ALL IRRIGATION EQUIPMENT SIZES ARE IN MILLIMETERS (DIAMETER NOMINAL) UNLESS OTHERWISE SHOWN.

IRRIGATION PLAN

SCALE 1:500

IP-7

STATE OF CALIFORNIA - DEPARTMENT OF TRANSPORTATION
Caltrans LANDSCAPE ARCHITECTURE

SENIOR LANDSCAPE ARCHITECT: STEPHEN ALVAREZ
CALCULATED-DESIGNED BY: JOEL HORTIZUELA
CHECKED BY: DAVID STRICKLAND
REVISED BY: X
DATE REVISED: MM/DD/YY

LAST REVISION 09-30-10
DATE PLOTTED => 21-OCT-2010
TIME PLOTTED => 08:29

Dist	COUNTY	ROUTE	KILOMETER POST TOTAL PROJECT	SHEET No.	TOTAL SHEETS
11	SD	905,805	R8.4/R9.8, 3.1/4.2	220	364

LICENSED LANDSCAPE ARCHITECT

10-18-10
PLANS APPROVAL DATE

LICENSED LANDSCAPE ARCHITECT DAVID G. STRICKLAND No. 3023 STATE OF CALIFORNIA
EXPIRES 3/31/12
REVISED DATE 07/27/10

THE STATE OF CALIFORNIA OR ITS OFFICERS OR AGENTS SHALL NOT BE RESPONSIBLE FOR THE ACCURACY OR COMPLETENESS OF ELECTRONIC COPIES OF THIS PLAN SHEET.

Caltrans Metric

NOTE:

FOR ACCURATE RIGHT OF WAY AND ACCESS DATA,
CONTACT RIGHT OF WAY ENGINEERING AT THE DISTRICT OFFICE.

PROPOSED IRRIGATION SYSTEM USING RECYCLED WATER
Exist IRRIGATION SYSTEM USING POTABLE WATER

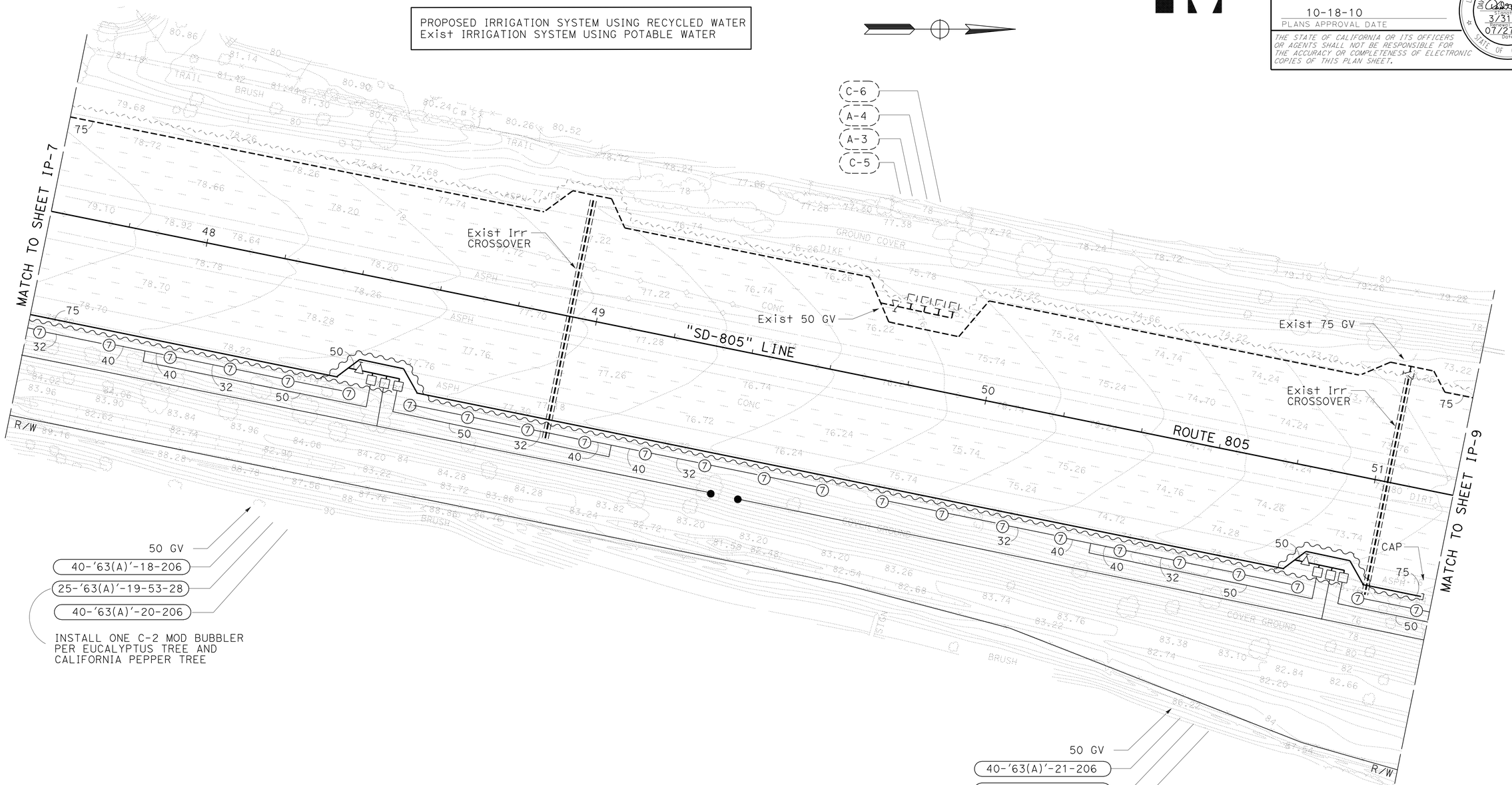

THIS PLAN ACCURATE FOR IRRIGATION WORK ONLY.

ALL IRRIGATION EQUIPMENT SIZES ARE IN MILLIMETERS (DIAMETER NOMINAL) UNLESS OTHERWISE SHOWN.

IRRIGATION PLAN

SCALE 1:500

IP-8

JOEL HORTIZUELA	REVISED BY	X
DAVID STRICKLAND	DATE REVISED	MM/DD/YY
CALCULATED-DESIGNED BY		
CHECKED BY		
SENIOR LANDSCAPE ARCHITECT		
STEPHEN ALVAREZ		

STATE OF CALIFORNIA - DEPARTMENT OF TRANSPORTATION
Caltrans LANDSCAPE ARCHITECTURE

LAST REVISION 07-23-10 | DATE PLOTTED => 20-OCT-2010 | TIME PLOTTED => 14:47

NOTE:

FOR ACCURATE RIGHT OF WAY AND ACCESS DATA,
CONTACT RIGHT OF WAY ENGINEERING AT THE DISTRICT OFFICE.

Dist	COUNTY	ROUTE	KILOMETER POST TOTAL PROJECT	SHEET No.	TOTAL SHEETS
11	SD	905,805	R8.4/R9.8, 3.1/4.2	221	364

LICENSED LANDSCAPE ARCHITECT

10-18-10
PLANS APPROVAL DATE

LICENSED LANDSCAPE ARCHITECT
DAVID G. STRICKLAND No. 5623
SIGNATURE
3/31/12
EXPIRATION DATE
07/27/10
DATE
STATE OF CALIFORNIA

THE STATE OF CALIFORNIA OR ITS OFFICERS OR AGENTS SHALL NOT BE RESPONSIBLE FOR THE ACCURACY OR COMPLETENESS OF ELECTRONIC COPIES OF THIS PLAN SHEET.

Caltrans Metric

PROPOSED IRRIGATION SYSTEM USING RECYCLED WATER
Exist IRRIGATION SYSTEM USING POTABLE WATER

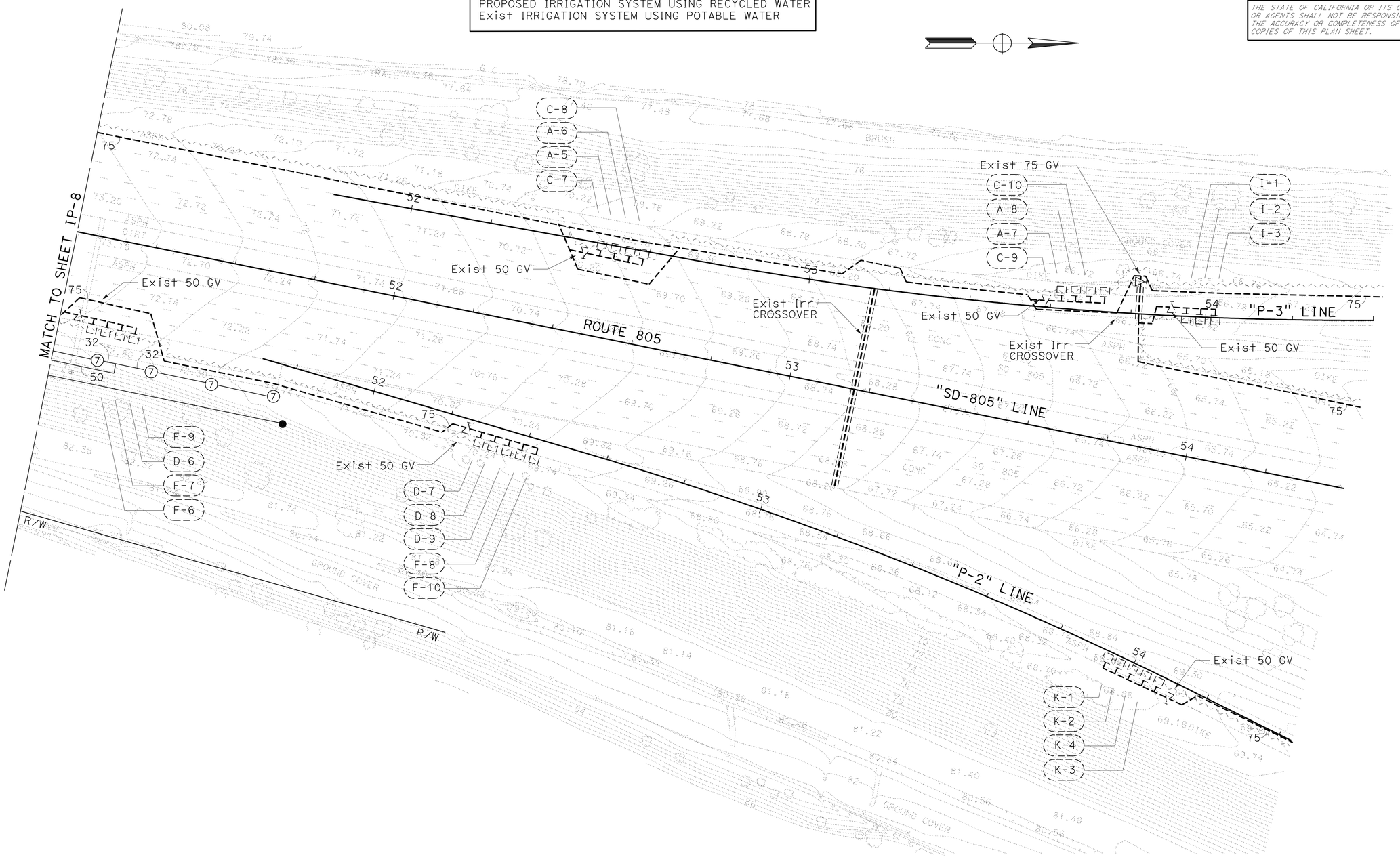

THIS PLAN ACCURATE FOR IRRIGATION WORK ONLY.

ALL IRRIGATION EQUIPMENT SIZES ARE IN MILLIMETERS
(DIAMETER NOMINAL) UNLESS OTHERWISE SHOWN.

IRRIGATION PLAN

SCALE 1:500

IP-9

REVISED BY	DATE REVISED MM/DD/YY
X	

JOEL HORTIZUELA
DAVID STRICKLAND

CALCULATED-DESIGNED BY
CHECKED BY

SENIOR LANDSCAPE ARCHITECT
STEPHEN ALVAREZ

STATE OF CALIFORNIA - DEPARTMENT OF TRANSPORTATION
Caltrans LANDSCAPE ARCHITECTURE

LAST REVISION 07-23-10
DATE PLOTTED => 20-OCT-2010
TIME PLOTTED => 14:47

Dist	COUNTY	ROUTE	KILOMETER POST TOTAL PROJECT	SHEET No.	TOTAL SHEETS
11	SD	905,805	R8.4/R9.8, 3.1/4.2	222	364

LICENSED LANDSCAPE ARCHITECT

10-18-10
PLANS APPROVAL DATE

LICENSED LANDSCAPE ARCHITECT DAVID G. STRICKLAND No. 3231 STATE OF CALIFORNIA
EXPIRATION DATE 3/31/12
RENEWAL DATE 07/27/10
DATE

THE STATE OF CALIFORNIA OR ITS OFFICERS OR AGENTS SHALL NOT BE RESPONSIBLE FOR THE ACCURACY OR COMPLETENESS OF ELECTRONIC COPIES OF THIS PLAN SHEET.

Caltrans Metric

SPRINKLER SCHEDULE

SYMBOL	TYPE	DESCRIPTION	SPRAY PATTERN	OPERATING PRESSURE (KILOPASCAL) (kPa)	PRESSURE COMPENSATING	PLUS / MINUS 5% ② DISCHARGE: LITERS PER SECOND L/s	LITERS PER MINUTE L/Min	LITERS PER HOUR L/h	RADIUS (IN METERS) (m)	WIDTH x LENGTH (IN METERS) (m)	MATERIAL	NOZZLE SIZE IN MILLIMETERS (mm)	INLET CONNECTION (NPT) (DN IN MILLIMETERS) (mm)	POSITIVE-LOCKING ADJ ARC STOP	BACKSPLASH PREVENTER	DIFFUSER PIN	DISTANCE CONTROL FLAP	ADJ DISCHARGE	RISER: TYPE	MATERIAL: PLASTIC	GALVANIZED	SIZE (IPS) (IN MILLIMETERS) (mm)	HEIGHT (IN MILLIMETERS) (mm)	SWING JOINT (TYPE)	RISER SUPPORT	SPRINKLER PROTECTOR (TYPE)	REMARKS
[5]	A-5	GEAR DRIVEN	F	345	-	-	15	-	12.2	-	PL	-	20	-	-	X	-	-	1	X	-	20	300	1	-	-	③
⑤	A-5	GEAR DRIVEN	P	345	-	-	15	-	12.2	-	PL	-	20	-	-	X	-	-	1	X	-	20	300	1	-	-	③ ⑦
[⑥]	A-6	GEAR DRIVEN	P	345	-	-	15	-	12.2	-	PL	-	20	-	-	X	-	-	-	-	-	-	-	1	-	1	③ ⑦ 300 mm POP-UP
[7]	A-7	GEAR DRIVEN	F	345	-	-	25.7	-	14.6	-	PL	-	20	-	-	X	-	-	1	X	-	20	300	1	-	-	③
⑦	A-7	GEAR DRIVEN	P	345	-	-	25.7	-	14.6	-	PL	-	20	-	-	X	-	-	1	X	-	20	300	1	-	-	③ ⑦
[⑧]	A-8	GEAR DRIVEN	P	345	-	-	25.7	-	14.6	-	PL	-	20	-	-	X	-	-	1	-	-	20	-	1	-	1	③ ⑦ 300 mm POP-UP
⑪	A-11	GEAR DRIVEN	P	345	-	-	6.8	-	7.6	-	PL	-	20	-	-	X	-	-	1	X	-	20	300	1	-	-	③ ⑦
▽	B-1	SHRUB SPRAY	H	207	-	-	7	-	4.5	-	PL	-	15	-	-	X	-	X	1	X	-	15	300	1	-	-	⑧ ⑨
●	C-2 Mod	MODIFIED FLOOD BUBBLER	-	207	X	-	1.9	-	-	-	PL	-	15	-	-	-	-	-	-	X	-	15	-	1	-	-	④ ⑨ ⑩ ⑪

X IN BOX DENOTES REQUIREMENT

APPLICABLE WHEN CIRCLED BELOW:

I - SEE SPECIAL PROVISIONS.
② - IF A PRESSURE COMPENSATING DEVICE IS SPECIFIED, THE DISCHARGE AND RADII SHOWN REFLECT ITS USE.
③ - SHALL HAVE AN INTERNAL OR EXTERNAL CHECK VALVE.
④ - NON-ADJUSTABLE DISCHARGE RATE.
5 - REQUIRED ADJACENT TO SHOULDERS, CURBS, SIDEWALKS, AND DIKES.
6 - UNLESS OTHERWISE SHOWN ON PLANS.
⑦ - ADJUSTABLE ARC.
⑧ - MATCHED PRECIPITATION RATE NOZZLES.
⑨ - REFER TO PIPE SIZING CHARTS.
⑩ - FOR RISER TYPE REFER TO C-2 MOD SPRINKLER INSTALLATION LANDSCAPE DETAIL SHEET.
⑪ - SEE PLANS FOR TREE LOCATIONS

ABBREVIATIONS

ADJ — ADJUSTABLE
B/B — BRASS/BRONZE
B/B/PL — BRASS/BRONZE/PLASTIC
B/PL — BRASS/PLASTIC
CST — CENTER STRIP
DN — DIAMETER NOMINAL
EST — END STRIP
F — FULL CIRCLE
F/P — FULL/PART CIRCLE
H — HALF CIRCLE
IPS — IRON PIPE SIZE
kPa — KILOPASCAL
L/h — LITERS PER HOUR
L/min — LITERS PER MINUTE
L/s — LITERS PER SECOND
m — METERS
mm — MILLIMETERS
NPT — NATIONAL PIPE THREAD
P — PART CIRCLE
PL — PLASTIC
PRV — PRESSURE REDUCING VALVE
RWCA — RECYCLED WATER CONNECTION ASSEMBLY
RWWS — RECYCLED WATER WARNING SIGN
RWS — RECYCLED WATER SLEEVE
Q — QUARTER CIRCLE
SST — SIDE STRIP
T — THIRD CIRCLE
TQ — THREE QUARTER CIRCLE
TT — TWO THIRDS CIRCLE

NOTES:

1. ALL LATERAL PIPE NOT LABELED SHALL BE 25 mm, OR AS SHOWN ON PIPE SIZING CHARTS.
2. ALL SPRINKLER HEADS, VALVES AND MAINLINE SHOWN NEAR MVP LOCATIONS ARE TO BE INSTALLED OUTSIDE OF THE PAVED MVP AREA. VALVES TO BE INSTALLED AT EXITING END OF THE MVP.
3. PULL ONE ADDITIONAL CNC WIRE FROM EACH CONTROLLER TO LAST VALVE BOX IN EACH VALVE MANIFOLD. (SEE CNC DETAIL SD-3)
4. ALL CNC AND FLOW SENSOR CABLE FROM RCVM'S AND FLOW SENSORS SHALL BE INSTALLED IN 25mm CONDUIT TO ICC-SAT'S.
5. ALL IRRIGATION EQUIPMENT SHALL BE PURPLE IN COLOR AND/OR LABELED AS PER SAN DIEGO COUNTY DEPARTMENT OF HEALTH REQUIREMENTS. NO PONDING, RUNOFF OR OVERSPRAY IS PERMITTED. ADJUST ALL SPRINKLER HEADS TO PREVENT OVERSPRAYING ONTO SIDEWALKS, STREETS AND PRIVATE LOTS.
6. INSTALL APPROVED, METALLIC BACKED AND STENCILED WARNING TAPE OVER ALL PRESSURE RECLAIMED WATER LINES, STENCIL AND COLOR CODE (PURPLE PANTONE 522) ALL IRRIGATION PIPE. ORIENT THE STENCILING TO THE TOP OF THE TRENCH.

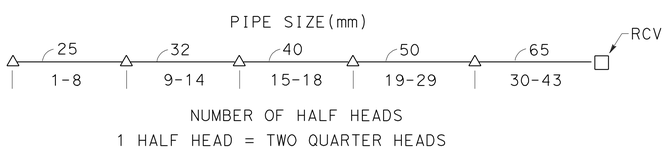

PIPE SIZING CHART
TYPE B-1 SPRINKLERS

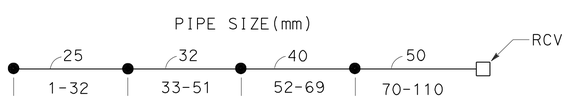

PIPE SIZING CHART
C-2 Mod SPRINKLERS
(FLOOD BUBBLER)

LEGEND

[M] REMOTE CONTROL VALVE MASTER
[FS] FLOW SENSOR
[H] ASSEMBLY
PRESSURE REDUCING VALVE
— — SCC — 25 mm SPRINKLER CONTROL CONDUIT FOR FLOW SENSOR CABLE AND RCVM CNC
RECYCLED WATER CONNECTION ASSEMBLY (RWCA)
RECYCLED WATER WARNING SIGN (RWWS)
RECYCLED WATER SLEEVE (RWS)

VALVE CODE

X-X(X)-XX-XX-XX
- RCV SIZE
- IRRIGATION CLUSTER CONTROL UNIT - (CCU)
- IRRIGATION SATELLITE CONTROLLER - (SAT)
- CONTROL VALVE STATION
- LITERS PER MINUTE (L/m)
- QUANTITY TYPE C-2 Mod SPRINKLERS

RCVM CODE

X(X)-XX
- IRRIGATION CLUSTER CONTROL UNIT - (CCU)
- IRRIGATION SATELLITE CONTROLLER - (SAT)
- CONTROL VALVE STATION

Exist VALVE CODE

A-1
- Exist IC
- CONTROL VALVE STATION- NO CHANGE

ALL IRRIGATION EQUIPMENT SIZES ARE IN MILLIMETERS (DIAMETER NOMINAL) UNLESS OTHERWISE SHOWN.

LANDSCAPE DETAILS

NO SCALE

LD-1

LAST REVISION 07-23-10
DATE PLOTTED => 20-OCT-2010
TIME PLOTTED => 14:47

STATE OF CALIFORNIA - DEPARTMENT OF TRANSPORTATION
Caltrans
LANDSCAPE ARCHITECTURE

SENIOR LANDSCAPE ARCHITECT: STEPHEN ALVAREZ
CALCULATED-DESIGNED BY: DAVID STRICKLAND
CHECKED BY: JOEL HORTIZUELA
REVISED BY: X
DATE REVISED: MM/DD/YY

Dist	COUNTY	ROUTE	KILOMETER POST TOTAL PROJECT	SHEET No.	TOTAL SHEETS
11	SD	905,805	R8.4/R9.8, 3.1/4.2	223	364

LICENSED LANDSCAPE ARCHITECT

10-18-10
PLANS APPROVAL DATE

LICENSED LANDSCAPE ARCHITECT DAVID G. STRICKLAND No. 5223 SIGNATURE 3/31/12 REGISTERED DATE 07/27/10 DATE STATE OF CALIFORNIA

THE STATE OF CALIFORNIA OR ITS OFFICERS OR AGENTS SHALL NOT BE RESPONSIBLE FOR THE ACCURACY OR COMPLETENESS OF ELECTRONIC COPIES OF THIS PLAN SHEET.

Caltrans Metric

THRUST BLOCK DETAIL

INSTALLATION	TYPE FITTING	INSTALLATION	TYPE FITTING
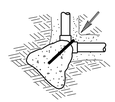	90° ELL	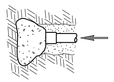	DEAD END
	BEND 45° 22.5° 11.25°		GATE VALVE
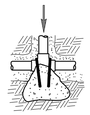	TEE	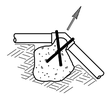	VERTICAL BEND (TYPE I) 45° 22.5° 11.25°
		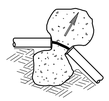	OR VERTICAL BEND (TYPE II) 45° 22.5° 11.25°

NOTES:
Min 0.03 m^3 PCC FOR PIPE 40 mm AND SMALLER.
Min 0.06 m^3 PCC FOR PIPE 50 mm .
Min 0.10 m^3 PCC FOR PIPE 75 & 100 mm .
USE #10 REINFORCING BAR WHERE SHOWN (∩).

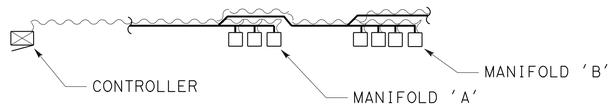

EXAMPLE:
MANIFOLD 'A' - INSTALL 4 CNC AND 1 ADDITIONAL WIRE FROM CONTROLLER TO LAST VALVE BOX IN MANIFOLD 'A'.
MANIFOLD 'B' - INSTALL 5 CNC AND 1 ADDITIONAL WIRE FROM CONTROLLER TO LAST VALVE BOX IN MANIFOLD 'B'.

CONTROL AND NEUTRAL CONDUCTOR

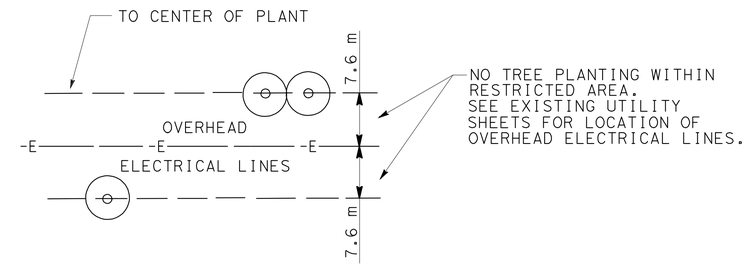

PLAN VIEW

TREE PLANTING LIMITS

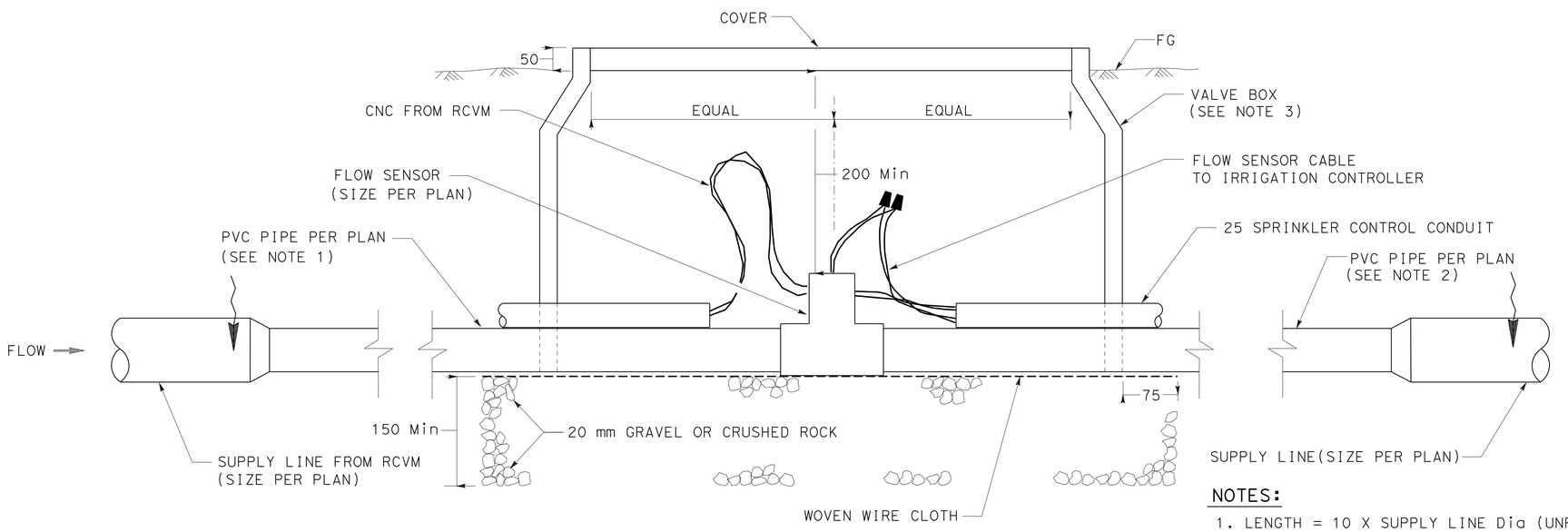

NOTES:
1. LENGTH = 10 X SUPPLY LINE Dia (UNRESTRICTED, NO FITTINGS).
2. LENGTH = 5 X SUPPLY LINE Dia (UNRESTRICTED, NO FITTINGS).
3. VALVE BOX OR BOX EXTENSION WITH 2 SIDE OPENINGS. SEAL OPENINGS WITH No.30 ASPHALT-SATURATED FELT.

FLOW SENSOR

ALL IRRIGATION EQUIPMENT SIZES ARE IN MILLIMETERS (DIAMETER NOMINAL) UNLESS OTHERWISE SHOWN.

LANDSCAPE DETAILS

NO SCALE **LD-2**

REVISED BY	DATE REVISED MM/DD/YY
X	

JOEL HORTIZUELA — DAVID STRICKLAND — CALCULATED-DESIGNED BY — CHECKED BY

SENIOR LANDSCAPE ARCHITECT STEPHEN ALVAREZ

STATE OF CALIFORNIA - DEPARTMENT OF TRANSPORTATION
Caltrans LANDSCAPE ARCHITECTURE

LAST REVISION 07-23-10 | DATE PLOTTED => 20-OCT-2010 | TIME PLOTTED => 14:47

Dist	COUNTY	ROUTE	KILOMETER POST TOTAL PROJECT	SHEET No.	TOTAL SHEETS
11	SD	905,805	R8.4/R9.8, 3.1/4.2	224	364

LICENSED LANDSCAPE ARCHITECT

10-18-10
PLANS APPROVAL DATE

LICENSED LANDSCAPE ARCHITECT DAVID G. STRICKLAND No. 4623 SIGNATURE 3/31/12 EXPIRATION DATE 07/27/10 DATE STATE OF CALIFORNIA

THE STATE OF CALIFORNIA OR ITS OFFICERS OR AGENTS SHALL NOT BE RESPONSIBLE FOR THE ACCURACY OR COMPLETENESS OF ELECTRONIC COPIES OF THIS PLAN SHEET.

Caltrans Metric

LEGEND

1. 0.70 m X 0.46 m X 0.33 m CONCRETE VALVE BOX WITH COVER
2. PRESSURE REGULATING VALVE WITH UNION AND WITH PRESSURE GAUGE PORT.
3. CONCRETE COVER
4. 20 CRUSHED GRAVEL SUMP (300 DEEP)
5. PVC PIPE (SIZE PER PLAN) (DEPTH PER SPECIFICATIONS)
6. PRESSURE GAUGE
7. PRESSURE GAUGE PORT (3.2)
8. 152 Min
9. COPPER OR B/B NIPPLE (LENGTH AS REQUIRED)(SIZE PER PLAN)
10. DIELECTRIC UNION
11. MT X S PVC ELL- ANGLE DOWN TO REQUIRED DEPTH
12. T X S PVC ADAPTOR
13. PVC NIPPLE 150 MIN

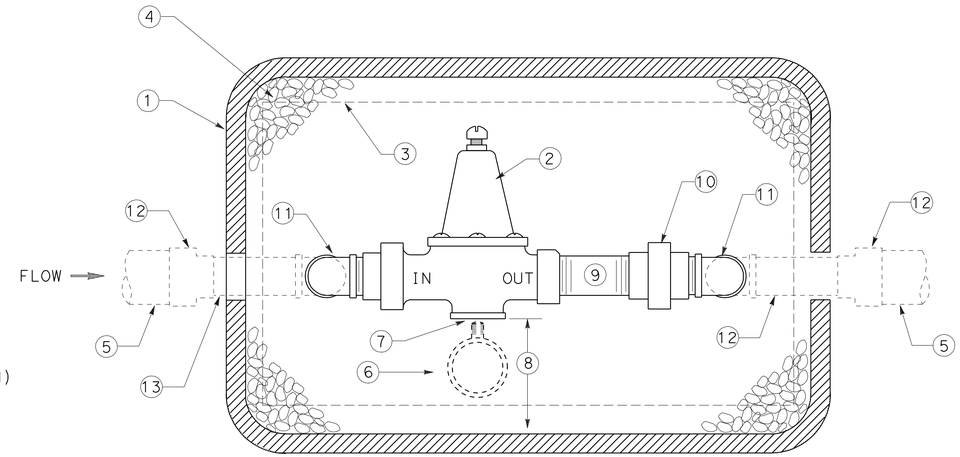

PLAN

NOTES:

1. THIS PRV DETAIL TO BE USED AT ALL MANIFOLD LOCATIONS.

PRESSURE REDUCING VALVE (PRV)

NOTES:

1. GV, FITTINGS, AND PIPE SHALL BE SAME SIZE AS SUPPLY LINE SHOWN ON PLANS.
2. ALL METAL IN CONTACT WITH SOIL AND PCC SHALL BE POLYETHYLENE WRAPPED USING 50 mm WIDE PLASTIC BACKED ADHESIVE TAPE 20 MIL THICK WITH 15 mm OVERLAP.
3. ASSEMBLY MATERIAL PIPING TO BE DIP.
4. JOINTS SHALL BE FLANGED.

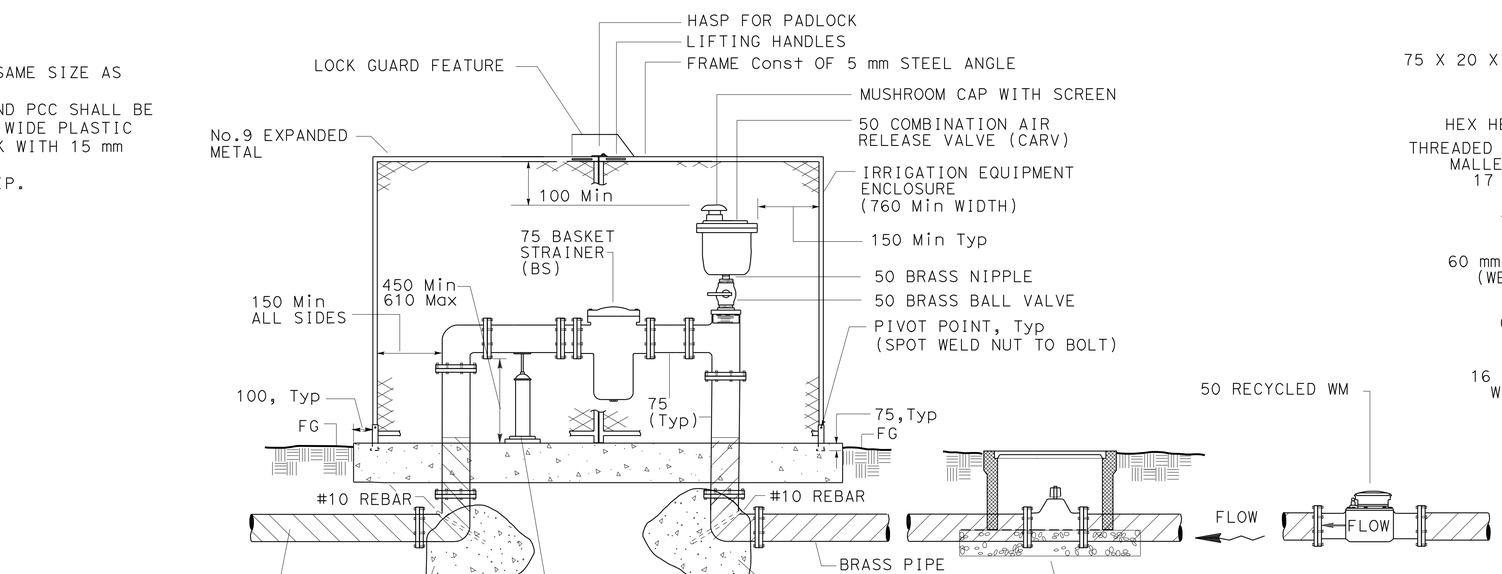

RECYCLED WATER CONNECTION ASSEMBLY (RWCA)

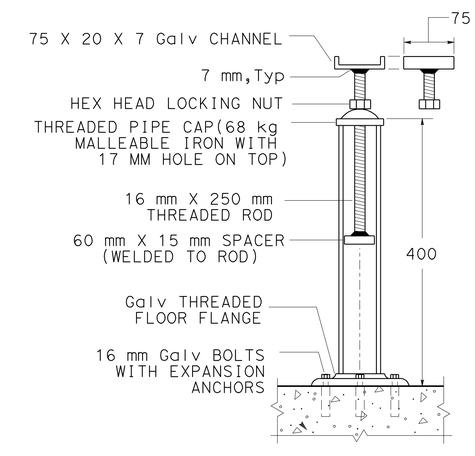

ADJUSTABLE SUPPORT

ALL IRRIGATION EQUIPMENT SIZES ARE IN MILLIMETERS (DIAMETER NOMINAL) UNLESS OTHERWISE SHOWN.

LANDSCAPE DETAILS

NO SCALE

LD-3

LAST REVISION 07-23-10	DATE PLOTTED => 20-OCT-2010
	TIME PLOTTED => 14:47

STATE OF CALIFORNIA - DEPARTMENT OF TRANSPORTATION
Caltrans LANDSCAPE ARCHITECTURE

SENIOR LANDSCAPE ARCHITECT: STEPHEN ALVAREZ
CALCULATED-DESIGNED BY: JOEL HORTIZUELA
CHECKED BY: DAVID STRICKLAND
REVISED BY: X
DATE REVISED: MM/DD/YY

Dist	COUNTY	ROUTE	KILOMETER POST TOTAL PROJECT	SHEET No.	TOTAL SHEETS
11	SD	905,805	R8.4/R9.8, 3.1/4.2	225	364

Caltrans Metric

LICENSED LANDSCAPE ARCHITECT

10-18-10
PLANS APPROVAL DATE

LICENSED LANDSCAPE ARCHITECT DAVID G. STRICKLAND No. 4023 STATE OF CALIFORNIA
EXPIRATION DATE 3/31/12
REGISTRATION DATE 07/27/10

THE STATE OF CALIFORNIA OR ITS OFFICERS OR AGENTS SHALL NOT BE RESPONSIBLE FOR THE ACCURACY OR COMPLETENESS OF ELECTRONIC COPIES OF THIS PLAN SHEET.

NOTES:

1. ALL METAL IN CONTACT WITH SOIL AND PCC SHALL BE POLETHYLENE WRAPPED USING 50 MM WIDE PLASTIC BACKED ADHESIVE TAPE 20 MIL THICK WITH 50 MM OVERLAP.
2. ASSEMBLY MATERIAL PIPING TO BE BRASS.
3. FOR THRUST BLOCK DETAILS SEE LANDSCAPE DETAIL SHEETS.
4. DETAIL TO BE USED AT SUPPLY LINE (MAIN) LOCATIONS OTHER THAN MANIFOLD LOCATIONS.

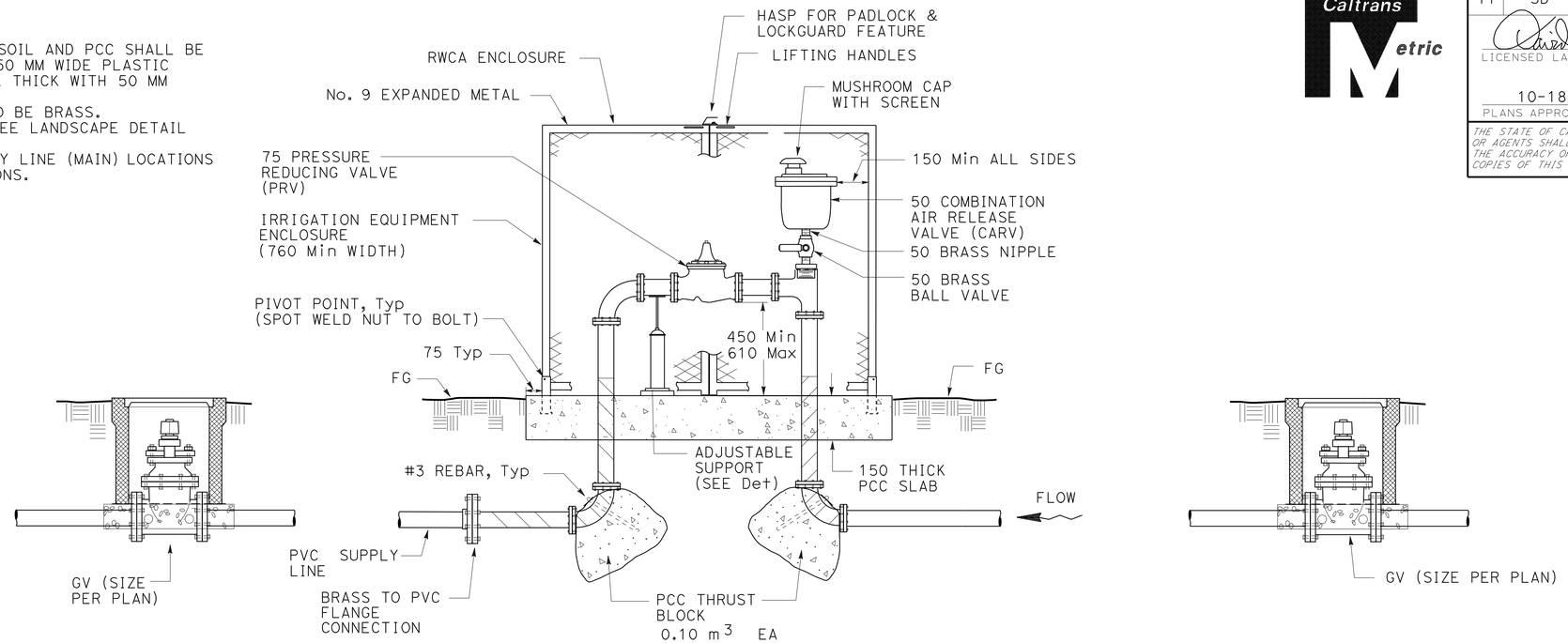

PRESSURE REDUCING VALVE (PRV) ASSEMBLY

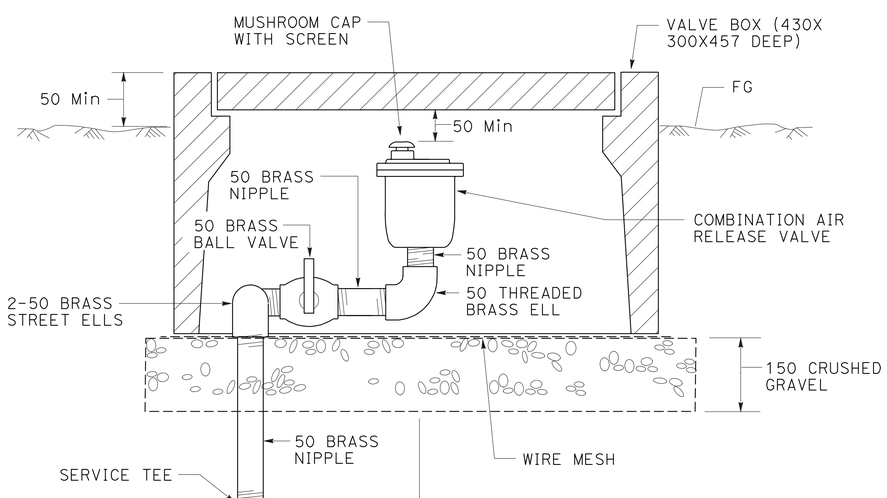

COMBINATION AIR RELEASE VALVE (CARV)

ALL IRRIGATION EQUIPMENT SIZES ARE IN MILLIMETERS (DIAMETER NOMINAL) UNLESS OTHERWISE SHOWN.

LANDSCAPE DETAILS

NO SCALE **LD-4**

STATE OF CALIFORNIA - DEPARTMENT OF TRANSPORTATION
Caltrans LANDSCAPE ARCHITECTURE

SENIOR LANDSCAPE ARCHITECT: STEPHEN ALVAREZ

CALCULATED-DESIGNED BY: JOEL HORTIZUELA
CHECKED BY: DAVID STRICKLAND

REVISED BY: X
DATE REVISED: MM/DD/YY

LAST REVISION DATE PLOTTED => 20-OCT-2010
TIME PLOTTED => 14:47
07-23-10

Dist	COUNTY	ROUTE	KILOMETER POST TOTAL PROJECT	SHEET No.	TOTAL SHEETS
11	SD	905,805	R8.4/R9.8, 3.1/4.2	226	364

LICENSED LANDSCAPE ARCHITECT

10-18-10
PLANS APPROVAL DATE

LICENSED LANDSCAPE ARCHITECT DAVID G. STRICKLAND No. 4623 STATE OF CALIFORNIA
EXPIRATION DATE 3/31/12
RENEWAL DATE 07/27/10
DATE

THE STATE OF CALIFORNIA OR ITS OFFICERS OR AGENTS SHALL NOT BE RESPONSIBLE FOR THE ACCURACY OR COMPLETENESS OF ELECTRONIC COPIES OF THIS PLAN SHEET.

Caltrans Metric

LEGEND

1. 0.70 m X 0.46 m X 0.33 m CONCRETE VALVE BOX WITH COVER
2. REMOTE CONTROL VALVE -MASTER-
3. CONCRETE COVER
4. 20 CRUSHED GRAVEL SUMP (300 DEEP)
5. PVC PIPE (SIZE PER PLAN) (DEPTH PER SPECIFICATIONS)
6. 100 X 200 X 400 PCC BLOCK
7. WOVEN WIRE CLOTH
8. 100 Min-250 Max
9. COPPER OR B/B (LENGTH AS REQUIRED)(SIZE PER PLAN)
10. DIELECTRIC UNION
11. T X S ADAPTER
12. COPPER OR B/B COUPLING
13. Galv NIPPLE (150 LONG)
14. 2-LOW VOLTAGE TRANSMITTER WIRES (AS PER MANUFACTURER'S SPECIFICATIONS)

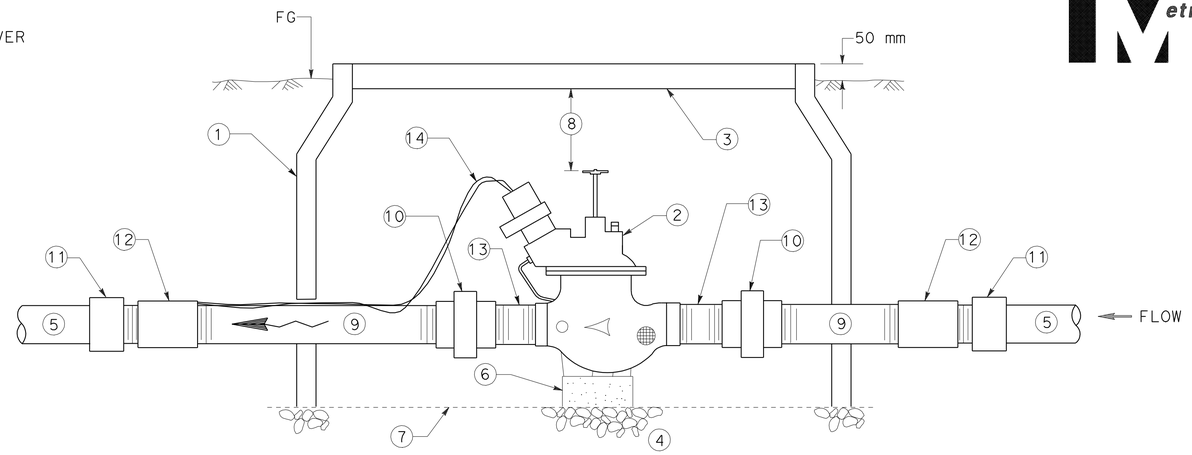

SECTION

REMOTE CONTROL VALVE -MASTER- (RCVM)

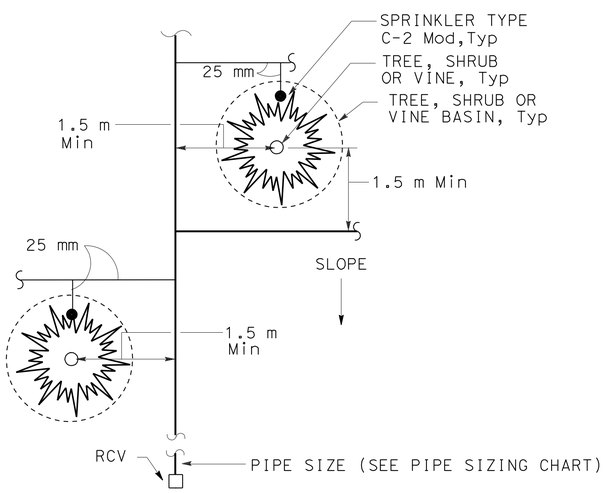

PLAN VIEW

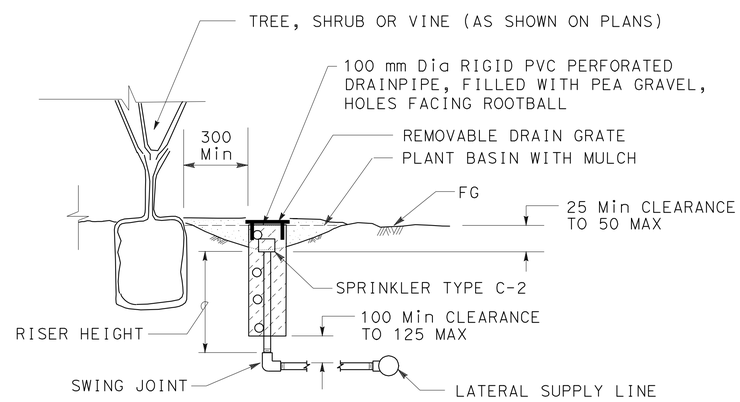

NOTE:
INSTALL SPRINKLER TYPE C-2 MOD ON UP-HILL SIDE OF PLANT WHEN ON SLOPE.

SECTION

SPRINKLER TYPE C-2 MOD INSTALLATION

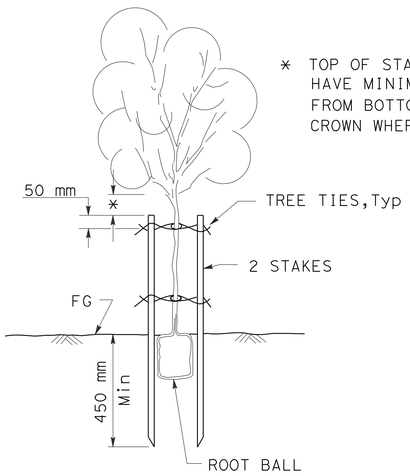

SECTION

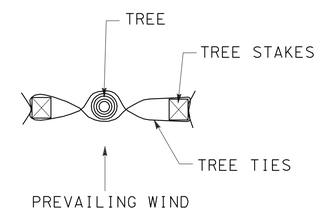

PLAN

MODIFIED TREE STAKING

ALL IRRIGATION EQUIPMENT SIZES ARE IN MILLIMETERS (DIAMETER NOMINAL) UNLESS OTHERWISE SHOWN.

LANDSCAPE DETAILS

NO SCALE **LD-5**

STATE OF CALIFORNIA - DEPARTMENT OF TRANSPORTATION
Caltrans LANDSCAPE ARCHITECTURE

SENIOR LANDSCAPE ARCHITECT: STEPHEN ALVAREZ
CALCULATED-DESIGNED BY: JOEL HORTIZUELA
CHECKED BY: DAVID STRICKLAND
REVISED BY: X
DATE REVISED: MM/DD/YY

LAST REVISION 07-23-10
DATE PLOTTED => 20-OCT-2010
TIME PLOTTED => 14:04

Dist	COUNTY	ROUTE	KILOMETER POST TOTAL PROJECT	SHEET No.	TOTAL SHEETS
11	SD	905,805	R8.4/R9.8, 3.1/4.2	227	364

LICENSED LANDSCAPE ARCHITECT

10-18-10
PLANS APPROVAL DATE

LICENSED LANDSCAPE ARCHITECT DAVID G. STRICKLAND No. 4623 SIGNATURE 3/31/12 RENEWAL DATE 07/27/10 DATE STATE OF CALIFORNIA

THE STATE OF CALIFORNIA OR ITS OFFICERS OR AGENTS SHALL NOT BE RESPONSIBLE FOR THE ACCURACY OR COMPLETENESS OF ELECTRONIC COPIES OF THIS PLAN SHEET.

Caltrans Metric

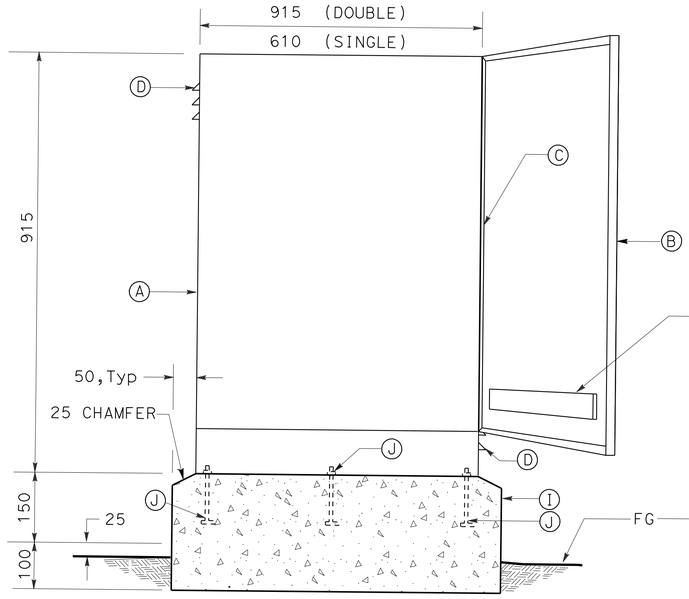

FRONT ELEVATION

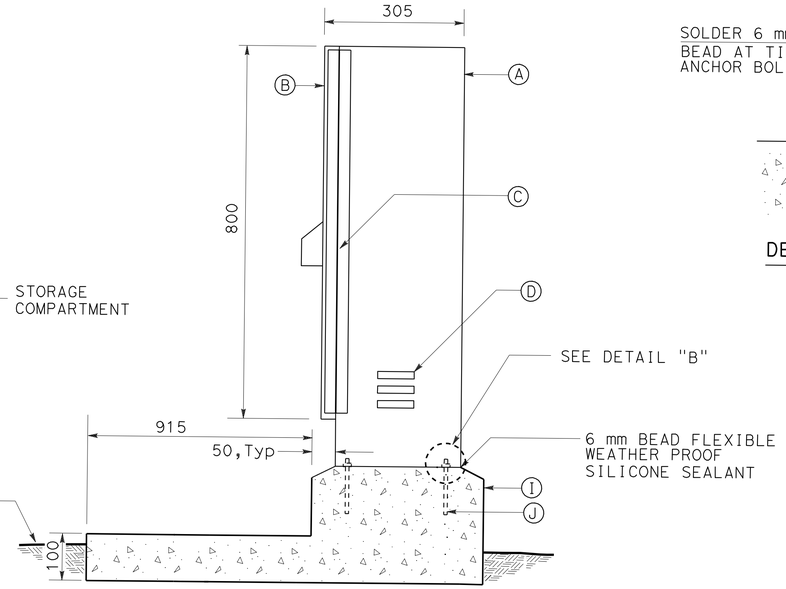

SIDE SECTION

CABINET, SECURITY DOOR, AND FOUNDATION

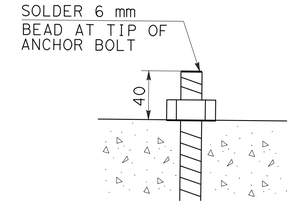

DETAIL "B"

LEGEND

- (A) STAINLESS STEEL CONTROLLER ENCLOSURE CABINET
- (B) DOOR WITH THREE POINT LOCKING MECHANISM, FLUSH-MOUNTED ACCESS HANDLE FOR PADLOCK WITH LOCKGUARD FEATURE AND STORAGE FOR PLANS
- (C) CONTINUOUS STAINLESS STEEL PIANO HINGE
- (D) LOUVERS AT TOP AND BOTTOM FOR CROSS VENTILATION
- (E) No. 8 AWG GROUND CONDUCTOR
- (F) LOW PRO ANTENNA AND CABLE (FOR COMMUNICATION BETWEEN CCU AND SAT) (NOT NEEDED WITH POLE MOUNT ANTENNA MAST)
- (G) JUNCTION BOX
- (H) SURGE PROTECTION
- (I) PCC PAD AND FOUNDATION
- (J) 10 mm DIAMETER, 70 mm LONG, WINGED STAINLESS STEEL ANCHOR BOLTS WITH WASHERS AND HEX HEAD LOCKNUTS (4 BOLTS FOR SINGLE, 6 BOLTS FOR DOUBLE)
- (K) 16 mm X 3.0 m LONG COPPER CLAD STEEL ROD GROUND ELECTRODE AND GROUND CLAMP
- (L) SIZE 27, TYPE 3 CONDUIT FOR ELECTRICAL SERVICE (2 FOR CABINET WITH TELEPHONE SERVICE)
- (M) SIZE 41, TYPE 3 CONDUIT FOR RCVM INPUT WIRING
- (N) SIZE 53, TYPE 3 CONDUIT FOR LOW VOLTAGE WIRING (2 FOR SINGLE CABINET, 3 FOR DOUBLE CABINET)
- (O) SIZE 13, TYPE 4 CONDUIT
- (P) 2 GANG WEATHER PROOF BOX WITH GROUND FAULT PROTECTED RECEPTACLE AND ON-OFF SWITCH, SEE DETAIL "D" ON THIS SHEET
- (Q) STAINLESS STEEL MOUNTING PANEL 4 mm Min. THICKNESS), ATTACHED TO ENCLOSURE
- (R) BRUSHED ALUMINUM MOUNTING BOARD, SECURED WITH STAINLESS STEEL BOLTS
- (S) TERMINAL STRIPS FOR LOW VOLTAGE WIRE CONNECTIONS
- (T) SATELLITE IRRIGATION CONTROLLER (SAT) WITH TWO WAY RADIO CONNECTIONS (QUANTITIES SHOWN ON PLANS)
- (TT) FUTURE SATELLITE IRRIGATION CONTROLLER (SAT)
- (U) IRRIGATION CLUSTER CONTROL UNIT (CCU) WITH TELEPHONE AND TWO WAY RADIO CONNECTIONS AND RECEIVER CARD FOR HAND HELD REMOTE OPERATION (QUANTITIES SHOWN ON PLANS)
- (V) LO PRO ANTENNA WITH TRC RECEIVER CARD (SAT ONLY) AT SATS '63(A & B)',
- (W) RAIN SWITCH WITH STAINLESS STEEL HOUSING.
- (X) Exist RJ-11 TELEPHONE CONNECTION (CCU ONLY)
- (Y) 13 Galv PIPE CONDUIT CONNECT TO ANTENNA MAST WHERE CALLED FOR ON PLAN.
- (Z) ET MANAGER

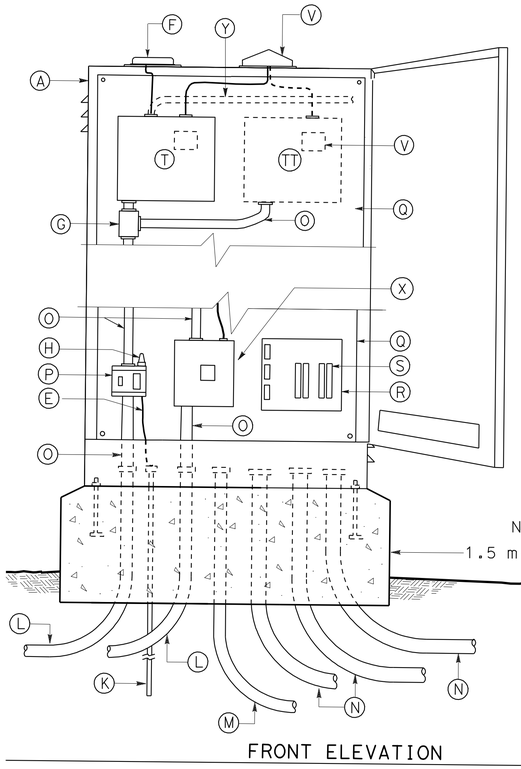

FRONT ELEVATION

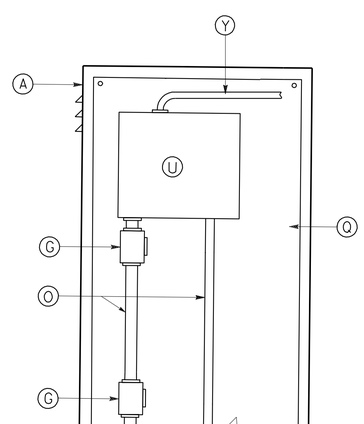

SINGLE CONTROLLER LAYOUT

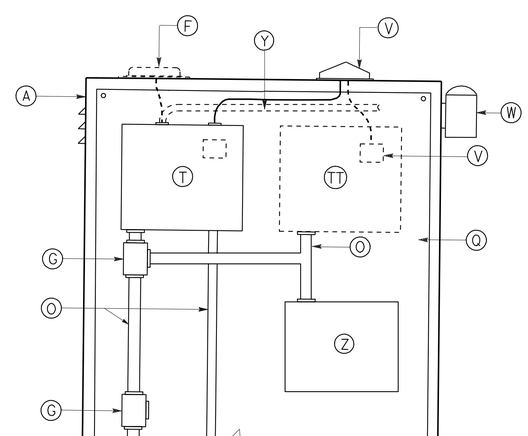

DOUBLE CONTROLLER LAYOUT

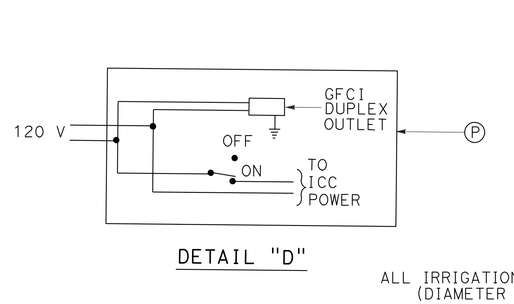

DETAIL "D"

ELECTRICAL AND SINGLE/DOUBLE CONTROLLER LAYOUT

ALL IRRIGATION EQUIPMENT SIZES ARE IN MILLIMETERS (DIAMETER NOMINAL) UNLESS OTHERWISE SHOWN.

LANDSCAPE DETAILS

NO SCALE

LD-6

STATE OF CALIFORNIA - DEPARTMENT OF TRANSPORTATION
Caltrans LANDSCAPE ARCHITECTURE

SENIOR LANDSCAPE ARCHITECT: STEPHEN ALVAREZ
CALCULATED-DESIGNED BY: JOEL HORTIZUELA
CHECKED BY: DAVID STRICKLAND
REVISED BY: X
DATE REVISED: MM/DD/YY

LAST REVISION 07-23-10
DATE PLOTTED => 20-OCT-2010
TIME PLOTTED => 14:05

Dist	COUNTY	ROUTE	KILOMETER POST TOTAL PROJECT	SHEET No.	TOTAL SHEETS
11	SD	905,805	R8.4/R9.8, 3.1/4.2	228	364

LICENSED LANDSCAPE ARCHITECT

10-18-10
PLANS APPROVAL DATE

LICENSED LANDSCAPE ARCHITECT DAVID G. STRICKLAND No. 4623 STATE OF CALIFORNIA
EXPIRATION DATE 3/31/12
RENEWAL DATE 07/27/10
DATE

THE STATE OF CALIFORNIA OR ITS OFFICERS OR AGENTS SHALL NOT BE RESPONSIBLE FOR THE ACCURACY OR COMPLETENESS OF ELECTRONIC COPIES OF THIS PLAN SHEET.

Caltrans Metric

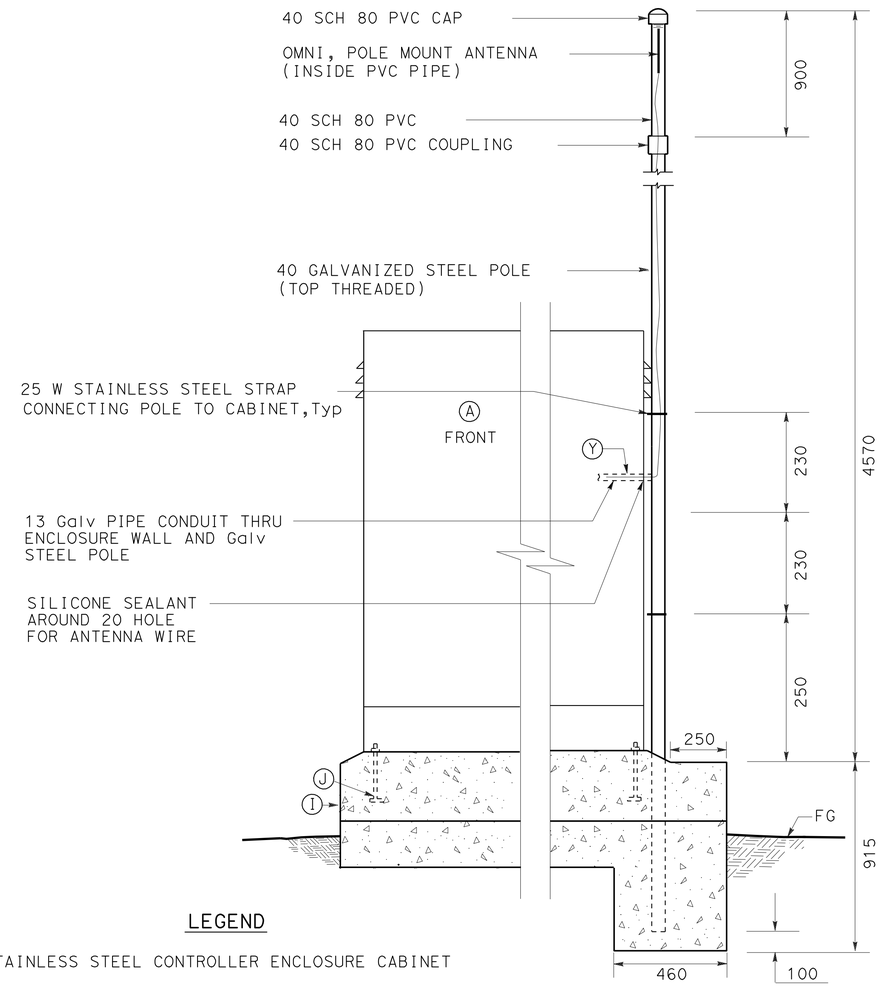

LEGEND

Ⓐ STAINLESS STEEL CONTROLLER ENCLOSURE CABINET

Ⓘ PCC PAD AND FOUNDATION

Ⓙ 10 mm DIAMETER, 70 mm LONG, WINGED STAINLESS STEEL ANCHOR BOLTS WITH WASHERS AND HEX HEAD LOCKNUTS (4 BOLTS FOR SINGLE, 6 BOLTS FOR DOUBLE)

Ⓨ 13 Galv PIPE CONDUIT CONNECT TO ANTENNA MAST WHERE CALLED FOR ON PLAN

FRONT ELEVATION

ANTENNA MAST
(CCU AND SAT '63(A)'

NOTES:

1. SEE SHEET LD-7 FOR CABINET DIMENSIONS

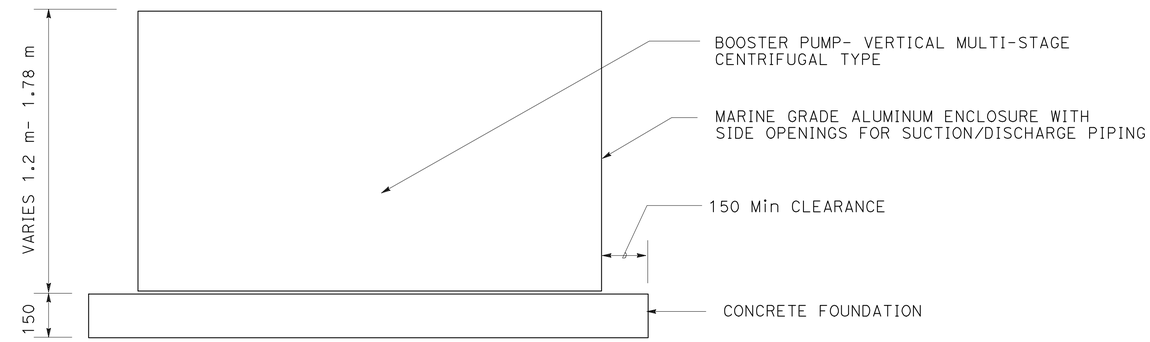

ELEVATION

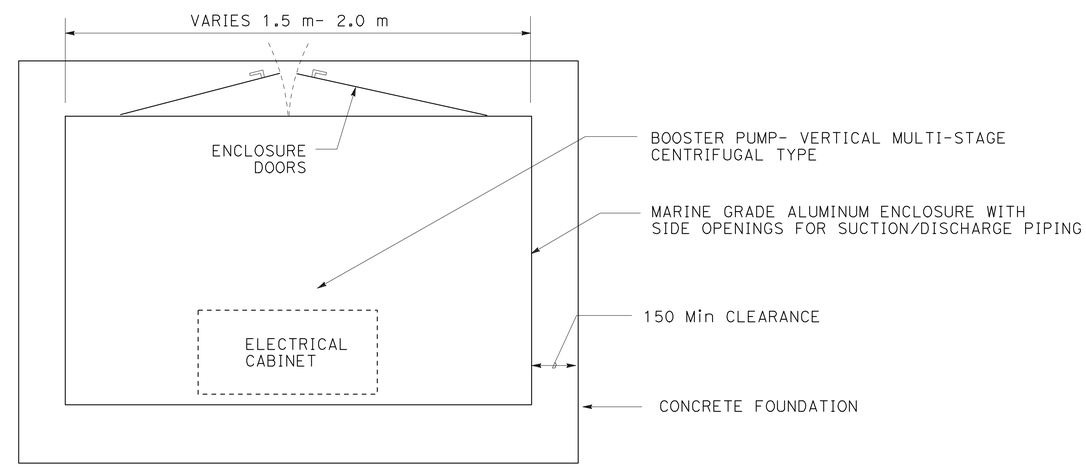

PLAN

BOOSTER PUMP

ALL IRRIGATION EQUIPMENT SIZES ARE IN MILLIMETERS (DIAMETER NOMINAL) UNLESS OTHERWISE SHOWN.

LANDSCAPE DETAILS

NO SCALE **LD-7**

JOEL HORTIZUELA	REVISED BY X
DAVID STRICKLAND	DATE REVISED MM/DD/YY
CALCULATED-DESIGNED BY	
CHECKED BY	
SENIOR LANDSCAPE ARCHITECT	
STEPHEN ALVAREZ	

STATE OF CALIFORNIA - DEPARTMENT OF TRANSPORTATION
Caltrans LANDSCAPE ARCHITECTURE

LAST REVISION 07-23-10
DATE PLOTTED => 21-OCT-2010
TIME PLOTTED => 13:36

Dist	COUNTY	ROUTE	KILOMETER POST TOTAL PROJECT	SHEET No.	TOTAL SHEETS
11	SD	905,805	R8.4/R9.8, 3.1/4.2	229	364

LICENSED LANDSCAPE ARCHITECT

10-18-10
PLANS APPROVAL DATE

LICENSED LANDSCAPE ARCHITECT DAVID G. STRICKLAND No. 4023 REGISTERED PROFESSIONAL ENGINEER 3/31/12 RENEWAL DATE 07/27/10 DATE STATE OF CALIFORNIA

THE STATE OF CALIFORNIA OR ITS OFFICERS OR AGENTS SHALL NOT BE RESPONSIBLE FOR THE ACCURACY OR COMPLETENESS OF ELECTRONIC COPIES OF THIS PLAN SHEET.

Caltrans Metric

NOTES:

1. A PHYSICAL SEPARATION SHALL BE PROVIDED BETWEEN ADJACENT AREAS IRRIGATED WITH RECYCLED WATER AND POTABLE WATER. SEPARATION SHALL BE PROVIDED BY DISTANCE, CONCRETE MOW STRIPS OR OTHER APPROVED METHODS.
2. ALL NOTES AND REFERENCES THIS SHEET PER COUNTY OF SAN DIEGO DEPARTMENT OF ENVIRONMENTAL HEALTH.

NOTE:

INSTALL RECYCLED WATER LINE BELOW POTABLE WATER LINE, IF NECESSARY, TO MAINTAIN MINIMUM CLEARANCE.

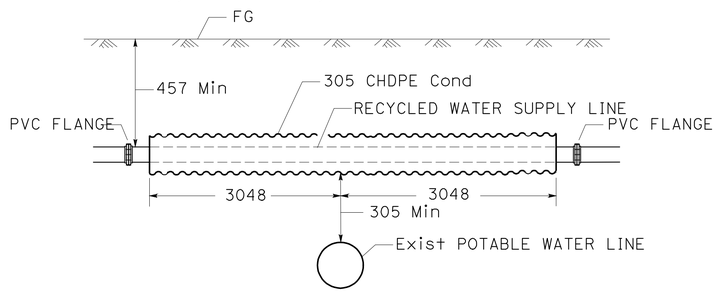

SECTION

RECYCLED WATER SLEEVE (RCWS)

POTABLE SERVICE LINE CROSSING

(FOR INFORMATION ONLY. NO POTABLE SERVICE LINE CROSSINGS WITH IRRIGATION SUPPLY LINE (MAIN) ARE SHOWN ON PLANS).

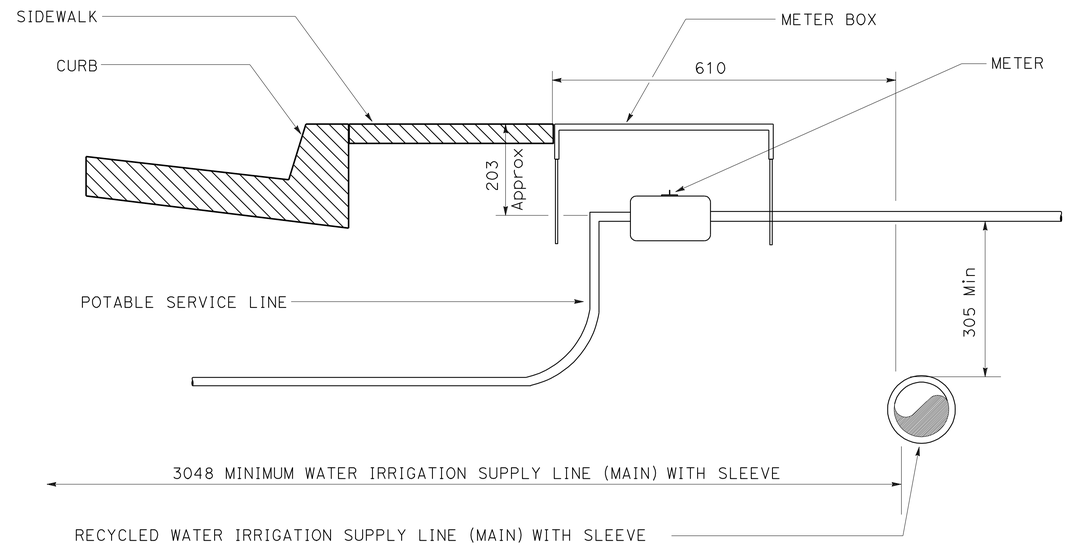

NOTE:

VERTICAL CLEARANCE OF 305 MINIMUM IS MANDATORY WHEN CROSSING PATH OF A POTABLE WATER LINE. INSTALLATION OF RECYCLED WATER IRRIGATION SUPPLY LINE (MAIN) 610 FROM BACK OF SIDEWALK WILL PROVIDE THE NECESSARY 3048 HORIZONTAL CLEARANCE FROM THE POTABLE SUPPLY LINE (MAIN) IN THE STREET.

POTABLE SERVICE LINE CROSSING

(FOR INFORMATION ONLY. NO POTABLE SERVICE LINE CROSSINGS WITH IRRIGATION SUPPLY LINE (MAIN) ARE SHOWN ON PLANS).

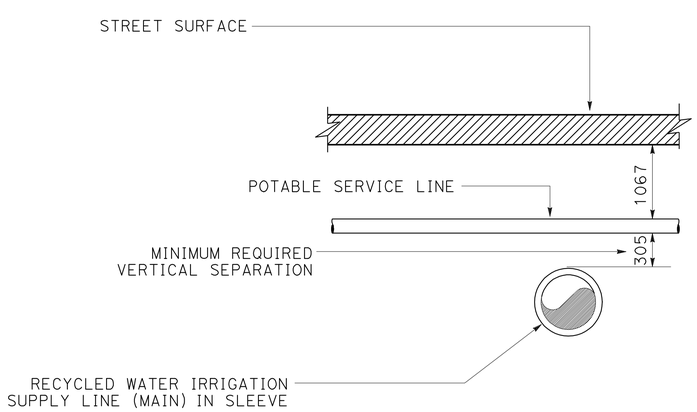

NOTE:

ALL RECYCLED WATER IRRIGATION PIPES AND SLEEVES SHALL BE PURPLE AND LABELED AS SPECIFIED IN THE "STANDARD SPECIFICATION FOR PRIVATE IRRIGATION SYSTEMS WATER DISTRICT" RULES AND REGULATIONS FOR CONSTRUCTION OF RECYCLED WATER MAINS, OCTOBER 1993.

POTABLE SERVICE LINE CROSSING

(FOR INFORMATION ONLY. NO POTABLE SERVICE LINE CROSSINGS WITH IRRIGATION SUPPLY LINE (MAIN) ARE SHOWN ON PLANS).

ALL IRRIGATION EQUIPMENT SIZES ARE IN MILLIMETERS (DIAMETER NOMINAL) UNLESS OTHERWISE SHOWN.

LANDSCAPE DETAILS

NO SCALE **LD-8**

CALCULATED-DESIGNED BY	JOEL HORTIZUELA	REVISED BY	X
CHECKED BY	DAVID STRICKLAND	DATE REVISED	MM/DD/YY
SENIOR LANDSCAPE ARCHITECT	STEPHEN ALVAREZ		

STATE OF CALIFORNIA - DEPARTMENT OF TRANSPORTATION
Caltrans LANDSCAPE ARCHITECTURE

LAST REVISION 07-23-10 | DATE PLOTTED => 21-OCT-2010 | TIME PLOTTED => 13:40

Dist	COUNTY	ROUTE	KILOMETER POST TOTAL PROJECT	SHEET No.	TOTAL SHEETS
11	SD	905,805	R8.4/R9.8, 3.1/4.2	230	364

LICENSED LANDSCAPE ARCHITECT

10-18-10
PLANS APPROVAL DATE

LICENSED LANDSCAPE ARCHITECT DAVID G. STRICKLAND No. 4623 STATE OF CALIFORNIA
EXPIRATION DATE 3/31/12
RENEWAL DATE 07/27/10

THE STATE OF CALIFORNIA OR ITS OFFICERS OR AGENTS SHALL NOT BE RESPONSIBLE FOR THE ACCURACY OR COMPLETENESS OF ELECTRONIC COPIES OF THIS PLAN SHEET.

Caltrans Metric

NOTE:

1. A CROSS-CONNECTION TEST AND COVERAGE TEST SHALL BE CONDUCTED AS DIRECTED BY THE CITY OF ESCONDIDO WATER DISTRICT AND/OR THE SAN DIEGO COUNTY DEPARTMENT OF ENVIRONMENTAL HEALTH PRIOR TO ANY USE OF RECYCLED WATER.

2. THE REQUIRED CROSS-CONNECTION CONTROL SHUTDOWN TEST SHALL BE MONITORED BY EITHER THE SAN DIEGO COUNTY DEPARTMENT OF ENVIRONMENTAL HEALTH OR STATE HEALTH.

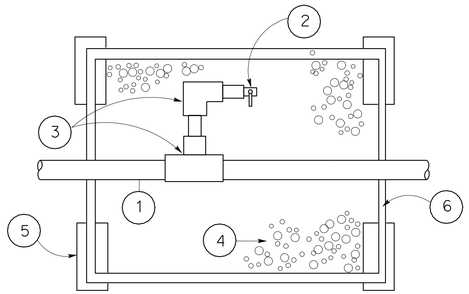

LEGEND

1. MAINLINE
2. BALL VALVE WITH 1/4" FEMALE THREAD
3. PVC SCH. 40 SOLVENT WELD FITTINGS
4. 3/8" DIA. PEA GRAVEL SUMP (MIN. 1/2 CU. FT.)
5. BRICK SUPPORTS ON COMPACTED/ UNDISTURBED SUBGRADE (MIN. OF FOUR PER BOX)
6. PURPLE COLOR VALVE BOX AND LID

* ONLY ON TEST STATIONS DOWNSTREAM OF THE METER

CROSS CONNECTION CONTROL TEST STATION

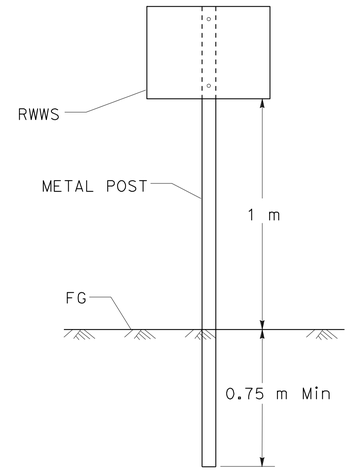

'DO NOT DRINK' SIGN

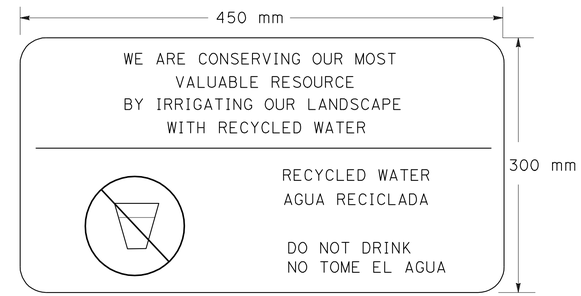

NOTE:

ATTACH RWWS TO POST WITH 6 mm Dia THEFT PROOF BOLTS.

RECYCLED WATER WARNING SIGN (RWWS)

(POST MOUNTED)

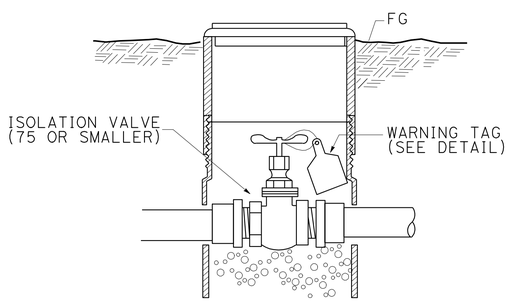

SIGN/TAG FOR RECYCLED WATER IRRIGATION VALVES

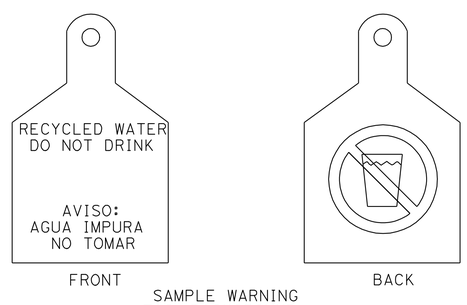

SAMPLE WARNING TAG. BACKGROUND PURPLE (PANTONE 512) WITH BLACK LETTERING

TAG FOR RECYCLED WATER

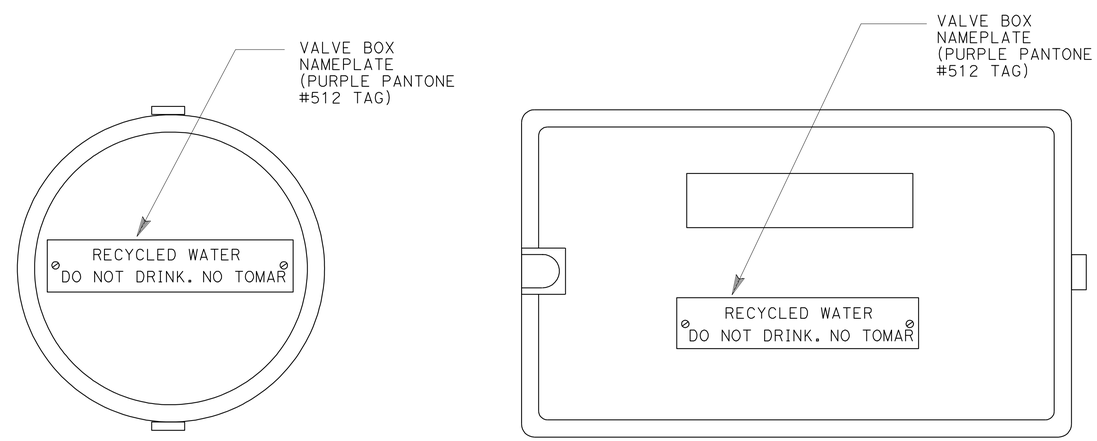

NOTE:

1. ALL RECYCLED WATER IRRIGATION BOX COVERS AND LIDS SHALL BE COLOR CODED PANTONE # 522

SIGN/TAG FOR RECYCLED WATER IRRIGATION BOX COVERS/LID

ALL IRRIGATION EQUIPMENT SIZES ARE IN MILLIMETERS (DIAMETER NOMINAL) UNLESS OTHERWISE SHOWN.

LANDSCAPE DETAILS

NO SCALE

LD-9

STATE OF CALIFORNIA - DEPARTMENT OF TRANSPORTATION
Caltrans LANDSCAPE ARCHITECTURE

SENIOR LANDSCAPE ARCHITECT: STEPHEN ALVAREZ
CALCULATED-DESIGNED BY: JOEL HORTIZUELA
CHECKED BY: DAVID STRICKLAND
REVISED BY: X
DATE REVISED: MM/DD/YY

LAST REVISION 07-23-10
DATE PLOTTED => 20-OCT-2010
TIME PLOTTED => 14:05

Dist	COUNTY	ROUTE	KILOMETER POST TOTAL PROJECT	SHEET No.	TOTAL SHEETS
11	SD	905,805	R8.4/R9.8, 3.1/4.2	231	364

Caltrans Metric

LICENSED LANDSCAPE ARCHITECT

10-18-10
PLANS APPROVAL DATE

LICENSED LANDSCAPE ARCHITECT DAVID G. STRICKLAND No. 5623 STATE OF CALIFORNIA
SIGNATURE 3/31/12
EXPIRATION DATE 07/27/10
DATE

THE STATE OF CALIFORNIA OR ITS OFFICERS OR AGENTS SHALL NOT BE RESPONSIBLE FOR THE ACCURACY OR COMPLETENESS OF ELECTRONIC COPIES OF THIS PLAN SHEET.

EROSION CONTROL (POLYMER STABILIZED FIBER MATRIX) COMPONENTS

	AREA		TACKIFIER	WOOD FIBER kg	CELLULOSE FIBER kg	PURE LIVE SEED TYPE 1	PURE LIVE SEED TYPE 2	PURE LIVE SEED TYPE 3	COMMERCIAL FERTILIZER (HUMATE)
	m2	ha	L (N)	(N)	(N)	kg (N)	kg (N)	kg (N)	kg (N)
EC (PSFM) SEED TYPE 1	12,100	1.21	112.8	2,400	1,200	41.7	-	-	600
EC (PSFM) SEED TYPE 2	41,300	4.13	388.22	8,260	4,130	-	130.2	-	2,065
EC (PSFM) SEED TYPE 3	22,700	2.27	213.38	4,540	2,270	-	-	47.67	1,135

EROSION CONTROL (POLYMER STABILIZED FIBER MATRIX)

SHEET NUMBER	ha SEED TYPE 1	ha SEED TYPE 2	ha SEED TYPE 3
PP-1	-	0.20	0.17
PP-2	-	1.06	0.75
PP-3	-	0.94	0.49
PP-4	0.72	0.50	0.50
PP-5	0.49	0.18	0.19
PP-6	-	0.21	-
PP-7	-	0.36	-
PP-8	-	0.58	-
PP-9	-	0.10	-
PP-10	-	-	0.17
SUBTOTAL	1.21	4.13	2.27
TOTAL	7.61		

MULCH

SHEET NUMBER	m^3
PP-1	-
PP-2	-
PP-3	-
PP-4	-
PP-5	-
PP-6	263.00
PP-7	159.00
PP-8	-
PP-9	-
PP-10	-
SUBTOTAL	422.00
BASIN MULCH	157.85
TOTAL	579.85

RECYCLED WATER WARNING SIGN

SHEET	POST MOUNTED EA (N)	FENCE MOUNTED EA (N)
IP-1	1	-
IP-2	1	-
IP-4	2	-
IP-5	1	-
IP-7	3	2
TOTAL	8	2

REMOVE TREE

SHEET	EACH (N)
PR-1	5
PR-2	31
TOTAL	36

EROSION CONTROL (COMPOST BLANKET)

SHEET	m^3
PP-1	86.67
PP-2	376.56
PP-3	228.93
PP-4	251.51
PP-5	92.96
PP-10	83.14
TOTAL	1,119.77

NOTE: (N) NOT A SEPARATE PAY ITEM. FOR INFORMATION ONLY

ALL IRRIGATION EQUIPMENT SIZES ARE IN MILLIMETERS (DIAMETER NOMINAL) UNLESS OTHERWISE SHOWN.

LANDSCAPE DETAILS

NO SCALE **LD-10**

X	MM/DD/YY
REVISED BY	DATE REVISED
JOEL HORTIZUELA	DAVID STRICKLAND
CALCULATED-DESIGNED BY	CHECKED BY
SENIOR LANDSCAPE ARCHITECT	STEPHEN ALVAREZ

STATE OF CALIFORNIA - DEPARTMENT OF TRANSPORTATION
Caltrans LANDSCAPE ARCHITECTURE

LAST REVISION 07-23-10 | DATE PLOTTED => 21-OCT-2010 | TIME PLOTTED => 08:11

Dist	COUNTY	ROUTE	KILOMETER POST TOTAL PROJECT	SHEET No.	TOTAL SHEETS
11	SD	905,805	R8.4/R9.8, 3.1/4.2	232	364

Enrique P Bernal 07-29-10
REGISTERED ELECTRICAL ENGINEER DATE

10-18-10
PLANS APPROVAL DATE

REGISTERED PROFESSIONAL ENGINEER E.P.BERNAL No. 15675 Exp. 6-30-12 ELECTRICAL STATE OF CALIFORNIA

THE STATE OF CALIFORNIA OR ITS OFFICERS OR AGENTS SHALL NOT BE RESPONSIBLE FOR THE ACCURACY OR COMPLETENESS OF ELECTRONIC COPIES OF THIS PLAN SHEET.

Caltrans Metric

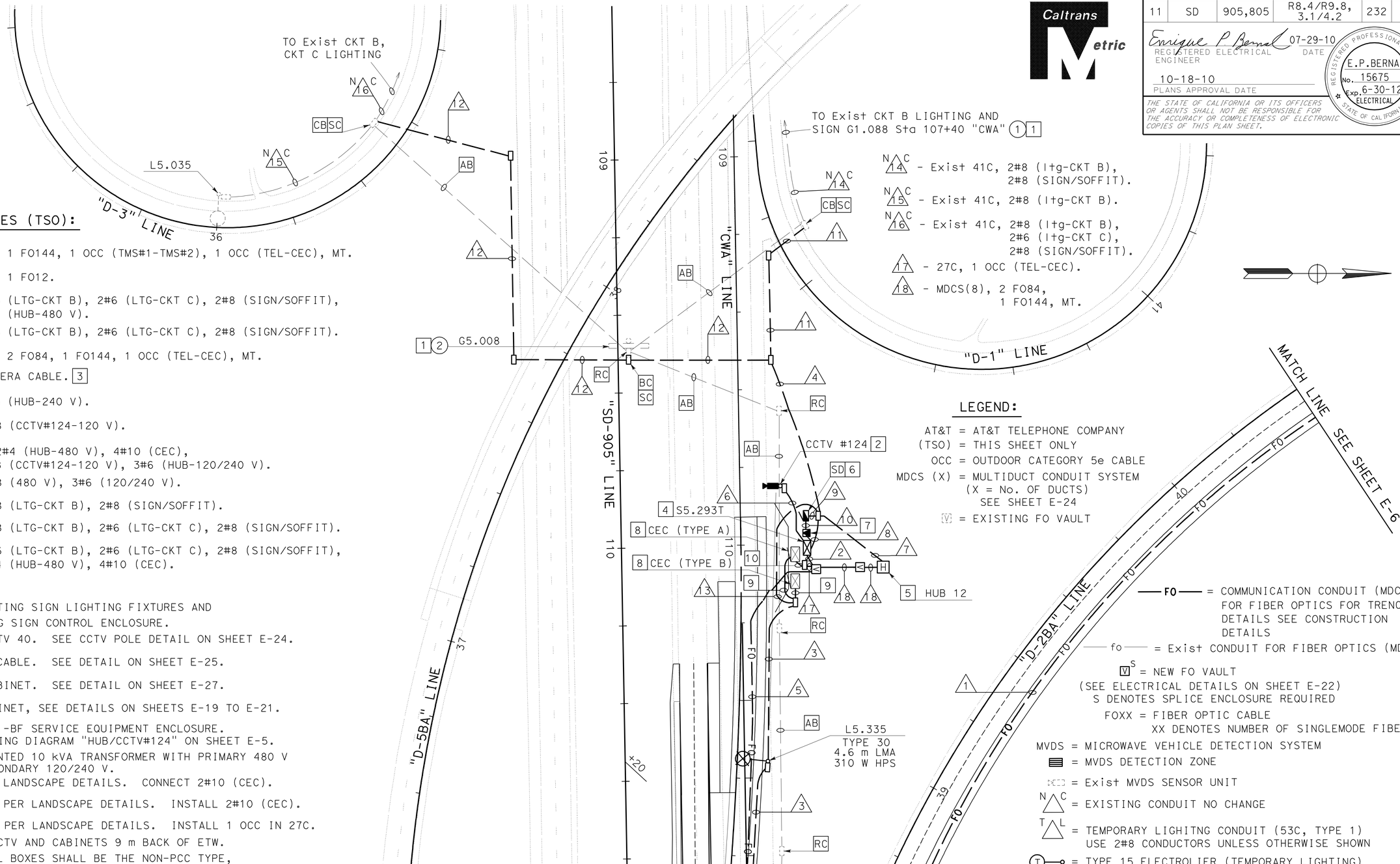

N C 14 - Exist 41C, 2#8 (ltg-CKT B), 2#8 (SIGN/SOFFIT).
N C 15 - Exist 41C, 2#8 (ltg-CKT B).
N C 16 - Exist 41C, 2#8 (ltg-CKT B), 2#6 (ltg-CKT C), 2#8 (SIGN/SOFFIT).
17 - 27C, 1 OCC (TEL-CEC).
18 - MDCS(8), 2 FO84, 1 FO144, MT.

CONDUIT NOTES (TSO):

1 - MDCS(8), 1 FO144, 1 OCC (TMS#1-TMS#2), 1 OCC (TEL-CEC), MT.
2 - MDCS(2), 1 FO12.
3 - 53C, 2#6 (LTG-CKT B), 2#6 (LTG-CKT C), 2#8 (SIGN/SOFFIT), 2#4 (HUB-480 V).
4 - 53C, 2#6 (LTG-CKT B), 2#6 (LTG-CKT C), 2#8 (SIGN/SOFFIT).
5 - MDCS(8), 2 FO84, 1 FO144, 1 OCC (TEL-CEC), MT.
6 - 78C, CAMERA CABLE. 3
7 - 53C, 3#6 (HUB-240 V).
8 - 53C, 2#8 (CCTV#124-120 V).
9 - 2-53C, 2#4 (HUB-480 V), 4#10 (CEC), 2#8 (CCTV#124-120 V), 3#6 (HUB-120/240 V).
10 - 53C, 2#8 (480 V), 3#6 (120/240 V).
11 - 53C, 2#8 (LTG-CKT B), 2#8 (SIGN/SOFFIT).
12 - 53C, 2#8 (LTG-CKT B), 2#6 (LTG-CKT C), 2#8 (SIGN/SOFFIT).
13 - 53C, 2#6 (LTG-CKT B), 2#6 (LTG-CKT C), 2#8 (SIGN/SOFFIT), 2#4 (HUB-480 V), 4#10 (CEC).

NOTE (TSO):

1 - RC EXISTING SIGN LIGHTING FIXTURES AND EXISTING SIGN CONTROL ENCLOSURE.
2 - TYPE CCTV 40. SEE CCTV POLE DETAIL ON SHEET E-24.
3 - CAMERA CABLE. SEE DETAIL ON SHEET E-25.
4 - CCTV CABINET. SEE DETAIL ON SHEET E-27.
5 - HUB CABINET, SEE DETAILS ON SHEETS E-19 TO E-21.
6 - TYPE III-BF SERVICE EQUIPMENT ENCLOSURE. SEE WIRING DIAGRAM "HUB/CCTV#124" ON SHEET E-5.
7 - PAD MOUNTED 10 kVA TRANSFORMER WITH PRIMARY 480 V AND SECONDARY 120/240 V.
8 - CEC PER LANDSCAPE DETAILS. CONNECT 2#10 (CEC).
9 - CONDUIT PER LANDSCAPE DETAILS. INSTALL 2#10 (CEC).
10 - CONDUIT PER LANDSCAPE DETAILS. INSTALL 1 OCC IN 27C.
11 - PLACE CCTV AND CABINETS 9 m BACK OF ETW.
12 - ALL PULL BOXES SHALL BE THE NON-PCC TYPE, UNLESS OTHERWISE NOTED.

LEGEND:

AT&T = AT&T TELEPHONE COMPANY
(TSO) = THIS SHEET ONLY
OCC = OUTDOOR CATEGORY 5e CABLE
MDCS (X) = MULTIDUCT CONDUIT SYSTEM (X = No. OF DUCTS) SEE SHEET E-24
V = EXISTING FO VAULT
—FO— = COMMUNICATION CONDUIT (MDCS) FOR FIBER OPTICS FOR TRENCH DETAILS SEE CONSTRUCTION DETAILS
—fo— = Exist CONDUIT FOR FIBER OPTICS (MDCS)
V S = NEW FO VAULT (SEE ELECTRICAL DETAILS ON SHEET E-22) S DENOTES SPLICE ENCLOSURE REQUIRED
FOXX = FIBER OPTIC CABLE XX DENOTES NUMBER OF SINGLEMODE FIBERS
MVDS = MICROWAVE VEHICLE DETECTION SYSTEM
= MVDS DETECTION ZONE
= Exist MVDS SENSOR UNIT
N C = EXISTING CONDUIT NO CHANGE
T L = TEMPORARY LIGHITNG CONDUIT (53C, TYPE 1) USE 2#8 CONDUCTORS UNLESS OTHERWISE SHOWN
T = TYPE 15 ELECTROLIER (TEMPORARY LIGHTING) SEE DETAIL ON SHEET E-38
CON = CONTACTOR

ILLUMINATED SIGN AND APPURTENANCES

SIGN No.	QUANTITY OF 85 W ISL FIXTURES	VOLTAGE (SERVICE)	LOAD	REMARKS
1	2	480 V	174 W	SEE SHEET E-5 FOR SIGN CONTROL
2	2	480 V	174 W	SEE SHEET E-5 FOR SIGN CONTROL

THIS PLAN IS ACCURATE FOR ELECTRICAL WORK ONLY. ALL DIMENSIONS ARE IN METERS UNLESS OTHERWISE SHOWN.

LIGHTING AND SIGN ILLUMINATION FIBER OPTIC COMMUNICATION SYSTEM

SCALE 1:500

E-1

STATE OF CALIFORNIA - DEPARTMENT OF TRANSPORTATION
Caltrans TRAFFIC ELECTRICAL

FUNCTIONAL SUPERVISOR: DALE WILSON
CALCULATED-DESIGNED BY: HENRY TSUI
CHECKED BY: ENRIQUE BERNAL
REVISED BY / DATE REVISED

LAST REVISION 06-25-10 | DATE PLOTTED => 21-OCT-2010 | TIME PLOTTED => 07:46

Dist	COUNTY	ROUTE	KILOMETER POST TOTAL PROJECT	SHEET No.	TOTAL SHEETS
11	SD	905,805	R8.4/R9.8, 3.1/4.2	233	364

Enrique P. Bernal 07-29-10
REGISTERED ELECTRICAL ENGINEER DATE

10-18-10
PLANS APPROVAL DATE

REGISTERED PROFESSIONAL ENGINEER E.P.BERNAL No. 15675 Exp. 6-30-12 ELECTRICAL STATE OF CALIFORNIA

THE STATE OF CALIFORNIA OR ITS OFFICERS OR AGENTS SHALL NOT BE RESPONSIBLE FOR THE ACCURACY OR COMPLETENESS OF ELECTRONIC COPIES OF THIS PLAN SHEET.

Caltrans Metric

CONDUIT NOTES (TSO):

1. MDCS(8), 1 FO144, 1 OCC (TMS#1-TMS#2), 1 OCC (TEL-CEC), MT.
2. MDCS(8), 2 FO84, MT.
3. 53C, 2#6 (LTG-CKT B), 2#6 (LTG-CKT C), 2#8 (SIGN/SOFFIT), 2#4 (HUB-480 V).
4. 53C, 2#8 (LTG-CKT A), 2#8 (TMS#1).
5. MDCS(8), 2 FO84, 1 FO144, 1 OCC (TEL-CEC), MT.
6. 53C, 2#8 (LTG-CKT A), 2#6 (LTG-CKT B), 2#6 (LTG-CKT C), 2#8 (SIGN/SOFFIT), 2#4 (HUB-480 V).
7. MDCS(4), 1 FO12, 1 OCC (TMS#1-TMS#2), MT.
8. 53C, 2#8 (LTG-CKT A).
9. 53C, 1 FO12, 1 OCC (TMS#1-TMS#2).

NOTES (TSO):

1. RC EXISTING TYPE 30 ELECTROLIER.
2. RC EXISTING SIGN LIGHTING FIXUTRES AND EXISTING SIGN CONTROL ENCLOSURE.
3. FOR CIRCUIT CONTINUITY SEE TRAFFIC MONITORING STATION (LOCATION 1) ON SHEET E-14.
4. 6(E), EXTEND PULL BOX 50 mm (Min) BELOW THE BOTTOM OF CONDUIT. CONDUIT SHALL BE AT AN ANGLE OF 22.5°. PULL BOX COVER SHALL BE MARKED AS "FIBER OPTIC".
5. ALL PULL BOXES SHALL BE THE NON-PCC TYPE, UNLESS OTHERWISE NOTED.

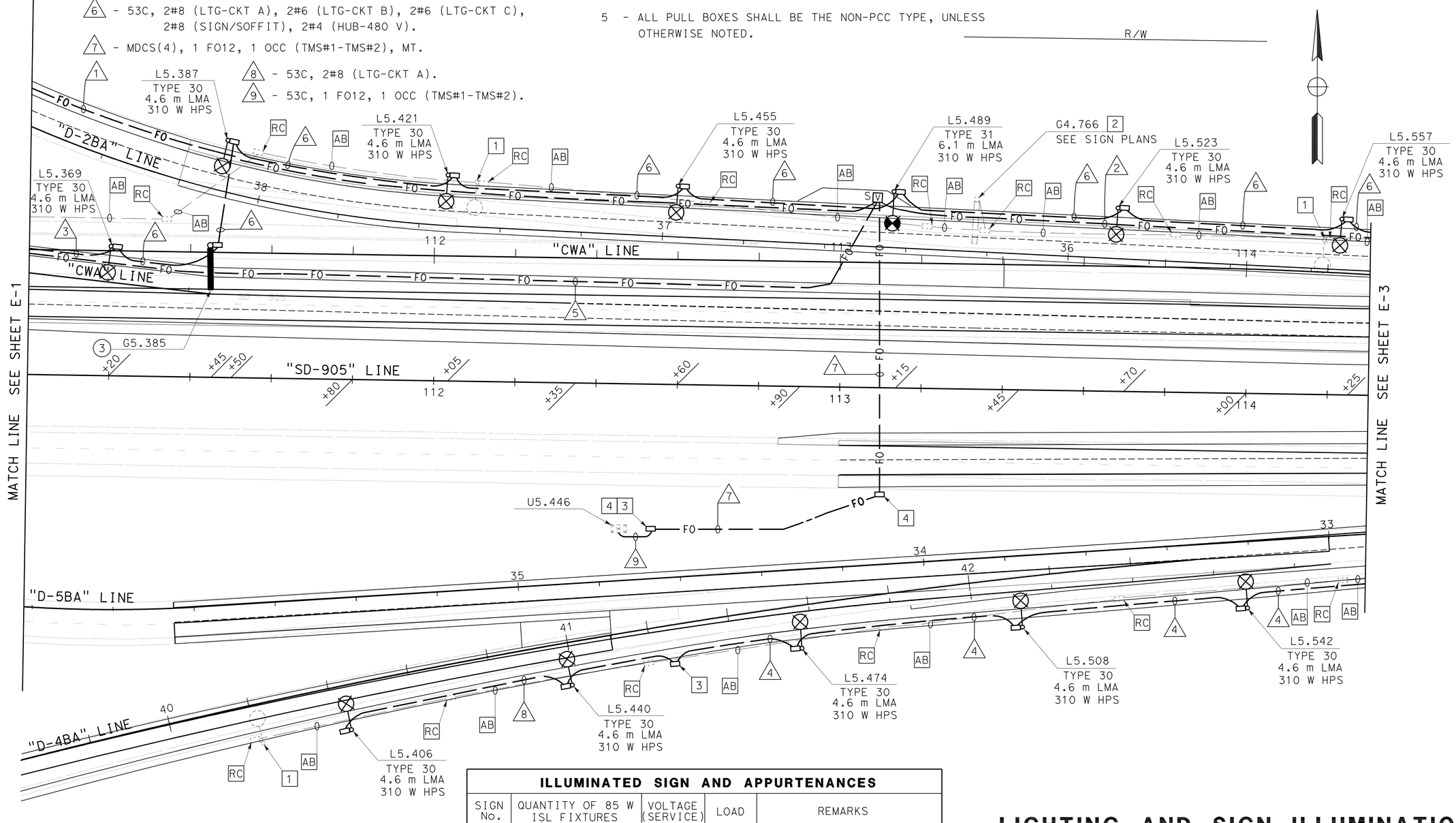

ILLUMINATED SIGN AND APPURTENANCES				
SIGN No.	QUANTITY OF 85 W ISL FIXTURES	VOLTAGE (SERVICE)	LOAD	REMARKS
3	2	480 V	174 W	SEE SHEET E-5 FOR SIGN CONTROL

LIGHTING AND SIGN ILLUMINATION FIBER OPTIC COMMUNICATION SYSTEM

SCALE 1:500

E-2

THIS PLAN IS ACCURATE FOR ELECTRICAL WORK ONLY.

ALL DIMENSIONS ARE IN METERS UNLESS OTHERWISE SHOWN.

STATE OF CALIFORNIA - DEPARTMENT OF TRANSPORTATION
Caltrans TRAFFIC ELECTRICAL

FUNCTIONAL SUPERVISOR: DALE WILSON
CALCULATED-DESIGNED BY: HENRY TSUI
CHECKED BY: ENRIQUE BERNAL
REVISED BY / DATE REVISED

LAST REVISION DATE PLOTTED => 21-OCT-2010
TIME PLOTTED => 07:47
06-25-10

Dist	COUNTY	ROUTE	KILOMETER POST TOTAL PROJECT	SHEET No.	TOTAL SHEETS
11	SD	905,805	R8.4/R9.8, 3.1/4.2	234	364

Caltrans Metric

Enrique P Bernal 07-29-10
REGISTERED ELECTRICAL ENGINEER DATE

10-18-10
PLANS APPROVAL DATE

REGISTERED PROFESSIONAL ENGINEER E.P.BERNAL No. 15675 Exp. 6-30-12 ELECTRICAL STATE OF CALIFORNIA

THE STATE OF CALIFORNIA OR ITS OFFICERS OR AGENTS SHALL NOT BE RESPONSIBLE FOR THE ACCURACY OR COMPLETENESS OF ELECTRONIC COPIES OF THIS PLAN SHEET.

CONDUIT NOTES (TSO):

1. - 53C, 2#8 (SIGN/SOFFIT).
2. - MDCS(8), 2 FO84, MT.
3. - 53C, 2#8 (SIGN/SOFFIT), 2#8 (CCTV#127).
4. - 53C, 2#8 (LTG-CKT A), 2#8 (TMS#1).
5. - 53C, 2#8 (LTG-CKT A), 2#8 (SIGN/SOFFIT), 2#8 (CCTV#127).
6. - 53C, 2#8 (LTG-CKT A), 2#6 (LTG-CKT B), 2#6 (LTG-CKT C), 2#8 (SIGN/SOFFIT), 2#4 (HUB-480 V).
7. - 53C, 2#8 (LTG-CKT A),2#6 (LTG-CKT B), 2#6 (LTG-CKT C), 2#8 (SIGN/SOFFIT), 2#4 (HUB-480 V), 2#8 (CCTV#127).
8. - MDCS(2), 1 FO12, MT.
9. - 78C, CAMERA CABLES. [4]
10. - 53C, 2#8 (CCTV#127-120 V).
11. - 53C, 2#8 (LTG-CKT A).
12. - 78C, 2#8 (LTG-CKT A), 2#6 (LTG-CKT B), 2#6 (LTG-CKT C), 2#8 (SIGN/SOFFIT), 2#4 (HUB-480 V), 2#8 (CCTV#127), 2#8 (TMS#1), 2#14 (PEU).
13. N C - Exist 41C, 2#2 (SERVICE DISCONNECT).
14. - 53C, 2#8 (LTG-CKT A), 2#8 (TMS#1), 2#14 (PEU).
15. - 53C, 2#2 (SERVICE DISCONNECT-REUSED)

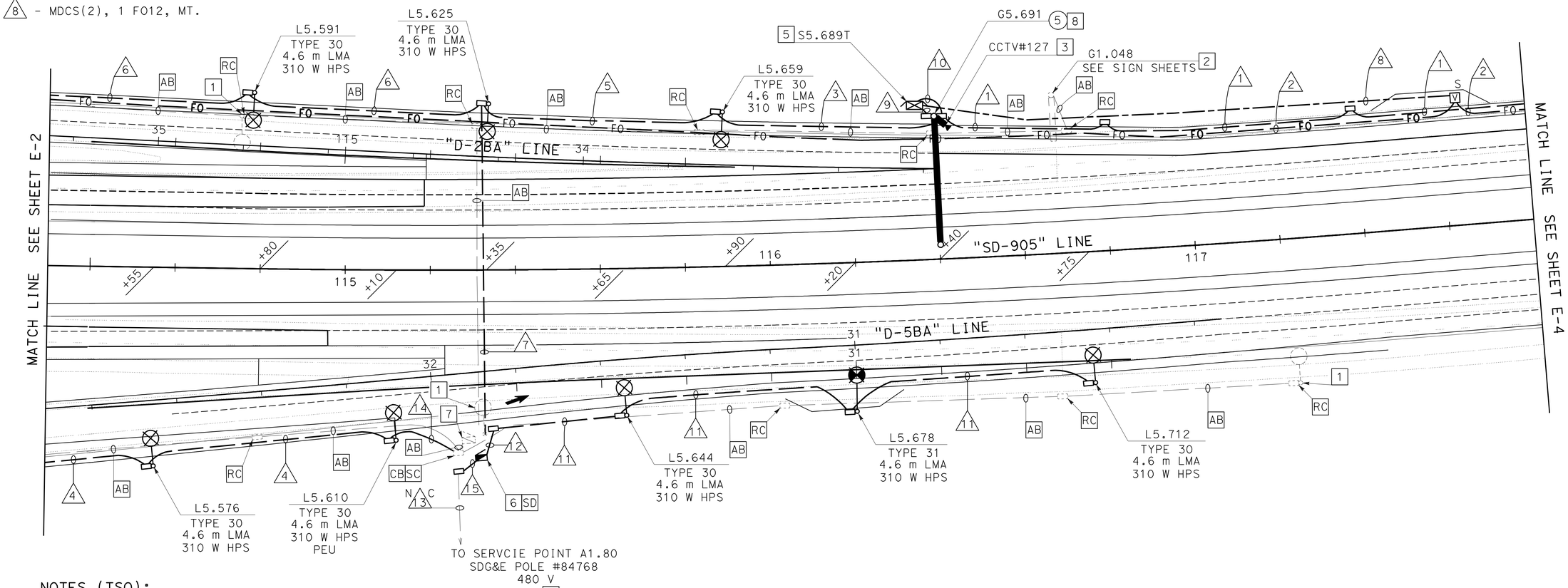

NOTES (TSO):

1. - RC EXISTING TYPE 30 ELECTROLIER.
2. - RC EXISTING SIGN LIGHTING FIXTURES AND EXISTING SIGN CONTROL ENCLOSURE.
3. - TYPE CCTV 10. SEE CCTV POLE DETAIL ON SHEET E-24.
4. - CAMERA CABLE. SEE DETAIL ON SHEET E-25.
5. - CCTV CABINET. SEE SHEET E-27 FOR DETAILS.
6. - TYPE III-C SERVICE EQUIPMENT ENCLOSURE. SEE WIRING DIAGRAM "MAIN" ON SHEET E-5.
7. - RC EXISTING CABINET. RR SERVICE CONDUCTORS. SEE CONDUIT NOTE 12.
8. - 53C AND 78C BETWEEN ADJACENT PULL BOX AND SIGN FOUNDATION.
9. - ALL PULL BOXES SHALL BE THE NON-PCC TYPE, UNLESS OTHERWISE NOTED.

ILLUMINATED SIGN AND APPURTENANCES				
SIGN No.	QUANTITY OF 85 W ISL FIXTURES	VOLTAGE (SERVICE)	LOAD	REMARKS
5	4	480 V	348 W	SEE SHEET E-5 FOR SIGN CONTROL

THIS PLAN IS ACCURATE FOR ELECTRICAL WORK ONLY.

ALL DIMENSIONS ARE IN METERS UNLESS OTHERWISE SHOWN.

LIGHTING AND SIGN ILLUMINATION
FIBER OPTIC COMMUNICATION SYSTEM

SCALE 1:500

E-3

STATE OF CALIFORNIA - DEPARTMENT OF TRANSPORTATION
Caltrans TRAFFIC ELECTRICAL

FUNCTIONAL SUPERVISOR: DALE WILSON
CALCULATED-DESIGNED BY: ENRIQUE BERNAL
CHECKED BY: HENRY TSUI
REVISED BY / DATE REVISED

LAST REVISION 06-25-10 | DATE PLOTTED => 25-OCT-2010 | TIME PLOTTED => 15:24

Dist	COUNTY	ROUTE	KILOMETER POST TOTAL PROJECT	SHEET No.	TOTAL SHEETS
11	SD	905,805	R8.4/R9.8, 3.1/4.2	235	364

Enrique P Bernal 07-29-10
REGISTERED ELECTRICAL ENGINEER DATE

10-18-10
PLANS APPROVAL DATE

REGISTERED PROFESSIONAL ENGINEER E.P.BERNAL No. 15675 Exp. 6-30-12 ELECTRICAL STATE OF CALIFORNIA

THE STATE OF CALIFORNIA OR ITS OFFICERS OR AGENTS SHALL NOT BE RESPONSIBLE FOR THE ACCURACY OR COMPLETENESS OF ELECTRONIC COPIES OF THIS PLAN SHEET.

Caltrans Metric

CONDUIT NOTES (TSO):

1 - 53C, 2#8 (SIGN/SOFFIT).

2 - MDCS(8), 2 FO84, MT.

NOTES (TSO):

1 - ALL PULL BOXES SHALL BE THE NON-PCC TYPE, UNLESS OTHERWISE NOTED.

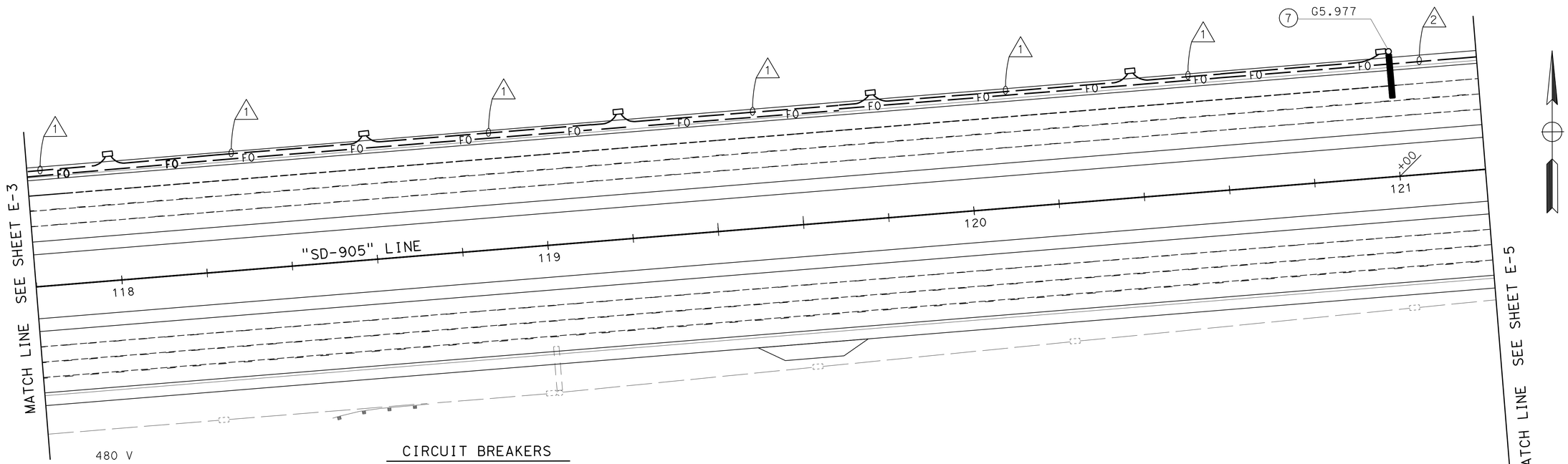

CIRCUIT BREAKERS

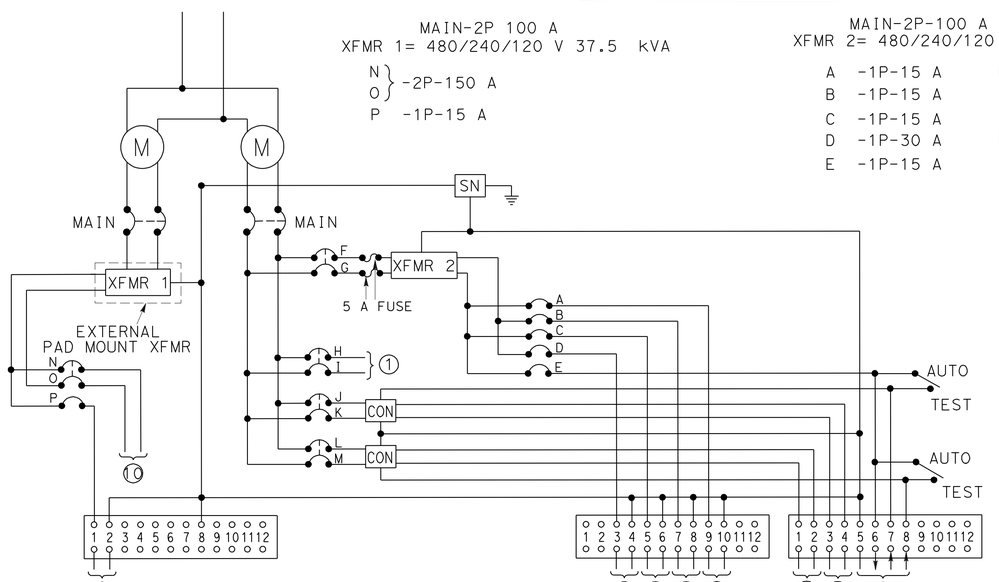

1 - SIGNAL
2 - CCTV#113
3 - TDC
4 - TMS#2
5 - MVDS
6 - LIGHTING
7 - SIGN/SOFFIT
8 - PEU
9 - CEC
10 - PUMP

WIRING DIAGRAM "DEL SOL"

TYPE III-CF SERVICE EQUIPMENT ENCLOSURE SEE RSP ES-2C AND RSP ES-2F

ILLUMINATED SIGN AND APPURTENANCES				
SIGN No.	QUANTITY OF 85 W ISL FIXTURES	VOLTAGE (SERVICE)	LOAD	REMARKS
7	2	480 V	174 W	SEE SHEET E-5 FOR SIGN CONTROL

LIGHTING AND SIGN ILLUMINATION
FIBER OPTIC COMMUNICATION SYSTEM

SCALE 1:500

E-4

THIS PLAN IS ACCURATE FOR ELECTRICAL WORK ONLY.

ALL DIMENSIONS ARE IN METERS UNLESS OTHERWISE SHOWN.

STATE OF CALIFORNIA - DEPARTMENT OF TRANSPORTATION
Caltrans TRAFFIC ELECTRICAL

FUNCTIONAL SUPERVISOR: DALE WILSON
CALCULATED-DESIGNED BY: HENRY TSUI
CHECKED BY: ENRIQUE BERNAL
REVISED BY
DATE REVISED

LAST REVISION 06-25-10
DATE PLOTTED => 21-OCT-2010
TIME PLOTTED => 07:47

Dist	COUNTY	ROUTE	KILOMETER POST TOTAL PROJECT	SHEET No.	TOTAL SHEETS
11	SD	905,805	R8.4/R9.8, 3.1/4.2	236	364

Caltrans Metric

Enrique P Bernal 07-29-10
REGISTERED ELECTRICAL ENGINEER — DATE

10-18-10
PLANS APPROVAL DATE

REGISTERED PROFESSIONAL ENGINEER E.P.BERNAL No. 15675 Exp. 6-30-12 ELECTRICAL STATE OF CALIFORNIA

THE STATE OF CALIFORNIA OR ITS OFFICERS OR AGENTS SHALL NOT BE RESPONSIBLE FOR THE ACCURACY OR COMPLETENESS OF ELECTRONIC COPIES OF THIS PLAN SHEET.

CIRCUIT BREAKERS

MAIN-2P-50 A
- A - 1P-15 A CB
- B - 1P-15 A CB
- C - 1P-15 A CB
- D, E - 2P-40 A CB

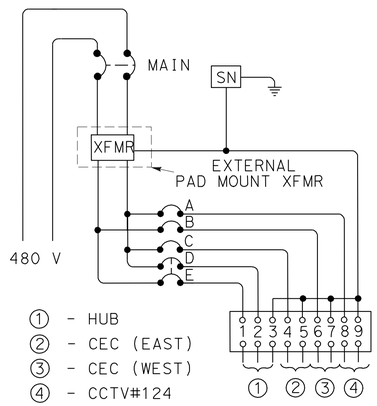

① - HUB
② - CEC (EAST)
③ - CEC (WEST)
④ - CCTV#124

XFMR = 480/240/120 V 10 kVA TRNSFORMER

WIRING DIAGRAM "HUB/CCTV#124"

TYPE III-BF SERVICE EQUIPMENT
ENCLOSURE SEE RSP ES-2C AND RSP ES-2E

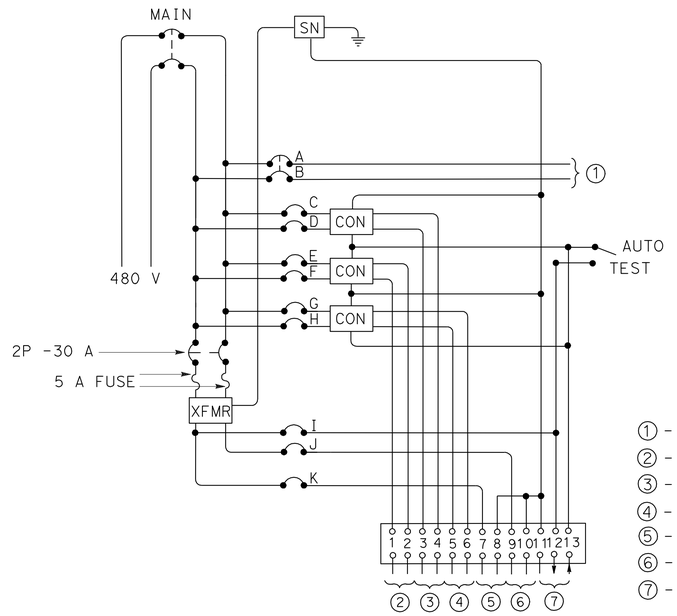

XFMR = 480/240/120 V 2 kVA TRNSFORMER

WIRING DIAGRAM "MAIN"

TYPE III-C SERVICE EQUIPMENT
ENCLOSURE SEE RSP ES-2C AND RSP ES-2F

CIRCUIT BREAKERS

MAIN-2P-100 A CB
- A, B - 2P-50 A CB
- C, D - 2P-30 A CB
- E, F - 2P-30 A CB
- G, H - 2P-30 A CB
- I - 1P-15 A CB
- J - 1P-15 A CB
- K - 2P-15 A CB

① - DISCONNECT (HUB)
② - LIGHTING (CKT-A)
③ - LIGHTING (CKT-B,CKT-C)
④ - SIGN/SOFFIT
⑤ - TMS#1
⑥ - CCTV (#127)
⑦ - PEU

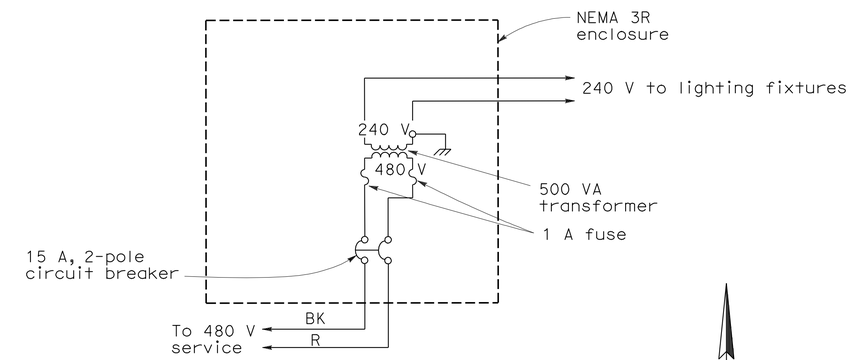

SIGN CONTROL

XFMR = 480/240 V 0.5 kVA TRANSFORMER
TERMINAL STRIP REQUIRED FOR WIRING TO FIXTURES

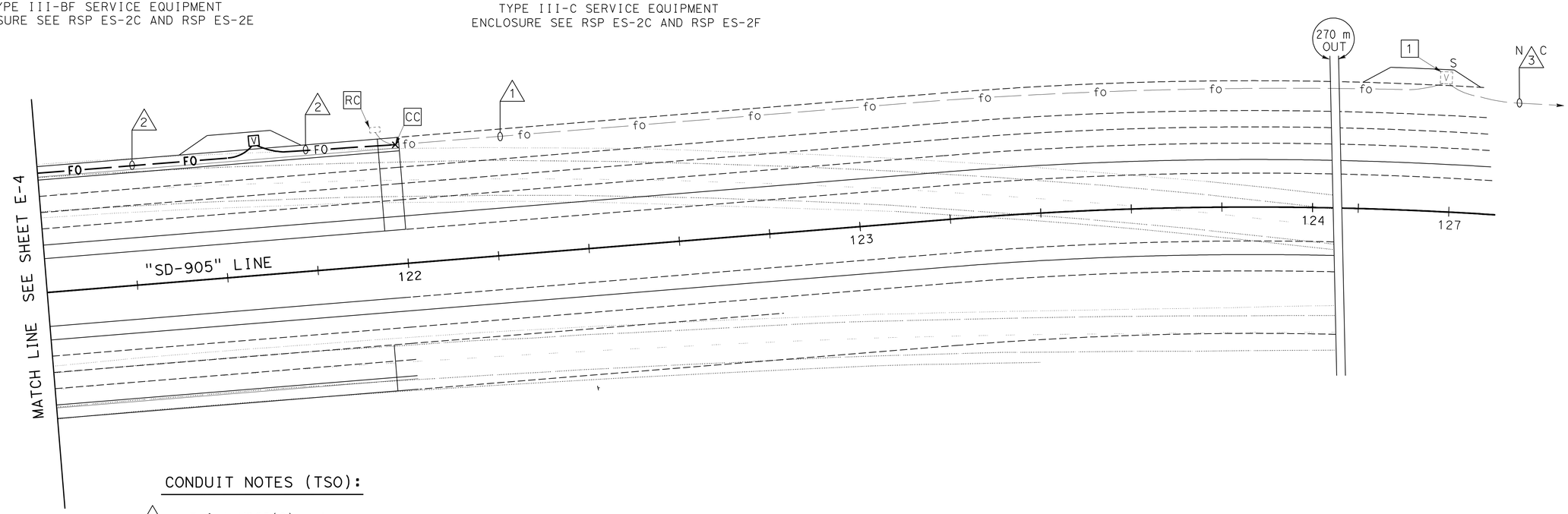

CONDUIT NOTES (TSO):

1 - Exist MDCS(8), mt.
ADD 2 FO84.

2 - MDCS(8), 2 FO84, MT.

N 3 C - Exist MDCS(8), 2 fo84, mt.

NOTES (TSO):

1 - PLACE SPLICE CLOSURE INSIDE OF EXISTING VAULT.

FIBER OPTIC COMMUNICATION SYSTEM

SCALE 1:500

E-5

THIS PLAN IS ACCURATE FOR ELECTRICAL WORK ONLY.

ALL DIMENSIONS ARE IN METERS UNLESS OTHERWISE SHOWN.

REVISED BY | DATE REVISED
HENRY TSUI | ENRIQUE BERNAL
CALCULATED-DESIGNED BY | CHECKED BY
FUNCTIONAL SUPERVISOR: DALE WILSON

STATE OF CALIFORNIA - DEPARTMENT OF TRANSPORTATION
Caltrans TRAFFIC ELECTRICAL

LAST REVISION 06-25-10 | DATE PLOTTED => 21-OCT-2010 | TIME PLOTTED => 07:47

Dist	COUNTY	ROUTE	KILOMETER POST TOTAL PROJECT	SHEET No.	TOTAL SHEETS
11	SD	905,805	R8.4/R9.8, 3.1/4.2	237	364

Enrique P Bernal 07-29-10
REGISTERED ELECTRICAL ENGINEER — DATE

10-18-10
PLANS APPROVAL DATE

REGISTERED PROFESSIONAL ENGINEER E.P.BERNAL No. 15675 Exp. 6-30-12 ELECTRICAL STATE OF CALIFORNIA

THE STATE OF CALIFORNIA OR ITS OFFICERS OR AGENTS SHALL NOT BE RESPONSIBLE FOR THE ACCURACY OR COMPLETENESS OF ELECTRONIC COPIES OF THIS PLAN SHEET.

Caltrans Metric

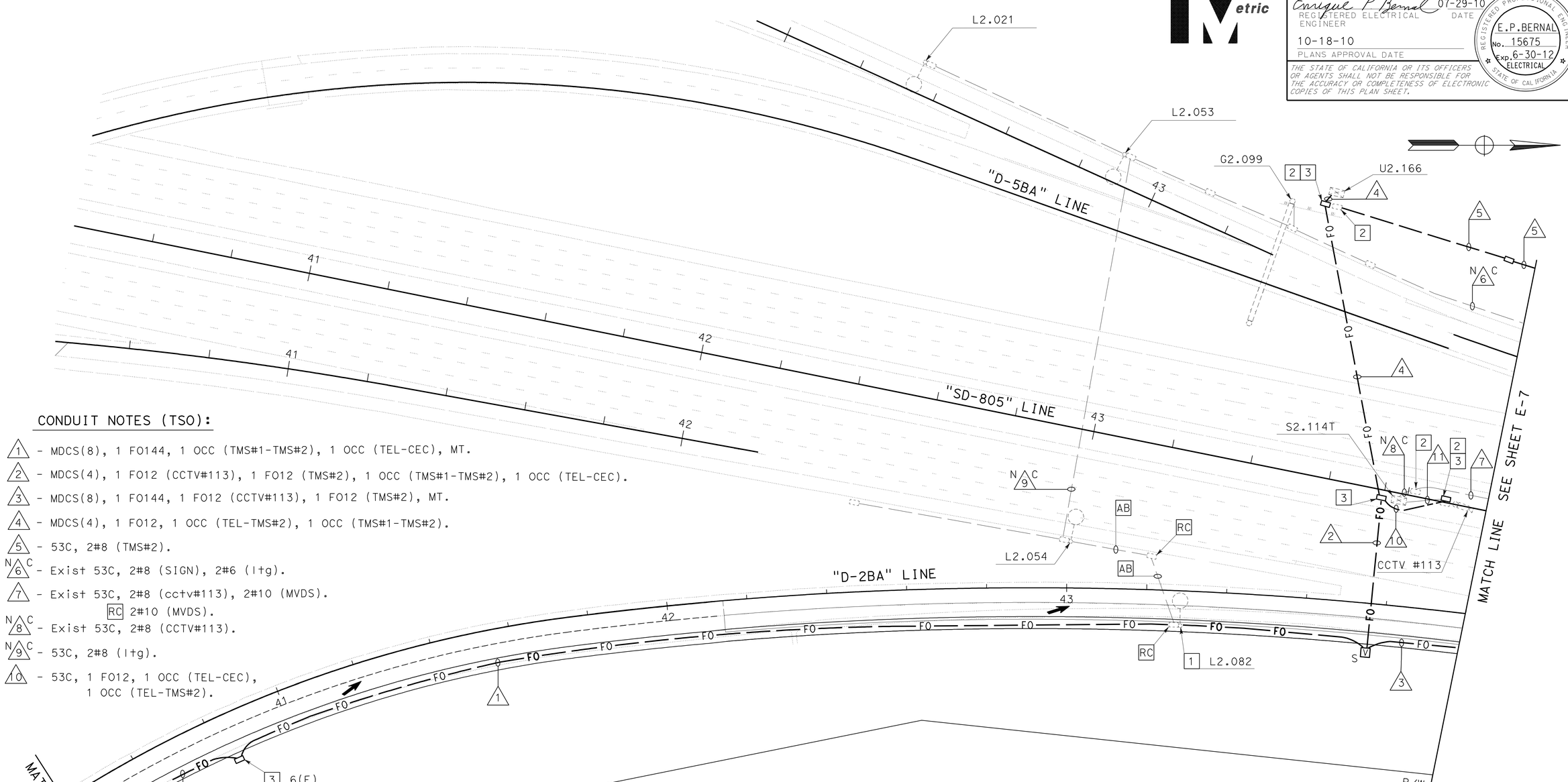

CONDUIT NOTES (TSO):

1 - MDCS(8), 1 FO144, 1 OCC (TMS#1-TMS#2), 1 OCC (TEL-CEC), MT.

2 - MDCS(4), 1 FO12 (CCTV#113), 1 FO12 (TMS#2), 1 OCC (TMS#1-TMS#2), 1 OCC (TEL-CEC).

3 - MDCS(8), 1 FO144, 1 FO12 (CCTV#113), 1 FO12 (TMS#2), MT.

4 - MDCS(4), 1 FO12, 1 OCC (TEL-TMS#2), 1 OCC (TMS#1-TMS#2).

5 - 53C, 2#8 (TMS#2).

N 6 C - Exist 53C, 2#8 (SIGN), 2#6 (ltg).

7 - Exist 53C, 2#8 (cctv#113), 2#10 (MVDS).
RC 2#10 (MVDS).

N 8 C - Exist 53C, 2#8 (CCTV#113).

N 9 C - 53C, 2#8 (ltg).

10 - 53C, 1 FO12, 1 OCC (TEL-CEC),
1 OCC (TEL-TMS#2).

11 - Exist 78C, 1 CAMERA CABLE, 1 OCC (TEL).
RC 1 OCC.
ADD 1 FO12.

NOTES (TSO):

1 - RC EXISTING TYPE 31 ELECTROLIER.

2 - FOR CIRCUIT CONTINUITY SEE TRAFFIC MONITORING STATION (LOCATION 2) ON SHEET E-15.

3 - 6(E), EXTEND PULL BOX 50 mm (Min) BELOW BOTTOM OF CONDUIT. CONDUIT BENDS SHALL BE AT AN ANGLE OF 22.5°. PULL BOX SHALL BE MAKED AS "FIBER OPTIC".

4 - ALL PULL BOXES SHALL BE THE NON-PCC TYPE, UNLESS OTHERWISE NOTED.

THIS PLAN IS ACCURATE FOR ELECTRICAL WORK ONLY.

ALL DIMENSIONS ARE IN METERS UNLESS OTHERWISE SHOWN.

LIGHTING AND SIGN ILLUMINATION
FIBER OPTIC COMMUNICATION SYSTEM

SCALE 1:500

E-6

REVISED BY | DATE REVISED
HENRY TSUI | ENRIQUE BERNAL
CALCULATED-DESIGNED BY | CHECKED BY
FUNCTIONAL SUPERVISOR | DALE WILSON

STATE OF CALIFORNIA - DEPARTMENT OF TRANSPORTATION
Caltrans TRAFFIC ELECTRICAL

LAST REVISION 06-25-10 | DATE PLOTTED => 21-OCT-2010 | TIME PLOTTED => 07:44

Dist	COUNTY	ROUTE	KILOMETER POST TOTAL PROJECT	SHEET No.	TOTAL SHEETS
11	SD	905,805	R8.4/R9.8, 3.1/4.2	238	364

Enrique P Bernal 07-29-10
REGISTERED ELECTRICAL ENGINEER DATE

10-18-10
PLANS APPROVAL DATE

REGISTERED PROFESSIONAL ENGINEER E.P.BERNAL No. 15675 Exp. 6-30-12 ELECTRICAL STATE OF CALIFORNIA

THE STATE OF CALIFORNIA OR ITS OFFICERS OR AGENTS SHALL NOT BE RESPONSIBLE FOR THE ACCURACY OR COMPLETENESS OF ELECTRONIC COPIES OF THIS PLAN SHEET.

Caltrans Metric

CONDUIT NOTES (TSO):

1 - MDCS(8), 1 FO144, MT.

2 - 53C, 2#8 (LTG), 2#8 (SIGN), 2#8 (MVDS).

3 - MDCS(8), 1 FO144, 1 FO12 (CCTV#113), 1 FO12 (TMS#2), MT.

4 - 53C, 2#8 (LTG).

5 - 53C, 2#8 (TMS#2).

N C 6 - Exist 41C, 2#8 (SIGN), 2#6 (ltg).

7 - Exist 53C, 2#8 (cctv#113), 2#10 (MVDS).
RC 2#10 (MVDS).

8 - 78C, CONDUCTORS BY SDG&E.

N C 9 - Exist 41C, 2#8 (SIGN/SOFFIT).

10 - 53C, 2#8 (LTG), 2#8 (SIGN), 2#8 (MVDS), 4#14 (PEU).

11 - 53C, 2#8 (SIGN).

12 - 53C, 2#8 (CCTV#113), 2#10 (TDC), 2#10 (CEC), 3#1/0(PUMP), 2#8 (TMS#2).

13 - 53C, 3#1/0 (PUMP).

14 - 53C, 2#10 (CEC).

15 - Exist 53C, 2#8 (cctv#113), 2#10 (MVDS).
RC 2#10 (MVDS).
ADD 2#10 (CEC), 3#1/0 (PUMP), 2#8 (TMS#2).

N C 16 - Exist 41C, 2#10 (tdc).

17 - 53C, 2#6 (XMFR-480 V), 3#1/0 (XMFR-120/240 V).

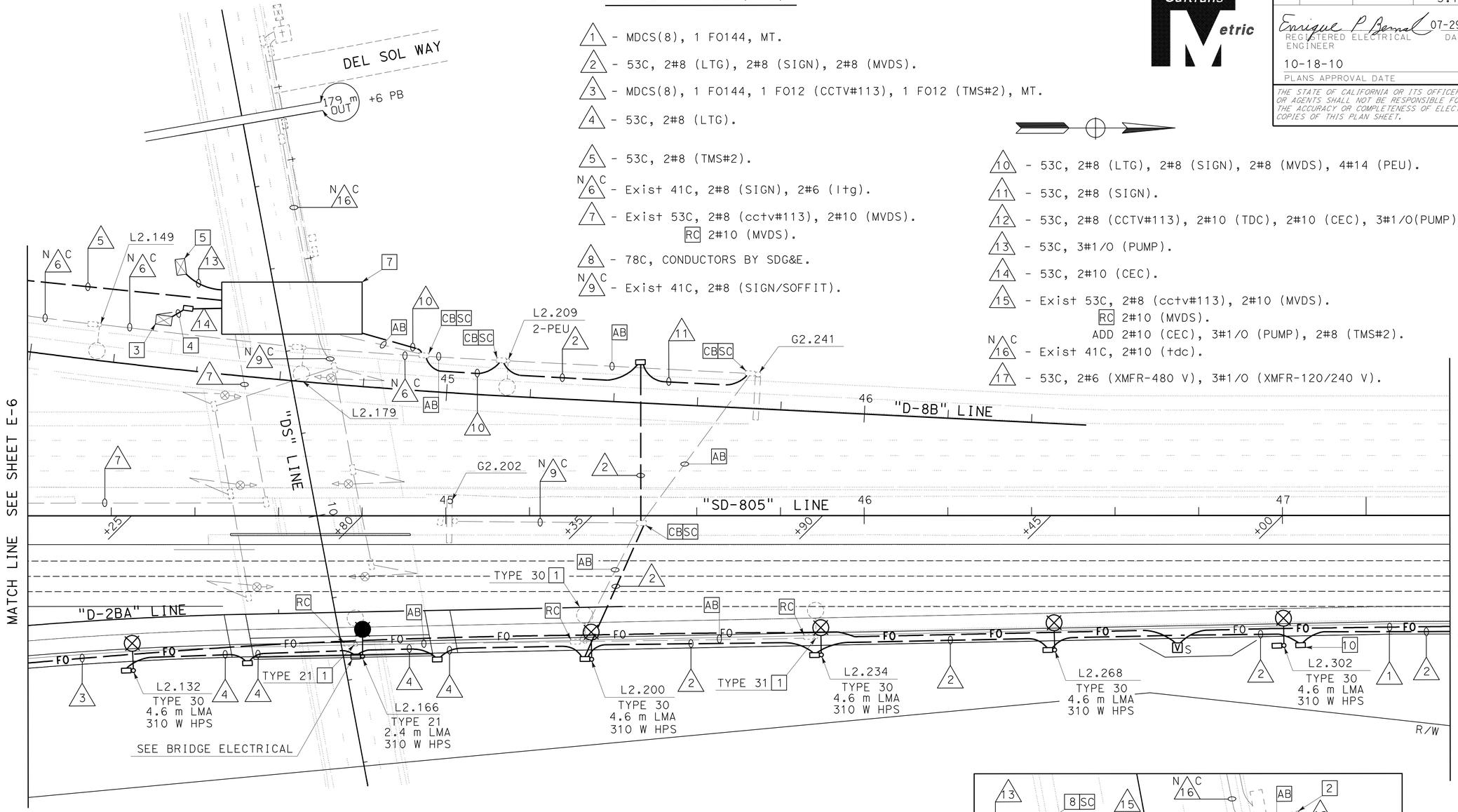

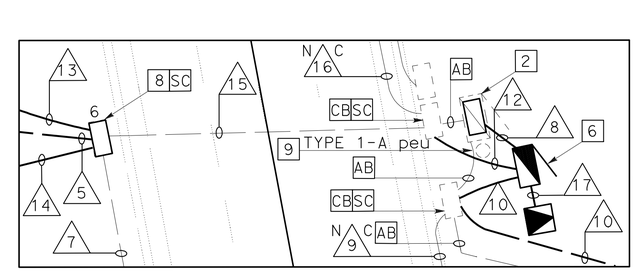

DETAIL "A"

NOTES(TSO):

1 - RC EXISTING ELECTROLIER.

2 - RC EXISTING TYPE III SERVICE CABINET AND REPLACE WITH PULL BOX.

3 - CEC PER LANDSCAPE DETAILS. CONNECT 2#10 (CEC).

4 - CONDUIT PER LANDSCAPE DETAILS. INSTALL 2#10 (CEC).

5 - BOOSTER PUMP PER LANDSCAPE DETAILS. CONNECT 3#1/0 (PUMP).

6 - TYPE III-C SERVICE EQUIPMENT ENCLOSURE.
SEE WIRING DIAGRAM "DEL SOL" ON SHEET E-4.

7 - SEE DETAIL "A" ON THIS SHEET.

8 - RC PULL BOX AND REEPLACE WITH No. 6 PULL BOX.

9 - RC TYPE 1-A.

10 - 6(E), EXTEND PULL BOX 50 mm (Min) BELOW THE BOTTOM OF CONDUIT.
CONDUIT SHALL BE AT AN ANGLE OF 22.5° . PULL BOX SHALL BE MARKED AS "FIBER OPTIC".

11 - ALL PULL BOXES SHALL BE THE NON-PCC TYPE, UNLESS OTHERWISE NOTED.

THIS PLAN IS ACCURATE FOR ELECTRICAL WORK ONLY.

ALL DIMENSIONS ARE IN METERS UNLESS OTHERWISE SHOWN.

LIGHTING AND SIGN ILLUMINATION
FIBER OPTIC COMMUNICATION SYSTEM

SCALE 1:500

E-7

STATE OF CALIFORNIA - DEPARTMENT OF TRANSPORTATION
Caltrans TRAFFIC ELECTRICAL

FUNCTIONAL SUPERVISOR: DALE WILSON
CALCULATED-DESIGNED BY: HENRY TSUI
CHECKED BY: ENRIQUE BERNAL
REVISED BY / DATE REVISED

LAST REVISION 06-25-10 | DATE PLOTTED => 21-OCT-2010 | TIME PLOTTED => 07:44

Dist	COUNTY	ROUTE	KILOMETER POST TOTAL PROJECT	SHEET No.	TOTAL SHEETS
11	SD	905,805	R8.4/R9.8, 3.1/4.2	239	364

Enrique P Bernal 07-29-10
REGISTERED ELECTRICAL ENGINEER DATE

10-18-10
PLANS APPROVAL DATE

REGISTERED PROFESSIONAL ENGINEER E.P.BERNAL No. 15675 Exp. 6-30-12 ELECTRICAL STATE OF CALIFORNIA

THE STATE OF CALIFORNIA OR ITS OFFICERS OR AGENTS SHALL NOT BE RESPONSIBLE FOR THE ACCURACY OR COMPLETENESS OF ELECTRONIC COPIES OF THIS PLAN SHEET.

Caltrans Metric

CONDUIT NOTES (TSO):

1. MDCS(8), 1 F0144, MT.
2. 53C, 2#8 (LTG), 2#8 (SIGN), 2#8 (MVDS).
3. 53C, 2#8 (LTG).
4. MDCS(2), 1 F012.
5. 53C, 2#8 (MVDS).
6. 53C, 2#8 (LTG), 2#8 (MVDS).

NOTES(TSO):

1. RL Exist TYPE VDS 35 AND MVDS UNIT.
2. RS SOLAR, BATTERY, AND WIRELESS EQUIPMENT. INSTALL NEW EQUIPMENT. SEE EQUIMENT LAYOUT ON SHEET E-17.
3. RS SOLAR PANEL AND MOUNTING ASSEMBLY.
4. RELOCATED TYPE VDS 35 AND MVDS UNIT. INSTALL POLE 9 m FROM ETW. SEE SEET E-18 FOR FOUNDATION DETAILS.
5. 6(E), EXTEND PULL BOX 50 mm (Min) BELOW THE BOTTOM OF CONDUIT. CONDUIT SHALL BE AT AN ANGLE OF 22.5°. PULL BOX SHALL BE MARKED AS "FIBER OPTIC".
6. RECALIBRATE MVDS UNITS TO DETECT TRAFFIC LANES WITHIN THESE ZONES.
7. ALL PULL BOXES SHALL BE THE NON-PCC TYPE, UNLESS OTHERWISE NOTED.

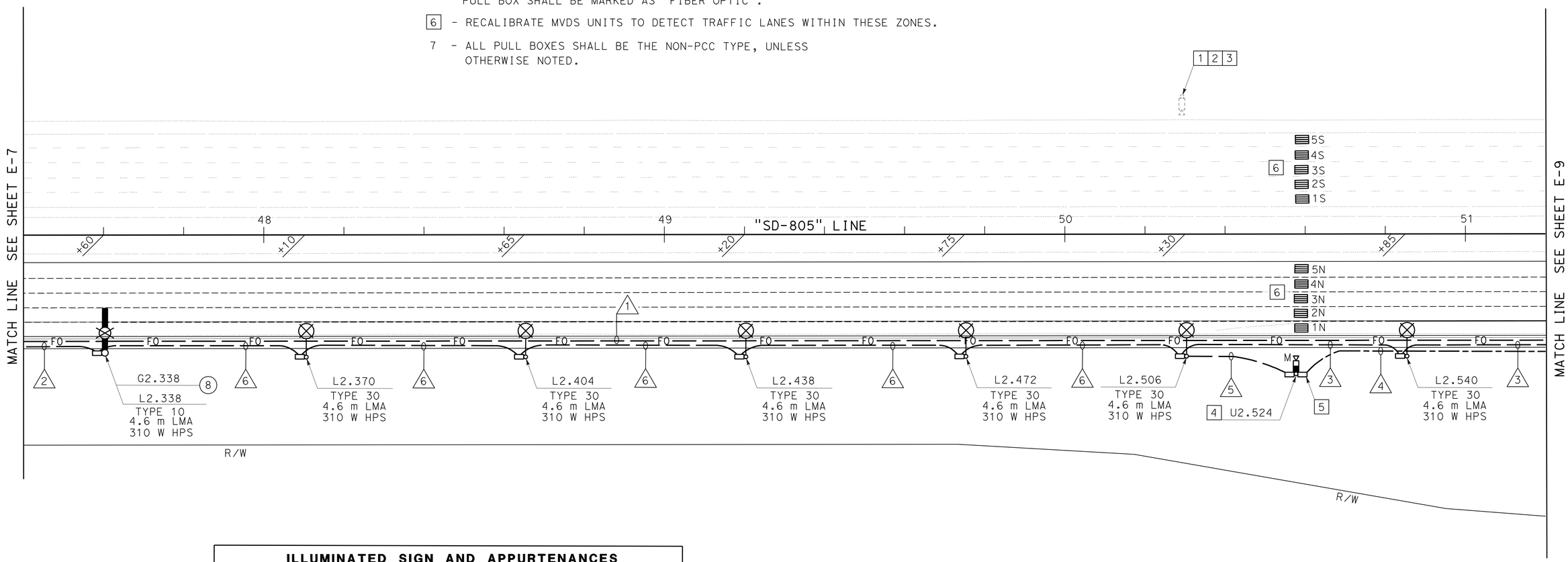

ILLUMINATED SIGN AND APPURTENANCES				
SIGN No.	QUANTITY OF 85 W ISL FIXTURES	VOLTAGE (SERVICE)	LOAD	REMARKS
8	2	480 V	174 W	SEE SHEET E-5 FOR SIGN CONTROL

TRAFFIC MONITORING STATION (LOCATION 3)
LIGHTING AND SIGN ILLUMINATION
FIBER OPTIC COMMUNICATION SYSTEM

SCALE 1:500

E-8

THIS PLAN IS ACCURATE FOR ELECTRICAL WORK ONLY.

ALL DIMENSIONS ARE IN METERS UNLESS OTHERWISE SHOWN.

STATE OF CALIFORNIA - DEPARTMENT OF TRANSPORTATION
Caltrans TRAFFIC ELECTRICAL

FUNCTIONAL SUPERVISOR: DALE WILSON
CALCULATED-DESIGNED BY: ENRIQUE BERNAL
CHECKED BY: HENRY TSUI
REVISED BY / DATE REVISED

LAST REVISION 06-25-10 | DATE PLOTTED => 21-OCT-2010 | TIME PLOTTED => 07:44

Dist	COUNTY	ROUTE	KILOMETER POST TOTAL PROJECT	SHEET No.	TOTAL SHEETS
11	SD	905,805	R8.4/R9.8, 3.1/4.2	240	364

Enrique P Bernal 07-29-10
REGISTERED ELECTRICAL ENGINEER DATE

10-18-10
PLANS APPROVAL DATE

REGISTERED PROFESSIONAL ENGINEER E.P.BERNAL No. 15675 Exp. 6-30-12 ELECTRICAL STATE OF CALIFORNIA

THE STATE OF CALIFORNIA OR ITS OFFICERS OR AGENTS SHALL NOT BE RESPONSIBLE FOR THE ACCURACY OR COMPLETENESS OF ELECTRONIC COPIES OF THIS PLAN SHEET.

Caltrans Metric

CONDUIT NOTES (TSO):

1 - MDCS(8), 1 FO144, MT.

2 - MDCS(8), 1 FO144, 1 FO12, MT.

3 - 53C, 2#8 (LTG).

4 - MDCS(2), 1 FO12.

N C 5 - Exist 41C, 2#8 (Ltg).

NOTES (TSO):

1 - RC EXISTING SIGN LIGHITNG FIXUTURE AND EXISTING SIGN CONTROL ENCLOSURE.

2 - CONDUIT SHALL BE PLACED BY JACK/DRILLING METHOD.

3 - 6(E), EXTEND PULL BOX 50 mm (Min) BELOW THE BOTTOM OF CONDUIT. CONDUIT SHALL BE AT AN ANGLE OF 22.5°. PULL BOX COVER SHALL BE MARKED AS "FIBER OPTIC".

4 - ALL PULL BOXES SHALL BE THE NON-PCC TYPE, UNLESS OTHERWISE NOTED.

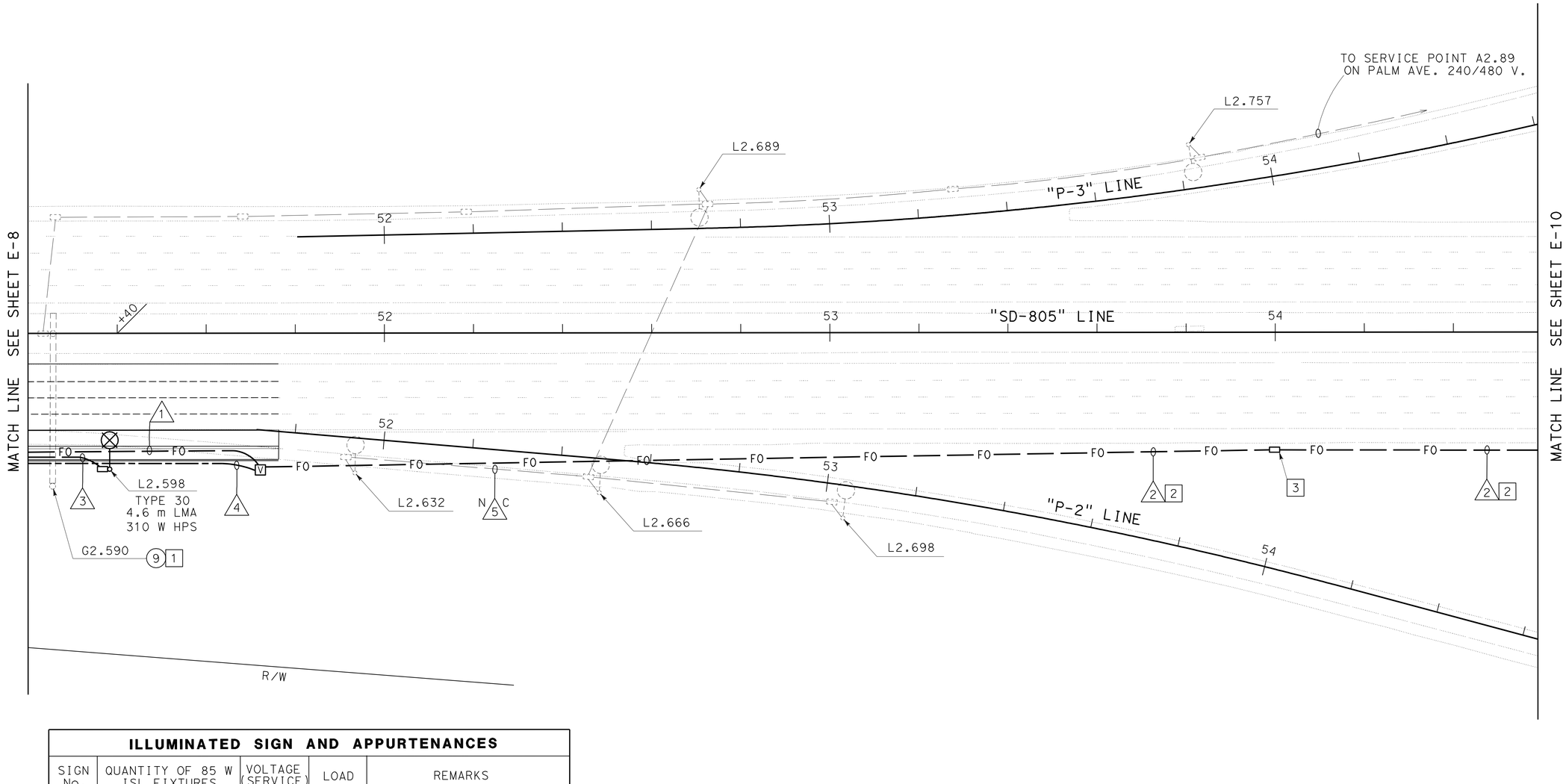

ILLUMINATED SIGN AND APPURTENANCES				
SIGN No.	QUANTITY OF 85 W ISL FIXTURES	VOLTAGE (SERVICE)	LOAD	REMARKS
9	4	480 V	348 W	SEE SHEET E-5 FOR SIGN CONTROL

LIGHTING AND SIGN ILLUMINATION
FIBER OPTIC COMMUNICATION SYSTEM

SCALE 1:500

E-9

THIS PLAN IS ACCURATE FOR ELECTRICAL WORK ONLY.

ALL DIMENSIONS ARE IN METERS UNLESS OTHERWISE SHOWN.

STATE OF CALIFORNIA - DEPARTMENT OF TRANSPORTATION
Caltrans TRAFFIC ELECTRICAL

FUNCTIONAL SUPERVISOR: DALE WILSON
CALCULATED-DESIGNED BY: HENRY TSUI
CHECKED BY: ENRIQUE BERNAL
REVISED BY / DATE REVISED

LAST REVISION 06-25-10
DATE PLOTTED => 21-OCT-2010
TIME PLOTTED => 07:44

Dist	COUNTY	ROUTE	KILOMETER POST TOTAL PROJECT	SHEET No.	TOTAL SHEETS
11	SD	905,805	R8.4/R9.8, 3.1/4.2	241	364

Caltrans Metric

Enrique P Bernal 07-29-10
REGISTERED ELECTRICAL ENGINEER — DATE

10-18-10
PLANS APPROVAL DATE

REGISTERED PROFESSIONAL ENGINEER E.P.BERNAL No. 15675 Exp. 6-30-12 ELECTRICAL STATE OF CALIFORNIA

THE STATE OF CALIFORNIA OR ITS OFFICERS OR AGENTS SHALL NOT BE RESPONSIBLE FOR THE ACCURACY OR COMPLETENESS OF ELECTRONIC COPIES OF THIS PLAN SHEET.

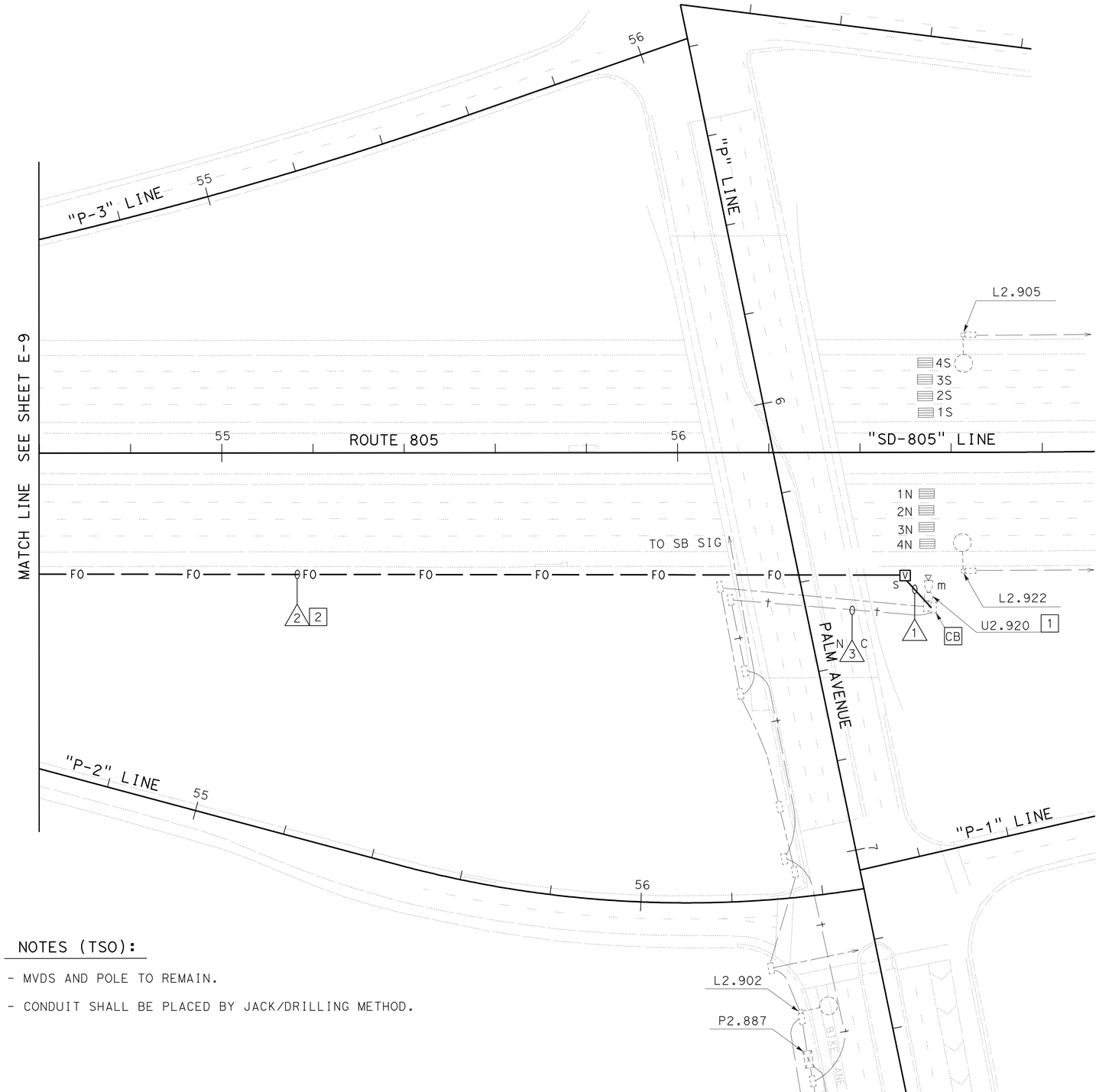

CONDUIT NOTES (TSO):

1 - 53C, 1 FO12.

2 - MDCS(8), 1 FO144, 1 FO12, MT.

N 3 C - Exist 53C, 1 OCC.

NOTES (TSO):

1 - MVDS AND POLE TO REMAIN.

2 - CONDUIT SHALL BE PLACED BY JACK/DRILLING METHOD.

THIS PLAN IS ACCURATE FOR ELECTRICAL WORK ONLY.

ALL DIMENSIONS ARE IN METERS UNLESS OTHERWISE SHOWN.

FIBER OPTIC COMMUNICATION SYSTEM

SCALE 1:500

E-10

STATE OF CALIFORNIA - DEPARTMENT OF TRANSPORTATION
Caltrans TRAFFIC ELECTRICAL

FUNCTIONAL SUPERVISOR: DALE WILSON
CALCULATED-DESIGNED BY: HENRY TSUI
CHECKED BY: ENRIQUE BERNAL
REVISED BY / DATE REVISED

LAST REVISION 06-25-10 | DATE PLOTTED => 21-OCT-2010 | TIME PLOTTED => 07:44

Dist	COUNTY	ROUTE	KILOMETER POST TOTAL PROJECT	SHEET No.	TOTAL SHEETS
11	SD	905,805	R8.4/R9.8, 3.1/4.2	242	364

Caltrans Metric

Enrique P Bernal 07-29-10
REGISTERED ELECTRICAL ENGINEER DATE

10-18-10
PLANS APPROVAL DATE

REGISTERED PROFESSIONAL ENGINEER E.P.BERNAL No. 15675 Exp. 6-30-12 ELECTRICAL STATE OF CALIFORNIA

THE STATE OF CALIFORNIA OR ITS OFFICERS OR AGENTS SHALL NOT BE RESPONSIBLE FOR THE ACCURACY OR COMPLETENESS OF ELECTRONIC COPIES OF THIS PLAN SHEET.

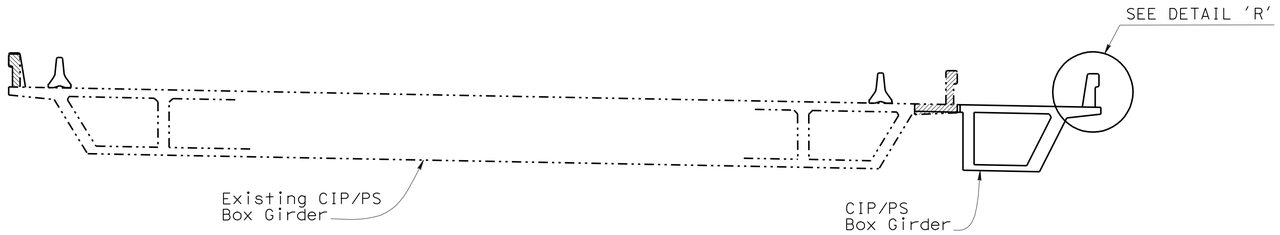

TYPICAL SECTION

NO SCALE

CONDUIT NOTES:

1. - 53C, (SEE LIGHTING AND SIGN ILLUMINATION)
2. - MDCS(8), (SEE FIBER OPTIC COMMUNICATION SYSTEM)

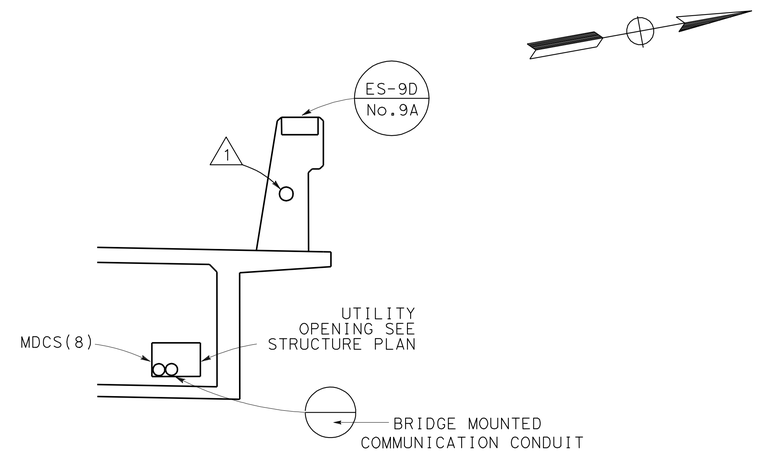

DETAIL "R"

(Typ)

NO SCALE

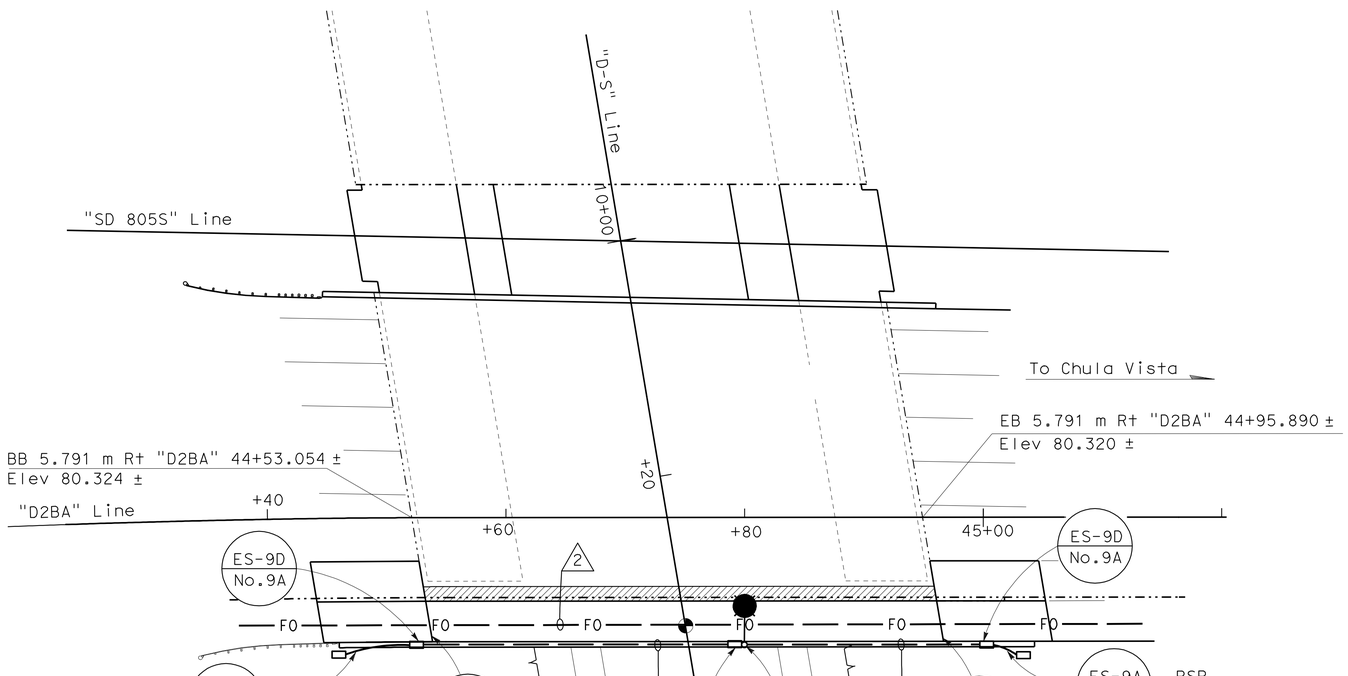

PLAN

NO SCALE

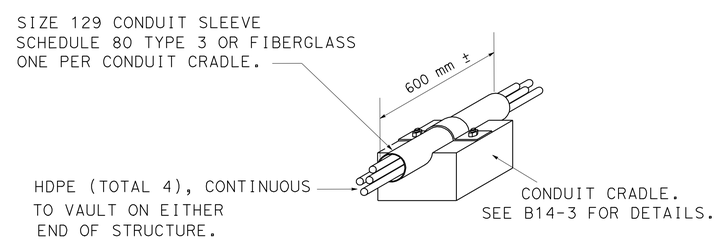

BRIDGE MOUNTED COMMUNICATION CONDUIT

NO SCALE

BRIDGE No. 57-0854R
DEL SOL Blvd UNDERCROSSING

BRIDGE ELECTRICAL (GENERAL)

SCALE 1:500

E-11

THIS PLAN IS ACCURATE FOR ELECTRICAL WORK ONLY.

ALL DIMENSIONS ARE IN METERS UNLESS OTHERWISE SHOWN.

STATE OF CALIFORNIA - DEPARTMENT OF TRANSPORTATION
Caltrans TRAFFIC ELECTRICAL

FUNCTIONAL SUPERVISOR: DALE WILSON
CALCULATED-DESIGNED BY: HENRY TSUI
CHECKED BY: ENRIQUE BERNAL
REVISED BY / DATE REVISED

LAST REVISION 06-25-10 | DATE PLOTTED => 21-OCT-2010 | TIME PLOTTED => 13:45

Dist	COUNTY	ROUTE	POST MILES TOTAL PROJECT	SHEET No.	TOTAL SHEETS
11	SD	905,805	R8.4/R9.8, 3.1/4.2	243	364

Caltrans Metric

Enrique P. Bernal 07-29-10
REGISTERED ELECTRICAL ENGINEER DATE

10-18-10
PLANS APPROVAL DATE

REGISTERED PROFESSIONAL ENGINEER
E.P.BERNAL
No. 15675
Exp. 6-30-12
ELECTRICAL
STATE OF CALIFORNIA

THE STATE OF CALIFORNIA OR ITS OFFICERS OR AGENTS SHALL NOT BE RESPONSIBLE FOR THE ACCURACY OR COMPLETENESS OF SCANNED COPIES OF THIS PLAN SHEET.

INTENTIONALLY LEFT BLANK

ELECTRICAL DETAILS

E-12

STATE OF CALIFORNIA - DEPARTMENT OF TRANSPORTATION
Caltrans

FUNCTIONAL SUPERVISOR: DALE WILSON

CALCULATED-DESIGNED BY: HENRY TSUI
CHECKED BY: ENRIQUE BERNAL

REVISED BY
DATE REVISED

LAST REVISION 06-25-10
DATE PLOTTED => 21-OCT-2010
TIME PLOTTED => 07:44

Dist	COUNTY	ROUTE	KILOMETER POST TOTAL PROJECT	SHEET No.	TOTAL SHEETS
11	SD	905,805	R8.4/R9.8, 3.1/4.2	244	364

Caltrans Metric

Enrique P Bernal 07-29-10
REGISTERED ELECTRICAL ENGINEER DATE

10-18-10
PLANS APPROVAL DATE

REGISTERED PROFESSIONAL ENGINEER E.P.BERNAL No. 15675 Exp. 6-30-12 ELECTRICAL STATE OF CALIFORNIA

THE STATE OF CALIFORNIA OR ITS OFFICERS OR AGENTS SHALL NOT BE RESPONSIBLE FOR THE ACCURACY OR COMPLETENESS OF ELECTRONIC COPIES OF THIS PLAN SHEET.

NOTES:

1 - RC ALL EXISTING PULL BOX AND AB ALL EXISTING CONDUIT.

2 - AB ALL EXISTING LOOPS.

3 - RC EXISTING CABINET AND APPURTENANCES.

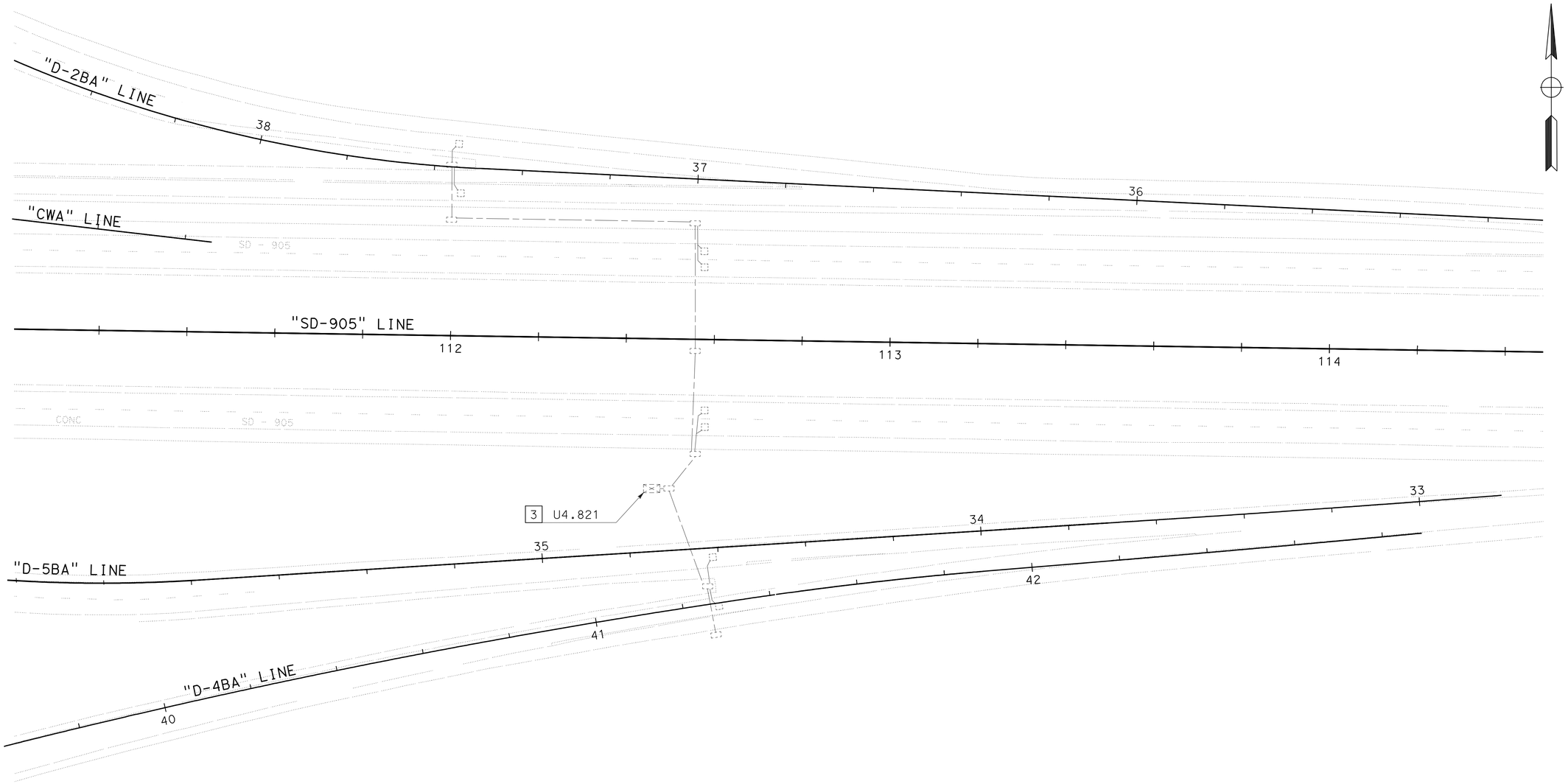

TRAFFIC MONITORING STATION (LOCATION 1)

EXISTING AND REMOVE

SCALE 1:500

E-13

THIS PLAN IS ACCURATE FOR ELECTRICAL WORK ONLY.

ALL DIMENSIONS ARE IN METERS UNLESS OTHERWISE SHOWN.

STATE OF CALIFORNIA - DEPARTMENT OF TRANSPORTATION

Caltrans TRAFFIC ELECTRICAL

FUNCTIONAL SUPERVISOR: DALE WILSON

CALCULATED-DESIGNED BY: HENRY TSUI

CHECKED BY: ENRIQUE BERNAL

REVISED BY / DATE REVISED

LAST REVISION 06-25-10

DATE PLOTTED => 21-OCT-2010

TIME PLOTTED => 07:44

Dist	COUNTY	ROUTE	KILOMETER POST TOTAL PROJECT	SHEET No.	TOTAL SHEETS
11	SD	905,805	R8.4/R9.8, 3.1/4.2	245	364

Enrique P Bernal 07-29-10
REGISTERED ELECTRICAL ENGINEER — DATE

10-18-10
PLANS APPROVAL DATE

REGISTERED PROFESSIONAL ENGINEER E.P.BERNAL No. 15675 Exp. 6-30-12 ELECTRICAL STATE OF CALIFORNIA

THE STATE OF CALIFORNIA OR ITS OFFICERS OR AGENTS SHALL NOT BE RESPONSIBLE FOR THE ACCURACY OR COMPLETENESS OF ELECTRONIC COPIES OF THIS PLAN SHEET.

Caltrans Metric

CONDUIT NOTES:

1. 53C, 2#8 (TMS#1).
2. 53C, 2 DLC, 2 TRANSMISSION CABLE.
3. 53C, 4 DLC, 4 TRANSMISSION CABLE.
4. 78C, 6 DLC, 6 TRANSMISSION CABLE.
5. 78C, 10 DLC, 10 TRANSMISSION CABLE.
6. 78C, 12 DLC, 12 TRANSMISSION CABLE.
7. 78C, 14 DLC, 14 TRANSMISSION CABLE.
8. 53C, 2 DLC, 2 TRANSMISSION CABLE, 2#8 (TMS #1).
9. 78C, 6 DLC, 6 TRANSMISSION CABLE, 2#8 (TMS #1).
10. 2-78C, 20 DLC, 20 TRANSMISSION CABLE, 2#8 (TMS #1).

NOTES:

1. FOR CIRCUIT CONTINUITY SEE LIGHTING AND SIGN ILLUMINATION ON SHEET E-2.
2. FOR LOOP PLACEMENT SEE DETAIL "TMS" ON THIS SHEET.
3. PLACE CABINET 9 m (Min) FROM BOTH SIDES OF ETW .
4. INSTALL PIEZO ELECTRIC AXLE SENSOR UNIT. SEE INSTALLATION DETAILS ON SEET E-16.
5. MODEL 334 CABINET (TYPE 1 HOUSING). CONSTRUCT FOUNDATION PER ES-3C. INSTALL STATE-FURNISHED 170 CONTROLLER.
6. ALL PULL BOXES SHALL BE THE NON-PCC TYPE, UNLESS OTHERWISE NOTED.

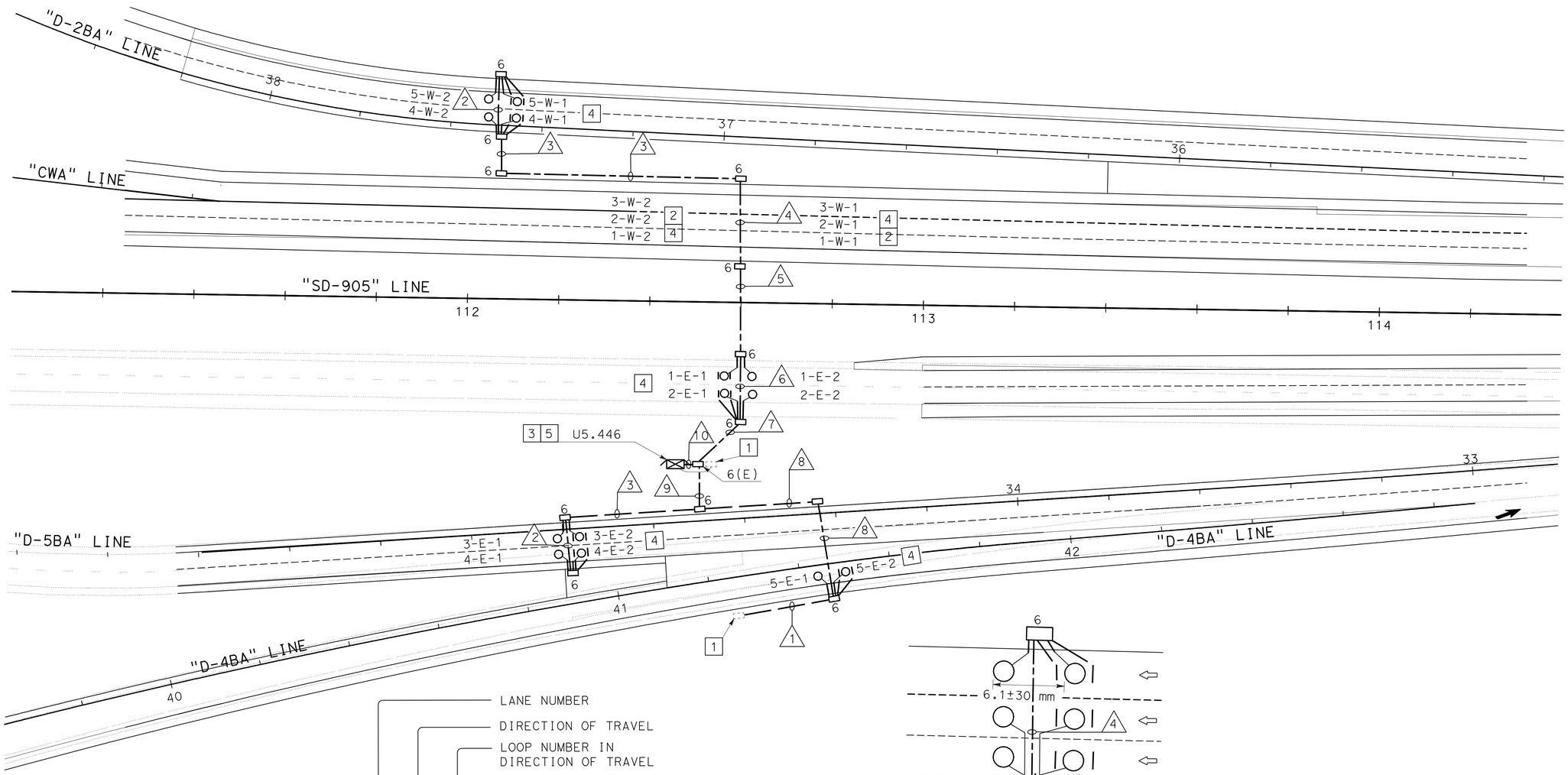

MAINLINE LOOP DETECTOR IDENTIFICATION

TYPICAL

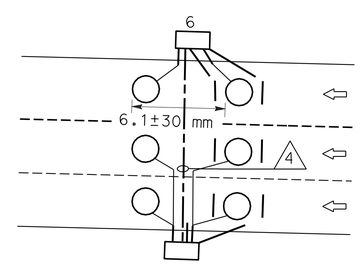

DETAIL "TMS"

NO SCALE

TRAFFIC MONITORING STATION (LOCATION 1)

SCALE 1:500

E-14

THIS PLAN IS ACCURATE FOR ELECTRICAL WORK ONLY.

ALL DIMENSIONS ARE IN METERS UNLESS OTHERWISE SHOWN.

STATE OF CALIFORNIA - DEPARTMENT OF TRANSPORTATION
Caltrans TRAFFIC ELECTRICAL

FUNCTIONAL SUPERVISOR: DALE WILSON
CALCULATED-DESIGNED BY: HENRY TSUI
CHECKED BY: ENRIQUE BERNAL
REVISED BY / DATE REVISED

LAST REVISION 06-25-10
DATE PLOTTED => 21-OCT-2010
TIME PLOTTED => 07:45

Dist	COUNTY	ROUTE	KILOMETER POST TOTAL PROJECT	SHEET No.	TOTAL SHEETS
11	SD	905,805	R8.4/R9.8, 3.1/4.2	246	364

Caltrans Metric

Enrique P Bernal 07-29-10
REGISTERED ELECTRICAL ENGINEER DATE

10-18-10
PLANS APPROVAL DATE

REGISTERED PROFESSIONAL ENGINEER E.P.BERNAL No. 15675 Exp. 6-30-12 ELECTRICAL STATE OF CALIFORNIA

THE STATE OF CALIFORNIA OR ITS OFFICERS OR AGENTS SHALL NOT BE RESPONSIBLE FOR THE ACCURACY OR COMPLETENESS OF ELECTRONIC COPIES OF THIS PLAN SHEET.

CONDUIT NOTES:

1. 53C, 2 DLC, 2 TRANSMISSION CABLE.
2. Exist 41C, 2 OCC,
   RC 2 OCC.
   ADD 1 OCC (TEL-CEC), 1 OCC (TEL-TMS#2).
3. 78C, 8 DLC, 8 TRANSMISSION CABLE.
4. 78C, 12 DLC, 12 TRANSMISSION CABLE.
5. 78C, 16 DLC, 16 TRANSMISSION CABLE.
6. 2-78C, 20 DLC, 20 TRANSMISSION CABLE.
7. 53C, 4 DLC, 4 TRANSMISSION CABLE.
8. 78C, 6 DLC, 6 TRANSMISSION CABLE.
9. 2-104C, 26 DLC, 26 TRANSMISSION CABLE, 2#8 (TMS#2).
10. N C Exist, 53C, 2#10 (MVDS).
11. Exist 53C, 2 OCC.
    RC 2 OCC.
    ADD 1 OCC (TEL-CEC), 1 OCC (TEL-TMS#2).

NOTES:

1. MODEL 334 CABINET (TYPE 1 HOUSING). CONSTRUCT FOUNDATION PER ES-3C. INSTALL STATE-FURNISHED 170 CONTROLLER.
2. INSTALL PIEZO ELECTRIC AXLE SENSOR UNIT. SEE INSTALLATION DETAILS ON SEET E-16.
3. FOR CIRCUIT CONTINUITY SEE LIGHTING AND SIGN ILLUMINATION ON SHEET E-6.
4. PLACE CABINET BEHIND EXISTING GUARDRAIL.
5. RS Exist MVDS SENSOR UNIT (TOTAL 2) WHEN DIRECTED BY THE ENGINEER.
6. ALL PULL BOXES SHALL BE THE NON-PCC TYPE, UNLESS OTHERWISE NOTED. SEE DETAIL ON SHEET E-12.

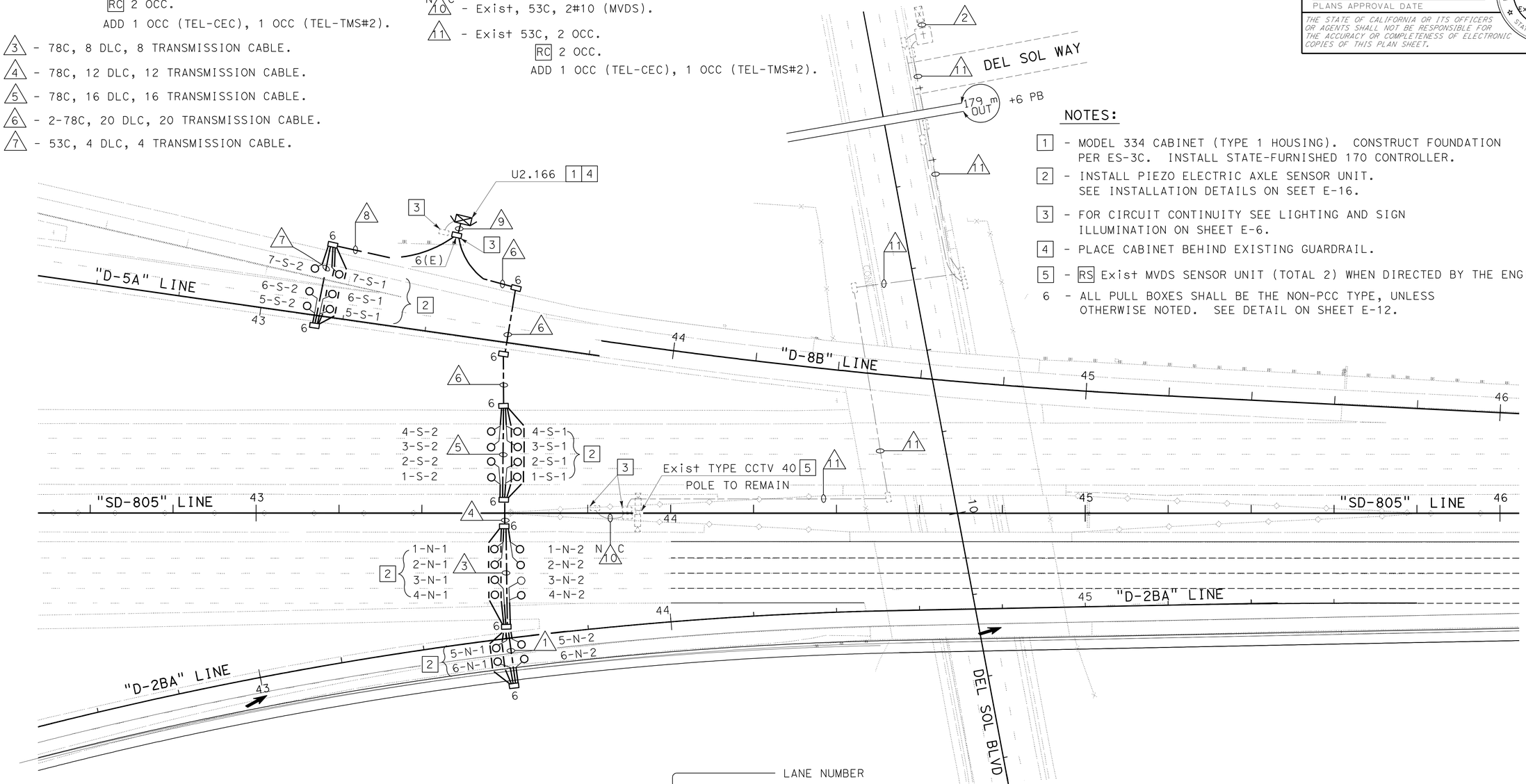

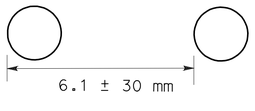

LOOP DETAIL
TYPICAL

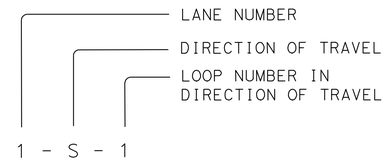

MAINLINE LOOP DETECTOR IDENTIFICATION
TYPICAL

THIS PLAN IS ACCURATE FOR ELECTRICAL WORK ONLY.

ALL DIMENSIONS ARE IN METERS UNLESS OTHERWISE SHOWN.

TRAFFIC MONITORING STATION (LOCATION 2)

SCALE 1:500

E-15

STATE OF CALIFORNIA - DEPARTMENT OF TRANSPORTATION
Caltrans TRAFFIC ELECTRICAL

FUNCTIONAL SUPERVISOR: DALE WILSON
CALCULATED-DESIGNED BY: HENRY TSUI
CHECKED BY: ENRIQUE BERNAL
REVISED BY / DATE REVISED

LAST REVISION 06-25-10
DATE PLOTTED => 21-OCT-2010
TIME PLOTTED => 07:44

Dist	COUNTY	ROUTE	KILOMETER POST TOTAL PROJECT	SHEET No.	TOTAL SHEETS
11	SD	905,805	R8.4/R9.8, 3.1/4.2	247	364

Caltrans Metric

Enrique P Bernal 07-29-10
REGISTERED ELECTRICAL ENGINEER — DATE

10-18-10
PLANS APPROVAL DATE

REGISTERED PROFESSIONAL ENGINEER E.P.BERNAL No. 15675 Exp. 6-30-12 ELECTRICAL STATE OF CALIFORNIA

THE STATE OF CALIFORNIA OR ITS OFFICERS OR AGENTS SHALL NOT BE RESPONSIBLE FOR THE ACCURACY OR COMPLETENESS OF ELECTRONIC COPIES OF THIS PLAN SHEET.

NOTES:

1 - PLACE 50 mm DUCT TAPE ALONG THE EDGE OF SAW CUT BEFORE POURING EPOXY SEALANT. LEVEL EPOXY SEALANT TO FINISHED ROAD SURFACE AND REMOVE DUCT TAPE WHEN EPOXY IS CURED.

FIRST SENSOR TRANSMISSION CABLE	FIRST LOOP DLC	SECOND SENSOR TRANSMISSION CABLE	SECOND LOOP DLC
1-N-1S	1-N-1	1-N-2S	1-N-2

PIEZO SENSOR IDENTIFICATION

DIRECTION OF TRAVEL ⟶ (TYPICAL)

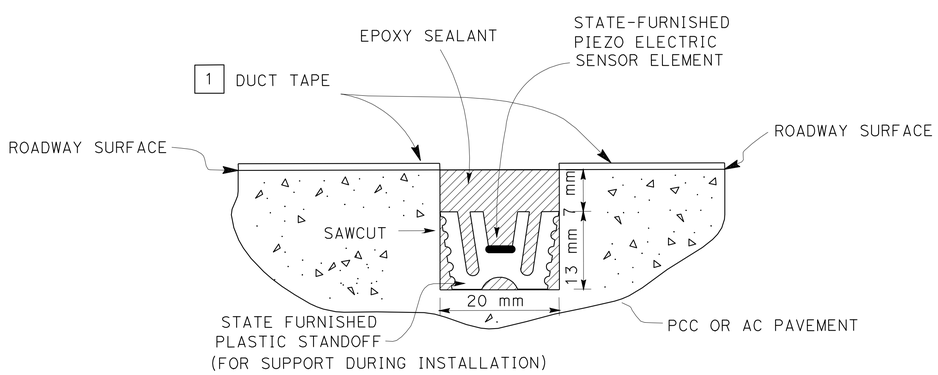

SECTION B-B
NO SCALE

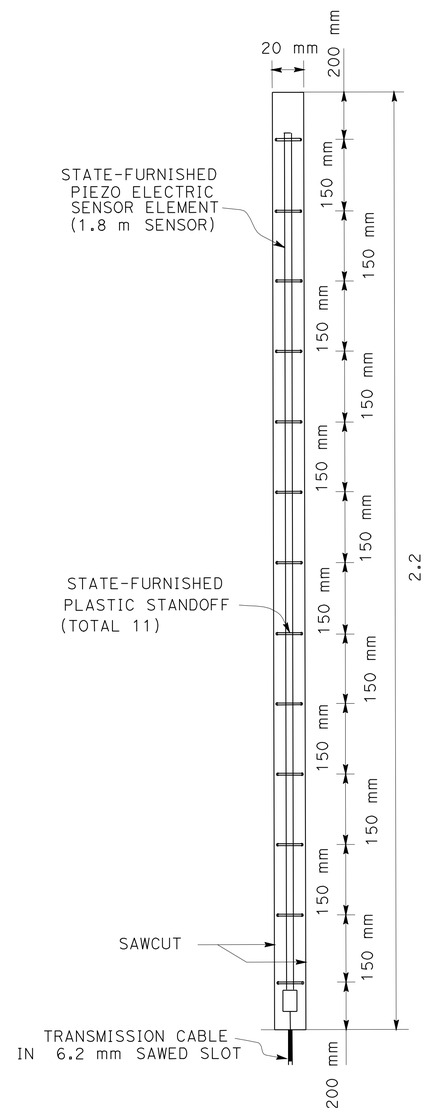

DETAIL "M"
SENSOR INSTALLATION
NO SCALE

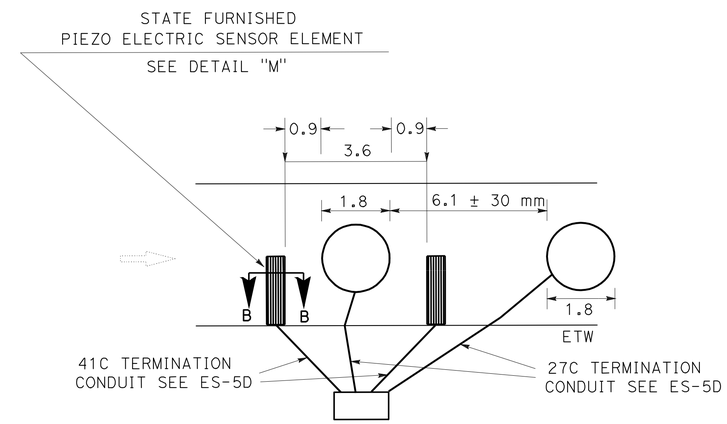

SENSOR PLACEMENT
TYPICAL
NO SCALE

PIEZOELECTRIC SENSOR INSTALLATION DETAILS

THIS PLAN IS ACCURATE FOR ELECTRICAL WORK ONLY.

ALL DIMENSIONS ARE IN METERS UNLESS OTHERWISE SHOWN.

TRAFFIC MONITORING STATION (ELECTRICAL DETAIL)

SCALE 1:500

E-16

STATE OF CALIFORNIA - DEPARTMENT OF TRANSPORTATION
Caltrans TRAFFIC ELECTRICAL

FUNCTIONAL SUPERVISOR: DALE WILSON
CALCULATED-DESIGNED BY: HENRY TSUI
CHECKED BY: ENRIQUE BERNAL
REVISED BY
DATE REVISED

LAST REVISION 06-25-10
DATE PLOTTED => 08-NOV-2010
TIME PLOTTED => 08:30

Dist	COUNTY	ROUTE	KILOMETER POST TOTAL PROJECT	SHEET No.	TOTAL SHEETS
11	SD	905,805	R8.4/R9.8, 3.1/4.2	248	364

Enrique P Bernal 07-29-10
REGISTERED ELECTRICAL ENGINEER DATE

10-18-10
PLANS APPROVAL DATE

REGISTERED PROFESSIONAL ENGINEER E.P.BERNAL No. 15675 Exp. 6-30-12 ELECTRICAL STATE OF CALIFORNIA

THE STATE OF CALIFORNIA OR ITS OFFICERS OR AGENTS SHALL NOT BE RESPONSIBLE FOR THE ACCURACY OR COMPLETENESS OF ELECTRONIC COPIES OF THIS PLAN SHEET.

Caltrans Metric

NOTES

1 - THE CONTRACTOR SHALL VERIFY ALL CONTROLLING FIELD DIMENSIONS BEFORE ORDERING OR FABRICATING MATERIAL.

2 - BACK MOUNTING BOARD (13 mm THICK AND GRADE ACX PLYWOOD).

3 - DRILL 50 mm ø HOLE THROUGH SHELF FOR POWER CABLES.

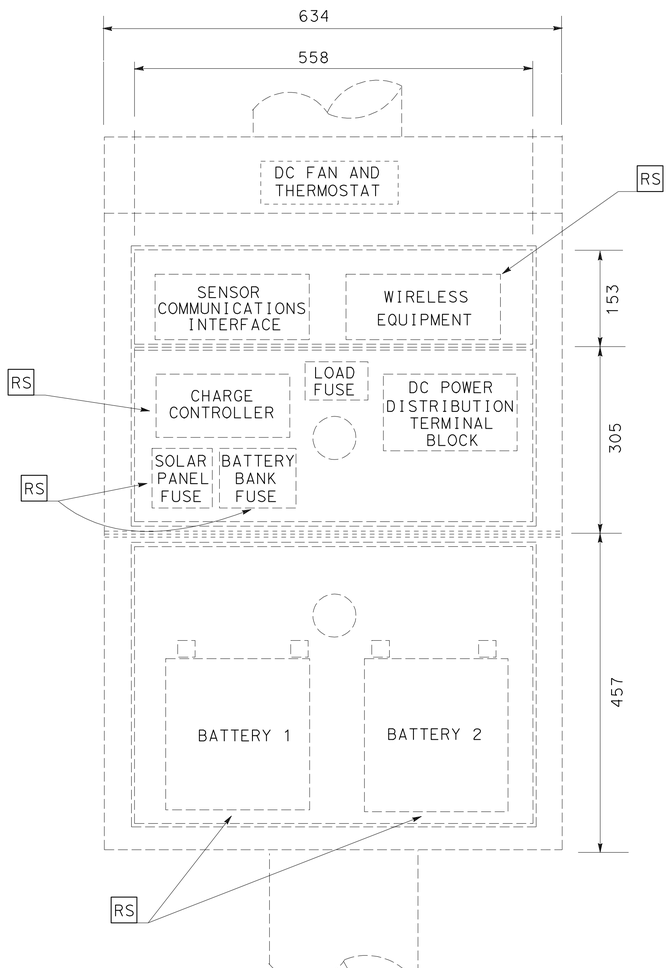

FRONT
(INTERIOR)
REMOVAL EQUIPMENT LAYOUT

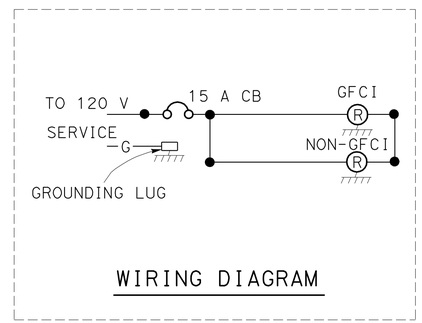

WIRING DIAGRAM

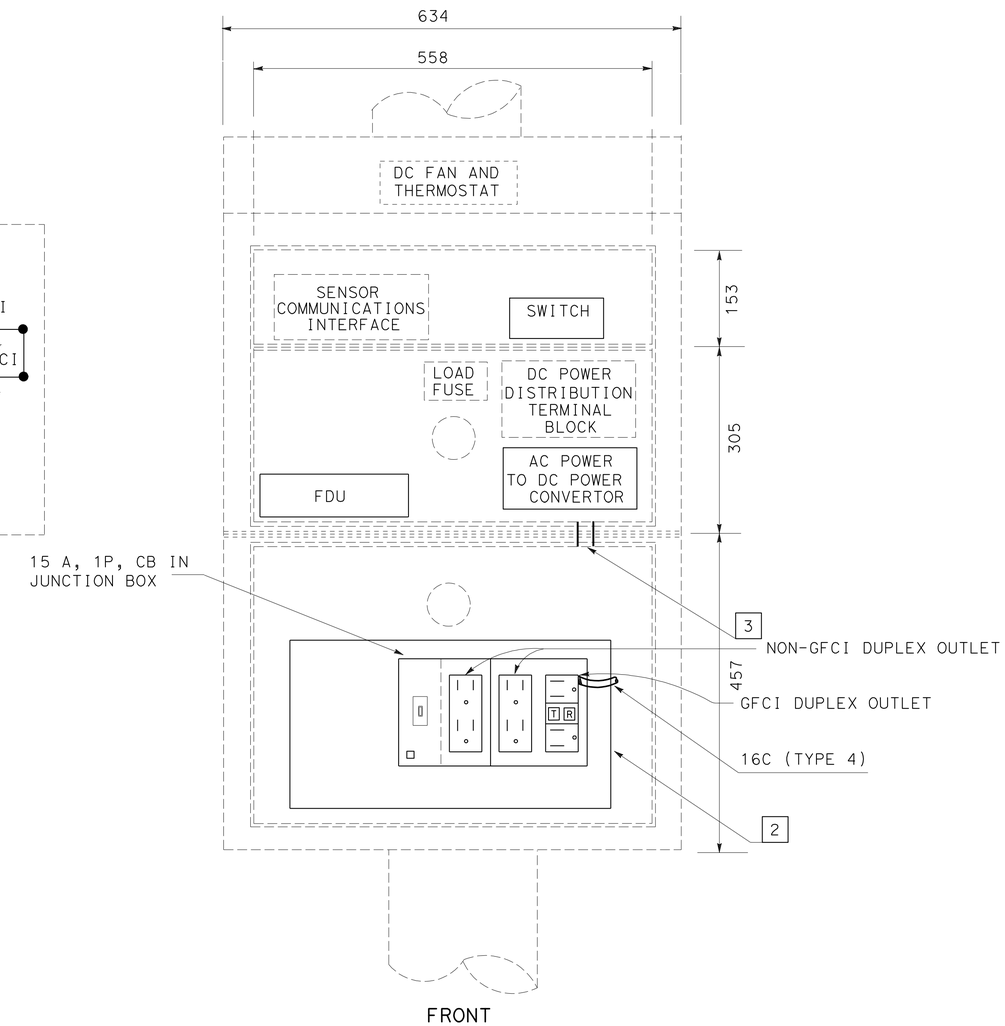

FRONT
(INTERIOR)
NEW EQUIPMENT LAYOUT

DETAIL "MVDS-Exist (RELOCATED)"

Exist POLE MOUNTED CABINET
U2.524

TRAFFIC MONITORING STATION
(ELECTRICAL DETAIL)

NO SCALE

E-17

THIS PLAN IS ACCURATE FOR ELECTRICAL WORK ONLY.

ALL DIMENSIONS ARE IN MILLIMETERS UNLESS OTHERWISE SHOWN.

STATE OF CALIFORNIA - DEPARTMENT OF TRANSPORTATION
Caltrans TRAFFIC ELECTRICAL

FUNCTIONAL SUPERVISOR: DALE WILSON
CALCULATED-DESIGNED BY: HENRY TSUI
CHECKED BY: ENRIQUE BERNAL
REVISED BY / DATE REVISED

LAST REVISION 06-25-10 | DATE PLOTTED => 21-OCT-2010 | TIME PLOTTED => 07:44

DIST	COUNTY	ROUTE	KILOMETER POST TOTAL PROJECT	SHEET No	TOTAL SHEETS
11	SD	905,805	R8.4/R9.8, 3.1/4.2	249	364

Caltrans Metric

K.C. Liu
REGISTERED CIVIL ENGINEER DATE

10-18-10
PLANS APPROVAL DATE

REGISTERED PROFESSIONAL ENGINEER K.C. LIU No. C 50291 Exp. 06-30-11 CIVIL STATE OF CALIFORNIA

The State of California or its officers or agents shall not be responsible for the accuracy or completeness of electronic copies of this plan sheet.

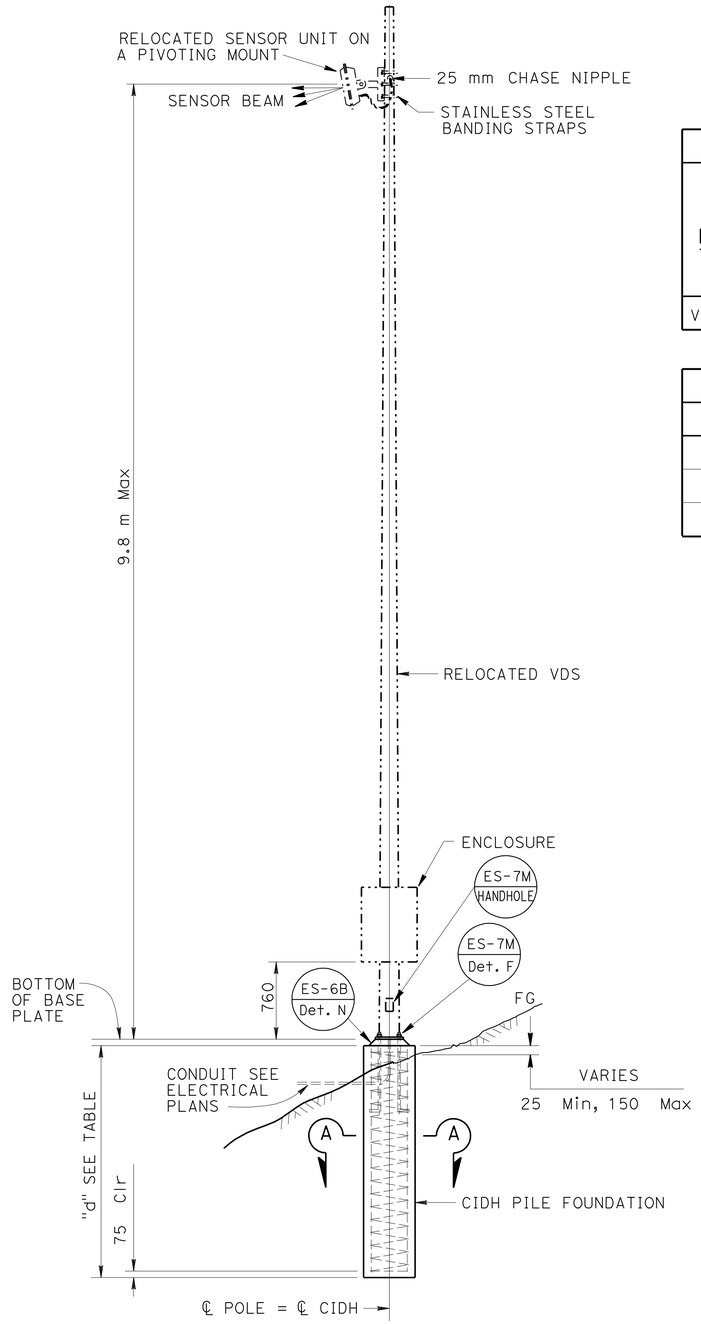

NOTE:
THE CONTRACTOR SHALL VERIFY ALL CONTROLLING FIELD DIMENSIONS BEFORE ORDERING OR FABRICATING ANY MATERIAL.

ELEVATION
VDS 35

TABLE A

POLE TYPE	POLE DATA				BASE PLATE DATA				"d" 610 mm Ø CIDH PILE	
	HEIGHT "h" (m)	Min OD		THICKNESS	"C"	THICKNESS	ANCHOR BOLTS			
		BASE	TOP				SIZE	BC = BOLT CIRCLE	LEVEL GROUND	SLOPING GROUND
VDS 35	10.7±	219±	98±	4.55±	330±	25±	32 x 914 x 102	330±	3.0 m	3.6 m

TABLE B

ATTACHMENT	MOUNTING HEIGHT	WEIGHT LIMIT KG
ENCLOSURE	760 mm BOTTOM Clr	60 MAX
PHOTOVOLTAIC	5.2 m - 8.2 m	20 MAX
SENSOR UNIT	9.1 m - 9.8 m	4 MAX

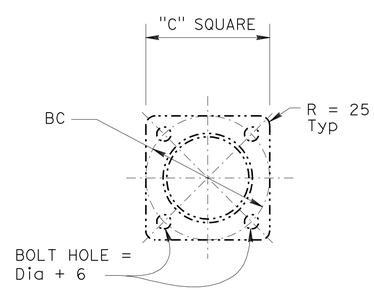

BASE PLATE
NO SCALE

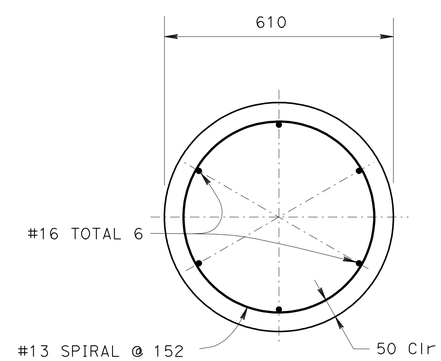

SECTION A-A
NO SCALE

ABBREVIATIONS:

VDS = VEHICLE DETECTION SYSTEM
MVDS = MICROWAVE VEHICLE DETECTION SYSTEM

GENERAL NOTES:

SPECIFICATIONS

DESIGN : AASHTO STANDARD SPECIFICATIONS FOR STRUCTURAL SUPPORTS FOR HIGHWAY SIGNS, LUMINAIRES AND TRAFFIC SIGNALS DATED 2001.

LOADING

WIND LOADINGS : 161 km/h

UNIT STRESSES

STRUCTURAL STEEL : fy = 330 MPa TAPERED STEEL TUBE
fy = 250 MPa UNLESS OTHERWISE NOTED.

ANCHOR BOLTS = A307

REINFORCED CONCRETE : f'c = 25 MPa
fy = 415 MPa

NOTES:

1. ALL STEEL SHALL BE GALVANIZED AFTER FABRICATION.
2. DURING POLE ERECTION THE POST SHALL BE RAKED AS NECESSARY WITH THE USE OF LEVELING NUTS TO PROVIDE A PLUMB POLE AXIS.
3. THE FOUNDATION SHALL BE TREATED AS LEVEL GROUND CONDITION IF THE SLOPE INCLINATION IS FLATTER THAN 4H:1V.
4. FOUNDATION DESIGN IS BASED ON AASHTO 2001 ARTICLE 13.6 BROMS' APPROXIMATE PROCEDURE ASSUMING A COHESSIONLESS MATERIAL. THE ANGLE OF INTERNAL FRICTION USED IS 30 DEGREES AND UNIT WEIGHT OF SOIL USED IS 1922 Kg/M^2.
5. FOR DETAILS NOT SHOWN, SEE "2004 STANDARD PLANS" AND "2004 REVISED STANDARD PLANS".

BRANCH CHIEF Jeffrey B Woody

	BY	CHECKED
DESIGN	R HEZAR	K.C. LIU
DETAILS	D W JUSTICE Jr	R HEZAR
QUANTITIES		

STATE OF CALIFORNIA
DEPARTMENT OF TRANSPORTATION

DIVISION OF ENGINEERING SERVICES
DESIGN AND TECHNICAL SERVICES
SPECIAL DESIGNS BRANCH A

BRIDGE NO.
POST MILE

RELOCATION OF EXISTING VDS 35
CIDH FOUNDATION DETAILS

E-18

(ENGLISH) SPECIAL DESIGNS BRANCH BORDER SHEET (REV. 7-1-09)

ORIGINAL SCALE IN MILLIMETERS FOR REDUCED PLANS 0 10 20 30 40 50 60 70 80 90 100

CU 11
EA 091831

DISREGARD PRINTS BEARING EARLIER REVISION DATES 10-7-10

REVISION DATES | SHEET | OF

FILE => spec_des_br_prj/2010sd/11-091831/11-091831_e18.dgn

USERNAME => trmguye DATE PLOTTED => 21-OCT-2010 TIME PLOTTED => 07:43

Dist	COUNTY	ROUTE	KILOMETER POST TOTAL PROJECT	SHEET No.	TOTAL SHEETS
11	SD	905,805	R8.4/R9.8, 3.1/4.2	250	364

Caltrans Metric

Enrique P Bernal 07-29-10
REGISTERED ELECTRICAL ENGINEER — DATE

10-18-10
PLANS APPROVAL DATE

REGISTERED PROFESSIONAL ENGINEER E.P.BERNAL No. 15675 Exp. 6-30-12 ELECTRICAL STATE OF CALIFORNIA

THE STATE OF CALIFORNIA OR ITS OFFICERS OR AGENTS SHALL NOT BE RESPONSIBLE FOR THE ACCURACY OR COMPLETENESS OF ELECTRONIC COPIES OF THIS PLAN SHEET.

LEGEND

- EXCAVATION
- BACKFILL

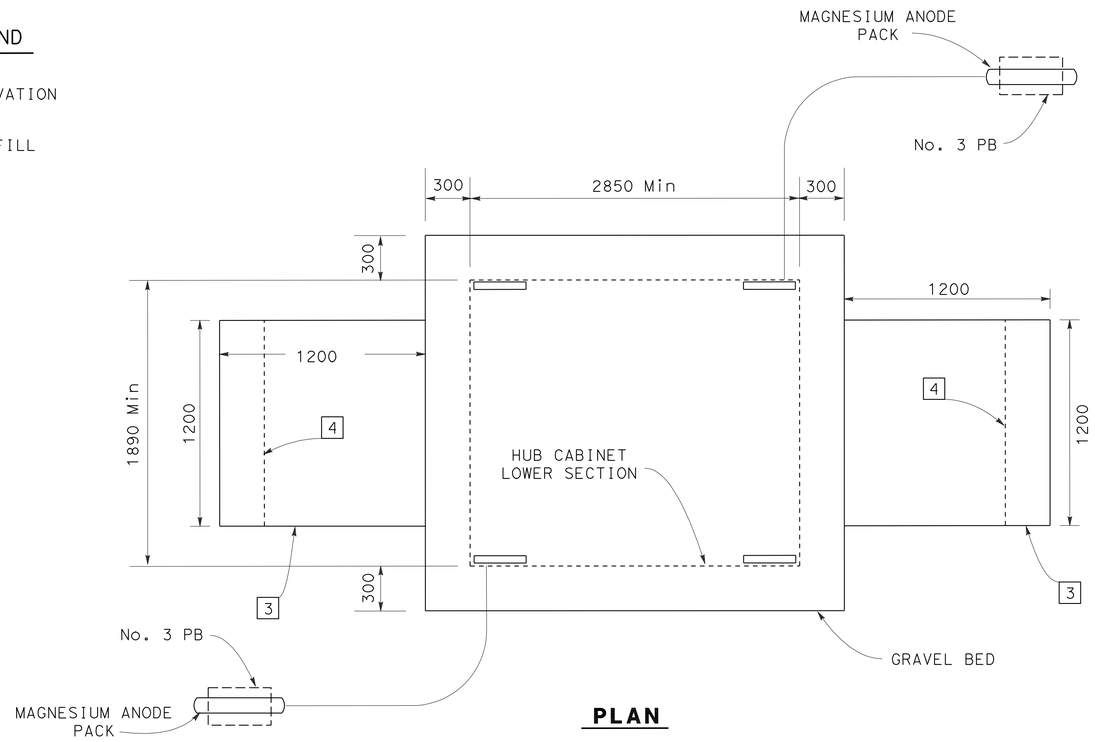

PLAN

HUB CABINET INSTALLATION

NOTES

1 - SERVICE ENTRY
2 - TO No. 5 PB
3 - PCC PAD
4 - PCC FOOTING

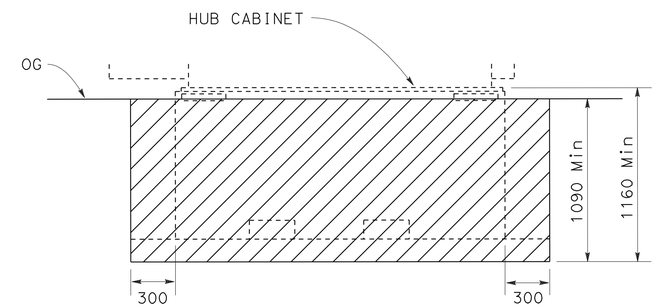

EXCAVATION

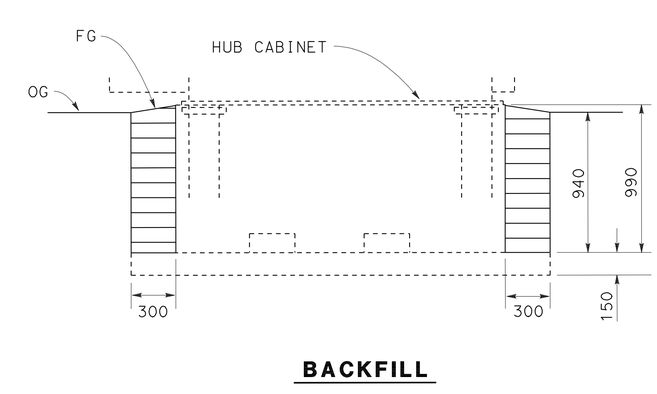

BACKFILL

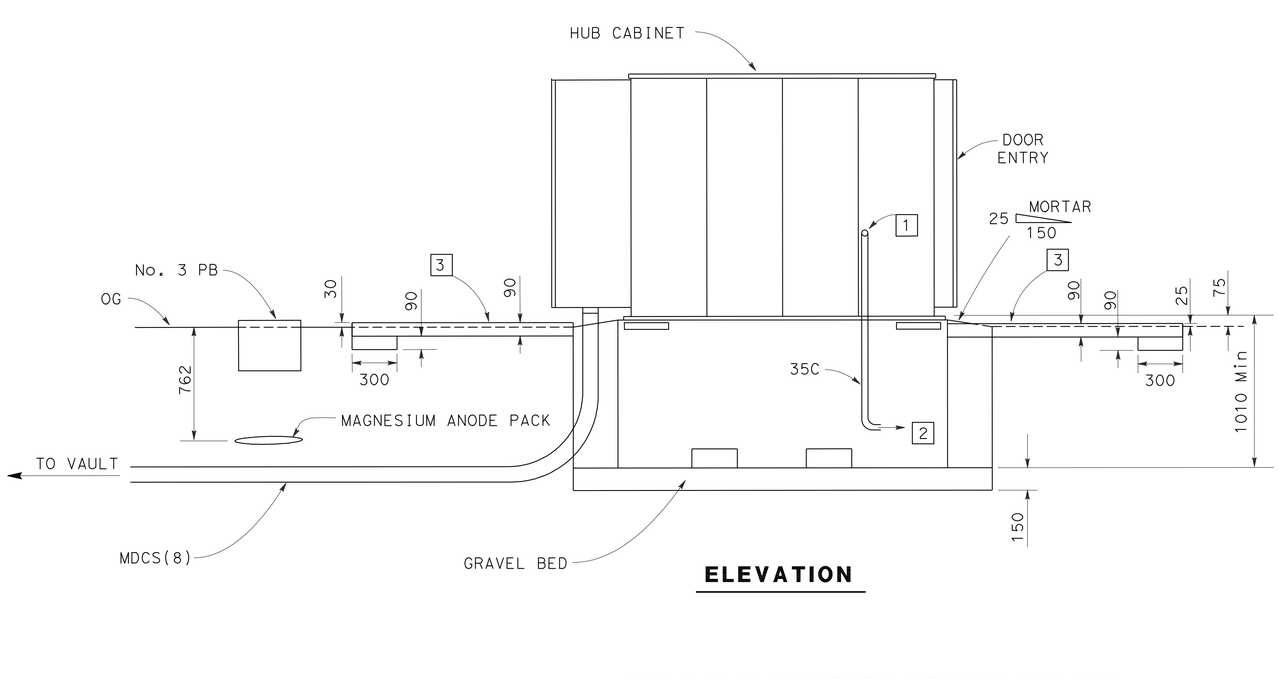

ELEVATION

ALL DIMENSIONS ARE IN MILLIMETERS UNLESS OTHERWISE SHOWN

THIS PLAN IS ACCURATE FOR ELECTRICAL WORK ONLY.

FIBER OPTIC COMMUNICATION SYSTEM (HUB CABINET DETAILS)

NO SCALE

E-19

REVISED BY	DATE REVISED
HENRY TSUI	ENRIQUE BERNAL
CALCULATED-DESIGNED BY	CHECKED BY
FUNCTIONAL SUPERVISOR	DALE WILSON

STATE OF CALIFORNIA - DEPARTMENT OF TRANSPORTATION
Caltrans TRAFFIC ELECTRICAL

LAST REVISION 06-25-10 | DATE PLOTTED => 21-OCT-2010 | TIME PLOTTED => 08:00

Dist	COUNTY	ROUTE	KILOMETER POST TOTAL PROJECT	SHEET No.	TOTAL SHEETS
11	SD	905,805	R8.4/R9.8, 3.1/4.2	251	364

Caltrans Metric

Enrique P Bernal 07-29-10
REGISTERED ELECTRICAL ENGINEER DATE

10-18-10
PLANS APPROVAL DATE

REGISTERED PROFESSIONAL ENGINEER E.P.BERNAL No. 15675 Exp. 6-30-12 ELECTRICAL STATE OF CALIFORNIA

THE STATE OF CALIFORNIA OR ITS OFFICERS OR AGENTS SHALL NOT BE RESPONSIBLE FOR THE ACCURACY OR COMPLETENESS OF ELECTRONIC COPIES OF THIS PLAN SHEET.

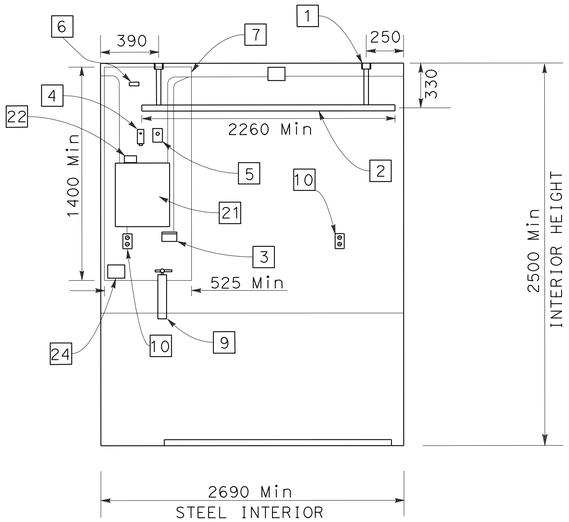

EAST ELEVATION

INTERIOR
HUB CABINET

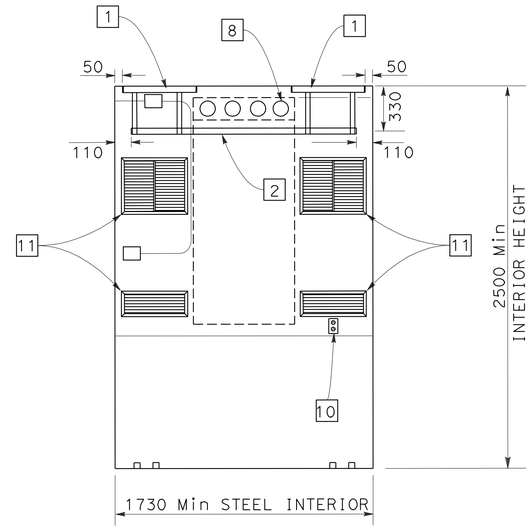

SOUTH ELEVATION

INTERIOR
HUB CABINET

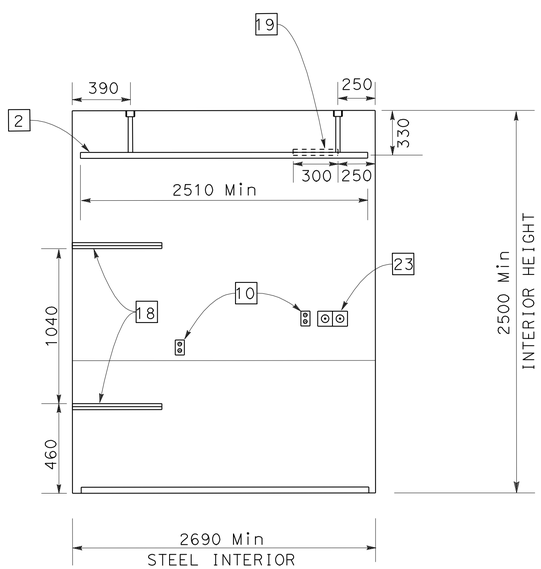

WEST ELEVATION

INTERIOR
HUB CABINET

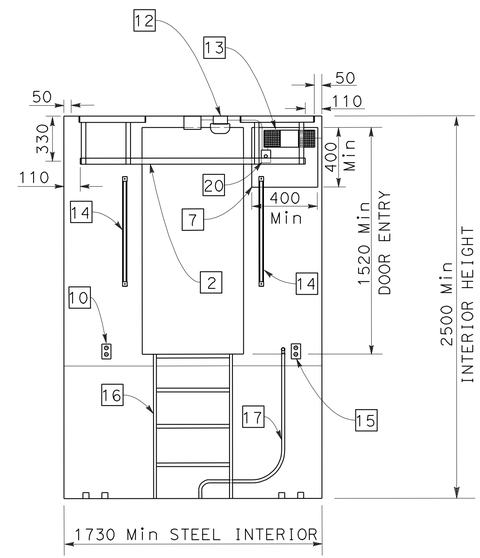

NORTH ELEVATION

INTERIOR
HUB CABINET

NOTES

1. - CEILING MOUNTED 41 mm x 41 mm STRUT 400 mm Min LENGTH (TOTAL 4)
2. - 300 mm SPLICE LADDER
3. - THERMOSTAT FOR AIR CONDITIONER
4. - THERMOSTAT FOR HIGH/LOW TEMPERATURE ALARM
5. - HUMIDISTAT FOR HIGH HUMIDITY ALARM
6. - 12 POLE TERMINAL BLOCK (ALARMS)
7. - 9.5 mm Min MOUNTING BOARD
8. - 103 mm CABLE ENTRY PORT WITH DUCT PLUG (TOTAL 4)
9. - A-B-C RATED FIRE EXTINGUISHER
10. - CONVENIENCE OUTLET (15 A)
11. - VENTS FOR AIR CONDITIONER
12. - CEILING MOUNTED SMOKE DETECTOR
13. - EMERGENCY LIGHTS
14. - SAFETY RAIL (TOTAL 2)
15. - CONVENIENCE OUTLET FOR SUMP PUMP (15 A)
16. - ENTRY LADDER
17. - SUMP PUMP DISCHARGE CONNECTION
18. - WALL MOUNTED 41 mm x 41 mm STRUT 600 mm Min LENGTH (TOTAL 2)
19. - WALL MOUNTED 41 mm x 41 mm STRUT
20. - LIGHT SWITCH/TIMER
21. - SERVICE PANEL WITH:
    TWO 2P-100 A CB (MAIN/EMERGENCY SLIDEBAR)
    2P-30 A CB (SPARE)
    2P-20 A CB (AIR CONDITIONER)
    1P-20 A CB (LIGHTS/SMOKE DETECTOR)
    1P-20 A CB (COMMUNICATION EQUIPMENT)
    1P-15 A CB (SUMP PUMP)
    1P-20 A CB (SPARE)
22. - SECONDARY SURGE ARRESTOR
23. - 30 A, 220 V, TWISTLOCK RECTIFIER BULK POWER RECEPTICLE
24. - POWER FAIL ALARM

ALL DIMENSIONS ARE IN
MILLIMETERS UNLESS OTHERWISE SHOWN

FIBER OPTIC COMMUNICATION SYSTEM (HUB CABINET DETAILS)

NO SCALE

E-20

THIS PLAN IS ACCURATE FOR ELECTRICAL WORK ONLY.

REVISED BY	DATE REVISED

HENRY TSUI — ENRIQUE BERNAL

CALCULATED-DESIGNED BY — CHECKED BY

FUNCTIONAL SUPERVISOR: DALE WILSON

STATE OF CALIFORNIA - DEPARTMENT OF TRANSPORTATION
Caltrans TRAFFIC ELECTRICAL

LAST REVISION 06-25-10 | DATE PLOTTED => 21-OCT-2010 | TIME PLOTTED => 08:00

Dist	COUNTY	ROUTE	KILOMETER POST TOTAL PROJECT	SHEET No.	TOTAL SHEETS
11	SD	905,805	R8.4/R9.8, 3.1/4.2	252	364

Caltrans Metric

Enrique P Bernal 07-29-10
REGISTERED ELECTRICAL ENGINEER DATE

10-18-10
PLANS APPROVAL DATE

REGISTERED PROFESSIONAL ENGINEER E.P.BERNAL No. 15675 Exp. 6-30-12 ELECTRICAL STATE OF CALIFORNIA

THE STATE OF CALIFORNIA OR ITS OFFICERS OR AGENTS SHALL NOT BE RESPONSIBLE FOR THE ACCURACY OR COMPLETENESS OF ELECTRONIC COPIES OF THIS PLAN SHEET.

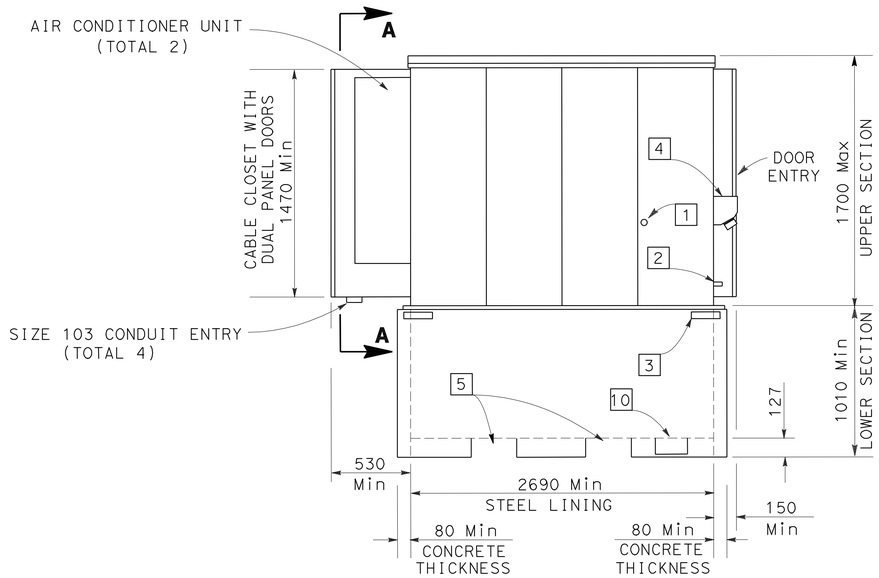

ELEVATION

EXTERIOR
HUB CABINET

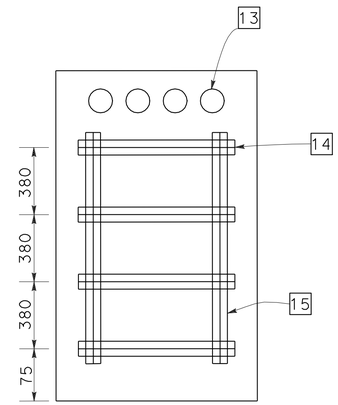

SECTION A-A

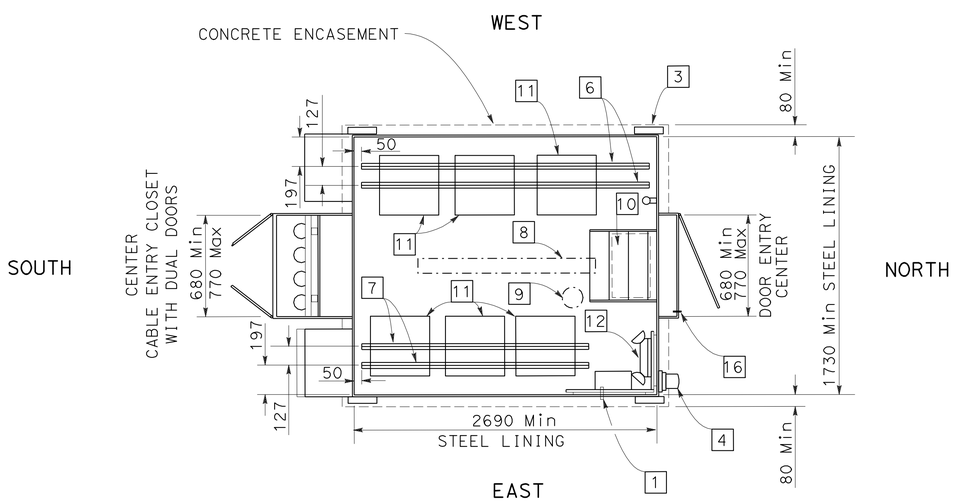

PLAN

HUB CABINET

NOTES

1 - 32 mm Ø HOLE FOR SERVICE ENTRY

2 - 21C DRAIN OUTLET FOR SUMP PUMP

3 - LIFTING EYE PLATE (TOTAL 4)

4 - EMERGENCY POWER INPUT CONNECTOR FOR GENERATOR

5 - FORK-LIFT OPENING

6 - FLOOR MOUNTED 41 mm x 41 mm STRUT 2590 mm Min LENGTH (TOTAL 2)

7 - FLOOR MOUNTED 41 mm x 41 mm STRUT 2180 mm Min LENGTH (TOTAL 2)

8 - CEILING MOUNTED 2-40 W LAMP FLUORESCENT FIXTURE (CENTERED)

9 - CEILING MOUNTED SMOKE DETECTOR

10 - 250 W SUMP PUMP WITH TWO FLOAT SWITCHES. RECESSED Min 100 mm BELOW FLOOR

11 - MOUNT EIA 482 mm RACK ON STRUT RACK SHALL BE 1800 mm NOMINAL HEIGHT AND 400 mm Min DEPTH (TOTAL 6)

12 - EMERGENCY LIGHTS

13 - 103 mm CABLE ENTRY PORT (TOTAL 4) WITH SEALING PLUGS.

14 - STRUT-MOUNTED 41 mm x 41 mm STRUT, 600 Min LENGTH (TOTAL 4)

15 - WALL MOUNTED 41 mm x 41 mm STRUT 1200 Min LENGTH (TOTAL 2)

16 - INTRUSION ALARM SWITCH

ALL DIMENSIONS ARE IN MILLIMETERS UNLESS OTHERWISE SHOWN

FIBER OPTIC COMMUNICATION SYSTEM (HUB CABINET DETAILS)

NO SCALE

E-21

THIS PLAN IS ACCURATE FOR ELECTRICAL WORK ONLY.

REVISED BY	DATE REVISED

CALCULATED-DESIGNED BY	HENRY TSUI
CHECKED BY	ENRIQUE BERNAL
FUNCTIONAL SUPERVISOR	DALE WILSON

STATE OF CALIFORNIA - DEPARTMENT OF TRANSPORTATION
Caltrans TRAFFIC ELECTRICAL

LAST REVISION 06-25-10 | DATE PLOTTED => 21-OCT-2010 | TIME PLOTTED => 08:00

DIST	COUNTY	ROUTE	KILOMETER POST TOTAL PROJECT	SHEET No	TOTAL SHEETS
11	SD	905,805	R8.4/R9.8, 3.1/4.2	253	364

Caltrans Metric

REGISTERED CIVIL ENGINEER DATE

10-18-10
PLANS APPROVAL DATE

REGISTERED PROFESSIONAL ENGINEER JOEL MAGANA No. C61500 Exp. 6/30/11 CIVIL STATE OF CALIFORNIA

The State of California or its officers or agents shall not be responsible for the accuracy or completeness of electronic copies of this plan sheet.

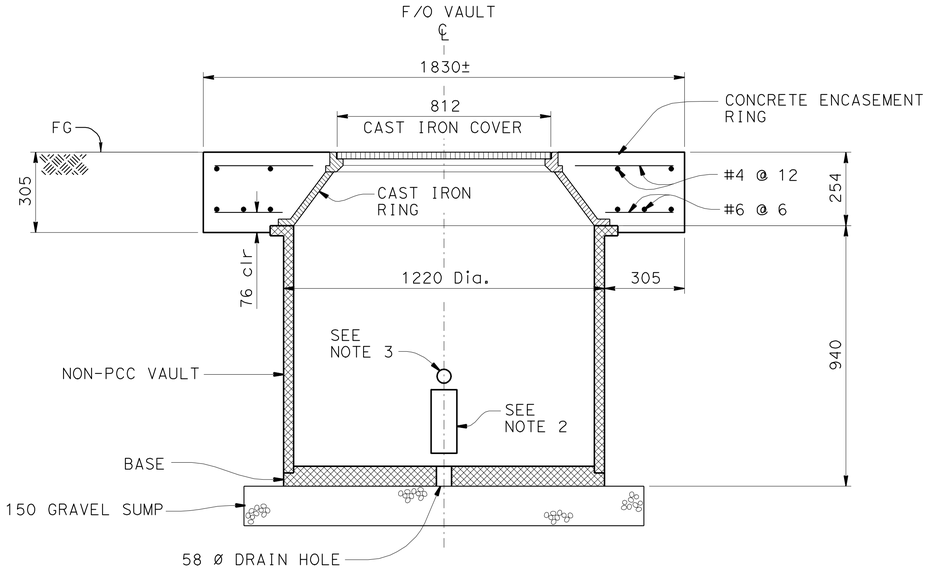

SECTION A-A

NO SCALE

NOTES

1. Install per manufacturer's recommendation
2. Knockout for mdcs (8) provide two equally spaced around vault
3. 53 Mm knockout (total 4) equally spaced around vault

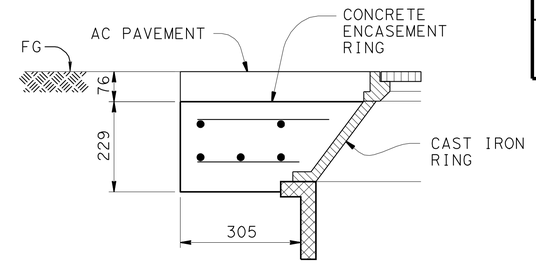

DETAIL "A"

VAULT INSIDE OF PULLOUT

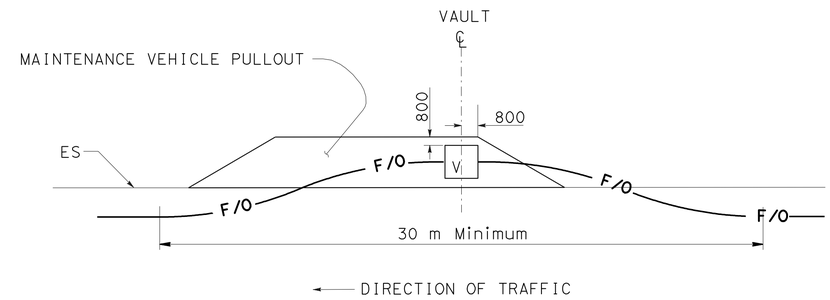

FIBER OPTIC VAULT INSTALLATION DETAIL (TYPICAL)

(INSIDE OF PULLOUT)

NOTE: SEE DETAIL "A"

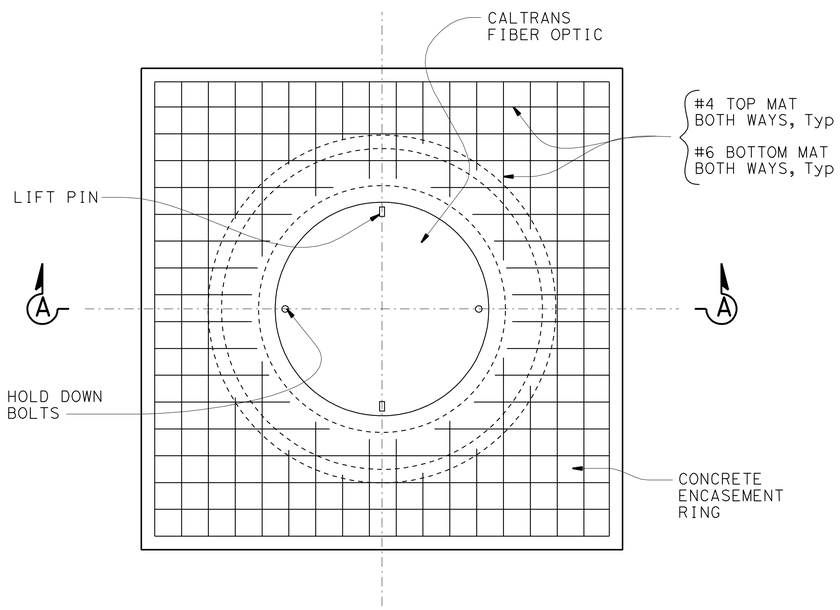

Plan

NO SCALE

NOTE:
THE CONTRACTOR SHALL VERIFY ALL CONTROLLING FIELD DIMENSIONS BEFORE ORDERING OR FABRICATING ANY MATERIAL.

GENERAL NOTES

DESIGN: CALTRANS BRIDGE DESIGN SPECIFICATIONS APRIL 2000 (LFD)

REINFORCED CONCRETE:

fy = 420 MPa (Tield strength of reinforcement)

f'_c = 25.0 MPa (Concrete compressive strength at 28 days

n = 8

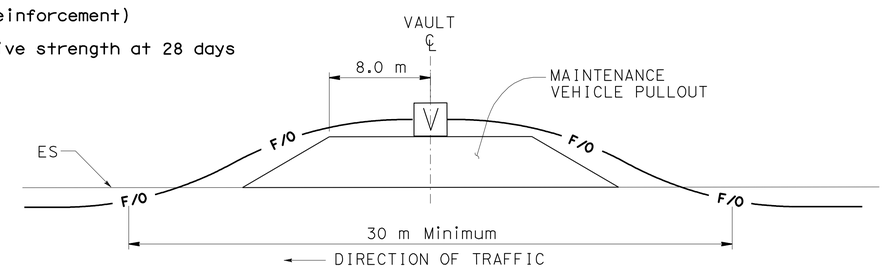

FIBER OPTIC VAULT INSTALLATION DETAIL (TYPICAL)

(OUTSIDE OF PULLOUT)

NO SCALE

BRANCH CHIEF JAMES SAGAR	DESIGN	BY J MAGANA	CHECKED G DORIA
	DETAILS	BY P C WELLS	CHECKED J MAGANA
	QUANTITIES	BY	CHECKED

STATE OF CALIFORNIA
DEPARTMENT OF TRANSPORTATION

DIVISION OF ENGINEERING SERVICES
DESIGN AND TECHNICAL SERVICES
SPECIAL DESIGNS BRANCH A

BRIDGE NO.
POST MILE

FIBER OPTIC COMMUNICATION SYSTEM
FIBER OPTIC VAULT DETAILS

E-22

(ENGLISH) SPECIAL DESIGNS BRANCH BORDER SHEET (REV. 7-1-09)

ORIGINAL SCALE IN MILLIMETERS FOR REDUCED PLANS 0 10 20 30 40 50 60 70 80 90 100

CU 11
EA 091831

DISREGARD PRINTS BEARING EARLIER REVISION DATES 10-7-10

REVISION DATES

SHEET OF

FILE => spec_des_br_prj/misc/paul/hold/ 11-091831_e22.dgn

USERNAME => frpierce DATE PLOTTED => 21-OCT-2010 TIME PLOTTED => 08:06

Dist	COUNTY	ROUTE	KILOMETER POST TOTAL PROJECT	SHEET No.	TOTAL SHEETS
11	SD	905,805	R8.4/R9.8, 3.1/4.2	254	364

Caltrans Metric

Enrique P Bernal 07-29-10
REGISTERED ELECTRICAL ENGINEER DATE

10-18-10
PLANS APPROVAL DATE

REGISTERED PROFESSIONAL ENGINEER E.P.BERNAL No. 15675 Exp. 6-30-12 ELECTRICAL STATE OF CALIFORNIA

THE STATE OF CALIFORNIA OR ITS OFFICERS OR AGENTS SHALL NOT BE RESPONSIBLE FOR THE ACCURACY OR COMPLETENESS OF ELECTRONIC COPIES OF THIS PLAN SHEET.

NOTES:

1. - EIA RACK
2. - 30 A, 250 V, TWIST-LOCK BULK POWER CONNECTOR.
3. - FIBER DISTRIBUTION UNIT FOR F0144 DISTRIBUTION CABLE.
4. - FIBER DISTRIBUTION UNIT FOR F084 DISTRIBUTION CABLE.
5. - FIBER DISTRIBUTION UNIT FOR F084 BACKBONE CABLE.

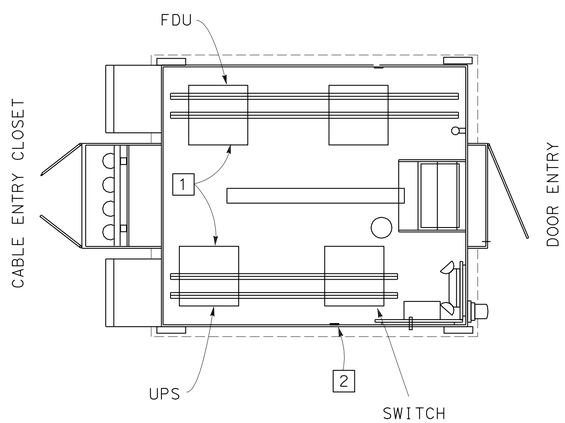

HUB CABINET EQUIPMENT PLACEMENT

DETAIL "HUB"

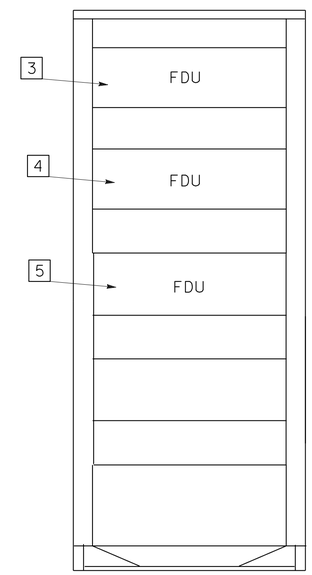

FIBER DISTRIBUTION UNIT (FDU)

FRONT VIEW

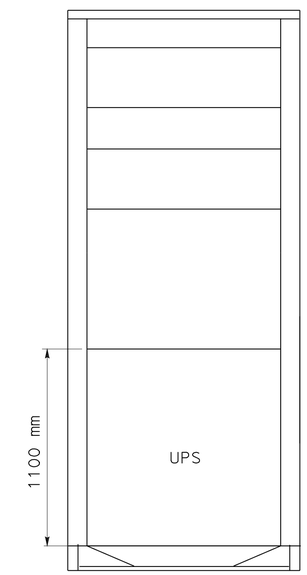

UPS

FRONT VIEW

ALL DIMENSIONS ARE IN METERS UNLESS OTHERWISE SHOWN

FIBER OPTIC COMMUNICATION SYSTEM (ELECTRICAL DETAILS)

NO SCALE

E-23

THIS PLAN IS ACCURATE FOR ELECTRICAL WORK ONLY.

STATE OF CALIFORNIA - DEPARTMENT OF TRANSPORTATION
Caltrans **ELECTRICAL DESIGN**

FUNCTIONAL SUPERVISOR: DALE WILSON
CALCULATED-DESIGNED BY: ENRIQUE BERNAL
CHECKED BY: HENRY TSUJI
REVISED BY
DATE REVISED

LAST REVISION 06-25-10
DATE PLOTTED => 21-OCT-2010
TIME PLOTTED => 08:00

DIST	COUNTY	ROUTE	KILOMETER POST TOTAL PROJECT	SHEET No	TOTAL SHEETS
11	SD	905,805	R8.4/R9.8, 3.1/4.2	255	364

Caltrans Metric

K. C. Liu
REGISTERED CIVIL ENGINEER DATE

10-18-10
PLANS APPROVAL DATE

REGISTERED PROFESSIONAL ENGINEER K.C. LIU No. C 50291 Exp. 06-30-11 CIVIL STATE OF CALIFORNIA

The State of California or its officers or agents shall not be responsible for the accuracy or completeness of electronic copies of this plan sheet.

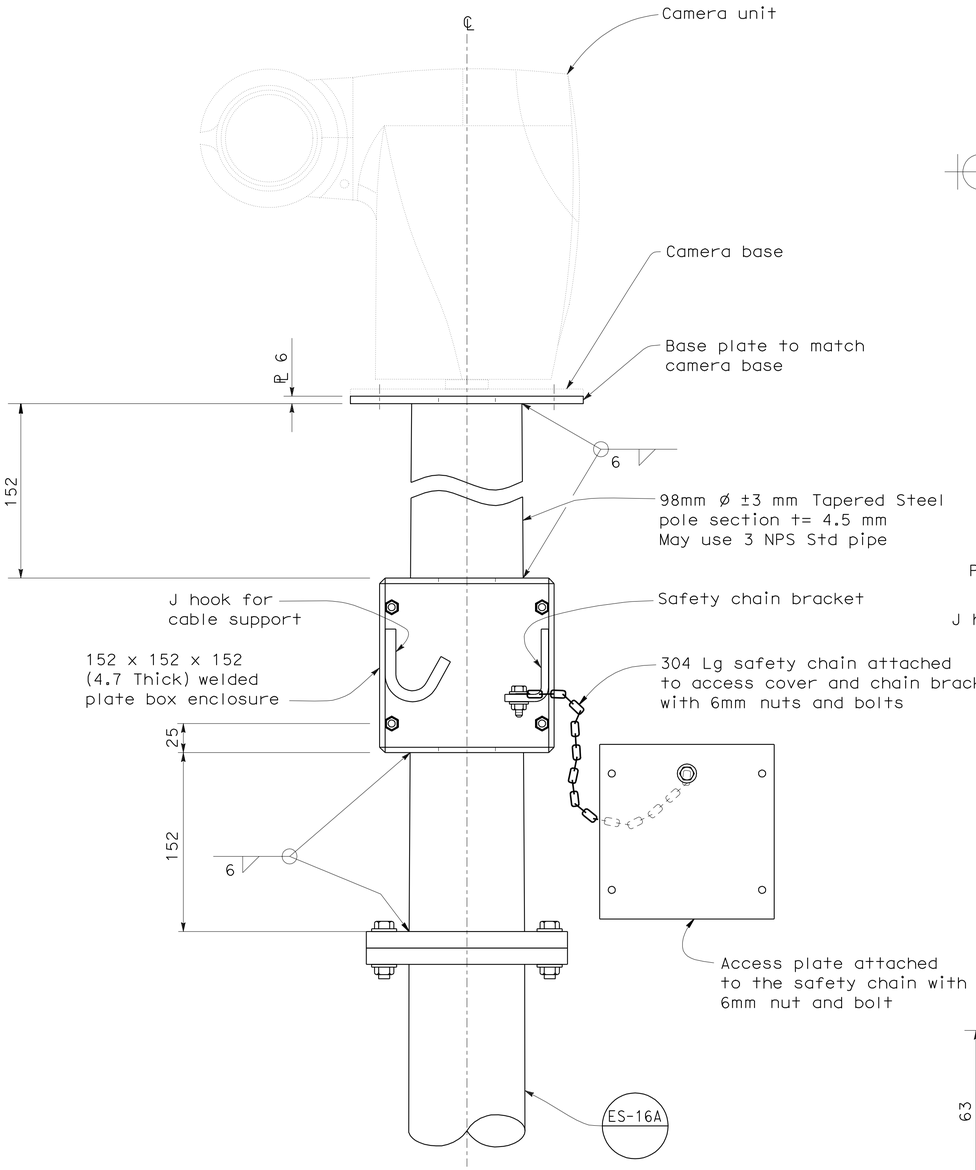

DETAIL A
CCTV POLE MOUNTING WITH ADAPTER

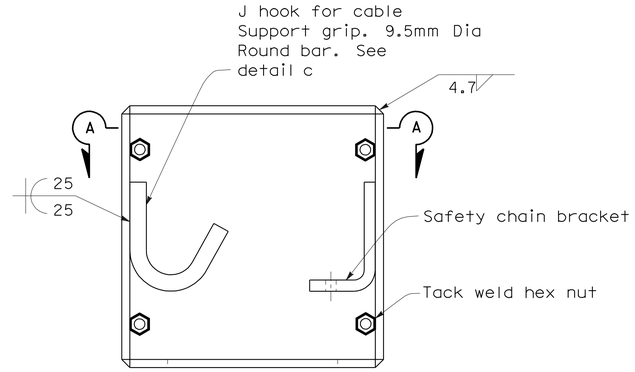

DETAIL B
BOX ENCLOSURE

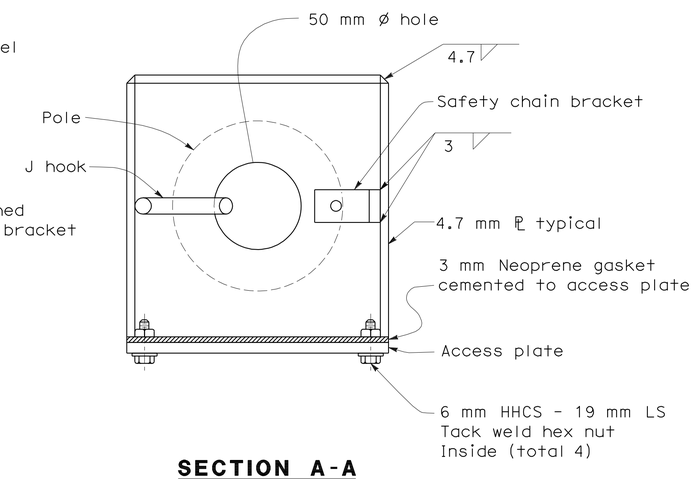

SECTION A-A

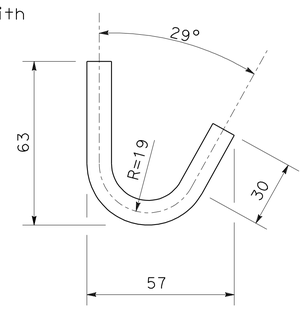

DETAIL C
J HOOK

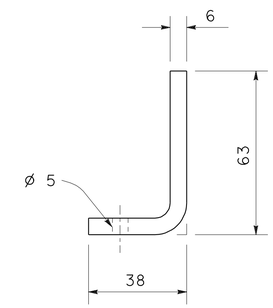

DETAIL D
SAFETY CHAIN BRACKET

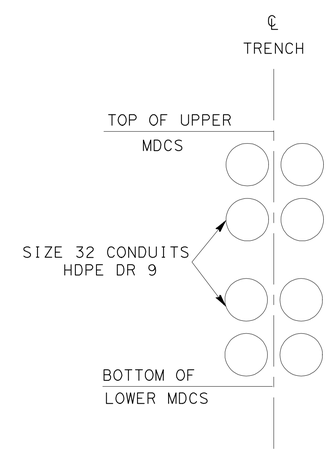

MDCS (Typ)
MDCS(8) SHOWN
NO SCALE

SEE MULTIDUCT CONDUIT SYSTEM DETAIL SHOWN ON CONSTRUCTION DETAILS

NOTE:
THE CONTRACTOR SHALL VERIFY ALL CONTROLLING FIELD DIMENSIONS BEFORE ORDERING OR FABRICATING ANY MATERIAL.

BRANCH CHIEF Jeffrey B Woody	DESIGN	BY R HEZAR	CHECKED
	DETAILS	BY D W JUSTICE Jr	CHECKED R HEZAR
	QUANTITIES	BY	CHECKED

STATE OF CALIFORNIA
DEPARTMENT OF TRANSPORTATION

DIVISION OF ENGINEERING SERVICES
DESIGN AND TECHNICAL SERVICES
SPECIAL DESIGNS BRANCH
A

BRIDGE NO. N/A
POST MILE

RELOCATION OF EXISTING VDS35 CAMERA MOUNTING DETAILS

E-24

(ENGLISH) SPECIAL DESIGNS BRANCH BORDER SHEET (REV. 7-1-09)

ORIGINAL SCALE IN MILLIMETERS FOR REDUCED PLANS 0 10 20 30 40 50 60 70 80 90 100

CU 11
EA 091831

DISREGARD PRINTS BEARING EARLIER REVISION DATES

REVISION DATES | SHEET | OF

FILE => spec_des_br_prj/2009sd/XX-XXXXXX/11-091831_e24.dgn

USERNAME => trpierce DATE PLOTTED => 21-OCT-2010 TIME PLOTTED => 08:06

Dist	COUNTY	ROUTE	KILOMETER POST TOTAL PROJECT	SHEET No.	TOTAL SHEETS
11	SD	905,805	R8.4/R9.8, 3.1/4.2	256	364

Enrique P Bernal 07-29-10
REGISTERED ELECTRICAL ENGINEER DATE

10-18-10
PLANS APPROVAL DATE

REGISTERED PROFESSIONAL ENGINEER E.P.BERNAL No. 15675 Exp. 6-30-12 ELECTRICAL STATE OF CALIFORNIA

THE STATE OF CALIFORNIA OR ITS OFFICERS OR AGENTS SHALL NOT BE RESPONSIBLE FOR THE ACCURACY OR COMPLETENESS OF ELECTRONIC COPIES OF THIS PLAN SHEET.

Caltrans Metric

NOTES:

1. SEE CAMERA CABLE CROSS SECTION ON THIS SHEET.
2. SEE TABLE "A" FOR CONNECTOR 1 ASSIGNMENT.
3. SEE TABLE "B" FOR CONNECTOR 2 ASSIGNMENT.
4. SEE TABLE "C" FOR CONNECTOR 3 ASSIGNMENT.
5. MIn 1 METER OF SLACK IS REQUIRED FROM CAMERA CABLE TO THE CONNECTORS.
6. SEE TABLE "D" FOR CONNECTOR ASSIGNMENT.
7. MOUNT TERMINAL BLOCK IN EXISTING CCTV CABINET.
8. CONTRACTOR SHALL VERIFY THE LENGTH OF CAMERA CABLE AT EACH LOCATION AS SHOWN IN ELECTRICAL PLANS. A SLACK OF 2 METERS IS REQUIRED AT EACH LOCATION.

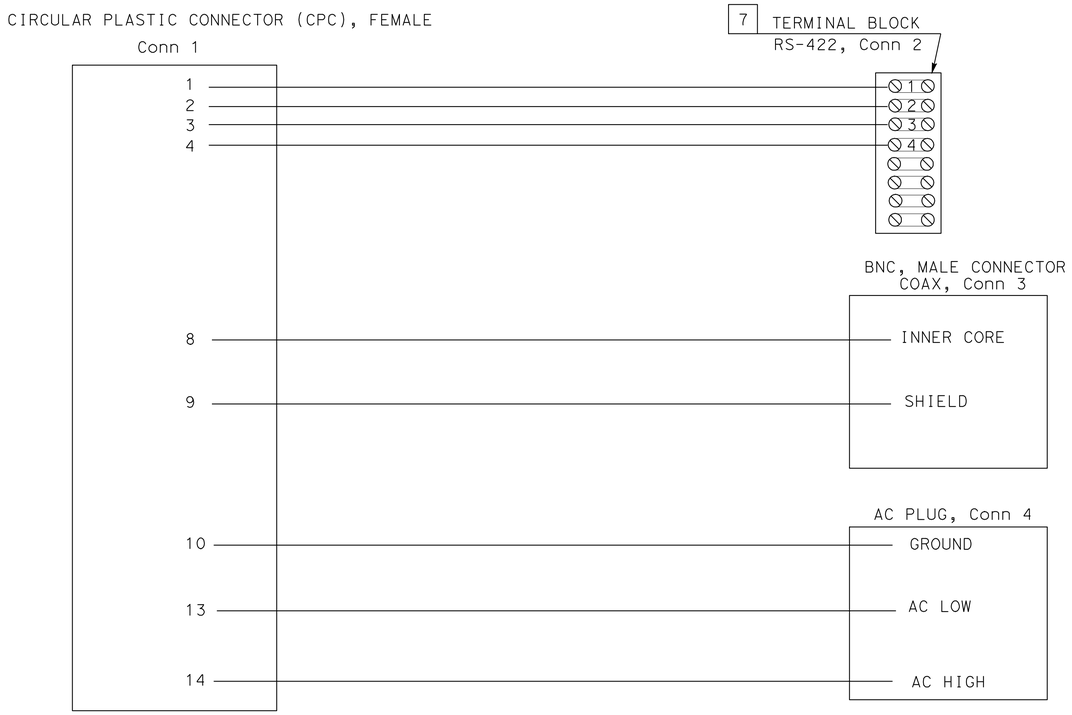

TABLE "D":

CPC PIN DESCRIPTION
PIN 1 - 22 AWG,RS-422
PIN 2 - 22 AWG,RS-422
PIN 3 - 22 AWG,RS-422
PIN 4 - 22 AWG,RS-422
PIN 8 - RG-59,CORE WIRE
PIN 9 - RG-59,SHIELD
PIN 10 - 18 AWG,AC Gnd
PIN 13 - AC LOW
PIN 14 - AC HIGH

TABLE "A":

Conn 1 DESCRIPTION			
PIN	FUNCTION	WIRE COLOR	WIRE GAUGE
1	CAMERA CONTROL RX-	BROWN	22 AWG
2	CAMERA CONTROL RX+	YELLOW	22 AWG
3	CAMERA CONTROL TX-	BLUE	22 AWG
4	CAMERA CONTROL TX+	RED	22 AWG
8	VIDEO SIGNAL COAX INNER CORE	BARE	
9	VIDEO SIGNAL COAX SHIELD	WHITE/BLACK	22 AWG
10	CAMERA POWER,GROUND	GREEN	18 AWG
13	CAMERA POWER,AC LOW	WHITE	18 AWG
14	CAMERA POWER,AC HIGH	BLACK	18 AWG

TABLE "B":

Conn 2 DESCRIPTION			
POSITION	FUNCTION	WIRE COLOR	WIRE GAUGE
1	CAMERA CONTROL RX-	BROWN	22 AWG
2	CAMERA CONTROL RX+	YELLOW	22 AWG
3	CAMERA CONTROL TX-	BLUE	22 AWG
4	CAMERA CONTROL TX+	RED	22 AWG

TABLE "C":

Conn 3 DESCRIPTION	
PIN	FUNCTION
CENTER	VIDEO SIGNAL INNER CORE,COAX
SHIELD	VIDEO SIGNAL SHIELD,COAX

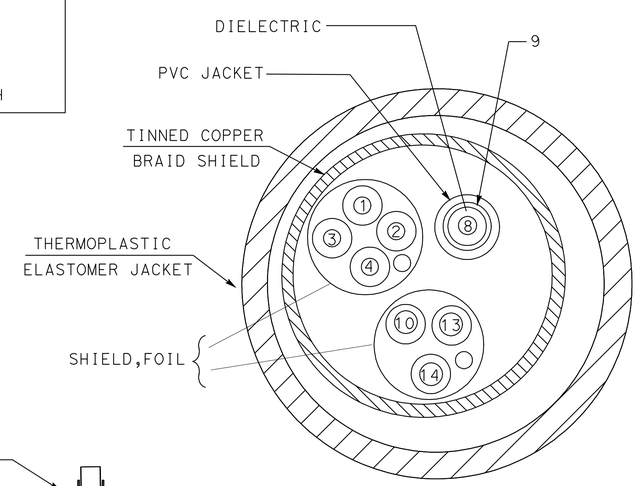

CAMERA CABLE CROSS SECTION 6

CONNECTOR DESCRIPTIONS			
CONNECTOR	TYPE	FUNCTION	LOCATION
Conn 1	CPC	CONTROL,VIDEO,POWER	POLE TOP 2
Conn 2	TERMINAL BLOCK	CAMERA CONTROL	CCTV CABINET 3
Conn 3	BNC,MALE	VIDEO	CCTV CABINET 4
Conn 4	AC PLUG,3 PRONG	CAMERA POWER	CCTV CABINET

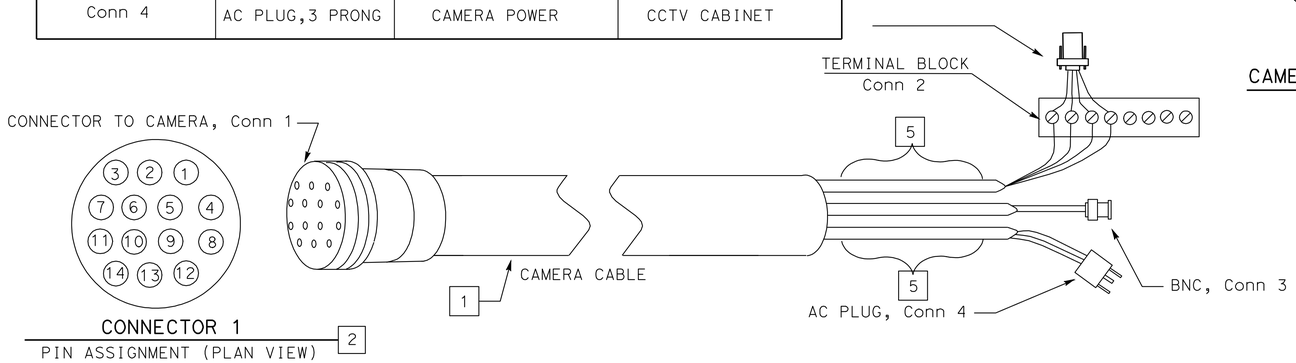

"CAMERA CABLE"

THIS PLAN IS ACCURATE FOR ELECTRICAL WORK ONLY.

FIBER OPTIC COMMUNICATION SYSTEM (ELECTRICAL DETAILS)

NO SCALE

E-25

STATE OF CALIFORNIA - DEPARTMENT OF TRANSPORTATION
Caltrans ELECTRICAL DESIGN

FUNCTIONAL SUPERVISOR: DALE WILSON
CALCULATED-DESIGNED BY: HENRY TSUI
CHECKED BY: ENRIQUE BERNAL
REVISED BY / DATE REVISED

LAST REVISION 06-25-10 | DATE PLOTTED => 21-OCT-2010 | TIME PLOTTED => 08:00

Dist	COUNTY	ROUTE	KILOMETER POST TOTAL PROJECT	SHEET No.	TOTAL SHEETS
11	SD	905,805	R8.4/R9.8, 3.1/4.2	257	364

Enrique P. Bernal 07-29-10
REGISTERED ELECTRICAL ENGINEER DATE

10-18-10
PLANS APPROVAL DATE

REGISTERED PROFESSIONAL ENGINEER E.P.BERNAL No. 15675 Exp. 6-30-12 ELECTRICAL STATE OF CALIFORNIA

THE STATE OF CALIFORNIA OR ITS OFFICERS OR AGENTS SHALL NOT BE RESPONSIBLE FOR THE ACCURACY OR COMPLETENESS OF ELECTRONIC COPIES OF THIS PLAN SHEET.

Caltrans Metric

LEGEND

- CABLE SPLICE SEE FO SPLICE DETAILS.
- (A) - H12/FH-FO144-905805/PALM
- (B) - H12/H13-FO84(DB)-905805/OTAYMESA
- (C) - H12/H13-FO84(BB)-905805/OTAYMESA
- (D) - CCTV124-FO12-905805
- (E) - CCTV127-FO12-W OTAYMESA
- (F) - CCTV113-FO12-S DELSOL
- (G) - U5.446-FO12-905805
- (H) - U2.166-FO12-S DELSOL
- (I) - U2.524-FO12-S PALM
- (J) - U5.446/U2.166-OCC-905805/S DELSOL
- (K) - U2.166/TDC-OCC-S DELSOL
- (L) - U2.920-FO12-N PALM

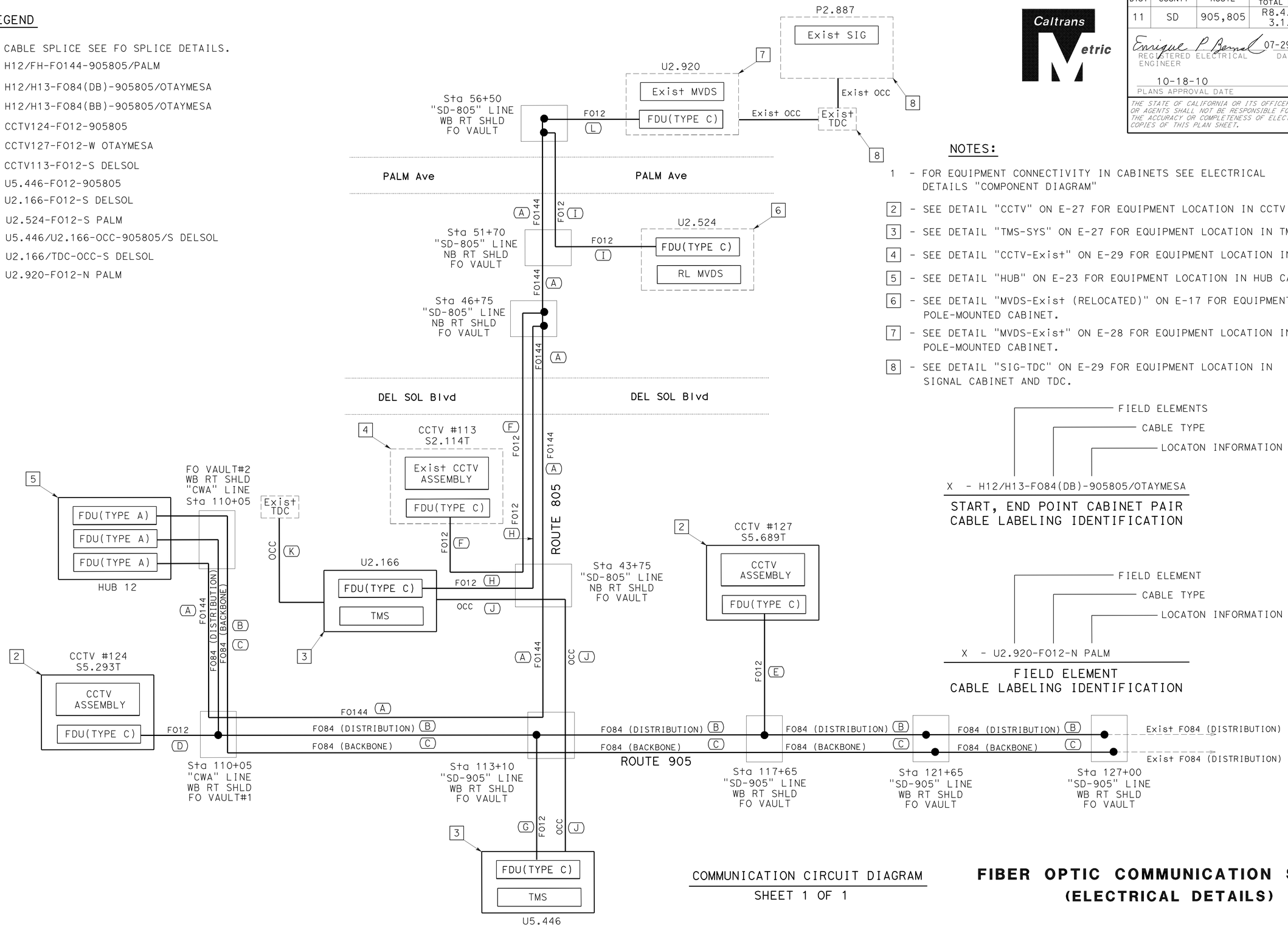

NOTES:

1 - FOR EQUIPMENT CONNECTIVITY IN CABINETS SEE ELECTRICAL DETAILS "COMPONENT DIAGRAM"

2 - SEE DETAIL "CCTV" ON E-27 FOR EQUIPMENT LOCATION IN CCTV CABINET.

3 - SEE DETAIL "TMS-SYS" ON E-27 FOR EQUIPMENT LOCATION IN TMS CABINET.

4 - SEE DETAIL "CCTV-Exist" ON E-29 FOR EQUIPMENT LOCATION IN CCTV CABINET.

5 - SEE DETAIL "HUB" ON E-23 FOR EQUIPMENT LOCATION IN HUB CABINET.

6 - SEE DETAIL "MVDS-Exist (RELOCATED)" ON E-17 FOR EQUIPMENT LOCATION IN POLE-MOUNTED CABINET.

7 - SEE DETAIL "MVDS-Exist" ON E-28 FOR EQUIPMENT LOCATION IN POLE-MOUNTED CABINET.

8 - SEE DETAIL "SIG-TDC" ON E-29 FOR EQUIPMENT LOCATION IN SIGNAL CABINET AND TDC.

FIELD ELEMENTS
CABLE TYPE
LOCATON INFORMATION

X - H12/H13-FO84(DB)-905805/OTAYMESA

START, END POINT CABINET PAIR CABLE LABELING IDENTIFICATION

FIELD ELEMENT
CABLE TYPE
LOCATON INFORMATION

X - U2.920-FO12-N PALM

FIELD ELEMENT CABLE LABELING IDENTIFICATION

COMMUNICATION CIRCUIT DIAGRAM

SHEET 1 OF 1

FIBER OPTIC COMMUNICATION SYSTEM (ELECTRICAL DETAILS)

NO SCALE

E-26

THIS PLAN SHEET ACCURATE FOR ELECTRICAL WORK ONLY.

STATE OF CALIFORNIA - DEPARTMENT OF TRANSPORTATION
Caltrans TRAFFIC ELECTRICAL

FUNCTIONAL SUPERVISOR: DALE WILSON
CALCULATED-DESIGNED BY: HENRY TSUI
CHECKED BY: ENRIQUE BERNAL
REVISED BY / DATE REVISED

LAST REVISION 06-25-10
DATE PLOTTED => 21-OCT-2010
TIME PLOTTED => 08:00

Dist	COUNTY	ROUTE	KILOMETER POST TOTAL PROJECT	SHEET No.	TOTAL SHEETS
11	SD	905,805	R8.4/R9.8, 3.1/4.2	258	364

Caltrans Metric

Enrique P. Bernal 07-29-10
REGISTERED ELECTRICAL ENGINEER DATE

10-18-10
PLANS APPROVAL DATE

REGISTERED PROFESSIONAL ENGINEER E.P.BERNAL No. 15675 Exp. 6-30-12 STATE OF CALIFORNIA

THE STATE OF CALIFORNIA OR ITS OFFICERS OR AGENTS SHALL NOT BE RESPONSIBLE FOR THE ACCURACY OR COMPLETENESS OF ELECTRONIC COPIES OF THIS PLAN SHEET.

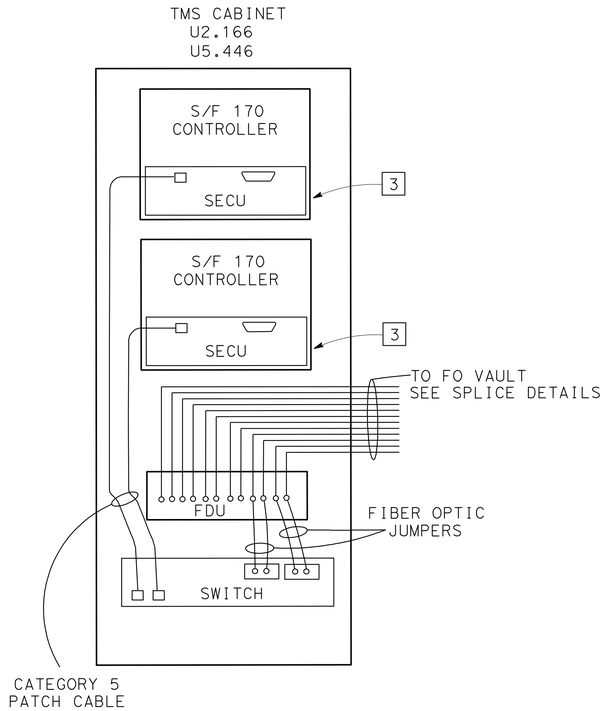

TMS CABINET
COMPONENT DIAGRAM

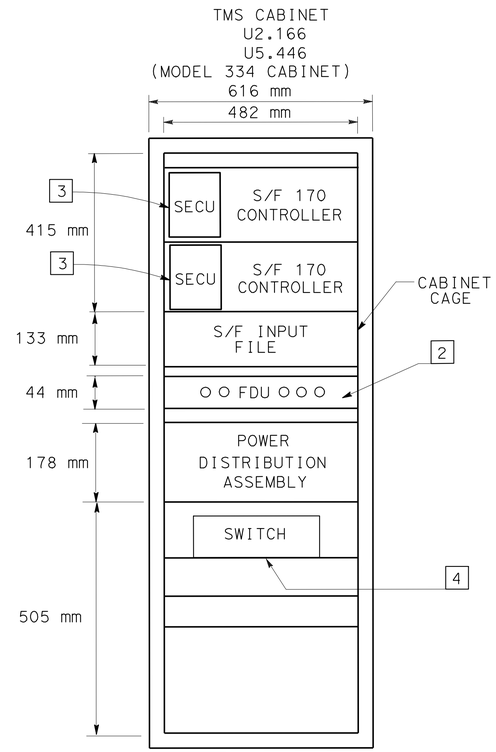

TMS CABINET EQUIPMENT PLACEMENT
DETAIL "TMS-SYS"
(TYPICAL)

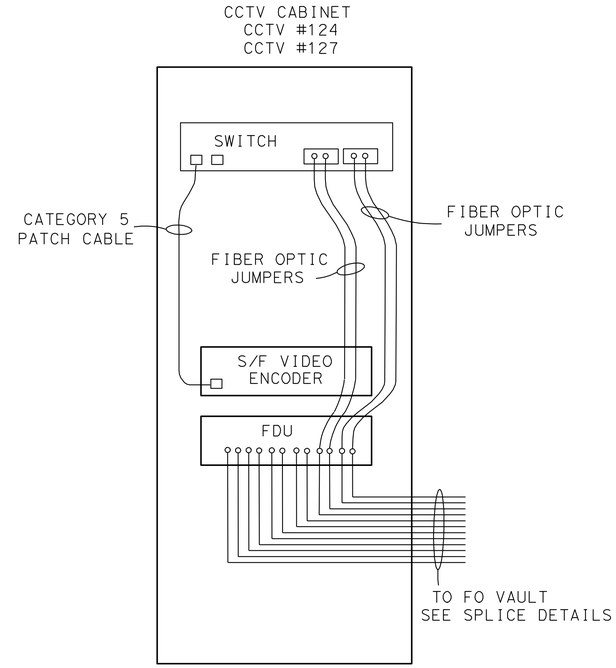

CCTV CABINET
COMPONENT DIAGRAM
(TYPICAL)

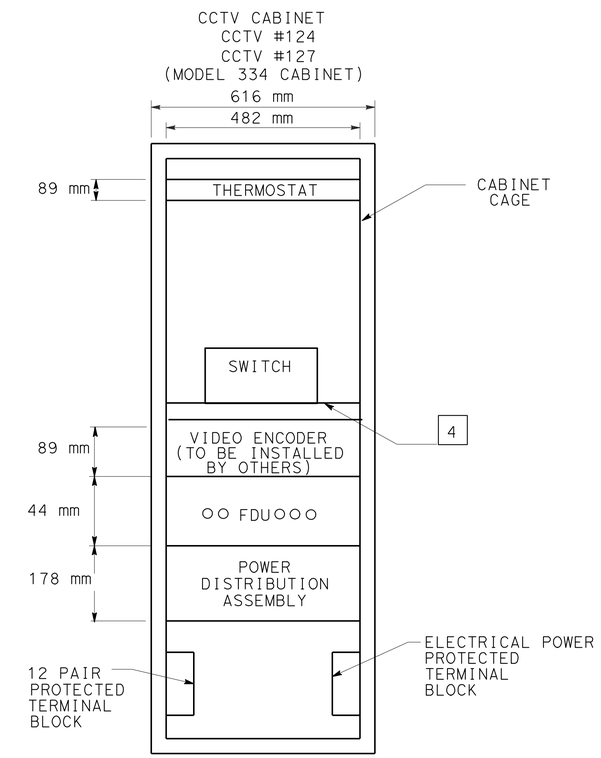

CCTV SYSTEM CABINET
DETAIL AND EQUIPMENT PLACEMENT

DETAIL "CCTV"
(TYPICAL)

LEGEND:

- FIBER OPTIC TRANSMITTER/RECEIVER
- NETWORK PORT
- SERIAL CONNECTION
- SECU - SERIAL ETHERNET CONVERSION UNIT
- SURGE PROTECTOR
- CIRCUIT BREAKER
- HT - RELAY COIL - HIGH TEMPERATURE
- HT - RELAY CONTACT - NORMALLY CLOSED
- W\GFC1 - WITH GROUND FAULT CURRENT INTERRUPT
- 8 - WIRE SIZE, IF NOT INDICATED SHALL BE #12 AWG
- F - FAN
- L - INDICATOR LAMP
- R - DUPLEX RECEPTACLE
- THERMOSTATIC CONTROL
- THERMO - ADJUSTABLE CALIBRATED THERMOSTAT

NOTES:

1 - THE CONTRACTOR SHALL VERIFY ALL CONTROLLING FIELD DIMENSIONS BEFORE ORDERING AND INSTALLING EQUIPMENT.

2 - REMOVE BLANK PANEL AND REPLACE WITH FDU.

3 - INSTALL SECU IN 170 CONTROLLER CARD SLOT.

4 - SHELF REQUIRED FOR EQUIPMENT.

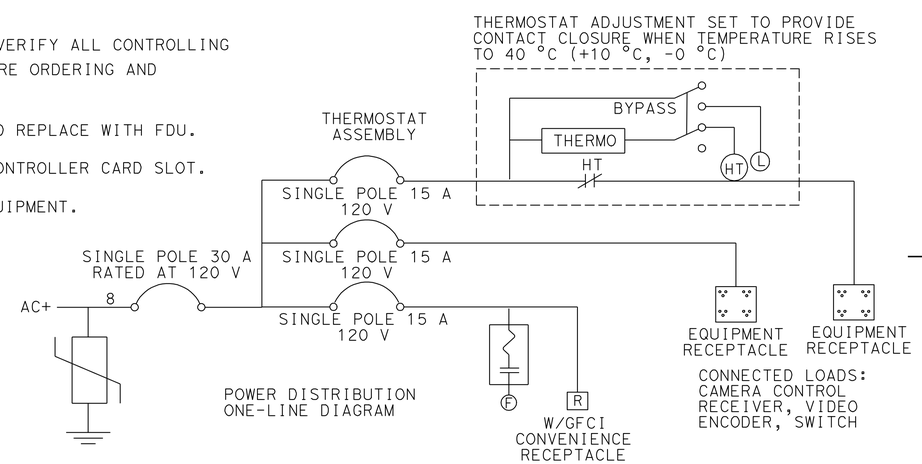

POWER DISTRIBUTION ONE-LINE DIAGRAM

CCTV SYSTEM CABINET
POWER DISTRIBUTION ASSEMBLY

THIS PLAN IS ACCURATE FOR ELECTRICAL WORK ONLY.

FIBER OPTIC COMMUNICATION SYSTEM
(ELECTRICAL DETAILS)

NO SCALE

E-27

STATE OF CALIFORNIA - DEPARTMENT OF TRANSPORTATION
Caltrans **ELECTRICAL DESIGN**

FUNCTIONAL SUPERVISOR: DALE WILSON
CALCULATED-DESIGNED BY: HENRY TSUI
CHECKED BY: ENRIQUE BERNAL
REVISED BY / DATE REVISED

LAST REVISION 06-25-10 | DATE PLOTTED => 08-NOV-2010 | TIME PLOTTED => 08:37

Dist	COUNTY	ROUTE	KILOMETER POST TOTAL PROJECT	SHEET No.	TOTAL SHEETS
11	SD	905,805	R8.4/R9.8, 3.1/4.2	259	364

Enrique P Bernal 07-29-10
REGISTERED ELECTRICAL ENGINEER DATE

10-18-10
PLANS APPROVAL DATE

REGISTERED PROFESSIONAL ENGINEER E.P.BERNAL No. 15675 Exp. 6-30-12 STATE OF CALIFORNIA

THE STATE OF CALIFORNIA OR ITS OFFICERS OR AGENTS SHALL NOT BE RESPONSIBLE FOR THE ACCURACY OR COMPLETENESS OF ELECTRONIC COPIES OF THIS PLAN SHEET.

Caltrans Metric

NOTES:

1 - SHELF REQUIRED FOR EQUIPMENT.

2 - INSTALL SECU IN 170 CONTROLLER CARD SLOT.

3 - LABEL CABLE END IN EACH CABINET. THE LABEL NAME SHALL CORRESPOND TO THE TERMINATION IN THE SIGNAL CABINET.

4 - Exist 110 PUNCH DOWN BLOCK WITH RJ45 CONNECTION. TERMINATED OCC PER EIA/TIA 568B.

5 - EEP NOT REQUIRED FOR U2.524. FDU AND SWITCH IN MVDS CABINET ONLY.

LEGEND:

- FIBER OPTIC TRANSMITTER/RECEIVER
- NETWORK PORT
- RJ45 CONNECTION
- SERIAL CONNECTION

SECU - SERIAL ETHERNET CONVERSION UNIT
EEP - ETHERNET EXTENDER PROVIDER
EES - ETHERNET EXTENDER SUBSCRIBER

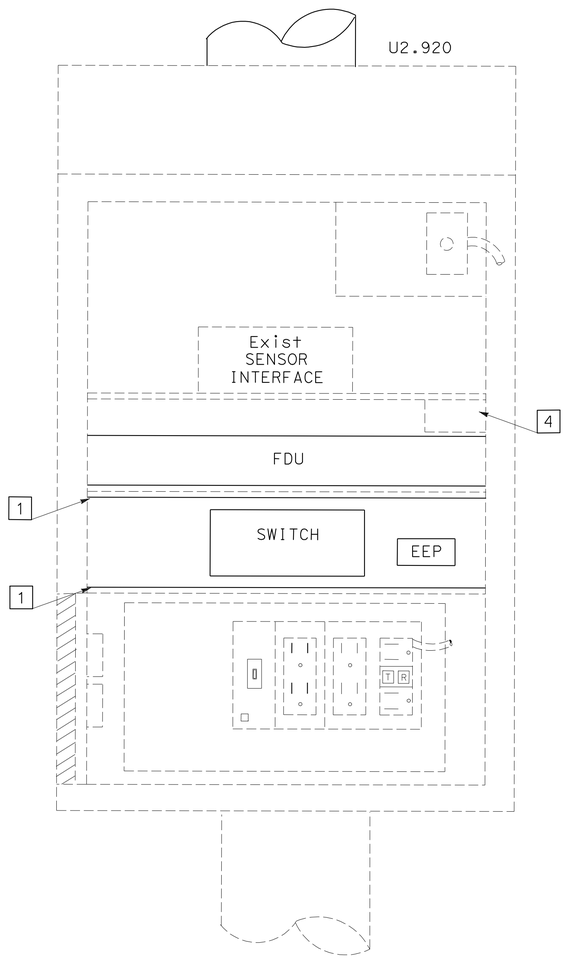

MVDS EQUIMENT PLACEMENT

DETAIL "MVDS-Exist"

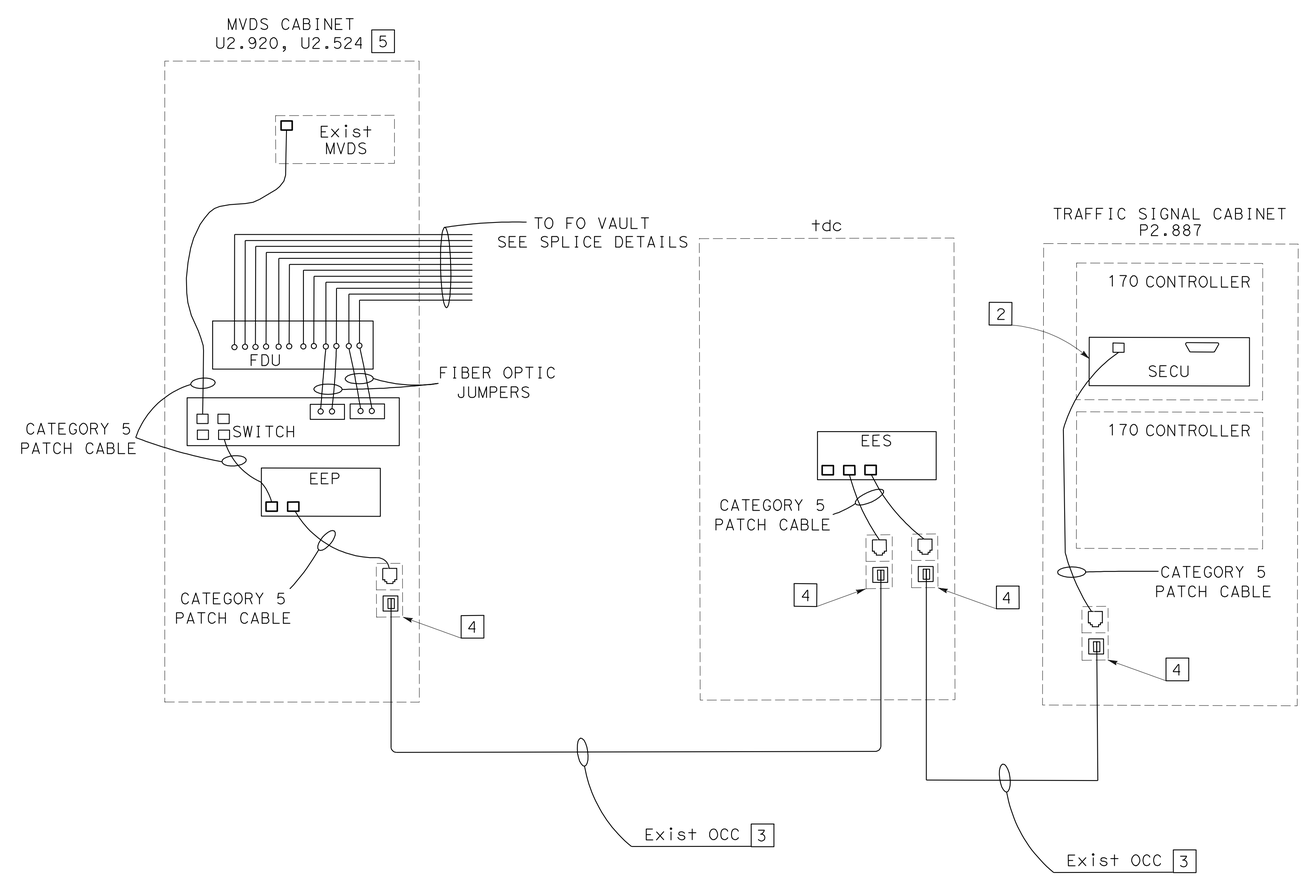

MVDS-tdc-SIGNAL

COMPONENT DIAGRAM

THIS PLAN IS ACCURATE FOR ELECTRICAL WORK ONLY.

FIBER OPTIC COMMUNICATION SYSTEM
(ELECTRICAL DETAILS)

NO SCALE

E-28

STATE OF CALIFORNIA - DEPARTMENT OF TRANSPORTATION
Caltrans **ELECTRICAL DESIGN**

FUNCTIONAL SUPERVISOR: DALE WILSON
CALCULATED-DESIGNED BY: ENRIQUE BERNAL
CHECKED BY: HENRY TSUI
REVISED BY
DATE REVISED

LAST REVISION 06-25-10
DATE PLOTTED => 21-OCT-2010
TIME PLOTTED => 08:01

Dist	COUNTY	ROUTE	KILOMETER POST TOTAL PROJECT	SHEET No.	TOTAL SHEETS
11	SD	905,805	R8.4/R9.8, 3.1/4.2	260	364

Enrique P Bernal 07-29-10
REGISTERED ELECTRICAL ENGINEER DATE

10-18-10
PLANS APPROVAL DATE

REGISTERED PROFESSIONAL ENGINEER E.P.BERNAL No. 15675 Exp. 6-30-12 STATE OF CALIFORNIA

THE STATE OF CALIFORNIA OR ITS OFFICERS OR AGENTS SHALL NOT BE RESPONSIBLE FOR THE ACCURACY OR COMPLETENESS OF ELECTRONIC COPIES OF THIS PLAN SHEET.

Caltrans Metric

NOTES:

1 - SHELF REQUIRED FOR EQUIPMENT.

2 - INSTALL SECU IN 170 CONROLLER SLOT.

3 - Exist 110 PUNCH BLOCK WITH RJ45 CONNECTION. TERMINATED OCC PER EIA/TIA 568B.

4 - Exist 110 PUNCH DOWN BOLCK WITH RJ45 CONNECTION. TERMINATED OCC PER EIA/TIA 568B.

5 - THE CONTRACTOR SHALL VERIFY ALL CONTROLLLING FIELD DIMENSIONS BEFORE ORDERING AND INSTALLING EQUIPMENT.

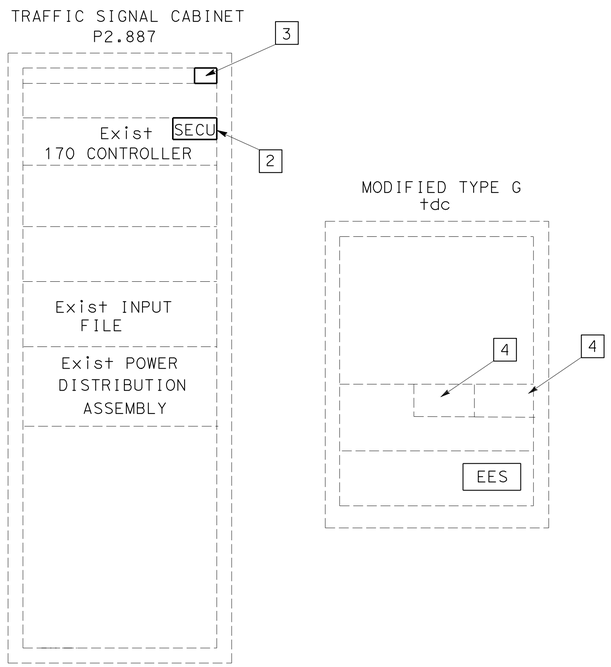

TRAFFIC SIGNAL CABINET AND TDC EQUIPMENT PLACEMENT

DETAIL "SIG-TDC"

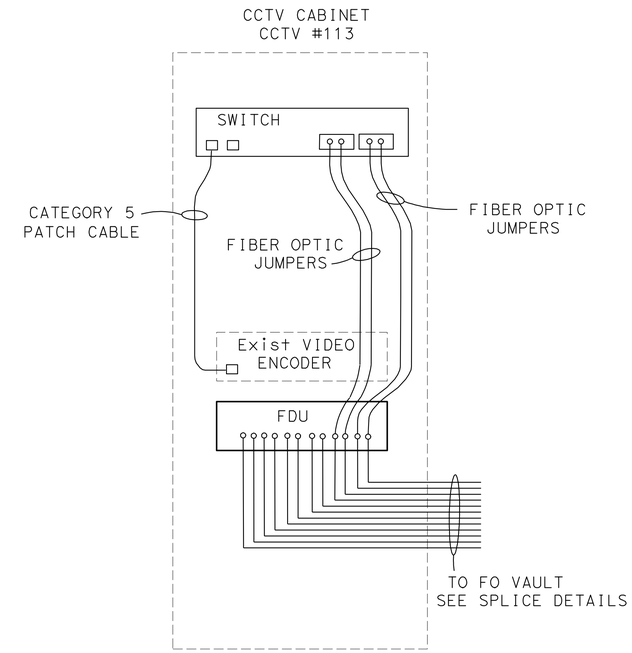

CCTV CABINET

COMPONENT DIAGRAM

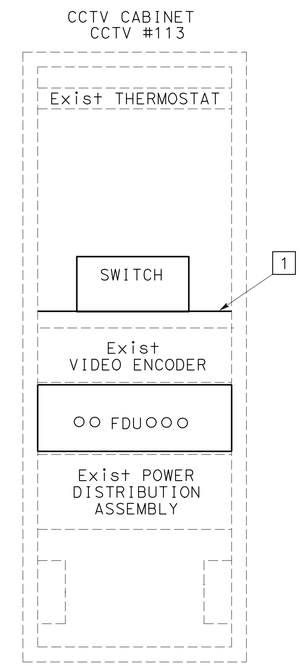

CCTV SYSTEM CABINET DETAIL AND EQUIPMENT PLACEMENT

DETAIL "CCTV-Exist"

LEGEND:

- FIBER OPTIC TRANSMITTER/RECEIVER
- NETWORK PORT
- SECU - SERIAL ETHERNET CONVERSION UNIT
- EES - ETHERNET EXTENDER SUBSCRIBER

THIS PLAN IS ACCURATE FOR ELECTRICAL WORK ONLY.

FIBER OPTIC COMMUNICATION SYSTEM (ELECTRICAL DETAILS)

NO SCALE

E-29

STATE OF CALIFORNIA - DEPARTMENT OF TRANSPORTATION
Caltrans ELECTRICAL DESIGN

FUNCTIONAL SUPERVISOR: DALE WILSON
CALCULATED-DESIGNED BY: HENRY TSUI
CHECKED BY: ENRIQUE BERNAL
REVISED BY / DATE REVISED

LAST REVISION 06-25-10 | DATE PLOTTED => 21-OCT-2010 | TIME PLOTTED => 08:14

Dist	COUNTY	ROUTE	KILOMETER POST TOTAL PROJECT	SHEET No.	TOTAL SHEETS
11	SD	905,805	R8.4/R9.8, 3.1/4.2	261	364

Enrique P Bernal 07-29-10
REGISTERED ELECTRICAL ENGINEER DATE

10-18-10
PLANS APPROVAL DATE

REGISTERED PROFESSIONAL ENGINEER E.P.BERNAL No. 15675 Exp. 6-30-12 ELECTRICAL STATE OF CALIFORNIA

THE STATE OF CALIFORNIA OR ITS OFFICERS OR AGENTS SHALL NOT BE RESPONSIBLE FOR THE ACCURACY OR COMPLETENESS OF ELECTRONIC COPIES OF THIS PLAN SHEET.

Caltrans Metric

COLOR CODES FOR BUFFER TUBES AND FIBERS:

1. BLUE (BL)
2. ORANGE (OR)
3. GREEN (GR)
4. BROWN (BR)
5. SLATE (SL)
6. WHITE (WT)
7. RED (RD)
8. BLACK (BK)
9. YELLOW (YL)
10. VIOLET (VL)
11. ROSE (RS)
12. AQUA (AQ)

NOTES (TSO):

1 - THIS SHEET DOES NOT SHOW ALL THE EX AND NEW FO VAULT/PULL BOXES. SEE CIRCUIT DIAGRAMS AND ELECTRICAL PLANS.

2 - FO84 (DISTRIBUTION) SHOWN ONLY. SAME DETAIL FOR FO84 (BACKBONE).

3 - TERMINATE FO84 ON FDU, SEE SHEET E-32 FOR FIBER TERMINATION LAYOUT.

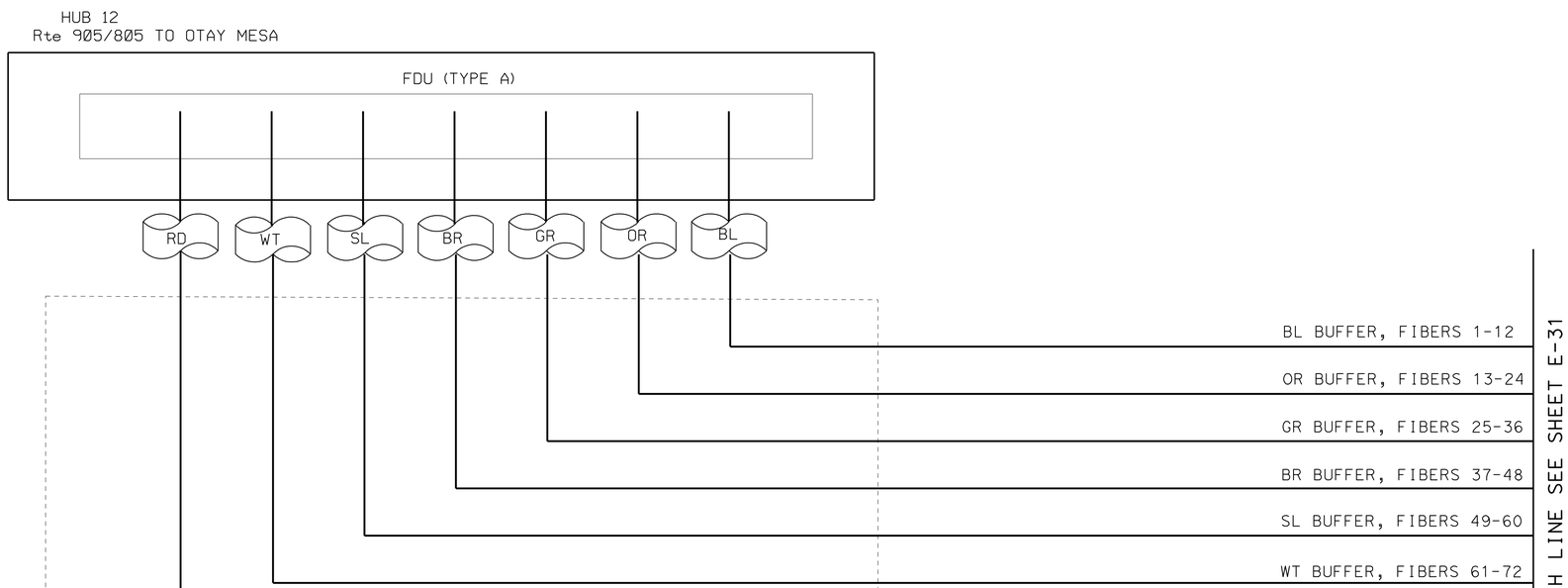

FO SPLICE DETAILS

FIBER OPTIC COMMUNICATION SYSTEM (ELECTRICAL DETAILS)

NO SCALE

E-30

THIS PLAN IS ACCURATE FOR ELECTRICAL WORK ONLY.

STATE OF CALIFORNIA - DEPARTMENT OF TRANSPORTATION
Caltrans ELECTRICAL DESIGN

FUNCTIONAL SUPERVISOR: DALE WILSON
CALCULATED-DESIGNED BY: HENRY TSUI
CHECKED BY: ENRIQUE BERNAL
REVISED BY / DATE REVISED

LAST REVISION 06-25-10 | DATE PLOTTED => 21-OCT-2010 | TIME PLOTTED => 08:14

Dist	COUNTY	ROUTE	KILOMETER POST TOTAL PROJECT	SHEET No.	TOTAL SHEETS
11	SD	905,805	R8.4/R9.8, 3.1/4.2	262	364

Enrique P Bernal 07-29-10
REGISTERED ELECTRICAL ENGINEER DATE

10-18-10
PLANS APPROVAL DATE

REGISTERED PROFESSIONAL ENGINEER E.P.BERNAL No. 15675 Exp. 6-30-12 ELECTRICAL STATE OF CALIFORNIA

THE STATE OF CALIFORNIA OR ITS OFFICERS OR AGENTS SHALL NOT BE RESPONSIBLE FOR THE ACCURACY OR COMPLETENESS OF ELECTRONIC COPIES OF THIS PLAN SHEET.

COLOR CODES FOR BUFFER TUBES AND FIBERS:

1. BLUE (BL)
2. ORANGE (OR)
3. GREEN (GR)
4. BROWN (BR)
5. SLATE (SL)
6. WHITE (WT)
7. RED (RD)
8. BLACK (BK)
9. YELLOW (YL)
10. VIOLET (VL)
11. ROSE (RS)
12. AQUA (AQ)

NOTES (TSO):

1 - THIS SHEET DOES NOT SHOW ALL THE Exist AND NEW FO VAULT/PULL BOXES. SEE CIRCUIT DIAGRAMS AND ELECTRICAL PLANS.

2 - FO84 SHOWN ONLY (DISTRIBUTION CABLE).

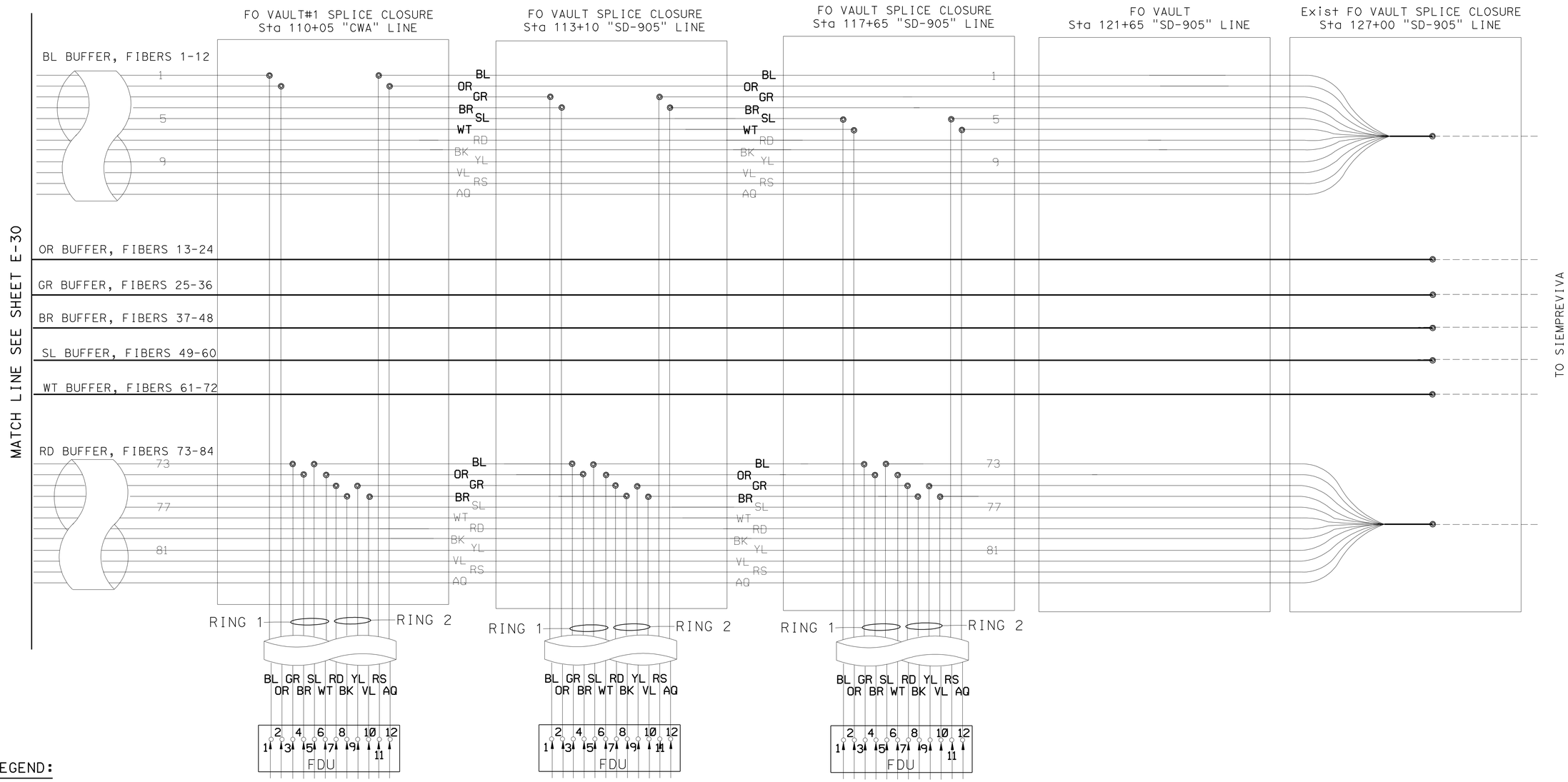

LEGEND:

- SPLICE OF TWO FIBER
- SC FEMALE CONNECTOR ON AN FDU PANEL
- SC MALE CONNECTOR ON AN SMFO PATCHCORD

THIS PLAN IS ACCURATE FOR ELECTRICAL WORK ONLY.

FO SPLICE DETAILS

FIBER OPTIC COMMUNICATION SYSTEM (ELECTRICAL DETAILS)

NO SCALE

E-31

STATE OF CALIFORNIA - DEPARTMENT OF TRANSPORTATION
Caltrans ELECTRICAL DESIGN

FUNCTIONAL SUPERVISOR: DALE WILSON
CALCULATED-DESIGNED BY: HENRY TSUI
CHECKED BY: ENRIQUE BERNAL
REVISED BY / DATE REVISED

LAST REVISION 06-25-10 | DATE PLOTTED => 21-OCT-2010 | TIME PLOTTED => 08:15

Dist	COUNTY	ROUTE	KILOMETER POST TOTAL PROJECT	SHEET No.	TOTAL SHEETS
11	SD	905,805	R8.4/R9.8, 3.1/4.2	263	364

Enrique P Bernal 07-29-10
REGISTERED ELECTRICAL ENGINEER DATE

10-18-10
PLANS APPROVAL DATE

REGISTERED PROFESSIONAL ENGINEER E.P.BERNAL No. 15675 Exp. 6-30-12 ELECTRICAL STATE OF CALIFORNIA

THE STATE OF CALIFORNIA OR ITS OFFICERS OR AGENTS SHALL NOT BE RESPONSIBLE FOR THE ACCURACY OR COMPLETENESS OF ELECTRONIC COPIES OF THIS PLAN SHEET.

Caltrans Metric

COLOR CODES FOR BUFFER TUBES AND FIBERS:

1. BLUE (BL)
2. ORANGE (OR)
3. GREEN (GR)
4. BROWN (BR)
5. SLATE (SL)
6. WHITE (WT)
7. RED (RD)
8. BLACK (BK)
9. YELLOW (YL)
10. VIOLET (VL)
11. ROSE (RS)
12. AQUA (AQ)

HUB 12
Rte 905/805

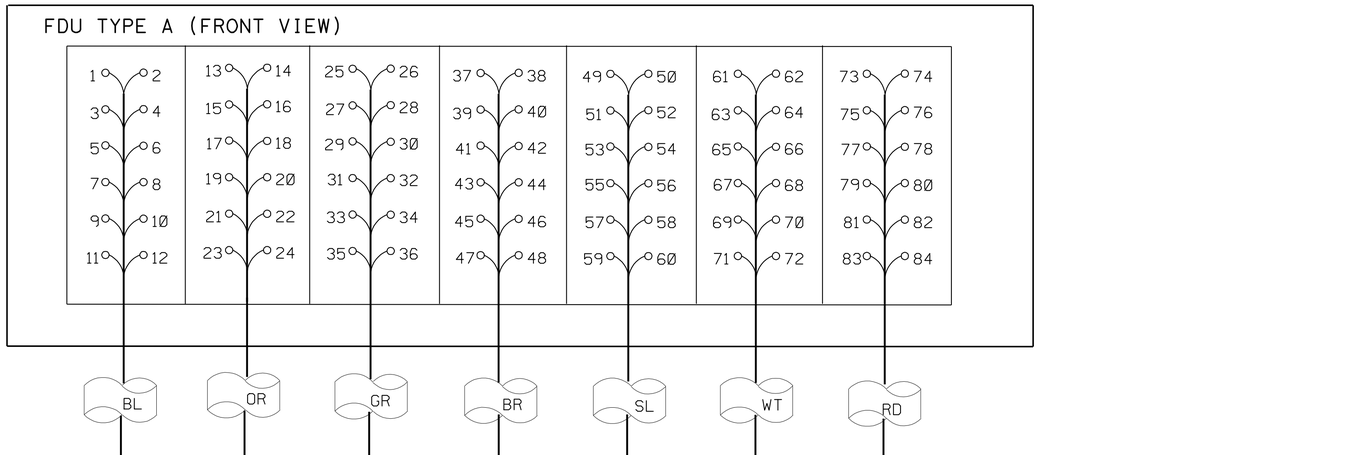

FDU TO FIBER CABLE TERMINATION DETAIL

SAME DETAIL FOR FO84 (BACKBONE)

LEGEND:

SC FEMALE CONNECTOR ON AN FDU PANEL

THIS PLAN IS ACCURATE FOR ELECTRICAL WORK ONLY.

FO SPLICE DETAILS

FIBER OPTIC COMMUNICATION SYSTEM (ELECTRICAL DETAILS)

NO SCALE

E-32

STATE OF CALIFORNIA - DEPARTMENT OF TRANSPORTATION
Caltrans ELECTRICAL DESIGN

FUNCTIONAL SUPERVISOR: DALE WILSON
CALCULATED-DESIGNED BY: HENRY TSUI
CHECKED BY: ENRIQUE BERNAL
REVISED BY / DATE REVISED

LAST REVISION 06-25-10 | DATE PLOTTED => 21-OCT-2010 | TIME PLOTTED => 08:15

Dist	COUNTY	ROUTE	KILOMETER POST TOTAL PROJECT	SHEET No.	TOTAL SHEETS
11	SD	905,805	R8.4/R9.8, 3.1/4.2	264	364

Enrique P Bernal 07-29-10
REGISTERED ELECTRICAL ENGINEER DATE

10-18-10
PLANS APPROVAL DATE

REGISTERED PROFESSIONAL ENGINEER E.P.BERNAL No. 15675 Exp. 6-30-12 ELECTRICAL STATE OF CALIFORNIA

THE STATE OF CALIFORNIA OR ITS OFFICERS OR AGENTS SHALL NOT BE RESPONSIBLE FOR THE ACCURACY OR COMPLETENESS OF ELECTRONIC COPIES OF THIS PLAN SHEET.

Caltrans Metric

COLOR CODES FOR BUFFER TUBES AND FIBERS:

1. BLUE (BL)
2. ORANGE (OR)
3. GREEN (GR)
4. BROWN (BR)
5. SLATE (SL)
6. WHITE (WT)
7. RED (RD)
8. BLACK (BK)
9. YELLOW (YL)
10. VIOLET (VL)
11. ROSE (RS)
12. AQUA (AQ)

NOTES (TSO):

1 - THIS SHEET DOES NOT SHOW ALL THE Exist AND NEW FO VAULT/PULL BOXES. SEE CIRCUIT DIAGRAMS AND ELECTRICAL PLANS.

2 - FO144 SHOWN ONLY (DISTRIBUTION CABLE).

3 - TERMINATE FO144 ON FDU, SEE SHEET E-35 FOR FIBER TERMINATION LAYOUT.

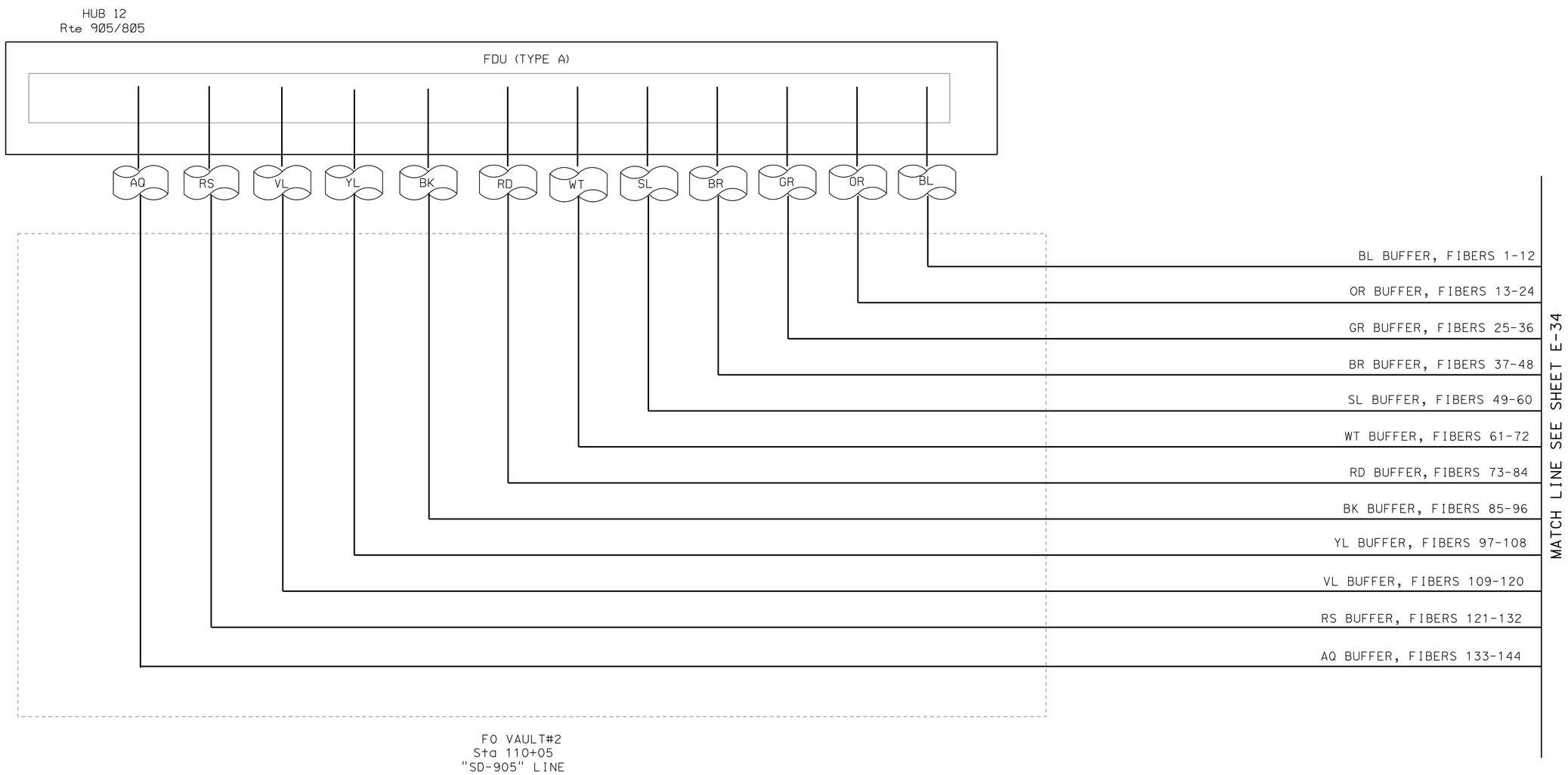

FO SPLICE DETAILS

FIBER OPTIC COMMUNICATION SYSTEM (ELECTRICAL DETAILS)

NO SCALE

THIS PLAN IS ACCURATE FOR ELECTRICAL WORK ONLY.

E-33

STATE OF CALIFORNIA - DEPARTMENT OF TRANSPORTATION
Caltrans ELECTRICAL DESIGN

FUNCTIONAL SUPERVISOR: DALE WILSON
CALCULATED-DESIGNED BY: HENRY TSUI
CHECKED BY: ENRIQUE BERNAL
REVISED BY / DATE REVISED

LAST REVISION 06-25-10
DATE PLOTTED => 21-OCT-2010
TIME PLOTTED => 08:15

Dist	COUNTY	ROUTE	KILOMETER POST TOTAL PROJECT	SHEET No.	TOTAL SHEETS
11	SD	905,805	R8.4/R9.8, 3.1/4.2	265	364

Enrique P Bernal 07-29-10
REGISTERED ELECTRICAL ENGINEER DATE

10-18-10
PLANS APPROVAL DATE

REGISTERED PROFESSIONAL ENGINEER E.P.BERNAL No. 15675 Exp. 6-30-12 ELECTRICAL STATE OF CALIFORNIA

THE STATE OF CALIFORNIA OR ITS OFFICERS OR AGENTS SHALL NOT BE RESPONSIBLE FOR THE ACCURACY OR COMPLETENESS OF ELECTRONIC COPIES OF THIS PLAN SHEET.

Caltrans Metric

COLOR CODES FOR BUFFER TUBES AND FIBERS:

1. BLUE (BL)
2. ORANGE (OR)
3. GREEN (GR)
4. BROWN (BR)
5. SLATE (SL)
6. WHITE (WT)
7. RED (RD)
8. BLACK (BK)
9. YELLOW (YL)
10. VIOLET (VL)
11. ROSE (RS)
12. AQUA (AQ)

NOTES (TSO):

1 - THIS SHEET DOES NOT SHOW ALL THE Exist AND NEW FO VAULT/PULL BOXES. SEE CIRCUIT DIAGRAMS AND ELECTRICAL PLANS.

2 - FO144 SHOWN ONLY (DISTRIBUTION CABLE).

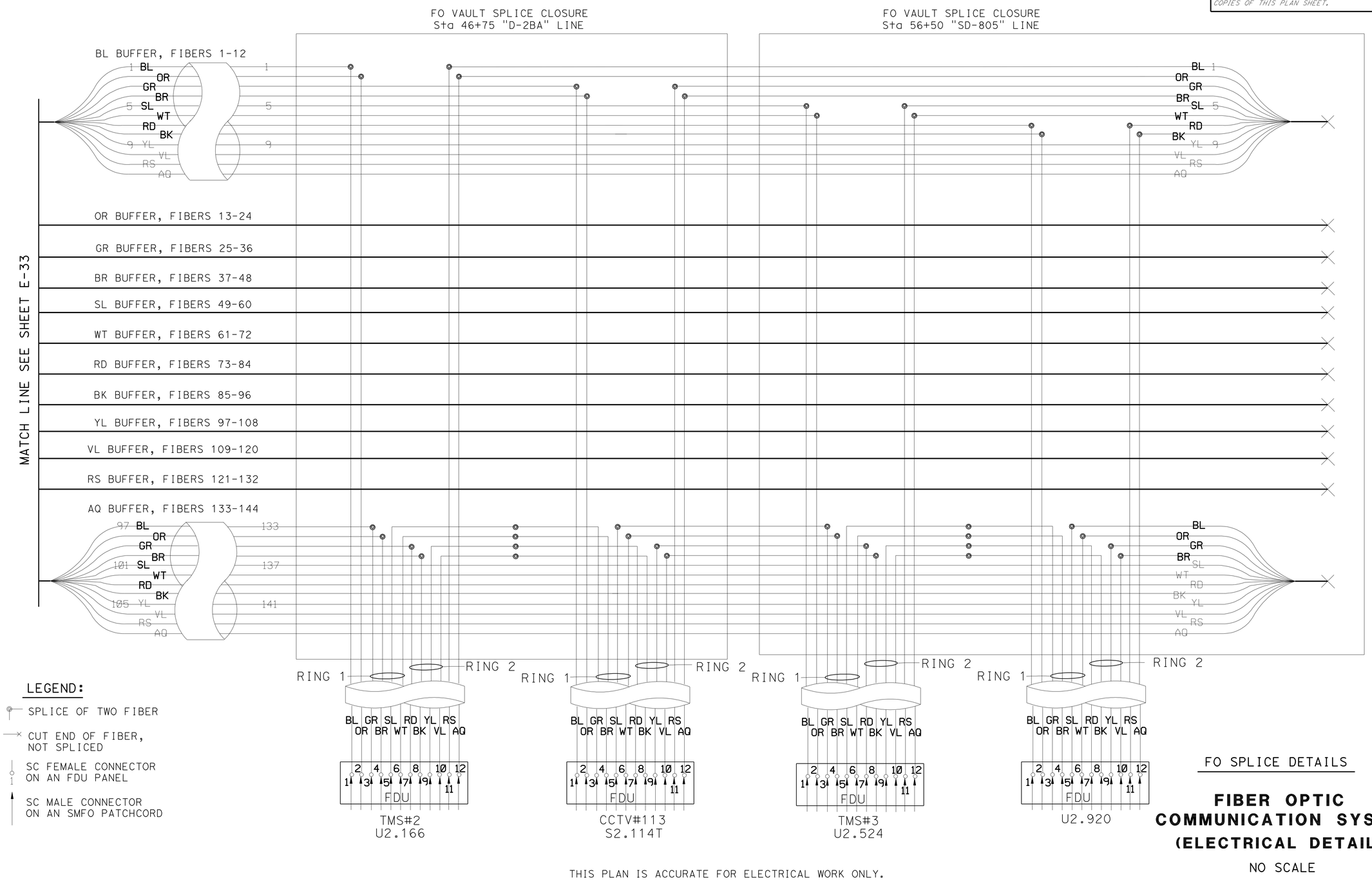

LEGEND:

- SPLICE OF TWO FIBER
- CUT END OF FIBER, NOT SPLICED
- SC FEMALE CONNECTOR ON AN FDU PANEL
- SC MALE CONNECTOR ON AN SMFO PATCHCORD

THIS PLAN IS ACCURATE FOR ELECTRICAL WORK ONLY.

FO SPLICE DETAILS

FIBER OPTIC COMMUNICATION SYSTEM (ELECTRICAL DETAILS)

NO SCALE

E-34

STATE OF CALIFORNIA - DEPARTMENT OF TRANSPORTATION
Caltrans ELECTRICAL DESIGN

FUNCTIONAL SUPERVISOR: DALE WILSON
CALCULATED-DESIGNED BY: ENRIQUE BERNAL
CHECKED BY: HENRY TSUI
REVISED BY / DATE REVISED

LAST REVISION 06-25-10 | DATE PLOTTED => 21-OCT-2010 | TIME PLOTTED => 08:15

Dist	COUNTY	ROUTE	KILOMETER POST TOTAL PROJECT	SHEET No.	TOTAL SHEETS
11	SD	905,805	R8.4/R9.8, 3.1/4.2	266	364

Enrique P Bernal 07-29-10
REGISTERED ELECTRICAL ENGINEER DATE

10-18-10
PLANS APPROVAL DATE

REGISTERED PROFESSIONAL ENGINEER E.P.BERNAL No. 15675 Exp. 6-30-12 ELECTRICAL STATE OF CALIFORNIA

THE STATE OF CALIFORNIA OR ITS OFFICERS OR AGENTS SHALL NOT BE RESPONSIBLE FOR THE ACCURACY OR COMPLETENESS OF ELECTRONIC COPIES OF THIS PLAN SHEET.

Caltrans Metric

COLOR CODES FOR BUFFER TUBES AND FIBERS:

1. BLUE (BL)
2. ORANGE (OR)
3. GREEN (GR)
4. BROWN (BR)
5. SLATE (SL)
6. WHITE (WT)
7. RED (RD)
8. BLACK (BK)
9. YELLOW (YL)
10. VIOLET (VL)
11. ROSE (RS)
12. AQUA (AQ)

HUB 12
Rte 905/805

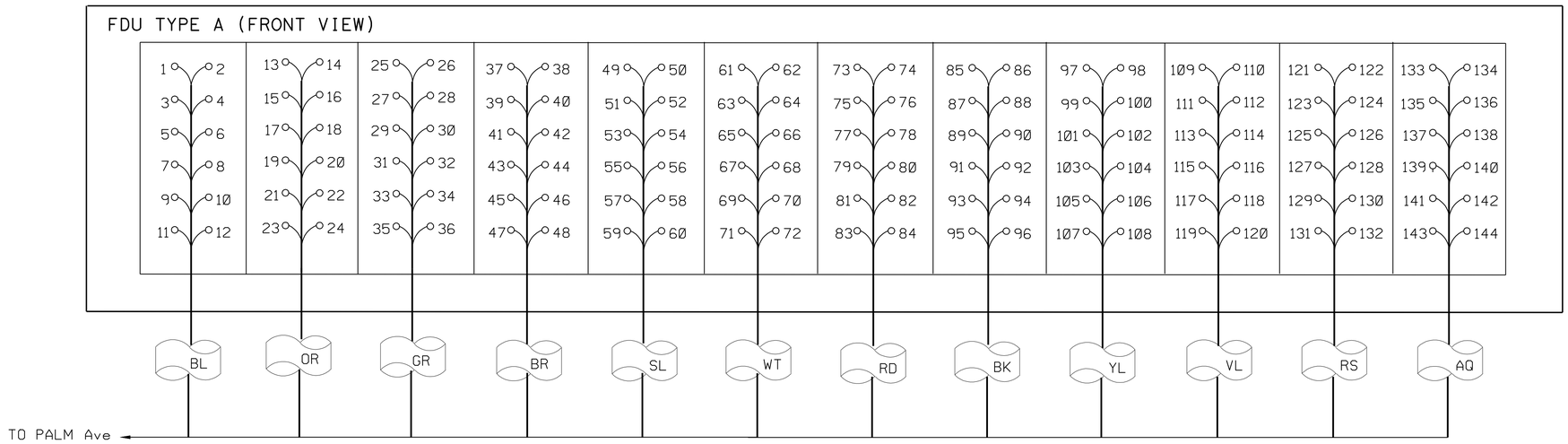

FDU TO FIBER CABLE TERMINATION DETAIL

LEGEND:

SC FEMALE CONNECTOR ON AN FDU PANEL

THIS PLAN IS ACCURATE FOR ELECTRICAL WORK ONLY.

FO SPLICE DETAILS

FIBER OPTIC COMMUNICATION SYSTEM (ELECTRICAL DETAILS)

NO SCALE

E-35

STATE OF CALIFORNIA - DEPARTMENT OF TRANSPORTATION
Caltrans ELECTRICAL DESIGN

FUNCTIONAL SUPERVISOR: DALE WILSON
CALCULATED-DESIGNED BY: HENRY TSUI
CHECKED BY: ENRIQUE BERNAL
REVISED BY
DATE REVISED

LAST REVISION 06-25-10
DATE PLOTTED => 21-OCT-2010
TIME PLOTTED => 08:15

Dist	COUNTY	ROUTE	KILOMETER POST TOTAL PROJECT	SHEET No.	TOTAL SHEETS
11	SD	905,805	R8.4/R9.8, 3.1/4.2	267	364

Caltrans Metric

Enrique P Bernal 07-29-10
REGISTERED ELECTRICAL ENGINEER DATE

10-18-10
PLANS APPROVAL DATE

REGISTERED PROFESSIONAL ENGINEER E.P.BERNAL No. 15675 Exp. 6-30-12 ELECTRICAL STATE OF CALIFORNIA

THE STATE OF CALIFORNIA OR ITS OFFICERS OR AGENTS SHALL NOT BE RESPONSIBLE FOR THE ACCURACY OR COMPLETENESS OF ELECTRONIC COPIES OF THIS PLAN SHEET.

CABINET S5.293T (CCTV#124) FDU POSITION NUMBER											
1	2	3	4	5	6	7	8	9	10	11	12
HUB 12		RING 1				RING 2				AIRWAY	
		HUB 12		TMS U5.446		HUB 12		TMS U5.446			
1	2	73	74	3	4	75	76	7	8	1	2

TMS-U5.446 FDU POSITION NUMBER											
1	2	3	4	5	6	7	8	9	10	11	12
HUB 12		RING 1				RING 2				AIRWAY	
		CCTV#124 S5.293T		CCTV#127 S5.689T		CCTV#124 S5.293T		CCTV#127 S5.689T			
3	4	5	6	3	4	9	10	7	8	3	4

CABINET S5.689T (CCTV#127) FDU POSITION NUMBER											
1	2	3	4	5	6	7	8	9	10	11	12
HUB 10		RING 1				RING 2				AIRWAY	
		TMS U5.446		RM ZR6.533		TMS U5.446		RM ZR6.533			
5	6	5	6	3	4	9	10	7	8	5	6

THIS PLAN IS ACCURATE FOR ELECTRICAL WORK ONLY.

FO SPLICE DETAILS

FIBER OPTIC COMMUNICATION SYSTEM (ELECTRICAL DETAILS)

NO SCALE

E-36

STATE OF CALIFORNIA - DEPARTMENT OF TRANSPORTATION
Caltrans ELECTRICAL DESIGN

FUNCTIONAL SUPERVISOR: DALE WILSON
CALCULATED-DESIGNED BY: HENRY TSUI
CHECKED BY: ENRIQUE BERNAL
REVISED BY / DATE REVISED

LAST REVISION 06-25-10 | DATE PLOTTED => 21-OCT-2010 | TIME PLOTTED => 08:15

Dist	COUNTY	ROUTE	KILOMETER POST TOTAL PROJECT	SHEET No.	TOTAL SHEETS
11	SD	905,805	R8.4/R9.8, 3.1/4.2	268	364

Caltrans Metric

Enrique P Bernal 07-29-10
REGISTERED ELECTRICAL ENGINEER DATE

10-18-10
PLANS APPROVAL DATE

REGISTERED PROFESSIONAL ENGINEER E.P.BERNAL No. 15675 Exp. 6-30-12 ELECTRICAL STATE OF CALIFORNIA

THE STATE OF CALIFORNIA OR ITS OFFICERS OR AGENTS SHALL NOT BE RESPONSIBLE FOR THE ACCURACY OR COMPLETENESS OF ELECTRONIC COPIES OF THIS PLAN SHEET.

TMS-U2.166
FDU POSITION NUMBER

1	2	3	4	5	6	7	8	9	10	11	12
HUB 12		RING 1				RING 2				PALM Ave	
		HUB 12		CCTV#113 S2.114T		HUB 12		CCTV#113 S2.114T			
1	2	133	134	3	4	135	136	7	8	1	2

CCTV#113
S2.114T

1	2	3	4	5	6	7	8	9	10	11	12
HUB 12		RING 1				RING 2				PALM Ave	
		TMS U2.166		TMS U2.524		TMS U2.166		TMS U2.524			
3	4	5	6	3	4	9	10	7	8	3	4

TMS-U2.524
FDU POSITION NUMBER

1	2	3	4	5	6	7	8	9	10	11	12
HUB 12		RING 1				RING 2				PALM Ave	
		CCTV#113 S2.114T		TMS U2.920		CCTV#113 S2.114T		TMS U2.920			
5	6	5	6	3	4	9	10	7	8	5	6

TMS-U2.920
FDU POSITION NUMBER

1	2	3	4	5	6	7	8	9	10	11	12
HUB 12		RING 1				RING 2				PALM Ave	
		TMS U2.524		PALM Ave		TMS U2.524		PALM Ave			
7	8	5	6	133	134	9	10	135	136	7	8

FO SPLICE DETAILS

FIBER OPTIC COMMUNICATION SYSTEM
(ELECTRICAL DETAILS)

NO SCALE

E-37

THIS PLAN IS ACCURATE FOR ELECTRICAL WORK ONLY.

STATE OF CALIFORNIA - DEPARTMENT OF TRANSPORTATION
Caltrans ELECTRICAL DESIGN

FUNCTIONAL SUPERVISOR: DALE WILSON
CALCULATED-DESIGNED BY: HENRY TSUI
CHECKED BY: ENRIQUE BERNAL
REVISED BY / DATE REVISED

LAST REVISION 06-25-10 | DATE PLOTTED => 21-OCT-2010 | TIME PLOTTED => 08:15

Dist	COUNTY	ROUTE	KILOMETER POST TOTAL PROJECT	SHEET No.	TOTAL SHEETS
11	SD	905,805	R8.4/R9.8, 3.1/4.2	269	364

Enrique P Bernal 07-29-10
REGISTERED ELECTRICAL ENGINEER DATE

10-18-10
PLANS APPROVAL DATE

REGISTERED PROFESSIONAL ENGINEER E.P.BERNAL No. 15675 Exp. 6-30-12 ELECTRICAL STATE OF CALIFORNIA

THE STATE OF CALIFORNIA OR ITS OFFICERS OR AGENTS SHALL NOT BE RESPONSIBLE FOR THE ACCURACY OR COMPLETENESS OF ELECTRONIC COPIES OF THIS PLAN SHEET.

Caltrans Metric

NOTES (TSO):

1 - MAINTAIN LIGHTING SYSTEM PER "TEMPORARY LIGHTING DETAIL" ON THIS SHEET.

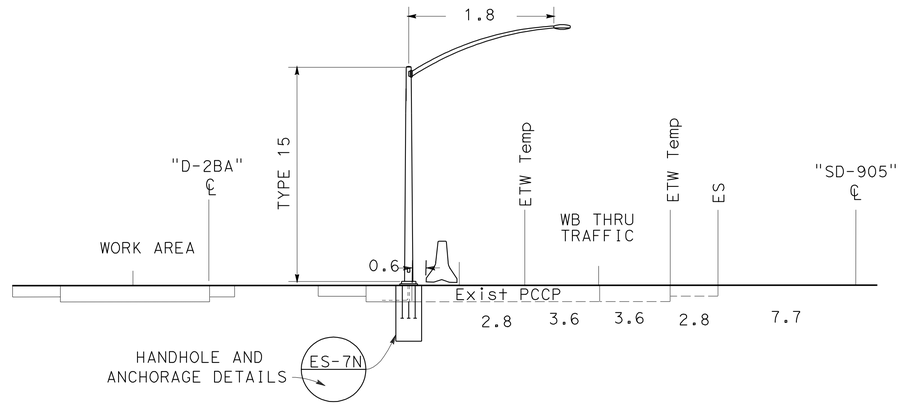

TEMPORARY LIGHTING DETAILS

STAGE 3A
NO SCALE

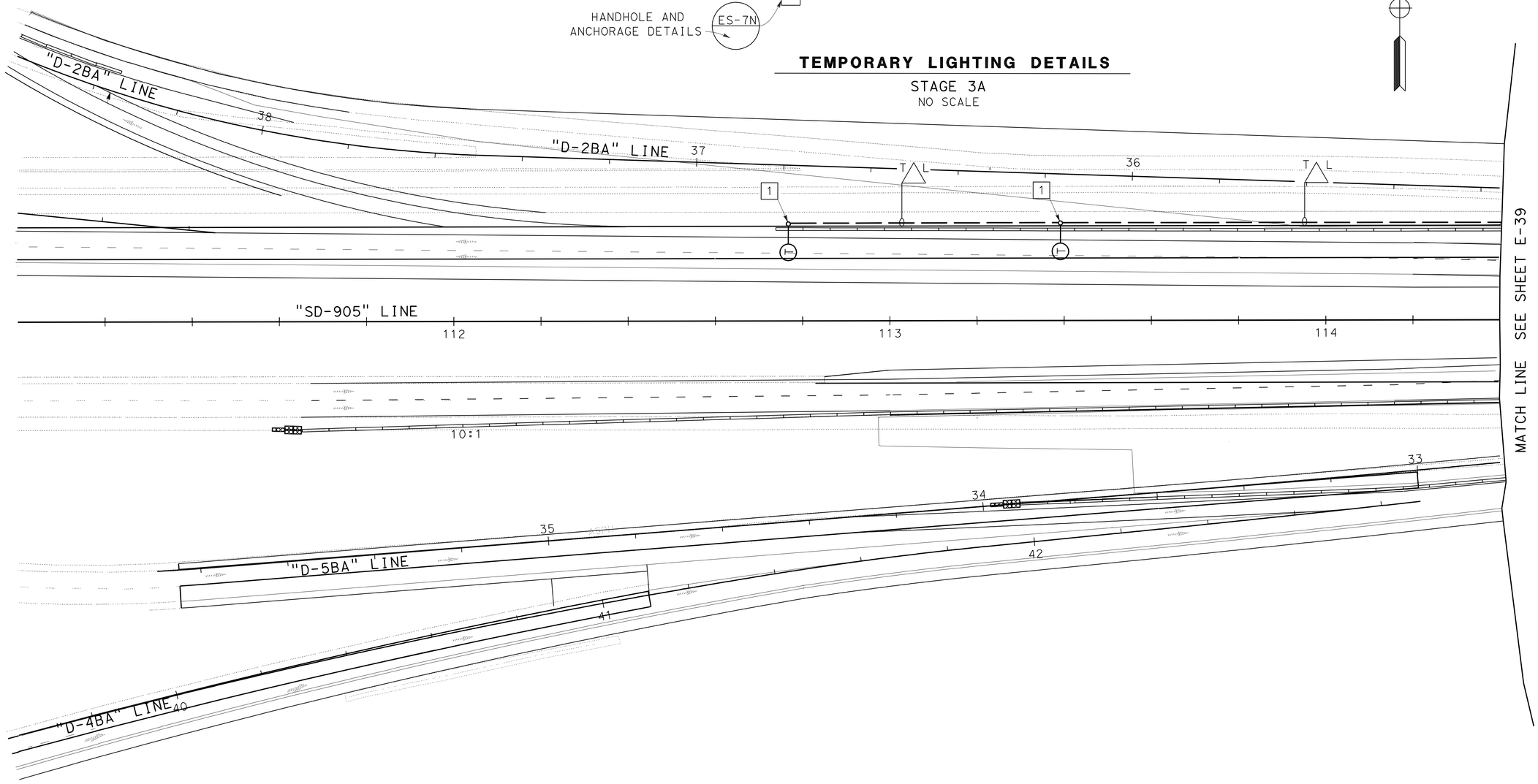

THIS PLAN IS ACCURATE FOR ELECTRICAL WORK ONLY.

ALL DIMENSIONS ARE IN METERS UNLESS OTHERWISE SHOWN.

TEMPORARY LIGHTING

SCALE 1:500

E-38

STATE OF CALIFORNIA - DEPARTMENT OF TRANSPORTATION
Caltrans ELECTRICAL DESIGN

FUNCTIONAL SUPERVISOR: DALE WILSON
CALCULATED-DESIGNED BY: HENRY TSUI
CHECKED BY: ENRIQUE BERNAL
REVISED BY
DATE REVISED

LAST REVISION 06-25-10
DATE PLOTTED => 21-OCT-2010
TIME PLOTTED => 08:04

Dist	COUNTY	ROUTE	KILOMETER POST TOTAL PROJECT	SHEET No.	TOTAL SHEETS
11	SD	905,805	R8.4/R9.8, 3.1/4.2	270	364

Enrique P Bernal 07-29-10
REGISTERED ELECTRICAL ENGINEER DATE

10-18-10
PLANS APPROVAL DATE

REGISTERED PROFESSIONAL ENGINEER E.P.BERNAL No. 15675 Exp. 6-30-12 ELECTRICAL STATE OF CALIFORNIA

THE STATE OF CALIFORNIA OR ITS OFFICERS OR AGENTS SHALL NOT BE RESPONSIBLE FOR THE ACCURACY OR COMPLETENESS OF ELECTRONIC COPIES OF THIS PLAN SHEET.

Caltrans Metric

NOTES (TSO):

1 - PAID PER LIGHTING AND SIGN ILLUMINATION.
SEE SHEET E-3.

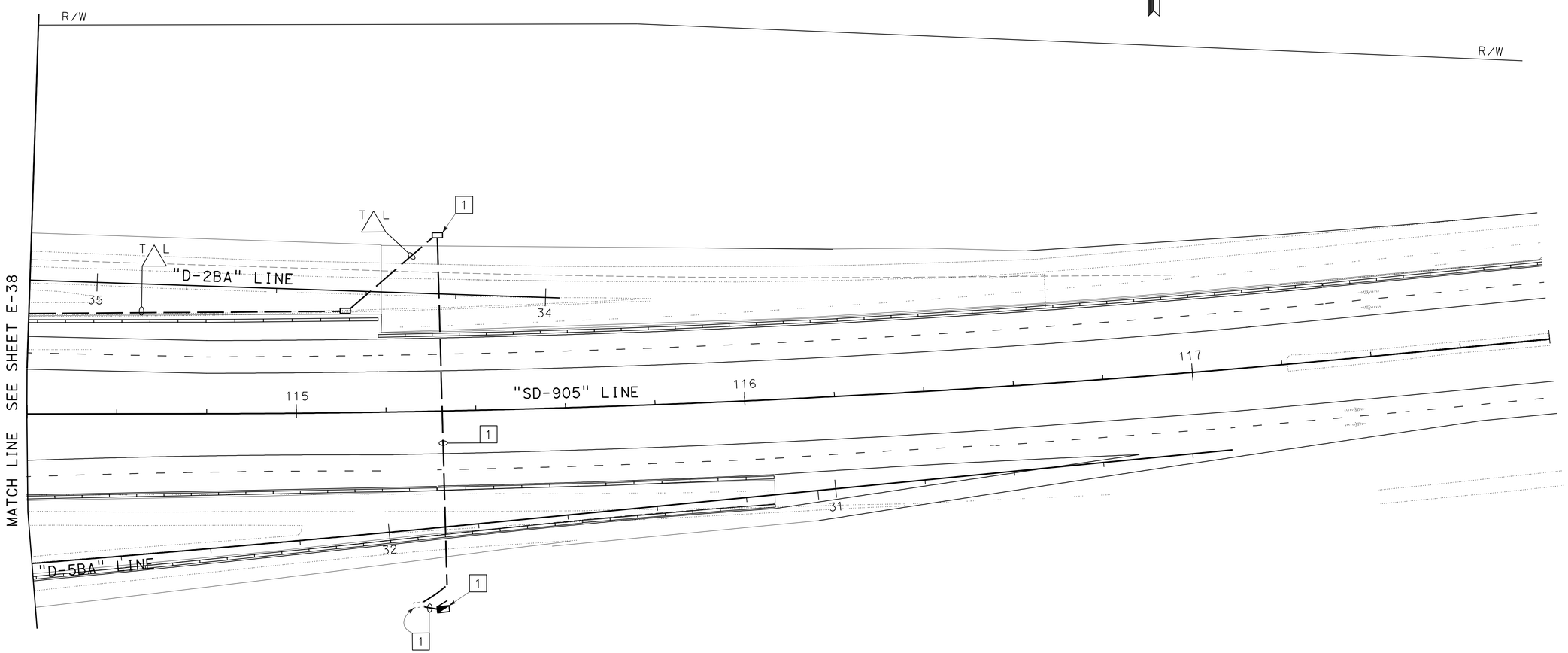

THIS PLAN IS ACCURATE FOR ELECTRICAL WORK ONLY.

ALL DIMENSIONS ARE IN METERS UNLESS OTHERWISE SHOWN.

TEMPORARY LIGHTING

SCALE 1:500 **E-39**

STATE OF CALIFORNIA - DEPARTMENT OF TRANSPORTATION
Caltrans **ELECTRICAL DESIGN**

FUNCTIONAL SUPERVISOR: DALE WILSON
CALCULATED-DESIGNED BY: HENRY TSUJI
CHECKED BY: ENRIQUE BERNAL
REVISED BY / DATE REVISED

LAST REVISION 06-25-10
DATE PLOTTED => 21-OCT-2010
TIME PLOTTED => 08:04

Dist	COUNTY	ROUTE	KILOMETER POST TOTAL PROJECT	SHEET No.	TOTAL SHEETS
11	SD	905,805	R8.4/R9.8, 3.1/4.2	271	364

Enrique P Bernal 07-29-10
REGISTERED ELECTRICAL ENGINEER DATE

10-18-10
PLANS APPROVAL DATE

REGISTERED PROFESSIONAL ENGINEER E.P.BERNAL No. 15675 Exp. 6-30-12 ELECTRICAL STATE OF CALIFORNIA

THE STATE OF CALIFORNIA OR ITS OFFICERS OR AGENTS SHALL NOT BE RESPONSIBLE FOR THE ACCURACY OR COMPLETENESS OF ELECTRONIC COPIES OF THIS PLAN SHEET.

Caltrans Metric

NOTES (TSO):

1 - MAINTAIN LIGHTING SYSTEM PER "TEMPORARY LIGHTING DETAIL" ON THIS SHEET.

2 - PAID PER LIGHTING AND SIGN ILLUMINATION. SEE SHEET E-7.

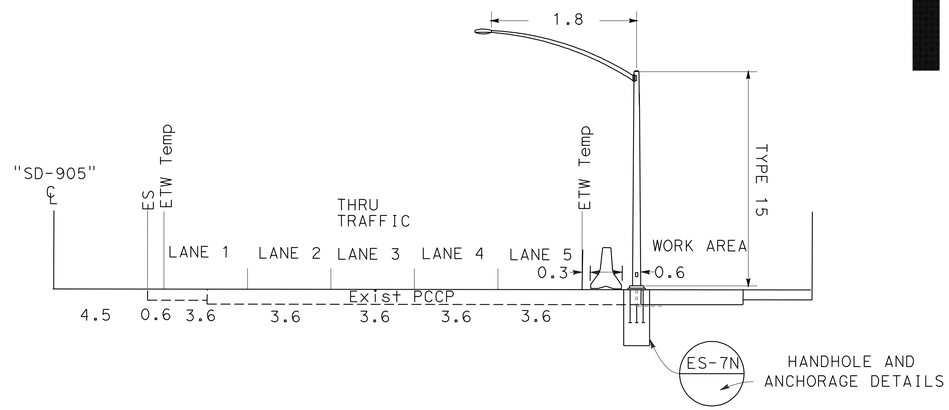

TEMPORARY LIGHTING DETAILS

STAGE 3A
NO SCALE

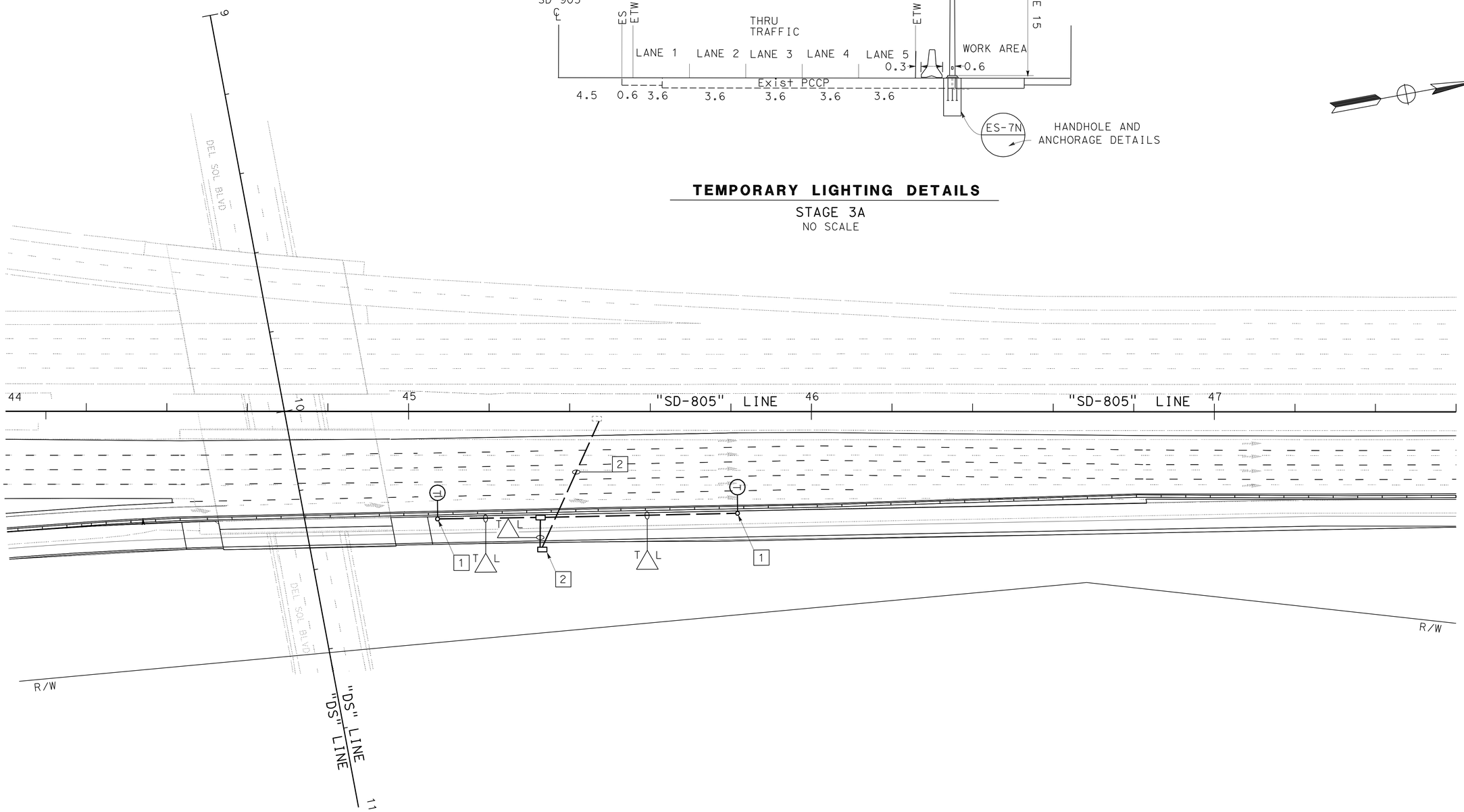

THIS PLAN IS ACCURATE FOR ELECTRICAL WORK ONLY.

ALL DIMENSIONS ARE IN METERS UNLESS OTHERWISE SHOWN.

TEMPORARY LIGHTING

SCALE 1:500

E-40

STATE OF CALIFORNIA - DEPARTMENT OF TRANSPORTATION
Caltrans **ELECTRICAL DESIGN**

FUNCTIONAL SUPERVISOR: DALE WILSON
CALCULATED-DESIGNED BY: HENRY TSUJI
CHECKED BY: ENRIQUE BERNAL
REVISED BY / DATE REVISED

LAST REVISION 06-25-10
DATE PLOTTED => 21-OCT-2010
TIME PLOTTED => 08:04

DIST	COUNTY	ROUTE	KILOMETER POST TOTAL PROJECT	SHEET NO.	TOTAL SHEETS
11	SD	905,805	R8.4/R9.8, 3.1/4.2	272	364

Caltrans Metric

REGISTERED CIVIL ENGINEER

November 17, 2006
PLANS APPROVAL DATE

REGISTERED PROFESSIONAL ENGINEER Michael Janzen No. 44788 Exp. 03-31-08 CIVIL STATE OF CALIFORNIA

The State of California or its officers or agents shall not be responsible for the accuracy or completeness of electronic copies of this plan sheet.

To get to the Caltrans web site, go to: http://www.dot.ca.gov

To accompany plans dated 10-18-10

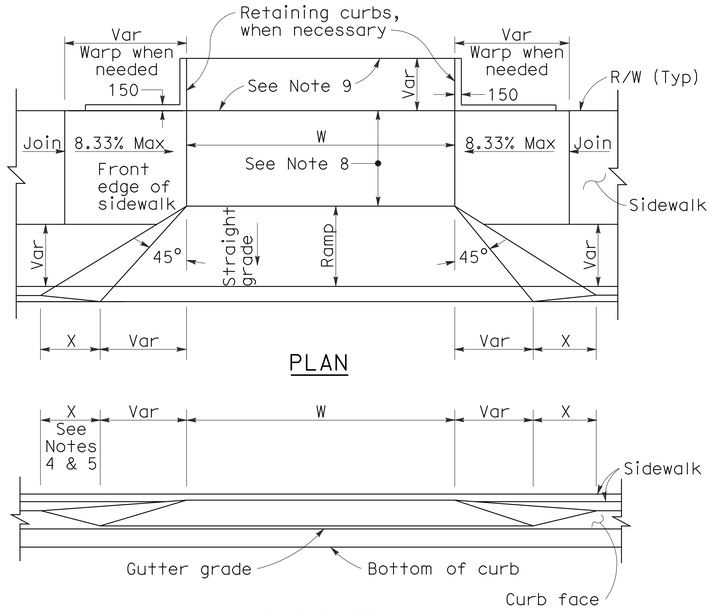

PLAN

ELEVATION

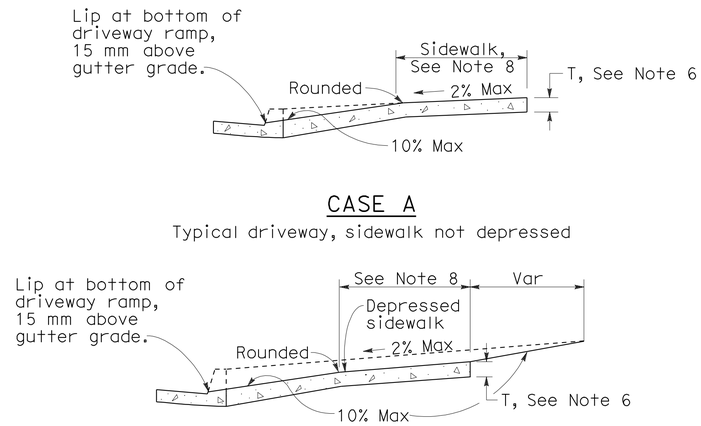

CASE A

Typical driveway, sidewalk not depressed

CASE B

Driveway with depressed sidewalk

SECTIONS

DRIVEWAYS

CURB QUANTITIES

TYPE	CUBIC METERS PER METER
A1-150	0.064
A1-200	0.075
A2-150	0.144
A2-200	0.155
A3-150	0.025
A3-200	0.035
B1-100	0.056
B1-150	0.073
B2-100	0.137
B2-150	0.152
B3-100	0.017
B3-150	0.027
B4	0.142
D-100	0.100
D-150	0.162
E	0.161

TABLE A

CURB TYPE	DIMENSIONS "H1"	"H2"	"W1"	"W2"
A1-150	350	150	190	40
A1-200	400	200	200	50
A2-150	300	150	790	40
A2-200	350	200	800	50
A3-150	150	130	185	35
A3-200	200	180	198	48
B1-100	300	100	200	70
B1-150	350	150	230	100
B2-100	250	100	800	70
B2-150	300	150	830	100
B3-100	100	80	185	55
B3-150	150	130	217	87
D-100	250	100	452	322
D-150	300	150	652	522

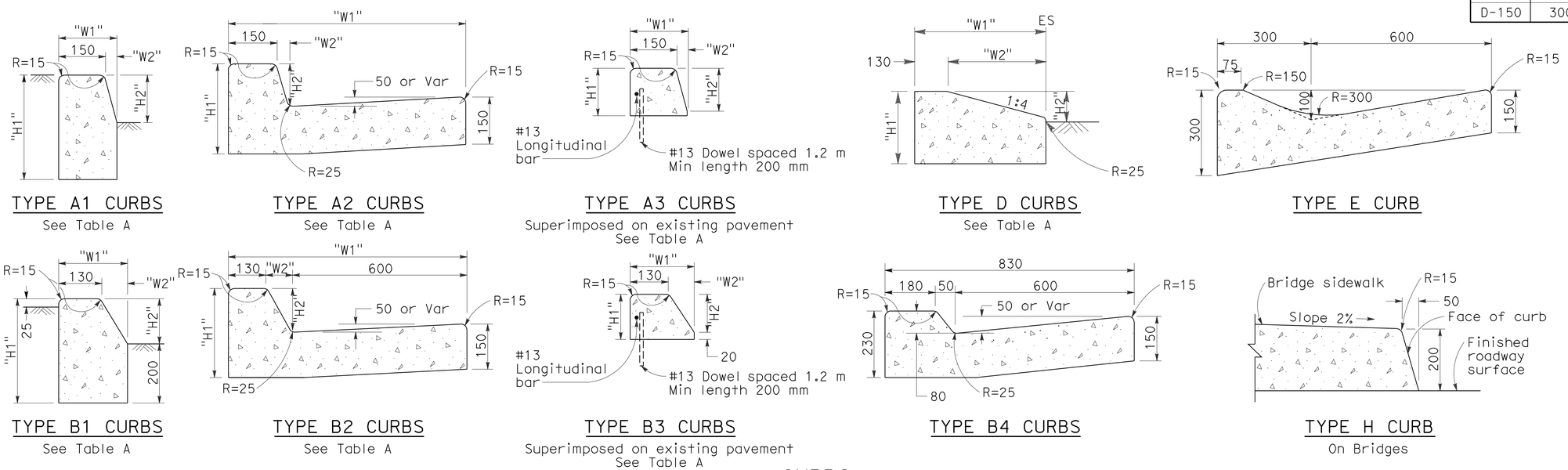

TYPE A1 CURBS
See Table A

TYPE A2 CURBS
See Table A

TYPE A3 CURBS
Superimposed on existing pavement
See Table A

TYPE D CURBS
See Table A

TYPE E CURB

TYPE B1 CURBS
See Table A

TYPE B2 CURBS
See Table A

TYPE B3 CURBS
Superimposed on existing pavement
See Table A

TYPE B4 CURBS

TYPE H CURB
On Bridges

CURBS

NOTES

1. Case A driveway section typically applies.
2. Use Case B driveway section when ramp slopes would exceed 10% in Case A.
3. Use Case B driveway section when sidewalk cross slope would exceed 2% in Case A.
4. X=900 mm except for curb heights over 250 mm where 1:4 slopes shall be used on curb slope.
5. X is a variable when sidewalk is located where wheelchairs may traverse the surface. Slopes shall not exceed 8.33%.
6. Sidewalk and ramp thickness ``T'' at driveway shall be 100 mm for residental and 150 mm for commercial.
7. Difference in slope of the driveway ramp and the slope of a line between the gutter and a point on the roadway 1.5 meters from gutter line shall not exceed 15%. Reduce driveway ramp slope, not gutter slope, where required.
8. Minimum width of clear passageway for sidewalk shall be 1.22 meters.
9. Retaining curbs and acquisition of construction easement may be necessary for narrow sidewalks or curb heights in excess of 150 mm.
10. Across the pedestrian route at curb ramp locations, the gutter pan slope shall not exceed 25 mm of depth for each 600 mm of width.

STATE OF CALIFORNIA
DEPARTMENT OF TRANSPORTATION

CURBS AND DRIVEWAYS

NO SCALE

ALL DIMENSIONS ARE IN MILLIMETERS UNLESS OTHERWISE SHOWN

RSP A87A DATED NOVEMBER 17, 2006 SUPERSEDES STANDARD PLAN A87A DATED JULY 1, 2004-PAGE 115 OF THE STANDARD PLANS BOOK DATED JULY 2004.

REVISED STANDARD PLAN RSP A87A

2004 REVISED Std PLAN RSP A87A

10-25-06

DIST	COUNTY	ROUTE	KILOMETER POST TOTAL PROJECT	SHEET NO.	TOTAL SHEETS
11	SD	905,805	R8.4/R9.8, 3.1/4.2	273	364

Caltrans Metric

William K. Farnbach
REGISTERED CIVIL ENGINEER

November 17, 2006
PLANS APPROVAL DATE

REGISTERED PROFESSIONAL ENGINEER — William K. Farnbach — No. 49042 — Exp. 09-30-08 — CIVIL — STATE OF CALIFORNIA

The State of California or its officers or agents shall not be responsible for the accuracy or completeness of electronic copies of this plan sheet.

To get to the Caltrans web site, go to: http://www.dot.ca.gov

To accompany plans dated 10-18-10

2004 REVISED Std PLAN RSP P1

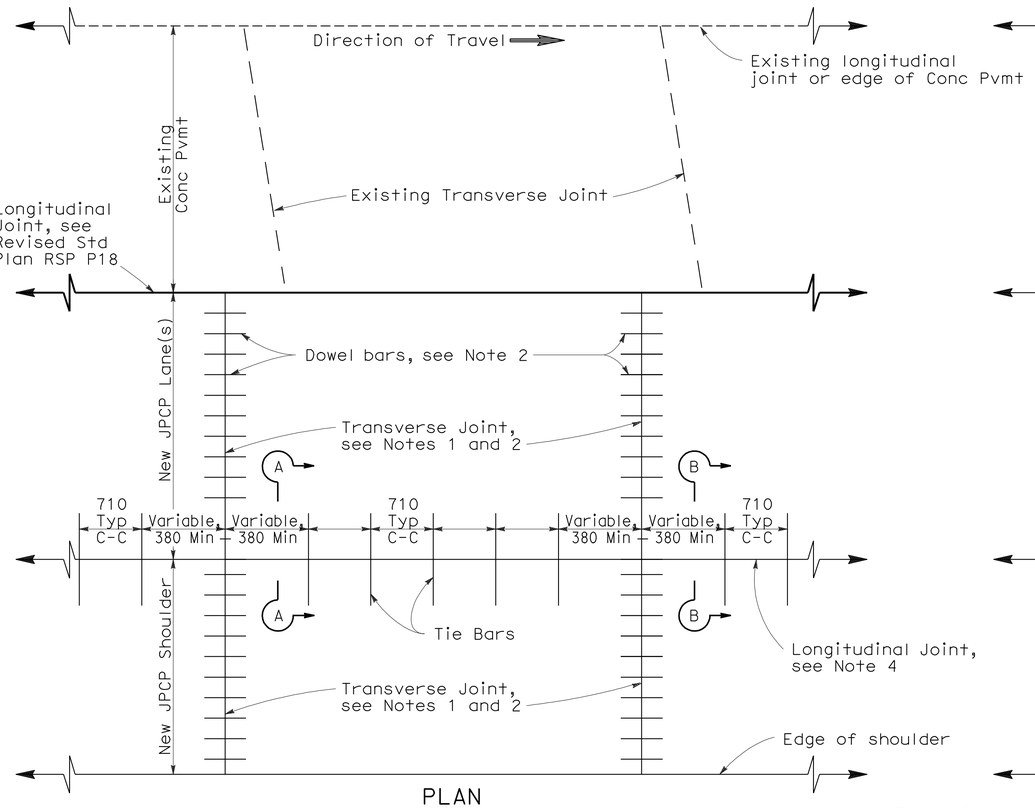

PLAN

LANE/SHOULDER ADDITION OR RECONSTRUCTION

See Notes 6 and 7

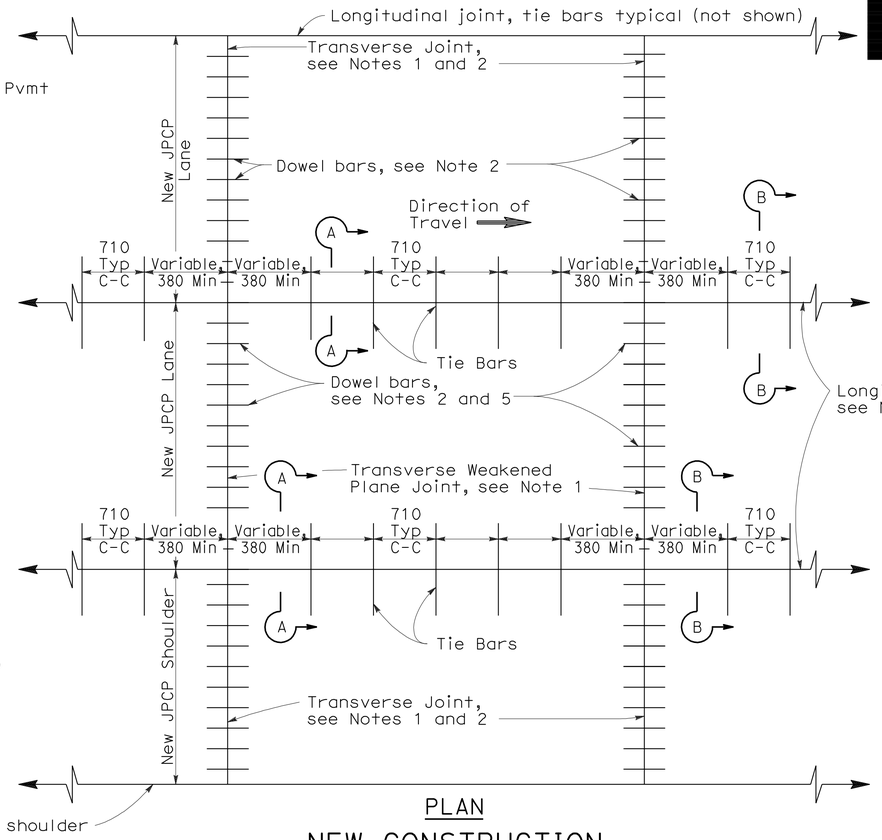

PLAN

NEW CONSTRUCTION

See Notes 6 and 7

NOTES

1. Transverse joints shall be constructed at right angles to the longitudinal pavement joints in new portland cement concrete pavement and spaced at successive repeated intervals of 3.66 m, 4.57 m, 3.96 m and 4.27 m.
2. For transverse joint and dowel bar details not shown, see Revised Standard Plan RSP P10.
3. Construct longitudinal weakened plane joints as shown in Section A-A when more than one lane or shoulder widths are placed at one time. If constructing one lane at a time, use longitudinal contact joint, as shown in Section B-B.
4. For additional longitudinal joint details, see Revised Standard Plan RSP P18.
5. If fresh concrete is placed adjacent to existing concrete, the top corner of the new hardened concrete does not need to be rounded to the 6 mm radius, as shown.
6. Joint spacing patterns do not apply to intersections.
7. Details can also apply to inside widening.

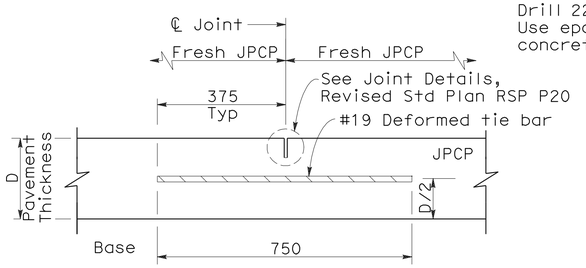

SECTION A-A

LONGITUDINAL WEAKENED PLANE JOINT

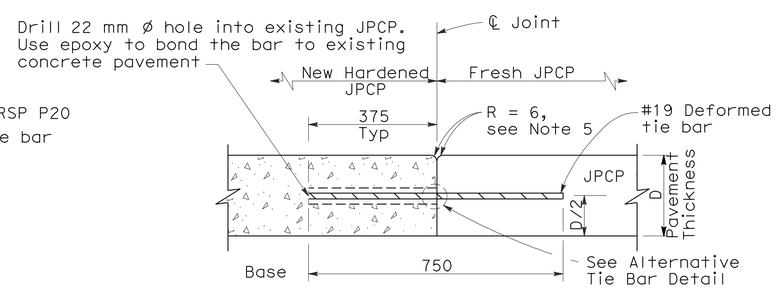

SECTION B-B

LONGITUDINAL CONTACT JOINT

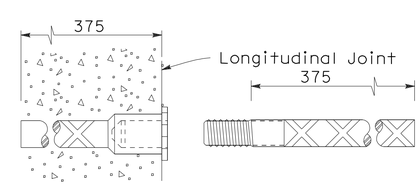

ALTERNATIVE TIE BAR DETAIL

(Dowel Splice Coupler)

TIE BAR DETAILS

STATE OF CALIFORNIA
DEPARTMENT OF TRANSPORTATION

JOINTED PLAIN CONCRETE PAVEMENT

NO SCALE

ALL DIMENSIONS ARE IN MILLIMETERS UNLESS OTHERWISE SHOWN

RSP P1 DATED NOVEMBER 17, 2006 SUPERSEDES STANDARD PLAN P1 DATED JULY 1, 2004-PAGE 121 OF THE STANDARD PLANS BOOK DATED JULY 2004.

REVISED STANDARD PLAN RSP P1

10-24-06

To accompany plans dated 10-18-10

Caltrans Metric

DIST	COUNTY	ROUTE	KILOMETER POST TOTAL PROJECT	SHEET NO.	TOTAL SHEETS
11	SD	905,805	R8.4/R9.8, 3.1/4.2	274	364

REGISTERED CIVIL ENGINEER

November 17, 2006
PLANS APPROVAL DATE

REGISTERED PROFESSIONAL ENGINEER William K. Farnbach No. 49042 Exp. 09-30-08 CIVIL STATE OF CALIFORNIA

The State of California or its officers or agents shall not be responsible for the accuracy or completeness of electronic copies of this plan sheet.

To get to the Caltrans web site, go to: http://www.dot.ca.gov

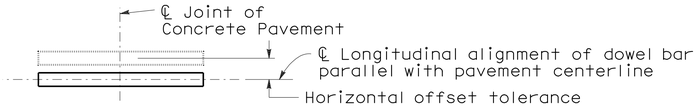

PLAN

HORIZONTAL OFFSET TOLERANCE

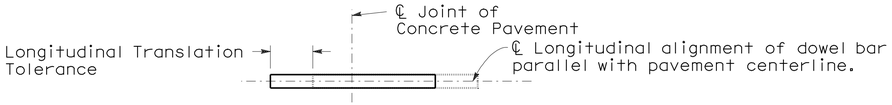

PLAN

LONGITUDINAL TRANSLATION TOLERANCE

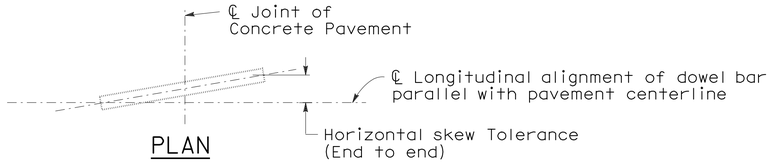

PLAN

HORIZONTAL SKEW TOLERANCE

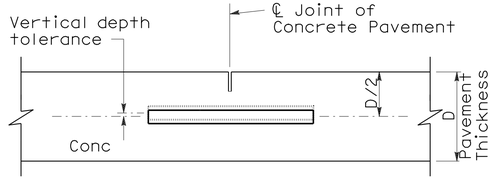

ELEVATION

VERTICAL DEPTH TOLERANCE

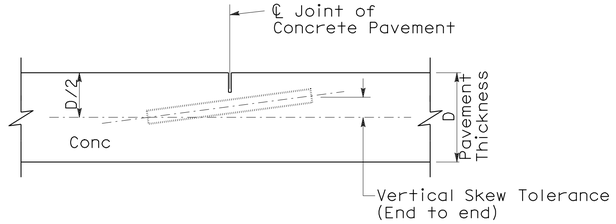

ELEVATION

VERTICAL SKEW TOLERANCE

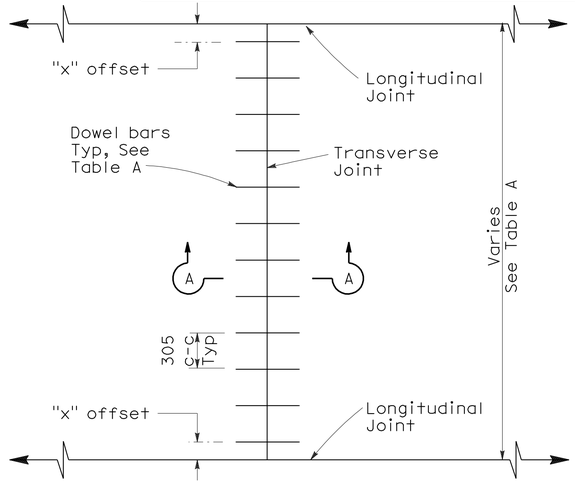

TRANSVERSE JOINT DOWEL BAR LAYOUT

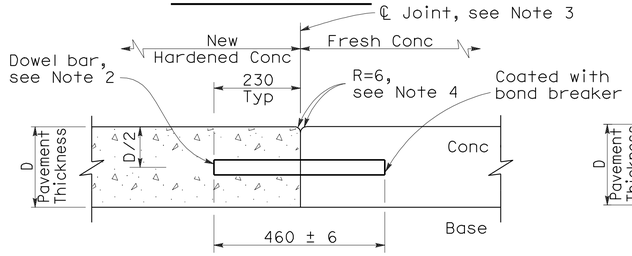

TRANSVERSE CONTACT JOINT DETAIL

SECTION A-A

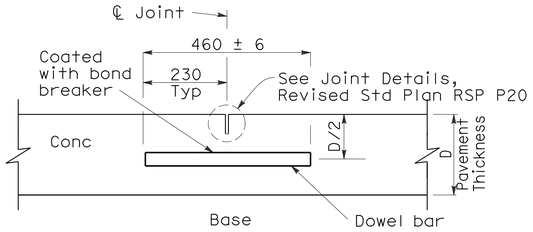

TRANSVERSE WEAKENED PLANE JOINT

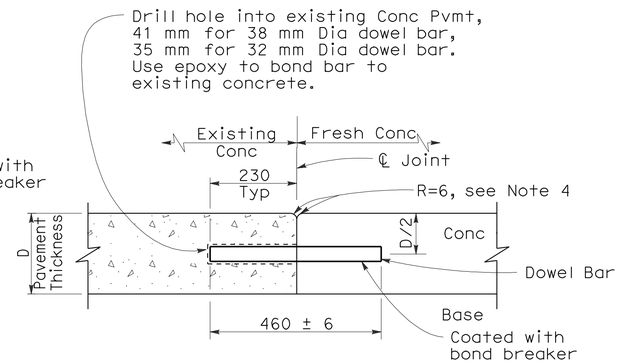

TRANSVERSE CONTACT JOINT FOR EXISTING CONCRETE PAVEMENT

(Drill and bond locations)

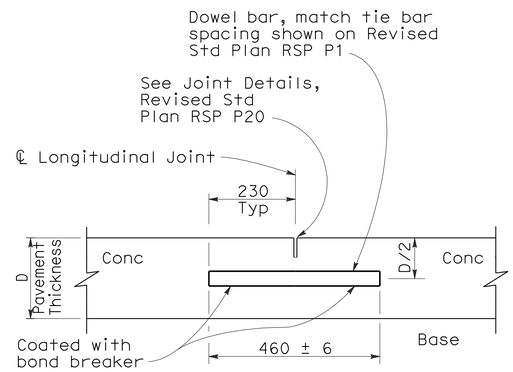

LONGITUDINAL WEAKENED PLANE JOINT WITH DOWEL BARS

(See Revised Std Plan RSP P18)

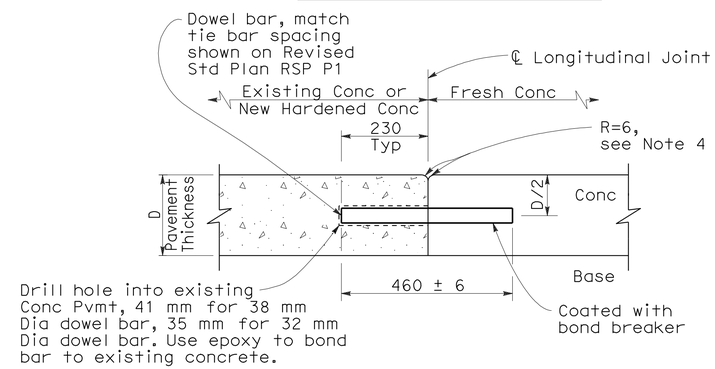

LONGITUDINAL CONTACT JOINT WITH DOWEL BARS

(See Revised Std Plan RSP P18)

TABLE A

Dowel Bar Transverse Spacing Table		
Width between Longitudinal Joints (m)	Offset Dimension "X" (mm)	Number of Dowels between Longitudinal Joints
4.27	152	14
3.66	152	12
3.60	125	12
3.05	152	10
3.00	125	10
2.44	152	8
2.4	130	8
1.52	150	5
1.50	140	5

See Note 3

NOTES

1. See Revised Standard Plan RSP P1 for typical dowel placement and locations.
2. 38 mm Dia smooth dowels are to be used with a pavement thickness, D, equal to or greater than 215 mm. For pavement thickness, D, less than 215 mm, use 32 mm Dia smooth dowels.
3. For widths not shown, see Project Plans.
4. If fresh concrete pavement is placed adjacent to existing concrete pavement, the top corner of the existing concrete pavement does not need to be rounded to the 6 mm radius, as shown.

STATE OF CALIFORNIA
DEPARTMENT OF TRANSPORTATION

CONCRETE PAVEMENT-DOWEL BAR DETAILS

NO SCALE

ALL DIMENSIONS ARE IN MILLIMETERS UNLESS OTHERWISE SHOWN

RSP P10 DATED NOVEMBER 17, 2006 SUPERSEDES STANDARD PLAN P10 DATED JULY 1, 2004-PAGE 125 OF THE STANDARD PLANS BOOK DATED JULY 2004.

REVISED STANDARD PLAN RSP P10

2004 REVISED Std PLAN RSP P10

10-25-06

DIST	COUNTY	ROUTE	KILOMETER POST TOTAL PROJECT	SHEET NO.	TOTAL SHEETS
11	SD	905,805	R8.4/R9.8, 3.1/4.2	275	364

Caltrans Metric

William K. Farnbach
REGISTERED CIVIL ENGINEER

November 17, 2006
PLANS APPROVAL DATE

REGISTERED PROFESSIONAL ENGINEER William K. Farnbach No. 49042 Exp. 09-30-08 CIVIL STATE OF CALIFORNIA

The State of California or its officers or agents shall not be responsible for the accuracy or completeness of electronic copies of this plan sheet.

To get to the Caltrans web site, go to: http://www.dot.ca.gov

To accompany plans dated 10-18-10

2004 REVISED Std PLAN RSP P12

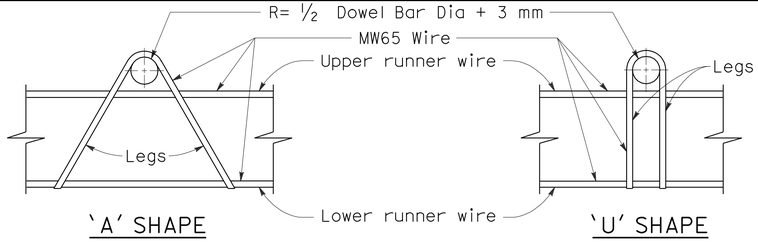

ASSEMBLY FRAME DETAILS

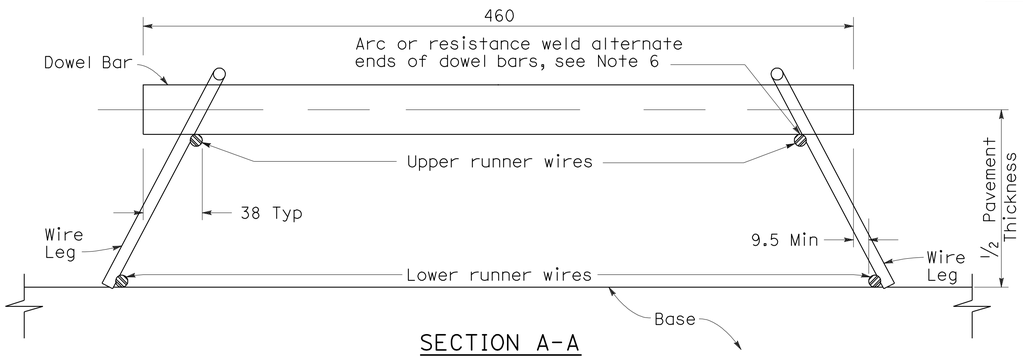

SECTION A-A

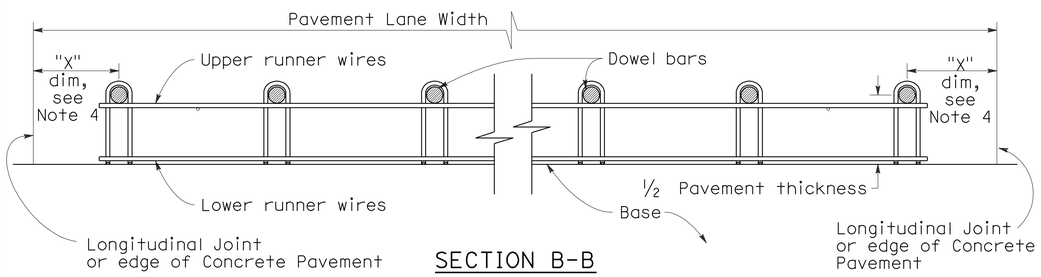

SECTION B-B

See Note 1

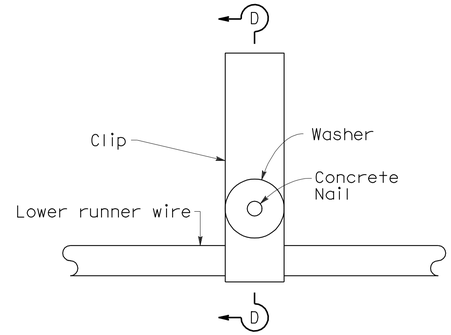

PLAN

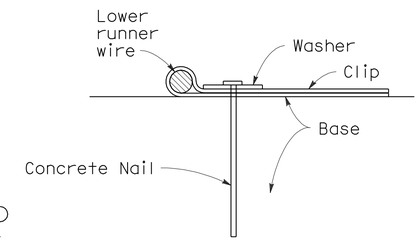

SECTION D-D

FASTENER DETAIL

NOTES

1. 'U' frame shape assembly shown. 'U' frame shape or 'A' frame shape are acceptable.
2. Wire sizes shown are minimum required.
3. All wire intersections are to be resistance welded.
4. For "X" dimension, number of dowel bars between longitudinal joints and other details for dowel bars not shown, See Revised Standard Plan RSP P10.
5. Use tie bar spacing for longitudinal dowel bar locations. See Revised Standard Plans RSP P1 and RSP P2, and New Standard Plan NSP P3 for tie bar requirements.
6. Weld may be at top or bottom of dowel bar.

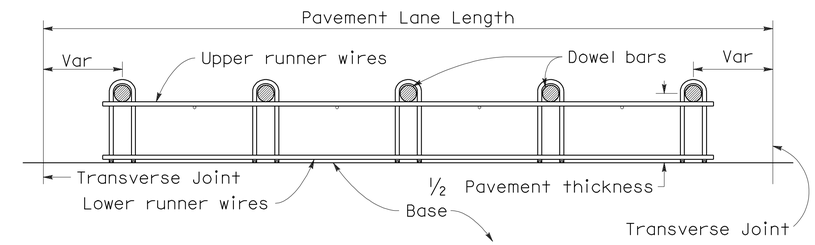

SECTION C-C

See Note 1 and 5

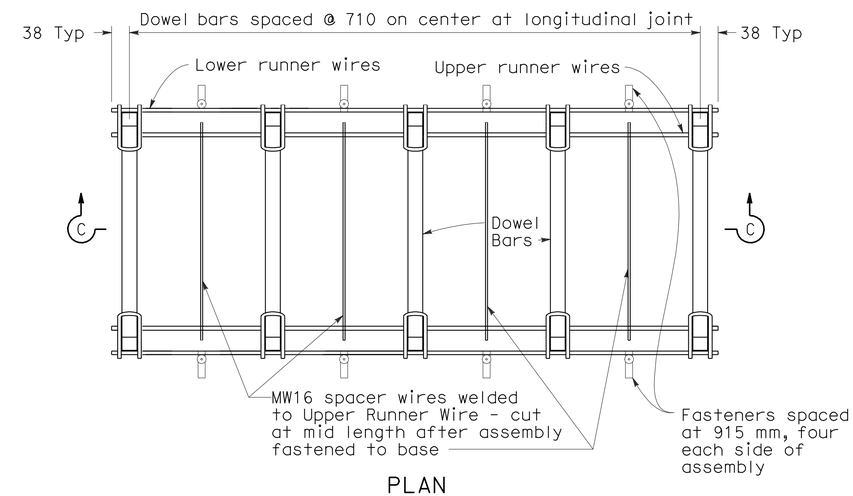

PLAN

DOWEL BAR BASKET (LONGITUDINAL JOINT)

See Note 1

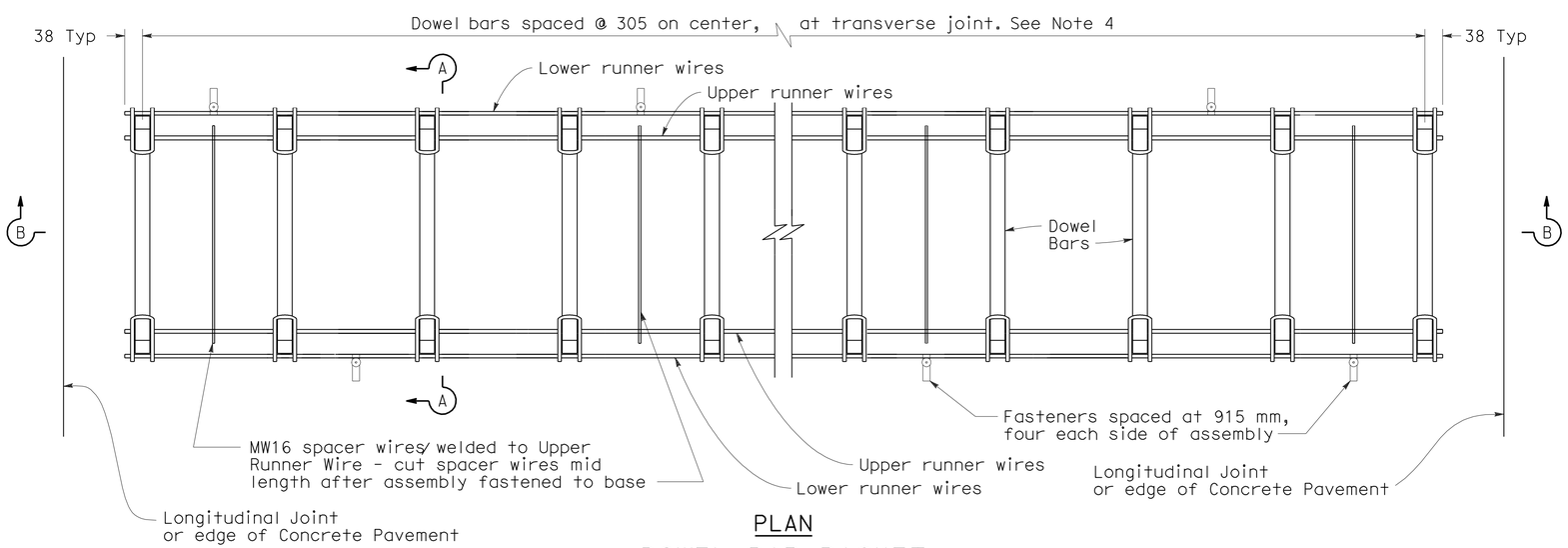

PLAN

DOWEL BAR BASKET (TRANSVERSE JOINT)

See Note 1

STATE OF CALIFORNIA
DEPARTMENT OF TRANSPORTATION

CONCRETE PAVEMENT-DOWEL BAR BASKET DETAILS

NO SCALE

ALL DIMENSIONS ARE IN MILLIMETERS UNLESS OTHERWISE SHOWN

RSP P12 DATED NOVEMBER 17, 2006 SUPERSEDES STANDARD PLAN P12 DATED JULY 1, 2004-PAGE 126 OF THE STANDARD PLANS BOOK DATED JULY 2004.

REVISED STANDARD PLAN RSP P12

10-25-06

DIST	COUNTY	ROUTE	KILOMETER POST TOTAL PROJECT	SHEET NO.	TOTAL SHEETS
11	SD	905,805	R8.4/R9.8, 3.1/4.2	276	364

Caltrans Metric

REGISTERED CIVIL ENGINEER

November 17, 2006
PLANS APPROVAL DATE

REGISTERED PROFESSIONAL ENGINEER William K. Farnbach No. 49042 Exp. 09-30-08 CIVIL STATE OF CALIFORNIA

The State of California or its officers or agents shall not be responsible for the accuracy or completeness of electronic copies of this plan sheet.

To get to the Caltrans web site, go to: http://www.dot.ca.gov

To accompany plans dated 10-18-10

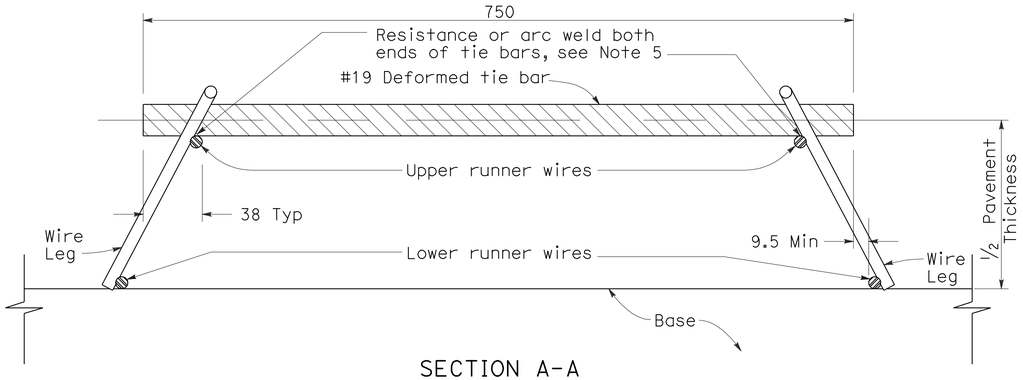

SECTION A-A

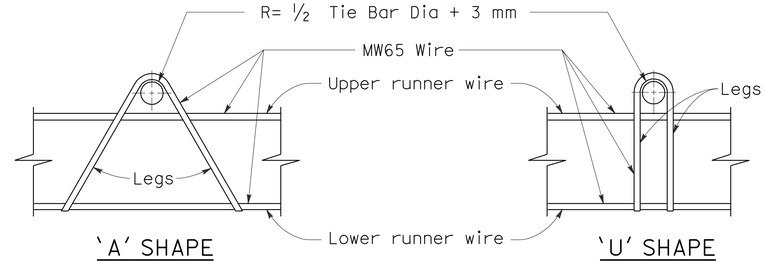

ASSEMBLY FRAME DETAILS

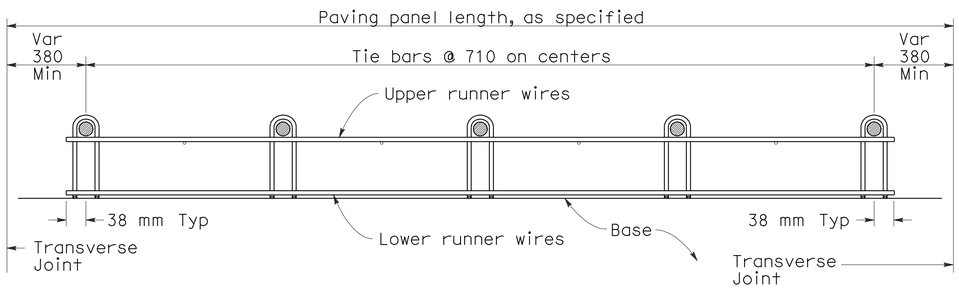

SECTION B-B

See Note 1

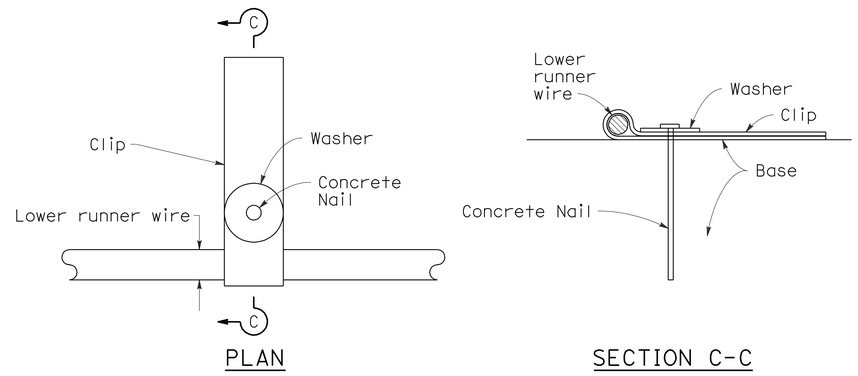

PLAN

SECTION C-C

FASTENER DETAIL

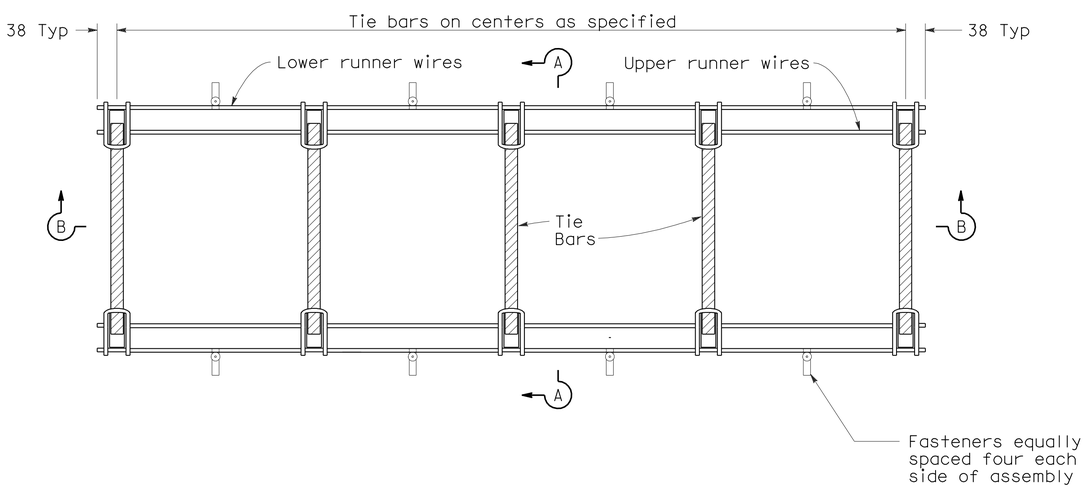

PLAN

TIE BAR BASKET

(TIE BARS AT LONGITUDINAL JOINT)
See Note 1

NOTES

1. 'U' frame shape assembly shown. 'U' frame shape or 'A' frame shape are acceptable.
2. Wire sizes shown are minimum required.
3. All wire intersections are to be resistance welded.
4. Not for use on undoweled skewed concrete pavement.
5. Weld may be at top or bottom of tie bar.

STATE OF CALIFORNIA
DEPARTMENT OF TRANSPORTATION

CONCRETE PAVEMENT-TIE BAR BASKET DETAILS

NO SCALE

ALL DIMENSIONS ARE IN MILLIMETERS UNLESS OTHERWISE SHOWN

RSP P17 DATED NOVEMBER 17, 2006 SUPERSEDES STANDARD PLAN P17 DATED JULY 1, 2004-PAGE 127 OF THE STANDARD PLANS BOOK DATED JULY 2004.

REVISED STANDARD PLAN RSP P17

2004 REVISED Std PLAN RSP P17

8-1-06

DIST	COUNTY	ROUTE	KILOMETER POST TOTAL PROJECT	SHEET NO.	TOTAL SHEETS
11	SD	905,805	R8.4/R9.8, 3.1/4.2	277	364

Caltrans Metric

REGISTERED CIVIL ENGINEER

November 17, 2006
PLANS APPROVAL DATE

REGISTERED PROFESSIONAL ENGINEER William K. Farnbach No. 49042 Exp. 09-30-08 CIVIL STATE OF CALIFORNIA

The State of California or its officers or agents shall not be responsible for the accuracy or completeness of electronic copies of this plan sheet.

To get to the Caltrans web site, go to: http://www.dot.ca.gov

To accompany plans dated 10-18-10

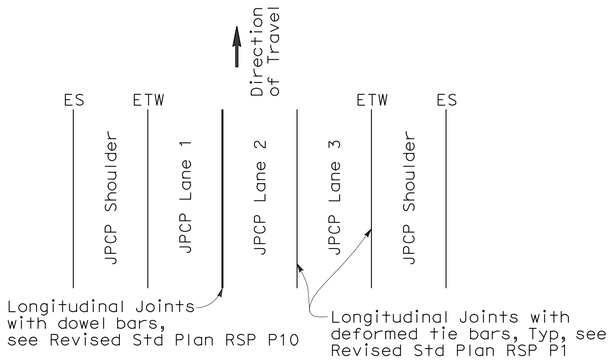

3 LANES WITH CONCRETE SHOULDERS
PLAN

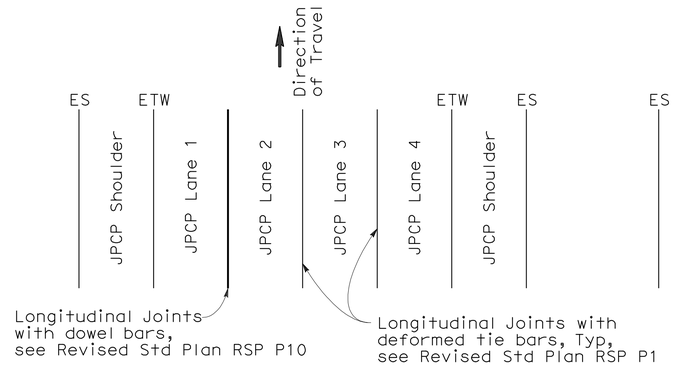

4 LANES WITH CONCRETE SHOULDERS
PLAN

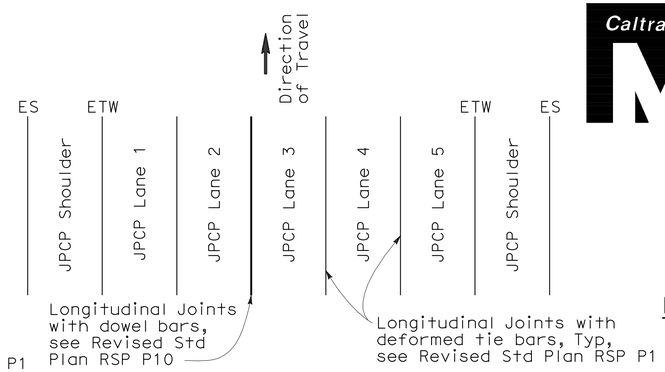

5 LANES WITH CONCRETE SHOULDERS
PLAN

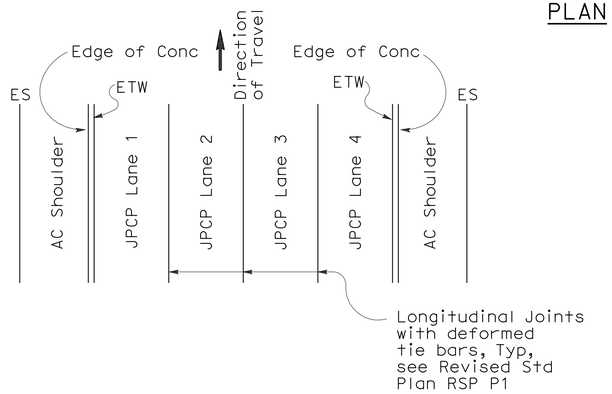

4 LANES OR LESS WITH AC SHOULDERS
PLAN

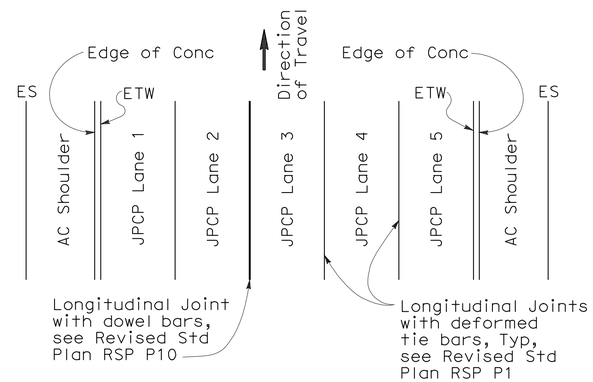

5 LANES WITH AC SHOULDERS
PLAN

NOTES

1. Where Lean Concrete Base is not used as base material, the joint filler material used for the longitudinal isolation joint shall only extend to the bottom of the new concrete slab. See Detail A.
2. Use 16±1 mm dimension for silicone sealant.
3. See Revised Stadard Plan RSP P10 for longitudinal joint with dowel bars.

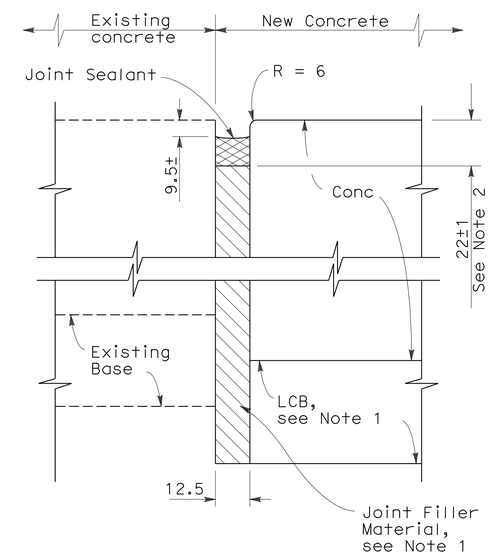

DETAIL A

ISOLATION JOINT

NEW CONSTRUCTION

Location of Longitudinal Joints
(JPCP only)

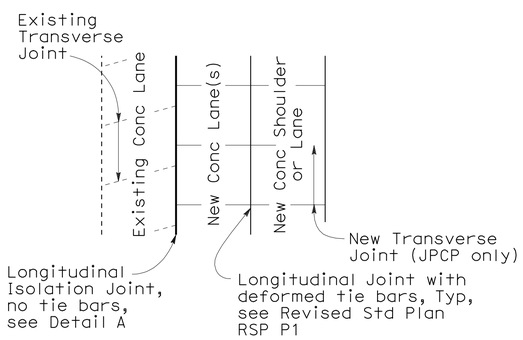

CASE 1
PLAN

Transverse Joints do not align between new and existing

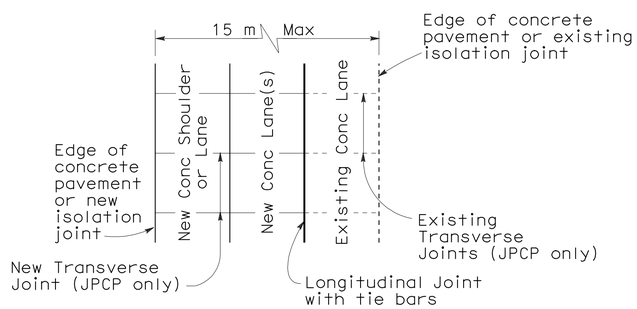

CASE 2
PLAN

Transverse Joints align between new and existing

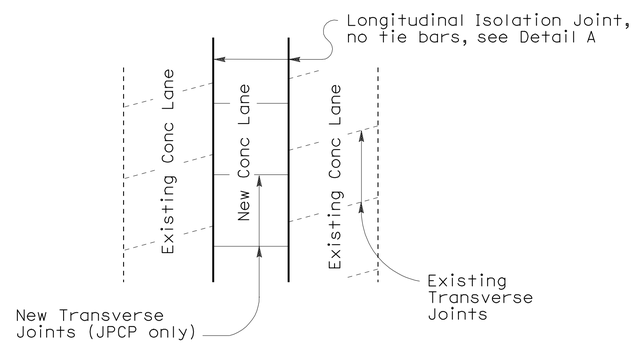

CASE 3 (INTERIOR LANE REPLACEMENT)
PLAN

Transverse Joints do not align between new and existing

LANE/SHOULDER ADDITION OR RECONSTRUCTION

For JPCP and Continuous Reinforced Concrete Pavement

STATE OF CALIFORNIA
DEPARTMENT OF TRANSPORTATION

CONCRETE PAVEMENT-LANE SCHEMATICS AND ISOLATION JOINT DETAIL

NO SCALE

ALL DIMENSIONS ARE IN MILLIMETERS UNLESS OTHERWISE SHOWN

RSP P18 DATED NOVEMBER 17, 2006 SUPERSEDES STANDARD PLAN P18 DATED JULY 1, 2004-PAGE 128 OF THE STANDARD PLANS BOOK DATED JULY 2004.

REVISED STANDARD PLAN RSP P18

2004 REVISED Std PLAN RSP P18

8-9-06

NOTE

1. Tie bars, dowel bars, and reinforcement are not shown in joint seal details, see Revised Std Plan RSP P1, New Std Plan NSP P3, Revised Std Plan RSP P10, Std Plan P35, Std Plan P45, or Std Plan P46 as applicable.

To accompany plans dated 10-18-10

Caltrans Metric

DIST	COUNTY	ROUTE	KILOMETER POST TOTAL PROJECT	SHEET NO.	TOTAL SHEETS
11	SD	905,805	R8.4/R9.8, 3.1/4.2	278	364

William K. Farnbach
REGISTERED CIVIL ENGINEER

November 17, 2006
PLANS APPROVAL DATE

REGISTERED PROFESSIONAL ENGINEER William K. Farnbach No. 49042 Exp. 09-30-08 CIVIL STATE OF CALIFORNIA

The State of California or its officers or agents shall not be responsible for the accuracy or completeness of electronic copies of this plan sheet.

To get to the Caltrans web site, go to: http://www.dot.ca.gov

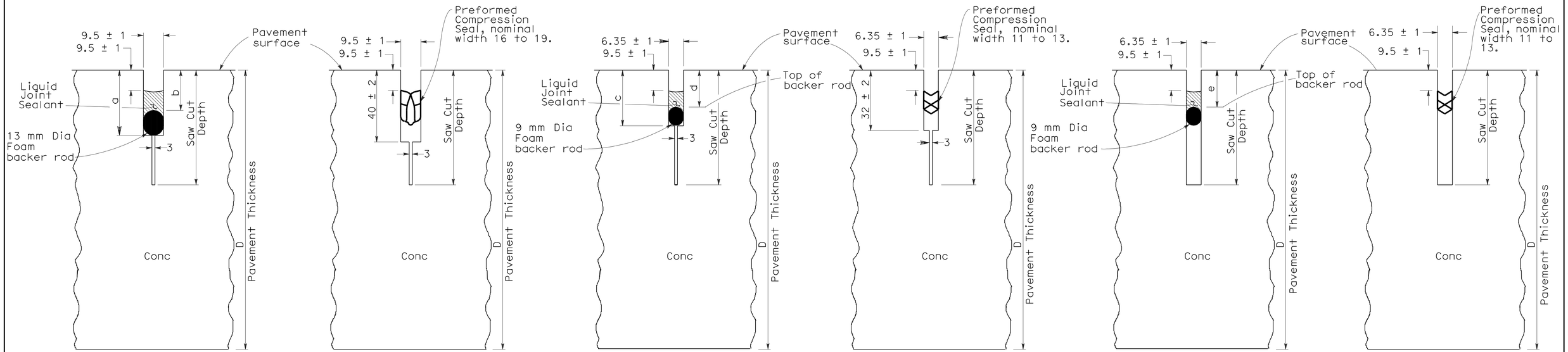

LIQUID SEALANT — COMPRESSION SEAL

TYPE A1

Transverse Weakened Plane Joints

LIQUID SEALANT — COMPRESSION SEAL

TYPE A2

Longitudinal Weakened Plane Joints

LIQUID SEALANT — COMPRESSION SEAL

TYPE B

Longitudinal or Transverse Weakened Plane Joints

LIQUID SEALANT RESERVOIR DEPTH

LIQUID SEALANT MATERIAL	9.5 mm Joint Width Type A1		6.35 mm Joint Width Type A2		6.35 mm Joint Width Type B
	DIMENSION		DIMENSION		DIMENSION
	a	b	c	d	e
SILICONE	26 ± 1	15 ± 1	23 ± 1	14 ± 1	14 ± 1
ASPHALT RUBBER	30 ± 1	19 ± 1	26 ± 1	17 ± 1	17 ± 1

TABLE A

Sawn Joint Width	Backer Rod Diameter	Dimension "c"	Dimension "d"
mm	mm ± 1	mm	mm
25	33	22	55
22	30	20	50
19	25	19	44
16	22	18	40
13	17	16	33

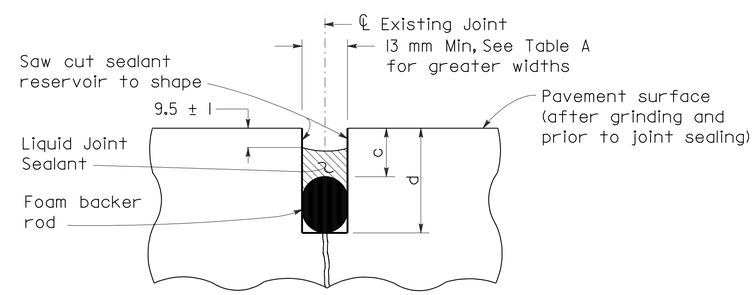

LIQUID SEALANT TYPE R

Retrofit Transverse and Longitudinal Joints

STATE OF CALIFORNIA
DEPARTMENT OF TRANSPORTATION

CONCRETE PAVEMENT-JOINT DETAILS

NO SCALE

ALL DIMENSIONS ARE IN MILLIMETERS UNLESS OTHERWISE SHOWN

RSP P20 DATED NOVEMBER 17, 2006 SUPERSEDES STANDARD PLAN P20 DATED JULY 1, 2004-PAGE 129 OF THE STANDARD PLANS BOOK DATED JULY 2004.

REVISED STANDARD PLAN RSP P20

2004 REVISED Std PLAN RSP P20

10-24-06

DIST	COUNTY	ROUTE	KILOMETER POST TOTAL PROJECT	SHEET NO.	TOTAL SHEETS
11	SD	905,805	R8.4/R9.8, 3.1/4.2	279	364

Caltrans Metric

Raymond Don Tsztoo
REGISTERED CIVIL ENGINEER

January 18, 2008
PLANS APPROVAL DATE

REGISTERED PROFESSIONAL ENGINEER Raymond Don Tsztoo No. C37332 Exp. 6-30-08 CIVIL STATE OF CALIFORNIA

The State of California or its officers or agents shall not be responsible for the accuracy or completeness of electronic copies of this plan sheet.

To get to the Caltrans web site, go to: http://www.dot.ca.gov

To accompany plans dated 10-18-10

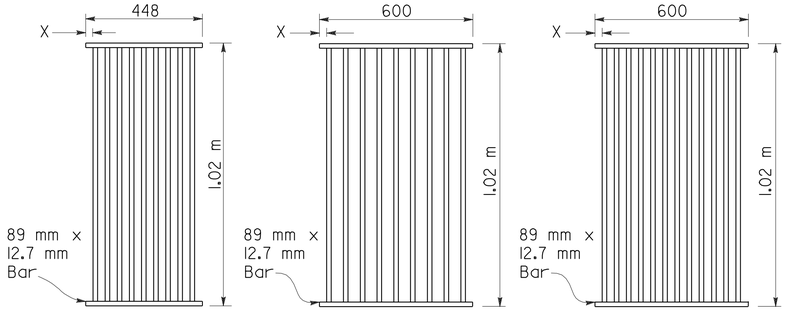

TYPE 450-9

35 mm Clear spacing. Use within the roadbed on highways where bicycles and pedestrians are excluded.

TYPE 600-9

51 mm Clear spacing. Use in locations off the roadbed on all types of highways.

TYPE 600-12

35 mm Clear spacing. Use within the roadbed on highways where bicycles and pedestrians are excluded.

RECTANGULAR GRATE DETAILS

(See table below)

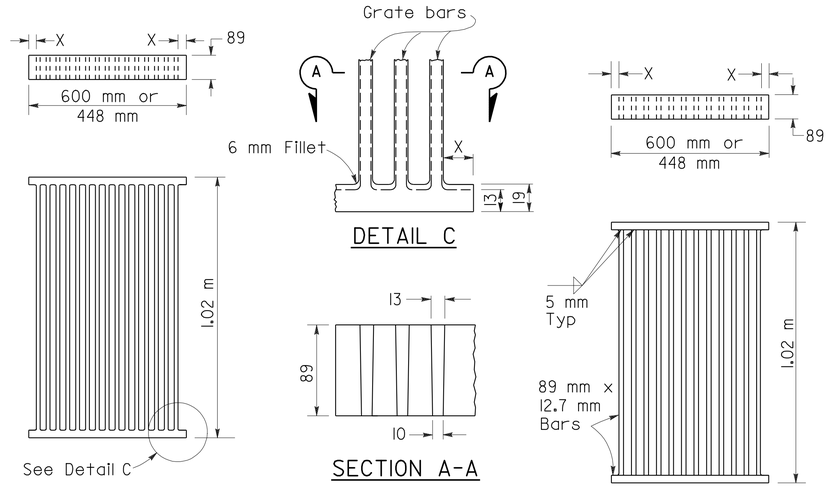

ALTERNATIVE CAST NODULAR IRON GRATE OR CAST STEEL GRATE

ALTERNATIVE WELDED GRATE

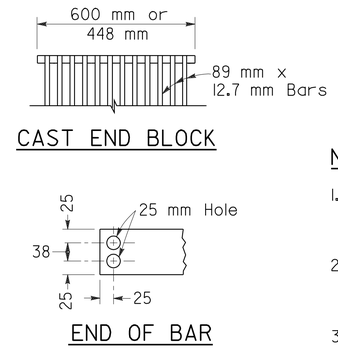

CAST END BLOCK

END OF BAR

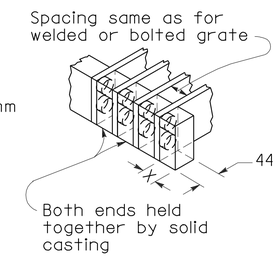

ALTERNATIVE CAST NODULAR IRON OR CAST STEEL END BLOCK GRATE

NOTES

1. Grate type numbers refer to approximate width of grate in millimeters and number of bars, respectively.
2. Contractor has the option of using cast nodular iron, cast steel, welded, bolted, or cast end block grate.
3. See Special Provisions for requirements pertaining to galvanizing or asphalt dipping of grates and frames.
4. Rounded top of bars optional on all grates.
5. Pipe inlets with a grate shall be placed so that bars parallel direction of principle surface flow.
6. Full penetration butt welds may be substituted for the fillet welds on all anchors.
7. Standard square, hexagon, round or equivalent headed anchors may be substituted for the right angle hooks on the anchors shown on this plan.
8. Grate and frame weights are based on welded grates (weights of face angles, steps, protection bars, etc. are not included).

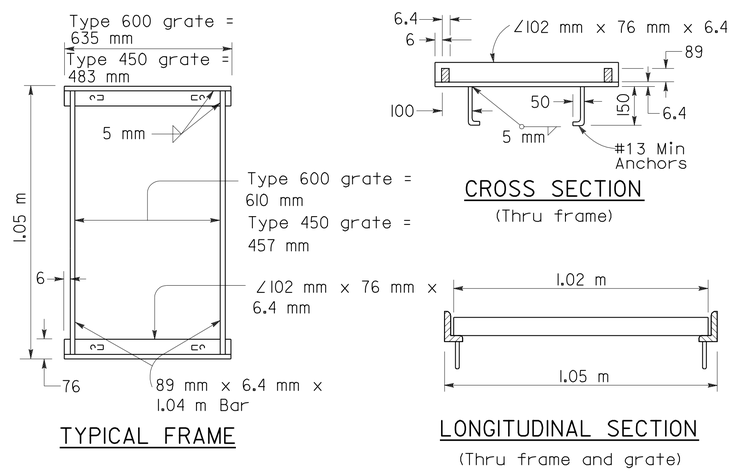

RECTANGULAR FRAME DETAILS

(For all rectangular grates)

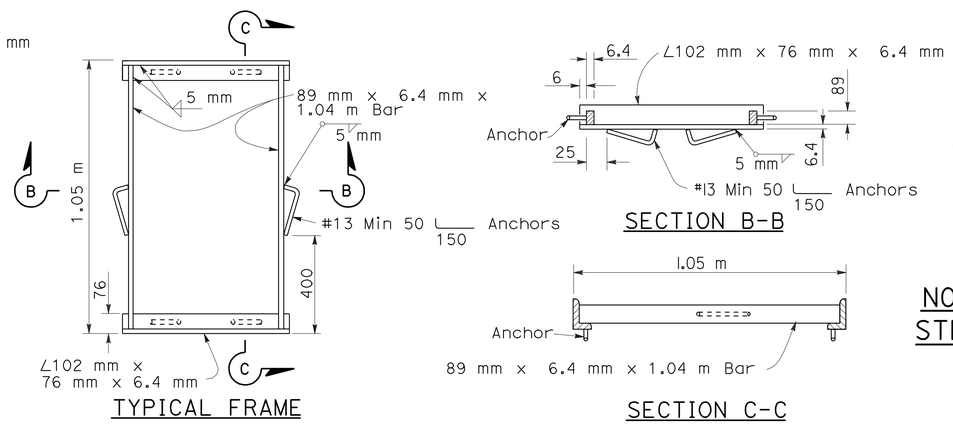

ALTERNATIVE ANCHOR FOR RECTANGULAR FRAME

(For details not shown, See Rectangular Frame Details)

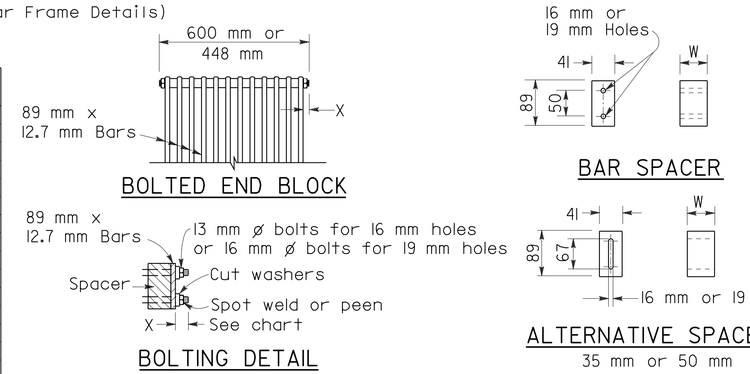

ALTERNATIVE BOLTED GRATE

GRATE BAR SPACING TABLE

TYPE	No. OF BARS	CLEAR BAR SPACING (mm)	X (mm)
450-9	9	35	27
600-9	9	51	40
600-12	12	35	32

INLET TYPE	COVER TYPE	MASS (kg)
OS	PLATE	79
OL-2.1	PLATE	77
OL-3.0	PLATE	77
OL-4.3	PLATE	77
OL-6.4	PLATE	77
OCP	PLATE	51
OCPI	PLATE	51
OCPI	REDWOOD	19
OMP	PLATE	80
OMPI	PLATE	80

INLET TYPE	GRATE TYPE	No. OF GRATES	MASS (kg)
GDO	600-12	2	288
GOL-2.1	600-12	1	148
GOL-3.0	600-12	1	148
GO,G1,G2,G3,G4(TYPE 600)	600-9	1	119
	600-12	1	148
G4(TYPE 450),G5,G6	450-9	1	113
GT-1	450-9	2	226
GT-2	450-9	2	226
GT-3	600-12	2	296
GT-4	600-12	2	296
TRASH RACK			10

BASIS FOR MISC IRON & STEEL FINAL PAY MASSES FOR DRAINAGE INLETS

(See General Notes, No. 8)

STATE OF CALIFORNIA
DEPARTMENT OF TRANSPORTATION

GRATE DETAILS

NO SCALE

ALL DIMENSIONS ARE IN MILLIMETERS UNLESS OTHERWISE SHOWN

RSP D77A DATED JANUARY 18, 2008 SUPERSEDES STANDARD PLAN D77A DATED JULY 1, 2004 - PAGE 155 OF THE STANDARD PLANS BOOK DATED JULY 2004.

REVISED STANDARD PLAN RSP D77A

2004 REVISED Std PLAN RSP D77A

To accompany plans dated 10-18-10

Caltrans Metric

DIST	COUNTY	ROUTE	KILOMETER POST TOTAL PROJECT	SHEET NO.	TOTAL SHEETS
11	SD	905,805	R8.4/R9.8, 3.1/4.2	280	364

Raymond Don Tsztoo
REGISTERED CIVIL ENGINEER

June 6, 2008
PLANS APPROVAL DATE

REGISTERED PROFESSIONAL ENGINEER Raymond Don Tsztoo No. C37332 Exp. 6-30-08 STATE OF CALIFORNIA

The State of California or its officers or agents shall not be responsible for the accuracy or completeness of electronic copies of this plan sheet.

To get to the Caltrans web site, go to: http://www.dot.ca.gov

ANNULAR AND HELICAL PROFILE

COUPLING TYPE	PIPE CORRUGATION (mm)	PIPE SIZE (mm)	W OR A (mm)	PIPE WALL THICKNESS CSP (mm)	PIPE WALL THICKNESS CAP (mm)	BAND THICKNESS CSP (mm)	BAND THICKNESS CAP (mm)	BAR AND STRAP (CSP ONLY) STRAP THICKNESS (mm)	BOLTS (mm ø)	BAR Dia (mm)	BAR YIELD STRENGTH (MPa)	ANGLE DIMENSIONS CSP (mm)	ANGLE DIMENSIONS CAP (mm)	BOLTS (No.-mm ø) CSP	BOLTS (No.-mm ø) CAP	RIVETS ANGLE TO BAND CSP	RIVETS ANGLE TO BAND CAP	SPOT WELDS ANGLE TO BAND CSP
TWO PIECE INTEGRAL FLANGE	38 x 6.5	150 - 250	178	1.32 - 2.01	1.22 - 1.52	1.32	1.52							2-10	2-10			
		300 - 450	178	1.32 - 2.01		1.63								2-13				
	68 x 13	300 - 600	178	1.32 - 2.01	1.52 - 2.67	1.63	1.52							2-13	2-13			
UNIVERSAL	68 x 13	THROUGH 900	305	1.32 - 3.51	1.52 - 3.43	1.32	1.52					51 x 51 x 4.8	51 x 51 x 4.8	3-13	3-13	3-9.5 mm	3-9.5 mm	3-15 mm
		1050 - 1500	305	1.32 - 4.27	1.91 - 4.17	1.32	1.52					51 x 51 x 4.8	51 x 51 x 4.8	3-13	3-13	3-9.5 mm	3-9.5 mm	5-15 mm
		THROUGH 1800	305	1.32 - 4.27	4.17	1.32	2.67	2.01	13	22	220	51 x 51 x 4.8	51 x 51 x 4.8	3-13	3-13	3-9.5 mm	3-9.5 mm	5-15 mm
		1950 - 2100	413	4.27		2.01		DOUBLE 2.01	13	22	220							
ANNULAR	68 x 13	THROUGH 900	178	1.63 - 3.51	1.52 - 3.43	1.32	1.52	2.01	13	22	220	51 x 51 x 4.8	51 x 51 x 4.8	2-13	2-13	3-9.5 mm	3-9.5 mm	3-15 mm
		1050 - 1800	305	1.63 - 4.27	1.91 - 4.17	1.32	2.67	2.01	13	22	220	51 x 51 x 4.8	51 x 51 x 4.8	3-13	3-13	3-9.5 mm	3-9.5 mm	5-15 mm
		1950 - 2100	305	4.27		2.01		2.77	13	22	310	51 x 51 x 4.8		3-13		3-9.5 mm		5-15 mm
	75 x 25	1200 - 2250	355	1.63 - 2.77		1.32		2.01	13	22	220	51 x 51 x 4.8		3-13		3-9.5 mm		5-15 mm
		2400 - 3000	355	2.01 - 2.77		1.32		2.77	13	22	310	51 x 51 x 4.8		3-13		4-9.5 mm		
		1050 - 2700	355		1.52 - 3.43		1.52						51 x 51 x 4.8		3-13		3-9.5 mm	
HELICAL	68 x 13	THROUGH 900	305	1.32 - 3.51	1.52 - 3.43	1.32	1.52	2.01	13	22	220	51 x 51 x 4.8	51 x 51 x 4.8	3-13	3-13	3-9.5 mm	3-9.5 mm	3-15 mm
		1050 - 1800	305	1.32 - 4.27	1.91 - 4.17	1.32	1.52	2.01	13	22	220	51 x 51 x 4.8	51 x 51 x 4.8	3-13	3-13	3-9.5 mm	3-9.5 mm	5-15 mm
		1950 - 2100	305	4.27		2.01		2.77	13	22	310	51 x 51 x 4.8		3-13		3-9.5 mm		5-15 mm
	75 x 25	1200 - 2250	355	1.63 - 2.77		1.32		2.01	13	22	220	51 x 51 x 4.8		3-13		3-9.5 mm		5-15 mm
		2400 - 3000	355	2.01 - 2.77		1.32		2.77	13	22	310	51 x 51 x 4.8		3-13		4-9.5 mm		
		1050 - 2700	355		1.52 - 3.43		1.52						51 x 51 x 4.8		3-13		3-9.5 mm	
HUGGER	68 x 13 REROLLED END	300 - 1350	100	1.32 - 2.77		1.32						64 x 38 x 4.8	64 x 38 x 4.8	1-13				3-15 mm
		1500 - 1650	100	2.77		1.63						64 x 38 x 4.8	64 x 38 x 4.8	1-13				3-15 mm
		900 - 1200	100	3.51		1.63						64 x 38 x 4.8	64 x 38 x 4.8	1-13				3-15 mm
		THROUGH 1800	267	1.32 - 4.27		1.32		2.01	13	22	220							
		1950 - 2100	267	4.27		2.01		2.77	13	22	310							
	75 x 25 REROLLED END	1200 - 2250	267	1.63 - 2.77		1.32		2.01	13	22	220							
		2400 - 3000	267	2.01 - 2.77		1.32		2.77	13	22	310							
	125 x 25 REROLLED END	1200 - 1650	190	1.63 - 2.77		1.63		2.01	13	22	220	64 x 38 x 4.8	64 x 38 x 4.8	1-13				3-15 mm
		1800 - 2250	190	1.63 - 2.01		1.63		2.01	13	22	220	64 x 38 x 4.8	64 x 38 x 4.8	1-13				3-15 mm
		1200 - 2250	190	1.63 - 3.51		1.63		2.01	13	22	220							
		1200 - 3000	305 SEE	1.63 - 2.77		1.63		2.01	13	22	220							
		1200 - 2100	305 NOTE	3.51		1.63		2.01	13	22	220							
		2250 - 3000	305 11	3.51		1.63		DOUBLE 2.01	13	22	220							

SPIRAL RIB PROFILE

COUPLING TYPE	PIPE CORRUGATION (mm)	PIPE SIZE (mm)	W (mm)	PIPE WALL THICKNESS SSRP (mm)	PIPE WALL THICKNESS ASRP (mm)	BAND THICKNESS SSRP (mm)	BAND THICKNESS ASRP (mm)	BAR AND STRAP (SSRP ONLY) STRAP THICKNESS (mm)	BOLTS (mm ø)	BAR Dia (mm)	BAR YIELD STRENGTH (MPa)	ANGLE DIMENSIONS SSRP (mm)	ANGLE DIMENSIONS ASRP (mm)	BOLTS (No.- mm ø) SSRP	BOLTS (No.- mm ø) ASRP	RIVETS ANGLE TO BAND SSRP	RIVETS ANGLE TO BAND ASRP	SPOT WELDS ANGLE TO BAND SSRP
ANNULAR	68 x 13 * REROLLED END	600 - 900	305	1.63 - 2.77	1.52 - 2.67	1.32	1.52	2.01	13	22	220	51 x 51 x 4.8	51 x 51 x 4.8	3-13	3-13	3-9.5 mm	3-9.5 mm	5-15 mm
		1050 - 1500	305	1.63 - 2.77	1.91 - 2.67	1.32	2.67	2.01	13	22	220	51 x 51 x 4.8	51 x 51 x 4.8	3-13	3-13	3-9.5 mm	3-9.5 mm	5-15 mm
		1650 - 1800	305	1.63 - 2.77		1.32		2.01	13	22	220	51 x 51 x 4.8	51 x 51 x 4.8	3-13	3-13	3-9.5 mm	3-9.5 mm	5-15 mm
		1950 - 2900	305	2.01 - 2.77		2.01		2.77	13	22	310	51 x 51 x 4.8	51 x 51 x 4.8	3-13	3-13	3-9.5 mm	3-9.5 mm	5-15 mm
HUGGER	68 x 13 * REROLLED END	600 - 1800	267	1.63 - 2.77		1.32		2.01	13	22	220							
		1950 - 2100	267	2.77		2.01		2.77	13	22	310							

* See Note 14.

14. All profiles of Spiral Rib Pipe (19 mm x 19 mm ribs at 191mm pitch and 19 mm x 25 mm ribs at 292 mm pitch in both steel and aluminum and 19 mm x 25 mm ribs at 216 mm pitch in steel only) shall be manufactured with rerolled ends. Corrugation profile of the rerolled ends shall be 68 mm x 13 mm annual corrugations with a minimum of two full corrugations at each end.

ALL DIMENSIONS ARE IN MILLIMETERS UNLESS OTHERWISE SHOWN

NOTES

1. All ferrous metal coupling band connection hardware shall be galvanized or electro-plated in accordance with the Standard Specifications.
2. For helically corrugated coupling bands, the connection angles may be oriented parallel to the pipe axis, provided connecting holes are slotted lengthwise sufficiently to allow adjustment for the helix angle.
3. Tension strap may be connected to band with either spot welds or fillet welds that develop minimum required strength of strap.
4. Use 32 mm gage line dimension on attached angle leg for rivets and spot welds.
5. Band thickness shall not be less than:
   a. 3 standard thicknesses lighter than the thickness of the pipe for Corrugated Steel Pipe.
   b. 2 standard thicknesses lighter than the thickness of the pipe and in no case lighter than 1.5 mm for Corrugated Aluminum Pipe.
6. Dimensions, thicknesses and strengths shown are minimum.
7. For pipe arches use same width band as for round pipe of equal periphery.
8. Fillet welds of equivalent strenght may be substituted for spot welds or rivets.
9. Spot welds shall develop minimum required strength of strap.
10. Pipe with rerolled ends having at least two 68 mm x 13 mm annular corrugations at each end with or without an upturned flange may be connected with any of the annular coupling bands shown for pipe of the same diameter and wall thickness and having 68 mm x 13 mm corrugations.
11. In the case of H-305 huggerbands, two piece bands are required for diameters through 2400 mm and three piece bands are required for diameters 2550 mm through 3000 mm.
12. Two piece bands are required for pipes greater than 1050 mm diameter.
13. The 57 mm x 51mm x 2.8 mm thick galvanized die-formed angle connector may be used in lieu of the 51mm x 51mm 4.8 mm angle connector for standard joints only on pipes through 1800 mm diameter.

STATE OF CALIFORNIA
DEPARTMENT OF TRANSPORTATION

CORRUGATED METAL PIPE COUPLING DETAILS No. 5 STANDARD JOINT

NO SCALE

RSP D97E DATED JUNE 6, 2008 SUPERSEDES STANDARD PLAN D97E DATED July 1, 2004 - PAGE 187 OF THE STANDARD PLANS BOOK DATED July 2004.

REVISED STANDARD PLAN RSP D97E

2004 REVISED Std PLAN RSP D97E

05-19-08

To accompany plans dated 10-18-10

Caltrans Metric

DIST	COUNTY	ROUTE	KILOMETER POST TOTAL PROJECT	SHEET NO.	TOTAL SHEETS
11	SD	905,805	R8.4/R9.8, 3.1/4.2	281	364

Raymond Don Tsztoo
REGISTERED CIVIL ENGINEER

June 6, 2008
PLANS APPROVAL DATE

REGISTERED PROFESSIONAL ENGINEER Raymond Don Tsztoo No. C37332 Exp. 6-30-08 STATE OF CALIFORNIA

The State of California or its officers or agents shall not be responsible for the accuracy or completeness of electronic copies of this plan sheet.

To get to the Caltrans web site, go to: http://www.dot.ca.gov

ANNULAR AND HELICAL PROFILE

COUPLING TYPE	PIPE CORRUGATION (mm)	PIPE SIZE (mm)	W OR A (mm)	PIPE WALL THICKNESS CSP (mm)	PIPE WALL THICKNESS CAP (mm)	BAND THICKNESS CSP (mm)	BAND THICKNESS CAP (mm)	BAR AND STRAP (CSP ONLY) STRAP THICKNESS (mm)	BOLTS (mm ø)	BAR Dia (mm)	BAR YIELD STRENGTH (MPa)	ANGLE DIMENSIONS CSP (mm)	ANGLE DIMENSIONS CAP (mm)	BOLTS (No. - mm ø) CSP	BOLTS CAP	RIVETS ANGLE TO BAND CSP	RIVETS ANGLE TO BAND CAP	SPOT WELDS ANGLE TO BAND CSP
TWO PIECE INTEGRAL FLANGE	38 x 6.5	150-250	178	1.63-2.01	1.52	1.63	1.52							2-10	2-10			
	68 x 13	300-600	305		1.52-2.67		1.52								3-13			
UNIVERSAL	68 x 13	THROUGH 900	305	1.63-3.51	1.52-3.43	1.63	1.52	2.01	13	22	220	51 x 51 x 4.8	51 x 51 x 4.8	3-13	3-13	3-9.5 mm	3-9.5 mm	5-15 mm
		1050-1500	413	1.63-4.27	1.52-4.17	1.63	1.52	DOUBLE 2.01	13	22	220	51 x 51 x 6.4	51 x 51 x 6.4	4-13	4-13	5-9.5 mm	5-9.5 mm	
ANNULAR	68 x 13	THROUGH 900	305	1.63-3.51	1.52-3.43	1.63	1.52					51 x 51 x 4.8	51 x 51 x 4.8	3-13	3-13	3-9.5 mm	3-9.5 mm	5-15 mm
		1050-1500	305	1.63-2.01		1.63						51 x 51 x 4.8		3-13		3-9.5 mm		5-15 mm
		1050-1500	305	2.77-4.27	3.43-4.17	1.63	1.91					51 x 51 x 6.4	51 x 51 x 6.4	3-13	3-13	5-9.5 mm	5-9.5 mm	
		1650-1800	610		4.17		2.67						51 x 51 x 6.4		5-13		5-13 mm	
		1650-2100	610	2.77-4.27		1.63						51 x 51 x 6.4		5-13		7-9.5 mm		
		1050-1350	305		1.52-2.67		1.52						51 x 51 x 4.8		3-13		3-9.5 mm	
	75 x 25	1200-1500	355	1.63-2.01		1.63						51 x 51 x 4.8		3-13		3-9.5 mm		5-15 mm
		1200-1500	355	2.77		1.63						51 x 51 x 4.8		3-13		5-9.5 mm		
		1650-3000	635	1.63-2.77		1.63						51 x 51 x 4.8		5-13		9-9.5 mm		
		1050-1500	355		1.52-2.67		1.52						51 x 51 x 4.8		3-13		5-9.5 mm	
		1050-1500	355		3.43		1.91						51 x 51 x 6.4		3-13		5-9.5 mm	
		1650-2400	635		1.52-3.43		1.52						51 x 51 x 6.4		5-13		7-9.5 mm	
		2400-2700	635		3.43		1.91						51 x 51 x 6.4		5-13		7-9.5 mm	
HELICAL	68 x 13	THROUGH 900	305	1.63-3.51	1.52-3.43	1.63	1.52					51 x 51 x 4.8	51 x 51 x 4.8	3-13	3-13	3-9.5 mm	3-9.5 mm	5-15 mm
		1050-1350	305		1.52-2.67		1.52						51 x 51 x 4.8		3-13		3-9.5 mm	
		1050-1500	305	1.63-2.01		1.63						51 x 51 x 4.8		3-13		3-9.5 mm		5-15 mm
		1050-1500	305	2.77-4.27	3.43-4.17	1.63	1.91					51 x 51 x 6.4	51 x 51 x 6.4	3-13	3-13	5-9.5 mm	5-9.5 mm	
		1650-2100	610	2.77-4.27		1.63						51 x 51 x 6.4		5-13		7-9.5 mm		
		1650-1800	610		4.17		2.67						51 x 51 x 6.4		5-13		5-9.5 mm	
	75 x 25	1200-1500	355	1.63-2.01		1.63						51 x 51 x 4.8		3-13		3-9.5 mm		5-15 mm
		1200-1500	355	2.77		1.63						51 x 51 x 4.8		3-13		5-9.5 mm		
		1650-3000	635	1.63-2.77		1.63						51 x 51 x 4.8		5-13		9-9.5 mm		
		1050-1500	355		1.52-2.67		1.52						51 x 51 x 4.8		3-13		5-9.5 mm	
		1050-1500	355		3.43		1.91						51 x 51 x 6.4		3-13		5-9.5 mm	
		1650-2400	635		1.52-3.43		1.52						51 x 51 x 6.4		5-13		7-9.5 mm	
		2400-2700	635		3.43		1.91						51 x 51 x 6.4		5-13		7-9.5 mm	
HUGGER	68 x 13 REROLLED END	THROUGH 1200	267	2.77		1.63		2.01	13	22	220							
		1350 - 1650	267	2.77		1.63		DOUBLE 2.01	13	22	220							
		THROUGH 1350	267	1.63 - 2.01		1.63		2.01	13	22	220							
		THROUGH 1500	267	3.51		2.01		DOUBLE 2.01	13	22	220							
		1650 - 1800	267	3.51		2.77		DOUBLE 2.01	13	22	220							
		THROUGH 1800	267	4.27		2.77		DOUBLE 2.77	13	22	310							
	75 x 25 REROLLED END	1200 - 2100	267	2.77		2.01		DOUBLE 2.01	13	22	220							
		1200 - 2250	267	1.63 - 2.01		1.63		DOUBLE 2.01	13	22	220							
		2400 - 2550	267	2.01		2.01		DOUBLE 2.01	13	22	220							
		2250 - 3000	267	2.77		2.77		DOUBLE 2.77	13	22	310							

SPIRAL RIB PROFILE

COUPLING TYPE	PIPE CORRUGATION (mm)	PIPE SIZE (mm)	W (mm)	PIPE WALL THICKNESS SSRP (mm)	PIPE WALL THICKNESS ASRP (mm)	BAND THICKNESS SSRP (mm)	BAND THICKNESS ASRP (mm)	BAR AND STRAP (SSRP ONLY) STRAP THICKNESS (mm)	BOLTS (mm ø)	BAR Dia (mm)	BAR YIELD STRENGTH (MPa)	ANGLE DIMENSIONS SSRP (mm)	ANGLE DIMENSIONS ASRP (mm)	BOLTS (No.- mm ø) SSRP	BOLTS ASRP	RIVETS ANGLE TO BAND SSRP	RIVETS ANGLE TO BAND ASRP	SPOT WELDS ANGLE TO BAND SSRP
ANNULAR	68 x 13 ✳ REROLLED END	600 - 900	305	1.63 - 2.77	1.52 - 2.67	1.63	1.52	2.01	13	22	220	51 x 51 x 4.8	51 x 51 x 4.8	3-13	3-13	3-9.5 mm	3-9.5 mm	5-15 mm
		1050 - 1500	305	1.63 - 2.01	1.90 - 2.67	1.63	1.90	2.01	13	22	220	51 x 51 x 4.8	51 x 51 x 4.8	3-13	3-13	3-9.5 mm	3-9.5 mm	5-15 mm
		1050 - 1500	305	2.77		1.63		2.01	13	22	220	51 x 51 x 6.4		3-13		5-9.5 mm		
		1650 - 2100	610	2.77		1.63		2.01	13	22	220	51 x 51 x 6.4		5-13		7-9.5 mm		
HUGGER	68 x 13 ✳ REROLLED END	600 - 1350	267	1.63 - 2.01		1.63		2.01	13	22	220							
		600 - 1200	267	2.77		1.63		2.01	13	22	220							
		1350 - 1650	267	2.77		1.63		Double 2.01	13	22	220							

✳ See Note 13.

13. All profiles of Spiral Rib Pipe (19 mm x 19 mm ribs at 191 mm pitch and 19 mm x 25 mm ribs at 292 mm pitch in both steel and aluminum and 19 mm x 25 mm ribs at 216 mm pitch in steel only) shall be manufactured with rerolled ends. Corrugation profile of the rerolled ends shall be 68 mm x 13 mm annual corrugations with a minimum of two full corrugations at each end.

ALL DIMENSIONS ARE IN MILLIMETERS UNLESS OTHERWISE SHOWN

NOTES

1. All ferrous metal coupling band connection hardware shall be galvanized or electro-plated in accordance with the Standard Specifications.
2. For helically corrugated coupling bands, the connection angles may be oriented parallel to the pipe axis, provided connecting holes are slotted lengthwise sufficiently to allow adjustment for the helix angle.
3. Tension strap may be connected to band with either spot welds or fillet welds that develop minimum required strength of strap.
4. Use 32 mm gage line dimension on attached angle leg for rivets and spot welds.
5. Band thickness shall not be less than:
   a. 3 standard thicknesses lighter than the thickness of the pipe for corrugated steel pipe.
   b. 2 standard thicknesses lighter than the thickness of the pipe and in no case lighter than 1.5 mm for corrugated aluminum pipe.
6. Dimensions, thicknesses and strengths shown are minimum.
7. For pipe arches use same width band as for round pipe of equal periphery.
8. Fillet welds of equivalent strength may be substituted for spot welds or rivets.
9. Spot welds shall develop minimum required strength of strap.
10. Pipe with rerolled ends having at least two 68 mm x 13 mm annular corrugations at each end with or without an upturned flange may be connected with any of the annular coupling bands shown for pipe of the same diameter and wall thickness and having 68 mm x 13 mm corrugations.
11. In the case of H-305 huggerbands, two piece bands are required for diameters through 2400 mm and three piece bands are required for diameters 2550 mm through 3000 mm.
12. Two piece bands are required for pipes greater than 1050 mm diameter.

STATE OF CALIFORNIA
DEPARTMENT OF TRANSPORTATION

CORRUGATED METAL PIPE COUPLING DETAILS No. 6 POSITIVE JOINT

NO SCALE

RSP D97F DATED JUNE 6, 2008 SUPERSEDES STANDARD PLAN D97F DATED July 1, 2004 - PAGE 188 OF THE STANDARD PLANS BOOK DATED July 2004.

REVISED STANDARD PLAN RSP D97F

2004 REVISED Std PLAN RSP D97F

05-19-08

To accompany plans dated 10-18-10

Caltrans Metric

DIST	COUNTY	ROUTE	KILOMETER POST TOTAL PROJECT	SHEET NO.	TOTAL SHEETS
11	SD	905,805	R8.4/R9.8, 3.1/4.2	282	364

Raymond Don Tsztoo
REGISTERED CIVIL ENGINEER

June 6, 2008
PLANS APPROVAL DATE

REGISTERED PROFESSIONAL ENGINEER Raymond Don Tsztoo No. C37332 Exp. 6-30-08 STATE OF CALIFORNIA

The State of California or its officers or agents shall not be responsible for the accuracy or completeness of electronic copies of this plan sheet.

To get to the Caltrans web site, go to: http://www.dot.ca.gov

ANNULAR AND HELICAL PROFILE

COUPLING TYPE	PIPE CORRUGATION (mm)	PIPE SIZE (mm)	W OR A (mm)	PIPE WALL THICKNESS		BAND THICKNESS		BAR AND STRAP (CSP ONLY)			ANGLE						
											DIMENSIONS		BOLTS (No.-mm ø)		RIVETS ANGLE TO BAND		SPOT WELDS ANGLE TO BAND
				CSP (mm)	CAP (mm)	CSP (mm)	CAP (mm)	STRAP THICKNESS (mm)	BOLTS (mm ø)	BAR Dia (mm)	CSP (mm)	CAP (mm)	CSP	CAP	CSP	CAP	CSP
TWO PIECE INTEGRAL FLANGE	38 x 6.5	150	178	1.63 - 4.27		1.32							3-10				
	38 x 6.5	200 - 250	178	1.63 - 4.27	1.52 - 4.17	1.63	1.52						3-10	3-10			
ANNULAR	68 x 13	THROUGH 600	305	1.63 - 4.27	1.52 - 4.17	1.63	1.52				51 x 51 x 4.8	51 x 51 x 4.8	3-13	3-13	3-9.5 mm	3-9.5 mm	3-15 mm
HUGGER	68 x 13 REROLLED END	THROUGH 600	267	1.63 - 4.27		1.63		2.01	13	22	51 x 51 x 4.8	51 x 51 x 4.8	3-13	3-13	3-9.5 mm	3-9.5 mm	3-15 mm

SPIRAL RIB PROFILE

COUPLING TYPE	PIPE CORRUGATION (mm)	PIPE SIZE (mm)	W (mm)	PIPE WALL THICKNESS		BAND THICKNESS		BAR AND STRAP (SSRP ONLY)			ANGLE						
											DIMENSIONS		BOLTS (No.- mm ø)		RIVETS ANGLE TO BAND		SPOT WELDS ANGLE TO BAND
				SSRP (mm)	ASRP (mm)	SSRP (mm)	ASRP (mm)	STRAP THICKNESS (mm)	BOLTS (mm ø)	BAR Dia (mm)	SSRP (mm)	ASRP (mm)	SSRP	ASRP	SSRP	ASRP	SSRP
ANNULAR	68 x 13 * REROLLED END	600	305	1.63 - 4.27	1.52 - 4.17	1.63	1.52				51 x 51 x 4.8	51 x 51 x 4.8	3-13	3-13	3-9.5 mm	3-9.5 mm	3-15 mm
HUGGER	68 x 13 * REROLLED END	600	267	1.63 - 4.27		1.63		2.01	13	22							

* See Note 12.

NOTES

1. All ferrous metal coupling band connection hardware shall be galvanized or electroplated in accordance with the Standard Specifications.
2. For helically corrugated coupling bands, the connection angles may be oriented parallel to the pipe axis, provided connecting holes are slotted lengthwise sufficiently to allow adjustment for the helix angle.
3. Tension straps may be connected to band with either spot welds or fillet welds that develop minimum required strength of strap.
4. Use 32 mm gage line dimension on attached angle leg for rivets and spot welds.
5. Band thickness shall not be less than:
   a. 3 standard thickness lighter than the thickness of the pipe for corrugated steel pipe.
   b. 2 standard thickness lighter than the thickness of the pipe and in no case lighter than 1.5 mm for corrugated aluminum pipe.
6. Dimensions, thickness and strengths shown are minimum.
7. For pipe arches use same width band as for round pipe of equal periphery.
8. Fillet welds of equivalent strength may be substituted for spot welds or rivets.
9. Spot welds shall develop minimum required strength of strap.
10. Pipe with rerolled ends having at least two 68 mm x 13 mm annular corrugations at each end with or without an upturned flange may be connected with any of the annular coupling bands shown for pipe of the same diameter and wall thickness and having 68 mm x 13 mm corrugations.
11. For downdrain applications, two piece integral flange couplers shall have factory applied sleeve type rubber gaskets with a minimum length of 175 mm measured along the length of the pipe.
12. All profiles of Spiral Rib Pipe (19 mm x 19 mm ribs at 191 mm pitch and 19 mm x 25 mm ribs at 292 mm pitch in both steel and aluminum and 19 mm x 25 mm ribs at 216 mm pitch in steel only) shall be manufactured with rerolled ends. Corrugation profile of the rerolled ends shall be 68 mm x 13 mm annual corrugations with a minimum of two full corrugations at each end.

STATE OF CALIFORNIA
DEPARTMENT OF TRANSPORTATION

CORRUGATED METAL PIPE COUPLING DETAILS No. 7 DOWNDRAIN

NO SCALE

ALL DIMENSIONS ARE IN MILLIMETERS UNLESS OTHERWISE SHOWN

RSP D97G DATED JUNE 6, 2008 SUPERSEDES STANDARD PLAN D97G DATED July 1, 2004 - PAGE 189 OF THE STANDARD PLANS BOOK DATED July 2004.

REVISED STANDARD PLAN RSP D97G

2004 REVISED Std PLAN RSP D97G

05-19-08

DIST	COUNTY	ROUTE	KILOMETER POST TOTAL PROJECT	SHEET NO.	TOTAL SHEETS
11	SD	905,805	R8.4/R9.8, 3.1/4.2	283	364

Caltrans Metric

Raymond Don Tsztoo
REGISTERED CIVIL ENGINEER

March 7, 2008
PLANS APPROVAL DATE

REGISTERED PROFESSIONAL ENGINEER
Raymond Don Tsztoo
No. C37332
Exp. 6-30-08
CIVIL
STATE OF CALIFORNIA

The State of California or its officers or agents shall not be responsible for the accuracy or completeness of electronic copies of this plan sheet.

To get to the Caltrans web site, go to: http://www.dot.ca.gov

To accompany plans dated 10-18-10

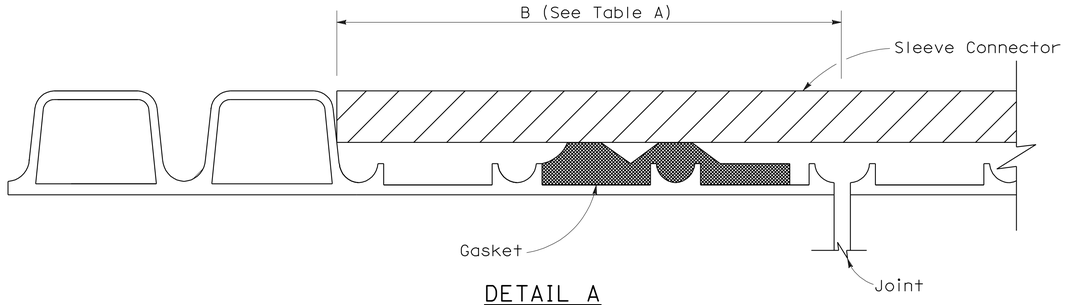

DETAIL A

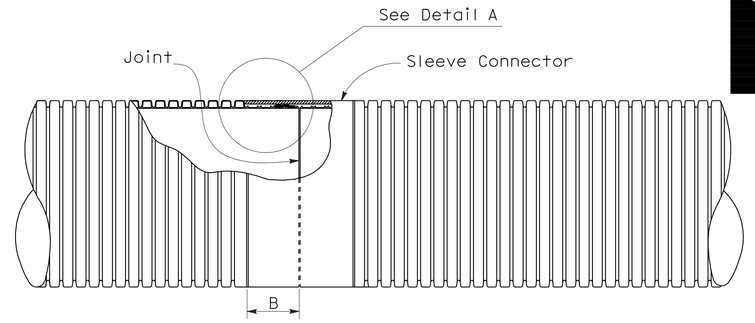

PLAN VIEW
Liner Insert
See Note 4

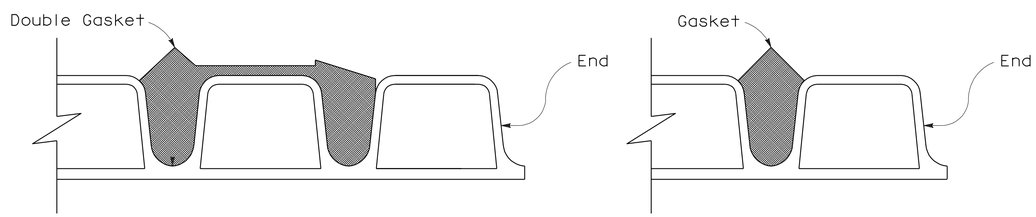

Double Gasket

Single Gasket

DETAIL B

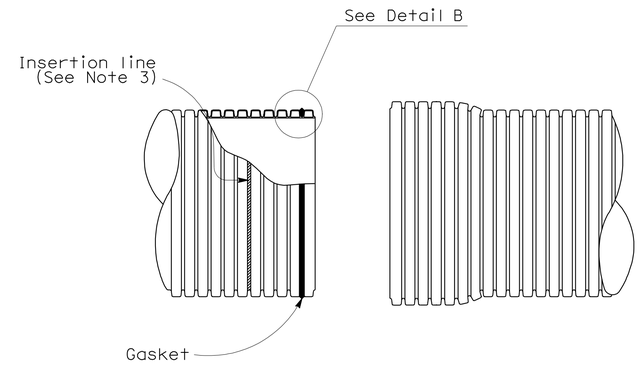

SPIGOT

BELL

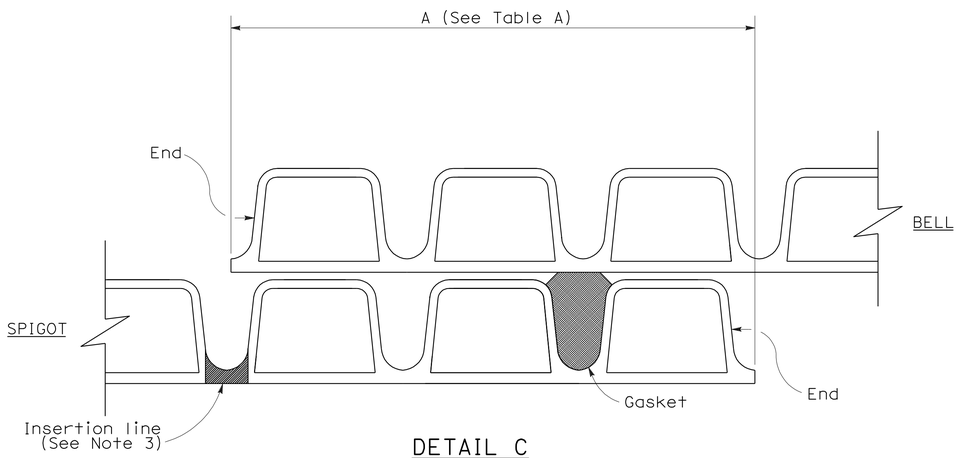

DETAIL C
(Single gasket shown)

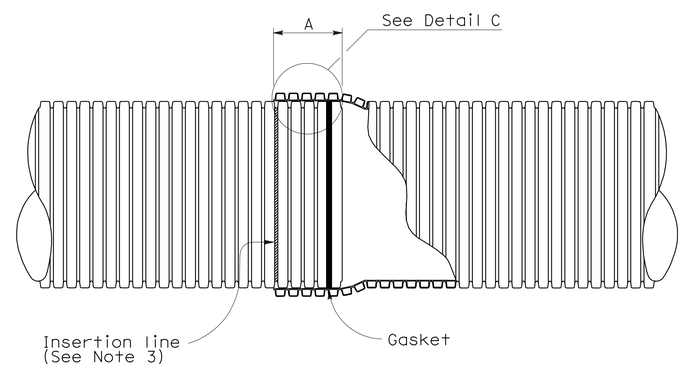

BELL AND SPIGOT JOINT

NOTES:

1. For pipe sections installed on straight alignment, the pipe sections shall be joined to achieve maxium joint overlap at all points on the periphery as indicated in Table A where the plans call for positive or watertight joints. Maxium joint overlap is recommended where the plans call for standard joints, but in no case shall the joint overlap be less than 89 mm.

2. For pipe sections installed on curved alignment, the maxium angle of deflection from straight alignment at any joint shall not exceed two degrees. Where the plans call for watertightness, field testing for compliance is required. Where plans call for positive joints, the pipe sections shall be joined to achieve Table A Dimensions on one side of the joint. Joints classified as standard shall have no less than 89 mm joint overlap at any point on the periphery.

3. Factory applied insertion line limit shall be placed on spigot.

4. Liner insert to be used inside of existing pipe.

TABLE A

JOINT OVERLAP DIMENSIONS		
PIPE Dia (NOMINAL) (mm)	A (mm)	B (mm)
305	146	108
380	171	143
460	171	143
535	216	143
610	216	156
760	216	181
915	216	206

STATE OF CALIFORNIA
DEPARTMENT OF TRANSPORTATION

CORRUGATED POLYVINYL CHLORIDE PIPE WITH SMOOTH INTERIOR STANDARD AND POSITIVE JOINTS

NO SCALE

ALL DIMENSIONS ARE IN MILLIMETERS UNLESS OTHERWISE SHOWN

NSP D97I DATED MARCH 7, 2008 SUPPLEMENTS THE STANDARD PLANS BOOK DATED JULY 2004.

NEW STANDARD PLAN NSP D97I

2004 NEW Std PLAN NSP D97I

2-21-08

DIST	COUNTY	ROUTE	KILOMETER POST TOTAL PROJECT	SHEET NO.	TOTAL SHEETS
11	SD	905,805	R8.4/R9.8, 3.1/4.2	284	364

Caltrans Metric

LICENSED LANDSCAPE ARCHITECT

March 7, 2008
PLANS APPROVAL DATE

LICENSED LANDSCAPE ARCHITECT Gregory A. Balzer 2576 Signature 02-28-2009 Renewal Date 02-21-08 Date STATE OF CALIFORNIA

The State of California or its officers or agents shall not be responsible for the accuracy or completeness of electronic copies of this plan sheet.

To get to the Caltrans web site, go to: http://www.dot.ca.gov

To accompany plans dated 10-18-10

2004 REVISED Std PLAN RSP H2

EXISTING	PROPOSED	ITEM DESCRIPTION
		WATER METER (WM)
		BACKFLOW PREVENTER ASSEMBLY (BPA)
		BACKFLOW PREVENTER ASSEMBLY IN ENCLOSURE (BPAE)
		BACKFLOW PREVENTER ENCLOSURE (BPE)
		BOOSTER PUMP (BP)
		TRUCK LOADING STANDPIPE (TLS)
fs	FS	FLOW SENSOR (FS)
		MASTER IRRIGATION CONTROLLER (MIC)
		AUXILIARY IRRIGATION CONTROLLER (AIC)
		IRRIGATION CONTROLLER (IC)/ IRRIGATION CONTROLLER (IC) (BATTERY)
		IRRIGATION CONTROLLER(S) IN CONTROLLER ENCLOSURE CABINET (ICC)
		CONTROL AND NEUTRAL CONDUCTORS (CNC)
scc	SCC	SPRINKLER CONTROL CONDUIT (SCC)
		CONDUIT (COND)
		IRRIGATION SLEEVE
dip	DIP	DUCTILE IRON PIPE (SUPPLY LINE) (MAIN) (DIP)
		GALVANIZED STEEL PIPE (SUPPLY LINE) (MAIN) (GSP)
		GALVANIZED STEEL PIPE (SUPPLY LINE) (LATERAL) (GSP)
		PLASTIC PIPE (PR 200) (SUPPLY LINE) (MAIN)
		PLASTIC PIPE (PR 200) (SUPPLY LINE) (LATERAL)
		PLASTIC PIPE (IRRIGATION LINE)
		REMOTE CONTROL VALVE (RCV) REMOTE CONTROL VALVE (MASTER) (RCVM)
		MANUAL CONTROL VALVE (MCV)
		VALVE ASSEMBLY UNIT (VAU)
		WYE STRAINER (WS)
		FILTER ASSEMBLY UNIT (FAU)
		GATE VALVE (GV)
		BALL VALVE (BV)

EXISTING	PROPOSED	ITEM DESCRIPTION
		QUICK COUPLING VALVE (QCV)
		CAM COUPLING ASSEMBLY (CCA)
		PRESSURE REDUCING VALVE (PRV)
		PRESSURE RELIEF VALVE (PRLV)
		FLOW CONTROL VALVE (FCV)
		COMBINATION AIR RELEASE VALVE (CARV)
		CHECK VALVE (CV)
		FLUSH VALVE (FV)
		NOZZLE LINE W/TURNING UNION
		IRRIGATION SYSTEM
		IRRIGATION SYSTEM TO BE REMOVED
		CHAIN LINK GATE
		QUICK COUPLING VALVE W/SPRINKLER PROTECTOR
3	3	SPRINKLER W/SPRINKLER PROTECTOR
	C	CONNECT TO EXISTING SYSTEM
		CAP
		CAP EXISTING

VALVE CODE

RCV SIZE (mm)
IRRIGATION CONTROLLER
CONTROLLER STATION
VALVE IN PARALLEL (IF APPLICABLE)
L/min
QUANTITY OF SPRINKLERS (WHEN SHOWN)

* 63.5-A-2b-151.4-60

MCV SIZE (mm)
VALVE NUMBER
L/min
QUANTITY OF TYPE SPRINKLERS (WHEN SHOWN)

* 50.8-3-113.5-50

* VALVE CODES FOR EXISTING VALVES ARE SHOWN IN A DASHED ENCLOSURE.

STATE OF CALIFORNIA
DEPARTMENT OF TRANSPORTATION

PLANTING AND IRRIGATION SYMBOLS

NO SCALE

ALL DIMENSIONS ARE IN MILLIMETERS UNLESS OTHERWISE SHOWN

RSP H2 DATED MARCH 7, 2008 SUPERSEDES STANDARD PLAN H2 DATED JULY 1, 2004 - PAGE 202 OF THE STANDARD PLANS BOOK DATED JULY 2004.

REVISED STANDARD PLAN RSP H2

2-20-08

DIST	COUNTY	ROUTE	KILOMETER POST TOTAL PROJECT	SHEET NO.	TOTAL SHEETS
11	SD	905,805	R8.4/R9.8, 3.1/4.2	285	364

Caltrans Metric

LICENSED LANDSCAPE ARCHITECT

December 1, 2006
PLANS APPROVAL DATE

LICENSED LANDSAPE ARCHITECT — Gregory A. Balzer 3878 — Signature — 02-28-2007 Renewal Date — 11-27-06 Date — STATE OF CALIFORNIA

The State of California or its officers or agents shall not be responsible for the accuracy or completeness of electronic copies of this plan sheet.

To get to the Caltrans web site, go to: http://www.dot.ca.gov

To accompany Plans dated 10-18-10

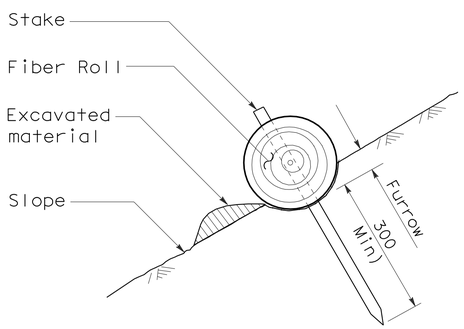

SECTION

FIBER ROLL (TYPE 1)

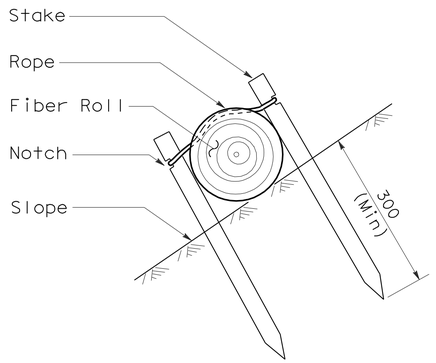

SECTION

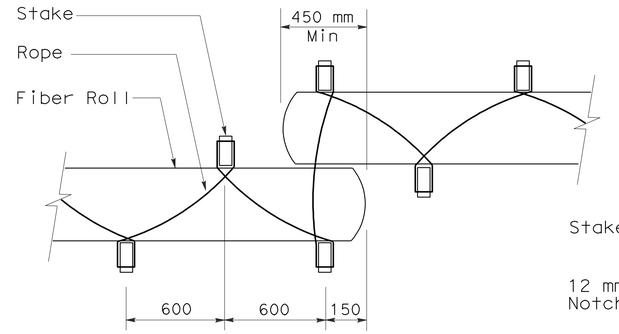

PLAN

FIBER ROLL (TYPE 2)

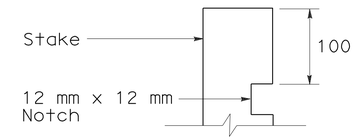

ELEVATION

STAKE NOTCH DETAIL

NOTE

1. Fiber roll spacing varies depending upon slope inclination.
2. Installations shown in the perspectives are for slope inclination of 1:10 and steeper.

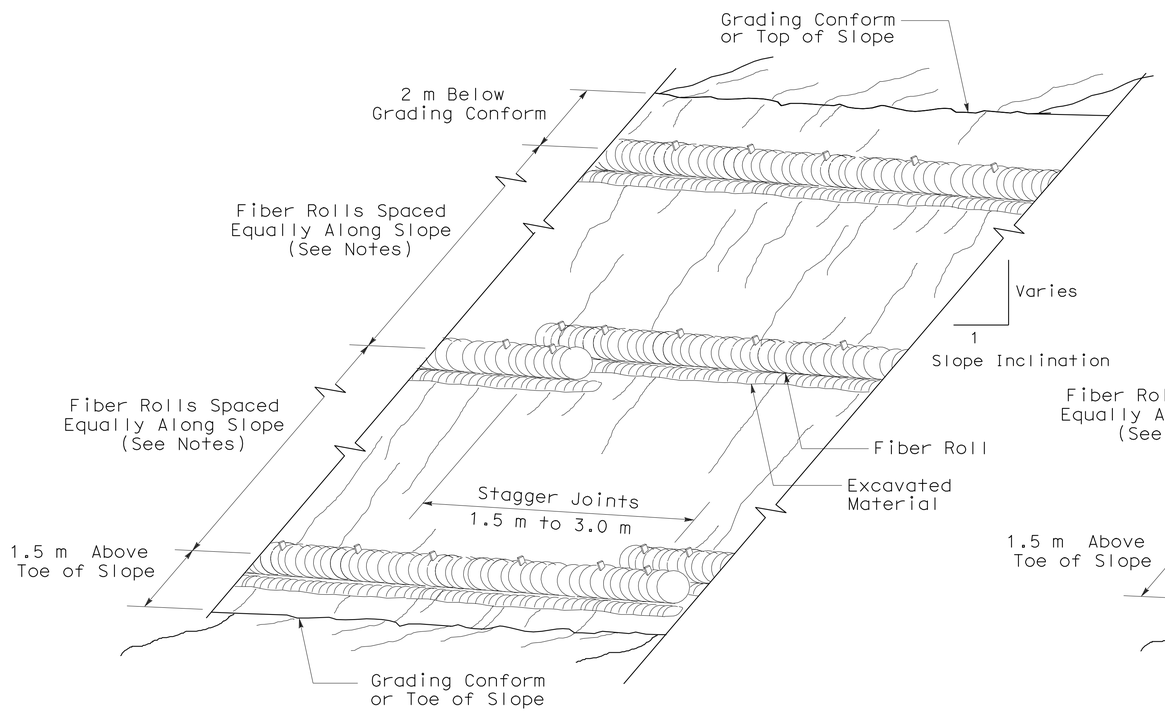

PERSPECTIVE

FIBER ROLL (TYPE 1)

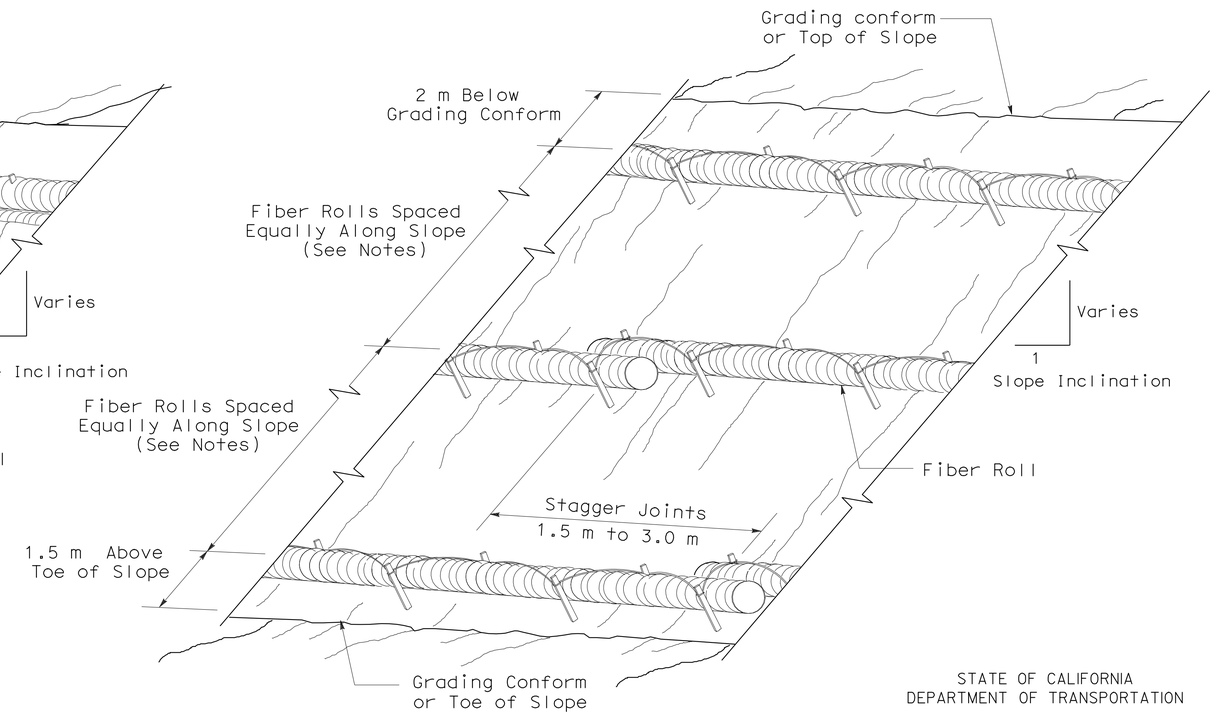

PERSPECTIVE

FIBER ROLL (TYPE 2)

STATE OF CALIFORNIA
DEPARTMENT OF TRANSPORTATION

EROSION CONTROL DETAILS (FIBER ROLL)

NO SCALE

ALL DIMENSIONS ARE IN MILLIMETERS UNLESS OTHERWISE SHOWN

NSP H51 DATED DECEMBER 1, 2006 SUPPLEMENTS THE STANDARD PLANS BOOK DATED JULY 2004.

NEW STANDARD PLAN NSP H51

2004 NEW Std PLAN NSP H51

10-5-06

DIST	COUNTY	ROUTE	KILOMETER POST TOTAL PROJECT	SHEET NO.	TOTAL SHEETS
11	SD	905,805	R8.4/R9.8, 3.1/4.2	286	364

Caltrans Metric

Randell D. Hiatt
REGISTERED CIVIL ENGINEER

June 6, 2008
PLANS APPROVAL DATE

REGISTERED PROFESSIONAL ENGINEER
Randell D. Hiatt
No. C50200
Exp. 6-30-09
CIVIL
STATE OF CALIFORNIA

The State of California or its officers or agents shall not be responsible for the accuracy or completeness of electronic copies of this plan sheet.

To get to the Caltrans web site, go to: http://www.dot.ca.gov

To accompany plans dated 10-18-10

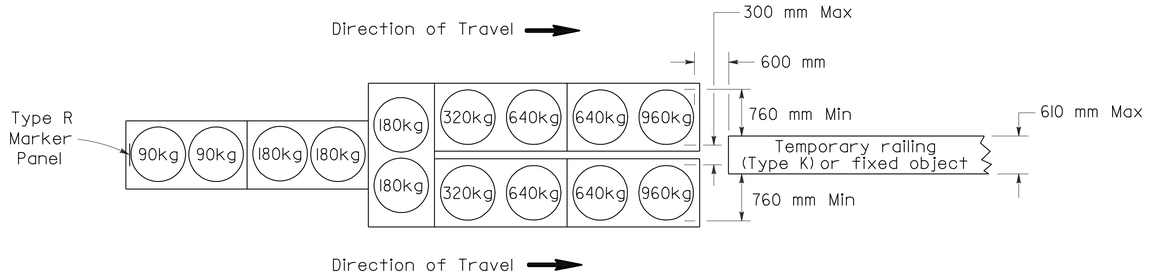

ARRAY 'TU14'

Approach speed 70 km/h or more

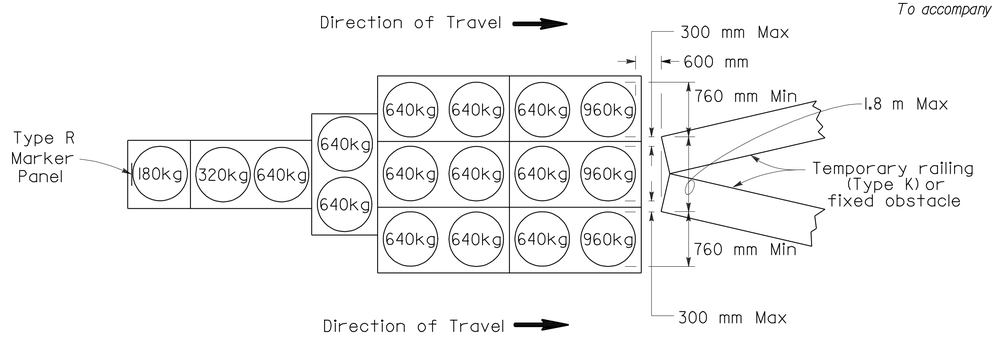

ARRAY 'TU17'

Approach speed less than 70 km/h

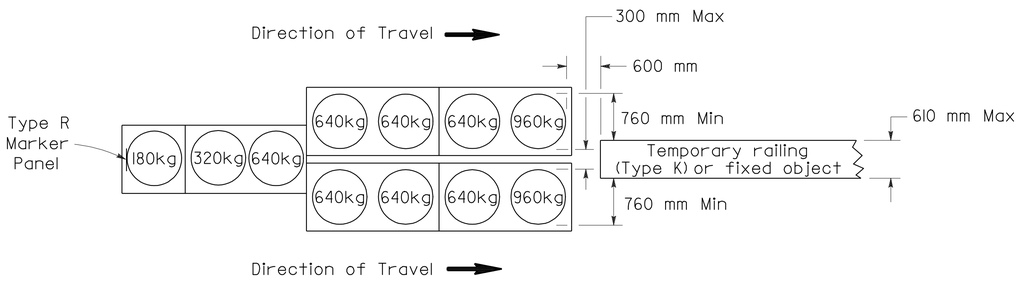

ARRAY 'TU11'

Approach speed less than 70 km/h

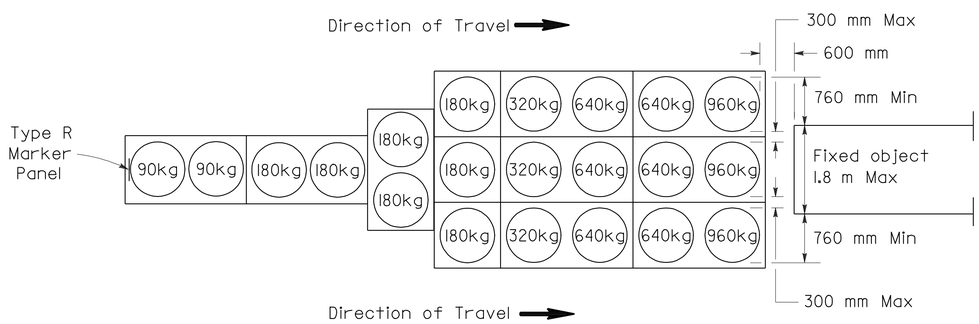

ARRAY 'TU21'

Approach speed 70 km/h or more

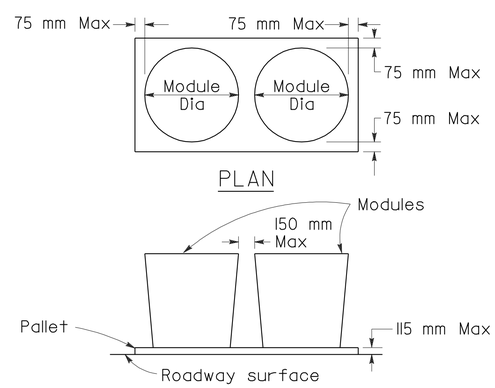

CRASH CUSHION PALLET DETAIL

See Note 7

NOTES

1. (XXX) Indicates sand filled module location and mass of sand in kilograms for each module. Module spacing is based on the greater diameter of the module.
2. All sand masses are nominal.
3. Temporary crash cushion arrays shall not encroach on the traveled way.
4. Place the top of Type R marker panel 25 mm below the module lid.
5. Refer to Standard Plan A73B for marker details.
6. Approach speeds indicated conform to NCHRP 350 Report criteria.
7. Use of Pallets is optional.

STATE OF CALIFORNIA
DEPARTMENT OF TRANSPORTATION

TEMPORARY CRASH CUSHION, SAND FILLED (UNIDIRECTIONAL)

NO SCALE

ALL DIMENSIONS ARE IN MILLIMETERS UNLESS OTHERWISE SHOWN

RSP T1A DATED JUNE 6, 2008 SUPERSEDES STANDARD PLAN T1A
DATED July 1, 2004 - PAGE 211 OF THE STANDARD PLANS BOOK DATED July 2004.

REVISED STANDARD PLAN RSP T1A

2004 REVISED Std PLAN RSP T1A

5-16-08

DIST	COUNTY	ROUTE	KILOMETER POST TOTAL PROJECT	SHEET NO.	TOTAL SHEETS
11	SD	905,805	R8.4/R9.8, 3.1/4.2	287	364

Caltrans Metric

Randell D. Hiatt
REGISTERED CIVIL ENGINEER

June 6, 2008
PLANS APPROVAL DATE

REGISTERED PROFESSIONAL ENGINEER
Randell D. Hiatt
No. C50200
Exp. 6-30-09
CIVIL
STATE OF CALIFORNIA

The State of California or its officers or agents shall not be responsible for the accuracy or completeness of electronic copies of this plan sheet.

To get to the Caltrans web site, go to: http://www.dot.ca.gov

To accompany plans dated 10-18-10

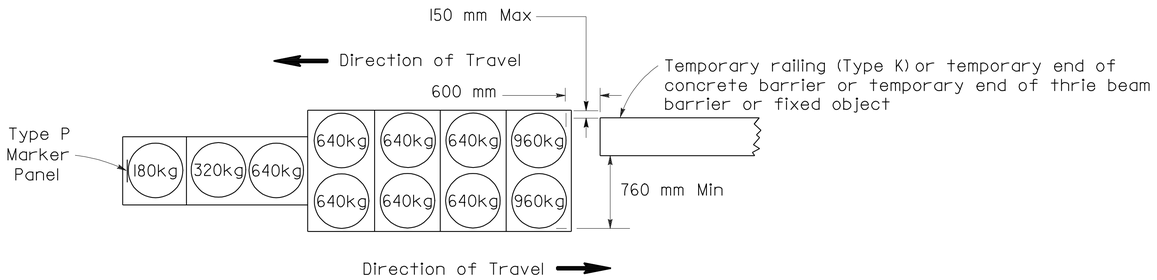

ARRAY 'TBI1'

Approach speed less than 70 km/h

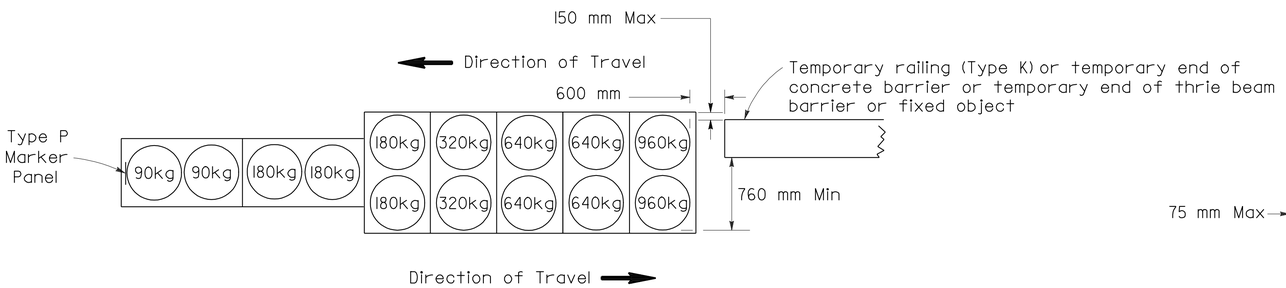

ARRAY 'TBI4'

Approach speed 70 km/h or more

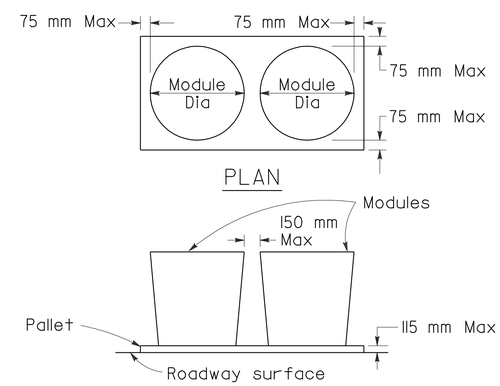

CRASH CUSHION PALLET DETAIL

See Note 7

NOTES

1. (XXX) Indicates sand filled module location and mass of sand in kilograms for each module. Module spacing is based on the greater diameter of the module.
2. All sand masses are nominal.
3. Temporary crash cushion arrays shall not encroach on the traveled way.
4. Place the Type P marker panel so that the bottom of the panel rests upon the pallet.
5. Refer to Standard Plan A73B for marker details.
6. Approach speeds indicated conform to NCHRP 350 Report criteria.
7. Use of Pallets is optional.

STATE OF CALIFORNIA
DEPARTMENT OF TRANSPORTATION

TEMPORARY CRASH CUSHION, SAND FILLED (BIDIRECTIONAL)

NO SCALE

ALL DIMENSIONS ARE IN MILLIMETERS UNLESS OTHERWISE SHOWN

RSP T1B DATED JUNE 6, 2008 SUPERSEDES STANDARD PLAN T1B DATED July 1, 2004 - PAGE 212 OF THE STANDARD PLANS BOOK DATED July 2004.

REVISED STANDARD PLAN RSP T1B

2004 REVISED Std PLAN RSP T1B

5-16-08

DIST	COUNTY	ROUTE	KILOMETER POST TOTAL PROJECT	SHEET NO.	TOTAL SHEETS
11	SD	905,805	R8.4/R9.8, 3.1/4.2	288	364

Caltrans Metric

Randell D. Hiatt
REGISTERED CIVIL ENGINEER

June 6, 2008
PLANS APPROVAL DATE

REGISTERED PROFESSIONAL ENGINEER
Randell D. Hiatt
No. C50200
Exp. 6-30-09
CIVIL
STATE OF CALIFORNIA

The State of California or its officers or agents shall not be responsible for the accuracy or completeness of electronic copies of this plan sheet.

To get to the Caltrans web site, go to: http://www.dot.ca.gov

To accompany plans dated 10-18-10

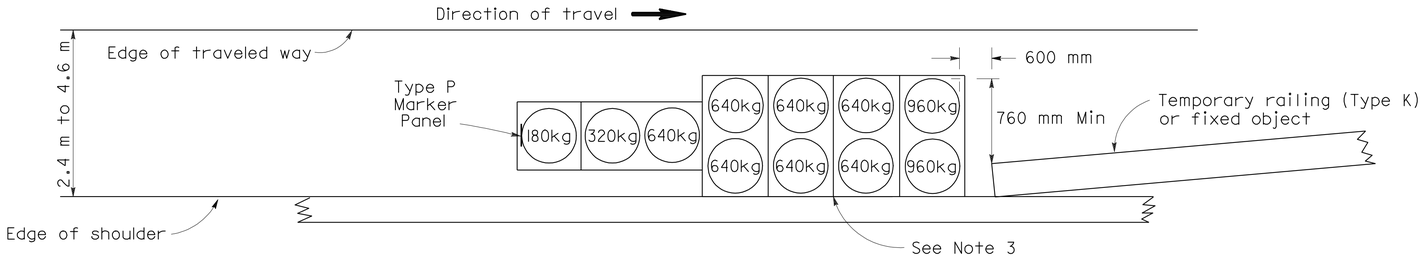

ARRAY 'TSI1'

Approach speed less than 70 km/h
See Note 9

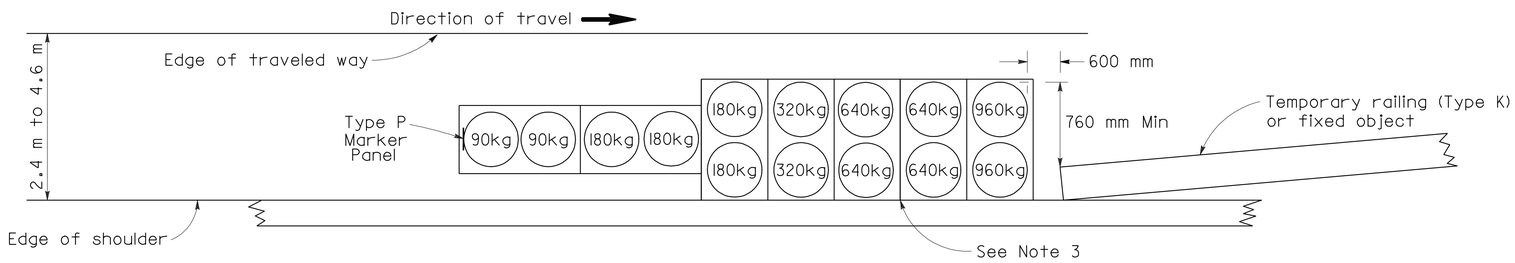

ARRAY 'TSI4'

Approach speed 70 km/h or more
See Note 9

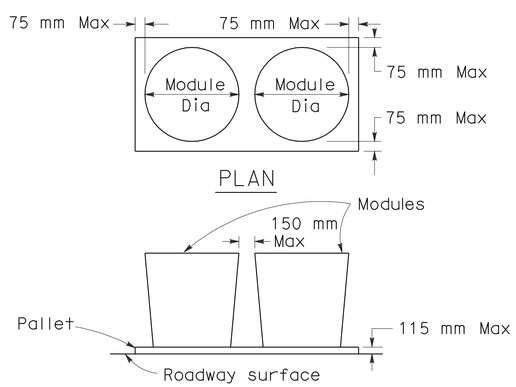

CRASH CUSHION PALLET DETAIL

See Note 11

NOTES

1. (XXX) Indicates sand filled module location and mass of sand in kilograms for each module. Module spacing is based on the greater diameter of the module.
2. All sand masses are nominal.
3. The temporary crash cushion arrays shown on this plan shall be used only in locations where there will be traffic on one side of the temporary crash cushion array.
4. If the fixed object or approach end of the temporary railing is less than 4.60 meters from the edge of traveled way, a temporary crash cushion is required.
5. Temporary crash cushion arrays shall not encroach on the traveled way.
6. Arrays for median shoulders shall conform to details shown on this plan for outside shoulders.
7. Place the Type P marker panel so that the bottom of the panel rest upon the pallet and faces traffic.
8. Refer to Standard Plan A73B for marker details.
9. For shoulder widths less than 2.4 m, appropriate approved crash cushion protection, other than sand filled modules, shall be provided at fixed objects and at approach ends of temporary railing. The specific type of crash cushion shall be as shown on the project plans or as specified in the Special Provisions, or if not shown on the project plans or specified in the Special Provisions, shall be as approved by the Engineer.
10. Approach speeds indicated conform to NCHRP 350 Report criteria.
11. Use of Pallets is optional.

STATE OF CALIFORNIA
DEPARTMENT OF TRANSPORTATION

TEMPORARY CRASH CUSHION, SAND FILLED (SHOULDER INSTALLATIONS)

NO SCALE

ALL DIMENSIONS ARE IN MILLIMETERS UNLESS OTHERWISE SHOWN

RSP T2 DATED JUNE 6, 2008 SUPERSEDES STANDARD PLAN T2
DATED July 1, 2004 - PAGE 213 OF THE STANDARD PLANS BOOK DATED July 2004.

REVISED STANDARD PLAN RSP T2

2004 REVISED Std PLAN RSP T2

5-16-08

To accompany plans dated 10-18-10

Caltrans Metric

DIST	COUNTY	ROUTE	KILOMETER POST TOTAL PROJECT	SHEET NO.	TOTAL SHEETS
11	SD	905,805	R8.4/R9.8, 3.1/4.2	289	364

REGISTERED CIVIL ENGINEER

November 17, 2006
PLANS APPROVAL DATE

REGISTERED PROFESSIONAL ENGINEER — Greg W. Edwards No. C36386 Exp. 6-30-08 CIVIL — STATE OF CALIFORNIA

The State of California or its officers or agents shall not be responsible for the accuracy or completeness of electronic copies of this plan sheet.

To get to the Caltrans web site, go to: http://www.dot.ca.gov

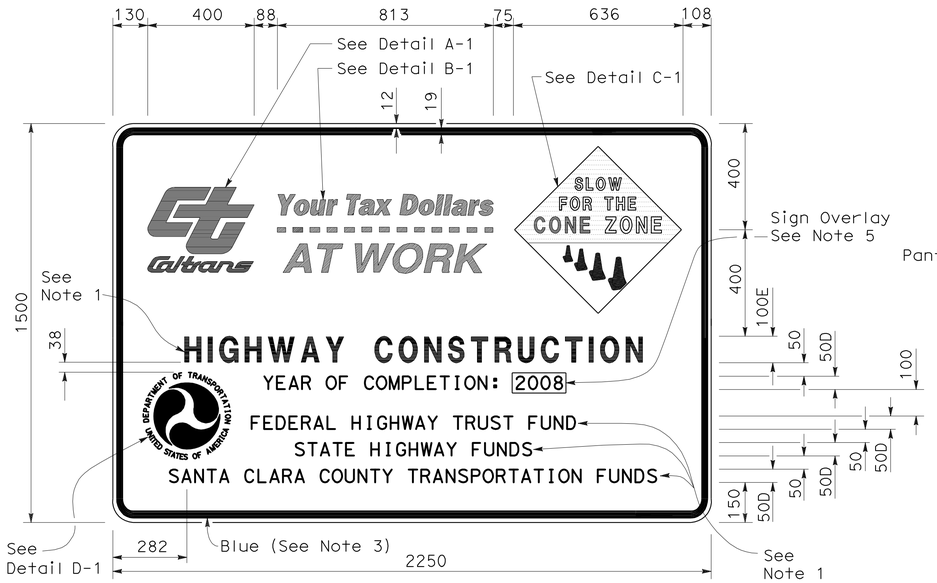

TYPE 1

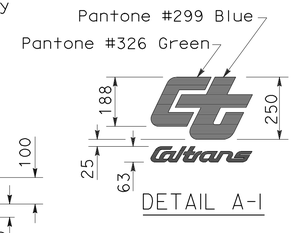

DETAIL A-1

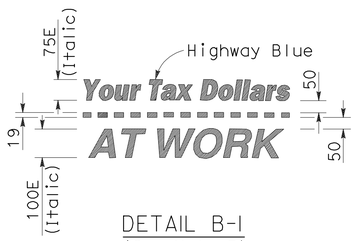

DETAIL B-1
(See Note 3)

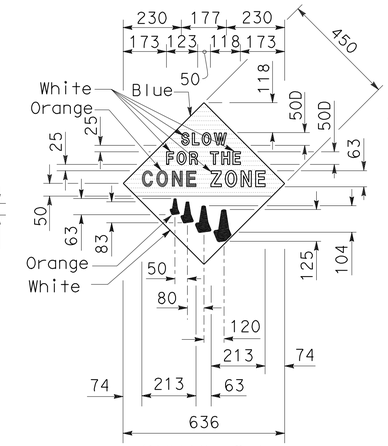

DETAIL C-1
(See Note 4)

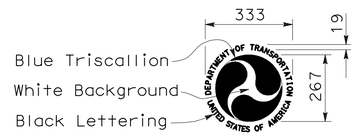

DETAIL D-1
(See Note 6)

NOTES:

1. The sign messages shown for type of project and fund types are examples only. See the Special Provisions for the applicable type of project and fund type messages to be used.
2. Except as otherwise shown, the legend of sign shall be black on a white background (non-reflective).
3. The border of the signs and details "B-1" and "B-2" shall be blue (non-reflective).
4. The diamond in details "C-1" and "C-2" shall be blue for the background of message, " SLOW FOR THE CONE ZONE", and white background for the orange cones. The color and type of font for the "SLOW FOR THE CONE ZONE" message shall be: "SLOW" white D; "FOR THE" white D; "CONE" orange Arial font; "ZONE" white Arial font.
5. Year of completion of project construction shown on the overlay is an example only. See the Special Provisions.
6. Use when the Project involves Federal Highway Trust Fund.

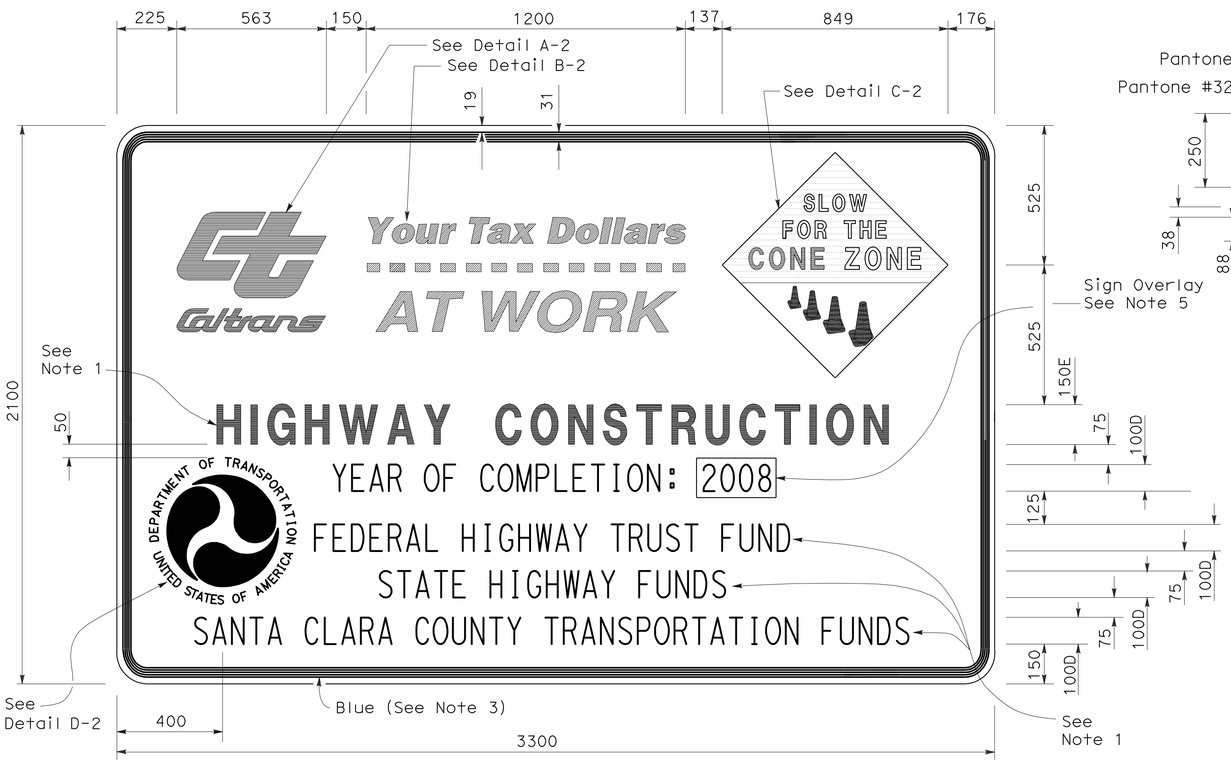

TYPE 2

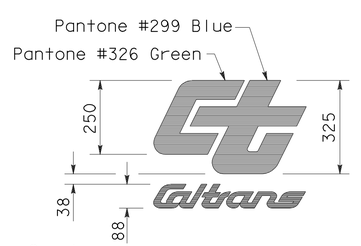

DETAIL A-2

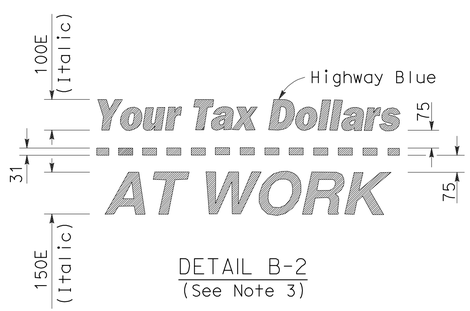

DETAIL B-2
(See Note 3)

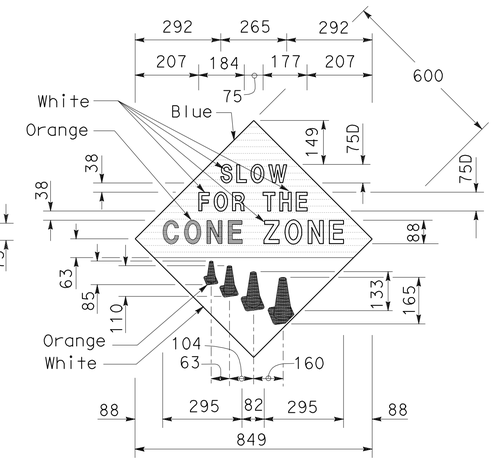

DETAIL C-2
(See Note 4)

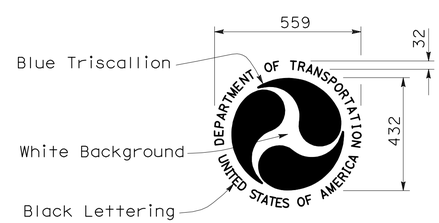

DETAIL D-2
(See Note 6)

STATE OF CALIFORNIA
DEPARTMENT OF TRANSPORTATION

CONSTRUCTION PROJECT FUNDING IDENTIFICATION SIGNS

NO SCALE

ALL DIMENSIONS ARE IN MILLIMETERS UNLESS OTHERWISE SHOWN

RSP T7 DATED NOVEMBER 17, 2006 SUPERSEDES RSP T7 DATED APRIL 28, 2005 AND STANDARD PLAN T7 DATED JULY 1, 2004-PAGE 217 OF THE STANDARD PLANS BOOK DATED JULY 2004.

REVISED STANDARD PLAN RSP T7

2004 REVISED Std PLAN RSP T7

9-7-06

DIST	COUNTY	ROUTE	KILOMETER POST TOTAL PROJECT	SHEET NO.	TOTAL SHEETS
11	SD	905,805	R8.4/R9.8, 3.1/4.2	290	364

REGISTERED CIVIL ENGINEER

April 28, 2005
PLANS APPROVAL DATE

REGISTERED PROFESSIONAL ENGINEER Greg W. Edwards No. C36386 Exp. 6-30-06 CIVIL STATE OF CALIFORNIA

The State of California or its officers or agents shall not be responsible for the accuracy or completeness of electronic copies of this plan sheet.

To get to the Caltrans web site, go to: http://www.dot.ca.gov

To accompany plans dated 10-18-10

Caltrans Metric

NOTES

Unless otherwise specified in the special provisions, all temporary warning signs shall have black legend on orange background.

California code are designated by (CA). Otherwise, Federal codes are shown.

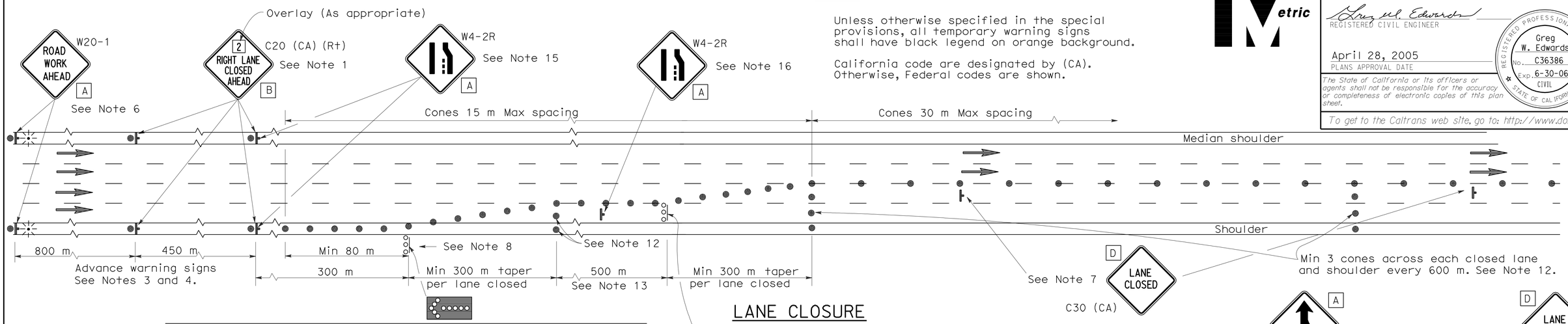

LANE CLOSURE

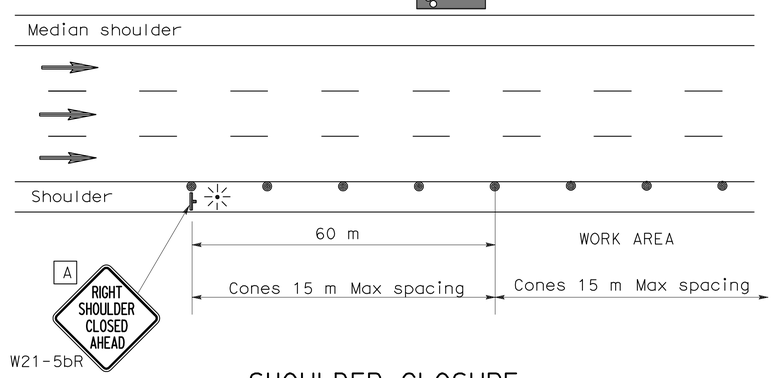

SHOULDER CLOSURE

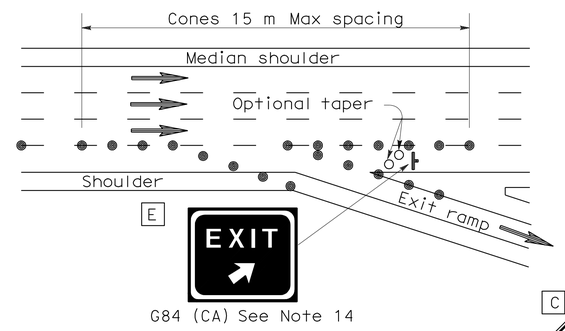

LANE CLOSURE AT EXIT RAMP

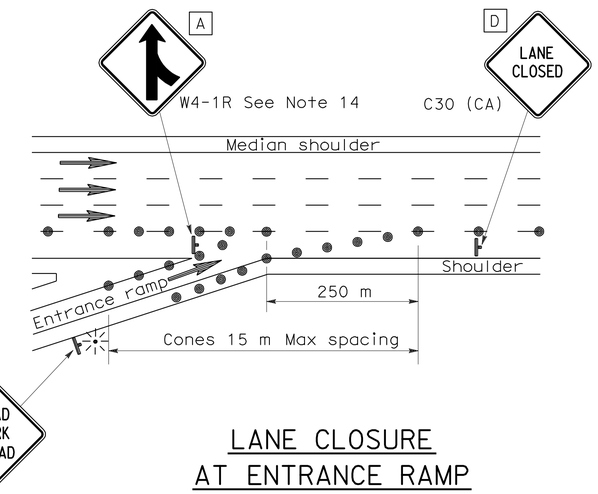

LANE CLOSURE AT ENTRANCE RAMP

NOTES

1. Median lane closures shall conform to the details for outside lane closures except that C20 (CA) (Lt) signs shall be used.
2. At least one person shall be assigned to provide full time maintenance of traffic control devices for lane closures.
3. Duplicate sign installations are not required:
   a) On opposite shoulder if at least one-half of the available lanes remain open to traffic.
   b) In the median if the width of the median shoulder is less than 2.4 m and the outside lanes are to be closed.
4. Each advance warning sign on each side of the roadway shall be equipped with at least two flags for daytime closure. Each flag shall be at least 400 mm x 400 mm in size and shall be orange or fluorescent red-orange in color. Flashing beacons shall be placed at the locations indicated for lane closure during hours of darkness.
5. A C14 (CA) "END ROAD WORK" sign, as appropriate, shall be placed at the end of the lane closure unless the end of work area is obvious or ends within a larger project's limits.
6. If the W20-1 sign would follow within 600 m of a stationary W20-1 or C11 (CA) "ROAD WORK NEXT _____ MILES", use a C20 (CA) sign for the first advance warning sign.
7. Place a C30 (CA) sign every 600 m throughout length of lane closure.
8. One flashing arrow sign for each lane closed. The first flashing arrow sign shall be Type I. All others may be either Type I or Type II.
9. A minimum 450 m of sight distance shall be provided where possible for vehicles approaching the first flashing arrow sign. Lane closures shall not begin at top of crest vertical curve or on a horizontal curve.
10. All cones used for lane closures during the hours of darkness shall be fitted with retroreflective bands (or sleeves) as specified in the specifications.
11. Portable delineators, placed at one-half the spacing indicated for traffic cones may be used instead of cones for daytime closures only.
12. Unless otherwise specified in the special provisions, a minimum of 3 cones shall be placed transversely across each closed lane and shoulder at each location where a taper across a traffic lane ends and every 600 m as shown on the "Lane Closure" detail. Two Type II barricades may be used instead of the 3 cones. The transverse alignment of the cones or barricades on the closed shoulder may be shifted from the transverse alignment to provide access to the work.
13. Unless otherwise specified in the special provisions, the 500 m tangent shown along lane lines shall be used between the 300 m tapers required for each closed traffic lane.
14. Unless otherwise specified in the special provisions, the G84 (CA) and W4-1 signs shall be used as shown.
15. When specified in the special provisions, a W4-2 "LANE ENDS" symbol sign is to be used in place of the C20 (CA) "RIGHT LANE CLOSED AHEAD" sign.
16. The W4-2 "LANE ENDS" symbol sign shown at this location is to be used where the W4-2 sign is used as advance warning as described in Note 15.

SIGN PANEL SIZE (Min)

A	1200 mm x 1200 mm
B	1219 mm x 1219 mm
C	750 mm x 750 mm
D	762 mm x 762 mm
E	1372 mm x 1219 mm

LEGEND

- Traffic Cone
- Traffic Cone (optional taper)
- Temporary Sign
- Flashing Arrow Sign (FAS)
- FAS Support or Trailer
- Direction of Travel
- Portable Flashing Beacon

STATE OF CALIFORNIA
DEPARTMENT OF TRANSPORTATION

TRAFFIC CONTROL SYSTEM FOR LANE CLOSURE ON FREEWAYS AND EXPRESSWAYS

NO SCALE

ALL DIMENSIONS ARE IN MILLIMETERS UNLESS OTHERWISE SHOWN

RSP T10 DATED APRIL 28, 2005 SUPERSEDES STANDARD PLAN T10 DATED JULY 1, 2004-PAGE 218 OF THE STANDARD PLANS BOOK DATED JULY 2004.

REVISED STANDARD PLAN RSP T10

2004 REVISED Std PLAN RSP T10

DIST	COUNTY	ROUTE	KILOMETER POST TOTAL PROJECT	SHEET NO.	TOTAL SHEETS
11	SD	905,805	R8.4/R9.8, 3.1/4.2	291	364

REGISTERED CIVIL ENGINEER

April 28, 2005
PLANS APPROVAL DATE

REGISTERED PROFESSIONAL ENGINEER G.W. Edwards No. C36386 Exp. 6-30-06 CIVIL STATE OF CALIFORNIA

The State of California or its officers or agents shall not be responsible for the accuracy or completeness of electronic copies of this plan sheet.

To get to the Caltrans web site, go to: http://www.dot.ca.gov

Caltrans Metric

To accompany plans dated 10-18-10

NOTES

Unless otherwise specified in the special provisions, all temporary warning signs shall have black legend on orange background.

California code are designated by (CA). Otherwise, Federal codes are shown.

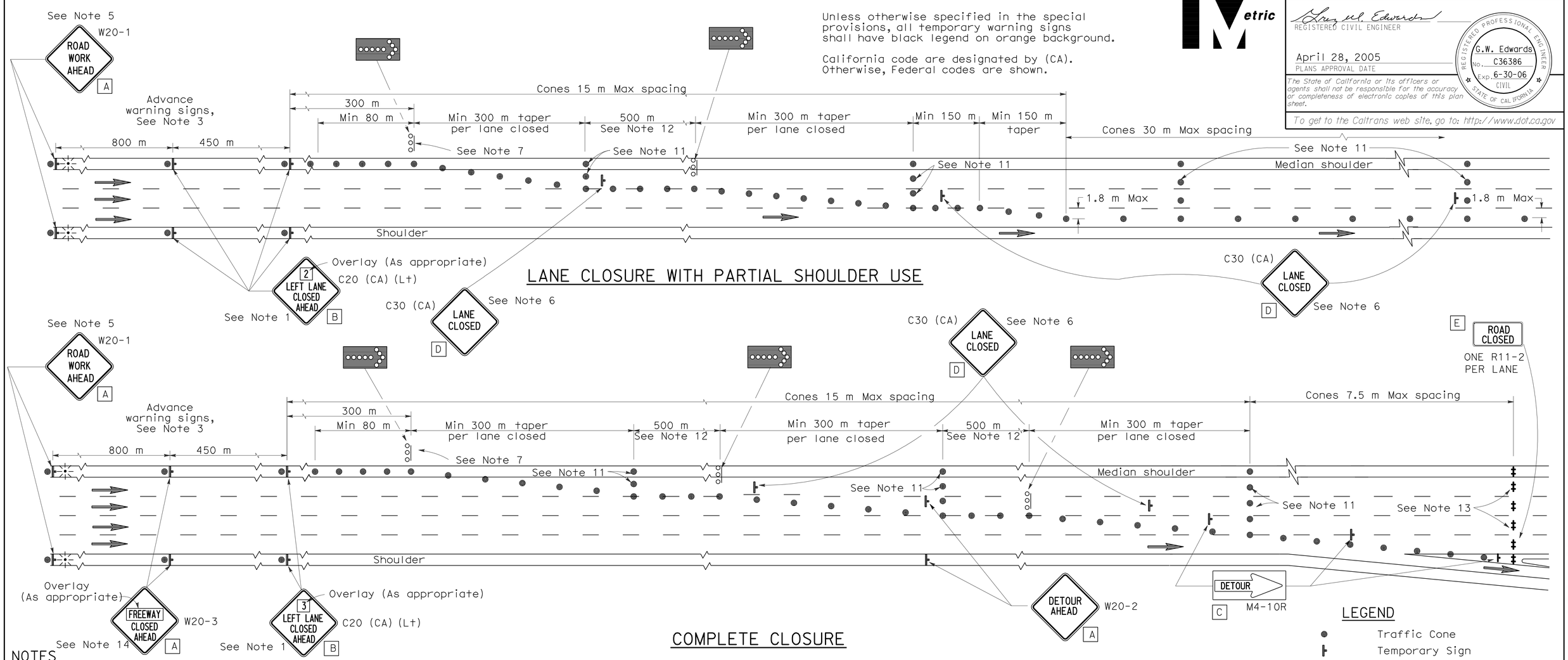

LANE CLOSURE WITH PARTIAL SHOULDER USE

COMPLETE CLOSURE

NOTES

1. Lane closures on the right side using partial median shoulder as a traffic lane shall conform to the details for inside lane closure except that C20 (CA) (Rt) signs shall be used.
2. At least one person shall be assigned to provide full time maintenance of traffic control devices for lane closures.
3. Each advance warning sign on each side of the roadway shall be equipped with at least two flags for daytime closure. Each flag shall be at least 400 mm x 400 mm in size and shall be orange or fluorescent red-orange in color. Flashing beacons shall be placed at the locations indicated for lane closure during hours of darkness.
4. A C14 (CA) "END ROAD WORK" sign, as appropriate, shall be placed at the end of the lane closure unless the end of work area is obvious or ends within a larger project's limits.
5. If the W20-1 sign would follow within 600 m of a stationary W20-1 or C11 (CA) "ROAD WORK NEXT ___ MILES", use a C20 (CA) sign for the first advance warning sign.
6. Place a C30 (CA) sign every 600 m throughout length of lane closure.
7. One flashing arrow sign for each lane closed. The first flashing arrow sign shall be Type I. All others may be either Type I or Type II.
8. A minimum 450 m of sight distance shall be provided where possible for vehicles approaching the first flashing arrow sign. Lane closures shall not begin at the top of crest vertical curve or on a horizontal curve.
9. All cones used for lane closures during the hours of darkness shall be fitted with retroreflective bands (or sleeves) as specified in the specifications.
10. Portable delineators, placed at one-half the spacing indicated for traffic cones, may be used instead of cones for daytime closures only.
11. Unless otherwise specified in the special provisions, a minimum of 3 cones shall be placed transversely across each closed lane and shoulder at each location where a taper across a traffic lane ends and every 600 m as shown on the "Lane Closure With Partial Shoulder Use" detail. Two Type II barricades may be used instead of the 3 cones. The transverse alignment of the cones or barricades on the closed shoulder may be shifted from the transverse alignment to provide access to the work.
12. Unless otherwise specified in the special provisions, the 500 m tangent shown along lane lines shall be used between the 300 m tapers required for each closed traffic lane.
13. A minimum of Two Type II barricades shall be placed across each closed lane and shoulder at the location shown and every 600 m within the complete closure area. Within the complete closure area, the transverse alignment of the barricades on the closed shoulder may be shifted from the transverse alignment to provide access to the work.
14. When specified in the special provisions, a W20-2 "DETOUR AHEAD" sign is to be used in place of the W20-3 "FREEWAY CLOSED AHEAD" sign.

SIGN PANEL SIZE (Min)

A	1200 mm x 1200 mm
B	1219 mm x 1219 mm
C	1200 mm x 450 mm
D	762 mm x 762 mm
E	1200 mm x 750 mm

LEGEND

- Traffic Cone
- Temporary Sign
- Barricade
- Flashing Arrow Sign (FAS)
- FAS Support or Trailer
- Direction of Travel
- Portable Flashing Beacon

STATE OF CALIFORNIA
DEPARTMENT OF TRANSPORTATION

TRAFFIC CONTROL SYSTEM FOR LANE AND COMPLETE CLOSURES ON FREEWAYS AND EXPRESSWAYS

NO SCALE

ALL DIMENSIONS ARE IN MILLIMETERS UNLESS OTHERWISE SHOWN

RSP T10A DATED APRIL 28, 2005 SUPERSEDES STANDARD PLAN T10A DATED JULY 1, 2004-PAGE 219 OF THE STANDARD PLANS BOOK DATED JULY 2004.

REVISED STANDARD PLAN RSP T10A

2004 REVISED Std PLAN RSP T10A

DIST	COUNTY	ROUTE	KILOMETER POST TOTAL PROJECT	SHEET No.	TOTAL SHEETS
11	SD	905,805	R8.4/R9.8, 3.1/4.2	292	364

REGISTERED CIVIL ENGINEER

April 28, 2005
PLANS APPROVAL DATE

REGISTERED PROFESSIONAL ENGINEER G.W. Edwards No. C36386 Exp. 6-30-06 CIVIL STATE OF CALIFORNIA

The State of California or its officers or agents shall not be responsible for the accuracy or completeness of electronic copies of this plan sheet.

To get to the Caltrans web site, go to: http://www.dot.ca.gov

Caltrans Metric

To accompany plans dated 10-18-10

NOTES

Unless otherwise specified in the special provisions, all temporary warning signs shall have black legend on orange background.

California code are designated by (CA). Otherwise, Federal codes are shown.

TYPICAL LANE CLOSURE WITH REVERSIBLE CONTROL

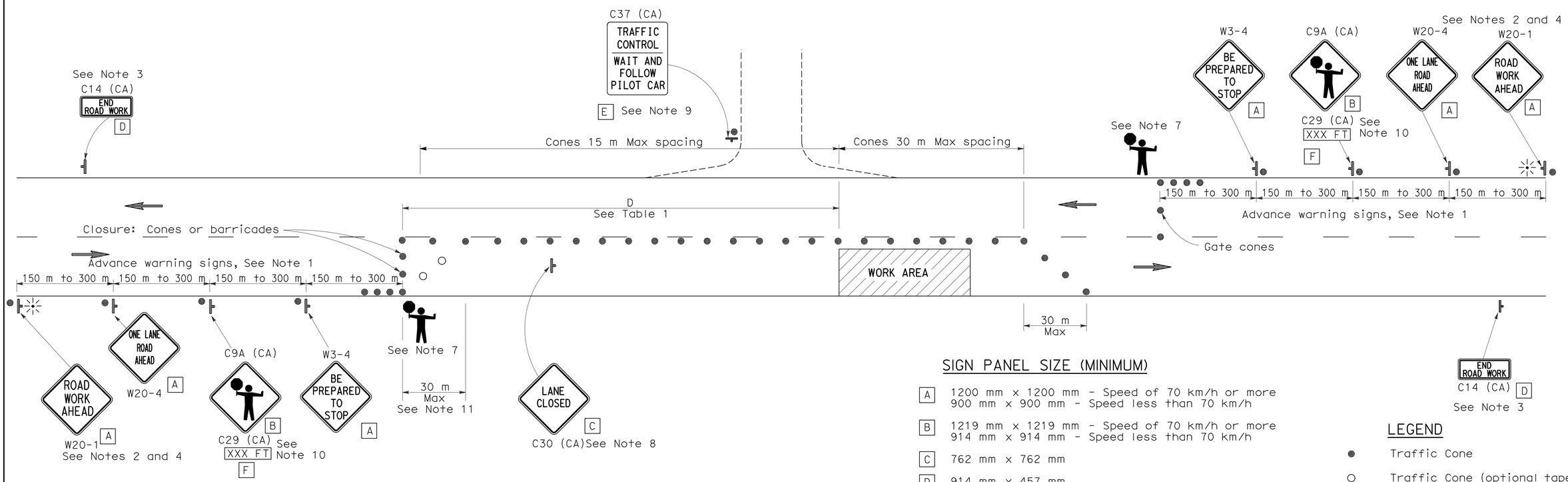

SIGN PANEL SIZE (MINIMUM)

A	1200 mm x 1200 mm - Speed of 70 km/h or more 900 mm x 900 mm - Speed less than 70 km/h
B	1219 mm x 1219 mm - Speed of 70 km/h or more 914 mm x 914 mm - Speed less than 70 km/h
C	762 mm x 762 mm
D	914 mm x 457 mm
E	914 mm x 1067 mm
F	914 mm x 229 mm

LEGEND

- Traffic Cone
- Traffic Cone (optional taper)
- Temporary Sign
- Direction of Travel
- Portable Flashing Beacon
- Flagger

NOTES

1. Where approach speeds are low, advance warning signs may be placed at 90 m spacing, and closer in urban areas.
2. Each advance warning sign in each direction of travel shall be equipped with at least two flags for daytime closure. Each flag shall be at least 400 mm x 400 mm in size and shall be orange or fluorescent red-orange in color. Flashing beacons shall be placed at the locations indicated for lane closure during hours of darkness.
3. A C14 (CA) "END ROAD WORK" sign, as appropriate, shall be placed at the end of the lane control unless the end of work area is obvious, or ends within a larger project's limits.
4. If the W20-1 sign would follow within 600 m of a stationary W20-1 or C11 (CA) "ROAD WORK NEXT_____ MILES", use a C16 (CA) sign for the first advance warning sign.
5. All cones used for lane closures during the hours of darkness shall be fitted with retroreflective bands (or sleeves) as specified in the specifications.
6. Portable delineators, placed at one-half the spacing indicated for traffic cones, may be used instead of cones for daytime closures only.
7. Additional advance flaggers may be required. Flagger should stand in a conspicuous place, be visible to approaching traffic as well as approaching vehicles after the first vehicle has stopped. During the hours of darkness, the flagging-station and flagger shall be illuminated and clearly visible to approaching traffic. The illumination footprint of the lighting on the ground shall be at least 6 m in diameter. Place a minimum of four cones at 15 m intervals in advance of flagger station as shown.
8. Place C30 (CA) "LANE CLOSED" sign at 150 to 300 m intervals throughout extended work areas. They are optional if the work area is visible from the flagger station.
9. When a pilot car is used, place a C37 (CA) "TRAFFIC CONTROL-WAIT AND FOLLOW PILOT CAR" sign at all intersections within traffic control area. Signs shall be clean and visible at all times.
10. An optional C29 (CA) sign may be placed below the C9A (CA) sign.
11. Traffic cones or barricades may be placed on the optional taper as shown, barricades shall be Type I, II, or III.

TABLE I

Approach Speed	Minimum D	Downgrade Minimum D *
km/h	m	m
30	60	72
40	60	72
50	60	72
60	90	108
70	90	108
80	150	180
90	150	180
100	150	180
110	170	204

* Use on substained downgrade steeper than -3 percent and longer than 1.6 km.

STATE OF CALIFORNIA
DEPARTMENT OF TRANSPORTATION

TRAFFIC CONTROL SYSTEM FOR LANE CLOSURE ON TWO LANE CONVENTIONAL HIGHWAYS

NO SCALE

ALL DIMENSIONS ARE IN MILLIMETERS UNLESS OTHERWISE SHOWN

RSP T13 DATED APRIL 28, 2005 SUPERSEDES STANDARD PLAN T13 DATED JULY 1, 2004-PAGE 222 OF THE STANDARD PLANS BOOK DATED JULY 2004.

REVISED STANDARD PLAN RSP T13

2004 REVISED Std PLAN RSP T13

TYPICAL RAMP CLOSURES

LEGEND

- Traffic Cone
- Temporary Sign
- Barricades
- Direction of Travel
- Turn Arrow

SIGN PANEL SIZE (Min)

A	1200 mm x 1200 mm
B	1200 mm x 750 mm
C	750 mm x 750 mm
D	762 mm x 762 mm
E	900 mm x 900 mm
F	1219 mm x 914 mm

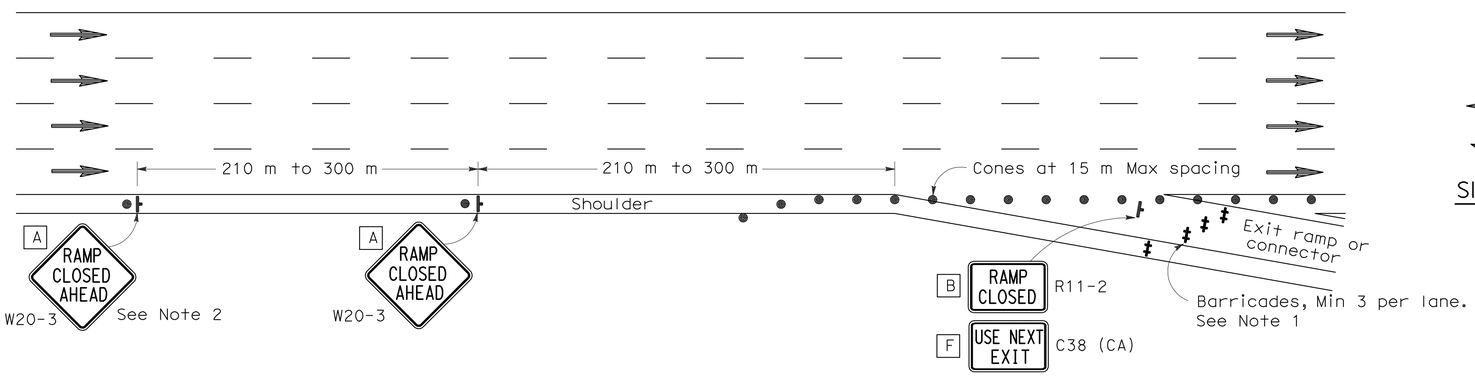

EXIT RAMP OR CONNECTOR

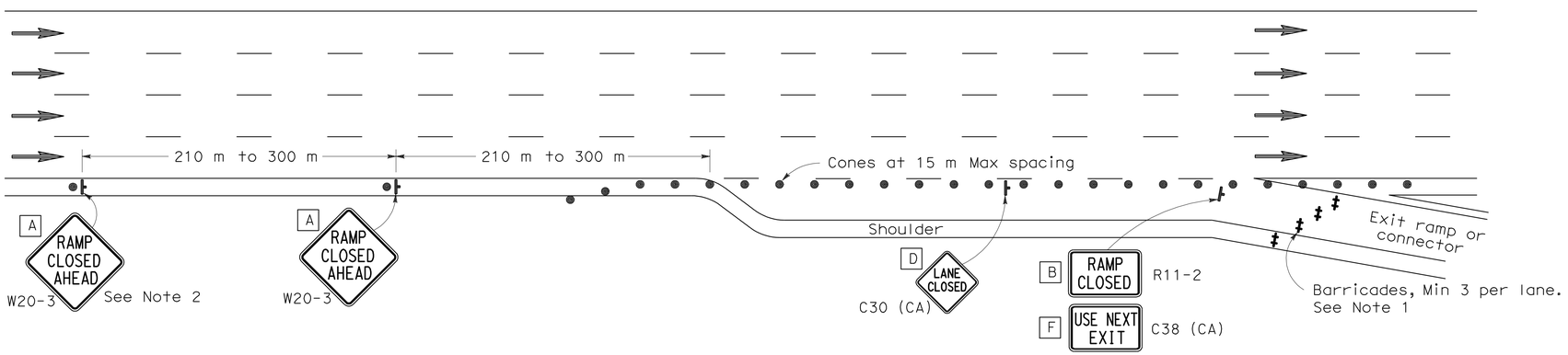

EXIT RAMP OR CONNECTOR WITH ADDITIONAL LANE

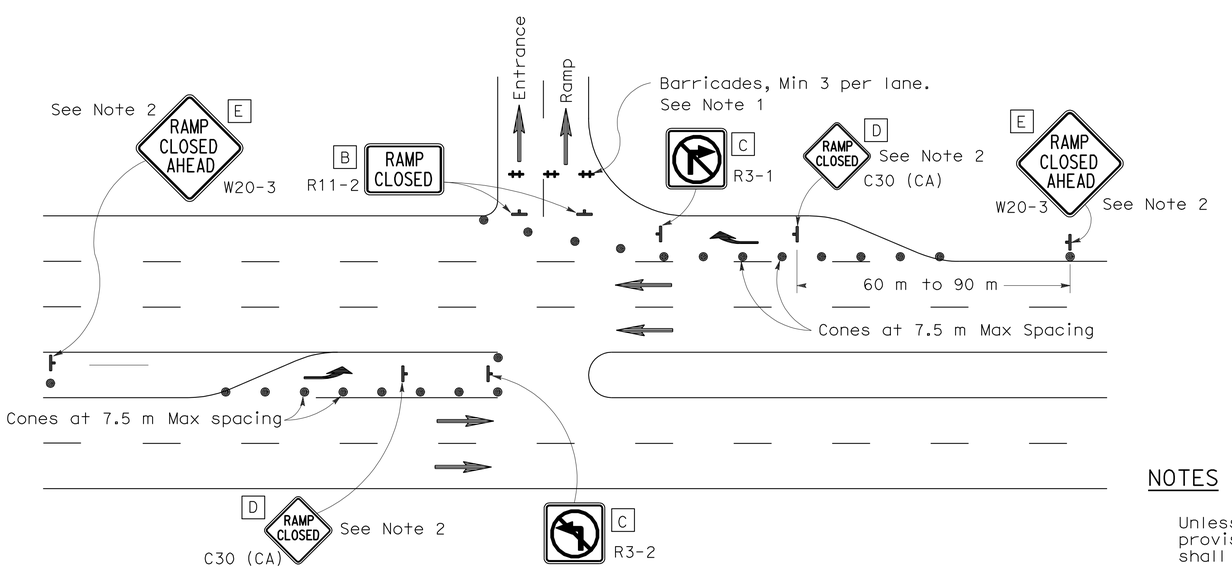

ENTRANCE RAMP WITH TURNING POCKETS

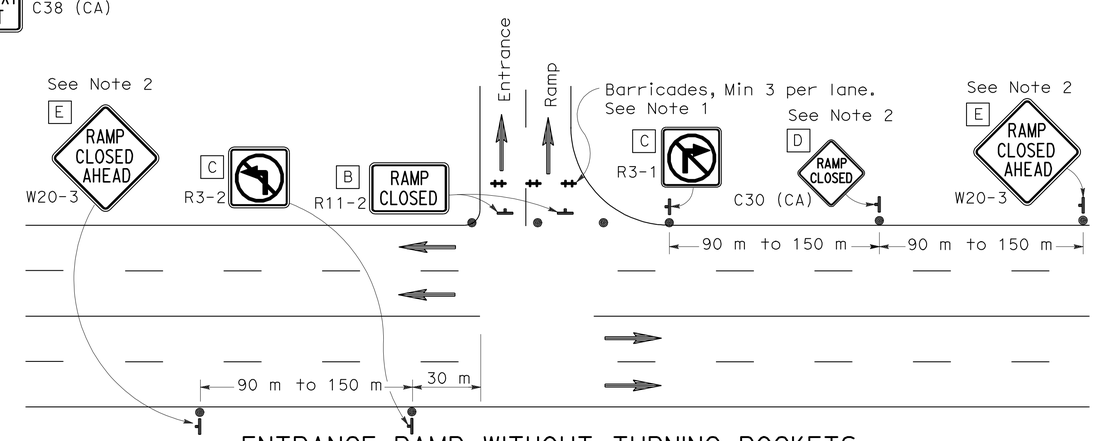

ENTRANCE RAMP WITHOUT TURNING POCKETS

NOTES

1. Barricades shall be Type I, II, or III for closures lasting one week or less and Type III for closures lasting longer than one week.
2. Instead of placing the W20-3 "RAMP CLOSED AHEAD" and C30 (CA) "RAMP CLOSED" signs, black on orange overlay plates with the word "CLOSED" may be mounted, as directed by the Engineer, on all guide signs that refer to the closed ramp. The letter size on the overlay shall be the same as the guide sign.
3. Each advance W20-3 "RAMP CLOSED AHEAD" sign shall be equipped with at least two flags for daytime closure. Each flag shall be at least 400 mm x 400 mm in size and shall be orange or fluorescent red-orange in color.
4. All cones used for ramp closures during the hours of darkness shall be fitted with retroreflective bands (or sleeves) as specified in the specifications.
5. Portable delineators, placed at one-half the spacing indicated for traffic cones, may be used instead of cones for daytime ramp closures only.
6. At least one person shall be assigned to provide full time maintenance of traffic control devices, unless otherwise directed by the Engineer.
7. The existing "EXIT" sign in the gore area shall be covered during ramp closures.

NOTES

Unless otherwise specified in the special provisions, all temporary warning signs shall have black legend on orange background.

California code are designated by (CA). Otherwise, Federal codes are shown.

DIST	COUNTY	ROUTE	KILOMETER POST TOTAL PROJECT	SHEET NO.	TOTAL SHEETS
11	SD	905,805	R8.4/R9.8, 3.1/4.2	293	364

Greg W. Edwards
REGISTERED CIVIL ENGINEER

April 28, 2005
PLANS APPROVAL DATE

REGISTERED PROFESSIONAL ENGINEER
Greg W. Edwards
No. C36386
Exp. 6-30-06
CIVIL
STATE OF CALIFORNIA

The State of California or its officers or agents shall not be responsible for the accuracy or completeness of electronic copies of this plan sheet.

To get to the Caltrans web site, go to: http://www.dot.ca.gov

Caltrans Metric

To accompany plans dated 10-18-10

STATE OF CALIFORNIA
DEPARTMENT OF TRANSPORTATION

TRAFFIC CONTROL SYSTEM FOR RAMP CLOSURE

NO SCALE

ALL DIMENSIONS ARE IN MILLIMETERS UNLESS OTHERWISE SHOWN

RSP T14 DATED APRIL 28, 2005 SUPERSEDES STANDARD PLAN T14 DATED JULY 1, 2004-PAGE 223 OF THE STANDARD PLANS BOOK DATED JULY 2004.

REVISED STANDARD PLAN RSP T14

2004 REVISED Std PLAN RSP T14

To accompany plans dated 10-18-10

Caltrans Metric

DIST	COUNTY	ROUTE	KILOMETER POST TOTAL PROJECT	SHEET NO.	TOTAL SHEETS
11	SD	905,805	R8.4/R9.8, 3.1/4.2	294	364

REGISTERED CIVIL ENGINEER

April 28, 2005
PLANS APPROVAL DATE

REGISTERED PROFESSIONAL ENGINEER Greg W. Edwards No. C36386 Exp. 6-30-06 CIVIL STATE OF CALIFORNIA

The State of California or its officers or agents shall not be responsible for the accuracy or completeness of electronic copies of this plan sheet.

To get to the Caltrans web site, go to: http://www.dot.ca.gov

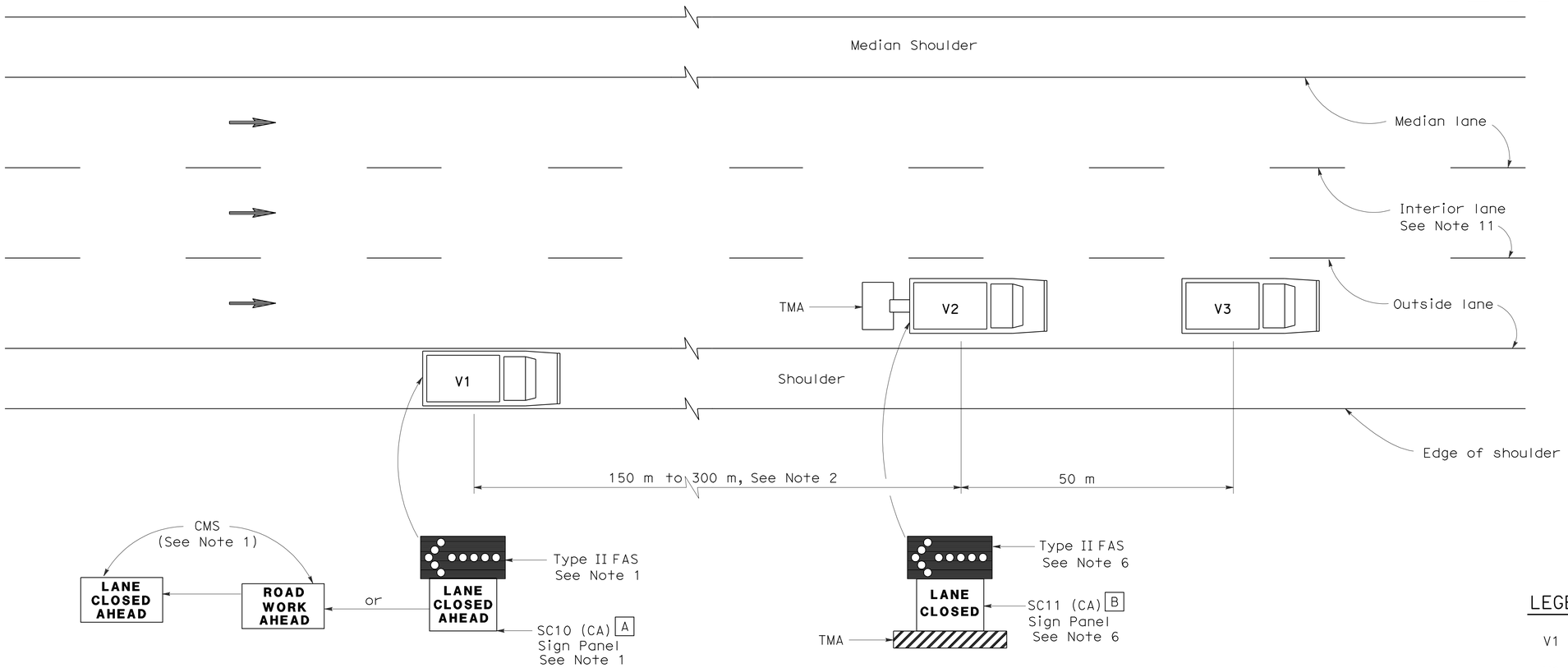

MOVING LANE CLOSURE ON MEDIAN OR OUTSIDE LANE OF MULTILANE HIGHWAYS

SIGN PANEL SIZE (Min)

A 1676 mm x 914 mm

B 1372 mm x 1067 mm

LEGEND

V1	Sign Vehicle
V2	Shadow Vehicle
V3	Work/Application Vehicle
	Flashing Arrow Sign (FAS)
CMS	Changeable Message Sign
TMA	Truck-Mounted Attenuator
	Direction of Travel

NOTES

1. Either a changeable message sign or a SC10 (CA) sign panel and a Type II flashing arrow sign shall be mounted on the rear of sign vehicle V1. A Type II flashing arrow sign shall be mounted on the rear of sign vehicle V1 and used with the SC10 (CA) sign panel. A Type II flashing arrow sign will not be required with the changeable message sign provided the flashing arrow sign symbol is displayed on the changeable message sign board. The changeable message sign shall be sequenced to show the "ROAD WORK AHEAD" message first, followed by the "LANE CLOSED AHEAD" message and then the flashing arrow sign symbol. For median lane closure, the flashing arrow symbol shall be reversed with the arrowhead on the right.
2. If traffic queues develop, sign vehicle V1 should be positioned upstream from the end of queue. Sign vehicle V1 shall be positioned where highly visible when shoulders are not available.
3. A minimum sight distance of 450 m should be provided in advance of sign vehicle V1.
4. Sign vehicle V1 should remain at the beginning of horizontal or vertical curves until the other vehicles (V2 and V3) are far enough beyond the curve to resume the minimum sight distance of 450 m.
5. Vehicle-mounted sign panels shall be Type III, IV, VII, VIII or IX retroreflective sheeting, black on white, black on orange, or black on fluorescent orange, with 150 mm minimum series D letters per Caltrans sign specifications.
6. Gross Vehicle Weight of shadow vehicle V2 shall be a minimum of 9000 kilograms and shall be equipped with a truck-mounted attenuator. The sign panel shown and a Type II flashing arrow sign shall be mounted on the rear of shadow vehicle V2. For median lane closure the flashing arrow sign symbol shall be displayed with the arrowhead on the right.
7. All vehicles used for lane closures shall be equipped with two-way radios, and the vehicle operators shall maintain communication during the work or application operation.
8. All vehicles shall be equipped with flashing or rotating amber lights.
9. Where sufficient shoulder width is not available, sign vehicle V1 may encroach into the traffic lane staying as close to the edge of shoulder as practicable. Both V1 and V2 shall be equipped with a truck-mounted attenuator. The Gross Vehicle Weight of V1 and V2 shall be at least 9000 kg, respectively.
10. Where workers would be on foot in the work area, a stationary type lane closure (Revised Standard Plan RSP T10, RSP T11, etc., as applicable) shall be used instead of this plan.
11. For moving lane closure on interior lane of multilane highways, see Revised Standard Plan RSP T16.
12. When multiple work vehicles are used in close proximity to each other, only one shadow vehicle is required, and spacing between work vehicles shall be minimized in order to deter traffic from entering the closdlane.

STATE OF CALIFORNIA
DEPARTMENT OF TRANSPORTATION

TRAFFIC CONTROL SYSTEM FOR MOVING LANE CLOSURE ON MULTILANE HIGHWAYS

NO SCALE

ALL DIMENSIONS ARE IN MILLIMETERS UNLESS OTHERWISE SHOWN

RSP T15 DATED APRIL 28, 2005 SUPERSEDES STANDARD PLAN T15 DATED JULY 1, 2004-PAGE 224 OF THE STANDARD PLANS BOOK DATED JULY 2004.

REVISED STANDARD PLAN RSP T15

2004 REVISED Std PLAN RSP T15

DIST	COUNTY	ROUTE	KILOMETER POST TOTAL PROJECT	SHEET NO.	TOTAL SHEETS
11	SD	905,805	R8.4/R9.8, 3.1/4.2	295	364

REGISTERED CIVIL ENGINEER

April 28, 2005
PLANS APPROVAL DATE

REGISTERED PROFESSIONAL ENGINEER G.W. Edwards No. C36386 Exp. 6-30-06 CIVIL STATE OF CALIFORNIA

The State of California or its officers or agents shall not be responsible for the accuracy or completeness of electronic copies of this plan sheet.

To get to the Caltrans web site, go to: http://www.dot.ca.gov

To accompany plans dated 10-18-10

2004 REVISED Std PLAN RSP T16

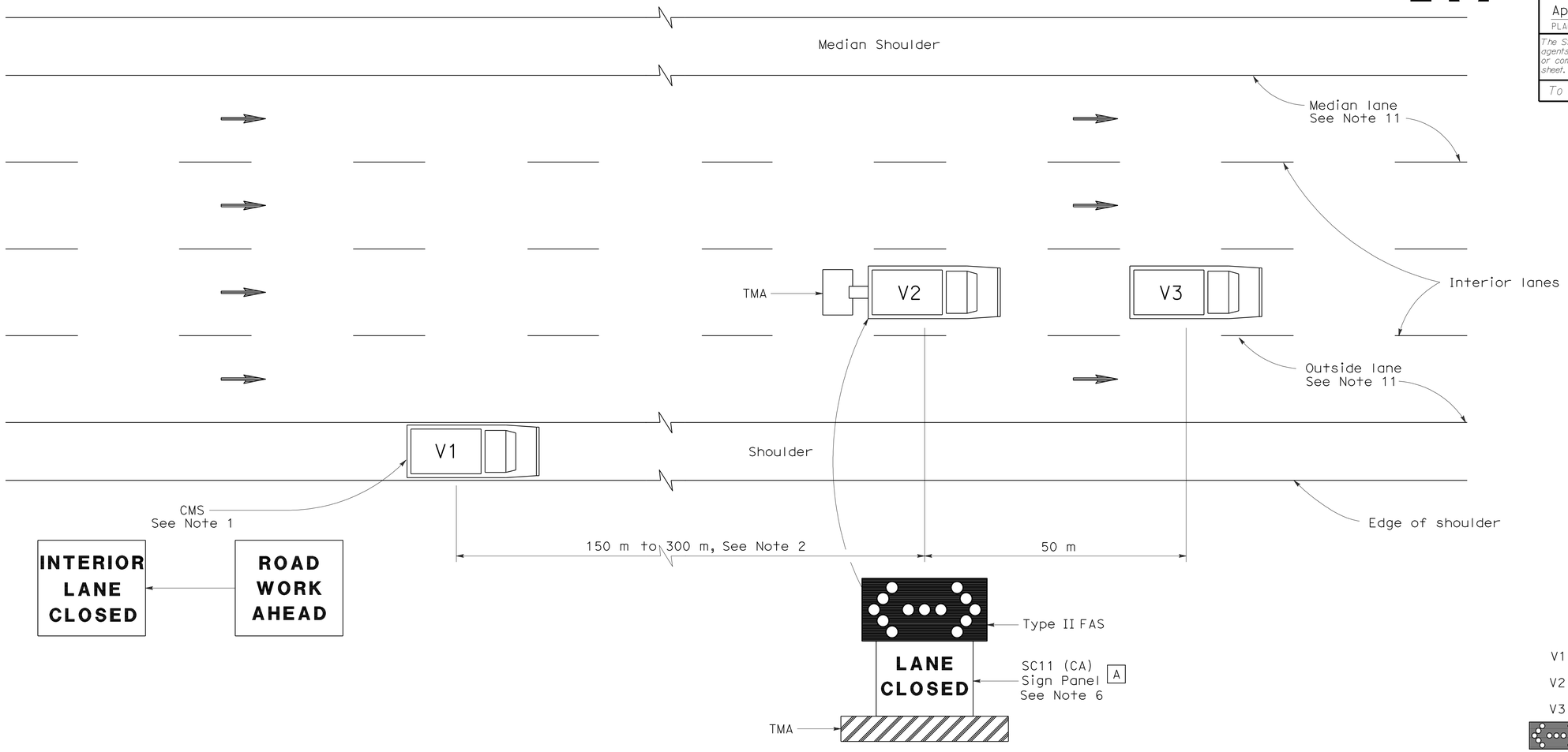

SIGN PANEL SIZE (Min)

A 1372 mm x 1067 mm

LEGEND

V1	Sign Vehicle
V2	Shadow Vehicle
V3	Work/Application Vehicle
	Flashing Arrow Sign (FAS) in flashing double arrow mode
CMS	Changeable Message Sign
TMA	Truck-Mounted Attenuator
	Direction of Travel

MOVING LANE CLOSURE ON INTERIOR LANE OF MULTILANE HIGHWAYS

NOTES

1. A changeable message sign shall be mounted on the rear of sign vehicle V1. The changeable message sign shall be sequenced to show the "ROAD WORK AHEAD" message first, followed by the "INTERIOR LANE CLOSED" message. The message "CENTER LANE CLOSED" may be used in place of the "INTERIOR LANE CLOSED" message.
2. If traffic queues develop, sign vehicle V1 should be positioned upstream from the end of queue. Sign vehicle V1 shall be positioned where highly visible when shoulders are not available.
3. A minimum sight distance of 450 m should be provided in advance of sign vehicle V1.
4. Sign vehicle V1 should remain at the beginning of horizontal or vertical curves until the other vehicles (V2 and V3) are far enough beyond the curve to resume the minimum sight distance of 450 m.
5. Vehicle-mounted sign panels shall be Type III, IV, VII, VIII, or IX retroreflective sheeting, black on white, black on orange, or black on fluorescent orange, with 150 mm minimum series D letters per Caltrans sign specifications.
6. Gross Vehicle Weight of shadow vehicle V2 shall be a minimum of 9000 kilograms and shall be equipped with a truck-mounted attenuator. The sign panel shown and a Type II flashing arrow sign shall be mounted on the rear of shadow vehicle V2.
7. All vehicles used for lane closures shall be equipped with two-way radios, and the vehicle operators shall maintain communication during the work or application operation.
8. All vehicles shall be equipped with flashing or rotating amber lights.
9. Where sufficient shoulder width is not available, sign vehicle V1 may encroach into the traffic lane staying as close to the edge of shoulder as practicable. Both V1 and V2 shall be equipped with a truck-mounted attenuator. The Gross Vehicle Weight of V1 and V2 shall be at least 9000 kg, respectively.
10. Where workers would be on foot in the work area, a stationary type lane closure (Revised Standard Plan RSP T10, RSP T11 etc., as applicable) shall be used instead of this plan.
11. For moving lane closure on median or outside lanes of multilane highways, see Revised Standard Plan RSP T15.
12. When multiple work vehicles are used in close proximity to each other, only one shadow vehicle is required, and spacing between work vehicles shall be minimized in order to deter traffic from entering the closed lane.

STATE OF CALIFORNIA
DEPARTMENT OF TRANSPORTATION

TRAFFIC CONTROL SYSTEM FOR MOVING LANE CLOSURE ON MULTILANE HIGHWAYS

NO SCALE

ALL DIMENSIONS ARE IN MILLIMETERS UNLESS OTHERWISE SHOWN

RSP T16 DATED APRIL 28, 2005 SUPERSEDES STANDARD PLAN T16 DATED JULY 1, 2004-PAGE 225 OF THE STANDARD PLANS BOOK DATED JULY 2004.

REVISED STANDARD PLAN RSP T16

DIST	COUNTY	ROUTE	KILOMETER POST TOTAL PROJECT	SHEET NO.	TOTAL SHEETS
11	SD	905,805	R8.4/R9.8, 3.1/4.2	296	364

Caltrans Metric

Greg W. Edwards
REGISTERED CIVIL ENGINEER

April 28, 2005
PLANS APPROVAL DATE

REGISTERED PROFESSIONAL ENGINEER
Greg W. Edwards
No. C36386
Exp. 6-30-06
CIVIL
STATE OF CALIFORNIA

The State of California or its officers or agents shall not be responsible for the accuracy or completeness of electronic copies of this plan sheet.

To get to the Caltrans web site, go to: http://www.dot.ca.gov

To accompany plans dated 10-18-10

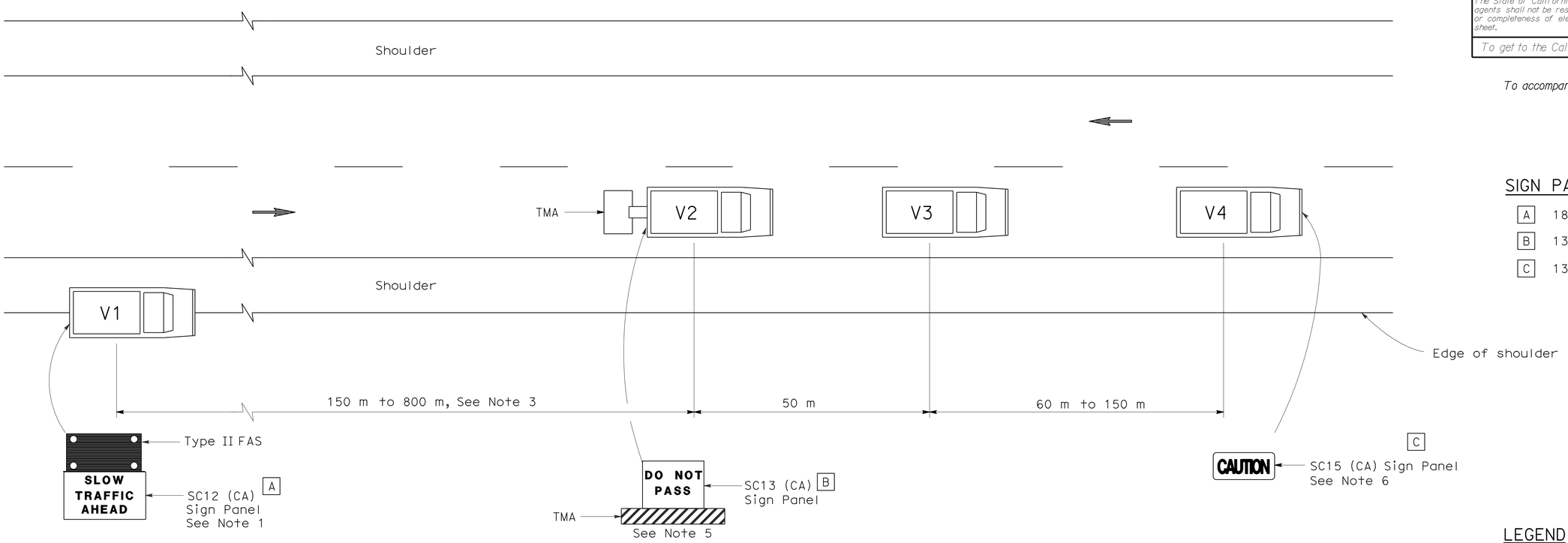

SIGN PANEL SIZE (Min)

A	1829 mm x 1067 mm
B	1372 mm x 1067 mm
C	1372 mm x 610 mm

LEGEND

V1	Sign Vehicle
V2	Shadow Vehicle
V3	Work/Application Vehicle
V4	Sign Vehicle
TMA	Truck-Mounted Attenuator
→	Direction of Travel
▭	Flashing Arrow Sign (FAS) in flashing caution mode

NOTES

1. Either a changeable message sign or a SC12 (CA) "SLOW TRAFFIC AHEAD" sign shall be mounted on the rear of sign vehicle V1. A Type II flashing arrow sign may be used with the SC12 (CA) sign panel.
2. Sign vehicle V1 should be positioned where highly
3. If traffic queues develop, sign vehicle V1 should be
4. Vehicle-mounted sign panels shall be Type III, IV VII, VIII, or IX retroreflective sheeting, black on white, black on orange, or black on fluorescent orange, with 150 mm minimum series D letters per Caltrans sign specifications.
5. Gross Vehicle Weight of shadow vehicle shall be a minimum of 9000 kilograms and shall be equipped with a truck-mounted attenuator. The sign panel shown shall be mounted on the rear of shadow vehicle V2. The message "LANE CLOSED" may be used in place of the "DO NOT PASS" message.
6. The sign panel shown shall be mounted on the front of sign vehicle V4, facing opposing traffic.
7. All vehicles shall be equipped with flashing or rotating amber lights.
8. Sign vehicle V4 will not be required when the work and vehicles V2 and V3 are 0.6 m or more from the centerline of the highway during the work or application operations.
9. All vehicles used for lane closures shall be equipped with two-way radios and the vehicle operators shall maintain communication during the work or application operation.
10. This plan shall not be used where workers would be on foot in the work area. Use a stationary type lane closure (Revised Standard Plan RSP T13) for this condition.
11. When multiple work vehicles are used in close proximity to each other, only one shadow vehicle is required and spacing between work vehicles shall be minimized in order to deter traffic from entering the closed lane.

STATE OF CALIFORNIA
DEPARTMENT OF TRANSPORTATION

TRAFFIC CONTROL SYSTEM FOR MOVING LANE CLOSURE ON TWO LANE HIGHWAYS

NO SCALE

ALL DIMENSIONS ARE IN MILLIMETERS UNLESS OTHERWISE SHOWN

RSP T17 DATED APRIL 28, 2005 SUPERSEDES STANDARD PLAN T17 DATED JULY 1, 2004-PAGE 226 OF THE STANDARD PLANS BOOK DATED JULY 2004.

REVISED STANDARD PLAN RSP T17

2004 REVISED Std PLAN RSP T17

DIST	COUNTY	ROUTE	KILOMETER POST TOTAL PROJECT	SHEET NO.	TOTAL SHEETS
11	SD	905,805	R8.4/R9.8, 3.1/4.2	297	364

REGISTERED CIVIL ENGINEER

October 5, 2007
PLANS APPROVAL DATE

REGISTERED PROFESSIONAL ENGINEER Efthymios Delis No. C51434 Exp. 6-30-08 CIVIL STATE OF CALIFORNIA

The State of California or its officers or agents shall not be responsible for the accuracy or completeness of electronic copies of this plan sheet.

To get to the Caltrans web site, go to: http://www.dot.ca.gov

Caltrans Metric

To accompany plans dated 10-18-10

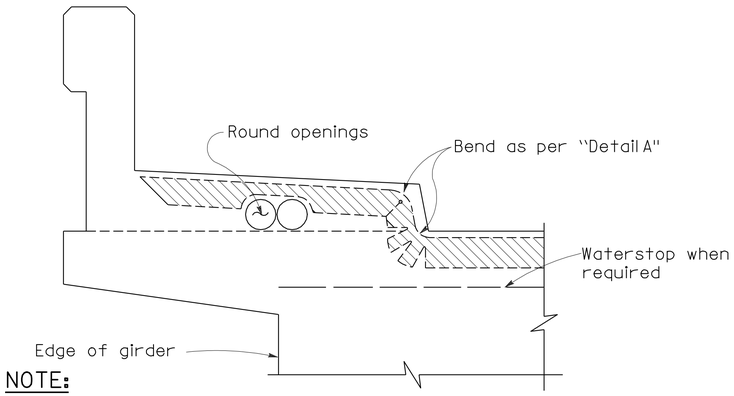

NOTE:
Type "B" seal shown. Type "A" seals to comform to the general path of seal shown, cuts for bending not required. Bend Type "A" seals 75 mm up into curb or barrier rail on only the low end of the seal.

CONCRETE BARRIER AND SIDEWALK

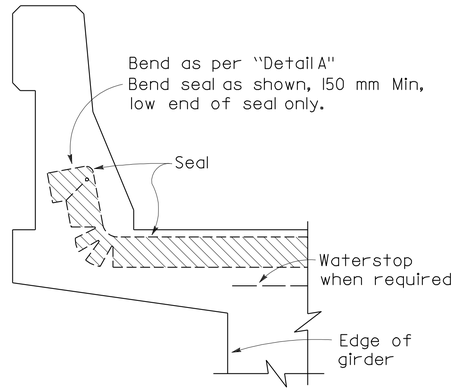

CONCRETE BARRIER

JOINT SEALS DETAILS

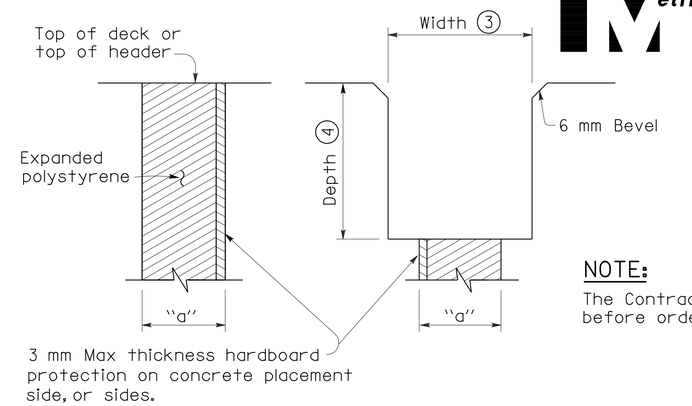

FORMING DETAIL SAWCUT DETAIL

NOTE:
The Contractor shall verify all controlling field dimensions before ordering or fabricating any material.

NOTES:

① Make smooth cuts from the bottom of seal to 40 mm clear of top leaving at least one complete cell between the top of the cut and top of the seal. When necessary cut back of seal to clear conduit and round openings.

② Opening in barrier to match width of sawn deck joint.

③ Sawcut groove widths shall be as ordered by the Engineer.

④ Depth of sawcut: Type A - Depth to be 50 mm minimum.
Type B - Depth to be equal to or greater than the depth of seal measured along the contact surface, when compressed to minimum width position (W_2) plus dimensions shown above.

⑤ MR (movement rating) as shown on other plan sheets.

⑥ Other depths must be approved by the Engineer.

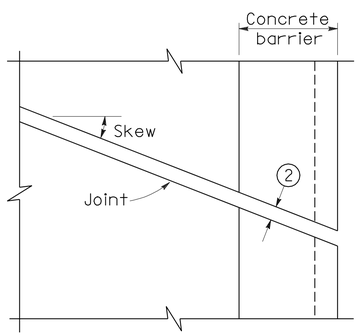

PLAN OF JOINT (SKEW ≤ 20°)

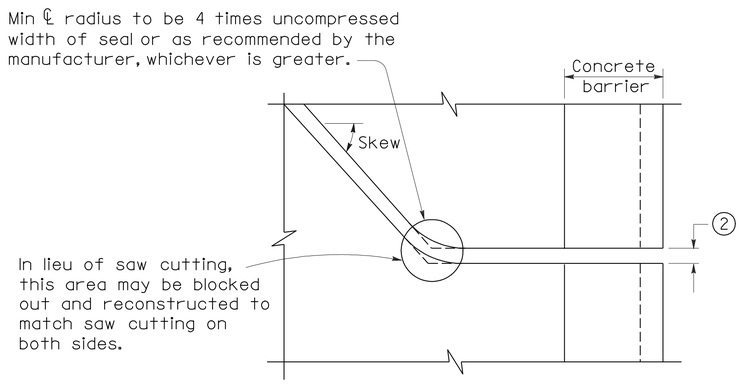

PLAN OF JOINT (SKEW > 20°)

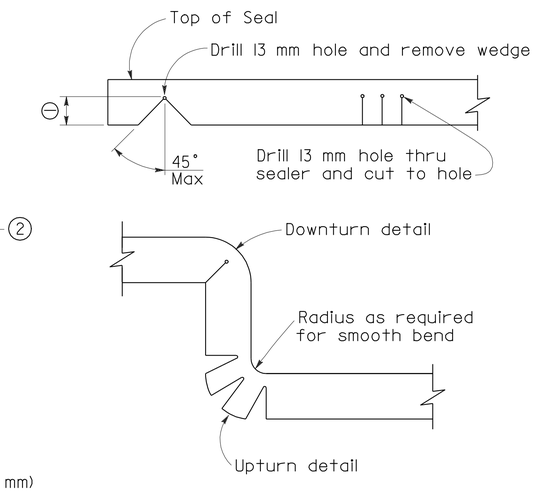

DETAIL A

DIMENSIONS "a" OF JOINT REQUIRED

Movement Rating (MR) ⑤	Bridge Type	"a" Dimension Deck Concrete Placed		
		Winter	Fall-Spring	Summer
50 mm	All except CIP/PS	40 mm	30 mm	20 mm
	CIP/PS	30 mm	25 mm	13 mm
40 mm	All except CIP/PS	30 mm	25 mm	13 mm
	CIP/PS	25 mm	20 mm	13 mm
25 mm	All except CIP/PS	25 mm	20 mm	13 mm
	CIP/PS	20 mm	13 mm	13 mm
13 mm	All except CIP/PS	20 mm	20 mm	13 mm
	CIP/PS	13 mm	13 mm	13 mm

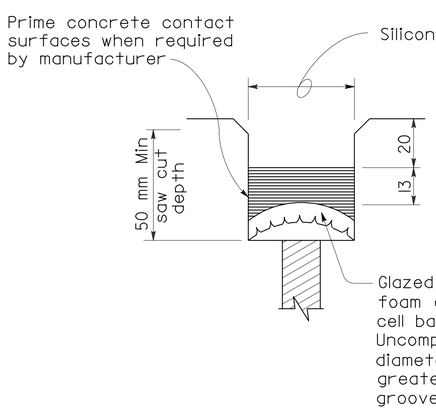

TYPE A SEAL
Movement rating : Silicone = 25 mm Max

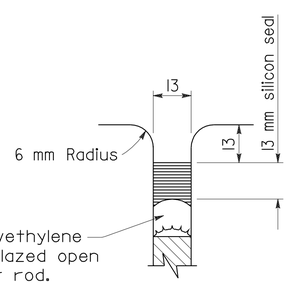

TYPE AL SEAL
Longitudinal joints only

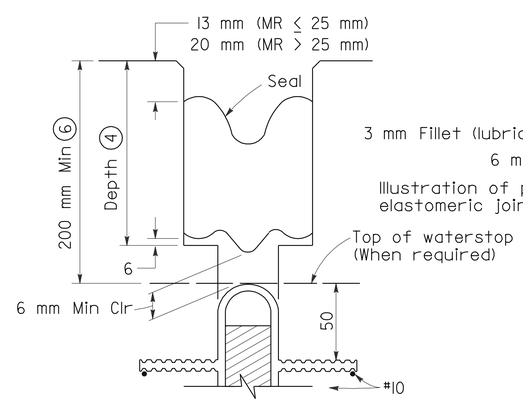

TYPE B JOINT SEAL
IN MINIMUM WIDTH POSITION (W_2)

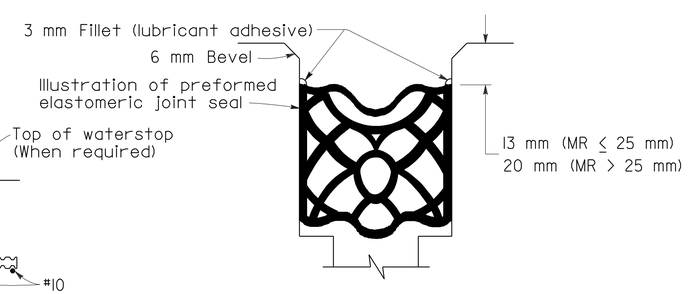

TYPE B SEAL
Movement Rating ≤ 50 mm

STATE OF CALIFORNIA
DEPARTMENT OF TRANSPORTATION

JOINT SEALS (MAXIMUM MOVEMENT RATING = 50 mm)

NO SCALE

ALL DIMENSIONS ARE IN MILLIMETERS UNLESS OTHERWISE SHOWN

RSP B6-21 DATED OCTOBER 5, 2007 SUPERSEDES RSP B6-21 DATED JANUARY 26, 2005 AND STANDARD PLAN B6-21 DATED JULY 1, 2004-PAGE 258 OF THE STANDARD PLANS BOOK DATED JULY 2004.

REVISED STANDARD PLAN RSP B6-21

2004 REVISED Std PLAN RSP B6-21

5-17-07

To accompany plans dated 10-18-10

Caltrans Metric

DIST	COUNTY	ROUTE	KILOMETER POST TOTAL PROJECT	SHEET NO.	TOTAL SHEETS
11	SD	905,805	R8.4/R9.8, 3.1/4.2	298	364

REGISTERED CIVIL ENGINEER

April 28, 2005
PLANS APPROVAL DATE

REGISTERED PROFESSIONAL ENGINEER Michael Pope No. C54503 Exp. 12-31-05 CIVIL STATE OF CALIFORNIA

The State of California or its officers or agents shall not be responsible for the accuracy or completeness of electronic copies of this plan sheet.

To get to the Caltrans web site, go to: http://www.dot.ca.gov

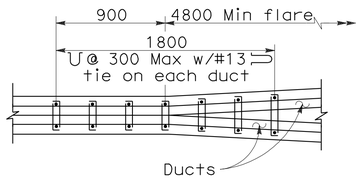

PLAN

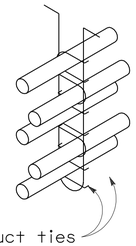

NOTE

Place closed end of duct ties in direction of flare.

STIRRUP REINFORCEMENT AT FLARE OF GIRDER STEM

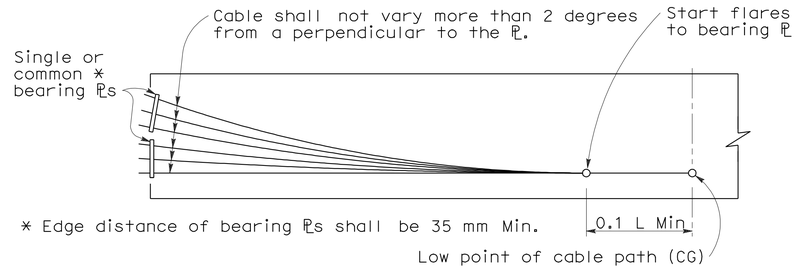

BEARING PLATE PRESTRESSING PATH

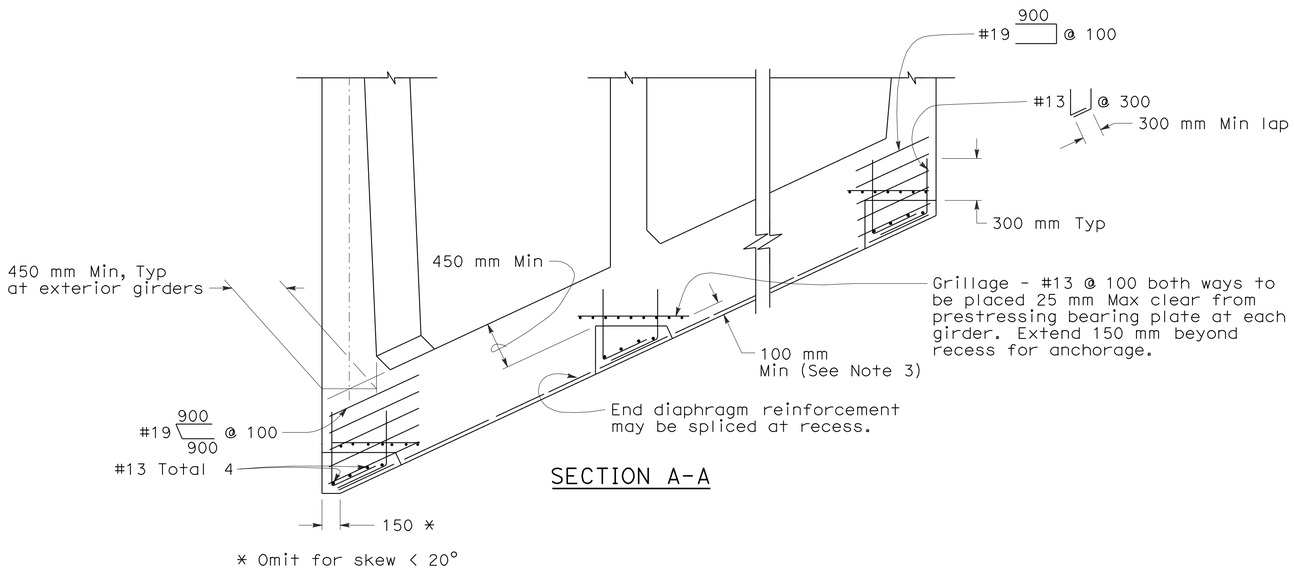

SECTION A-A

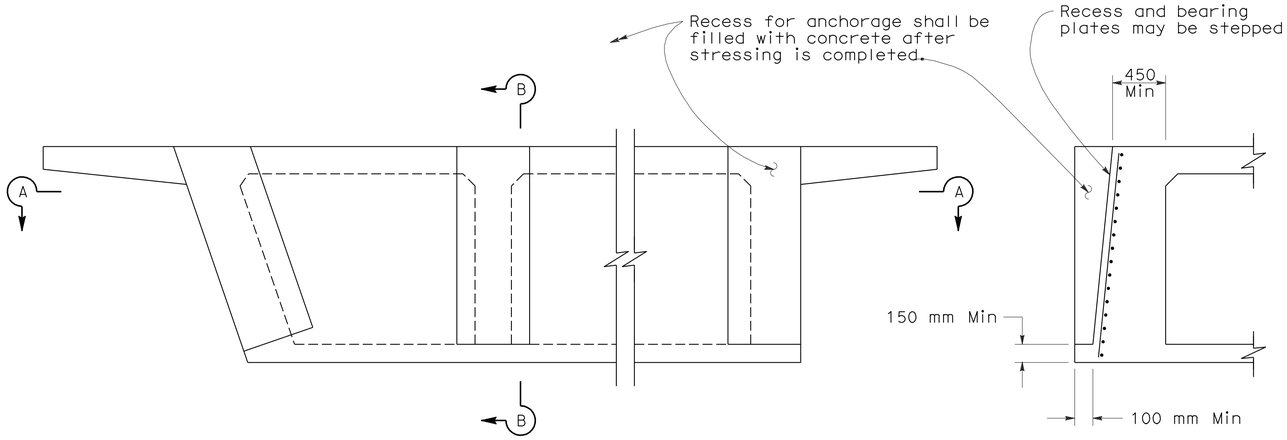

PRESTRESS ANCHORAGE DETAILS AT SEAT TYPE ABUTMENTS

SECTION B-B

NOTES

Distribution of prestressing force:

Unless otherwise noted, the prestressing force shall be distributed with an approximately equal amount in each girder and shall be placed symmetrically about the center line of the structure. In slabs, the prestressing force shall be uniformly distributed across the slab.

Stressing sequence:

No more than ½ of the prestressing force in any girder may be applied before an equal force is applied in the adjacent girders. The maximum force variation between girders shall also not exceed the prestressing force of the largest tendon used in all girders. At no time during stressing operations will more than 1/6 of total prestressing force be applied eccentrically about the centerline of the structure.

Girder stem may be flared near anchorage to provide clearances for the particular anchorage system.

Place duct ties, as shown for flare girder stem, at each location where ducts change horizontal direction.

Bar reinforcement interfering with the prestressing tendon alignment shall be adjusted, as approved by the Engineer.

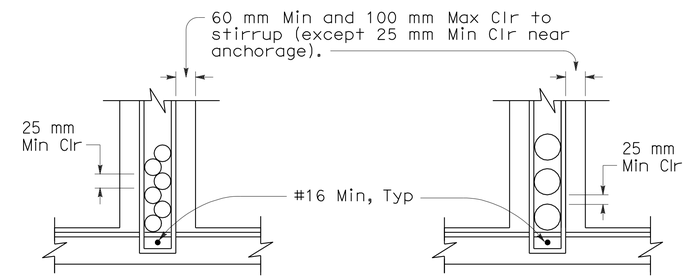

DUCTS 114 mm OD AND LESS

DUCTS OVER 114 mm OD

CLEARANCE REQUIREMENTS FOR DUCTS

NOTES

1. Duct patterns shown are for a 300 mm wide girder stem. For other widths the minimum clearances must be maintained.
2. ⊔ Stirrups may also be used. For continuous stirrups in girder stems greater than 400 mm wide (ie: at flares) use 2-#16 minimum ⊔ or ⊔.
3. 100 mm minimum is not required if this detail is used at hinge location.
4. For additional details, see Standard Plan B7-1.
5. Approval of the Engineer is required for deviations.

STATE OF CALIFORNIA
DEPARTMENT OF TRANSPORTATION

CAST-IN-PLACE PRESTRESSED GIRDER DETAILS

NO SCALE

ALL DIMENSIONS ARE IN MILLIMETERS UNLESS OTHERWISE SHOWN

RSP B8-5 DATED APRIL 28, 2005 SUPERSEDES STANDARD PLAN B8-5 DATED JULY 1, 2004-PAGE 266 OF THE STANDARD PLANS BOOK DATED JULY 2004.

REVISED STANDARD PLAN RSP B8-5

2004 REVISED Std PLAN RSP B8-5

DIST	COUNTY	ROUTE	KILOMETER POST TOTAL PROJECT	SHEET NO.	TOTAL SHEETS
11	SD	905,805	R8.4/R9.8, 3.1/4.2	299	364

REGISTERED CIVIL ENGINEER

January 24, 2005
PLANS APPROVAL DATE

REGISTERED PROFESSIONAL ENGINEER Tillat Sattar No. C42892 Exp. 03-31-2006 CIVIL STATE OF CALIFORNIA

The State of California or its officers or agents shall not be responsible for the accuracy or completeness of electronic copies of this plan sheet.

To get to the Caltrans web site, go to: http://www.dot.ca.gov

To accompany plans dated 10-18-10

INSTRUCTIONS TO FABRICATOR

PROJECT PLANS SHOW:

1. Sign structure location.
2. Length of structure frame.
3. Panel size and locations on structure.
4. Walkway length for two post signs.
5. Post type and height to bottom of frame.
6. Base plate elevation.
7. Footing elevation or location of pile foundation.
8. Photoelectric unit location if required.

REFER TO THE FOLLOWING STANDARD PLANS FOR DETAILS NOT SHOWN ON PROJECT PLANS:

Sheet #	SHEET NAME
RSP S1	Overhead Signs-Truss, Instructions and Examples
RSP S2	Overhead Signs-Truss, Single Post Type, Post Types II to IX
RSP S3	Overhead Signs-Truss, Single Post Type, Base Plate and Anchorage Details
RSP S4	Overhead Signs-Truss, Single Post Type, Structural Frame Members Details No. 1
RSP S5	Overhead Signs-Truss, Single Post Type, Structural Frame Members Details No. 2
RSP S6	Overhead Signs-Truss, Gusset Plate Details
RSP S7	Overhead Signs-Truss, Single Post Type, Square Pedestal Pile Foundation
RSP S8	Overhead Signs-Truss, Single Post Type, Round Pedestal Pile Foundation
RSP S9	Overhead Signs-Truss, Two Post Type, Post Types I-S through VII-S
RSP S10	Overhead Signs-Truss, Two Post Type, Base Plate and Anchorage Details
RSP S11	Overhead Signs-Truss, Two Post Type, Structural Frame Members
RSP S12	Overhead Signs-Truss, Structural Frame Details
RSP S13	Overhead Signs-Truss, Frame Juncture Details
RSP S14	Overhead Signs-Truss, Two Post Type, Square Pedestal Pile Foundation
RSP S15	Overhead Signs-Truss, Two Post Type, Round Pedestal Pile Foundation
RSP S16	Overhead Signs, Walkway Details No. 1
RSP S17	Overhead Signs, Walkway Details No. 2
NSP S17A	Overhead Signs, Walkway Details No. 3
RSP S18	Overhead Signs, Walkway Safety Railing Details
RSP S19	Overhead Signs-Truss, Sign Mounting Details, Laminated Panel-Type A
RSP S20	Overhead Signs, Steel Frames, Removable Sign Panel Frames
RSP S21	Overhead Signs, Removable Sign Panel Frames, Mounting Details
RSP S22	Overhead Signs-Truss, Removable Sign Panel Frames, 2794 mm and 3048 mm Sign Panels

WALKWAY BRACKETS:

Space all walkway brackets maintaining uniform spacing where possible. Maximum spacing shall not exceed 1676 mm.

LIGHTING FIXTURE SUPPORTS:

Where distance from walkway bracket to end of sign panel exceeds 406 mm, extend lighting fixture supports to next walkway bracket. See Example No. 2.

WALKWAY AND SAFETY RAILING:

Walkway to be continuous for entire length of frame for single post signs. For two post signs, see Project Plans. Safety railing to protect entire walkway, but continuous for no more than 3353 mm in one unit.

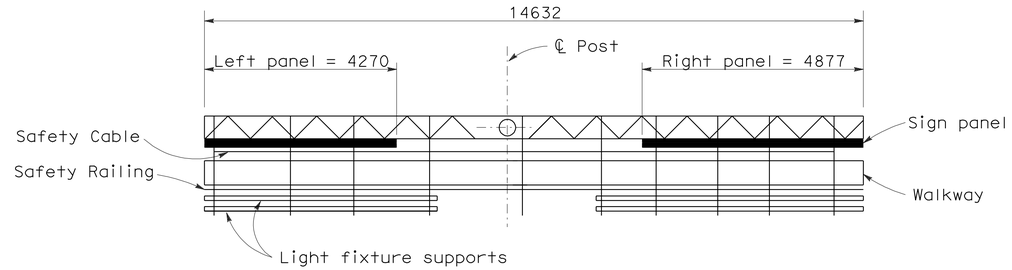

PLAN

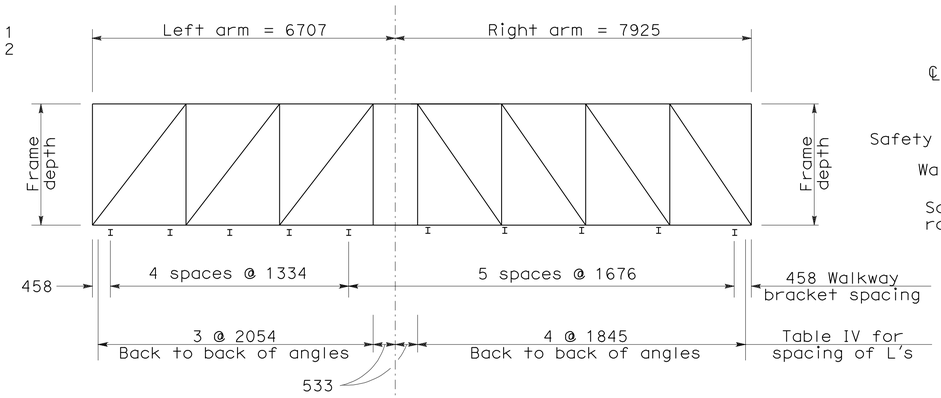

UNBALANCED SINGLE POST TYPE

Example No. 1

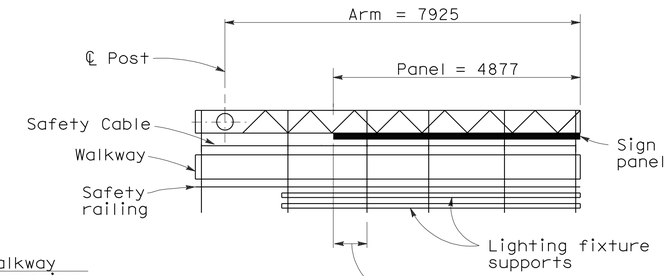

PLAN

CANTILEVER SINGLE POST TYPE

Example No. 2

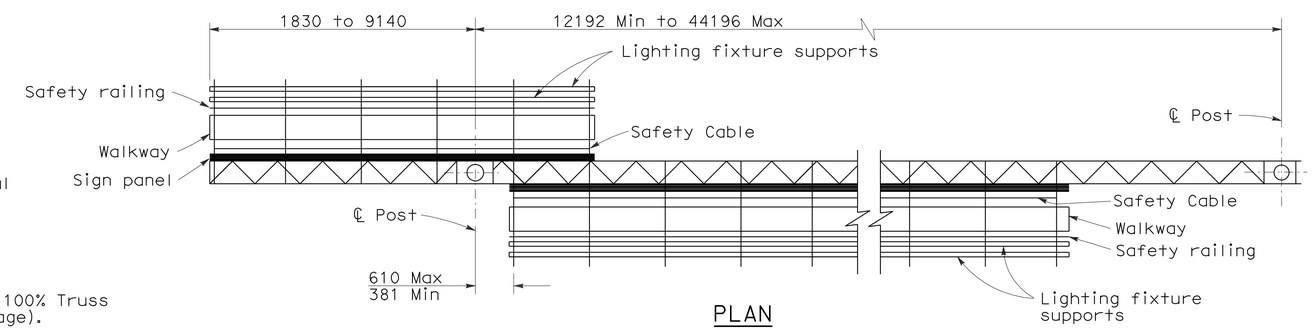

PLAN

TWO POST TYPE WITH CANTILEVER (PART DOUBLE-FACED)

Example No. 3

GENERAL NOTES

DESIGN:

AASHTO Specifications for Structural Supports for Highway Signs, Luminaires and Traffic Signals, dated 2001.

CONSTRUCTION:

Standard Specifications and the Special Provisions.

LOADING:

WIND LOADING:

Normal to face of sign: 1930 Pa on 100% Truss surface area (i.e. 100% panel coverage).

Transverse to face of sign: 20% of normal force.

WALKWAY LOADING:

Dead load +229 kg concentrated live load.

UNIT STRESSES:

STRUCTURAL STEEL: fy = 250 MPa
REINFORCED CONCRETE: fy = 415 MPa
f'c = 25 MPa

FOOTING SOIL PRESSURE: 120 kPa (spread footing)

MINIMUM CLEARANCE

Vertical roadway clearance 5500 mm.

WELDING:

All welding continuous unless otherwise noted on the plans. All welding to be done in accordance with the Standard Specifications.

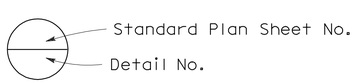

NOTE

Signs are shown and dimensioned looking in the direction of traffic. Double faced signs are shown and dimensioned looking ahead along stationing.

STATE OF CALIFORNIA
DEPARTMENT OF TRANSPORTATION

OVERHEAD SIGNS-TRUSS INSTRUCTIONS AND EXAMPLES

NO SCALE

ALL DIMENSIONS ARE IN MILLIMETERS UNLESS OTHERWISE SHOWN

RSP S1 DATED JANUARY 24, 2005 SUPERSEDES STANDARD PLAN S1 DATED JULY 1, 2004-PAGE 310 OF THE STANDARD PLANS BOOK DATED JULY 2004.

REVISED STANDARD PLAN RSP S1

2004 REVISED Std PLAN RSP S1

DIST	COUNTY	ROUTE	KILOMETER POST TOTAL PROJECT	SHEET NO.	TOTAL SHEETS
11	SD	905,805	R8.4/R9.8, 3.1/4.2	300	364

REGISTERED CIVIL ENGINEER

April 28, 2005
PLANS APPROVAL DATE

REGISTERED PROFESSIONAL ENGINEER Tillat Sattar No. C42892 Exp. 03-31-2006 CIVIL STATE OF CALIFORNIA

The State of California or its officers or agents shall not be responsible for the accuracy or completeness of electronic copies of this plan sheet.

To get to the Caltrans web site, go to: http://www.dot.ca.gov

To accompany plans dated 10-18-10

2004 REVISED Std PLAN RSP S2

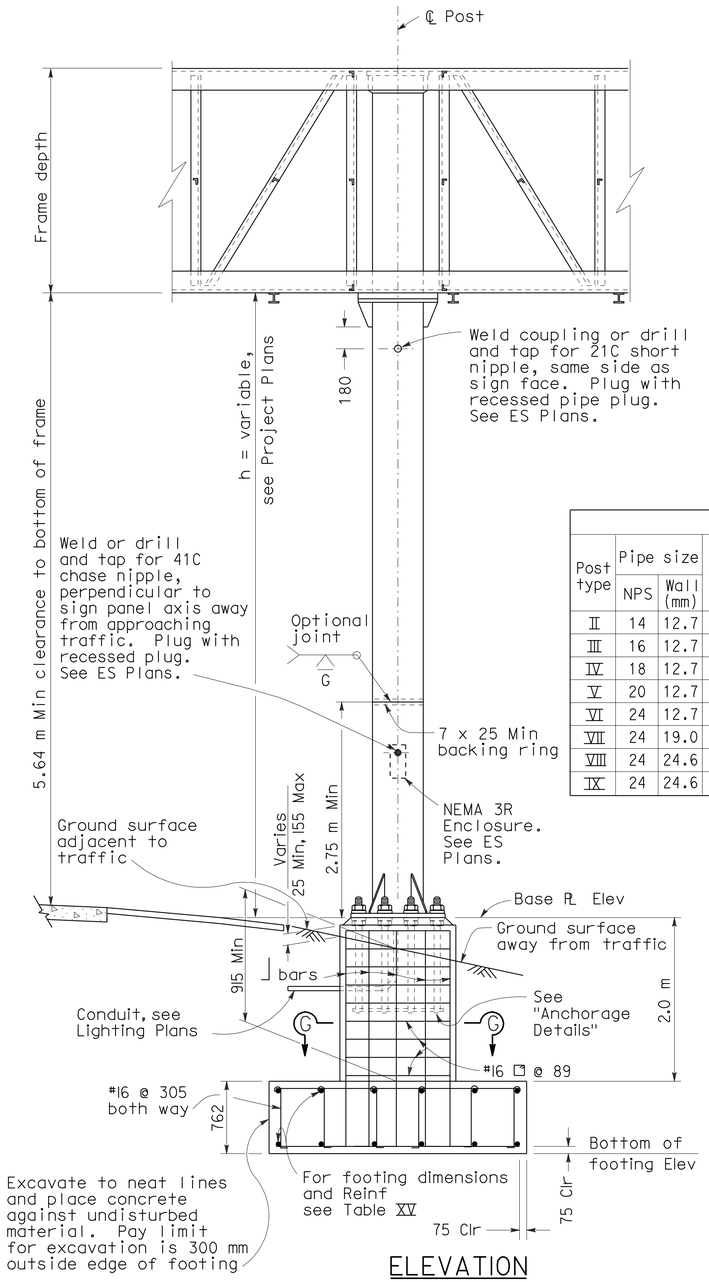

ELEVATION

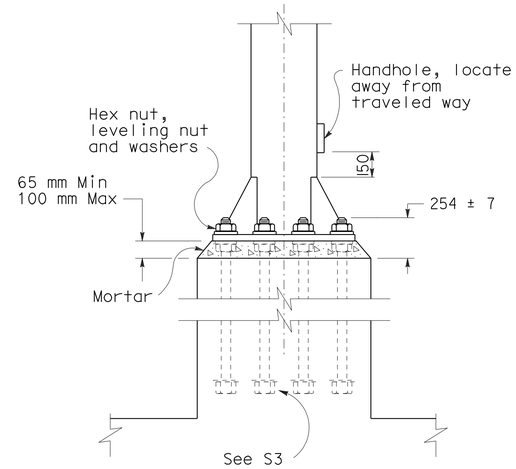

ANCHORAGE DETAILS

TABLE XV

Post type	Pipe size NPS	Pipe size Wall (mm)	Cap Plate for L 127x127 (mm)	Cap Plate for L 152x152 (mm)	Round Pedestal: Pedestal Size Dia (mm)	Round Pedestal: Vertical ⌋-Bars Equally spaced total	Round Pedestal: Vertical ⌋-Bars Bar Size	Round Pedestal: Vertical ⌋-Bars Bar B.C. (mm)	Round Pedestal: Spiral Bar Size	Round Pedestal: Spiral Pitch (mm)	Square Pedestal: Pedestal Size Square (mm)	Square Pedestal: Vertical ⌋-Bars Equally spaced total	Square Pedestal: Vertical ⌋-Bars Bar Size	Square Pedestal: Vertical ⌋-Bars Spacing ea face (mm)	Square Pedestal: Hoop Bar Size	Square Pedestal: Hoop Spacing (mm)	Pile footing Dia (mm)	Pile footing Depth (m)	Alternate: Spread Footing See note 2 (mm)	Alternate: Spread Footing Reinforcement: Width Top	Alternate: Spread Footing Reinforcement: Width Bottom	Alternate: Spread Footing Reinforcement: Longitudinal Top	Alternate: Spread Footing Reinforcement: Longitudinal Bottom	Alternate: Spread Footing Reinforcement: Footing Stirrups
II	14	12.7	610 x 610 x 25	660 x 660 x 25	1600	16	32	1372	16	89	1600	16	32	346	16	89	1372	4.5	3658 x 4267 x 762	14-#19	14-#22	13-#29	13-#29	#16 @ 305
III	16	12.7	660 x 660 x 25	711 x 711 x 25	1600	16	32	1372	16	89	1600	16	32	346	16	89	1372	4.9	3658 x 4267 x 762	15-#19	15-#22	13-#29	13-#29	#16 @ 305
IV	18	12.7	711 x 711 x 25	762 x 762 x 25	1600	16	32	1372	16	89	1600	16	32	346	16	89	1372	5.5	3658 x 4267 x 762	15-#19	15-#22	13-#29	13-#29	#16 @ 305
V	20	12.7	762 x 762 x 25	813 x 813 x 25	1600	16	32	1372	16	89	1600	16	32	346	16	89	1372	5.8	3962 x 4267 x 762	15-#19	15-#22	14-#29	14-#29	#16 @ 305
VI	24	12.7	864 x 864 x 25	914 x 914 x 25	1753	16	36	1534	16	89	1753	16	36	381	16	89	1524	6.7	3962 x 4877 x 762	17-#22	17-#22	14-#29	14-#36	#16 @ 305
VII	24	19.0	864 x 864 x 25	914 x 914 x 25	1753	16	36	1534	16	89	1753	16	36	381	16	89	1524	7.0	3962 x 5182 x 762	18-#22	18-#22	14-#29	14-#36	#16 @ 305
VIII	24	24.6	864 x 864 x 25	914 x 914 x 25	1753	16	36	1534	16	89	1753	16	36	381	16	89	1524	7.6	3962 x 5486 x 762	19-#22	19-#22	14-#29	14-#36	#16 @ 305
IX	24	24.6	864 x 864 x 25	914 x 914 x 25	1753	16	36	1534	16	89	1753	16	36	381	16	89	1524	7.6	3962 x 5486 x 762	19-#22	19-#22	14-#29	14-#36	#16 @ 305

Notes:

1. For "General Notes" see Revised Standard Plan RSP S1.
2. Longer side of footing shall be normal to axis of sign.
3. Backfill shall be in place prior to erection of post.
4. Thread upper 254 mm of anchor bolts and galvanize upper 305 mm.
5. Spread footing shown, use Pile Foundation when shown on the Project Plans.
6. Anchor plates may be retained with hexagon nut or formed head as alternatives to details shown.
7. On single post sign structures, the post shall be raked out of plumb, with the use of the leveling nuts to make the bottom of the sign frame level.
8. At final position of post all top and bottom nuts shall be tightened against base plate.
9. When foundation is located on a steep slope with exposed face of concrete adjacent to traffic, see "Detail C" on Revised Standard Plan RSP S7 or RSP S8, as applicable.
10. Slope protection required when indicated on the Project Plans.

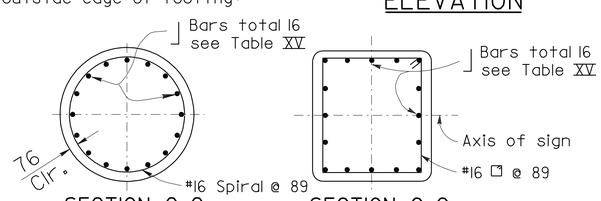

SECTION G-G
ROUND PEDESTAL

SECTION G-G
RECTANGLE PEDESTAL

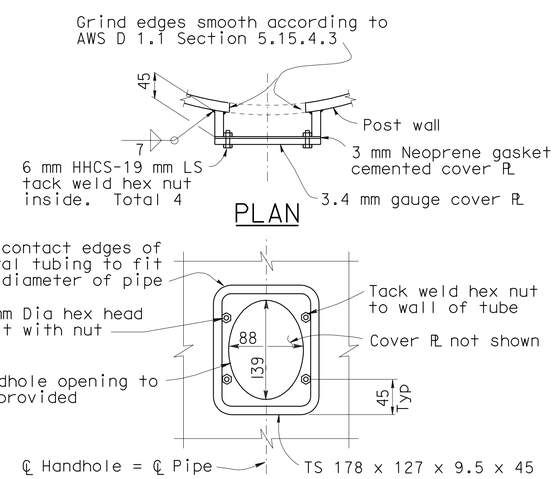

PLAN

ELEVATION

TYPICAL DETAILS OF HANDHOLE AND COVER

STATE OF CALIFORNIA
DEPARTMENT OF TRANSPORTATION

OVERHEAD SIGNS-TRUSS SINGLE POST TYPE POST TYPES II THROUGH IX

NO SCALE

ALL DIMENSIONS ARE IN MILLIMETERS UNLESS OTHERWISE SHOWN

RSP S2 DATED APRIL 28, 2005 SUPERSEDES RSP S2 DATED JANUARY 24,2005 AND STANDARD PLAN S2 DATED JULY 1, 2004-PAGE 311 OF THE STANDARD PLANS BOOK DATED JULY 2004.

REVISED STANDARD PLAN RSP S2