INFORMATION HANDOUT

For Contract No. 10-0Y90U4

At 10-SJ-99-18.4/23.0

Identified by
Project ID 1015000055

MATERIALS INFORMATION

Water Source Information

Manufacturer's Drawings for Alternative In-line Terminal System

Manufacturer's Drawings for Alternative Flared Terminal System

CALIFORNIA WATER SERVICE COMPANY
1602 E LAFAYETTE ST • STOCKTON, CA 95205
(209) 464-8311 • FAX (209) 464-0195

STOCKTON DISTRICT

November 25, 2014

State Of California Department Of Transportation
Attention: Nomer Gutierrez, PE
Design Manager
CR PJD, Design IV-Branch I D-10/Unit #1454
1976 E. Dr. Martin Luther King Jr. Blvd.
Stockton, CA 95205

Will Serve Letter

Tract or Parcel Map No: *Project I.D. 1015000055, Contract # 10-0Y90U*
Developer: California Department of Transportation

Dear *Mr. Gutierrez*:

California Water Service Company Stockton district ("Cal Water") has determined that water is available to serve the above-referenced project based on the information provided. Cal Water agrees to operate the water system and provide service in accordance with the rules and regulations of the California Public Utilities Commission (CPUC) and the company's approved tariffs on file with the CPUC. This determination of water availability shall remain valid for **two years** from the date of this letter. If construction of the project has not commenced within this **two year** time frame, Cal Water will be under no further obligation to serve the project unless the developer receives an updated letter from Cal Water reconfirming water availability. Additionally, Cal Water reserves the right to rescind this letter at any time in the event its water supply is severely reduced by legislative, regulatory or environmental actions.

Cal Water will provide such potable[1] water at such pressure as may be available from time to time as a result of its normal operations per the company's tariffs on file with the CPUC. Installation of facilities through developer funding shall be made in accordance with the current rules and regulations of the CPUC including, among others, Tariff Rules 15 and 16 and General Order 103-A. In order for us to provide adequate water for domestic use as well as fire service protection, it may be necessary for the developer to fund the cost of special facilities, such as, but not limited to, booster pumps, storage tanks and/or water wells,[2] in addition to the cost of mains and services. Cal Water will provide more specific information regarding special facilities and fees after you provide us with your improvement plans, fire department requirements, and engineering fees for this project.

This letter shall at all times be subject to such changes or modifications by the CPUC as said Commission may, from time to time, require in the exercise of its jurisdiction.

If you have any questions regarding the above, please call me at *(209)547-7901*.

Sincerely,

John Freeman Jr. By Steve Cavallini

John Freeman Jr.
District Manager

cc: Ting He – Cal Water Engineering Dept

---

[1] This portion of the letter to be modified accordingly in the event the development for which this letter is being generated is to be served with potable and non potable water.

[2] For the districts that collect facility fees on a per lot basis, delete the reference to wells as a special facility here and add in the following sentence, "Developer will also be required to contribute towards Cal Water's water supply by paying facilities fees on a per lot basis as described in Rule 15"

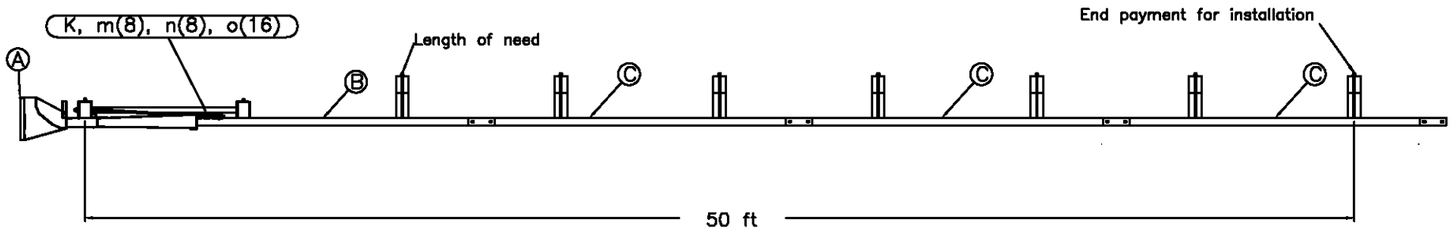

PLAN

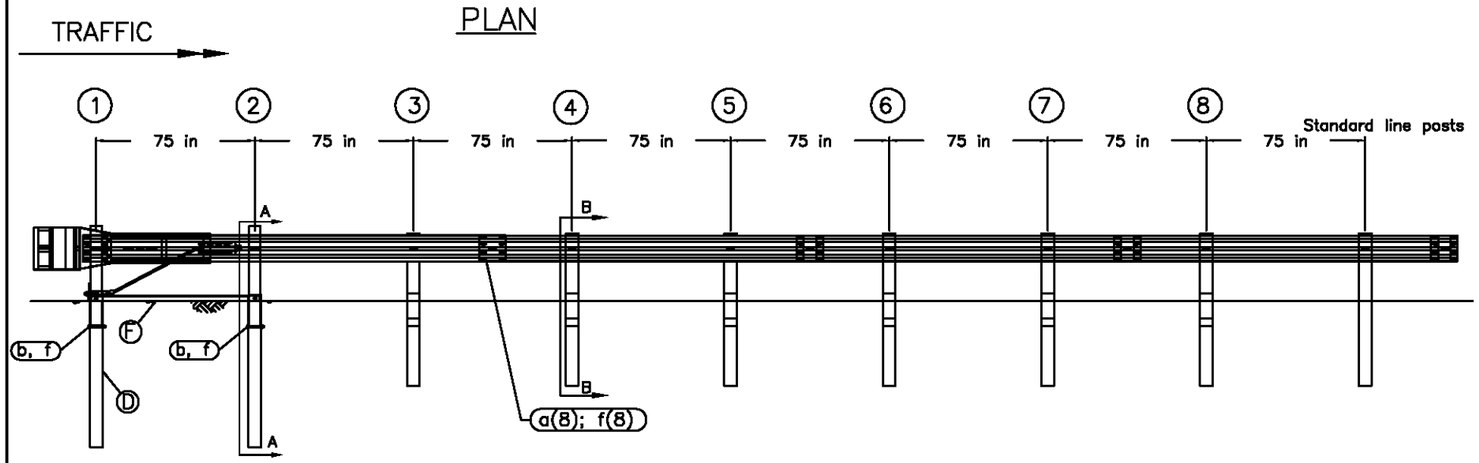

ELEVATION

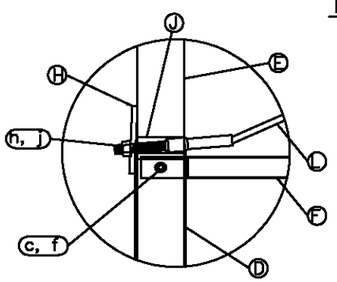

POST #1 CONNECTION DETAIL

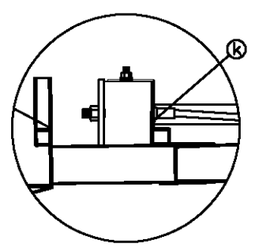

IMPACT HEAD CONNECTION DETAIL

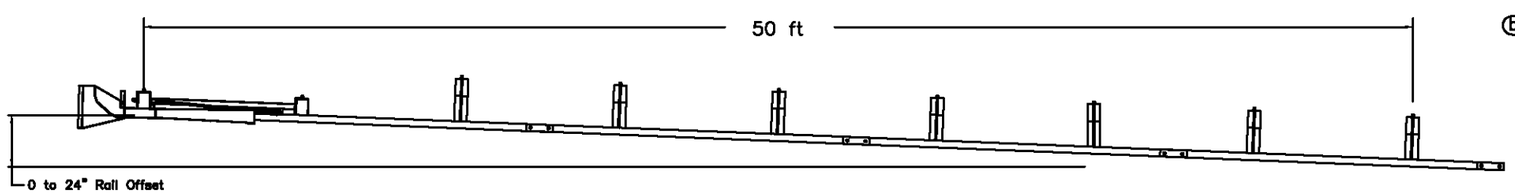

OPTIONAL FLARED INSTALLATION

25:1 maximum flare rate

GENERAL NOTES:

1. Breakaway posts are required with the SKT.
2. All bolts, nuts, cable assemblies, cable anchors and bearing plates shall be galvanized.
3. The SKT can be flared at a rate of up to 25:1 to prevent the impact head from encroaching on the shoulder.
4. The foundation tubes shall not protrude more than 4" above the ground (measured along a 5' cord). Site grading may be necessary to meet this requirement.
5. When rock is encountered, a 12" Ø post hole, 20" into the rock surface may be used if approved by the engineer. Granular material will be placed in the bottom of the hole, approximately 2.5" deep to provide drainage. The first two posts can be field cut to length, placed in the hole and backfilled with adequately compacted material excavated from the hole.
6. The breakaway cable assembly must be taut. A locking device (vice grips or channel lock pliers) should be used to prevent the cable from twisting when tightening nuts.
7. A site evalution should be considered if there is less than 25' between the outlet side of the terminal and any adjacent driving lane.
8. The soil tubes may be driven with an approved driving head. They shall not be driven with the post in the tube.
9. The wood blockouts should be "toe-nailed" to the rectangular wood posts to prevent them from turning when the wood shrinks.

ITEM	QTY	BILL OF MATERIALS	ITEM NO.
A	1	IMPACT HEAD	S3000
B	1	W-BEAM GUARDRAIL END SECTION, 12 Ga.	S1303 MGS
C	3	W-BEAM GUARDRAIL, 12 Ga.	G1203 MGS
D	2	FOUNDATION TUBE	E731
E	2	BCT WOOD POST	P650 MGS
F	1	GROUND STRUT	E780
G	6	CRT WOOD POST	P671 MGS
H	1	BEARING PLATE	E750
J	1	PIPE SLEEVE	E740
K	1	CABLE ANCHOR BOX	S760
L	1	BCT CABLE ANCHOR ASSEMBLY	E770
M	6	MGS TIMBER BLOCKOUT OR EQUIV.	P618
		HARDWARE (ALL DIMENSIONS IN INCHES)	
a	24	5/8ø x 1 1/4 SPLICE BOLT	B580122
b	2	5/8ø x 7 1/2 HEX BOLT	B580754
c	2	5/8ø x 10 HEX BOLT	B581004
d	1	5/8ø x 10 H.G.R. BOLT	B581002
e	6	5/8ø x 22 H.G.R. BOLT	B582202
f	35	5/8ø H.G.R. NUT	N050
g	7	H.G.R. WASHER	W050
h	2	1 ANCHOR CABLE HEX NUT	N100
j	2	1 ANCHOR CABLE WASHER	W100
k	2	3/8 x 3 LAG SCREW	E350
m	8	CABLE ANCHOR BOX SHOULDER BOLT	SB58A
n	8	1/2 A325 STRUCTURAL NUT	N055A
o	16	1 1/16 OD x 9/16 ID A325 STR. WASHER	W050A

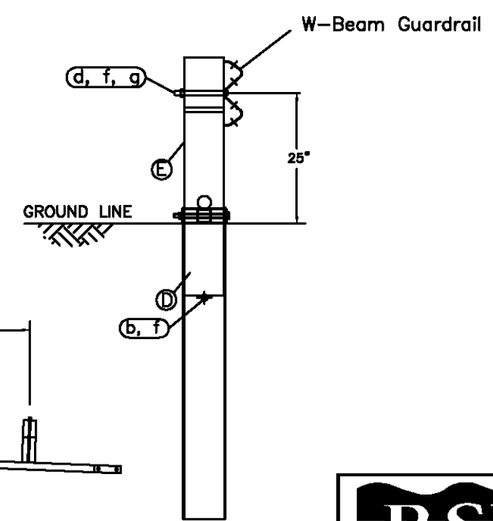

SECTION A-A

Post #2

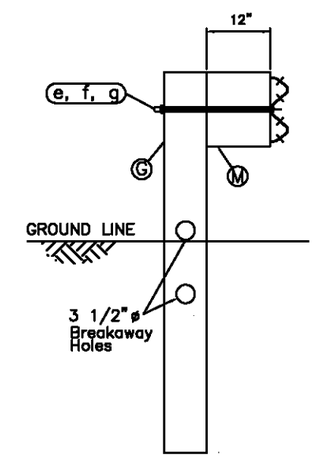

SECTION B-B

Posts 3 thru 8

RSI
Road Systems, Inc.
Big Spring, TX
Phone: 432-263-2435
or Phone: 330-346-0721

Sequential Kinking Terminal
SKT - Assembly

Midwest Guardrail System
Wood Post System

Sheet: A1
Date: 12/01/04
By: JRR
Drawing Name: SKT-MGS-W-US
Scale: NONE
Rev: 0

Appendix A - System Configuration, 37' 6" MGS

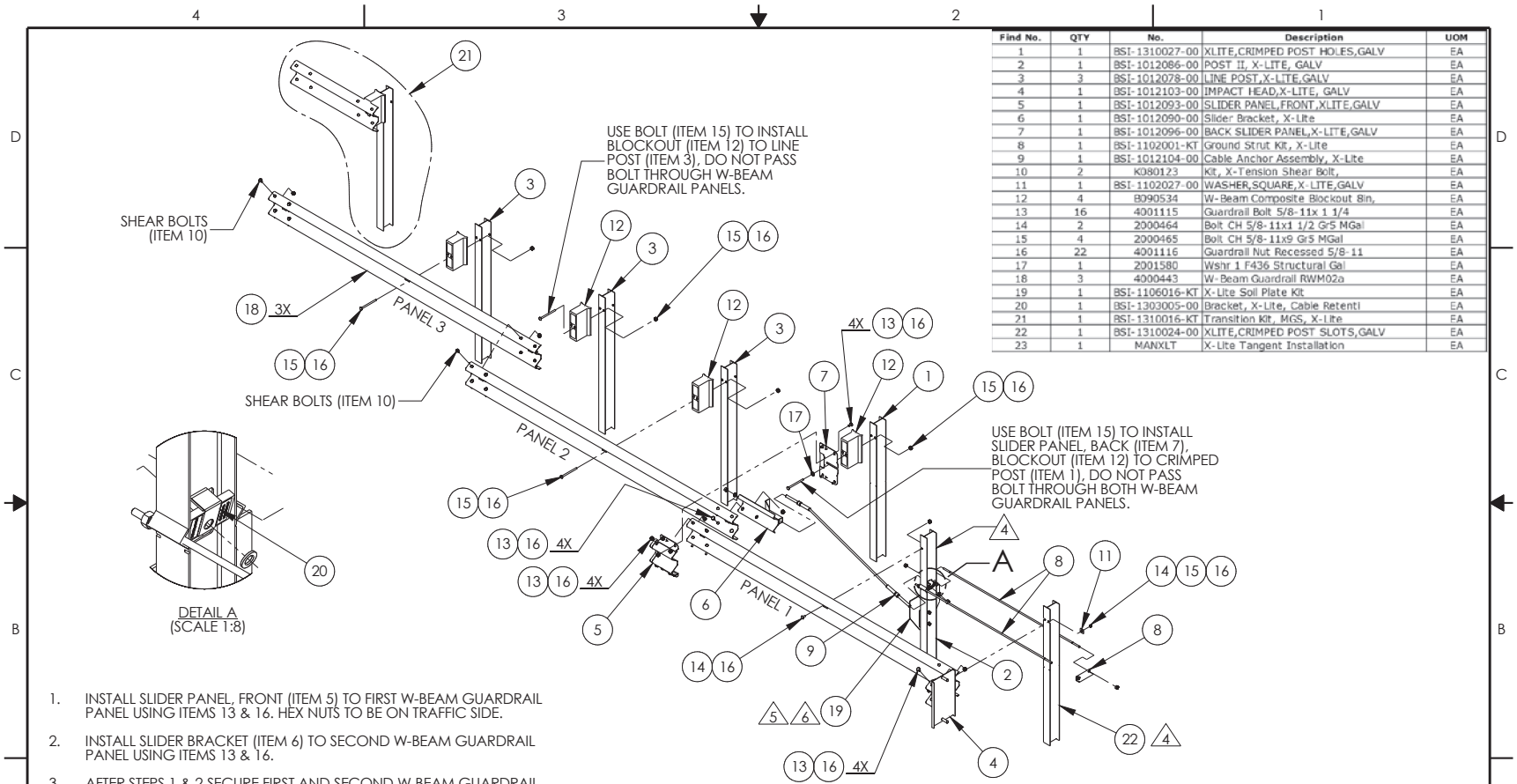

Find No.	QTY	No.	Description	UOM
1	1	BSI-1310027-00	XLITE,CRIMPED POST HOLES,GALV	EA
2	1	BSI-1012086-00	POST II, X-LITE, GALV	EA
3	3	BSI-1012078-00	LINE POST,X-LITE,GALV	EA
4	1	BSI-1012103-00	IMPACT HEAD,X-LITE, GALV	EA
5	1	BSI-1012093-00	SLIDER PANEL,FRONT,XLITE,GALV	EA
6	1	BSI-1012090-00	Slider Bracket, X-Lite	EA
7	1	BSI-1012096-00	BACK SLIDER PANEL,X-LITE,GALV	EA
8	1	BSI-1102001-KT	Ground Strut Kit, X-Lite	EA
9	1	BSI-1012104-00	Cable Anchor Assembly, X-Lite	EA
10	2	K080123	Kit, X-Tension Shear Bolt,	EA
11	1	BSI-1102027-00	WASHER,SQUARE,X-LITE,GALV	EA
12	4	B090534	W-Beam Composite Blockout 8in,	EA
13	16	4001115	Guardrail Bolt 5/8-11x 1 1/4	EA
14	2	2000464	Bolt CH 5/8-11x1 1/2 Gr5 MGal	EA
15	4	2000465	Bolt CH 5/8-11x9 Gr5 MGal	EA
16	22	4001116	Guardrail Nut Recessed 5/8-11	EA
17	1	2001580	Wshr 1 F436 Structural Gal	EA
18	3	4000443	W-Beam Guardrail RWM02a	EA
19	1	BSI-1106016-KT	X-Lite Soil Plate Kit	EA
20	1	BSI-1303005-00	Bracket, X-Lite, Cable Retentl	EA
21	1	BSI-1310016-KT	Transition Kit, MGS, X-Lite	EA
22	1	BSI-1310024-00	XLITE,CRIMPED POST SLOTS,GALV	EA
23	1	MANXLT	X-Lite Tangent Installation	EA

1. INSTALL SLIDER PANEL, FRONT (ITEM 5) TO FIRST W-BEAM GUARDRAIL PANEL USING ITEMS 13 & 16. HEX NUTS TO BE ON TRAFFIC SIDE.
2. INSTALL SLIDER BRACKET (ITEM 6) TO SECOND W-BEAM GUARDRAIL PANEL USING ITEMS 13 & 16.
3. AFTER STEPS 1 & 2 SECURE FIRST AND SECOND W-BEAM GUARDRAIL PANEL USING ITEMS 7, 13 & 16. HEX NUTS TO BE ON TRAFFIC SIDE.
4. SLOT ON POSTS 1 AND 2 TO FACE GUARDRAIL PANEL.
5. IF ROCK OR STIFF SOIL IS ENCOUNTERED, THE POST AND SOIL PLATE MAY BE INSTALLED BY AUGERING AND BACKFILLING THE HOLE. EXTRA CARE MUST BE TAKEN TO PREVENT SETTLEMENT OR LATERAL DISPLACEMENT OF THE POST. BACKFILL MATERIAL SHALL BE COMPACTED TO OPTIMUM COMPACTION.
6. IF ROCK IS ENCOUNTERED, THE SOIL PLATE MAY BE MODIFIED IF APPROVED BY THE PROJECT ENGINEER.

© 2010 BARRIER SYSTEMS INC. THE INFORMATION CONTAINED IN THIS DRAWING IS THE SOLE PROPERTY OF BARRIER SYSTEMS INC. ANY REPRODUCTION IN PART OR WHOLE WITHOUT THE WRITTEN PERMISSION OF BARRIER SYSTEMS INC. IS PROHIBITED.

APPROVALS

DRAWN BY:	JMT
DRAWN DATE:	10/09/2013
APPR'D BY:	GAD
APPR'D DATE:	10/09/13

UNLESS OTHERWISE SPECIFIED DIMENSIONS ARE IN INCHES. TOLERANCES ARE:
FRACTIONS ±1/16 DECIMAL .XX = ±.03 .XXX = ±.010 ANGLES ±1/2°
INTERPRET DIMENSIONS AND TOLERANCES PER ASME Y14.5-1994

THIRD ANGLE PROJECTION

DO NOT SCALE DRAWING

REV	ECN#	DATE
B	2220	01/23/14
A	2165	11/13/13
0	2151	10/09/13

BARRIER SYSTEMS
A LINDSAY TRANSPORTATION SOLUTIONS COMPANY
3333 Vaca Valley Parkway Ste 800
Vacaville, CA 95688
Tel: 888-800-3691
www.barriersystemsinc.com

TITLE
X-LITE SYSTEM ASSEMBLY, TANGENT, TRANSITION TO MGS

SIZE B | DWG NO. XLTSUS-MGS | REV. B
SCALE 1:40 | SHEET 1 OF 2

Doc. B100108

Appendix A - System Configuration, 37' 6" MGS

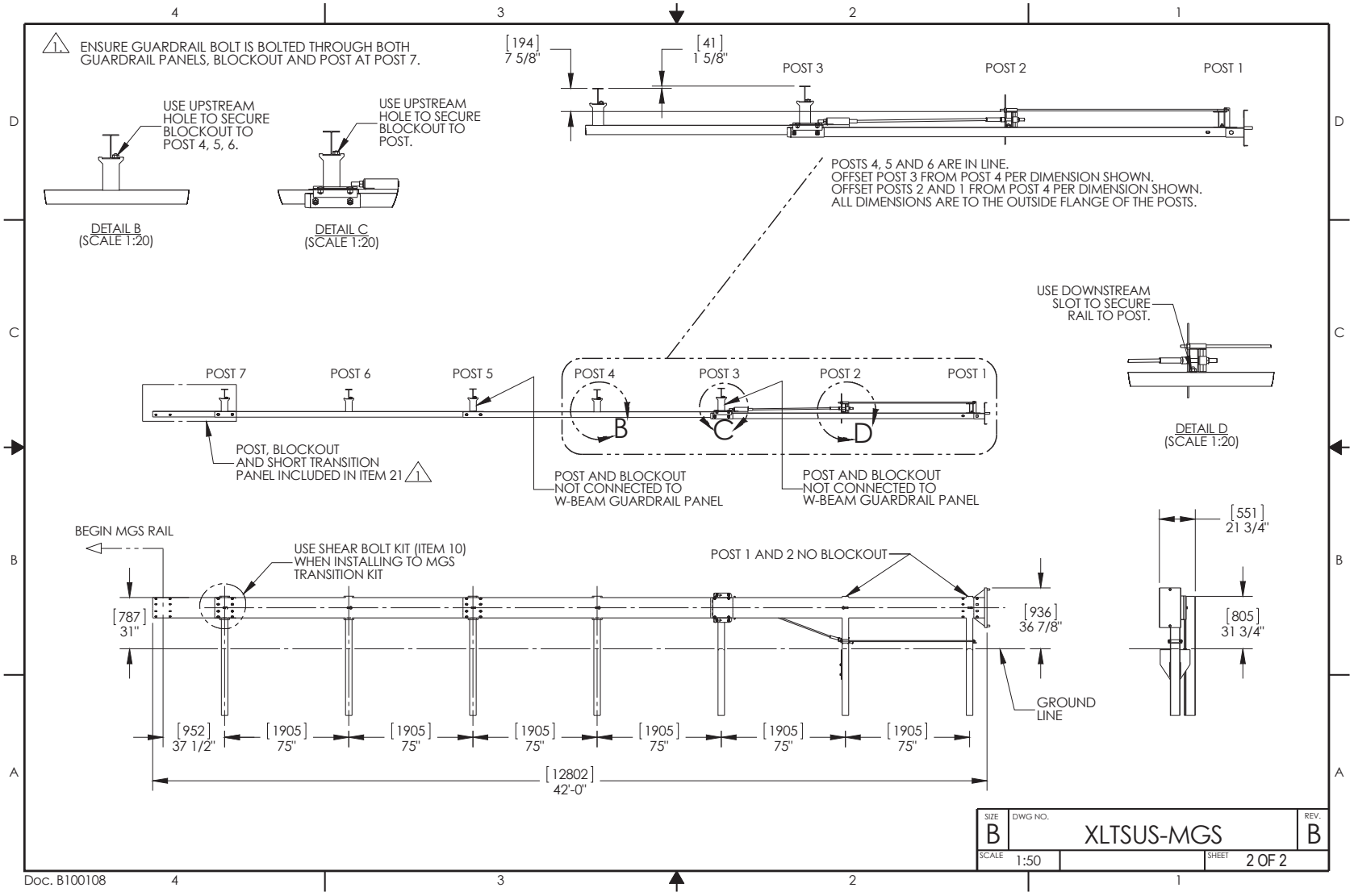

Appendix A -Bill of Materials - X-Lite Tangent, MGS 37’ 6”

Item	Description	Full System	Kit Only
BSI-1310024-00	XLITE,CRIMPED POST SLOTS,GALV	1.00	1.00
BSI-1310027-00	XLITE,CRIMPED POST HOLES,GALV	1.00	1.00
BSI-1012086-00	POST II, X-LITE, GALV	1.00	1.00
BSI-1012078-00	LINE POST,X-LITE,GALV	3.00	-
BSI-1012103-00	IMPACT HEAD,X-LITE, GALV	1.00	1.00
BSI-1012093-00	SLIDER PANEL,FRONT,XLITE,GALV	1.00	1.00
BSI-1012090-00	Slider Bracket, X-Lite	1.00	1.00
BSI-1012096-00	BACK SLIDER PANEL,X-LITE,GALV	1.00	1.00
BSI-1012097-00	Ground Strut, X-Lite	2.00	2.00
BSI-1012098-00	Ground Strut Angle	1.00	1.00
BSI-1012104-00	Cable Anchor Assembly, X-Lite	1.00	1.00
K080123	Kit, X-Tension Shear Bolt,	2.00	2.00
BSI-1102027-00	WASHER,SQUARE,X-LITE,GALV	1.00	1.00
B090534	W-Beam Composite Blockout 8in,	4.00	-
4001115	Guardrail Bolt 5/8-11x 1 1/4	16.00	-
2000464	Bolt CH 5/8-11x1 1/2 Gr5 MGal	2.00	-
2000465	Bolt CH 5/8-11x9 Gr5 MGal	4.00	-
4001116	Guardrail Nut Recessed 5/8-11	26.00	-
2001580	Wshr 1" F436 Structural	1.00	-
4000443	W-Beam Guardrail RWM02a	3.00	-
BSI-1312100-00	Soil Plate	1.00	1.00
2000220	C-Scr HH 5/8-11x3 1/2 Gr5 MGal	2.00	2.00
2001636	Wshr 5/8 F436 Struct MGal	4.00	4.00
2000312	Nut HX 5/8-11 Gr5 Mgal	2.00	1.00
BSI-1303005-00	Bracket, X-Lite, Cable Retenti	1.00	1.00
BSI-1310016-KT	Transition Kit, MGS, X-Lite	1.00	1.00

ITEM NO.	PART NUMBER	DESCRIPTION	QTY	UOM
1	BSI-1301252-KT	X-Tension Terminal Comp, 31 in	1	EACH
2	K070202	X-Tension Hardware Kit, GT,	1	EACH
3	K070206	X-Tension System Hardware Kit,	1	EACH
4	K070210	X-Tension GT Guardrail	1	EACH
5	B061100	BSI, I-Beam Post, Middle, X350	1	EACH
6	MANXT1	X-TENSION Installation Manual	1	EACH

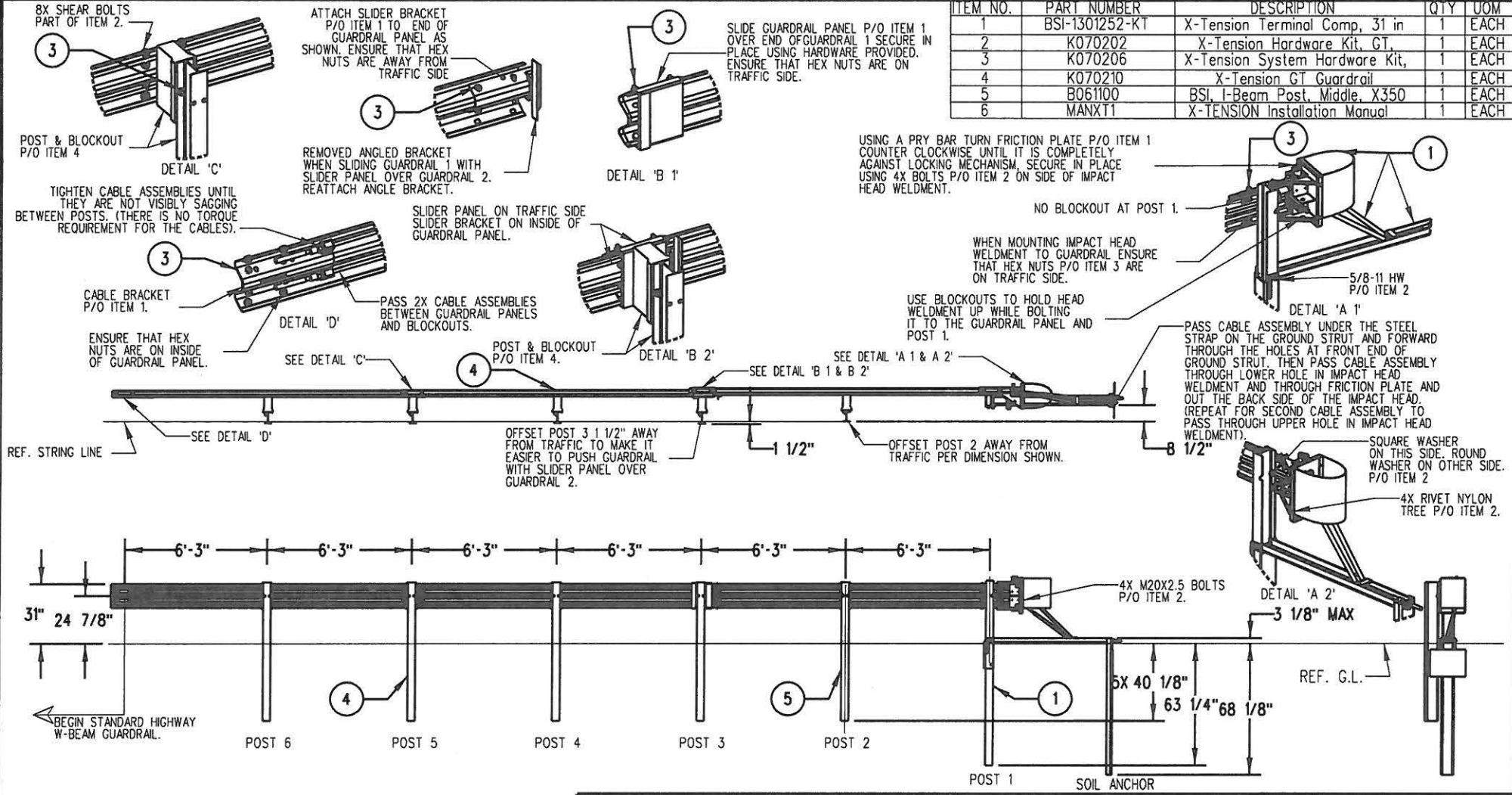

NOTES: UNLESS OTHERWISE SPECIFIED.

1. SYSTEM TO BE INSTALLED PER MANUFACTURER SPECIFICATIONS.
2. ONLY TIGHTEN THE CABLE ASSEMBLIES USING THE NUTS AT THE CABLE BRACKET (SEE DETAIL 'D'). DO NOT TIGHTEN THE CABLES AT THE FRONT OF THE GROUND ANCHOR.
3. WHEN DRIVING STEEL POST, ENSURE THAT A DRIVING CAP WITH TIMBER OR PLASTIC INSERT IS USED TO PREVENT DAMAGE TO THE GALVANIZING TO THE TOP OF THE POST.

3/2012 BARRIER SYSTEMS INC. THE INFORMATION CONTAINED IN THIS DRAWING IS THE SOLE PROPERTY OF BARRIER SYSTEMS INC. ANY REPRODUCTION IN PART OR WHOLE WITHOUT THE WRITTEN PERMISSION OF BARRIER SYSTEMS INC. IS PROHIBITED.

APPROVALS

DRAWN BY:	NMV
DRAWN DATE:	2/08/13
APPR'D BY:	JMT
APPR'D DATE:	2/08/13

UNLESS OTHERWISE SPECIFIED DIMENSIONS ARE IN INCHES. TOLERANCES ARE:
FRACTIONS ±1/16 DECIMAL .XX - ±.03 .XXX - ±.010 ANGLES ±1/2°
INTERPRET DIMENSIONS AND TOLERANCES PER ASME Y14.5-1994
THIRD ANGLE PROJECTION
DO NOT SCALE DRAWING

REV	ECN#	DATE
B	2067	03/02/13
A	2022	2/08/13

LINDSAY TRANSPORTATION SOLUTIONS™

BARRIER SYSTEMS INC.
3333 Vaca Valley Parkway Ste 800
Vacaville, CA 95688
Tel: 888-800-3691
www.barriersystemsinc.com

TITLE
X-TENSION GUARDRAIL TERMINAL SYSTEM STEEL POST WITH COMPOSITE BLOCKOUT 31" RAIL HEIGHT

SIZE	DWG NO.	REV.
B	XTGTSS5	B

SCALE 1:50 SHEET 1 OF 1

Doc. B100108

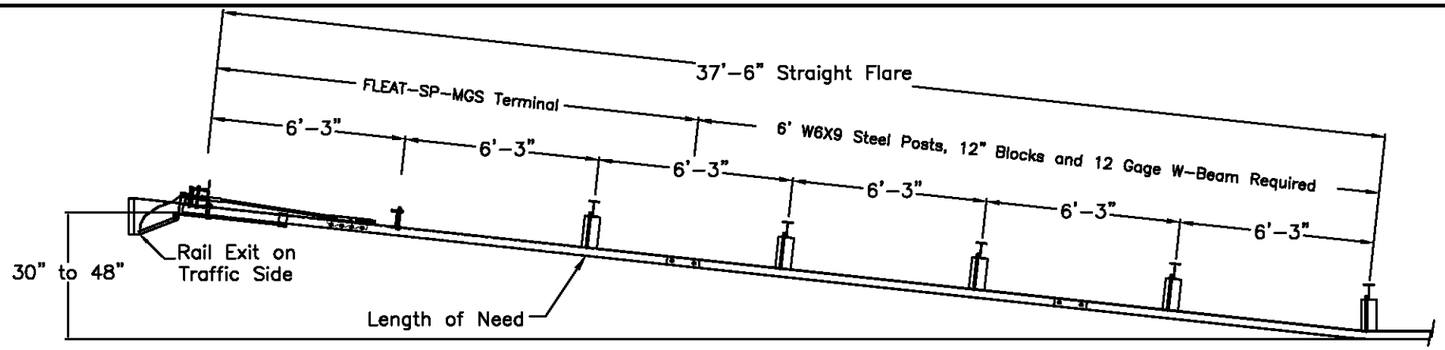

PLAN

TRAFFIC

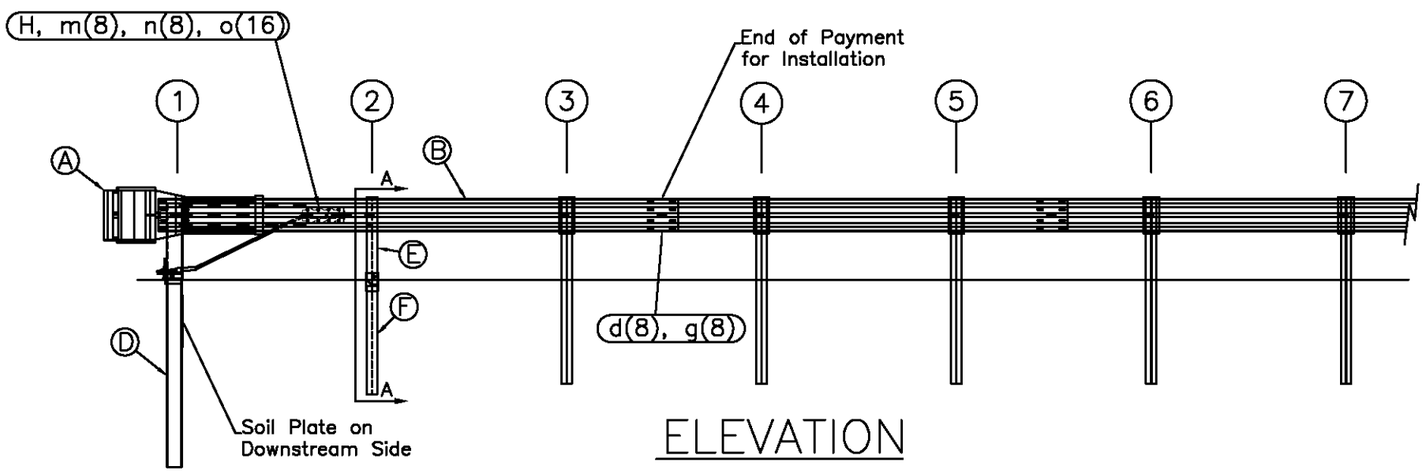

ELEVATION

ITEM	QTY	BILL OF MATERIALS	ITEM NO.
A	1	IMPACT HEAD	F3000
B	1	W-BEAM GUARDRAIL END SECTION, 12 Ga.	MGS-SF1303
C	1	FIRST POST TOP (6X6X$\frac{1}{8}$" Tube)	TPHP1A
D	1	FIRST POST BOTTOM (6' W6X15)	TPHP1B
E	1	SECOND POST ASSEMBLY TOP	UHP2A
F	1	SECOND POST ASSEMBLY BOTTOM	HP3B
G	1	BEARING PLATE	E750
H	1	CABLE ANCHOR BOX	S760
J	1	BCT CABLE ANCHOR ASSEMBLY	E770
		HARDWARE (ALL DIMENSIONS IN INCHES)	
a	2	5/16 x 1 HEX BOLT GRD 5	B5160104A
b	4	5/16 WASHER	W0516
c	2	5/16 HEX NUT	N0516
d	9	5/8 Dia. x 1 1/4 SPLICE BOLT (POST #2)	B580122
e	1	5/8 Dia. x 9 HEX BOLT GRD 5	B580904A
f	3	5/8 WASHER	W050
g	10	5/8 Dia. H.G.R NUT	N050
h	1	3/4 Dia. x 8 1/2 HEX BOLT GRD A449	B340854A
j	1	3/4 Dia. HEX NUT	N030
k	2	1 ANCHOR CABLE HEX NUT	N100
l	2	1 ANCHOR CABLE WASHER	W100
m	8	CABLE ANCHOR BOX SHOULDER BOLT	SB58A
n	8	1/2 A325 STRUCTURAL NUT	N055A
o	16	1 1/16 OD x 9/16 ID A325 STR. WASHER	W050A

GENERAL NOTES:

1. All bolts, nuts, cable assemblies, cable anchors and bearing plates shall be galvanized.
2. The lower sections of the Posts 1&2 shall not protrude more than 4 in above the ground (measured along a 5' cord). Site grading may be necessary to meet this requirement.
3. The lower sections of the hinged posts should not be driven with the upper post attached. If the post is placed in a drilled hole, the backfill material must be satisfactorily compacted to prevent settlement.
4. When competent rock is encountered, a 12" Ø post hole, 20 in. deep cored into the rock surface may be used if approved by the engineer for post 1. Granular material will be placed in the bottom of the hole, approximately 2.5" deep to provide drainage. The first post can be field cut to length, placed in the hole and backfilled with suitable backfill. The soil plate may be trimmed if required.
5. The breakaway cable assembly must be taut. A locking device (vice grips or channel lock pliers) should be used to prevent the cable from twisting when tightening nuts.

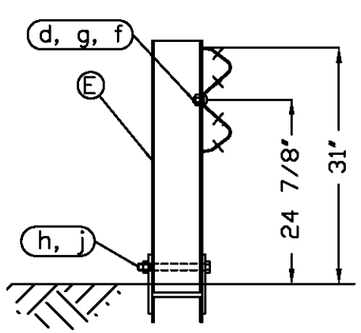

SECTION A-A
Post #2

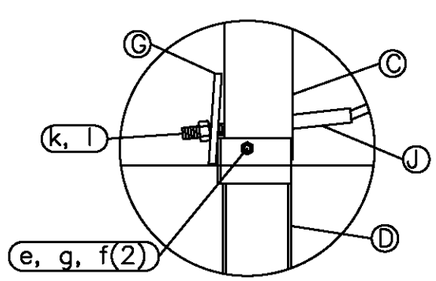

Post #1 Connection Detail

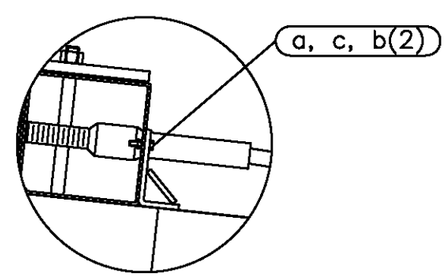

Impact Head Connection Detail

RSI
Road Systems, Inc.
Big Spring, TX
Phone: 432-263-2435
or Phone: 330-346-0721

FLEAT-SP-MGS Terminal
Midwest Guardrail System
31" Top of Rail

Sheet: 1
Date: 02/24/10
By: JRR
Drawing Name: FLT-SP-S-MGS
Scale: None
Rev: 0

SRT™-31 SYSTEM

FOR SPECIFIC INSTALLATION, MAINTENANCE, OR REPAIR DETAILS, REFER TO THE STATE/SPECIFYING AGENCY'S STANDARD DRAWING(S) AND/OR TRINITY STANDARD LAYOUT DRAWINGS

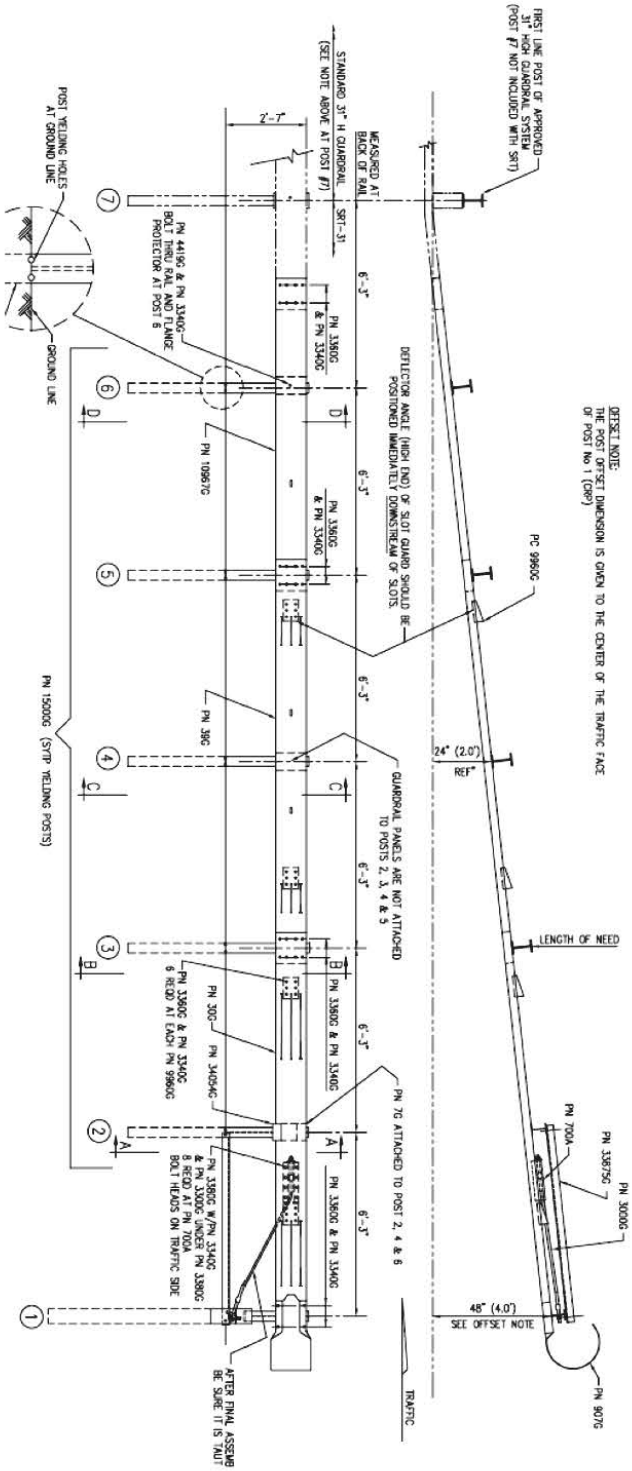

ITEM NO.	PART NUMBER	DESCRIPTION	QTY	UOM
1	BSI-1301252-KT	X-Tension Terminal Comp, 31 in	1	EACH
2	K070202	X-Tension Hardware Kit, GT,	1	EACH
3	K070206	X-Tension System Hardware Kit,	1	EACH
4	K070210	X-Tension GT Guardrail	1	EACH
5	B061100	BSI, I-Beam Post, Middle, X350	1	EACH
6	MANXT1	X-TENSION Installation Manual	1	EACH

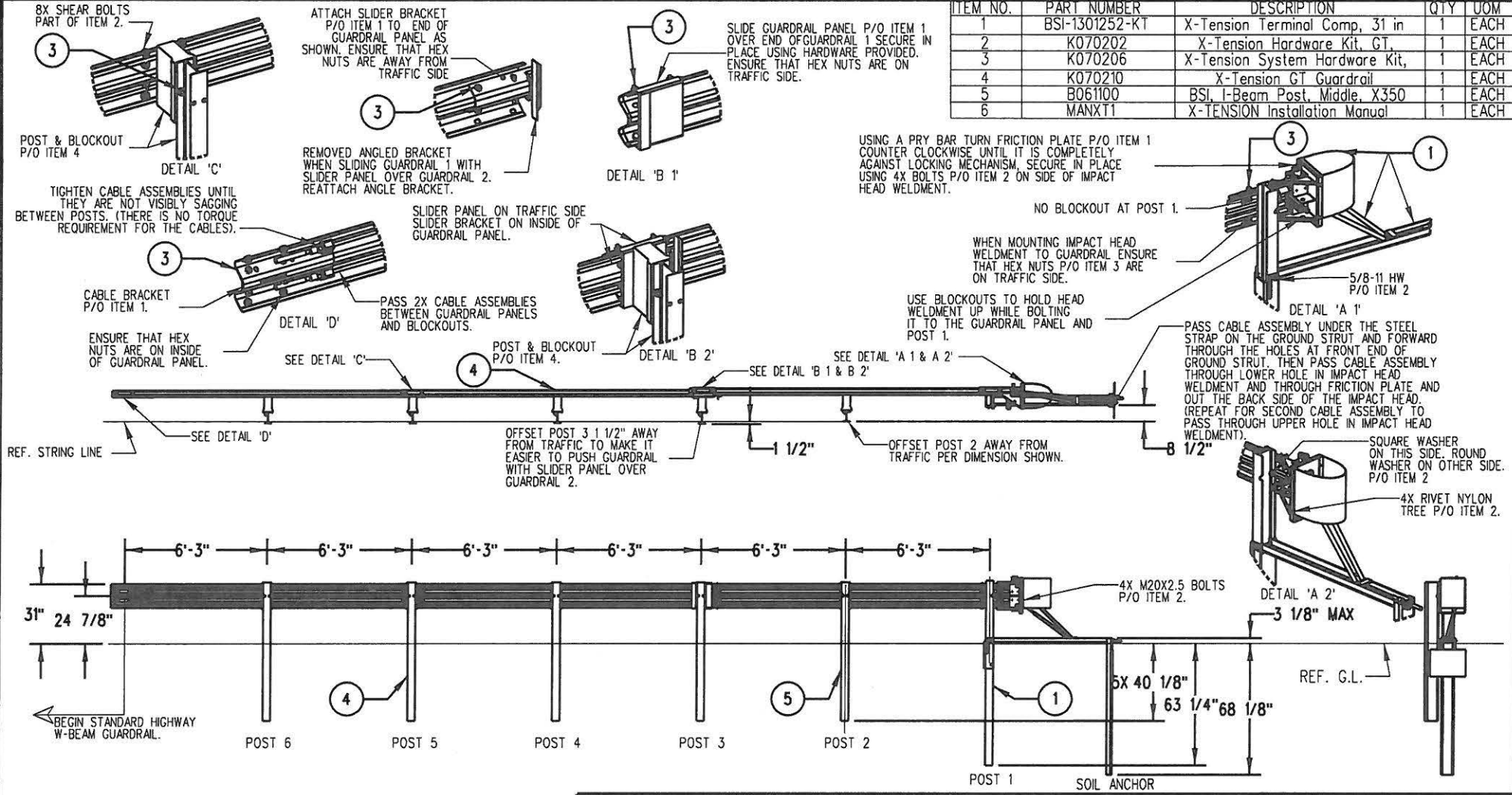

NOTES: UNLESS OTHERWISE SPECIFIED.

1. SYSTEM TO BE INSTALLED PER MANUFACTURER SPECIFICATIONS.
2. ONLY TIGHTEN THE CABLE ASSEMBLIES USING THE NUTS AT THE CABLE BRACKET (SEE DETAIL 'D'). DO NOT TIGHTEN THE CABLES AT THE FRONT OF THE GROUND ANCHOR.
3. WHEN DRIVING STEEL POST, ENSURE THAT A DRIVING CAP WITH TIMBER OR PLASTIC INSERT IS USED TO PREVENT DAMAGE TO THE GALVANIZING TO THE TOP OF THE POST.

3/2012 BARRIER SYSTEMS INC. THE INFORMATION CONTAINED IN THIS DRAWING IS THE SOLE PROPERTY OF BARRIER SYSTEMS INC. ANY REPRODUCTION IN PART OR WHOLE WITHOUT THE WRITTEN PERMISSION OF BARRIER SYSTEMS INC. IS PROHIBITED.

APPROVALS

DRAWN BY:	NMV
DRAWN DATE:	2/08/13
APPR'D BY:	JMT
APPR'D DATE:	2/08/13

UNLESS OTHERWISE SPECIFIED DIMENSIONS ARE IN INCHES. TOLERANCES ARE:
FRACTIONS ±1/16 DECIMAL .XX - ±.03 .XXX - ±.010 ANGLES ±1/2°
INTERPRET DIMENSIONS AND TOLERANCES PER ASME Y14.5-1994
THIRD ANGLE PROJECTION
DO NOT SCALE DRAWING

REV	ECN#	DATE
B	2067	03/02/13
A	2022	2/08/13

LINDSAY TRANSPORTATION SOLUTIONS™

BARRIER SYSTEMS INC.
3333 Vaca Valley Parkway Ste 800
Vacaville, CA 95688
Tel: 888-800-3691
www.barriersystemsinc.com

TITLE
X-TENSION GUARDRAIL TERMINAL SYSTEM STEEL POST WITH COMPOSITE BLOCKOUT 31" RAIL HEIGHT

SIZE	DWG NO.	REV.
B	XTGTSS5	B

SCALE 1:50 SHEET 1 OF 1

Doc. B100108