Dist	COUNTY	ROUTE	POST MILES TOTAL PROJECT	SHEET No.	TOTAL SHEETS
10	SJ	99	18.4/23.0	2	106

Rhodel De Claro 12/23/14
REGISTERED CIVIL ENGINEER DATE

12-29-14
PLANS APPROVAL DATE

REGISTERED PROFESSIONAL ENGINEER RHODEL De CLARO No. 74058 Exp. 6/30/15 CIVIL STATE OF CALIFORNIA

THE STATE OF CALIFORNIA OR ITS OFFICERS OR AGENTS SHALL NOT BE RESPONSIBLE FOR THE ACCURACY OR COMPLETENESS OF SCANNED COPIES OF THIS PLAN SHEET.

NOTES:

1. DIMENSIONS OF THE PAVEMENT STRUCTURES (STRUCTURAL SECTIONS) ARE SUBJECT TO TOLERANCES SPECIFIED IN THE STANDARD SPECIFICATIONS.
2. FOR ACCURATE RIGHT OF WAY DATA, CONTACT RIGHT OF WAY ENGINEERING AT THE DISTRICT OFFICE.
3. FOR COLD PLANE AC PAVEMENT, RUMBLE STRIP, REPLACE BASE, AND JOINTED PLAIN CONCRETE PAVEMENT (RSC) DIMENSIONS AND LOCATIONS, SEE SUMMARY OF QUANTITIES SHEET.
4. EXISTING UTILITY FACILITY INFORMATION IS INCOMPLETE.
5. 1 FOR LOCATIONS OF MGS AND HMA DIKES, SEE LAYOUTS AND SUMMARY OF QUANTITIES SHEETS.

ABBREVIATIONS:

RSC - RAPID STRENGTH CONCRETE
RS - RAPID SETTING
LTS - LIME TREATED SOIL
URB - UNTREATED ROCK BASE
BBB - BASE BOND BREAKER
CHP - CALIFORNIA HIGHWAY PATROL
1 SEG - SUBGRADE ENHANCEMENT GEOTEXTILE

DESIGN DESIGNATION

ADT (2014)	91,000	D	60%
ADT (2036)	159,400	T	11%
DHV (2036)	15,000	V	65 mph
		TI_{20}	14.5

PAVEMENT CLIMATE REGION: INLAND VALLEY

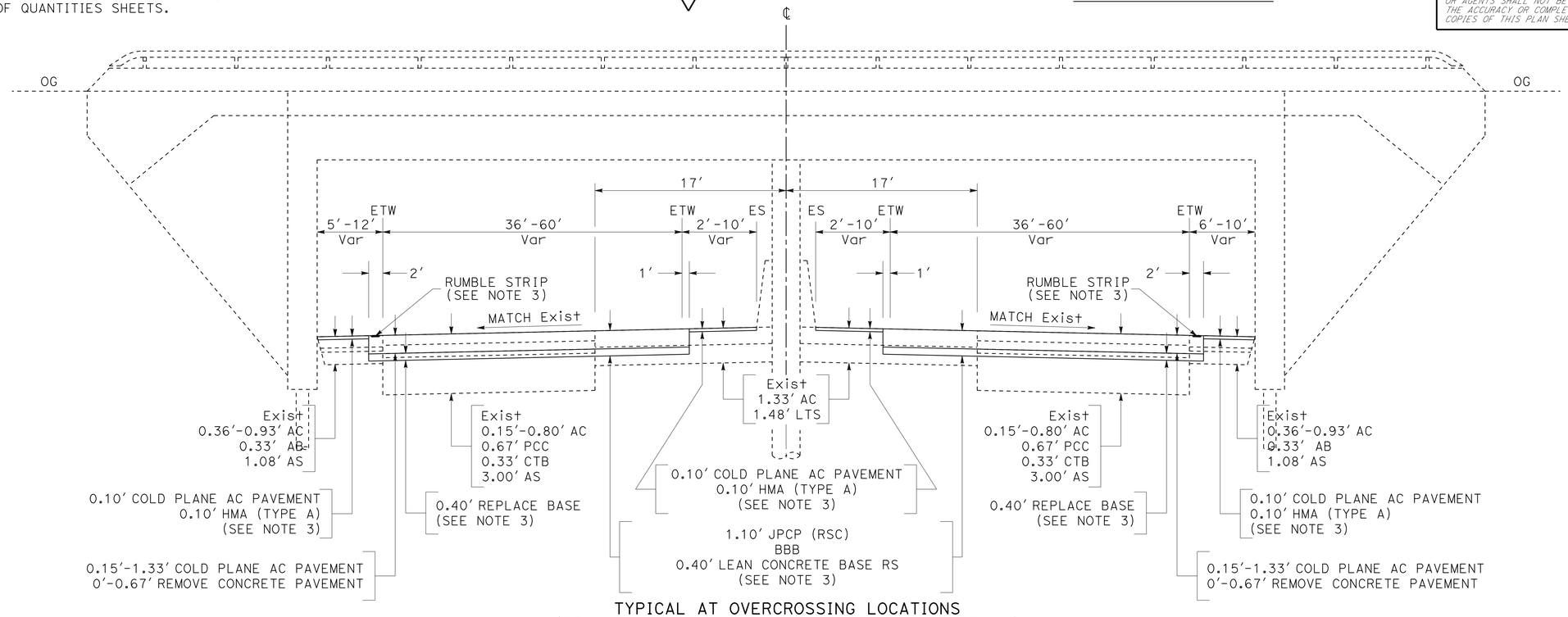

TYPICAL AT OVERCROSSING LOCATIONS
(FROM ROUTE 26/99 Sep TO CALAVERAS RIVER OC)
PM 19.3/21.9

ROUTE 99

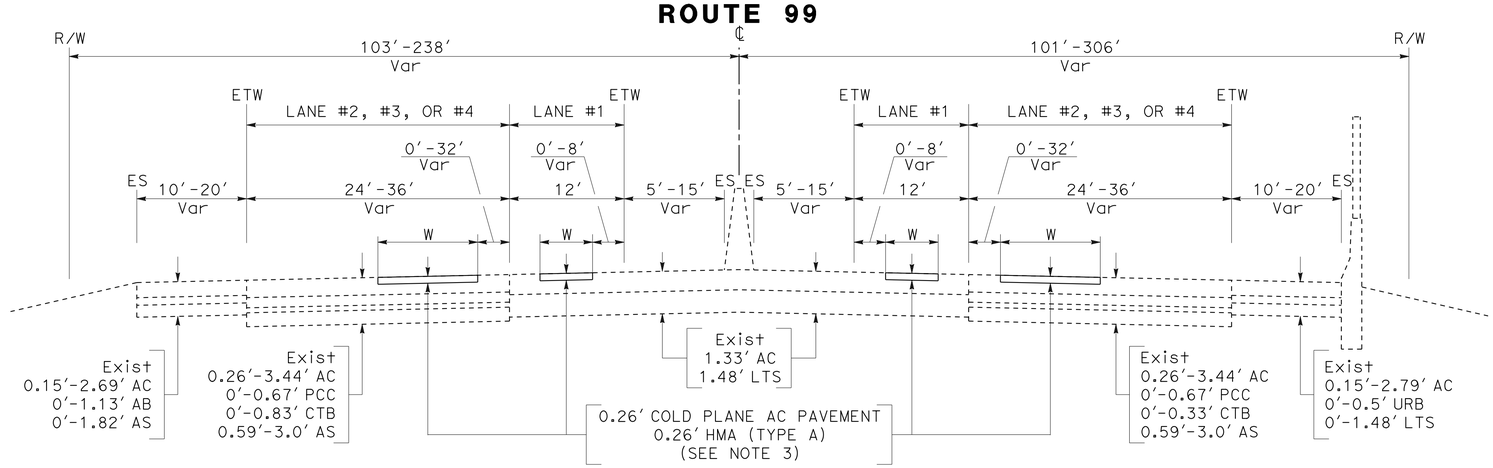

PM 18.4/23.0
ROUTE 99

TYPICAL CROSS SECTIONS

NO SCALE

X-1

1 REPLACED PER ADDENDUM No. 1 DATED JULY 8, 2015

STATE OF CALIFORNIA - DEPARTMENT OF TRANSPORTATION
Caltrans®
MAINTENANCE

FUNCTIONAL SUPERVISOR: ALVIN MANGINDIN
CALCULATED-DESIGNED BY: RHODEL DE CLARO
CHECKED BY: BRUCE SUMIDA
REVISED BY: RDC
DATE REVISED: 12/03/14

LAST REVISION 12-23-14
DATE PLOTTED => 07-JUL-2015
TIME PLOTTED => 15:22

Dist	COUNTY	ROUTE	POST MILES TOTAL PROJECT	SHEET No.	TOTAL SHEETS
10	SJ	99	18.4/23.0	4	106

Sheikh Alam 12-23-14
REGISTERED CIVIL ENGINEER DATE

12-29-14
PLANS APPROVAL DATE

REGISTERED PROFESSIONAL ENGINEER SHEIKH ALAM No. C 72145 Exp. 6/30/16 CIVIL STATE OF CALIFORNIA

THE STATE OF CALIFORNIA OR ITS OFFICERS OR AGENTS SHALL NOT BE RESPONSIBLE FOR THE ACCURACY OR COMPLETENESS OF SCANNED COPIES OF THIS PLAN SHEET.

1

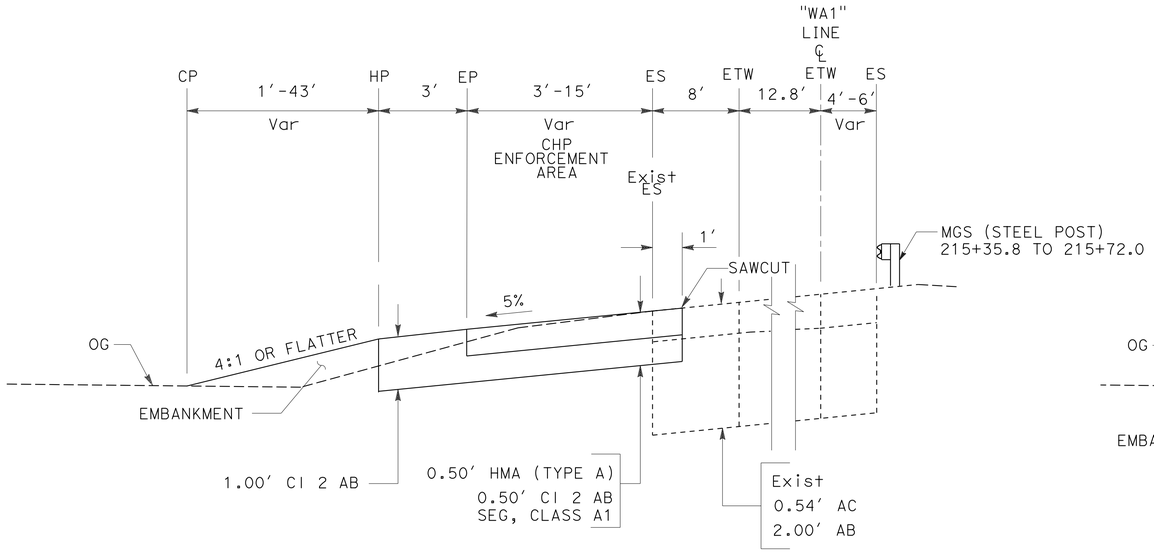

"WA1" LINE Sta 211+56.2 TO 215+42.2

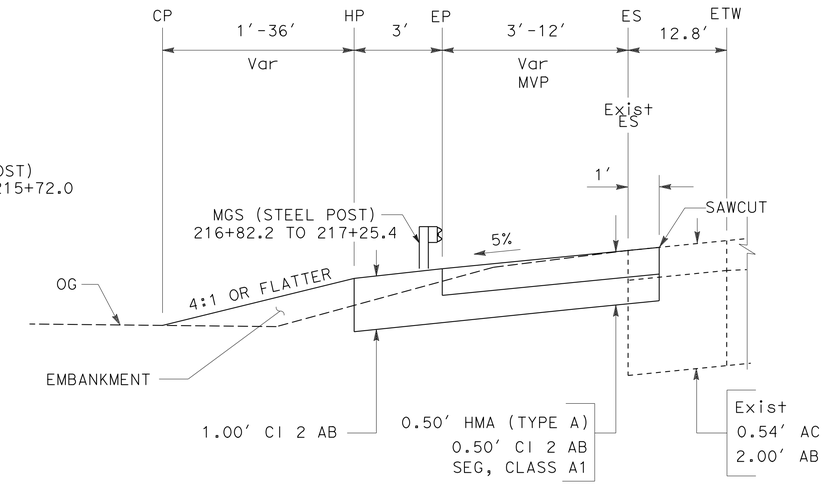

"WA1" LINE Sta 215+68.3 TO 216+62.2

EB WATERLOO SOUTHBOUND ON-RAMP
(LOCATION 2)

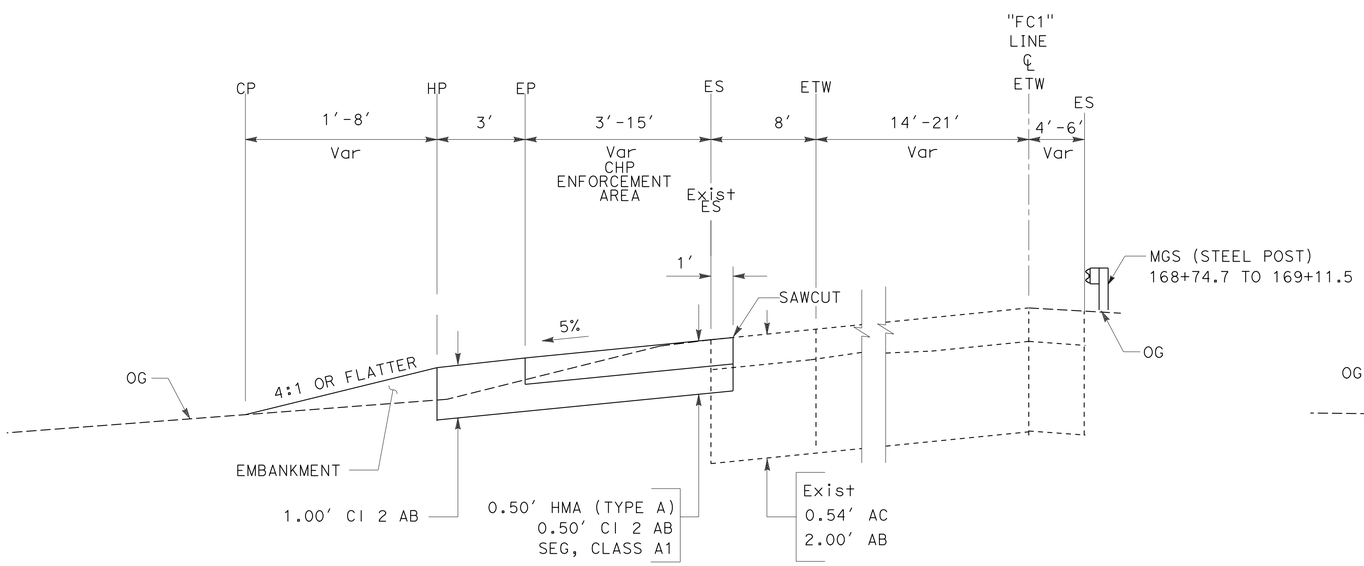

"FC1" LINE Sta 165+53.9 TO 168+81.1

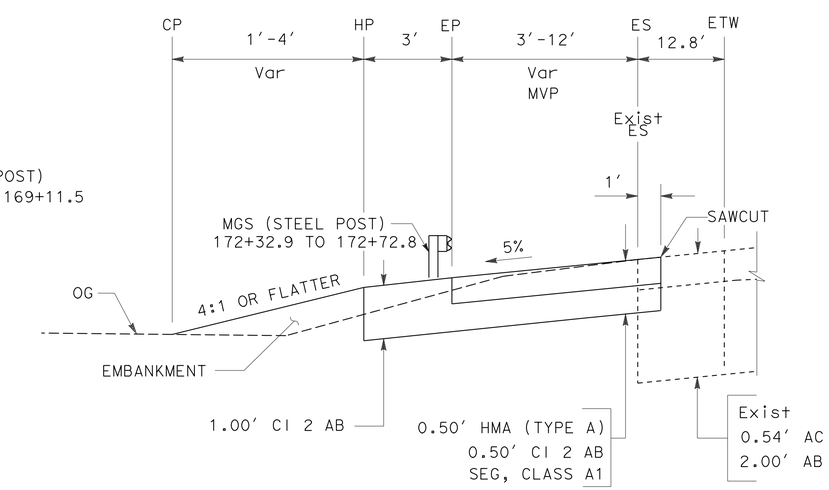

"FC1" LINE Sta 170+07.4 TO 171+13.9

FREMONT St SOUTHBOUND LOOP ON-RAMP
(LOCATION 1)

1 **REPLACED PER ADDENDUM No. 1 DATED JULY 8, 2015**

TYPICAL CROSS SECTIONS

NO SCALE

X-3

STATE OF CALIFORNIA - DEPARTMENT OF TRANSPORTATION
Caltrans® DESIGN

FUNCTIONAL SUPERVISOR: NOMER GUTIERREZ
CALCULATED-DESIGNED BY: YOON HAHN
CHECKED BY: SHEIKH ALAM
REVISED BY: Y.H
DATE REVISED: 02/23/15

LAST REVISION 12-23-14
DATE PLOTTED => 07-JUL-2015
TIME PLOTTED => 15:22

Dist	COUNTY	ROUTE	POST MILES TOTAL PROJECT	SHEET No.	TOTAL SHEETS
10	SJ	99	18.4/23.0	5	106

Sheikh Alam 12-23-14
REGISTERED CIVIL ENGINEER DATE

12-29-14
PLANS APPROVAL DATE

REGISTERED PROFESSIONAL ENGINEER SHEIKH ALAM No. C 72145 Exp. 6/30/16 CIVIL STATE OF CALIFORNIA

THE STATE OF CALIFORNIA OR ITS OFFICERS OR AGENTS SHALL NOT BE RESPONSIBLE FOR THE ACCURACY OR COMPLETENESS OF SCANNED COPIES OF THIS PLAN SHEET.

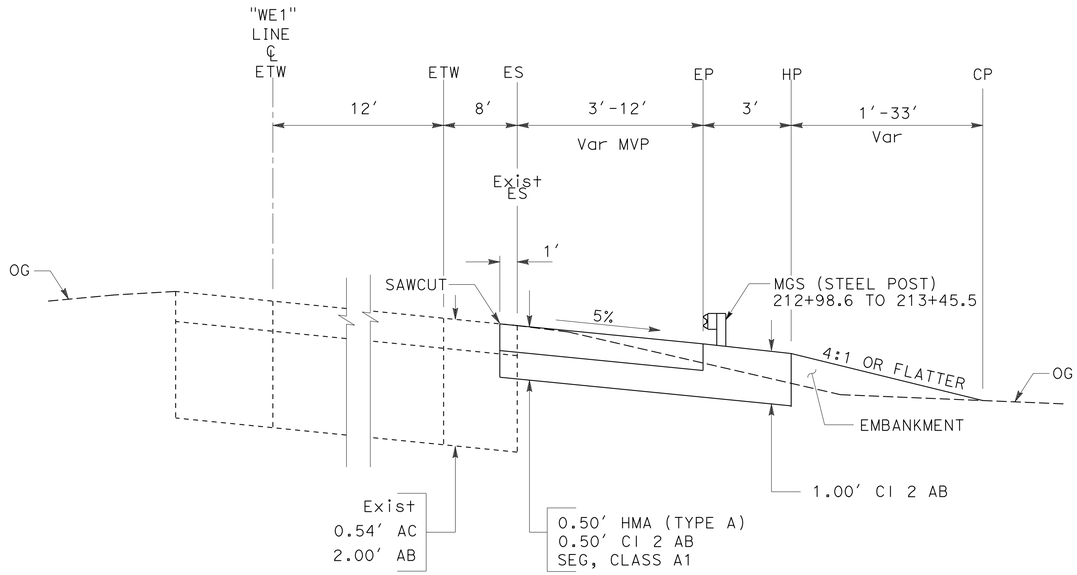

"WE1" LINE Sta 211+16.6 TO 212+24.7

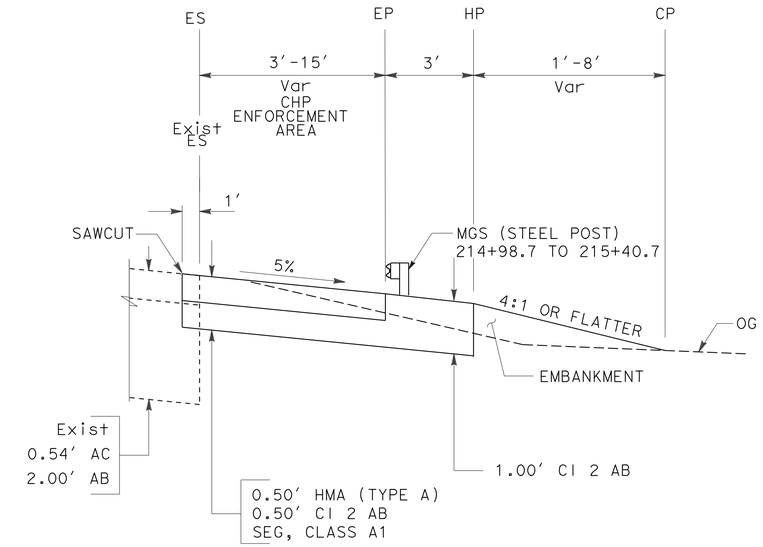

"WE1" LINE Sta 215+30.4 TO 218+85.8

EB WATERLOO NORTHBOUND LOOP ON-RAMP

(LOCATION 4)

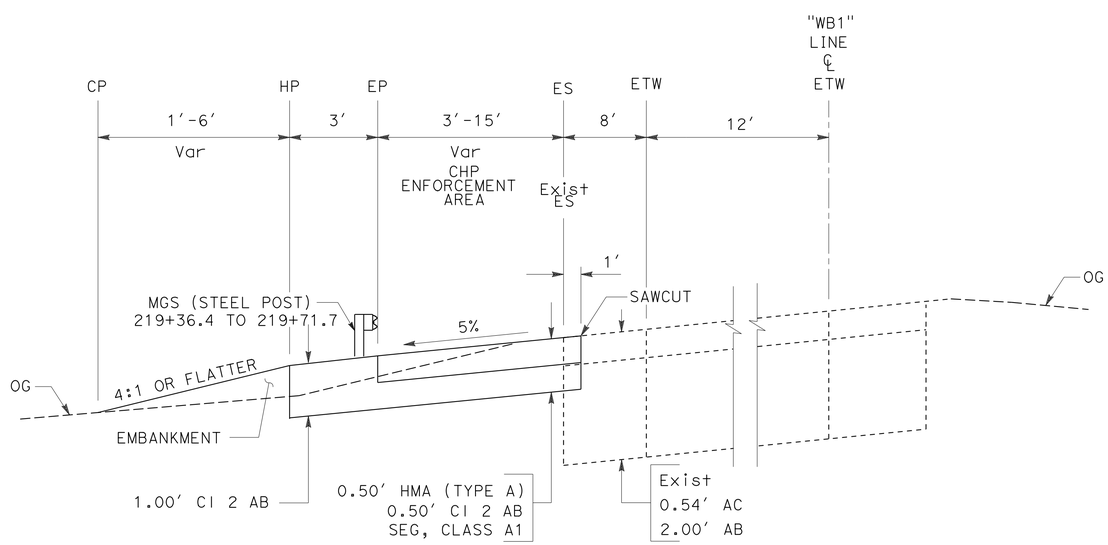

"WB1" LINE Sta 215+68.4 TO 219+47.6

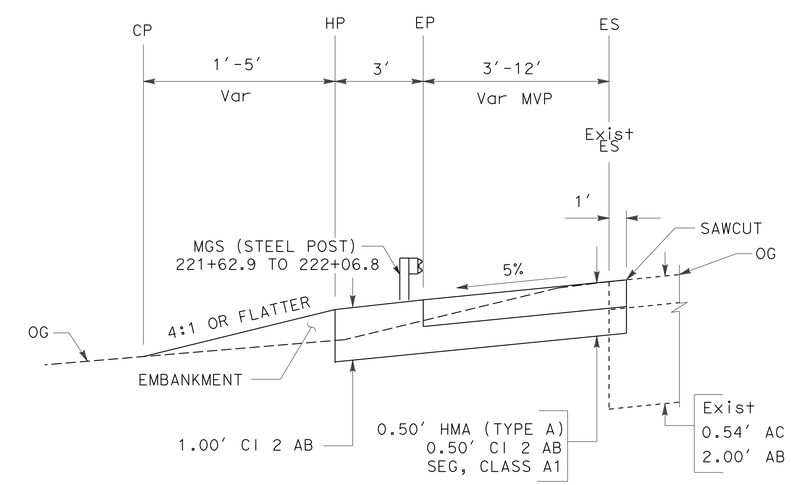

"WB1" LINE Sta 221+80.4 TO 222+93.9

WB WATERLOO SOUTHBOUND LOOP ON-RAMP

(LOCATION 3)

1 **REPLACED PER ADDENDUM No. 1 DATED JULY 8, 2015**

TYPICAL CROSS SECTIONS

NO SCALE

X-4

STATE OF CALIFORNIA - DEPARTMENT OF TRANSPORTATION
Caltrans® **DESIGN**

FUNCTIONAL SUPERVISOR: NOMER GUTIERREZ

CALCULATED-DESIGNED BY: YOON HAHN | REVISED BY: Y.H
CHECKED BY: SHEIKH ALAM | DATE REVISED: 02/23/15

LAST REVISION 12-23-14 | DATE PLOTTED => 07-JUL-2015 | TIME PLOTTED => 15:22

Dist	COUNTY	ROUTE	POST MILES TOTAL PROJECT	SHEET No.	TOTAL SHEETS
10	SJ	99	18.4/23.0	6	106

Sheikh Alam 12-23-14
REGISTERED CIVIL ENGINEER DATE

12-29-14
PLANS APPROVAL DATE

REGISTERED PROFESSIONAL ENGINEER SHEIKH ALAM No. C 72145 Exp. 6/30/16 CIVIL STATE OF CALIFORNIA

THE STATE OF CALIFORNIA OR ITS OFFICERS OR AGENTS SHALL NOT BE RESPONSIBLE FOR THE ACCURACY OR COMPLETENESS OF SCANNED COPIES OF THIS PLAN SHEET.

1

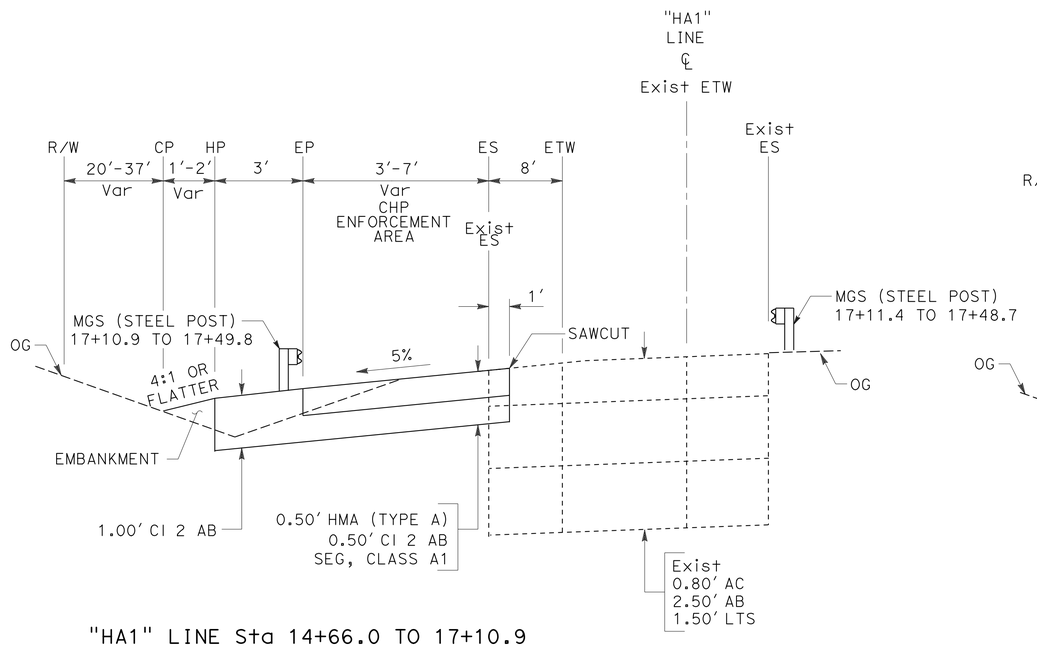

"HA1" LINE Sta 14+66.0 TO 17+10.9

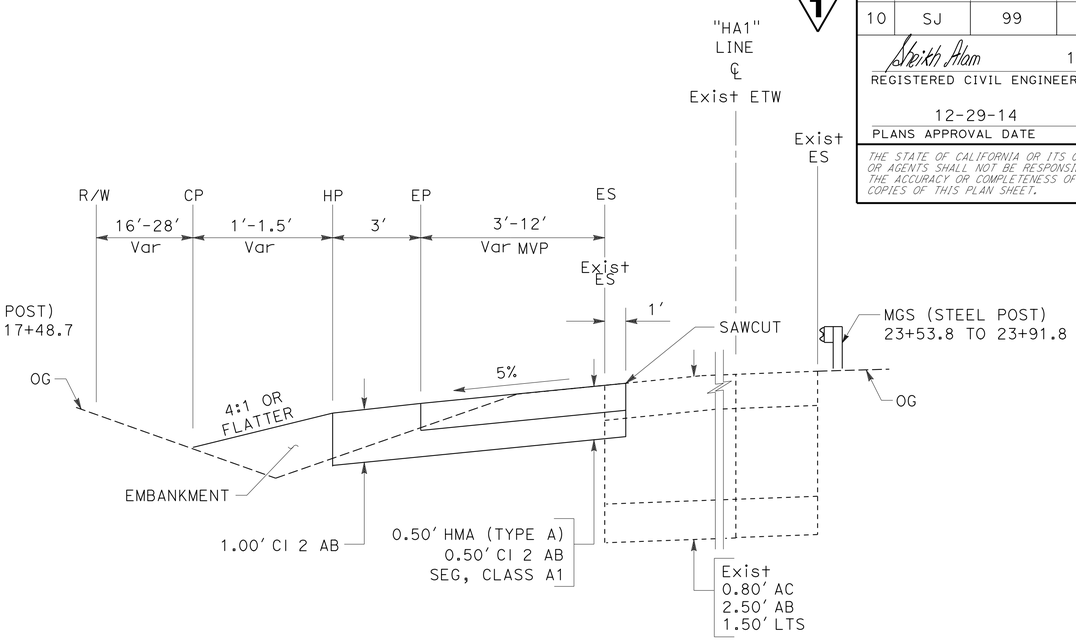

"HA1" LINE Sta TO 21+05.0 TO 21+90.0

HAMMER LANE SB ON-RAMP
(LOCATION 6)

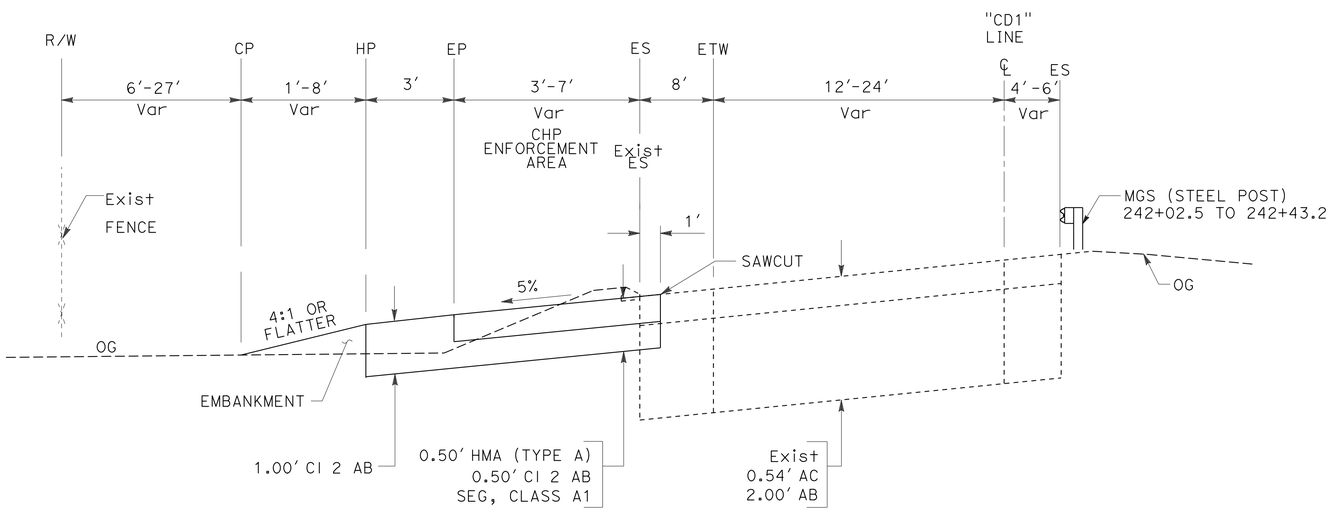

"CD1" LINE Sta 237+81.3 TO 240+27.6

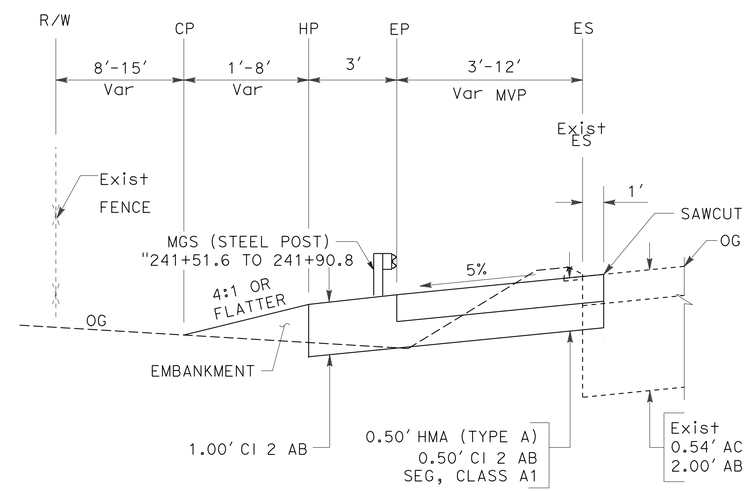

"CD1" LINE Sta 241+90.7 TO 242+75.8

CHEROKEE ROAD SB ON-RAMP
(LOCATION 5)

1 REPLACED PER ADDENDUM No. 1 DATED JULY 8, 2015

TYPICAL CROSS SECTIONS
NO SCALE

X-5

REVISED BY	Y.H
DATE REVISED	02/23/15
YOON HAHN	SHEIKH ALAM
CALCULATED-DESIGNED BY	CHECKED BY
FUNCTIONAL SUPERVISOR	NOMER GUTIERREZ

STATE OF CALIFORNIA - DEPARTMENT OF TRANSPORTATION
Caltrans DESIGN

LAST REVISION 12-23-14 | DATE PLOTTED => 07-JUL-2015 | TIME PLOTTED => 15:22

Dist	COUNTY	ROUTE	POST MILES TOTAL PROJECT	SHEET No.	TOTAL SHEETS
10	SJ	99	18.4/23.0	7	106

Sheikh Alam 12-23-14
REGISTERED CIVIL ENGINEER DATE

12-29-14
PLANS APPROVAL DATE

REGISTERED PROFESSIONAL ENGINEER SHEIKH ALAM No. C 72145 Exp. 6/30/16 CIVIL STATE OF CALIFORNIA

THE STATE OF CALIFORNIA OR ITS OFFICERS OR AGENTS SHALL NOT BE RESPONSIBLE FOR THE ACCURACY OR COMPLETENESS OF SCANNED COPIES OF THIS PLAN SHEET.

NOTES:

1. FOR ACCURATE RIGHT OF WAY DATA, CONTACT RIGHT OF WAY ENGINEERING AT THE DISTRICT OFFICE.
2. EXISTING UTILITY FACILITY INFORMATION IS INCOMPLETE.

ABBREVIATIONS:

CHP — CALIFORNIA HIGHWAY PATROL
ACOD — ASPHALT CONCRETE OVERSIDE DRAIN

LEGEND:

MINOR Conc (TEXTURED PAVING)

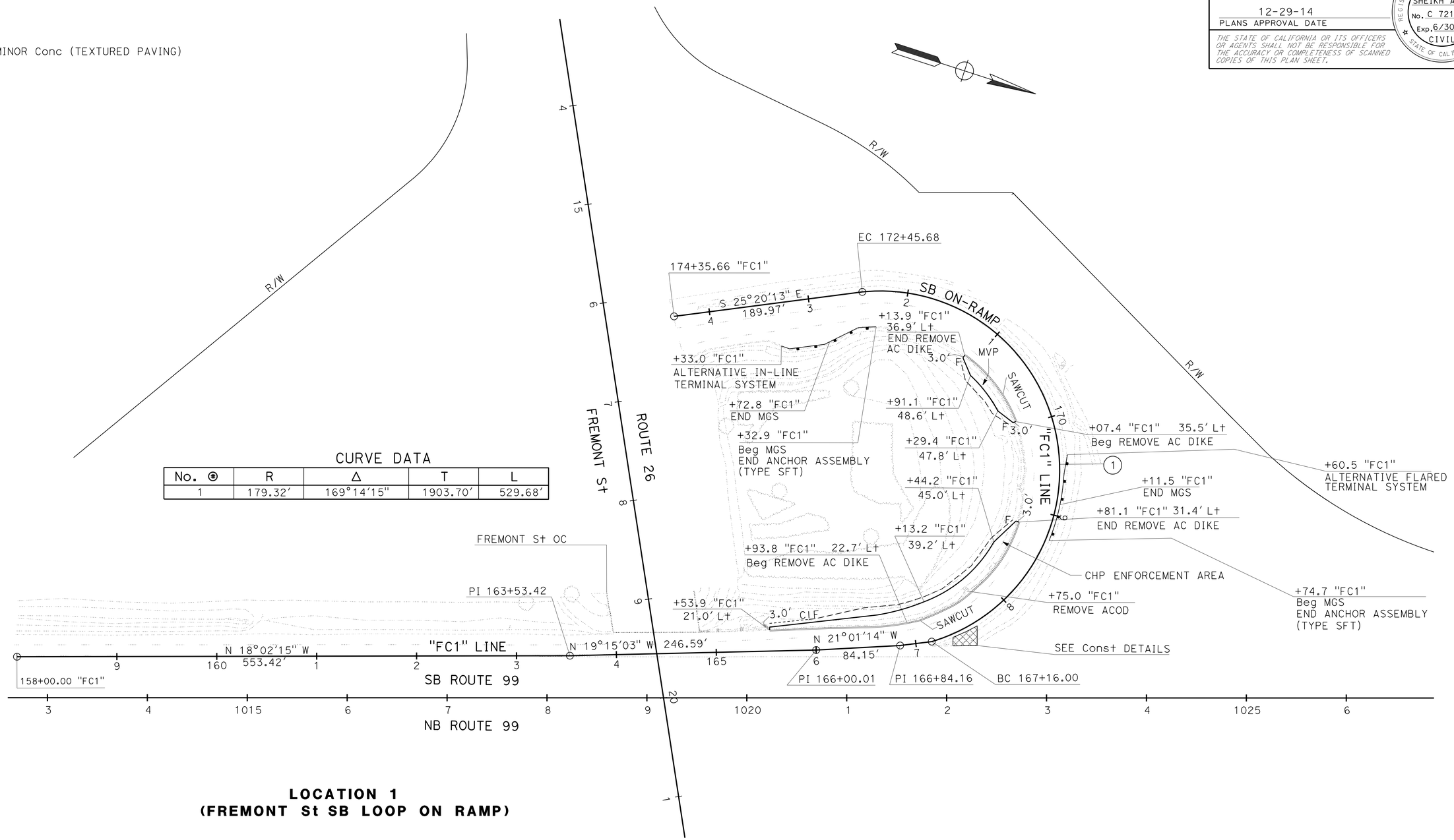

CURVE DATA

No. ⊛	R	Δ	T	L
1	179.32'	169°14'15"	1903.70'	529.68'

LOCATION 1
(FREMONT St SB LOOP ON RAMP)

1 REPLACED PER ADDENDUM No. 1 DATED JULY 8, 2015

LAYOUT

SCALE: 1"=50'

L-1

STATE OF CALIFORNIA - DEPARTMENT OF TRANSPORTATION
Caltrans **DESIGN**

FUNCTIONAL SUPERVISOR: NOMER GUTIERREZ
CALCULATED-DESIGNED BY: YOON HAHN
CHECKED BY: SHEIKH ALAM
REVISED BY: Y.H
DATE REVISED: 02/23/15

LAST REVISION 12-23-14
DATE PLOTTED => 07-JUL-2015
TIME PLOTTED => 15:23

Dist	COUNTY	ROUTE	POST MILES TOTAL PROJECT	SHEET No.	TOTAL SHEETS
10	SJ	99	18.4/23.0	8	106

Sheikh Alam 12-23-14
REGISTERED CIVIL ENGINEER DATE

12-29-14
PLANS APPROVAL DATE

REGISTERED PROFESSIONAL ENGINEER SHEIKH ALAM No. C 72145 Exp. 6/30/16 CIVIL STATE OF CALIFORNIA

THE STATE OF CALIFORNIA OR ITS OFFICERS OR AGENTS SHALL NOT BE RESPONSIBLE FOR THE ACCURACY OR COMPLETENESS OF SCANNED COPIES OF THIS PLAN SHEET.

NOTES:

FOR ACCURATE RIGHT OF WAY DATA, CONTACT RIGHT OF WAY ENGINEERING AT THE DISTRICT OFFICE.

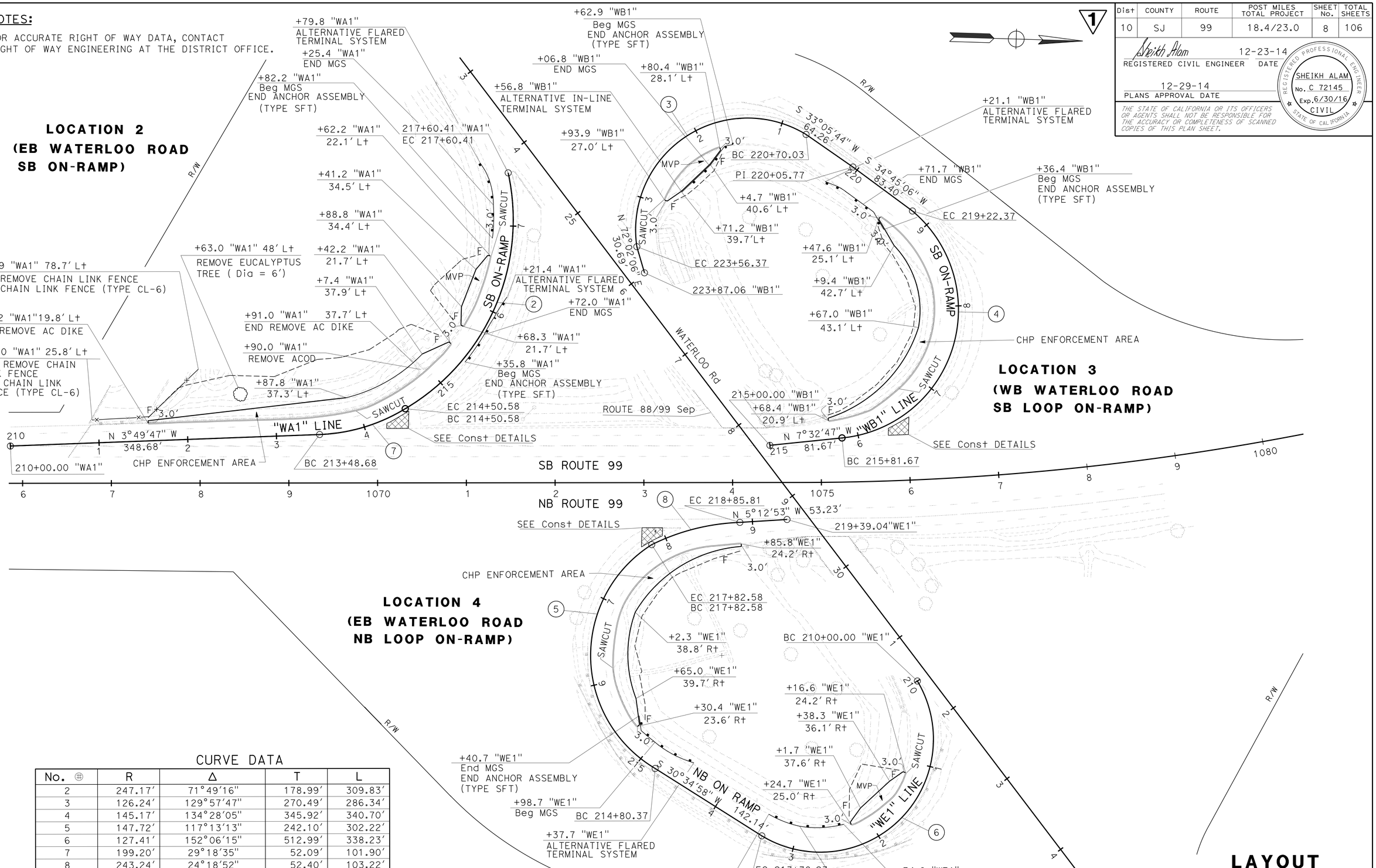

CURVE DATA

No. ⊕	R	Δ	T	L
2	247.17'	71°49'16"	178.99'	309.83'
3	126.24'	129°57'47"	270.49'	286.34'
4	145.17'	134°28'05"	345.92'	340.70'
5	147.72'	117°13'13"	242.10'	302.22'
6	127.41'	152°06'15"	512.99'	338.23'
7	199.20'	29°18'35"	52.09'	101.90'
8	243.24'	24°18'52"	52.40'	103.22'

1 REPLACED PER ADDENDUM No. 1 DATED JULY 8, 2015

LAYOUT

SCALE: 1"=50'

L-2

STATE OF CALIFORNIA - DEPARTMENT OF TRANSPORTATION
Caltrans DESIGN

FUNCTIONAL SUPERVISOR: NOMER GUTIERREZ
CALCULATED-DESIGNED BY: YOON HAHN
CHECKED BY: SHEIKH ALAM
REVISED BY: Y.H
DATE REVISED: 02/23/15

LAST REVISION 12-23-14
DATE PLOTTED => 07-JUL-2015
TIME PLOTTED => 15:23

Dist	COUNTY	ROUTE	POST MILES TOTAL PROJECT	SHEET No.	TOTAL SHEETS
10	SJ	99	18.4/23.0	9	106

Sheikh Alam 12-23-14
REGISTERED CIVIL ENGINEER DATE

12-29-14
PLANS APPROVAL DATE

REGISTERED PROFESSIONAL ENGINEER SHEIKH ALAM No. C 72145 Exp. 6/30/16 CIVIL STATE OF CALIFORNIA

THE STATE OF CALIFORNIA OR ITS OFFICERS OR AGENTS SHALL NOT BE RESPONSIBLE FOR THE ACCURACY OR COMPLETENESS OF SCANNED COPIES OF THIS PLAN SHEET.

NOTES:

FOR ACCURATE RIGHT OF WAY DATA, CONTACT
RIGHT OF WAY ENGINEERING AT THE DISTRICT OFFICE.

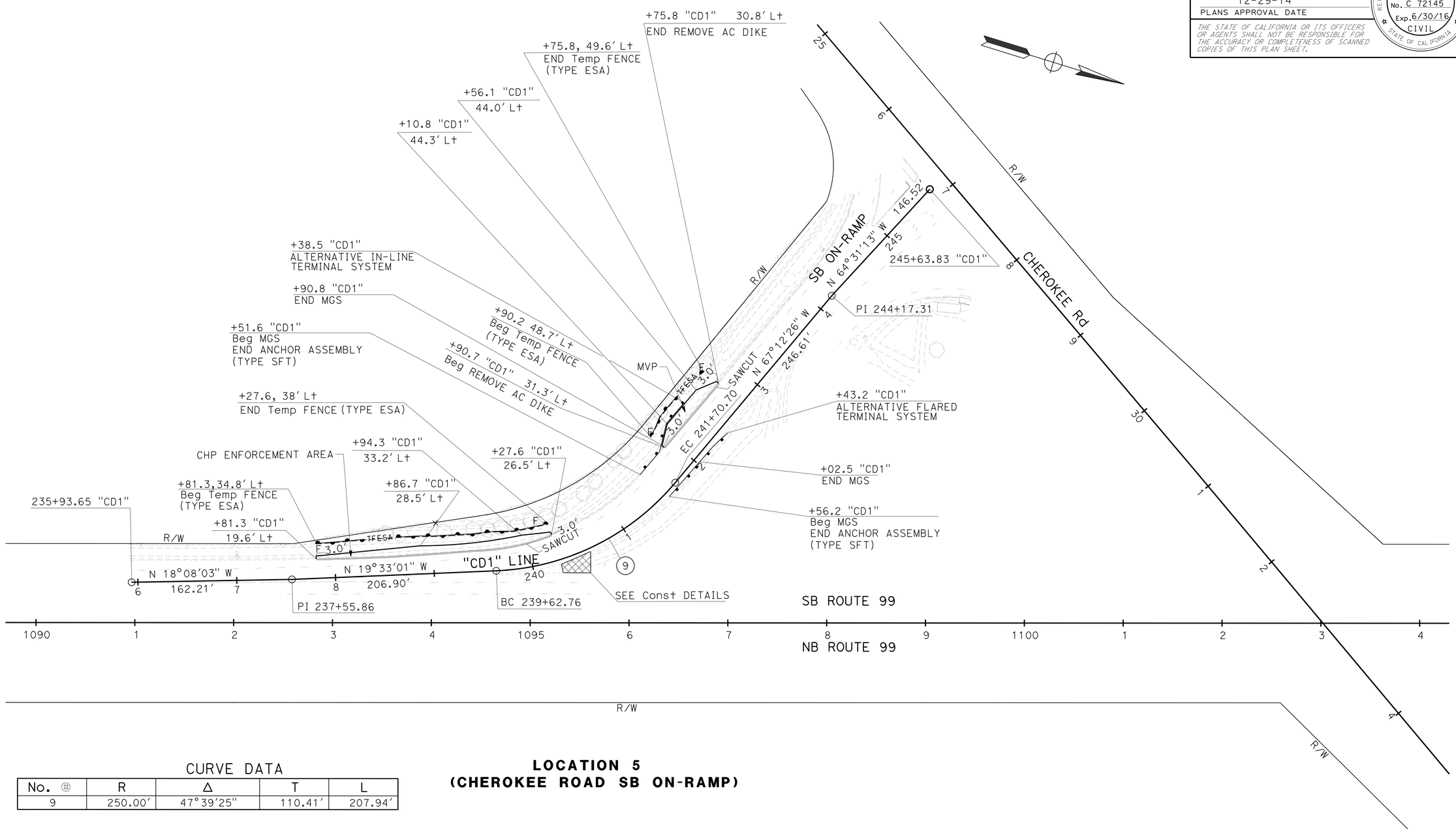

CURVE DATA

No. ⊕	R	Δ	T	L
9	250.00'	47°39'25"	110.41'	207.94'

LOCATION 5
(CHEROKEE ROAD SB ON-RAMP)

1 REPLACED PER ADDENDUM No. 1 DATED JULY 8, 2015

LAYOUT L-3
SCALE: 1"=50'

STATE OF CALIFORNIA - DEPARTMENT OF TRANSPORTATION
Caltrans® **DESIGN**

FUNCTIONAL SUPERVISOR: NOMER GUTIERREZ
CALCULATED-DESIGNED BY: YOON HAHN
CHECKED BY: SHEIKH ALAM
REVISED BY: Y.H
DATE REVISED: 02/23/15

LAST REVISION 12-23-14 DATE PLOTTED => 07-JUL-2015 TIME PLOTTED => 15:23

Dist	COUNTY	ROUTE	POST MILES TOTAL PROJECT	SHEET No.	TOTAL SHEETS
10	SJ	99	18.4/23.0	10	106

Sheikh Alam 12-23-14
REGISTERED CIVIL ENGINEER DATE

12-29-14
PLANS APPROVAL DATE

REGISTERED PROFESSIONAL ENGINEER SHEIKH ALAM No. C 72145 Exp. 6/30/16 CIVIL STATE OF CALIFORNIA

THE STATE OF CALIFORNIA OR ITS OFFICERS OR AGENTS SHALL NOT BE RESPONSIBLE FOR THE ACCURACY OR COMPLETENESS OF SCANNED COPIES OF THIS PLAN SHEET.

1

NOTES:

FOR ACCURATE RIGHT OF WAY DATA, CONTACT
RIGHT OF WAY ENGINEERING AT THE DISTRICT OFFICE.

CURVE DATA

No. ⊕	R	Δ	T	L
10	790.00′	28°59′58"	204.30′	399.84′
11	335.00′	34°35′26"	104.31′	202.25′

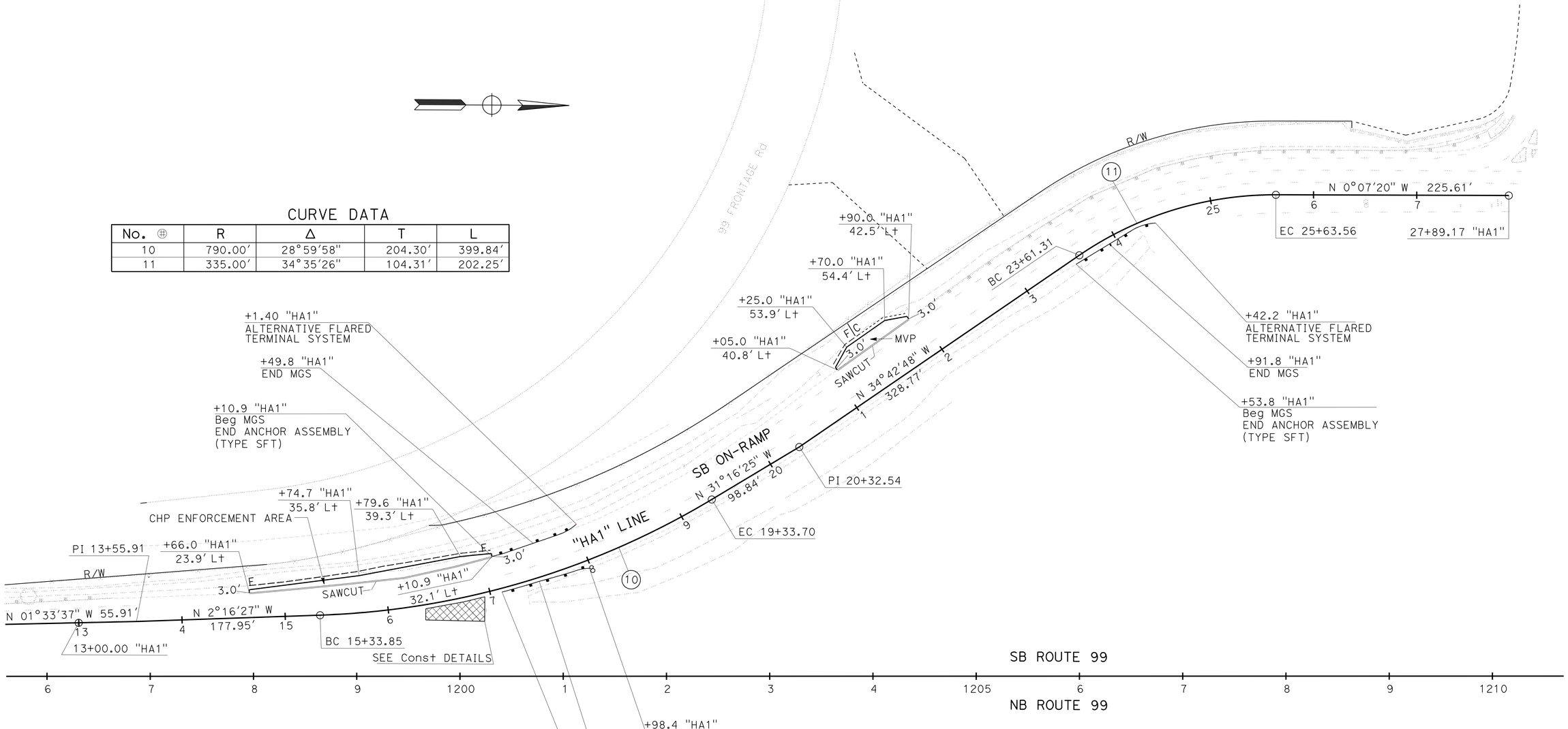

LOCATION 6
(HAMMER LANE SB ON-RAMP)

LAYOUT

SCALE: 1"=50′

L-4

1 **REPLACED PER ADDENDUM No. 1 DATED JULY 8, 2015**

STATE OF CALIFORNIA - DEPARTMENT OF TRANSPORTATION
Caltrans® **DESIGN**

FUNCTIONAL SUPERVISOR: NOMER GUTIERREZ
CALCULATED-DESIGNED BY: YOON HAHN
CHECKED BY: SHEIKH ALAM
REVISED BY: Y.H
DATE REVISED: 02/23/15

LAST REVISION 12-23-14
DATE PLOTTED => 07-JUL-2015
TIME PLOTTED => 15:23

Dist	COUNTY	ROUTE	POST MILES TOTAL PROJECT	SHEET No.	TOTAL SHEETS
10	SJ	99	18.4/23.0	14	106

Sheikh Alam 12-23-14
REGISTERED CIVIL ENGINEER DATE

12-29-14
PLANS APPROVAL DATE

REGISTERED PROFESSIONAL ENGINEER
SHEIKH ALAM
No. C 72145
Exp. 6/30/16
CIVIL
STATE OF CALIFORNIA

THE STATE OF CALIFORNIA OR ITS OFFICERS OR AGENTS SHALL NOT BE RESPONSIBLE FOR THE ACCURACY OR COMPLETENESS OF SCANNED COPIES OF THIS PLAN SHEET.

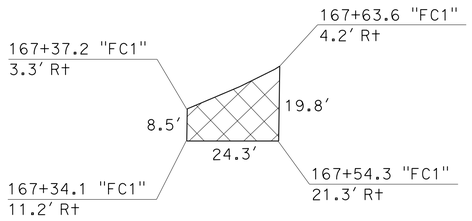

FREMONT St SB ON-RAMP LOOP
LOCATION 1

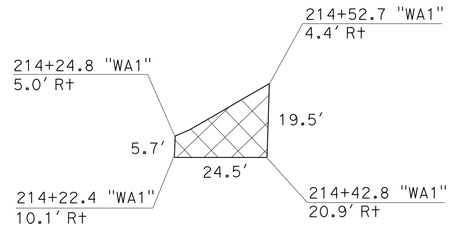

WATERLOO Rd SB ON-RAMP
LOCATION 2

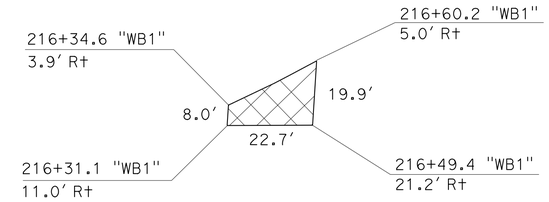

WATERLOO Rd SB ON-RAMP LOOP
LOCATION 3

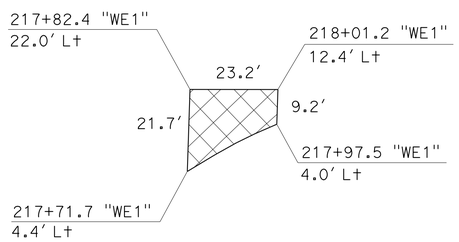

WATERLOO Rd NB ON-RAMP LOOP
LOCATION 4

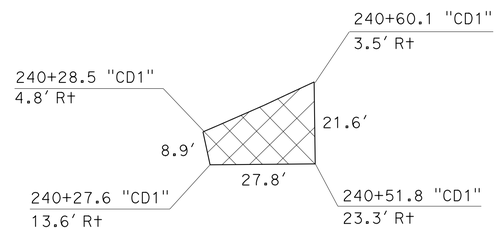

CHEROKEE Rd SB ON-RAMP
LOCATION 5

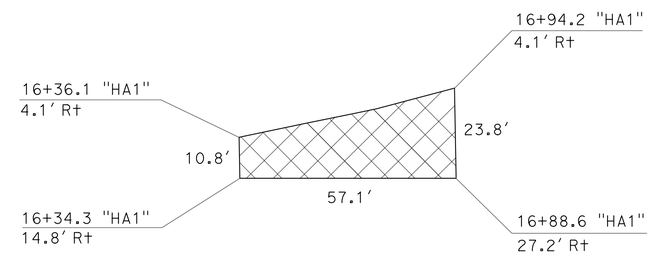

HAMMER LANE SB ON-RAMP
LOCATION 6

MINOR CONCRETE (TEXTURED PAVING)

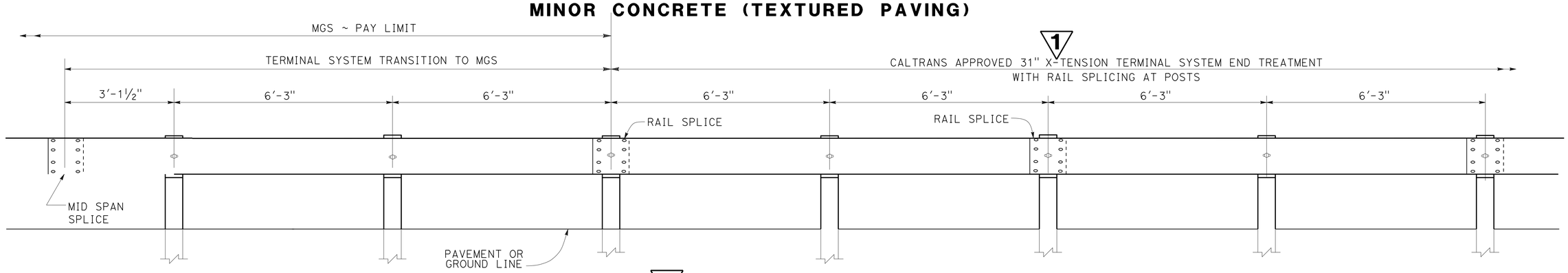

1

TRANSITION DETAIL FOR 31" X-TENSION TERMINAL SYSTEM END TREATMENT WITH RAIL SPLICING AT POSTS TO MIDWEST GUARDRAIL SYSTEM

NOTE: USE 15′-7½" LENGTH RAIL

1 **REPLACED PER ADDENDUM No. 1 DATED JULY 8, 2015**

CONSTRUCTION DETAILS

NO SCALE

C-4

STATE OF CALIFORNIA - DEPARTMENT OF TRANSPORTATION
Caltrans DESIGN

FUNCTIONAL SUPERVISOR: NOMER GUTIERREZ
CALCULATED-DESIGNED BY: YOON HAHN
CHECKED BY: SHEIKH ALAM
REVISED BY: Y.H
DATE REVISED: 02/23/15

LAST REVISION 12-23-14 | DATE PLOTTED => 07-JUL-2015 | TIME PLOTTED => 15:23

Dist	COUNTY	ROUTE	POST MILES TOTAL PROJECT	SHEET No.	TOTAL SHEETS
10	SJ	99	18.4/23.0	26	106

REGISTERED CIVIL ENGINEER 12/15/14 DATE

12-29-14
PLANS APPROVAL DATE

REGISTERED PROFESSIONAL ENGINEER HUE NGUYEN No. 74484 Exp 12/31/15 CIVIL STATE OF CALIFORNIA

THE STATE OF CALIFORNIA OR ITS OFFICERS OR AGENTS SHALL NOT BE RESPONSIBLE FOR THE ACCURACY OR COMPLETENESS OF SCANNED COPIES OF THIS PLAN SHEET.

STATIONARY MOUNTED CONSTRUCTION AREA SIGNS

SIGN	SIGN CODE FEDERAL	SIGN CODE CALIFORNIA	PANEL SIZE	No. OF POSTS AND SIZE	No. OF SIGNS	SIGN MESSAGE
A	G20-1		90" x 48"	2 - 6" X 6"	2	ROAD WORK NEXT 5 MILES
B	W20-1		48" x 48"	1 - 4" X 6"	4	ROAD WORK AHEAD
C	W20-1		36" x 36"	1 - 4" X 4"	16	ROAD WORK AHEAD
D	G20-2		36" X 18"	1 - 4" X 4"	11	END ROAD WORK
E		CPFIS	132" x 184"	2 - 6" X 6"	2	CONSTRUCTION PROJECT FUNDING IDENTIFICATION SIGNS

NOTES:

1. EXACT SIGN LOCATIONS TO BE DETERMINED BY THE ENGINEER.
2. FOR ADDITIONAL CONSTRUCTION AREA SIGNS, SEE SHEET MI-1.
3. EXISTING UTILITY FACILITY INFORMATION IS INCOMPLETE.

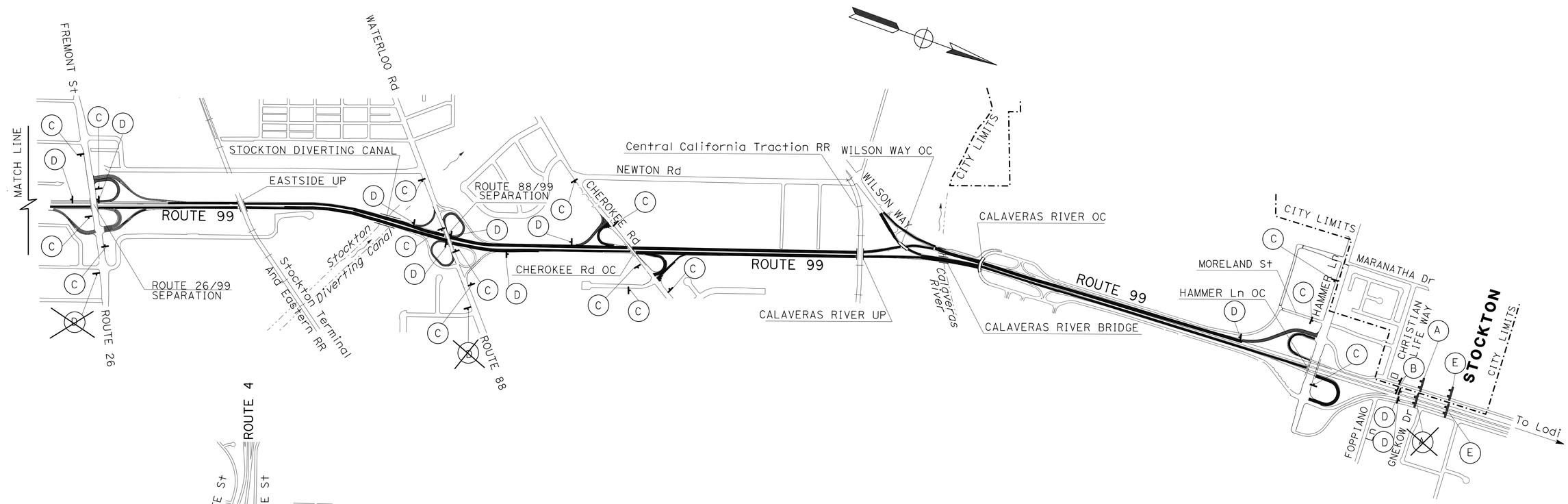

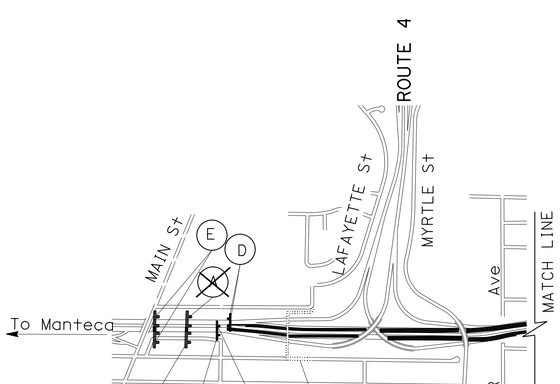

1 REPLACED PER ADDENDUM No. 1 DATED JULY 8, 2015

APPROVED FOR CONSTRUCTION AREA SIGN WORK ONLY

CONSTRUCTION AREA SIGNS

NO SCALE

CS-1

STATE OF CALIFORNIA - DEPARTMENT OF TRANSPORTATION
Caltrans® TRAFFIC DESIGN

FUNCTIONAL SUPERVISOR: MOHAMMED QATAMI
CALCULATED-DESIGNED BY: CECILE NGUYEN
CHECKED BY: HUE NGUYEN
REVISED BY / DATE REVISED

LAST REVISION 12-15-14
DATE PLOTTED => 07-JUL-2015
TIME PLOTTED => 15:23

Dist	COUNTY	ROUTE	POST MILES TOTAL PROJECT	SHEET No.	TOTAL SHEETS
10	SJ	99	18.4/23.0	27	106

Rhodel De Claro 12-23-14
REGISTERED CIVIL ENGINEER DATE

12-29-14
PLANS APPROVAL DATE

REGISTERED PROFESSIONAL ENGINEER RHODEL De CLARO No. 74058 Exp. 6/30/15 CIVIL STATE OF CALIFORNIA

THE STATE OF CALIFORNIA OR ITS OFFICERS OR AGENTS SHALL NOT BE RESPONSIBLE FOR THE ACCURACY OR COMPLETENESS OF SCANNED COPIES OF THIS PLAN SHEET.

NOTES:

1. GUIDE SIGNS ARE TO BE PLACED ON EXISTING SIGN POSTS WHERE POSSIBLE AND AS DETERMINED BY THE ENGINEER.
2. EXACT LOCATION OF ALL SIGNS TO BE DETERMINED BY THE ENGINEER.
3. DURING THE NB ROUTE 99 ON-RAMP FROM WILSON WAY CLOSURE, THE PCMS MESSAGE AT (E) SHOULD READ:

NB-99 RAMP CLOSED	→	USE CHEROKEE
1ST FRAME		2ND FRAME

4. DURING THE SB ROUTE 99 OFF-RAMP TO WILSON WAY CLOSURE, THE PCMS MESSAGE AT (F) SHOULD READ:

WILSON WY RAMP CLOSED	→	USE NEXT EXIT
1ST FRAME		2ND FRAME

5. TWO FLAGGERS ARE TO BE PLACED AT WILSON WAY/NEWTON ROAD INTERSECTION. CLOSE LANE #2 EB WILSON WAY DURING NB ROUTE 99 ON-RAMP CLOSURE.
6. ONE ADDITIONAL FLAGGER TO BE PLACED AT BARRICADE CLOSURE FOR LOCAL TRAFFIC ACCESS.
7. ON-OFF RAMPS MUST NOT BE CLOSED AT THE SAME TIME.
8. FOR ADDITIONAL CONSTRUCTION AREA SIGNS, SEE SHEET CS-1.
9. * ADVANCED SPECIAL MESSAGE ADVISORY SIGN AT RAMPS.

LEGEND:

- (x) SIGN No.
- CONSTRUCTION AREA SIGN (PORTABLE)
- TYPE III BARRICADE
- PORTABLE CHANGEABLE MESSAGE SIGN (PCMS)
- DETOUR ROUTE TRAFFIC FLOW

CONSTRUCTION AREA SIGNS (PORTABLE)

SIGN	SIGN CODE FEDERAL	SIGN CODE STATE	PANEL SIZE	No. OF POSTS AND SIZE	No. OF SIGNS	SIGN MESSAGE
(A)*		SC6-4 (CA)	48" x 60"	1 - 6" x 6"	2	"RAMP CLOSED INFO"
(B)	M4-10(R↑)		48" x 18"	1 - 4" x 4"	3	DETOUR (ARROW)
(C)	M4-10(L↑)		48" x 18"	1 - 4" x 4"	4	DETOUR (ARROW)
(D)	M4-8a		24" x 12"	1 - 4" x 4"	2	END DETOUR

PORTABLE CHANGEABLE MESSAGE SIGN

SIGN	No. OF SIGNS
(E)	3
(F)	1

~~TYPE III BARRICADE~~

~~LOCATION~~	~~EA~~
~~NB ROUTE 99 FROM WILSON WAY~~	~~4~~

1

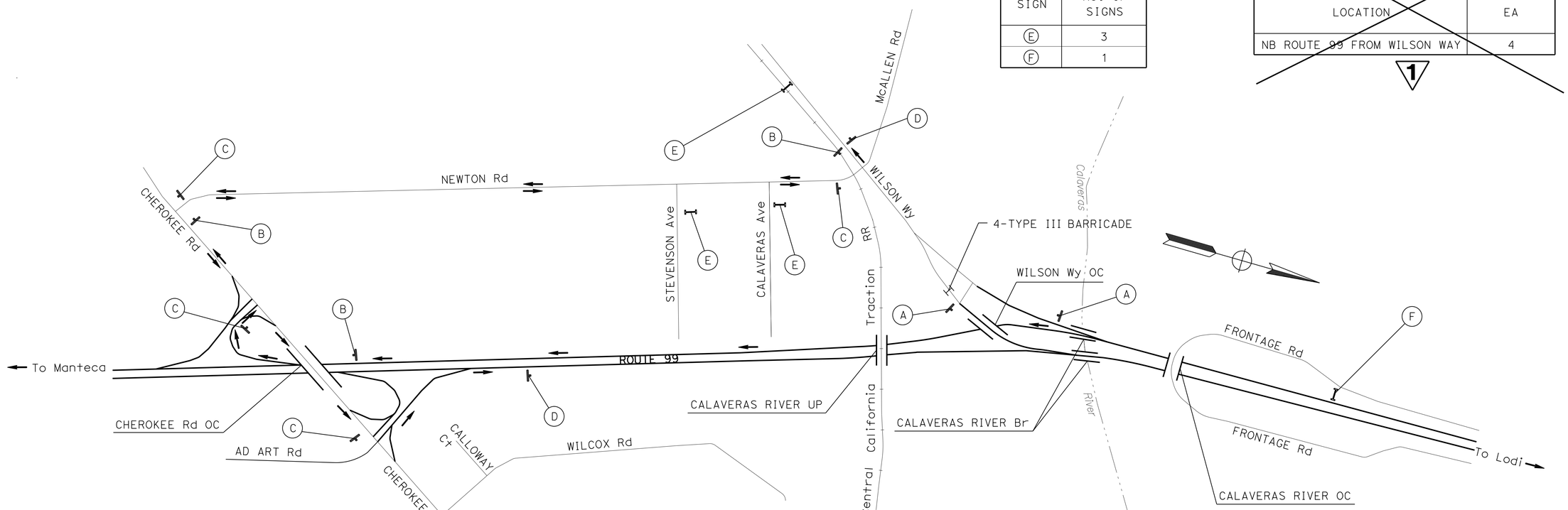

1 REPLACED PER ADDENDUM No. 1 DATED JULY 8, 2015

MOTORIST INFORMATION PLAN AND QUANTITIES

(WILSON WAY ON/OFF-RAMP CLOSURES)

NO SCALE

MI-1

APPROVED FOR MOTORIST INFORMATION WORK ONLY

STATE OF CALIFORNIA - DEPARTMENT OF TRANSPORTATION
Caltrans
MAINTENANCE

FUNCTIONAL SUPERVISOR: ALVIN MANGINDIN
CALCULATED-DESIGNED BY: RHODEL DE CLARO
CHECKED BY: BRUCE SUMIDA
REVISED BY: RDC
DATE REVISED: 12/03/14

LAST REVISION 12-23-14 | DATE PLOTTED => 07-JUL-2015 | TIME PLOTTED => 15:23

Dist	COUNTY	ROUTE	POST MILES TOTAL PROJECT	SHEET No.	TOTAL SHEETS
10	SJ	99	18.4/23.0	29	106

REGISTERED CIVIL ENGINEER 12/15/14 DATE

12-29-14
PLANS APPROVAL DATE

REGISTERED PROFESSIONAL ENGINEER HUE NGUYEN No. 74484 Exp 12/31/15 CIVIL STATE OF CALIFORNIA

THE STATE OF CALIFORNIA OR ITS OFFICERS OR AGENTS SHALL NOT BE RESPONSIBLE FOR THE ACCURACY OR COMPLETENESS OF SCANNED COPIES OF THIS PLAN SHEET.

LEGEND:

☐ RESET ROADSIDE SIGN

1 GF - GUARD RAILING DELINEATOR (GF = TYPE F; GG = TYPE G)
GG

NOTES:

1. FOR ACCURATE RIGHT OF WAY DATA, CONTACT RIGHT OF WAY ENGINEERING AT THE DISTRICT OFFICE.
2. EXISTING UTILITY FACILITY INFORMATION IS INCOMPLETE.

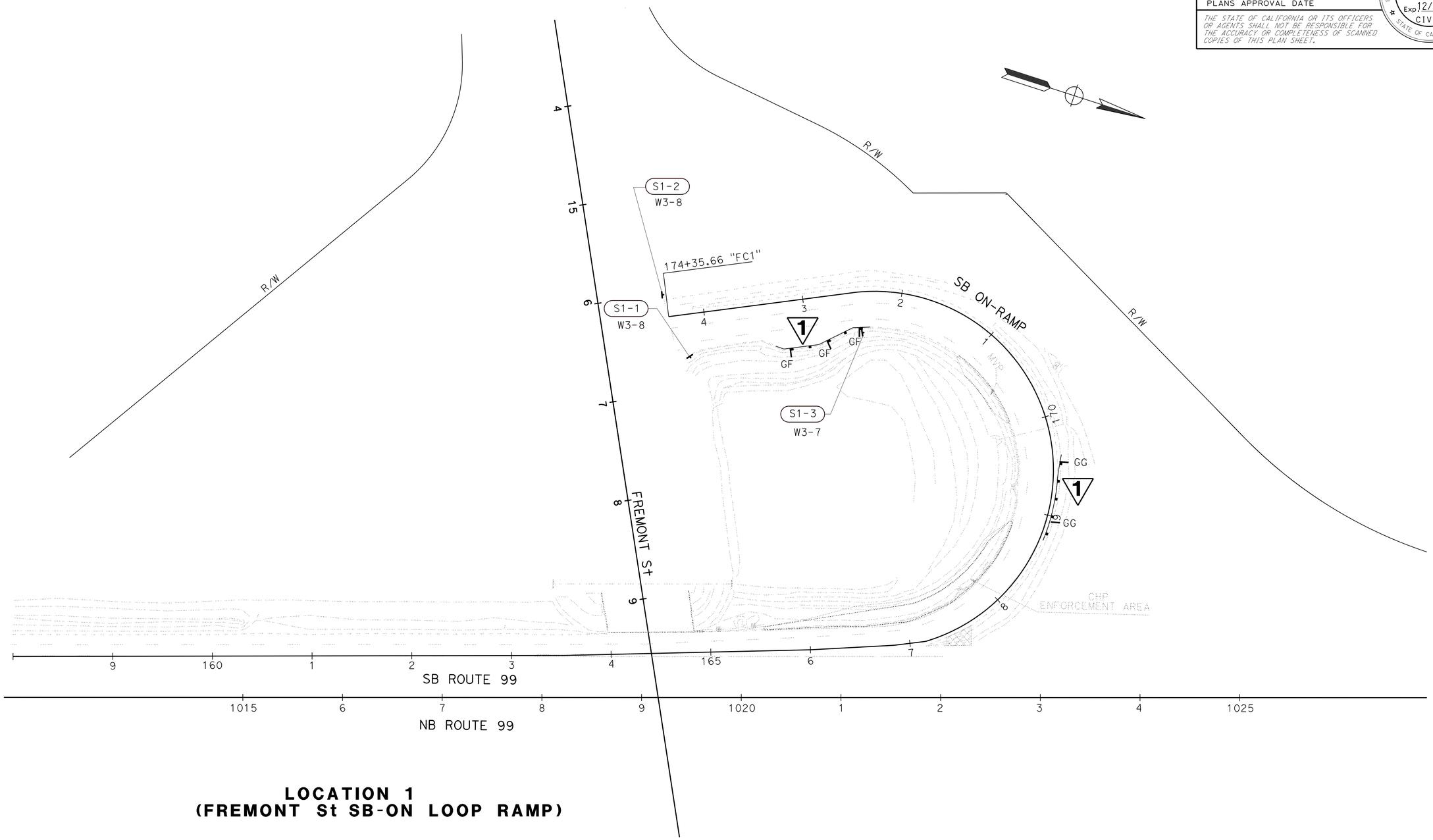

LOCATION 1
(FREMONT St SB-ON LOOP RAMP)

1 REPLACED PER ADDENDUM No. 1 DATED JULY 8, 2015

APPROVED FOR SIGN WORK ONLY

SIGN PLAN

SCALE: 1"=50'

S-1

STATE OF CALIFORNIA - DEPARTMENT OF TRANSPORTATION
Caltrans® **TRAFFIC DESIGN**

FUNCTIONAL SUPERVISOR: MOHAMMED QATAMI
CALCULATED-DESIGNED BY: CECILE NGUYEN
CHECKED BY: HUE NGUYEN
REVISED BY: HN
DATE REVISED: 3-24-15

LAST REVISION 12-15-14
DATE PLOTTED => 08-JUL-2015
TIME PLOTTED => 10:35

Dist	COUNTY	ROUTE	POST MILES TOTAL PROJECT	SHEET No.	TOTAL SHEETS
10	SJ	99	18.4/23.0	30	106

REGISTERED CIVIL ENGINEER 12/15/14 DATE

12-29-14
PLANS APPROVAL DATE

REGISTERED PROFESSIONAL ENGINEER HUE NGUYEN No. 74484 Exp. 12/31/15 CIVIL STATE OF CALIFORNIA

THE STATE OF CALIFORNIA OR ITS OFFICERS OR AGENTS SHALL NOT BE RESPONSIBLE FOR THE ACCURACY OR COMPLETENESS OF SCANNED COPIES OF THIS PLAN SHEET.

NOTE:
FOR ACCURATE RIGHT OF WAY DATA, CONTACT RIGHT OF WAY ENGINEERING AT THE DISTRICT OFFICE.

1

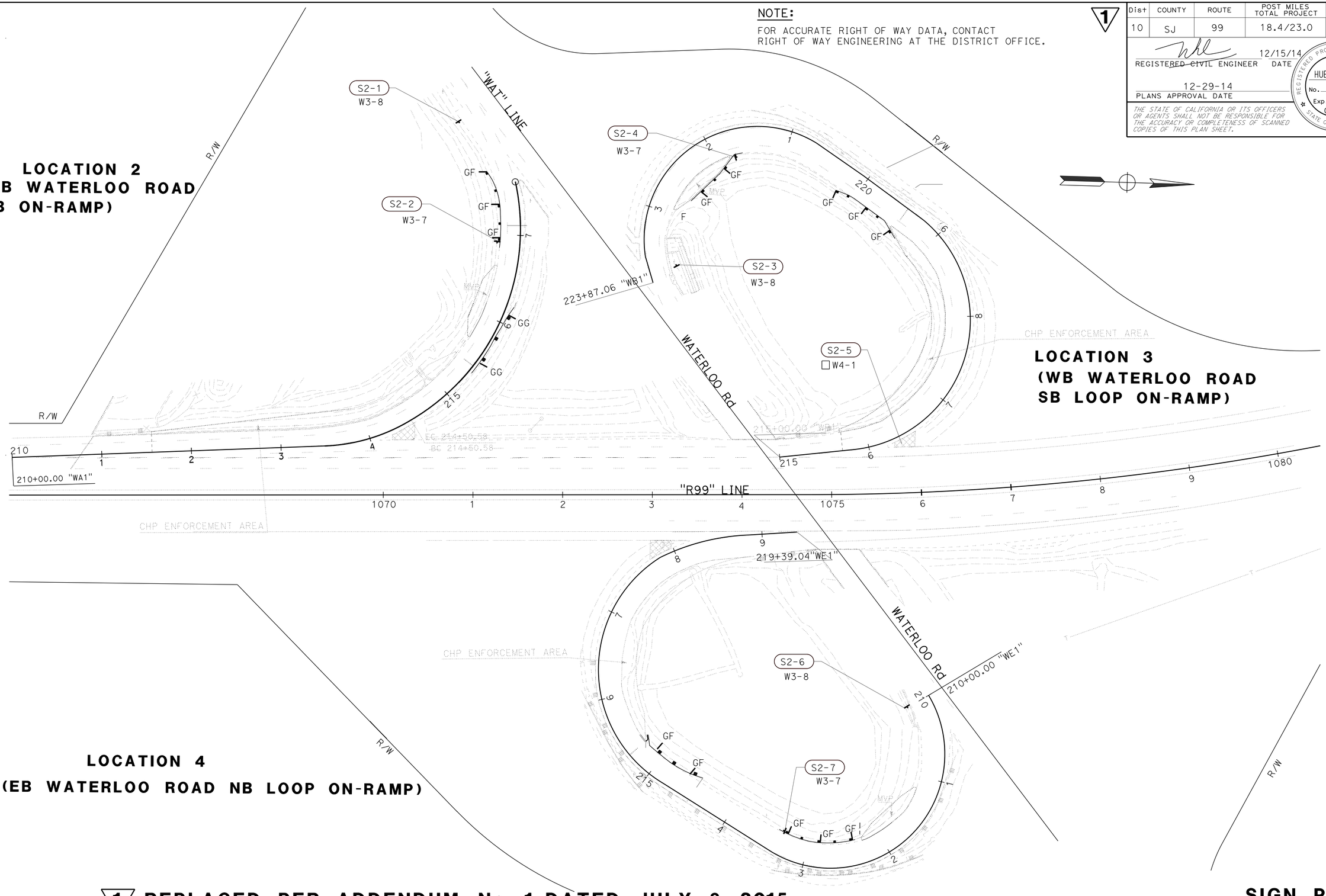

1 REPLACED PER ADDENDUM No. 1 DATED JULY 8, 2015

APPROVED FOR SIGN WORK ONLY

SIGN PLAN

S-2

SCALE: 1"=50'

HN	3-24-15		
REVISED BY	DATE REVISED		
CECILE NGUYEN	HUE NGUYEN		
CALCULATED-DESIGNED BY	CHECKED BY		
FUNCTIONAL SUPERVISOR	MOHAMMED QATAMI		

STATE OF CALIFORNIA - DEPARTMENT OF TRANSPORTATION
Caltrans
TRAFFIC DESIGN

LAST REVISION 12-15-14 | DATE PLOTTED => 07-JUL-2015 | TIME PLOTTED => 15:23

Dist	COUNTY	ROUTE	POST MILES TOTAL PROJECT	SHEET No.	TOTAL SHEETS
10	SJ	99	18.4/23.0	31	106

REGISTERED CIVIL ENGINEER 12/15/14 DATE

12-29-14
PLANS APPROVAL DATE

REGISTERED PROFESSIONAL ENGINEER
HUE NGUYEN
No. 74484
Exp. 12/31/15
CIVIL
STATE OF CALIFORNIA

THE STATE OF CALIFORNIA OR ITS OFFICERS OR AGENTS SHALL NOT BE RESPONSIBLE FOR THE ACCURACY OR COMPLETENESS OF SCANNED COPIES OF THIS PLAN SHEET.

NOTE:

FOR ACCURATE RIGHT OF WAY DATA, CONTACT RIGHT OF WAY ENGINEERING AT THE DISTRICT OFFICE.

LOCATION 5
(CHEROKEE ROAD SB ON-RAMP)

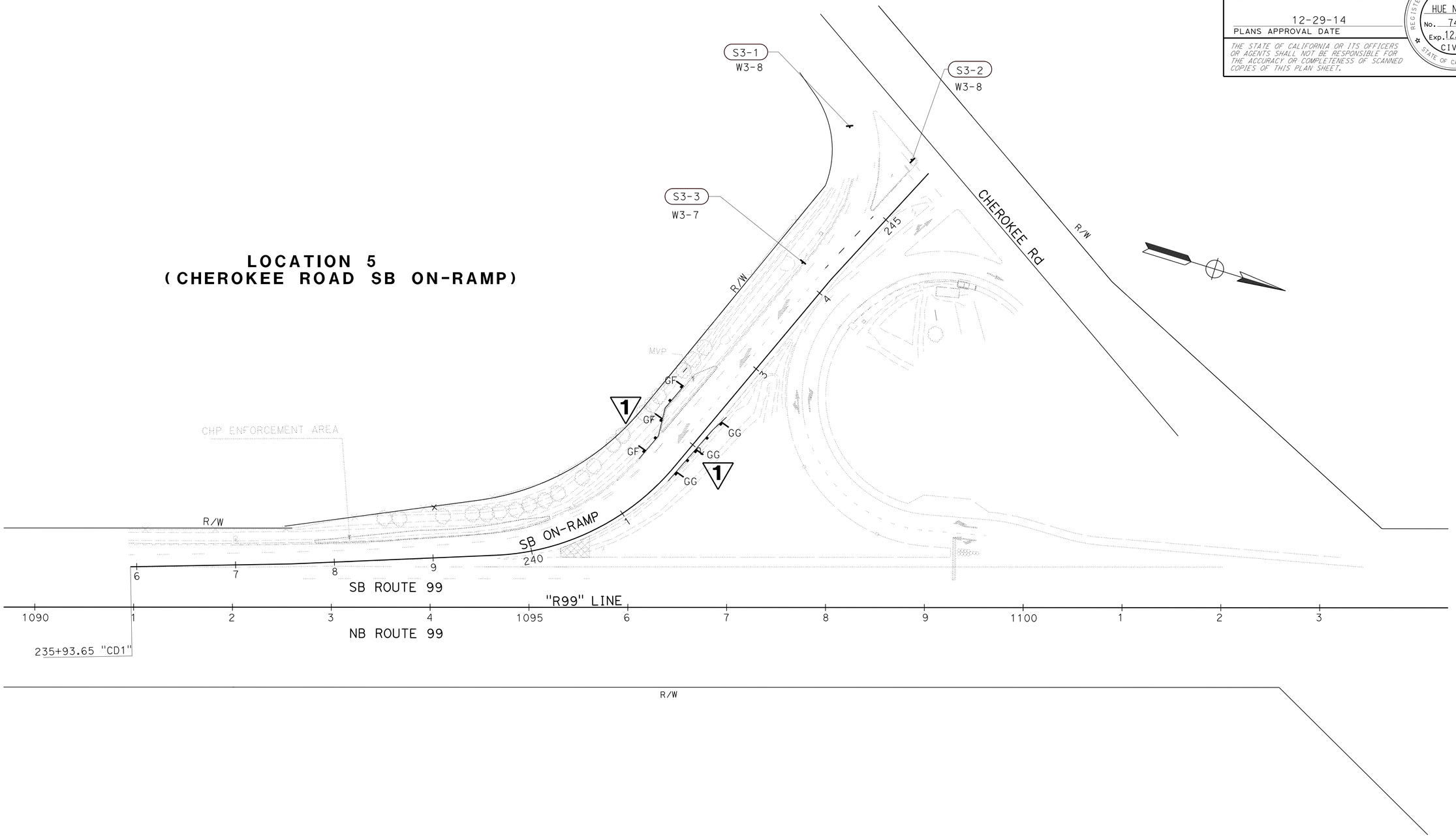

1 REPLACED PER ADDENDUM No. 1 DATED JULY 8, 2015

APPROVED FOR SIGN WORK ONLY

SCALE: 1"=50'

SIGN PLAN

S-3

STATE OF CALIFORNIA - DEPARTMENT OF TRANSPORTATION
Caltrans
TRAFFIC DESIGN

FUNCTIONAL SUPERVISOR: MOHAMMED QATAMI
CALCULATED-DESIGNED BY: CECILE NGUYEN
CHECKED BY: HUE NGUYEN
REVISED BY: HN
DATE REVISED: 3-24-15

LAST REVISION 12-15-14
DATE PLOTTED => 08-JUL-2015
TIME PLOTTED => 10:35

Dist	COUNTY	ROUTE	POST MILES TOTAL PROJECT	SHEET No.	TOTAL SHEETS
10	SJ	99	18.4/23.0	32	106

REGISTERED CIVIL ENGINEER — DATE 12/15/14

PLANS APPROVAL DATE 12-29-14

REGISTERED PROFESSIONAL ENGINEER HUE NGUYEN No. 74484 Exp. 12/31/15 CIVIL STATE OF CALIFORNIA

THE STATE OF CALIFORNIA OR ITS OFFICERS OR AGENTS SHALL NOT BE RESPONSIBLE FOR THE ACCURACY OR COMPLETENESS OF SCANNED COPIES OF THIS PLAN SHEET.

NOTE:

FOR ACCURATE RIGHT OF WAY DATA, CONTACT RIGHT OF WAY ENGINEERING AT THE DISTRICT OFFICE.

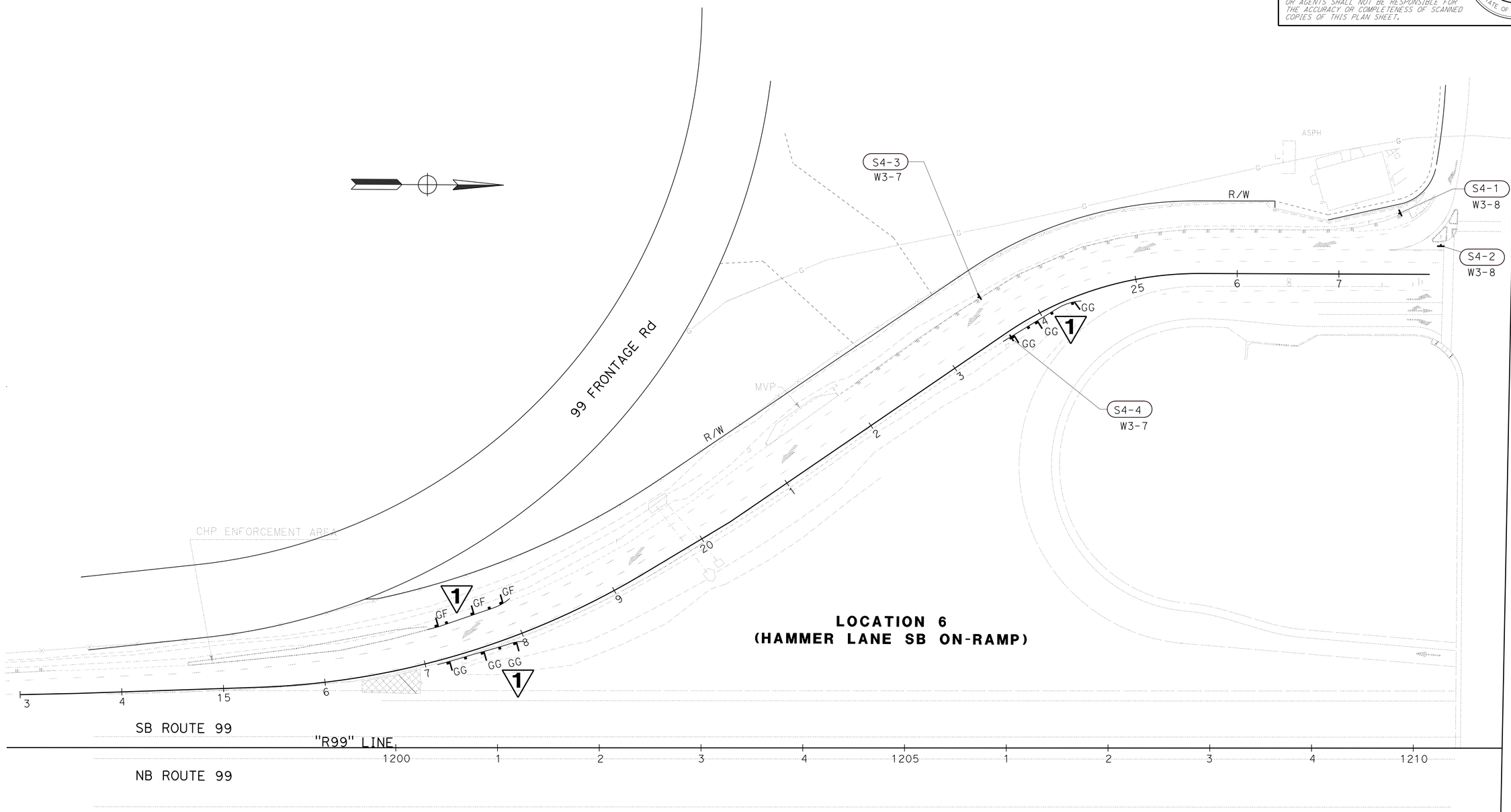

LOCATION 6
(HAMMER LANE SB ON-RAMP)

1 **REPLACED PER ADDENDUM No. 1 DATED JULY 8, 2015**

APPROVED FOR SIGN WORK ONLY

SIGN PLAN

SCALE: 1"=50'

S-4

STATE OF CALIFORNIA - DEPARTMENT OF TRANSPORTATION
Caltrans® **TRAFFIC DESIGN**

FUNCTIONAL SUPERVISOR: MOHAMMED QATAMI

CALCULATED-DESIGNED BY: CECILE NGUYEN
CHECKED BY: HUE NGUYEN

REVISED BY: HN
DATE REVISED: 3-24-15

LAST REVISION 12-15-14
DATE PLOTTED => 07-JUL-2015
TIME PLOTTED => 15:23

Dist	COUNTY	ROUTE	POST MILES TOTAL PROJECT	SHEET No.	TOTAL SHEETS
10	SJ	99	18.4/23.0	33	106

REGISTERED CIVIL ENGINEER 12/15/14 DATE

12-29-14
PLANS APPROVAL DATE

REGISTERED PROFESSIONAL ENGINEER HUE NGUYEN No. 74484 Exp 12/31/15 CIVIL STATE OF CALIFORNIA

THE STATE OF CALIFORNIA OR ITS OFFICERS OR AGENTS SHALL NOT BE RESPONSIBLE FOR THE ACCURACY OR COMPLETENESS OF SCANNED COPIES OF THIS PLAN SHEET.

NOTES:

1. EXACT SIGN LOCATIONS TO BE DETERMINED BY THE ENGINEER.
2. * - INSTALLATION DETAILS INCLUDED IN ELECTRICAL SHEETS.

ROADSIDE SIGN ITEMS

SHEET No.	SIGN No.	SIGN CODE	SIGN MESSAGE	PANEL SIZE	SINGLE FACED	BACKGROUND SHEETING COLOR	BACKGROUND RETROREFLECTIVITY ASTM TYPE	LEGEND SHEETING COLOR	LEGEND RETROREFLECTIVITY ASTM TYPE	GRAFFITI FLOW STANDARD	GRAFFITI FLOW PREMIUM	RETRO-REFLECTIVE SHEETING (TYPE XI) SQFT	FURNISH SINGLE SHEET ALUMINUM SIGN (0.063"- UNFRAMED) FOR RETROREFLECTIVE SHEETING (TYPE XI) SQFT	RESET ROADSIDE SIGN EA	INSTALL SIGN * (STRAP AND SADDLE BRACKET METHOD) EA	GUARD RAILING DELINEATOR 1 TYPE GF EA	GUARD RAILING DELINEATOR 1 TYPE GG EA	REMARKS
S-1	S1-1	W3-8	RAMP METERED WHEN FLASHING	36" x 36"	X	YELLOW	XI	BLACK			X	9.0	9.0		X			MOUNTED ON FLASHING BEACON, REFER TO ELECTRICAL PLANS
	S1-2	W3-8	RAMP METERED WHEN FLASHING	36" x 36"	X	YELLOW	XI	BLACK			X	9.0	9.0		X			MOUNTED ON FLASHING BEACON, REFER TO ELECTRICAL PLANS
	S1-3	W3-7	RAMP METER AHEAD	36" x 36"	X	YELLOW	XI	BLACK			X	9.0	9.0		X	3	2	MOUNTED ON FLASHING BEACON, REFER TO ELECTRICAL PLANS
S-2	S2-1	W3-8	RAMP METERED WHEN FLASHING	36" x 36"	X	YELLOW	XI	BLACK			X	9.0	9.0		X			MOUNTED ON FLASHING BEACON, REFER TO ELECTRICAL PLANS
	S2-2	W3-7	RAMP METER AHEAD	36" x 36"	X	YELLOW	XI	BLACK			X	9.0	9.0		X	3	2	MOUNTED ON FLASHING BEACON, REFER TO ELECTRICAL PLANS
	S2-3	W3-8	RAMP METERED WHEN FLASHING	36" x 36"	X	YELLOW	XI	BLACK			X	9.0	9.0		X			MOUNTED ON FLASHING BEACON, REFER TO ELECTRICAL PLANS
	S2-4	W3-7	RAMP METER AHEAD	36" x 36"	X	YELLOW	XI	BLACK			X	9.0	9.0		X	5		MOUNTED ON FLASHING BEACON, REFER TO ELECTRICAL PLANS
	S2-5	W4-1	MERGE											1				
	S2-6	W3-8	RAMP METERED WHEN FLASHING	36" x 36"	X	YELLOW	XI	BLACK			X	9.0	9.0		X			MOUNTED ON FLASHING BEACON, REFER TO ELECTRICAL PLANS
	S2-7	W3-7	RAMP METER AHEAD	36" x 36"	X	YELLOW	XI	BLACK			X	9.0	9.0		X	5		MOUNTED ON FLASHING BEACON, REFER TO ELECTRICAL PLANS
S-3	S3-1	W3-8	RAMP METERED WHEN FLASHING	36" x 36"	X	YELLOW	XI	BLACK			X	9.0	9.0		X			MOUNTED ON FLASHING BEACON, REFER TO ELECTRICAL PLANS
	S3-2	W3-8	RAMP METERED WHEN FLASHING	36" x 36"	X	YELLOW	XI	BLACK			X	9.0	9.0		X			MOUNTED ON FLASHING BEACON, REFER TO ELECTRICAL PLANS
	S3-3	W3-7	RAMP METER AHEAD	36" x 36"	X	YELLOW	XI	BLACK			X	9.0	9.0		X	3	3	MOUNTED ON FLASHING BEACON, REFER TO ELECTRICAL PLANS
S-4	S4-1	W3-8	RAMP METERED WHEN FLASHING	36" x 36"	X	YELLOW	XI	BLACK			X	9.0	9.0		X			MOUNTED ON FLASHING BEACON, REFER TO ELECTRICAL PLANS
	S4-2	W3-8	RAMP METERED WHEN FLASHING	36" x 36"	X	YELLOW	XI	BLACK			X	9.0	9.0		X			MOUNTED ON FLASHING BEACON, REFER TO ELECTRICAL PLANS
	S4-3	W3-7	RAMP METER AHEAD	36" x 36"	X	YELLOW	XI	BLACK			X	9.0	9.0		X			MOUNTED ON FLASHING BEACON, REFER TO ELECTRICAL PLANS
	S4-4	W3-7	RAMP METER AHEAD	36" x 36"	X	YELLOW	XI	BLACK			X	9.0	9.0		X	3	6	MOUNTED ON FLASHING BEACON, REFER TO ELECTRICAL PLANS
SUBTOTAL												144.0	144.0	1		22	13	
TOTAL												144.0	144.0	1		35		

1 REPLACED PER ADDENDUM No. 1 DATED JULY 8, 2015

SIGN QUANTITIES
SQ-1

STATE OF CALIFORNIA - DEPARTMENT OF TRANSPORTATION
Caltrans TRAFFIC DESIGN

FUNCTIONAL SUPERVISOR: MOHAMMED QATAMI
CALCULATED-DESIGNED BY: CECILE NGUYEN
CHECKED BY: HUE NGUYEN
REVISED BY: HN
DATE REVISED: 3-24-15

LAST REVISION 12-15-14
DATE PLOTTED => 07-JUL-2015
TIME PLOTTED => 15:23

Dist	COUNTY	ROUTE	POST MILES TOTAL PROJECT	SHEET No.	TOTAL SHEETS
10	SJ	99	18.4/23.0	37	106

Rhodel De Claro 12-23-14
REGISTERED CIVIL ENGINEER DATE

12-29-14
PLANS APPROVAL DATE

REGISTERED PROFESSIONAL ENGINEER RHODEL De CLARO No. 74058 Exp. 6/30/15 CIVIL STATE OF CALIFORNIA

THE STATE OF CALIFORNIA OR ITS OFFICERS OR AGENTS SHALL NOT BE RESPONSIBLE FOR THE ACCURACY OR COMPLETENESS OF SCANNED COPIES OF THIS PLAN SHEET.

TRAFFIC MANAGEMENT SYSTEM ELEMENTS (EXISTING)

ROUTE	PM	Dir	LOCATION	TYPE
4	R19.41	EB	SB ROUTE 99 FROM EB ROUTE 4	TMS
99	18.67		CROSSTOWN	RWIS
	18.80	NB	SOUTH OF MARSH STREET Ped OC, OFF RAMP TO EB ROUTE 4	TMS
	18.80	SB	SOUTH OF Ped OC, OFF RAMP FROM EB ROUTE 4	TMS
	18.85	SB	SOUTH OF MYRTLE STREET OC	TMS
	19.11	SB	SOUTH OF ON RAMP FROM EB FREMONT STREET/ROUTE 26 EAST	TMS
	19.28	SB	ROUTE 26/FREMONT STREET	SIGNAL
	19.29	NB	ROUTE 26/FREMONT STREET	SIGNAL
	19.37	NB/SB	NORTH OF FREMONT STREET	TMS
	19.51	NB	NORTH OF FREMONT STREET	CCTV, CMS
	19.60	NB/SB	NORTH OF FREMONT STREET	TMS
	19.75	NB	FREMONT STREET	RWIS
	19.87	NB	SOUTH OF WATERLOO ROAD	TMS
	20.00	NB/SB	SOUTH OF WATERLOO ROAD OC	TMS
	20.11	SB	SOUTH OF ON RAMP FROM EB ROUTE 88/WATERLOO ROAD	TMS
	20.12	SB	SOUTH OF ROUTE 88/WATERLOO ROAD	CCTV, CMS, TMS
	20.15	NB	SOUTH OF WATERLOO ROAD	TMS
	20.34	SB	WATERLOO ROAD	SIGNAL
	20.35	NB	WATERLOO ROAD	SIGNAL
	20.39	SB	SOUTH OF OFF RAMP TO ROUTE 88/WATERLOO ROAD	TMS
	20.40	NB	NORTH OF WATERLOO ROAD	TMS
	20.60	SB	SOUTH OF ON RAMP FROM CHEROKEE ROAD	TMS
	20.61	NB	NORTH OF WATERLOO ROAD	TMS
	20.76	SB	ON RAMP FROM CHEROKEE ROAD	TMS
	20.80	NB	SOUTH OF OFF RAMP TO CHEROKEE ROAD	TMS
	20.85	SB	SOUTH OF CHEROKEE ROAD OC	TMS
	20.85	SB	OFF RAMP TO CHEROKEE ROAD	TMS
	20.88	NB	CHEROKEE ROAD	SIGNAL
	20.89	SB	CHEROKEE ROAD	SIGNAL
	20.94	NB	OFF RAMP TO CHEROKEE ROAD	MVDS, TMS
	21.05	NB	ON RAMP FROM CHEROKEE ROAD	MVDS
	21.14	SB	NORTH OF CHEROKEE ROAD OC	TMS
	21.15	NB	NORTH OF ON RAMP FROM CHEROKEE ROAD	TMS
	21.35	NB/SB	SOUTH OF WILSON WAY OC	TMS
	21.61	NB/SB	SOUTH OF WILSON WAY OC	TMS
	21.85	NB	NORTH OF OFF RAMP TO WILSON WAY	TMS
	21.85		WILSON WAY	RWIS
	21.86	SB	SOUTH OF CALAVERAS RIVER OC	TMS
	22.00	NB	NORTH OF WILSON WAY	CMS
	22.09	NB	NORTH OF OFF RAMP TO WILSON WAY	TMS
	22.10	SB	SOUTH OF HAMMER LANE OC	TMS
	22.36	NB	SOUTH OF ON RAMP FROM HAMMER LANE	TMS
	22.50	SB	SOUTH OF HAMMER LANE	CCTV, CMS
	22.60	NB	SOUTH OF ON RAMP FROM HAMMER LANE	TMS
	22.84	NB	SOUTH OF OFF RAMP TO HAMMER LANE	TMS
	22.84		HAMMER LANE	RWIS
	22.91	SB	HAMMER LANE	SIGNAL
	22.93	NB	HAMMER LANE	SIGNAL

NOTE: TRAFFIC MANAGEMENT SYSTEM ELEMENTS LOCATIONS ARE APPROXIMATE.

1 MIDWEST GUARDRAIL SYSTEM

LOCATION	STATION	MIDWEST GUARDRAIL SYSTEM (STEEL POST)	ALTERNATIVE IN-LINE TERMINAL SYSTEM	ALTERNATIVE FLARED TERMINAL SYSTEM	END ANCHOR ASSEMBLY (TYPE SFT)	LAYOUT TYPE (N)
		LF	EA	EA	EA	
1	"FC1"168+74.7 TO "FC1" 169+11.5 R†	37.5		1	1	16B
	"FC1"172+32.9 TO "FC1" 172+72.8 L†	37.5	1		1	16A
2	"WA1" 215+35.8 TO "WA1" 215+72.0 R†	37.5		1	1	16B
	"WA1" 216+82.2 TO "WA1" 217+25.4 L†	37.5		1	1	16B
3	"WB1" 219+36.4 TO "WB1" 219+71.7 L†	37.5		1	1	16B
	"WB1" 221+62.9 TO "WB1" 222+06.8 L†	37.5	1		1	16A
4	"WE1" 212+98.6 TO "WE1" 213+45.5 R†	37.5		1	1	16B
	"WE1" 214+98.7 TO "WE1" 215+40.7 R†	37.5		1	1	16B
5	"CD1" 242+02.5 TO "CD1" 242+43.2 R†	37.5		1	1	16B
	"CD1" 241+51.6 TO "CD1" 241+90.8 L†	37.5	1		1	16A
6	"HA1" 17+10.9 TO "HA1" 17+49.8 L†	37.5		1	1	16B
	"HA1" 17+11.4 TO "HA1" 17+48.7 R†	37.5		1	1	16B
	"HA1" 23+53.8 TO "HA1" 23+91.8 R†	37.5		1	1	16B
	TOTAL	487.5	3	10	13	

1 SUBGRADE ENHANCEMENT GEOTEXTILE

LOCATION	STATION	SUBGRADE ENHANCEMENT GEOTEXTILE, CLASS A1
		SQYD
1	"FC1"165+53.9 TO "FC1" 168+81.1 L†	454.5
	"FC1"170+07.4 TO "FC1" 171+13.9 L†	117.7
2	"WA1" 211+56.2 TO "WA1" 215+42.2 L†	631.1
	"WA1" 215+68.3 TO "WA1" 216+62.2 L†	126.1
3	"WB1" 215+68.4 TO "WB1" 219+47.6 L†	554.7
	"WB1" 221+80.4 TO "WB1" 222+93.9 L†	135.6
4	"WE1" 211+16.6 TO "WE1" 212+24.7 R†	134.7
	"WE1" 215+30.4 TO "WE1" 218+85.8 R†	508.7
5	"CD1" 237+81.3 TO "CD1" 240+27.6 L†	250.7
	"CD1" 241+90.7 TO "CD1" 242+75.8 L†	127.5
6	"HA1" 14+66.0 TO "HA1" 17+10.9 L†	227.2
	"HA1" 21+05.0 TO "HA1" 21+90.0 L†	121.3
	TOTAL	3,389.7

1 REPLACED PER ADDENDUM No. 1 DATED JULY 8, 2015

SUMMARY OF QUANTITIES
Q-4

STATE OF CALIFORNIA - DEPARTMENT OF TRANSPORTATION
Caltrans® MAINTENANCE

FUNCTIONAL SUPERVISOR: ALVIN MANGINDIN
CALCULATED-DESIGNED BY: RHODEL DE CLARO
CHECKED BY: BRUCE SUMIDA
REVISED BY: RDC
DATE REVISED: 12/03/14

LAST REVISION 12-23-14 | DATE PLOTTED => 07-JUL-2015 | TIME PLOTTED => 15:23

Dist	COUNTY	ROUTE	POST MILES TOTAL PROJECT	SHEET No.	TOTAL SHEETS
10	SJ	99	18.4/23.0	38	106

Sheikh Alam 12-23-14
REGISTERED CIVIL ENGINEER DATE

12-29-14
PLANS APPROVAL DATE

REGISTERED PROFESSIONAL ENGINEER SHEIKH ALAM No. C 72145 Exp. 6/30/16 CIVIL STATE OF CALIFORNIA

THE STATE OF CALIFORNIA OR ITS OFFICERS OR AGENTS SHALL NOT BE RESPONSIBLE FOR THE ACCURACY OR COMPLETENESS OF SCANNED COPIES OF THIS PLAN SHEET.

ROADWAY ITEMS

LOCATION	STATION	ROADWAY: COLD PLANE AC PAVEMENT	ROADWAY: HMA (TYPE A)	ROADWAY: CI 2 AB	ROADWAY: TACK COAT	EARTHWORK: ROADWAY EXCAVATION	EARTHWORK: EMBANKMENT (N)	EARTHWORK: IMPORTED BORROW
		SQYD	TON	CY	TON	CY	CY	CY
UNDERNEATH BRIDGE STRUCTURES		5,110						
SHOULDERS		1,122	83		1.0			
CONFORM TAPERS AT BRIDGE STRUCTURES		18,064	3186		7.5			
MAINLINE (DIGOUTS)		22,967	4061		9.6			
RAMP (DIGOUTS)		4,722	618		1.9			
1	"FC1"165+53.9 TO "FC1" 168+81.1 Lt		132	98	0.24	163	8	
1	"FC1"170+07.4 TO "FC1" 171+13.9 Lt		35	28	0.06	47	4	
2	"WA1" 211+56.2 TO "WA1" 215+42.2 Lt		183	132	0.30	95	1779	
2	"WA1" 215+68.3 TO "WA1" 216+62.2 Lt		37	29	0.06	25	170	
3	"WB1" 215+68.4 TO "WB1" 219+47.6 Lt		161	113	0.26	149	15	
3	"WB1" 221+80.4 TO "WB1" 222+93.9 Lt		40	30	0.06	35	8	
4	"WE1" 211+16.6 TO "WE1" 212+24.7 Rt		148	105	0.24	20	72	
4	"WE1" 215+30.4 TO "WE1" 218+85.8 Rt		40	29	0.06	143	49	
5	"CD1" 237+81.3 TO "CD1" 240+27.6 Lt		73	64	0.11	36	80	
5	"CD1" 241+90.7 TO "CD1" 242+75.8 Lt		37	29	0.06	27	78	
6	"HA1" 14+66.0 TO "HA1" 17+10.9 Lt		66	60	0.09	48	1	
6	"HA1" 21+05.0 TO "HA1" 21+90.0 Lt		36	28	0.06	50		
REMOVE RSP (SHEET DQ-1)						6		
MINOR Conc (TEXTURED PAVING)				50.8				
	TOTAL	51,985	8936	795.8	21.6	844	2264	1420

REMOVE AC OVERSIDE DRAIN

LOCATION	STATION	EA
1	"FC1" 167+75.0 Lt	1
2	"WA1" 214+90.0 Lt	1
	TOTAL	2

1 TEMPORARY DRAINAGE INLET PROTECTION

LOCATION	STATION	EA
1	"WA1" 211+91.1 Lt	1
2	"CD1" 239+26.9 Lt	1
	TOTAL	2

REMOVE TREE

LOCATION	STATION	(N) EA
2	"WA1" 212+63.0, 48' Lt	1

TEMPORARY FENCE (TYPE ESA)

LOCATION	STA - STA "CD1"		SIDE	LENGTH LF
5	237+81.3	240+27.6	Lt	246.3
	241+90.2	242+75.8	Lt	85.6
TOTAL				331.9

REMOVE AC DIKE

LOCATION	STATION	LF
1	"FC1"166+93.8 TO "FC1" 168+81.1 Lt	188
1	"FC1"170+07.4 TO "FC1" 171+13.9 Lt	107
2	"WA1" 211+56.2 TO "WA1" 214+91.0 Lt	335
5	"CD1" 241+90.7 TO "CD1" 242+75.8 Lt	85
TOTAL		715

POTHOLE UNDERGROUND UTILITY

AT&T POTHOLE LOCATION

No.	STATION	DISTANCE FROM ℄	SURFACE Elev	QUANTITY
	"FC1" LINE			EA
1	165+48.6	44.7' Lt	999.37'	1
2	165+52.6	22.5' Lt	999.90'	1
	"WA1" LINE			
3	216+65.3	23.7' Lt	1981.03'	1
4	216+81.9	34.8' Lt	1978.90'	1
	"WE1" LINE			
5	218+63.1	26.2' Rt	1979.82'	1
6	218+76.5	40.6' Rt	1978.48'	1
	"HA1" LINE			
9	21+70	55.0' Lt	3994.86'	1
GAS LINE POTHOLE LOCATION				
	"HA1" LINE			
7	15+39.5	31.1' Lt	3992.15'	1
8	15+40.2	46.5' Lt	3991.26'	1
	TOTAL			9

MINOR CONCRETE (TEXTURED PAVING)

LOCATION	STATION	CI 2 AB	MINOR Conc (TEXTURED PAVING)
		CY	CY
1	"FC1"167+34.1 TO "FC1"167+63.6	6.4	6.4
2	"WA1" 214+22.4 TO "WA1" 214+52.7	5.7	5.7
3	"WB1" 216+31.1 TO "WB1" 216+60.2	5.9	5.9
4	"WE1" 217+71.7 TO "WE1" 218+01.2	6.6	6.6
5	"CD1" 240+27.6 TO "CD1" 240+60.1	7.9	7.9
6	"HA1" 16+34.3 TO "HA1" 16+94.2	18.3	18.3
	TOTAL	50.8 *	50.8

FENCE

LOCATION	STATION	CHAIN LINK FENCE (TYPE CL-6)	REMOVE CHAIN LINK FENCE
		LF	LF
2	"WA1" 210+93 TO "WA1" 212+14.9 Lt	150	150

1 REPLACED PER ADDENDUM No. 1 DATED JULY 8, 2015

SUMMARY OF QUANTITIES

Q-5

STATE OF CALIFORNIA - DEPARTMENT OF TRANSPORTATION
Caltrans DESIGN

FUNCTIONAL SUPERVISOR: NOMER GUTIERREZ
CALCULATED-DESIGNED BY: YOON HAHN | CHECKED BY: SHEIKH ALAM
REVISED BY: Y.H | DATE REVISED: 02/23/15

LAST REVISION | DATE PLOTTED => 07-JUL-2015 | TIME PLOTTED => 15:23
06-23-15

Dist	COUNTY	ROUTE	POST MILES TOTAL PROJECT	SHEET No.	TOTAL SHEETS
10	SJ	99	18.4/23.0	67A	106

1

Randell D. Hiatt
REGISTERED CIVIL ENGINEER

July 19, 2013
PLANS APPROVAL DATE

REGISTERED PROFESSIONAL ENGINEER
Randell D. Hiatt
No. C50200
Exp. 6-30-15
CIVIL
STATE OF CALIFORNIA

THE STATE OF CALIFORNIA OR ITS OFFICERS OR AGENTS SHALL NOT BE RESPONSIBLE FOR THE ACCURACY OR COMPLETENESS OF SCANNED COPIES OF THIS PLAN SHEET.

TO ACCOMPANY PLANS DATED 12-29-14

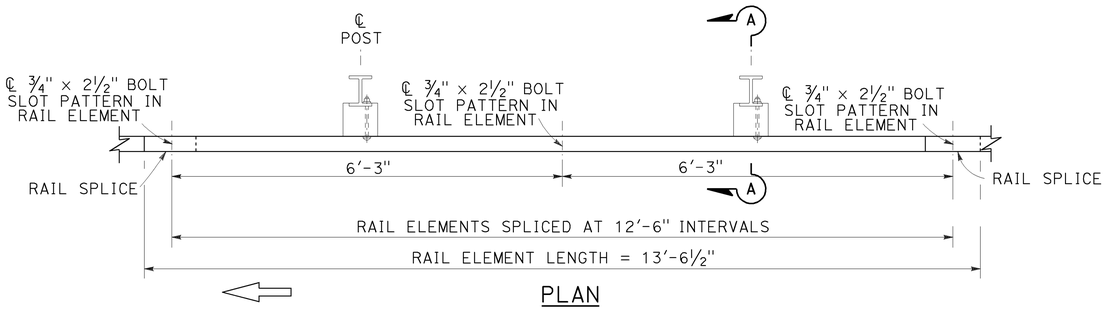

PLAN

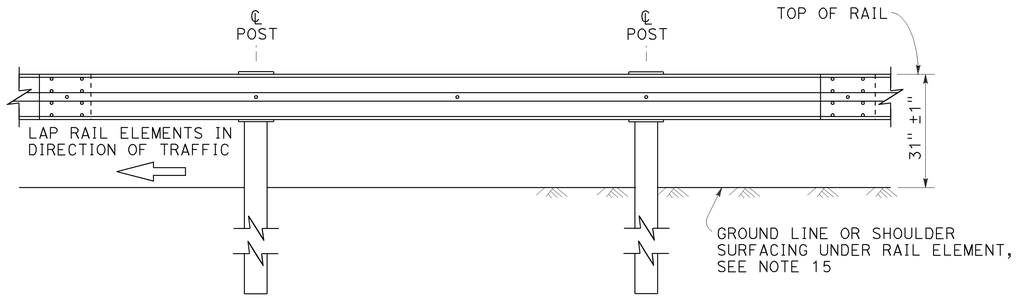

ELEVATION

MIDWEST GUARDRAIL SYSTEM WITH STEEL POSTS AND NOTCHED WOOD OR NOTCHED RECYCLED PLASTIC BLOCKS

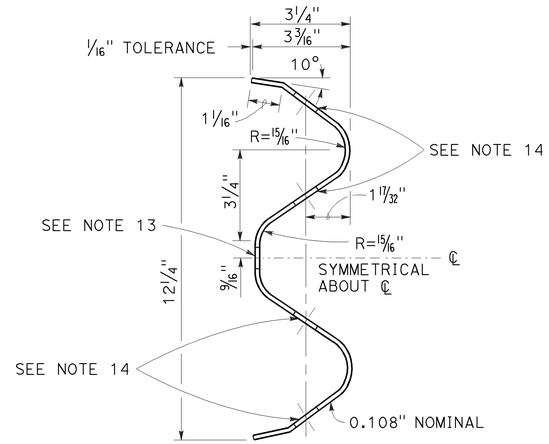

SECTION THRU RAIL ELEMENT

NOTES:

1. For details of wood post installations, see Revised Standard Plan RSP A77L1.
2. For details of standard hardware used to construct MGS, see Revised Standard Plan RSP A77M1.
3. For details of steel posts and notched wood blocks used to construct MGS, see Revised Standard Plan RSP A77N2.
4. For additional installation details, see Revised Standard Plan RSP A77N3.
5. MGS post spacing to be 6'-3" center to center, except as otherwise noted.
6. For MGS typical layouts, see the A77P, A77Q and A77R Series of Standard Plans.
7. If railing is connected to terminal system end treatment, use 31" height terminal system end treatment.
8. For MGS end anchor details, see Revised Standard Plans RSP A77S1 and RSP A77T2.
9. For details of MGS transition to bridge railing, see Revised Standard Plan RSP A77U4.
10. For additional details of MGS connection to bridge railings, see Revised Standard Plans RSP A77U1, RSP A77U2 and RSP A77V1.
11. For dike positioning and MGS delineation details, see Revised Standard Plan RSP A77N4.
12. Notched face of block faces steel post.
13. Slotted hole for bolted connection of rail element to block and post. See "Section Thru Rail Element".
14. Slotted holes for splice bolts to overlap ends of rail element. See "Section Thru Rail Element".
15. Install posts in soil.

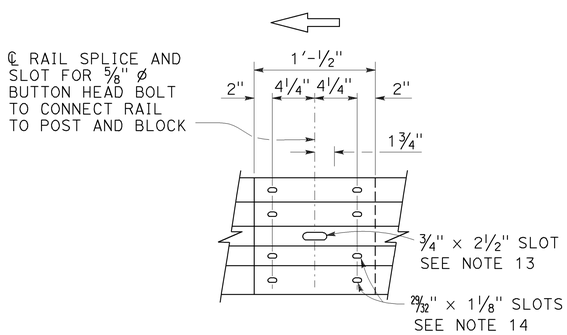

ELEVATION

RAIL ELEMENT SPLICE DETAIL

a) Connect the over lapped end of the rail elements with ⅝" ø × 1⅜" button head oval shoulder splice bolts inserted into the 29⁄32" × 1⅛" slots and bolted together with ⅝" ø recessed hex nuts. Recess of hex nut points toward rail element. A total of 8 bolts and nuts are to be used at each rail splice connection.

b) The ends of the rail elements are to be overlapped in the direction of traffic (see details).

c) Where end cap is to be attached to the end of a rail element, a total of 4 of the above described splice bolts and nuts are to be used.

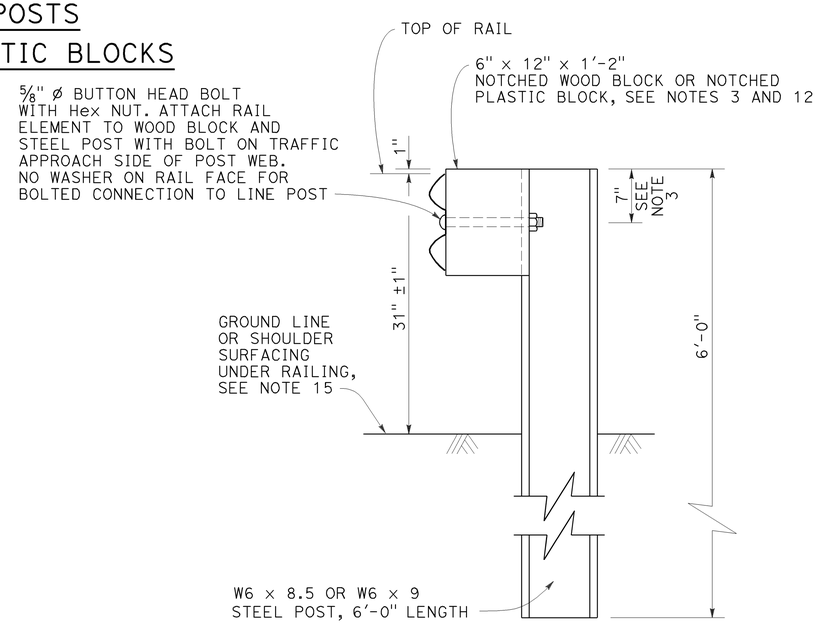

SECTION A-A

TYPICAL STEEL LINE POST INSTALLATION

See Note 4

STATE OF CALIFORNIA
DEPARTMENT OF TRANSPORTATION

MIDWEST GUARDRAIL SYSTEM STANDARD RAILING SECTION (STEEL POST WITH NOTCHED WOOD OR NOTCHED RECYCLED PLASTIC BLOCK)

NO SCALE

1 **ADDED PER ADDENDUM No. 1 DATED JULY 8, 2015**

RSP A77L2 DATED JULY 19, 2013 SUPPLEMENTS THE STANDARD PLANS BOOK DATED 2010.

REVISED STANDARD PLAN RSP A77L2

2010 REVISED STANDARD PLAN RSP A77L2

7-3-13

Dist	COUNTY	ROUTE	POST MILES TOTAL PROJECT	SHEET No.	TOTAL SHEETS
10	SJ	99	18.4/23.0	67B	106

1

Randell D. Hiatt
REGISTERED CIVIL ENGINEER

July 19, 2013
PLANS APPROVAL DATE

REGISTERED PROFESSIONAL ENGINEER
Randell D. Hiatt
No. C50200
Exp. 6-30-15
CIVIL
STATE OF CALIFORNIA

THE STATE OF CALIFORNIA OR ITS OFFICERS OR AGENTS SHALL NOT BE RESPONSIBLE FOR THE ACCURACY OR COMPLETENESS OF SCANNED COPIES OF THIS PLAN SHEET.

TO ACCOMPANY PLANS DATED 12-29-14

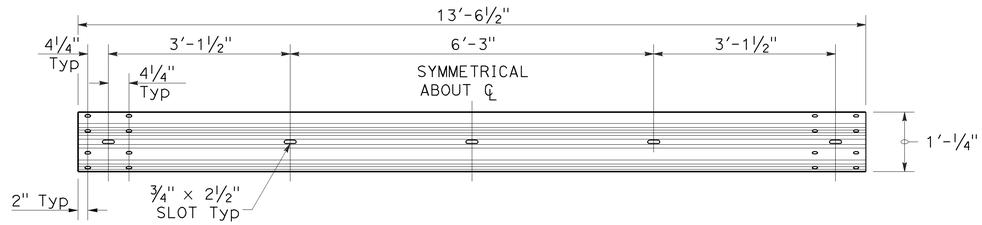

TYPICAL RAIL ELEMENT

NOTE:

1. Slotted holes for splice bolts to overlap ends of rail element.

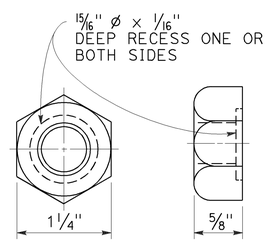

⅝" ø RECESS NUT

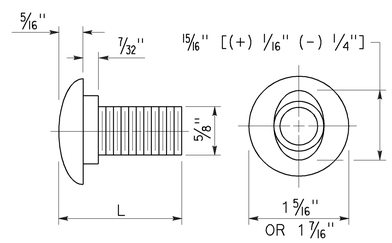

⅝" ø BUTTON HEAD BOLT

BUTTON HEAD BOLT

L	THREAD LENGTH
1⅜"	FULL THREAD LENGTH
2"	FULL THREAD LENGTH
10"	4" Min THREAD LENGTH
18"	4" Min THREAD LENGTH
20"	4" Min THREAD LENGTH
22"	4" Min THREAD LENGTH
26"	4" Min THREAD LENGTH
36"	4" Min THREAD LENGTH
** 2¾"	2" Min THREAD LENGTH
** 19"	4" Min THREAD LENGTH

** For nested rail applications.

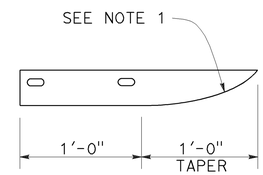

PLAN

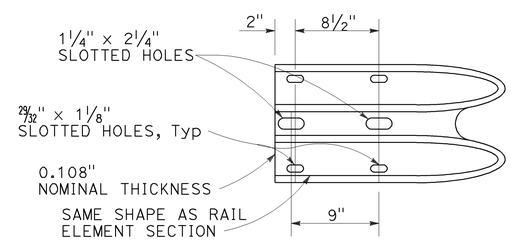

ELEVATION

END CAP
(TYPE A)

STATE OF CALIFORNIA
DEPARTMENT OF TRANSPORTATION

MIDWEST GUARDRAIL SYSTEM STANDARD HARDWARE

NO SCALE

RSP A77M1 DATED JULY 19, 2013 SUPPLEMENTS THE STANDARD PLANS BOOK DATED 2010.

REVISED STANDARD PLAN RSP A77M1

1 **ADDED PER ADDENDUM No. 1 DATED JULY 8, 2015**

2010 REVISED STANDARD PLAN RSP A77M1

7-3-13

Dist	COUNTY	ROUTE	POST MILES TOTAL PROJECT	SHEET No.	TOTAL SHEETS
10	SJ	99	18.4/23.0	67C	106

1

Randell D. Hiatt
REGISTERED CIVIL ENGINEER

November 15, 2013
PLANS APPROVAL DATE

REGISTERED PROFESSIONAL ENGINEER
Randell D. Hiatt
No. C50200
Exp. 6-30-15
CIVIL
STATE OF CALIFORNIA

THE STATE OF CALIFORNIA OR ITS OFFICERS OR AGENTS SHALL NOT BE RESPONSIBLE FOR THE ACCURACY OR COMPLETENESS OF SCANNED COPIES OF THIS PLAN SHEET.

TO ACCOMPANY PLANS DATED 12-29-14

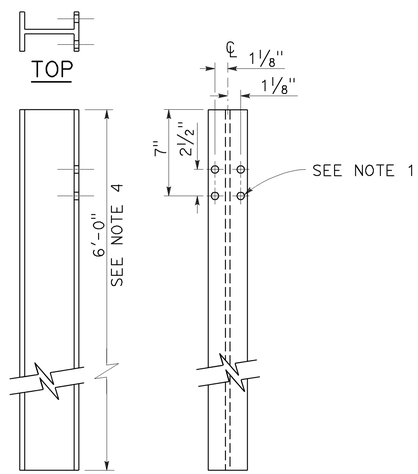

W6 x 9 OR W6 x 8.5
STEEL POST
See Note 4

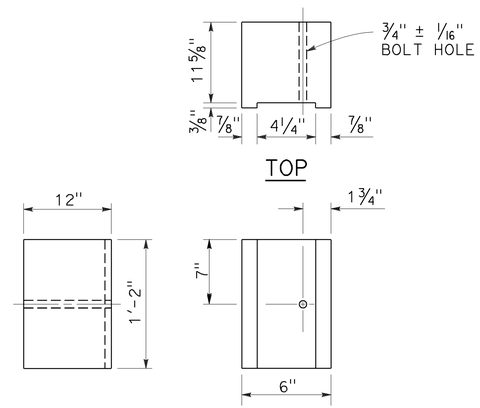

6" x 12"
NOTCHED WOOD BLOCK
See Notes 2 and 3

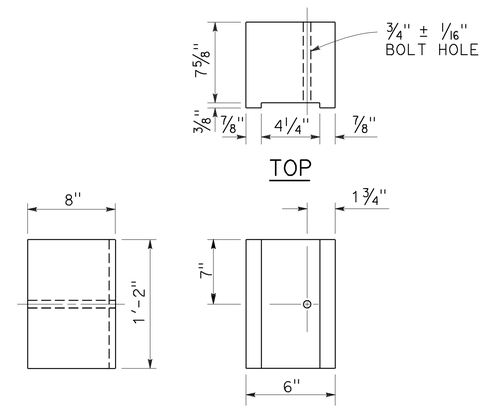

6" x 8"
NOTCHED WOOD BLOCK
Only for use with metal beam guard railing. See Note 5

NOTES:

1. All holes in steel post shall be 13/16" Dia maximum.
2. Dimensions shown for wood block are nominal.
3. Notched face of block faces steel post.
4. 6'-0" length posts to be used for typical roadway installation. See Revised Standard Plan RSP A77N3.
5. See Revised Standard Plan RSP A77L3 for use of 6" x 8" and 8" x 8" notched wood blocks.
6. This post and 8" x 12" block combination to be used for line post sections of MGS on narrow roadways and where strengthened line post sections of MGS are warranted to shield fixed objects.

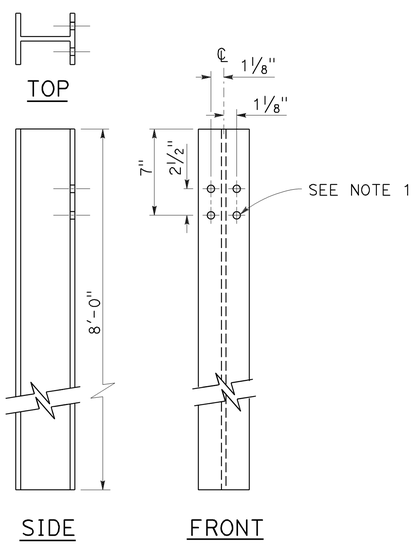

W6 x 15
STEEL POST
See Note 6

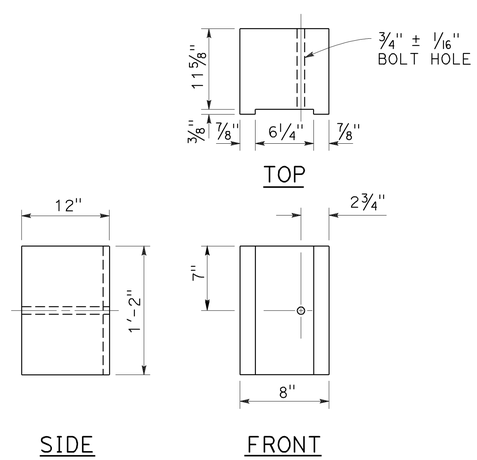

8" x 12"
NOTCHED WOOD BLOCK
See Notes 2 and 3

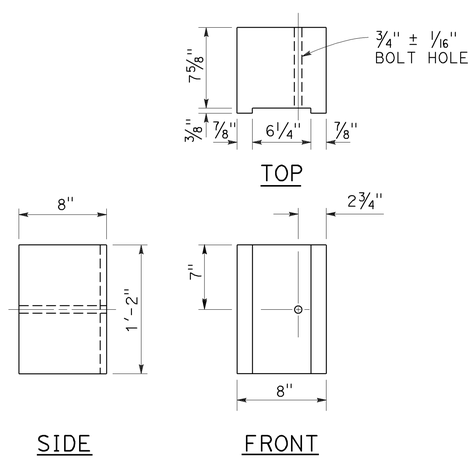

8" x 8"
NOTCHED WOOD BLOCK
Only for use with metal beam guard railing. See Note 5

STATE OF CALIFORNIA
DEPARTMENT OF TRANSPORTATION

MIDWEST GUARDRAIL SYSTEM STEEL POST AND NOTCHED WOOD BLOCK DETAILS

NO SCALE

RSP A77N2 DATED NOVEMBER 15, 2013 SUPERSEDES RSP A77N2
DATED JULY 19, 2013 THAT SUPPLEMENTS THE STANDARD PLANS BOOK DATED 2010.

REVISED STANDARD PLAN RSP A77N2

2010 REVISED STANDARD PLAN RSP A77N2

1 **ADDED PER ADDENDUM No. 1 DATED JULY 8, 2015**

10-29-13

Dist	COUNTY	ROUTE	POST MILES TOTAL PROJECT	SHEET No.	TOTAL SHEETS
10	SJ	99	18.4/23.0	67D	106

1

Randell D. Hiatt
REGISTERED CIVIL ENGINEER

November 15, 2013
PLANS APPROVAL DATE

REGISTERED PROFESSIONAL ENGINEER
Randell D. Hiatt
No. C50200
Exp. 6-30-15
CIVIL
STATE OF CALIFORNIA

THE STATE OF CALIFORNIA OR ITS OFFICERS OR AGENTS SHALL NOT BE RESPONSIBLE FOR THE ACCURACY OR COMPLETENESS OF SCANNED COPIES OF THIS PLAN SHEET.

TO ACCOMPANY PLANS DATED 12-29-14

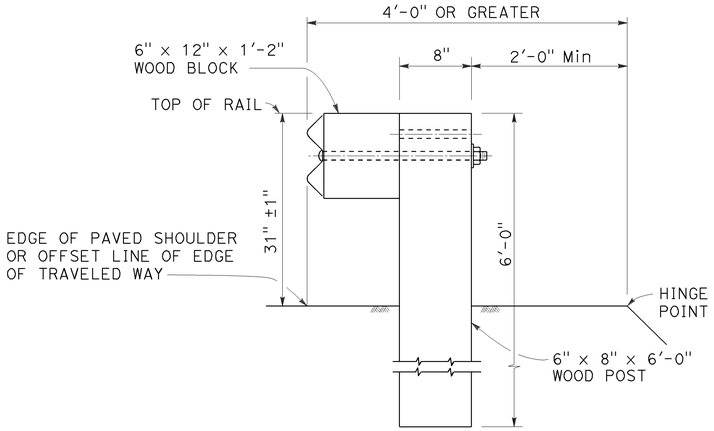

DETAIL A
TYPICAL ROADWAY INSTALLATION
See Note 1

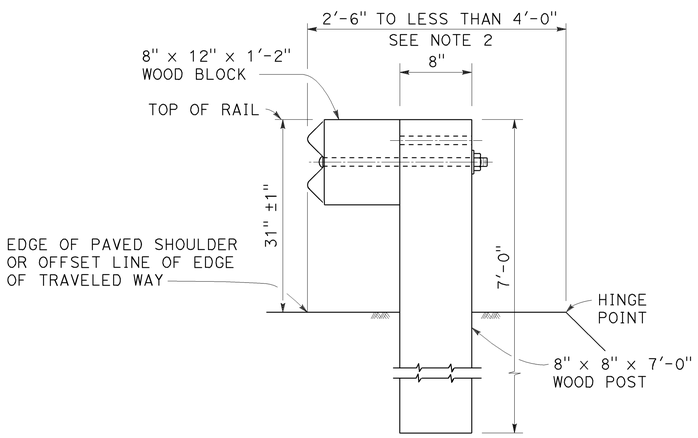

DETAIL B
NARROW ROADWAY INSTALLATION
See Note 1

POST EMBEDMENT

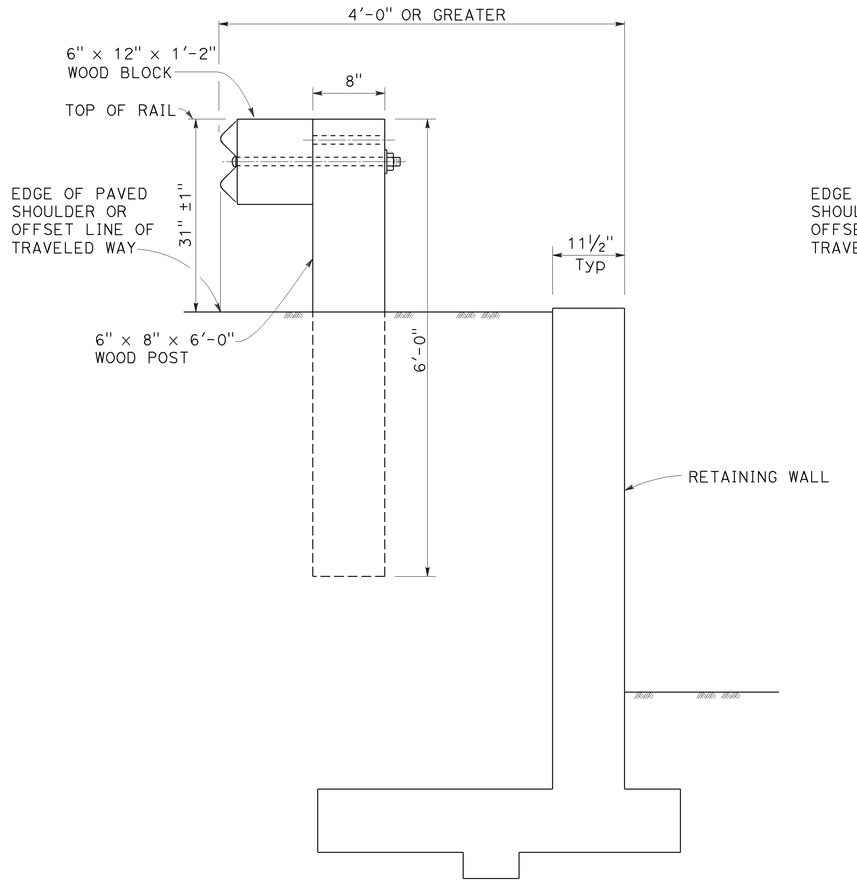

DETAIL C

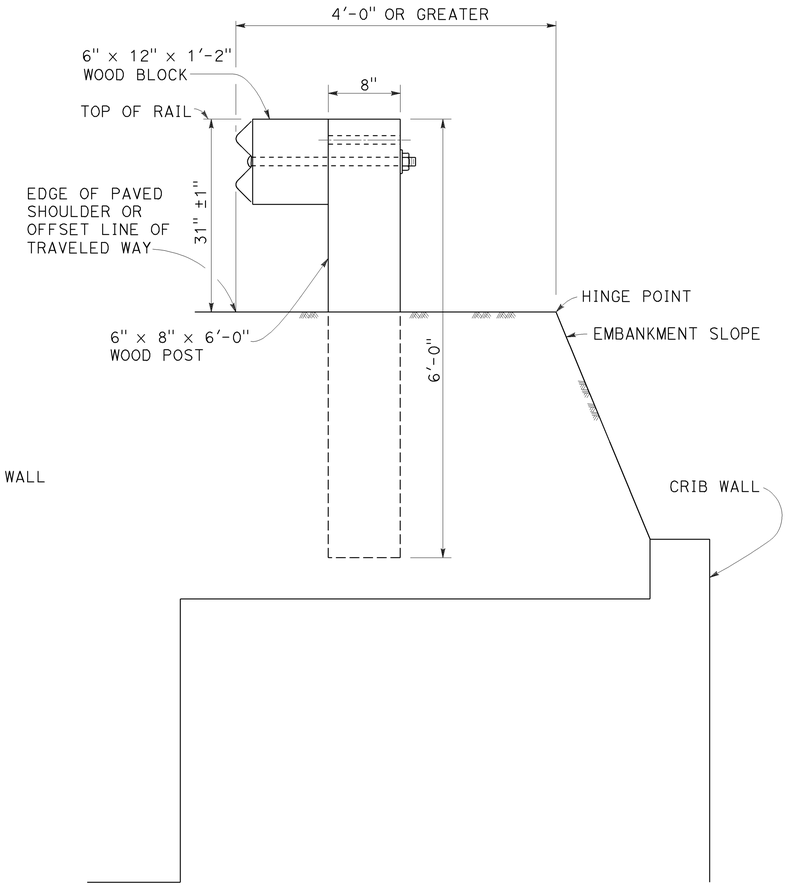

DETAIL D

INSTALLATION AT EARTH RETAINING WALLS

NOTES:

1. These installation details also applicable to steel line post installations. For Detail A, C, and D, where steel line post installations are constructed, W6 x 8.5 or W6 x 9 steel post, 6'-0" in length, with 6" x 12" x 1'-2" notched wood blocks or notched recycled plastic blocks are to be used in place of the size of wood post and wood block shown. For Detail B, where steel line post installations are constructed, W6 x 15 steel post, 8'-0" in length, with 8" x 12" x 1'-2" notched wood blocks or notched recycled plastic blocks are to be used in place of the size of wood post and wood block shown. For additional installation details, see Revised Standard Plan RSP A77L1 and RSP A77L2.
2. Where the distance between the face of the rail and the hinge point is less than 2'-6", see the Project Plans for special details.
3. For dike positioning with MGS installations, see Revised Standard Plan RSP A77N4.

1 **ADDED PER ADDENDUM No. 1 DATED JULY 8, 2015**

STATE OF CALIFORNIA
DEPARTMENT OF TRANSPORTATION

MIDWEST GUARDRAIL SYSTEM TYPICAL LINE POST EMBEDMENT AND HINGE POINT OFFSET DETAILS

NO SCALE

RSP A77N3 DATED NOVEMBER 15, 2013 SUPERSEDES RSP A77N3
DATED JULY 19, 2013 THAT SUPPLEMENTS THE STANDARD PLANS BOOK DATED 2010.

REVISED STANDARD PLAN RSP A77N3

2010 REVISED STANDARD PLAN RSP A77N3

10-29-13

Dist	COUNTY	ROUTE	POST MILES TOTAL PROJECT	SHEET No.	TOTAL SHEETS
10	SJ	99	18.4/23.0	67E	106

1

Randell D. Hiatt
REGISTERED CIVIL ENGINEER

July 19, 2013
PLANS APPROVAL DATE

REGISTERED PROFESSIONAL ENGINEER
Randell D. Hiatt
No. C50200
Exp. 6-30-15
CIVIL
STATE OF CALIFORNIA

THE STATE OF CALIFORNIA OR ITS OFFICERS OR AGENTS SHALL NOT BE RESPONSIBLE FOR THE ACCURACY OR COMPLETENESS OF SCANNED COPIES OF THIS PLAN SHEET.

TO ACCOMPANY PLANS DATED 12-29-14

NOTES:

1. When necessary to place dike more than 7" in front of face of MGS, only Type C dike may be used. For dike details, see Revised Standard Plan RSP A87B.
2. For standard railing post embedment, see Revised Standard Plan RSP A77N3.
3. MGS delineation to be used where shown on the Project Plans.
4. When dike or curb is placed under MGS, the maximum height of the dike or curb shall be 6". Mountable dike should not be used. For dike and curb details, see Revised Standard Plans RSP A87A and RSP A87B.
5. For details of typical distance between the face of rail and hinge point, see Revised Standard Plan RSP A77N3.
6. For steel line posts, use 1/4 - 20 self-tapping screws in 0.22" diameter holes or 1/4" bolts in 9/32" diameter holes.

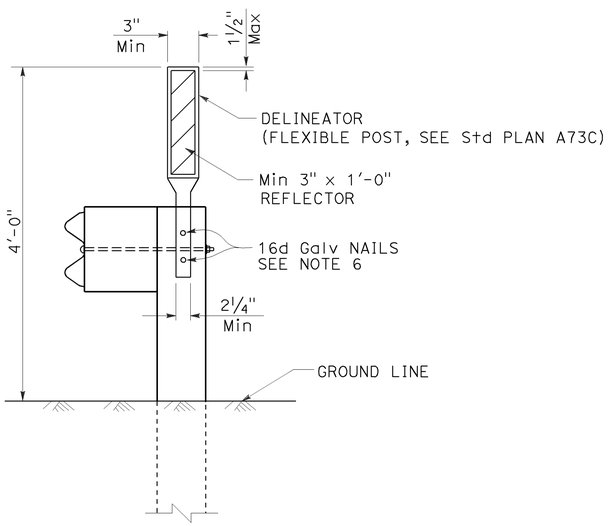

MGS DELINEATION
See Note 3

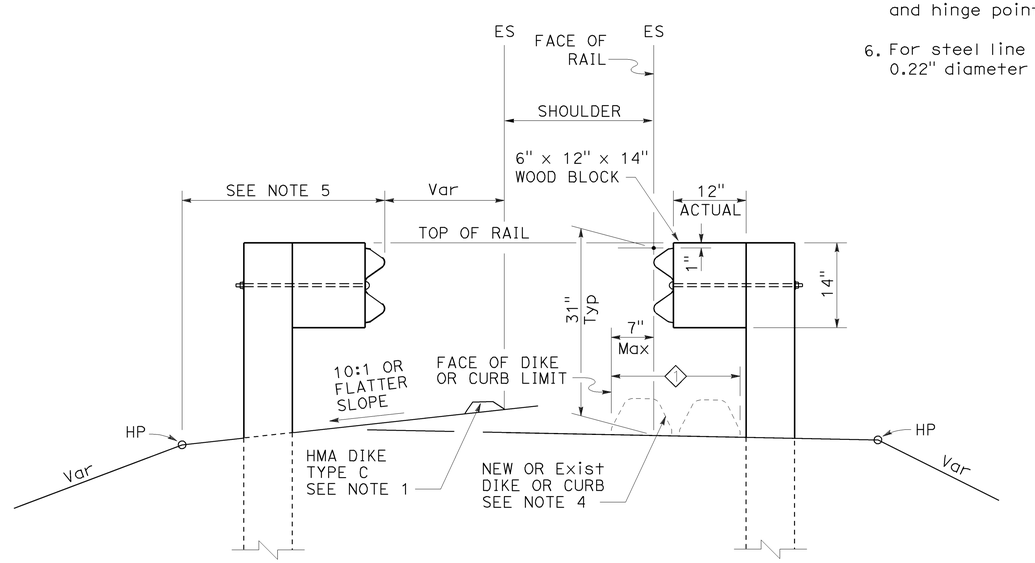

DIKE POSITIONING
See Note 1

1 PERMISSIBLE DIKE OR CURB PLACEMENT AREA

STATE OF CALIFORNIA
DEPARTMENT OF TRANSPORTATION

MIDWEST GUARDRAIL SYSTEM TYPICAL RAILING DELINEATION AND DIKE POSITIONING DETAILS

NO SCALE

1 **ADDED PER ADDENDUM No. 1 DATED JULY 8, 2015**

RSP A77N4 DATED JULY 19, 2013 SUPPLEMENTS THE STANDARD PLANS BOOK DATED 2010.

REVISED STANDARD PLAN RSP A77N4

2010 REVISED STANDARD PLAN RSP A77N4

7-10-13

Dist	COUNTY	ROUTE	POST MILES TOTAL PROJECT	SHEET No.	TOTAL SHEETS
10	SJ	99	18.4/23.0	67F	106

Randell D. Hiatt
REGISTERED CIVIL ENGINEER

July 19, 2013
PLANS APPROVAL DATE

REGISTERED PROFESSIONAL ENGINEER
Randell D. Hiatt
No. C50200
Exp. 6-30-15
CIVIL
STATE OF CALIFORNIA

THE STATE OF CALIFORNIA OR ITS OFFICERS OR AGENTS SHALL NOT BE RESPONSIBLE FOR THE ACCURACY OR COMPLETENESS OF SCANNED COPIES OF THIS PLAN SHEET.

TO ACCOMPANY PLANS DATED 12-29-14

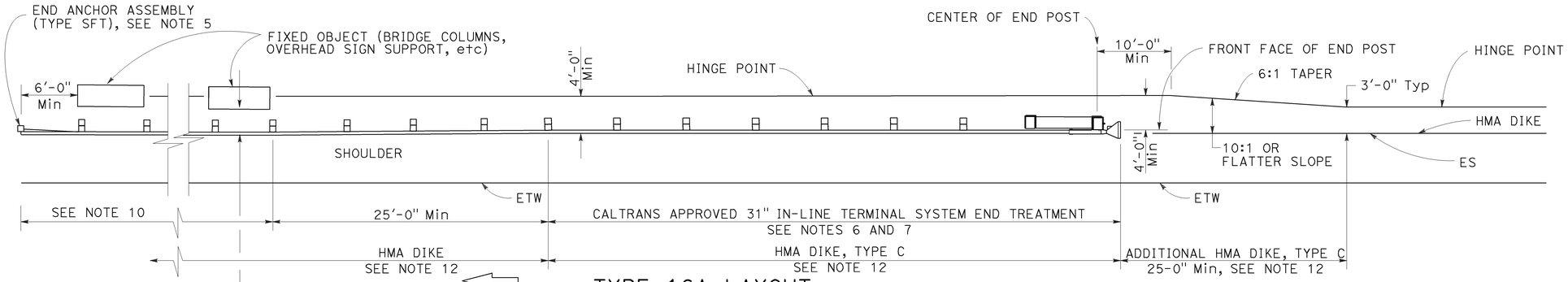

TYPE 16A LAYOUT

(MGS installation at roadside fixed object or objects with 31" in-line end treatment at traffic approach end of railing)
See Notes 11 and 12

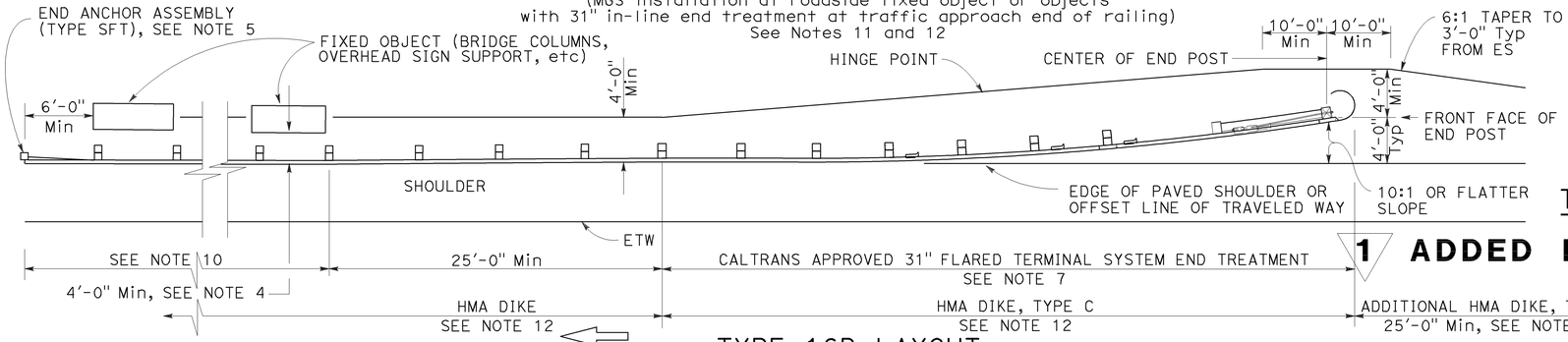

TYPE 16B LAYOUT

(MGS installation at roadside fixed object or objects with 31' flared end treatment at traffic approach end of railing)
See Notes 11 and 12

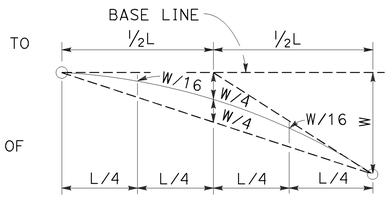

TYPIC AL PARABOLIC LAYOUT

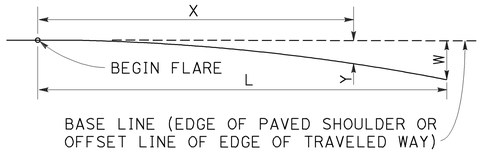

BASE LINE (EDGE OF PAVED SHOULDER OR OFFSET LINE OF EDGE OF TRAVELED WAY)

$$Y = \frac{WX^2}{L^2}$$

Y = OFFSET FROM BASE LINE
W = MAXIMUM OFFSET
X = DISTANCE ALONG BASE LINE
L = LENGTH OF FLARE

PARABOLIC FLARE OFFSETS

1 **ADDED PER ADDENDUM No. 1 DATED JULY 8, 2015**

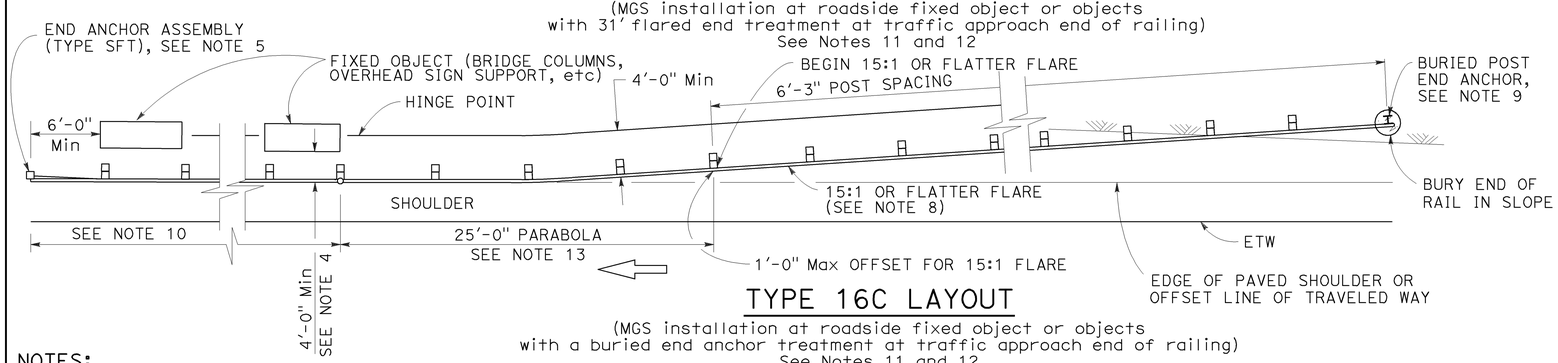

TYPE 16C LAYOUT

(MGS installation at roadside fixed object or objects with a buried end anchor treatment at traffic approach end of railing)
See Notes 11 and 12

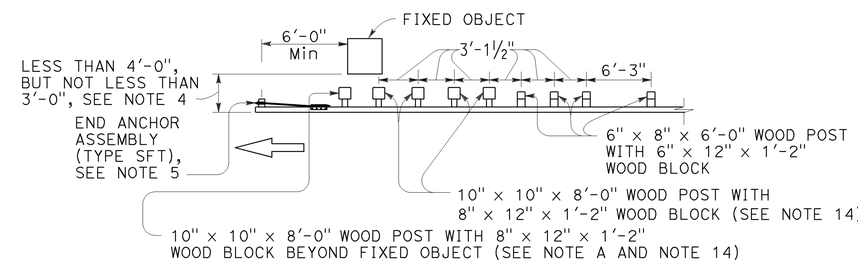

NOTE A: For a series of fixed objects (bridge columns, overhead sign supports, etc.) additional 10" x 10" x 8'-0" wood post with 8" x 12" x 1'-2" wood blocks at 3'-1½" center to center spacing are to be used between fixed objects.

STRENGTHENED MIDWEST GUARDRAIL SYSTEM SECTIONS FOR FIXED OBJECT

Use strengthened MGS sections with Types 16A, 16B or 16C layouts where minimum clearance between the face of the railing and fixed object(s) is less than 4'-0", but not less than 3'-0". See Note 4

NOTES:

1. Line post, blocks and hardware to be used are shown on Revised Standard Plans RSP A77L1, RSP A77L2, RSP A77M1, RSP A77N1 and RSP A77N2.
2. MGS post spacing to be 6'-3" center to center, except as otherwise noted.
3. Except as noted, line posts are 6" x 8" x 6'-0" wood with 6" x 12" x 1'-2" wood blocks. W6 x 8.5 or W6 x 9 steel posts, 6'-0" in length, with 6" x 12" x 1'-2" notched wood blocks or notched recycled plastic blocks may be used for 6" x 8" x 6'-0" wood line posts with 6" x 12" x 1'-2" wood blocks where applicable and when specified.
4. A 4'-0" minimum clearance is required between the face of the railing and the face of a fixed object located directly behind MGS sections with post spacing of 6'-3". Construct MGS as shown in the detail "Strengthened Midwest Guardrail System Sections for Fixed Object" on this plan, where the clearance between the face of the railing and the face of a fixed object is less than 4'-0", but not less than 3'-0". Where the clearance is less than 3'-0", a concrete wall or barrier should be constructed to shield the fixed object(s).
5. For End Anchor Assembly (Type SFT) details, see Revised Standard Plan RSP A77S1.
6. 31" in-line terminal system end treatments are used where site conditions will not accommodate a 31" flared end treatment.
7. The type of 31" terminal system to be used will be shown on the Project Plans.
8. The 15:1 or flatter flare used with Type 16C Layout is based on the edge of the paved shoulder or offset line of edge of the traveled way. The length of MGS within the 15:1 or flatter flare is based on site conditions and should be a length equal to multiples of 12'-6".
9. For details of the Buried Post End Anchor used with Type 16C Layout, see Revised Standard Plan RSP A77T2.
10. As site conditions dictate, construct additional MGS to shield fixed object(s). Additional MGS length equal to multiples of 12'-6". Post spacing at 6'-3" except as specified in Note 4.
11. Layout Types 16A, 16B or 16C are typically used where MGS is recommended to shield roadside fixed object(s) and a crashworthy 31" end treatment is required for only one direction of traffic.
12. Where placement of dike is required with MGS, see Revised Standard Plan RSP A77N4 for dike positioning details.
13. For typical flare offsets for 25'-0" length parabola with maximum offset of 1'-0", see Revised Standard Plan RSP A77P1.
14. W6 x 15 steel post, 8'-0" in length, with 8" x 12" x 1'-2" notched wood block or notched recycled plastic blocks may be used in place of the 10" x 10" x 8'-0" wood post with 8" x 12" x 1'-2" wood block shown in the detail "Strengthened Midwest Guardrail System Sections for Fixed Object".

STATE OF CALIFORNIA
DEPARTMENT OF TRANSPORTATION

MIDWEST GUARDRAIL SYSTEM TYPICAL LAYOUTS FOR ROADSIDE FIXED OBJECTS

NO SCALE

RSP A77R3 DATED JULY 19, 2013 SUPPLEMENTS THE STANDARD PLANS BOOK DATED 2010.

REVISED STANDARD PLAN RSP A77R3

2010 REVISED STANDARD PLAN RSP A77R3

6-20-13

Dist	COUNTY	ROUTE	POST MILES TOTAL PROJECT	SHEET No.	TOTAL SHEETS
10	SJ	99	18.4/23.0	67G	106

1

Randell D. Hiatt
REGISTERED CIVIL ENGINEER

November 15, 2013
PLANS APPROVAL DATE

REGISTERED PROFESSIONAL ENGINEER
Randell D. Hiatt
No. C50200
Exp. 6-30-15
CIVIL
STATE OF CALIFORNIA

THE STATE OF CALIFORNIA OR ITS OFFICERS OR AGENTS SHALL NOT BE RESPONSIBLE FOR THE ACCURACY OR COMPLETENESS OF SCANNED COPIES OF THIS PLAN SHEET.

TO ACCOMPANY PLANS DATED 12-29-14

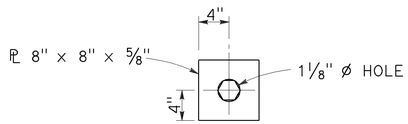

DETAIL "A"
CABLE CONNECTION
END PLATE

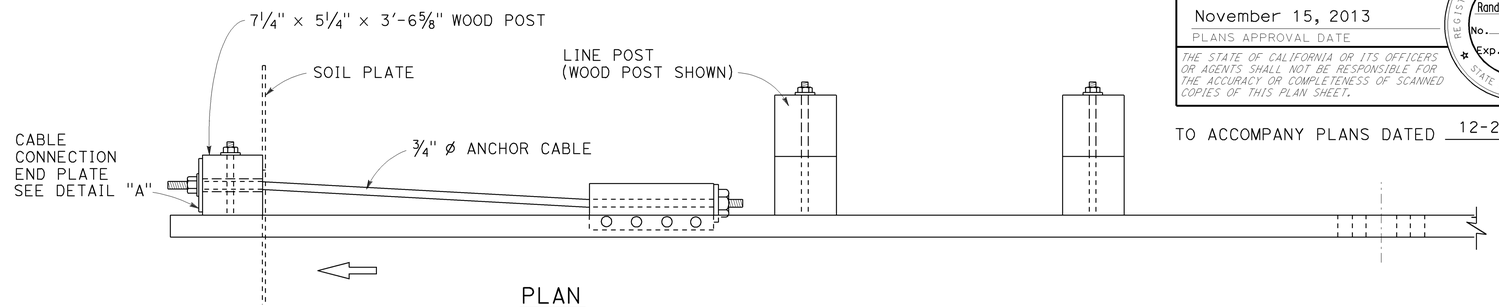

PLAN

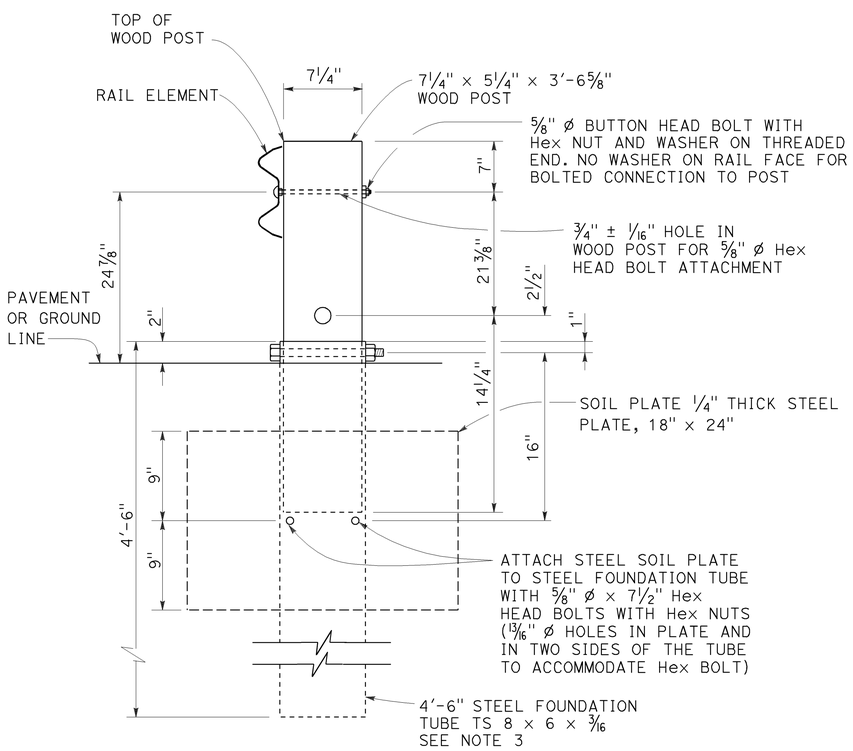

SECTION A-A

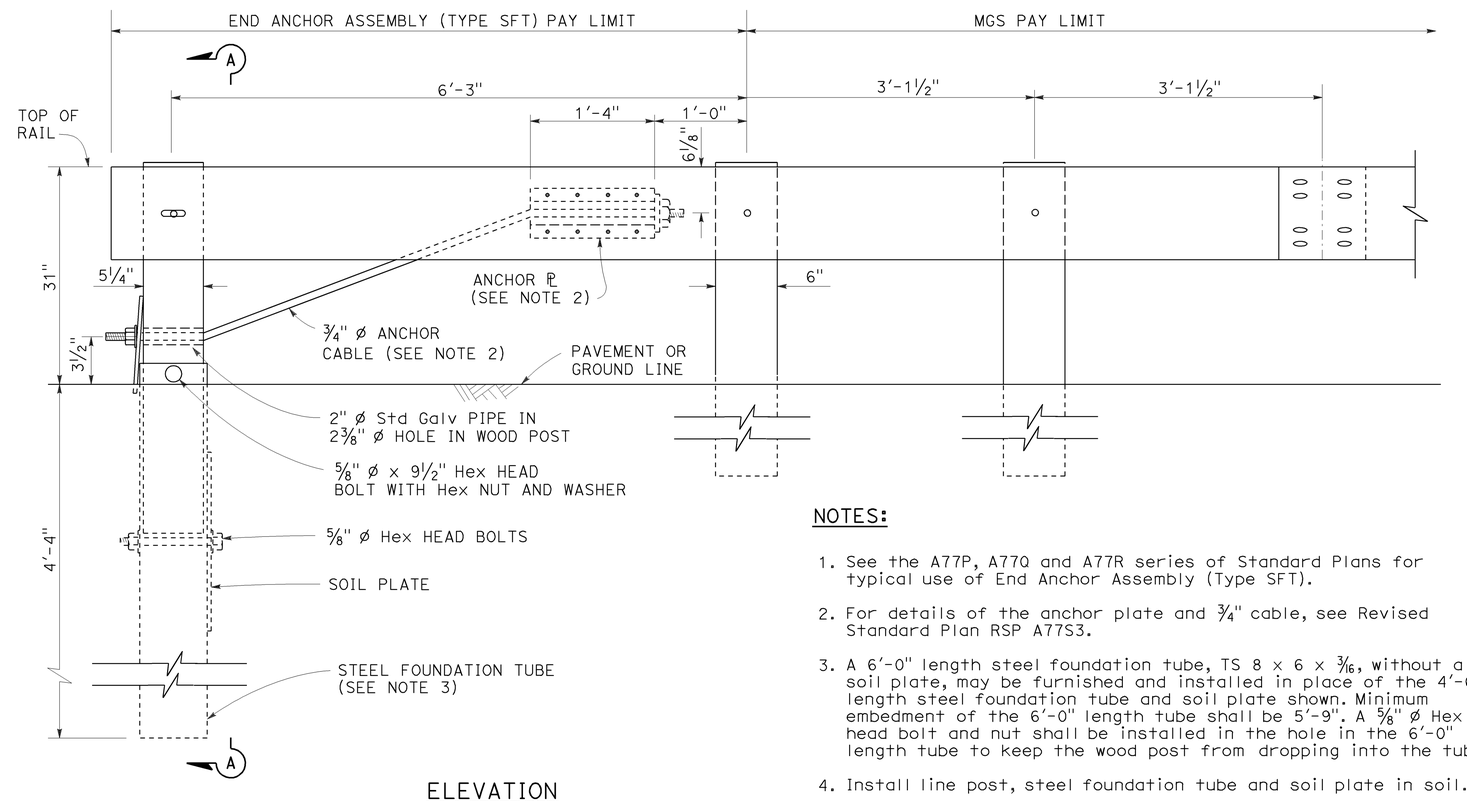

ELEVATION

END ANCHOR
ASSEMBLY (TYPE SFT)
See Note 1

NOTES:

1. See the A77P, A77Q and A77R series of Standard Plans for typical use of End Anchor Assembly (Type SFT).
2. For details of the anchor plate and 3/4" cable, see Revised Standard Plan RSP A77S3.
3. A 6'-0" length steel foundation tube, TS 8 x 6 x 3/16, without a soil plate, may be furnished and installed in place of the 4'-6" length steel foundation tube and soil plate shown. Minimum embedment of the 6'-0" length tube shall be 5'-9". A 5/8" ø Hex head bolt and nut shall be installed in the hole in the 6'-0" length tube to keep the wood post from dropping into the tube.
4. Install line post, steel foundation tube and soil plate in soil.

STATE OF CALIFORNIA
DEPARTMENT OF TRANSPORTATION

MIDWEST GUARDRAIL SYSTEM END ANCHOR ASSEMBLY (TYPE SFT)

NO SCALE

RSP A77S1 DATED NOVEMBER 15, 2013 SUPERSEDES RSP A77S1
DATED JULY 19, 2013 THAT SUPPLEMENTS THE STANDARD PLANS BOOK DATED 2010.

REVISED STANDARD PLAN RSP A77S1

2010 REVISED STANDARD PLAN RSP A77S1

1 ADDED PER ADDENDUM No. 1 DATED JULY 8, 2015

10-4-13