Dist	COUNTY	ROUTE	POST MILES TOTAL PROJECT	SHEET No.	TOTAL SHEETS
10	Sta	132	1.1/1.8	47	87

REGISTERED CIVIL ENGINEER

July 15, 2016
PLANS APPROVAL DATE

REGISTERED PROFESSIONAL ENGINEER Sukhdeep Singh Sandher No. C74893 Exp. 12-31-17 CIVIL STATE OF CALIFORNIA

THE STATE OF CALIFORNIA OR ITS OFFICERS OR AGENTS SHALL NOT BE RESPONSIBLE FOR THE ACCURACY OR COMPLETENESS OF SCANNED COPIES OF THIS PLAN SHEET.

TO ACCOMPANY PLANS DATED 6-13-16

2010 REVISED STANDARD PLAN RSP A85

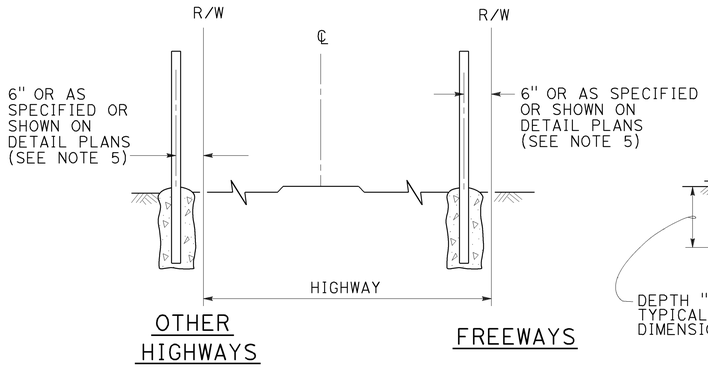

FENCE LOCATION

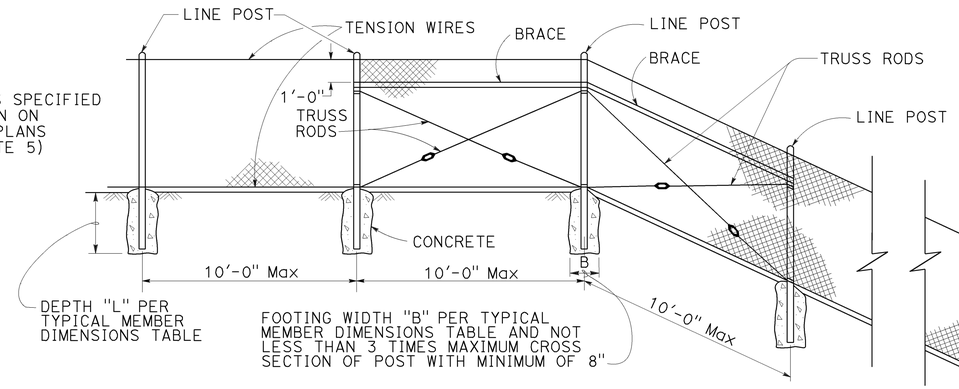

CHAIN LINK FENCE ON SHARP BREAK IN GRADE

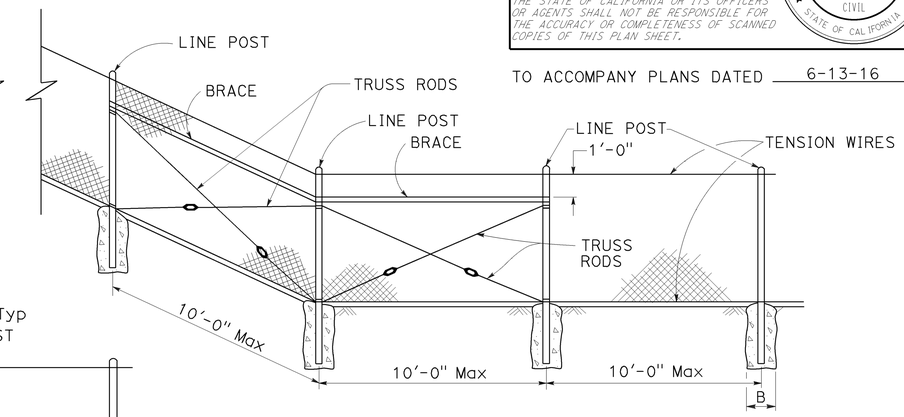

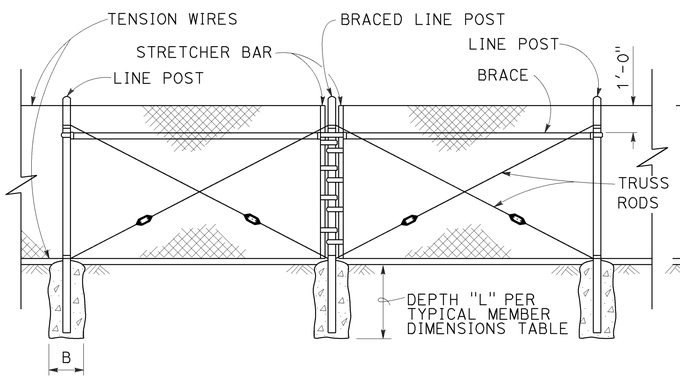

BRACED LINE POST INSTALLATION

Braced line post at intervals not exceeding 1000'

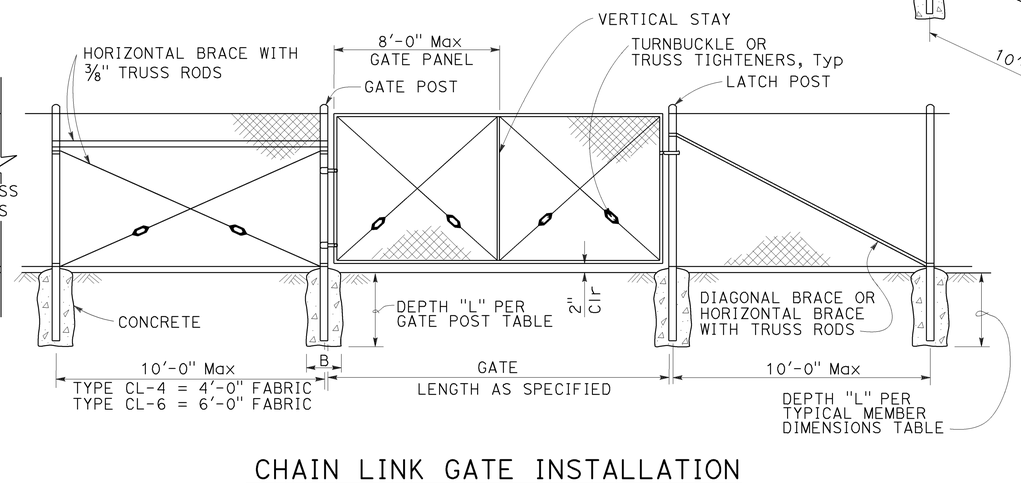

CHAIN LINK GATE INSTALLATION

GATE POST						
FENCE HEIGHT (Max)	SLATTED	B (in)	L (ft)	ROUND PIPE		
				SECTION	ROUND OD PIPE	WEIGHT (lb/ft)
5'-0"	NO	12"	2'-6"	3 Std	3.50"	7.58
6'-0"	NO	12"	2'-6"	3 Std	3.50"	7.58
8'-0"	NO	12"	3'-0"	3 Std	3.50"	7.58
10'-0"	NO	14"	3'-6"	3 Std	3.50"	7.58
5'-0"	YES	12"	3'-0"	3½ Std	4.00"	9.12
6'-0"	YES	14"	3'-6"	4 Std	4.50"	10.80
8'-0"	YES	18"	3'-6"	5 Std	5.56"	14.60
10'-0"	YES	20"	4'-0"	6 Std	6.63"	19.00

Above post dimensions and weights are minimums.
Larger sizes may be used upon approval.
Maximum Gate Width is 24'-0".

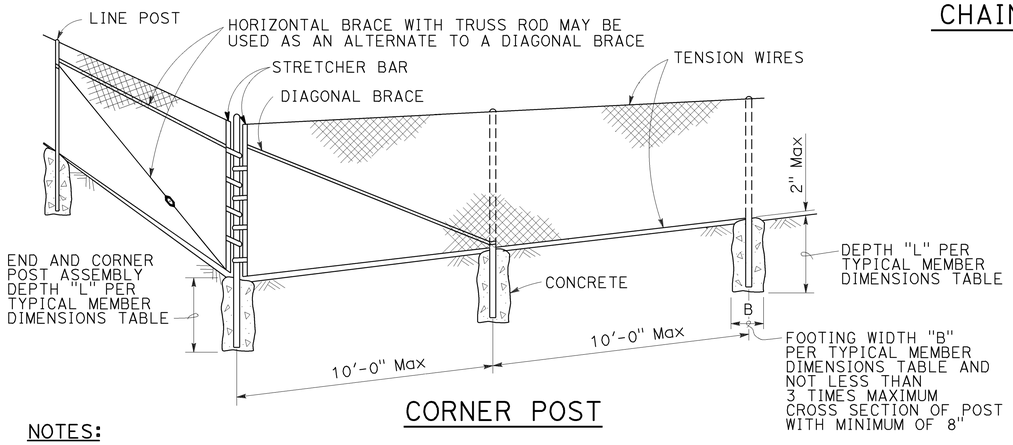

CORNER POST

TYPICAL MEMBER DIMENSIONS (See Notes)													
FENCE HEIGHT (Max)	SLATTED	B (in)	L (ft)	LINE POSTS					BRACES				
				ROUND PIPE			ROLL FORMED		ROUND PIPE			ROLL FORMED	
				SECTION	ROUND OD PIPE	WEIGHT (lb/ft)	SECTION	WEIGHT (lb/ft)	SECTION	ROUND OD PIPE	WEIGHT (lb/ft)	SECTION	WEIGHT (lb/ft)
5'-0"	NO	8"	2'-6"	1½ Std	1.90"	2.72	1.875" x 1.625"	1.85	2 Std	2.38"	3.66	1.625" x 1.250"	1.35
6'-0"	NO	10"	2'-6"	2 Std	2.38"	3.66	1.875" x 1.625"	2.40	2 Std	2.38"	3.66	1.625" x 1.250"	1.35
8'-0"	NO	12"	3'-0"	2½ Std	2.88"	5.80	3.250" x 2.500"	4.50	2 Std	2.38"	3.66	1.625" x 1.250"	1.35
10'-0"	NO	14"	3'-6"	3 Std	3.50"	7.58	3.250" x 2.500"	4.50	2½ Std	2.88"	5.80	1.625" x 1.250"	1.35
5'-0"	YES	12"	3'-0"	3½ Std	4.00"	9.12	N/A	-	2 Std	2.38"	3.66	N/A	-
6'-0"	YES	14"	3'-0"	4 Std	4.50"	10.80	N/A	-	2 Std	2.38"	3.66	N/A	-
8'-0"	YES	18"	3'-6"	5 Std	5.56"	14.60	N/A	-	2 Std	2.38"	3.66	N/A	-
10'-0"	YES	20"	4'-0"	6 Std	6.63"	19.00	N/A	-	2½ Std	2.88"	5.80	N/A	-

NOTES:

1. The table to the right shows minimum sized posts and braces complying with the specifications. Larger or heavier post and brace sizes may be used upon approval.
2. Sections shown in the tables must also comply with the strength requirements and other provisions of the Specifications.
3. Other sections which comply with the strength requirements and other provisions of the Specifications may be used upon approval.
4. Options exercised shall be uniform on any one project.
5. Offset to be 2'-0" at monument locations, measured at right angles to R/W lines. Taper to achieve offset to be at least 20'-0" long.
6. See Revised Standard Plan RSP A85B for Brace, Stretcher Bar, and Truss Tightener Details.

STATE OF CALIFORNIA
DEPARTMENT OF TRANSPORTATION

CHAIN LINK FENCE

NO SCALE

3 **REPLACED PER ADDENDUM No. 3 DATED SEPTEMBER 20, 2016**

RSP A85 DATED JULY 15, 2016 SUPERSEDES RSP A85 DATED JULY 18, 2014 AND STANDARD PLAN A85 DATED MAY 20, 2011 - PAGE 112 OF THE STANDARD PLANS BOOK DATED 2010.

REVISED STANDARD PLAN RSP A85

6-29-16

Dist	COUNTY	ROUTE	POST MILES TOTAL PROJECT	SHEET No.	TOTAL SHEETS
10	Sta	132	1.1/1.8	57	87

3

Theresa Gabriel
REGISTERED ELECTRICAL ENGINEER

April 15, 2016
PLANS APPROVAL DATE

REGISTERED PROFESSIONAL ENGINEER
Theresa Aziz Gabriel
No. E15129
Exp. 6-30-16
ELECTRICAL
STATE OF CALIFORNIA

THE STATE OF CALIFORNIA OR ITS OFFICERS OR AGENTS SHALL NOT BE RESPONSIBLE FOR THE ACCURACY OR COMPLETENESS OF SCANNED COPIES OF THIS PLAN SHEET.

TO ACCOMPANY PLANS DATED 6-13-16

EQUIPMENT IDENTIFICATION

ILLUMINATED SIGN IDENTIFICATION:

SIGN No. 12345
10 ISL SCI 1.0

- SIGN EQUIPMENT IDENTIFICATION CHARACTERS - PLACE ON POST OR STRUCTURE
- TRANSFORMER RATING (kVA)
- LIGHTING CONTROL TYPE
- NUMBER AND TYPE OF FIXTURES

} DO NOT PLACE ON STANDARD OR STRUCTURE

ELECTROLIER OR EQUIPMENT IDENTIFICATION:

L2745 - 15'-0"

- MAST ARM LENGTH, IF SHOWN. DO NOT PLACE ON STANDARD OR STRUCTURE
- EQUIPMENT IDENTIFICATION CHARACTERS - PLACE ON STANDARD OR STRUCTURE. EXISTING EQUIPMENT IDENTIFICATION CHARACTERS ARE SHOWN IN PARENTHESIS

CONDUIT AND CONDUCTOR IDENTIFICATION:

1½"C, 2#10, 15#14, 2 DLC, 12P#18 (PAIR)

- NUMBER AND SIZE OF CONDUCTORS AND CABLES
- SIZE OF CONDUIT IN INCHES

ø1, ø2, ø2P, etc.	TRAFFIC PHASE IDENTIFICATION FOR SIGNALS, DETECTORS AND PHASE DIAGRAMS
1 2 3	LEGEND NUMBERS
A B C	EQUIPMENT, SIGNAL POLES, INSTALLATION OR ITEMS
1 2 3	CONDUIT RUN NUMBERS

SIGNAL AND LIGHTING STANDARD (TYPICAL DESIGNATION):

19A - 3 - 100

- WIND VELOCITY = 100 mph
- CASE 3 ARM LOADING
- STANDARD TYPE
- STANDARD PLAN SHEET NUMBER
- DETAIL, NUMBER, SECTION, TYPE OR ELEVATION

MISCELLANEOUS EQUIPMENT

NEW	EXISTING	
CMS	cms	CHANGEABLE MESSAGE SIGN
		CLOSED CIRCUIT TELEVISION CAMERA
		HIGHWAY ADVISORY RADIO POLE AND ANTENNA
EMS	ems	LED EXTINGUISHABLE MESSAGE SIGN
M V	m v	DETECTION DEVICE M = MICROWAVE SENSOR V = VIDEO IMAGE SENSOR

WIRING DIAGRAM LEGEND

----	EXTERNAL CONDUCTOR
	CONDUCTOR OR BUS
	TIE POINT
	CONTACTOR COIL
	CONTACTOR, NO CONTACT
	TERMINAL BLOCKS
	CONTACTOR, NC CONTACT
	ENCLOSURE BOND
	GROUNDING ELECTRODE
	CIRCUIT BREAKER
	RECEPTACLE

PULL BOXES

NEW	EXISTING	
		PULL BOX, No. 5 UNLESS OTHERWISE INDICATED OR NOTED
3	9A(21)	PULL BOX, ADDITIONAL DESIGNATIONS OR DESCRIPTIONS

3 No. 3½ PULL BOX
5 No. 5 PULL BOX
6 No. 6 PULL BOX
7 No. 7 PULL BOX (CEILING)
8 No. 8 PULL BOX
9 No. 9 PULL BOX (STRUCTURE)
9A No. 9A PULL BOX (STRUCTURE)

(C) COMMUNICATIONS PULL BOX
(E) PULL BOX WITH EXTENSION
(S) SPRINKLER CONTROL PULL BOX
(21) ANCHOR BOLTS AND CONDUIT FOR FUTURE INSTALLATION OF TYPE 21 STANDARD
(T) TRAFFIC PULL BOX

VEHICLE DETECTORS

5 J 9 U

- VEHICLE DETECTOR DESIGNATION
- U = UPPER
  L = LOWER
- SLOT NUMBER IN INPUT FILE
- INPUT FILE (I OR J)
- PHASE

NEW	EXISTING	
		TYPE A LOOP DETECTOR. OUTLINE OF SAW CUT SHOWN
		TYPE B LOOP DETECTOR. OUTLINE OF SAW CUT SHOWN
		TYPE C LOOP DETECTOR. OUTLINE OF SAW CUT SHOWN
		TYPE D LOOP DETECTOR. OUTLINE OF SAW CUT SHOWN
		TYPE E LOOP DETECTOR. OUTLINE OF SAW CUT SHOWN
		TYPE Q LOOP DETECTOR. OUTLINE OF SAW CUT SHOWN
DH	dh	DETECTOR HANDHOLE
		MICROWAVE OR VIDEO DETECTION ZONE

2010 REVISED STANDARD PLAN RSP ES-1C

3 **REPLACED PER ADDENDUM No. 3 DATED SEPTEMBER 20, 2016**

STATE OF CALIFORNIA
DEPARTMENT OF TRANSPORTATION

ELECTRICAL SYSTEMS (LEGEND AND ABBREVIATIONS)

NO SCALE

RSP ES-1C DATED APRIL 15, 2016 SUPERSEDES RSP ES-1C DATED OCTOBER 30, 2015 AND RSP ES-1C DATED JULY 19, 2013 AND STANDARD PLAN ES-1C DATED MAY 20, 2011 - PAGE 427 OF THE STANDARD PLANS BOOK DATED 2010.

REVISED STANDARD PLAN RSP ES-1C

1-22-16

Dist	COUNTY	ROUTE	POST MILES TOTAL PROJECT	SHEET No.	TOTAL SHEETS
10	Sta	132	1.1/1.8	61	87

Theresa Gabriel
REGISTERED ELECTRICAL ENGINEER

April 15, 2016
PLANS APPROVAL DATE

REGISTERED PROFESSIONAL ENGINEER
Theresa Aziz Gabriel
No. E15129
Exp. 6-30-16
ELECTRICAL
STATE OF CALIFORNIA

THE STATE OF CALIFORNIA OR ITS OFFICERS OR AGENTS SHALL NOT BE RESPONSIBLE FOR THE ACCURACY OR COMPLETENESS OF SCANNED COPIES OF THIS PLAN SHEET.

TO ACCOMPANY PLANS DATED 6-13-16

2010 REVISED STANDARD PLAN RSP ES-3C

NOTES:

1. Controller units, plug-mounted equipment, shelf-mounted equipment and wall-mounted equipment shall be located to permit safe and easy removal or replacement without removing any other piece of equipment.
2. Cabinet fan may be installed at an alternate location near the top of the cabinet when approved by the Engineer.
3. Where telephone interconnect is required, a minimum of 5" clear vertical space shall be provided inside the cabinet for the equipment.
4. Telephone interconnect conductors shall be enclosed in a ¾"C or larger conduit through the foundation. Type 4 conduit shall be used to separate telephone and power conductors in cabinets.

3 **REPLACED PER ADDENDUM No. 3 DATED SEPTEMBER 20, 2016**

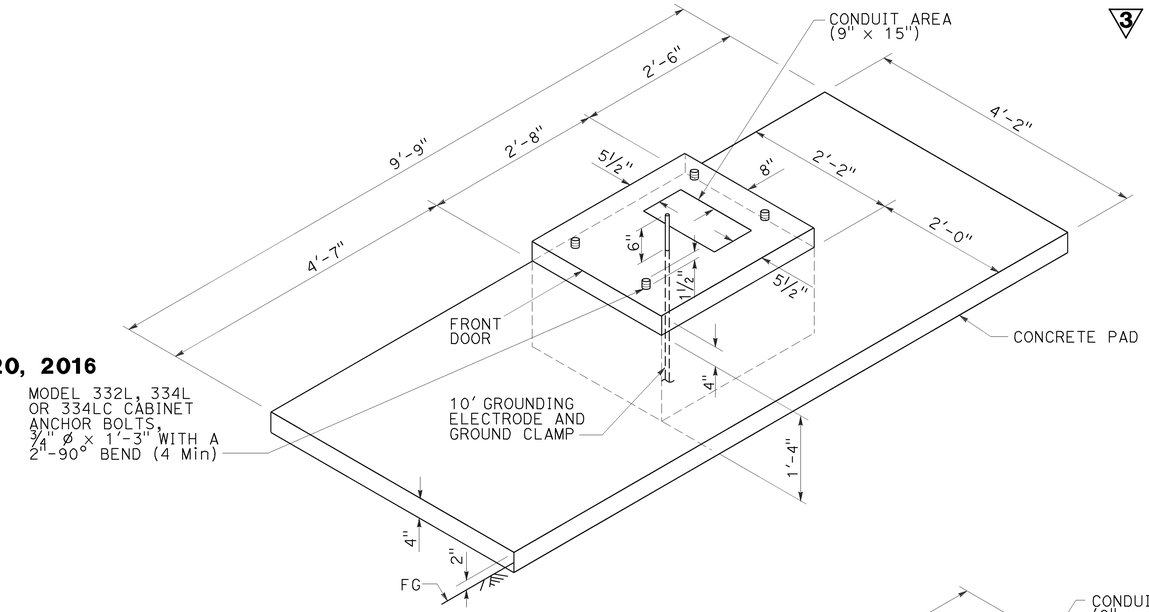

FOUNDATION AND PAD DETAIL

Model 332L, 334L and 334LC

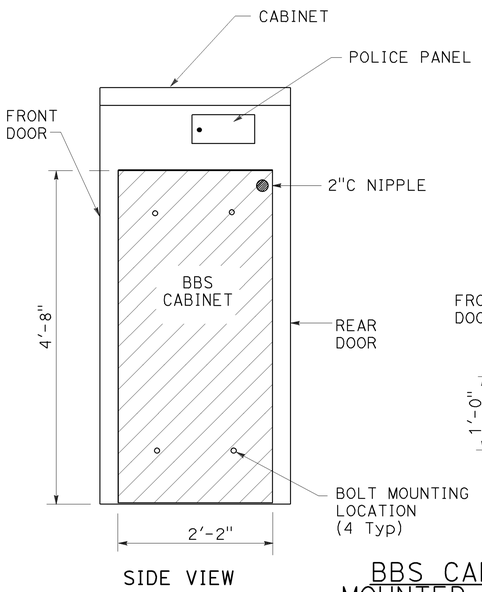

SIDE VIEW

BBS CABINET MOUNTED TO THE MODEL 332L CABINET

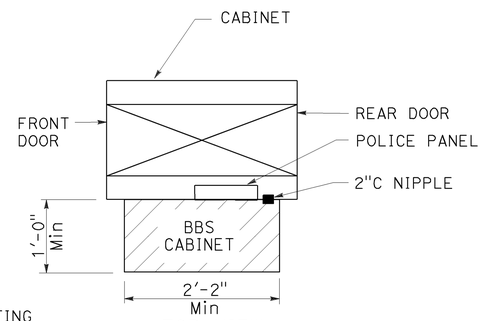

TOP VIEW

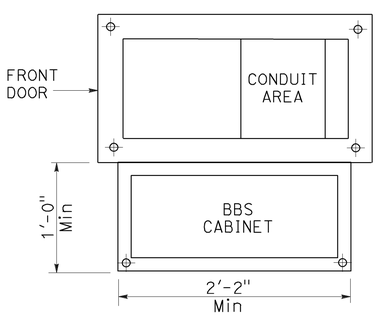

BASE PLAN FOR BBS MOUNTED TO THE MODEL 332L CABINET

(FOR DIMENSIONS AND DETAILS NOT SHOWN, SEE CABINET HOUSING DETAILS OF THE TRANSPORTATION ELECTRICAL EQUIPMENT SPECIFICATION (TEES))

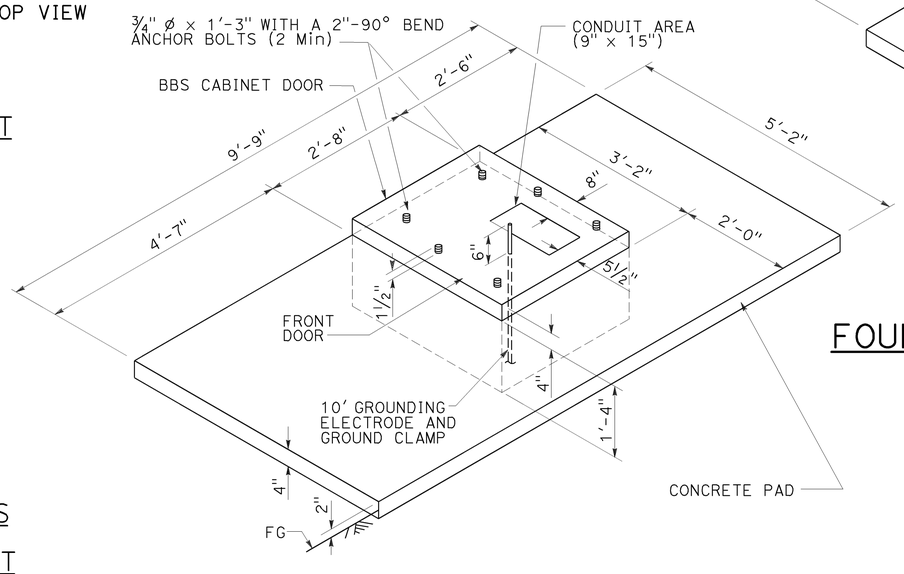

LEFT SIDE INSTALLATION

DETAIL A

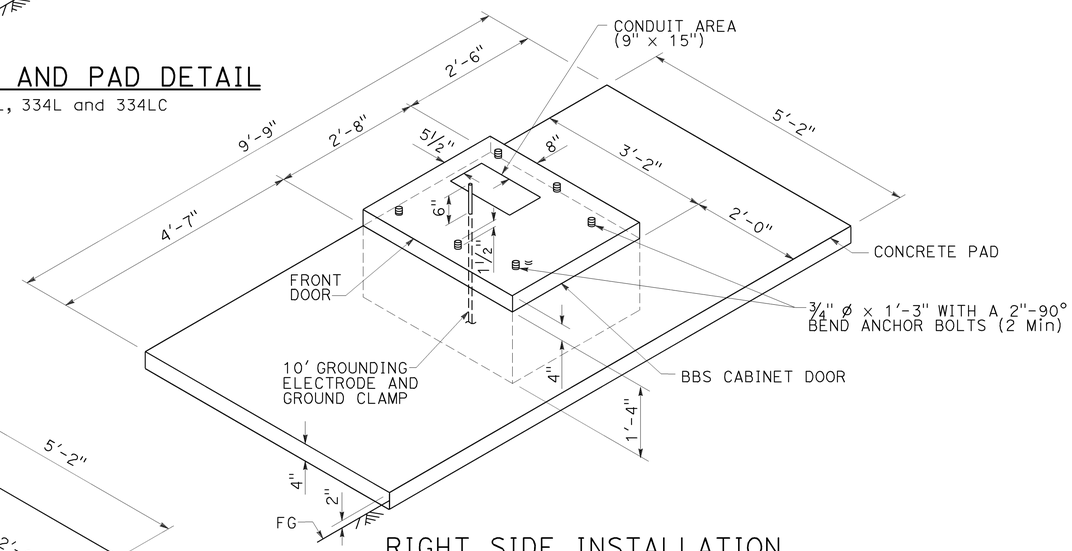

RIGHT SIDE INSTALLATION

DETAIL B

MODIFIED MODEL 332L CABINET FOUNDATION DETAIL FOR BATTERY BACKUP SYSTEM

STATE OF CALIFORNIA
DEPARTMENT OF TRANSPORTATION

ELECTRICAL SYSTEMS (CONTROLLER CABINET FOUNDATION AND PAD DETAILS)

NO SCALE

RSP ES-3C DATED APRIL 15, 2016 SUPERSEDES RSP ES-3C DATED OCTOBER 30, 2015 AND STANDARD PLAN ES-3C DATED MAY 20, 2011 - PAGE 437 OF THE STANDARD PLANS BOOK DATED 2010.

REVISED STANDARD PLAN RSP ES-3C

1-12-16

Dist	COUNTY	ROUTE	POST MILES TOTAL PROJECT	SHEET No.	TOTAL SHEETS
10	Sta	132	1.1/1.8	62	87

3

Theresa Gabriel
REGISTERED ELECTRICAL ENGINEER

April 15, 2016
PLANS APPROVAL DATE

REGISTERED PROFESSIONAL ENGINEER Theresa Aziz Gabriel No. E15129 Exp. 6-30-16 ELECTRICAL STATE OF CALIFORNIA

THE STATE OF CALIFORNIA OR ITS OFFICERS OR AGENTS SHALL NOT BE RESPONSIBLE FOR THE ACCURACY OR COMPLETENESS OF SCANNED COPIES OF THIS PLAN SHEET.

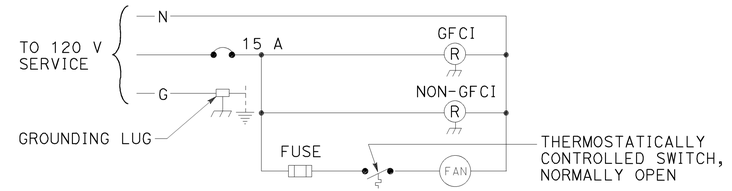

WIRING DIAGRAM
DETAIL F

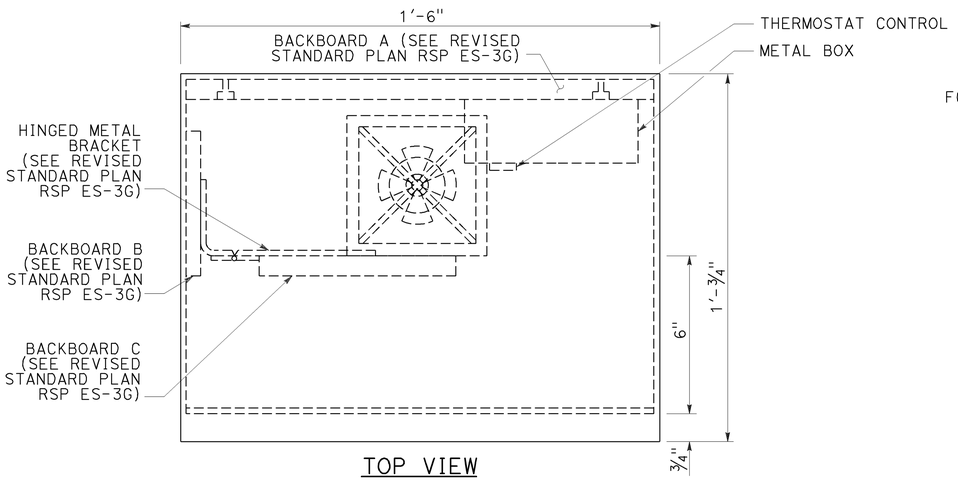

TOP VIEW
DETAIL C

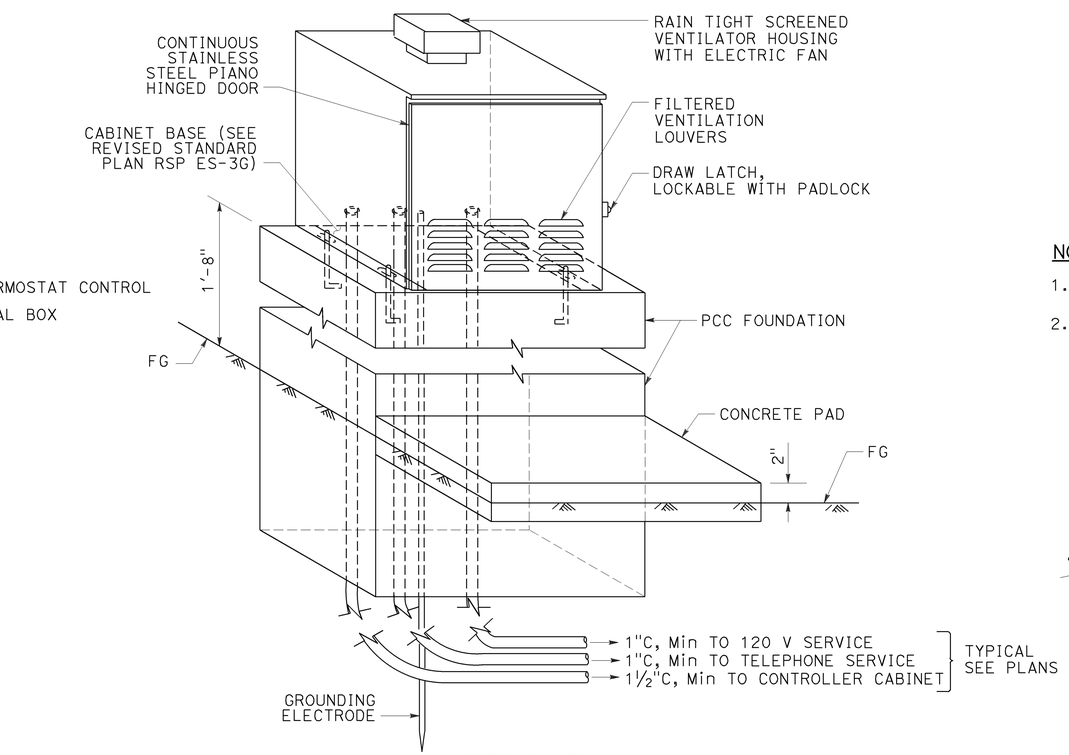

DETAIL D

NOTES: TO ACCOMPANY PLANS DATED 6-13-16

1. Dimensions are nominal.
2. Hardware for fastening of mounting boards:
   a. Fasten backboard A and backboard B to telephone demarcation cabinet with 3/16" ø x ¾" stainless steel carriage bolts (8 required).
   b. Fasten hinged metal bracket to backboard B and backboard C to hinged metal bracket with number No. 10 x ¾" wood screws (9 required).

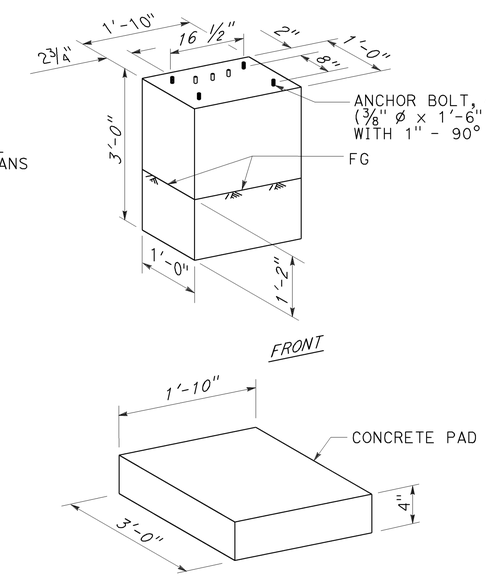

CONCRETE PAD

FOUNDATION AND PAD DETAILS

DETAIL E

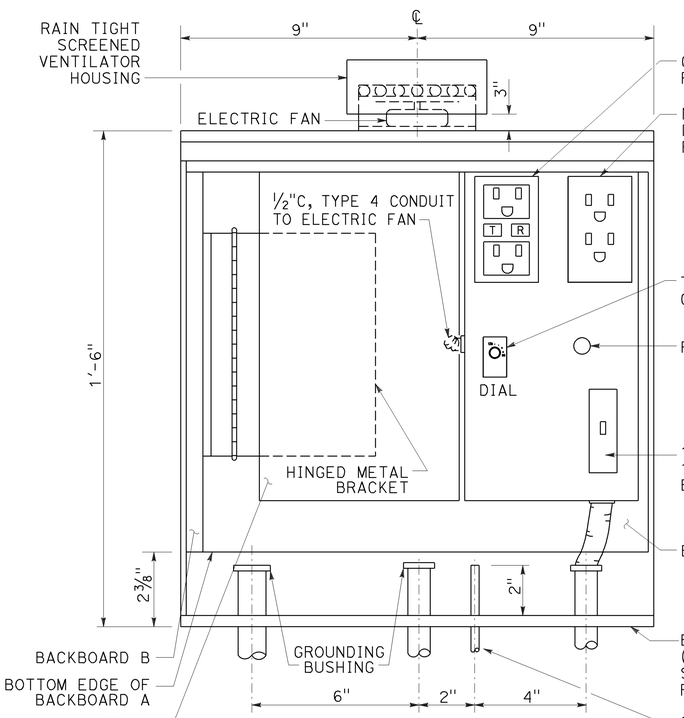

FRONT VIEW
DETAIL A
Outer door removed

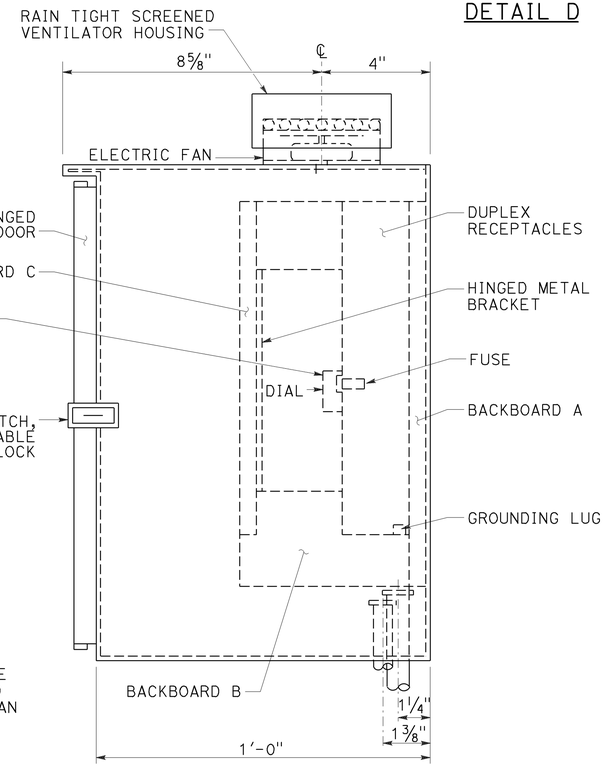

SIDE VIEW
DETAIL B

3 **REPLACED PER ADDENDUM No. 3 DATED SEPTEMBER 20, 2016**

STATE OF CALIFORNIA
DEPARTMENT OF TRANSPORTATION

ELECTRICAL SYSTEMS (TELEPHONE DEMARCATION CABINET, TYPE C)

NO SCALE

RSP ES-3F DATED APRIL 15, 2016 SUPERSEDES RSP ES-3F DATED OCTOBER 30, 2015 AND STANDARD PLAN ES-3F DATED MAY 20, 2011 - PAGE 440 OF THE STANDARD PLANS BOOK DATED 2010.

REVISED STANDARD PLAN RSP ES-3F

2010 REVISED STANDARD PLAN RSP ES-3F

1-12-16

Dist	COUNTY	ROUTE	POST MILES TOTAL PROJECT	SHEET No.	TOTAL SHEETS
10	Sta	132	1.1/1.8	64	87

3

Theresa Gabriel
REGISTERED ELECTRICAL ENGINEER

April 15, 2016
PLANS APPROVAL DATE

REGISTERED PROFESSIONAL ENGINEER
Theresa Aziz Gabriel
No. E15129
Exp. 6-30-16
ELECTRICAL
STATE OF CALIFORNIA

THE STATE OF CALIFORNIA OR ITS OFFICERS OR AGENTS SHALL NOT BE RESPONSIBLE FOR THE ACCURACY OR COMPLETENESS OF SCANNED COPIES OF THIS PLAN SHEET.

TO ACCOMPANY PLANS DATED 6-13-16

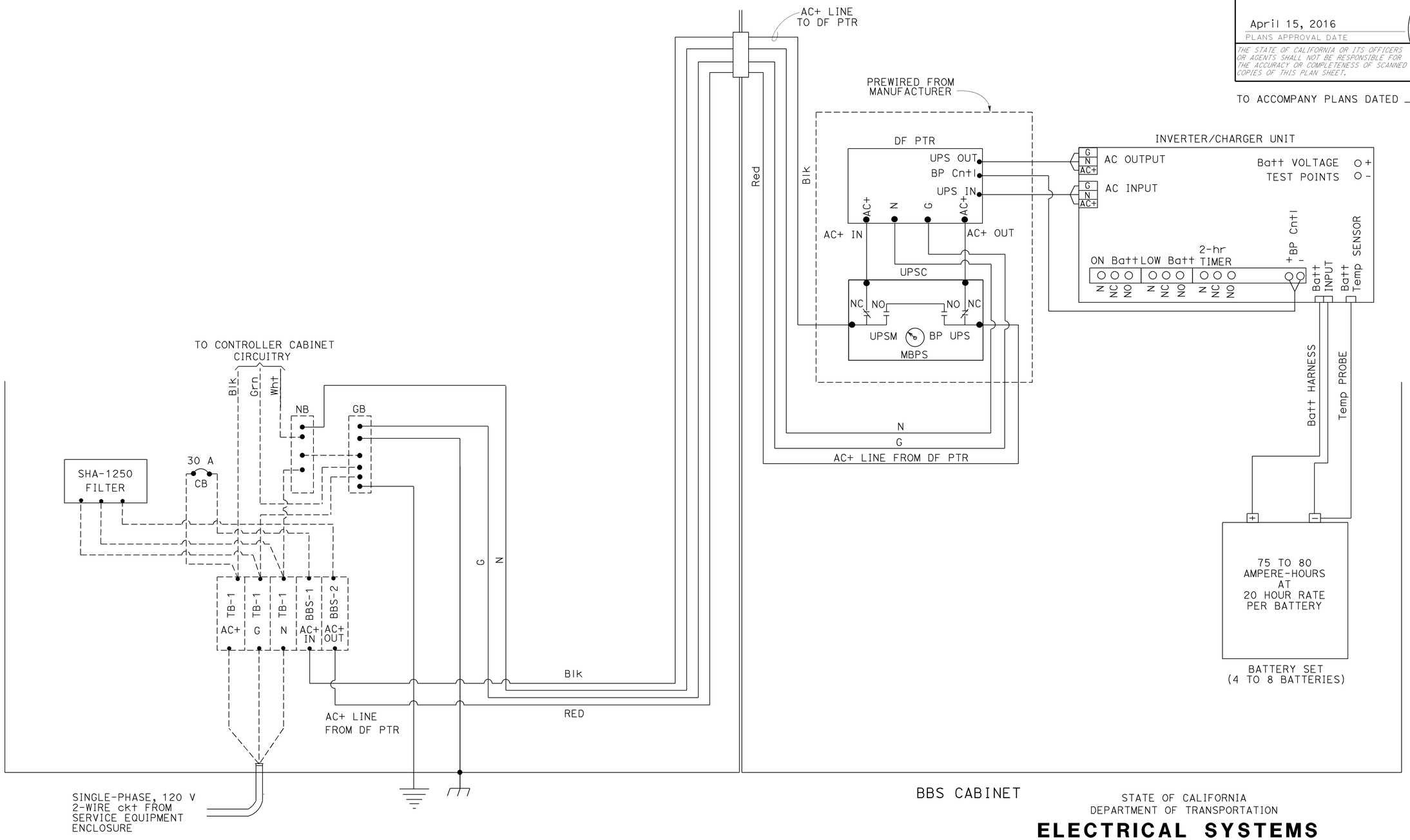

STATE OF CALIFORNIA
DEPARTMENT OF TRANSPORTATION

ELECTRICAL SYSTEMS (ELECTRONICS ASSEMBLY CONNECTION DIAGRAM, WITH BYPASS CONTROL LINE)

NO SCALE

3 **REPLACED PER ADDENDUM No. 3 DATED SEPTEMBER 20, 2016**

RSP ES-3I DATED APRIL 15, 2016 SUPERSEDES RSP ES-3I
DATED OCTOBER 30, 2015 THAT SUPPLEMENTS THE STANDARD PLANS BOOK DATED 2010.

REVISED STANDARD PLAN RSP ES-3I

2010 REVISED STANDARD PLAN RSP ES-3I

1-12-16

Dist	COUNTY	ROUTE	POST MILES TOTAL PROJECT	SHEET No.	TOTAL SHEETS
10	Sta	132	1.1/1.8	69	87

3

Theresa Gabriel
REGISTERED ELECTRICAL ENGINEER

April 15, 2016
PLANS APPROVAL DATE

REGISTERED PROFESSIONAL ENGINEER
Theresa Aziz Gabriel
No. E15129
Exp. 6-30-16
ELECTRICAL
STATE OF CALIFORNIA

THE STATE OF CALIFORNIA OR ITS OFFICERS OR AGENTS SHALL NOT BE RESPONSIBLE FOR THE ACCURACY OR COMPLETENESS OF SCANNED COPIES OF THIS PLAN SHEET.

TO ACCOMPANY PLANS DATED 6-13-16

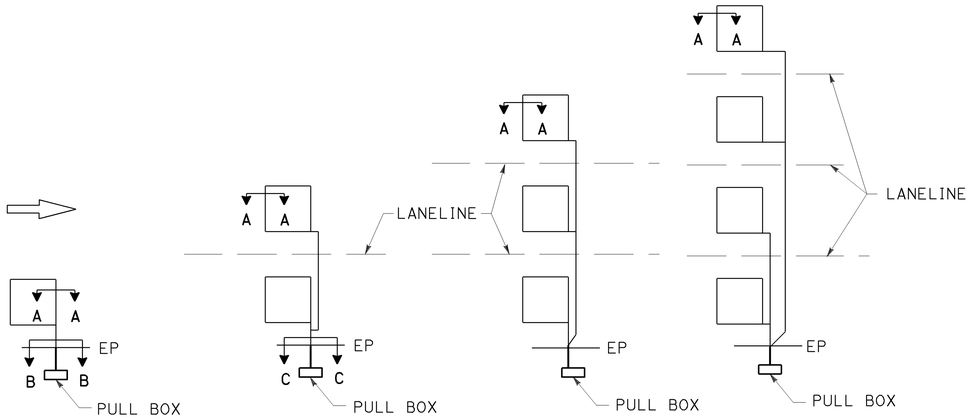

SAW CUT DETAILS

Type A loop detector configurations illustrated

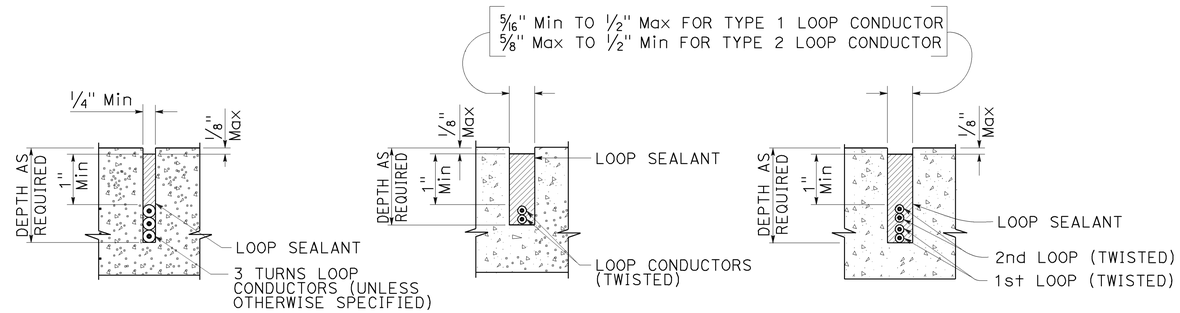

SECTION A-A SECTION B-B SECTION C-C

SLOT DETAILS - TYPE 1 AND TYPE 2 LOOP CONDUCTOR

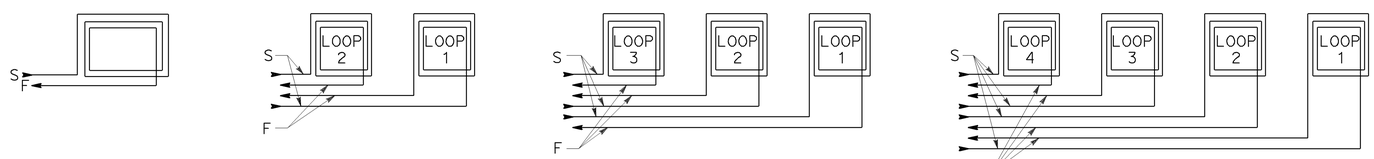

WINDING DETAILS

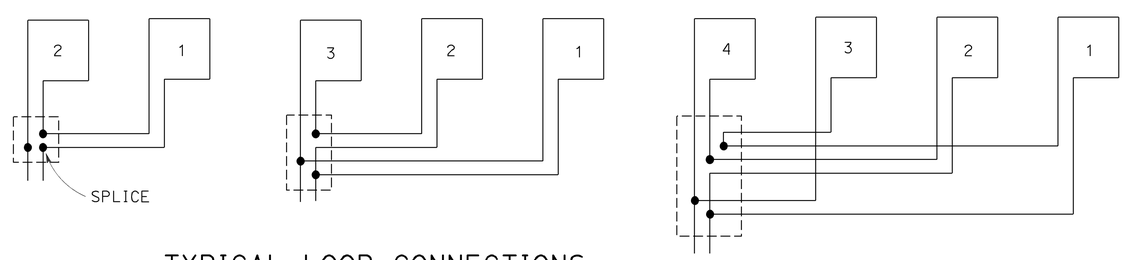

TYPICAL LOOP CONNECTIONS

Dashed lines represent the pull box

ABBREVIATIONS:

S - START
F - FINISH

STATE OF CALIFORNIA
DEPARTMENT OF TRANSPORTATION

ELECTRICAL SYSTEMS (LOOP DETECTORS)

NO SCALE

RSP ES-5A DATED APRIL 15, 2016 SUPERSEDES RSP ES-5A DATED OCTOBER 30, 2015 AND STANDARD PLAN ES-5A DATED MAY 20, 2011 - PAGE 448 OF THE STANDARD PLANS BOOK DATED 2010.

3 **REPLACED PER ADDENDUM No. 3 DATED SEPTEMBER 20, 2016**

REVISED STANDARD PLAN RSP ES-5A

2010 REVISED STANDARD PLAN RSP ES-5A

1-12-16

Dist	COUNTY	ROUTE	POST MILES TOTAL PROJECT	SHEET No.	TOTAL SHEETS
10	Sta	132	1.1/1.8	70	87

3

Theresa Gabriel
REGISTERED ELECTRICAL ENGINEER

April 15, 2016
PLANS APPROVAL DATE

REGISTERED PROFESSIONAL ENGINEER
Theresa Aziz Gabriel
No. E15129
Exp. 6-30-16
ELECTRICAL
STATE OF CALIFORNIA

THE STATE OF CALIFORNIA OR ITS OFFICERS OR AGENTS SHALL NOT BE RESPONSIBLE FOR THE ACCURACY OR COMPLETENESS OF SCANNED COPIES OF THIS PLAN SHEET.

TO ACCOMPANY PLANS DATED 6-13-16

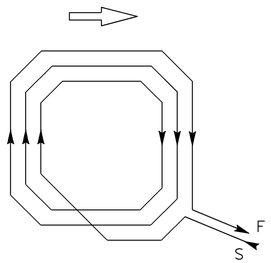

WINDING DETAIL

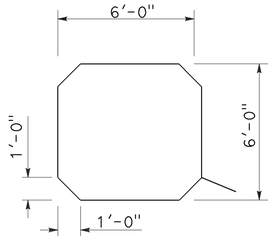

SAW CUT DETAIL

TYPE A LOOP DETECTOR CONFIGURATION

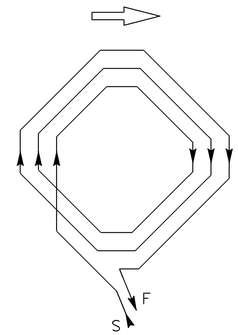

WINDING DETAIL

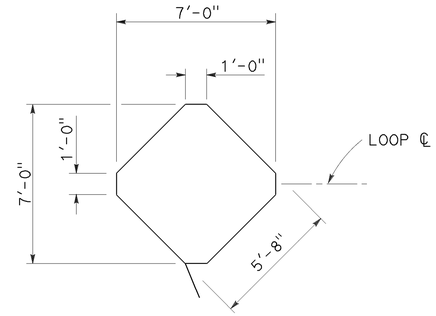

SAW CUT DETAIL

TYPE B LOOP DETECTOR CONFIGURATION

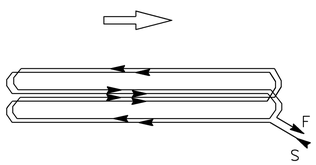

WINDING DETAIL

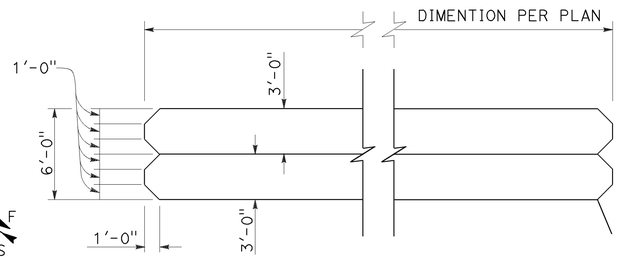

SAW CUT DETAIL

TYPE C LOOP DETECTOR CONFIGURATION

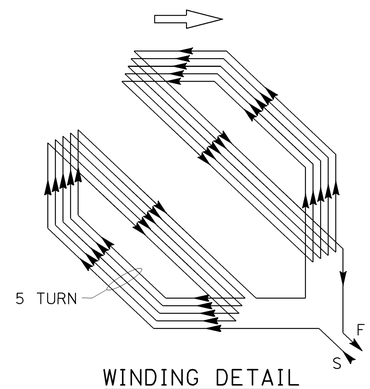

WINDING DETAIL

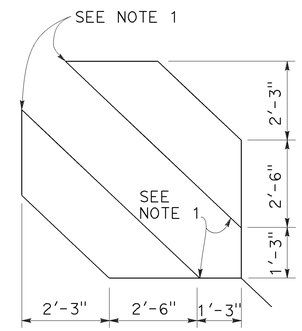

SAW CUT DETAIL

TYPE D LOOP DETECTOR CONFIGURATION

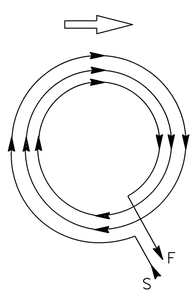

WINDING DETAIL

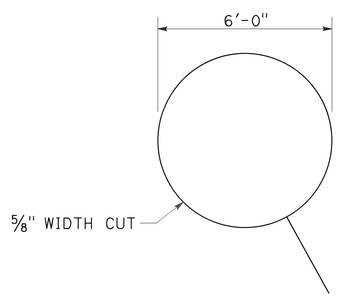

SAW CUT DETAIL

TYPE E LOOP DETECTOR CONFIGURATION

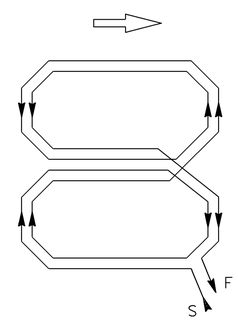

WINDING DETAIL

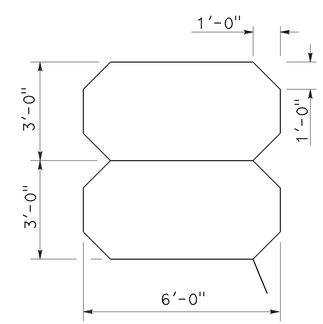

SAW CUT DETAIL

TYPE Q LOOP DETECTOR CONFIGURATION

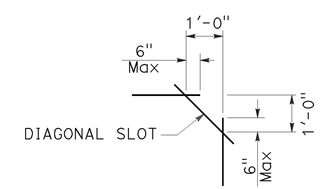

PLAN VIEW OF DIAGONAL SLOT AT CORNERS

NOTES:

1. Round corners of acute angle saw cuts to prevent damage to conductors.
2. Typical distance separating loops from edge to edge is 10' for Type A, B, D and E installation in single lane.
3. Use Type D loops for limit line detection and bicycle lanes.

3 **REPLACED PER ADDENDUM No. 3 DATED SEPTEMBER 20, 2016**

STATE OF CALIFORNIA
DEPARTMENT OF TRANSPORTATION

ELECTRICAL SYSTEMS (DETECTORS)

NO SCALE

RSP ES-5B DATED APRIL 15, 2016 SUPERSEDES RSP ES-5B DATED OCTOBER 30, 2015 AND RSP ES-5B DATED JULY 19, 2013 AND STANDARD PLAN ES-5B DATED MAY 20, 2011 - PAGE 449 OF THE STANDARD PLANS BOOK DATED 2010.

REVISED STANDARD PLAN RSP ES-5B

2010 REVISED STANDARD PLAN RSP ES-5B

1-22-16

Dist	COUNTY	ROUTE	POST MILES TOTAL PROJECT	SHEET No.	TOTAL SHEETS
10	Sta	132	1.1/1.8	72	87

REGISTERED CIVIL ENGINEER

July 15, 2016
PLANS APPROVAL DATE

REGISTERED PROFESSIONAL ENGINEER
Stanley P. Johnson
No. C57793
Exp. 3-31-18
CIVIL
STATE OF CALIFORNIA

THE STATE OF CALIFORNIA OR ITS OFFICERS OR AGENTS SHALL NOT BE RESPONSIBLE FOR THE ACCURACY OR COMPLETENESS OF SCANNED COPIES OF THIS PLAN SHEET.

TO ACCOMPANY PLANS DATED 6-13-16

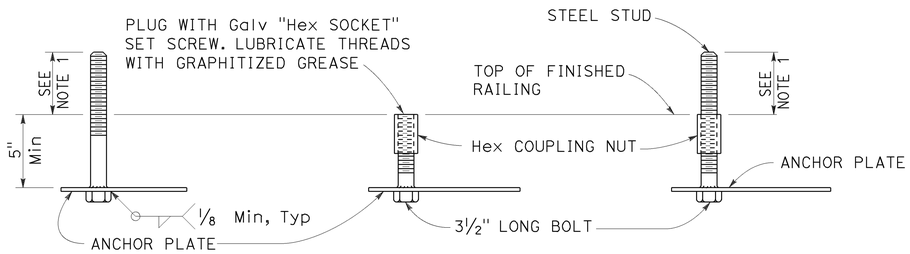

FOR IMMEDIATE INSTALLATION
DETAIL B-1

FOR FUTURE INSTALLATION WITH PLUG
DETAIL B-2

FOR INSTALLATION ON FUTURE ANCHORAGE WITH STUD
DETAIL B-3

ELECTROLIER ANCHORAGES
DETAIL B

NOTES:

1. Anchor bolt or stud length shall be such that thread extends 1/2" maximum above nut on level base plate after grouting. See Detail N.
2. Electrolier anchor bolts shall be held in position for pouring by means of anchor plates and suitable templates. Deviation from the true position, vertical and height shall not exceed 1/16".
3. See railing sheets for reinforcement and structural details at electroliers and pull boxes.

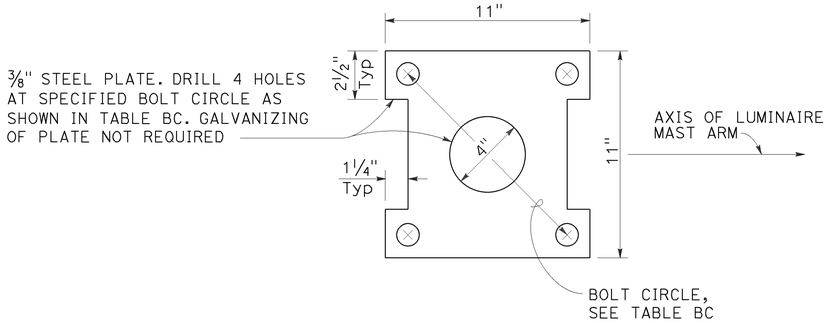

ANCHOR PLATE
DETAIL A

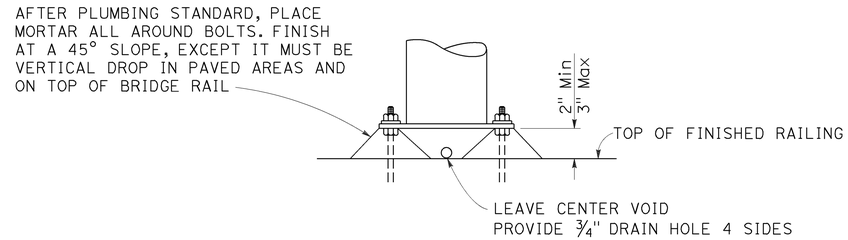

GROUTING AT ELECTROLIER
DETAIL N

TABLE BC				
TYPE	BC = BOLT CIRCLE	ANCHOR BOLT DIAMETER	COUPLING NUT BASIC LENGTH	SET SCREW LENGTH DETAIL B-2
15	1'-0"	1"	3"	1 1/2"
21		1 1/4"	3 3/4"	1 7/8"

STATE OF CALIFORNIA
DEPARTMENT OF TRANSPORTATION

ELECTRICAL SYSTEMS (ELECTROLIER ANCHORAGE AND GROUTING FOR TYPE 15 AND TYPE 21 BARRIER RAIL MOUNTED)

NO SCALE

RSP ES-6B DATED JULY 15, 2016 SUPERSEDES STANDARD PLAN ES-6B DATED MAY 20, 2011 - PAGE 453 OF THE STANDARD PLANS BOOK DATED 2010.

3 REPLACED PER ADDENDUM No. 3 DATED SEPTEMBER 20, 2016

REVISED STANDARD PLAN RSP ES-6B

2010 REVISED STANDARD PLAN RSP ES-6B

6-20-16

Dist	COUNTY	ROUTE	POST MILES TOTAL PROJECT	SHEET No.	TOTAL SHEETS
10	Sta	132	1.1/1.8	73	87

3

REGISTERED CIVIL ENGINEER

July 15, 2016
PLANS APPROVAL DATE

REGISTERED PROFESSIONAL ENGINEER
Stanley P. Johnson
No. C57793
Exp. 3-31-18
CIVIL
STATE OF CALIFORNIA

THE STATE OF CALIFORNIA OR ITS OFFICERS OR AGENTS SHALL NOT BE RESPONSIBLE FOR THE ACCURACY OR COMPLETENESS OF SCANNED COPIES OF THIS PLAN SHEET.

TO ACCOMPANY PLANS DATED 6-13-16

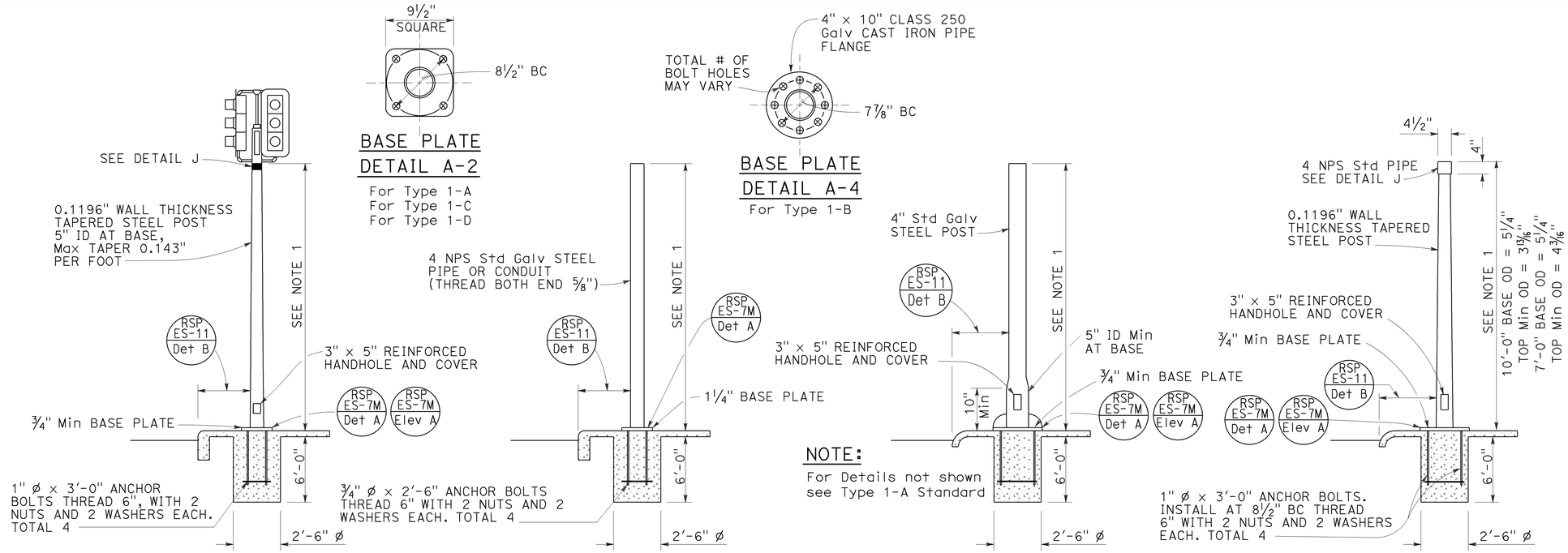

TYPE 1 SIGNAL STANDARDS
DETAIL A

NOTES:

1. Standards shall be 10'-0" ± 2" for vehicle signals and 7'-0" ± 2" for pedestrian signals unless shorter pole is noted on project plans.
2. Top of standards shall be 4½" OD.
3. Conduits shall extend 2" maximum above finished surface of foundation and for Types 1-A, 1-C and 1-D shall be sloped toward handhole.
4. Anchor bolts shall be bonded to conduit or grounding conductor.
5. For additional notes and details, see Revised Standard Plans RSP ES-7M and RSP ES-7N.
6. Pour foundation concrete against undisturbed soil.
7. For standards with handhole, locate in the downstream side of traffic.
8. Coupling nuts to be used only when shown or specified on project plans.

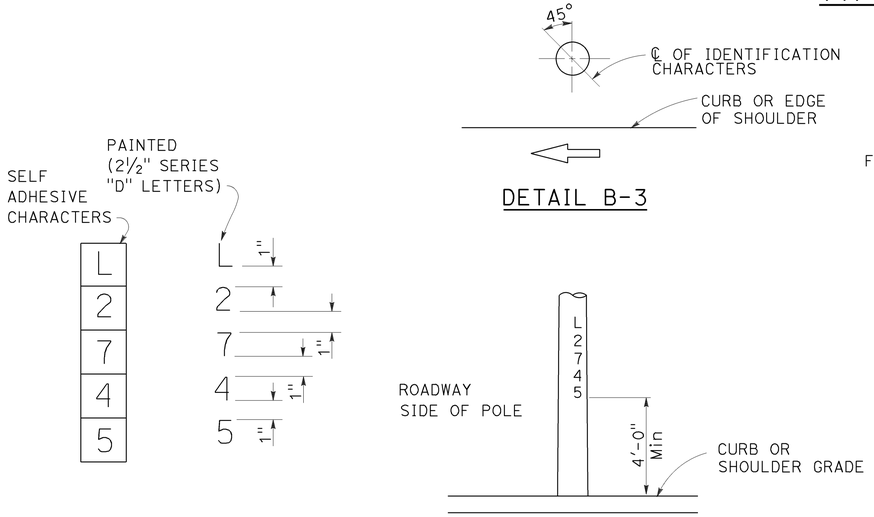

IDENTIFICATION CHARACTER DETAIL
DETAIL B-1

TYPICAL IDENTIFICATION CHARACTER FORMAT
DETAIL B-2

LOCATION OF EQUIPMENT IDENTIFICATION CHARACTERS ON STANDARDS AND POSTS
DETAIL B

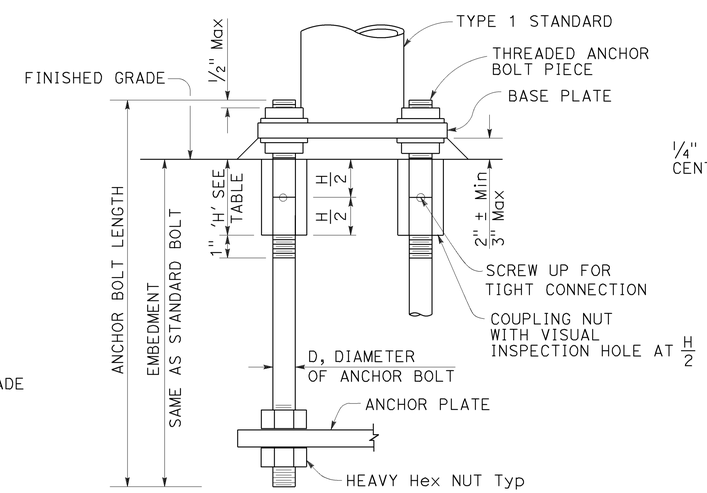

ANCHOR BOLTS WITH SLEEVE NUTS
DETAIL C
(See Note 8)

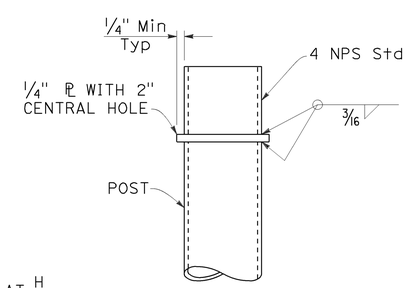

DETAIL J

COUPLING NUT TABLE	
BOLT DIAMETER	NUT TABLE THICKNESS 'H'
¾"	2¼"
1"	3'

STATE OF CALIFORNIA
DEPARTMENT OF TRANSPORTATION

ELECTRICAL SYSTEMS (SIGNAL AND LIGHTING STANDARD, TYPE 1 AND EQUIPMENT IDENTIFICATION CHARACTERS)

NO SCALE

RSP ES-7B DATED JULY 15, 2016 SUPERSEDES RSP ES-7B DATED OCTOBER 30, 2015 AND STANDARD PLAN ES-7B DATED MAY 20, 2011 - PAGE 463 OF THE STANDARD PLANS BOOK DATED 2010.

3 **REPLACED PER ADDENDUM No. 3 DATED SEPTEMBER 20, 2016**

REVISED STANDARD PLAN RSP ES-7B

2010 REVISED STANDARD PLAN RSP ES-7B

6-20-16

Dist	COUNTY	ROUTE	POST MILES TOTAL PROJECT	SHEET No.	TOTAL SHEETS
10	Sta	132	1.1/1.8	74	87

REGISTERED CIVIL ENGINEER

July 15, 2016
PLANS APPROVAL DATE

REGISTERED PROFESSIONAL ENGINEER Stanley P. Johnson No. C57793 Exp. 3-31-18 CIVIL STATE OF CALIFORNIA

THE STATE OF CALIFORNIA OR ITS OFFICERS OR AGENTS SHALL NOT BE RESPONSIBLE FOR THE ACCURACY OR COMPLETENESS OF SCANNED COPIES OF THIS PLAN SHEET.

TO ACCOMPANY PLANS DATED 6-13-16 3

NOTE:

Handhole shall be located on the downstream side of traffic.

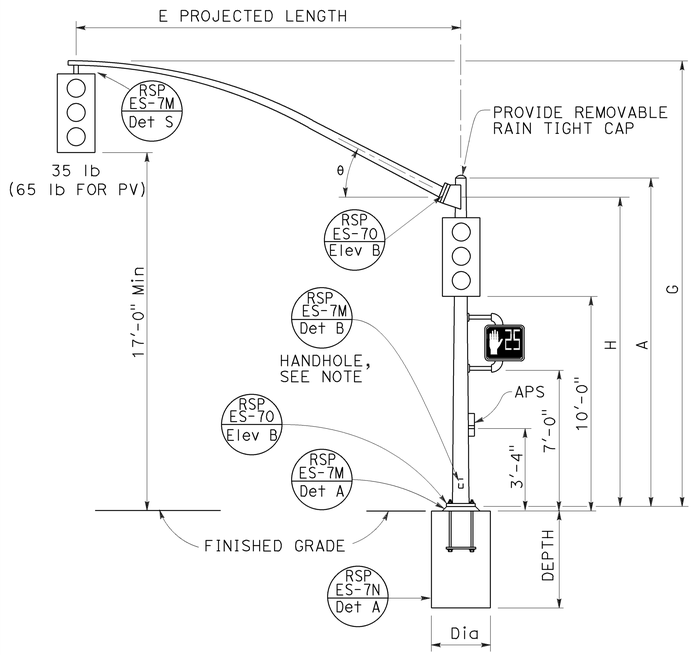

TYPE 16-1-100, 18-1-100

ELEVATION A

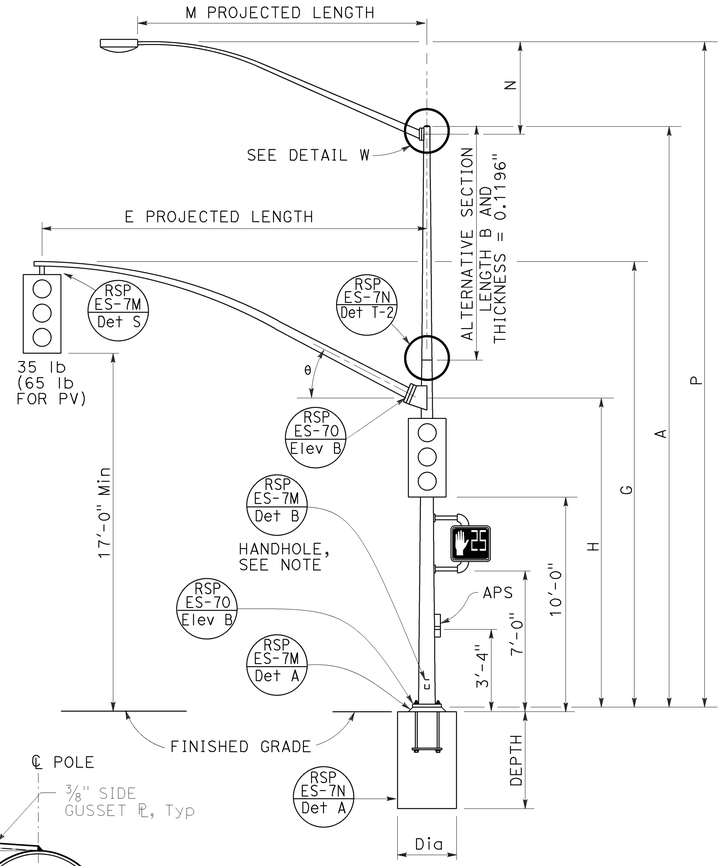

TYPE 19-1-100, 19A-1-100

ELEVATION B

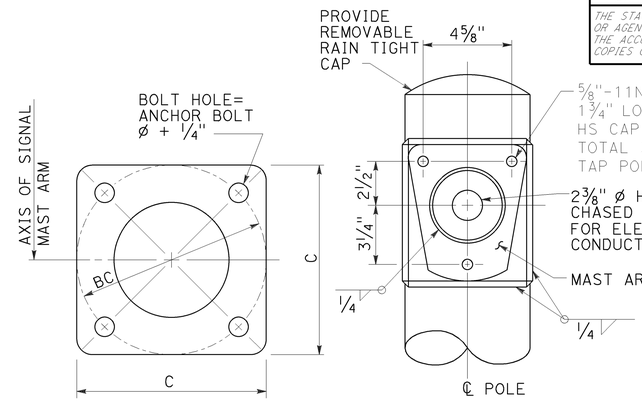

DETAIL D

BASE PLATE

DETAIL W-1

LUMINAIRE MAST ARM CONNECTION

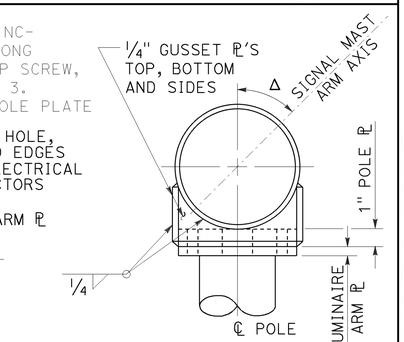

DETAIL W-2

DETAIL W

3 **REPLACED PER ADDENDUM No. 3 DATED SEPTEMBER 20, 2016**

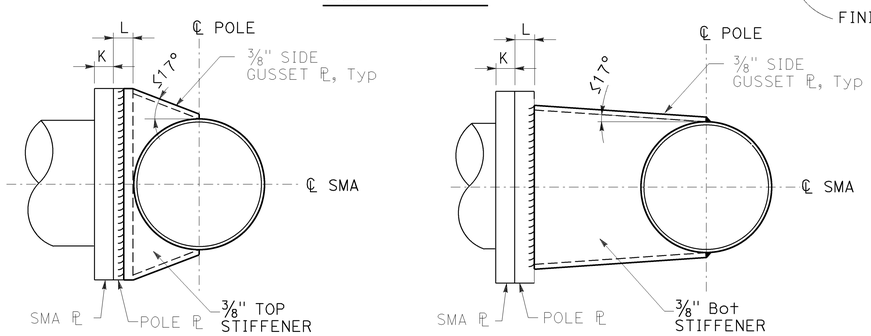

SECTION B-B

SECTION C-C

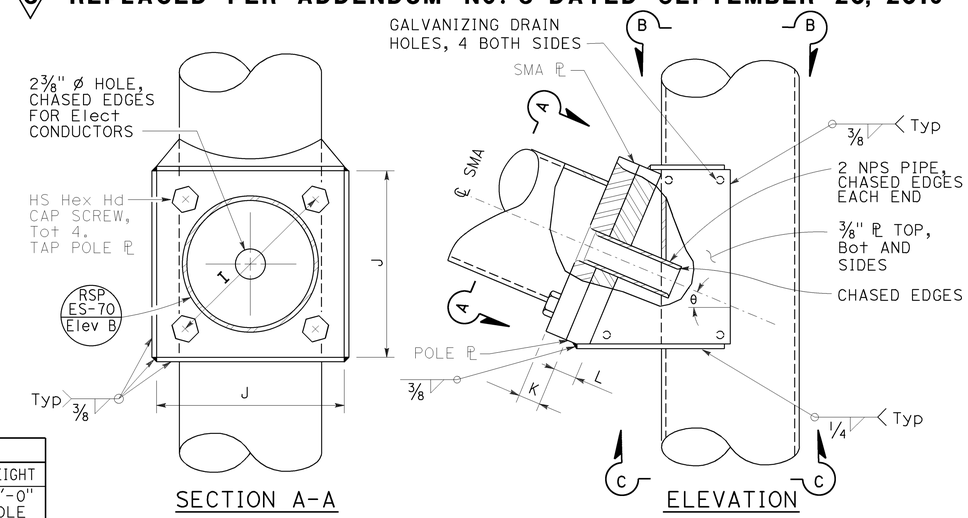

SECTION A-A

ELEVATION

SIGNAL MAST ARM CONNECTION

DETAIL A

SIGNAL MAST ARM DATA										
E PROJECTED LENGTH	G MOUNTING HEIGHT	H	Min OD AT POLE	THICKNESS	I BOLT CIRCLE	HS CAP SCREWS	J PLATE SIZE	K MAST ARM ℄ THICKNESS	L POLE ℄ THICKNESS	θ
15'-0"	21'-8"±	17'-6"	7 3/8"	0.1793"	12"	1 1/4"-7NC-3"	1'-0"	1 1/4"	1 1/2"	23°
20'-0"			8"				1'-1"			
25'-0"	22'-8"±	16'-0"	9"							
30'-0"	23'-0"±		10"							

LUMINAIRE MAST ARM DATA					
M PROJECTED LENGTH	N RISE	Min OD AT POLE	THICKNESS	P MOUNTING HEIGHT 30'-0" POLE	P MOUNTING HEIGHT 35'-0" POLE
6'-0"	2'-0"±	3 1/4"	0.1196"	31'-6"±	36'-6"±
8'-0"	2'-6"±	3 1/2"		32'-0"±	37'-0"±
10'-0"	3'-3"±	3 7/8"		32'-9"±	37'-9"±
12'-0"	4'-3"±			33'-9"±	38'-9"±
15'-0"	4'-9"±	4 1/4"		34'-3"±	39'-3"±

POLE TYPE	LOAD CASE	WIND VELOCITY (mph)	POLE DATA: A HEIGHT	Min OD BASE	Min OD TOP	THICKNESS	ALTERNATIVE SECTION B LENGTH	ALTERNATIVE SECTION BOTTOM	ALTERNATIVE SECTION TOP	BASE PLATE DATA: C	BC = BOLT CIRCLE	THICKNESS	ANCHOR BOLT SIZE	LUMINAIRE MAST ARM	SIGNAL MAST ARM	CIDH PILE FOUNDATION Dia	CIDH PILE FOUNDATION DEPTH
16-1-100	1	100	18'-6"	12"	9 3/8"	0.2391" OR 0.25"	None			1'-6"	1'-4"	2"	1 3/4"ø × 42"	NONE	15'-0", [20'-0"]	3'-0"	9'-0"
18-1-100			17'-0"				None							NONE			
19-1-100			30'-0"	14"	9 3/4"		10'-0"	11 1/8"	9 3/4"	1'-10"	1'-8"	2 1/2"	2"ø × 42"	6'-15' [12'-0"]	25'-0", [30'-0"]	3'-6"	10'-0"
19A-1-100			35'-0"		9"		15'-0"		9"					6'-15' [15'-0"]			

[ ] INDICATES MAST ARM LENGTH TO BE USED UNLESS OTHERWISE NOTED ON PLANS.

STATE OF CALIFORNIA
DEPARTMENT OF TRANSPORTATION

ELECTRICAL SYSTEMS (SIGNAL AND LIGHTING STANDARD, CASE 1 SIGNAL MAST ARM LOADING, WIND VELOCITY = 100 MPH AND SIGNAL MAST ARM LENGTHS 15' TO 30')

NO SCALE

RSP ES-7C DATED JULY 15, 2016 SUPERSEDES RSP ES-7C DATED OCTOBER 30, 2015 AND RSP ES-7C DATED JULY 19, 2013 AND STANDARD PLAN ES-7C DATED MAY 20, 2011 - PAGE 464 OF THE STANDARD PLANS BOOK DATED 2010.

REVISED STANDARD PLAN RSP ES-7C

2010 REVISED STANDARD PLAN RSP ES-7C

6-20-16

Dist	COUNTY	ROUTE	POST MILES TOTAL PROJECT	SHEET No.	TOTAL SHEETS
10	Sta	132	1.1/1.8	75	87

3

REGISTERED CIVIL ENGINEER

July 15, 2016

PLANS APPROVAL DATE

REGISTERED PROFESSIONAL ENGINEER Stanley P. Johnson No. C57793 Exp. 3-31-18 CIVIL STATE OF CALIFORNIA

THE STATE OF CALIFORNIA OR ITS OFFICERS OR AGENTS SHALL NOT BE RESPONSIBLE FOR THE ACCURACY OR COMPLETENESS OF SCANNED COPIES OF THIS PLAN SHEET.

TO ACCOMPANY PLANS DATED 6-13-16

NOTE:

Handhole shall be located on the downstream side of traffic.

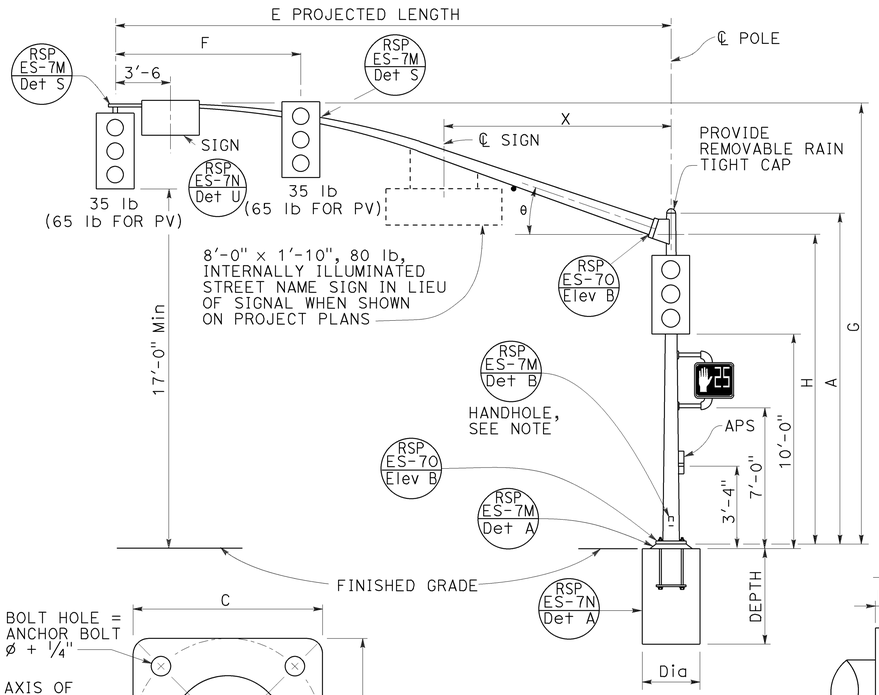

TYPE 16-3-100, 18-3-100, 23-3-100, 27-3-100

ELEVATION A

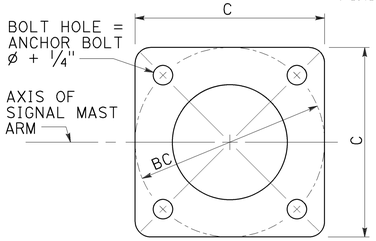

BASE PLATE

DETAIL B

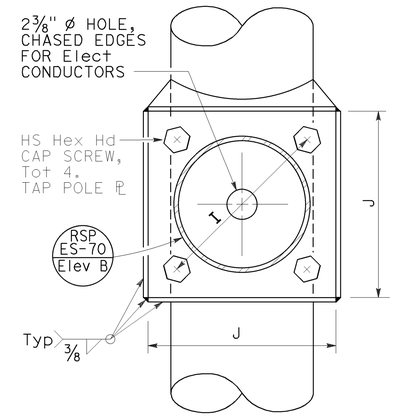

SECTION A-A

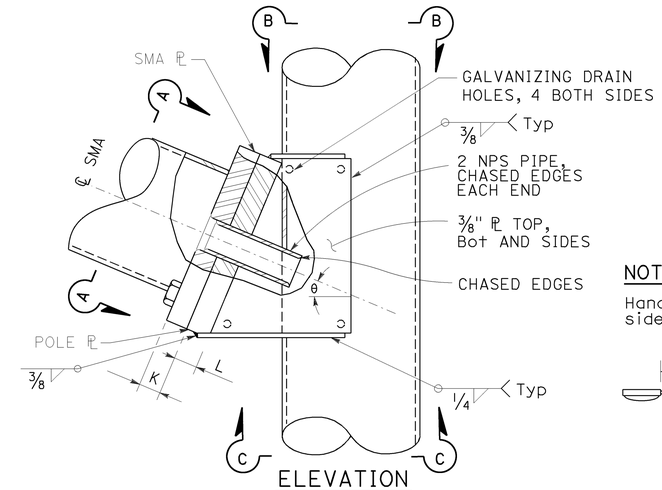

ELEVATION

SIGNAL MAST ARM CONNECTION

DETAIL A

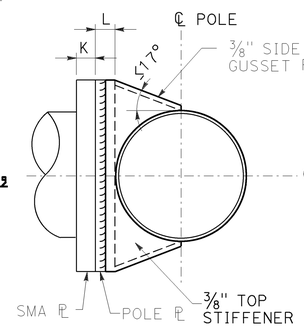

SECTION B-B

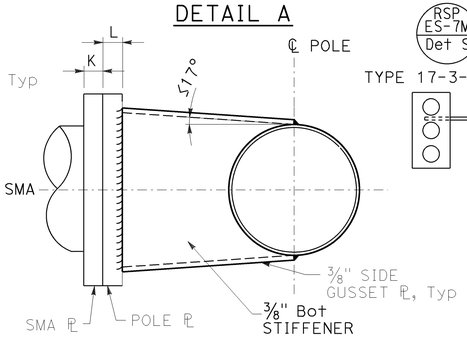

SECTION C-C

3 **REPLACED PER ADDENDUM No. 3 DATED SEPTEMBER 20, 2016**

SIGNAL MAST ARM DATA												
E PROJECTED LENGTH	F Min SPACING	G MOUNTING HEIGHT	H	Min OD AT POLE	THICKNESS	I BOLT CIRCLE	HS CAP SCREWS	J PLATE SIZE	K MAST ARM ℄ THICKNESS	L POLE ℄ THICKNESS	θ	X Max
15'-0"	8'-0"	21'-8"±	17'-6"	7 3/8"	0.1793"	12"	1 1/4"-7NC-3"	1'-3"	1 1/4"	1 1/2"	23°	-
20'-0"		21'-8"±		7 3/8"								
25'-0"	12'-0"	22'-8"±	16'-0"	7 3/8"	0.2391"							10'-6"
30'-0"		23'-0"±		8"								
35'-0"	14'-0"			8 3/4"		13"			1 1/2"	1 3/4"	21°	
40'-0"	15'-0"			9 3/8"							15°	13'-0"
45'-0"		23'-8"±		10 1/16"				1'-5"				

LUMINAIRE MAST ARM DATA					
M PROJECTED LENGTH	N RISE	Min OD AT POLE	THICKNESS	P MOUNTING HEIGHT 30'-0" POLE	P MOUNTING HEIGHT 35'-0" POLE
6'-0"	2'-0"±	3 1/4"	0.1196"	31'-6"±	36'-6"±
8'-0"	2'-6"±	3 1/2"		32'-0"±	37'-0"±
10'-0"	3'-3"±	3 7/8"		32'-9"±	37'-9"±
12'-0"	4'-3"±			33'-9"±	38'-9"±
15'-0"	4'-9"±	4 1/4"		34'-3"±	39'-3"±

POLE TYPE	LOAD CASE	WIND VELOCITY (mph)	POLE DATA: A HEIGHT	Min OD BASE	Min OD TOP	THICKNESS	ALTERNATIVE SECTION B LENGTH	ALTERNATIVE SECTION BOTTOM	ALTERNATIVE SECTION TOP	BASE PLATE DATA: C	BC = BOLT CIRCLE	THICKNESS	ANCHOR BOLT SIZE	LUMINAIRE MAST ARM	SIGNAL MAST ARM	CIDH PILE FOUNDATION Dia	CIDH PILE FOUNDATION DEPTH
16-3-100	3	100	18'-6"	16"	13 3/8"	0.2391" OR 0.25"				1'-11"	1'-9"	3"	2 1/4" Ø x 42"	NONE	15'-0", 20'-0"	3'-6"	12'-0"
17-3-100			30'-0"		11 3/4"		10'-0"	13 1/8"	11 3/4"					6'-15' 12'-0"			
18-3-100			17'-0"		13 5/8"									NONE	25'-0", 30'-0"		
19-3-100			30'-0"		11 3/4"		10'-0"	13 1/8"	11 3/4"					6'-15' 12'-0"			
19A-3-100			35'-0"		11"	0.3125"	15'-0"		11"					6'-15' 15'-0"			
23-3-100			17'-0"		13 5/8"	0.2391" OR 0.25"								NONE	35'-0"		
24-3-100			30'-0"		11 3/4"	0.3125"	10'-0"	13 1/8"	11 3/4"					6'-15' 12'-0"			
24A-3-100			35'-0"		11"		15'-0"		11"					6'-15' 15'-0"			
26-3-100			30'-0"	18"	13 3/4"		10'-0"	15 1/8"	13 3/4"	2'-1"	1'-11"			6'-15' 12'-0"	40'-0", 45'-0"		13'-0"
26A-3-100			35'-0"		13"		15'-0"		13"					6'-15' 15'-0"			
27-3-100			17'-0"		15 5/8"									NONE			

INDICATES MAST ARM LENGTH TO BE USED UNLESS OTHERWISE NOTED ON PLANS.

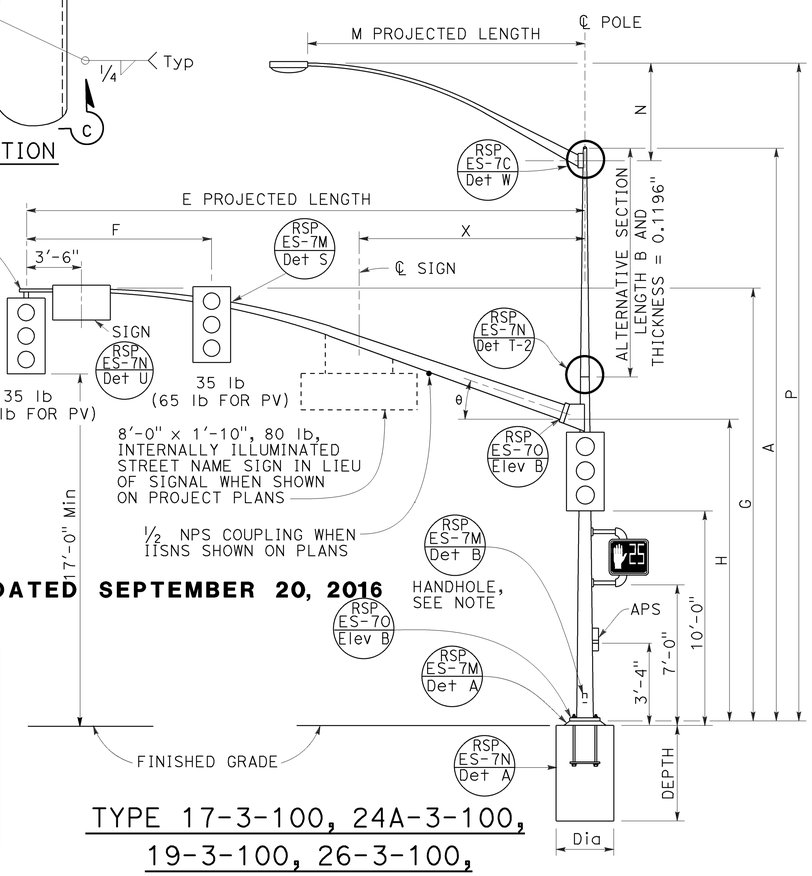

TYPE 17-3-100, 24A-3-100, 19-3-100, 26-3-100, 19A-3-100, 26A-3-100, 24-3-100

ELEVATION B

STATE OF CALIFORNIA
DEPARTMENT OF TRANSPORTATION

ELECTRICAL SYSTEMS (SIGNAL AND LIGHTING STANDARD, CASE 3 SIGNAL MAST ARM LOADING, WIND VELOCITY=100 MPH AND SIGNAL MAST ARM LENGTHS 15' TO 45')

NO SCALE

RSP ES-7E DATED JULY 15, 2016 SUPERSEDES RSP ES-7E DATED OCTOBER 30, 2015 AND RSP ES-7E DATED JULY 19, 2013 AND STANDARD PLAN ES-7E DATED MAY 20, 2011 - PAGE 466 OF THE STANDARD PLANS BOOK DATED 2010.

REVISED STANDARD PLAN RSP ES-7E

2010 REVISED STANDARD PLAN RSP ES-7E

6-20-16

Dist	COUNTY	ROUTE	POST MILES TOTAL PROJECT	SHEET No.	TOTAL SHEETS
10	Sta	132	1.1/1.8	76	87

REGISTERED CIVIL ENGINEER

July 15, 2016

PLANS APPROVAL DATE

REGISTERED PROFESSIONAL ENGINEER Stanley P. Johnson No. C57793 Exp. 3-31-18 CIVIL STATE OF CALIFORNIA

THE STATE OF CALIFORNIA OR ITS OFFICERS OR AGENTS SHALL NOT BE RESPONSIBLE FOR THE ACCURACY OR COMPLETENESS OF SCANNED COPIES OF THIS PLAN SHEET.

TO ACCOMPANY PLANS DATED 6-13-16

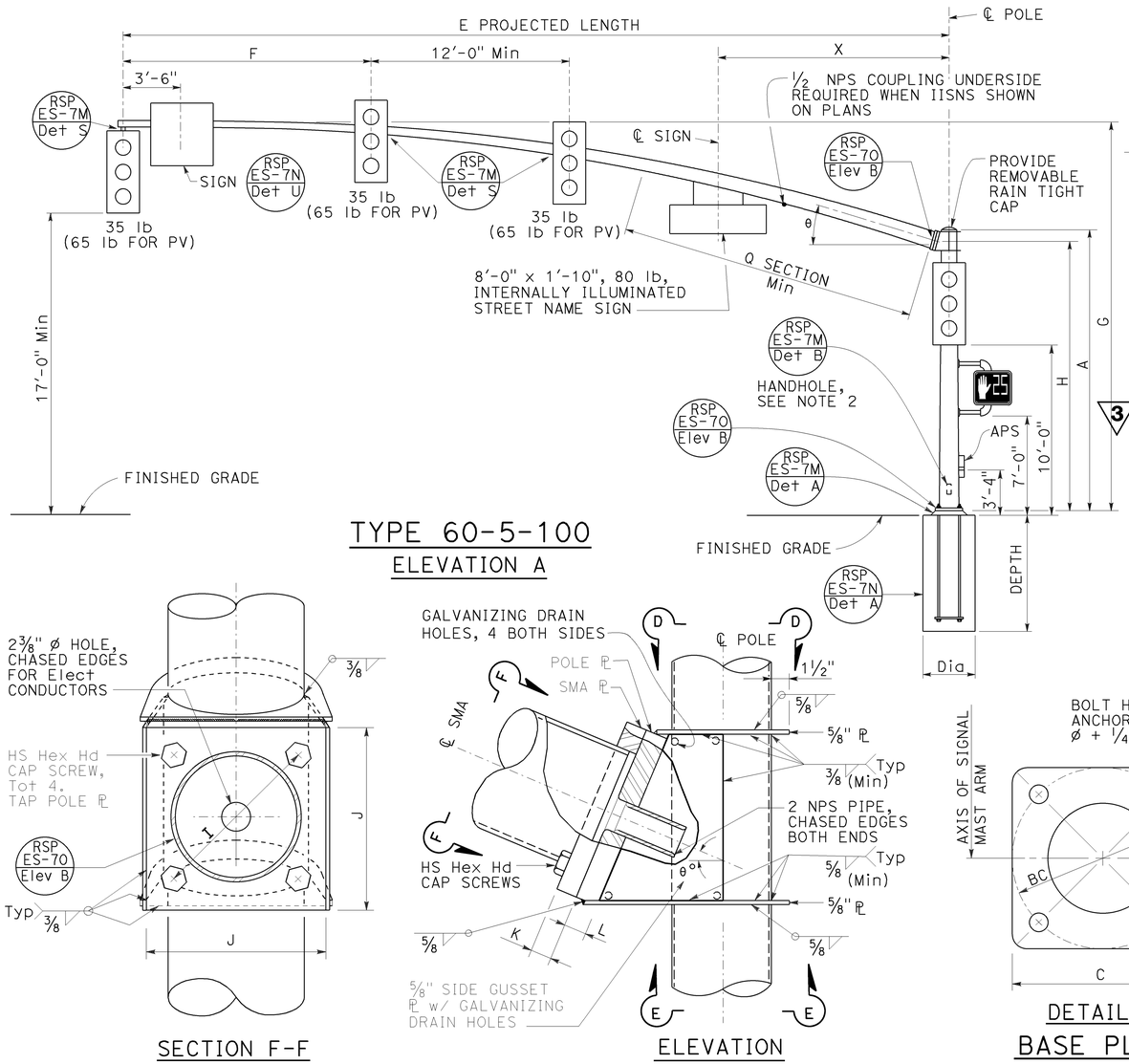

TYPE 60-5-100

ELEVATION A

SECTION F-F

ELEVATION

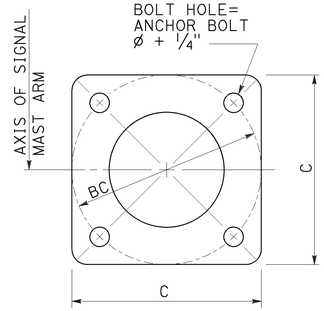

DETAIL B

BASE PLATE

SIGNAL MAST ARM CONNECTION

DETAIL B

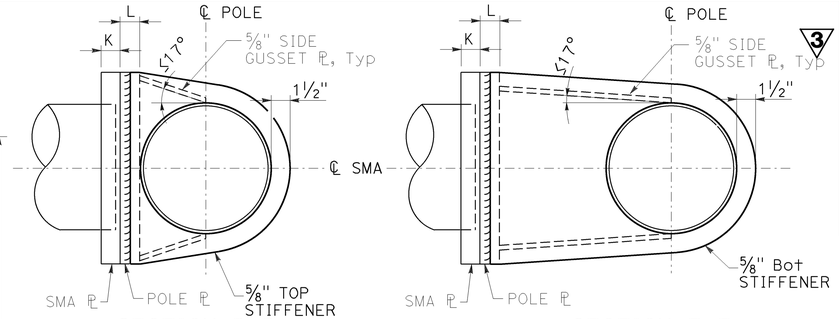

SECTION D-D

SECTION E-E

3 **REPLACED PER ADDENDUM No. 3 DATED SEPTEMBER 20, 2016**

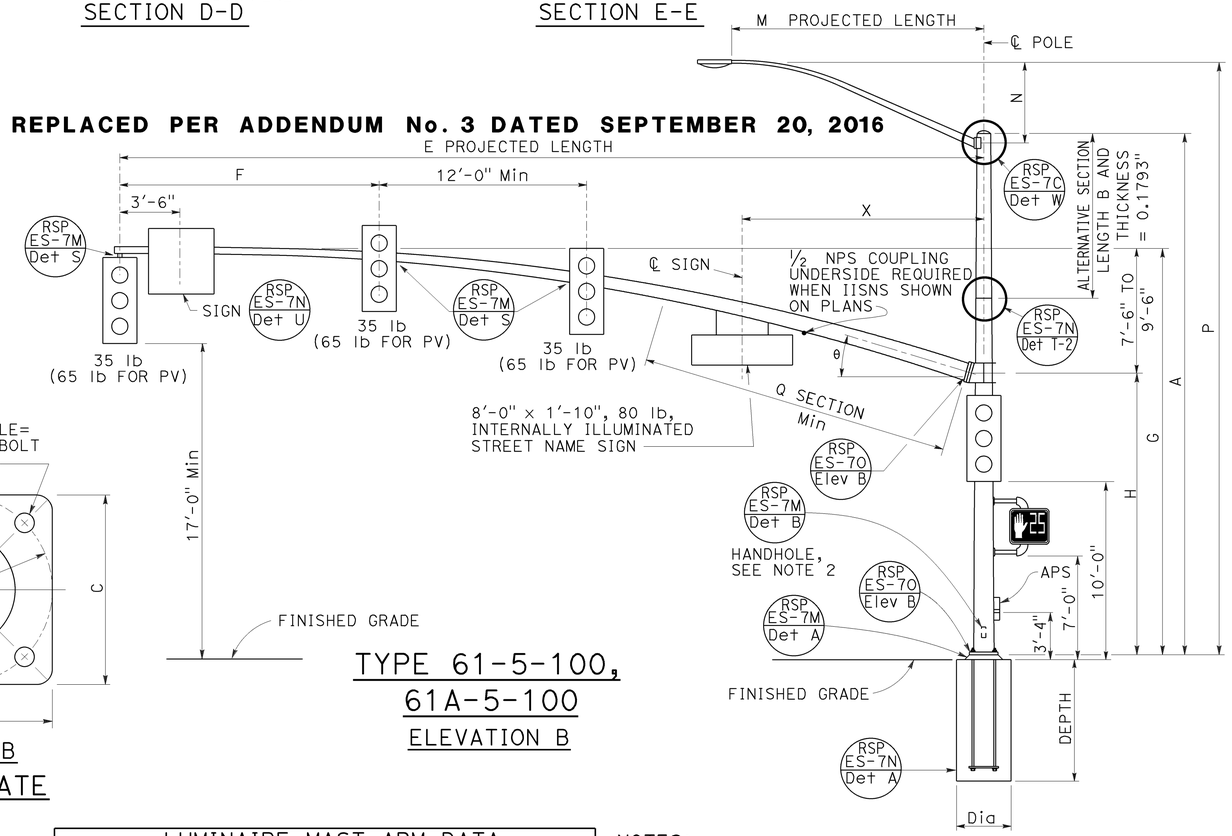

TYPE 61-5-100,

61A-5-100

ELEVATION B

SIGNAL MAST ARM DATA														
E PROJECTED LENGTH	F Min SPACING	G MOUNTING HEIGHT	H	Min OD AT POLE	THICKNESS	I BOLT CIRCLE	HS CAP SCREWS	J PLATE SIZE	K MAST ARM ℄ THICKNESS	L POLE ℄ THICKNESS	θ	Q SECTION LENGTH	Q SECTION THICKNESS	X Max
60'-0"	15'-0"	23'-7" TO 25'-7"	16'-0"	1'-1½"	0.1793"	20"	1½"-6NC-4"	2'-0"	2"	2"	15°	24'-0"	0.2391"	14'-0"
65'-0"					0.2391"							29'-0"	0.3125"	

LUMINAIRE MAST ARM DATA					
M PROJECTED LENGTH	N RISE	Min OD AT POLE	THICKNESS	P MOUNTING HEIGHT 30'-0" POLE	P MOUNTING HEIGHT 35'-0" POLE
6'-0"	2'-0"±	3¼"	0.1196"	31'-6"±	36'-6"±
8'-0"	2'-6"±	3½"		32'-0"±	37'-0"±
10'-0"	3'-3"±	3⅞"		32'-9"±	37'-9"±
12'-0"	4'-3"±			33'-9"±	38'-9"±
15'-0"	4'-9"±	4¼"		34'-3"±	39'-3"±

NOTES:

1. The radial separation between the face of the pole and the adjacent insides of the top and bottom gusset plates shall not exceed 3/16". Fillet weld size to be increased by amount of gap.
2. Handhole shall be located on the downstream side of traffic.

POLE TYPE	LOAD CASE	WIND VELOCITY (mph)	POLE DATA A HEIGHT	Min OD BASE	Min OD TOP	THICKNESS	ALTERNATIVE SECTION B LENGTH	ALTERNATIVE SECTION BOTTOM	ALTERNATIVE SECTION TOP	BASE PLATE DATA C	BC = BOLT CIRCLE	THICKNESS	ANCHOR BOLT SIZE	LUMINAIRE MAST ARM	SIGNAL MAST ARM	CIDH PILE FOUNDATION Dia	CIDH PILE FOUNDATION DEPTH
60-5-100	5	100	17'-0"	22"	19⅝"	0.375"				2'-6"	2'-4"	3"	2¼"ø x 42"	NONE	50'-0", [55'-0"]	4'-0"	14'-0"
61-5-100			30'-0"	25"	20¾"		10'-0"	22⅛"	20¾"	2'-11"	2'-9"		3"ø x 60"	6'-15' [15'-0"]		4'-6"	15'-0"
61A-5-100			35'-0"		20"		15'-0"		20"								

[ ] INDICATES MAST ARM LENGTH TO BE USED UNLESS OTHERWISE NOTED ON PLANS.

STATE OF CALIFORNIA
DEPARTMENT OF TRANSPORTATION

ELECTRICAL SYSTEMS (SIGNAL AND LIGHTING STANDARD, CASE 5 SIGNAL MAST ARM LOADING, WIND VELOCITY=100 MPH AND SIGNAL MAST ARM LENGTHS 60' TO 65')

NO SCALE

RSP ES-7H DATED JULY 15, 2016 SUPERSEDES RSP ES-7H DATED OCTOBER 30, 2015 AND RSP ES-7H DATED JULY 19, 2013 AND STANDARD PLAN ES-7H DATED MAY 20, 2011 - PAGE 469 OF THE STANDARD PLANS BOOK DATED 2010.

REVISED STANDARD PLAN RSP ES-7H

2010 REVISED STANDARD PLAN RSP ES-7H

6-20-16

Dist	COUNTY	ROUTE	POST MILES TOTAL PROJECT	SHEET No.	TOTAL SHEETS
10	Sta	132	1.1/1.8	77	87

REGISTERED CIVIL ENGINEER

July 15, 2016

PLANS APPROVAL DATE

REGISTERED PROFESSIONAL ENGINEER Stanley P. Johnson No. C57793 Exp. 3-31-18 CIVIL STATE OF CALIFORNIA

THE STATE OF CALIFORNIA OR ITS OFFICERS OR AGENTS SHALL NOT BE RESPONSIBLE FOR THE ACCURACY OR COMPLETENESS OF SCANNED COPIES OF THIS PLAN SHEET.

TO ACCOMPANY PLANS DATED 6-13-16

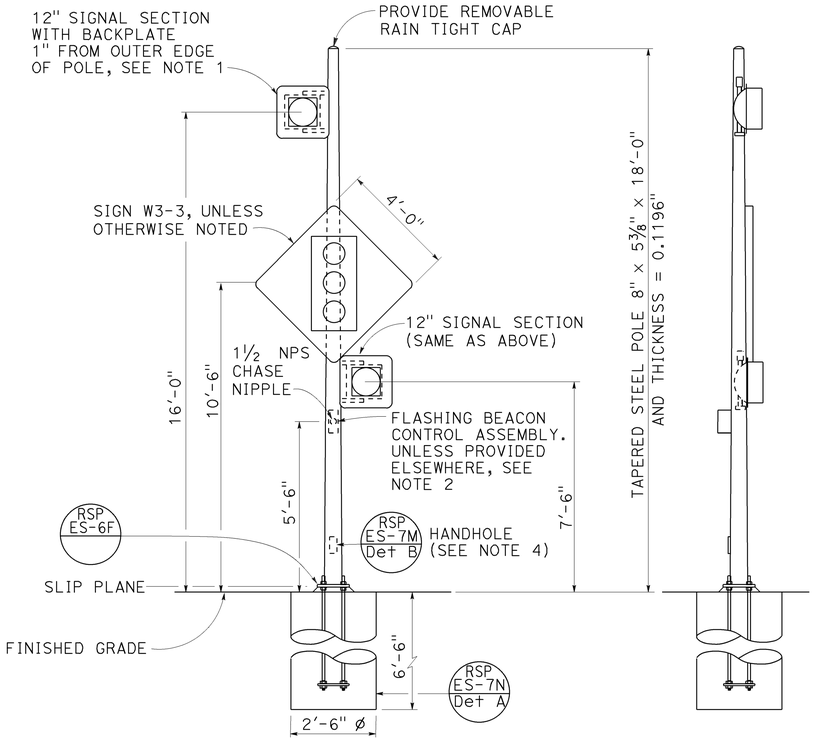

FRONT VIEW

SIDE VIEW

TYPE 15-FBS
FLASHING BEACON WITH SLIP BASE INSTALLATION
DETAIL A

3 REPLACED PER ADDENDUM No. 3 DATED SEPTEMBER 20, 2016

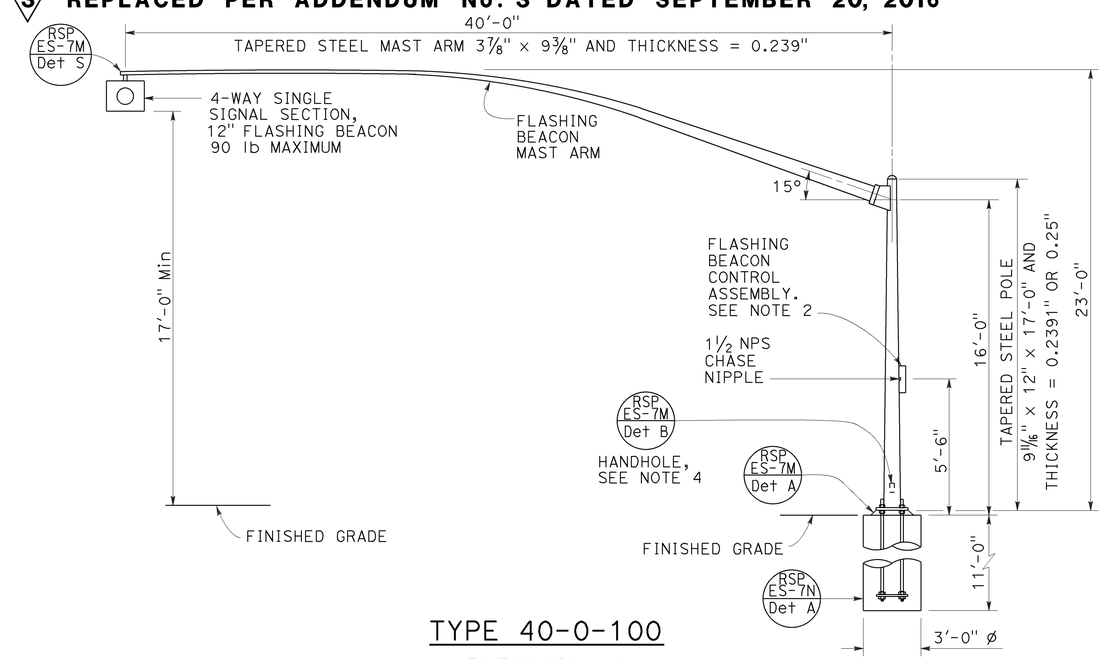

TYPE 40-0-100
ELEVATION A

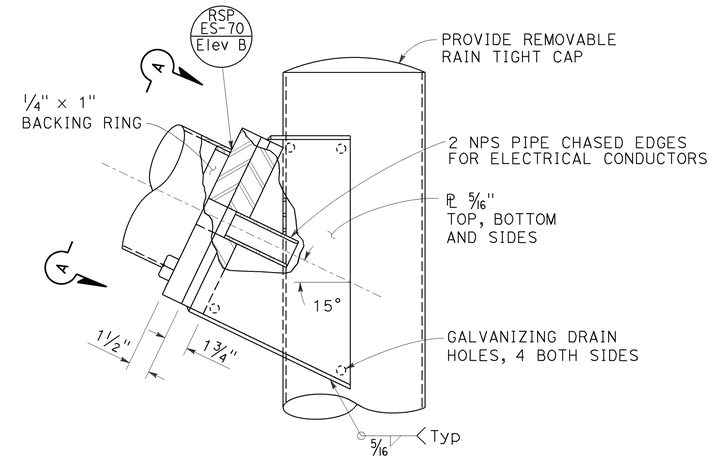

ELEVATION B

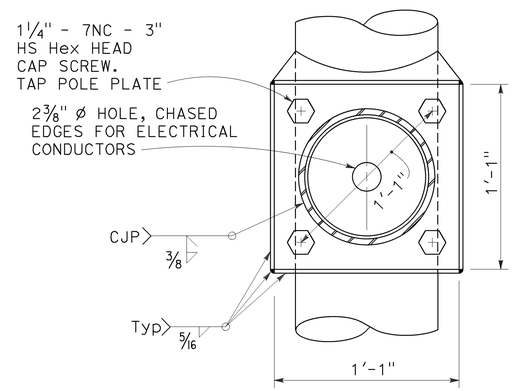

VIEW A-A

FLASHING BEACON MAST ARM CONNECTION DETAIL
DETAIL B

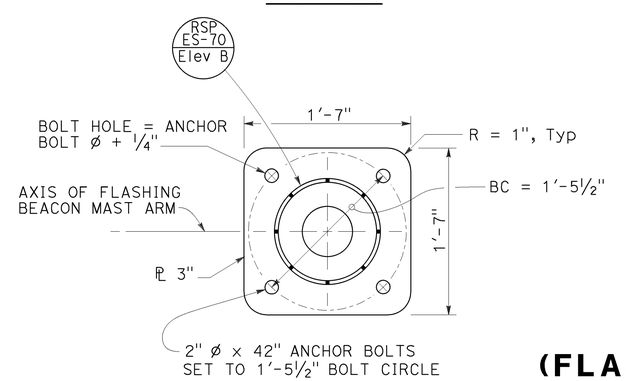

BASE PLATE

DETAIL C

NOTES:

1. See Revised Standard Plans RSP ES-4A and RSP ES-4D for attachment fitting details.
2. For wiring diagram, see Revised Standard Plan RSP ES-14B.
3. For additional notes and details, see Revised Standard Plans RSP ES-7M and RSP ES-7N.
4. Handhole shall be located on the downstream side of traffic.
5. See project plans for type of standard to be installed.

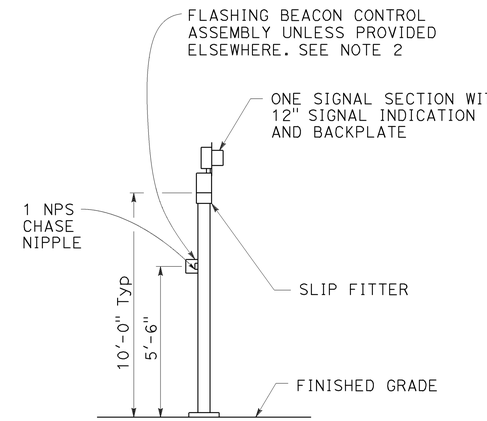

TYPE 1-A, 1-B, 1-C, AND 1-D
FLASHING BEACON INSTALLATION

DETAIL D
See Note 5

STATE OF CALIFORNIA
DEPARTMENT OF TRANSPORTATION

ELECTRICAL SYSTEMS (FLASHING BEACON ON A TYPE 1, TYPE 15-FBS, AND TYPE 40 STANDARD)

NO SCALE

RSP ES-7J DATED JULY 15, 2016 SUPERSEDES RSP ES-7J DATED APRIL 15, 2016 AND RSP ES-7J DATED OCTOBER 30, 2015 AND RSP ES-7J DATED JULY 19, 2013 AND STANDARD PLAN ES-7J DATED MAY 20, 2011 - PAGE 471 OF THE STANDARD PLANS BOOK DATED 2010.

REVISED STANDARD PLAN RSP ES-7J

2010 REVISED STANDARD PLAN RSP ES-7J

6-20-16

Dist	COUNTY	ROUTE	POST MILES TOTAL PROJECT	SHEET No.	TOTAL SHEETS
10	Sta	132	1.1/1.8	78	87

3

REGISTERED CIVIL ENGINEER

April 15, 2016
PLANS APPROVAL DATE

REGISTERED PROFESSIONAL ENGINEER
Stanley P. Johnson
No. C57793
Exp. 3-31-18
CIVIL
STATE OF CALIFORNIA

THE STATE OF CALIFORNIA OR ITS OFFICERS OR AGENTS SHALL NOT BE RESPONSIBLE FOR THE ACCURACY OR COMPLETENESS OF SCANNED COPIES OF THIS PLAN SHEET.

TO ACCOMPANY PLANS DATED 6-13-16

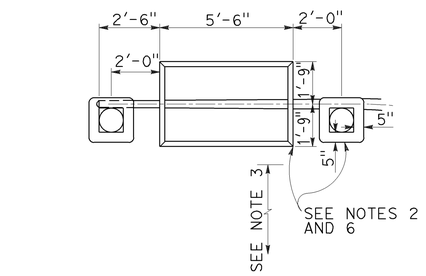

TYPE 9

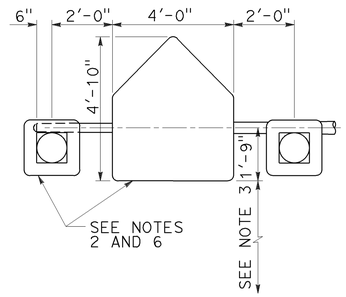

TYPE 9A

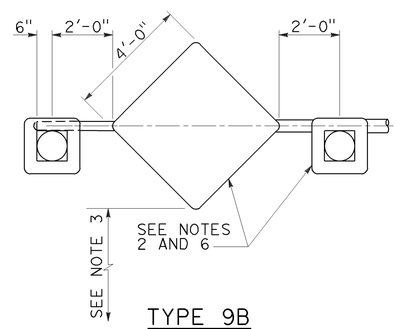

TYPE 9B

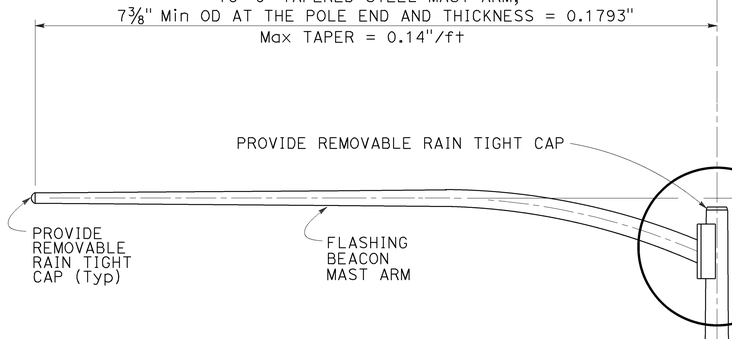

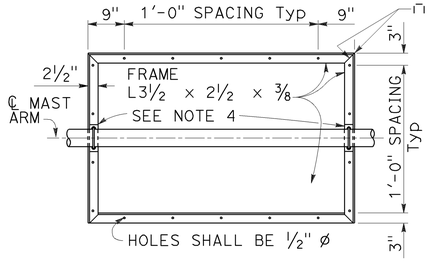

TYPE 9

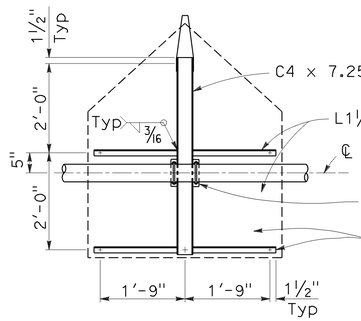

TYPE 9A

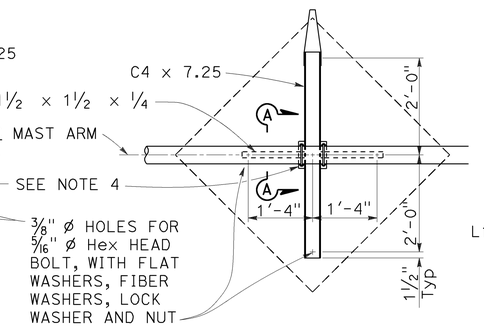

TYPE 9B

FRAME DETAILS
DETAIL A

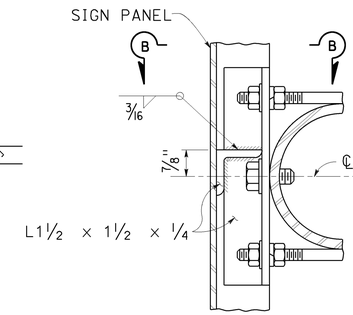

SECTION A-A

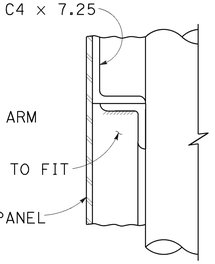

SECTION B-B

TYPE 9B
DETAIL B

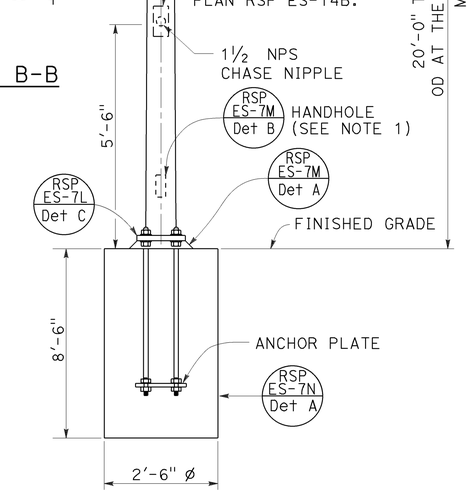

ELEVATION A

NOTES:

1. Handhole shall be located on the downstream side of traffic.
2. Install flashing beacons and sign frame. Flashing beacons shall be MAT mounted on pipe tenon (See Revised Standard Plan RSP ES-7M, Detail S).
3. Vertical clearance shall be 17'-0" minimum between roadway and bottom of signal panel.
4. See Revised Standard Plan RSP ES-7L, Detail B, for sign frame mounting details.
5. For additional notes and details, see Revised Standard Plan RSP ES-7L, Detail B-3.
6. 12" flashing beacon with signal indication, standard visor and 5" x 5" backplate (total 2).

3 **REPLACED PER ADDENDUM No. 3 DATED SEPTEMBER 20, 2016**

STATE OF CALIFORNIA
DEPARTMENT OF TRANSPORTATION

ELECTRICAL SYSTEMS (FLASHING BEACON WITH TYPE 9, 9A AND 9B SIGN)

NO SCALE

RSP ES-7K DATED APRIL 15, 2016 SUPERSEDES RSP ES-7K DATED OCTOBER 30, 2015 AND STANDARD PLAN ES-7K DATED MAY 20, 2011 - PAGE 472 OF THE STANDARD PLANS BOOK DATED 2010.

REVISED STANDARD PLAN RSP ES-7K

2010 REVISED STANDARD PLAN RSP ES-7K

1-22-16

Dist	COUNTY	ROUTE	POST MILES TOTAL PROJECT	SHEET No.	TOTAL SHEETS
10	Sta	132	1.1/1.8	79	87

3

REGISTERED CIVIL ENGINEER

April 15, 2016
PLANS APPROVAL DATE

REGISTERED PROFESSIONAL ENGINEER
Stanley P. Johnson
No. C57793
Exp. 3-31-18
CIVIL
STATE OF CALIFORNIA

THE STATE OF CALIFORNIA OR ITS OFFICERS OR AGENTS SHALL NOT BE RESPONSIBLE FOR THE ACCURACY OR COMPLETENESS OF SCANNED COPIES OF THIS PLAN SHEET.

TO ACCOMPANY PLANS DATED 6-13-16

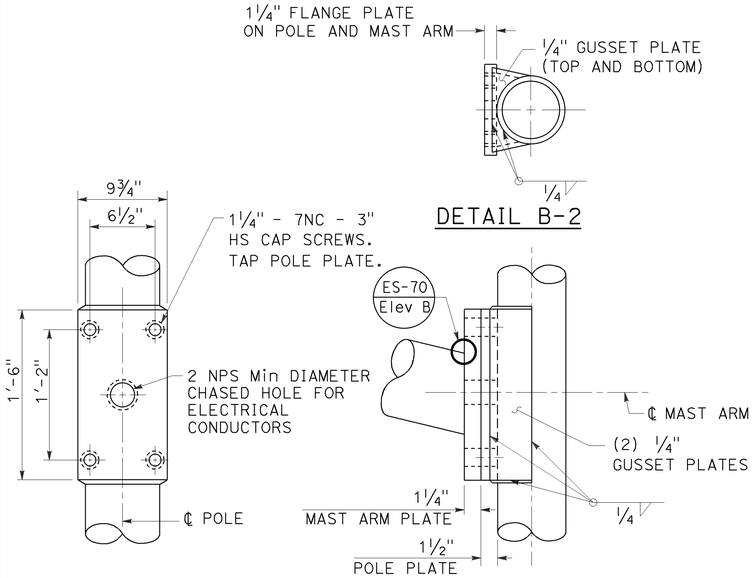

FLASHING BEACON MAST ARM CONNECTION DETAILS

DETAIL B-1

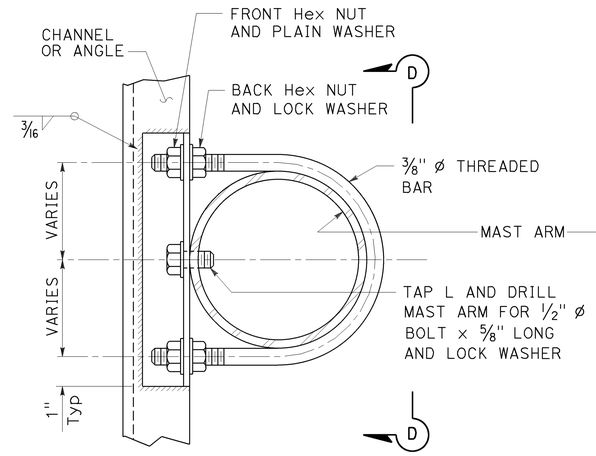

DETAIL B-3

NOTE: Tighten front Hex nuts first, then tighten back Hex nuts.

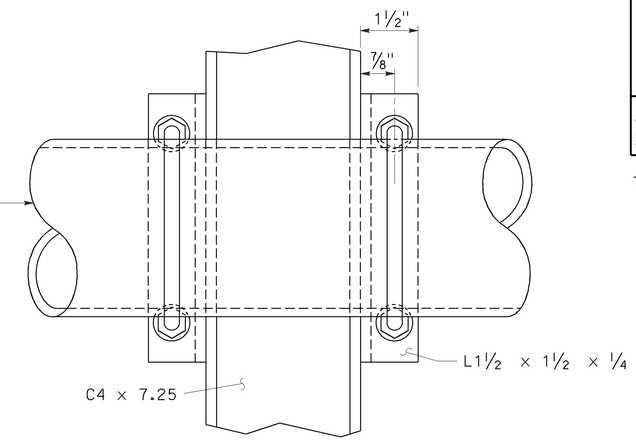

VIEW D-D

SIGN FRAME MOUNTING DETAILS

All types

DETAIL B

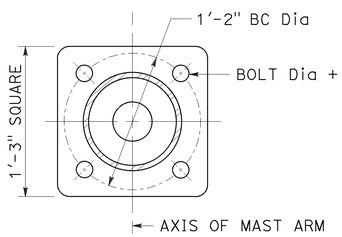

PLAN

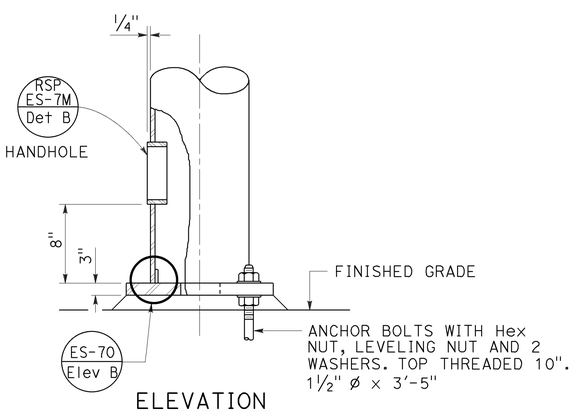

ELEVATION

BASE PLATE AND ANCHORAGE DETAIL

DETAIL C

3 **REPLACED PER ADDENDUM No. 3 DATED SEPTEMBER 20, 2016**

STATE OF CALIFORNIA
DEPARTMENT OF TRANSPORTATION

ELECTRICAL SYSTEMS (FLASHING BEACON WITH TYPE 9, 9A AND 9B SIGN)

NO SCALE

RSP ES-7L DATED APRIL 15, 2016 SUPERSEDES RSP ES-7L DATED OCTOBER 30, 2015 AND STANDARD PLAN ES-7L DATED MAY 20, 2011 - PAGE 473 OF THE STANDARD PLANS BOOK DATED 2010.

REVISED STANDARD PLAN RSP ES-7L

2010 REVISED STANDARD PLAN RSP ES-7L

1-22-16

Dist	COUNTY	ROUTE	POST MILES TOTAL PROJECT	SHEET No.	TOTAL SHEETS
10	Sta	132	1.1/1.8	80	87

REGISTERED CIVIL ENGINEER

July 15, 2016
PLANS APPROVAL DATE

REGISTERED PROFESSIONAL ENGINEER
Stanley P. Johnson
No. C57793
Exp. 3-31-18
CIVIL
STATE OF CALIFORNIA

THE STATE OF CALIFORNIA OR ITS OFFICERS OR AGENTS SHALL NOT BE RESPONSIBLE FOR THE ACCURACY OR COMPLETENESS OF SCANNED COPIES OF THIS PLAN SHEET.

TO ACCOMPANY PLANS DATED 6-13-16

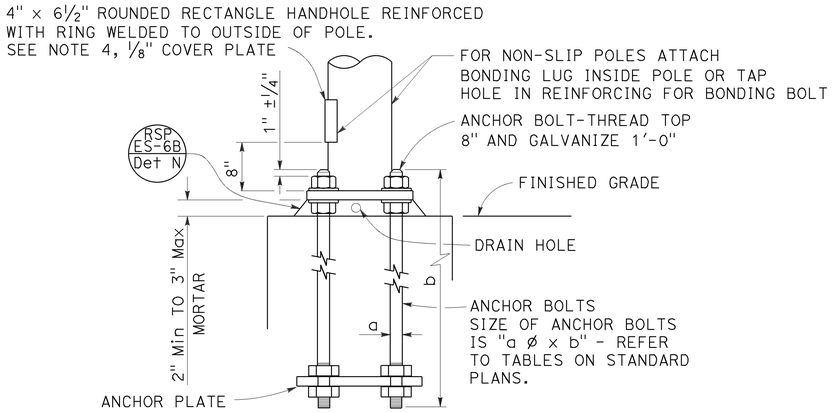

HANDHOLE AND ANCHORAGE
DETAIL A

IDENTIFICATION NUMBER

1. Attach a stamped metal tag with pole's identification number above the handhole. ¼" high number, minimum.
2. Attach a stamped metal tag with mast arm's identification number to the bottom of the signal mast arm near the pole plate. ¼" high number, minimum.

Type — Load case (Use SL for special load case) — Design wind velocity (mph) — Signal mast arm length (ft) {Near handhole: Maximum signal mast arm length for pole type; Near pole plate: Installed signal mast arm length} — Standard plan year — Only for poles or mast arms using Detail F — Only for poles or mast arms using RSP ES-7O

26A - 3 - 100 - 45 - 10 - F or FB

SAMPLE IDENTIFICATION NUMBER

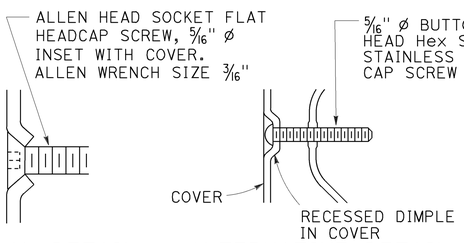

TYPICAL DETAIL
DETAIL B-1

ALTERNATIVE DETAIL
DETAIL B-2

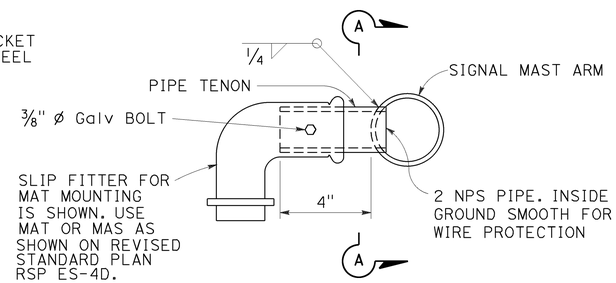

SIDE TENON
DETAIL S-1

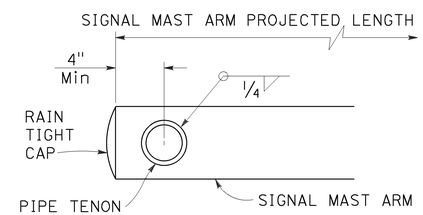

SECTION A-A

PIPE TENONS
DETAIL S

NOTES:

1. Provide a Hex nut, leveling nut and 2 washers for each bolt.
2. Luminaire mast arms shall be round, tapered steel tubes, taper of 0.1375" to 0.143-inch per foot with an end section 2⅜" OD for mounting hardware. Extensions of 2 NPS Standard pipe and 7" long may be used at the option of the manufacturer. When low pressure sodium luminaires are required, the extension shall be 1'-3".
3. Signal mast arms shall be round, tapered steel tubes, maximum taper 0.143-inch per foot.
4. Handhole reinforcement ring shall be ¼" x 2" for 0.1196" to 0.2391" thick poles, ⅜" x 2" for 0.3125" to 0.375" thick poles.
5. Handholes shall be located on the downstream side of traffic.
6. Detail F, fatigue resistant weld, is required at socket welded signal mast arm plate and pole base plate.
7. Cap screws shall be tightened by the turn-of-nut method ⅓ turn from a snug tight condition. No washer will be required.
8. Outside diameter, wall thickness, and corresponding section properties of poles and mast arms as shown in the Standard Plans are minimums. Unless otherwise specified, alternative sections shall require approval by the Engineer.
9. Design: AASHTO Standard Specifications for Structural Support for Highway Signs, Luminaires, and Traffic Signals, 6th Edition. Basic Wind Speed = 100 mph (3 seconds gust). Yearly Mean Wind Velocity = 15.6 mph.
10. Materials (Structural steel):
    fy = 55,000 psi (tapered steel tube and anchor bolts)
    fy = 50,000 psi (unless otherwise noted)
11. Materials (Reinforced concrete):
    f'c = 3,625 psi
    fy = 60,000 psi

WELD SIZE	WALL THICKNESS
3/16"	0.1196"
¼"	0.1793"
5/16"	0.2391"
⅜"	0.3125"
7/16"	0.375"

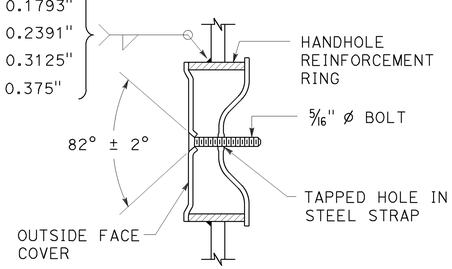

TAMPER RESISTANT HANDHOLE COVER
DETAIL B

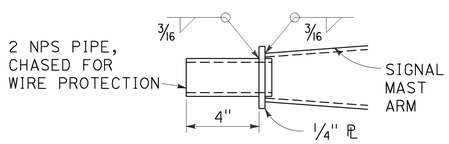

TIP TENON
DETAIL TL

This detail supersedes Detail S when so designated

WELD SIZE	WALL THICKNESS
⅛"	0.1196"
3/16"	0.1793"
¼"	0.2391"

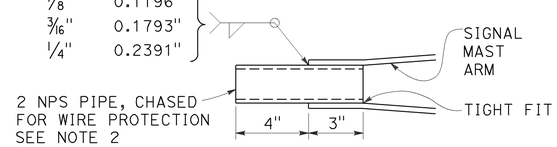

TIP TENON
DETAIL TS

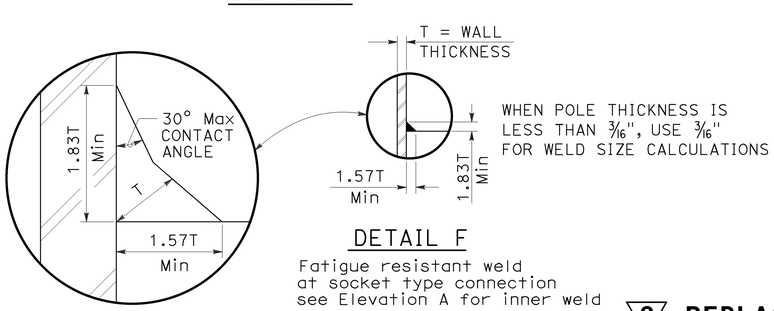

DETAIL F

Fatigue resistant weld at socket type connection see Elevation A for inner weld

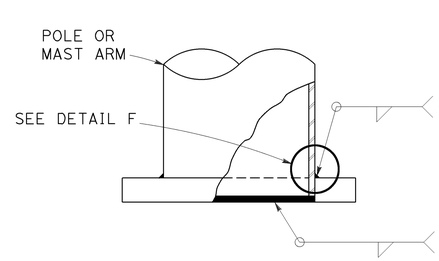

WELD SIZE	WALL THICKNESS
¼"	0.1196"
5/16"	0.1793"
⅜"	0.2391"
7/16"	0.3125"

⅛"	0.1196"
3/16"	0.1793"
¼"	0.2391"
5/16"	0.3125"

ELEVATION A

3 **REPLACED PER ADDENDUM No. 3 DATED SEPTEMBER 20, 2016**

STATE OF CALIFORNIA
DEPARTMENT OF TRANSPORTATION

ELECTRICAL SYSTEMS (SIGNAL AND LIGHTING STANDARD, DETAIL No. 1)

NO SCALE

RSP ES-7M DATED JULY 15, 2016 SUPERSEDES RSP ES-7M DATED OCTOBER 30, 2015 AND STANDARD PLAN ES-7M DATED MAY 20, 2011 - PAGE 474 OF THE STANDARD PLANS BOOK DATED 2010.

REVISED STANDARD PLAN RSP ES-7M

2010 REVISED STANDARD PLAN RSP ES-7M

6-20-16

Dist	COUNTY	ROUTE	POST MILES TOTAL PROJECT	SHEET No.	TOTAL SHEETS
10	Sta	132	1.1/1.8	81	87

REGISTERED CIVIL ENGINEER

July 15, 2016
PLANS APPROVAL DATE

REGISTERED PROFESSIONAL ENGINEER
Stanley P. Johnson
No. C57793
Exp. 3-31-18
CIVIL
STATE OF CALIFORNIA

THE STATE OF CALIFORNIA OR ITS OFFICERS OR AGENTS SHALL NOT BE RESPONSIBLE FOR THE ACCURACY OR COMPLETENESS OF SCANNED COPIES OF THIS PLAN SHEET.

TO ACCOMPANY PLANS DATED 6-13-16

2010 REVISED STANDARD PLAN RSP ES-7N

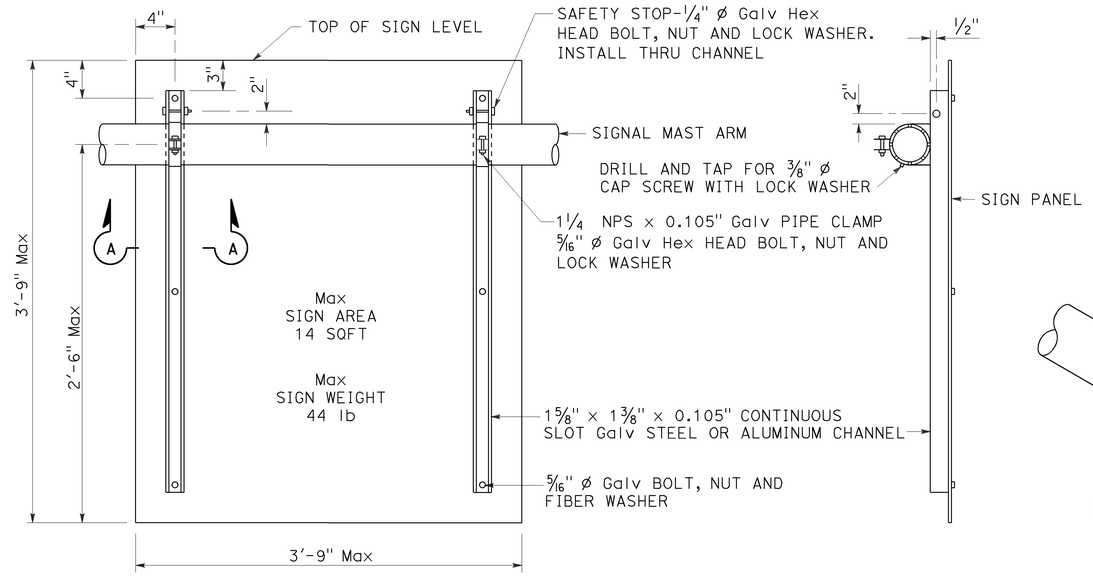

REAR VIEW

SIDE VIEW

SIGN MOUNTING DETAILS
DETAIL U

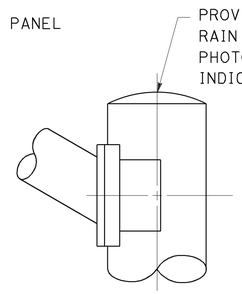

STANDARD TOP
DETAIL B-1

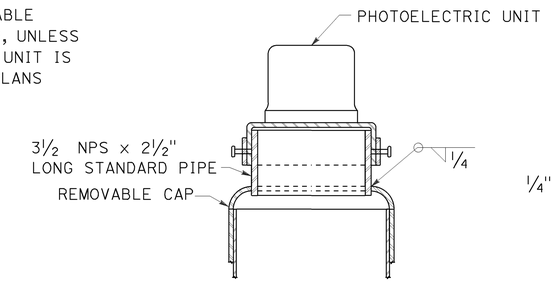

MOUNTING ADAPTER FOR
PHOTOELECTRIC UNIT
DETAIL B-2

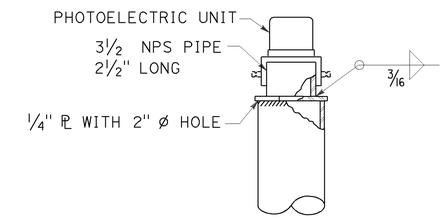

ALTERNATIVE
MOUNTING ADAPTER
DETAIL B-3

POLE TOP DETAILS
DETAIL B

3 **REPLACED PER ADDENDUM No. 3 DATED SEPTEMBER 20, 2016**

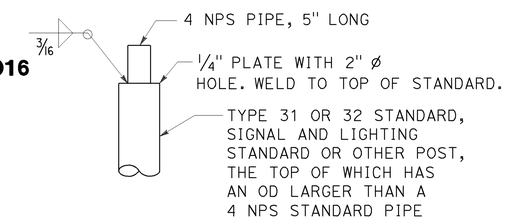

DETAIL C-1

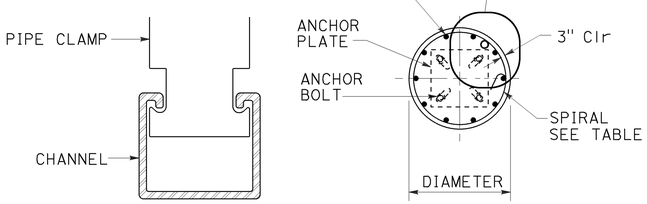

SECTION A-A

SECTION B-B

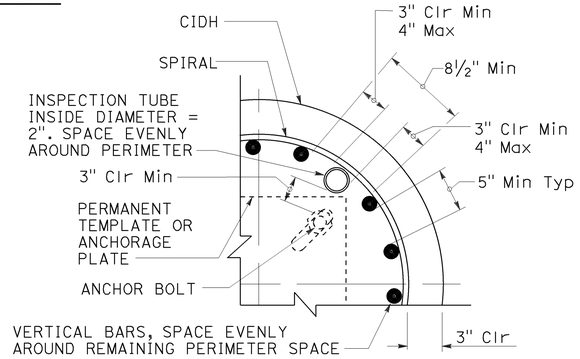

INSPECTION TUBE PLACEMENT
DETAIL I

CIDH REINFORCING AND INSPECTION TUBE SCHEDULE			
CIDH DIAMETER	VERTICAL BARS	SPIRAL	INSPECTION TUBE
2 ft	8-#5	#4 AT 6	2
2.5 ft	10-#6		4*
3 ft	12-#7	#5 AT 6	
3.5 ft	14-#8		4
4 ft	18-#9	2-#4 AT 7	5
4.5 ft	18-#9	2-#5 AT 7	5
5 ft	22-#10	2-#5 AT 7	6
6 ft	26-#11	2-#6 AT 7	7

* FOR SLIP BASE VERSIONS WITH 3 ANCHOR BOLTS USE 3 INSPECTION TUBES.

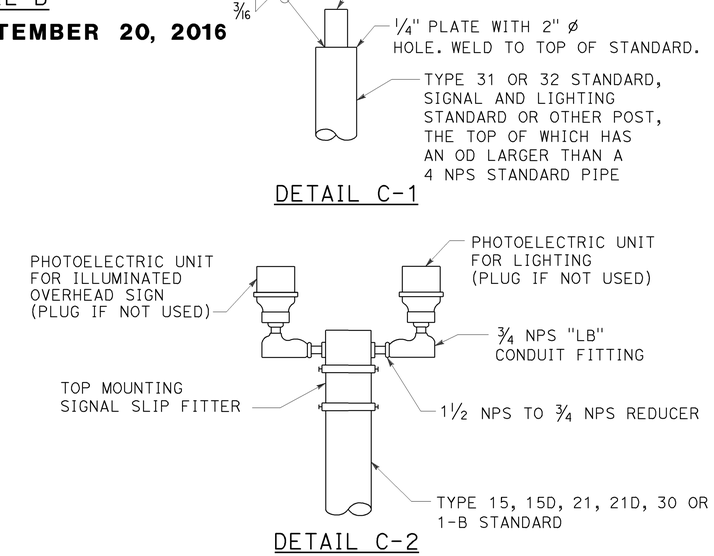

DETAIL C-2

DUAL PHOTOELECTRIC UNIT MOUNTING DETAIL
DETAIL C

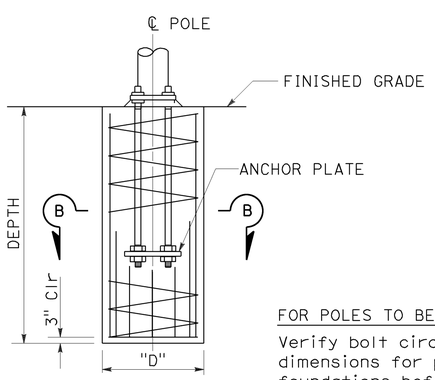

ELEVATION

FOR POLES TO BE INSTALLED ON EXISTING FOUNDATION:

Verify bolt circles, anchor bolt sizes and dependent dimensions for poles to be installed on existing foundations before fabricating the poles.

CAST-IN-DRILLED-HOLE PILE FOUNDATION, REINFORCED PILE
DETAIL A

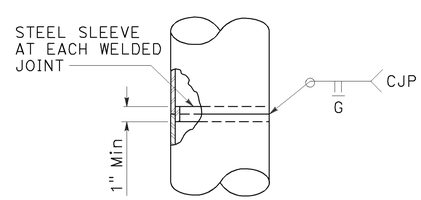

FOR UNIFORM TUBE THICKNESS
DETAIL T-1

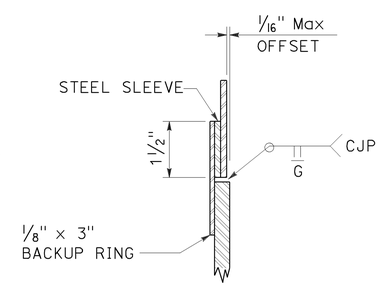

AT TUBE THICKNESS CHANGE
DETAIL T-2

POLE SPLICES
DETAIL T

STATE OF CALIFORNIA
DEPARTMENT OF TRANSPORTATION

ELECTRICAL SYSTEMS (SIGNAL AND LIGHTING STANDARD, DETAIL No. 2)

NO SCALE

RSP ES-7N DATED JULY 15, 2016 SUPERSEDES RSP ES-7N DATED OCTOBER 30, 2015 AND STANDARD PLAN ES-7N DATED MAY 20, 2011 - PAGE 475 OF THE STANDARD PLANS BOOK DATED 2010.

REVISED STANDARD PLAN RSP ES-7N

6-20-16

DIST	COUNTY	ROUTE	POST MILES TOTAL PROJECT	SHEET NO.	TOTAL SHEETS
10	Sta	132	1.1/1.8	82	87

3

Theresa Gabriel
REGISTERED ELECTRICAL ENGINEER

April 15, 2016
PLANS APPROVAL DATE

REGISTERED PROFESSIONAL ENGINEER Theresa Aziz Gabriel No. E15129 Exp. 6-30-16 ELECTRICAL STATE OF CALIFORNIA

THE STATE OF CALIFORNIA OR ITS OFFICERS OR AGENTS SHALL NOT BE RESPONSIBLE FOR THE ACCURACY OR COMPLETENESS OF SCANNED COPIES OF THIS PLAN SHEET.

TO ACCOMPANY PLANS DATED 6-13-16

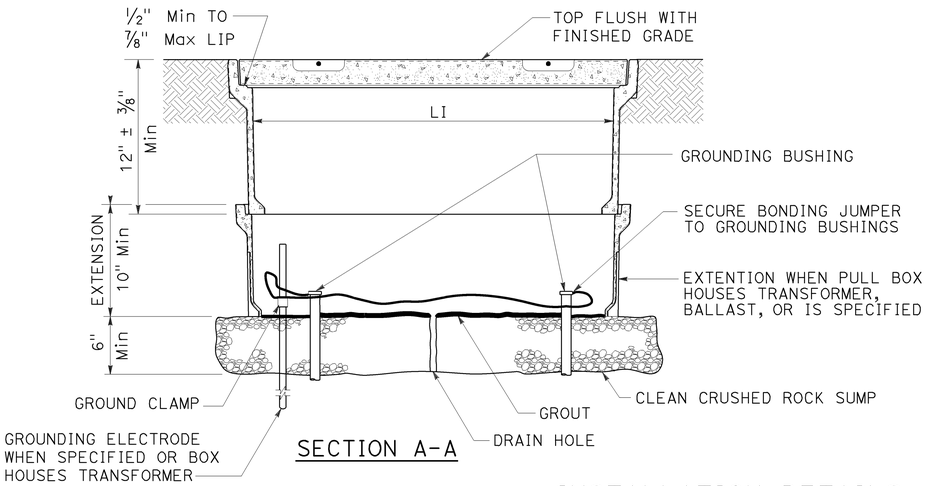

SECTION A-A

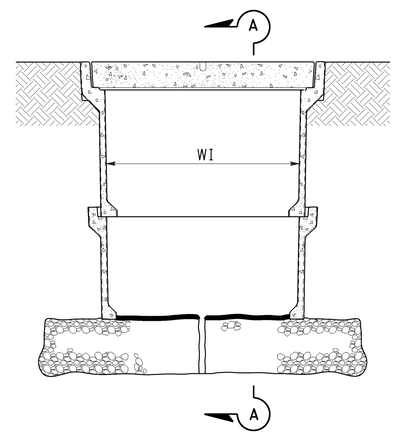

SIDE VIEW

INSTALLATION DETAILS

DETAIL A

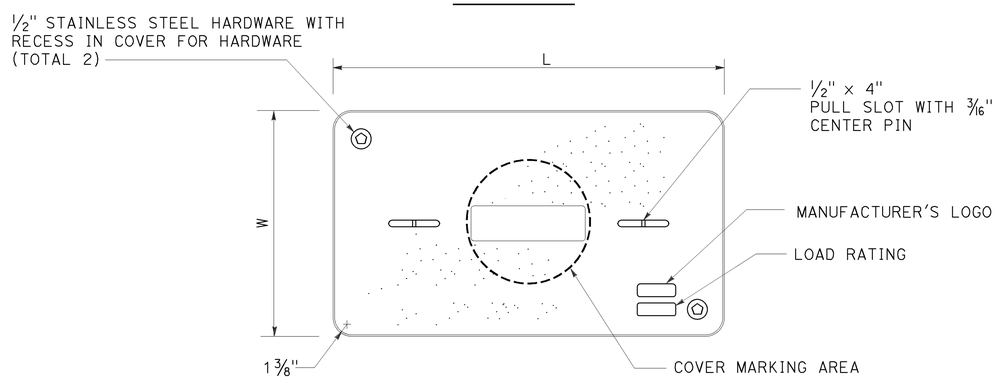

COVER TOP VIEW

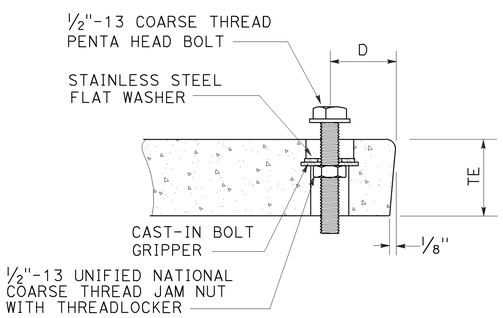

TYPICAL COVER CAPTIVE BOLT

OR SIMILAR

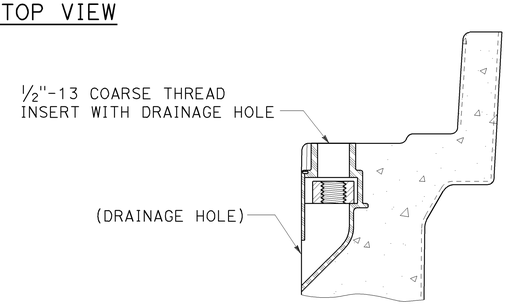

TYPICAL THREADED INSERT

OR SIMILAR

NOTES:

1. The nominal dimensions of the opening in which the cover sets shall be the same as the cover dimensions except the length and width dimensions shall be 1/8" greater.
2. Covers and boxes shall be interchangeable with California standard male and female gages. When interchanged with a standard male or female gage, the top surfaces shall be flush within 1/8". Top outside radius of covers and pull boxes shall have a 1/8" radius.
3. Dimensions for the cover for non-traffic pull box are nominal values.

3 **REPLACED PER ADDENDUM No. 3 DATED SEPTEMBER 20, 2016**

DIMENSION TABLE

PULL BOX	PULL BOX					COVER				
	MINIMUM DEPTH BOX	MINIMUM DEPTH EXTENSION	MINIMUM WEIGHT	LI Min	WI Min	TE	D	L	W	MINIMUM WEIGHT
No. 3 1/2	12"	N/A	40 lb	1' - 3"	9"	1 3/4"	1 3/4"	1'-3 1/4" - 1'-3 3/8"	10" - 10 1/8"	30 lb
No. 5	12"	10"	55 lb	1' - 8"	11"	2"	1 3/4"	1'-11 1/4"	1'-1 3/4"	60 lb
No. 6	12"	10"	70 lb	2' - 4 1/4"	1' - 3 1/4"	2"	2"	2'-6 1/2"	1'-5 1/2"	85 lb

STATE OF CALIFORNIA
DEPARTMENT OF TRANSPORTATION

ELECTRICAL SYSTEMS (NON-TRAFFIC PULL BOX)

NO SCALE

RSP ES-8A DATED APRIL 15, 2016 SUPERSEDES RSP ES-8A DATED OCTOBER 30, 2015 AND RSP ES-8A DATED JULY 19, 2013 AND RSP ES-8A DATED JANUARY 20, 2012 THAT SUPPLEMENTS THE STANDARD PLANS BOOK DATED 2010.

REVISED STANDARD PLAN RSP ES-8A

2010 REVISED STANDARD PLAN RSP ES-8A

1-22-16

DIST	COUNTY	ROUTE	POST MILES TOTAL PROJECT	SHEET NO.	TOTAL SHEETS
10	Sta	132	1.1/1.8	83	87

3

Theresa Gabriel
REGISTERED ELECTRICAL ENGINEER

April 15, 2016
PLANS APPROVAL DATE

REGISTERED PROFESSIONAL ENGINEER
Theresa Aziz Gabriel
No. E15129
Exp. 6-30-16
ELECTRICAL
STATE OF CALIFORNIA

THE STATE OF CALIFORNIA OR ITS OFFICERS OR AGENTS SHALL NOT BE RESPONSIBLE FOR THE ACCURACY OR COMPLETENESS OF SCANNED COPIES OF THIS PLAN SHEET.

TO ACCOMPANY PLANS DATED 6-13-16

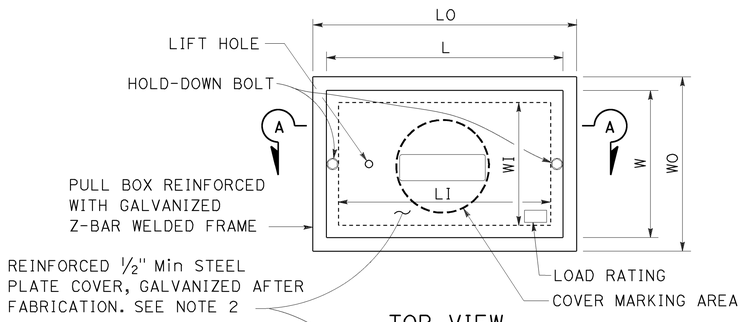

TOP VIEW

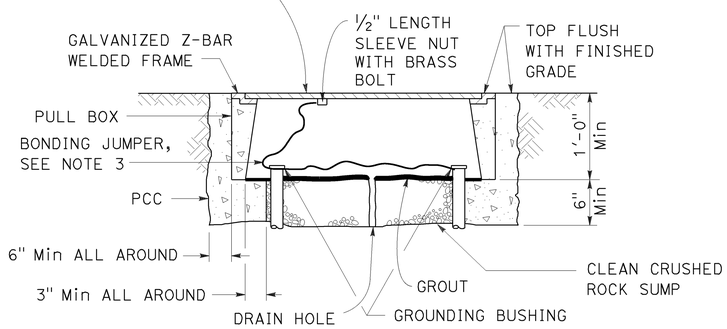

SECTION A-A

No. 3½(T), No. 5(T) AND No. 6(T) TRAFFIC PULL BOX

NOTES:

1. Traffic pull box shall be provided with steel cover and special concrete footing. Steel cover shall have embossed non-skid pattern.
2. Steel reinforcing shall be as regularly used in the standard products of the respective manufacturer.
3. Bonding jumper for metal covers shall be 3' long, minimum.
4. The nominal dimensions of the opening in which the cover sets shall be the same as the cover dimensions except the length and width dimensions shall be ⅛" greater.
5. Covers and boxes shall be interchangeable with California standard male and female gages. When interchanged with a standard male or female gage, the top surfaces shall be flush within ⅛".

3 **REPLACED PER ADDENDUM No. 3 DATED SEPTEMBER 20, 2016**

DIMENSION TABLE

PULL BOX	PULL BOX						COVER	
	MINIMUM * THICKNESS	MINIMUM DEPTH BOX AND EXTENSION	LO	LI	WO	WI	L **	W **
No. 3½(T)	1½"	1'-0"	1'-10" - 1'-11"	1'-5" - 1'-6½"	1'-3" - 1'-4"	10" - 1'-0"	1'-8" -1'-8½"	1'-1" - 1'-2"
No. 5(T)	1¾"	1'-0"	2'-5" - 2'-6"	2'-0" - 2'-1"	1'-6" - 1'-7"	1'-1" - 1'-2"	2'-3" - 2'-3½"	1'-4" - 1'-4½"
No. 6(T)	2"	1'-0"	2'-11" - 3'-1"	2'-6" - 2'-7"	1'-10" - 2'-0"	1'-5" - 1'-6"	2'-9" - 2'-9½"	1'-8" - 1'-8½"

* EXCLUDING CONDUIT WEB ** TOP DIMENSION

STATE OF CALIFORNIA
DEPARTMENT OF TRANSPORTATION

ELECTRICAL SYSTEMS (TRAFFIC PULL BOX)

NO SCALE

RSP ES-8B DATED APRIL 15, 2016 SUPERSEDES RSP ES-8B DATED OCTOBER 30, 2015 AND RSP ES-8B DATED JULY 19, 2013 AND RSP ES-8B DATED JANUARY 20, 2012 THAT SUPPLEMENTS THE STANDARD PLANS BOOK DATED 2010.

REVISED STANDARD PLAN RSP ES-8B

2010 REVISED STANDARD PLAN RSP ES-8B

1-22-16

Dist	COUNTY	ROUTE	POST MILES TOTAL PROJECT	SHEET No.	TOTAL SHEETS
10	Sta	132	1.1/1.8	85	87

3

REGISTERED CIVIL ENGINEER

July 15, 2016
PLANS APPROVAL DATE

REGISTERED PROFESSIONAL ENGINEER
Stanley P. Johnson
No. C57793
Exp. 3-31-18
CIVIL
STATE OF CALIFORNIA

THE STATE OF CALIFORNIA OR ITS OFFICERS OR AGENTS SHALL NOT BE RESPONSIBLE FOR THE ACCURACY OR COMPLETENESS OF SCANNED COPIES OF THIS PLAN SHEET.

TO ACCOMPANY PLANS DATED 6-13-16

2010 REVISED STANDARD PLAN RSP ES-11

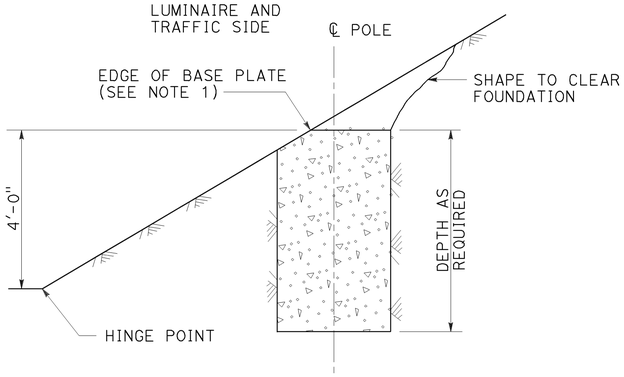

CUT SLOPES
STEEPER THAN 4:1,
LESS THAN 2:1
DETAIL A-1
See Note 2 and 3

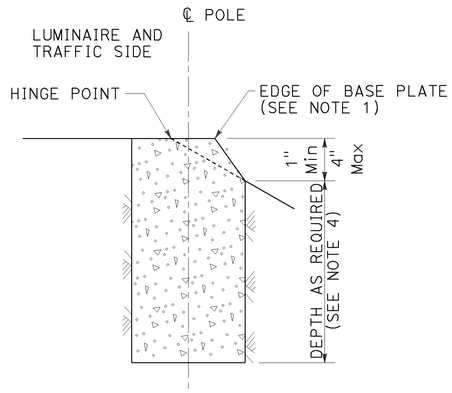

FILL SLOPES
STEEPER THAN 4:1,
LESS THAN 2:1
DETAIL A-2
See Note 2 and 3

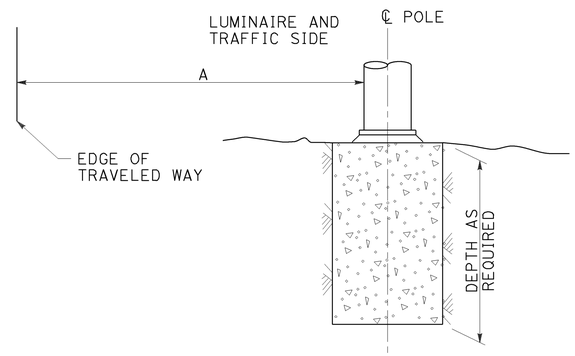

FLAT SECTIONS, CUT OR FILL SLOPES
4:1 OR FLATTER
DETAIL A-3
See Note 2

STANDARD TYPE	SETBACK (DIMENSION A)
32	30'-0" (Min)
31	20'-0" (Min)
15, 15D, 15-SB, 21, 21D, 30	ARM LENGTH (Min)

FOUNDATIONS ADJACENT TO ALL ROADWAYS EXCEPT
IN SIDEWALK, MEDIAN AND ISLAND AREAS
DETAIL A

NOTES:

1. Where a portion of the foundation is above grade, the top edges shall have a 1" chamfer.
2. Slopes shall be horizontal to vertical ratio (Horizontal : Vertical).
3. Horizontal setbacks on cut and fill slopes steeper than 4:1 shall not exceed the distance shown for flat sections.
4. CIDH embedment depth shall be increased beyond standard depths by the diameter of the CIDH.

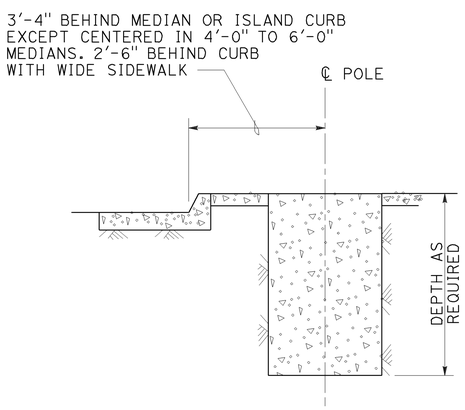

MEDIAN, ISLAND
OR WIDE SIDEWALK
DETAIL B-1
7' Wide and wider

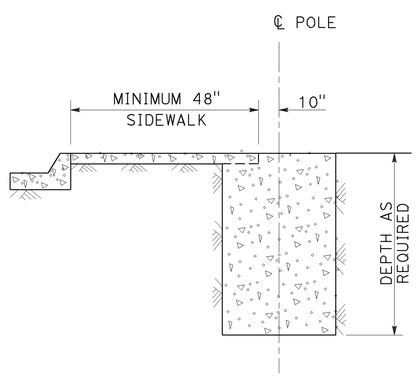

NARROW SIDEWALK
DETAIL B-2
Less than 7' wide

FOUNDATIONS IN SIDEWALK, MEDIAN AND ISLAND AREAS
DETAIL B

3 **REPLACED PER ADDENDUM No. 3 DATED SEPTEMBER 20, 2016**

STATE OF CALIFORNIA
DEPARTMENT OF TRANSPORTATION

ELECTRICAL SYSTEMS (FOUNDATION INSTALLATIONS)

NO SCALE

RSP ES-11 DATED JULY 15, 2016 SUPERSEDES RSP ES-11 DATED JULY 19, 2013 AND STANDARD PLAN ES-11 DATED MAY 20, 2011 - PAGE 488 OF THE STANDARD PLANS BOOK DATED 2010.

REVISED STANDARD PLAN RSP ES-11

6-20-16

Dist	COUNTY	ROUTE	POST MILES TOTAL PROJECT	SHEET No.	TOTAL SHEETS
10	Sta	132	1.1/1.8	86	87

3

Theresa Gabriel
REGISTERED ELECTRICAL ENGINEER

April 15, 2016
PLANS APPROVAL DATE

REGISTERED PROFESSIONAL ENGINEER
Theresa Aziz Gabriel
No. E15129
Exp. 6-30-16
ELECTRICAL
STATE OF CALIFORNIA

THE STATE OF CALIFORNIA OR ITS OFFICERS OR AGENTS SHALL NOT BE RESPONSIBLE FOR THE ACCURACY OR COMPLETENESS OF SCANNED COPIES OF THIS PLAN SHEET.

TO ACCOMPANY PLANS DATED 6-13-16

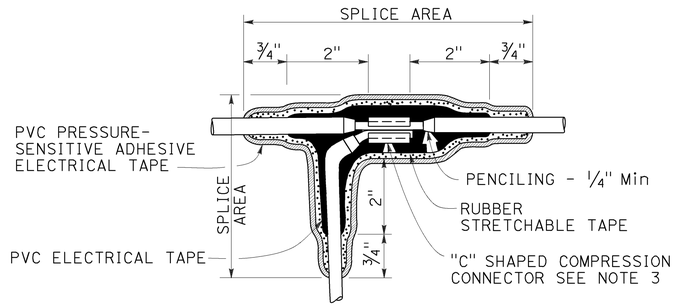

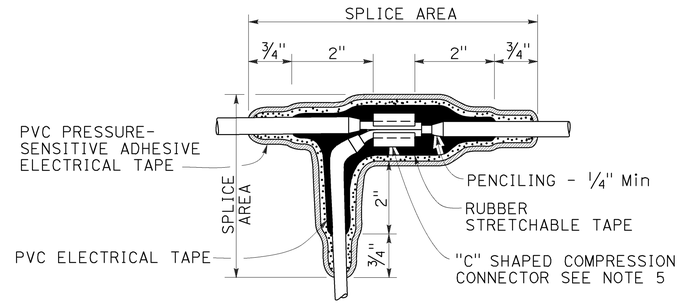

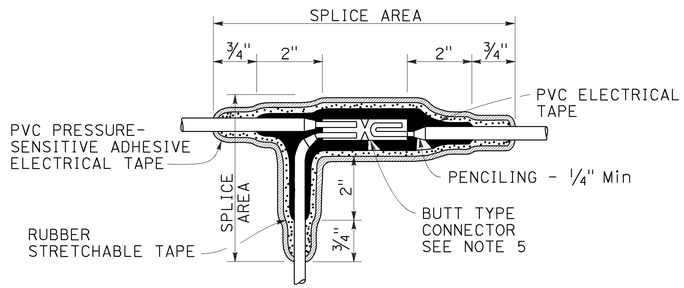

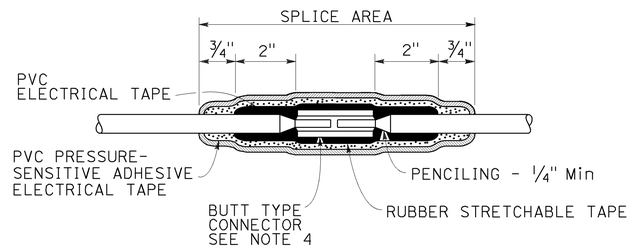

TYPICAL SPLICE INSULATION METHOD B

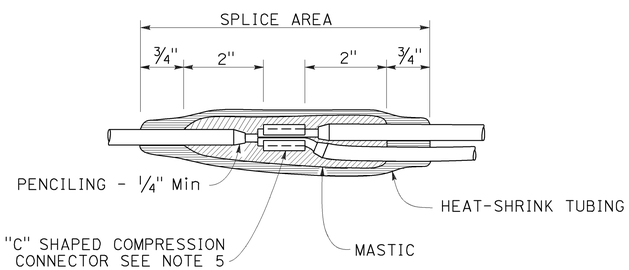

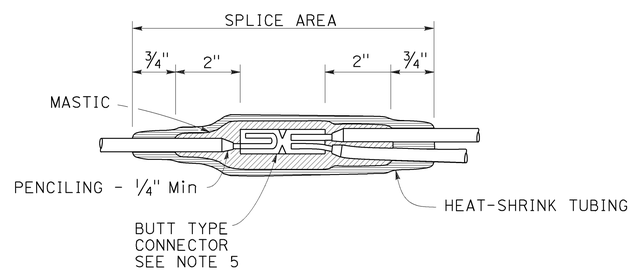

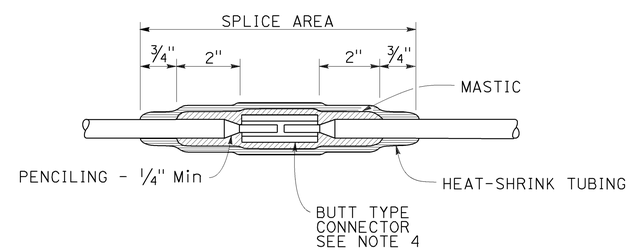

TYPICAL SPLICE INSULATION HEAT-SHRINK TUBING

NOTES:

1. Dimensions are minimum.
2. Rubber tapes shall be rolled after application.
3. Between 1 free-end and 1 through conductor.
4. Between 2 free-end conductors.
5. Between 3 free-end conductors.

3 **REPLACED PER ADDENDUM No. 3 DATED SEPTEMBER 20, 2016**

STATE OF CALIFORNIA
DEPARTMENT OF TRANSPORTATION

ELECTRICAL SYSTEMS (SPLICE INSULATION METHODS DETAILS)

NO SCALE

RSP ES-13A DATED APRIL 15, 2016 SUPERSEDES RSP ES-13A DATED OCTOBER 30, 2015 AND STANDARD PLAN ES-13A DATED MAY 20, 2011 - PAGE 491 OF THE STANDARD PLANS BOOK DATED 2010.

REVISED STANDARD PLAN RSP ES-13A

2010 REVISED STANDARD PLAN RSP ES-13A

1-22-16

Dist	COUNTY	ROUTE	POST MILES TOTAL PROJECT	SHEET No.	TOTAL SHEETS
10	Sta	132	1.1/1.8	86A	87

3

Theresa Gabriel
REGISTERED ELECTRICAL ENGINEER

April 15, 2016
PLANS APPROVAL DATE

REGISTERED PROFESSIONAL ENGINEER
Theresa Aziz Gabriel
No. E15129
Exp. 6-30-16
ELECTRICAL
STATE OF CALIFORNIA

THE STATE OF CALIFORNIA OR ITS OFFICERS OR AGENTS SHALL NOT BE RESPONSIBLE FOR THE ACCURACY OR COMPLETENESS OF SCANNED COPIES OF THIS PLAN SHEET.

TO ACCOMPANY PLANS DATED 6-13-16

CIRCUIT VOLTAGE	FUSE VOLTAGE RATING	FUSE CURRENT RATING						
		HPS LAMP BALLAST		LOW PRESSURE SODIUM BALLAST	INDUCTION SIGN LIGHTING	SINGLE PHASE (TWO WIRE) TRANSFORMERS (PRIMARY SIDE)		
		70 W	100 W	180 W	85 W	1 kVA	2 kVA	3 kVA
120 V	250 V	5 A	5 A	5 A	5 A	10 A	20 A	30 A
240 V	250 V	5 A	5 A	5 A	5 A	6 A	10 A	20 A
480 V	500-600 V	5 A	5 A	3 A	1 A (SEE NOTE 2)	3 A	6 A	10 A

NOTES:

1. Primary lines of multiple ballasts shall be provided with fused connectors. Fuse ratings shall be as noted above.
2. See Revised Standard Plan RSP ES-15D, Type SC3 control.

FUSE RATINGS FOR FUSED CONNECTORS

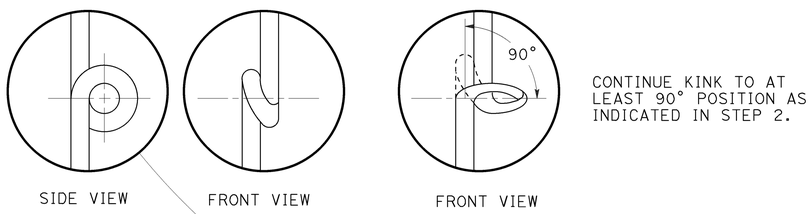

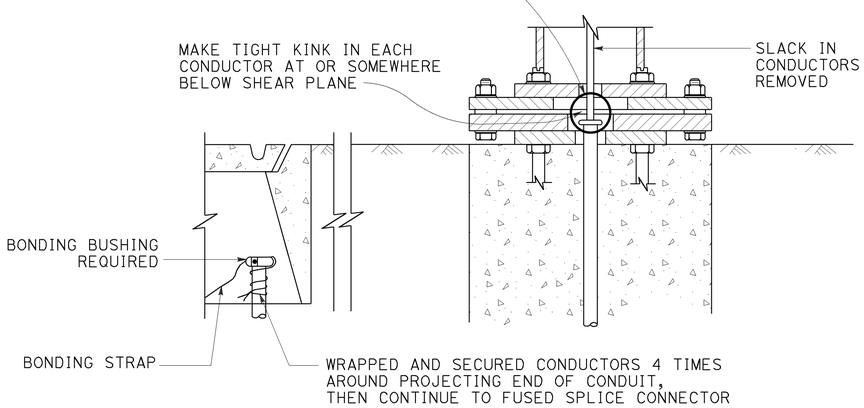

KINKING DETAIL FOR SLIP BASE STANDARDS

DETAIL A

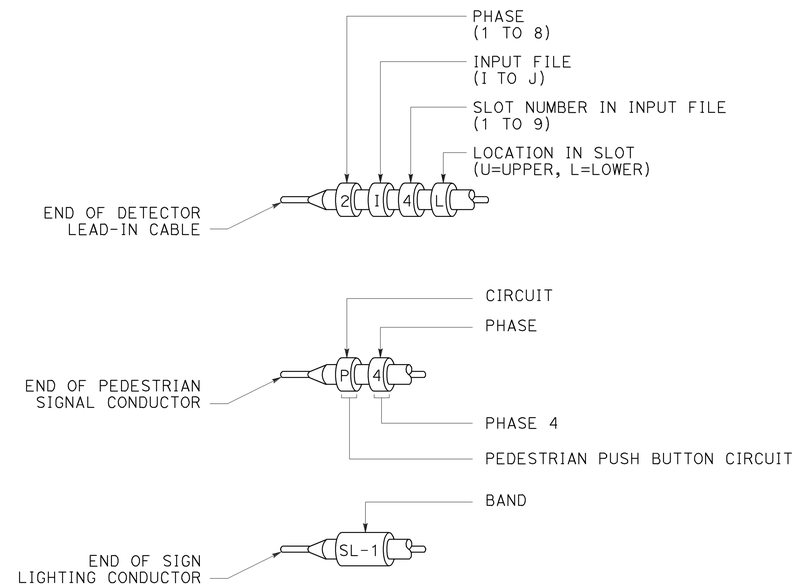

TYPICAL BANDING DETAILS

DETAIL B

STATE OF CALIFORNIA
DEPARTMENT OF TRANSPORTATION

ELECTRICAL SYSTEMS (FUSE RATING, KINKING AND BANDING DETAIL)

NO SCALE

3 **ADDED PER ADDENDUM No. 3 DATED SEPTEMBER 20, 2016**

RSP ES-13B DATED APRIL 15, 2016 SUPERSEDES STANDARD PLAN ES-13B DATED MAY 20, 2011 - PAGE 492 OF THE STANDARD PLANS BOOK DATED 2010.

REVISED STANDARD PLAN RSP ES-13B

2010 REVISED STANDARD PLAN RSP ES-13B

1-12-16

Dist	COUNTY	ROUTE	POST MILES TOTAL PROJECT	SHEET No.	TOTAL SHEETS
10	Sta	132	1.1/1.8	87	87

3

Theresa Gabriel
REGISTERED ELECTRICAL ENGINEER

April 15, 2016
PLANS APPROVAL DATE

REGISTERED PROFESSIONAL ENGINEER
Theresa Aziz Gabriel
No. E15129
Exp. 6-30-16
ELECTRICAL
STATE OF CALIFORNIA

THE STATE OF CALIFORNIA OR ITS OFFICERS OR AGENTS SHALL NOT BE RESPONSIBLE FOR THE ACCURACY OR COMPLETENESS OF SCANNED COPIES OF THIS PLAN SHEET.

TO ACCOMPANY PLANS DATED 6-13-16

THE FLASHER SHALL MATE WITH A CINCH-JONES SOCKET S-406-SB OR EQUAL AND CONNECTED AS FOLLOWS:

PIN	CIRCUIT	PIN	CIRCUIT
7	LOAD	10	NEUTRAL
8	LOAD	11	LINE
9	CHASSIS GROUND	12	NOT USED

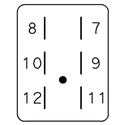

CONNECTOR SOCKET
SOLID STATE FLASHER UNIT

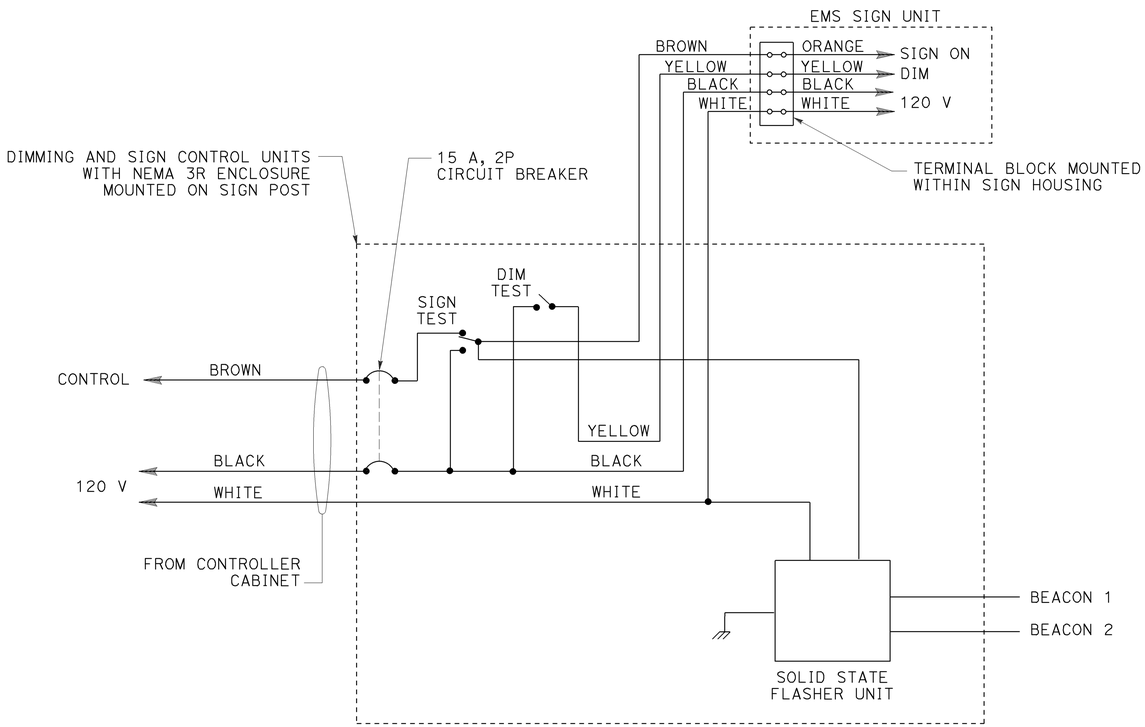

WIRING DIAGRAM
LED EXTINGUISHABLE MESSAGE SIGN
DETAIL A

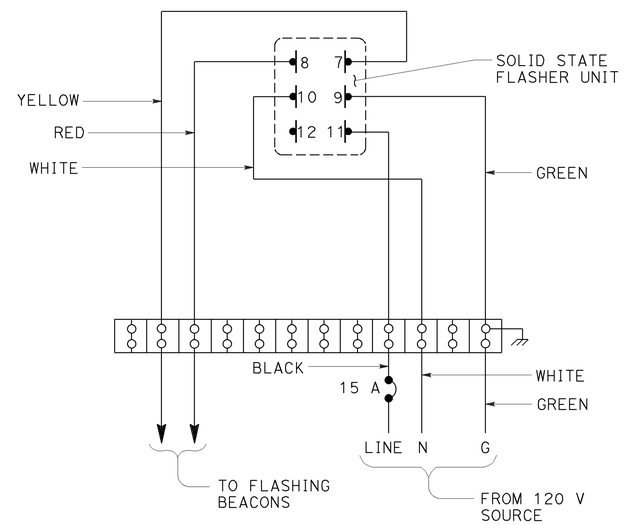

WIRING DIAGRAM
FLASHING BEACON CONTROL ASSEMBLY
DETAIL B

STATE OF CALIFORNIA
DEPARTMENT OF TRANSPORTATION

ELECTRICAL SYSTEMS (CONTROL ASSEMBLY WIRING DIAGRAMS)

NO SCALE

RSP ES-14B DATED APRIL 15, 2016 SUPERSEDES STANDARD PLAN ES-14B DATED MAY 20, 2011 - PAGE 494 OF THE STANDARD PLANS BOOK DATED 2010.

3 **REPLACED PER ADDENDUM No. 3 DATED SEPTEMBER 20, 2016**

REVISED STANDARD PLAN RSP ES-14B

2010 REVISED STANDARD PLAN RSP ES-14B

1-22-16