Dist	COUNTY	ROUTE	POST MILES TOTAL PROJECT	SHEET No.	TOTAL SHEETS
10	SJ	99	4.9/14.2	5	639

REGISTERED CIVIL ENGINEER — DATE 3/7/11

10-17-11
PLANS APPROVAL DATE

REGISTERED PROFESSIONAL ENGINEER — JOHN A. KLEMUNES — No. 60728 — Exp. 12-31-12 — CIVIL — STATE OF CALIFORNIA

THE STATE OF CALIFORNIA OR ITS OFFICERS OR AGENTS SHALL NOT BE RESPONSIBLE FOR THE ACCURACY OR COMPLETENESS OF SCANNED COPIES OF THIS PLAN SHEET.

HDR ENGINEERING, INC.
2365 IRON POINT ROAD
SUITE 300
FOLSOM, CA 95630-8709

SAN JOAQUIN COUNCIL OF GOVERNMENTS
555 E. WEBER AVE.
STOCKTON, CA 95202

1

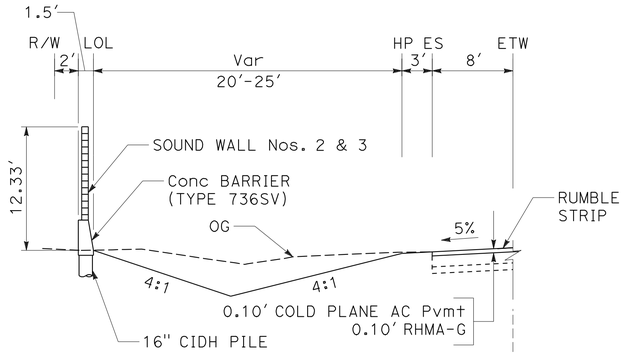

"SR 99" Sta 393+61.50 TO 419+69.00 SW No. 2
"SR 99" Sta 421+09.43 TO 455+17.43 SW No. 3

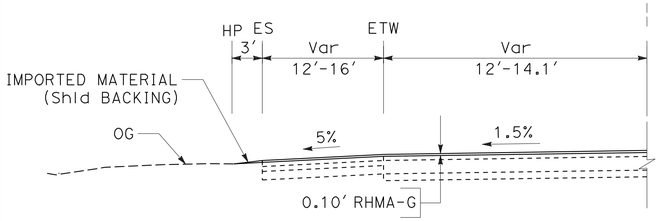

"SR 99" Sta 324+32.51 TO 327+14.13
"SR 99" Sta 338+11.36 TO 343+00.00

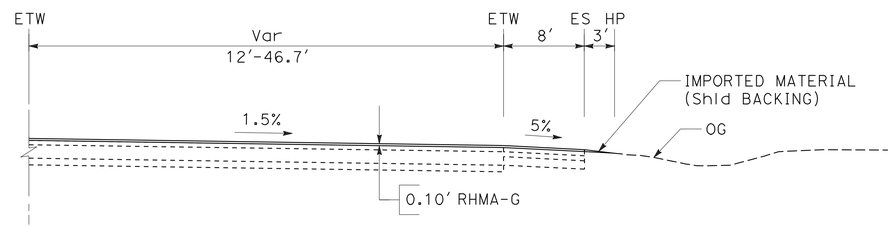

"SR 99" Sta 340+18.42 TO 344+55.54

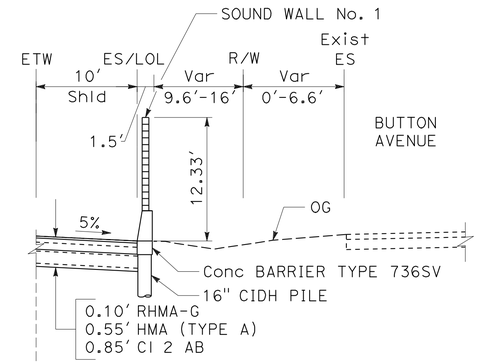

"SR 99" Sta 379+25.74 TO 383+79.46

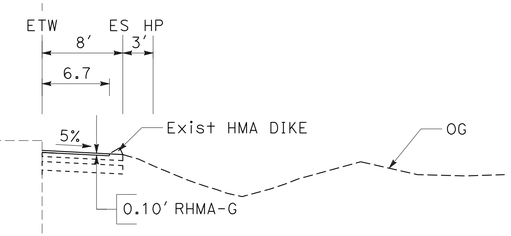

"SR 99" Sta 308+50.00 TO 340+18.42

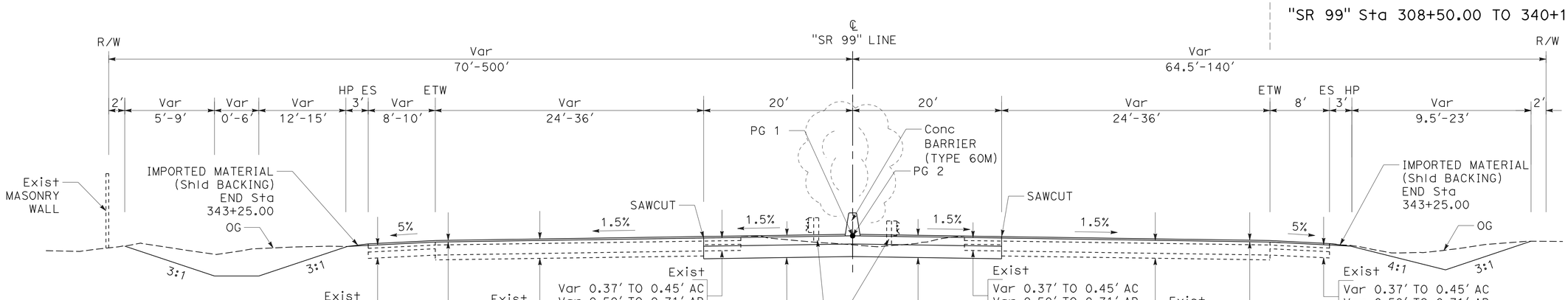

NOTES:
✳ COLD PLANE AC Pvmt Sta 370+00.00 TO 461+00.00 (NB)
✳ COLD PLANE AC Pvmt Sta 370+00.00 TO 457+33.70 (SB)

ROUTE 99

SOUTHBOUND — NORTHBOUND

"SR 99" Sta 307+92.78 TO 343+00.00 (CONTINUED ON X-5)
"SR 99" Sta 379+00.00 TO 448+00.00 (CONTINUED ON X-6)

1 **REVISED PER ADDENDUM No. 1 DATED FEBRUARY 22, 2012**

TYPICAL CROSS SECTIONS

NO SCALE

X-4

STATE OF CALIFORNIA - DEPARTMENT OF TRANSPORTATION — Caltrans

CONSULTANT FUNCTIONAL SUPERVISOR: JOHN A. KLEMUNES
CALCULATED-DESIGNED BY: JAROSLAW J. KUSZ
CHECKED BY: TRY V. KHOU
REVISED BY / DATE REVISED

LAST REVISION 00-00-00 | DATE PLOTTED => 22-FEB-2012 | TIME PLOTTED => 11:25

Dist	COUNTY	ROUTE	POST MILES TOTAL PROJECT	SHEET No.	TOTAL SHEETS
10	SJ	99	4.9/14.2	7	639

REGISTERED CIVIL ENGINEER — DATE 3/7/11

10-17-11
PLANS APPROVAL DATE

REGISTERED PROFESSIONAL ENGINEER — JOHN A. KLEMUNES No. 60728 Exp. 12-31-12 CIVIL — STATE OF CALIFORNIA

THE STATE OF CALIFORNIA OR ITS OFFICERS OR AGENTS SHALL NOT BE RESPONSIBLE FOR THE ACCURACY OR COMPLETENESS OF SCANNED COPIES OF THIS PLAN SHEET.

HDR ENGINEERING, INC.
2365 IRON POINT ROAD
SUITE 300
FOLSOM, CA 95630-8709

SAN JOAQUIN COUNCIL OF GOVERNMENTS
555 E. WEBER AVE.
STOCKTON, CA 95202

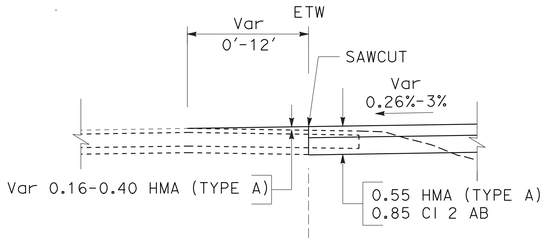

"SR 99" Sta 489+00.00 TO 490+00.00

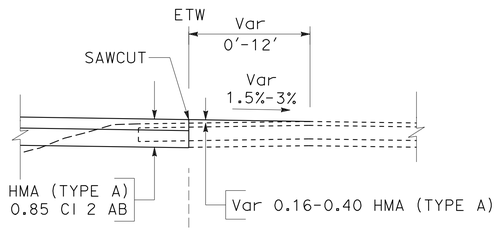

"SR 99" Sta 476+00.00 TO 489+00.00

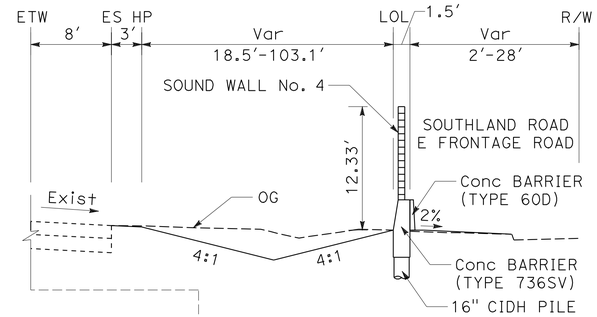

"SR 99" Sta 458+50.00 TO 467+01.32

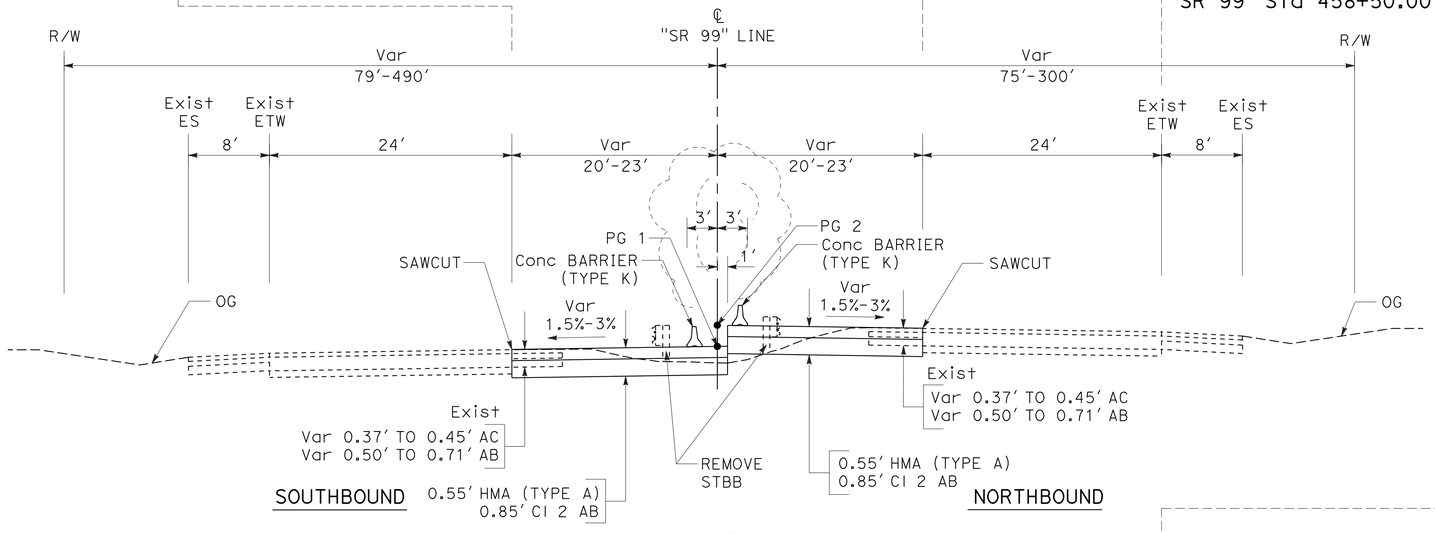

ROUTE 99

"SR 99" Sta 461+00.00 TO 491+00.00

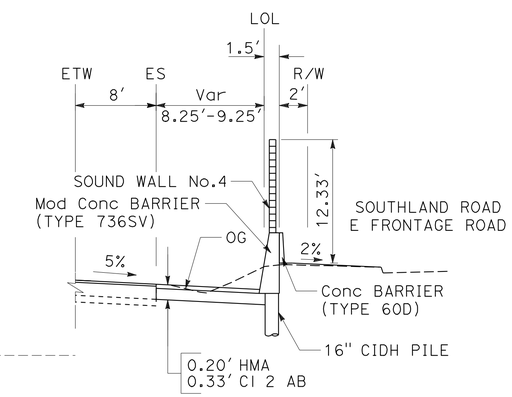

"SR 99" Sta 453+96.49 TO 458+50.00

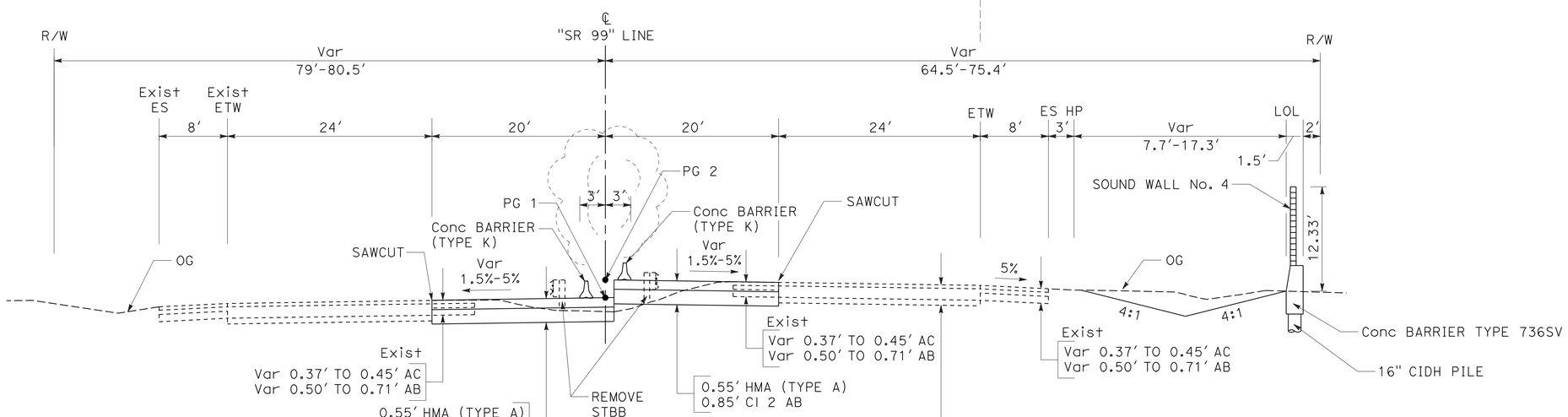

ROUTE 99

"SR 99" Sta 448+00.00 TO 461+00.00

TYPICAL CROSS SECTIONS

NO SCALE

X-6

1 **REVISED PER ADDENDUM No. 1 DATED FEBRUARY 22, 2012**

REVISED BY	DATE REVISED

CALCULATED-DESIGNED BY	CHECKED BY
JAROSLAW J. KUSZ	TRY V. KHOU

CONSULTANT FUNCTIONAL SUPERVISOR: JOHN A. KLEMUNES

STATE OF CALIFORNIA - DEPARTMENT OF TRANSPORTATION — Caltrans

LAST REVISION 00-00-00 | DATE PLOTTED => 22-FEB-2012 | TIME PLOTTED => 11:25

Dist	COUNTY	ROUTE	POST MILES TOTAL PROJECT	SHEET No.	TOTAL SHEETS
10	SJ	99	4.9/14.2	8	639

REGISTERED CIVIL ENGINEER 3/7/11 DATE

10-17-11
PLANS APPROVAL DATE

REGISTERED PROFESSIONAL ENGINEER JOHN A. KLEMUNES No. 60728 Exp. 12-31-12 CIVIL STATE OF CALIFORNIA

THE STATE OF CALIFORNIA OR ITS OFFICERS OR AGENTS SHALL NOT BE RESPONSIBLE FOR THE ACCURACY OR COMPLETENESS OF SCANNED COPIES OF THIS PLAN SHEET.

HDR ENGINEERING, INC.
2365 IRON POINT ROAD
SUITE 300
FOLSOM, CA 95630-8709

SAN JOAQUIN COUNCIL
OF GOVERNMENTS
555 E. WEBER AVE.
STOCKTON, CA 95202

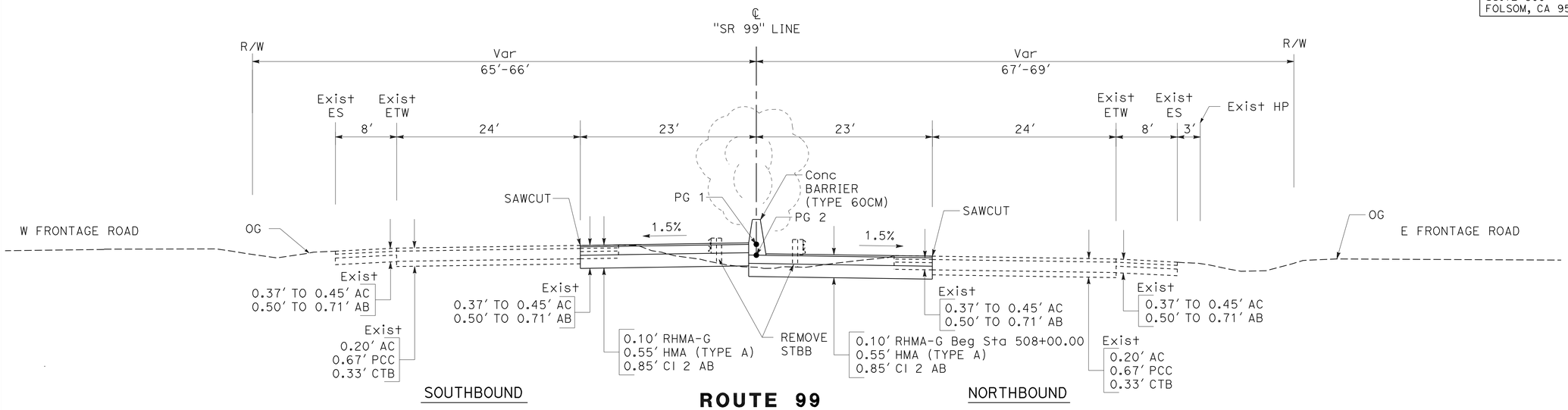

ROUTE 99

"SR 99" Sta 507+00.00 TO 516+00.00

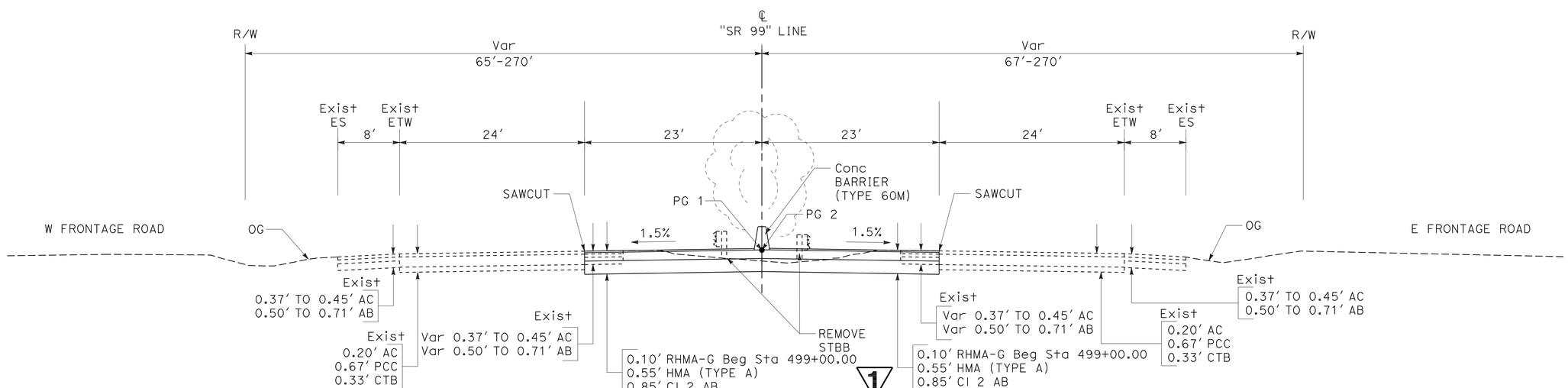

ROUTE 99

"SR 99" Sta 491+00.00 TO 507+00.00

TYPICAL CROSS SECTIONS

NO SCALE

1 REVISED PER ADDENDUM No. 1 DATED FEBRUARY 22, 2012

X-7

STATE OF CALIFORNIA - DEPARTMENT OF TRANSPORTATION
Caltrans

CONSULTANT FUNCTIONAL SUPERVISOR: JOHN A. KLEMUNES
CALCULATED-DESIGNED BY: JAROSLAW J. KUSZ
CHECKED BY: TRY V. KHOU
REVISED BY
DATE REVISED

LAST REVISION 00-00-00
DATE PLOTTED => 22-FEB-2012
TIME PLOTTED => 11:25

Dist	COUNTY	ROUTE	POST MILES TOTAL PROJECT	SHEET No.	TOTAL SHEETS
10	SJ	99	4.9/14.2	9	639

REGISTERED CIVIL ENGINEER 3/7/11 DATE

10-17-11
PLANS APPROVAL DATE

REGISTERED PROFESSIONAL ENGINEER JOHN A. KLEMUNES No. 60728 Exp. 12-31-12 CIVIL STATE OF CALIFORNIA

THE STATE OF CALIFORNIA OR ITS OFFICERS OR AGENTS SHALL NOT BE RESPONSIBLE FOR THE ACCURACY OR COMPLETENESS OF SCANNED COPIES OF THIS PLAN SHEET.

HDR ENGINEERING, INC.
2365 IRON POINT ROAD
SUITE 300
FOLSOM, CA 95630-8709

SAN JOAQUIN COUNCIL OF GOVERNMENTS
555 E. WEBER AVE.
STOCKTON, CA 95202

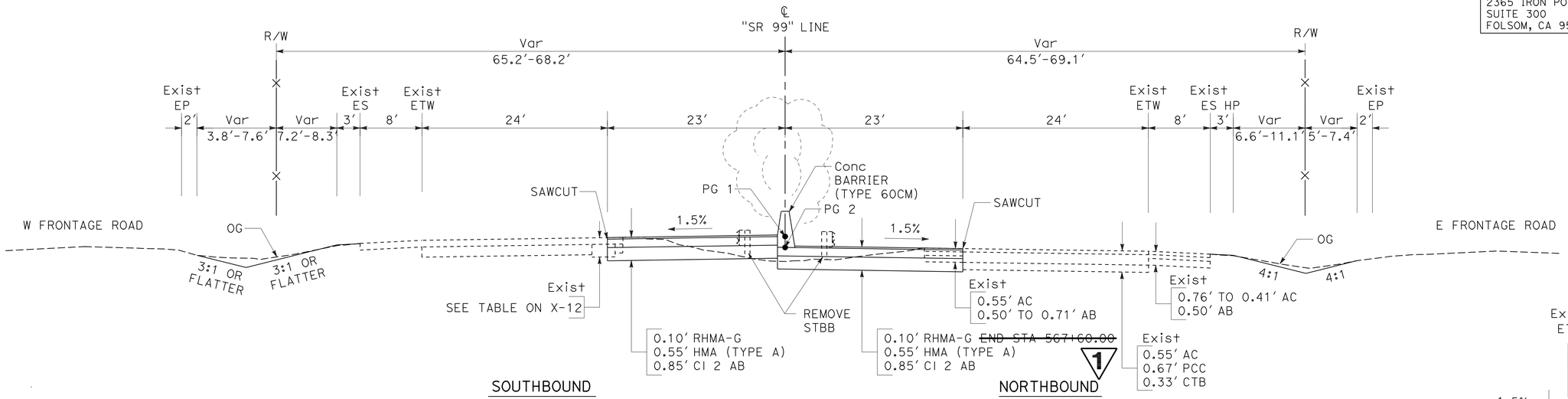

ROUTE 99

"SR 99" Sta 528+00.00 TO 534+00.00 (CONTINUED ON X-9)
"SR 99" Sta 559+00.00 TO 570+00.00 (CONTINUED ON X-9)

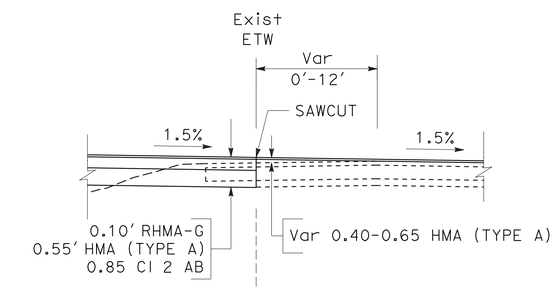

"SR 99" Sta 519+00.00 TO 529+00.00

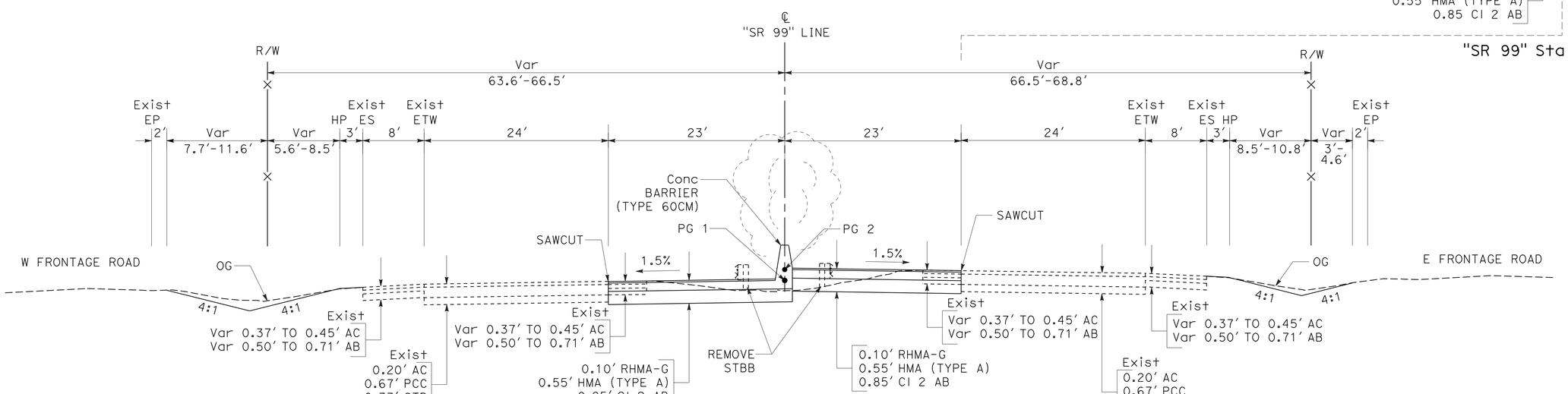

ROUTE 99

"SR 99" Sta 516+00.00 TO 528+00.00

TYPICAL CROSS SECTIONS

NO SCALE

1 REVISED PER ADDENDUM No. 1 DATED FEBRUARY 22, 2012

X-8

STATE OF CALIFORNIA - DEPARTMENT OF TRANSPORTATION
Caltrans

CONSULTANT FUNCTIONAL SUPERVISOR: JOHN A. KLEMUNES
CALCULATED-DESIGNED BY: JAROSLAW J. KUSZ
CHECKED BY: TRY V. KHOU
REVISED BY
DATE REVISED

LAST REVISION 00-00-00
DATE PLOTTED => 22-FEB-2012
TIME PLOTTED => 11:25

Dist	COUNTY	ROUTE	POST MILES TOTAL PROJECT	SHEET No.	TOTAL SHEETS
10	SJ	99	4.9/14.2	10	639

REGISTERED CIVIL ENGINEER — DATE 3/7/11

10-17-11
PLANS APPROVAL DATE

REGISTERED PROFESSIONAL ENGINEER — JOHN A. KLEMUNES — No. 60728 — Exp. 12-31-12 — CIVIL — STATE OF CALIFORNIA

THE STATE OF CALIFORNIA OR ITS OFFICERS OR AGENTS SHALL NOT BE RESPONSIBLE FOR THE ACCURACY OR COMPLETENESS OF SCANNED COPIES OF THIS PLAN SHEET.

HDR ENGINEERING, INC.
2365 IRON POINT ROAD
SUITE 300
FOLSOM, CA 95630-8709

SAN JOAQUIN COUNCIL OF GOVERNMENTS
555 E. WEBER AVE.
STOCKTON, CA 95202

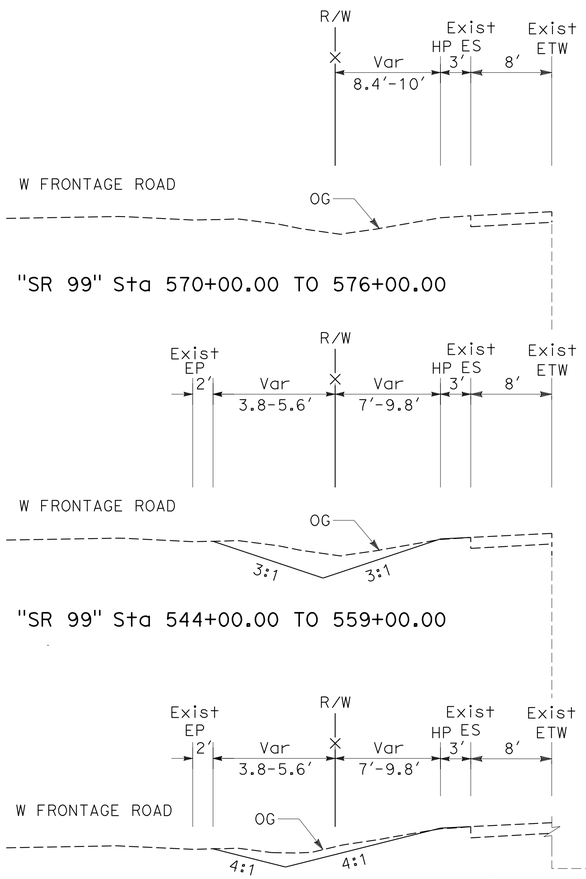

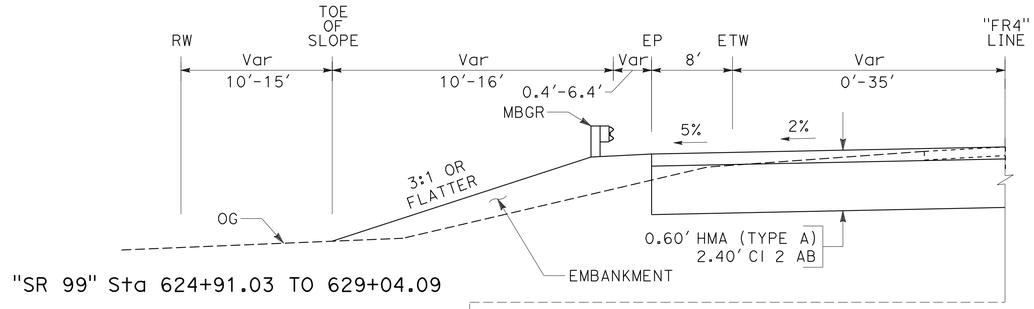

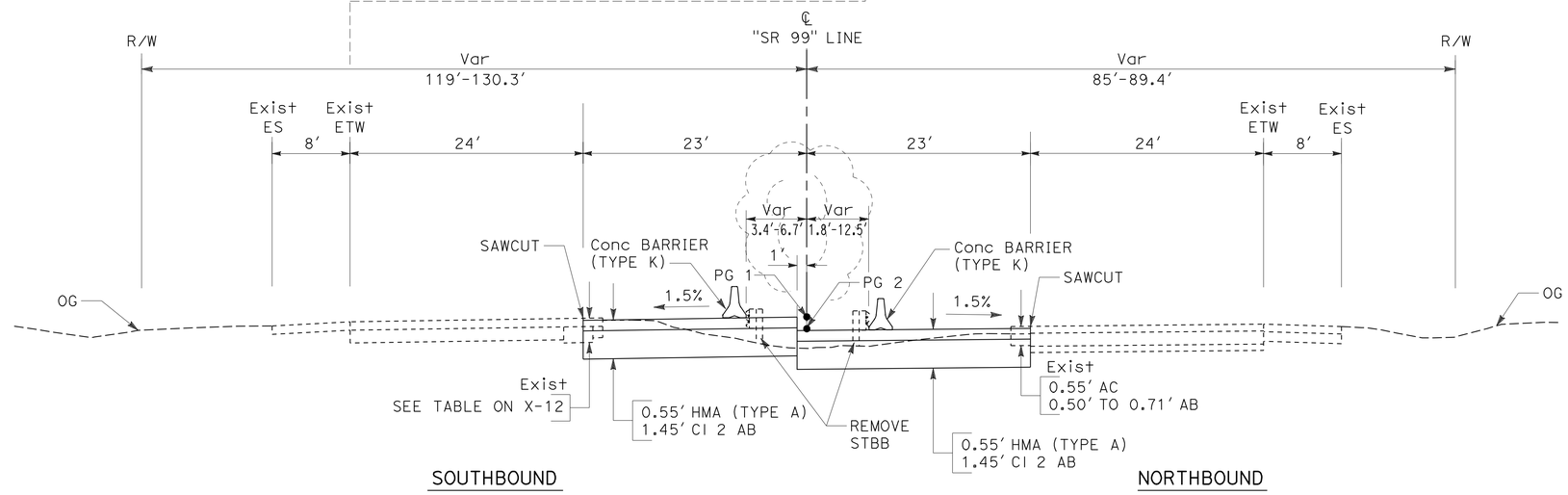

ROUTE 99

"SR 99" Sta 623+20.00 TO 623+55.39 BB
"SR 99" Sta 624+18.08 EB TO 627+50.00

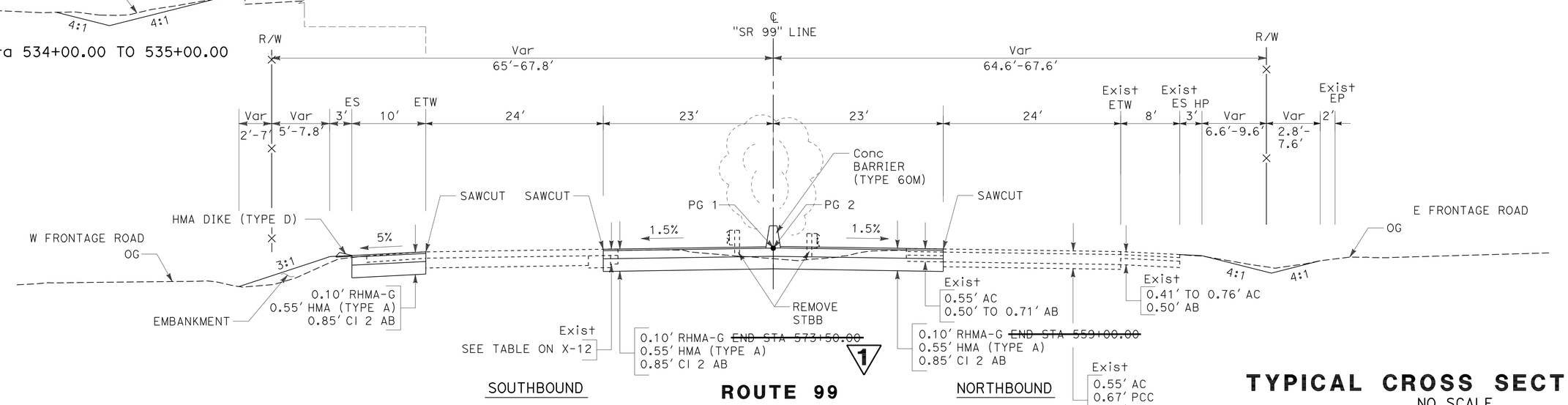

ROUTE 99

"SR 99" Sta 534+00.00 TO 559+00.00 (CONTINUED ON X-8)
"SR 99" Sta 570+00.00 TO 576+00.00

1 **REVISED PER ADDENDUM No. 1**
DATED FEBRUARY 22, 2012

TYPICAL CROSS SECTIONS

NO SCALE

X-9

STATE OF CALIFORNIA - DEPARTMENT OF TRANSPORTATION — Caltrans

CONSULTANT FUNCTIONAL SUPERVISOR: JOHN A. KLEMUNES
CALCULATED-DESIGNED BY: JAROSLAW J. KUSZ
CHECKED BY: TRY V. KHOU
REVISED BY
DATE REVISED

LAST REVISION 00-00-00
DATE PLOTTED => 22-FEB-2012
TIME PLOTTED => 11:25

Dist	COUNTY	ROUTE	POST MILES TOTAL PROJECT	SHEET No.	TOTAL SHEETS
10	SJ	99	4.9/14.2	33	639

REGISTERED CIVIL ENGINEER 3/7/11 DATE

10-17-11
PLANS APPROVAL DATE

REGISTERED PROFESSIONAL ENGINEER JOHN A. KLEMUNES No. 60728 Exp. 12-31-12 CIVIL STATE OF CALIFORNIA

THE STATE OF CALIFORNIA OR ITS OFFICERS OR AGENTS SHALL NOT BE RESPONSIBLE FOR THE ACCURACY OR COMPLETENESS OF SCANNED COPIES OF THIS PLAN SHEET.

HDR ENGINEERING, INC.
2365 IRON POINT ROAD
SUITE 300
FOLSOM, CA 95630-8709

SAN JOAQUIN COUNCIL
OF GOVERNMENTS
555 E. WEBER AVE.
STOCKTON, CA 95202

NOTES:

1. FOR ACCURATE RIGHT OF WAY DATA, CONTACT RIGHT OF WAY ENGINEERING AT THE DISTRICT OFFICE.
2. INSTALL WEED CONTROL MAT (RUBBER) UNDER MBGR (SEE CONSTRUCTION DETAILS).

CURVE DATA

No.	R	Δ	T	L
4	2650′	31°13′33″	740.54′	1444.24′

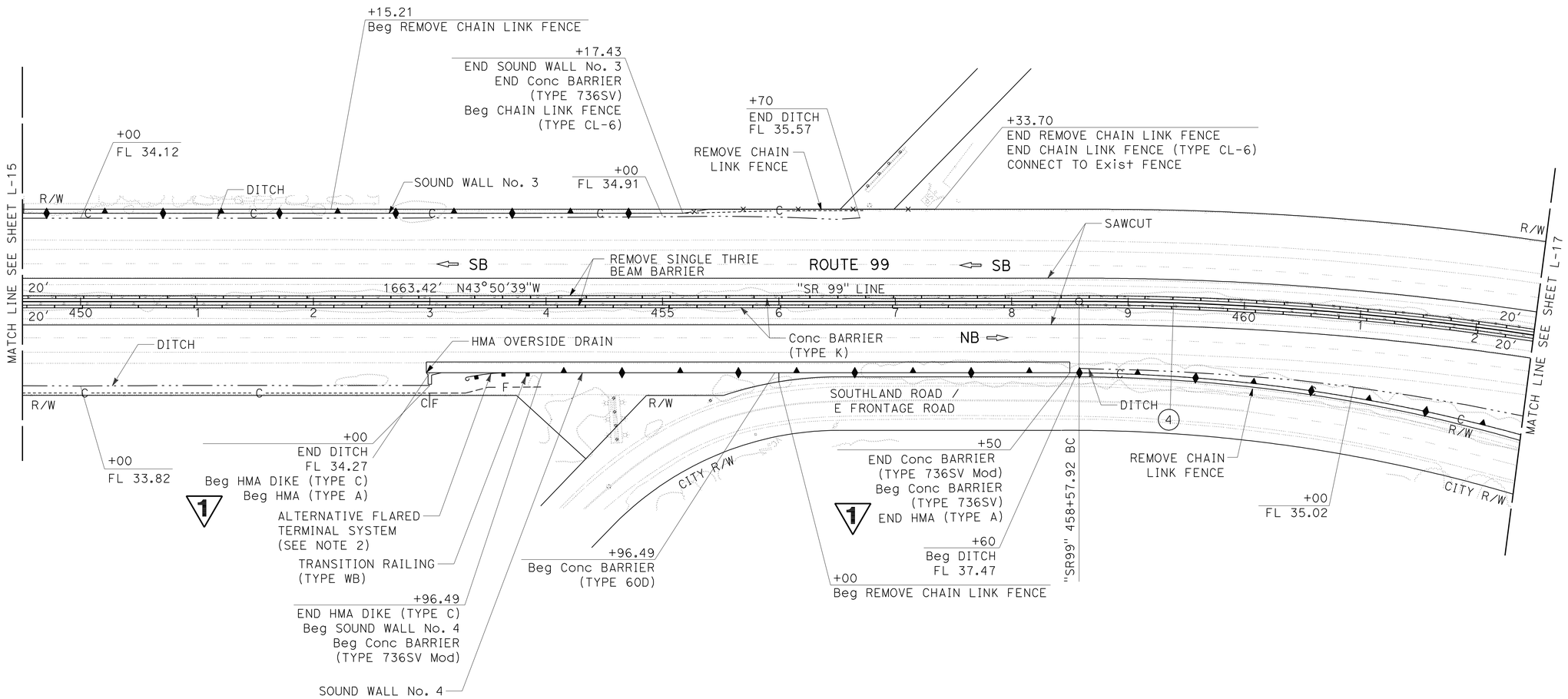

1 REVISED PER ADDENDUM No. 1 DATED FEBRUARY 22, 2012

LAYOUT

SCALE: 1" = 50′

L-16

STATE OF CALIFORNIA - DEPARTMENT OF TRANSPORTATION
Caltrans

CONSULTANT FUNCTIONAL SUPERVISOR: JOHN A. KLEMUNES
CALCULATED-DESIGNED BY: JAROSLAW J. KUSZ
CHECKED BY: TRY V. KHOU
REVISED BY
DATE REVISED

LAST REVISION 00-00-00
DATE PLOTTED => 22-FEB-2012
TIME PLOTTED => 11:25

Dist	COUNTY	ROUTE	POST MILES TOTAL PROJECT	SHEET No.	TOTAL SHEETS
10	SJ	99	4.9/14.2	102	639

REGISTERED CIVIL ENGINEER 3/7/11 DATE

10-17-11
PLANS APPROVAL DATE

REGISTERED PROFESSIONAL ENGINEER JOHN A. KLEMUNES No. 60728 Exp. 12-31-12 CIVIL STATE OF CALIFORNIA

THE STATE OF CALIFORNIA OR ITS OFFICERS OR AGENTS SHALL NOT BE RESPONSIBLE FOR THE ACCURACY OR COMPLETENESS OF SCANNED COPIES OF THIS PLAN SHEET.

HDR ENGINEERING, INC.
2365 IRON POINT ROAD
SUITE 300
FOLSOM, CA 95630-8709

SAN JOAQUIN COUNCIL
OF GOVERNMENTS
555 E. WEBER AVE.
STOCKTON, CA 95202

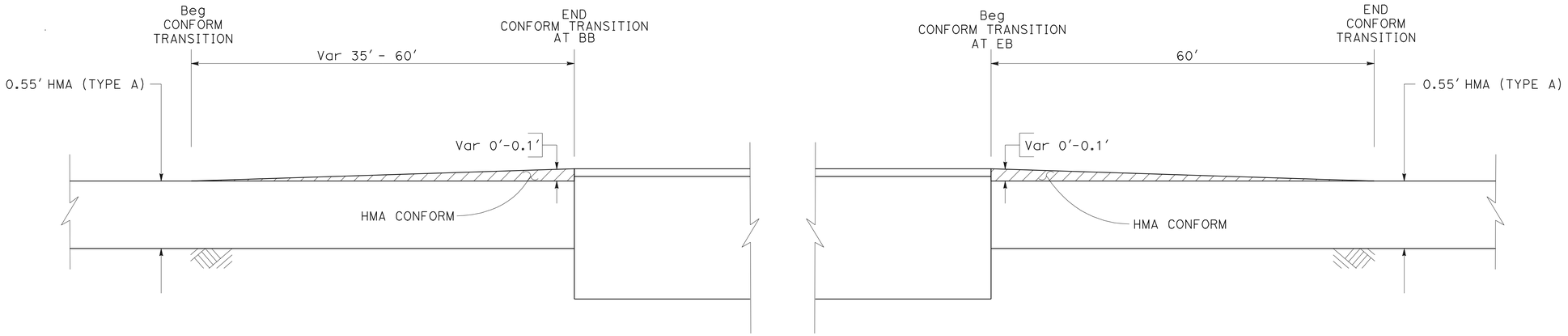

PAVEMENT DETAIL AT BRIDGE APPROACH

"SR 99" 623+20.00 TO 624+78.08
"SR 99" 650+62.27 TO 652+61.63
"SR 99" 661+31.36 TO 663+22.07

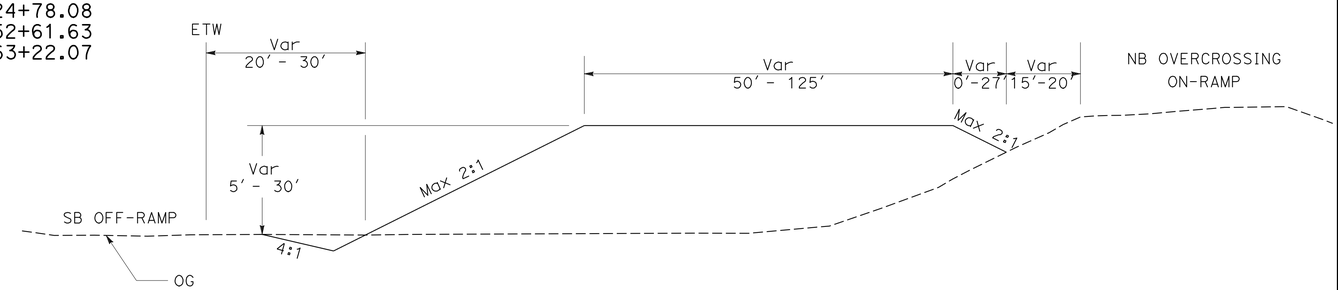

STOCKPILE TYPICAL

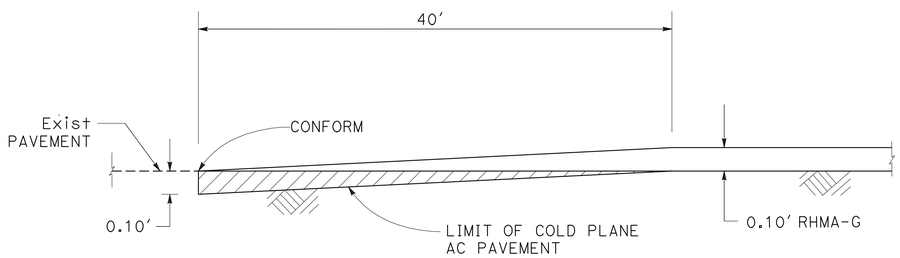

OVERLAY CONFORM

SB ROUTE 99: "SR 99 HC" 258+92.32 TO 259+32.32
"SR 99" 346+09.78 TO 346+49.78
"SR 99" 350+79.26 TO 351+19.26
"SR 99" 353+88.30 TO 354+28.30
"SR 99" 360+35.30 TO 360+75.30

NB ROUTE 99: "SR 99" 299+01.09 TO 299+41.09
"SR 99" 344+11.35 TO 344+51.35
"SR 99" 350+79.26 TO 351+19.26
"SR 99" 353+88.30 TO 354+28.30
"SR 99" 359+13.76 TO 359+53.76

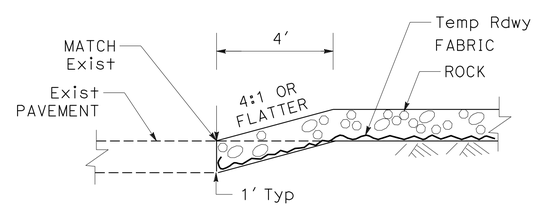

SECTION

CONFORM DETAIL

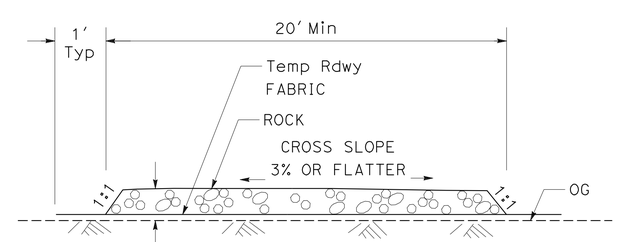

SECTION

TEMPORARY CONSTRUCTION ROADWAY

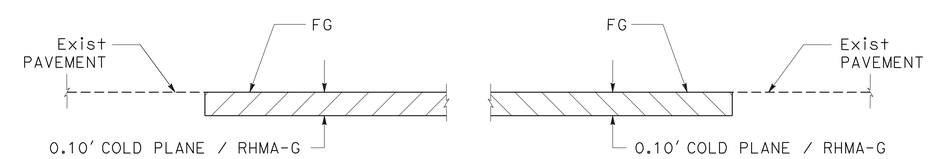

COLD PLANE CONFORM

SB ROUTE 99: "SR 99" 370+00.00 TO ~~457+33.70~~ 448+00.00
NB ROUTE 99: "SR 99" 370+00.00 TO ~~461+00.00~~ 448+00.00

1

1 REVISED PER ADDENDUM No. 1 DATED FEBRUARY 22, 2012

CONSTRUCTION DETAILS

NO SCALE

C-2

STATE OF CALIFORNIA - DEPARTMENT OF TRANSPORTATION
Caltrans

CONSULTANT FUNCTIONAL SUPERVISOR: JOHN A. KLEMUNES
CALCULATED-DESIGNED BY: JIGNESH I. RATHOD
CHECKED BY: TRY V. KHOU
REVISED BY
DATE REVISED

LAST REVISION 00-00-00
DATE PLOTTED => 22-FEB-2012
TIME PLOTTED => 11:25

Dist	COUNTY	ROUTE	POST MILES TOTAL PROJECT	SHEET No.	TOTAL SHEETS
10	SJ	99	4.9/14.2	302	639

REGISTERED CIVIL ENGINEER — DATE 3/7/11

10-17-11
PLANS APPROVAL DATE

REGISTERED PROFESSIONAL ENGINEER — JOHN A. KLEMUNES No. 60728 Exp. 12-31-12 CIVIL — STATE OF CALIFORNIA

THE STATE OF CALIFORNIA OR ITS OFFICERS OR AGENTS SHALL NOT BE RESPONSIBLE FOR THE ACCURACY OR COMPLETENESS OF SCANNED COPIES OF THIS PLAN SHEET.

HDR ENGINEERING, INC.
2365 IRON POINT ROAD
SUITE 300
FOLSOM, CA 95630-8709

SAN JOAQUIN COUNCIL OF GOVERNMENTS
555 E. WEBER AVE.
STOCKTON, CA 95202

LEGEND:

- WORK AREA
- TEMPORARY PAVEMENT
- RHMA-G OVERLAY
- CHANNELIZER (SURFACE MOUNTED)
- (P) OBJECT MARKER (TYPE P)
- ○ PORTABLE DELINEATOR
- XX TEMPORARY TRAFFIC STRIPE DETAIL NUMBER
- XX REMOVE TRAFFIC STRIPE
- (X) CONSTRUCTION AREA SIGN No.
- TRAFFIC LANE / DIRECTION
- BEGIN/END TRAFFIC STRIPE DETAIL
- TEMPORARY RAILING (TYPE K) FROM PREVIOUS STAGE TO REMAIN
- ALTERNATIVE TEMPORARY CRASH CUSHION
- TEMPORARY SAND FILLED CRASH CUSHION ARRAY
- EXISTING ROADSIDE SIGN
- ROADSIDE SIGN ONE-POST
- ROADSIDE SIGN TWO-POST
- ▲ RELOCATE ROADSIDE SIGN — FROM / TO
- ■ REMOVE ROADSIDE SIGN
- TEMPORARY PAVEMENT MARKING TYPE VI ARROW

NOTES:

1. FOR LIMITS OF TRAFFIC STRIPE REMOVAL AND PAVEMENT MARKING REMOVAL, SEE TRAFFIC HANDLING QUANTITIES.
2. STATION/OFFSET CALLOUTS FOR TRK REFER TO THE TRAFFIC SIDE OF THE RAILING.
3. TRK TAPERS SHALL BE 10:1 OR FLATTER UNLESS OTHERWISE INDICATED.
4. SEE ANCHORING DETAIL (SECTION ~~G-G~~ J-J) ON STANDARD PLAN ~~T3~~ T3A, IF THE OFFSET DISTANCE BETWEEN WORK AREA AND CLOSEST EDGE OF TRK IS LESS THAN 2 FEET. 1
5. FOR TEMPORARY PAVEMENT DETAILS, SEE DETOUR LAYOUTS PLANS.
6. EXACT LOCATION OF SIGNS TO BE DETERMINED BY THE ENGINEER.
7. SEE CONSTRUCTION AREA SIGNS SHEETS FOR ADDITIONAL CONSTRUCTION AREA SIGNS.
8. FOR PERMANENT STRIPING DETAILS, SEE PAVEMENT DELINEATION PLANS.
9. ROUTE 99 LANE WIDENING IN MEDIAN WORK SHALL BE CONSTRUCTED BY SEGMENT;
   SEGMENT 270+00 TO 345+92
   SEGMENT 358+75 TO 576+00
   SEGMENT 623+20 TO 747+35
   EACH SEGMENT SHALL BE COMPLETED AND TEMPORARY RAILING (TYPE K) REMOVED BEFORE WORK BEGINS ON THE NEXT SEGMENT.
10. PAINT TRAFFIC STRIPE SHALL BE USED FOR STAGE 1, AND TEMPORARY TRAFFIC STRIPE (PAINT) SHALL BE USED FOR STAGE 2, 3 AND 4.
    TEMPORARY PAVEMENT MARKNIG (PAINT) SHALL BE USED ON ALL STAGES.

ABBREVIATIONS:

PS	PERMANENT TRAFFIC STRIPE
RPM	REMOVE PAVEMENT MARKING
TRK	TEMPORARY RAILING (TYPE K)
TS	TEMPORARY TRAFFIC STRIPE
TTS	TEMPORARY TRAFFIC SCREEN
S	"STOP" TEMPORARY PAVEMENT MARKING
A	"AHEAD" TEMPORARY PAVEMENT MARKING

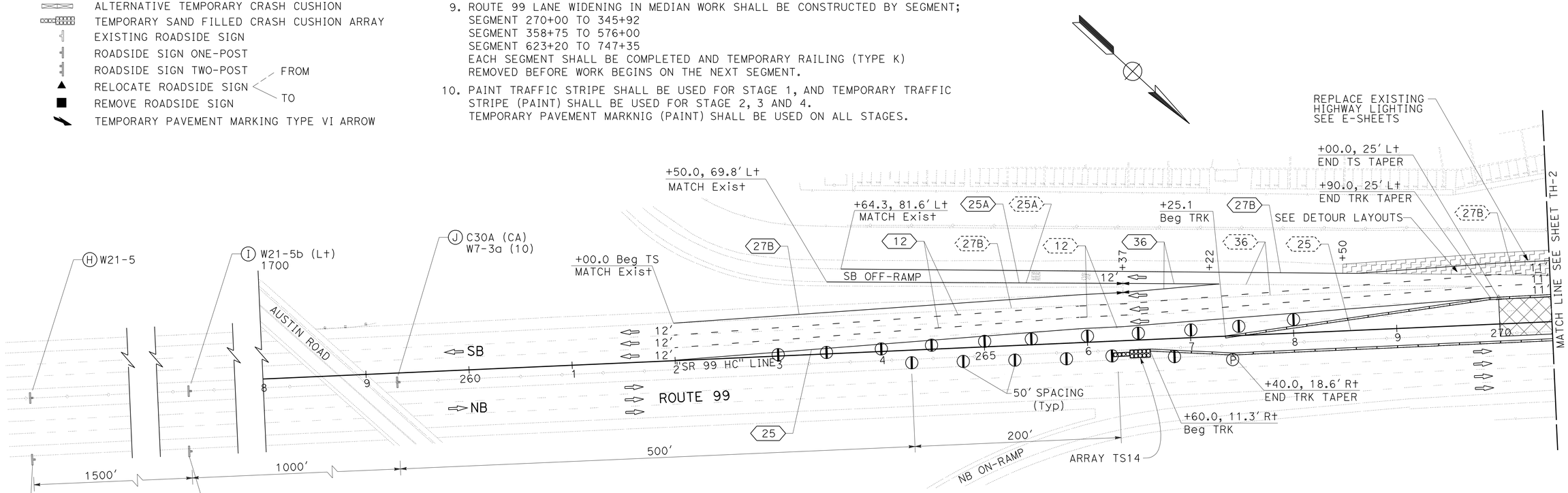

1 REVISED PER ADDENDUM No. 1 DATED FEBRUARY 22, 2012

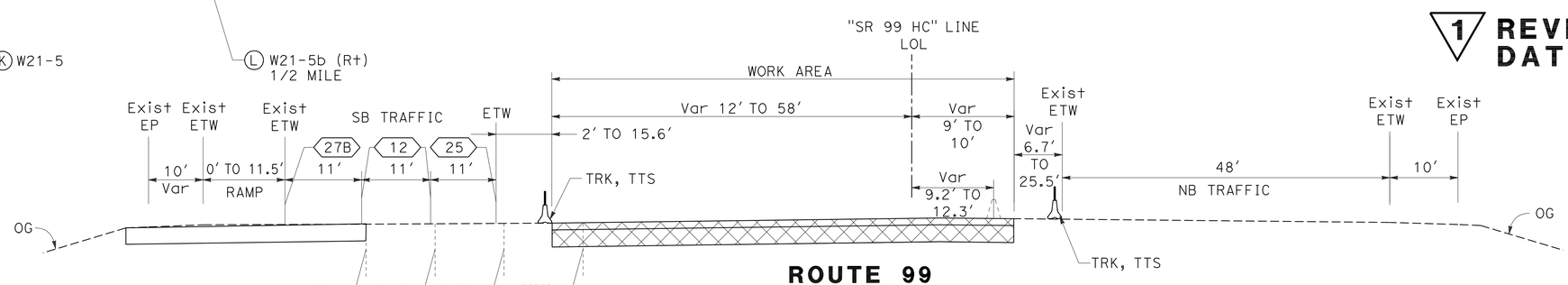

ROUTE 99
"SR 99 HC" 270+00.0 TO 275+99.4
NO SCALE
THIS PLAN ACCURATE FOR TRAFFIC HANDLING WORK ONLY

TRAFFIC HANDLING PLAN
(STAGE 1)
SCALE: 1" = 50'

TH-1

STATE OF CALIFORNIA - DEPARTMENT OF TRANSPORTATION
CONSULTANT FUNCTIONAL SUPERVISOR: JOHN A. KLEMUNES
CALCULATED-DESIGNED BY: TRY V. KHOU
CHECKED BY: VINCENT FUNG
REVISED BY / DATE REVISED

LAST REVISION 00-00-00 | DATE PLOTTED => 22-FEB-2012 | TIME PLOTTED => 11:25

Dist	COUNTY	ROUTE	POST MILES TOTAL PROJECT	SHEET No.	TOTAL SHEETS
10	SJ	99	4.9/14.2	441	639

REGISTERED CIVIL ENGINEER 3/7/11 DATE

10-17-11
PLANS APPROVAL DATE

REGISTERED PROFESSIONAL ENGINEER JOHN A. KLEMUNES No. 60728 Exp. 12-31-12 CIVIL STATE OF CALIFORNIA

THE STATE OF CALIFORNIA OR ITS OFFICERS OR AGENTS SHALL NOT BE RESPONSIBLE FOR THE ACCURACY OR COMPLETENESS OF SCANNED COPIES OF THIS PLAN SHEET.

HDR ENGINEERING, INC.
2365 IRON POINT ROAD
SUITE 300
FOLSOM, CA 95630-8709

SAN JOAQUIN COUNCIL OF GOVERNMENTS
555 E. WEBER AVE.
STOCKTON, CA 95202

ABBREVIATIONS:
U.C. = UPPER CASE
L.C. = LOWER CASE
LL = LANE LINE

1 Sta "SR 99" 421+80 FSBT ON ROUTE 99

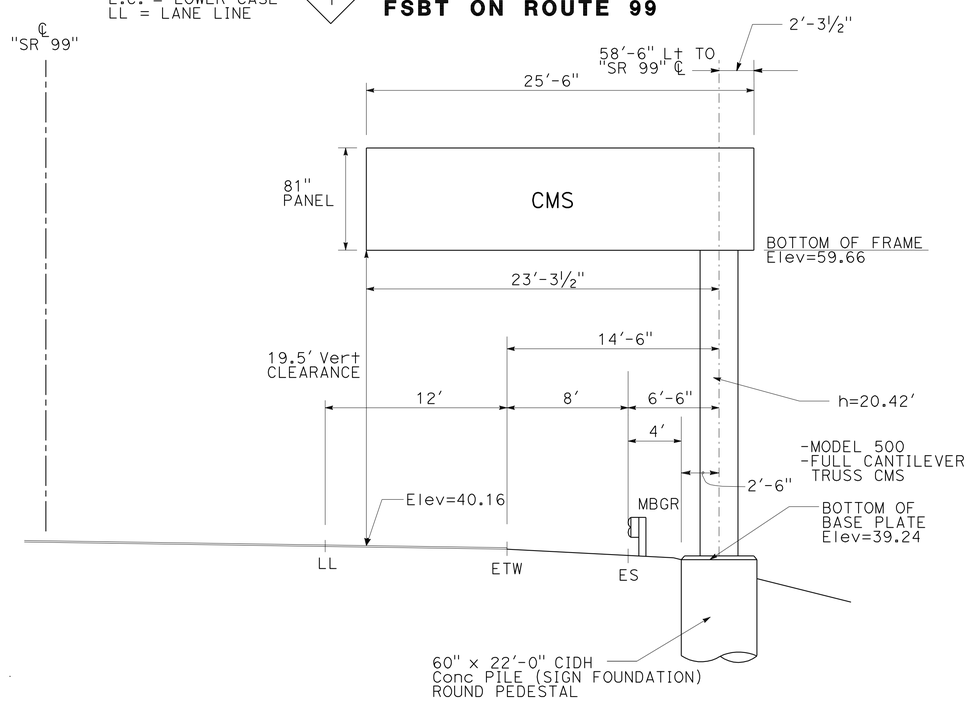

2 Sta "SR 99" 549+60 FNBT ON ROUTE 99

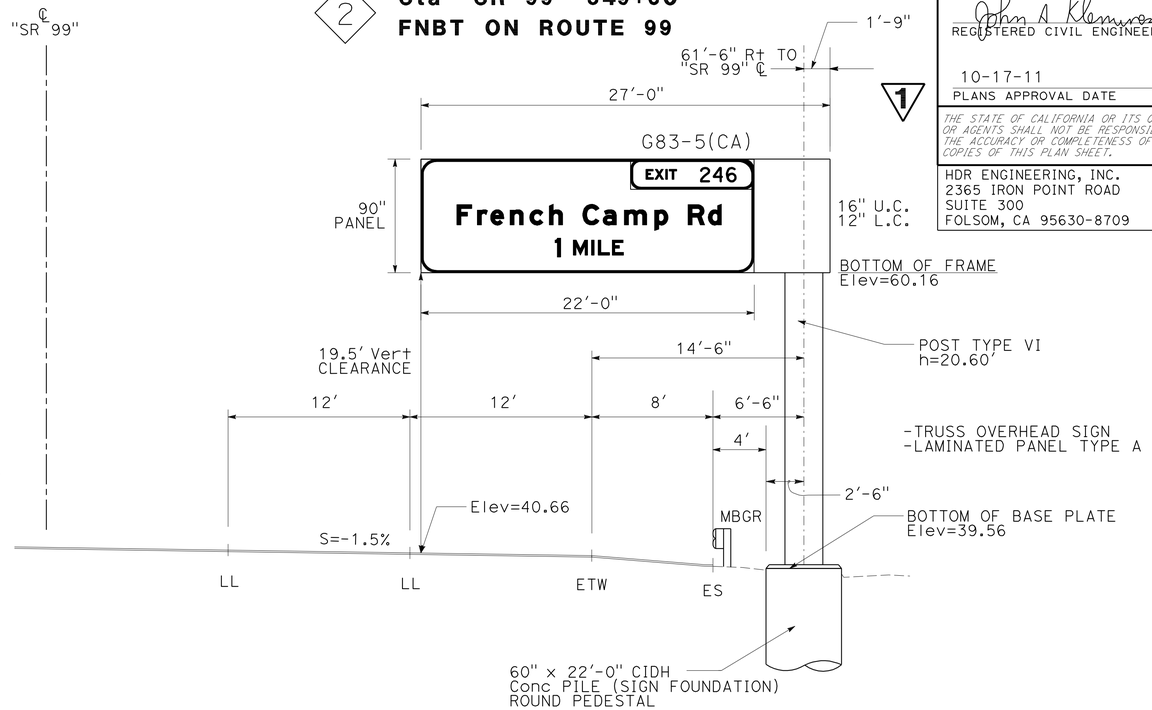

3 Sta "SR 99" 554+00 FSBT ON ROUTE 99

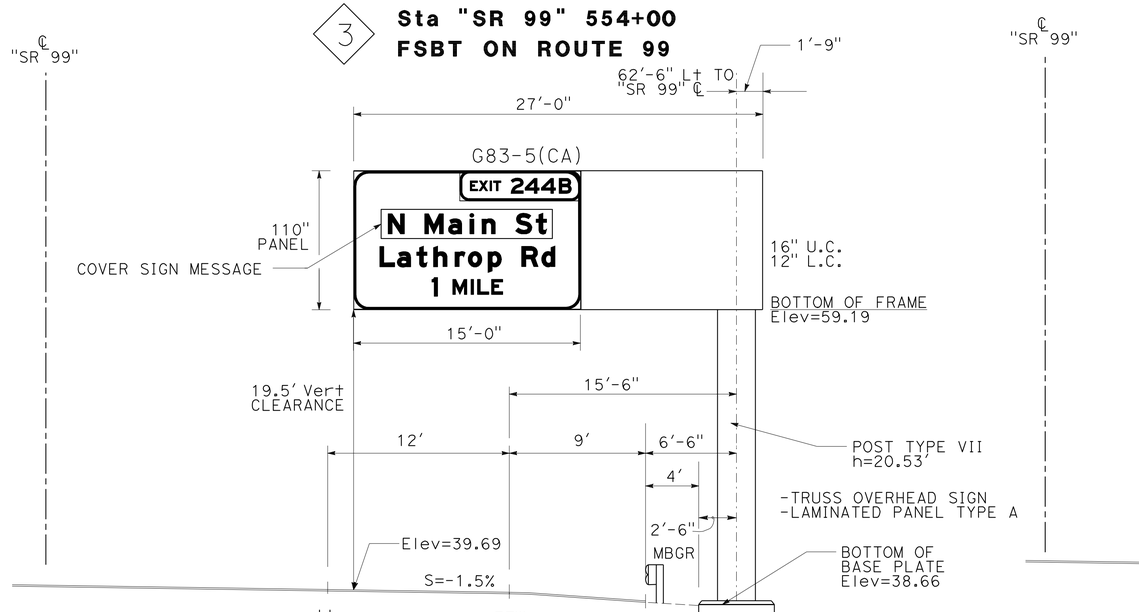

4 Sta "SR 99" 682+00 FSBT ON ROUTE 99

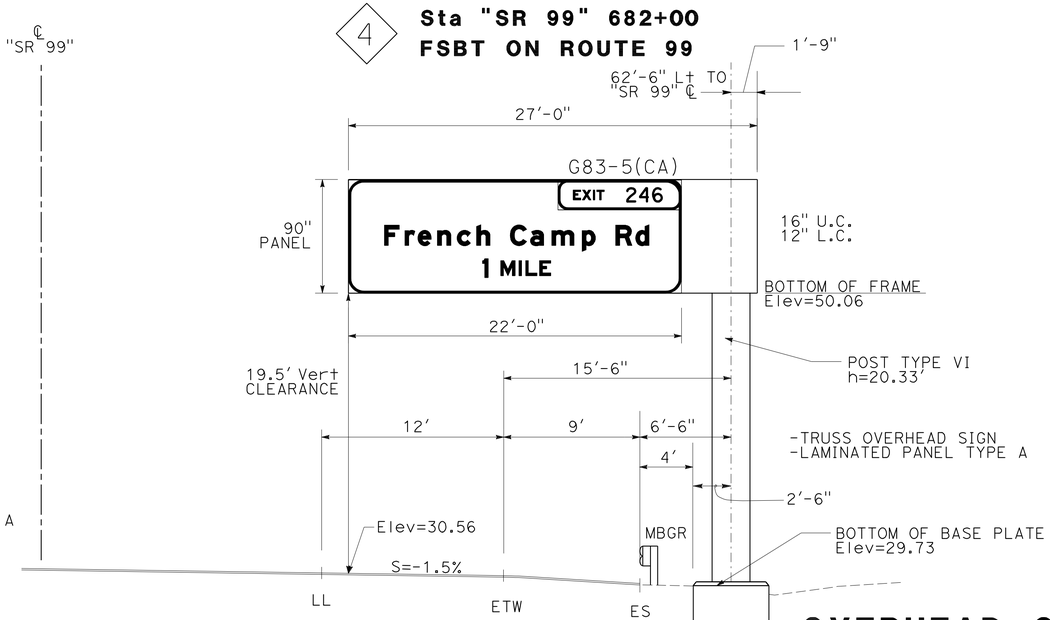

1 REVISED PER ADDENDUM No. 1 DATED FEBRUARY 22, 2012

OVERHEAD SIGN DETAILS

NO SCALE

SD-2

STATE OF CALIFORNIA - DEPARTMENT OF TRANSPORTATION
Caltrans

CONSULTANT FUNCTIONAL SUPERVISOR: JOHN A. KLEMUNES
CALCULATED-DESIGNED BY: VINCENT FUNG
CHECKED BY: TRY V. KHOU
REVISED BY
DATE REVISED

LAST REVISION 00-00-00
DATE PLOTTED => 22-FEB-2012
TIME PLOTTED => 11:25