DIST	COUNTY	ROUTE	KILOMETER POST TOTAL PROJECT	SHEET NO.	TOTAL SHEETS
10	Sta	219,108	3.4/7.9, 44.3/44.9	501	522

Caltrans Metric

Jeffery G. McRae
REGISTERED ELECTRICAL ENGINEER

June 6, 2008
PLANS APPROVAL DATE

REGISTERED PROFESSIONAL ENGINEER Jeffery G. McRae No. E14512 Exp. 6-30-10 ELECTRICAL STATE OF CALIFORNIA

The State of California or its officers or agents shall not be responsible for the accuracy or completeness of electronic copies of this plan sheet.

To get to the Caltrans web site, go to: http://www.dot.ca.gov

To accompany plans dated 6-28-10

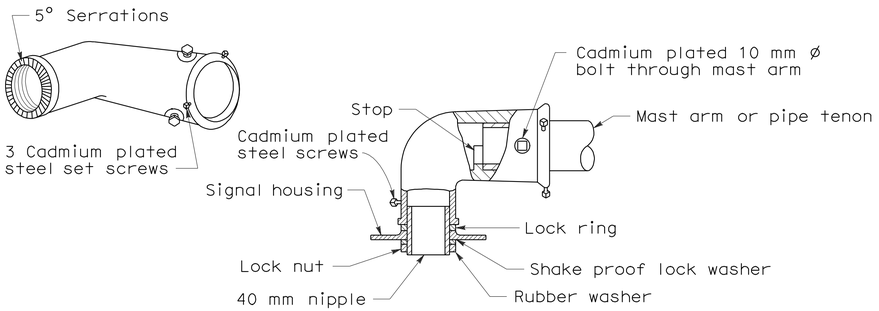

MAST ARM MOUNTING - TYPE "MAT"

For 2 NPS pipe, see Note 1.

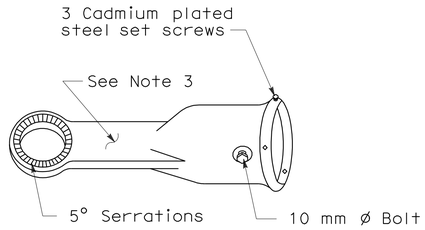

MAST ARM MOUNTING - TYPE "MAS"

For 2 NPS pipe. See Note 1.

SIGNAL SLIP FITTERS

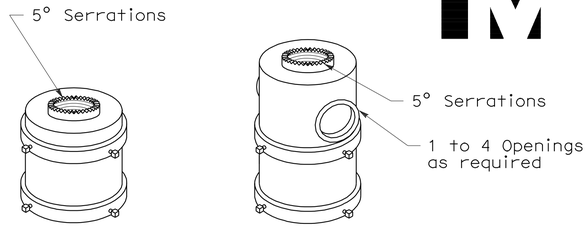

For one mounting For mulitiple mountings

TOP MOUNTINGS

For 4 NPS pipe, see Note 2.

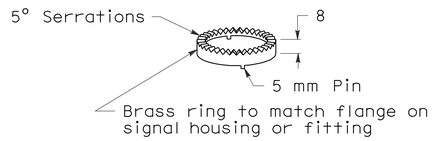

LOCK RING

Use where locking ring is not integral with signal housing or fitting.

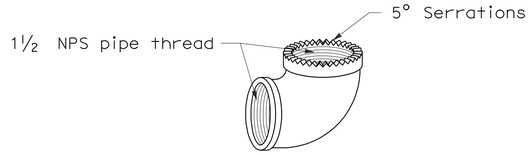

SPECIAL 90° ELBOW

One for each signal head, except those with special slip fitter mounting

MISCELLANEOUS MOUNTING HARDWARE

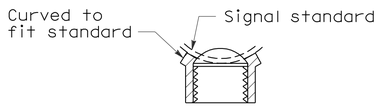

SECTION A-A

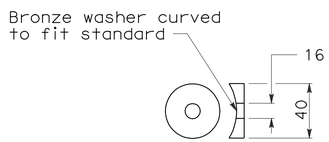

WASHER DETAIL "C"

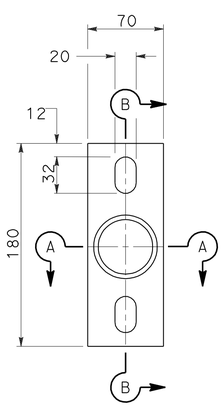

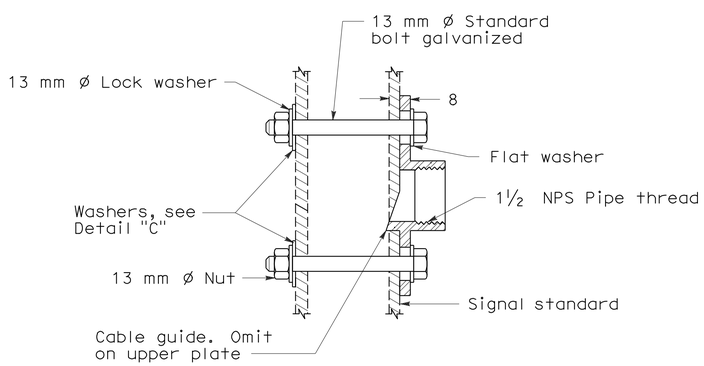

SECTION B-B

POLE PLATE

For side mountings

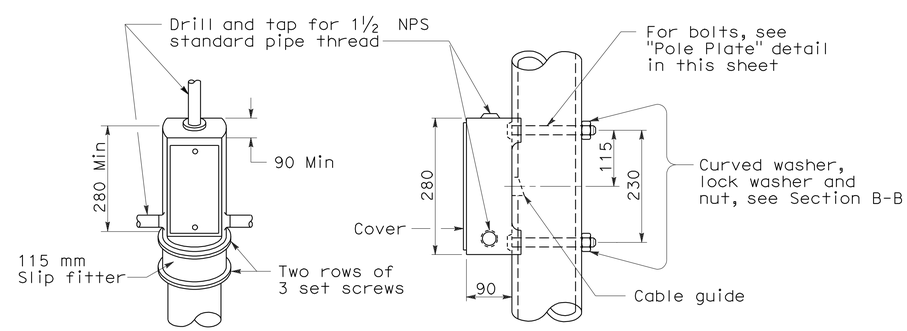

TOP MOUNTING SIDE MOUNTING

TERMINAL COMPARTMENTS

NOTES

1. After mast arm signal has been plumbed and secured, drill 11 mm hole through mast arm tenon in line with slip fitter hole. Place a cadmium plated 10 mm ø galvanized bolt with washer under bolt head through hole and secure with washer, nut, and locknut. Seal openings between mast arm mountings and mast arm with mastic.
2. (a) Threaded top mounted slip fitter openings shall be 1½ NPS.
   (b) Serrations in fittings shall match those on bottom of signal heads or in lock ring.
   (c) Top opening shall be offset when backplate is used.
3. Wireway shall have a cross section area of 600 mm^2 minimum. Minimum width of 13 mm.

STATE OF CALIFORNIA
DEPARTMENT OF TRANSPORTATION

ELECTRICAL SYSTEMS (SIGNAL HEADS AND MOUNTINGS)

NO SCALE

ALL DIMENSIONS ARE IN MILLIMETERS UNLESS OTHERWISE SHOWN

RSP ES-4D DATED JUNE 6, 2008 SUPERSEDES STANDARD PLAN ES-4D DATED July 1, 2004 - PAGE 434 OF THE STANDARD PLANS BOOK DATED July 2004.

REVISED STANDARD PLAN RSP ES-4D

2004 REVISED Std PLAN RSP ES-4D

5-20-08

DIST	COUNTY	ROUTE	KILOMETER POST TOTAL PROJECT	SHEET NO.	TOTAL SHEETS
10	Sta	219,108	3.4/7.9, 44.3/44.9	502	522

Jeffery G. McRae
REGISTERED ELECTRICAL ENGINEER

October 5, 2007
PLANS APPROVAL DATE

REGISTERED PROFESSIONAL ENGINEER Jeffery G. McRae No. E14512 Exp. 6-30-08 ELECTRICAL STATE OF CALIFORNIA

The State of California or its officers or agents shall not be responsible for the accuracy or completeness of electronic copies of this plan sheet.

To get to the Caltrans web site, go to: http://www.dot.ca.gov

To accompany plans dated 6-28-10

Caltrans Metric

LOOP INSTALLATION PROCEDURE

1. Loops shall be centered in lanes.
2. Saw slots in pavement for loop conductors as shown in details.
3. Distance between side of loop and a lead-in saw cut from adjacent detectors shall be 600 mm minimum. Distance between lead-in saw cuts shall be 150 mm minimum.
4. Bottom of saw slot shall be smooth with no sharp edges.
5. Slots shall be washed until clean, blown out and thoroughly dried before installing loop conductors.
6. Adjacent loops on the same sensor unit channel shall be wound in opposite directions.
7. Identify and tag loop circuit pairs in the pull box with loop number, start (S) and finish (F) of conductor. Identify and tag lead-in-cable with sensor number and phase.
8. Install loop conductor in slot using a 5 mm to 6 mm thick wood paddle. Hold loop conductors with wood paddles (at the bottom of the sawed slot) during sealant placement.
9. No more than 2 twisted pairs shall be installed in one sawed slot.
10. Allow additional 1.5 m of slack length of conductor for the lead-in run to pull box.
11. The additional length of each conductor for each loop shall be twisted together into a pair (6 turns per meter minimum) before being placed in the slot and conduit leading to pull box.
12. Test each loop circuit for continuity, circuit resistance and insulation resistance at the pull box before filling slots.
13. Fill slots as shown in details.
14. Splice loop conductors to lead-in cable. Splices shall be soldered.
15. End of lead-in-cable and Type 2 loop conductor shall be waterproofed prior to installing in conduit to prevent moisture from entering the cable.
16. Lead-in-cable shall not be spliced between the pull box and the controller cabinet terminals.
17. Test each loop circuit for continuity, circuit resistance and insulation resistance at the controller cabinet location.
18. Where loop conductors are not to be spliced to a lead-in-cable, the ends of the conductors shall be taped and waterproofed with electrical insulating coating.

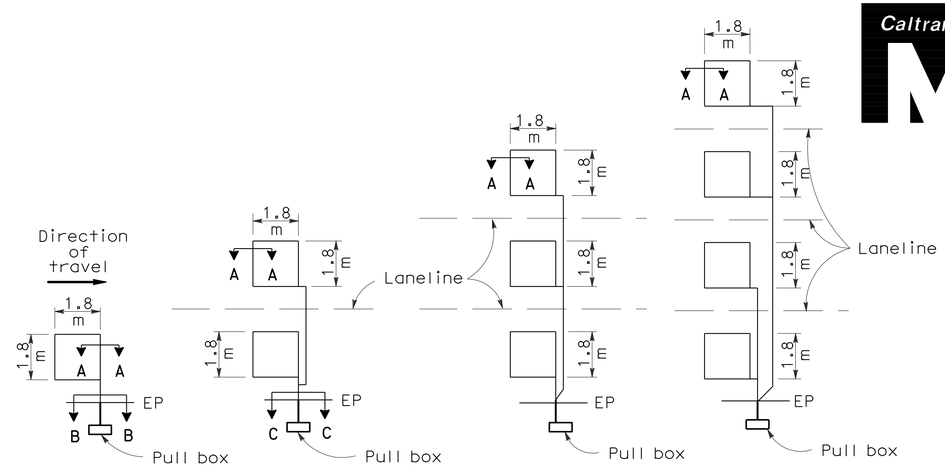

TYPE 1A INSTALLATION | TYPE 2A INSTALLATION | TYPE 3A INSTALLATION | TYPE 4A INSTALLATION

SAWCUT DETAILS

(Type A loop detector configurations illustrated)

1. 1A thru 4A = 1 Type A loop configuration in each lane.
2. 1B thru 4B = 1 Type B loop configuration in each lane.
3. 1C = 1 Type C loop configuration entering lanes as required.
4. 1D thru 4D = 1 Type D loop configuration in each lane.
5. 1E thru 4E = 1 Type E loop configuration in each lane.
6. 1Q thru 4Q = 1 Type Q loop configuration in each lane.
   (Use Type A, B, C, D, E or Q loop detector configurations only when specified or shown on plans)

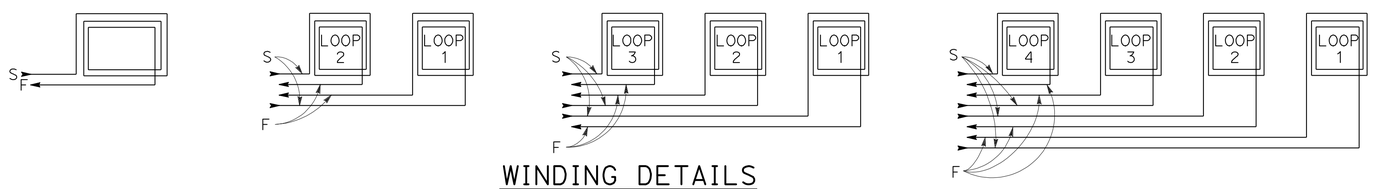

WINDING DETAILS

See Notes 6 and 7

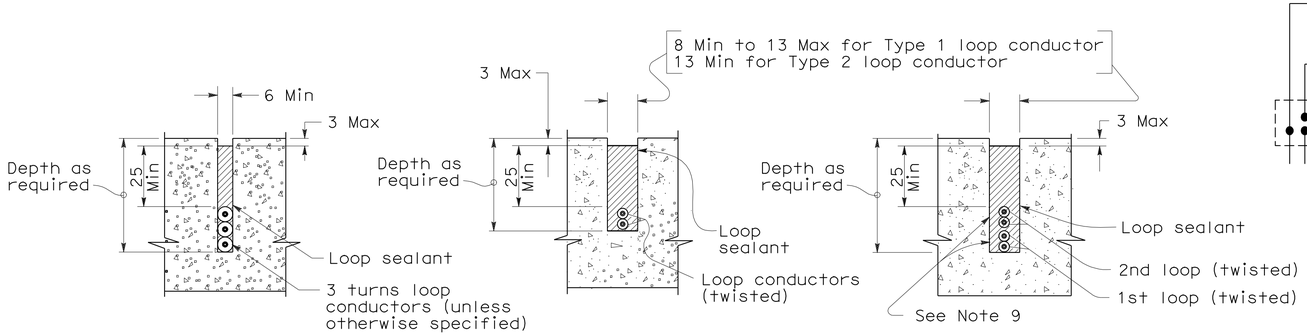

SECTION A-A | SECTION B-B | SECTION C-C

SLOT DETAILS - TYPE 1 AND TYPE 2 LOOP CONDUCTOR

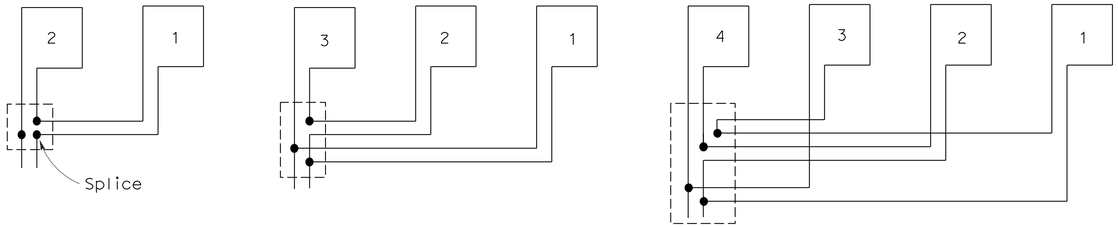

TYPICAL LOOP CONNECTIONS

(Dashed lines represent the pull box)

STATE OF CALIFORNIA
DEPARTMENT OF TRANSPORTATION

ELECTRICAL SYSTEMS (DETECTORS)

NO SCALE

ALL DIMENSIONS ARE IN MILLIMETERS UNLESS OTHERWISE SHOWN

RSP ES-5A DATED OCTOBER 5, 2007 SUPERSEDES STANDARD PLAN ES-5A DATED JULY 1, 2004-PAGE 436 OF THE STANDARD PLANS BOOK DATED JULY 2004.

REVISED STANDARD PLAN RSP ES-5A

2004 REVISED Std PLAN RSP ES-5A

8-9-07

DIST	COUNTY	ROUTE	KILOMETER POST TOTAL PROJECT	SHEET NO.	TOTAL SHEETS
10	Sta	219,108	3.4/7.9, 44.3/44.9	503	522

Caltrans Metric

REGISTERED ELECTRICAL ENGINEER

October 5, 2007
PLANS APPROVAL DATE

REGISTERED PROFESSIONAL ENGINEER Jeffery G. McRae No. E14512 Exp. 6-30-08 ELECTRICAL STATE OF CALIFORNIA

The State of California or its officers or agents shall not be responsible for the accuracy or completeness of electronic copies of this plan sheet.

To get to the Caltrans web site, go to: http://www.dot.ca.gov

To accompany plans dated 6-28-10

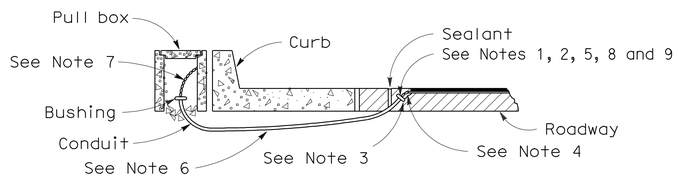

TYPE A
CURB TERMINATION DETAIL

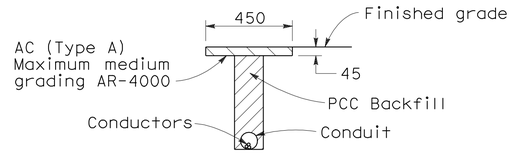

"T" TRENCH DETAIL

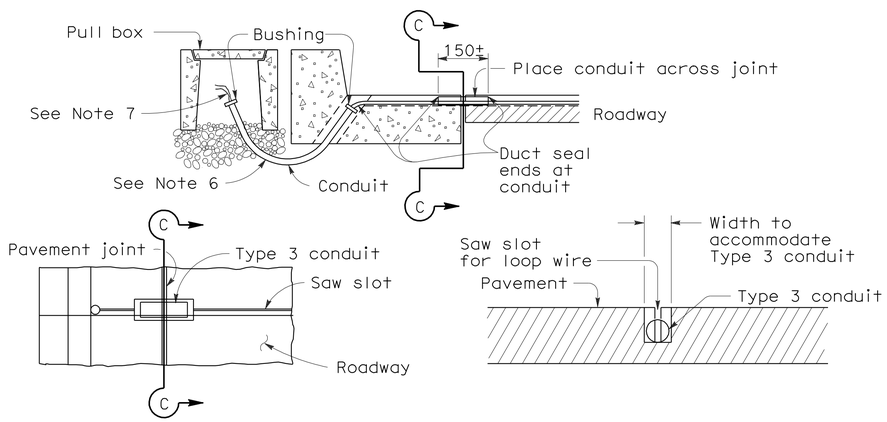

PLAN VIEW

SECTION C-C

TYPE B
CURB TERMINATION DETAILS

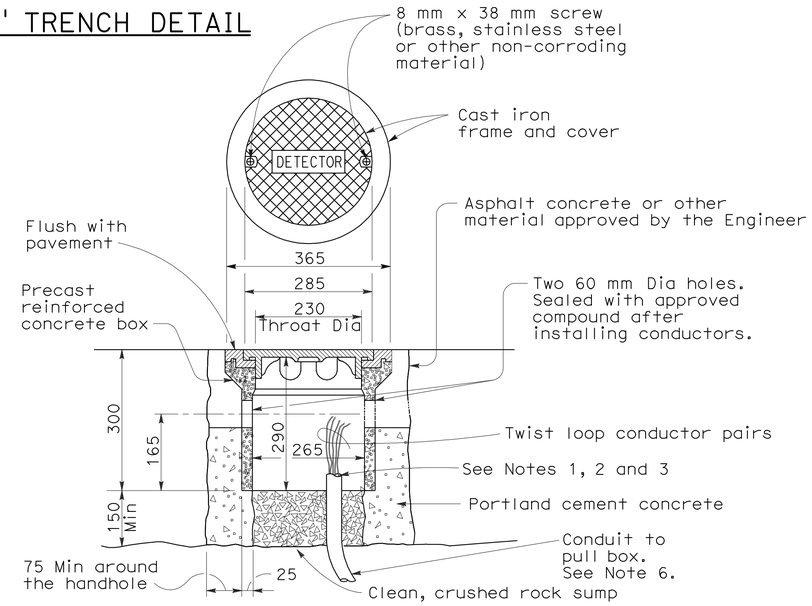

DETECTOR HANDHOLE DETAILS

NOTES (This sheet only):

1. Bushing shall be used at end of conduit.
2. Tape detector conductors or cables 75 mm each side of bushings.
3. Install duct seal compound to each end of termination conduit before installing sealant.
4. Round all sharp edges where detector conductors or cables have to pass.
5. End of conduit shall be 80 mm below roadway surface.
6. Conduit size — Loop Conductors
   - 27C Minimum — 1 to 2 pairs
   - 41C Minimum — 3 to 4 pairs
   - 53C Minimum — 5 or more pairs
7. Splice detector conductors or cables to lead-in-cable run to controller cabinet.
8. Location of detector handhole when shown on plans.
9. When the shoulder and traveled way are paved with the same material and there is no joint between them, the conduit shall extend only 600 mm into the shoulder pavement.

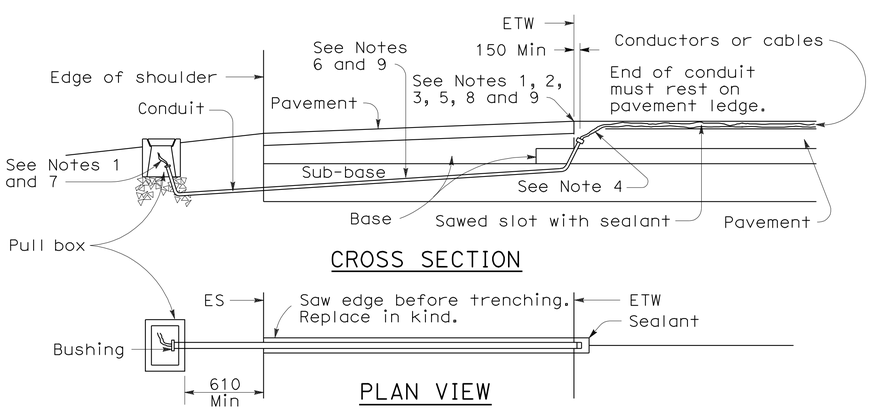

CROSS SECTION

PLAN VIEW

SHOULDER TERMINATION DETAILS

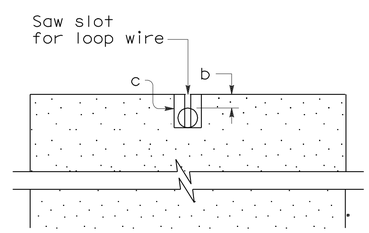

SECTION A-A

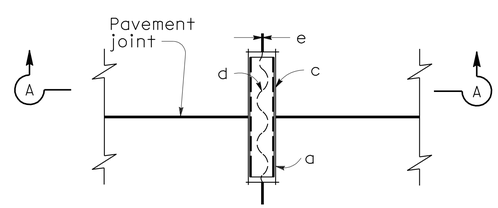

PLAN VIEW

TYPICAL LOOP LEAD-IN DETAILS AT PAVEMENT JOINT

NOTES:

a. 21C, Type 3 conduit 150 mm long minimum, plug both ends with caulking compound to keep out sealant.

b. 13 mm minimum between top of conduit and pavement surface.

c. Saw cut shall not exceed 25 mm in width and 3 mm longer than conduit to be installed.

d. Conductors with 13 mm minimum slack inside conduit.

e. Inductive loop detector saw slot.

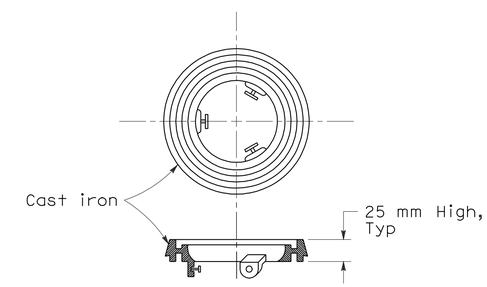

NOTE:

Use for Type A detector handhole on pavement resurfacing only.

LOCKING GRADE RING

STATE OF CALIFORNIA
DEPARTMENT OF TRANSPORTATION

ELECTRICAL SYSTEMS (DETECTORS)

NO SCALE

ALL DIMENSIONS ARE IN
MILLIMETERS UNLESS OTHERWISE SHOWN

RSP ES-5D DATED OCTOBER 5, 2007 SUPERSEDES STANDARD PLAN ES-5D
DATED JULY 1, 2004-PAGE 439 OF THE STANDARD PLANS BOOK DATED JULY 2004.

REVISED STANDARD PLAN RSP ES-5D

2004 REVISED Std PLAN RSP ES-5D

10-1-07

DIST	COUNTY	ROUTE	KILOMETER POST TOTAL PROJECT	SHEET NO.	TOTAL SHEETS
10	Sta	219,108	3.4/7.9, 44.3/44.9	504	522

Caltrans Metric

REGISTERED CIVIL ENGINEER

October 5, 2007
PLANS APPROVAL DATE

REGISTERED PROFESSIONAL ENGINEER
Stanley P. Johnson
No. C57793
Exp. 03-31-08
CIVIL
STATE OF CALIFORNIA

The State of California or its officers or agents shall not be responsible for the accuracy or completeness of electronic copies of this plan sheet.

To get to the Caltrans web site, go to: http://www.dot.ca.gov

To accompany plans dated 6-28-10

2004 REVISED Std PLAN RSP ES-6A

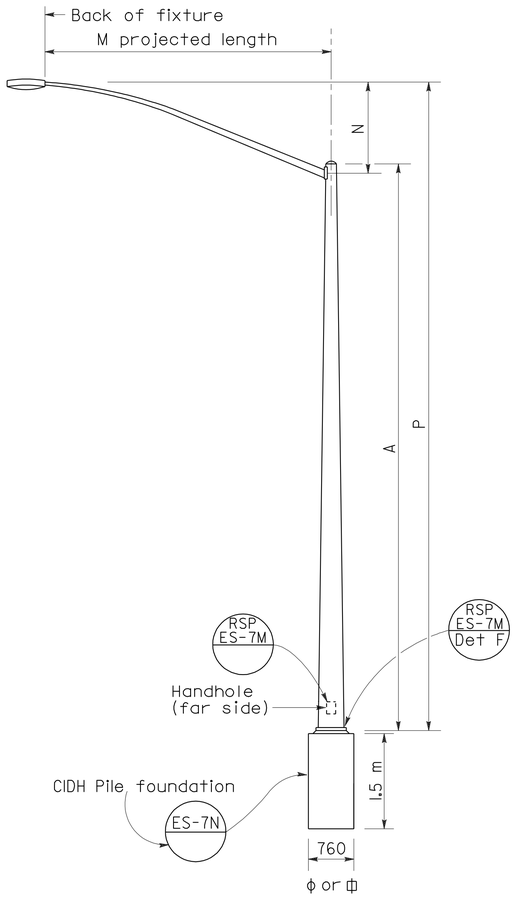

ELEVATION
TYPE 15 AND TYPE 21

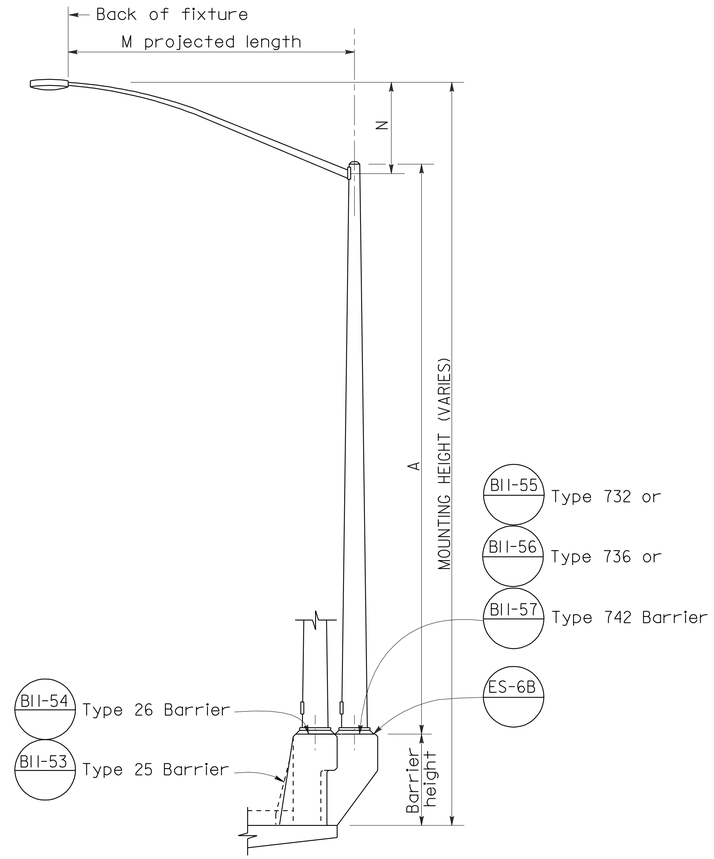

ELEVATION
TYPE 15 AND TYPE 21 BARRIER RAIL MOUNTED

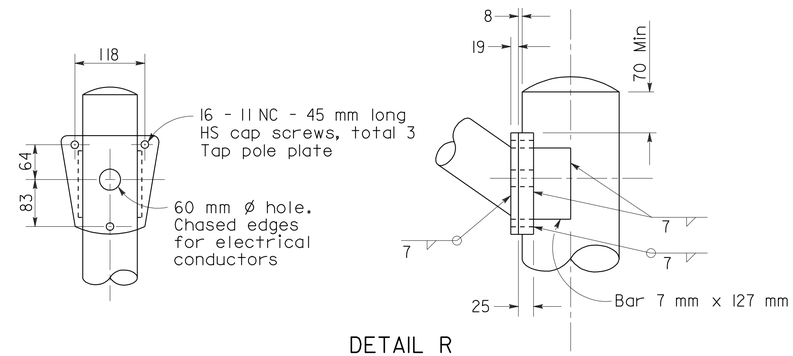

DETAIL R
LUMINAIRE ARM CONNECTION

HIGH STRENGTH CAP SCREWS
16 - 11NC - 45
Length (mm)
Threads (per inch)
Size (mm)

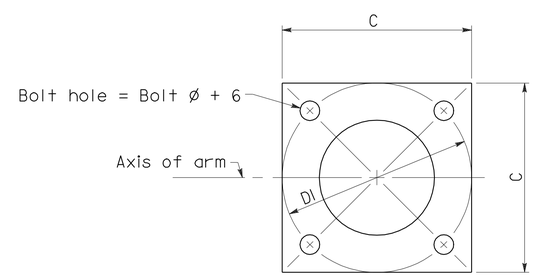

BASE PLATE

POLE TYPE	POLE DATA				BASE PLATE DATA				LUMINAIRE ARM
	A Height	Min OD Base	Min OD Top	Wall Thickness	C	DI Bolt Circle	Thick-ness	Anchor Bolts Size	
	m	mm	mm	mm	mm				m
15	9.1	203	98	3.04	305	305	25	25 ø x 915 x 102*	1.8-4.6 [3.7]
21	10.7	219	98	3.04	305	305	25	See ES-6B	1.8-4.6 [3.7]

*For barrier rail bolts, see Standard Plan ES-6B.

LUMINAIRE ARM DATA					
M Projected Length	N Rise	Min OD At Pole	Nominal Thickness	P Type 15	P Type 21
m	mm	mm	mm	m	m
1.8	610±	83	3.04	9.5±	11.2±
2.4	760±	89	3.04	9.7±	11.3±
3.1	990±	98	3.04	9.9±	11.5±
3.7	1290±	98	3.04	10.2±	11.8±
4.6	1450±	108	3.04	10.3±	11.9±

NOTES:

1. ☐ Indicates arm length to be used unless otherwise noted on the plans.
2. For Type 15-SB, use Type 15 standard with Type 30 base plate details, see Standard Plan ES-6F.
3. For additional notes, see Revised Standard Plan RSP ES-7M and ES-7N.

STATE OF CALIFORNIA
DEPARTMENT OF TRANSPORTATION

ELECTRICAL SYSTEMS (LIGHTING STANDARD TYPES 15 AND 21)

NO SCALE

ALL DIMENSIONS ARE IN MILLIMETERS UNLESS OTHERWISE SHOWN

RSP ES-6A DATED OCTOBER 5, 2007 SUPERSEDES STANDARD PLAN ES-6A DATED JULY 1, 2004-PAGE 440 OF THE STANDARD PLANS BOOK DATED JULY 2004.

REVISED STANDARD PLAN RSP ES-6A

To accompany plans dated 6-28-10

Caltrans Metric

DIST	COUNTY	ROUTE	KILOMETER POST TOTAL PROJECT	SHEET NO.	TOTAL SHEETS
10	Sta	219,108	3.4/7.9, 44.3/44.9	505	522

REGISTERED CIVIL ENGINEER

October 5, 2007
PLANS APPROVAL DATE

REGISTERED PROFESSIONAL ENGINEER Stanley P. Johnson No. C57793 Exp. 03-31-08 CIVIL STATE OF CALIFORNIA

The State of California or its officers or agents shall not be responsible for the accuracy or completeness of electronic copies of this plan sheet.

To get to the Caltrans web site, go to: http://www.dot.ca.gov

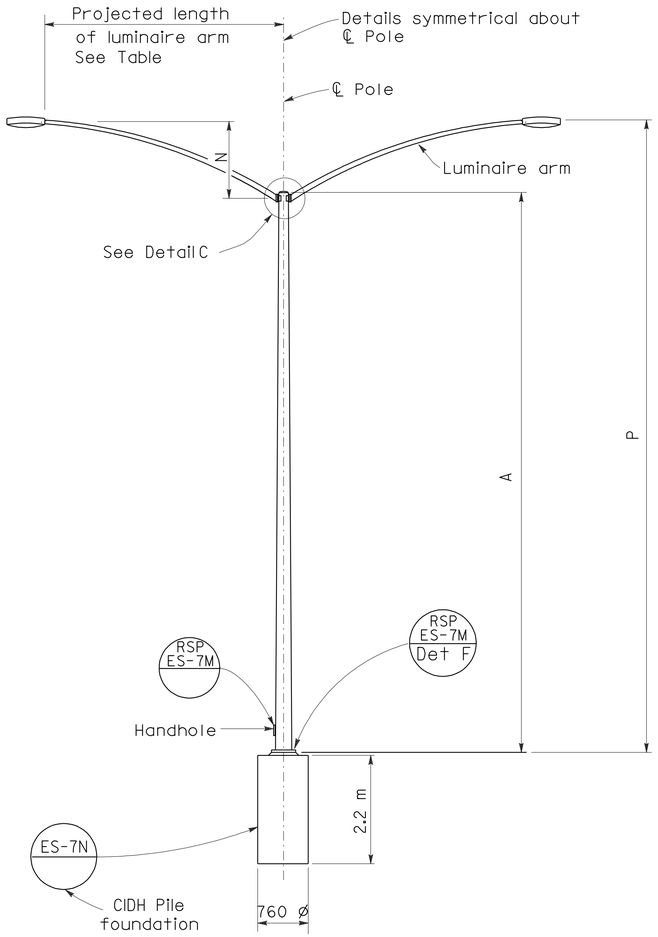

ELEVATION

TYPE 15D AND TYPE 21D

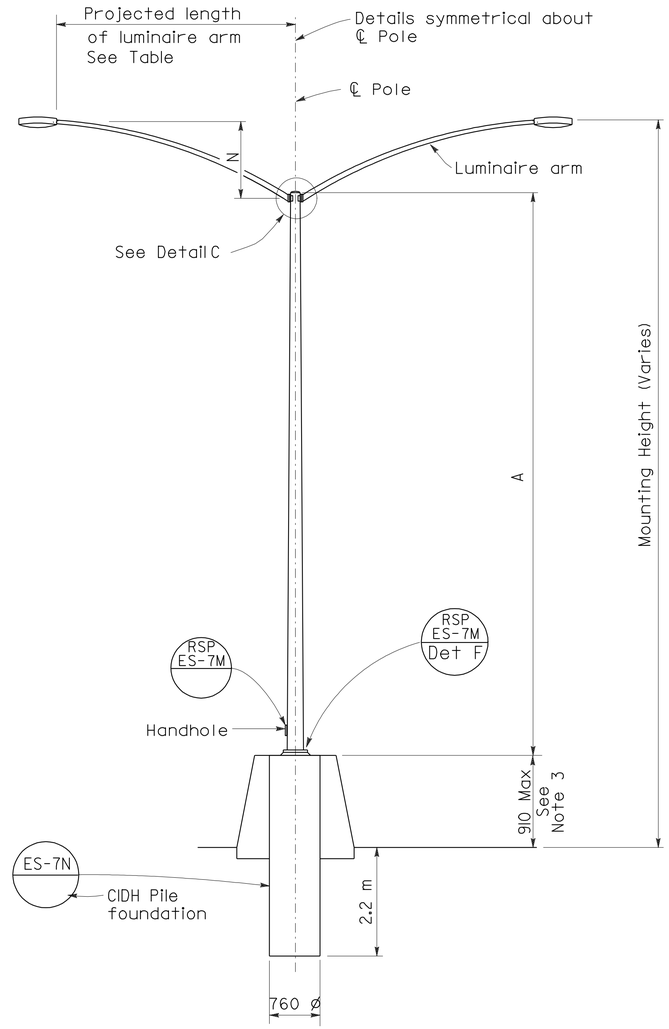

ELEVATION

TYPE 15D AND TYPE 21D MEDIAN BARRIER MOUNTED

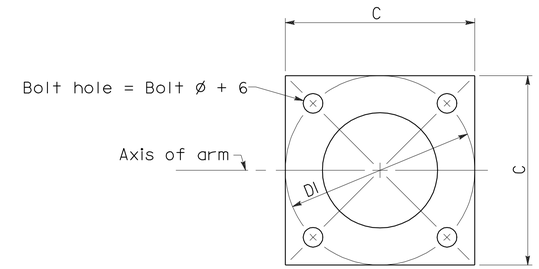

BASE PLATE

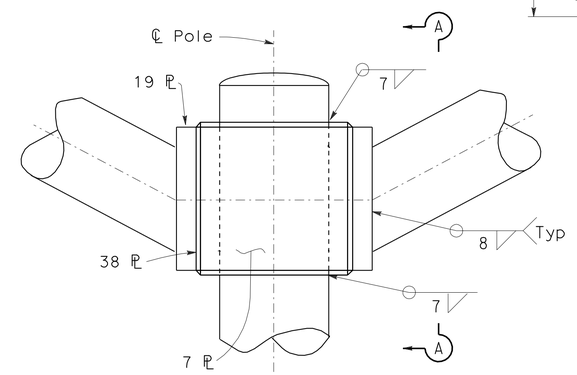

DETAIL C

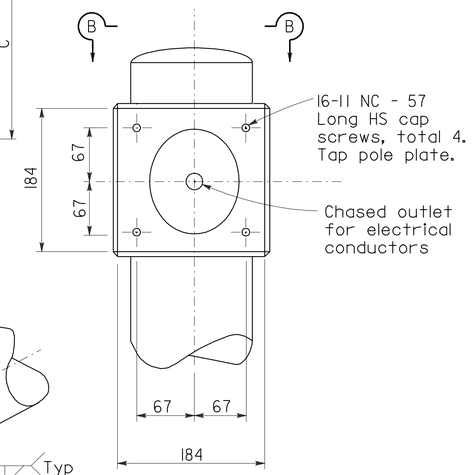

SECTION A-A

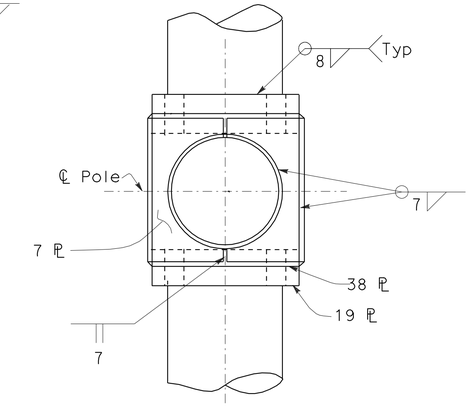

SECTION B-B

POLE TYPE	POLE DATA				BASE PLATE DATA				
	A Height	Min OD Base	Min OD Top	Min Thickness	C	DI Bolt Circle	Thick-ness	Anchor Bolts Size	Anchor Bolts Bolt Circle
	m	mm	mm	mm	mm	mm	mm	mm	mm
15D	9.1	203	98	4.55	305	305	25	32 ø x 915 x 152	305
21D	10.7	219	98	4.55					

HIGH STRENGTH CAP SCREWS

16 - 11NC - 45
- Length (mm)
- Threads (per inch)
- Size (mm)

LUMINAIRE ARM DATA					
Projected Length	N Rise	Min OD At Pole	Nominal Thickness	P Type 15D	P Type 21D
m	mm	mm	mm	m	m
1.8	610±	83	3.04	9.5±	11.2±
2.4	760±	89	3.04	9.7±	11.3±
3.1	990±	98	3.04	9.9±	11.5±
$\boxed{3.7}$	1290±	98	3.04	10.2±	11.8±

NOTES:

1. ☐ Indicates arm length to be used unless otherwise noted on the plans.
2. For additional notes see Revised Standard Plan RSP ES-7M.
3. See Concrete Barrier Details Type 60E and 60SE.

STATE OF CALIFORNIA
DEPARTMENT OF TRANSPORTATION

ELECTRICAL SYSTEMS (LIGHTING STANDARD TYPES 15D AND 21D DOUBLE ARM)

NO SCALE

ALL DIMENSIONS ARE IN MILLIMETERS UNLESS OTHERWISE SHOWN

RSP ES-6D DATED OCTOBER 5, 2007 SUPERSEDES STANDARD PLAN ES-6D DATED JULY 1, 2004-PAGE 443 OF THE STANDARD PLANS BOOK DATED JULY 2004.

REVISED STANDARD PLAN RSP ES-6D

2004 REVISED Std PLAN RSP ES-6D

6-20-07

DIST	COUNTY	ROUTE	KILOMETER POST TOTAL PROJECT	SHEET NO.	TOTAL SHEETS
10	Sta	219,108	3.4/7.9, 44.3/44.9	506	522

REGISTERED CIVIL ENGINEER

January 24, 2005
PLANS APPROVAL DATE

REGISTERED PROFESSIONAL ENGINEER
Tillat Sattar
No. C42892
Exp. 03-31-06
CIVIL
STATE OF CALIFORNIA

The State of California or its officers or agents shall not be responsible for the accuracy or completeness of electronic copies of this plan sheet.

To get to the Caltrans web site, go to: http://www.dot.ca.gov

To accompany plans dated 6-28-10

2004 REVISED Std PLAN RSP ES-7A

NOTES

1. Pipe dimensions for pedestrian push button post are nominal. See ASTM A6M.
2. For additional details and data for Type 15TS Standard, see Standard Plan ES-6A.

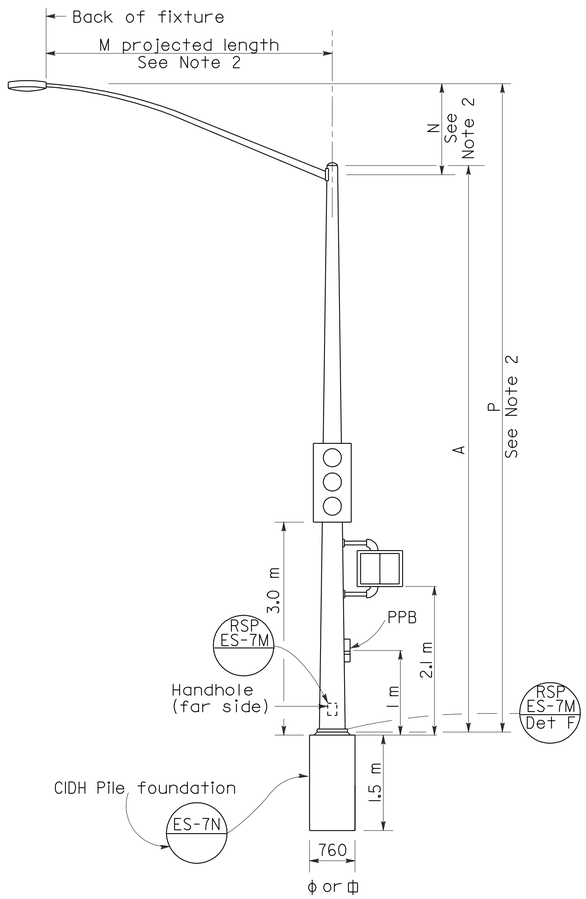

ELEVATION
TYPE 15TS STANDARD
See Note 2

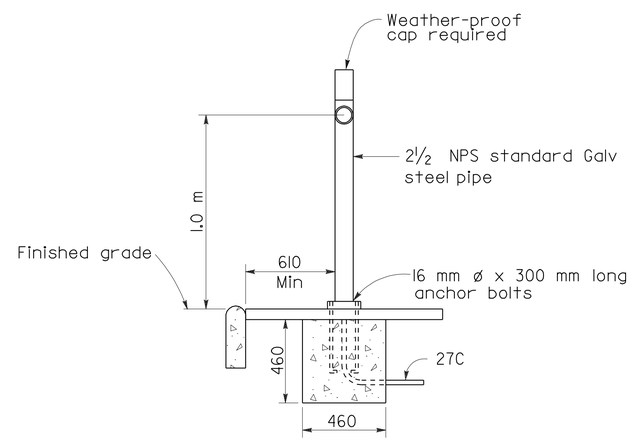

ELEVATION

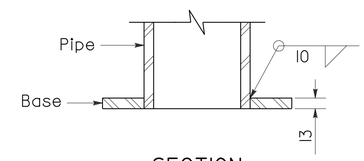

SECTION

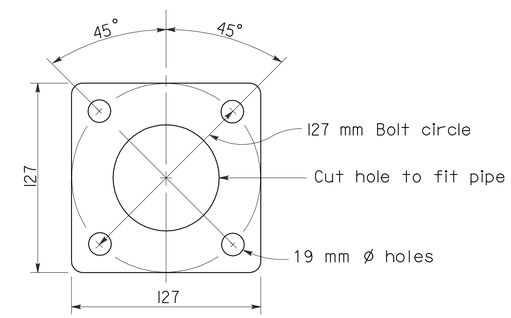

BASE PLATE
PPB POST

PEDESTRIAN PUSH BUTTON POST

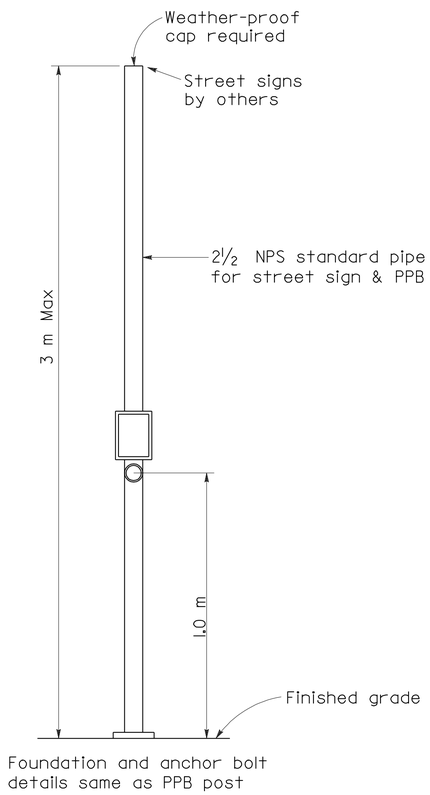

COMBINED STREET SIGN
PEDESTRIAN PUSH BUTTON POST

TYPE 15TS STANDARD (See Note 2)

POLE DATA				BASE PLATE DATA			
A Height	Min OD Base	Min OD Top	Wall Thickness	C	DI Bolt Circle	Thick-ness	Anchor Bolts Size
m	mm	mm	mm	mm			
9.1	203	98	4.55	305	305	25	32 ø x 915 x 152

STATE OF CALIFORNIA
DEPARTMENT OF TRANSPORTATION

ELECTRICAL SYSTEMS (SIGNAL STANDARDS PUSH BUTTON POSTS AND TYPE 15TS STANDARD)

NO SCALE

ALL DIMENSIONS ARE IN
MILLIMETERS UNLESS OTHERWISE SHOWN

RSP ES-7A DATED JANUARY 24, 2005 SUPERSEDES STANDARD PLAN ES-7A
DATED JULY 1, 2004-PAGE 451 OF THE STANDARD PLANS BOOK DATED JULY 2004.

REVISED STANDARD PLAN RSP ES-7A

DIST	COUNTY	ROUTE	KILOMETER POST TOTAL PROJECT	SHEET NO.	TOTAL SHEETS
10	Sta	219,108	3.4/7.9, 44.3/44.9	507	522

REGISTERED CIVIL ENGINEER

October 5, 2007
PLANS APPROVAL DATE

REGISTERED PROFESSIONAL ENGINEER Stanley P. Johnson No. C57793 Exp. 03-31-08 CIVIL STATE OF CALIFORNIA

The State of California or its officers or agents shall not be responsible for the accuracy or completeness of electronic copies of this plan sheet.

To get to the Caltrans web site, go to: http://www.dot.ca.gov

Caltrans Metric

To accompany plans dated 6-28-10

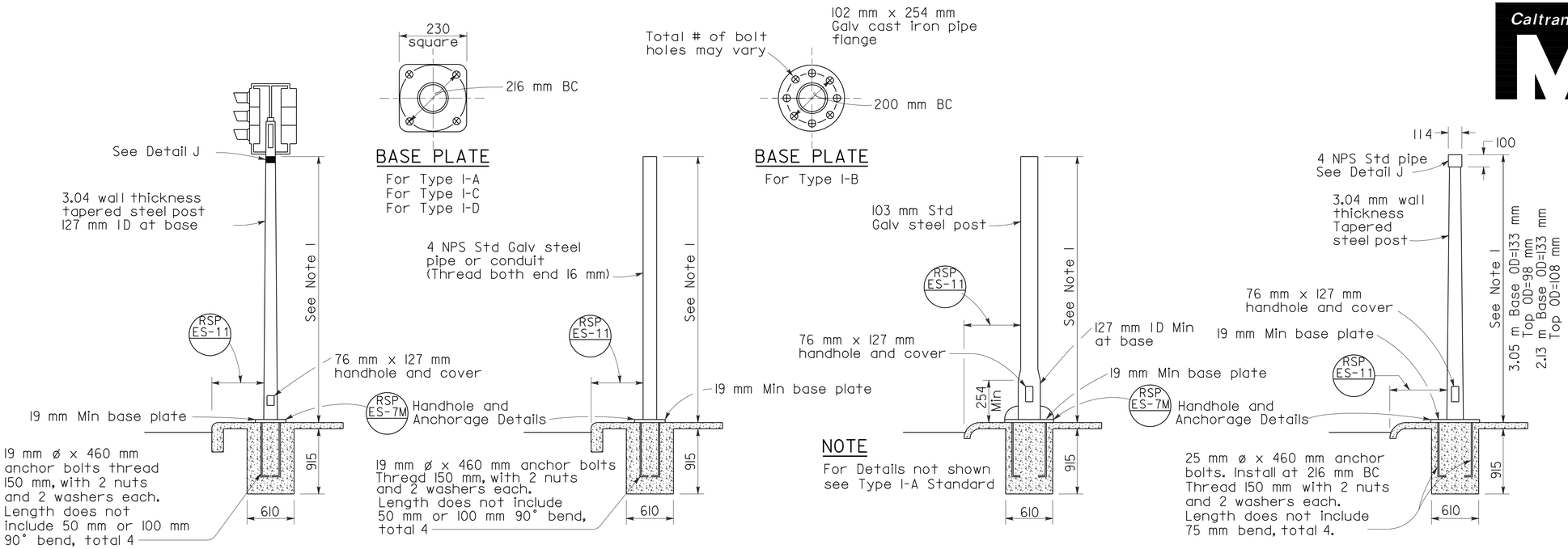

NOTES:

1. Standards shall be 3.05 m± 50 mm for vehicle signals and 2.13 m± 50 mm for pedestrian signals unless otherwise noted on plans.
2. Top of standards shall be 114 mm OD.
3. Conduits shall extend 50 mm maximum above finished surface of foundation and for Types I-A, I-C and I-D shall be sloped toward handhole.
4. Anchor bolts shall be bonded to conduit or grounding conductor.
5. Conduit between standard and adjacent pull box shall be Size 53 minimum.
6. Paint numbers on roadway side facing traffic when electrolier or post is left of direction of traffic.

TYPE I SIGNAL STANDARDS

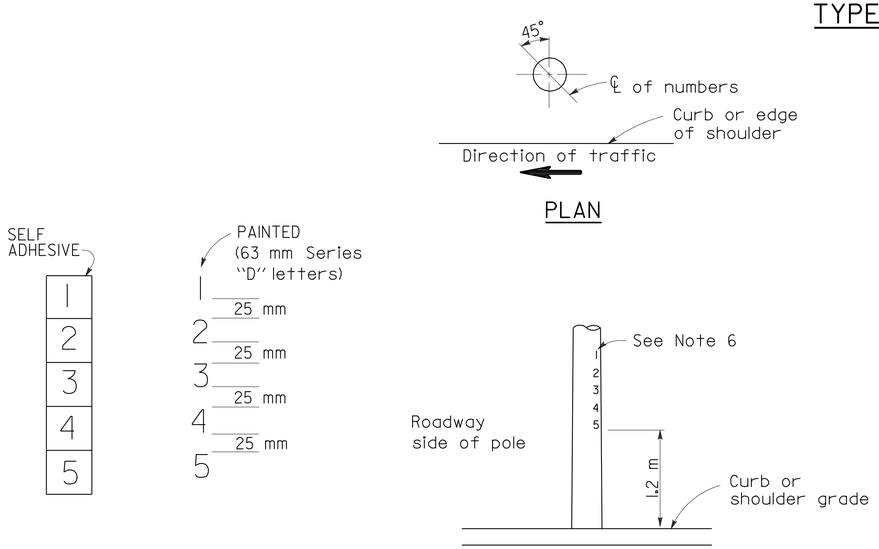

LOCATION OF EQUIPMENT NUMBERS ON STANDARDS AND POSTS

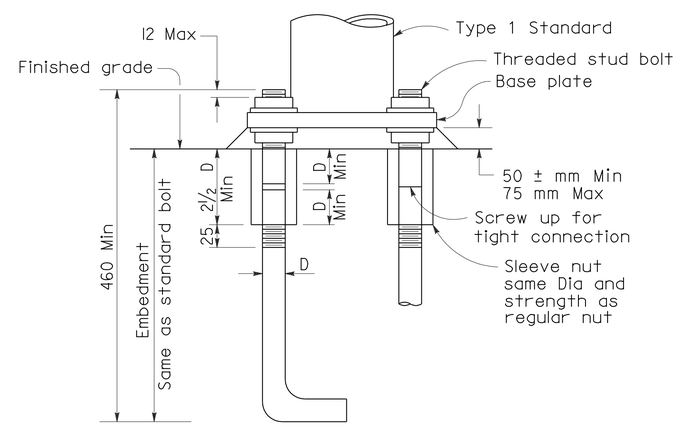

ANCHOR BOLTS WITH SLEEVE NUTS

Sleeve nuts to be used only when shown or specified on Project Plans
D = Diameter of anchor bolt

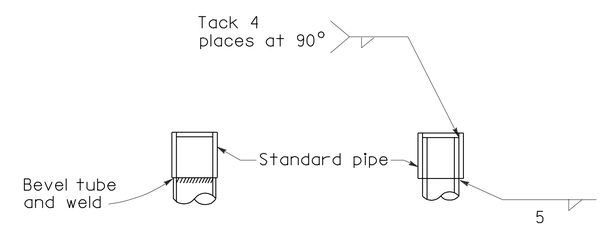

DETAIL J

Tube may be inserted into pipe or butted as required

STATE OF CALIFORNIA
DEPARTMENT OF TRANSPORTATION

ELECTRICAL SYSTEM (SIGNAL AND LIGHTING STANDARD TYPE 1 STANDARDS AND EQUIPMENT NUMBERING)

NO SCALE

ALL DIMENSIONS ARE IN MILLIMETERS UNLESS OTHERWISE SHOWN

RSP ES-7B DATED OCTOBER 5, 2007 SUPERSEDES STANDARD PLAN ES-7B DATED JULY 1, 2004-PAGE 452 OF THE STANDARD PLANS BOOK DATED JULY 2004.

REVISED STANDARD PLAN RSP ES-7B

2004 REVISED Std PLAN RSP ES-7B

10-1-07

DIST	COUNTY	ROUTE	KILOMETER POST TOTAL PROJECT	SHEET NO.	TOTAL SHEETS
10	Sta	219,108	3.4/7.9, 44.3/44.9	508	522

REGISTERED CIVIL ENGINEER

October 5, 2007
PLANS APPROVAL DATE

Registered Professional Engineer — Stanley P. Johnson, No. C57793, Exp. 03-31-08, CIVIL, State of California

The State of California or its officers or agents shall not be responsible for the accuracy or completeness of electronic copies of this plan sheet.

To get to the Caltrans web site, go to: http://www.dot.ca.gov

To accompany plans dated 6-28-10

Caltrans Metric

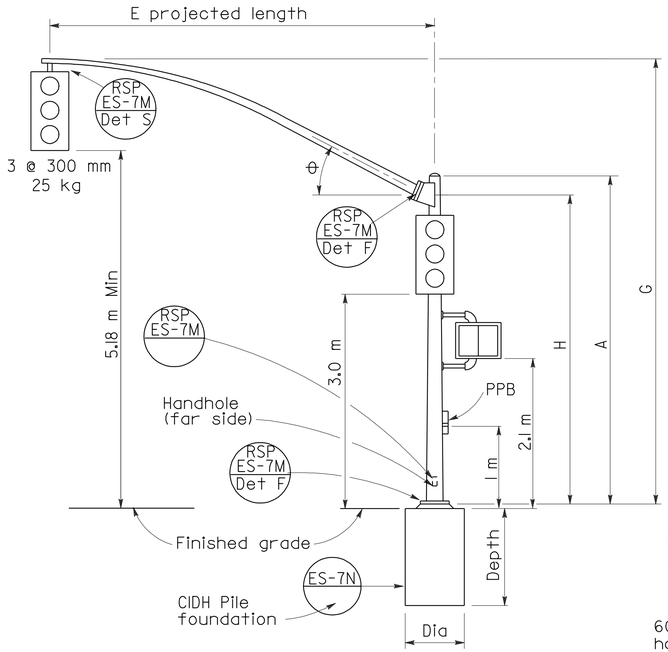

ELEVATION

TYPE 16-1-161, 18-1-161

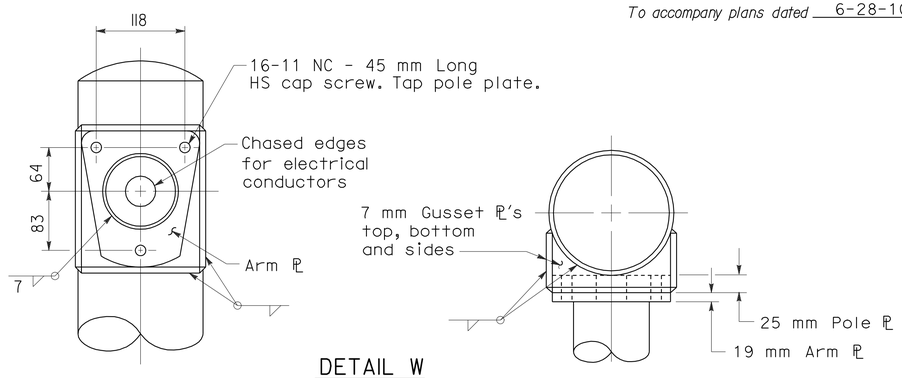

DETAIL W

LUMINAIRE ARM CONNECTION

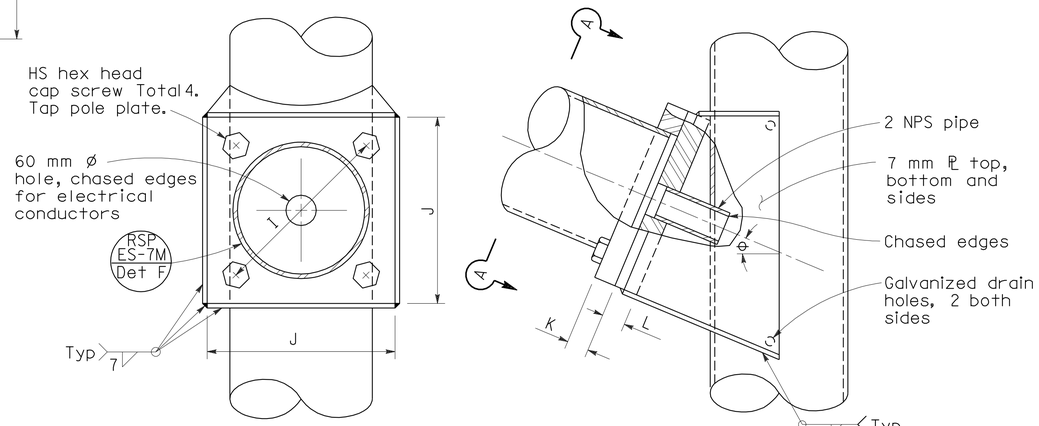

SECTION A-A

ELEVATION

SIGNAL ARM CONNECTION DETAILS

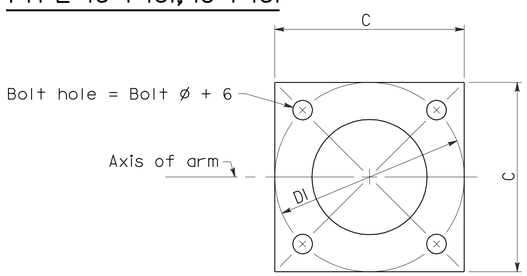

BASE PLATE

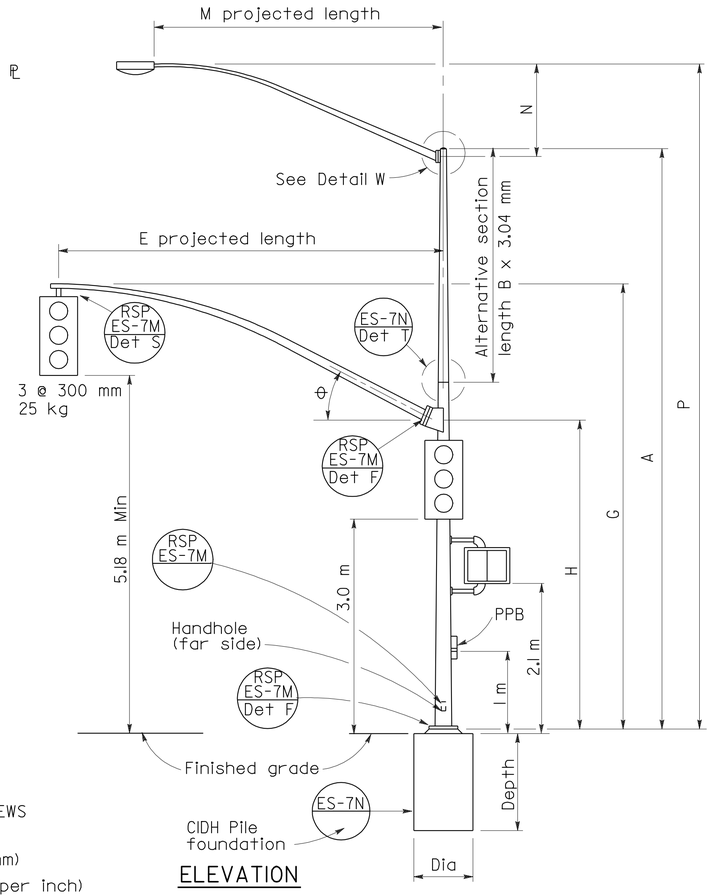

ELEVATION

TYPE 19-1-161, 19A-1-161

HIGH STRENGTH CAP SCREWS

16 - 11NC - 45
- Length (mm)
- Threads (per inch)
- Size (mm)

SIGNAL ARM DATA										
E Projected Length	G Mounting Height	H	Min OD At Pole	Thickness	I Bolt Circle	HS Cap Screws	J Plate Size	K Arm ℙ Thickness	L Pole ℙ Thickness	θ
m			mm							
4.6	6.6 ±	5.3	178	3.04	305	32-7NC-76	305	32	38	23°
6.1	6.6 ±		181							
7.6	6.9 ±	4.9	186							
9.1	7.0 ±		203							

LUMINAIRE ARM DATA					
M Projected Length	N Rise	Min OD at Pole	Thickness	P Mounting Height 9.1 Pole	P Mounting Height 10.7 Pole
m	mm			m	
1.8	610 ±	83	3.04	9.5 ±	11.1 ±
2.4	760 ±	89		9.7 ±	11.3 ±
3.1	990 ±	98		9.9 ±	11.5 ±
3.7	1290 ±			10.2 ±	11.8 ±
4.6	1450 ±	108		10.4 ±	12.0 ±

Pole Type	Load Case	Wind Velocity km/h	POLE DATA: A Height	Min OD Base	Min OD Top	Thickness	Alternative Section B Length	Alternative Section Bottom	Alternative Section Top	BASE PLATE DATA: C	DI Bolt Circle	Thickness	Anchor Bolts Size	Luminaire Arm	Signal Arm	CIDH PILE FOUNDATION: Diameter	Depth	Reinforced
			m	mm			m	mm		mm				m		mm	m	
16-1-161	1	161	5.6	273	210	4.55	None	203	168	457	445	32	38 ø × 925 × 152	None	4.6, 6.1	760	2.2	Yes
18-1-161			5.2		214		None							None				
19-1-161			9.1		168		3.0							1.8-4.6 [3.7]	7.6, 9.1			
19A-1-161			10.7		151		4.6		151					1.8-4.6 [4.6]				

☐ Indicates arm length to be used unless otherwise noted on plans.

STATE OF CALIFORNIA
DEPARTMENT OF TRANSPORTATION

ELECTRICAL SYSTEMS (SIGNAL AND LIGHTING STANDARD CASE 1 ARM LOADING WIND VELOCITY=161 km/h ARM LENGTHS 4.6 m TO 9.1 m)

NO SCALE

ALL DIMENSIONS ARE IN MILLIMETERS UNLESS OTHERWISE SHOWN

RSP ES-7C DATED OCTOBER 5, 2007 SUPERSEDES
RSP ES-7C DATED JANUARY 24, 2005 AND STANDARD PLAN ES-7C
DATED JULY 1, 2004-PAGE 453 OF THE STANDARD PLANS BOOK DATED JULY 2004.

REVISED STANDARD PLAN RSP ES-7C

2004 REVISED Std PLAN RSP ES-7C

6-19-07

DIST	COUNTY	ROUTE	KILOMETER POST TOTAL PROJECT	SHEET NO.	TOTAL SHEETS
10	Sta	219,108	3.4/7.9, 44.3/44.9	509	522

REGISTERED CIVIL ENGINEER

October 5, 2007
PLANS APPROVAL DATE

Stanley P. Johnson No. C57793 Exp. 03-31-08 CIVIL — REGISTERED PROFESSIONAL ENGINEER — STATE OF CALIFORNIA

The State of California or its officers or agents shall not be responsible for the accuracy or completeness of electronic copies of this plan sheet.

To get to the Caltrans web site, go to: http://www.dot.ca.gov

Caltrans Metric

To accompany plans dated 6-28-10

2004 REVISED Std PLAN RSP ES-7D

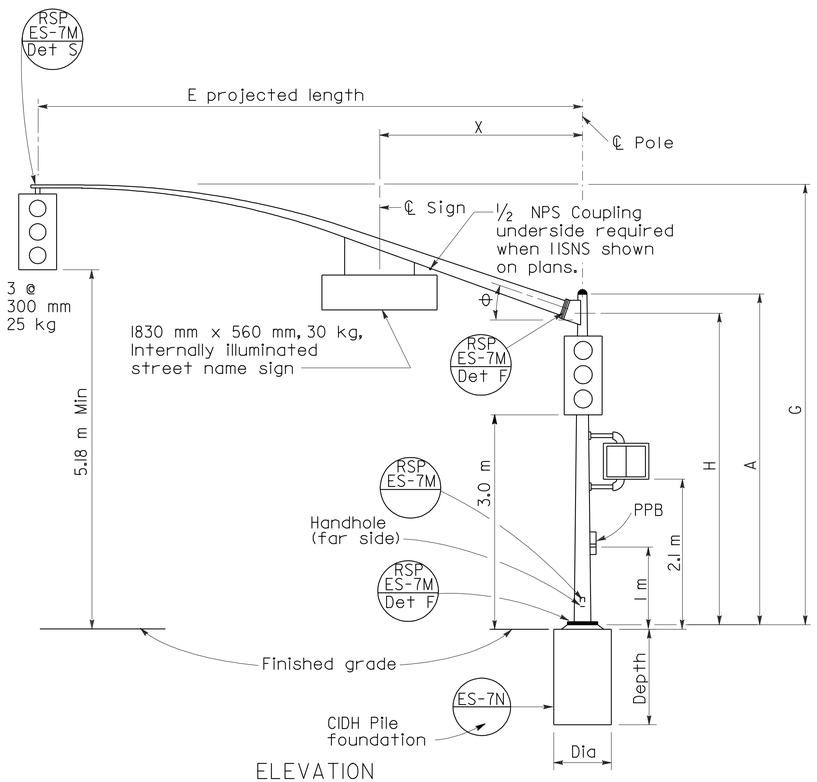

ELEVATION

TYPE 16-2-161, 18-2-161

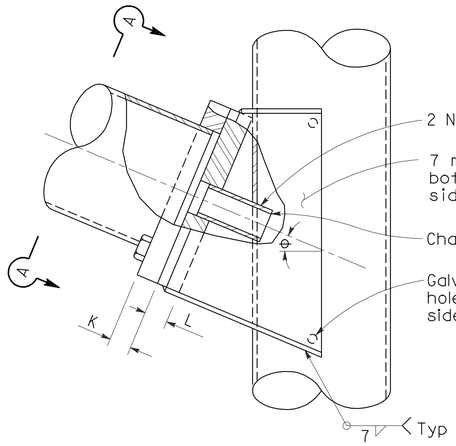

ELEVATION

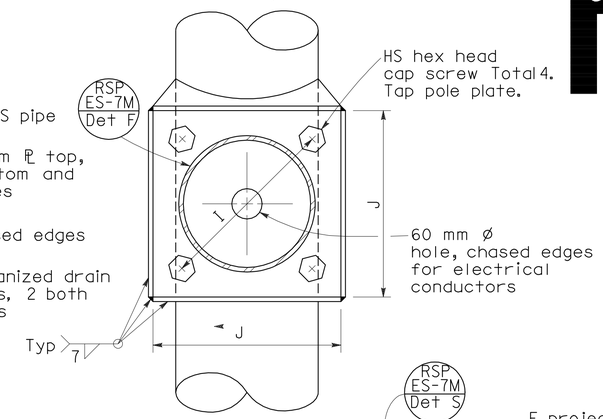

SECTION A-A

SIGNAL ARM CONNECTION DETAILS

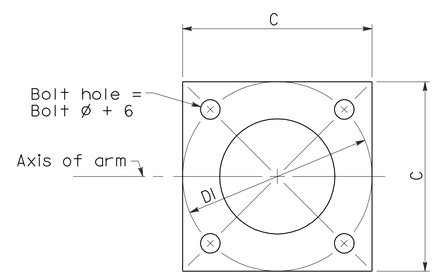

BASE PLATE

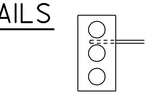

Required for Type 17-2-161 Type 17A-2-161

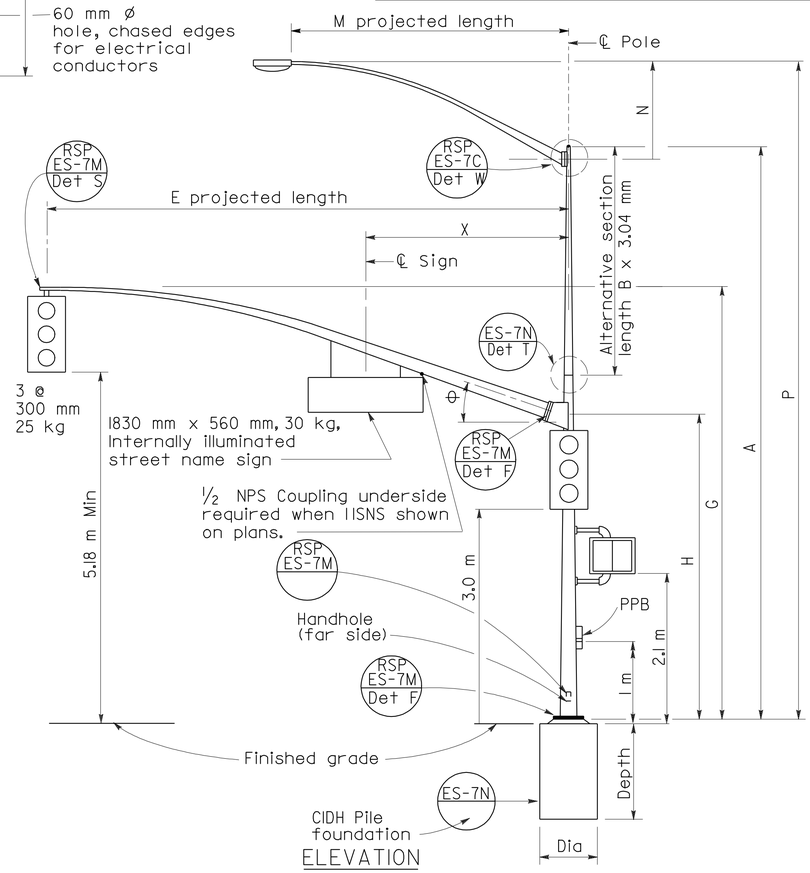

ELEVATION

TYPE 17-2-161, 17A-2-161, 19-2-161, 19A-2-161

SIGNAL ARM DATA											
E Projected Length	G Mounting Height	H	Min OD At Pole	Thickness	I Bolt Circle	HS Cap Screws	J Plate Size	K Arm ℙ Thickness	L Pole ℙ Thickness	⊖	X Max
m			mm								m
4.6	6.6 ±	5.3	168	4.55	305	32-7NC-76	305	32	38	23°	3.2
6.1	6.6 ±		168								
7.6	6.9 ±	4.9	186								
9.1	7.0 ±		203								

LUMINAIRE ARM DATA					
M Projected Length	N Rise	Min OD at Pole	Thickness	P Mounting Height 9.1 Pole	P Mounting Height 10.7 Pole
m	mm			m	
1.8	610 ±	83	3.04	9.5 ±	11.1 ±
2.4	760 ±	89		9.7 ±	11.3 ±
3.1	990 ±	98		9.9 ±	11.5 ±
3.7	1290 ±			10.2 ±	11.8 ±
4.6	1450 ±	108		10.4 ±	12.0 ±

HIGH STRENGTH CAP SCREWS

16 - 11NC - 45

Length (mm)
Threads (per inch)
Size (mm)

Pole Type	Load Case	Wind Velocity km/h	POLE DATA: A Height	Min OD Base	Min OD Top	Thickness	Alternative Section B Length	Alternative Section Bottom	Alternative Section Top	BASE PLATE DATA: C	DI Bolt Circle	Thickness	Anchor Bolts Size	Luminaire Arm	Signal Arm	CIDH PILE FOUNDATION: Diameter	Depth	Reinforced
			m	mm			m	mm		mm				m		mm	m	
16-2-161	2	161	5.6	273	210	4.55	None	203	168	457	445	38	51 ø x 1067 x 152	None	4.6, 6.1	760	2.2	Yes
17-2-161			9.1		168		3.0							1.8-4.6 [3.7]				
17A-2-161			10.7		151		4.6		151					1.8-4.6 [4.6]				
18-2-161			5.2		214		None							None	7.6, 9.1			
19-2-161			9.1		168	6.07	3.0	203	168					1.8-4.6 [3.7]				
19A-2-161			10.7		151		4.6		151					1.8-4.6 [4.6]				

☐ Indicates arm length to be used unless otherwise noted on plans.

STATE OF CALIFORNIA
DEPARTMENT OF TRANSPORTATION

ELECTRICAL SYSTEMS (SIGNAL AND LIGHTING STANDARD CASE 2 ARM LOADING WIND VELOCITY=161 km/h ARM LENGTHS 4.6 m TO 9.1 m)

NO SCALE

ALL DIMENSIONS ARE IN MILLIMETERS UNLESS OTHERWISE SHOWN

RSP ES-7D DATED OCTOBER 5, 2007 SUPERSEDES RSP ES-7D DATED JANUARY 24, 2005 AND STANDARD PLAN ES-7D DATED JULY 1, 2004-PAGE 454 OF THE STANDARD PLANS BOOK DATED JULY 2004.

REVISED STANDARD PLAN RSP ES-7D

6-19-07

DIST	COUNTY	ROUTE	KILOMETER POST TOTAL PROJECT	SHEET NO.	TOTAL SHEETS
10	Sta	219,108	3.4/7.9, 44.3/44.9	510	522

REGISTERED CIVIL ENGINEER

October 5, 2007
PLANS APPROVAL DATE

REGISTERED PROFESSIONAL ENGINEER Stanley P. Johnson No. C57793 Exp. 03-31-08 CIVIL STATE OF CALIFORNIA

The State of California or its officers or agents shall not be responsible for the accuracy or completeness of electronic copies of this plan sheet.

To get to the Caltrans web site, go to: http://www.dot.ca.gov

Caltrans Metric

To accompany plans dated 6-28-10

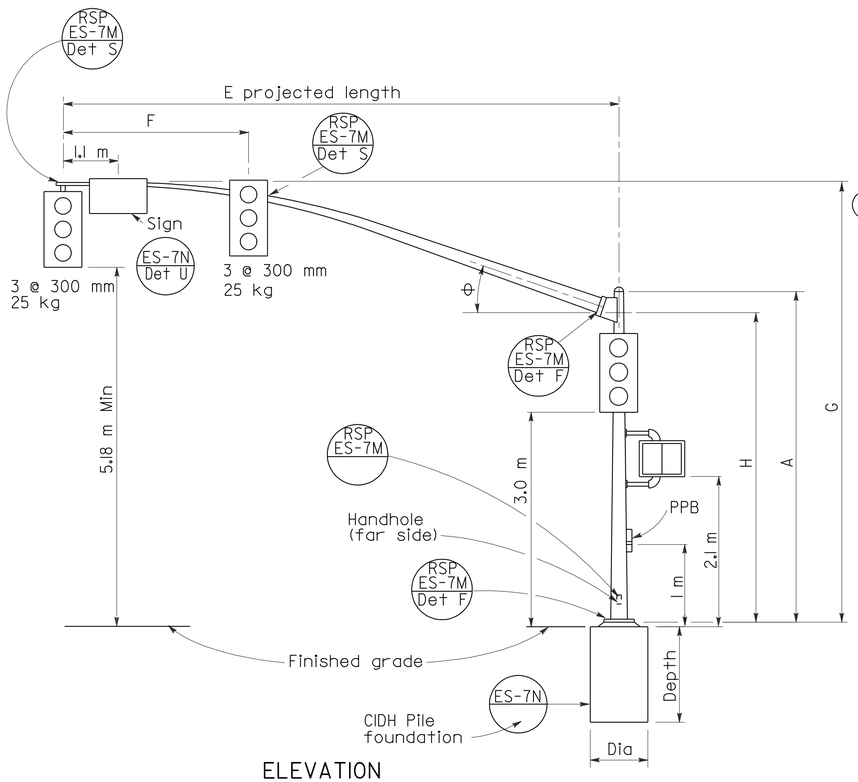

ELEVATION

TYPE 16-3-161, 18-3-161, 23-3-161, 27-3-161

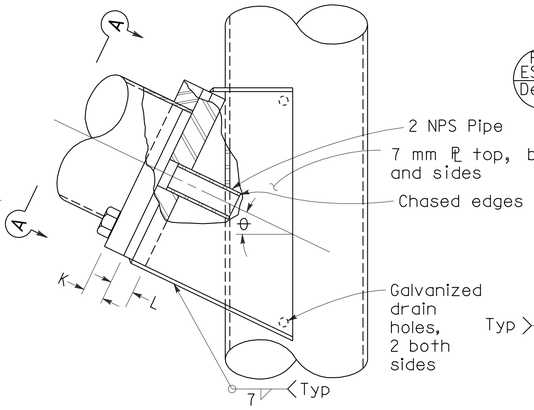

ELEVATION

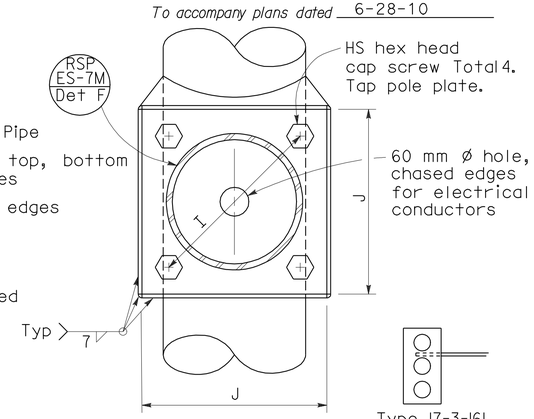

SECTION A-A

Type 17-3-161

SIGNAL ARM CONNECTION DETAILS

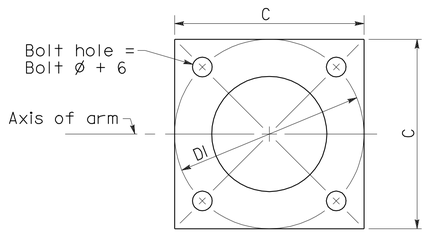

BASE PLATE

HIGH STRENGTH CAP SCREWS

16 - 11NC - 45

- Length (mm)
- Threads (per inch)
- Size (mm)

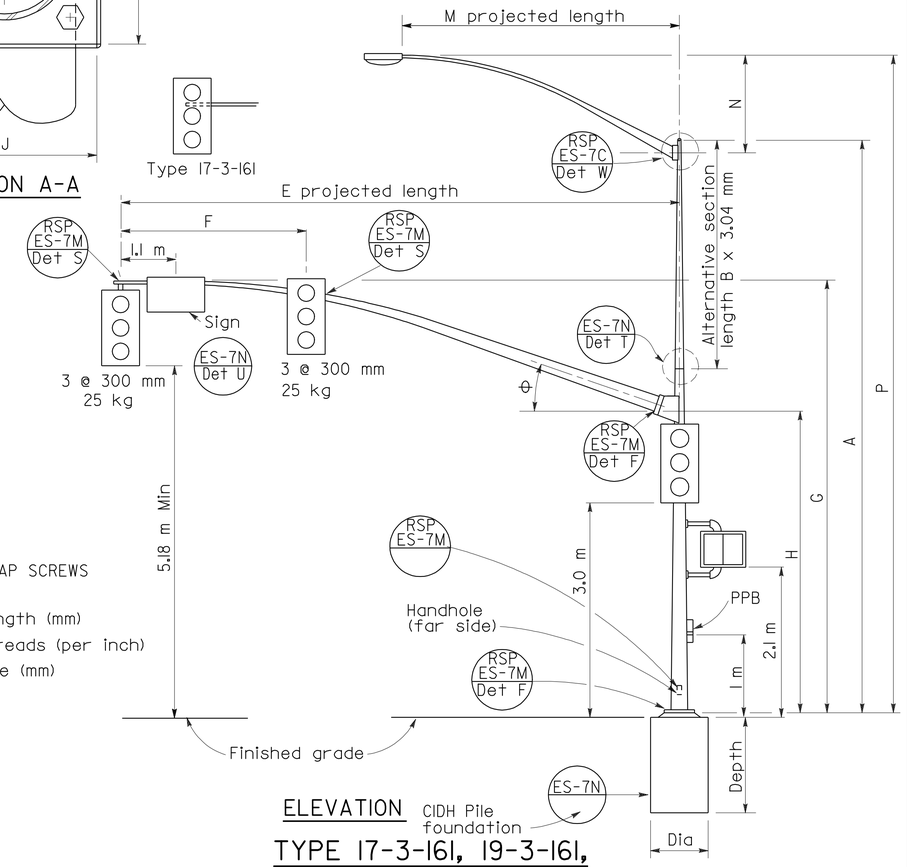

ELEVATION

TYPE 17-3-161, 19-3-161, 19A-3-161, 24-3-161, 24A-3-161, 26-3-161, 26A-3-161

SIGNAL ARM DATA

E Projected Length	F Min Spacing	G Mounting Height	H	Min OD At Pole	Thickness	I Bolt Circle	HS Cap Screws	J Plate Size	K Arm PL Thickness	L Pole PL Thickness	θ
m				mm							
4.6	2.4	6.6 ±	5.3	168	4.55	305	32-7NC-76	305	32	38	23°
6.1		6.6 ±		178							
7.6	3.7	6.9 ±	4.9	186	6.07						
9.1		7.0 ±		203							
10.7	4.3			222		330		330	38	45	21°
12.2	4.6			238							15°
13.7		7.2 ±		256							

LUMINAIRE ARM DATA

M Projected Length	N Rise	Min OD at Pole	Thickness	P Mounting Height 9.1 Pole	P Mounting Height 10.7 Pole
m	mm			m	
1.8	610 ±	83	3.04	9.5 ±	11.1 ±
2.4	760 ±	89		9.7 ±	11.3 ±
3.1	990 ±	98		9.9 ±	11.5 ±
3.7	1290 ±			10.2 ±	11.8 ±
4.6	1450 ±	108		10.4 ±	12.0 ±

Pole Type	Load Case	Wind Velocity km/h	POLE DATA: A Height	Min OD Base	Min OD Top	Thickness	Alternative Section B Length	Alternative Section Bottom	Alternative Section Top	BASE PLATE DATA: C	DI Bolt Circle	Thickness	Anchor Bolts Size	Luminaire Arm	Signal Arm	CIDH PILE FOUNDATION: Diameter	Depth	Reinforced
			m	mm			m	mm		mm				m		mm	m	
16-3-161	3	161	5.6	273	210	4.55	None			457	445	38	51 ø x 1067 x 152	None	4.6, 6.1	914	2.7	Yes
17-3-161			9.1		168		3.1	203	186					1.8-4.6 [3.7]				
18-3-161			5.2		214	6.07	None							None	7.6, [9.1]			
19-3-161			9.1	305	200		3.1	235	200					1.8-4.6 [3.7]				
19A-3-161			10.7		183		4.6		183					1.8-4.6 [4.6]				
23-3-161			5.2		245		None							None	10.7			
24-3-161			9.1		200		3.1	235	200					1.8-4.6 [3.7]				
24A-3-161			10.7		183		4.6		183					1.8-4.6 [4.6]				
26-3-161			9.1	308	203	7.94	3.1	238	203					1.8-4.6 [3.7]	12.2, [13.7]			
26A-3-161			10.7		186		4.6		186					1.8-4.6 [4.6]				
27-3-161			5.2		248		None							None				

[ ] Indicates arm length to be used unless otherwise noted on plans.

STATE OF CALIFORNIA
DEPARTMENT OF TRANSPORTATION

ELECTRICAL SYSTEMS (SIGNAL AND LIGHTING STANDARD CASE 3 ARM LOADING WIND VELOCITY=161 km/h ARM LENGTHS 4.6 m TO 13.7 m)

NO SCALE

ALL DIMENSIONS ARE IN MILLIMETERS UNLESS OTHERWISE SHOWN

RSP ES-7E DATED OCTOBER 5, 2007 SUPERSEDES RSP ES-7E DATED JANUARY 24, 2005 AND STANDARD PLAN ES-7E DATED JULY 1, 2004-PAGE 455 OF THE STANDARD PLANS BOOK DATED JULY 2004.

REVISED STANDARD PLAN RSP ES-7E

2004 REVISED Std PLAN RSP ES-7E

6-19-07

DIST	COUNTY	ROUTE	KILOMETER POST TOTAL PROJECT	SHEET NO.	TOTAL SHEETS
10	Sta	219,108	3.4/7.9, 44.3/44.9	511	522

REGISTERED CIVIL ENGINEER

October 5, 2007
PLANS APPROVAL DATE

Stanley P. Johnson
No. C57793
Exp. 3-31-08
CIVIL
REGISTERED PROFESSIONAL ENGINEER
STATE OF CALIFORNIA

The State of California or its officers or agents shall not be responsible for the accuracy or completeness of electronic copies of this plan sheet.

To get to the Caltrans web site, go to: http://www.dot.ca.gov

To accompany plans dated 6-28-10

Caltrans Metric

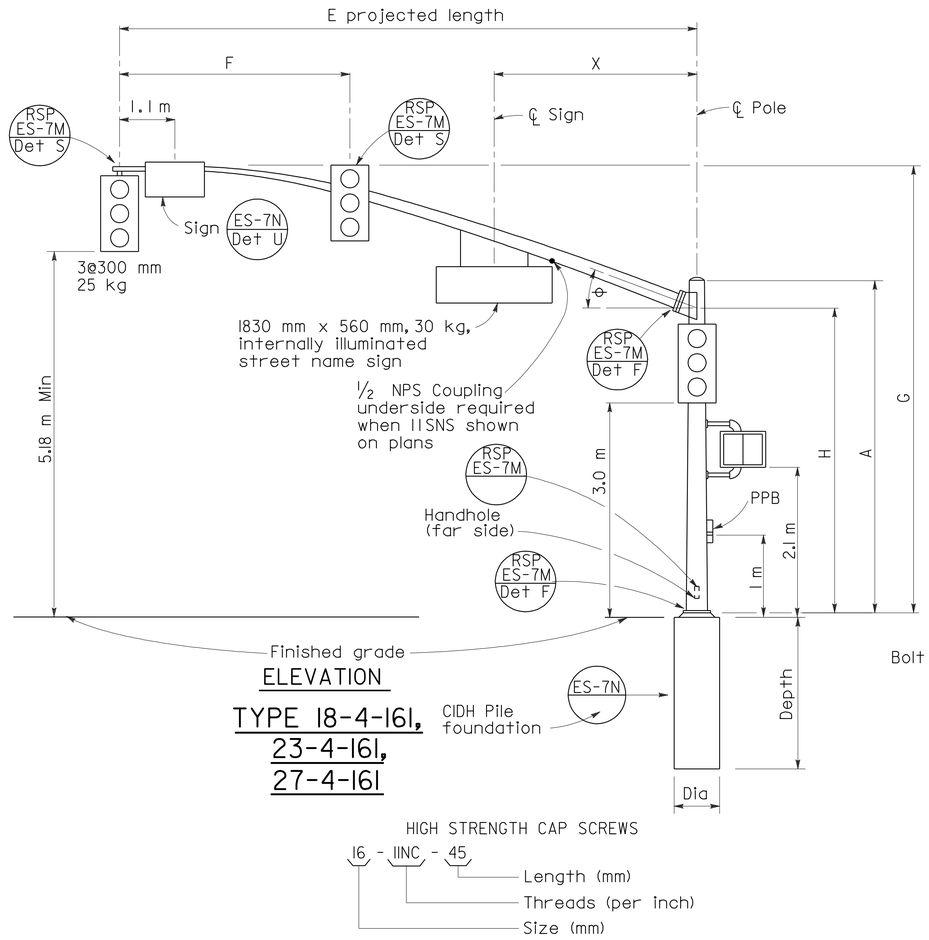

ELEVATION

TYPE 18-4-161, 23-4-161, 27-4-161

HIGH STRENGTH CAP SCREWS

16 - 11NC - 45
Length (mm)
Threads (per inch)
Size (mm)

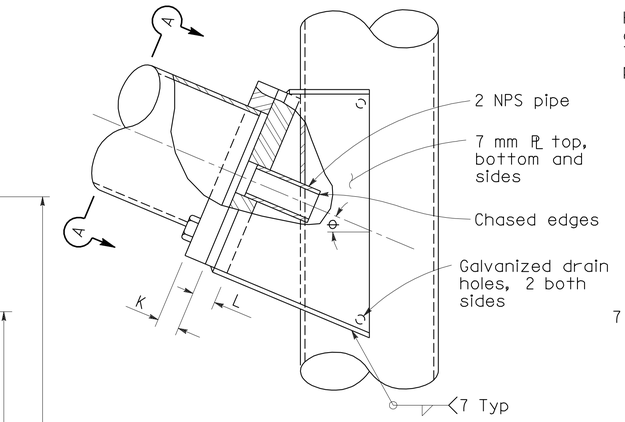

ELEVATION

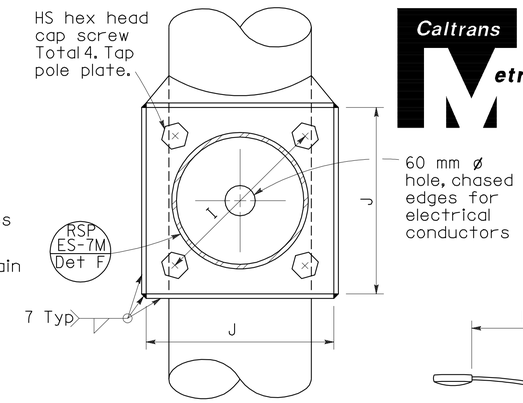

SECTION A-A

SIGNAL ARM CONNECTION DETAILS

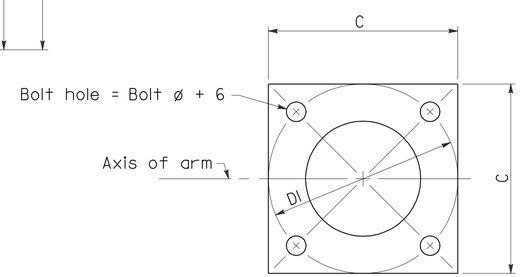

BASE PLATE

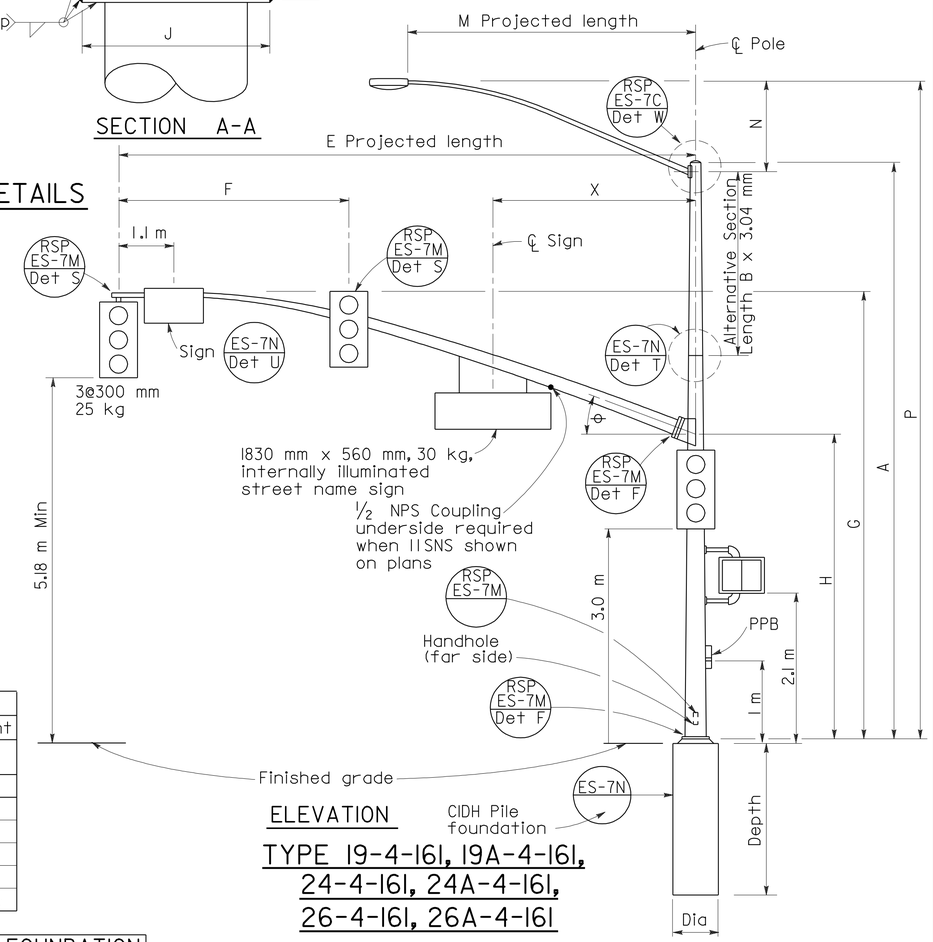

ELEVATION

TYPE 19-4-161, 19A-4-161, 24-4-161, 24A-4-161, 26-4-161, 26A-4-161

SIGNAL ARM DATA

E Projected Length	F Min Spacing	G Mounting Height	H	Min OD At Pole	Thickness	I Bolt Circle	HS Cap Screws	J Plate Size	K Arm PL Thickness	L Pole PL Thickness	⊖	X Max
m				mm								m
7.6	3.1	6.9 ±	4.9	186	6.07	305	32-7NC-76	305	32	38	23°	3.2
9.1	3.7	7.0 ±		203								
10.7	4.3			221		343		343	38	45	21°	
12.2	4.6			238							15°	4.0
13.7		7.2 ±		260								

LUMINAIRE ARM DATA

M Projected Length	N Rise	Min OD at Pole	Thickness	P Mounting Height 9.1 Pole	P Mounting Height 10.7 Pole
m	mm			m	
1.8	610 ±	83	3.04	9.5 ±	11.1 ±
2.4	760 ±	89		9.7 ±	11.3 ±
3.1	990 ±	98		9.9 ±	11.5 ±
3.7	1290 ±			10.2 ±	11.8 ±
4.6	1450 ±	108		10.4 ±	12.0 ±

Pole Type	Load Case	Wind Velocity km/h	POLE DATA: A Height	Min OD Base	Min OD Top	Thickness	Alternative Section B Length	Alternative Section Bottom	Alternative Section Top	BASE PLATE DATA: C	DI Bolt Circle	Thickness	Anchor Bolts Size	Luminaire Arm	Signal Arm	CIDH PILE FOUNDATION: Diameter	Depth	Reinforced
			m	mm			m	mm		mm				m		mm	m	
18-4-161	4	161	5.2	305	229	6.07	None	238	203	457	457	38	51ø x 1067 x 152	None	7.6, 9.1	914	2.7	Yes
19-4-161			9.1		203		3.1							1.8-4.6 3.7				
19A-4-161			10.7		186		4.6		186					1.8-4.6 4.6				
23-4-161			5.2		229		None							None	10.7			
24-4-161			9.1		203		3.1	238	203					1.8-4.6 3.7				
24A-4-161			10.7		186		4.6		186					1.8-4.6 4.6				
26-4-161			9.1	318	203	7.94	3.1	248	213					1.8-4.6 3.7	12.2, 13.7			
26A-4-161			10.7		186		4.6		196					1.8-4.6 4.6				
27-4-161			5.2		248		None							None				

☐ Indicates arm length to be used unless otherwise noted on plans.

STATE OF CALIFORNIA
DEPARTMENT OF TRANSPORTATION

ELECTRICAL SYSTEMS (SIGNAL AND LIGHTING STANDARD CASE 4 ARM LOADING WIND VELOCITY=161 km/h ARM LENGTHS 7.6 m TO 13.7 m)

NO SCALE

ALL DIMENSIONS ARE IN MILLIMETERS UNLESS OTHERWISE SHOWN

RSP ES-7F DATED OCTOBER 5, 2007 SUPERSEDES RSP ES-7F DATED JANUARY 24, 2005 AND STANDARD PLAN ES-7F DATED JULY 1, 2004-PAGE 456 OF THE STANDARD PLANS BOOK DATED JULY 2004.

REVISED STANDARD PLAN RSP ES-7F

2004 REVISED Std PLAN RSP ES-7F

6-19-07

DIST	COUNTY	ROUTE	KILOMETER POST TOTAL PROJECT	SHEET NO.	TOTAL SHEETS
10	Sta	219,108	3.4/7.9, 44.3/44.9	512	522

REGISTERED CIVIL ENGINEER

October 5, 2007
PLANS APPROVAL DATE

Registered Professional Engineer — Stanley P. Johnson, No. C57793, Exp. 3-31-08, Civil, State of California

The State of California or its officers or agents shall not be responsible for the accuracy or completeness of electronic copies of this plan sheet.

To get to the Caltrans web site, go to: http://www.dot.ca.gov

To accompany plans dated 6-28-10

Caltrans Metric

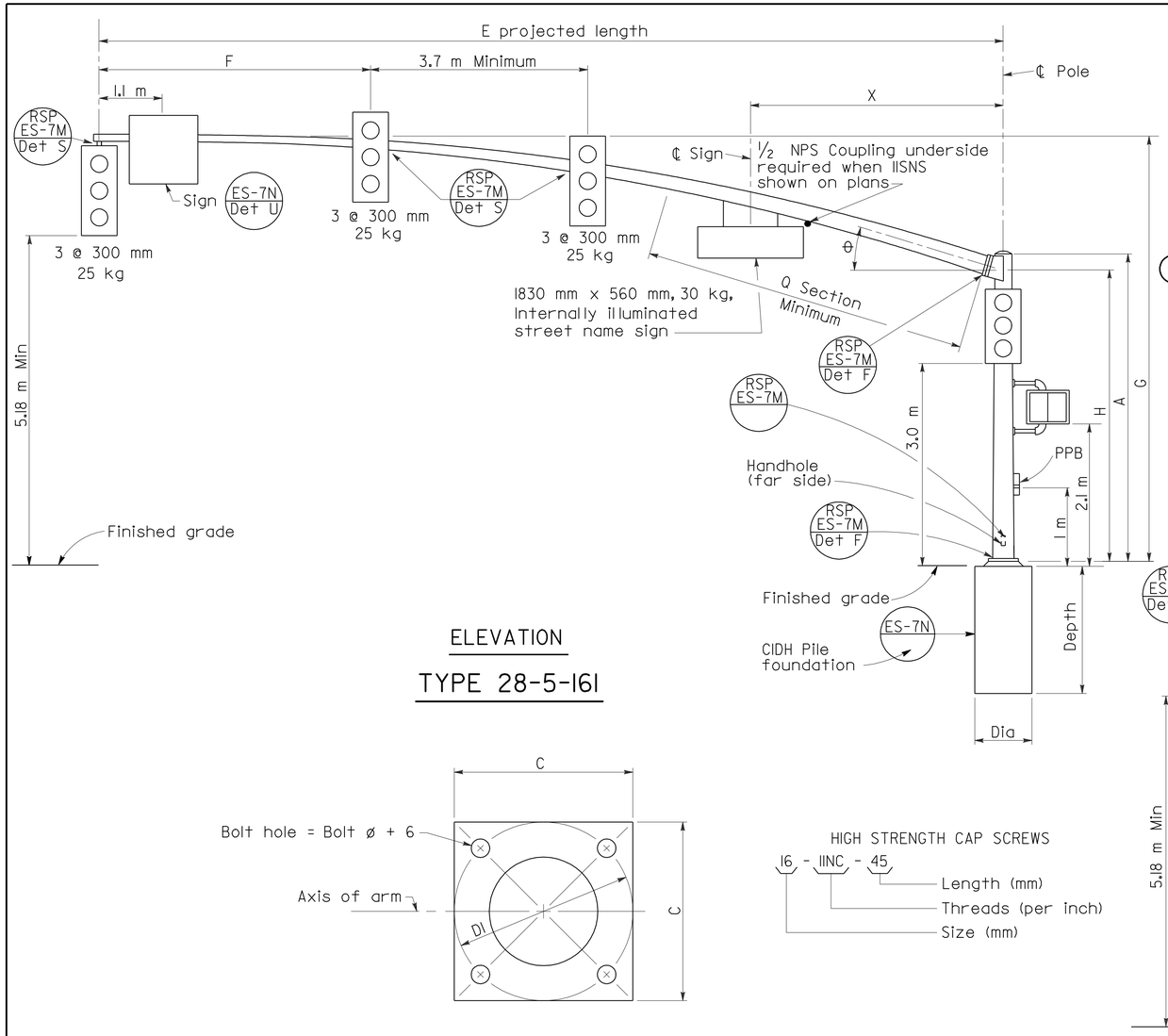

ELEVATION

TYPE 28-5-161

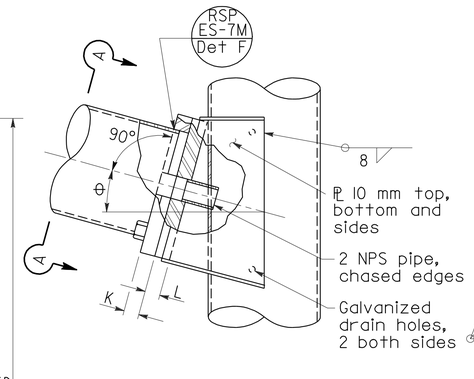

ELEVATION

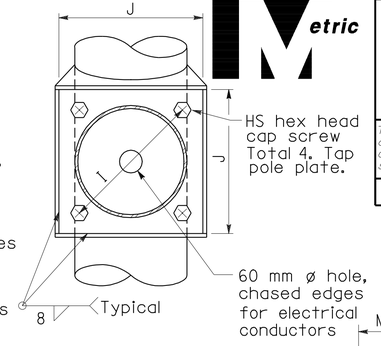

SECTION A-A

SIGNAL ARM CONNECTION DETAILS

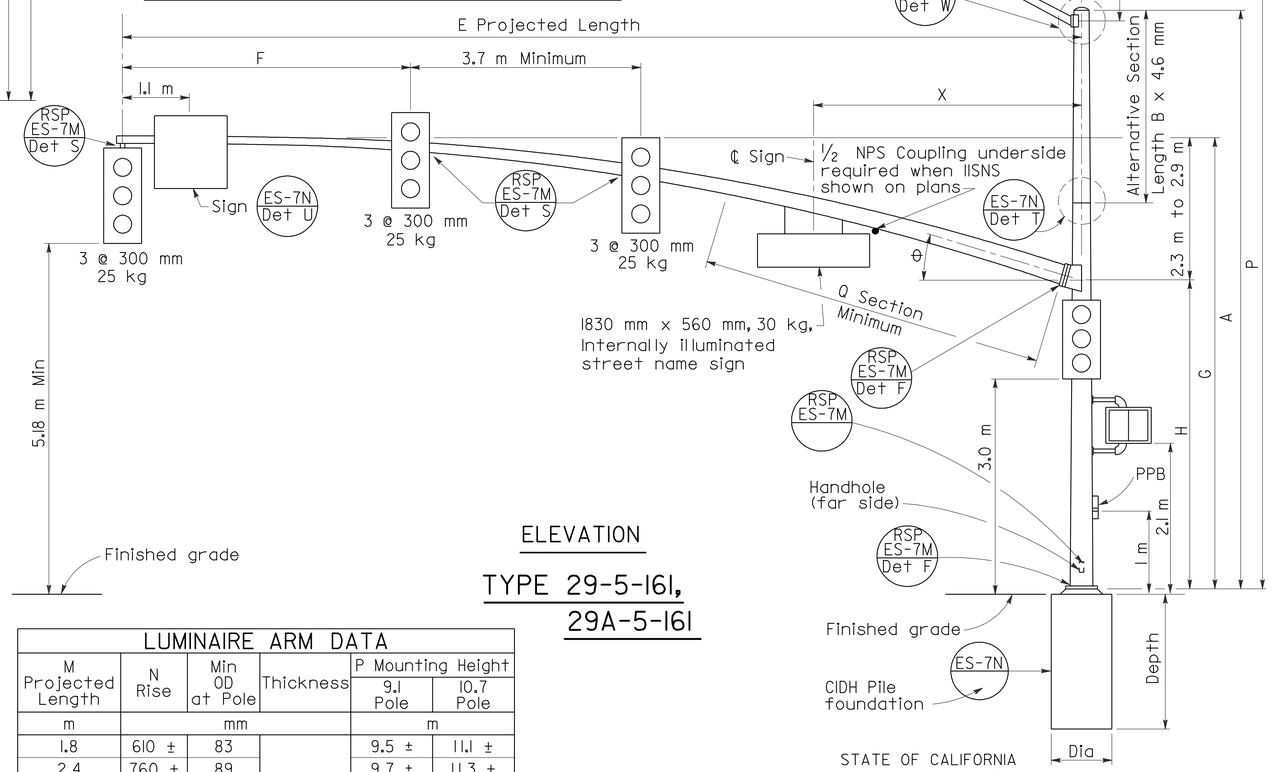

ELEVATION

TYPE 29-5-161, 29A-5-161

BASE PLATE

HIGH STRENGTH CAP SCREWS

16 - IINC - 45
- Length (mm)
- Threads (per inch)
- Size (mm)

SIGNAL ARM DATA														
E Projected Length	F Min Spacing	G Mounting Height	H	Min OD At Pole	Thickness	I Bolt Circle	HS Cap Screws	J Plate Size	K Arm PL Thickness	L Pole PL Thickness	θ	Q SECTION Length	Q SECTION Thickness	X Max
m				mm								m	mm	m
15.2	4.6	7.2 to 7.8	4.9	291	4.6	406	38-6NC-83	406	45	45	15°	5.5	6.1	4.3
16.8				311								7.0		

LUMINAIRE ARM DATA					
M Projected Length	N Rise	Min OD at Pole	Thickness	P Mounting Height 9.1 Pole	P Mounting Height 10.7 Pole
m	mm			m	
1.8	610 ±	83	3.04	9.5 ±	11.1 ±
2.4	760 ±	89		9.7 ±	11.3 ±
3.1	990 ±	98		9.9 ±	11.5 ±
3.7	1290 ±			10.2 ±	11.8 ±
4.6	1450 ±	108		10.4 ±	12.0 ±

Pole Type	Load Case	Wind Velocity km/h	POLE DATA A Height	Min OD Base	Min OD Top	Thickness	Alternative Section B Length	Alternative Section Bottom	Alternative Section Top	BASE PLATE DATA C	DI Bolt Circle	Thickness	Anchor Bolts Size	Luminaire Arm	Signal Arm	CIDH PILE FOUNDATION Diameter	Depth	Reinforced
			m	mm			m	mm		mm				m		mm	m	
28-5-161	5	161	5.2	356	297	7.94	None			533	533	45	51ø x 1067 x 152	None	15.2, 16.8	914	2.8	Yes
29-5-161			9.1		251		3.1	286	251					1.8 - 4.6 [4.6]				
29A-5-161			10.7		233		4.6		233	584	584							

☐ Indicates arm length to be used unless otherwise noted on plans.

STATE OF CALIFORNIA
DEPARTMENT OF TRANSPORTATION

ELECTRICAL SYSTEMS (SIGNAL AND LIGHTING STANDARD CASE 5 ARM LOADING WIND VELOCITY=161 km/h ARM LENGTHS 15.2 m TO 16.8 m)

NO SCALE

ALL DIMENSIONS ARE IN MILLIMETERS UNLESS OTHERWISE SHOWN

RSP ES-7G DATED OCTOBER 5, 2007 SUPERSEDES RSP ES-7G DATED JANUARY 24, 2005 AND STANDARD PLAN ES-7G DATED JULY 1, 2004-PAGE 457 OF THE STANDARD PLANS BOOK DATED JULY 2004.

REVISED STANDARD PLAN RSP ES-7G

2004 REVISED Std PLAN RSP ES-7G

6-19-07

To accompany plans dated 6-28-10

Caltrans Metric

DIST	COUNTY	ROUTE	KILOMETER POST TOTAL PROJECT	SHEET NO.	TOTAL SHEETS
10	Sta	219,108	3.4/7.9, 44.3/44.9	513	522

REGISTERED CIVIL ENGINEER

October 5, 2007
PLANS APPROVAL DATE

REGISTERED PROFESSIONAL ENGINEER Stanley P. Johnson No. C57793 Exp. 3-31-08 CIVIL STATE OF CALIFORNIA

The State of California or its officers or agents shall not be responsible for the accuracy or completeness of electronic copies of this plan sheet.

To get to the Caltrans web site, go to: http://www.dot.ca.gov

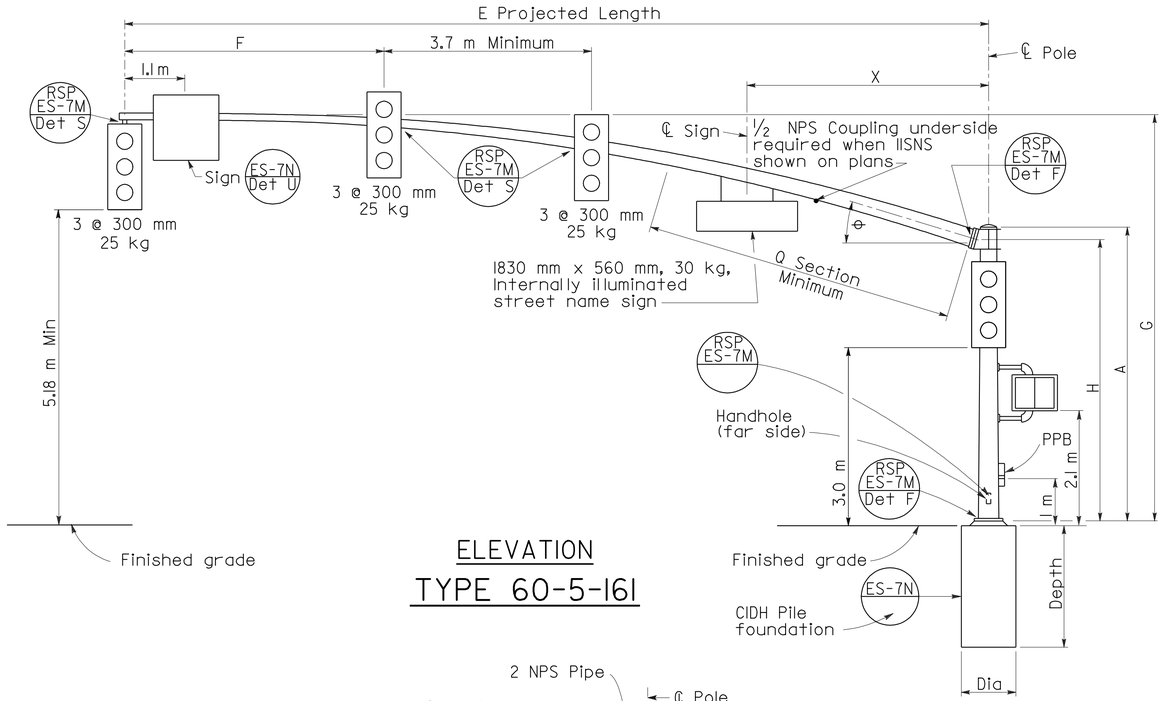

ELEVATION

TYPE 60-5-161

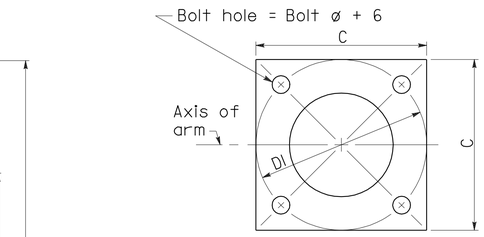

BASE PLATE

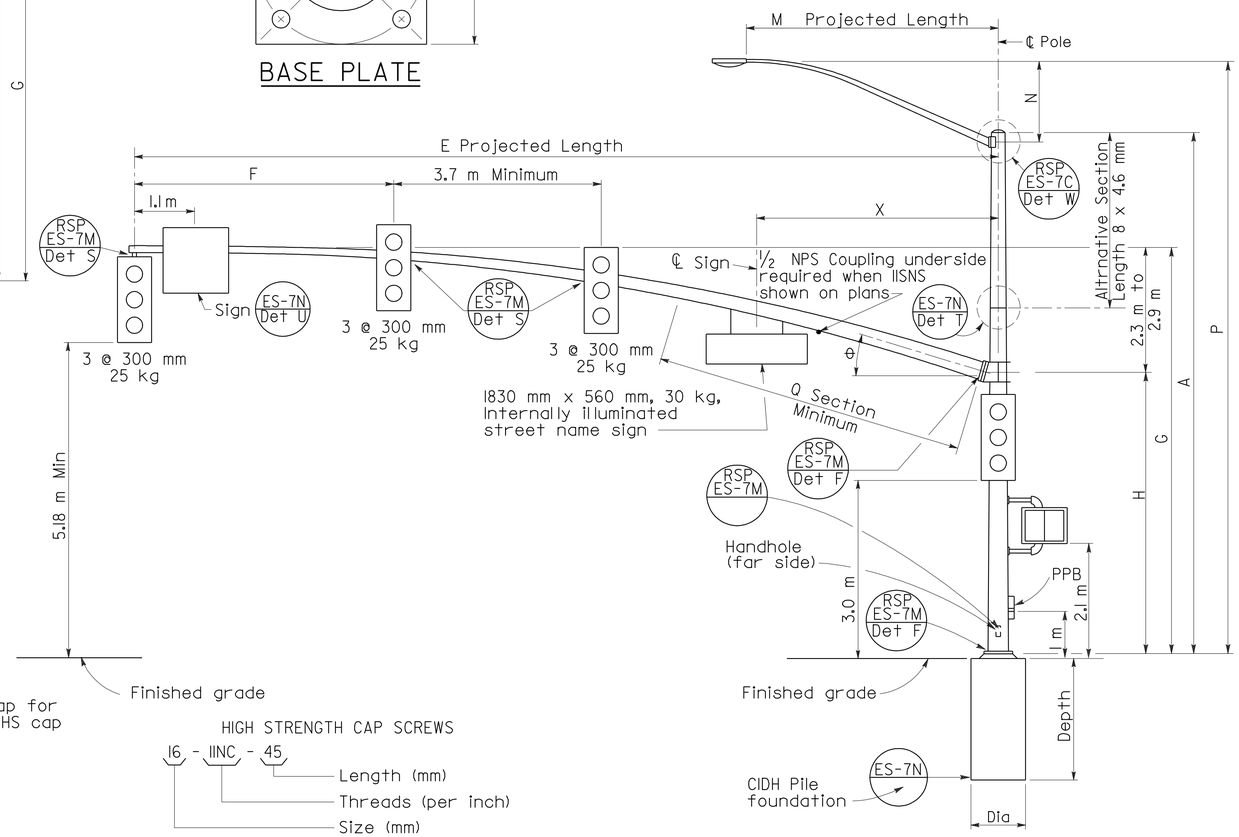

ELEVATION

TYPE 61-5-161, 61A-5-161

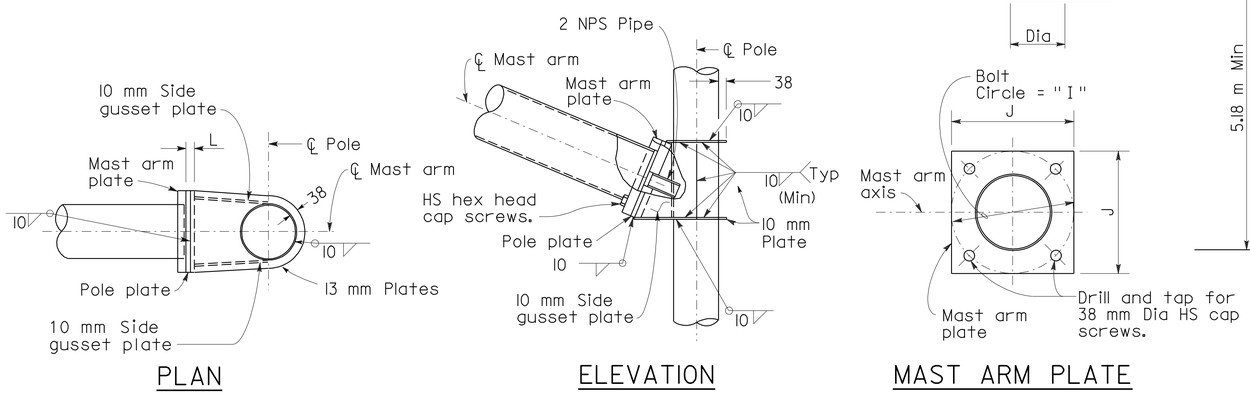

PLAN

ELEVATION

MAST ARM PLATE

HIGH STRENGTH CAP SCREWS

16 - 11NC - 45

- Length (mm)
- Threads (per inch)
- Size (mm)

SIGNAL ARM CONNECTION DETAIL

NOTE

The radial separation between the face of the pole and the adjacent insides of the top and bottom gusset plates shall not exceed 5 mm. Fillet weld size to be increased by amount of gap.

SIGNAL ARM DATA														
E Projected Length	F Min Spacing	G Mounting Height	H	Min OD At Pole	Thickness	I Bolt Circle	HS Cap Screws	J Plate Size	K Arm ℙ Thickness	L Pole ℙ Thickness	θ	Q SECTION Length	Q SECTION Thickness	X Max
m				mm								m	mm	m
18.2	4.6	7.2 to 7.8	4.9	343	4.6	508	38-6NC-102	508	51	51	15°	7.3	6.1	4.3
19.8				343	6.1							8.8	7.9	

LUMINAIRE ARM DATA					
M Projected Length	N Rise	Min OD at Pole	Thickness	P Mounting Height 9.1 Pole	P Mounting Height 10.7 Pole
m	mm			m	
1.8	610 ±	83	3.04	9.5 ±	11.1 ±
2.4	760 ±	89		9.7 ±	11.3 ±
3.1	990 ±	98		9.9 ±	11.5 ±
3.7	1290 ±			10.2 ±	11.8 ±
4.6	1450 ±	108		10.4 ±	12.0 ±

Pole Type	Load Case	Wind Velocity km/h	POLE DATA A Height	Min OD Base	Min OD Top	Thickness	BASE PLATE DATA C	DI Bolt Circle	Thickness	Anchor Bolts Size	Luminaire Arm	Signal Arm	CIDH PILE FOUNDATION Diameter	Depth	Reinforced
			m	mm			mm				m		mm	m	
60-5-161	5	161	5.2	406	347	7.94	584	584	51	57 ø x 1524 x 152	None	18.2, 19.8	914	4.9	Yes
61-5-161			9.1		301						1.8-4.6 [4.6]				
61A-5-161			10.7		282										

☐ Indicates arm length to be used unless otherwise noted on plans.

ELECTRICAL SYSTEMS (SIGNAL AND LIGHTING STANDARD CASE 5 ARM LOADING WIND VELOCITY=161 km/h ARM LENGTHS 18.2 m TO 19.8 m)

NO SCALE

ALL DIMENSIONS ARE IN MILLIMETERS UNLESS OTHERWISE SHOWN

RSP ES-7H DATED OCTOBER 5, 2007 SUPERSEDES RSP ES-7H DATED JANUARY 24, 2005 AND STANDARD PLAN ES-7H DATED JULY 1, 2004-PAGE 458 OF THE STANDARD PLANS BOOK DATED JULY 2004.

REVISED STANDARD PLAN RSP ES-7H

2004 REVISED Std PLAN RSP ES-7H

10-1-07

To accompany plans dated 6-28-10

DIST	COUNTY	ROUTE	KILOMETER POST TOTAL PROJECT	SHEET NO.	TOTAL SHEETS
10	Sta	219,108	3.4/7.9, 44.3/44.9	514	522

REGISTERED CIVIL ENGINEER

October 5, 2007
PLANS APPROVAL DATE

REGISTERED PROFESSIONAL ENGINEER Stanley P. Johnson No. C57793 Exp. 03-31-08 CIVIL STATE OF CALIFORNIA

The State of California or its officers or agents shall not be responsible for the accuracy or completeness of electronic copies of this plan sheet.

To get to the Caltrans web site, go to: http://www.dot.ca.gov

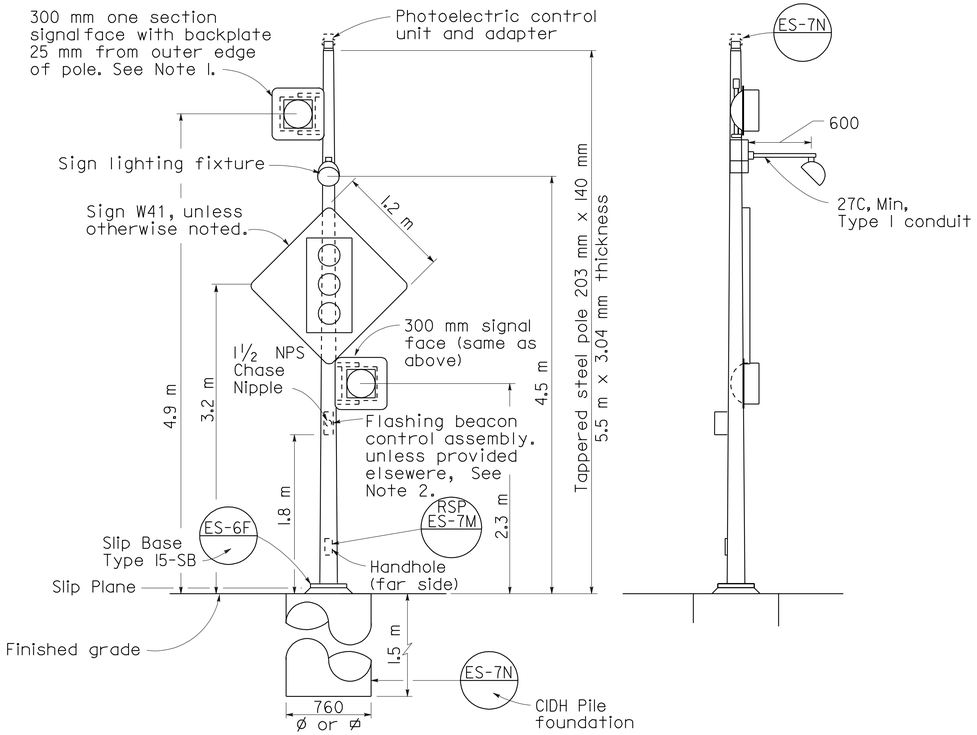

FRONT VIEW

SIDE VIEW

TYPE 15-FBS

ADVANCE FLASHING BEACON WITH SLIP BASE INSTALLATION

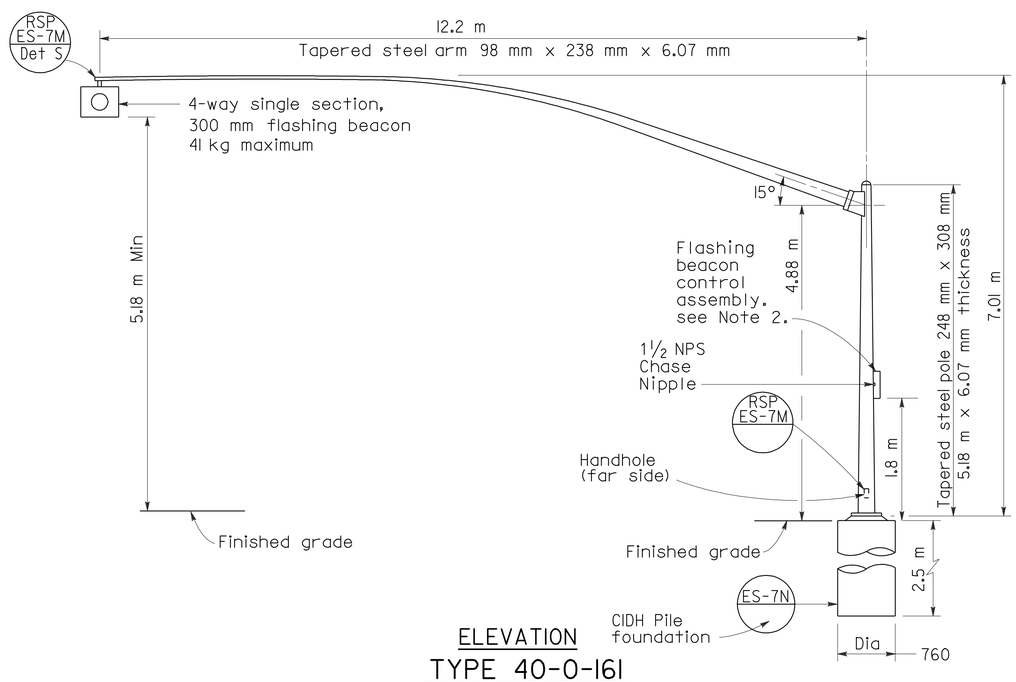

ELEVATION

TYPE 40-0-161

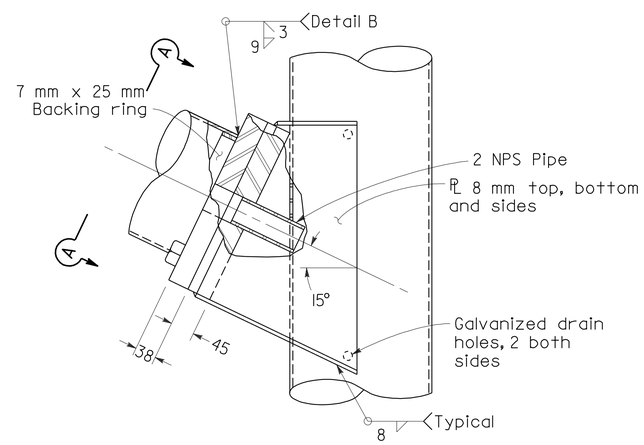

ELEVATION

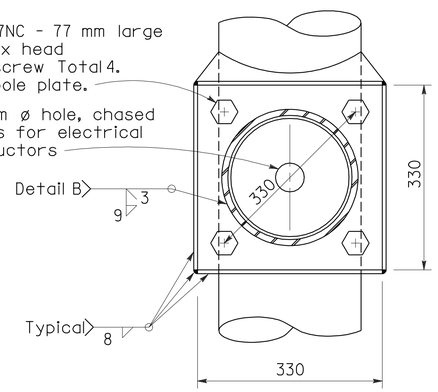

SECTION A-A

SIGNAL ARM CONNECTION DETAILS

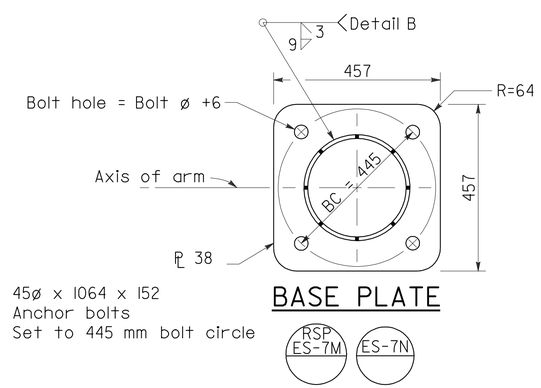

BASE PLATE

HIGH STRENGTH CAP SCREWS

16 - 11NC - 45
- Length (mm)
- Threads (per inch)
- Size (mm)

NOTES:

1. See Standard Plans ES-4D and ES-4E for attachment fitting details.
2. For wiring diagram, see Standard Plan ES-3B.

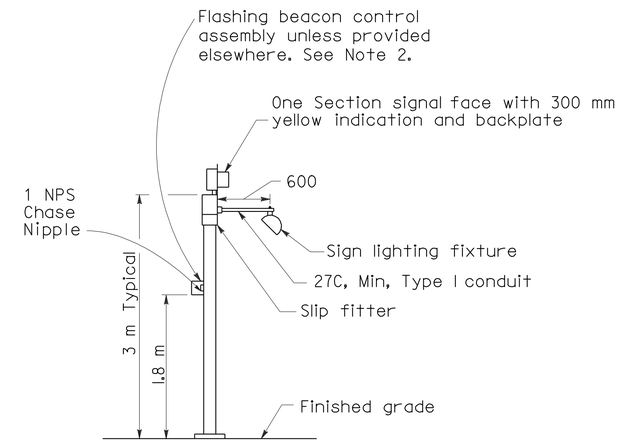

TYPE 1-A, 1-B, 1-C AND 1-D

ADVANCE FLASHING BEACON INSTALLATION

(See Project Plans for type of standard to be installed)

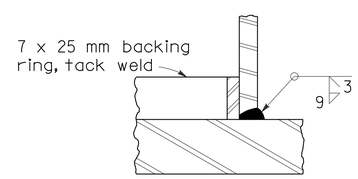

DETAIL B

STATE OF CALIFORNIA
DEPARTMENT OF TRANSPORTATION

ELECTRICAL SYSTEMS (SIGNAL AND LIGHTING STANDARD ADVANCE FLASHING BEACONS)

NO SCALE

ALL DIMENSIONS ARE IN MILLIMETERS UNLESS OTHERWISE SHOWN

RSP ES-7J DATED OCTOBER 5, 2007 SUPERSEDES STANDARD PLAN ES-7J DATED JULY 1, 2004-PAGE 460 OF THE STANDARD PLANS BOOK DATED JULY 2004.

REVISED STANDARD PLAN RSP ES-7J

2004 REVISED Std PLAN RSP ES-7J

10-1-07

DIST	COUNTY	ROUTE	KILOMETER POST TOTAL PROJECT	SHEET NO.	TOTAL SHEETS
10	Sta	219,108	3.4/7.9, 44.3/44.9	515	522

REGISTERED CIVIL ENGINEER

April 28, 2005
PLANS APPROVAL DATE

REGISTERED PROFESSIONAL ENGINEER Tillat Sattar No. C42892 Exp. 03-31-2006 CIVIL STATE OF CALIFORNIA

The State of California or its officers or agents shall not be responsible for the accuracy or completeness of electronic copies of this plan sheet.

To get to the Caltrans web site, go to: http://www.dot.ca.gov

To accompany plans dated 6-28-10

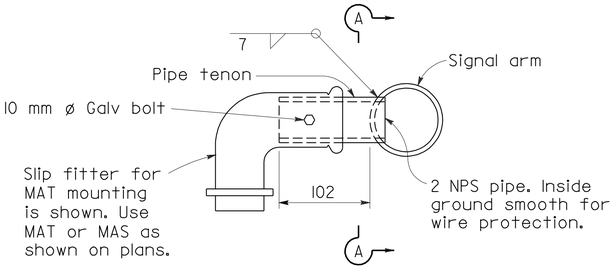

ES-4D

DETAIL S-SIDE TENON

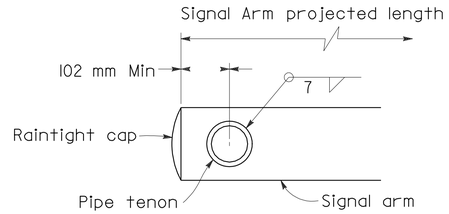

SECTION A-A

PIPE TENONS

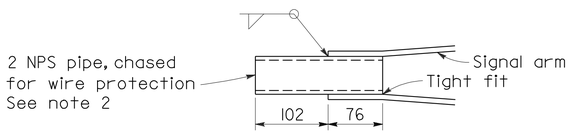

DETAIL TS-TIP TENON

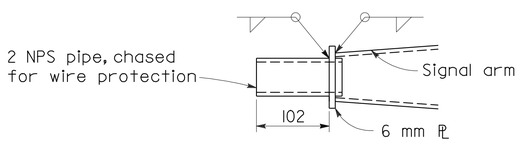

DETAIL TL-TIP TENON

This detail supersedes Detail S when so designated

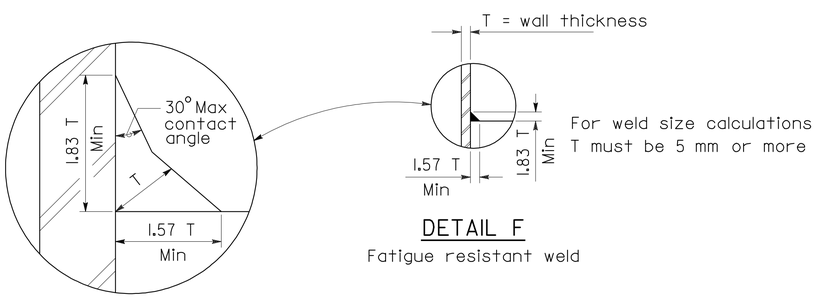

DETAIL F

Fatigue resistant weld

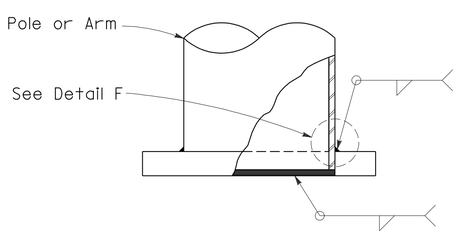

Weld Size	Wall Thickness
7	3.04
8	4.55
10	6.07
11	7.94
4	3.04
5	4.55
7	6.07
8	7.94

ELEVATION A

IDENTIFICATION NUMBER

Attach a stamped metal tag with each pole's indentification number to shaft above handhole. 7 mm high number minimum.

A similar tag shall be attached to the top of the signal mast arm near the pole plate.

Sample Identification Number

Type — Load case — Design wind velocity (km/h) — Signal arm length maximum (m) — Standard plan year — Only for poles with fatigue resistant welds

19A - 3 - 161 - 9.1 - 04 - F

Use SL for special load case

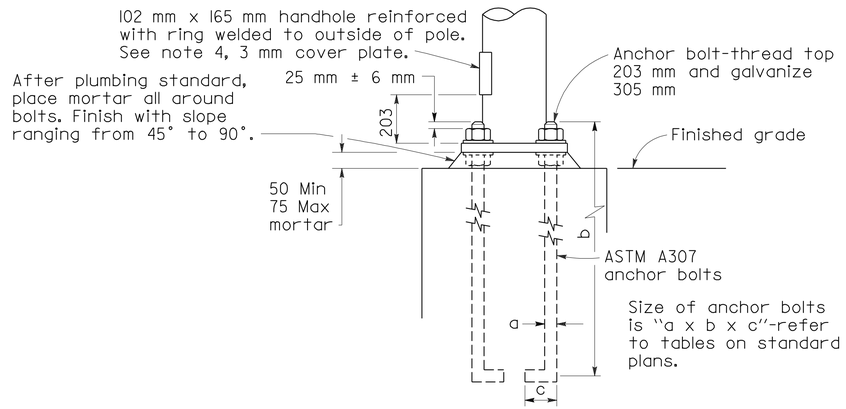

HANDHOLE AND ANCHORAGE DETAILS

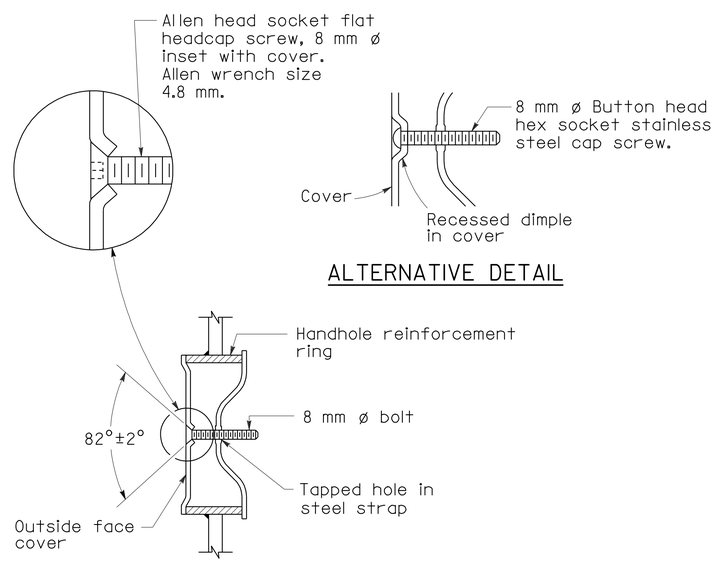

ALTERNATIVE DETAIL

TAMPER RESISTANT HANDHOLE COVER

GENERAL NOTES

SPECIFICATIONS

DESIGN : AASHTO Standard specifications for structural supports for highway signs, luminaires and traffic signals dated 2001.

Loading

WIND LOADINGS : 161 km/h

Unit Stresses

STRUCTURAL STEEL : fy = 330 MPa tapered steel tube
fy = 250 MPa unless otherwise noted

CONSTRUCTION : Standard Specifications and the Special Provisions

NOTES

1. ASTM A307 anchor bolts are required for each pole. Provide a hex nut, leveling nut and 2 washers for each bolt.
2. Luminaire arms shall be round, tapered steel tubes, taper of 11.45 mm/m to 11.66 mm/m with an end section 60 mm OD for mounting hardware. Extensions of 2 NPS Standard pipe and 178 mm long may be used at the option of the manufacturer. When low pressure sodium luminaires are required, the extension shall be 381 mm.
3. Signal arms shall be round, tapered steel tubes, maximum taper 11.66 mm/m.
4. Handhole reinforcement ring shall be 6 mm x 51 mm for 3.04 mm to 6.07 mm poles, 10 mm x 51mm for 7.94 mm.
5. Handholes for lighting standards shall be located on the downstream side of the pole unless otherwise noted on the plans.
6. Detail F, fatigue resistant weld, is required at signal arm plate and pole base plate.
7. Cap screws shall be tightened by the turn-of-nut method 1/3 turn to form a snug tight condition. No washer will be required.
8. During pole erection, the post shall be raked as necessary with the use of leveling nuts to provide a plumb pole axis.
9. When Project Plans show a lesser number of signs and signals, the Project Plans shall prevail.
10. Outside diameter, wall thickness, and corresponding section properties at the base of traffic signal poles and arms as shown in the Standard Plans are minimums. Unless otherwise specified, alternative sections require approval by the Engineer.

STATE OF CALIFORNIA
DEPARTMENT OF TRANSPORTATION

ELECTRICAL SYSTEMS (SIGNAL AND LIGHTING STANDARDS DETAILS No. 1)

NO SCALE

ALL DIMENSIONS ARE IN MILLIMETERS UNLESS OTHERWISE SHOWN

RSP ES-7M DATED APRIL 28, 2005 SUPERSEDES RSP ES-7M DATED JANUARY 24,2005 AND STANDARD PLAN ES-7M DATED JULY 1, 2004-PAGE 463 OF THE STANDARD PLANS BOOK DATED JULY 2004.

REVISED STANDARD PLAN RSP ES-7M

2004 REVISED Std PLAN RSP ES-7M

DIST	COUNTY	ROUTE	KILOMETER POST TOTAL PROJECT	SHEET NO.	TOTAL SHEETS
10	Sta	219,108	3.4/7.9, 44.3/44.9	516	522

Caltrans Metric

REGISTERED CIVIL ENGINEER

October 5, 2007
PLANS APPROVAL DATE

REGISTERED PROFESSIONAL ENGINEER Stanley P. Johnson No. C57793 Exp. 03-31-08 CIVIL STATE OF CALIFORNIA

The State of California or its officers or agents shall not be responsible for the accuracy or completeness of electronic copies of this plan sheet.

To get to the Caltrans web site, go to: http://www.dot.ca.gov

To accompany plans dated 6-28-10

2004 REVISED Std PLAN RSP ES-7P

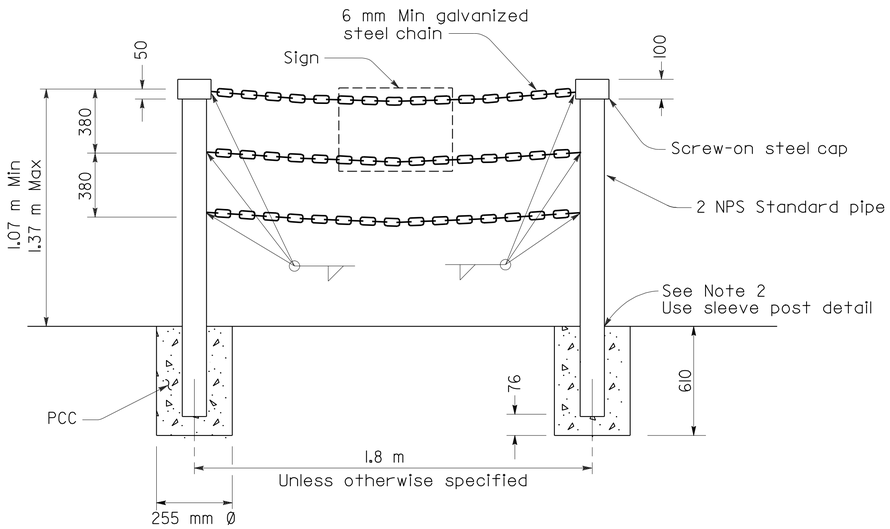

TYPE II

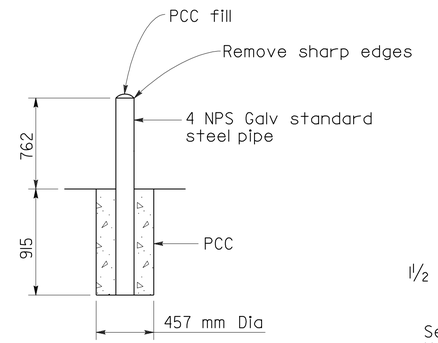

GUARD POST

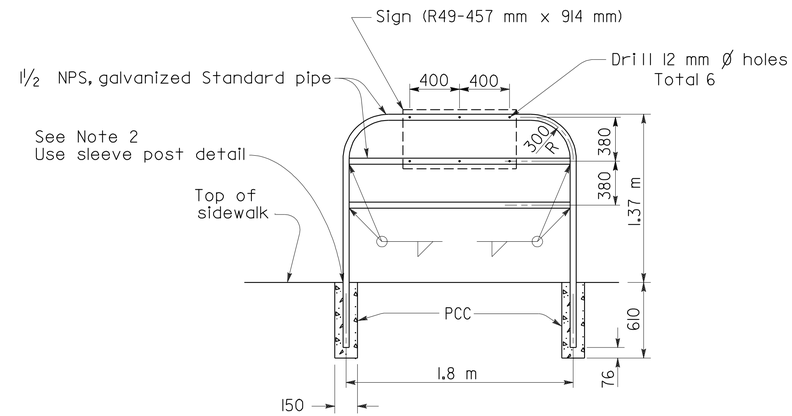

TYPE I

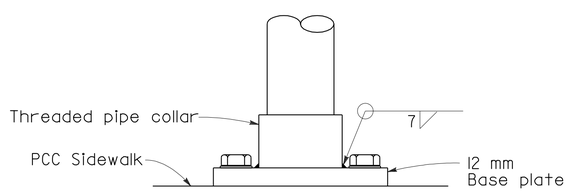

ELEVATION

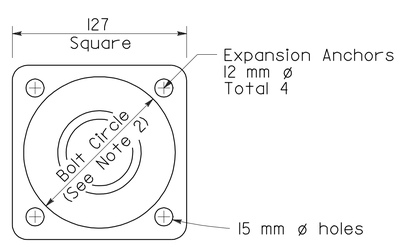

PLAN

POST ANCHORAGE DETAIL

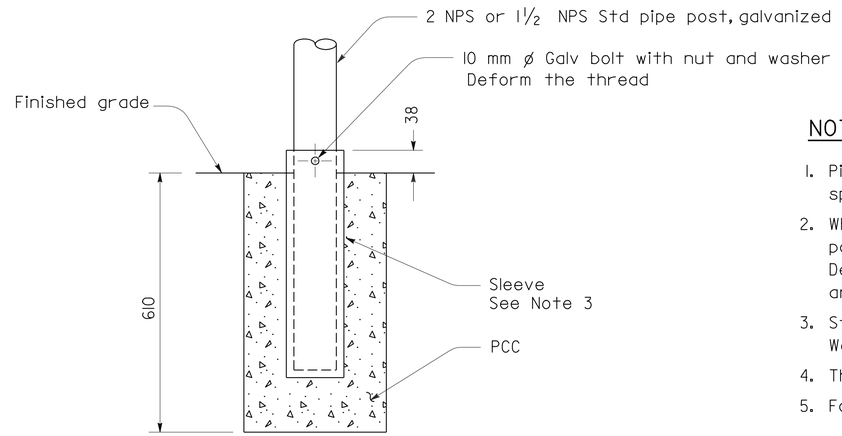

SLEEVE POST DETAIL

Use unless otherwise specified or shown on plans

NOTES:

1. Pipe post to be set 460 mm back from face of curb unless otherwise specified.
2. Where barricade posts are installed in existing concrete sidewalk, the post may be anchored to the sidewalk as shown in the "Post Anchorage Detail". Bolt circle diameter shall be 102 mm minimum for Type I barricade and 127 mm minimum for Type II barricade.
3. Steel sleeve to be constructed with a diameter 2.5 mm larger than post. Wall thickness of sleeve to be same as post or larger.
4. The Contractor may submit alternative details for approval by the Engineer.
5. For minimum pipe diameters and wall thickness refer to ASTM A6M.

STATE OF CALIFORNIA
DEPARTMENT OF TRANSPORTATION

ELECTRICAL SYSTEMS (PEDESTRIAN BARRICADES)

NO SCALE

ALL DIMENSIONS ARE IN MILLIMETERS UNLESS OTHERWISE SHOWN

RSP ES-7P DATED OCTOBER 5, 2007 SUPERSEDES STANDARD PLAN ES-7P DATED JULY 1, 2004-PAGE 466 OF THE STANDARD PLANS BOOK DATED JULY 2004.

REVISED STANDARD PLAN RSP ES-7P

6-12-07

DIST	COUNTY	ROUTE	KILOMETER POST TOTAL PROJECT	SHEET NO.	TOTAL SHEETS
10	Sta	219,108	3.4/7.9, 44.3/44.9	517	522

Caltrans Metric

Jeffery G. McRae
REGISTERED ELECTRICAL ENGINEER

October 5, 2007
PLANS APPROVAL DATE

REGISTERED PROFESSIONAL ENGINEER Jeffery G. McRae No. E14512 Exp. 6-30-08 ELECTRICAL STATE OF CALIFORNIA

The State of California or its officers or agents shall not be responsible for the accuracy or completeness of electronic copies of this plan sheet.

To get to the Caltrans web site, go to: http://www.dot.ca.gov

To accompany plans dated 6-28-10

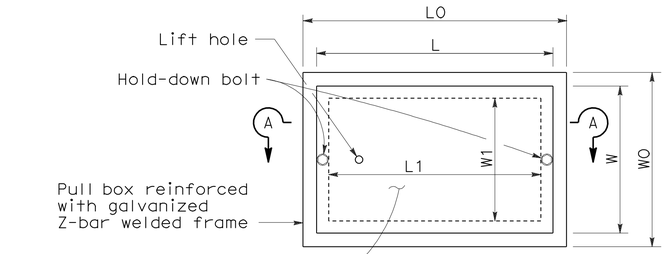

TOP VIEW

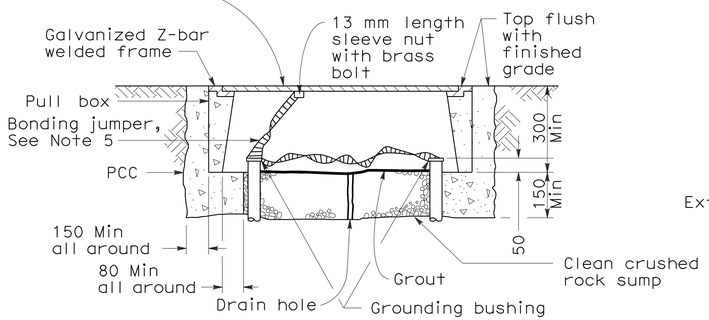

SECTION A-A

No. 3½(T), No. 5(T) AND No. 6(T) TRAFFIC PULL BOX

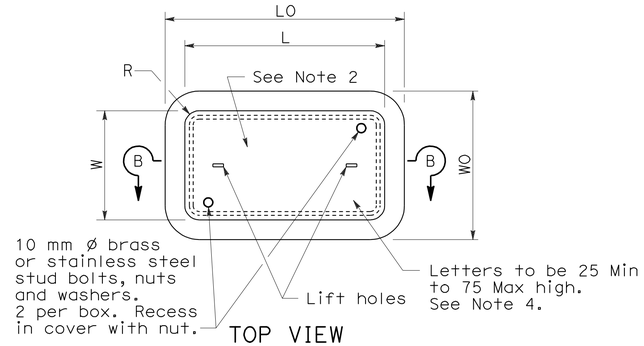

TOP VIEW

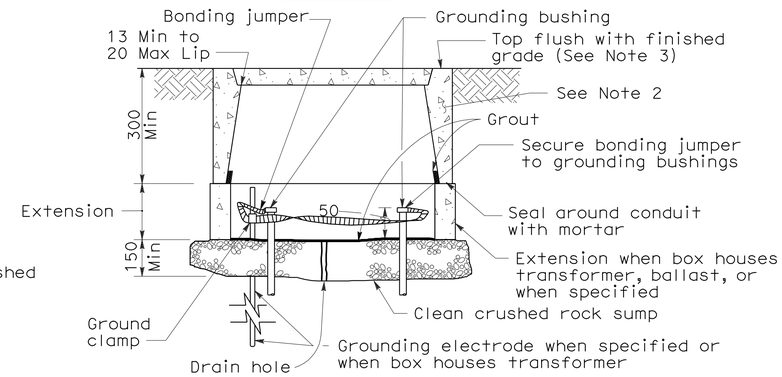

SECTION B-B

INSTALLATION DETAILS

DIMENSION TABLE

PULL BOX	CONCRETE BOX				NON-PCC BOX		CONCRETE OR NON-PCC COVERS				
	Minimum * Thickness	Minimum Depth Box and Extension	LO (mm)	WO (mm)	Minimum ** Thickness	Minimum Depth Box and Extension	L ** (mm)	W ** (mm)	R (mm)	Edge Thickness	Edge Taper
No. 3½	25 mm	No Extension	457	330	8 mm	No Extension	390	260	27	45 mm	3 mm
No. 5	25 mm	560 mm	666	425	8 mm	510 mm	590	350	32	50 mm	3 mm
No. 6	40 mm	610 mm	854	524	10 mm	510 mm	775	444	32	50 mm	3 mm

* Excluding conduit web ** Top dimension

DIMENSION TABLE

PULL BOX	CONCRETE BOX						NON-PCC BOX		CONCRETE OR NON-PCC COVERS				
	Minimum * Thickness	Minimum Depth Box and Extension	LO (mm)	WO (mm)	L1 (mm)	W1 (mm)	Minimum ** Thickness	Minimum Depth Box and Extension	L ** (mm)	W ** (mm)	R (mm)	Edge Thickness	Edge Taper
No. 3½(T)	40 mm	305 mm	530 ±	430 ± 25	370 ±	270 ± 25	Does Not Apply		510 ±	350 ±	0	13 mm	None
No. 5(T)	45 mm	305 mm	750 ±	600 ± 25	480 ±	330 ± 25	Does Not Apply		690 ±	410 ±	0	13 mm	None
No. 6(T)	50 mm	305 mm	900 ±	760 ± 25	600 ±	430 ± 25	Does Not Apply		840 ±	510 ±	0	13 mm	None

* Excluding conduit web ** Top dimension

NOTES ON PULL BOXES:

1. Traffic pull box shall be provided with steel cover and special concrete footing. Steel cover shall have embossed non-skid pattern.
2. Steel reinforcing shall be as regularly used in the standard products of the respective manufacturer.
3. Top of pull boxes shall be flush with surrounding grade or top of adjacent curb, except that in unpaved areas where pull box is not immediately adjacent to and protected by a concrete foundation, pole or other protective construction, the box shall be placed with its top 30 mm above surrounding grade. Where practicable, pull boxes shown in the vicinity of curbs shall be placed adjacent to the back of curb, and pull boxes shown adjacent to standards shall be placed on side of foundation facing away from traffic, unless otherwise noted. When pull box is installed in sidewalk area, the depth of the pull box shall be adjusted so that the top of the pull box is flush with the sidewalk.
4. Pull box covers shall be marked as follows: "SERVICE" Service circuits between service point and service disconnect; "SPRINKLER-CONTROL" Sprinkler control circuits, 50 V or less; "CALTRANS" On all pull boxes, except pull boxes marked "SPRINKLER-CONTROL"; and "TELEPHONE" Telephone service.

   a) No. 3½ pull box.

      1) "SIGNAL" Traffic signal circuits with or without street or sign lighting circuits.

      2) "ST LIGHTING" Street or sign lighting circuits where voltage is under 600 V.

   b) No. 5, 6, 9 or 9A pull box.

      1) "TRAFFIC SIGNAL" Traffic signal circuits with or without street or sign lighting circuits.

      2) "STREET LIGHTING" Street or sign lighting circuits where voltage is under 600 V.

      3) "STREET LIGHTING-HIGH VOLTAGE" Street or sign lighting circuits where voltage is above 600 V.

      4) "IRRIGATION" Circuits to irrigation controller 120 V or more.

      5) "RAMP METER" Ramp meter circuits.

      6) "COUNT STATION" Count or speed monitor circuits.

      7) "COMMUNICATION" Communication circuits.

      8) "TOS COMMUNICATIONS" TOS communications line.

      9) "TOS POWER" TOS power.

      10) "TDC POWER" Telephone demarcation cabinet power.

      11) "CCTV" Closed circuit television circuits.

      12) "TMS" Traffic monitoring station circuits.

      13) "CMS" Changeable message sign circuits.

      14) "HAR" Highway advisory radio circuits.
5. Bonding jumper for metal covers shall be 1 m long, minimum.
6. The nominal dimensions of the opening in which the cover sets shall be the same as the cover dimensions except the length and width dimensions shall be 3 mm greater.
7. Covers and boxes shall be interchangeable with California standard male and female gages. When interchanged with a standard male or female gage, the top surfaces shall be flush within 3 mm. Top outside edge of concrete covers and pull boxes shall have a 6 mm minimum radius.
8. Pull box shall not be installed within the boundaries of new or existing curb ramps.
9. Pull boxes for electroliers, post and signal standards shall be located ± 1.5 m from the station of the adjacent electrolier, post or signal standard. Pull boxes shall be placed adjacent to back of curb or edge of shoulder except where this is impractical, a box may be placed in another suitable protected and accessible location.

STATE OF CALIFORNIA
DEPARTMENT OF TRANSPORTATION

ELECTRICAL SYSTEMS (PULL BOX DETAILS)

NO SCALE

ALL DIMENSIONS ARE IN MILLIMETERS UNLESS OTHERWISE SHOWN

RSP ES-8 DATED OCTOBER 5, 2007 SUPERSEDES STANDARD PLAN ES-8 DATED JULY 1, 2004-PAGE 467 OF THE STANDARD PLANS BOOK DATED JULY 2004.

REVISED STANDARD PLAN RSP ES-8

2004 REVISED Std PLAN RSP ES-8

7-3-07

DIST	COUNTY	ROUTE	KILOMETER POST TOTAL PROJECT	SHEET NO.	TOTAL SHEETS
10	Sta	219,108	3.4/7.9, 44.3/44.9	518	522

Caltrans Metric

Jeffery G. McRae
REGISTERED ELECTRICAL ENGINEER

October 5, 2007
PLANS APPROVAL DATE

REGISTERED PROFESSIONAL ENGINEER Jeffery G. McRae No. E14512 Exp. 6-30-08 ELECTRICAL STATE OF CALIFORNIA

The State of California or its officers or agents shall not be responsible for the accuracy or completeness of electronic copies of this plan sheet.

To get to the Caltrans web site, go to: http://www.dot.ca.gov

To accompany plans dated 6-28-10

ISOLUX CURVE - MINIMUM

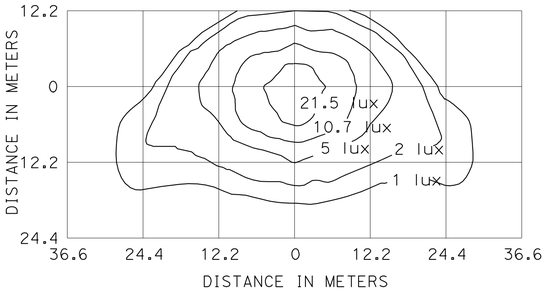

TYPE III MEDIUM CUTOFF

Cutoff Luminaire
10.4 m Mounting Height
LAMP OPERATED AT 22 000 lm
200 W HIGH PRESSURE SODIUM LAMP
ANSI DESIGNATION S66

ISOLUX CURVE - MINIMUM

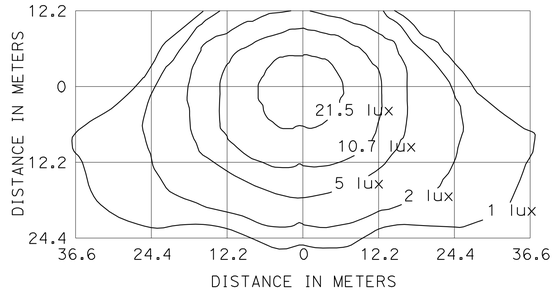

TYPE III MEDIUM CUTOFF

Cutoff Luminaire
12.2 m Mounting Height
LAMP OPERATED AT 37 000 lm
310 W HIGH PRESSURE SODIUM LAMP
ANSI DESIGNATION S67

ISOLUX CURVE - MINIMUM

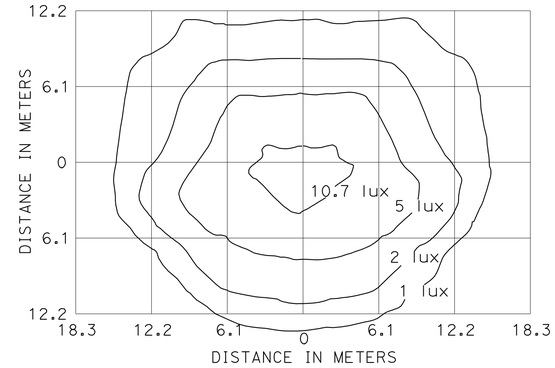

FLUSH SOFFIT LUMINAIRE

5.2 m Mounting Height
LAMP OPERATED AT 5800 lm
70 W HIGH PRESSURE SODIUM LAMP
ANSI DESIGNATION S62

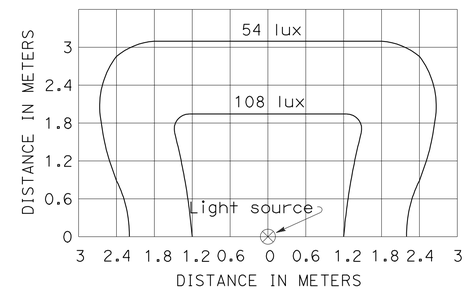

SIGN LIGHTING FIXTURE ISOLUX DIAGRAM

1. Curves represent the minimum lux of initial illumination on a 3 m x 6 m panel.
2. The lux shown are with the fixture attached to the light fixture mounting channel which places the center of the source 1420 mm in front of panel and 300 mm below the bottom edge.
3. Applicable lamp: 85-W fluorescent phosphor coated induction lamp.

ISOLUX CURVE - MINIMUM

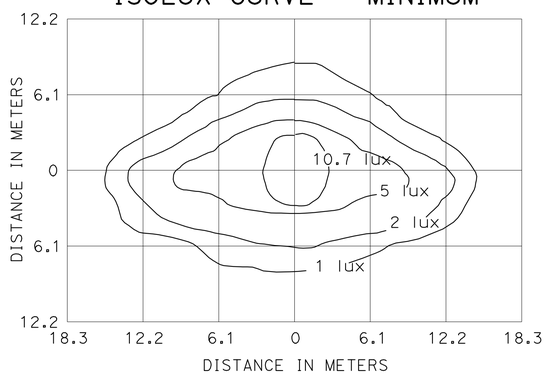

PENDANT SOFFIT LUMINAIRE
TYPE III SHORT

5.2 m Mounting Height
LAMP OPERATED AT 5800 lm
70 W HIGH PRESSURE SODIUM LAMP
ANSI DESIGNATION S62

ISOLUX CURVE - MINIMUM

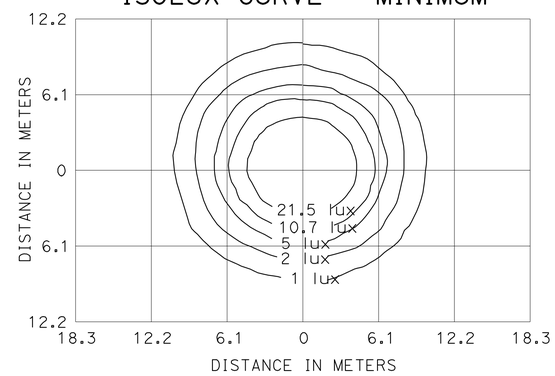

PENDANT SOFFIT LUMINAIRE

5.2 m Mounting Height
LAMP OPERATED AT 5800 lm
70 W HIGH PRESSURE SODIUM LAMP
ANSI DESIGNATION S62

ISOLUX CURVE - MINIMUM

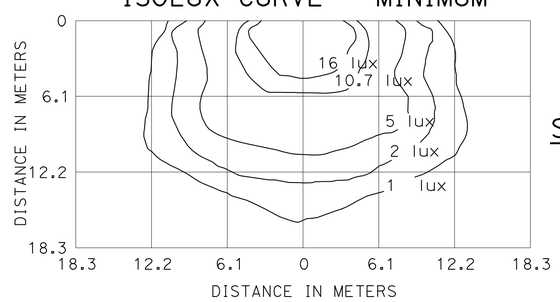

DETAIL ``W'' WALL LUMINAIRE

4.6 m Mounting Height
LAMP OPERATED AT 9500 lm
100 W HIGH PRESSURE SODIUM LAMP
ANSI DESIGNATION S54

NOTE

Isolux diagrams show the minimum horizontal lux required.

ISOLUX CURVE - MINIMUM

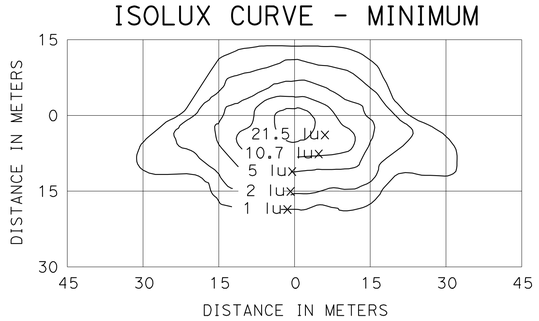

TYPE III MEDIUM CUTOFF

Cutoff Luminaire
9.1 m Mounting Height
LAMP OPERATED AT 16 000 lm
150 W HIGH PRESSURE SODIUM LAMP
ANSI DESIGNATION S55

ISOLUX CURVE - MINIMUM

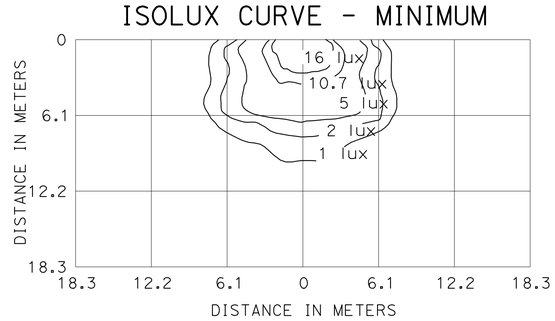

WALL LUMINAIRE

4.6 m Mounting Height
LAMP OPERATED AT 5800 lm
70 W HIGH PRESSURE SODIUM LAMP
ANSI DESIGNATION S62

ISOLUX CURVE - MINIMUM

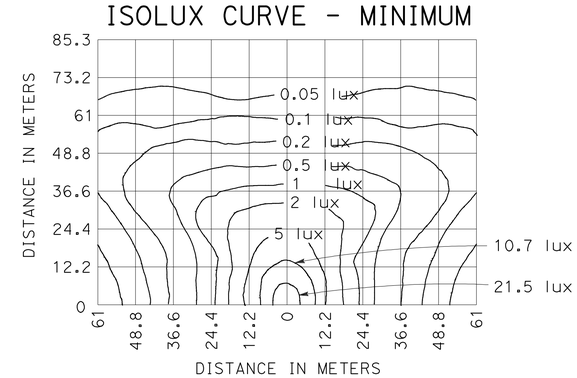

LOW PRESSURE SODIUM LUMINAIRE

12.2 m Mounting Height
LAMP OPERATED AT 33 000 lm
180 W LOW PRESSURE SODIUM LAMP

STATE OF CALIFORNIA
DEPARTMENT OF TRANSPORTATION

ELECTRICAL SYSTEMS (ISOLUX DIAGRAMS)

NO SCALE

ALL DIMENSIONS ARE IN MILLIMETERS UNLESS OTHERWISE SHOWN

RSP ES-10 DATED OCTOBER 5, 2007 SUPERSEDES STANDARD PLAN ES-10 DATED JULY 1, 2004-PAGE 474 OF THE STANDARD PLANS BOOK DATED JULY 2004.

REVISED STANDARD PLAN RSP ES-10

2004 REVISED Std PLAN RSP ES-10

6-27-07

DIST	COUNTY	ROUTE	KILOMETER POST TOTAL PROJECT	SHEET NO.	TOTAL SHEETS
10	Sta	219,108	3.4/7.9, 44.3/44.9	519	522

REGISTERED CIVIL ENGINEER

October 5, 2007
PLANS APPROVAL DATE

REGISTERED PROFESSIONAL ENGINEER
Stanley P. Johnson
No. C57793
Exp. 03-31-08
CIVIL
STATE OF CALIFORNIA

The State of California or its officers or agents shall not be responsible for the accuracy or completeness of electronic copies of this plan sheet.

To get to the Caltrans web site, go to: http://www.dot.ca.gov

To accompany plans dated 6-28-10

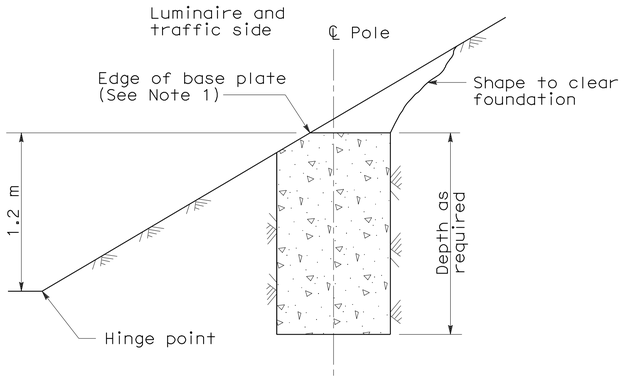

CUT SLOPES
STEEPER THAN 1:4
See Note 2

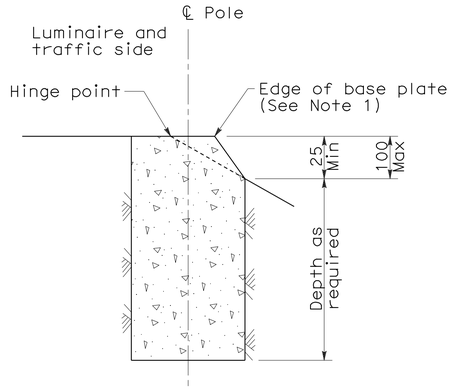

FILL SLOPES
STEEPER THAN 1:4
See Note 2

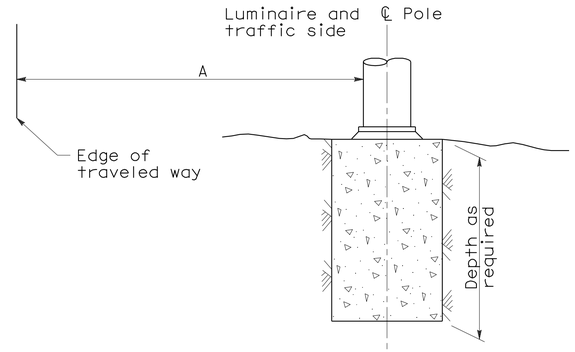

FLAT SECTIONS, CUT OR FILL SLOPES
1:4 OR FLATTER

STANDARD TYPE	SETBACK (DIMENSION A)
32	9 m Min
31, 36-20A	6 m Min
15, 15D, 15-SB, 21, 21D, 30	Mast Arm Length (Min)

FOUNDATIONS ADJACENT TO ALL ROADWAYS EXCEPT IN SIDEWALK, MEDIAN AND ISLAND AREAS

NOTES:

1. Where a portion of the foundation is above grade, the top edges shall have a 25 mm chamfer.
2. Horizontal setbacks on cut and fill slopes steeper than 1:4 shall not exceed the distance shown for flat sections.

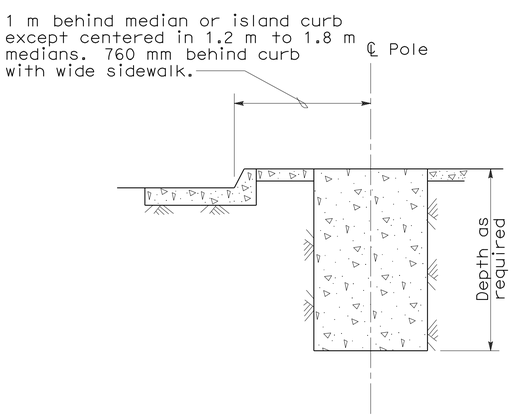

MEDIAN, ISLAND
OR WIDE SIDEWALK
(2 m wide and wider)

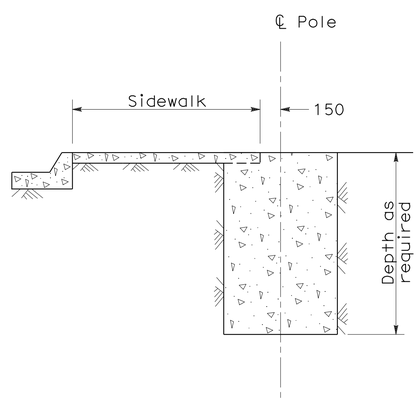

NARROW SIDEWALK
(Less than 2 m wide)

FOUNDATIONS IN SIDEWALK, MEDIAN AND ISLAND AREAS

STATE OF CALIFORNIA
DEPARTMENT OF TRANSPORTATION

ELECTRICAL SYSTEMS (FOUNDATION INSTALLATIONS)

NO SCALE

ALL DIMENSIONS ARE IN MILLIMETERS UNLESS OTHERWISE SHOWN

RSP ES-11 DATED OCTOBER 5, 2007 SUPERSEDES STANDARD PLAN ES-11 DATED JULY 1, 2004-PAGE 475 OF THE STANDARD PLANS BOOK DATED JULY 2004.

REVISED STANDARD PLAN RSP ES-11

2004 REVISED Std PLAN RSP ES-11

10-1-07

DIST	COUNTY	ROUTE	KILOMETER POST TOTAL PROJECT	SHEET NO.	TOTAL SHEETS
10	Sta	219,108	3.4/7.9, 44.3/44.9	520	522

Caltrans Metric

REGISTERED ELECTRICAL ENGINEER

October 5, 2007
PLANS APPROVAL DATE

REGISTERED PROFESSIONAL ENGINEER
Jeffery G. McRae
No. E14512
Exp. 6-30-08
ELECTRICAL
STATE OF CALIFORNIA

The State of California or its officers or agents shall not be responsible for the accuracy or completeness of electronic copies of this plan sheet.

To get to the Caltrans web site, go to: http://www.dot.ca.gov

To accompany plans dated 6-28-10

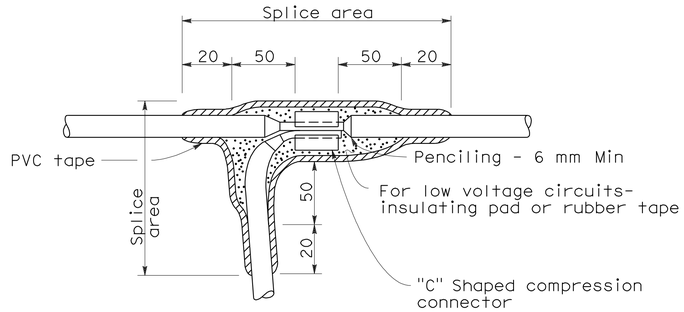

TYPE "C" SPLICE

Between 1 free-end and 1 through conductor

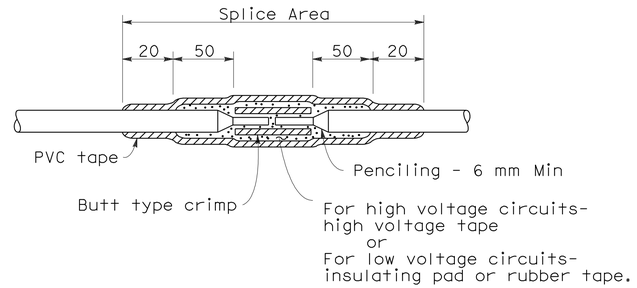

TYPE "S" SPLICE

Between 2 free-ends

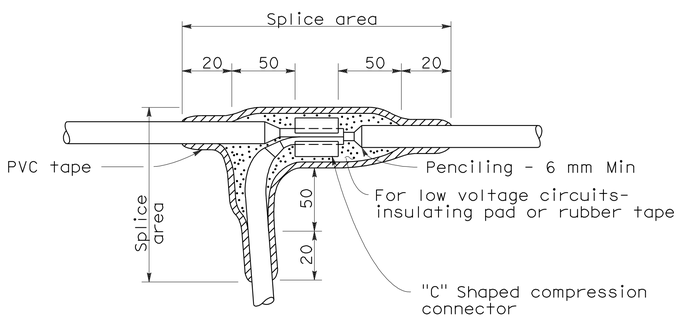

TYPE "T" SPLICE

For 3 free-ends

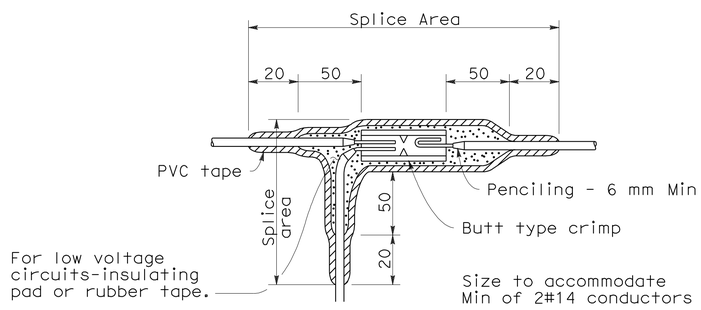

TYPE "ST" SPLICE

NOTES:

1. Dimensions are minimum.
2. Rubber tapes shall be rolled after application.

INSULATION METHODS

Low Voltage Circuits (0-600 V)

METHOD "B"

1. Completely cover the splice area with electrical insulating coating and allow to dry.
2. Apply 2 layers of electrical insulating pad with minimum thickness of 4 mm each layer or 2 layers, half lapped, synthetic oil resistant, self fusing rubber tape.
3. Apply 3 layers half lapped polyvinyl chloride tape.
4. Cover entire splice with electrical insulating coating and allow to dry.

High Voltage Circuits (Over 600 V)

1. Completely cover the splice area with electrical insulating coating and allow to dry.
2. Apply high voltage tape to a minimum thickness equal to original insulation.
3. Apply 3 layers half lapped polyvinyl chloride tape.
4. Cover entire splice with electrical insulating coating and allow to dry.

STATE OF CALIFORNIA
DEPARTMENT OF TRANSPORTATION

ELECTRICAL SYSTEMS (SPLICING DETAILS)

NO SCALE

ALL DIMENSIONS ARE IN MILLIMETERS UNLESS OTHERWISE SHOWN

RSP ES-13A DATED OCTOBER 5, 2007 SUPERSEDES STANDARD PLAN ES-13A DATED JULY 1, 2004-PAGE 478 OF THE STANDARD PLANS BOOK DATED JULY 2004.

REVISED STANDARD PLAN RSP ES-13A

2004 REVISED Std PLAN RSP ES-13A

6-27-07

DIST	COUNTY	ROUTE	KILOMETER POST TOTAL PROJECT	SHEET NO.	TOTAL SHEETS
10	Sta	219,108	3.4/7.9, 44.3/44.9	521	522

Caltrans Metric

REGISTERED ELECTRICAL ENGINEER

October 5, 2007
PLANS APPROVAL DATE

REGISTERED PROFESSIONAL ENGINEER Jeffery G. McRae No. E14512 Exp. 6-30-08 ELECTRICAL STATE OF CALIFORNIA

The State of California or its officers or agents shall not be responsible for the accuracy or completeness of electronic copies of this plan sheet.

To get to the Caltrans web site, go to: http://www.dot.ca.gov

To accompany plans dated 6-28-10

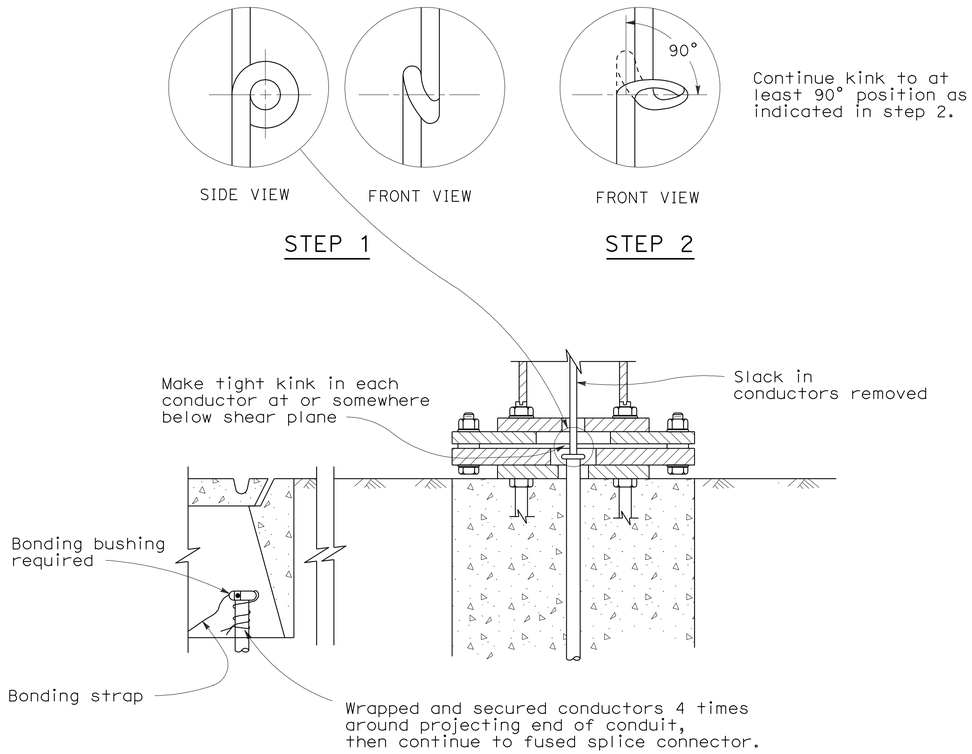

KINKING DETAIL FOR SLIP BASE STANDARDS

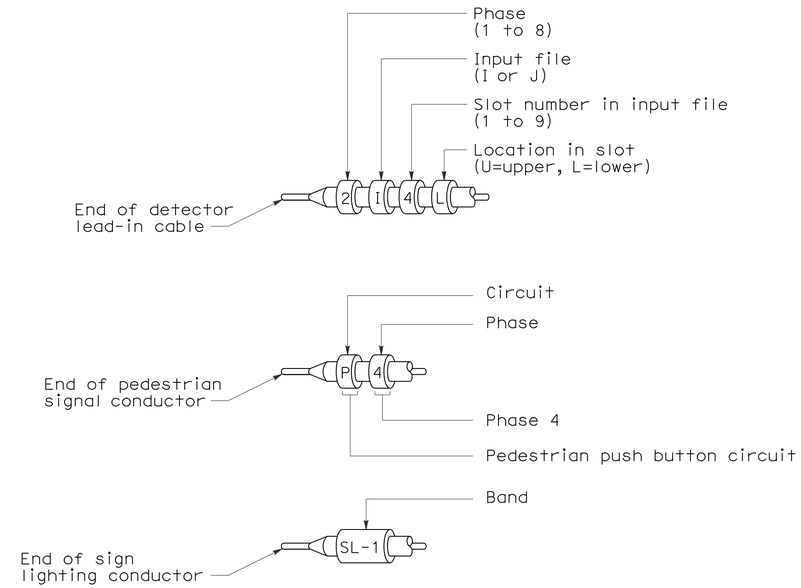

TYPICAL BANDING OF CONDUCTOR ENDS

Primary lines of multiple ballasts shall be provided with fused connectors.
Fuse ratings shall be as noted below.

CIRCUIT VOLTAGE	FUSE VOLTAGE RATING	FUSE CURRENT RATING																
		HPS LAMP BALLAST								LOW PRESSURE SODIUM BALLAST					INDUCTION SIGN LIGHTING	SINGLE PHASE (TWO WIRE) TRANSFORMERS (PRIMARY SIDE)		
		70 W	100 W	150 W	200 W	250 W	310 W	400 W	1000 W	35 W	55 W	90 W	135 W	180 W	85 W	1 kVA	2 kVA	3 kVA
120 V	250 V	5	5	5	5	5	5	5	-	5	5	5	5	5	5	10	20	30
240 V	250 V	5	5	5	5	5	5	5	5	3	3	3	5	5	5	6	10	20
480 V	500-600 V	5	5	5	5	5	5	5	5	2	2	2	3	3	1*	3	6	10

* See Revised Standard Plan RSP ES-15D, Type SC3 Control.

FUSE RATINGS FOR FUSED CONNECTORS

LUMINAIRE BALLAST FUSING

STATE OF CALIFORNIA
DEPARTMENT OF TRANSPORTATION

ELECTRICAL SYSTEMS (WIRING DETAILS AND FUSE RATINGS)

NO SCALE

ALL DIMENSIONS ARE IN MILLIMETERS UNLESS OTHERWISE SHOWN

RSP ES-13B DATED OCTOBER 5, 2007 SUPERSEDES STANDARD PLAN ES-13B DATED JULY 1, 2004-PAGE 479 OF THE STANDARD PLANS BOOK DATED JULY 2004.

REVISED STANDARD PLAN RSP ES-13B

2004 REVISED Std PLAN RSP ES-13B

10-1-07

Pole Extension Type	Pole Data			
	Height "H" (m)	Min OD (mm)		Thickness (mm)
		BASE	TOP	
CCTV 5	1.5	116	98	4.55
CCTV 10	3.0	133	98	4.55
CCTV 15	4.5	151	98	4.55

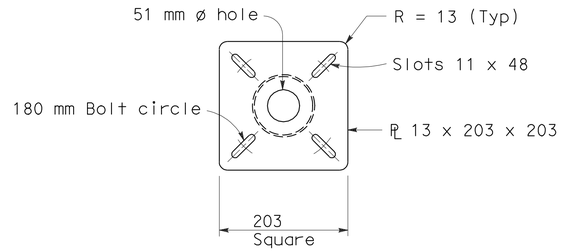

CAMERA MOUNTING PLATE

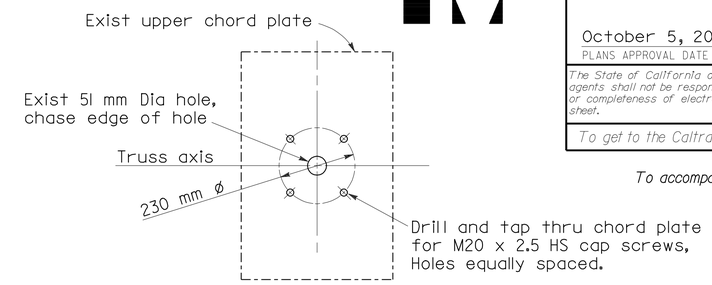

UPPER CHORD PLATE (RSP S13)

HIGH STRENGTH CAP SCREWS

16 - 11NC - 45
- Length (mm)
- Threads (per inch)
- Size (mm)

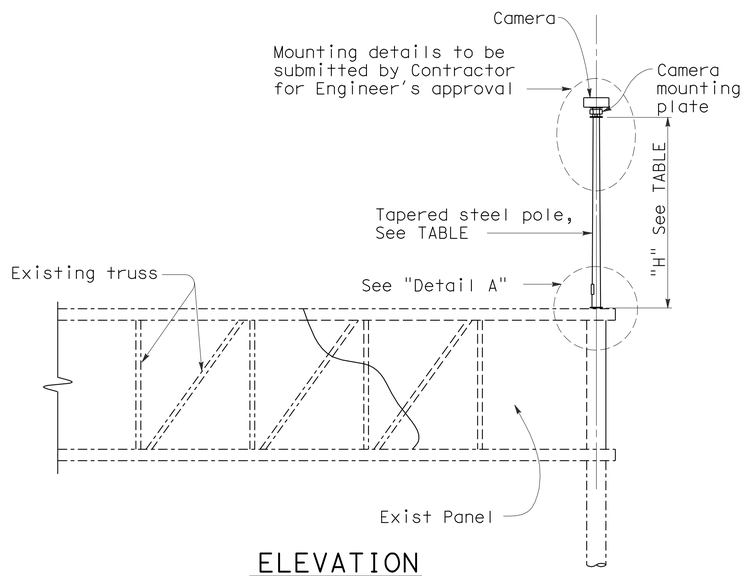

ELEVATION

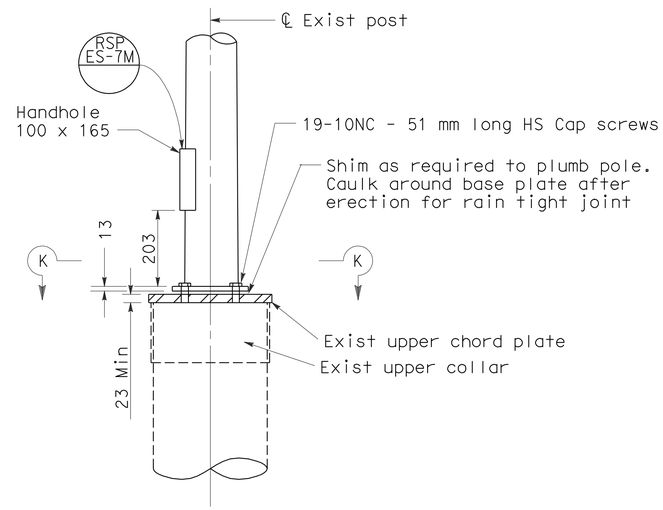

DETAIL A

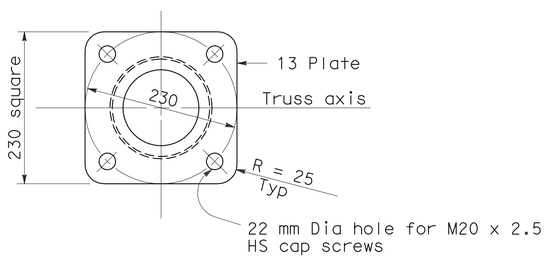

SECTION K-K

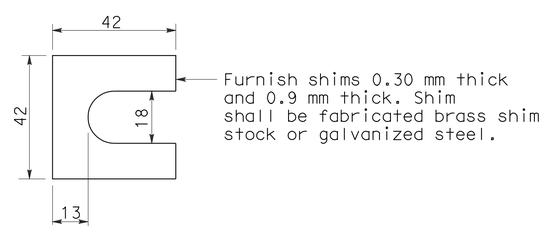

SHIM DETAIL

GENERAL NOTES:

SPECIFICATIONS

Design : AASHTO Standard specifications for structural supports for highway signs, luminaires and traffic signals dated 2001.

LOADING

Wind Loadings : 161 km/h

UNIT STRESSES

Structural Steel : fy = 330 MPa tapered steel tube
fy = 250 MPa unless otherwise noted

NOTES:

1. The Contractor shall verify controlling field dimensions before ordering or fabricating any material.
2. All steel shall be galvanized after fabrication.
3. Bolt hole locations may vary at the discretion of the Engineer.

DIST	COUNTY	ROUTE	KILOMETER POST TOTAL PROJECT	SHEET NO.	TOTAL SHEETS
10	Sta	219,108	3.4/7.9, 44.3/44.9	522	522

REGISTERED CIVIL ENGINEER

October 5, 2007
PLANS APPROVAL DATE

REGISTERED PROFESSIONAL ENGINEER Stanley P. Johnson No. C57793 Exp. 3-31-08 CIVIL STATE OF CALIFORNIA

The State of California or its officers or agents shall not be responsible for the accuracy or completeness of electronic copies of this plan sheet.

To get to the Caltrans web site, go to: http://www.dot.ca.gov

To accompany plans dated 6-28-10

STATE OF CALIFORNIA
DEPARTMENT OF TRANSPORTATION

ELECTRICAL SYSTEMS (CLOSED CIRCUIT TELEVISION POLE DETAILS-OVERHEAD SIGN MOUNTED)

NO SCALE

ALL DIMENSIONS ARE IN MILLIMETERS UNLESS OTHERWISE SHOWN

RSP ES16B DATED OCTOBER 5, 2007 SUPERSEDES RSP ES-16B DATED JANUARY 24, 2005 AND STANDARD PLAN ES-16B DATED JULY 1, 2004-PAGE 488 OF THE STANDARD PLANS BOOK DATED JULY 2004.

REVISED STANDARD PLAN RSP ES-16B

2004 REVISED Std PLAN RSP ES-16B

9-13-07