NOTE: FOR COMPLETE R/W DATA, SEE R/W RECORD MAPS AT DISTRICT OFFICE.

Dist	COUNTY	ROUTE	KILOMETER POST TOTAL PROJECT	SHEET No.	TOTAL SHEETS
10	Sta	219,108	3.4/7.9, 44.3/44.9	401	522

REGISTERED CIVIL ENGINEER 6/12/09 DATE

6-28-10
PLANS APPROVAL DATE

REGISTERED PROFESSIONAL ENGINEER HASSAN MAREI No. 35068 Exp. 9/30/10 CIVIL STATE OF CALIFORNIA

THE STATE OF CALIFORNIA OR ITS OFFICERS OR AGENTS SHALL NOT BE RESPONSIBLE FOR THE ACCURACY OR COMPLETENESS OF ELECTRONIC COPIES OF THIS PLAN SHEET.

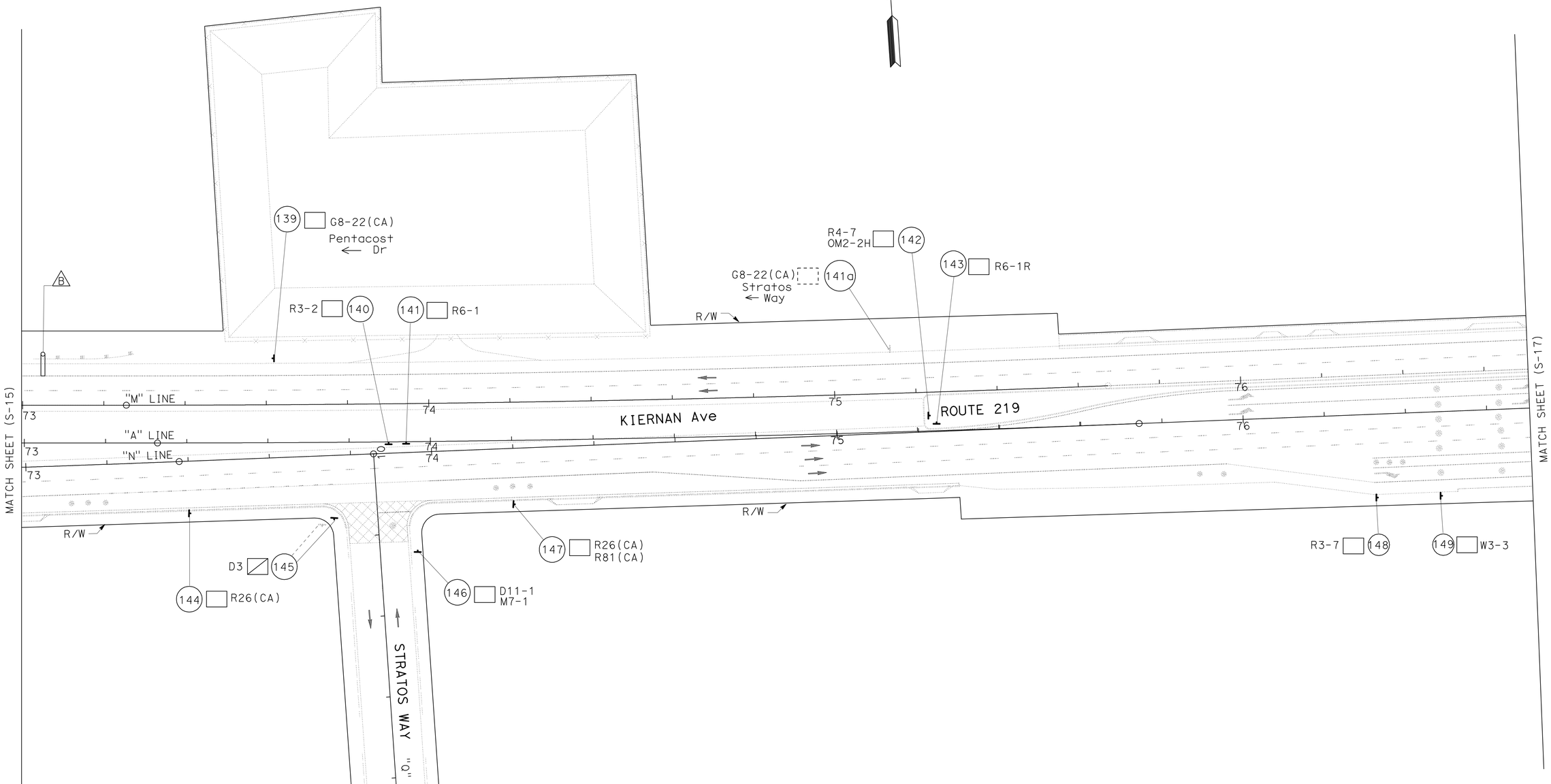

ALL DIMENSIONS ARE IN METERS UNLESS OTHERWISE SHOWN

SIGN PLAN

SCALE 1:500

S-16

THIS PLAN ACCURATE FOR SIGN WORK ONLY.

STATE OF CALIFORNIA - DEPARTMENT OF TRANSPORTATION
Caltrans
TRAFFIC DESIGN

FUNCTIONAL SUPERVISOR: HASSAN MAREI
CALCULATED-DESIGNED BY: CECILE NGUYEN
CHECKED BY: ALI JUMA
REVISED BY: CN
DATE REVISED: 6/30/09

LAST REVISION 00-00-00
DATE PLOTTED => 30-JUN-2010
TIME PLOTTED => 15:59

NOTE: FOR COMPLETE R/W DATA, SEE R/W RECORD MAPS AT DISTRICT OFFICE.

Dist	COUNTY	ROUTE	KILOMETER POST TOTAL PROJECT	SHEET No.	TOTAL SHEETS
10	Sta	219,108	3.4/7.9, 44.3/44.9	402	522

REGISTERED CIVIL ENGINEER 6/12/09 DATE

6-28-10
PLANS APPROVAL DATE

REGISTERED PROFESSIONAL ENGINEER HASSAN MAREI No. 35068 Exp. 9/30/10 CIVIL STATE OF CALIFORNIA

THE STATE OF CALIFORNIA OR ITS OFFICERS OR AGENTS SHALL NOT BE RESPONSIBLE FOR THE ACCURACY OR COMPLETENESS OF ELECTRONIC COPIES OF THIS PLAN SHEET.

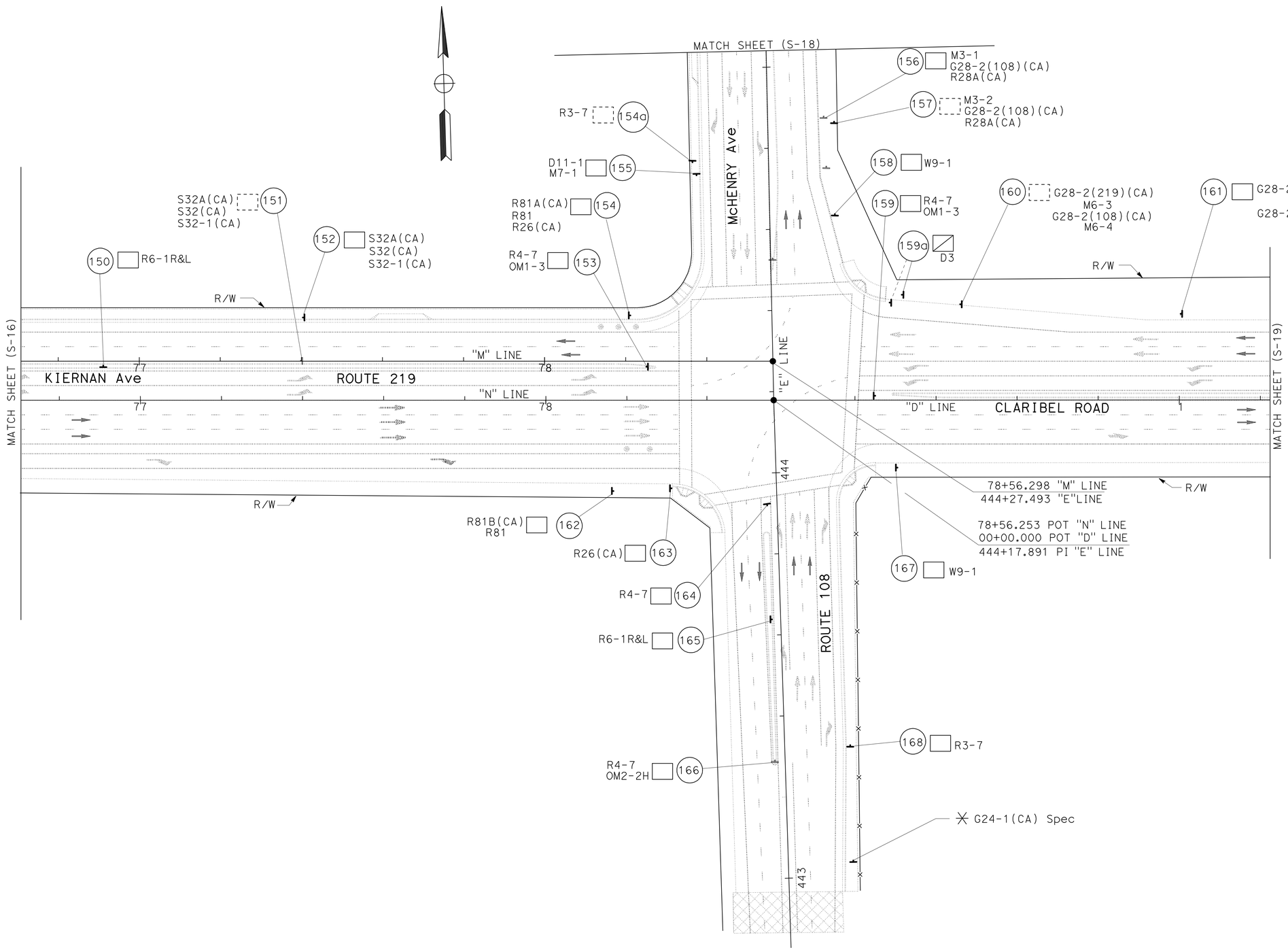

THIS PLAN ACCURATE FOR SIGNN WORK ONLY.

ALL DIMENSIONS ARE IN METERS UNLESS OTHERWISE SHOWN

SIGN PLAN

SCALE 1:500

S-17

STATE OF CALIFORNIA - DEPARTMENT OF TRANSPORTATION
Caltrans
TRAFFIC DESIGN

FUNCTIONAL SUPERVISOR: HASSAN MAREI
CALCULATED-DESIGNED BY: CECILE NGUYEN
CHECKED BY: ALI JUMA
REVISED BY: CN
DATE REVISED: 7/1/09

LAST REVISION 00-00-00 | DATE PLOTTED => 30-JUN-2010 | TIME PLOTTED => 15:59

NOTE: FOR COMPLETE R/W DATA, SEE R/W RECORD MAPS AT DISTRICT OFFICE.

Dist	COUNTY	ROUTE	KILOMETER POST TOTAL PROJECT	SHEET No.	TOTAL SHEETS
10	Sta	219,108	3.4/7.9, 44.3/44.9	403	522

REGISTERED CIVIL ENGINEER — DATE 6/12/09

6-28-10
PLANS APPROVAL DATE

REGISTERED PROFESSIONAL ENGINEER HASSAN MAREI No. 35068 Exp. 9/30/10 CIVIL STATE OF CALIFORNIA

THE STATE OF CALIFORNIA OR ITS OFFICERS OR AGENTS SHALL NOT BE RESPONSIBLE FOR THE ACCURACY OR COMPLETENESS OF ELECTRONIC COPIES OF THIS PLAN SHEET.

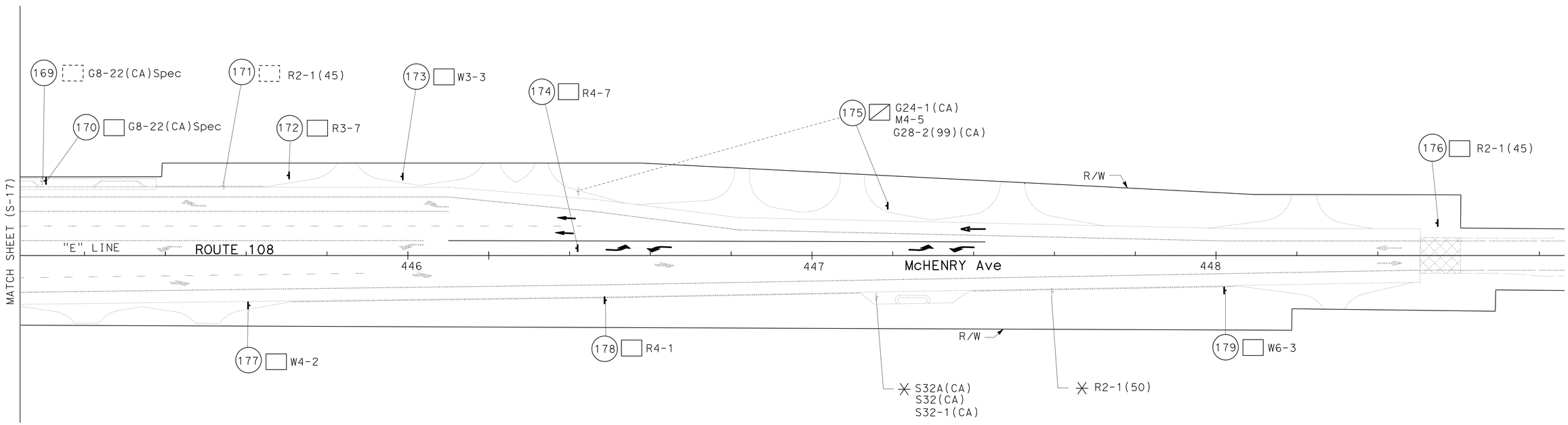

ALL DIMENSIONS ARE IN METERS UNLESS OTHERWISE SHOWN

SIGN PLAN

SCALE 1:500

S-18

THIS PLAN ACCURATE FOR SIGNN WORK ONLY.

CN	7/1/09	CECILE NGUYEN	ALI JUMA
REVISED BY	DATE REVISED	CALCULATED-DESIGNED BY	CHECKED BY

FUNCTIONAL SUPERVISOR: HASSAN MAREI

STATE OF CALIFORNIA - DEPARTMENT OF TRANSPORTATION

Caltrans TRAFFIC DESIGN

LAST REVISION 00-00-00 | DATE PLOTTED => 25-JAN-2012 | TIME PLOTTED => 08:43

NOTE: FOR COMPLETE R/W DATA, SEE R/W RECORD MAPS AT DISTRICT OFFICE.

Dist	COUNTY	ROUTE	KILOMETER POST TOTAL PROJECT	SHEET No.	TOTAL SHEETS
10	Sta	219,108	3.4/7.9, 44.3/44.9	404	522

Caltrans Metric

REGISTERED CIVIL ENGINEER 6/12/09 DATE

6-28-10
PLANS APPROVAL DATE

REGISTERED PROFESSIONAL ENGINEER HASSAN MAREI No. 35068 Exp. 9/30/10 CIVIL STATE OF CALIFORNIA

THE STATE OF CALIFORNIA OR ITS OFFICERS OR AGENTS SHALL NOT BE RESPONSIBLE FOR THE ACCURACY OR COMPLETENESS OF ELECTRONIC COPIES OF THIS PLAN SHEET.

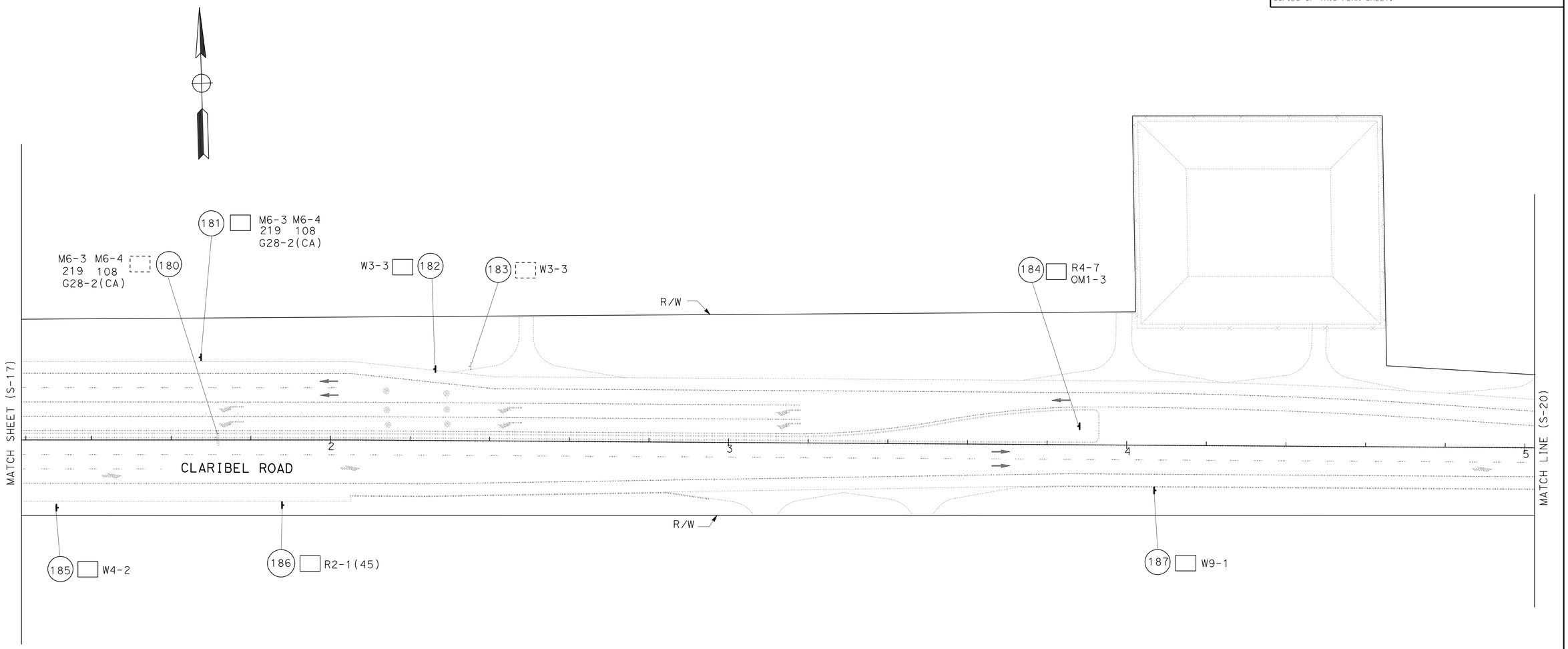

ALL DIMENSIONS ARE IN METERS UNLESS OTHERWISE SHOWN

SIGN PLAN

SCALE 1:500

S-19

THIS PLAN ACCURATE FOR SIGN WORK ONLY.

CALCULATED-DESIGNED BY	CN
CHECKED BY	
REVISED BY	
DATE REVISED	7/1/09
FUNCTIONAL SUPERVISOR	HASSAN MAREI
	CECILE NGUYEN
	ALI JUMA

STATE OF CALIFORNIA - DEPARTMENT OF TRANSPORTATION
Caltrans TRAFFIC DESIGN

LAST REVISION 00-00-00 DATE PLOTTED => 30-JUN-2010 TIME PLOTTED => 15:59

Dist	COUNTY	ROUTE	KILOMETER POST TOTAL PROJECT	SHEET No.	TOTAL SHEETS
10	Sta	219,108	3.4/7.9, 44.3/44.9	405	522

Hassan Marei 6/12/09
REGISTERED CIVIL ENGINEER DATE

6-28-10
PLANS APPROVAL DATE

REGISTERED PROFESSIONAL ENGINEER HASSAN MAREI No. 35068 Exp. 9/30/10 CIVIL STATE OF CALIFORNIA

THE STATE OF CALIFORNIA OR ITS OFFICERS OR AGENTS SHALL NOT BE RESPONSIBLE FOR THE ACCURACY OR COMPLETENESS OF ELECTRONIC COPIES OF THIS PLAN SHEET.

Caltrans Metric

NOTE: FOR COMPLETE R/W DATA, SEE R/W RECORD MAPS AT DISTRICT OFFICE.

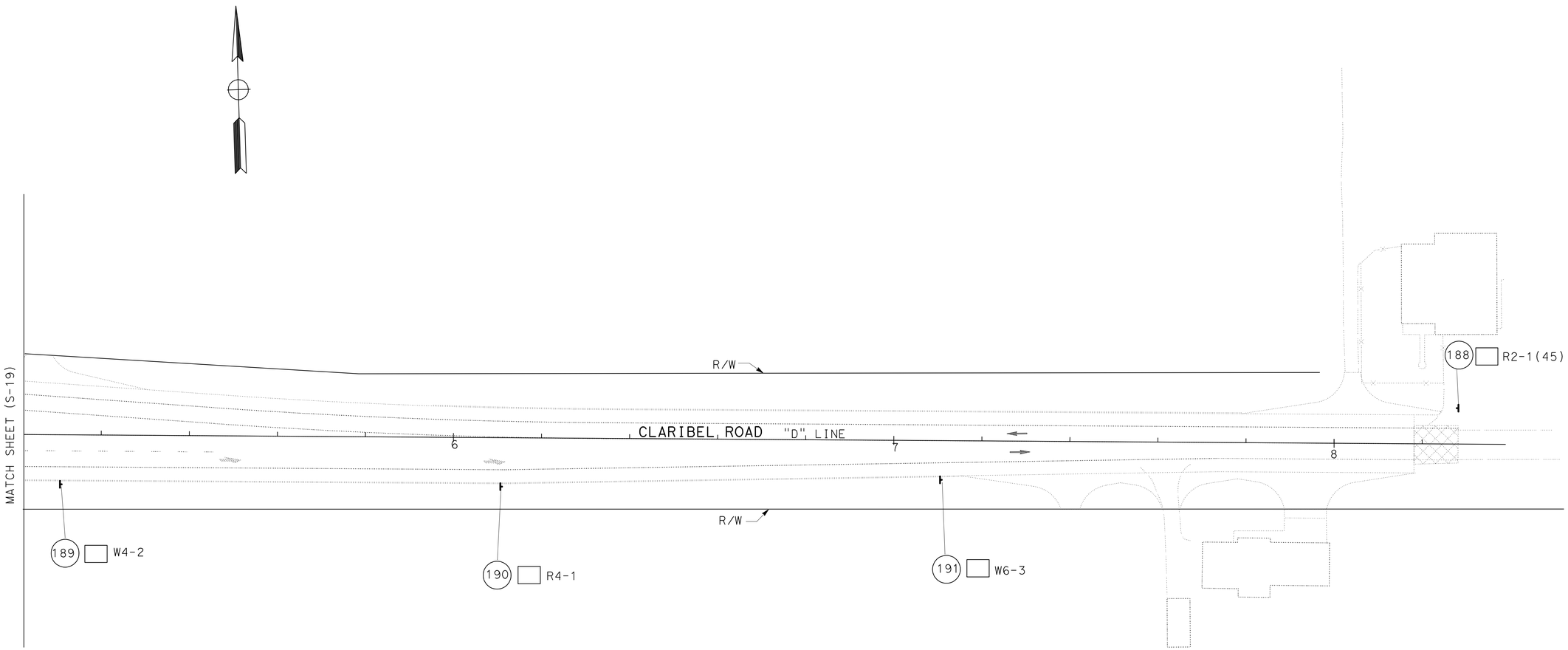

ALL DIMENSIONS ARE IN METERS UNLESS OTHERWISE SHOWN

SIGN PLAN

SCALE 1:500 **S-20**

THIS PLAN ACCURATE FOR SIGN WORK ONLY.

CALCULATED-DESIGNED BY	CHECKED BY	
CECILE NGUYEN	ALI JUMA	
REVISED BY	DATE REVISED	
CN	7/1/09	
FUNCTIONAL SUPERVISOR	HASSAN MAREI	

STATE OF CALIFORNIA - DEPARTMENT OF TRANSPORTATION
Caltrans TRAFFIC DESIGN

LAST REVISION 00-00-00 DATE PLOTTED => 30-JUN-2010 TIME PLOTTED => 15:59

Dist	COUNTY	ROUTE	KILOMETER POST TOTAL PROJECT	SHEET No.	TOTAL SHEETS
10	Sta	219,108	3.4/7.9, 44.3/44.9	406	522

Caltrans Metric

Hassan Marei 6/12/09
REGISTERED CIVIL ENGINEER DATE

6-28-10
PLANS APPROVAL DATE

REGISTERED PROFESSIONAL ENGINEER HASSAN MAREI No. 35068 Exp. 9/30/10 CIVIL STATE OF CALIFORNIA

THE STATE OF CALIFORNIA OR ITS OFFICERS OR AGENTS SHALL NOT BE RESPONSIBLE FOR THE ACCURACY OR COMPLETENESS OF ELECTRONIC COPIES OF THIS PLAN SHEET.

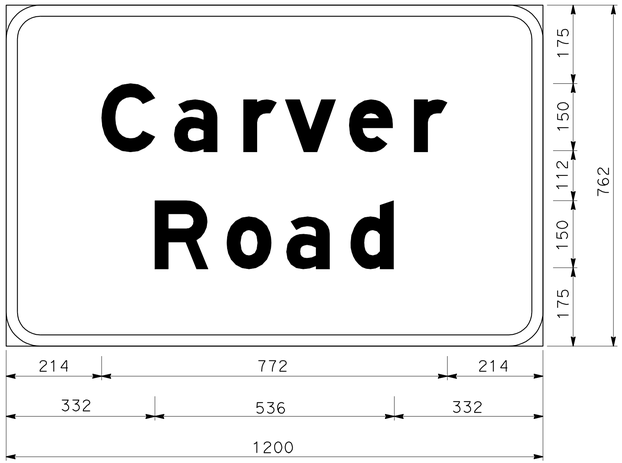

76 mm RADIUS, 25 mm BORDER, WHITE ON GREEN;
[Carver] E Mod; [Road] E Mod;

G7-2(CA)
SIGN NUMBER 53 & 67

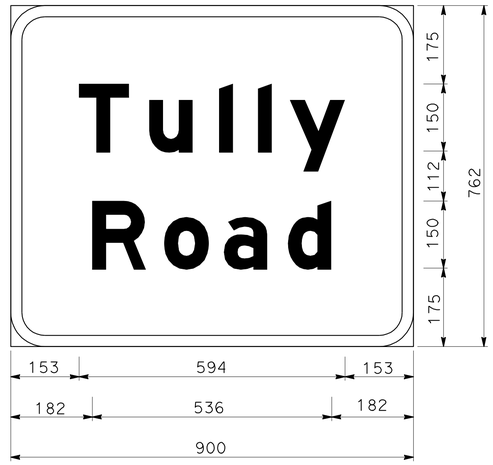

76 mm RADIUS, 25 mm BORDER, WHITE ON GREEN;
[Tully] E Mod; [Road] E Mod;

G7-2(CA)
SIGN NUMBER 82 & 105

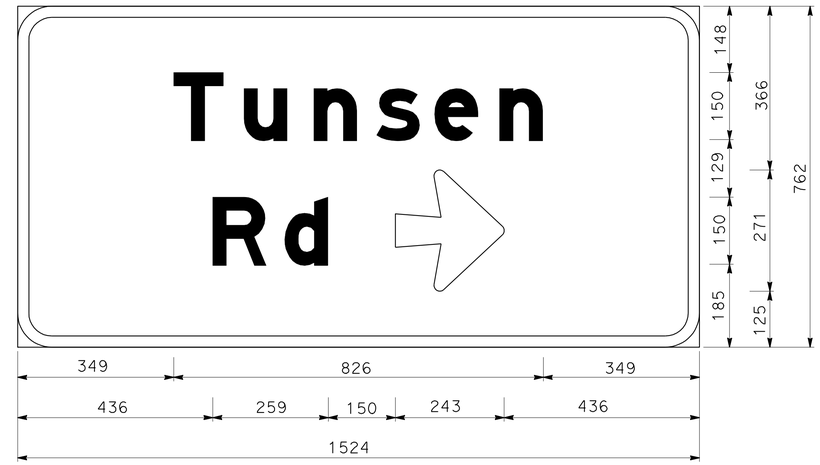

76 mm RADIUS, 25 mm BORDER, WHITE ON GREEN;
[Tunsen] E Mod; [Rd] E Mod;
Arrow 150UC-2LH - 243 mm 0°;

G8-22(CA)
SIGN NUMBER 124

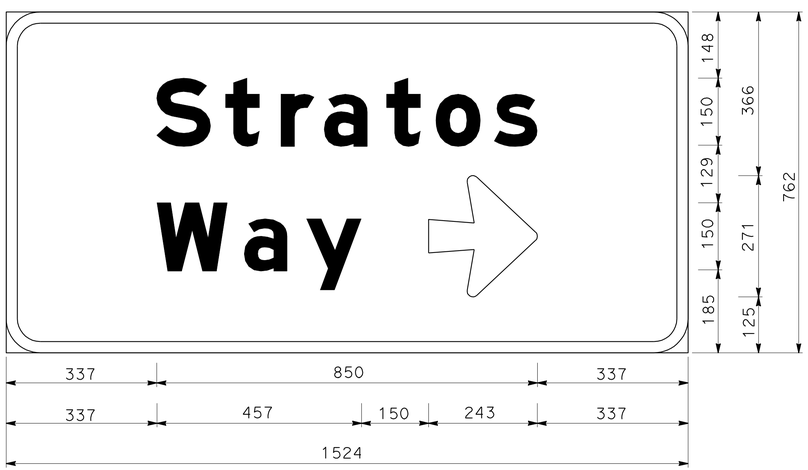

76 mm RADIUS, 25 mm BORDER, WHITE ON GREEN;
[Stratos] E Mod; [Way] E Mod;
ARROW 150UC-2LH - 243 mm 0°;

G8-22(CA)
SIGN NUMBER 135 & 136

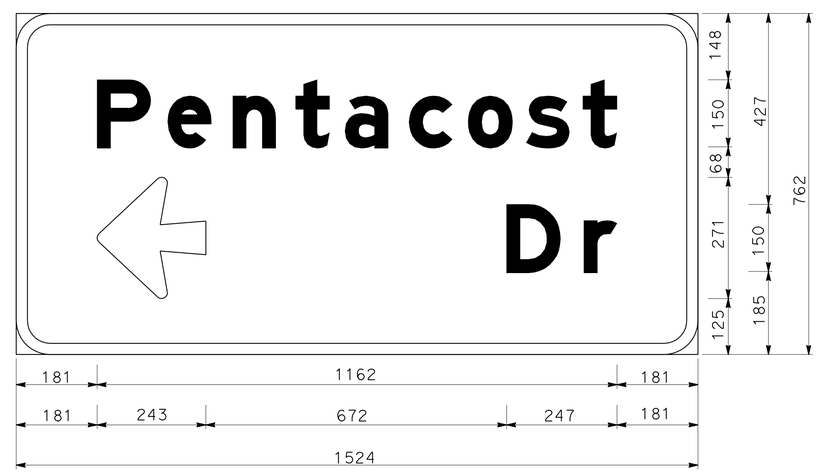

76 mm RADIUS, 25 mm BORDER, WHITE ON GREEN;
[Pentacost] E Mod; ARROW 150UC-2LH - 243 mm 180°;
[Dr] E Mod;

G8-22(CA)
SIGN NUMBER 139

ALL DIMENSIONS ARE IN
MILLIMETERS UNLESS OTHERWISE SHOWN

SIGN DETAILS

NO SCALE **SD-1**

CN	REVISED BY	6/24/09
CECILE NGUYEN	ALI JUMA	DATE REVISED
CALCULATED-DESIGNED BY	CHECKED BY	
FUNCTIONAL SUPERVISOR	HASSAN MAREI	

STATE OF CALIFORNIA - DEPARTMENT OF TRANSPORTATION
Caltrans
TRAFFIC DESIGN

LAST REVISION 00-00-00
DATE PLOTTED => 30-JUN-2010
TIME PLOTTED => 15:59

Dist	COUNTY	ROUTE	KILOMETER POST TOTAL PROJECT	SHEET No.	TOTAL SHEETS
10	Sta	219,108	3.4/7.9, 44.3/44.9	407	522

Caltrans Metric

Hassan Marei 6/12/09
REGISTERED CIVIL ENGINEER DATE

6-28-10
PLANS APPROVAL DATE

REGISTERED PROFESSIONAL ENGINEER HASSAN MAREI No. 35068 Exp. 9/30/10 CIVIL STATE OF CALIFORNIA

THE STATE OF CALIFORNIA OR ITS OFFICERS OR AGENTS SHALL NOT BE RESPONSIBLE FOR THE ACCURACY OR COMPLETENESS OF ELECTRONIC COPIES OF THIS PLAN SHEET.

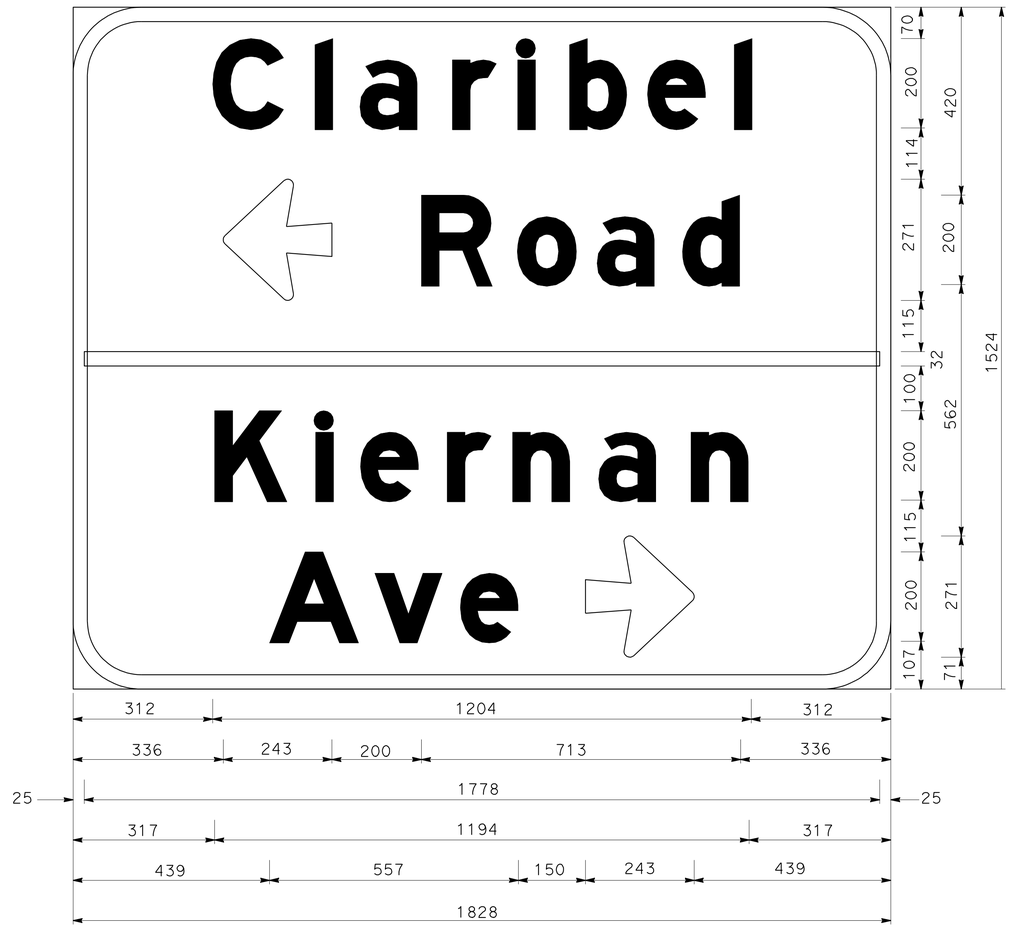

152 mm RADIUS, 32 mm BORDER, WHITE ON GREEN;
[Claribel] E Mod; ARROW 150UC-2LH - 243 mm 180°; [Road] E Mod;
[Kiernan] E Mod; [Ave] E Mod; ARROW 150UC-2LH - 243 mm 0°;

G8-22(CA) Spec
SIGN NUMBER 170

ALL DIMENSIONS ARE IN
MILLIMETERS UNLESS OTHERWISE SHOWN

SIGN DETAILS

NO SCALE

SD-2

STATE OF CALIFORNIA - DEPARTMENT OF TRANSPORTATION
Caltrans
TRAFFIC DESIGN

FUNCTIONAL SUPERVISOR: HASSAN MAREI
CALCULATED-DESIGNED BY: CECILE NGUYEN
CHECKED BY: ALI JUMA
REVISED BY: CN
DATE REVISED: 6/24/09

LAST REVISION 07-07-08
DATE PLOTTED => 30-JUN-2010
TIME PLOTTED => 15:59

Dist	COUNTY	ROUTE	KILOMETER POST TOTAL PROJECT	SHEET No.	TOTAL SHEETS
10	Sta	219,108	3.4/7.9, 44.3/44.9	408	522

Hassan Marei 6/12/09
REGISTERED CIVIL ENGINEER DATE

6-28-10
PLANS APPROVAL DATE

REGISTERED PROFESSIONAL ENGINEER HASSAN MAREI No. 35068 Exp. 9/30/10 CIVIL STATE OF CALIFORNIA

THE STATE OF CALIFORNIA OR ITS OFFICERS OR AGENTS SHALL NOT BE RESPONSIBLE FOR THE ACCURACY OR COMPLETENESS OF ELECTRONIC COPIES OF THIS PLAN SHEET.

Caltrans Metric

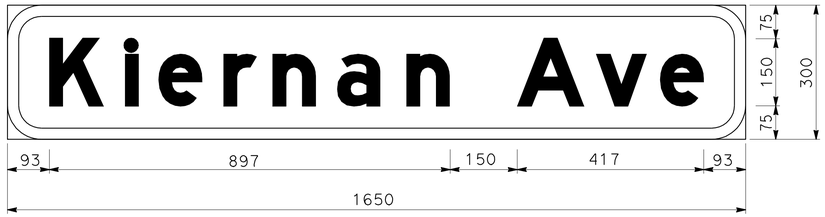

76 mm RADIUS, 25 mm BORDER, WHITE ON GREEN;
[Kiernan Ave] E Mod;

D3
SIGN NUMBER D3-1

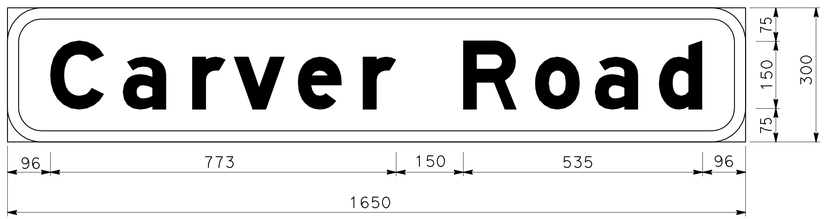

76 mm RADIUS, 25 mm BORDER, WHITE ON GREEN;
[Carver Road] E Mod;

D3
SIGN NUMBER D3-2

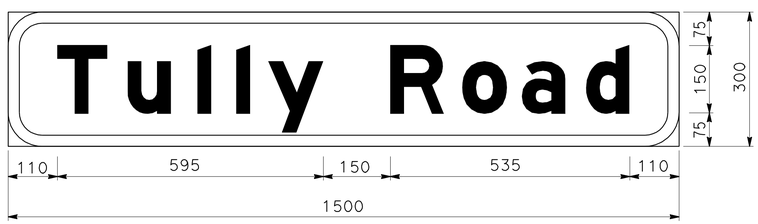

76 mm RADIUS, 25 mm BORDER, WHITE ON GREEN;
[Tully Road] E Mod;

D3
SIGN NUMBER D3-3

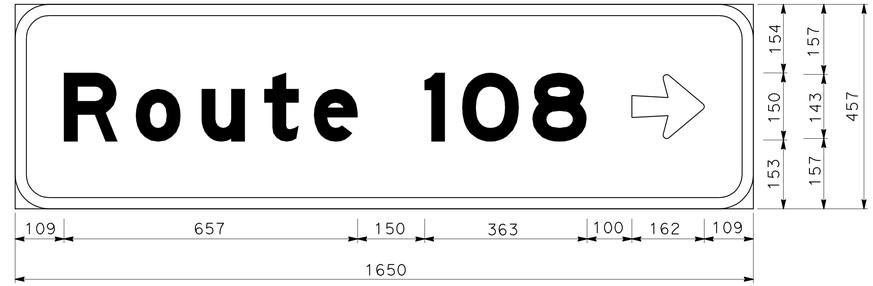

76 mm RADIUS, 25 mm BORDER, WHITE ON GREEN;
[Route 108] E Mod; ARROW 100UC&CAP-1L - 162 mm 0°;

D3
SIGN NUMBER D3-5

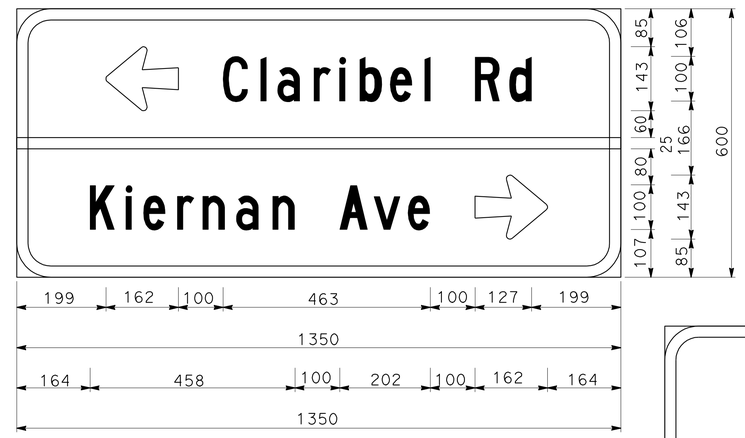

76 mm RADIUS, 25 mm BORDER, WHITE ON GREEN;
ARROW 100UC&CAP-1L - 162 mm 180°; [Claribel Rd] C;
[Kiernan Ave] C; ARROW 100UC&CAP-1L - 162 mm 0°;

D3
SIGN NUMBER D3-6

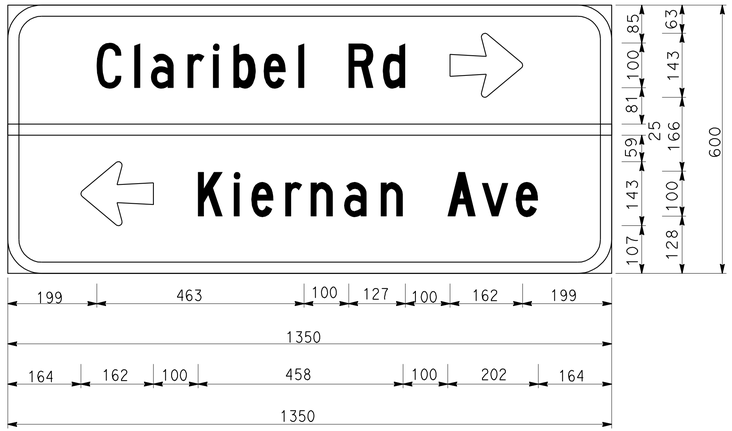

76 mm RADIUS, 25 mm BORDER, WHITE ON GREEN;
[Claribel Rd] C; ARROW 100UC&CAP-1L - 162 mm 0°;
ARROW 100UC&CAP-1L - 162 mm 180°;
[Kiernan Ave] C;

D3
SIGN NUMBER D3-7

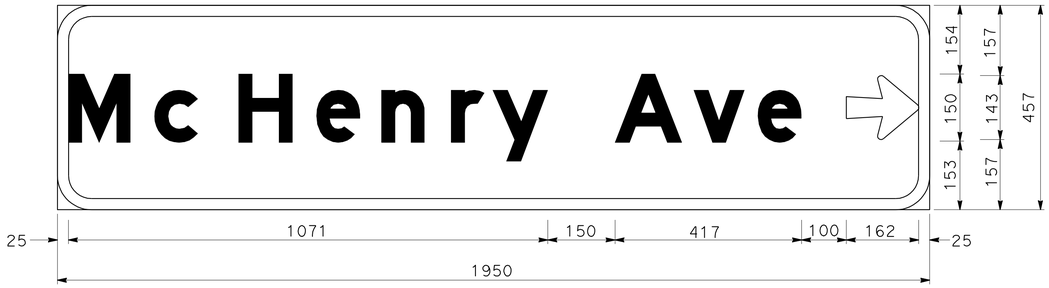

76 mm RADIUS, 25 mm BORDER, WHITE ON GREEN;
[McHenry Ave] E Mod; ARROW 100UC&CAP-1L - 162 mm 0°;

D3
SIGN NUMBER D3-4

ALL DIMENSIONS ARE IN
MILLIMETERS UNLESS OTHERWISE SHOWN

SIGN DETAILS

NO SCALE **SD-3**

STATE OF CALIFORNIA - DEPARTMENT OF TRANSPORTATION
Caltrans
TRAFFIC DESIGN

FUNCTIONAL SUPERVISOR: HASSAN MAREI
CALCULATED-DESIGNED BY: CECILE NGUYEN
CHECKED BY: ALI JUMA
REVISED BY: CN
DATE REVISED: 6/25/09

LAST REVISION 00-00-00
DATE PLOTTED => 30-JUN-2010
TIME PLOTTED => 15:59

Dist	COUNTY	ROUTE	KILOMETER POST TOTAL PROJECT	SHEET No.	TOTAL SHEETS
10	Sta	219,108	3.4/7.9, 44.3/44.9	409	522

Caltrans Metric

REGISTERED CIVIL ENGINEER 6/12/09 DATE

6-28-10
PLANS APPROVAL DATE

REGISTERED PROFESSIONAL ENGINEER HASSAN MAREI No. 35068 Exp. 9/30/10 CIVIL STATE OF CALIFORNIA

THE STATE OF CALIFORNIA OR ITS OFFICERS OR AGENTS SHALL NOT BE RESPONSIBLE FOR THE ACCURACY OR COMPLETENESS OF ELECTRONIC COPIES OF THIS PLAN SHEET.

NOTES:

1. QUANTITIES ARE BASED ON 1- SIDE WALKWAY.
2. FOR DIMENSIONS SEE TYPICAL CROSS SECTIONS SHEET.
3. CHANGEABLE MESSAGE SIGN PANEL WILL BE STATE FURNISHED.
4. THE CONTRACTOR SHALL VERIFY ALL CONTROLLING FIELD DIMENSIONS BEFORE ORDERING OR FABRICATING ANY MATERIAL.

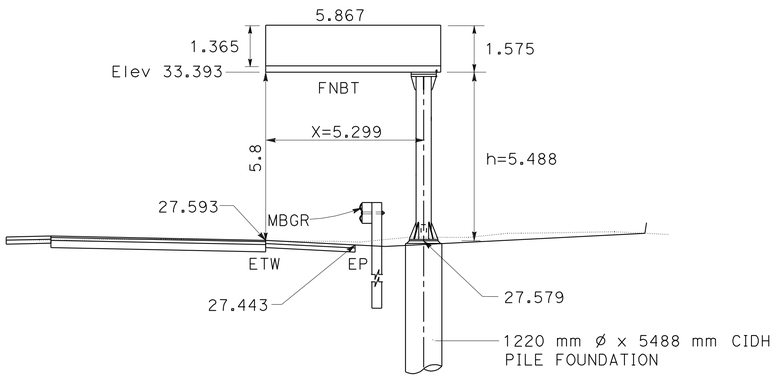

A FNBT STA 40+50
CHANGEABLE MESSAGE SIGN

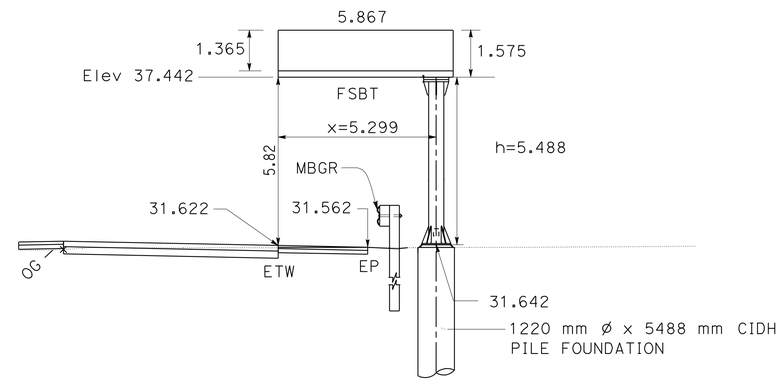

B FSBT STA 73+05
CHANGEABLE MESSAGE SIGN

CHANGEABLE MESSAGE SIGN QUANTITIES

CMS TYPE	LOCATION	STATION	ROUTE	ORIENTATION	X (m)	"h" (m)	Elev B (m)	QUANTITIES: FURNISH SIGN STRUCTURE TRUSS (kg)	INSTALL SIGN STRUCTURE TRUSS (kg)	1220 mm Dia CIDH PILE (m)
CANTILEVER MODEL 510	A	40+50	219	FNBT	5.299	5.814	27.579	4960	4960	5.488
CANTILEVER MODEL 510	B	73+05	219	FSBT	5.299	5.8	31.642	4958	4958	5.488
TOTAL								9918	9918	10.976

ALL DIMENSIONS ARE IN METERS UNLESS OTHERWISE SHOWN

SIGN DETAILS AND SIGN QUANTITIES

NO SCALE

SD-4

REVISED BY	DATE REVISED
CN	6/25/09

CECILE NGUYEN
ALI JUMA
CALCULATED-DESIGNED BY
CHECKED BY
FUNCTIONAL SUPERVISOR
HASSAN MAREI

STATE OF CALIFORNIA - DEPARTMENT OF TRANSPORTATION
Caltrans
TRAFFIC DESIGN

LAST REVISION 00-00-00
DATE PLOTTED => 30-JUN-2010
TIME PLOTTED => 16:00

Dist	COUNTY	ROUTE	KILOMETER POST TOTAL PROJECT	SHEET No.	TOTAL SHEETS
10	Sta	219,108	3.4/7.9, 44.3/44.9	410	522

Hassan Marei 6/12/09
REGISTERED CIVIL ENGINEER DATE

6-28-10
PLANS APPROVAL DATE

REGISTERED PROFESSIONAL ENGINEER HASSAN MAREI No. 35068 Exp. 9/30/10 CIVIL STATE OF CALIFORNIA

THE STATE OF CALIFORNIA OR ITS OFFICERS OR AGENTS SHALL NOT BE RESPONSIBLE FOR THE ACCURACY OR COMPLETENESS OF ELECTRONIC COPIES OF THIS PLAN SHEET.

Caltrans Metric

STATE TRANSPORTATION BOND FUNDS

ATWORK

SCTC
STANISLAUS COUNTY TRANSPORTATION COMMISSION

Caltrans

SR 219 WIDENING

COMPLETION
FALL 2011

SLOW FOR THE CONE ZONE

J A B C C

D E F G H J G K J L M K G F J G

DIMENSIONS IN METERS

A	B	C	D	E	F	G	H	J	K	L	M
3.36	2.70	0.05	0.18	0.46	0.10	0.13	0.3	0.15	0.2D	0.15D	0.08

SR 219 WIDENING BOND FUND SIGN

COLORS: BORDER - PURPLE (PANTONE #520)

LEGEND - BLACK, WHITE AND ORANGE

BACKGROUND - PURPLE (PANTONE #520) AND WHITE

CT LOGO - BLUE (PANTONE #326) AND BLUE (PANTONE #299) AND BLACK

SCTC LOGO - BLUE (PANTONE #293)

1. VECTOR FILES FOR LOGO TO BE SUPPLIED TO THE SIGN MANUFACTURER UPON REQUEST.
2. COMPLY WITH 2006 STANDARD PLANS S93 AND S94 FOR SIGN PANEL.
3. COMPLY WITH ASTM TYPE II RETROREFLECTIVE SHEETING (OR HIGHER GRADE) FOR ALL COLORS EXCEPT BLACK.
4. LEGEND AND ARTWORK MAY BE TRANSPARENT FILM, INK, OR APPLIED DECALS.
5. OVERLAY ENTIRE SIGN FACE WITH PREMIUM GRADE GRAFFITI FILM.
6. COMPLY WITH RETROREFLECTIVE SHEETING MANUFACTURER'S RECOMMENDATIONS FOR TRANSPARENT FILM, INK, APPLIED DECALS AND GRAFFITI FILM.
7. MAIN TEXT (WITHIN CENTRAL WHITE BOX), USE FHWA STANDARD ALPHABET SERIES D LETTERS AT SIZES SPECIFIED.

ALL DIMENSIONS ARE IN METERS UNLESS OTHERWISE SHOWN

SIGN DETAILS

NO SCALE **SD-5**

CN	6/25/09
REVISED BY	DATE REVISED
CECILE NGUYEN	
ALI JUMA	
CALCULATED-DESIGNED BY	
CHECKED BY	
FUNCTIONAL SUPERVISOR	
HASSAN MAREI	

STATE OF CALIFORNIA - DEPARTMENT OF TRANSPORTATION
Caltrans **TRAFFIC DESIGN**

LAST REVISION 00-00-00 | DATE PLOTTED => 02-JUL-2010 | TIME PLOTTED => 05:27

Dist	COUNTY	ROUTE	KILOMETER POST TOTAL PROJECT	SHEET No.	TOTAL SHEETS
10	Sta	219,108	3.4/7.9, 44.3/44.9	411	522

Hassan Marei 6/12/09
REGISTERED CIVIL ENGINEER DATE

6-28-10
PLANS APPROVAL DATE

REGISTERED PROFESSIONAL ENGINEER HASSAN MAREI No. 35068 Exp. 9/30/10 CIVIL STATE OF CALIFORNIA

THE STATE OF CALIFORNIA OR ITS OFFICERS OR AGENTS SHALL NOT BE RESPONSIBLE FOR THE ACCURACY OR COMPLETENESS OF ELECTRONIC COPIES OF THIS PLAN SHEET.

Caltrans Metric

SIGN QUANTITIES

SIGN No.	SIGN CODE	SIGN MESSAGE	SIGN SIZE (L X D)	No. OF POST AND POST SIZE	ROADSIDE SIGN-ONE POST	ROADSIDE SIGN-TWO POST	RELOCATE ROADSIDE SIGN	REMOVE ROADSIDE SIGN	SIGN MATERIALS: FURNISH SINGLE SHEET ALUMINUM SIGN 1.6 mm FRAMED	1.6 mm-UNFRAMED	2.0 mm-UNFRAMED	DOULE FACED	SINGLE FACED	BACKGROUND SHEETING COLOR	BACKGROUND RETROFLECTIVE ASTM TYPE	LEGEND SHEETING COLOR	LEGEND RETROFLECTIVE ASTM TYPE	GRAFFITI FILM STANDARD	GRAFFITI FILM PREMIUM
			mm x mm	mm x mm	EA		EA	EA		m2									
1	R81	BIKE LANE	600 x 450	1- 89 x 89	1					0.27			×	WHITE	III	BLACK			×
	R26(CA)	NO PARKING ANY TIME	600 x 750							0.45				WHITE	II	RED	II	×	
2	R1-1	STOP	750 x 750	1- 89 x 140	1					0.56			×	RED	VII	WHITE	VII		×
3	R1-1	STOP						1											
3a	R3-5R+		750 x 900	1- 89 x 89	1					0.68			×	WHITE	III	BLACK			×
4	D11-1	BIKE ROUTE	762 x 610	1- 89 x 89	1					0.46			×	GREEN	IV	WHITE	IV		×
	M7-1		300 x 225							0.07				GREEN	IV	WHITE	IV		
5	R36(CA)	COMMERCIAL VEHICLE WEIGHT EXCLUSION						1											
6	R36(CA)	COMMERCIAL VEHICLE WEIGHT EXCLUSION	610 x 610	1- 89 x 89	1					0.37			×	WHITE	III	BLACK			×
7	S32A(CA)	ADOPT-A-HIGHWAY SYMBOL						1											
	S32(CA)	ADOPT-A-HIGHWAY																	
	S32-1(CA)	LITTER REMOVAL																	
8	R6-1	ONE WAY	914 x 305	1- 89 x 89	1					0.28				WHITE	III	BLACK			×
9	R6-1	ONE WAY	914 x 305	1- 89 x 140	1					0.28			×	WHITE	III	BLACK			×
10	S32A(CA)	ADOPT-A-HIGHWAY SYMBOL	381 x 457	1- 89 x 89	1					0.17			×	WHITE/ TEALG	II	WHITE	II	×	
	S32(CA)	ADOPT-A-HIGHWAY	914 x 762							0.70					II		II	×	
	S32-1(CA)	LITTER REMOVAL	381 x 457							0.17					II	MULTI		×	
12	R6-1R	ONE WAY	914 x 305	1- 89 x 89	1					0.28			×	WHITE	III	W/B			×
13	R81(CA)	BIKE LANE	600 x 450	1- 89 x 89	1					0.27			×	WHITE	III	BLACK			×
	R26(CA)	NO PARKING ANY TIME	600 x 750							0.45				WHITE	II	RED	II	×	
14	G8-22(CA)	Morrow ←					1												
15	R6-1	ONE WAY	914 x 305	1- 89 x 89	1					0.28			×	BLACK	III	W/B			×
16	R1-1	STOP						1											
16a	R3-5R+		750 x 900	1- 89 x 89	1					0.68			×	WHITE	III	BLACK			×
17	R1-1	STOP	750 x 750	1- 89 x 89	1					0.56			×	RED	VII	WHITE	VII		×
18	D11-1		762 x 610	1- 89 x 89	1					0.46			×	GREEN	IV	WHITE	IV		×
	M7-1		300 x 225							0.07			×	GREEN	IV	WHITE	IV		
19	R26(CA)	NO PARKING ANY TIME	600 x 750	1- 89 x 89	1					0.45				WHITE	II	RED	II	×	
	R81	BIKE LANE	600 x 450							0.27				WHITE	III	BLACK			×
20	W3-3	SIGNAL AHEAD	900 x 900	1- 89 x 140	1					0.81			×	YELLOW	VII	R/G/B			×
21	W3-3	SIGNAL AHEAD	900 x 900	1- 89 x 140	1					0.81			×	YELLOW	VII	R/G/B			×
22	S5-2	END SCHOOL ZONE	900 x 1200	1- 89 x 140	1					1.08			×	YELLOW	VII	BLACK			×
23	S5-2	END SCHOOL ZONE	900 x 1200	1- 89 x 140	1					1.08			×	YELLOW	VII	BLACK			×
24	R81(CA)	BIKE LANE	600 x 450	1- 89 x 89	1					0.27			×	WHITE	III	BLACK			×
	R26(CA)	NO PARKING ANY TIME	600 x 750							0.45				WHITE	II	RED	II	×	
25	R4-7	KEEP RIGHT	900 x 1200	1- 89 x 140	1					1.08			×	WHITE	III	BLACK			×
26	R3-5	MANDATORY MOVEMENT	750 x 900	1- 89 x 89	1					0.68			×	WHITE	III	BLACK			×
27	S4-3	SCHOOL PLAQUE	900 x 375	1- 89 x 140	1					0.34			×	YELLOW	VII	BLACK		×	×
	R2-1	SPEED LIMIT	900 x 1200							1.08				WHITE	III	BLACK			
	S4-2	SCHOOL PLAQUE	900 x 375							0.34				WHITE	III	BLACK			
28	S4-3	SCHOOL PLAQUE	900 x 375	1- 89 x 140	1					0.34			×	YELLOW	VII	BLACK		×	×
	R2-1	SPEED LIMIT	900 x 1200							1.08				WHITE	III	BLACK			
	S4-2	SCHOOL PLAQUE	900 x 375							0.34				WHITE	III	BLACK			
29	R6-1	ONE WAY	914 x 305	1-89 x 89	1					0.28			×	BLACK		B/W	III	×	
30	R4-7	KEEP RIGHT	900 x 1200	1- 89 x 140	1					1.08				WHITE	III	BLACK			×
31	R81(CA)	BIKE LANE	600 x 450	1- 89 x 89	1					0.27			×	WHITE	III	BLACK			×
	R26(CA)	NO PARKING ANY TIME	600 x 750							0.45				WHITE	II	RED	II	×	
32	R6-1	ONE WAY	914 x 305	1-89 x 89	1					0.28			×	BLACK		B/W	III		
33	R81(CA)	BIKE LANE	600 x 450	1- 89 x 89	1					0.27			×	WHITE	III	BLACK			×
	R26(CA)	NO PARKING ANY TIME	600 x 750							0.45				WHITE	II	RED	II	×	
				SUBTOTAL	29		1	4		21.09									

ABBREVIATIONS

B/R = BLUE/RED
B/W = BLUE/WHITE
R/G/B = RED/GREEN/BLACK
L = LENGTH OF SIGN
D = DEPTH OF SIGN

NOTES: 1. EXACT SIGN LOCATIONS TO BE DETERMINED BY THE ENGINEER.
2. CALIFORNIA SIGN CODES ARE DESIGNATED BY (CA), OTHERWISE FEDERAL SIGN CODES ARE SHOWN.

SIGN QUANTITIES
SQ-1

REVISED BY CN | DATE REVISED 7/1/09
CALCULATED-DESIGNED BY CECILE NGUYEN | CHECKED BY ALI JUMA
FUNCTIONAL SUPERVISOR HASSAN MAREI
STATE OF CALIFORNIA - DEPARTMENT OF TRANSPORTATION
Caltrans TRAFFIC DESIGN

LAST REVISION 00-00-00 | DATE PLOTTED => 30-JUN-2010 | TIME PLOTTED => 16:00

Dist	COUNTY	ROUTE	KILOMETER POST TOTAL PROJECT	SHEET No.	TOTAL SHEETS
10	Sta	219,108	3.4/7.9, 44.3/44.9	412	522

Caltrans Metric

Hassan Marei 6/12/09
REGISTERED CIVIL ENGINEER DATE

6-28-10
PLANS APPROVAL DATE

REGISTERED PROFESSIONAL ENGINEER HASSAN MAREI No. 35068 Exp. 9/30/10 CIVIL STATE OF CALIFORNIA

THE STATE OF CALIFORNIA OR ITS OFFICERS OR AGENTS SHALL NOT BE RESPONSIBLE FOR THE ACCURACY OR COMPLETENESS OF ELECTRONIC COPIES OF THIS PLAN SHEET.

SIGN QUANTITIES

SIGN No.	SIGN CODE	SIGN MESSAGE	SIGN SIZE (L X D)	No. OF POST AND POST SIZE	ROADSIDE SIGN (ONE POST)	ROADSIDE SIGN (TWO POST)	RELOCATE ROADSIDE SIGN	REMOVE ROADSIDE SIGN	SIGN MATERIALS: FURNISH SINGLE SHEET ALUMINUM SIGN 1.6 mm FRAMED	1.6 mm-UNFRAMED	2.0 mm-UNFRAMED	DOUBLE FACED	SINGLE FACED	BACKGROUND SHEETING COLOR	BACKGROUND RETROFLECTIVE ASTM TYPE	LEGEND SHEETING COLOR	LEGEND RETROFLECTIVE ASTM TYPE	GRAFFITI FILM STANDARD	GRAFFITI FILM PREMIUM
			mm x mm	mm x mm	EA	EA	EA	EA	m2										
33a	R3-5	MANDATORY MOVEMENT	750 x 900	1- 89 x 89	1					0.68			×	WHITE	III	BLACK			×
34	W3-3	SIGNAL AHEAD	900 x 900	1- 89 x 140	1					0.81			×	YELLOW	VII	R/G/B			×
35	W3-3	SIGNAL AHEAD	900 x 900	1- 89 x 140	1					0.81			×	YELLOW	VII	R/G/B			×
36	R3-7	RIGHT LANE MUST TURN RIGHT	900 x 900	1- 89 x 140	1					0.81			×	WHITE	III	BLACK			×
37	S4-3	SCHOOL PLAQUE	900 x 375	1- 89 x 140	1					0.34			×	YELLOW	VII	BLACK		×	×
	R2-1	SPEED LIMIT	900 x 1200							1.08				WHITE	III	BLACK			
	S4-2	SCHOOL PLAQUE	900 x 375							0.34				WHITE	III	BLACK			
38	S4-3	SCHOOL PLAQUE	900 x 375	1- 89 x 140	1					0.34			×	YELLOW	VII	BLACK		×	×
	R2-1	SPEED LIMIT	900 x 1200							1.08				WHITE	III	BLACK			
	S4-2	SCHOOL PLAQUE	900 x 375											WHITE	III	BLACK			
39	S5-2	END SCHOOL ZONE	900 x 1200	1- 89 x 140	1					1.08			×	YELLOW	VII	BLACK			×
40	S5-2	END SCHOOL ZONE	900 x 1200	1- 89 x 140	1					1.08			×	YELLOW	VII	BLACK			×
41	W4-2L	LANE END SYMBOL	900 x 900	1- 89 x 140	1					0.81			×	YELLOW	VII	BLACK			
42	R81(CA)	BIKE LANE	600 x 450	1- 89 x 89	1					0.27			×	WHITE	III	BLACK			×
	R26(CA)	NO PARKING ANY TIME	600 x 750							0.45				WHITE	II	RED	II	×	
43	W9-1	LEFT LANE END	900 x 900	1- 89 x 140	1					0.81			×	YELLOW	VII	BLACK			×
43a	R1-1	STOP						2											
43b	D11-1 M7-1	BIKE ROUTE GUIDE BIKE DIRECTION ARROW	300 x 225 600 x 450	1- 89 x 89	1					0.07 0.27			×	GREEN	IV	WHITE	IV		×
44	R36(CA)	COMMERCIAL VEHICLE WEIGHT EXCLUSION						1											
45	R36(CA)	COMMERCIAL VEHICLE WEIGHT EXCLUSION	610 x 610	1- 89 x 89	1					0.37			×	WHITE	III	BLACK			×
46	D3	STREET NAME					1												
47	R4-7	KEEP RIGHT	900 x 1200	1- 89 x 140	1					1.08			×	WHITE	III	BLACK			×
48	R6-1	ONE WAY	900 x 300	1- 89 x 89	1					0.27				BLACK		B/W		×	
49	R3-7	RIGHT LANE MUST TURN RIGHT	900 x 900	1- 89 x 140	1					0.81				WHITE	III	BLACK			×
50	W3-3	SIGNAL AHEAD	900 x 900	1- 89 x 140	1					0.81			×	YELLOW	VII	R/G/B			×
51	W3-3	SIGNAL AHEAD	900 x 900	1- 89 x 140	1					0.81			×	YELLOW	VII	R/G/B			×
52	M16-8	Carver Road						1											
53	M16-8	Carver Road	1200 x 762	1- 89 x 140	1				0.91				×	GREEN	IV	WHITE	IV		×
55	R3-7	RIGHT LANE MUST TURN RIGHT	900 x 900	1- 89 x 140	1					0.81			×	WHITE	III	BLACK			×
56	R6-1	ONE WAY	900 x 300	1-89 x 89	1					0.27			×	BLACK		B/W		×	
57	R4-7	KEEP RIGHT	900 x 1200		1					1.08			×	WHITE	III	BLACK			×
58	D3						1												
58a	R2-1(35)	SPEED LIMIT (35)	900 x 1200	1- 89 x 140	1					1.08			×	WHITE	III	BLACK			×
59	W1-4	REVERSE CURVE	900 x 900	1- 89 x 140	1					0.81			×	YELLOW	VII	BLACK			×
60	D11-1	BIKE ROUTE	762 x 610	1- 89 x 89	1					0.46			×	GREEN	IV	WHITE	IV		×
	M7-1		300 x 225							0.07				GREEN	IV	WHITE	IV		
61	R81(CA)	BIKE LANE	600 x 450	1- 89 x 89	1					0.27			×	WHITE	III	BLACK			×
	R26(CA)	NO PARKING ANY TIME	600 x 750							0.45				WHITE	II	RED	II	×	
62	W1-4	REVERSE CURVE	900 x 900	1- 89 x 140	1					0.81				YELLOW	VII	BLACK			×
			SUBTOTAL		27		2	4	0.91	21.39									

SIGN QUANTITIES
SQ-2

REVISED BY	DATE REVISED	CALCULATED-DESIGNED BY	CHECKED BY	FUNCTIONAL SUPERVISOR
CN	6/24/09	CECILE NGUYEN	ALI JUMA	HASSAN MAREI

STATE OF CALIFORNIA - DEPARTMENT OF TRANSPORTATION
Caltrans TRAFFIC DESIGN

LAST REVISION 00-00-00 DATE PLOTTED => 30-JUN-2010 TIME PLOTTED => 16:00

Dist	COUNTY	ROUTE	KILOMETER POST TOTAL PROJECT	SHEET No.	TOTAL SHEETS
10	Sta	219,108	3.4/7.9, 44.3/44.9	413	522

REGISTERED CIVIL ENGINEER — DATE 6/12/09

6-28-10
PLANS APPROVAL DATE

REGISTERED PROFESSIONAL ENGINEER HASSAN MAREI No. 35068 Exp. 9/30/10 CIVIL STATE OF CALIFORNIA

THE STATE OF CALIFORNIA OR ITS OFFICERS OR AGENTS SHALL NOT BE RESPONSIBLE FOR THE ACCURACY OR COMPLETENESS OF ELECTRONIC COPIES OF THIS PLAN SHEET.

Caltrans Metric

SIGN QUANTITIES

SIGN No.	SIGN CODE	SIGN MESSAGE	SIGN SIZE (L X D)	No. OF POST AND POST SIZE	ROADSIDE SIGN (ONE POST)	ROADSIDE SIGN (TWO POST)	RELOCATE ROADSIDE SIGN	REMOVE ROADSIDE SIGN	SIGN MATERIALS: FURNISH SINGLE SHEET ALUMINUM SIGN 1.6 mm FRAMED	1.6 mm-UNFRAMED	2.0 mm-UNFRAMED	DOUBLE FACED	SINGLE FACED	BACKGROUND SHEETING COLOR	BACKGROUND RETROFLECTIVE ASTM TYPE	LEGEND SHEETING COLOR	LEGEND RETROFLECTIVE ASTM TYPE	GRAFFITI FILM STANDARD	GRAFFITI FILM PREMIUM
			mm x mm	mm x mm	EA	EA	EA	EA	m^2										
63	R2-1(35)	SPEED LIMIT (35)	900 x 1200	1-89 x 140	1					1.08			×	WHITE	III	BLACK			×
64	W3-3	SIGNAL AHEAD	900 x 900	1-89 x 140	1					0.81			×	YELLOW	VII	BLACK			×
65	W3-1	STOP AHEAD						1											
65a	W3-3	SIGNAL AHEAD	900 x 900	1-89 x 140	1					0.81			×	YELLOW	VII	BLACK			×
66	R2-1(35)	SPEED LIMIT (35)	900 x 1200	1-89 x 140	1					0.27			×	WHITE	III	BLACK			×
67	M16-8	CARVER Rd	1200 x 762	1-89 x 140	1				0.91				×	GREEN	IV	WHITE	IV		×
67a	M16-8	CARVER Rd						1											
68	W3-3	SIGNAL AHEAD	900 x 900	1-89 x 140	1					0.81			×	YELLOW	VII	R/G/B			×
69	W3-3	SIGNAL AHEAD	900 x 900	1-89 x 140	1					0.81			×	YELLOW	VII	R/G/B			×
71	W3-3	SIGNAL AHEAD	900 x 900	1-89 x 140	1					0.81			×	YELLOW	VII	R/G/B			×
72	R81(CA)	BIKE LANE	600 x 450	1-89 x 89	1					0.27			×	WHITE	III	BLACK			×
	R26(CA)	NO PARKING ANY TIME	600 x 750							0.45				WHITE	II	RED	II	×	
73	R6-1	ONE WAY	900 x 300	1-89 x 89	1					0.27			×	BLACK		B/W		×	
74	R4-7	KEEP RIGHT	900 x 1200	1-89 x 140	1					1.08			×	WHITE	III	BLACK			×
74a	R1-1/R3-1	STOP/4-WAY						4											
75	D11-1	BIKE ROUTE	762 x 610	1-89 x 89	1					0.46			×	GREEN	IV	WHITE	IV		×
	M7-1		300 x 225							0.07				GREEN	IV	WHITE	IV		
76	R4-1	DO NOT PASS						1											
76a	R2-1(35)	SPEED LIMIT (35)	900 x 1200	1-89 x 140	1					1.08				WHITE	III	BLACK			×
77	R4-1	DO NOT PASS	900 x 1200	1-89 x 140	1					1.08				WHITE	III	BLACK			×
78	R36(CA)	COMMERCIAL VEHICLE WEIGHT EXCLUSION (7 TONS)						1											
79	R36(CA)	COMMERCIAL VEHICLE WEIGHT EXCLUSION (7 TONS)	610 x 610	1-89 x 89	1					0.37			×	WHITE	III	BLACK			×
80	W3-3	SIGNAL AHEAD	900 x 900	1-89 x 140	1					0.81			×	YELLOW	VII	R/G/B			×
80a	W3-1							1											
81	G8-22(CA) R5-2 M6-1L	Tully Road NO TRUCK DIRECTION ARROW AUXILIARY						1											
82	G8-22(CA)	Tully Road	900 x 762	1-89 x 89	1					0.69				GREEN	IV	WHITE	IV		×
	R5-2	NO TRUCK	900 x 900							0.81				WHITE	III	B/R		×	
	M6-1L	DIRECTION ARROW AUXILIARY	525 x 762							0.20				WHITE	III	BLACK		×	
84	R3-7	RIGHT LANE MUST TURN RIGHT	900 x 900	1-89 x 140	1					0.81				WHITE	III	BLACK			×
85	W9-1	RIGHT LANE ENDS	750 x 750	1-89 x 89	1					0.56				YELLOW	VII	BLACK			×
85a	R2-1(35)	SPEED LIMIT (35)	900 x 1200	1-89 x 140	1					1.08				WHITE	III	BLACK			×
86	D11-1	BIKE ROUTE	762 x 610	1-89 x 89	1					0.46			×	GREEN	IV	WHITE	IV		
	M7-1		300 x 225							0.07				GREEN	IV	WHITE	IV		×
87a	D3	STREET NAME					1												
87	R4-7	KEEP RIGHT	900 x 1200	1-89 x 140	1					1.08				WHITE	III	BLACK			×
88	R6-1	ONE WAY	900 x 300	1-89 x 89	1					0.27				BLACK		B/W		×	
89	W9-1	RIGHT LANE ENDS	1200 x 1200	1-89 x 140	1						1.44			YELLOW	VII	BLACK			×
90	R81(CA)	BIKE LANE	600 x 450	1-89 x 89	1					0.27			×	WHITE	III	BLACK			×
	R26(CA)	NO PARKING ANY TIME	600 x 750							0.45				WHITE	II	RED	II	×	
91	W4-2	LANE END SYMBOL	750 x 750	1-89 x 89	1					0.56				YELLOW	VII	BLACK			×
92	R4-1	DO NOT PASS	450 x 600		1					0.27				WHITE	III	BLACK			×
93	W6-3	TWO WAY TRAFFIC SYMBOL	750 x 750	1-89 x 89	1					0.56				YELLOW	VII	BLACK			×
94	R2-1(35)	SPEED LIMIT (35)	600 x 750	1-89 x 89	1					0.45				WHITE	III	BLACK			×
95	W3-3	SIGNAL AHEAD	750 x 750	1-89 x 89	1					0.56				YELLOW	VII	R/G/B			×
95a	W3-1	STOP AHEAD						1											
96	R3-7	RIGHT LANE MUST TURN RIGHT	750 x 750	1-89 x 89	1					0.56				WHITE	III	BLACK			×
97	W3-1	STOP AHEAD						1											
97a	W3-3	SIGNAL AHEAD	750 x 750	1-89 x 89	1					0.56				YELLOW	VII	BLACK			×
98	R2-1(35)	SPEED LIMIT (35)	600 x 750	1-89 x 89	1					0.45				WHITE	III	BLACK			×
99	R2-1(50)	SPEED LIMIT (50)						1											
				SUBTOTAL	33		1	13	0.91	22.06	1.44								

STATE OF CALIFORNIA - DEPARTMENT OF TRANSPORTATION
Caltrans
TRAFFIC DESIGN

FUNCTIONAL SUPERVISOR: HASSAN MAREI
CALCULATED-DESIGNED BY: CECILE NGUYEN
CHECKED BY: ALI JUMA
REVISED BY: CN
DATE REVISED: 7/1/09

LAST REVISION 00-00-00
DATE PLOTTED => 30-JUN-2010
TIME PLOTTED => 16:01

SIGN QUANTITIES
SQ-3

Dist	COUNTY	ROUTE	KILOMETER POST TOTAL PROJECT	SHEET No.	TOTAL SHEETS
10	Sta	219,108	3.4/7.9, 44.3/44.9	414	522

Caltrans Metric

Hassan Marei 6/12/09
REGISTERED CIVIL ENGINEER DATE

6-28-10
PLANS APPROVAL DATE

REGISTERED PROFESSIONAL ENGINEER HASSAN MAREI No. 35068 Exp. 9/30/10 CIVIL STATE OF CALIFORNIA

THE STATE OF CALIFORNIA OR ITS OFFICERS OR AGENTS SHALL NOT BE RESPONSIBLE FOR THE ACCURACY OR COMPLETENESS OF ELECTRONIC COPIES OF THIS PLAN SHEET.

SIGN QUANTITIES

SIGN No.	SIGN CODE	SIGN MESSAGE	SIGN SIZE (L X D)	No. OF POST AND POST SIZE	ROADSIDE SIGN (ONE POST)	ROADSIDE SIGN (TWO POST)	RELOCATE ROADSIDE SIGN	REMOVE ROADSIDE SIGN	SIGN MATERIALS: FURNISH SINGLE SHEET ALUMINUM SIGN: 1.6 mm FRAMED	1.6 mm-UNFRAMED	2.0 mm-UNFRAMED	DOUBLE FACED	SINGLE FACED	BACKGROUND: SHEETING COLOR	RETROFLECTIVE ASTM TYPE	LEGEND: SHEETING COLOR	RETROFLECTIVE ASTM TYPE	GRAFFITI FILM: STANDARD	PREMIUM
			mm x mm	mm x mm	EA	EA	EA	EA	m^2										
100	R2-1(50)	SPEED LIMIT(50)	600 x 750	1-89 x 89	1					0.45			x	WHITE	III	BLACK			x
101	M16-8	Tully Road						1											
	R5-2	NO TRUCK SYMBOL																	
	M6-1R	DIRECTION ARROW AUXILIARY																	
102	R3-7	RIGHT LANE MUST TURN RIGHT	900 x 900	1-89 x 140	1					0.81				WHITE	III	BLACK			x
103	W3-3	SIGNAL AHEAD	900 x 900	1-89 x 140	1					0.81			x	YELLOW	VII	R/G/B			x
104	W3-3	SIGNAL AHEAD	900 x 900	1-89 x 140	1					0.81				YELLOW	VII	R/G/B			x
104a	W3-1	STOP AHEAD						1											
105	M16-8	Tully Road	900 x 762	1-89 x 89	1					0.69			x	GREEN	IV	WHITE	IV		x
	R5-2	NO TRUCK SYMBOL	900 x 900							0.81				WHITE	III	R/B		x	
	M6-1R	DIRECTION ARROW AUXILIARY	525 x 375							0.20				WHITE	III	BLACK		x	
107	W4-2L	LANE END SYMBOL	1200 x 1200	1-89 x 140	1						1.44		x	YELLOW	VII	BLACK			x
108	R81(CA)	BIKE LANE	600 x 450	1-89 x 89	1					0.27			x	WHITE	III	BLACK			x
	R26(CA)	NO PARKING ANY TIME	600 x 750							0.45				WHITE	II	RED	II	x	
109	R1-1							1											
110	R1-1	STOP	750 x 750	1-89 x 140	1					0.56			x	RED	VII	WHITE	VII		x
110a	D11-1	BIKE ROUTE	762 x 610	1-89 x 89	1					0.46			x	GREEN	IV	WHITE	IV		x
	M7-1		300 x 225							0.07				GREEN	IV	WHITE	IV		
110b	R3-5	MANDATORY MOVEMENT	750 x 900	1-89 x 89	1					0.68			x	WHITE	III	BLACK			x
111	W14-1	NOT THROUGH STREET						1											
112	W14-1	NOT THROUGH STREET	900 x 900	1-89 x 140	1					0.81			x	YELLOW	VII	BLACK			x
113	G8-22(CA)	TUNSEN Rd						1											
114	R28A(CA)	NO PARKING ANY TIME	600 x 750	1-89 x 89	1					0.45			x	WHITE	II	RED	II	x	
115	G8-22(CA)	TUNSEN Rd						1											
116	R26A(CA)	NO PARKING ANY TIME	600 x 750	1-89 x 89	1					0.45				WHITE	II	RED	II	x	
117	R6-1	ONE WAY	900 x 300	1-89 x 89	1					0.27				BLACK		B/W		x	
118	R3-2	NO LEFT TURN	900 x 900	1-89 x 140	1					0.81				WHITE	III	B/R		x	
122	R26A(CA)	NO PARKING ANY TIME	600 x 750	1-89 x 89	1					0.45				WHITE	II	RED	II	x	
			SUBTOTAL		18			6		10.31	1.44								

CN 7/1/09 REVISED BY DATE REVISED

CECILE NGUYEN ALI JUMA CALCULATED-DESIGNED BY CHECKED BY

FUNCTIONAL SUPERVISOR HASSAN MAREI

STATE OF CALIFORNIA - DEPARTMENT OF TRANSPORTATION
Caltrans TRAFFIC DESIGN

LAST REVISION 00-00-00 DATE PLOTTED => 30-JUN-2010 TIME PLOTTED => 16:01

SIGN QUANTITIES
SQ-4

Dist	COUNTY	ROUTE	KILOMETER POST TOTAL PROJECT	SHEET No.	TOTAL SHEETS
10	Sta	219,108	3.4/7.9, 44.3/44.9	415	522

Caltrans Metric

Hassan Marei 6/12/09
REGISTERED CIVIL ENGINEER DATE

6-28-10
PLANS APPROVAL DATE

REGISTERED PROFESSIONAL ENGINEER HASSAN MAREI No. 35068 Exp. 9/30/10 CIVIL STATE OF CALIFORNIA

THE STATE OF CALIFORNIA OR ITS OFFICERS OR AGENTS SHALL NOT BE RESPONSIBLE FOR THE ACCURACY OR COMPLETENESS OF ELECTRONIC COPIES OF THIS PLAN SHEET.

SIGN QUANTITIES

SIGN No.	SIGN CODE	SIGN MESSAGE	SIGN SIZE (L X D)	No. OF POST AND POST SIZE	ROADSIDE SIGN (ONE POST)	ROADSIDE SIGN (TWO POST)	RELOCATE ROADSIDE SIGN	REMOVE ROADSIDE SIGN	SIGN MATERIALS: FURNISH SINGLE SHEET ALUMINUM SIGN 1.6 mm FRAMED	1.6 mm-UNFRAMED	2.0 mm-UNFRAMED	DOUBLE FACED	SINGLE FACED	BACKGROUND SHEETING COLOR	BACKGROUND RETROFLECTIVE ASTM TYPE	LEGEND SHEETING COLOR	LEGEND RETROFLECTIVE ASTM TYPE	GRAFFITI FILM STANDARD	GRAFFITI FILM PREMIUM
			mm x mm	mm x mm	EA	EA	EA	EA	m2										
124	G8-22(CA)	TUNSEN Rd →	1524 x 762	1-89 x 140	1						1.16		×	GREEN	IV	WHITE	IV		×
125	R81(CA)	BIKE LANE	600 x 450	1-89 x 89	1					0.27			×	WHITE	III	BLACK			×
	R26(CA)	NO PARKING ANY TIME	600 x 750							0.45				WHITE	II	RED	II	×	
126	R1-1							1											
127	R1-1	STOP	750 x 750	1-89 x 140	1					0.56			×	RED	VII	WHITE	VII		×
128	D11-1	BIKE ROUTE	762 x 610	1-89 x 89	1					0.46			×	GREEN	IV	WHITE	IV		×
	M7-1		300 x 225							0.07				GREEN	IV	WHITE	IV		
129	R6-1	ONE WAY	900 x 300	1-89 x 89	1					0.27				BLACK		B/W		×	
132	R28A(CA)	NO PARKING ANY TIME	600 x 750	1-89 x 89	1					0.45				WHITE	II	RED	II	×	
133	R6-1	ONE WAY	900 x 300	1-89 x 89	1					0.27				BLACK		B/W		×	
134	R3-2	NO LEFT TURN	900 x 900	1-89 x 140	1					0.81				WHITE	III	B/R		×	
135	G8-22(CA)	STRATOS WAY →						1											
136	G8-22(CA)	STRATOS WAY →	1524 x 762	1-89 x 140	1						1.16		×	GREEN	IV	WHITE	IV		×
139	G8-22(CA)	PENTACOST ← Dr	1524 x 762	1-89 x 140	1						1.16		×	GREEN	IV	WHITE	IV		×
140	R3-2	NO LEFT TURN	900 x 900	1-89 x 140	1					0.81				WHITE	III	B/R		×	
141	R6-1	ONE WAY	900 x 300	1-89 x 89	1					0.27				BLACK		B/W		×	
141a	G8-22(CA)	STRATOS WAY →						1											
142	R4-7 OM2-2H	KEEP RIGHT	900 x 1200	1-89 x 140	1					1.08				WHITE	III	BLACK			×
143	R6-1	ONE WAY	900 x 300	1-89 x 89	1					0.27				BLACK		B/W		×	
144	R26A(CA)	NO PARKING ANY TIME	600 x 750	1-89 x 89	1					0.45				WHITE	II	RED	II	×	
145	D3						1							BLACK		B/W		×	
146	D11-1	BIKE ROUTE	762 x 610	1-89 x 89	1					0.46			×	GREEN	IV	WHITE	IV		×
	M7-1		300 x 225							0.07				GREEN	IV	WHITE	IV		
147	R81(CA)	BIKE LANE	600 x 450	1-89 x 89	1					0.27			×	WHITE	III	BLACK			×
	R26(CA)	NO PARKING ANY TIME	600 x 750							0.45				WHITE	II	RED	II	×	
148	R3-7	RIGHT LANE MUST TURN RIGHT	900 x 900	1-89 x 140	1					0.81				WHITE	III	BLACK			×
149	W3-3	SIGNAL AHEAD	900 x 900	1-89 x 140	1					0.81			×	YELLOW	VII	R/G/B			×
150	R6-1R&L	ONE WAY	900 x 300	1-89 x 89	1					0.54		×		BLACK		B/W		×	
151	S32A(CA) S32(CA) S32-1(CA)						1												
				SUBTOTAL	20		2	3		9.9	3.48								

STATE OF CALIFORNIA - DEPARTMENT OF TRANSPORTATION
Caltrans
TRAFFIC DESIGN

FUNCTIONAL SUPERVISOR: HASSAN MAREI
CALCULATED-DESIGNED BY: CECILE NGUYEN
CHECKED BY: ALI JUMA
REVISED BY: CN
DATE REVISED: 7/1/09

LAST REVISION 00-00-00
DATE PLOTTED => 30-JUN-2010
TIME PLOTTED => 16:01

SIGN QUANTITIES
SQ-5

Dist	COUNTY	ROUTE	KILOMETER POST TOTAL PROJECT	SHEET No.	TOTAL SHEETS
10	Sta	219,108	3.4/7.9, 44.3/44.9	416	522

Caltrans Metric

Hassan Marei 6/12/09
REGISTERED CIVIL ENGINEER DATE

6-28-10
PLANS APPROVAL DATE

REGISTERED PROFESSIONAL ENGINEER HASSAN MAREI No. 35068 Exp. 9/30/10 CIVIL STATE OF CALIFORNIA

THE STATE OF CALIFORNIA OR ITS OFFICERS OR AGENTS SHALL NOT BE RESPONSIBLE FOR THE ACCURACY OR COMPLETENESS OF ELECTRONIC COPIES OF THIS PLAN SHEET.

SIGN QUANTITIES

SIGN No.	SIGN CODE	SIGN MESSAGE	SIGN SIZE (L X D)	No. OF POST AND POST SIZE	ROADSIDE SIGN (ONE POST)	ROADSIDE SIGN (TWO POST)	RELOCATE ROADSIDE SIGN	REMOVE ROADSIDE SIGN	SIGN MATERIALS: FURNISH SINGLE SHEET ALUMINUM SIGN: 1.6 mm FRAMED	1.6 mm-UNFRAMED	2.0 mm-UNFRAMED	DOUBLE FACED	SINGLE FACED	BACKGROUND: SHEETING COLOR	RETROFLECTIVE ASTM TYPE	LEGEND: SHEETING COLOR	RETROFLECTIVE ASTM TYPE	GRAFITI FILM: STANDARD	PREMIUM
			mm x mm	mm x mm	EA	EA	EA	EA	m^2										
152	S32A(CA)	ADOPT-A-HIGHWAY SYMBOL	381 x 457	1-89 x 89	1					0.17			x	WHITE/ TEALG	II	MULTI	II	x	
	S32(CA)	ADOPT-A-HIGHWAY	914 x 762							0.70			x		II				
	S32-1(CA)	LITTER REMOVAL	381 x 457							0.17			x		II				
153	R4-7	KEEP RIGHT	900 x 1200	1-89 x 140	1					1.08			x	WHITE	III	BLACK		x	
	OM1-3	TYPE N OBJECT MARKER	457 x 457							0.21			x	YELLOW	VII				x
154a	R3-7	RIGHT LANE MUST TURN RIGHT						1											
154	R81A(CA)	BEGIN	305 x 127	1-89 x 89	1					0.04				WHITE	III	BLACK			x
	R81(CA)	BIKE LANE	600 x 450							0.27			x	WHITE	III	BLACK			x
	R26(CA)	NO PARKING ANY TIME	600 x 750							0.45				WHITE	II	RED	II	x	
155	D11-1		762 x 610	1- 8 x 89	1					0.46			x	GREEN	IV	WHITE	IV		x
	M7-1		300 x 225							0.07				GREEN	IV	WHITE	IV		
156	M3-1	CARDINAL DIRECTION MARKER	600 x 300	1-89 x 89	1					0.18				GREEN	IV	WHITE	IV		x
	G28-2(CA)	ROUTE STATE MARKER	711 x 635							0.45			x	GREEN	IV	WHITE	IV		x
	R28A(CA)	NO PARKING ANY TIME →	600 x 750							0.45				WHITE	II	RED	II	x	
157	M3-2 G28-2(CA) R28A(CA)							1											
158	W9-1	RIGHT LANE ENDS	900 x 900	1-89 x 140	1								x	YELLOW	VII	BLACK			x
159a	D3	STREET NAME					1												
159	R4-7	KEEP RIGHT	900 x 1200	1-89 x 140	1					1.08			x	WHITE	III	BLACK			
	OM1-3	TYPE N OBJECT MARKER	457 x 457							0.21			x	YELLOW	VII				x
160	G28-2(219)	STATE ROUTE MARKER(219)																	
	M6-3	DIRECTION ARROW AUXILIARY																	
	G28-2(108)	STATE ROUTE MARKER(108)																	
	M6-4	DIRECTION ARROW AUXILIARY						1											
161	G28-2(CA)	STATE ROUTE MARKER(219)	711 x 635	1-89 x 89	1					0.45			x	GREEN	IV	WHITE	IV		x
	M6-3	DIRECTION ARROW AUXILIARY	525 x 375							0.20				GREEN	IV	WHITE	IV		
	G28-2(CA)	STATE ROUTE MARKER(108)	711 x 635							0.45				GREEN	IV	WHITE	IV		
	M6-4	DIRECTION ARROW AUXILIARY	525 x 375							0.20				GREEN	IV	WHITE	IV		
162	R81B(CA)	END	203 x 127	1-89 x 89	1					0.30				WHITE	III	BLACK			x
	R81(CA)	BIKE LANE	600 x 450							0.27				WHITE	III	BLACK			x
163	R26(CA)	NO PARKING ANY TIME	600 x 750	1-89 x 89	1					0.45				WHITE	II	RED	II	x	
164	R4-7	KEEP RIGHT	900 x 1200	1-89 x 140	1					1.08			x	WHITE	III	BLACK		x	
165	R6-1R & L	ONE WAY	900 x 300	1-89 x 89	1					0.54		x		BLACK		B/W		x	
166	R4-7 OM2-2H	KEEP RIGHT	900 x 1200	1-89 x 89	1					1.08			x	WHITE	III	BLACK		x	
167	W9-1	RIGHT LANE ENDS	900 x 900	1-89 x 140	1					0.81			x	YELLOW	VII	BLACK			x
168	R3-7	RIGHT LANE MUST TURN RIGHT	750 x 750	1-89 x 89	1					0.56			x	WHITE	III	BLACK			x
169	G8-22(CA)Spec							1											
170	G8-22(CA)Spec	CLARIBEL Rd / KIERNAN Ave	1828 x 1524	2-89 x 140		1			2.09				x	GREEN	IV	WHITE	IV		x
171	R2-1(45)(CA)							1											
172	R3-7	RIGHT LANE MUST TURN RIGHT	750 x 750	1-89 x 89	1					0.56			x	WHITE	III	BLACK		x	
173	W3-3	SIGNAL AHEAD	900 x 900	1-89 x 140	1					0.81			x	YELLOW	VII	R/G/B			x
174	R4-7	KEEP RIGHT	600 x 750	1-89 x 89	1					0.45			x	WHITE	III	BLACK		x	
175	G24-1(CA)																		
	M4-5																		
	G28-2(CA)						1												
				SUBTOTAL	18	1	1	5	2.09	14.20									

STATE OF CALIFORNIA - DEPARTMENT OF TRANSPORTATION
Caltrans
TRAFFIC DESIGN

FUNCTIONAL SUPERVISOR: HASSAN MAREI
CALCULATED-DESIGNED BY: CECILE NGUYEN
CHECKED BY: ALI JUMA
REVISED BY: CN
DATE REVISED: 7/1/09

SIGN QUANTITIES
SQ-6

LAST REVISION 00-00-00
DATE PLOTTED => 30-JUN-2010
TIME PLOTTED => 16:01

Dist	COUNTY	ROUTE	KILOMETER POST TOTAL PROJECT	SHEET No.	TOTAL SHEETS
10	Sta	219,108	3.4/7.9, 44.3/44.9	417	522

Caltrans Metric

Hassan Marei 6/12/09
REGISTERED CIVIL ENGINEER DATE

6-28-10
PLANS APPROVAL DATE

REGISTERED PROFESSIONAL ENGINEER HASSAN MAREI No. 35068 Exp. 9/30/10 CIVIL STATE OF CALIFORNIA

THE STATE OF CALIFORNIA OR ITS OFFICERS OR AGENTS SHALL NOT BE RESPONSIBLE FOR THE ACCURACY OR COMPLETENESS OF ELECTRONIC COPIES OF THIS PLAN SHEET.

SIGN QUANTITIES

SIGN No.	SIGN CODE	SIGN MESSAGE	SIGN SIZE (L X D)	No. OF POST AND POST SIZE	ROADSIDE SIGN (ONE POST)	ROADSIDE SIGN (TWO POST)	RELOCATE ROADSIDE SIGN	REMOVE ROADSIDE SIGN	SIGN MATERIALS: FURNISH SINGLE SHEET ALUMINUM SIGN: 1.6 mm FRAMED	1.6 mm-UNFRAMED	2.0 mm-UNFRAMED	DOUBLE FACED	SINGLE FACED	BACKGROUND: SHEETING COLOR	BACKGROUND: RETROFLECTIVE ASTM TYPE	LEGEND: SHEETING COLOR	LEGEND: RETROFLECTIVE ASTM TYPE	GRAFFITI FILM: STANDARD	GRAFFITI FILM: PREMIUM
			mm x mm	mm x mm	EA	EA	EA	EA	m2										
176	R2-1(45)(CA)	SPEED LIMIT(45)	600 x 750	1-89 x 89	1					0.45			×	WHITE	III	BLACK			×
177	W4-2	LANE ENDS	900 x 900	1-89 x 140	1					0.81			×	YELLOW	VII	BLACK			×
178	R4-1	DO NOT PASS	600 x 750	1-89 x 89	1					0.45				WHITE	III	BLACK			
179	W6-3	TWO-WAY TRAFFIC	900 x 900	1-89 x 140	1					0.81			×	YELLOW	VII	BLACK			×
180	M6-3 M6-4	DIRECTION ARROW AUXILIARY																	
	G28-2 G28-2(CA)	STATE ROUTE MARKER(108)						1											
181	M6-3 M6-4	DIRECTION ARROW AUXILIARY	2(525 x 375)	1-89 x 89	1					0.39			×	GREEN	IV	WHITE	IV		×
	G28-2(219)(108)	STATE ROUTE MARKER	2(711 x 635)							0.90				GREEN	IV	WHITE	IV		
182	W3-3	SIGNAL AHEAD						1											
183	W3-3	SIGNAL AHEAD	900 x 900	1-89 x 140	1					0.81			×	YELLOW	VII	R/G/B			×
184	R4-7	KEEP RIGHT	600 x 750	1-89 x 89	1					0.45			×	WHITE	III	BLACK			
	OM1-3	YELLOW OBJECT MARKER	457 x 457							0.21				YELLOW	VII				×
185	W4-2	LANE ENDS	900 x 900	1-89 x 140	1					0.81			×	YELLOW	VII	BLACK			×
186	R2-1(45)	SPEED LIMIT(45)	600 x 750	1-89 x 89	1					0.45			×	WHITE	III	BLACK		×	
187	W9-1	RIGHT LANE ENDS	900 x 900	1-89 x 140	1					0.81			×	YELLOW	VII	BLACK			×
188	R2-1(45)	SPEED LIMIT(45)	600 x 750	1-89 x 89	1					0.45			×	WHITE	III	BLACK		×	
189	W4-2	LANE ENDS	900 x 900	1-89 x 140	1					0.81			×	YELLOW	VII	BLACK			×
190	R4-1	DO NOT PASS	600 x 750	1-89 x 89	1					0.45			×	WHITE	III	BLACK		×	
191	W6-3	DIVIDED HIGHWAY (ROAD)	900 x 900	1-89 x 140	1					0.81			×	YELLOW	VII	BLACK			×
			SUBTOTAL		14			2		9.87									

CN 7/2/09 REVISED BY DATE REVISED

CECILE NGUYEN ALI JUMA CALCULATED-DESIGNED BY CHECKED BY

FUNCTIONAL SUPERVISOR HASSAN MAREI

STATE OF CALIFORNIA - DEPARTMENT OF TRANSPORTATION
Caltrans TRAFFIC DESIGN

SIGN QUANTITIES
SQ-7

LAST REVISION 00-00-00 DATE PLOTTED => 30-JUN-2010 TIME PLOTTED => 16:01

Dist	COUNTY	ROUTE	KILOMETER POST TOTAL PROJECT	SHEET No.	TOTAL SHEETS
10	Sta	219,108	3.4/7.9, 44.3/44.9	418	522

Caltrans Metric

REGISTERED CIVIL ENGINEER 6/12/09 DATE

6-28-10
PLANS APPROVAL DATE

REGISTERED PROFESSIONAL ENGINEER HASSAN MAREI No. 35068 Exp. 9/30/10 CIVIL STATE OF CALIFORNIA

THE STATE OF CALIFORNIA OR ITS OFFICERS OR AGENTS SHALL NOT BE RESPONSIBLE FOR THE ACCURACY OR COMPLETENESS OF ELECTRONIC COPIES OF THIS PLAN SHEET.

SIGN QUANTITIES

SIGN No.	SIGN CODE	SIGN MESSAGE	SIGN SIZE (L X D)	No. OF POST AND POST SIZE	No. OF SIGN	ROADSIDE SIGN (ONE POST)	ROADSIDE SIGN (TWO POST)	RELOCATE ROADSIDE SIGN	REMOVE ROADSIDE SIGN	SIGN MATERIALS: FURNISH SINGLE SHEET ALUMINUM SIGN: 1.6 mm FRAMED	1.6 mm-UNFRAMED	2.0 mm-UNFRAMED	DOUBLE FACED	SINGLE FACED	BACKGROUND: SHEETING COLOR	BACKGROUND: RETROFLECTIVE ASTM TYPE	LEGEND: SHEETING COLOR	LEGEND: RETROFLECTIVE ASTM TYPE	GRAFFITI FILM: STANDARD	GRAFFITI FILM: PREMIUM
			mm x mm	mm x mm	EA	EA	EA	EA	EA	m2										
*	D3-1	Kiernan Ave	1650 x 300	ON SIGNAL MAST ARM	4							2.00		×	GREEN	VII	WHITE	VII		×
*	D3-2	Carver Road	1650 x 300		2							1.00		×	GREEN	VII	WHITE	VII		×
*	D3-3	Tully Road	1500 x 300		2							0.90		×	GREEN	VII	WHITE	VII		×
*	D3-4	Mc Henry Road →	1950 x 450		1					0.88				×	GREEN	VII	WHITE	VII		×
*	D3-5	Route 108 →	1650 x 450		1					0.74				×	GREEN	VII	WHITE	VII		×
*	D3-6	← Claribel Rd Kiernan Ave →	1350 x 600		1					0.81				×	GREEN	VII	WHITE	VII		×
*	D3-7	Claribel Rd → ← Kiernan Ave	1350 x 600		1					0.81				×	GREEN	VII	WHITE	VII		×
*	R73-6	LANE CONTROL ARROWS	900 x 900		4						3.24			×	WHITE	VII	BLACK		×	
*	R73-3	LELFT TURN ONLY	900 x 900		6						4.86			×	WHITE	VII	BLACK		×	
*	R73-5	NO U TURN	900 x 900		2						1.62			×	WHITE	VII	BLACK		×	
				SUB-TOTAL						3.24	9.72	3.90								

NOTE: * - FOR THE LOCATION OF THESE SIGNS SEE ELECTRICAL PLANS.

CN	7/2/09
REVISED BY	DATE REVISED
CECILE NGUYEN	ALI JUMA
CALCULATED-DESIGNED BY	CHECKED BY
FUNCTIONAL SUPERVISOR	HASSAN MAREI

STATE OF CALIFORNIA - DEPARTMENT OF TRANSPORTATION
Caltrans TRAFFIC DESIGN

SIGN QUANTITIES
SQ-8

LAST REVISION 00-00-00 | DATE PLOTTED => 30-JUN-2010 | TIME PLOTTED => 16:50

Dist	COUNTY	ROUTE	KILOMETER POST TOTAL PROJECT	SHEET No.	TOTAL SHEETS
10	Sta	219,108	3.4/7.9, 44.3/44.9	419	522

Caltrans Metric

Hassan Marei 6/12/09
REGISTERED CIVIL ENGINEER DATE

6-28-10
PLANS APPROVAL DATE

REGISTERED PROFESSIONAL ENGINEER HASSAN MAREI No. 35068 Exp. 9/30/10 CIVIL STATE OF CALIFORNIA

THE STATE OF CALIFORNIA OR ITS OFFICERS OR AGENTS SHALL NOT BE RESPONSIBLE FOR THE ACCURACY OR COMPLETENESS OF ELECTRONIC COPIES OF THIS PLAN SHEET.

SIGN QUANTITIES

SIGN No.	SIGN CODE	SIGN MESSAGE	SIGN SIZE (L X D)	No. OF POST AND POST SIZE	ROADSIDE SIGN (ONE POST)	ROADSIDE SIGN (TWO POST)	RELOCATE ROADSIDE SIGN	REMOVE ROADSIDE SIGN	RESET ROADSIDE SIGN	SIGN MATERIALS: FURNISH SINGLE SHEET ALUMINUM SIGN 1.6 mm FRAMED	1.6 mm-UNFRAMED	2.0 mm-UNFRAMED	DOUBLE FACED	SINGLE FACED	BACKGROUND SHEETING COLOR	BACKGROUND RETROFLECTIVE ASTM TYPE	LEGEND SHEETING COLOR	LEGEND RETROFLECTIVE ASTM TYPE	GRAFFITI FILM STANDARD	GRAFFITI FILM PREMIUM
			mm x mm	mm x mm	EA	EA	EA	EA	EA	m2										
179**	R99(CA)	ACCESSIBLE PARKING ONLY	304 x 457	1-89 x 89	5						0.70			×	BLUE	III	WHITE	III		×
	R99B(CA)	MINIMUN FINE $250 (PLAQUE)	304 x 229								0.35			×	BLUE	III	WHITE	III		×
180**	R1-1	STOP	750 x 750	1-89 x 89	3						1.68			×	RED	VII	WHITE	VII		×
181**	R1-2	YIELD	$\frac{750 \times \sqrt{3}}{4}$	1-89 x 89	3						0.72			×	RED	VII		VII		×
182**	R6-1R	ONE WAY	900 x 300	1-89 x 89	3						0.81			×	BLACK		WHITE	IV		×
				SUB-TOTAL THIS SHEET	14						4.26									
				SUB-TOTAL SQ-1	29		1	4			21.09									
				SUB-TOTAL SQ-2	27		2	4		0.91	21.39									
				SUB-TOTAL SQ-3	33		1	13		0.91	22.06	1.44								
				SUB-TOTAL SQ-4	16			6			10.31	1.44								
				SUB-TOTAL SQ-5	20		2	3			9.9	3.48								
				SUB-TOTAL SQ-6	18	1	1	5		2.09	14.20									
				SUB-TOTAL SQ-7	14			2			9.87									
				SUB-TOTAL SQ-8						3.24	9.72	3.90								
				SUB-TOTAL THQ-11			68	31	10											
				SUB-TOTAL PDQ-4	14															
				TOTAL	185	1	75	68	10	7.15	122.8	10.26								

NOTE: ** - SEE PD-22 AND PD-23 FOR LOCATION OF SIGNS.

NOTE:
EXACT LOCATION AND POSITION OF ROADSIDE SIGN
WILL BE DETERMINED BY THE ENGINEER.

SIGN QUANTITIES
SQ-9

CN 7/2/09 REVISED BY DATE REVISED
CECILE NGUYEN CALCULATED-DESIGNED BY
ALI JUMA CHECKED BY
HASSAN MAREI FUNCTIONAL SUPERVISOR
STATE OF CALIFORNIA - DEPARTMENT OF TRANSPORTATION
Caltrans TRAFFIC DESIGN

LAST REVISION 00-00-00 DATE PLOTTED => 25-JAN-2012 TIME PLOTTED => 08:32

Dist	COUNTY	ROUTE	KILOMETER POST TOTAL PROJECT	SHEET No.	TOTAL SHEETS
10	Sta	219,108	3.4/7.9, 44.3/44.9	420	522

Caltrans Metric

REGISTERED CIVIL ENGINEER 6/16/09 DATE

6-28-10
PLANS APPROVAL DATE

REGISTERED PROFESSIONAL ENGINEER WUTHY SENG No. 60114 Exp. 6/30/10 CIVIL STATE OF CALIFORNIA

THE STATE OF CALIFORNIA OR ITS OFFICERS OR AGENTS SHALL NOT BE RESPONSIBLE FOR THE ACCURACY OR COMPLETENESS OF ELECTRONIC COPIES OF THIS PLAN SHEET.

ROADWAY QUANTITIES

LOCATION	STATION FROM	STATION TO	ROADWAY EXCAVATION	(N) EMBANKMENT	CLASS 2 AB SOUTHBOUND / WESTBOUND	CLASS 2 AB NORTHBOUND / EASTBOUND	HOT MIX ASPHALT (TYPE A) SOUTHBOUND / WESTBOUND	HOT MIX ASPHALT (TYPE A) NORTHBOUND / EASTBOUND	HOT MIX ASPHALT (TYPE A) LEVELING 0 TO 315 mm	IMPORTED MATERIAL (SHOULDER BACKING)	TACK COAT	REPLACE ASPHALT CONCRETE SURFACING
			m^3		m^3		tonne			tonne	tonne	m^3
AMERICAN AVENUE	10+16.500	10+54.912	280	100	123	34	230	63		31	0.6	
MORROW ROAD	9+46.949	9+78.813	121	42	87	24	17	168		31	0.6	
CARVER ROAD	5+56.835	9+74.167	2783	1939	513	430	957	946		276	4.1	
	10+19.105	12+38.176	173	705	304	266	569	586		108	2.5	
TULLY ROAD	5+74.164	9+75.849	593	2185	914	293	1681	644		248	5.4	
	10+20.930	13+09.155	322	868	749	101	1427	229		163	3.3	
TUNSON ROAD	10+16.500	10+64.794	163	150	68	68	126	126		48	0.7	
PENTACOST DRIVE	10+21.771	10+39.834	59		36	14	99	41	12.4		0.4	
STRATOS WAY	9+78.081	9+88.088	24				72	72			0.1	
ROUTE 219												
	33+66.095	37+84.635	2172	1630	639	39	1039	64		381	4.3	
	37+84.635	41+85.280	5181	4283	932	880	1701	1606		577	6.3	
	41+85.280	47+89.958	7518	8571	1506	1729	2751	3158		871	10.3	
	47+89.958	49+99.431	3476	3884	1149	690	2487	1334		299	3.9	
	49+99.431	54+52.330	7558	11101	1708	1711	3281	3289		652	10.7	
	54+52.330	62+53.251	15205	10320	3124	3177	5688	5783		1153	19.4	
	62+53.251	68+54.260	11469	10811	2547	1680	2343	1546		600	13.2	
	68+54.260	71+97.784	2814	2728	1113	883	2708	2148		179	6.1	
	71+97.784	73+85.973	5244	258	562	122	1461	319		68	3.1	
	73+85.973	78+26.658	10024	310	1564		4904		485.6	61	10.1	7.4
McHENRY AVENUE	442+86.541	444+17.891	371	28		39	33	76	32.5		2.6	3.6
	444+17.891	448+60.213	1126	1105	476	477	1532	1065	256.5	126	7.0	11.9
CLARIBEL ROAD	0+17.746	8+28.161	11670	1245	2261	1145	5574	2096	893.0	259	12.6	
STANISLAUS COUNTY UNION SCHOOL			2771	161	2154		3830				5.6	2.0
		SUB-TOTAL	91 117	62 424	22 529	13 802	44 510	25 359	1680.0	6131	132.9	24.9
ROUTE 219	OVERSIDE DRAIN AT VARIOUS LOCATIONS						4.9**					
PLACE AC DIKE							182.24**					
DRIVEWAYS					2253.5**		2272.3**					
		TOTAL	91 117		38 584.5		72 328.44			6131	132.9	24.9

(N) NOT A SEPARATE PAY ITEM, FOR INFORMATION ONLY.
** SEE Q-2, Q-5, AND DD-7 SHEETS FOR DETAILED INFORMATION.

SUMMARY OF QUANTITIES
Q-1

STATE OF CALIFORNIA - DEPARTMENT OF TRANSPORTATION
Caltrans DESIGN

FUNCTIONAL SUPERVISOR: JOSE HUERTA
CALCULATED-DESIGNED BY: HUONG LE
CHECKED BY: WUTHY SENG
REVISED BY: WS
DATE REVISED: 4/13/10

LAST REVISION 00-00-00
DATE PLOTTED => 25-JAN-2012
TIME PLOTTED => 08:32

Dist	COUNTY	ROUTE	KILOMETER POST TOTAL PROJECT	SHEET No.	TOTAL SHEETS
10	Sta	219,108	3.4/7.9, 44.3/44.9	421	522

Wuthy Seng 6/16/09
REGISTERED CIVIL ENGINEER DATE

6-28-10
PLANS APPROVAL DATE

REGISTERED PROFESSIONAL ENGINEER
WUTHY SENG
No. 60114
Exp. 6/30/10
CIVIL
STATE OF CALIFORNIA

THE STATE OF CALIFORNIA OR ITS OFFICERS OR AGENTS SHALL NOT BE RESPONSIBLE FOR THE ACCURACY OR COMPLETENESS OF ELECTRONIC COPIES OF THIS PLAN SHEET.

Caltrans Metric

ASPHALT CONCRETE DIKE

LOCATION	PLACE AC DIKE (TYPE E)	HMA (TYPE A)
	m	tonne
54+12.700 "A" LINE To 54+38.922 "A" LINE (L+)	29.1	1.89
10+32.654 "H" LINE To 10+90.228 "H" LINE (L+)	58.9	3.82
10+37.954 "H" LINE To 10+84.327 "H" LINE (R+)	47.3	3.07
54+68.742 "A" LINE To 56+16.256 "A" LINE (L+)	136.5	8.85
9+01.000 "I" LINE To 9+63.447 "I" LINE (L+)	63.3	4.10
7+10.000 "I" LINE To 7+70.000 "I" LINE (R+)	60.0	3.89
8+00.000 "I" LINE To 9+66.211 "I" LINE (R+)	167.8	10.87
10+44.718 "I" LINE To 10+85.000 "I" LINE (L+)	40.5	2.62
10+15.000 "I" LINE To 10+46.000 "I" LINE (L+)	31.2	2.02
12+29.058 "I" LINE To 12+89.032 "I" LINE (L+)	60.2	3.90
10+36.796 "I" LINE To 10+85.000 "I" LINE (R+)	49.0	3.18
11+15.000 "I" LINE To 12+39.000 "I" LINE (R+)	124.3	8.05
65+97.500 "A" LINE To 67+61.088 "A" LINE (R+)	163.6	10.60
68+11.100 "A" LINE To 70+20.786 "A" LINE (R+)	209.7	13.59
68+76.200 "A" LINE To 69+96.200 "A" LINE (L+)	113.8	7.37
70+66.000 "A" LINE To 71+78.735 "A" LINE (L+)	113.5	7.35
72+13.139 "A" LINE To 73+22.200 "A" LINE (L+)	109.2	7.08
74+27.571 "A" LINE To 75+55.472 "A" LINE (L+)	128.3	8.31
70+69.800 "A" LINE To 72+50.478 "A" LINE (R+)	180.7	11.71
2+05.093 "D" LINE To 2+95.223 "D" LINE (R+)	90.2	5.84
3+73.725 "D" LINE To 7+15.000 "D" LINE (R+)	341.3	22.12
5+95.187 "D" LINE To 7+80.000 "D" LINE (L+)	184.8	11.98
444+51.732 "E" LINE To 445+09.141 "E" LINE (R+)	58.4	3.78
445+57.959 "E" LINE To 447+11.740 "E" LINE (R+)	159.7	10.35
447+39.650 "E" LINE To 448+04.477 "E" LINE (R+)	64.8	4.20
445+37.728 "E" LINE To 445+64.033 "E" LINE (L+)	26.3	1.70
TOTAL	2812.4	182.24**

** SEE Q-1 FOR TOTAL QUANTITY

SUMMARY OF QUANTITIES
Q-2

REVISED BY	WS
DATE REVISED	4/13/10
HUONG LE	
WUTHY SENG	
CALCULATED-DESIGNED BY	
CHECKED BY	
FUNCTIONAL SUPERVISOR	
JOSE HUERTA	

STATE OF CALIFORNIA - DEPARTMENT OF TRANSPORTATION
Caltrans DESIGN

LAST REVISION 00-00-00
DATE PLOTTED => 30-JUN-2010
TIME PLOTTED => 16:51

Dist	COUNTY	ROUTE	KILOMETER POST TOTAL PROJECT	SHEET No.	TOTAL SHEETS
10	Sta	219,108	3.4/7.9, 44.3/44.9	422	522

Wuthy Seng 6/16/09
REGISTERED CIVIL ENGINEER DATE

6-28-10
PLANS APPROVAL DATE

REGISTERED PROFESSIONAL ENGINEER WUTHY SENG No. 60114 Exp. 6/30/10 CIVIL STATE OF CALIFORNIA

THE STATE OF CALIFORNIA OR ITS OFFICERS OR AGENTS SHALL NOT BE RESPONSIBLE FOR THE ACCURACY OR COMPLETENESS OF ELECTRONIC COPIES OF THIS PLAN SHEET.

NOTES:

EXACT LOCATIONS OFCHAI LINK FENCE WILL BE DETERMINED BY THE ENGINEER.

CHAIN LINK FENCE

LOCATION	STATION	RELOCATE CHAIN LINK GATE (N)	CHAIN LINK GATE		REMOVE FENCE			RECONSTRUCT FENCE			CHAIN LINK FENCE (TYPE CL-1.8)	CHAIN LINK FENCE (TYPE CL-1.8, SLATTED)
			TYPE CL-1.8	(N)	CHAIN LINK FENCE	WIRE MESH FENCE	WOODEN FENCE	CHAIN LINK FENCE	CHAIN LINK FENCE (SLATTED)	WOODEN FENCE		
		EA	EA	m	m			m			m	m
STANISLAUS COUNTY UNION SCHOOL	49+89.094 TO 50+26.937 "A" LINE, Lt						37.8					
	10+38.105 TO 11+32.006 "P" LINE, Lt		1	1.5	107.4							
	10+27.126 TO 11+07.076 "O" LINE, Lt										80.0	
	11+07.076 TO 11+11.883 "O" LINE, Lt TO Rt										48.7	
	10+69.765 TO 11+11.883 "O" LINE, Rt							42.4@				
	10+42.585 TO 10+56.300 "O" LINE, Rt							13.8@				
	48+28.563 TO 48+49.060 "A" LINE, Lt	1		7.2				20.5@				
ROUTE 219	41+96.675 TO 42+20.000 "A" LINE, Rt							23.3				
ROUTE 219	43+85.608 "A" LINE, Rt to Lt				46.0							
ROUTE 219	43+41.900 TO 43+76.778 "A" LINE, Lt									34.9		
ROUTE 219	60+88.775 TO 62+36.128 "A" LINE, Lt		1	4.8			163.8					335.3
TULLY ROAD	12+37.253 TO 13+24.046 "I" LINE, Lt									86.7		
TULLY ROAD	10+42.261 TO 11+53.570 "I" LINE, Rt	1		7.2		113.2					113.2	
ROUTE 219	62+76.518 TO 64+53.111 "A" LINE, Lt					176.6					176.6	
TULLY ROAD	11+53.570 TO 12+59.835 "I" LINE, Rt		1	3.6				7.2		106.2		
ROUTE 219	66+54.060 TO 68+33.243 "A" LINE, Lt		1	4.8								390.6
ROUTE 219	72+95.391 TO 73+49.773 "A" LINE, Lt							99.4				
ROUTE 219	73+49.152 TO 74+64.611 "A" LINE, Lt		1	4.8								370.8
ROUTE 219	74+54.809 TO 75+55.472 "A" LINE, Lt								100.7			
ROUTE 219	76+55.297 "A" LINE, Lt				8.3							
ROUTE 108	442+96.541 TO 443+97.731 "E" LINE, Rt							103.0				
ROUTE 108	448+17.904 "E" LINE, Rt				9.2							
CLARIBEL ROAD	2+57.518 TO 3+97.231 "D" LINE, Lt									139.7		
CLARIBEL ROAD	3+23.526 "D" LINE, Lt						26.6					
CLARIBEL ROAD	4+03.188 "D" LINE, Lt						22.0					
CLARIBEL ROAD	4+02.670 TO 4+64.292 "D" LINE, Lt		1	4.8								230.4
CLARIBEL ROAD	7+67.208 TO 7+87.523 "D" LINE, Rt									20.3		
	SUB-TOTAL		6		170.9	289.8	250.2	309.6	100.7	387.8	418.5	1327.1
	TOTAL		6			710.9			798.1		418.5	1327.1

(N) - NOT A SEPARATE PAY ITEM, FOR INFORMATION ONLY.
@ - EXISTING BARBED WIRE AT TOP OF FENCE TO BE REMOVED BY THE CONTRACTOR.

SUMMARY OF QUANTITIES
Q-3

REVISED BY	DATE REVISED
WS	4/13/10

HUONG LE — WUTHY SENG
CALCULATED-DESIGNED BY — CHECKED BY
FUNCTIONAL SUPERVISOR — JOSE HUERTA

STATE OF CALIFORNIA - DEPARTMENT OF TRANSPORTATION
Caltrans DESIGN

LAST REVISION 00-00-00 | DATE PLOTTED => 30-JUN-2010 | TIME PLOTTED => 16:51

Dist	COUNTY	ROUTE	KILOMETER POST TOTAL PROJECT	SHEET No.	TOTAL SHEETS
10	Sta	219,108	3.4/7.9, 44.3/44.9	423	522

Wuthy Seng 6/16/09
REGISTERED CIVIL ENGINEER DATE

6-28-10
PLANS APPROVAL DATE

REGISTERED PROFESSIONAL ENGINEER WUTHY SENG No. 60114 Exp. 6/30/10 CIVIL STATE OF CALIFORNIA

THE STATE OF CALIFORNIA OR ITS OFFICERS OR AGENTS SHALL NOT BE RESPONSIBLE FOR THE ACCURACY OR COMPLETENESS OF ELECTRONIC COPIES OF THIS PLAN SHEET.

Caltrans Metric

NOTES:
SIDEWALK AND RAMP THICKNESS SHALL BE 150 mm FOR COMMERCIAL CONCRETE DRIVEWAYS.

DRIVEWAYS

LOCATION	CLASS 2 AB m^3	HMA (TYPE A) tonne	MINOR CONCRETE (MISCELLANEOUS CONSTRUCTION) m^3	DESCRIPTION
STA 33+83.915 "A" LINE Lt	31.2	31.3		RESIDENTIAL
STA 34+81.537 "A" LINE Lt	28.2	27.0		RESIDENTIAL
STA 35+85.570 "A" LINE Lt	23.2	22.0		RESIDENTIAL
STA 37+51.320 "A" LINE Rt	34.8	35.0		RESIDENTIAL
STA 37+91.366 "A" LINE Rt	25.5	30.6		RESIDENTIAL
STA 38+41.023 "A" LINE Rt	28.1	27.0		RESIDENTIAL
STA 39+87.130 "A" LINE Rt	32.1	30.5		RESIDENTIAL
STA 41+17.020 "A" LINE Lt	28.2	27.0		RESIDENTIAL
STA 41+85.941 "A" LINE Lt	28.0	26.7		RESIDENTIAL
STA 42+24.090 "A" LINE Rt	36.8	37.7		RESIDENTIAL
STA 42+66.677 "A" LINE Rt	28.4	27.6		RESIDENTIAL
STA 43+28.111 "A" LINE Lt	35.1	35.7		RESIDENTIAL
STA 43+31.741 "A" LINE Rt	27.5	26.3		RESIDENTIAL
STA 44+23.150 "A" LINE Rt	30.0	28.6		RESIDENTIAL
STA 45+84.967 "A" LINE Lt	28.2	27.0		RESIDENTIAL
STA 46+83.275 "A" LINE Rt	31.5	31.5		RESIDENTIAL
STA 49+94.510 "A" LINE Rt	38.9	39.3		RESIDENTIAL
STA 50+30.943 "A" LINE Lt	32.0	34.5		RESIDENTIAL
STA 52+93.253 "A" LINE Rt	33.0	31.7		RESIDENTIAL
STA 53+91.781 "A" LINE Lt	38.0	51.5		COMMERCIAL
STA 6+14.250 "H" LINE Lt	21.6	21.1		RESIDENTIAL
STA 6+14.220 "H" LINE Rt	29.1	27.8		RESIDENTIAL
STA 8+71.770 "H" LINE Rt	19.3	28.2		RESIDENTIAL
STA 9+31.390 "H" LINE Lt	19.2	20.5		RESIDENTIAL
STA 10+95.214 "H" LINE Lt	23.1	23.8		COMMERCIAL
STA 11+05.000 "H" LINE Rt	10.1	9.3		RESIDENTIAL
STA 11+34.481 "H" LINE Lt	20.5	22.3		COMMERCIAL
STA 11+40.000 "H" LINE Rt	10.0	9.2		RESIDENTIAL
STA 11+55.751 "H" LINE Lt	23.1	24.1		COMMERCIAL
SUB-TOTAL	794.7 #	801.4 #		

SEE Q-5 FOR TOTAL QUANTITIES.

DRIVEWAYS

LOCATION	CLASS 2 AB m^3	HMA (TYPE A) tonne	MINOR CONCRETE (MISCELLANEOUS CONSTRUCTION) m^3	DESCRIPTION
STA 11+96.778 "H" LINE Rt	24.5	23.5		RESIDENTIAL
STA 56+27.493 "A" LINE Lt	15.5	13.8		RESIDENTIAL
STA 56+39.214 "A" LINE Rt	29.2	27.9		RESIDENTIAL
STA 56+56.568 "A" LINE Lt	61.1	61.2		RESIDENTIAL
STA 56+90.376 "A" LINE Rt	29.2	27.9		RESIDENTIAL
STA 58+87.513 "A" LINE Lt	26.3	25.8		RESIDENTIAL
STA 59+12.250 "A" LINE Lt	26.1	25.6		RESIDENTIAL
STA 59+83.351 "A" LINE Rt	31.4	29.9		RESIDENTIAL
STA 60+58.815 "A" LINE Lt	29.1	27.7		RESIDENTIAL
STA 60+78.288 "A" LINE Rt	31.1	29.9		RESIDENTIAL
STA 62+13.506 "A" LINE Lt	15.1	19.7		COMMERCIAL
STA 6+72.922 "I" LINE Lt	25.7	24.9		RESIDENTIAL
STA 7+36.815 "I" LINE Lt	24.3	24.6		RESIDENTIAL
STA 7+68.235 "I" LINE Lt	20.6	22.0		RESIDENTIAL
STA 7+85.818 "I" LINE Rt	28.1	27.7		RESIDENTIAL
STA 7+89.426 "I" LINE Lt	20.5	21.4		RESIDENTIAL
STA 8+27.197 "I" LINE Lt	20.2	20.8		RESIDENTIAL
STA 8+51.627 "I" LINE Lt	18.9	27.2		COMMERCIAL
STA 8+69.687 "I" LINE Lt	16.5	24.2		COMMERCIAL
STA 8+85.180 "I" LINE Lt	18.6	25.0		COMMERCIAL
STA 10+98.091 "I" LINE Lt	24.4	24.0		RESIDENTIAL
STA 11+01.055 "I" LINE Rt	25.6	25.0		RESIDENTIAL
STA 11+63.997 "I" LINE Lt	22.1	21.5		RESIDENTIAL
STA 12+12.759 "I" LINE Lt	23.6	23.1		RESIDENTIAL
STA 12+52.743 "I" LINE Rt	19.0	25.3		RESIDENTIAL
STA 12+67.866 "I" LINE Rt	23.0	23.7		RESIDENTIAL
STA 13+16.745 "I" LINE Lt	21.6	21.4		RESIDENTIAL
SUB-TOTAL	671.4 #	694.7 #		

SUMMARY OF QUANTITIES
Q-4

REVISED BY	DATE REVISED
WS	7/14/09

HUONG LE — CALCULATED-DESIGNED BY
WUTHY SENG — CHECKED BY
JOSE HUERTA — FUNCTIONAL SUPERVISOR

STATE OF CALIFORNIA - DEPARTMENT OF TRANSPORTATION
Caltrans DESIGN

LAST REVISION 00-00-00 | DATE PLOTTED => 30-JUN-2010 | TIME PLOTTED => 16:51

Dist	COUNTY	ROUTE	KILOMETER POST TOTAL PROJECT	SHEET No.	TOTAL SHEETS
10	Sta	219,108	3.4/7.9, 44.3/44.9	424	522

REGISTERED CIVIL ENGINEER 6/16/09 DATE

6-28-10
PLANS APPROVAL DATE

REGISTERED PROFESSIONAL ENGINEER WUTHY SENG No. 60114 Exp. 6/30/10 CIVIL STATE OF CALIFORNIA

THE STATE OF CALIFORNIA OR ITS OFFICERS OR AGENTS SHALL NOT BE RESPONSIBLE FOR THE ACCURACY OR COMPLETENESS OF ELECTRONIC COPIES OF THIS PLAN SHEET.

Caltrans Metric

DRIVEWAYS

LOCATION	CLASS 2 AB m^3	HMA (TYPE A) tonne	MINOR CONCRETE (MISCELLANEOUS CONSTRUCTION) m^3	DESCRIPTION
STA 63+72.568 "A" LINE R+	29.3	27.9		RESIDENTIAL
STA 64+53.387 "A" LINE L+	31.7	30.2		RESIDENTIAL
STA 66+44.673 "A" LINE L+	47.0	47.9		RESIDENTIAL
STA 67+95.969 "A" LINE R+	42.6	44.4		COMMERCIAL
STA 68+32.600 "A" LINE L+	17.0	16.3		COMMERCIAL
STA 10+40.324 "J" LINE R+	21.1	21.1		RESIDENTIAL
STA 70+21.155 "A" LINE L+	28.7	28.7		COMMERCIAL
STA 70+36.950 "A" LINE R+	43.5	47.0		COMMERCIAL
STA 72+78.141 "A" LINE R+	26.1	27.1		COMMERCIAL
STA 73+00.754 "A" LINE R+			1.7	COMMERCIAL
STA 74+04.554 "A" LINE L+	27.2	26.5		COMMERCIAL
STA 75+35.353 "A" LINE R+			2.2	COMMERCIAL
STA 75+22.888 "A" LINE R+			1.6	COMMERCIAL
STA 75+74.966 "A" LINE L+			1.6	COMMERCIAL
STA 76+07.831 "A" LINE L+			1.1	COMMERCIAL
STA 76+20.634 "A" LINE L+			1.1	COMMERCIAL
STA 76+63.217 "A" LINE L+			2.6	COMMERCIAL
STA 77+64.628 "A" LINE L+			2.6	COMMERCIAL
STA 445+02.530 "E" LINE L+			2.2	COMMERCIAL
STA 445+28.596 "E" LINE L+			2.2	COMMERCIAL
SUB-TOTAL	314.2	317.1	18.9	

DRIVEWAYS

LOCATION	CLASS 2 AB m^3	HMA (TYPE A) tonne	MINOR CONCRETE (MISCELLANEOUS CONSTRUCTION) m^3	DESCRIPTION
STA 445+32.949 "E" LINE R+	20.5	12.1		RESIDENTIAL
STA 445+85.474 "E" LINE L+	17.3	16.6		RESIDENTIAL
STA 446+20.646 "E" LINE L+	13.7	14.0		RESIDENTIAL
STA 446+33.075 "E" LINE L+	15.1	14.9		RESIDENTIAL
STA 446+82.732 "E" LINE L+	27.4	27.5		RESIDENTIAL
STA 447+10.033 "E" LINE L+	24.5	25.3		COMMERCIAL
STA 447+25.167 "E" LINE R+	11.4	12.6		COMMERCIAL
STA 447+49.645 "E" LINE L+	25.7	25.7		COMMERCIAL
STA 448+21.817 "E" LINE L+	21.3	20.7		COMMERCIAL
STA 448+29.173 "E" LINE R+	20.3	19.5		RESIDENTIAL
STA 2+49.004 "D" LINE L+	27.9	26.9		RESIDENTIAL
STA 3+09.389 "D" LINE R+	22.0	21.7		RESIDENTIAL
STA 3+49.208 "D" LINE R+	22.6	22.3		RESIDENTIAL
STA 3+98.903 "D" LINE L+	32.1	30.6		RESIDENTIAL
STA 4+48.254 "D" LINE L+	27.5	25.7		COMMERCIAL
STA 5+05.938 "D" LINE L+	22.9	22.0		RESIDENTIAL
STA 7+40.014 "D" LINE R+	20.9	21.0		RESIDENTIAL
STA 7+63.324 "D" LINE R+	19.0	19.8		RESIDENTIAL
STA 7+93.581 "D" LINE R+	26.4	27.8		RESIDENTIAL
STA 8+04.021 "D" LINE L+	25.7	24.7		RESIDENTIAL
SUB-TOTAL	444.2	431.4		
	314.2	317.1	18.9	Q-5
	794.7 #	801.4 #		Q-4
	671.4 #	694.7 #		
TOTAL	2224.4 **	2244.6 **	18.9 ***	

SEE Q-4 SHEET FOR DETAILED INFORMATION.
** SEE Q-1 SHEET FOR TOTAL QUANTITY.
*** SEE Q-7 SHEET FOR TOTAL QUANTITY.

SUMMARY OF QUANTITIES

Q-5

STATE OF CALIFORNIA - DEPARTMENT OF TRANSPORTATION
Caltrans DESIGN

FUNCTIONAL SUPERVISOR: JOSE HUERTA
CALCULATED-DESIGNED BY: HUONG LE
CHECKED BY: WUTHY SENG
REVISED BY: WS
DATE REVISED: 7/14/09

LAST REVISION 00-00-00
DATE PLOTTED => 30-JUN-2010
TIME PLOTTED => 16:51

Dist	COUNTY	ROUTE	KILOMETER POST TOTAL PROJECT	SHEET No.	TOTAL SHEETS
10	Sta	219,108	3.4/7.9, 44.3/44.9	425	522

REGISTERED CIVIL ENGINEER 6/16/09 DATE

6-28-10
PLANS APPROVAL DATE

REGISTERED PROFESSIONAL ENGINEER WUTHY SENG No. 60114 Exp. 6/30/10 CIVIL STATE OF CALIFORNIA

THE STATE OF CALIFORNIA OR ITS OFFICERS OR AGENTS SHALL NOT BE RESPONSIBLE FOR THE ACCURACY OR COMPLETENESS OF ELECTRONIC COPIES OF THIS PLAN SHEET.

Caltrans Metric

NOTES:

1) EXACT LOCATION OF "RELOCATE MAILBOX" WILL BE DETERMINED BY THE ENGINEER.

RELOCATE MAILBOX

LOCATION (FROM)	LOCATION (TO)	EA
STA 7+80.368 SB "I" LINE	STA 7+80.368 SB "I" LINE	1
STA 7+58.863 SB "I" LINE	STA 7+58.863 SB "I" LINE	1
STA 7+59.532 SB "I" LINE	STA 7+59.532 SB "I" LINE	1
STA 7+91.352 SB "I" LINE	STA 7+91.352 SB "I" LINE	1
STA 8+42.558 SB "I" LINE	STA 8+42.558 SB "I" LINE	1
STA 10+31.198 NB "I" LINE	STA 10+31.198 NB "I" LINE	1
STA 11+06.344 SB "I" LINE	STA 11+06.344 SB "I" LINE	1
STA 11+09.931 NB "I" LINE	STA 11+09.931 NB "I" LINE	1
STA 11+57.208 NB "I" LINE	STA 11+57.208 NB "I" LINE	1
STA 11+93.447 NB "I" LINE	STA 11+93.447 NB "I" LINE	1
STA 12+57.540 NB "I" LINE	STA 12+57.540 NB "I" LINE	1
STA 12+59.312 NB "I" LINE	STA 12+60.069 NB "I" LINE	1
STA 12+59.312 NB "I" LINE	STA 12+60.069 NB "I" LINE	1
STA 3+25.956 WB "D" LINE	STA 3+25.956 WB "D" LINE	1
STA 3+95.332 EB "D" LINE	STA 3+95.332 EB "D" LINE	1
	TOTAL (SEE NOTE 1)	14

ADJUST VALVE BOX

LOCATION	OFFSET (m) L†	OFFSET (m) R†	QUANTITY EA
STA 78+25.171 "M" LINE		2.997	1
STA 444+42.751 "E" LINE	10.242		1
STA 443+87.914 "E" LINE		2.905	1
STA 443+87.759 "E" LINE		10.070	1
STA 443+63.364 "E" LINE	6.552		1
STA 443+63.361 "E" LINE		1.841	1
STA 443+61.338 "E" LINE		12.468	1
STA 443+59.894 "E" LINE		12.099	1
STA 443+38.034 "E" LINE	6.693		1
	TOTAL		9

SEE DRAINAGE QUANTITIES SHEET, DQ-14, FOR DETAILED INFORMATION.
** SEE DRAINAGE DETAILS SHEET, DD-7, FOR DETAILED INFORMATION.

PLACE HMA (Misc AREA)

LOCATION	OFFSET (m) L†	OFFSET (m) R†	QUANTITY m^2
STA 10+22.528 "L" LINE		16.89	0.1
STA 10+24.758 "L" LINE	17.44		0.1
STA 10+29.571 "L" LINE		7.82	0.1
STA 444+42.214 "E" LINE		28.09	0.1
STA 444+54.346 "E" LINE		17.63	0.1
STA 443+85.674 "E" LINE		13.63	0.1
STA 443+94.557 "E" LINE		25.71	0.1
STA 444+01.127 "E" LINE		24.62	0.1
DQ-14	VARIOUS		421.8 ###
DD-7	VARIOUS		34.3 **
		TOTAL	456.9

SURVEY MONUMENT

LOCATION	OFFSET DISTANCE (m) L†	OFFSET DISTANCE (m) R†	REMOVE (N) EA	SURVEY MONUMENT (TYPE D) EA
STA 37+84.193 "A" LINE		20.01	1	1
STA 37+84.234 "A" LINE		13.63	1	1
STA 45+97.062 "A" LINE		16.64	1	1
STA 45+94.326 "A" LINE		1.85	1	1
STA 45+84.732 "A" LINE	22.67		1	1
STA 48+26.966 "A" LINE	23.49		1	1
STA 10+25.032 "H" LINE	0.19		1	1
STA 10+16.965 "H" LINE	0.19		1	1
STA 10+23.873 "H" LINE		0.09	1	1
STA 10+25.080 "H" LINE		0.09	1	1
STA 10+25.662 "H" LINE		0.09	1	1
STA 9+89.513 "I" LINE	0.19		1	1
STA 70+52.989 "A" LINE		24.19	1	1
STA 70+55.419 "A" LINE		13.32	1	1
STA 70+70.837 "A" LINE		18.93	1	1
STA 70+55.029 "N" LINE		4.04	1	1
STA 444+14.118 "E" LINE		0.08	1	1
STA 445+12.241 "E" LINE		15.44	1	1
		TOTAL		18

NOTE: EXACT LOCATION OF SURVEY MONUMENTS WILL BE DETERMINED BY THE ENGINEER.

SUMMARY OF QUANTITIES

Q-6

REVISED BY	DATE REVISED
WS	7/14/09

HUONG LE
WUTHY SENG
CALCULATED-DESIGNED BY
CHECKED BY
FUNCTIONAL SUPERVISOR
JOSE HUERTA

STATE OF CALIFORNIA - DEPARTMENT OF TRANSPORTATION
Caltrans DESIGN

LAST REVISION 00-00-00
DATE PLOTTED => 29-DEC-2011
TIME PLOTTED => 11:00

Dist	COUNTY	ROUTE	KILOMETER POST TOTAL PROJECT	SHEET No.	TOTAL SHEETS
10	Sta	219,108	3.4/7.9, 44.3/44.9	426	522

Wuthy Seng 6/16/09
REGISTERED CIVIL ENGINEER DATE

6-28-10
PLANS APPROVAL DATE

REGISTERED PROFESSIONAL ENGINEER
WUTHY SENG
No. 60114
Exp. 6/30/10
CIVIL
STATE OF CALIFORNIA

THE STATE OF CALIFORNIA OR ITS OFFICERS OR AGENTS SHALL NOT BE RESPONSIBLE FOR THE ACCURACY OR COMPLETENESS OF ELECTRONIC COPIES OF THIS PLAN SHEET.

Caltrans Metric

COLD PLANE AC PAVEMENT

ALIGNMENT	STATION BEGIN	STATION END	AREA m^2
"A" LINE L+	33+66.095	33+76.095	117.0
"A" LINE R+	36+63.336	36+73.336	117.0
"F" LINE R+	10+44.912	10+54.912	145.4
"G" LINE	9+46.949	9+56.766	117.5
"H" LINE	5+56.835	5+66.835	91.4
"H" LINE	12+28.176	12+38.176	123.2
"I" LINE	5+74.164	5+84.164	86.1
"I" LINE	13+26.988	13+36.988	89.8
"J" LINE	10+54.794	10+64.794	65.6
"L" LINE	10+29.711	10+39.834	131.2
"Q" LINE	9+78.081	9+88.088	160.9
"P" LINE	10+28.751	10+62.158	1246.0 ****
"A" LINE	73+00.000	78+56.512	8582.1
"D" LINE	0+00.000	8+28.161	9305.0
"E" LINE	442+86.541	444+17.891	3130.4
"E" LINE	444+17.891	448+60.213	5792.9
		TOTAL	29 301.5

**** SEE CONSTRUCTION DETAILS FOR LIMITS OF COLD PLANE.

MINOR CONCRETE (MISCELLANEOUS CONSTRUCTION)

LOCATION	DESCRIPTION	QUANTITY m^3
STA 47+69.980 TO STA 47+72.980 "A" LINE	MEDIAN ISLAND AND CURB	5.7
STA 47+75.980 TO STA 47+79.946 "A" LINE	MEDIAN ISLAND AND CURB	5.3
STA 48+04.799 TO STA 48+09.464 "A" LINE	MEDIAN ISLAND AND CURB	7.9
STA 48+12.494 TO STA 48+15.494 "A" LINE	MEDIAN ISLAND AND CURB	7.4
STA 70+33.631 TO STA 70+55.502 "A" LINE	MEDIAN ISLAND AND CURB	29.7
STA 70+57.917 TO STA 70+79.757 "A" LINE	MEDIAN ISLAND AND CURB	29.7
STA 10+24.758 TO STA 10+31.848 L+ "L" LINE	RAMP AND CURB	5.1
STA 10+22.528 TO STA 10+29.571 L+ "L" LINE	RAMP AND CURB	4.9
STA 72+93.748 TO STA 75+29.595 R+ "A" LINE	CURB	38.5
STA 75+21.735 TO STA 78+27.408 L+ "A" LINE	MEDIAN ISLAND AND CURB	99.5
STA 75+55.877 R+ "A" LINE TO STA 445+37.726 L+ "E" LINE	SIDEWALK, RAMP AND CURB	187.4
STA 444+49.872 TO STA 446+42.896 L+ "E" LINE	MEDIAN ISLAND AND CURB	55.6
STA 443+28.294 TO STA 443+85.488 L+ "E" LINE	MEDIAN ISLAND AND CURB	14.3
STA 442+96.541 TO STA 444+01.127 R+ "E" LINE	SIDEWALK, RAMP AND CURB	47.5
STA 444+42.214 TO STA 444+54.346 R+ "E" LINE	RAMP AND CURB	7.6
VARIES	DRIVEWAYS	18.9 ***
STA 443+28.294 TO STA 443.84.647 "E" LINE	SIDEWALK, RAMP, CURB	74.8
STA 443+85.674 TO STA 443+97.479 R+ "E" LINE	RAMP AND CURB	11.6
STANISLAUS COUNTY UNION SCHOOL	RAISED ISLANDS,CURB, GUTTER, AND SIDEWALK	379.9
	CONCRETE PILE CAP (SOUND WALL)	68.5 ##
	TOTAL	1099.8

*** QUANTITY FROM SHEET Q-5.
QUANTITY FROM SHEET Q-8.

SUMMARY OF QUANTITIES

Q-7

REVISED BY	DATE REVISED
WS	7/14/09

HUONG LE — WUTHY SENG — CALCULATED-DESIGNED BY — CHECKED BY

FUNCTIONAL SUPERVISOR: JOSE HUERTA

STATE OF CALIFORNIA - DEPARTMENT OF TRANSPORTATION — Caltrans — DESIGN

LAST REVISION 00-00-00 — DATE PLOTTED => 25-JAN-2012 — TIME PLOTTED => 08:48

Dist	COUNTY	ROUTE	KILOMETER POST TOTAL PROJECT	SHEET No.	TOTAL SHEETS
10	Sta	219,108	3.4/7.9, 44.3/44.9	427	522

REGISTERED CIVIL ENGINEER 6/16/09 DATE

6-28-10
PLANS APPROVAL DATE

REGISTERED PROFESSIONAL ENGINEER WUTHY SENG No. 60114 Exp. 6/30/10 CIVIL STATE OF CALIFORNIA

THE STATE OF CALIFORNIA OR ITS OFFICERS OR AGENTS SHALL NOT BE RESPONSIBLE FOR THE ACCURACY OR COMPLETENESS OF ELECTRONIC COPIES OF THIS PLAN SHEET.

Caltrans Metric

METAL BEAM GUARD RAILING

ALIGNMENT	LOCATION	SIDE	MBGR (2.1 m WOOD POST)	TERMINAL ANCHOR ASSEMBLY (TYPE SFT)	ALTERNATIVE FLARED TERMINAL SYSTEM (AFTS)	REMOVE METAL BEAM GUARD RAILING
			m	EA	EA	m
"A" LINE	40+27.170 TO 40+51.800	Rt	11.4	1	1	
"A" LINE	56+47.920 TO 56+51.720	Lt	3.8	1	1	
"A" LINE	73+16.400 TO 73+27.830	Lt	11.4	1	1	
"A" LINE	56+34.183 TO 56+68.565	Lt				34.4
		TOTAL	26.6	3	3	34.4

REMOVE CRASH CUSHION MODULE

LOCATION	QUANTITY
	EA
70+49.031 "A" LINE 19.28 m Rt	10
70+68.604 "A" LINE 6.08 m Lt	14
TOTAL	24

SOUNDWALL (MASONARY BLOCK)

LOCATION	ITEM		QUANTITY
STA 48+28.693 "A" LINE 26.91 m Lt TO STA 49+79.951 "A" LINE 28.04 m Lt (SOUND WALL 1)	SOUNDWALL (MASONRY BLOCK)	m^2	857
STA 49+36.050 "A" LINE 38.34 m Lt TO STA 10+88.432 "P" LINE 24.40 m Lt (SOUND WALL 2)			
STA 10+90.132 "P" LINE 24.40 m Lt TO STA 11+31.833 "P" LINE 24.26 m Lt (SOUND WALL 3)	400 mm CIDH CONCRETE PILING (SOUND WALL)	m	195
	CONCRETE PILE CAP (SOUND WALL)	m^3	68.5 ##

SEE SUMMARY OF QUANTITIES, Q-7, FOR TOTAL QUANTITY.

REMOVE CONCRETE

LOCATION: WESTBOUND / SOUTHBOUND	LOCATION: EASTBOUND / NORTHBOUND	DESCRIPTION	QUANTITY m^3
	STA 72+93.748 Rt "A" LINE TO STA 9+82.348 Lt "Q" LINE	Exist CURB AND DRIVEWAY	14.5
	STA 9+81.723 Rt "Q" LINE TO STA 75+29.595 Rt "A" LINE	Exist CURB AND DRIVEWAY	18.6
	STA 78+31.423 Rt "A" LINE TO STA 443+84.990 Lt "E" LINE	Exist CURB AND RAMP	10.2
	STA 442+96.541 Rt "E" LINE TO STA 0+25.101 Rt "D" LINE	Exist CURB, RAMP, AND SIDEWALK	23.8
STA 75+55.877 Lt "A" LINE TO STA 445+37.726 Lt "E" LINE		Exist CURB AND SIDEWALK	100.3
	STA 447+17.405 Rt "E" LINE TO STA 447+32.343 Rt "E" LINE	Exist CURB AND MEDIAN ISLAND	11.3
STA 443+25.369 Lt "E" LINE TO STA 443+86.320 Lt "E" LINE		Exist CURB AND MEDIAN ISLAND	18.1
	STA 77+30.295 Rt "A" LINE TO STA 78+31.620 Rt "A" LINE	Exist CURB AND MEDIAN ISLAND	45.8
	STA 10+16.363 Rt "L" LINE TO STA 10+29.573 Rt "L" LINE	Exist CURB	2.0
STA 10+14.585 Lt "L" LINE TO STA 10+31.846 Lt "L" LINE		Exist CURB AND SIDEWALK	5.5
STA 10+40.468 Lt "P" LINE TO STA 10+43.403 Lt "P" LINE		Exist CURB	1.8
	STA 10+40.468 Lt "P" LINE TO STA 10+51.079 Rt "P" LINE	Exist CURB	2.8
	STA 10+42.585 Rt "O" LINE TO STA 10+56.300 Rt "O" LINE	Exist CURB AND GUTTER	2.0
STA 10+44.552 Rt "O" LINE STA 48+49.060 Lt "A" LINE TO STA 10+36.452 Lt "P" LINE STA 49+56.356 Lt "A" LINE		Exist CURB,GUTTER, AND SIDEWALK	25.1
STA 10+36.452 Lt "P" LINE STA 49+56.356 Lt "A" LINE TO STA 10+53.090 Lt "P" LINE		Exist CURB	1.1
STA 10+53.330 Lt "P" LINE TO STA 11+32.006 Lt "P" LINE		Exist CURB AND SIDEWALK	17.1
	STA 70+64.864 "A" LINE, 23.733 m Rt	Exist HEADWALL	108.5
STA 48+27.294 TO STA 48.83.002 LT "A" LINE		Exist CURB	3.3
		TOTAL	411.8

ADJUST MANHOLE TO GRADE

LOCATION	DESCRIPTION	OFFSET (m) Lt	OFFSET (m) Rt	QUANTITY EA
STA 54+45.309 "A" LINE	SS MANHOLE	6.40		1
STA 77+91.804 "M" LINE	SD MANHOLE		3.35	1
STA 77+94.341 "M" LINE	SS MANHOLE		3.58	1
STA 78+07.308 "M" LINE	SD MANHOLE		3.56	1
STA 78+10.777 "M" LINE	SS MANHOLE		4.23	1
STA 78+23.441 "M" LINE	SD MANHOLE		3.65	1
STA 78+25.171 "M" LINE	SS MANHOLE		3.00	1
STA 443+59.894 "E" LINE	SS MANHOLE		12.1	1
STA 443+90.981 "E" LINE	SS MANHOLE	12.41		1
		TOTAL		9

SUMMARY OF QUANTITIES
Q-8

STATE OF CALIFORNIA - DEPARTMENT OF TRANSPORTATION
Caltrans DESIGN

FUNCTIONAL SUPERVISOR: JOSE HUERTA
CALCULATED-DESIGNED BY: HUONG LE
CHECKED BY: WUTHY SENG
REVISED BY: WS
DATE REVISED: 7/14/09

LAST REVISION 00-00-00
DATE PLOTTED => 30-JUN-2010
TIME PLOTTED => 16:52

Dist	COUNTY	ROUTE	KILOMETER POST TOTAL PROJECT	SHEET No.	TOTAL SHEETS
10	Sta	219,108	3.4/7.9, 44.3/44.9	428	522

REGISTERED CIVIL ENGINEER 6/16/09 DATE

6-28-10
PLANS APPROVAL DATE

REGISTERED PROFESSIONAL ENGINEER WUTHY SENG No. 60114 Exp. 6/30/10 CIVIL STATE OF CALIFORNIA

THE STATE OF CALIFORNIA OR ITS OFFICERS OR AGENTS SHALL NOT BE RESPONSIBLE FOR THE ACCURACY OR COMPLETENESS OF ELECTRONIC COPIES OF THIS PLAN SHEET.

NOTE: SEE "SOUND WALL DETAILS" FOR AESTHETIC FEATURES TO BE PLACED ON SOUND WALLS.

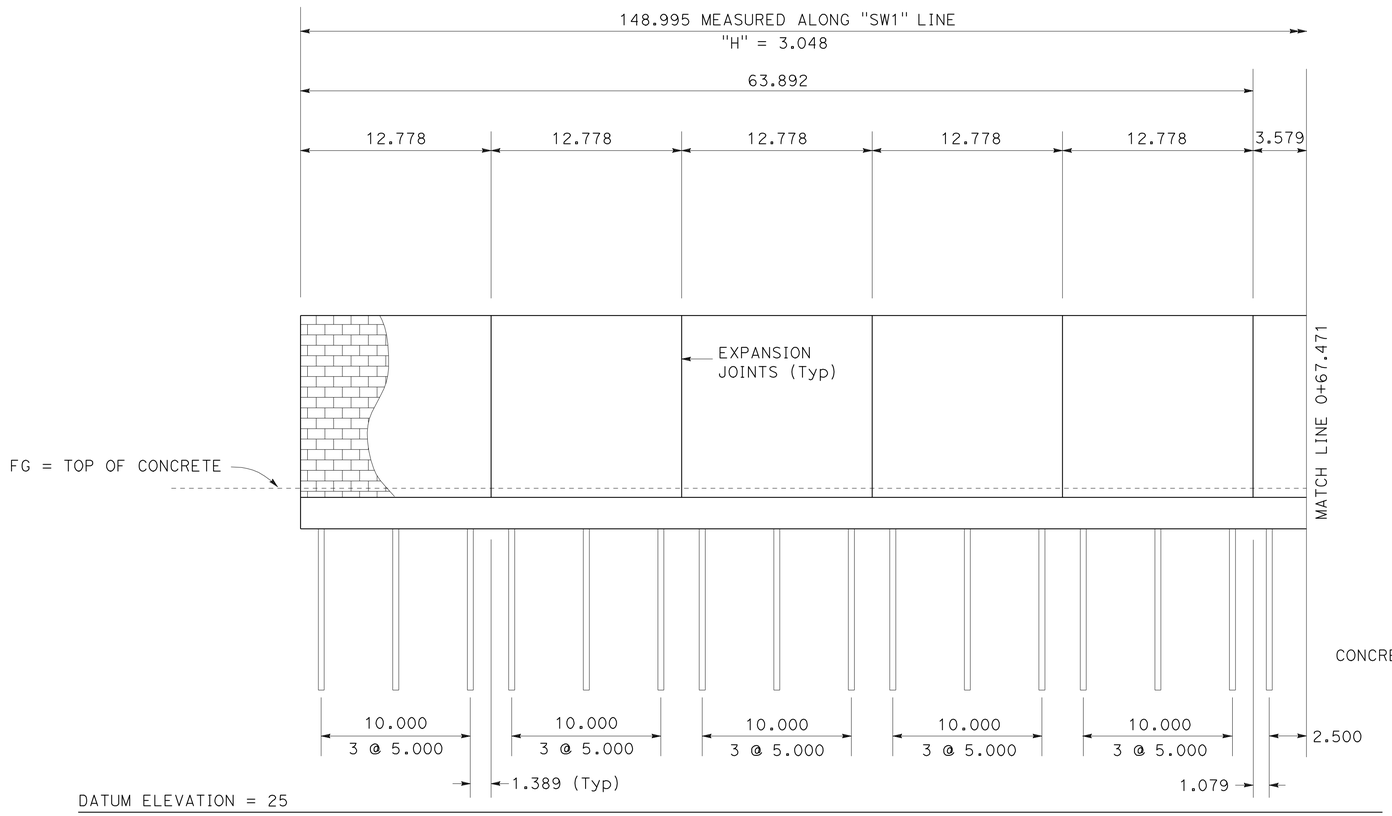

DEVELOPED ELEVATION

SCALE HORIZONTAL 1:200
VERTICAL 1:50

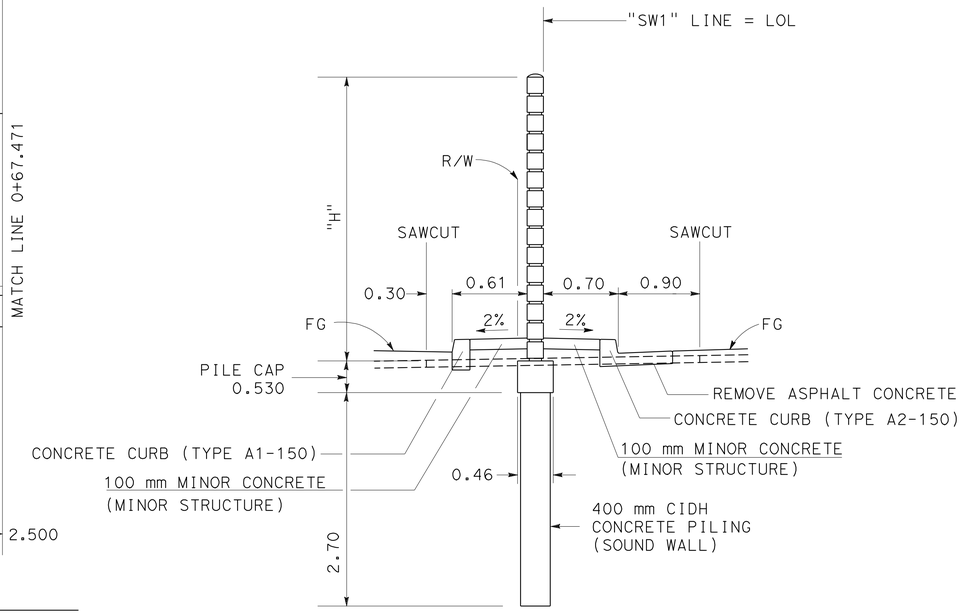

STA 0+00.000 TO STA 1+48.995 "SW1" LINE

SECTION A-A

NO SCALE

B15-3 B15-4 B15-5 B15-9

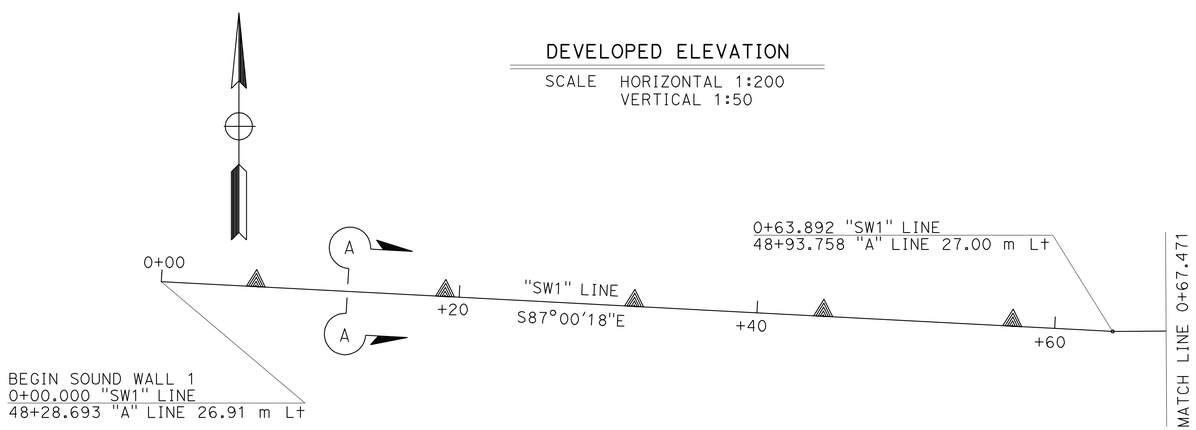

PLAN

SCALE 1:200

LEGEND:

STANDARD PLAN SHEET No.

ALL DIMENSIONS ARE IN METERS UNLESS OTHERWISE SHOWN

SOUND WALL PLAN
(SOUND WALL No. 1)

SCALE AS SHOWN

SW-1

THIS PLAN ACCURATE FOR SOUND WALL WORK ONLY

REVISED BY	DATE REVISED
WS	7/7/09

CALCULATED-DESIGNED BY: ALLEN LAO
CHECKED BY: WUTHY SENG
FUNCTIONAL SUPERVISOR: JOSE HUERTA

STATE OF CALIFORNIA - DEPARTMENT OF TRANSPORTATION
Caltrans
DESIGN

LAST REVISION 00-00-00
DATE PLOTTED => 30-JUN-2010
TIME PLOTTED => 16:00

Dist	COUNTY	ROUTE	KILOMETER POST TOTAL PROJECT	SHEET No.	TOTAL SHEETS
10	Sta	219,108	3.4/7.9, 44.3/44.9	429	522

Wuthy Seng 6/16/09
REGISTERED CIVIL ENGINEER DATE

6-28-10
PLANS APPROVAL DATE

REGISTERED PROFESSIONAL ENGINEER WUTHY SENG No. 60114 Exp. 6/30/10 CIVIL STATE OF CALIFORNIA

THE STATE OF CALIFORNIA OR ITS OFFICERS OR AGENTS SHALL NOT BE RESPONSIBLE FOR THE ACCURACY OR COMPLETENESS OF ELECTRONIC COPIES OF THIS PLAN SHEET.

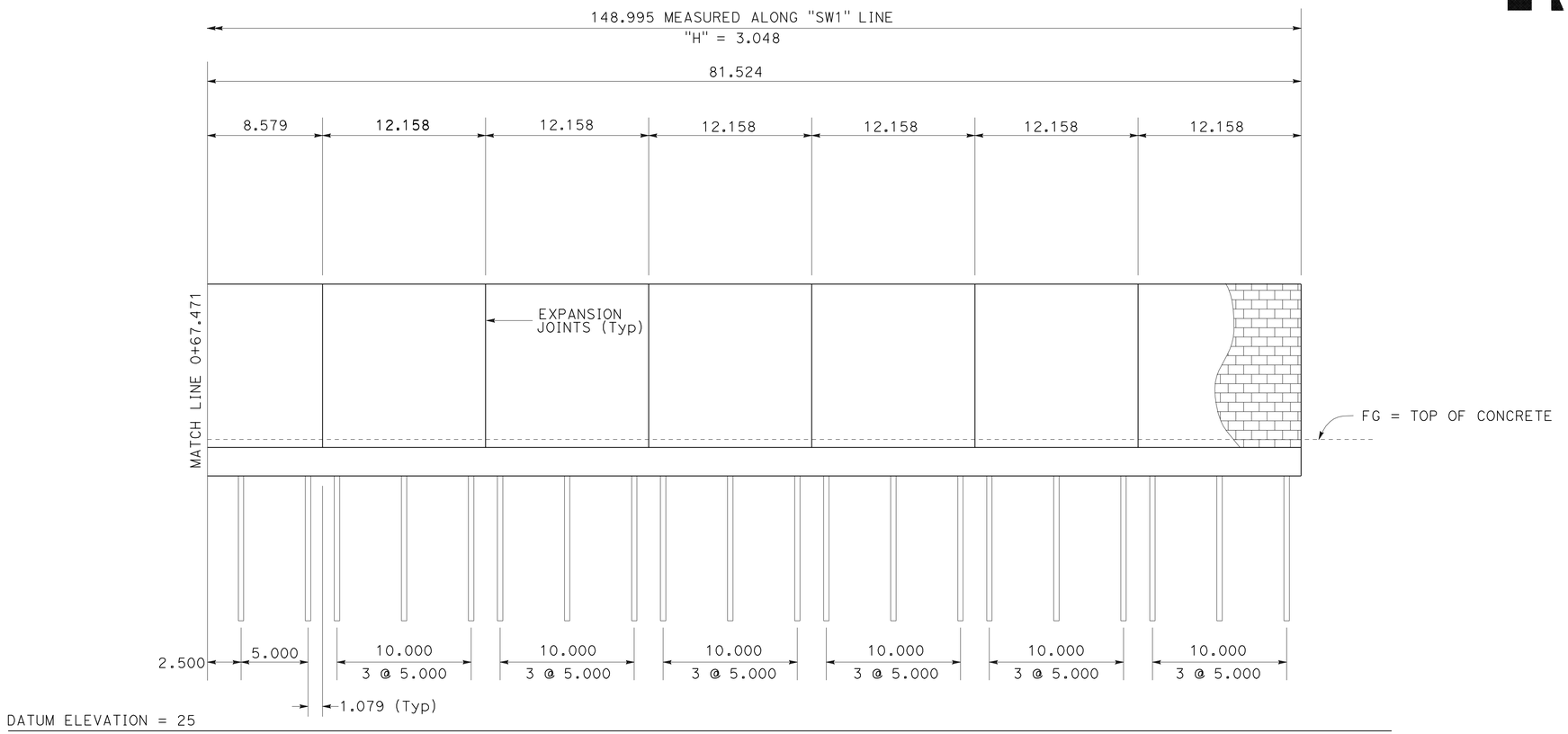

DEVELOPED ELEVATION

SCALE HORIZONTAL 1:200
VERTICAL 1:50

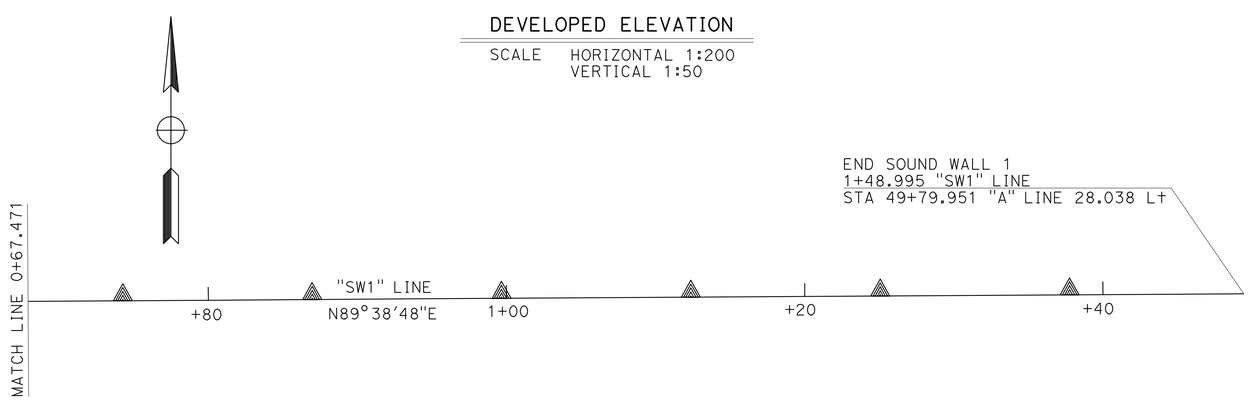

PLAN

SCALE 1:200

ALL DIMENSIONS ARE IN METERS UNLESS OTHERWISE SHOWN

SOUND WALL PLAN
(SOUND WALL No. 1)

SCALE AS SHOWN **SW-2**

THIS PLAN ACCURATE FOR SOUND WALL WORK ONLY

REVISED BY	WS
DATE REVISED	7/7/09
CALCULATED-DESIGNED BY	ALLEN LAO
CHECKED BY	WUTHY SENG
FUNCTIONAL SUPERVISOR	JOSE HUERTA

STATE OF CALIFORNIA - DEPARTMENT OF TRANSPORTATION
Caltrans DESIGN

LAST REVISION 00-00-00 | DATE PLOTTED => 30-JUN-2010 | TIME PLOTTED => 16:01

Dist	COUNTY	ROUTE	KILOMETER POST TOTAL PROJECT	SHEET No.	TOTAL SHEETS
10	Sta	219,108	3.4/7.9, 44.3/44.9	430	522

Wuthy Seng 6/16/09
REGISTERED CIVIL ENGINEER DATE

6-28-10
PLANS APPROVAL DATE

REGISTERED PROFESSIONAL ENGINEER WUTHY SENG No. 60114 Exp. 6/30/10 CIVIL STATE OF CALIFORNIA

THE STATE OF CALIFORNIA OR ITS OFFICERS OR AGENTS SHALL NOT BE RESPONSIBLE FOR THE ACCURACY OR COMPLETENESS OF ELECTRONIC COPIES OF THIS PLAN SHEET.

Caltrans Metric

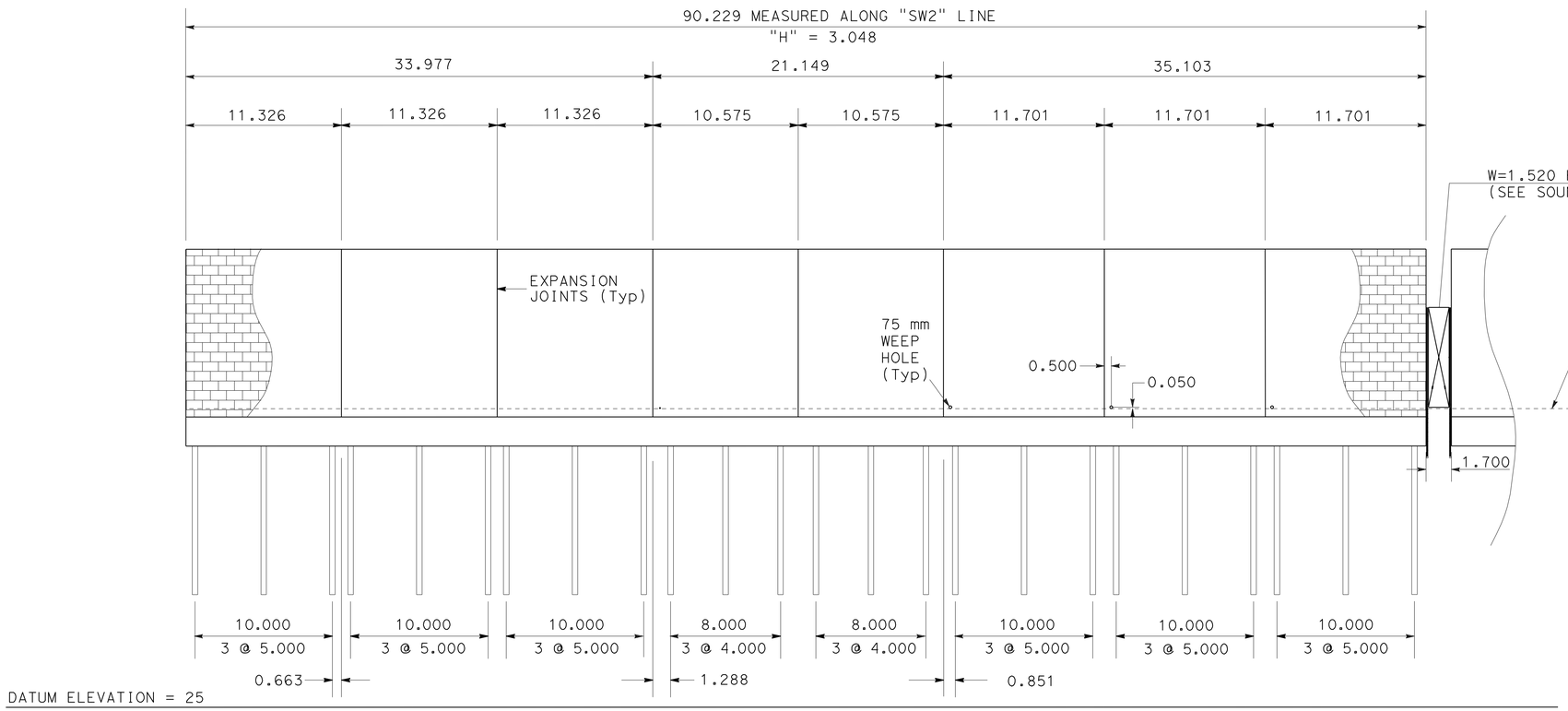

DEVELOPED ELEVATION

SCALE HORIZONTAL 1:200
VERTICAL 1:50

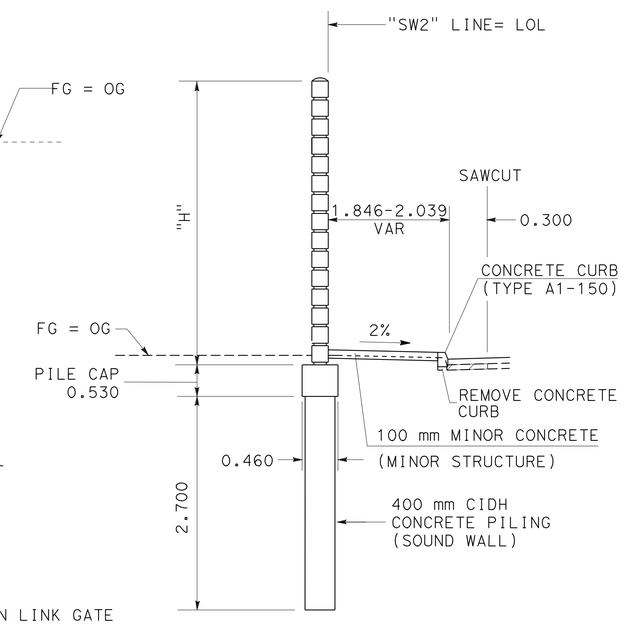

STA 0+00.000 TO STA 0+33.897 "SW2" LINE

SECTION B-B

NO SCALE

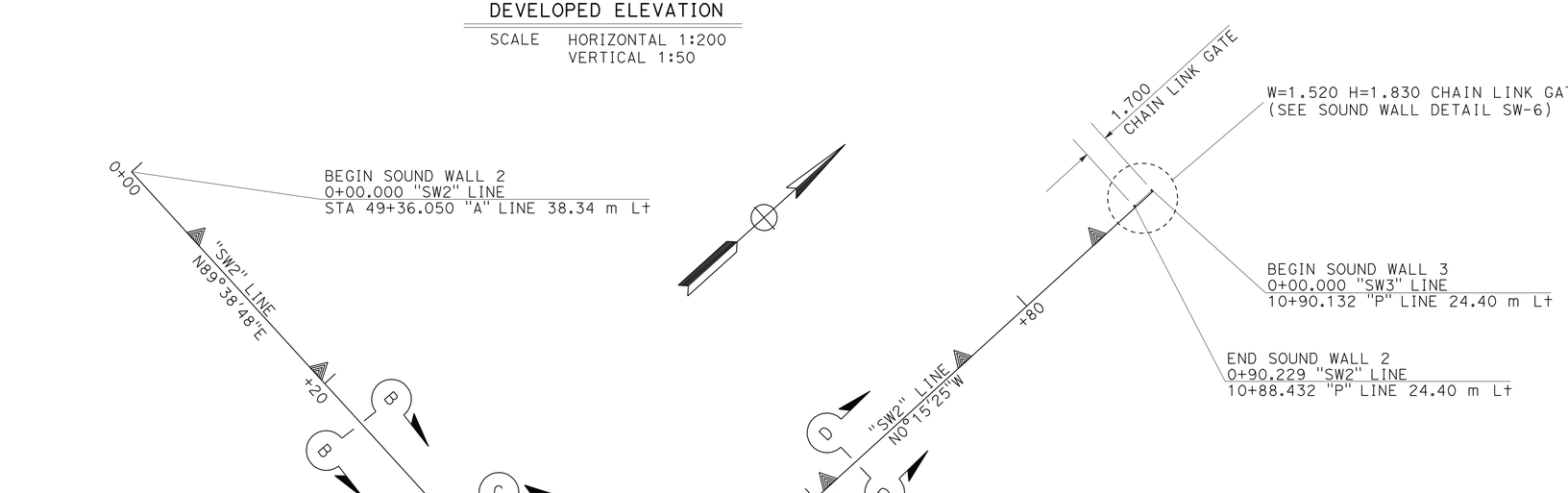

PLAN

SCALE 1:200

ALL DIMENSIONS ARE IN METERS UNLESS OTHERWISE SHOWN

SOUND WALL PLAN
(SOUND WALL No. 2)

SCALE AS SHOWN

SW-3

THIS PLAN ACCURATE FOR SOUND WALL WORK ONLY

REVISED BY	DATE REVISED
WS	7/7/09

CALCULATED-DESIGNED BY: ALLEN LAO
CHECKED BY: WUTHY SENG
FUNCTIONAL SUPERVISOR: JOSE HUERTA

STATE OF CALIFORNIA - DEPARTMENT OF TRANSPORTATION
Caltrans DESIGN

LAST REVISION 00-00-00 | DATE PLOTTED => 30-JUN-2010 | TIME PLOTTED => 16:01

Dist	COUNTY	ROUTE	KILOMETER POST TOTAL PROJECT	SHEET No.	TOTAL SHEETS
10	Sta	219,108	3.4/7.9, 44.3/44.9	431	522

Caltrans Metric

REGISTERED CIVIL ENGINEER 6/16/09 DATE

6-28-10
PLANS APPROVAL DATE

REGISTERED PROFESSIONAL ENGINEER WUTHY SENG No. 60114 Exp. 6/30/10 CIVIL STATE OF CALIFORNIA

THE STATE OF CALIFORNIA OR ITS OFFICERS OR AGENTS SHALL NOT BE RESPONSIBLE FOR THE ACCURACY OR COMPLETENESS OF ELECTRONIC COPIES OF THIS PLAN SHEET.

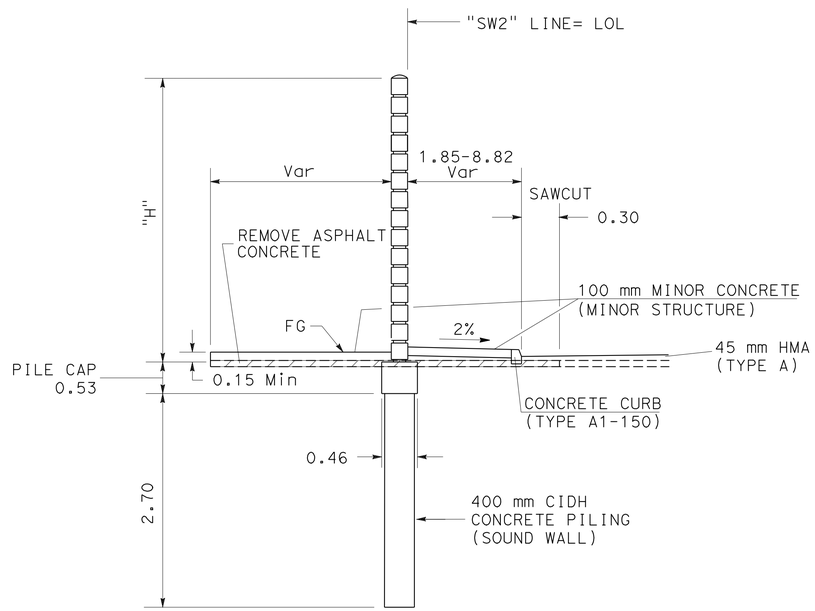

STA 0+33.897 To STA 0+53.084 "SW2" LINE

SECTION C-C

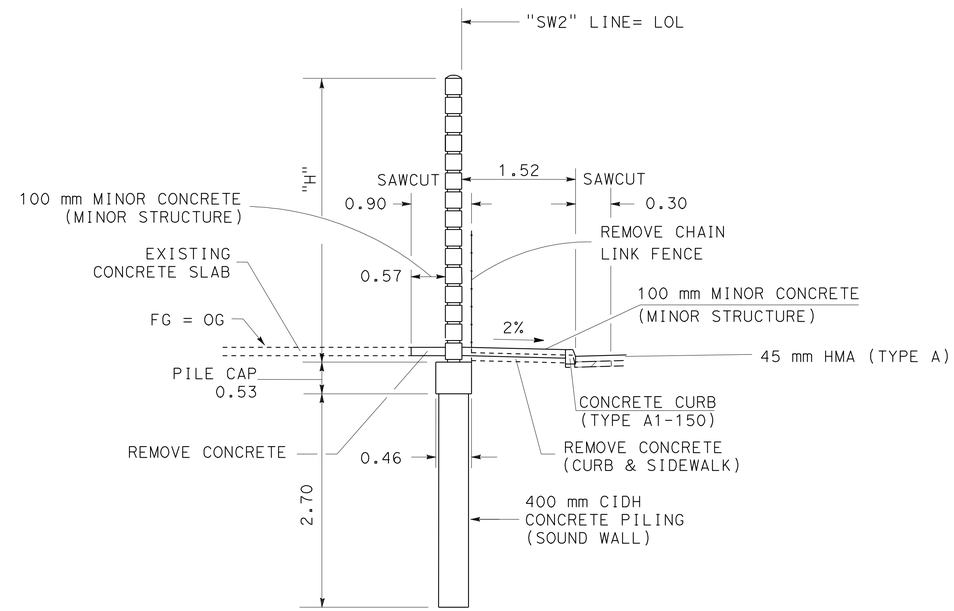

STA 0+53.084 TO STA 0+80.075 "SW2" LINE

SECTION D-D

ALL DIMENSIONS ARE IN METERS UNLESS OTHERWISE SHOWN

SOUND WALL PLAN
(SOUND WALL No. 2)

THIS PLAN ACCURATE FOR SOUND WALL WORK ONLY

NO SCALE **SW-4**

REVISED BY	WS
DATE REVISED	7/7/09
CALCULATED-DESIGNED BY	ALLEN LAO
CHECKED BY	WUTHY SENG
FUNCTIONAL SUPERVISOR	JOSE HUERTA

STATE OF CALIFORNIA - DEPARTMENT OF TRANSPORTATION
Caltrans
DESIGN

LAST REVISION 00-00-00 | DATE PLOTTED => 30-JUN-2010 | TIME PLOTTED => 16:01

Dist	COUNTY	ROUTE	KILOMETER POST TOTAL PROJECT	SHEET No.	TOTAL SHEETS
10	Sta	219,108	3.4/7.9, 44.3/44.9	432	522

Wuthy Seng 6/16/09
REGISTERED CIVIL ENGINEER DATE

6-28-10
PLANS APPROVAL DATE

REGISTERED PROFESSIONAL ENGINEER
WUTHY SENG
No. 60114
Exp. 6/30/10
CIVIL
STATE OF CALIFORNIA

THE STATE OF CALIFORNIA OR ITS OFFICERS OR AGENTS SHALL NOT BE RESPONSIBLE FOR THE ACCURACY OR COMPLETENESS OF ELECTRONIC COPIES OF THIS PLAN SHEET.

Caltrans Metric

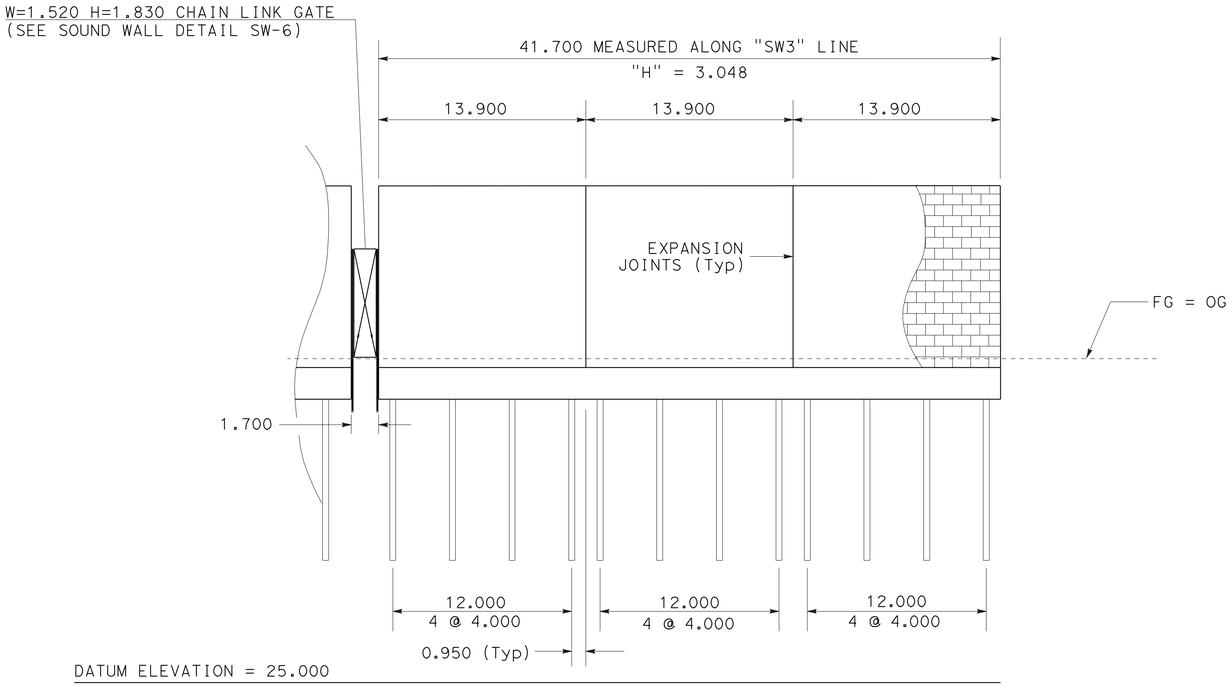

DEVELOPED ELEVATION

SCALE HORIZONTAL 1:200
VERTICAL 1:50

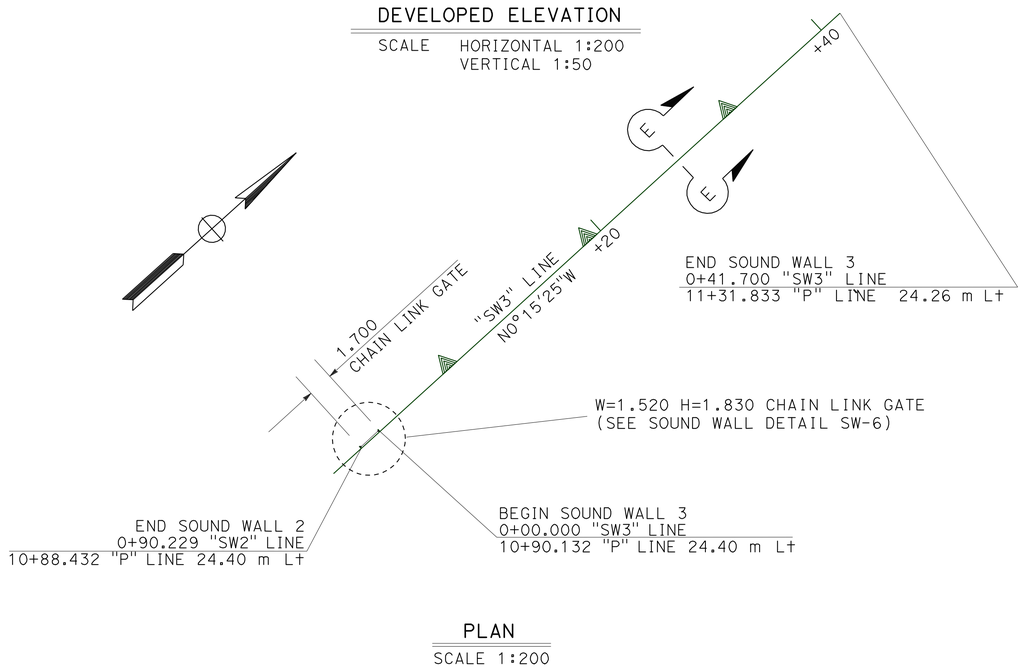

PLAN

SCALE 1:200

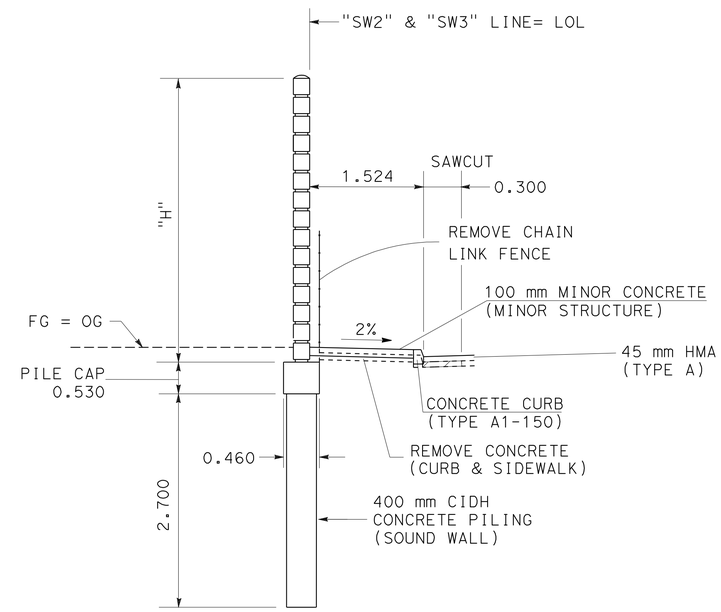

STA 0+80.075 TO STA 0+90.229 "SW2" LINE
STA 0+00.000 To STA 0+41.700 "SW3" LINE

SECTION E-E

NO SCALE

ALL DIMENSIONS ARE IN METERS UNLESS OTHERWISE SHOWN

THIS PLAN ACCURATE FOR SOUND WALL WORK ONLY

SOUND WALL PLAN
(SOUND WALL No. 3)

SCALE AS SHOWN **SW-5**

REVISED BY	DATE REVISED
WS	7/7/09

CALCULATED-DESIGNED BY: ALLEN LAO
CHECKED BY: WUTHY SENG
FUNCTIONAL SUPERVISOR: JOSE HUERTA

STATE OF CALIFORNIA - DEPARTMENT OF TRANSPORTATION
Caltrans
DESIGN

LAST REVISION 00-00-00 | DATE PLOTTED => 30-JUN-2010 | TIME PLOTTED => 16:01

Dist	COUNTY	ROUTE	KILOMETER POST TOTAL PROJECT	SHEET No.	TOTAL SHEETS
10	Sta	219,108	3.4/7.9, 44.3/44.9	433	522

Wuthy Seng 6/16/09
REGISTERED CIVIL ENGINEER DATE

6-28-10
PLANS APPROVAL DATE

REGISTERED PROFESSIONAL ENGINEER
WUTHY SENG
No. 60114
Exp. 6/30/10
CIVIL
STATE OF CALIFORNIA

THE STATE OF CALIFORNIA OR ITS OFFICERS OR AGENTS SHALL NOT BE RESPONSIBLE FOR THE ACCURACY OR COMPLETENESS OF ELECTRONIC COPIES OF THIS PLAN SHEET.

Caltrans Metric

NOTES: FOR DETAILS NOT SHOWN SEE STANDARD PLAN A85.

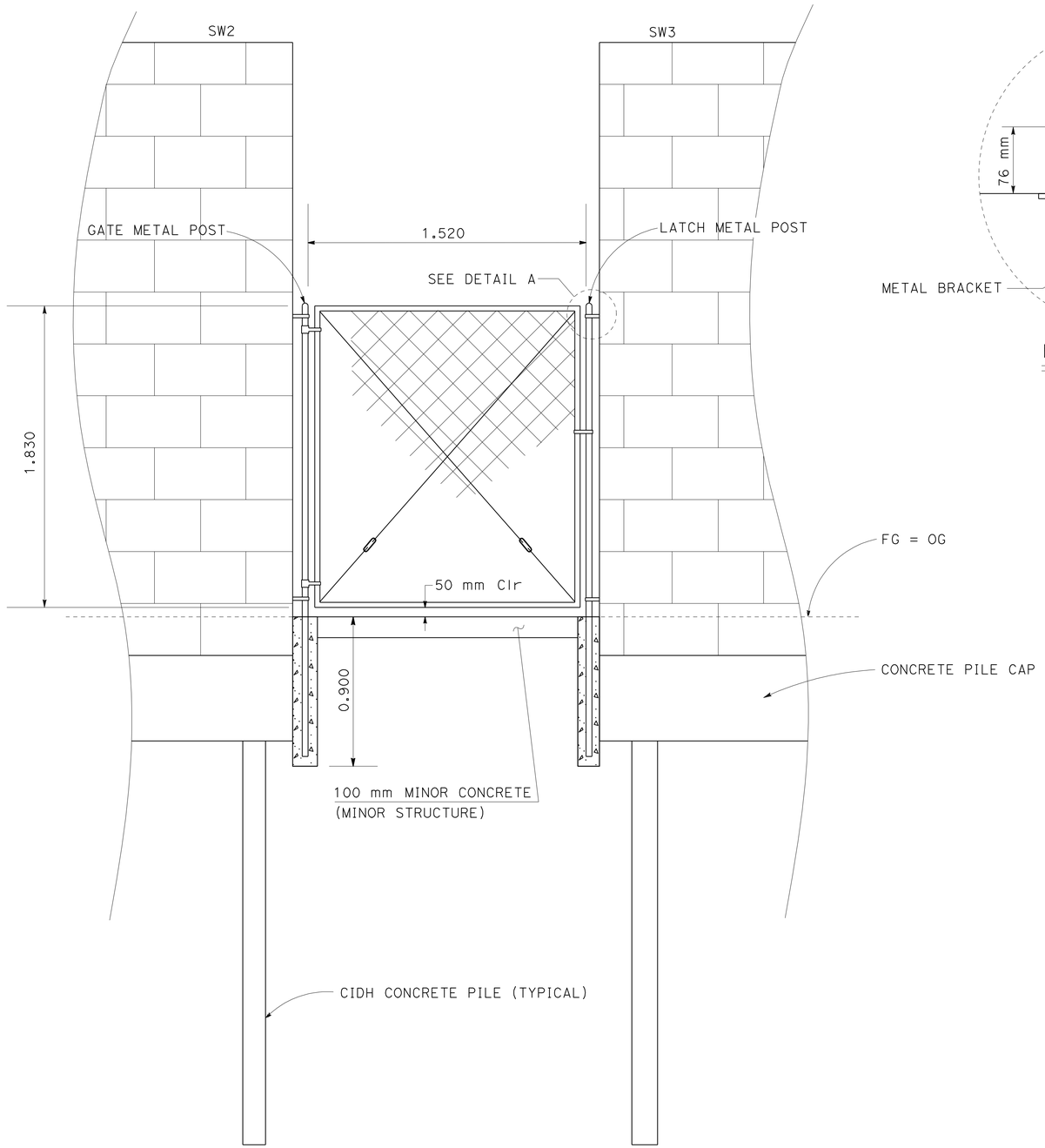

CHAIN LINK GATE BETWEEN "SW2" & "SW3"

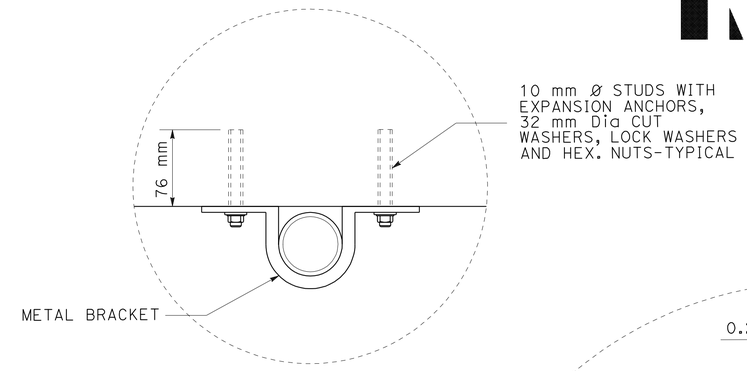

DETAIL A (Typ)

PLAN VIEW

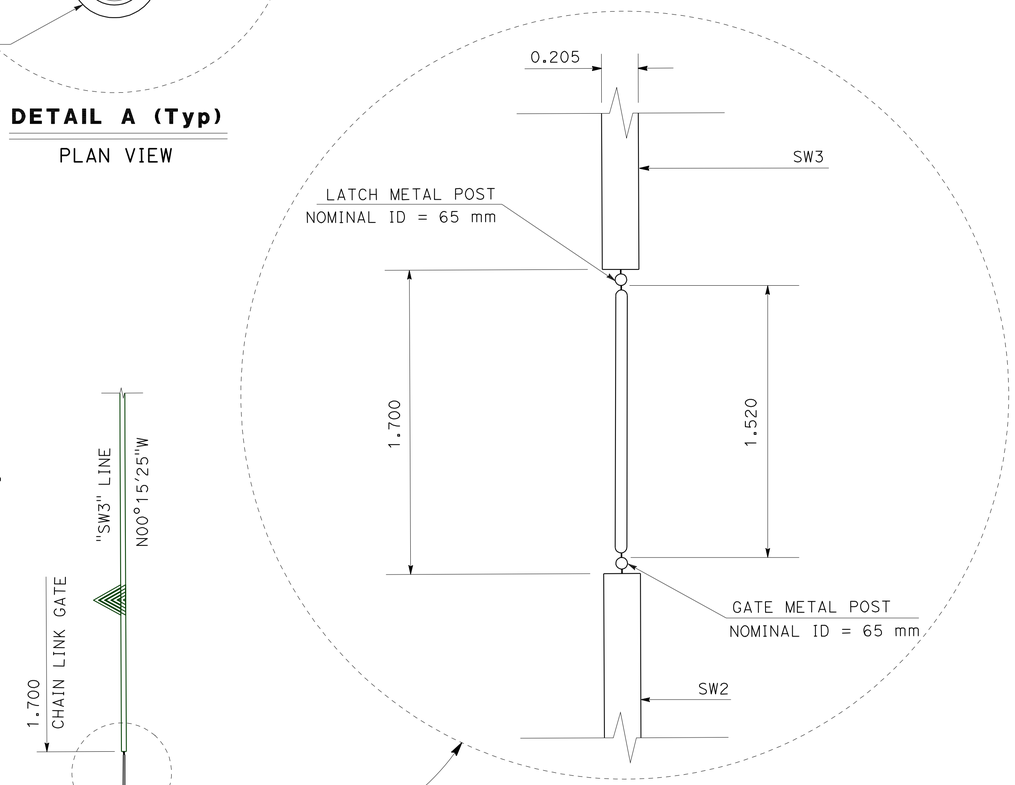

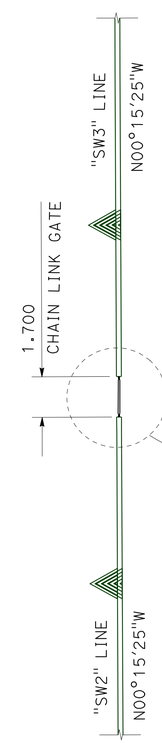

ALL DIMENSIONS ARE IN
METERS UNLESS OTHERWISE SHOWN

SOUND WALL DETAILS

NO SCALE **SW-6**

REVISED BY	WS	7/7/09
DATE REVISED		
CALCULATED-DESIGNED BY	ALLEN LAO	
CHECKED BY	WUTHY SENG	
FUNCTIONAL SUPERVISOR	JOSE HUERTA	

STATE OF CALIFORNIA - DEPARTMENT OF TRANSPORTATION
Caltrans
DESIGN

LAST REVISION 00-00-00
DATE PLOTTED => 30-JUN-2010
TIME PLOTTED => 16:01

Dist	COUNTY	ROUTE	KILOMETER POST TOTAL PROJECT	SHEET No.	TOTAL SHEETS
10	Sta	219,108	3.4/7.9, 44.3/44.9	434	522

LICENSED LANDSCAPE ARCHITECT

6-28-10
PLANS APPROVAL DATE

THE STATE OF CALIFORNIA OR ITS OFFICERS OR AGENTS SHALL NOT BE RESPONSIBLE FOR THE ACCURACY OR COMPLETENESS OF ELECTRONIC COPIES OF THIS PLAN SHEET.

LICENSED LANDSCAPE ARCHITECT — William Duttera No. 4242 — STATE OF CALIFORNIA — SIGNATURE 9/30/10 — EXPIRATION DATE 05/21/09 — Date

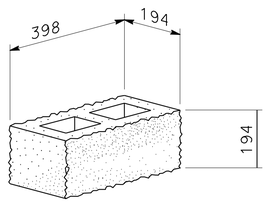

'A' BLOCK
SPLIT FACE BOTH SIDES
203 X 203 X 406 NOMINAL

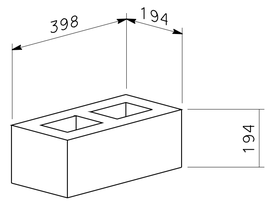

'B' BLOCK
PLAIN FACE BOTH SIDES
203 X 203 X 406 NOMINAL

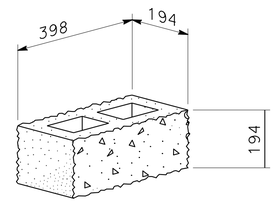

'C' BLOCK
SPLIT FACE BOTH SIDES
203 X 203 X 406 NOMINAL

BLOCK DETAILS

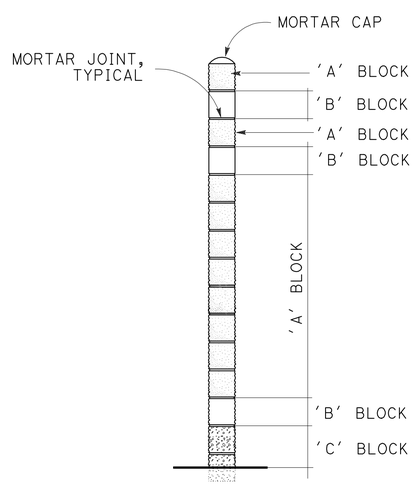

SECTION A-A
TYPICAL FOR SOUND WALL No. 1

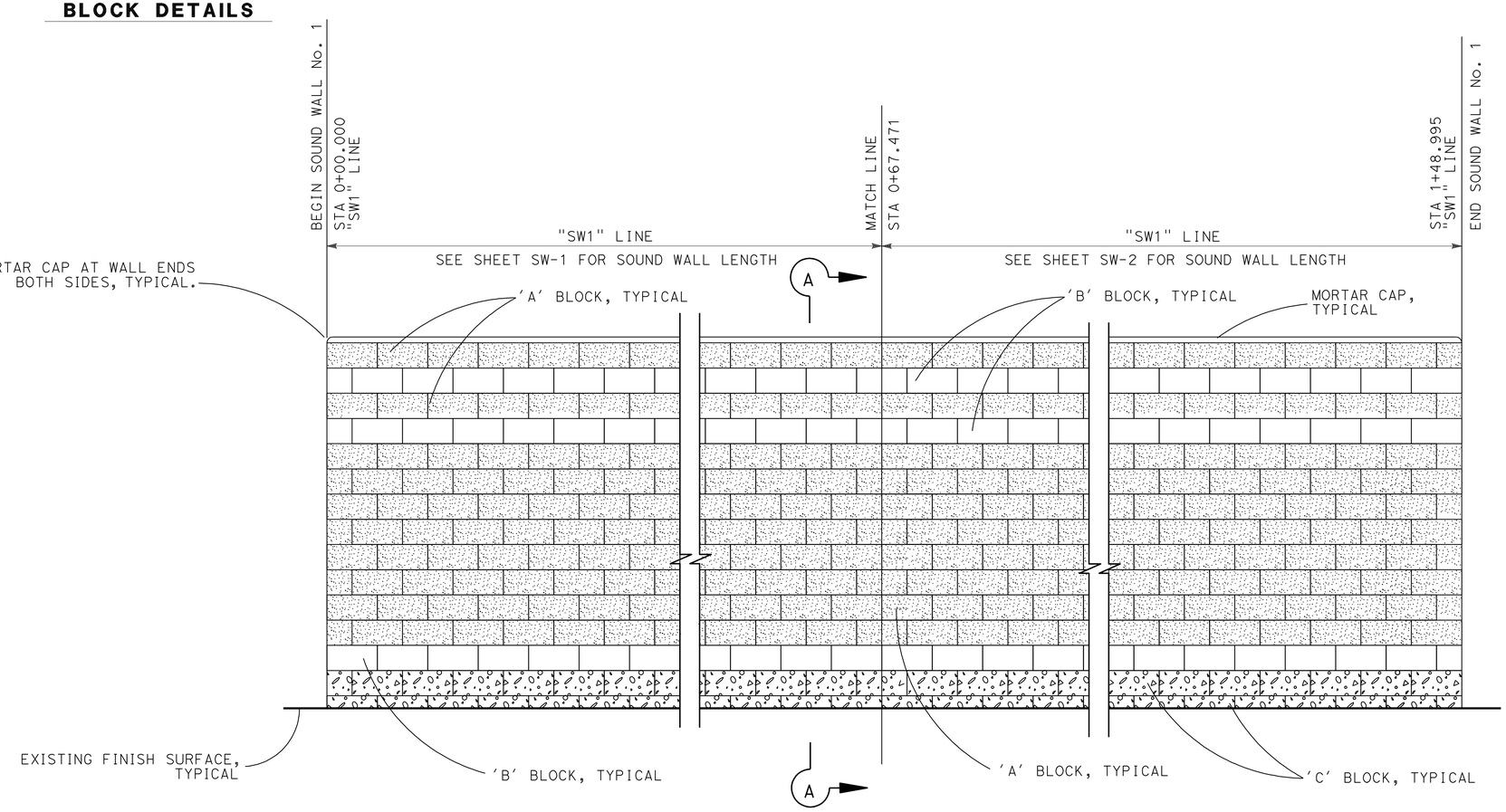

ELEVATION

SOUND WALL No. 1

STATION 0+00.000 TO STATION 1+48.995

NOTE: SEE STANDARD SPECIAL PROVISIONS FOR BLOCK COLORS.

ALL DIMENSIONS ARE IN MILLIMETERS UNLESS OTHERWISE SHOWN

SOUND WALL DETAILS
(AESTHETIC FEATURES)

NO SCALE

SW-7

GE	05-21-09	GUS ESCUTIA	CALCULATED-DESIGNED BY
REVISED BY	DATE REVISED	WILLIAM DUTTERA	CHECKED BY
SENIOR LANDSCAPE ARCHITECT		BRAD COLE	

STATE OF CALIFORNIA - DEPARTMENT OF TRANSPORTATION
Caltrans LANDSCAPE ARCHITECTURE

LAST REVISION 00-00-00 | DATE PLOTTED => 30-JUN-2010 | TIME PLOTTED => 16:01

Dist	COUNTY	ROUTE	KILOMETER POST TOTAL PROJECT	SHEET No.	TOTAL SHEETS
10	Sta	219,108	3.4/7.9, 44.3/44.9	435	522

LICENSED LANDSCAPE ARCHITECT

6-28-10
PLANS APPROVAL DATE

LICENSED LANDSCAPE ARCHITECT — William Duttera No. 2422 — STRUCTURE — 9/30/10 Renewal Date — 05/21/09 Date — STATE OF CALIFORNIA

THE STATE OF CALIFORNIA OR ITS OFFICERS OR AGENTS SHALL NOT BE RESPONSIBLE FOR THE ACCURACY OR COMPLETENESS OF ELECTRONIC COPIES OF THIS PLAN SHEET.

Caltrans Metric

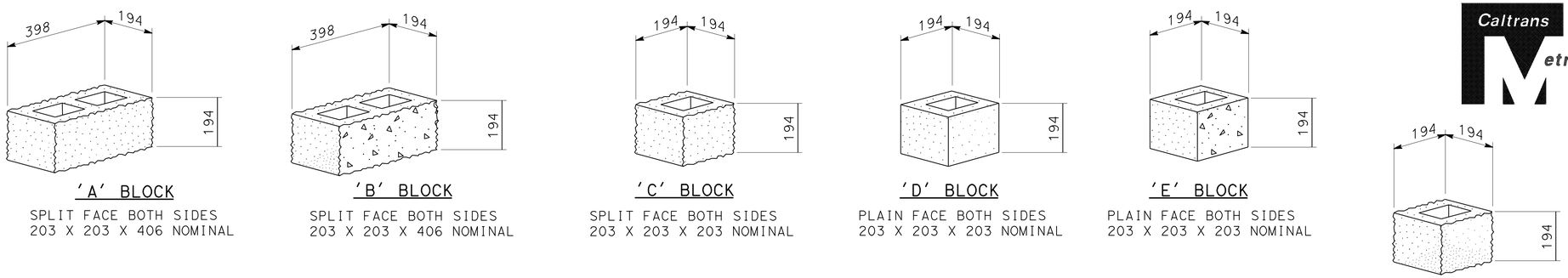

BLOCK DETAILS

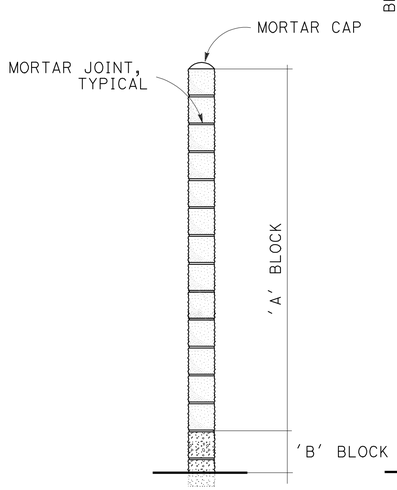

SECTION B-B

TYPICAL SECTION FOR SOUND WALL No. 2 AND No. 3(THIS SECTION REPRESENTS THE WALL AREAIN BETWEEN THE TREE IMAGES)

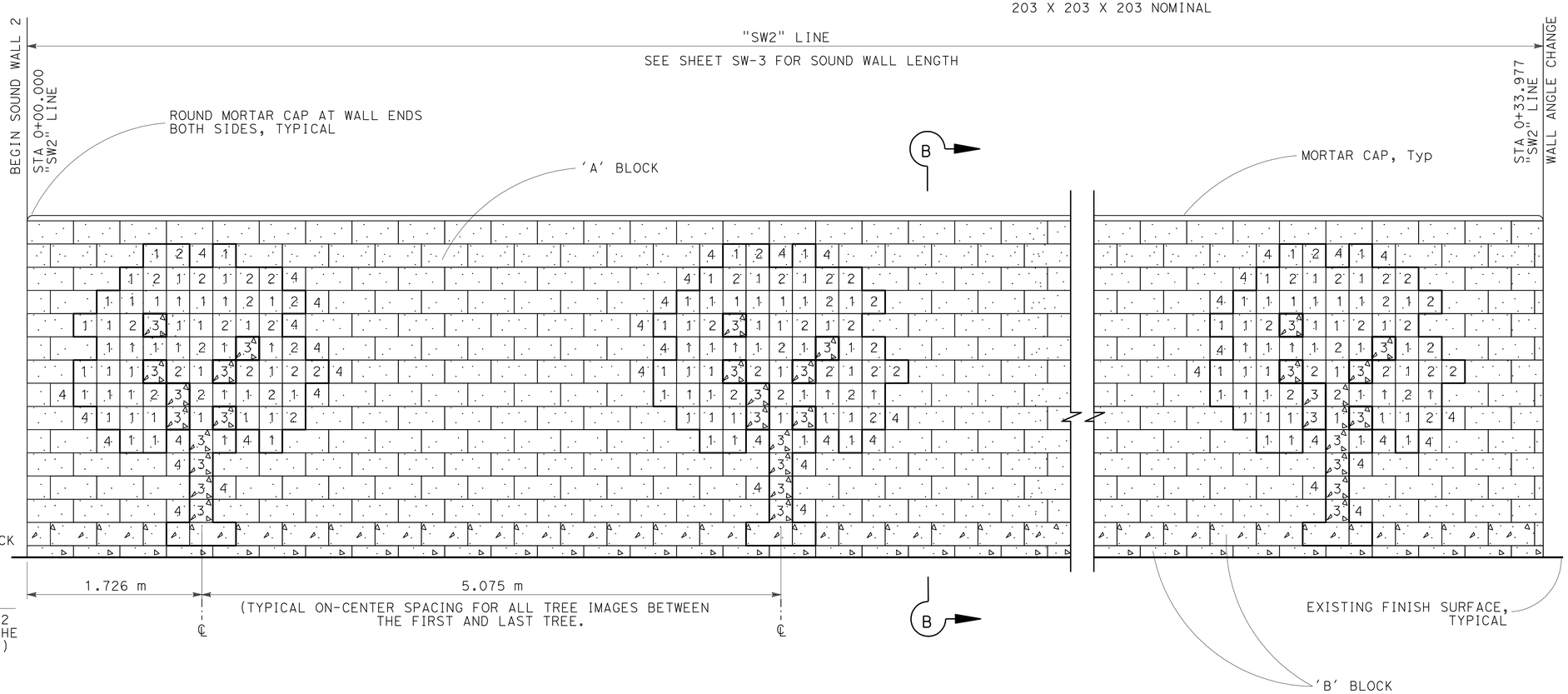

ELEVATION

SOUND WALL No. 2

STATION 0+00.000 TO STATION 0+33.977

BLOCK LEGEND

1. 'C' BLOCK (203 X 203 X 203)
2. 'D' BLOCK (203 X 203 X 203)
3. 'E' BLOCK (203 X 203 X 203)
4. 'F' BLOCK (203 X 203 X 203)

NOTE: SEE STANDARD SPECIAL PROVISIONS FOR BLOCK COLORS.

ALL DIMENSIONS ARE IN MILLIMETERS UNLESS OTHERWISE SHOWN

SOUND WALL DETAILS (AESTHETIC FEATURES)

NO SCALE

SW-8

GUS ESCUTIA	WILLIAM DUTTERA	GE	05-21-09
REVISED BY	DATE REVISED		
CALCULATED-DESIGNED BY	CHECKED BY		
SENIOR LANDSCAPE ARCHITECT	BRAD COLE		

STATE OF CALIFORNIA - DEPARTMENT OF TRANSPORTATION
Caltrans LANDSCAPE ARCHITECTURE

LAST REVISION 05-21-09 | DATE PLOTTED => 30-JUN-2010 | TIME PLOTTED => 16:01

Dist	COUNTY	ROUTE	KILOMETER POST TOTAL PROJECT	SHEET No.	TOTAL SHEETS
10	Sta	219,108	3.4/7.9, 44.3/44.9	436	522

LICENSED LANDSCAPE ARCHITECT

6-28-10
PLANS APPROVAL DATE

THE STATE OF CALIFORNIA OR ITS OFFICERS OR AGENTS SHALL NOT BE RESPONSIBLE FOR THE ACCURACY OR COMPLETENESS OF ELECTRONIC COPIES OF THIS PLAN SHEET.

LICENSED LANDSCAPE ARCHITECT — William Duttera No. 4242 — SIGNATURE — 9/30/10 EXPIRATION DATE — 05/21/09 Date — STATE OF CALIFORNIA

Caltrans Metric

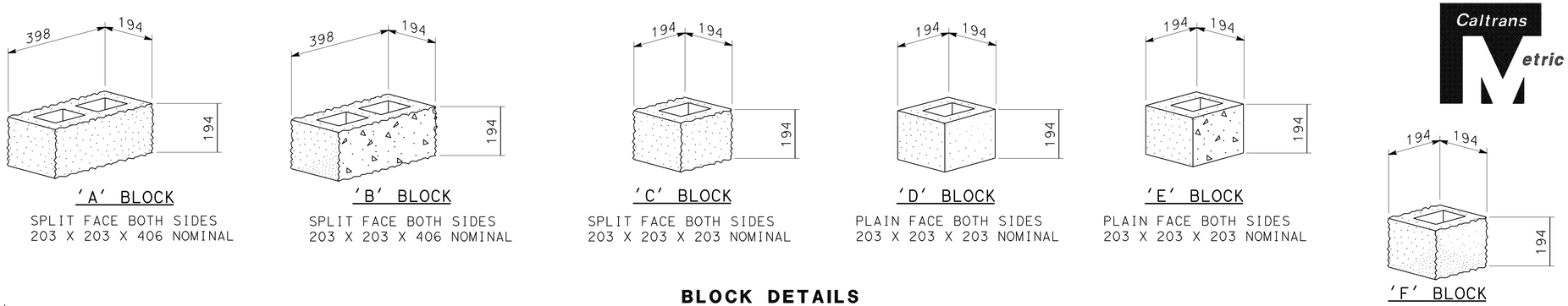

BLOCK DETAILS

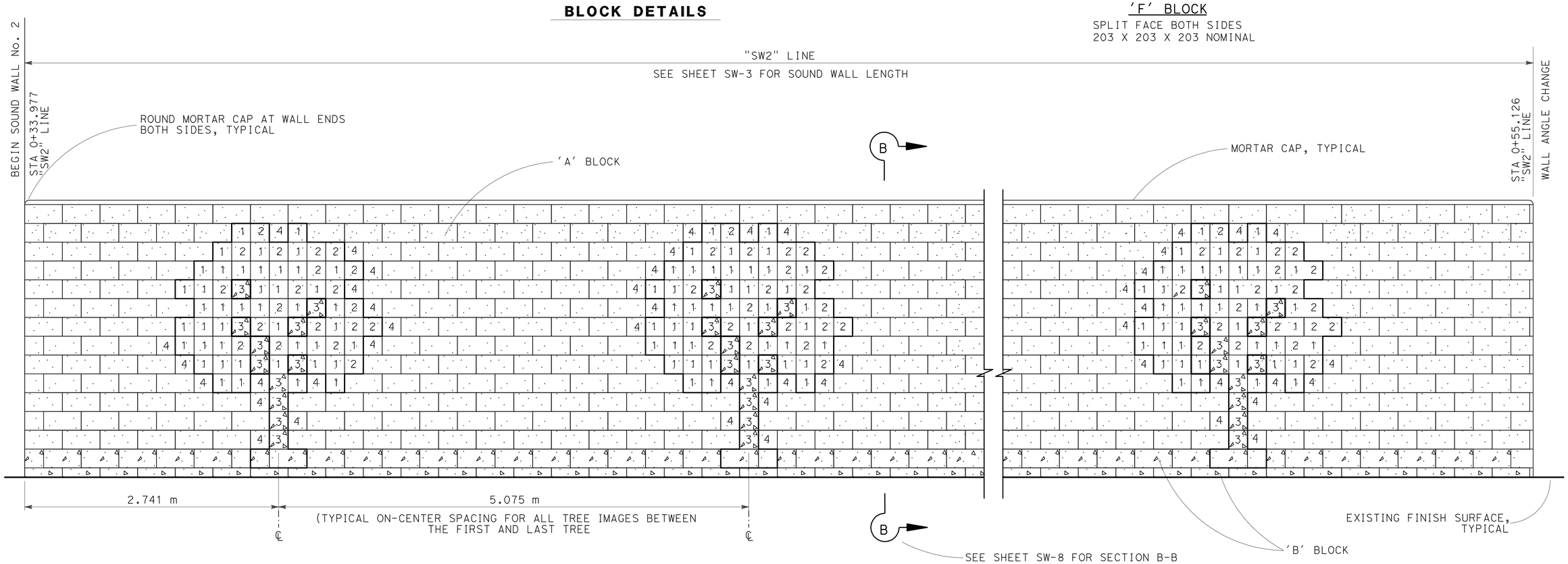

BLOCK LEGEND

1	'C' BLOCK (203 X 203 X 203)
2	'D' BLOCK (203 X 203 X 203)
3	'E' BLOCK (203 X 203 X 203)
4	'F' BLOCK (203 X 203 X 203)

NOTE: SEE STANDARD SPECIAL PROVISIONS FOR BLOCK COLORS.

ELEVATION

SOUND WALL No. 2

STATION 0+33.977 TO STATION 0+55.126

ALL DIMENSIONS ARE IN MILLIMETERS UNLESS OTHERWISE SHOWN

SOUND WALL DETAILS
(AESTHETIC FEATURES)

NO SCALE

SW-9

GUS ESCUTIA	GE	REVISED BY	05-21-09
WILLIAM DUTTERA		DATE REVISED	
CALCULATED-DESIGNED BY			
CHECKED BY			
SENIOR LANDSCAPE ARCHITECT			
BRAD COLE			

STATE OF CALIFORNIA - DEPARTMENT OF TRANSPORTATION
Caltrans LANDSCAPE ARCHITECTURE

LAST REVISION 00-00-00 | DATE PLOTTED => 30-JUN-2010 | TIME PLOTTED => 16:01

Dist	COUNTY	ROUTE	KILOMETER POST TOTAL PROJECT	SHEET No.	TOTAL SHEETS
10	Sta	219,108	3.4/7.9, 44.3/44.9	437	522

LICENSED LANDSCAPE ARCHITECT

6-28-10
PLANS APPROVAL DATE

THE STATE OF CALIFORNIA OR ITS OFFICERS OR AGENTS SHALL NOT BE RESPONSIBLE FOR THE ACCURACY OR COMPLETENESS OF ELECTRONIC COPIES OF THIS PLAN SHEET.

LICENSED LANDSCAPE ARCHITECT — William Duttera No. 2422 — STATE OF CALIFORNIA — SIGNATURE 9/30/10 — REGISTRATION EXPIRES 05/21/09 Date

Caltrans Metric

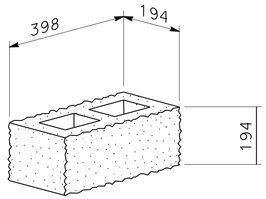

'A' BLOCK
SPLIT FACE BOTH SIDES
203 X 203 X 406 NOMINAL

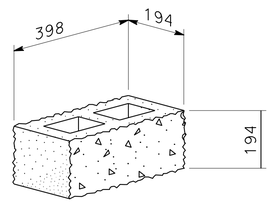

'B' BLOCK
SPLIT FACE BOTH SIDES
203 X 203 X 406 NOMINAL

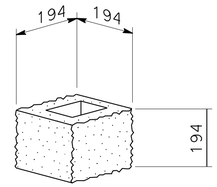

'C' BLOCK
SPLIT FACE BOTH SIDES
203 X 203 X 203 NOMINAL

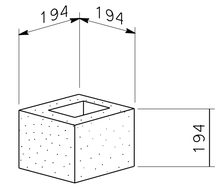

'D' BLOCK
PLAIN FACE BOTH SIDES
203 X 203 X 203 NOMINAL

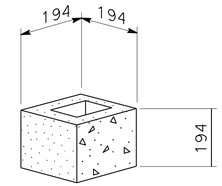

'E' BLOCK
PLAIN FACE BOTH SIDES
203 X 203 X 203 NOMINAL

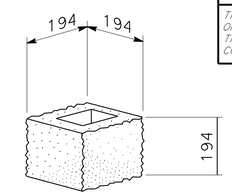

'F' BLOCK
SPLIT FACE BOTH SIDES
203 X 203 X 203 NOMINAL

BLOCK DETAILS

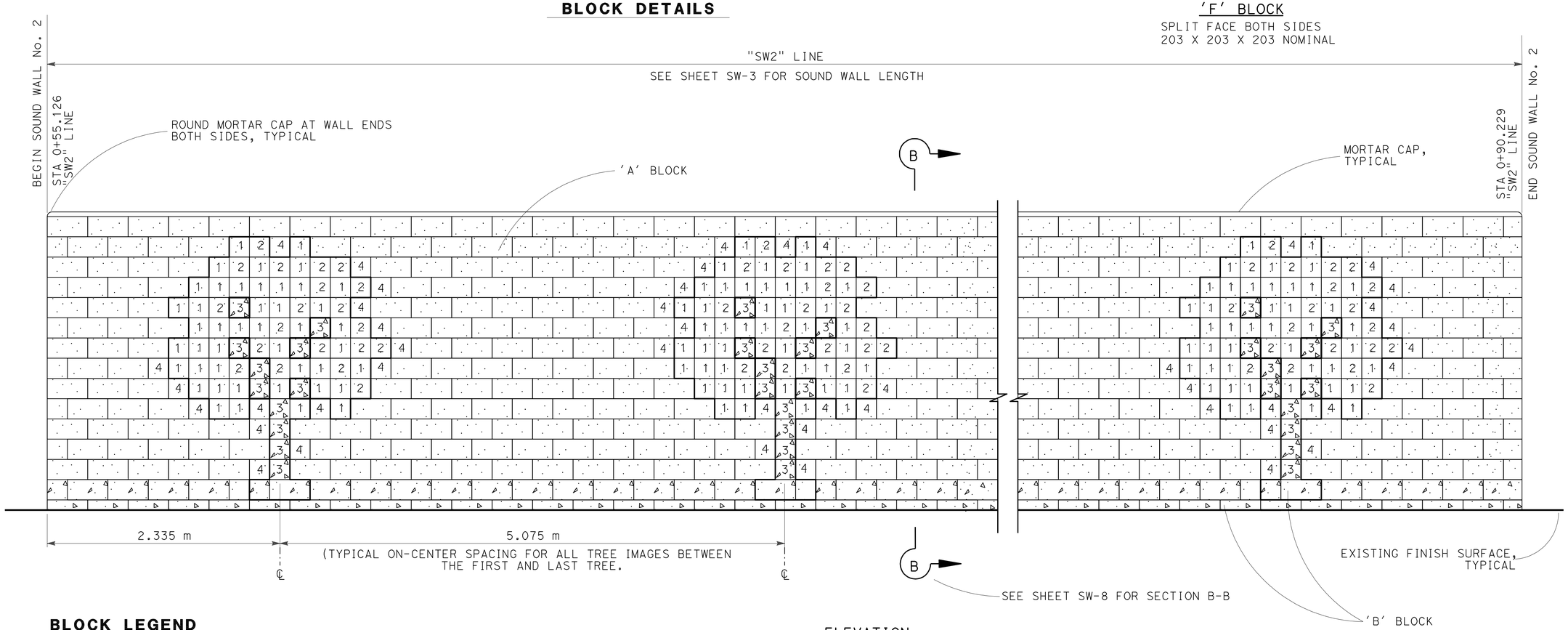

ELEVATION

SOUND WALL No. 2

STATION 0+55.126 TO STATION 0+90.229

BLOCK LEGEND

1 'C' BLOCK (203 X 203 X 203)
2 'D' BLOCK (203 X 203 X 203)
3 'E' BLOCK (203 X 203 X 203)
4 'F' BLOCK (203 X 203 X 203)

NOTE: SEE STANDARD SPECIAL PROVISIONS FOR BLOCK COLORS.

ALL DIMENSIONS ARE IN MILLIMETERS UNLESS OTHERWISE SHOWN

SOUND WALL DETAILS
(AESTHETIC FEATURES)

NO SCALE

SW-10

GE	05-21-09	GUS ESCUTIA	WILLIAM DUTTERA
REVISED BY	DATE REVISED	CALCULATED-DESIGNED BY	CHECKED BY
SENIOR LANDSCAPE ARCHITECT	BRAD COLE		

STATE OF CALIFORNIA - DEPARTMENT OF TRANSPORTATION
Caltrans LANDSCAPE ARCHITECTURE

LAST REVISION 05-21-09 | DATE PLOTTED => 30-JUN-2010 | TIME PLOTTED => 16:01

Dist	COUNTY	ROUTE	KILOMETER POST TOTAL PROJECT	SHEET No.	TOTAL SHEETS
10	Sta	219,108	3.4/7.9, 44.3/44.9	438	522

LICENSED LANDSCAPE ARCHITECT

6-28-10
PLANS APPROVAL DATE

LICENSED LANDSCAPE ARCHITECT — William Duttera No. 2422 — STRUCTURE — 9/30/10 — REGISTRATION EXPIRES — 05/21/09 Date — STATE OF CALIFORNIA

THE STATE OF CALIFORNIA OR ITS OFFICERS OR AGENTS SHALL NOT BE RESPONSIBLE FOR THE ACCURACY OR COMPLETENESS OF ELECTRONIC COPIES OF THIS PLAN SHEET.

Caltrans Metric

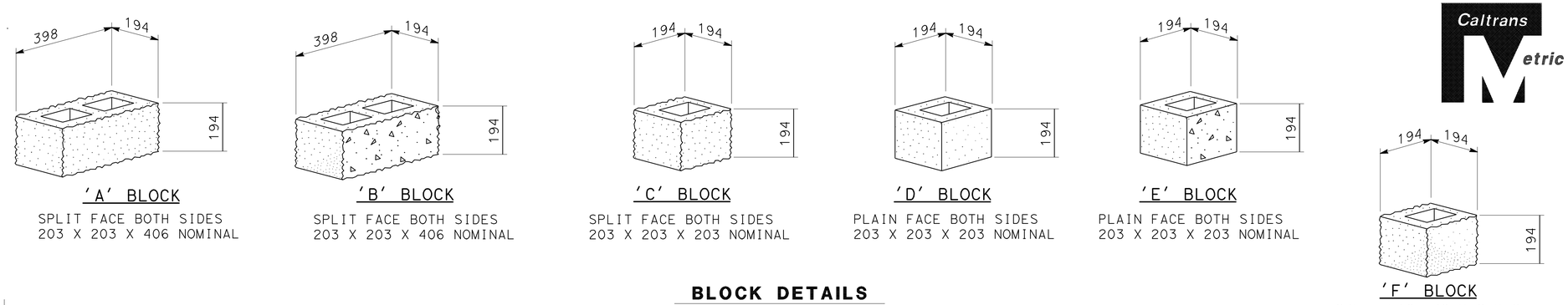

BLOCK DETAILS

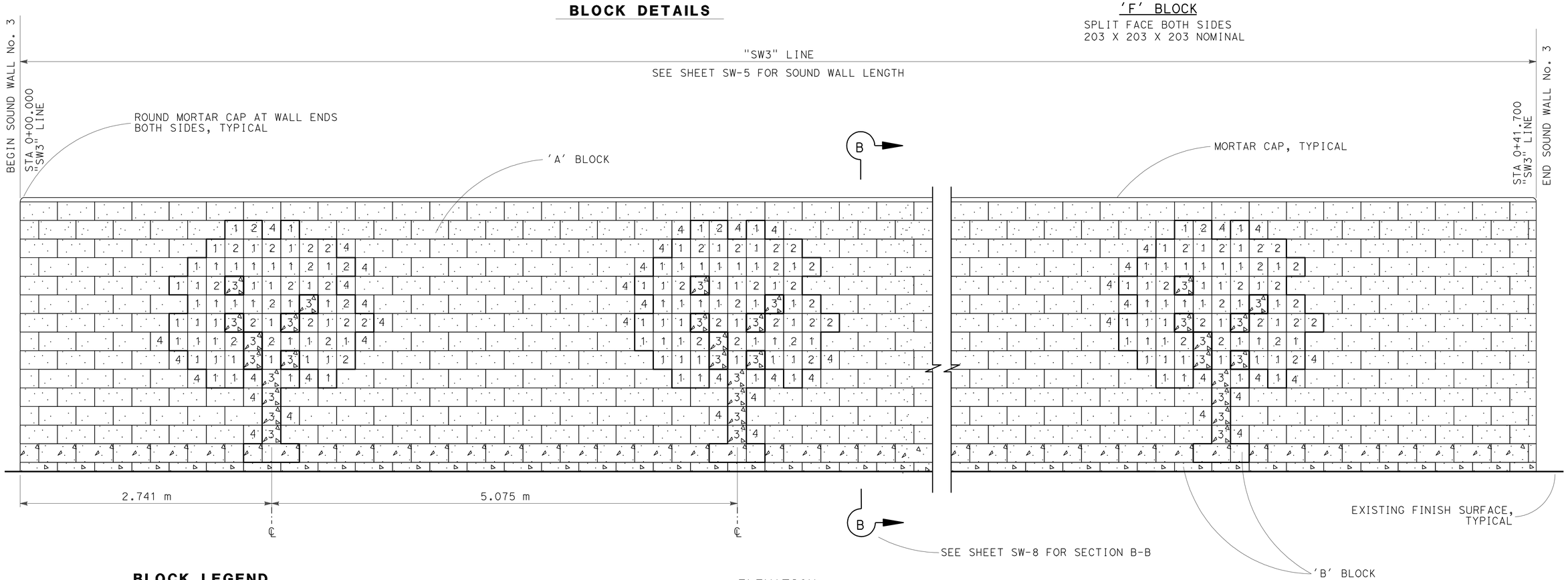

BLOCK LEGEND

1 'C' BLOCK (203 X 203 X 203)
2 'D' BLOCK (203 X 203 X 203)
3 'E' BLOCK (203 X 203 X 203)
4 'F' BLOCK (203 X 203 X 203)

NOTE: SEE STANDARD SPECIAL PROVISIONS FOR BLOCK COLORS.

ELEVATION

SOUND WALL No. 3

STATION 0+00.000 TO STATION 0+41.700

ALL DIMENSIONS ARE IN MILLIMETERS UNLESS OTHERWISE SHOWN

SOUND WALL DETAILS
(AESTHETIC FEATURES)

NO SCALE

SW-11

GUS ESCUTIA	GE
WILLIAM DUTTERA	05-21-09
REVISED BY	
DATE REVISED	
CALCULATED-DESIGNED BY	
CHECKED BY	
SENIOR LANDSCAPE ARCHITECT	
BRAD COLE	

STATE OF CALIFORNIA - DEPARTMENT OF TRANSPORTATION
Caltrans LANDSCAPE ARCHITECTURE

LAST REVISION 05-21-09 | DATE PLOTTED => 30-JUN-2010 | TIME PLOTTED => 16:01

DIST	COUNTY	ROUTE	KILOMETER POST TOTAL PROJECT	SHEET No	TOTAL SHEETS
10	Sta	219,108	3.4/7.9, 44.3/44.9	439	522

REGISTERED CIVIL ENGINEER 09-16-08

6-28-10
PLANS APPROVAL DATE

REGISTERED PROFESSIONAL ENGINEER
Qiang Huang
No. C055670
Exp. 12-31-08
CIVIL
STATE OF CALIFORNIA

The State of California or its officers or agents shall not be responsible for the accuracy or completeness of electronic copies of this plan sheet.

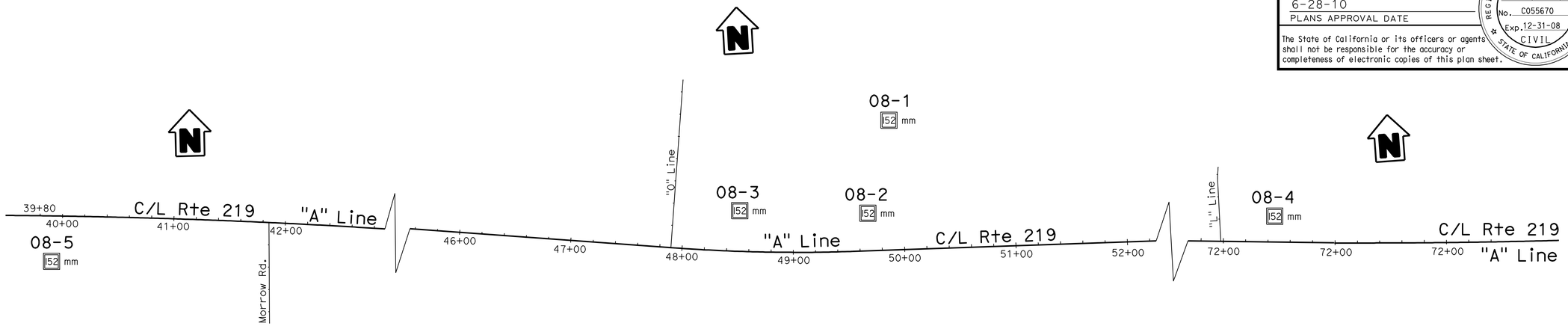

BENCH MARK

Boring elevations obtained from Topographic Map.

PLAN

1:2000

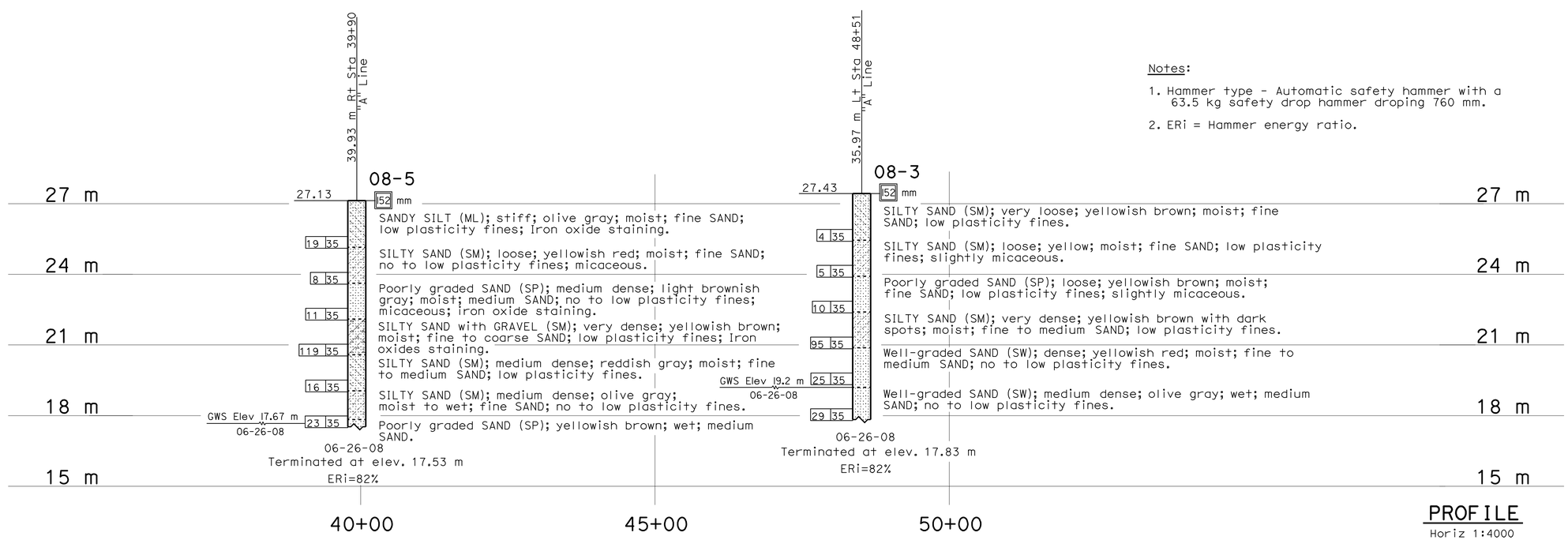

Notes:

1. Hammer type - Automatic safety hammer with a 63.5 kg safety drop hammer droping 760 mm.
2. ERi = Hammer energy ratio.

PROFILE

Horiz 1:4000
Vert 1:100

SW-12

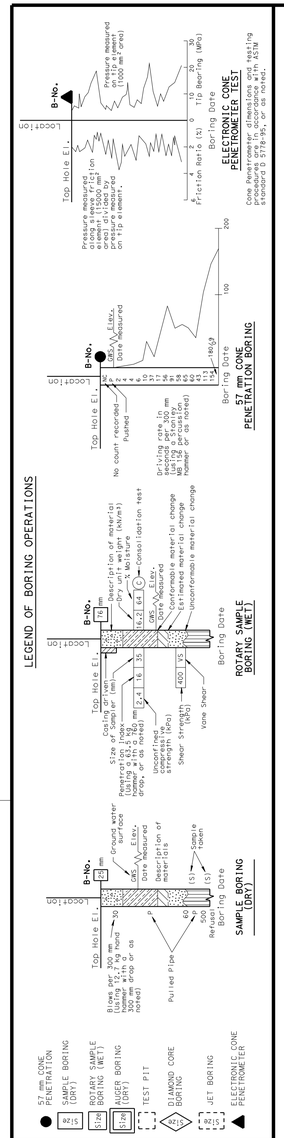

LEGEND OF EARTH MATERIALS

GRAVEL, SAND, SILT, CLAY, SANDY CLAY or CLAYEY SAND, SANDY SILT or SILTY SAND, SILTY CLAY, CLAYEY SILT, PEAT and/or ORGANIC MATTER, COBBLES and/or BOULDERS, IGNEOUS ROCK, SEDIMENTARY ROCK, METAMORPHIC

CONSISTENCY CLASSIFICATION FOR SOILS

According to the Standard Penetration Test

SPT N-Value (Blows/0.3m)	Granular	SPT N-Value (Blows/0.3m)	Cohesive
0-4	Very Loose	<2	Very Soft
5-10	Loose	2-4	Soft
11-30	Medium Dense	5-8	Firm
31-50	Dense	9-15	Stiff
>50	Very Dense	16-30	Very stiff
		>30	Hard

NOTE: Classification of earth material as shown on this sheet is based upon field inspection and is not to be construed to imply mechanical analysis.

OGS CIVIL LOG OF TEST BORINGS SHEET (METRIC) (REV. 4/04)

Caltrans Metric

ENGINEERING SERVICES	GEOTECHNICAL SERVICES
DRAWN BY	W. Tang 08/08
CHECKED BY	Qiang Huang

FIELD INVESTIGATION BY: C. Zhen

STATE OF CALIFORNIA
DEPARTMENT OF TRANSPORTATION

DIVISION OF ENGINEERING SERVICES
STRUCTURE DESIGN
DESIGN BRANCH

BRIDGE NO.
KILOMETER POST 3.4/7.9

RTE 219 SOUND WALLS AND CMS'S
LOG OF TEST BORINGS 1 OF 3

ALL DIMENSIONS ARE IN METERS UNLESS OTHERWISE SHOWN

ORIGINAL SCALE IN MILLIMETERS FOR REDUCED PLANS 0 10 20 30 40 50 60 70 80 90 100

CU 10
EA 0A8721

DISREGARD PRINTS BEARING EARLIER REVISION DATES

REVISION DATES (PRELIMINARY STAGE ONLY) 09-15-08 SHEET OF

FILE => a0a872ra012.dgn

USERNAME => s121614 DATE PLOTTED => 11-JAN-2012 TIME PLOTTED => 07:23

DIST	COUNTY	ROUTE	KILOMETER POST TOTAL PROJECT	SHEET No	TOTAL SHEETS
10	Sta	219,108	3.4/7.9, 44.3/44.9	440	522

REGISTERED CIVIL ENGINEER 09-16-08

6-28-10
PLANS APPROVAL DATE

REGISTERED PROFESSIONAL ENGINEER
Qiang Huang
No. C055670
Exp. 12-31-08
CIVIL
STATE OF CALIFORNIA

The State of California or its officers or agents shall not be responsible for the accuracy or completeness of electronic copies of this plan sheet.

FOR PLAN VIEW, SEE
"LOG OF TEST BORINGS" 1 OF 3

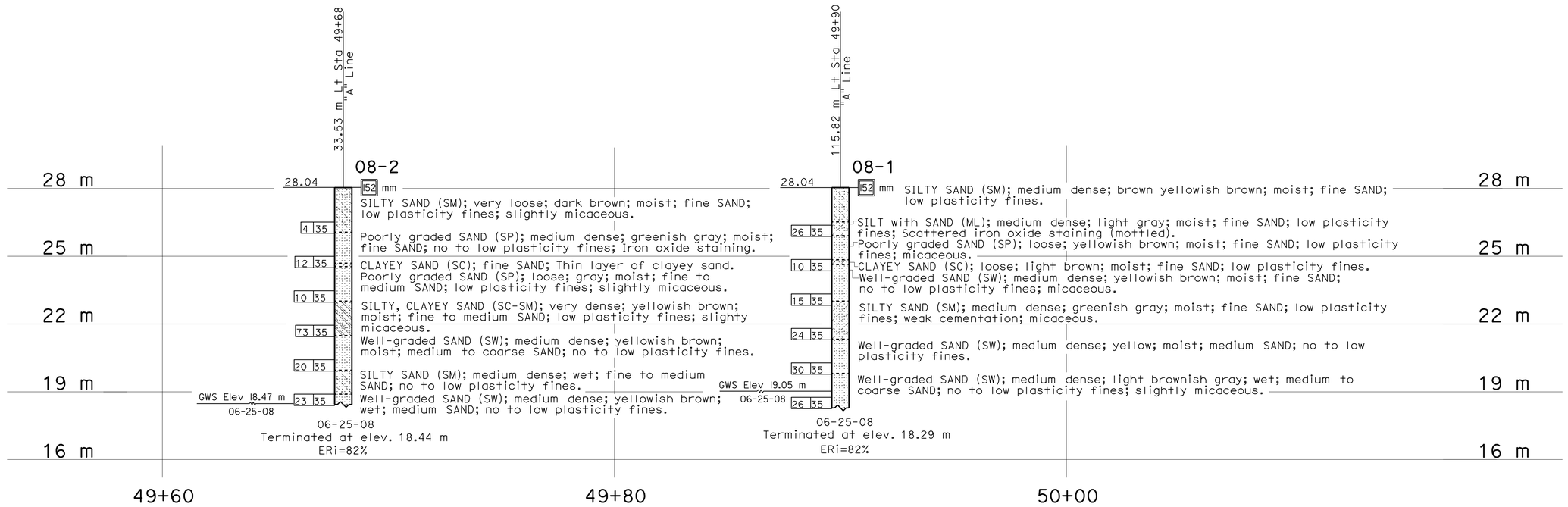

PROFILE
Horiz 1:100
Vert 1:100

SW-13

LEGEND OF BORING OPERATIONS

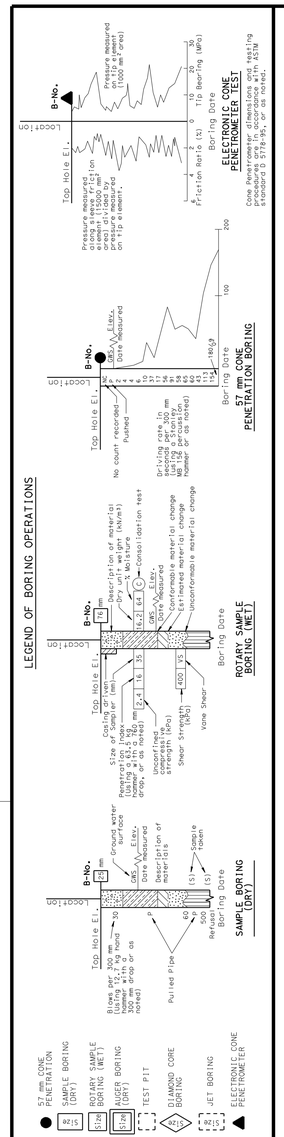

LEGEND OF EARTH MATERIALS

GRAVEL, SAND, SILT, CLAY, SANDY CLAY or CLAYEY SAND, SANDY SILT or SILTY SAND, SILTY CLAY, CLAYEY SILT, PEAT and/or ORGANIC MATTER, COBBLES and/or BOULDERS, IGNEOUS ROCK, SEDIMENTARY ROCK, METAMORPHIC

CONSISTENCY CLASSIFICATION FOR SOILS

According to the Standard Penetration Test

SPT N-Value (Blows/ 0.3m)	Granular	SPT N-Value (Blows/ 0.3m)	Cohesive
0-4	Very Loose	<2	Very Soft
5-10	Loose	2-4	Soft
11-30	Medium Dense	5-8	Firm
31-50	Dense	9-15	Stiff
>50	Very Dense	16-30	Very stiff
		>30	Hard

NOTE: Classification of earth material as shown on this sheet is based upon field inspection and is not to be construed to imply mechanical analysis.

OGS CIVIL LOG OF TEST BORINGS SHEET (METRIC) (REV. 4/04)

Caltrans Metric

ENGINEERING SERVICES	GEOTECHNICAL SERVICES
DRAWN BY	W. Tang 08/08
CHECKED BY	Qiang Huang

FIELD INVESTIGATION BY: C. Zhen

STATE OF CALIFORNIA
DEPARTMENT OF TRANSPORTATION

DIVISION OF ENGINEERING SERVICES
STRUCTURE DESIGN
DESIGN BRANCH

BRIDGE NO.
KILOMETER POST 3.4/7.9

RTE 219 SOUND WALLS AND CMS'S
LOG OF TEST BORINGS 2 OF 3

ALL DIMENSIONS ARE IN METERS UNLESS OTHERWISE SHOWN

ORIGINAL SCALE IN MILLIMETERS FOR REDUCED PLANS 0 10 20 30 40 50 60 70 80 90 100

CU 10
EA 0A8721

DISREGARD PRINTS BEARING EARLIER REVISION DATES

REVISION DATES (PRELIMINARY STAGE ONLY) 09-15-08

SHEET OF

FILE => a0a872ra013.dgn

USERNAME => trmartok DATE PLOTTED => 30-JUN-2010 TIME PLOTTED => 16:26

DIST	COUNTY	ROUTE	KILOMETER POST TOTAL PROJECT	SHEET No	TOTAL SHEETS
10	Sta	219,108	3.4/7.9, 44.3/44.9	441	522

REGISTERED CIVIL ENGINEER 09-16-08

6-28-10
PLANS APPROVAL DATE

REGISTERED PROFESSIONAL ENGINEER
Qiang Huang
No. C055670
Exp. 12-31-08
CIVIL
STATE OF CALIFORNIA

The State of California or its officers or agents shall not be responsible for the accuracy or completeness of electronic copies of this plan sheet.

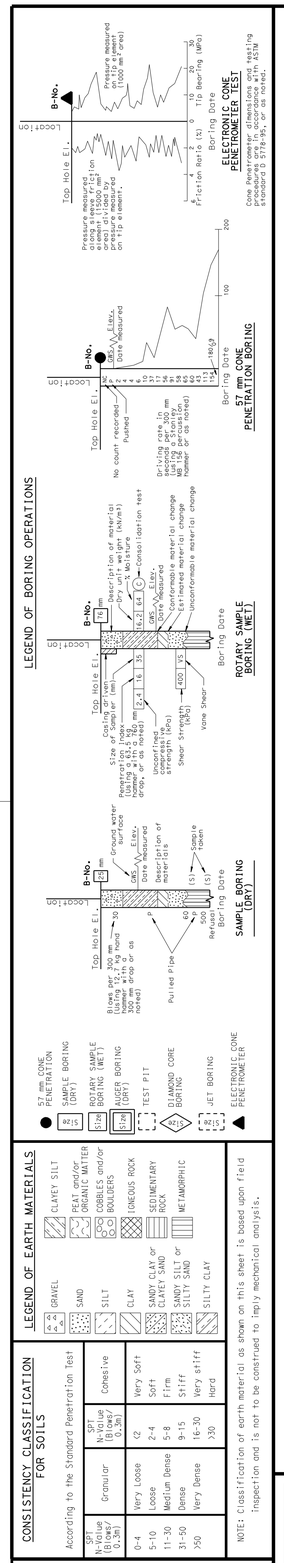

OGS CIVIL LOG OF TEST BORINGS SHEET (METRIC) (REV. 4/04)

FOR PLAN VIEW, SEE
"LOG OF TEST BORINGS" 1 OF 3

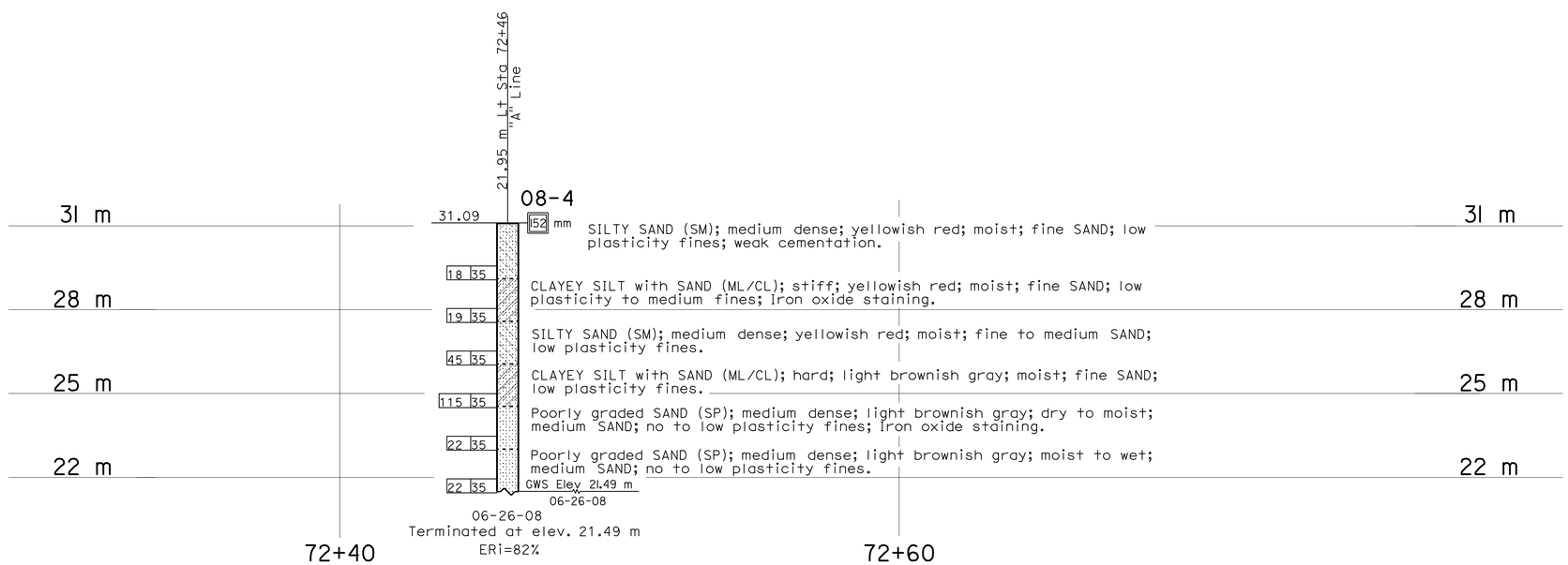

PROFILE
Horiz 1:100
Vert 1:100

SW-14

Caltrans Metric

ENGINEERING SERVICES	GEOTECHNICAL SERVICES
DRAWN BY	W. Tang 08/08
CHECKED BY	Qiang Huang

FIELD INVESTIGATION BY: C. Zhen

STATE OF CALIFORNIA
DEPARTMENT OF TRANSPORTATION

DIVISION OF ENGINEERING SERVICES
STRUCTURE DESIGN
DESIGN BRANCH

BRIDGE NO.
KILOMETER POST 3.4/7.9

RTE 219 SOUND WALLS AND CMS'S
LOG OF TEST BORINGS 3 OF 3

ALL DIMENSIONS ARE IN METERS UNLESS OTHERWISE SHOWN

ORIGINAL SCALE IN MILLIMETERS FOR REDUCED PLANS 0 10 20 30 40 50 60 70 80 90 100

CU 10
EA 0A8721

DISREGARD PRINTS BEARING EARLIER REVISION DATES 09-15-08

REVISION DATES (PRELIMINARY STAGE ONLY) SHEET OF

FILE => a0a872ra014.dgn

USERNAME => ttmorlok DATE PLOTTED => 30-JUN-2010 TIME PLOTTED => 16:27

Dist	COUNTY	ROUTE	KILOMETER POST TOTAL PROJECT	SHEET No.	TOTAL SHEETS
10	Sta	219,108	3.4/7.9, 44.3/44.9	442	522

LICENSED LANDSCAPE ARCHITECT

6-28-10
PLANS APPROVAL DATE

LICENSED LANDSCAPE ARCHITECT
William Duttera No. 4422
Signature
9/30/10
Renewal Date
05/21/09
Date
STATE OF CALIFORNIA

THE STATE OF CALIFORNIA OR ITS OFFICERS OR AGENTS SHALL NOT BE RESPONSIBLE FOR THE ACCURACY OR COMPLETENESS OF ELECTRONIC COPIES OF THIS PLAN SHEET.

Caltrans Metric

ABBREVIATIONS

AMEND — amendment
B & B — balled and burlapped
DIA — diameter
EA — each
g — gram
kg — kilogram
m — meter
m^2 — square meter
m^3 — cubic meter
MAX — maximum
MIN — minimum
mm — millimeter
No — number
Pkt — packet
PLT ESTB — plant establishment
PVMT — pavement
R/W — right of way
SF — state furnished
TRVD — traveled

LEGEND

EXISTING TREES
EXISTING SHRUBS
EXISTING TURF
MAINTAIN EXISTING PLANTED AREA

PLANT LIST AND PLANTING SPECIFICATIONS

PLANT GROUP	PLANT No	SYMBOL	BOTANICAL NAME ⑦	COMMON NAME ⑦	SIZE	QUANTITY AREA M^2	HOLE SIZE (mm) DIA	HOLE SIZE (mm) DEPTH	BASIN TYPE	IRON SULFATE ①	SOIL AMEND ①	COMMERCIAL FERTILIZER ⑧ PLANTING	COMMERCIAL FERTILIZER ⑧ PLT ESTB	BASIN MULCH	STAKING	PLANTING LIMITS MINIMUM DISTANCE (m) FROM TRVD WAY	PVMT	FENCE	WALL	PAVED DITCH	EARTH DITCH	ON CENTER (m)	REMARKS
T	1		FESTUCA / POA BLEND	TALL FESCUE / BLUEGRASS	110 M^2	⑦	—	—	—	—	3.0 m^3	3.4 kg/ 100 m^2	3.4 kg/ 100 m^2	—	—	—	—	—	—	—	—	—	SOD

APPLICABLE WHEN CIRCLED:

① - Quantities shown are "per plant" unless shown as m^3 application rates.
2 - Sufficient to receive root ball.
3 - Does not apply to mulch areas.
4 - As shown on plans.
5 - Unless otherwise shown on plans.
6 - See detail.
⑦ - See Special Provisions.
⑧ - Commercial fertilizer at planting shall be slow release.

NOTE:

Underlined portions of botanical name indicate abbreviations used on Planting Plans.

PLANT LIST

PL-1

STATE OF CALIFORNIA - DEPARTMENT OF TRANSPORTATION
Caltrans LANDSCAPE ARCHITECTURE

SENIOR LANDSCAPE ARCHITECT: BRAD COLE
CALCULATED-DESIGNED BY: WILLIAM DUTTERA
CHECKED BY: GUS ESCUTIA
REVISED BY: WD
DATE REVISED: 6/23/09

LAST REVISION 00-00-00
DATE PLOTTED => 30-JUN-2010
TIME PLOTTED => 16:27

NOTE: FOR COMPLETE R/W DATA, SEE R/W RECORD MAPS AT DISTRICT OFFICE.

Dist	COUNTY	ROUTE	KILOMETER POST TOTAL PROJECT	SHEET No.	TOTAL SHEETS
10	Sta	219,108	3.4/7.9, 44.3/44.9	443	522

LICENSED LANDSCAPE ARCHITECT

6-28-10
PLANS APPROVAL DATE

LICENSED LANDSCAPE ARCHITECT
William Duttera No. 4843
Signature
9/30/10
Renewal Date
05/21/09
Date
STATE OF CALIFORNIA

THE STATE OF CALIFORNIA OR ITS OFFICERS OR AGENTS SHALL NOT BE RESPONSIBLE FOR THE ACCURACY OR COMPLETENESS OF ELECTRONIC COPIES OF THIS PLAN SHEET.

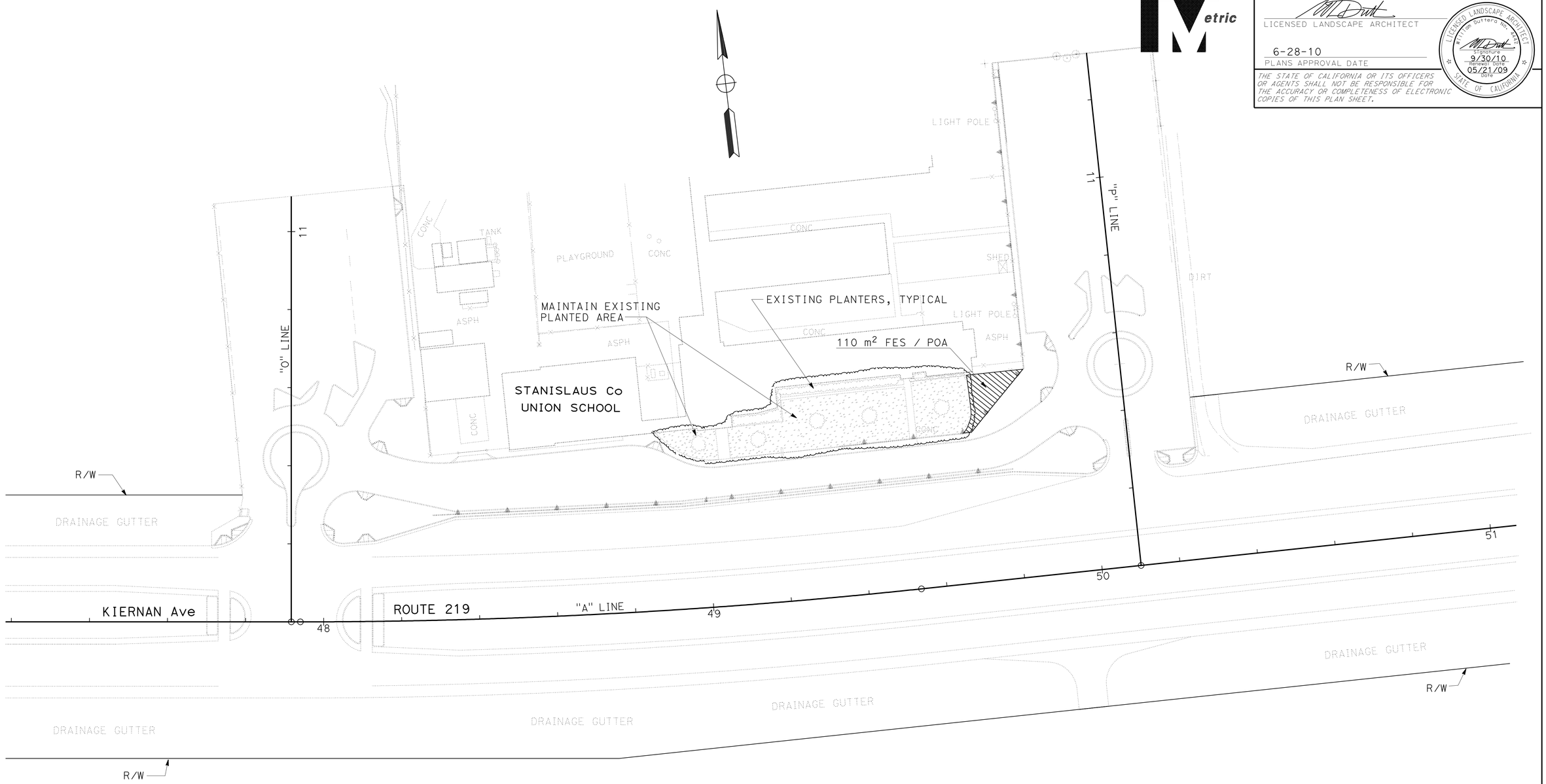

ALL DIMENSIONS ARE IN METERS UNLESS OTHERWISE SHOWN

THIS PLAN ACCURATE FOR PLANTING WORK ONLY

PLANTING PLAN

SCALE 1:500

PP-1

STATE OF CALIFORNIA - DEPARTMENT OF TRANSPORTATION
Caltrans LANDSCAPE ARCHITECTURE

SENIOR LANDSCAPE ARCHITECT: BRAD COLE
CALCULATED-DESIGNED BY: WILLIAM DUTTERA
CHECKED BY: DON CHIN
REVISED BY: WD
DATE REVISED: 6/23/09

LAST REVISION 00-00-00
DATE PLOTTED => 30-JUN-2010
TIME PLOTTED => 16:27

Dist	COUNTY	ROUTE	KILOMETER POST TOTAL PROJECT	SHEET No.	TOTAL SHEETS
10	Sta	219,108	3.4/7.9, 44.3/44.9	444	522

LICENSED LANDSCAPE ARCHITECT

6-28-10
PLANS APPROVAL DATE

LICENSED LANDSCAPE ARCHITECT
William Duttera No. 2444
Signature
9/30/10
Renewal Date
05/21/09
Date
STATE OF CALIFORNIA

THE STATE OF CALIFORNIA OR ITS OFFICERS OR AGENTS SHALL NOT BE RESPONSIBLE FOR THE ACCURACY OR COMPLETENESS OF ELECTRONIC COPIES OF THIS PLAN SHEET.

Caltrans Metric

NOTES:

1. FOR COMPLETE R/W DATA, SEE R/W RECORD MAPS AT DISTRICT OFFICE.
2. NEW IC-A SHALL REPLACE EXISTING IC.

LEGEND

--EXISITING IRRIGATION FACILITIES TO BE REMOVED

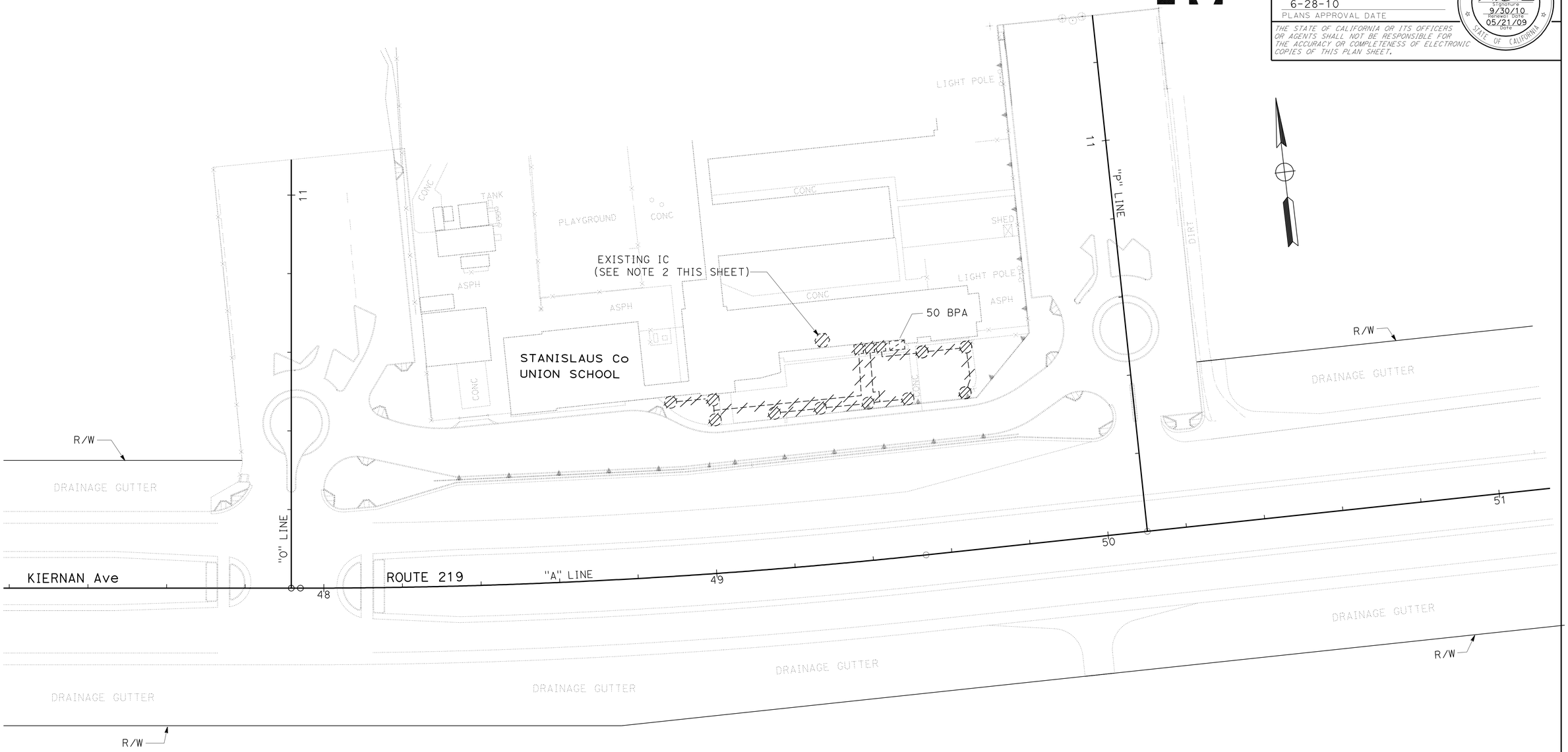

ALL DIMENSIONS ARE IN MILLIMETERS UNLESS OTHERWISE SHOWN

IRRIGATION REMOVAL PLAN

SCALE 1:500

IR-1

THIS PLAN ACCURATE FOR IRRIGATION REMOVAL WORK ONLY

WD	6/23/09
REVISED BY	DATE REVISED
WILLIAM DUTTERA	DON CHIN
CALCULATED-DESIGNED BY	CHECKED BY
SENIOR LANDSCAPE ARCHITECT	BRAD COLE

STATE OF CALIFORNIA - DEPARTMENT OF TRANSPORTATION
Caltrans LANDSCAPE ARCHITECTURE

LAST REVISION 05-20-09
DATE PLOTTED => 30-JUN-2010
TIME PLOTTED => 16:27

Dist	COUNTY	ROUTE	KILOMETER POST TOTAL PROJECT	SHEET No.	TOTAL SHEETS
10	Sta	219,108	3.4/7.9, 44.3/44.9	445	522

LICENSED LANDSCAPE ARCHITECT

6-28-10
PLANS APPROVAL DATE

LICENSED LANDSCAPE ARCHITECT
William Duttera No. 3663
Signature
9/30/10
Renewal Date
05/21/09
Date
STATE OF CALIFORNIA

THE STATE OF CALIFORNIA OR ITS OFFICERS OR AGENTS SHALL NOT BE RESPONSIBLE FOR THE ACCURACY OR COMPLETENESS OF ELECTRONIC COPIES OF THIS PLAN SHEET.

Caltrans Metric

NOTES:

1. FOR COMPLETE R/W DATA, SEE R/W RECORD MAPS AT DISTRICT OFFICE.
2. INSTALL WALL MOUNT IRRIGATION CONTROLLER IN THE MAIN BUILDING INSIDE THE BOOK STORAGE ROOM.
3. CNC ARE TO BE INSTALLED IN THE SAME TRENCH AS THE MAINLINE, WHERE FEASIBLE.
4. SIZE IRRIGATION LATERAL LINES PER LATERAL PIPE SIZING CHART ON SHEET LD-1.

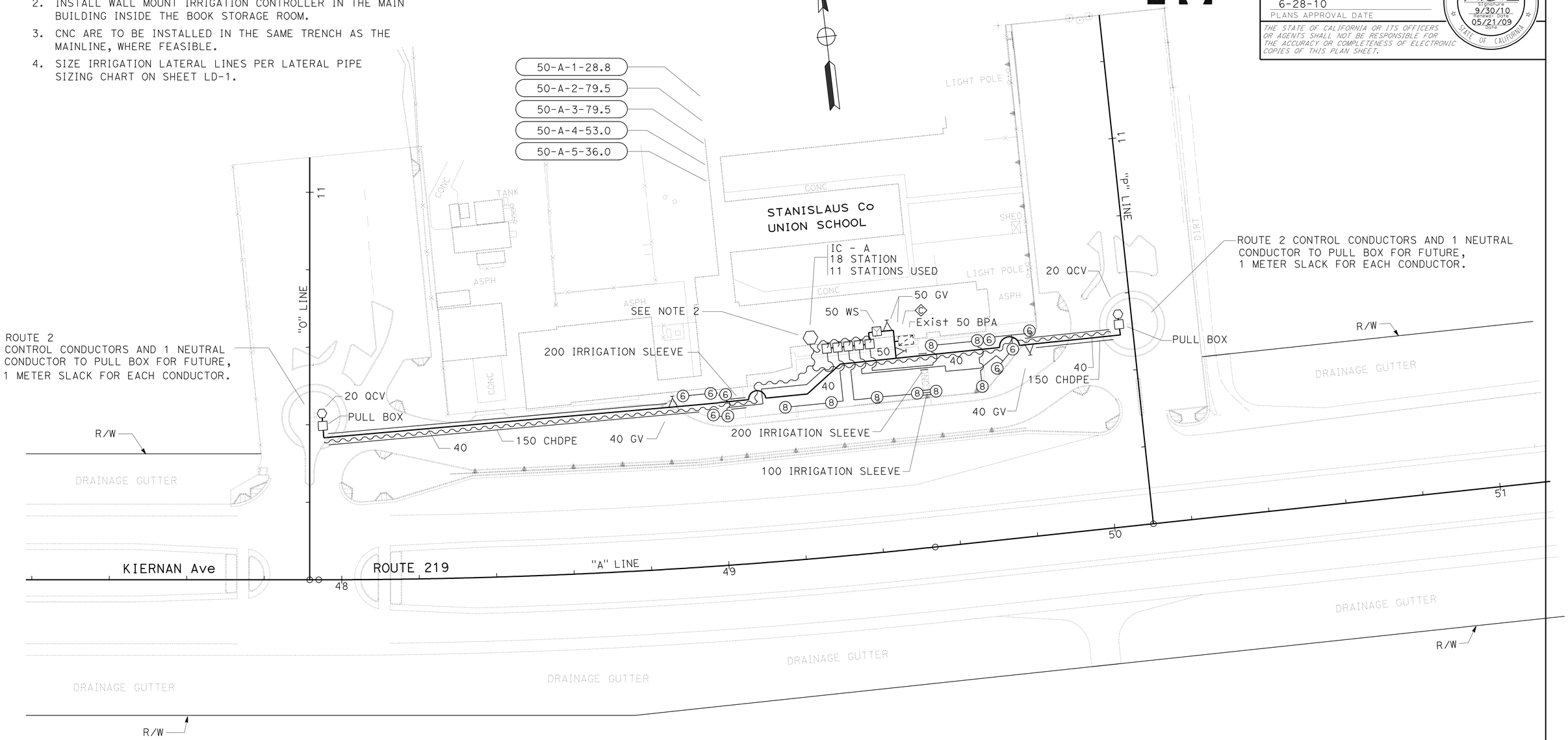

ALL DIMENSIONS ARE IN
MILLIMETERS UNLESS OTHERWISE SHOWN

IRRIGATION PLAN

SCALE 1:500

IP-1

THIS PLAN ACCURATE FOR IRRIGATION WORK ONLY

STATE OF CALIFORNIA - DEPARTMENT OF TRANSPORTATION
Caltrans LANDSCAPE ARCHITECTURE

SENIOR LANDSCAPE ARCHITECT: BRAD COLE
CALCULATED-DESIGNED BY: WILLIAM DUTTERA
CHECKED BY: DON CHIN
REVISED BY: WD
DATE REVISED: 6/23/09

LAST REVISION 05-20-09
DATE PLOTTED => 30-JUN-2010
TIME PLOTTED => 16:27

Dist	COUNTY	ROUTE	KILOMETER POST TOTAL PROJECT	SHEET No.	TOTAL SHEETS
10	Sta	219,108	3.4/7.9, 44.3/44.9	446	522

Caltrans Metric

LICENSED LANDSCAPE ARCHITECT

6-28-10
PLANS APPROVAL DATE

LICENSED LANDSCAPE ARCHITECT William Duttera No. 4844 Signature 9/30/10 Renewal Date 05/21/09 Date STATE OF CALIFORNIA

THE STATE OF CALIFORNIA OR ITS OFFICERS OR AGENTS SHALL NOT BE RESPONSIBLE FOR THE ACCURACY OR COMPLETENESS OF ELECTRONIC COPIES OF THIS PLAN SHEET.

SPRINKLER SCHEDULE

SYMBOL	TYPE	DESCRIPTION	SPRAY PATTERN	OPERATING PRESSURE (KILOPASCAL) (kPa)	PRESSURE COMPENSATING	PLUS / MINUS 5% DISCHARGE: LITERS PER SECOND L/sec	LITERS PER MINUTE L/min	LITERS PER HOUR L/h	RADIUS (IN METERS)(m)	WIDTH x LENGTH (IN METERS)(m)	MATERIAL	INLET CONNECTION (NPT) (DN IN MILLIMETERS)(mm)	POSITIVE-LOCKING ADJ ARC STOP	BACKSPLASH PREVENTER	DIFFUSER PIN	DISTANCE CONTROL FLAP	ADJ DISCHARGE	RISER: TYPE	MATERIAL: PLASTIC	MATERIAL: GALVANIZED	SIZE (IPS) (IN MILLIMETERS)(mm)	HEIGHT (IN MILLIMETERS)(mm)	FLOW SHUTOFF DEVICE	⑤ SWING JOINT (TYPE)	RISER SUPPORT	SPRINKLER PROTECTOR (TYPE)	REMARKS
⑥	A-6	ROTOR	P	275	-	-	7.2	-	8.5	-	PL	20	-	-	-	-	X	-	X	-	20	-	-	I	-	-	100 POP-UP
⑧	A-8	ROTOR	P	275	-	-	26.5	-	14.3	-	PL	20	-	-	-	-	X	-	X	-	20	-	-	I	-	-	100 POP-UP

X IN BOX DENOTES REQUIREMENT

APPLICABLE WHEN CIRCLED BELOW:

1 - See Special Provisions.
2 - If a pressure compensating device is specified, the discharge and radii shown reflect its use.
3 - Arc Stop shall be fitted with a nut and bolt.
4 - Vinyl-coated cast iron housing.
⑤ - Swing Joints required adjacent to shoulders, curbs, sidewalks, and dikes.
6 - Unless otherwise shown on plans.

ABBREVIATIONS

ADJ — adjustable
B/B — brass/bronze
B/B/PL - brass/bronze/plastic
B/PL — brass/plastic
CST — center strip
DN — diameter nominal
EST — end strip
F — full circle
F/P — full/part circle
H — half circle
IPS — iron pipe size
kPa — kilopascal
L/h — liters per hour
L/min - liters per minute
L/sec - liters per second
m — meters
mm — millimeters
NPT — national pipe thread
P — part circle
PL — plastic
Q — quarter circle
SST — side strip
T — third circle
TQ — three quarter circle
TT — two third circle

LATERAL PIPE SIZING CHART

Pipe Size	No. of Heads by Type: A-6	A-8
20 mm	2	-
25 mm	4	1
32 mm	7	2
40 mm	10	3
50 mm	19	5

IRRIGATION CROSSOVERS

LOCATION: LINE	STATION	SIDE: R†	L†	CONDUIT TYPE ③ SIZE (mm) DN 150: LENGTH (m)		(N) WATER LINE CROSSOVER SIZE (mm) DN	(N) SPRINKLER CONTROL CROSSOVER SIZE (mm) DN
SR 219	47+97		X	94	—	40	25
SR 219	49+80		X	24	—	40	25
	TOTAL			118	—		

(N) - NOT A SEPARATE PAY ITEM FOR INFORMATION ONLY
DN - DIAMETER NOMINAL
X - DENOTES REQUIREMENT

CONDUIT TYPE
(Applicable when circled below and shown under the 'CONDUIT TYPE' column heading)

1 BITUMINOUS COATED CORRUGATED STEEL PIPE (1.626 mm THICK)
2 CORRUGATED STEEL PIPE (1.626 mm THICK)
③ CORRUGATED HIGH DENSITY POLYETHYLENE PIPE
4 ALTERNATIVE CONDUIT

SPRINKLER SCHEDULE
LD-1

REVISED BY	DATE REVISED
WD	6/23/09

WILLIAM DUTTERA — DON CHIN — CALCULATED-DESIGNED BY — CHECKED BY

SENIOR LANDSCAPE ARCHITECT — BRAD COLE

STATE OF CALIFORNIA - DEPARTMENT OF TRANSPORTATION
Caltrans LANDSCAPE ARCHITECTURE

LAST REVISION 05-20-09 | DATE PLOTTED => 30-JUN-2010 | TIME PLOTTED => 16:27

Dist	COUNTY	ROUTE	KILOMETER POST TOTAL PROJECT	SHEET No.	TOTAL SHEETS
10	Sta	219,108	3.4/7.9, 44.3/44.9	447	522

REGISTERED ELECTRICAL ENGINEER 6/16/09

6-28-10
PLANS APPROVAL DATE

REGISTERED PROFESSIONAL ENGINEER Jaspal Singh No. 16657 Exp. 6/30/10 ELECTRICAL STATE OF CALIFORNIA

THE STATE OF CALIFORNIA OR ITS OFFICERS OR AGENTS SHALL NOT BE RESPONSIBLE FOR THE ACCURACY OR COMPLETENESS OF ELECTRONIC COPIES OF THIS PLAN SHEET.

Caltrans Metric

NOTES: (FOR THIS SHEET ONLY)

1. 120/240 V, 1Ø, 3-WIRE, TYPE III-BF SERVICE EQUIPMENT ENCLOSURE WITH THE FOLLOWING CIRCUIT BREAKERS:

CTID No. 10382190002522T

AMPERES	VOLTS	POLES	NAME PLATE DESCRIPTION	METER
100	240	2	MAIN BREAKER	YES
30	120	1	CMS CABINET	YES
30	240	2	CMS LAMPS	YES
30	120	1	TMS/CCTV CABINET	YES
15	120	1	WMS	YES
15	120	1	TDC	YES
15	120	1	SPARE	YES
-	-	4	SPACE	-

2. STATE-FURNISHED MODEL 170 CONTROLLER ASSEMBLY FOR CMS.
3. MODEL 334 CABINET WITH WIRELESS MODEM AND STATE-FURNISHED 2070 CONTROLLER UNIT FOR TMS, AND STATE-FURNISHED MODEM FOR CCTV.
4. STATE-FURNISHED MODEL 510 CHANGEABLE MESSAGE SIGN.
5. INSTALL TYPE 15 CCTV POLE WITH CCTV CAMERA UNIT ON TOP OF CMS POST.
6. WEATHER MONITORING STATION WITH WIRELESS MODEM, SEE SHEET E-17 FOR DETAILS.
7. TYPE C TDC.
8. 53C, 2#8 (CMS), 2#8 (CCTV), 2#8 (CMS LAMPS), 2#10 (TDC), 2#10 (WMS) 1#6 (LAMPS NEUTRAL)
9. PULL BOX PER MID REQUIREMENTS.
10. THE CONTRACTOR SHALL COORDINATE WITH UTILITIES FOR SERVICE REQUIREMENTS.
11. FOR COMPLETE RIGHT OF WAY DATA, SEE RIGHT OF WAY RECORD MAPS AT DISTRICT OFFICE.

ABBREVIATIONS:

MID - MODESTO IRRIGATION DISTRICT
WMS - WEATHER MONITORING STATION
AT&T - AMERICAN TELEPHONE AND TELEGRAPH
VIVDS - VIDEO IMAGE VEHICLE DETECTION SYSTEM
SF - STATE-FURNISHED

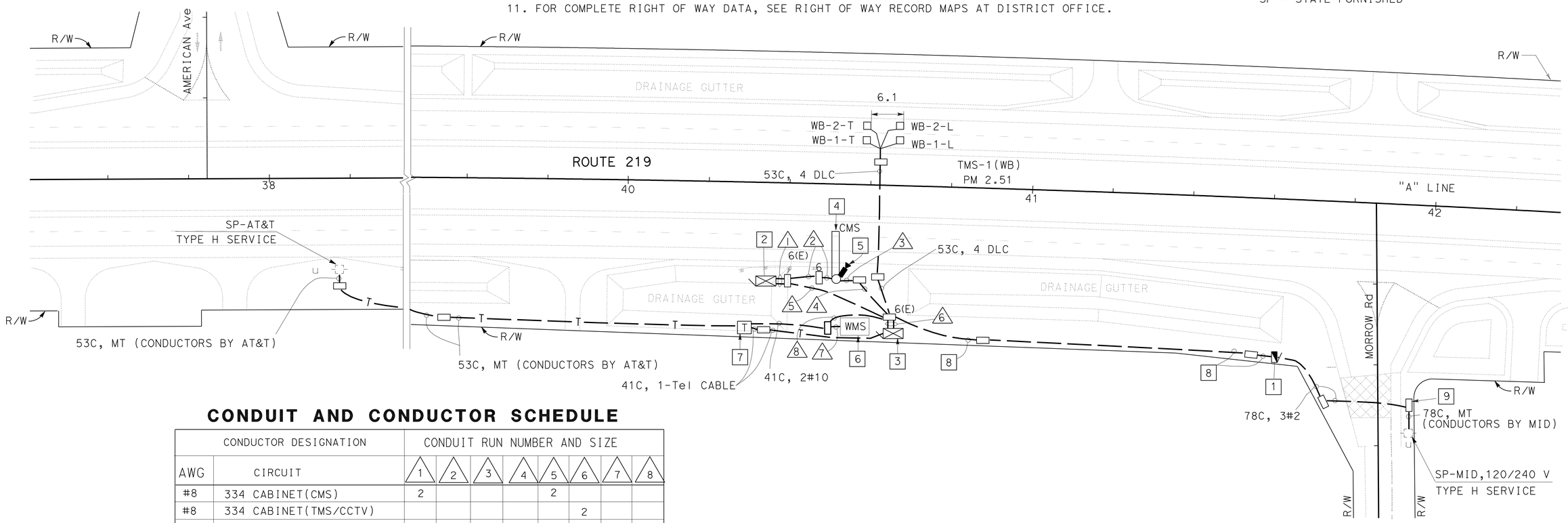

CONDUIT AND CONDUCTOR SCHEDULE

CONDUCTOR DESIGNATION		CONDUIT RUN NUMBER AND SIZE							
AWG	CIRCUIT	1	2	3	4	5	6	7	8
#8	334 CABINET(CMS)	2				2			
#8	334 CABINET(TMS/CCTV)						2		
#8	CMS LAMPS			2	2				
#10	WMS							2	2
#10	TDC								2
#6	LAMPS NEUTRAL			1	1				
	SF HARNESS #4	1	1						
	SF HARNESS #5	1	1						
	COMPOSITE CABLE(CCTV)			1	1		1		
	DLC						4		
	CONDUIT SIZE	2-78	53	53	53	53	2-53	41	41

THIS PLAN IS ACCURATE FOR ELECTRICAL WORK ONLY.

TRAFFIC MONITORING STATION (LOCATION 1)
CHANGEABLE MESSAGE SIGN SYSTEM (LOCATION 1)
CLOSED CIRCUIT TELEVISION SYSTEM (LOCATION 1)
WEATHER MONITORING STATION (LOCATION 1)

ALL DIMENSIONS ARE IN METERS UNLESS OTHERWISE SHOWN

SCALE 1:500

E-1

JR	7/2/09		
REVISED BY	DATE REVISED		
JASPAL SINGH	JORGE RAMIREZ		
CALCULATED-DESIGNED BY	CHECKED BY		
FUNCTIONAL SUPERVISOR	ALI BAKHDOUD		

STATE OF CALIFORNIA - DEPARTMENT OF TRANSPORTATION
Caltrans ELECTRICAL DESIGN

LAST REVISION 07-02-09 DATE PLOTTED => 30-JUN-2010 TIME PLOTTED => 16:27

Dist	COUNTY	ROUTE	KILOMETER POST TOTAL PROJECT	SHEET No.	TOTAL SHEETS
10	Sta	219,108	3.4/7.9, 44.3/44.9	448	522

REGISTERED ELECTRICAL ENGINEER 6/16/09

6-28-10
PLANS APPROVAL DATE

REGISTERED PROFESSIONAL ENGINEER Jaspal Singh No. 16657 Exp. 6/30/10 ELECTRICAL STATE OF CALIFORNIA

THE STATE OF CALIFORNIA OR ITS OFFICERS OR AGENTS SHALL NOT BE RESPONSIBLE FOR THE ACCURACY OR COMPLETENESS OF ELECTRONIC COPIES OF THIS PLAN SHEET.

Caltrans Metric

NOTES:

1. FOR NOTES AND SCHEDULE SEE SHEET E-4.
2. FOR COMPLETE RIGHT OF WAY DATA, SEE RIGHT OF WAY RECORD MAPS AT DISTRICT OFFICE.

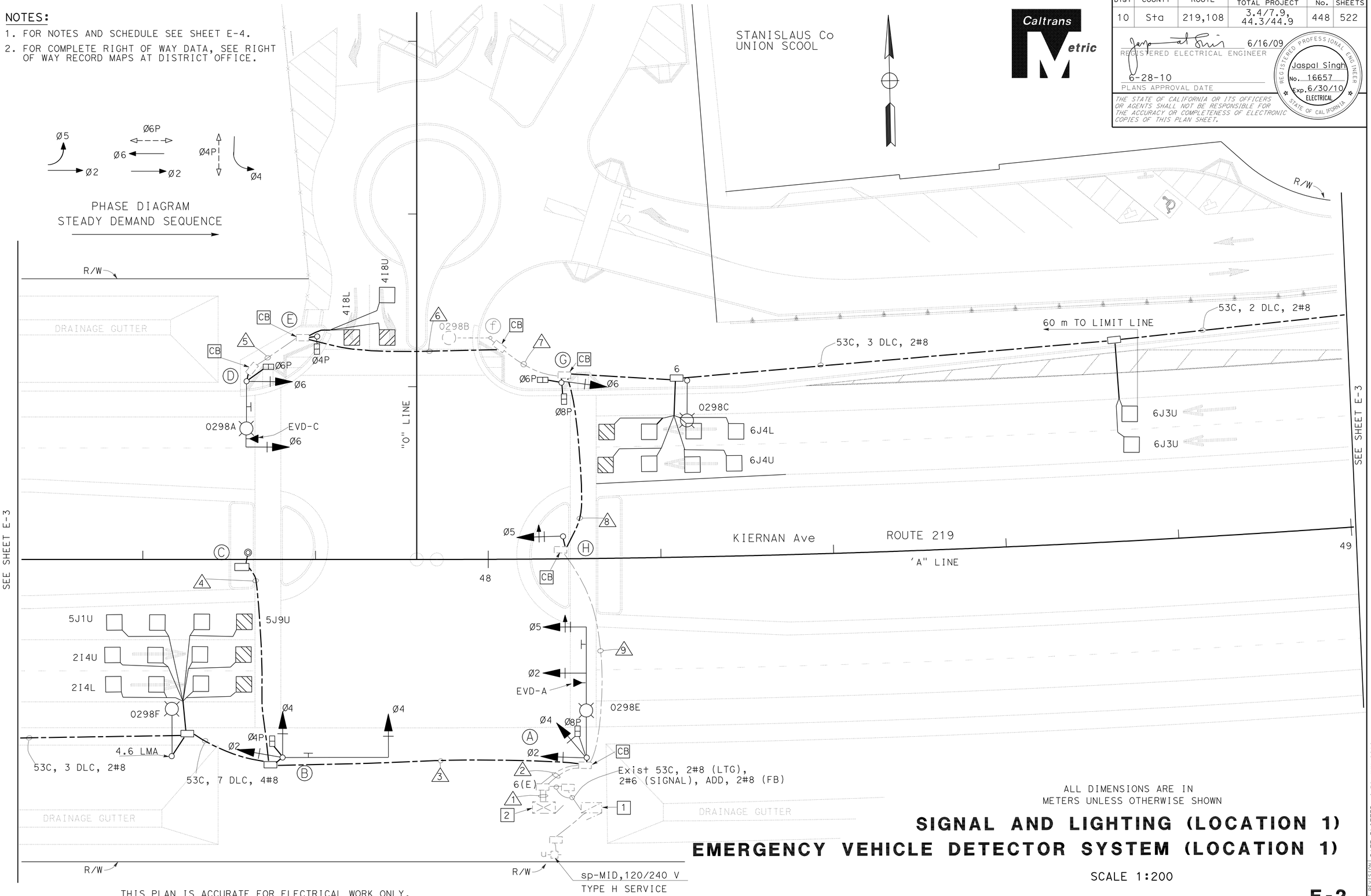

THIS PLAN IS ACCURATE FOR ELECTRICAL WORK ONLY.

ALL DIMENSIONS ARE IN METERS UNLESS OTHERWISE SHOWN

SIGNAL AND LIGHTING (LOCATION 1)
EMERGENCY VEHICLE DETECTOR SYSTEM (LOCATION 1)

SCALE 1:200

E-2

REVISED BY	DATE REVISED
JR	7/2/09

JASPAL SINGH — JORGE RAMIREZ — CALCULATED-DESIGNED BY — CHECKED BY

FUNCTIONAL SUPERVISOR: ALI BAKHDOUD

STATE OF CALIFORNIA - DEPARTMENT OF TRANSPORTATION
Caltrans ELECTRICAL DESIGN

LAST REVISION 07-02-09 DATE PLOTTED => 30-JUN-2010 TIME PLOTTED => 16:28

Dist	COUNTY	ROUTE	KILOMETER POST TOTAL PROJECT	SHEET No.	TOTAL SHEETS
10	Sta	219,108	3.4/7.9, 44.3/44.9	449	522

REGISTERED ELECTRICAL ENGINEER 6/16/09

6-28-10
PLANS APPROVAL DATE

REGISTERED PROFESSIONAL ENGINEER Jaspal Singh No. 16657 Exp. 6/30/10 ELECTRICAL STATE OF CALIFORNIA

THE STATE OF CALIFORNIA OR ITS OFFICERS OR AGENTS SHALL NOT BE RESPONSIBLE FOR THE ACCURACY OR COMPLETENESS OF ELECTRONIC COPIES OF THIS PLAN SHEET.

Caltrans Metric

NOTES:

1. FOR NOTES AND SCHEDULE SEE SHEET E-4.
2. FOR COMPLETE RIGHT OF WAY DATA, SEE RIGHT OF WAY RECORD MAPS AT DISTRICT OFFICE.

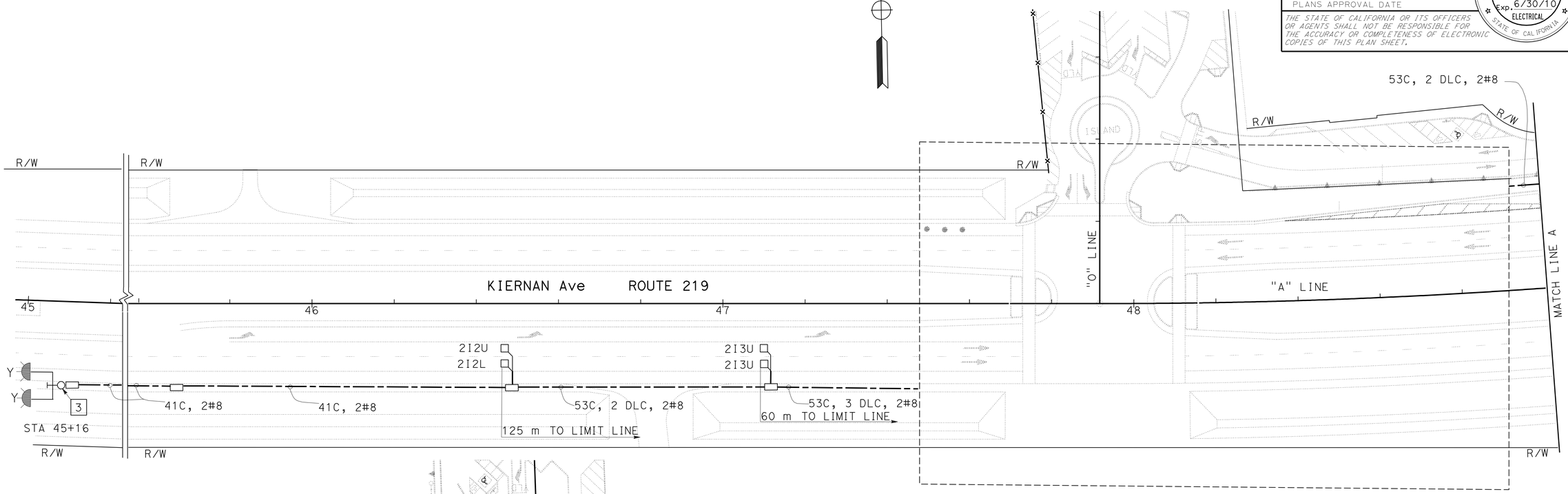

SEE SHEET E-2 FOR SIGNAL DETAILS

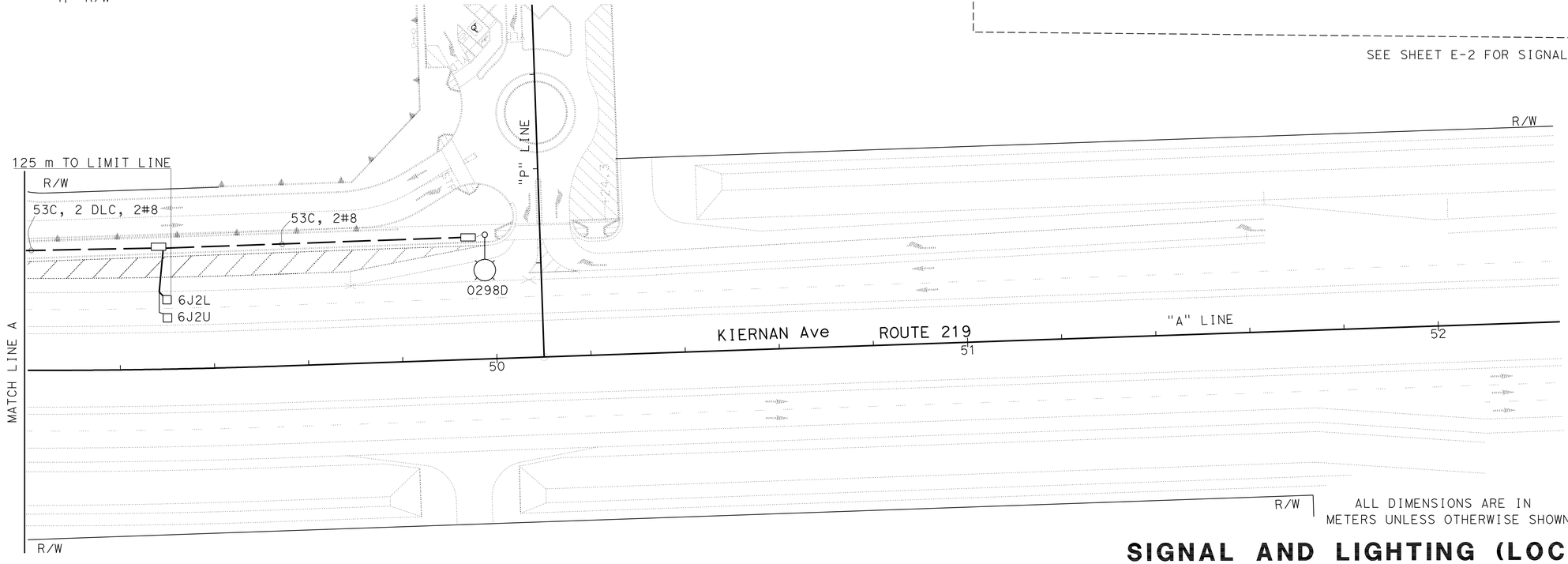

ALL DIMENSIONS ARE IN METERS UNLESS OTHERWISE SHOWN

SIGNAL AND LIGHTING (LOCATION 1)

SCALE 1:500

E-3

THIS PLAN IS ACCURATE FOR ELECTRICAL WORK ONLY.

REVISED BY	JR
DATE REVISED	7/2/09
JASPAL SINGH	
JORGE RAMIREZ	
CALCULATED-DESIGNED BY	
CHECKED BY	
FUNCTIONAL SUPERVISOR	
ALI BAKHDOUD	

STATE OF CALIFORNIA - DEPARTMENT OF TRANSPORTATION
Caltrans ELECTRICAL DESIGN

LAST REVISION 00-00-00
DATE PLOTTED => 30-JUN-2010
TIME PLOTTED => 17:21

Dist	COUNTY	ROUTE	KILOMETER POST TOTAL PROJECT	SHEET No.	TOTAL SHEETS
10	Sta	219,108	3.4/7.9, 44.3/44.9	450	522

Caltrans Metric

6/16/09
REGISTERED ELECTRICAL ENGINEER

6-28-10
PLANS APPROVAL DATE

REGISTERED PROFESSIONAL ENGINEER Jaspal Singh No. 16657 Exp. 6/30/10 ELECTRICAL STATE OF CALIFORNIA

THE STATE OF CALIFORNIA OR ITS OFFICERS OR AGENTS SHALL NOT BE RESPONSIBLE FOR THE ACCURACY OR COMPLETENESS OF ELECTRONIC COPIES OF THIS PLAN SHEET.

NOTES: (FOR SHEETS E-2, E-3 AND E-4)

1. 120/240 V, 1Ø, 3-WIRE, TYPE III-BF SERVICE EQUIPMENT ENCLOSURE. SEE SHEET E-19 FOR SERVICE SCHEDULE.
2. STATE-FURNISHED MODEL 2070 CONTROLLER ASSEMBLY WITH BATTERY BACKUP SYSTEM. ADD WIRELESS MODEM.
3. TYPE 15-FBS ADVANCE FLASHING BEACON INSTALLATION WITH W3-3 SIGN. REFER TO SIGN PLANS FOR SIGN DETAILS.
4. REFER TO SIGN PLANS FOR SIGN DETAILS.
5. ALL PULL BOXES ADJACENT TO SIGNAL STANDARDS SHALL BE No. 6(E) UNLESS OTHERWISE INDICATED.
6. THE CONTRACTOR SHALL COORDINATE WITH UTILITIES FOR ALL SERVICE REQUIREMENTS.
7. SEE SHEET E-18 FOR CONSTRUCTION STAGE 1A.

CONDUIT AND CONDUCTOR SCHEDULE

CONDUCTOR DESIGNATION			CONDUIT RUN NUMBER AND SIZE								
CABLE TYPE	POLE	PHASE	1	2	3	4	5	6	7	8	9
			2-103	2-103	103	78	78	103	103	2-103	2-103
VEH-PED 12CSC	A	2,4,5,8P / 8	2 / 1	2 / 1							
	B	2,4,4P / 4	1 / 1	1 / 1	1 / 1						
	C	/ 4	1	1	1	1					
PPB 3CSC	D	6,6P / 4	1 / 1	1 / 1			1 / 1	1 / 1	1 / 1	1 / 1	1 / 1
	E	4P / 6	1 / 1	1 / 1				1 / 1	1 / 1	1 / 1	1 / 1
	F	/ 6	1 / 1	1 / 1					1 / 1	1 / 1	1 / 1
	G	6,6P,8P / 8	1 / 1	1 / 1						1 / 1	1 / 1
	H	5 / 8	1 / 1	1 / 1							1 / 1
		TOTAL	8 / 8	8 / 8	2 / 2	1 / 1	1 / 1	2 / 2	3 / 3	4 / 4	5 / 5
AWG	CIRCUIT										
#8	LIGHTING			2	2		2	2	2	2	2
#6	SIGNAL		2								
#8	FB			2	2						
OPTICAL DETECTOR CABLE			2	2			1	1	1	1	1
DLC	PHASE										
	Ø2		2	2	2						
	Ø4		2	2				2	2	2	2
	Ø5		2	2	2						
	Ø6		2	2						2	2
	Ø2 INT/ADV		3	3	3						
	Ø6 INT/ADV		3	3						3	3
	TOTAL		14	14	7			2	2	7	7

POLE AND EQUIPMENT SCHEDULE

STANDARD				VEH SIG MTG		PED SIG MTG	PPB		HPS LUM	SPECIAL REQUIREMENTS
No.	TYPE	SMA	LMA	MAST ARM	POLE		Ø	ARROW		
A	29-5-161	15.2	4.6	MAS MAS	SV-2-T	SP-1-T	8	→	200 W	INSTALL TYPE R73-2(CA) SIGN ON SMA [4] F=5.4
B	27-4-161	12.2		MAS	SV-2-T	SP-1-T	4	→		INSTALL TYPE R73-1(CA) SIGN ON SMA [4]
C	PPB POST						4	→ ←		
D	19-3-161	7.6	4.6	MAS	SV-1-T	SP-1-T	4	←	200 W	
E	1-A					SP-1-T	6	→		
f	15TS		3.7				6	←	200 W	
G	1-A				TV-1-T	SP-2-T	8	←		
H	1-A				TV-1-T		8	← →		

ALL DIMENSIONS ARE IN METERS UNLESS OTHERWISE SHOWN

SIGNAL AND LIGHTING (LOCATION 1)
EMERGENCY VEHICLE DETECTOR SYSTEM (LOCATION 1)

THIS PLAN IS ACCURATE FOR ELECTRICAL WORK ONLY.

E-4

REVISED BY	DATE REVISED
JR	7/2/09

CALCULATED-DESIGNED BY: JASPAL SINGH
CHECKED BY: JORGE RAMIREZ
FUNCTIONAL SUPERVISOR: ALI BAKHDOUD

STATE OF CALIFORNIA - DEPARTMENT OF TRANSPORTATION
Caltrans ELECTRICAL DESIGN

LAST REVISION 00-00-00 | DATE PLOTTED => 30-JUN-2010 | TIME PLOTTED => 17:03

Dist	COUNTY	ROUTE	KILOMETER POST TOTAL PROJECT	SHEET No.	TOTAL SHEETS
10	Sta	219,108	3.4/7.9, 44.3/44.9	451	522

REGISTERED ELECTRICAL ENGINEER 6/16/09

6-28-10
PLANS APPROVAL DATE

REGISTERED PROFESSIONAL ENGINEER Jaspal Singh No. 16657 Exp. 6/30/10 ELECTRICAL STATE OF CALIFORNIA

THE STATE OF CALIFORNIA OR ITS OFFICERS OR AGENTS SHALL NOT BE RESPONSIBLE FOR THE ACCURACY OR COMPLETENESS OF ELECTRONIC COPIES OF THIS PLAN SHEET.

Caltrans Metric

NOTE:

1. FOR NOTES AND SCHEDULES SEE SHEET E-7.
2. FOR COMPLETE RIGHT OF WAY DATA, SEE RIGHT OF WAY RECORD MAPS AT DISTRICT OFFICE.

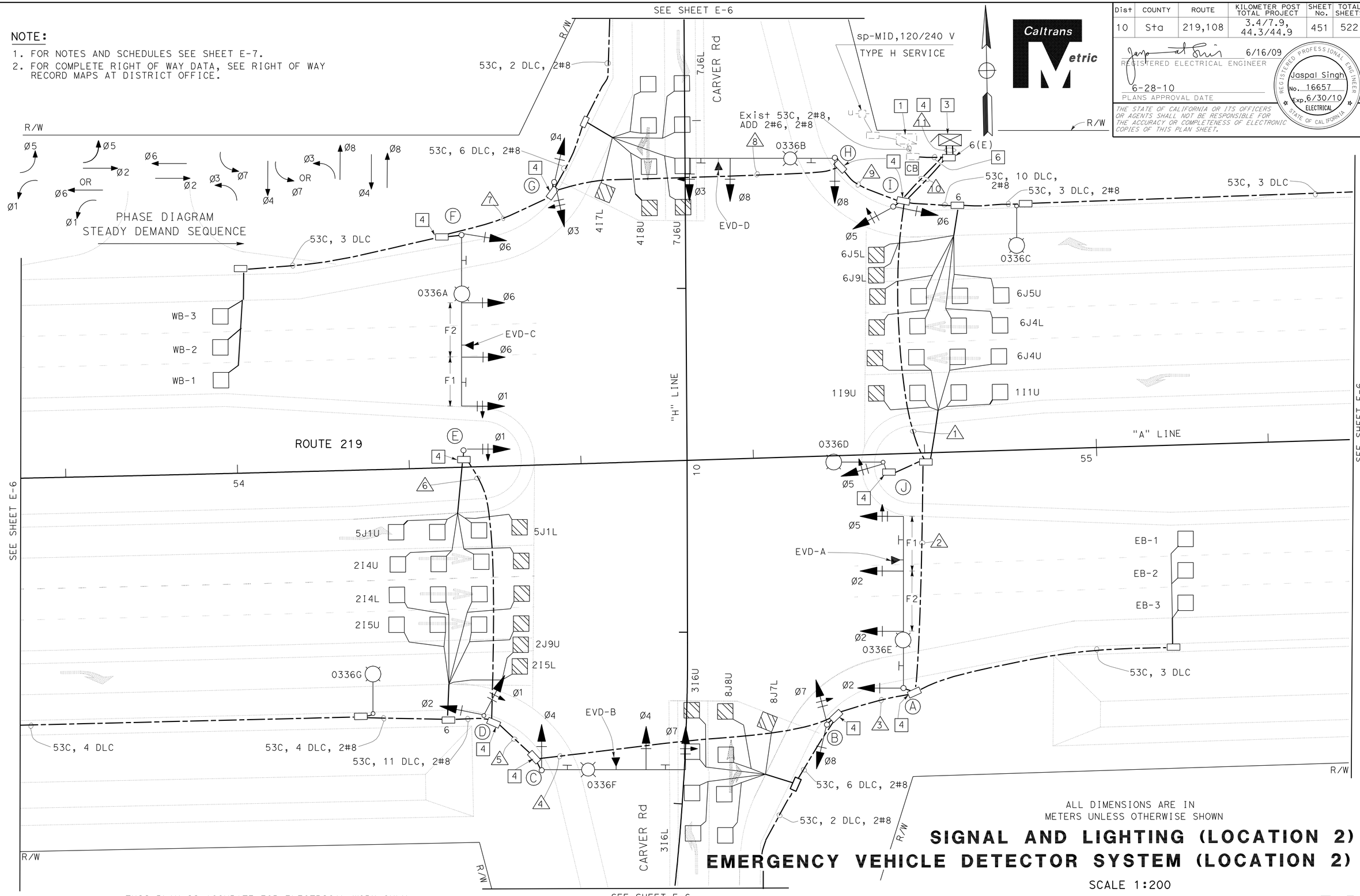

ALL DIMENSIONS ARE IN METERS UNLESS OTHERWISE SHOWN

SIGNAL AND LIGHTING (LOCATION 2)
EMERGENCY VEHICLE DETECTOR SYSTEM (LOCATION 2)

SCALE 1:200

THIS PLAN IS ACCURATE FOR ELECTRICAL WORK ONLY.

E-5

REVISED BY	DATE REVISED
JR	7/3/09

CALCULATED-DESIGNED BY: JASPAL SINGH
CHECKED BY: JORGE RAMIREZ
FUNCTIONAL SUPERVISOR: ALI BAKHDOUD

STATE OF CALIFORNIA - DEPARTMENT OF TRANSPORTATION
Caltrans ELECTRICAL DESIGN

LAST REVISION 00-00-00
DATE PLOTTED => 30-JUN-2010
TIME PLOTTED => 17:03

Dist	COUNTY	ROUTE	KILOMETER POST TOTAL PROJECT	SHEET No.	TOTAL SHEETS
10	Sta	219,108	3.4/7.9, 44.3/44.9	452	522

REGISTERED ELECTRICAL ENGINEER 6/16/09

6-28-10
PLANS APPROVAL DATE

REGISTERED PROFESSIONAL ENGINEER Jaspal Singh No. 16657 Exp. 6/30/10 ELECTRICAL STATE OF CALIFORNIA

THE STATE OF CALIFORNIA OR ITS OFFICERS OR AGENTS SHALL NOT BE RESPONSIBLE FOR THE ACCURACY OR COMPLETENESS OF ELECTRONIC COPIES OF THIS PLAN SHEET.

Caltrans Metric

NOTE:

1. FOR NOTES AND SCHEDULES SEE SHEET E-7.
2. FOR COMPLETE RIGHT OF WAY DATA, SEE RIGHT OF WAY RECORD MAPS AT DISTRICT OFFICE.

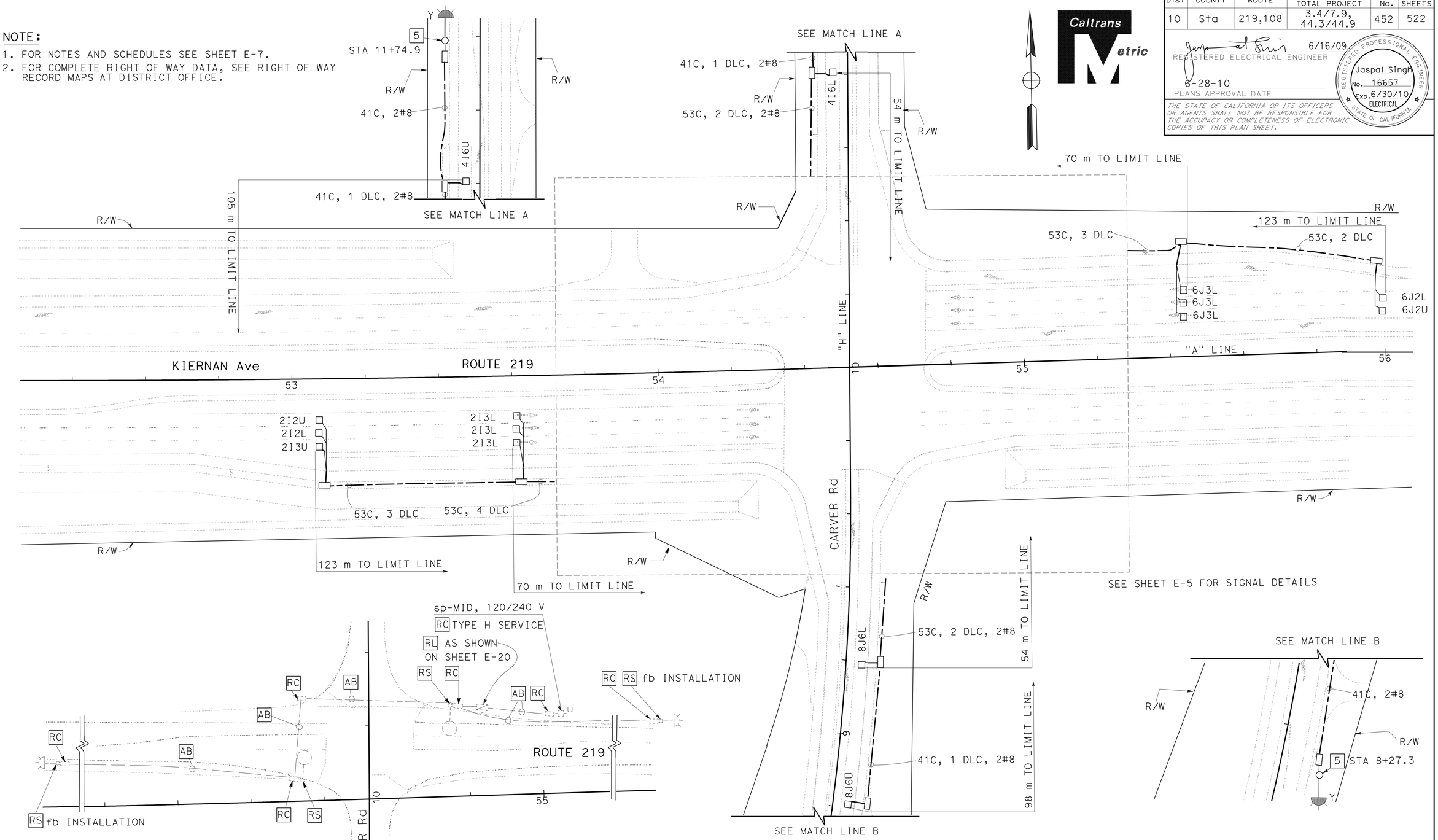

NO SCALE

ALL DIMENSIONS ARE IN METERS UNLESS OTHERWISE SHOWN

THIS PLAN IS ACCURATE FOR ELECTRICAL WORK ONLY.

SIGNAL AND LIGHTING (LOCATION 2)

SCALE 1:500

E-6

JASPAL SINGH	JR
JORGE RAMIREZ	7/2/09
CALCULATED-DESIGNED BY	REVISED BY
CHECKED BY	DATE REVISED
FUNCTIONAL SUPERVISOR	
ALI BAKHDOUD	

STATE OF CALIFORNIA - DEPARTMENT OF TRANSPORTATION
Caltrans ELECTRICAL DESIGN

LAST REVISION 00-00-00 | DATE PLOTTED => 30-JUN-2010 | TIME PLOTTED => 17:03

Dist	COUNTY	ROUTE	KILOMETER POST TOTAL PROJECT	SHEET No.	TOTAL SHEETS
10	Sta	219,108	3.4/7.9, 44.3/44.9	453	522

Caltrans Metric

REGISTERED ELECTRICAL ENGINEER 6/16/09

6-28-10
PLANS APPROVAL DATE

REGISTERED PROFESSIONAL ENGINEER Jaspal Singh No. 16657 Exp.6/30/10 ELECTRICAL STATE OF CALIFORNIA

THE STATE OF CALIFORNIA OR ITS OFFICERS OR AGENTS SHALL NOT BE RESPONSIBLE FOR THE ACCURACY OR COMPLETENESS OF ELECTRONIC COPIES OF THIS PLAN SHEET.

NOTES: (FOR SHEETS E-5, E-6 AND E-7)

1. 120/240 V, 1Ø, 3-WIRE, TYPE III-BF SERVICE EQUIPMENT ENCLOSURE. SEE SHEET E-20 FOR SERVICE SCHEDULE.
2. REFER TO SIGN PLANS FOR SIGN DETAILS
3. STATE-FURNISHED MODEL 2070 CONTROLLER ASSEMBLY WITH BATTERY BACKUP SYSTEM. ADD WIRELESS MODEM.
4. COIL 5 m OF 3CSC CABLE IN THE PULL BOX FOR FUTURE USE.
5. TYPE 1-A ADVANCE FB INSTALLATION WITH W3-3 SIGN, SEE SIGN PLANS FOR SIGN DETAILS.
6. 53C, 2#6 (SIGNAL), 2#8 (LTG), 2#8 (FB)
7. ALL PULL BOXES ADJACENT TO SIGNAL STANDARDS SHALL BE No. 6(E) UNLESS OTHERWISE INDICATED.
8. THE CONTRACTOR SHALL COORDINATE WITH UTILITIES FOR SERVICE REQUIREMENTS.
9. SEE SHEET E-20 FOR CONSTRUCTION STAGE 1A AND 2A.

POLE AND EQUIPMENT SCHEDULE

STANDARD				VEH SIG MTG		HPS LUM	SPECIAL REQUIREMENTS	
No.	TYPE	SMA	LMA	MAST ARM	POLE			
A	61-5-161	19.8	4.6	MAS MAS MAS	SV-1-T	200 W	INSTALL TYPE R73-2(CA) AND TYPE D3 SIGNS ON SMA 2	F1=6.3 F2=7.0
B	1-A				TV-2-T			
C	29-5-161	16.8	4.6	MAS MAS	SV-1-T	200 W	INSTALL TYPE R73-3(CA) AND TYPE D3 SIGNS ON SMA 2	F=4.6
D	1-A				TV-2-T			
E	1-A				TV-1-T			
F	61-5-161	19.8	4.6	MAS MAS MAS	SV-1-T	200 W	INSTALL TYPE R73-2(CA) AND TYPE D3 SIGNS ON SMA 2	F1=5.7 F2=6.3
G	1-A				TV-2-T			
H	29-5-161	16.8	4.6	MAS MAS	SV-1-T	200 W	INSTALL TYPE R73-3(CA) AND TYPE D3 SIGNS ON SMA 2	F=4.6
I	1-A				TV-2-T			
J	15TS		4.6		SV-1-T	200 W		

CONDUIT AND CONDUCTOR SCHEDULE

CONDUCTOR DESIGNATION			CONDUIT RUN NUMBER AND SIZE										
CABLE TYPE	POLE	PHASE	1	2	3	4	5	6	7	8	9	10	11
			2-103	2-103	103	103	78	78	78	78	103	3-103	3-103
VEH-PED 12CSC / PPB 3CSC	A	2,5 / 8	1/1	1/1								1/1	1/1
	B	7,8 / 2	1/1	1/1	1/1							1/1	1/1
	C	4,7 / 2	1/1	1/1	1/1	1/1						1/1	1/1
	D	1,2 / 4	1/1	1/1	1/1	1/1	1/1					1/1	1/1
	E	1 / 4	1/1	1/1	1/1	1/1	1/1	1/1				1/1	1/1
	F	1,6 / 4							1/1	1/1	1/1	1/1	1/1
	G	3,4 / 6								1/1	1/1	1/1	1/1
	H	3,8 / 6									1/1	1/1	1/1
	I	5,6 / 8										1/1	1/1
	J	5 / 8	1/1									1/1	1/1
		TOTAL	6/6	5/5	4/4	3/3	2/2	1/1	1/1	2/2	3/3	10/10	10/10
AWG		CIRCUIT											
#6		SIGNAL											2
#8		LIGHTING	2	2	2	2	2		2	2	2	2	
#8		FB	2	2	2					2	2	2	
OPTICAL DETECTOR CABLE			2	2	1	1			1	1	2	4	4
DLC		PHASE											
		Ø1	2									2	2
		Ø2	5	5	5	5	5	1				5	5
		Ø3	2	2	2							2	2
		Ø4								2	2	2	2
		Ø5	2	2	2	2	2	2				2	2
		Ø6	1									5	5
		Ø7								2	2	2	2
		Ø8	2	2	2							2	2
		Ø2 INT/ADV	4	4	4	4	4					4	4
		Ø6 INT/ADV										3	3
		Ø4 INT/ADV								2	2	2	2
		Ø8 INT/ADV	2	2	2							2	2
		EB-1	1	1								1	1
		EB-2	1	1								1	1
		EB-3	1	1								1	1
		WB-1							1	1	1	1	1
		WB-2							1	1	1	1	1
		WB-3							1	1	1	1	1
		TOTAL	23	20	17	11	11	3	3	9	9	39	39

SIGNAL AND LIGHTING (LOCATION 2)
EMERGENCY VEHICLE DETECTOR SYSTEM (LOCATION 2)

E-7

THIS PLAN IS ACCURATE FOR ELECTRICAL WORK ONLY.

STATE OF CALIFORNIA - DEPARTMENT OF TRANSPORTATION
Caltrans ELECTRICAL DESIGN

FUNCTIONAL SUPERVISOR: ALI BAKHDOUD
CALCULATED-DESIGNED BY: JASPAL SINGH
CHECKED BY: JORGE RAMIREZ
REVISED BY: JR
DATE REVISED: 7/2/09

LAST REVISION 00-00-00
DATE PLOTTED => 30-JUN-2010
TIME PLOTTED => 17:07

NOTES:

1. FOR NOTES AND SCHEDULES SEE SHEET E-10.
2. FOR COMPLETE RIGHT OF WAY DATA, SEE RIGHT OF WAY RECORD MAPS AT DISTRICT OFFICE.

Dist	COUNTY	ROUTE	KILOMETER POST TOTAL PROJECT	SHEET No.	TOTAL SHEETS
10	Sta	219,108	3.4/7.9, 44.3/44.9	454	522

REGISTERED ELECTRICAL ENGINEER 6/16/09

6-28-10
PLANS APPROVAL DATE

REGISTERED PROFESSIONAL ENGINEER Jaspal Singh No. 16657 Exp. 6/30/10 ELECTRICAL STATE OF CALIFORNIA

THE STATE OF CALIFORNIA OR ITS OFFICERS OR AGENTS SHALL NOT BE RESPONSIBLE FOR THE ACCURACY OR COMPLETENESS OF ELECTRONIC COPIES OF THIS PLAN SHEET.

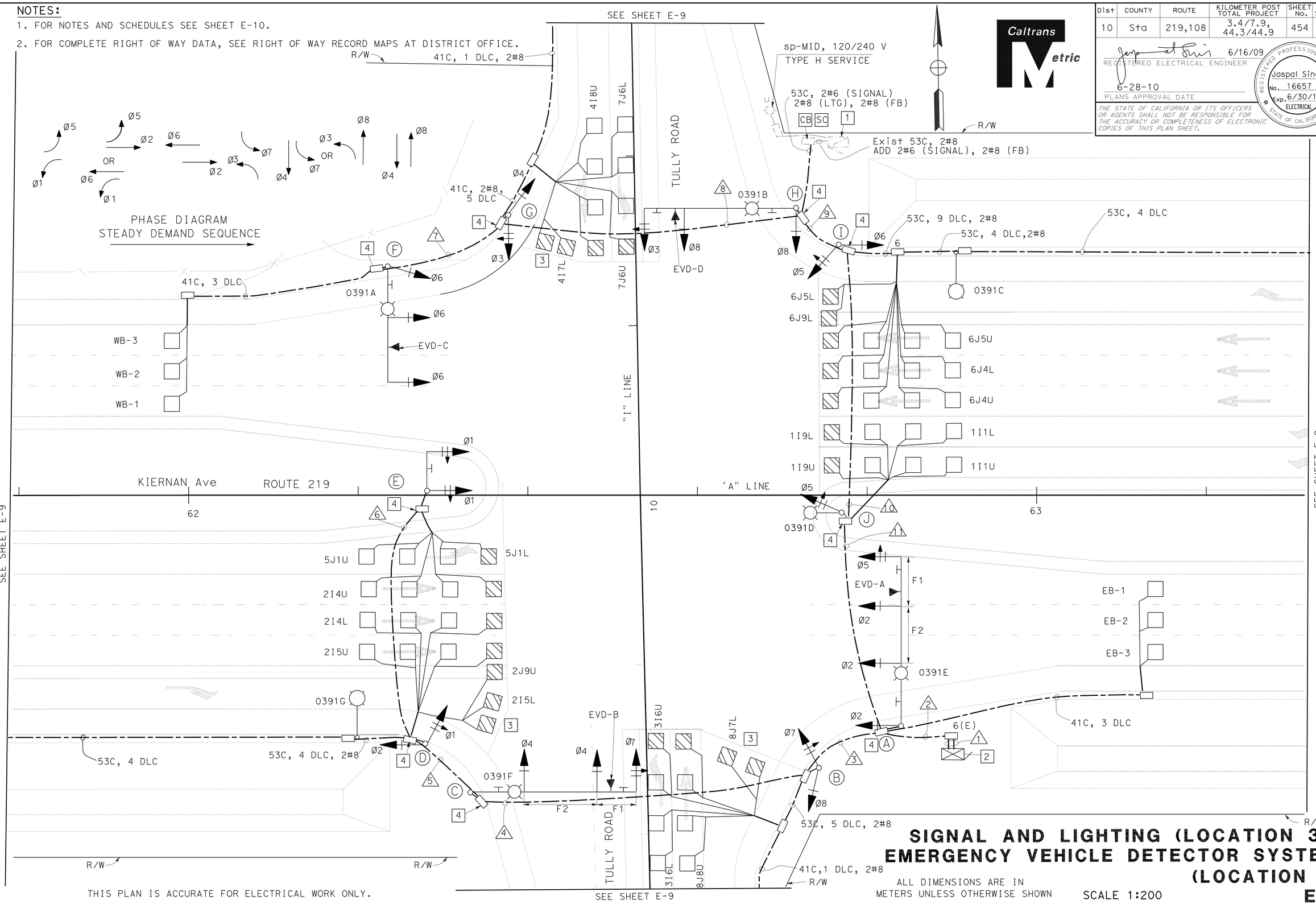

THIS PLAN IS ACCURATE FOR ELECTRICAL WORK ONLY.

ALL DIMENSIONS ARE IN METERS UNLESS OTHERWISE SHOWN

SCALE 1:200

SIGNAL AND LIGHTING (LOCATION 3)
EMERGENCY VEHICLE DETECTOR SYSTEM (LOCATION 3)

E-8

JASPAL SINGH	JR	7/2/09	CALCULATED-DESIGNED BY
JORGE RAMIREZ	REVISED BY	DATE REVISED	CHECKED BY
ALI BAKHDOUD	FUNCTIONAL SUPERVISOR		

STATE OF CALIFORNIA - DEPARTMENT OF TRANSPORTATION
Caltrans ELECTRICAL DESIGN

LAST REVISION 00-00-00 | DATE PLOTTED => 30-JUN-2010 | TIME PLOTTED => 17:03

BORDER LAST REVISED 3/1/2007 | RELATIVE BORDER SCALE IS IN MILLIMETERS 0 20 40 60 80 | USERNAME => trrichf | DGN FILE => a0a872ua008.dgn | CU 06391 | EA 0A8721

Dist	COUNTY	ROUTE	KILOMETER POST TOTAL PROJECT	SHEET No.	TOTAL SHEETS
10	Sta	219,108	3.4/7.9, 44.3/44.9	455	522

6/16/09
REGISTERED ELECTRICAL ENGINEER

6-28-10
PLANS APPROVAL DATE

REGISTERED PROFESSIONAL ENGINEER Jaspal Singh No. 16657 Exp. 6/30/10 ELECTRICAL STATE OF CALIFORNIA

THE STATE OF CALIFORNIA OR ITS OFFICERS OR AGENTS SHALL NOT BE RESPONSIBLE FOR THE ACCURACY OR COMPLETENESS OF ELECTRONIC COPIES OF THIS PLAN SHEET.

Caltrans Metric

NOTES:

1. FOR NOTES AND SCHEDULES SEE SHEET E-10.
2. FOR COMPLETE RIGHT OF WAY DATA, SEE RIGHT OF WAY RECORD MAPS AT DISTRICT OFFICE.

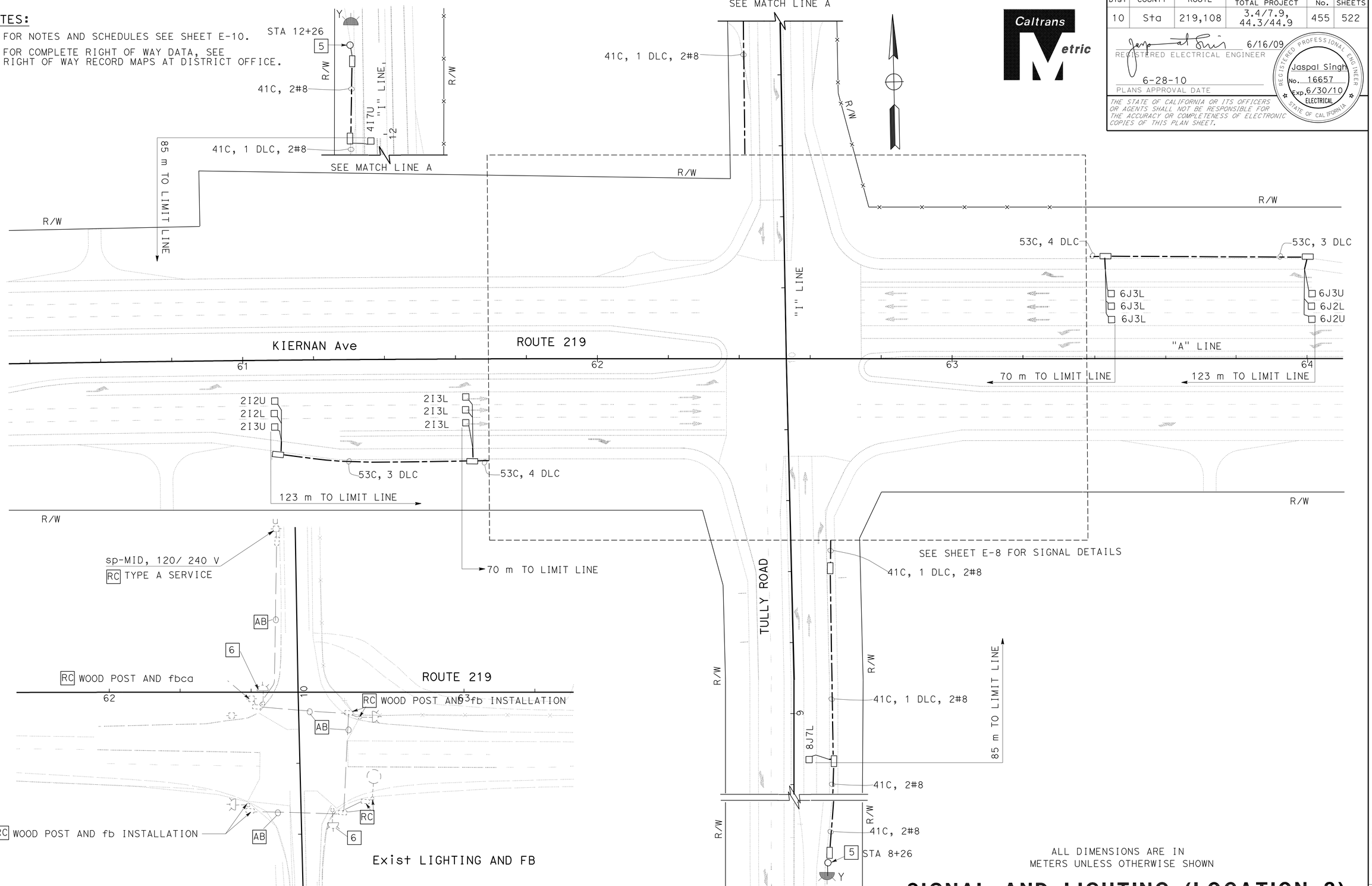

ALL DIMENSIONS ARE IN METERS UNLESS OTHERWISE SHOWN

THIS PLAN IS ACCURATE FOR ELECTRICAL WORK ONLY.

SIGNAL AND LIGHTING (LOCATION 3)

SCALE 1:500

E-9

JASPAL SINGH	JR	7/2/09	
JORGE RAMIREZ	REVISED BY	DATE REVISED	
CALCULATED-DESIGNED BY			
CHECKED BY			
FUNCTIONAL SUPERVISOR			
ALI BAKHDOUD			

STATE OF CALIFORNIA - DEPARTMENT OF TRANSPORTATION
Caltrans ELECTRICAL DESIGN

LAST REVISION 00-00-00 DATE PLOTTED => 01-JUL-2010 TIME PLOTTED => 13:49

Dist	COUNTY	ROUTE	KILOMETER POST TOTAL PROJECT	SHEET No.	TOTAL SHEETS
10	Sta	219,108	3.4/7.9, 44.3/44.9	456	522

REGISTERED ELECTRICAL ENGINEER 6/16/09

6-28-10
PLANS APPROVAL DATE

REGISTERED PROFESSIONAL ENGINEER Jaspal Singh No. 16657 Exp. 6/30/10 ELECTRICAL STATE OF CALIFORNIA

THE STATE OF CALIFORNIA OR ITS OFFICERS OR AGENTS SHALL NOT BE RESPONSIBLE FOR THE ACCURACY OR COMPLETENESS OF ELECTRONIC COPIES OF THIS PLAN SHEET.

Caltrans Metric

NOTES: (FOR SHEETS E-8, E-9 AND E-10)

1. 120/240 V, 1Ø, 3-WIRE, TYPE III-BF SERVICE EQUIPMENT ENCLOSURE. SEE SHEET E-21 FOR SERVICE SCHEDULE.
2. STATE-FURNISHED MODEL 2070 CONTROLLER ASSEMBLY WITH BATTERY BACKUP SYSTEM. ADD WIRELESS MODEM.
3. LOOP DETECTOR 1.8 X 3 m.
4. COIL 5 m OF 3 CSC CABLE IN THE PULL BOX FOR FUTURE USE.
5. TYPE 1-A ADVANCE FLASHING BEACON INSTALLATION WITH W3-3 SIGN. SEE SIGN PLANS FOR SIGN DETAILS.
6. RC fb INSTALLATION, WOOD POST SHALL REMAIN IN PLACE DURING STAGE CONSTRUCTION.
7. REFER TO SIGN PLANS FOR SIGN DETAILS.
8. ALL PULL BOXES ADJACENT TO SIGNAL STANDARDS SHALL BE No. 6(E) UNLESS OTHERWISE INDICATED.
9. THE CONTRACTOR SHALL COORDINATE WITH UTILITIES FOR ALL SERVICE REQUIREMENTS.
10. SEE SHEET E-21 FOR CONSTRUCTION STAGE 1A AND 2A.

POLE AND EQUIPMENT SCHEDULE

STANDARD				VEH SIG MTG		HPS LUM	SPECIAL REQUIREMENTS	
No.	TYPE	SMA	LMA	MAST ARM	POLE			
A	61-5-161	19.8	4.6	MAS MAS MAS	SV-1-T	200 W	INSTALL TYPE R73-2(CA) AND TYPE D3 SIGNS ON SMA [7]	F1=5.8 F2=6.7
B	1-A				TV-2-T			
C	61-5-161	19.8	4.6	MAS MAS MAS		200 W	INSTALL TYPE R73-3(CA) AND TYPE D3 SIGNS ON SMA [7]	F1=4.6 F2=8.6
D	1-A				TV-2-T			
E	18-2-161	4.6		MAS	SV-1-T		INSTALL TYPE R73-5(CA) ON SMA [7]	
F	26-4-161	13.7	4.6	MAS MAS	SV-1-T	200 W	INSTALL TYPE D3 SIGNS ON SMA [7]	F=7.6
G	1-A				TV-2-T			
H	61-5-161	18.2	4.6	MAS MAS	SV-1-T	200 W	INSTALL TYPE R73-3(CA) AND TYPE D3 SIGNS ON SMA [7]	F=4.6
I	1-A				TV-2-T			
J	15 TS		4.6		SV-1-T	200 W		

CONDUIT AND CONDUCTOR SCHEDULE

CONDUCTOR DESIGNATION			CONDUIT RUN NUMBER AND SIZE										
CABLE TYPE	POLE	PHASE	1	2	3	4	5	6	7	8	9	10	11
			3-103	3-103	2-103	103	103	78	78	78	103	2-103	2-103
VEH-PED 12CSC / PPB 3CSC	A	2,5 / 8	1 / 1	1 / 1									
	B	7,8 / 2	1 / 1	1 / 1	1 / 1								
	C	4,7 / 2	1 / 1	1 / 1	1 / 1	1 / 1							
	D	1,2 / 4	1 / 1	1 / 1	1 / 1	1 / 1	1 / 1						
	E	1 / 4	1 / 1	1 / 1	1 / 1	1 / 1	1 / 1	1 / 1					
	F	6 / 4	1 / 1	1 / 1					1 / 1	1 / 1	1 / 1	1 / 1	1 / 1
	G	3,4 / 6	1 / 1	1 / 1						1 / 1	1 / 1	1 / 1	1 / 1
	H	3,8 / 6	1 / 1	1 / 1							1 / 1	1 / 1	1 / 1
	I	5,6 / 8	1 / 1	1 / 1								1 / 1	1 / 1
	J	5 / 8	1 / 1	1 / 1									1 / 1
		TOTAL	10 / 10	10 / 10	4 / 4	3 / 3	2 / 2	1 / 1	1 / 1	2 / 2	3 / 3	4 / 4	5 / 5
AWG	CIRCUIT												
#6	SIGNAL		2	2							2	2	2
#8	LIGHTING				2	2	2		2	2	2	2	2
#8	FB				2					2	2	2	2
OPTICAL DETECTOR CABLE			4	4	1	1			1	1	2	2	2
DLC		PHASE											
		Ø1	4	4									4
		Ø2	5	5	5	5	5	1					
		Ø3	2	2	2								
		Ø4	2	2						2	2	2	2
		Ø5	2	2	2	2	2	2					
		Ø6	5	5								5	5
		Ø7	2	2						2	2	2	2
		Ø8	2	2	2								
		Ø2 INT/ADV	4	4	4	4	4						
		Ø6 INT/ADV	4	4								4	4
		Ø8 ADV	1	1	1								
		Ø4 ADV	1	1						1	1	1	1
		EB-1	1	1									
		EB-2	1	1									
		EB-3	1	1									
		WB-1	1	1					1	1	1	1	1
		WB-2	1	1					1	1	1	1	1
		WB-3	1	1					1	1	1	1	1
		TOTAL	40	40	16	11	11	3	3	8	8	17	21

ALL DIMENSIONS ARE IN METERS UNLESS OTHERWISE SHOWN

SIGNAL AND LIGHTING (LOCATION 3)
EMERGENCY VEHICLE DETECTOR SYSTEM (LOCATION 3)

THIS PLAN IS ACCURATE FOR ELECTRICAL WORK ONLY.

E-10

FUNCTIONAL SUPERVISOR	ALI BAKHDOUD	JASPAL SINGH	JR
CALCULATED-DESIGNED BY	CHECKED BY	JORGE RAMIREZ	7/5/09
		REVISED BY	DATE REVISED

STATE OF CALIFORNIA - DEPARTMENT OF TRANSPORTATION
Caltrans ELECTRICAL DESIGN

LAST REVISION 00-00-00 DATE PLOTTED => 30-JUN-2010 TIME PLOTTED => 17:10

Dist	COUNTY	ROUTE	KILOMETER POST TOTAL PROJECT	SHEET No.	TOTAL SHEETS
10	Sta	219,108	3.4/7.9, 44.3/44.9	457	522

REGISTERED ELECTRICAL ENGINEER 6/16/09

6-28-10
PLANS APPROVAL DATE

REGISTERED PROFESSIONAL ENGINEER Jaspal Singh No. 16657 Exp. 6/30/10 ELECTRICAL STATE OF CALIFORNIA

THE STATE OF CALIFORNIA OR ITS OFFICERS OR AGENTS SHALL NOT BE RESPONSIBLE FOR THE ACCURACY OR COMPLETENESS OF ELECTRONIC COPIES OF THIS PLAN SHEET.

Caltrans Metric

NOTES: (FOR THIS SHEET ONLY)

1. 120/240 V, 1Ø, 3-WIRE, TYPE III-BF SERVICE EQUIPMENT ENCLOSURE WITH THE FOLLOWING CIRCUIT BREAKERS:

CTID No. 10382190046000T

AMPERES	VOLTS	POLES	NAME PLATE DESCRIPTION	METER
100	240	2	MAIN BREAKER	YES
30	120	1	CMS CABINET	YES
30	240	2	CMS LAMPS	YES
30	120	1	TMS/CCTV CABINET	YES
15	120	1	WMS	YES
15	120	1	TDC	YES
15	120	1	SPARE	YES
-	-	4	SPACE	-

2. STATE-FURNISHED MODEL 170 CONTROLLER ASSEMBLY AND WIRELESS MODEM FOR CMS.
3. MODEL 334 CABINET WITH WIRELESS MODEM AND STATE-FURNISHED 2070 CONTROLLER UNIT FOR TMS AND STATE-FURNISHED MODEM FOR CCTV.
4. STATE-FURNISHED MODEL 510 CHANGEABLE MESSAGE SIGN.
5. TYPE 15 CCTV POLE WITH CCTV CAMERA UNIT ON TOP OF CMS POST.
6. WEATHER MONITORING STATION WITH WIRELESS MODEM, SEE SHEET E-17 FOR DETAILS.
7. TYPE C TDC.
8. PULL BOX PER UTILITY REQUIREMENTS.
9. THE CONTRACTOR SHALL COORDINATE WITH UTILITIES FOR SERVICE REQUIREMENTS.
10. FOR COMPLETE RIGHT OF WAY DATA, SEE RIGHT OF WAY RECORD MAPS AT DISTRICT OFFICE.

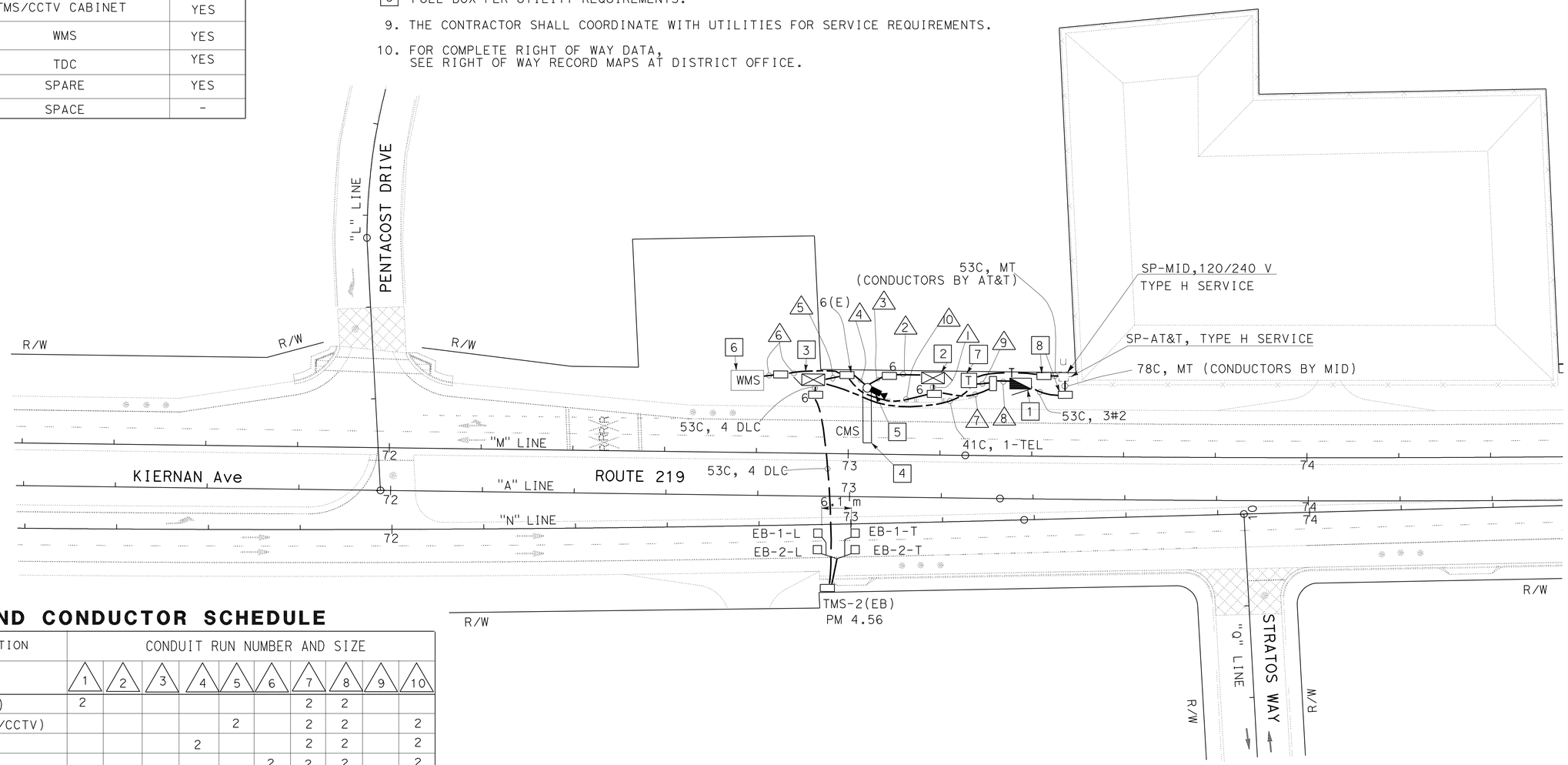

CONDUIT AND CONDUCTOR SCHEDULE

CONDUCTOR DESIGNATION		CONDUIT RUN NUMBER AND SIZE									
AWG	CIRCUIT	1	2	3	4	5	6	7	8	9	10
#8	334 CABINET(CMS)	2						2	2		
#8	334 CABINET(TMS/CCTV)					2		2	2		2
#8	CMS LAMPS				2			2	2		2
#10	WMS						2	2	2		2
#10	TDC								2	2	
#8	LAMPS NEUTRAL				1			1	1		1
	SF HARNESS #4		1	1							
	SF HARNESS #5		1	1							
	COMPOSITE CABLE(CCTV)				1	1					
	CONDUIT SIZE	78	78	78	78	78	41	53	53	41	41

THIS PLAN IS ACCURATE FOR ELECTRICAL WORK ONLY.

TRAFFIC MONITORING STATION (LOCATION 2)
CHANGEABLE MESSAGE SIGN SYSTEM (LOCATION 2)
CLOSED CIRCUIT TELEVISION SYSTEM (LOCATION 2)
WEATHER MONITORING STATION (LOCATION 2)

ALL DIMENSIONS ARE IN METERS UNLESS OTHERWISE SHOWN

SCALE 1:500

E-11

REVISED BY	DATE REVISED
JR	7/2/09

JASPAL SINGH — JORGE RAMIREZ — CALCULATED-DESIGNED BY — CHECKED BY

FUNCTIONAL SUPERVISOR: ALI BAKHDOUD

STATE OF CALIFORNIA - DEPARTMENT OF TRANSPORTATION
Caltrans ELECTRICAL DESIGN

LAST REVISION 00-00-00 DATE PLOTTED => 30-JUN-2010 TIME PLOTTED => 17:10

Dist	COUNTY	ROUTE	KILOMETER POST TOTAL PROJECT	SHEET No.	TOTAL SHEETS
10	Sta	219,108	3.4/7.9, 44.3/44.9	458	522

REGISTERED ELECTRICAL ENGINEER 6/16/09

6-28-10
PLANS APPROVAL DATE

REGISTERED PROFESSIONAL ENGINEER Jaspal Singh No. 16657 Exp. 6/30/10 ELECTRICAL STATE OF CALIFORNIA

THE STATE OF CALIFORNIA OR ITS OFFICERS OR AGENTS SHALL NOT BE RESPONSIBLE FOR THE ACCURACY OR COMPLETENESS OF ELECTRONIC COPIES OF THIS PLAN SHEET.

Caltrans Metric

NOTES:

1. FOR NOTES AND SCHEDULES SEE SHEET E-15.
2. NEW SIGNAL LIGHTING WAS INSTALLED AT STAGE 1 CONSTRUCTION, SEE SHEETS E-23 & E-24 FOR MORE INFORMATION.
3. FOR COMPLETE RIGHT OF WAY DATA, SEE RIGHT OF WAY RECORD MAPS AT DISTRICT OFFICE.

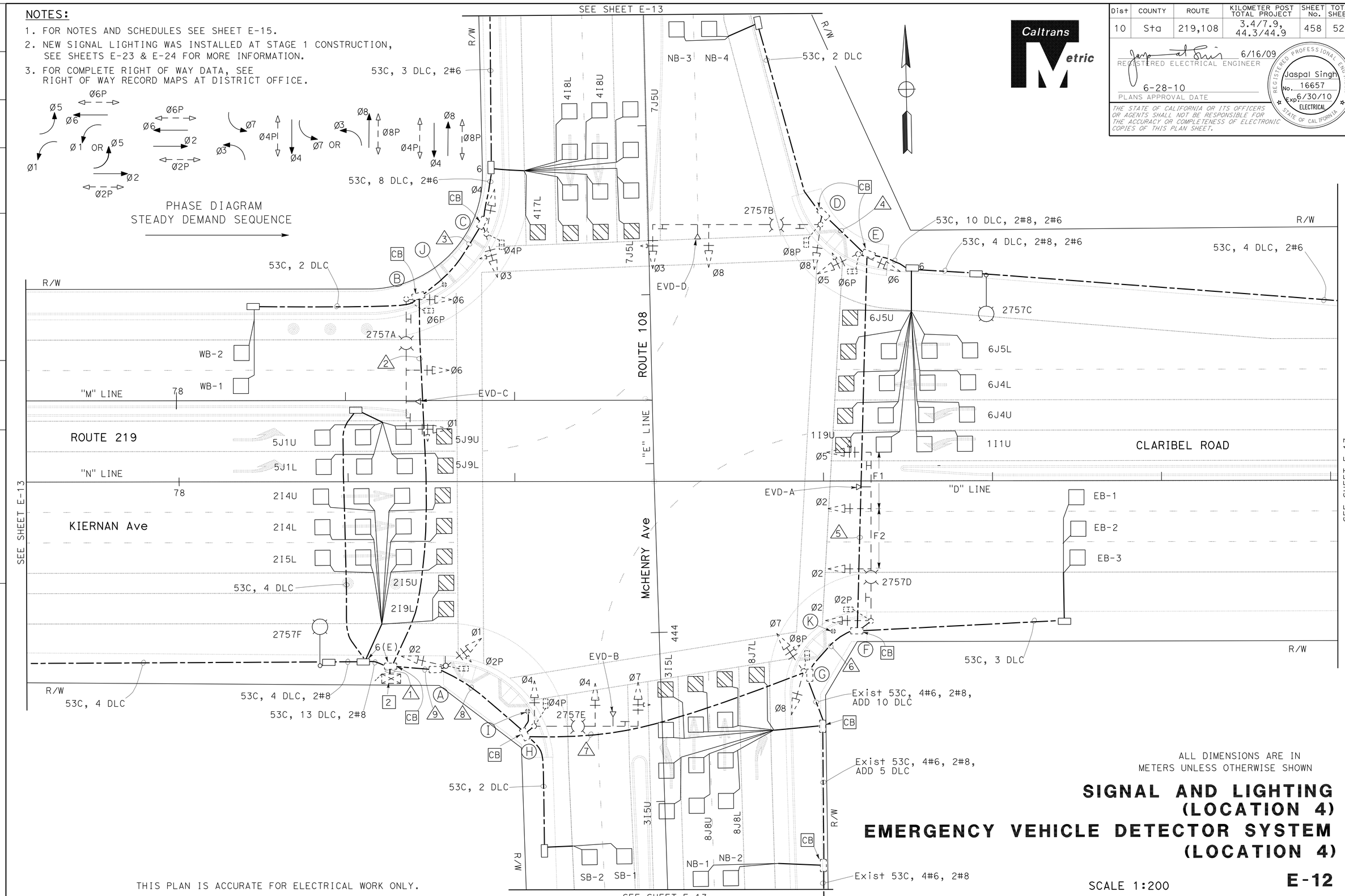

THIS PLAN IS ACCURATE FOR ELECTRICAL WORK ONLY.

ALL DIMENSIONS ARE IN METERS UNLESS OTHERWISE SHOWN

SIGNAL AND LIGHTING (LOCATION 4)
EMERGENCY VEHICLE DETECTOR SYSTEM (LOCATION 4)

SCALE 1:200

E-12

REVISED BY	DATE REVISED
JR	7/2/09

JASPAL SINGH — JORGE RAMIREZ
CALCULATED-DESIGNED BY — CHECKED BY
FUNCTIONAL SUPERVISOR — ALI BAKHDOUD

STATE OF CALIFORNIA - DEPARTMENT OF TRANSPORTATION
Caltrans ELECTRICAL DESIGN

LAST REVISION 00-00-00 | DATE PLOTTED => 30-JUN-2010 | TIME PLOTTED => 17:31

Dist	COUNTY	ROUTE	KILOMETER POST TOTAL PROJECT	SHEET No.	TOTAL SHEETS
10	Sta	219,108	3.4/7.9, 44.3/44.9	459	522

REGISTERED ELECTRICAL ENGINEER 6/16/09

6-28-10
PLANS APPROVAL DATE

REGISTERED PROFESSIONAL ENGINEER Jaspal Singh No. 16657 Exp. 6/30/10 ELECTRICAL STATE OF CALIFORNIA

THE STATE OF CALIFORNIA OR ITS OFFICERS OR AGENTS SHALL NOT BE RESPONSIBLE FOR THE ACCURACY OR COMPLETENESS OF ELECTRONIC COPIES OF THIS PLAN SHEET.

Caltrans Metric

NOTE:

1. FOR NOTES AND SCHEDULES SEE SHEET E-15.
2. FOR COMPLETE RIGHT OF WAY DATA, SEE RIGHT OF WAY RECORD MAPS AT DISTRICT OFFICE.

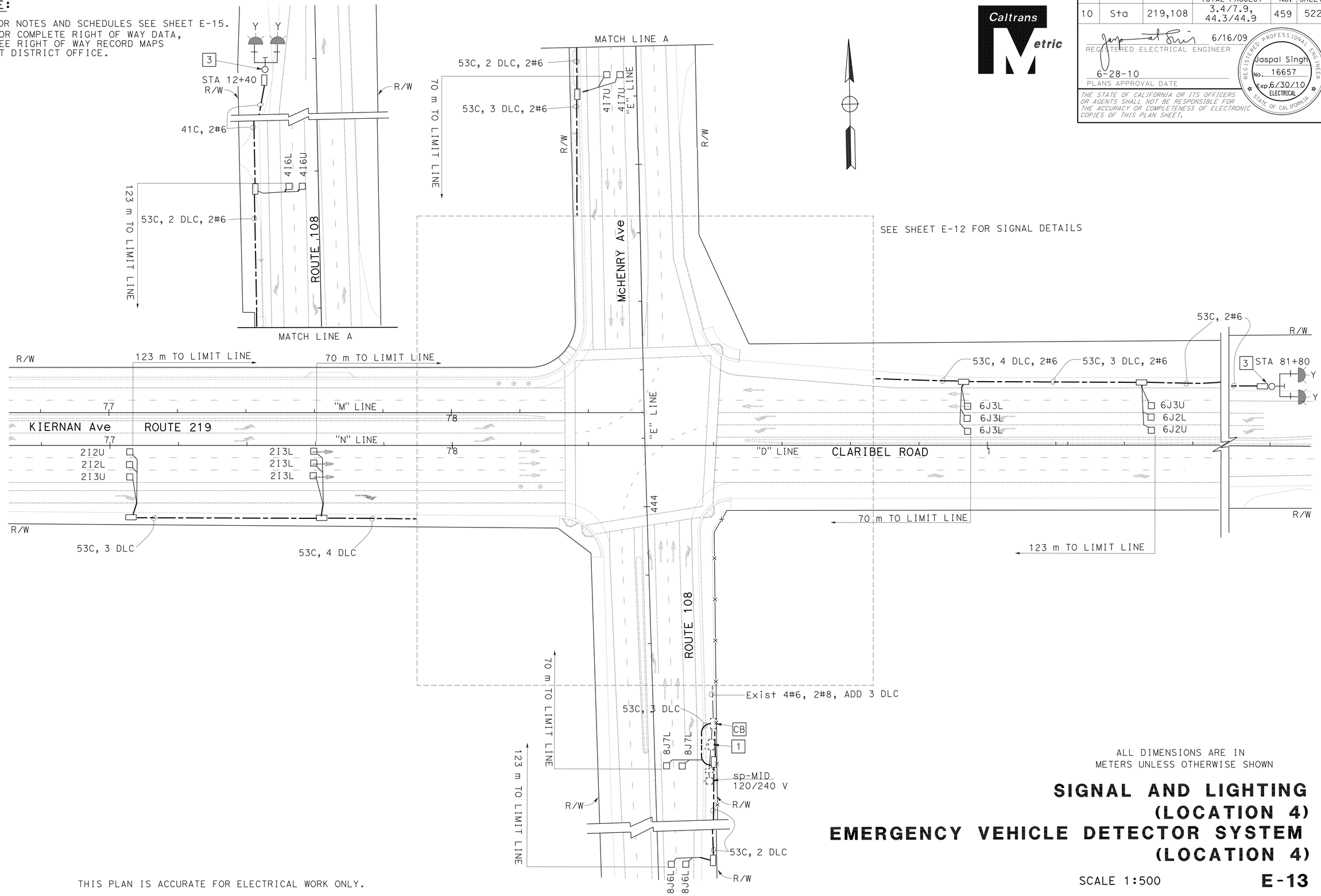

ALL DIMENSIONS ARE IN METERS UNLESS OTHERWISE SHOWN

THIS PLAN IS ACCURATE FOR ELECTRICAL WORK ONLY.

SIGNAL AND LIGHTING (LOCATION 4)
EMERGENCY VEHICLE DETECTOR SYSTEM (LOCATION 4)

SCALE 1:500

E-13

JASPAL SINGH	JR
JORGE RAMIREZ	7/2/09
ALI BAKHDOUD	

REVISED BY / DATE REVISED

CALCULATED-DESIGNED BY / CHECKED BY

FUNCTIONAL SUPERVISOR

STATE OF CALIFORNIA - DEPARTMENT OF TRANSPORTATION

Caltrans ELECTRICAL DESIGN

LAST REVISION 00-00-00 DATE PLOTTED => 30-JUN-2010 TIME PLOTTED => 17:30

Dist	COUNTY	ROUTE	KILOMETER POST TOTAL PROJECT	SHEET No.	TOTAL SHEETS
10	Sta	219,108	3.4/7.9, 44.3/44.9	460	522

REGISTERED ELECTRICAL ENGINEER 6/16/09

6-28-10
PLANS APPROVAL DATE

REGISTERED PROFESSIONAL ENGINEER Jaspal Singh No. 16657 Exp. 6/30/10 ELECTRICAL STATE OF CALIFORNIA

THE STATE OF CALIFORNIA OR ITS OFFICERS OR AGENTS SHALL NOT BE RESPONSIBLE FOR THE ACCURACY OR COMPLETENESS OF ELECTRONIC COPIES OF THIS PLAN SHEET.

Caltrans Metric

NOTE:

1. FOR NOTES AND SCHEDULES SEE SHEET E-15.
2. FOR COMPLETE RIGHT OF WAY DATA, SEE RIGHT OF WAY RECORD MAPS AT DISTRICT OFFICE.

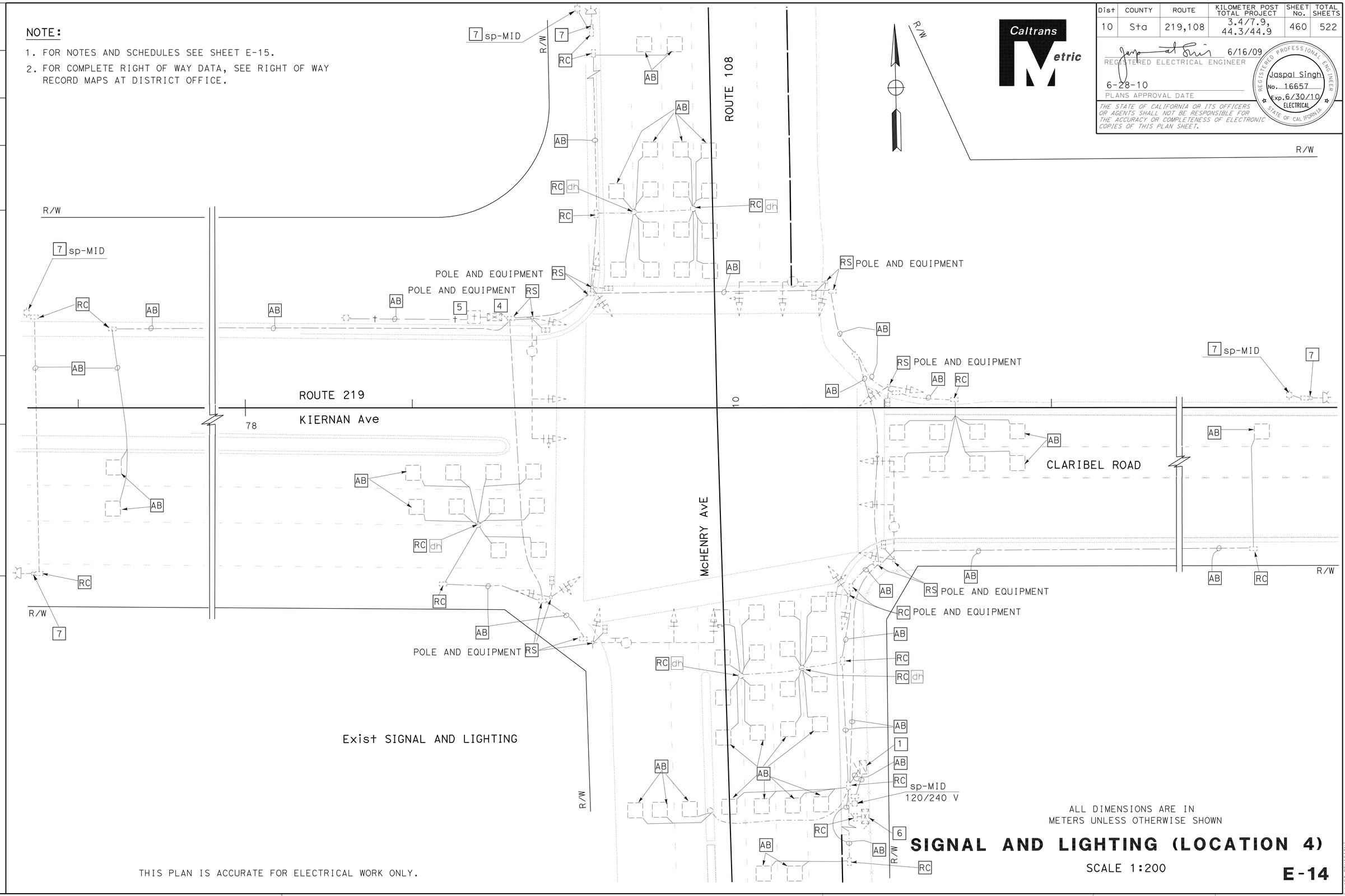

ALL DIMENSIONS ARE IN METERS UNLESS OTHERWISE SHOWN

THIS PLAN IS ACCURATE FOR ELECTRICAL WORK ONLY.

SIGNAL AND LIGHTING (LOCATION 4)

SCALE 1:200

E-14

JASPAL SINGH	JR	7/2/09	
JORGE RAMIREZ	REVISED BY	DATE REVISED	
CALCULATED-DESIGNED BY			
CHECKED BY			
FUNCTIONAL SUPERVISOR			
ALI BAKHDOUD			

STATE OF CALIFORNIA - DEPARTMENT OF TRANSPORTATION
Caltrans ELECTRICAL DESIGN

LAST REVISION 07-02-09 | DATE PLOTTED => 30-JUN-2010 | TIME PLOTTED => 17:10

Dist	COUNTY	ROUTE	KILOMETER POST TOTAL PROJECT	SHEET No.	TOTAL SHEETS
10	Sta	219,108	3.4/7.9, 44.3/44.9	461	522

REGISTERED ELECTRICAL ENGINEER 6/16/09

6-28-10
PLANS APPROVAL DATE

REGISTERED PROFESSIONAL ENGINEER Jaspal Singh No. 16657 Exp. 6/30/10 ELECTRICAL STATE OF CALIFORNIA

THE STATE OF CALIFORNIA OR ITS OFFICERS OR AGENTS SHALL NOT BE RESPONSIBLE FOR THE ACCURACY OR COMPLETENESS OF ELECTRONIC COPIES OF THIS PLAN SHEET.

Caltrans Metric

NOTES: (FOR SHEETS E-12, E-13, AND E-14)

1. 120/240 V, 1Ø, 3-WIRE, TYPE III-CF SERVICE EQUIPMENT ENCLOSURE. SEE SHEET E-23 AND E-24.
2. STATE-FURNISHED MODEL 2070 CONTROLLER ASSEMBLY WITH BATTERY BACKUP SYSTEM. ADD WIRELESS MODEM.
3. TYPE 15-FBS ADVANCE FLASHING BEACON INSTALLATION WITH W3-3 SIGN.
4. RS MODEL 332 CABINET AND BATTERY BACKUP SYSTEM.
5. RS TELEPHONE DEMARCATION CABINET.
6. RS MODEL 334 CABINET.
7. RC fb INSTALLATION, TYPE A SERVICE, SIGN AND RISER ON PG&E POLE. WOOD POLE SHALL REMAIN IN PLACE DURING STAGE CONSTRUCTION.
8. THE CONTRACTOR SHALL COORDINATE WITH UTILITIES FOR ALL SERVICE REQUIREMENTS.
9. ALL PULL BOXES ADJACENT TO SIGNAL STANDARDS SHALL BE No. 6(E) UNLESS OTHERWISE INDICATED.
10. SEE SHEET E-23 FOR CONSTRUCTION STAGE 1.

CONDUIT AND CONDUCTOR SCHEDULE

CONDUCTOR DESIGNATION				CONDUIT RUN NUMBER AND SIZE								
CABLE TYPE	POLE	PHASE		1	2	3	4	5	6	7	8	9
				3-103	103	78	78	103	103	2-103	2-103	2-103
VEH-PED 12CSC	A	1,2,2P	4	1 / 1								1 / 1
	B	1,6,6P		1	1							
	C	3,4,4P	6	1 / 1	1 / 1	1 / 1						
	D	3,8,8P	6	1 / 1			1 / 1	1 / 1	1 / 1	1 / 1	1 / 1	1 / 1
	E	5,6,6P	8	1 / 1				1 / 1	1 / 1	1 / 1	1 / 1	1 / 1
PPB 3CSC	F	2,5,2P		1					1	1	1	1
	G	7,8,8P	2	1 / 1						1 / 1	1 / 1	1 / 1
	H	4,7,4P		1							1	1
	I		2	1							1	1
	J		4	1	1							
	K		8	1					1	1	1	1
		TOTAL		8/8	2/2	1/1	1/1	2/2	3/3	4/4	5/5	6/6
AWG	CIRCUIT											
#6	SIGNAL			2						2	2	2
#8	LIGHTING				2		2	2	2	2	2	2
#6	FB				2	2		2	2	2	2	2
OPTICAL DETECTOR CABLE				4	1		1	1	2	2	3	3
DLC		PHASE										
		Ø1		2				2	2	2	2	2
		Ø2		5								
		Ø3		2						2	2	2
		Ø4		3	3	3						
		Ø5		4								
		Ø6		4				4	4	4	4	4
		Ø7		2	2	2						
		Ø8		3						3	3	3
		Ø2 INT/ADV		4								
		Ø6 INT/ADV		4				4	4	4	4	4
		Ø4 INT/ADV		3	3	3						
		Ø8 INT/ADV		3						3	3	3
		EB-1		1					1	1	1	1
		EB-2		1					1	1	1	1
		EB-3		1					1	1	1	1
		WB-1		1	1							
		WB-2		1	1							
		NB-1		1						1	1	1
		NB-2		1						1	1	1
		NB-3		1			1	1	1	1	1	1
		NB-4		1			1	1	1	1	1	1
		SB-1		1							1	1
		SB-2		1							1	1
		TOTAL		50	10	8	2	12	15	25	27	27

CONDUIT RUN 1 THRU 9 ARE Exist, SEE SHEET E-23

SIGNAL AND LIGHTING (LOCATION 4)
EMERGENCY VEHICLE DETECTOR SYSTEM (LOCATION 4)

E-15

THIS PLAN IS ACCURATE FOR ELECTRICAL WORK ONLY.

STATE OF CALIFORNIA - DEPARTMENT OF TRANSPORTATION
Caltrans ELECTRICAL DESIGN

FUNCTIONAL SUPERVISOR: ALI BAKHDOUD
CALCULATED-DESIGNED BY: JASPAL SINGH
CHECKED BY: JORGE RAMIREZ
REVISED BY: JR
DATE REVISED: 7/2/09

LAST REVISION 00-00-00
DATE PLOTTED => 30-JUN-2010
TIME PLOTTED => 17:01

Dist	COUNTY	ROUTE	KILOMETER POST TOTAL PROJECT	SHEET No.	TOTAL SHEETS
10	Sta	219,108	3.4/7.9, 44.3/44.9	462	522

REGISTERED ELECTRICAL ENGINEER 6/16/09

6-28-10
PLANS APPROVAL DATE

REGISTERED PROFESSIONAL ENGINEER Jaspal Singh No. 16657 Exp. 6/30/10 ELECTRICAL STATE OF CALIFORNIA

THE STATE OF CALIFORNIA OR ITS OFFICERS OR AGENTS SHALL NOT BE RESPONSIBLE FOR THE ACCURACY OR COMPLETENESS OF ELECTRONIC COPIES OF THIS PLAN SHEET.

Caltrans Metric

NOTES: (FOR THIS SHEET ONLY)

1. ELECTROLIER SHALL HAVE AN ADDITIONAL RAISED FOUNDATION OF 1 m ABOVE FINISHED GRADE.
2. SERVICE FROM Exist SERVICE TO THE PULL BOX SHALL BE PROVIDED AND SPLICED BY THE OWNER.
3. LUMINAIRES SHALL BE 240 V, 200 W HPS WITH TYPE IV PEC.
4. FOR COMPLETE RIGHT OF WAY DATA, SEE RIGHT OF WAY RECORD MAPS AT DISTRICT OFFICE.

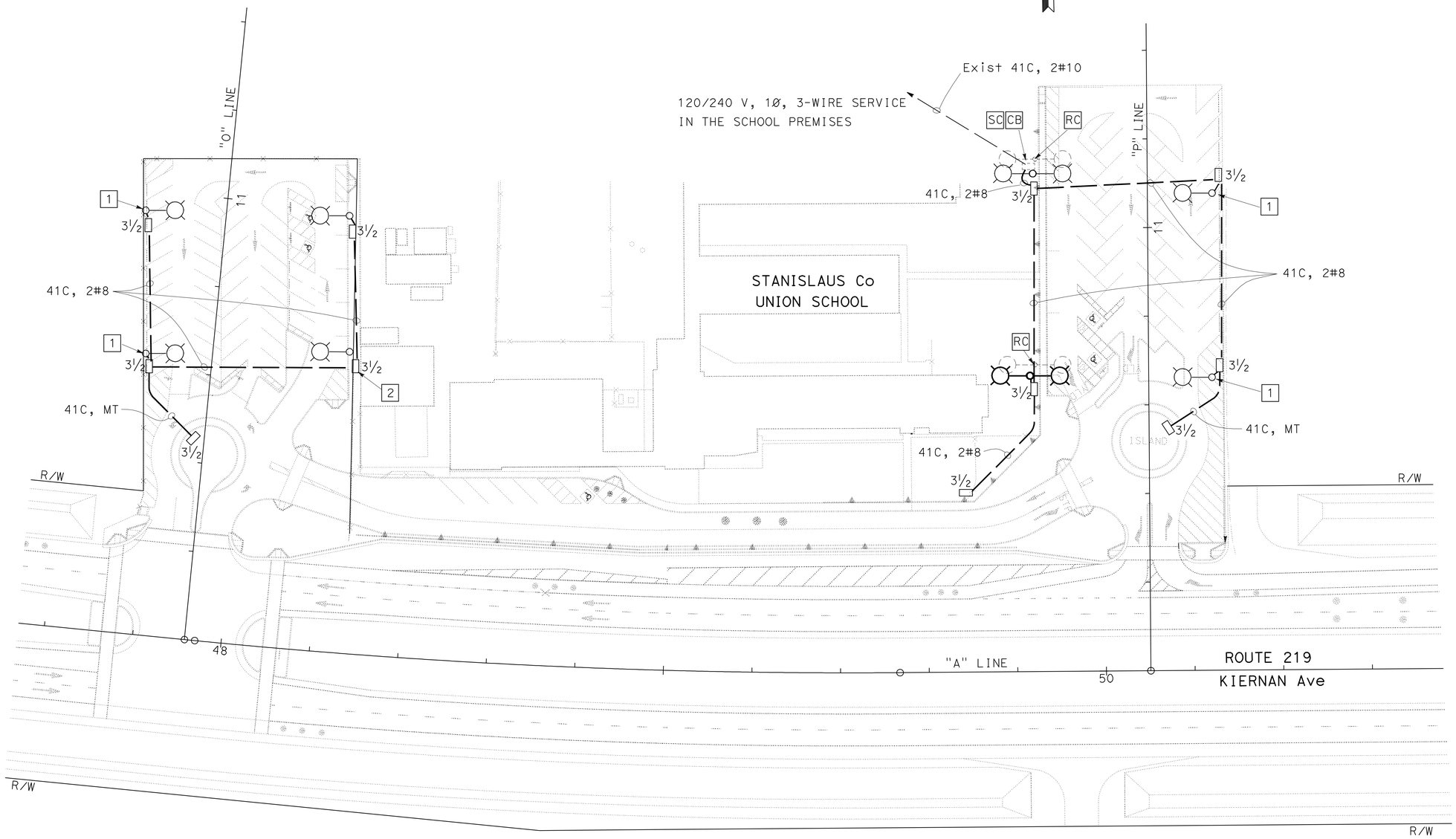

STANISLAUS Co UNION SCHOOL LIGHTING

ALL DIMENSIONS ARE IN METERS UNLESS OTHERWISE SHOWN

THIS PLAN IS ACCURATE FOR ELECTRICAL WORK ONLY.

LIGHTING (PARKING LOT)

SCALE 1:500

E-16

REVISED BY	DATE REVISED
JR	7/2/09

CALCULATED-DESIGNED BY: JASPAL SINGH
CHECKED BY: JORGE RAMIREZ
FUNCTIONAL SUPERVISOR: ALI BAKHDOUD

STATE OF CALIFORNIA - DEPARTMENT OF TRANSPORTATION
Caltrans ELECTRICAL DESIGN

LAST REVISION 00-00-00 DATE PLOTTED => 25-JAN-2012 TIME PLOTTED => 08:32

Dist	COUNTY	ROUTE	KILOMETER POST TOTAL PROJECT	SHEET No.	TOTAL SHEETS
10	Sta	219,108	3.4/7.9, 44.3/44.9	463	522

Caltrans Metric

6/16/09
REGISTERED ELECTRICAL ENGINEER

6-28-10
PLANS APPROVAL DATE

REGISTERED PROFESSIONAL ENGINEER Jaspal Singh No. 16657 Exp. 6/30/10 ELECTRICAL STATE OF CALIFORNIA

THE STATE OF CALIFORNIA OR ITS OFFICERS OR AGENTS SHALL NOT BE RESPONSIBLE FOR THE ACCURACY OR COMPLETENESS OF ELECTRONIC COPIES OF THIS PLAN SHEET.

GALVANIZED STEEL BASE LEGS IN 0.84X0.84 FOUNDATION. EMBED IN CONCRETE. ANCHORAGE PATTERN AS REQUIRED BY SUPPLIER TO ATTACH ALLUMINUM FRAME PER MANUFACTURER SPECIFICATIONS.

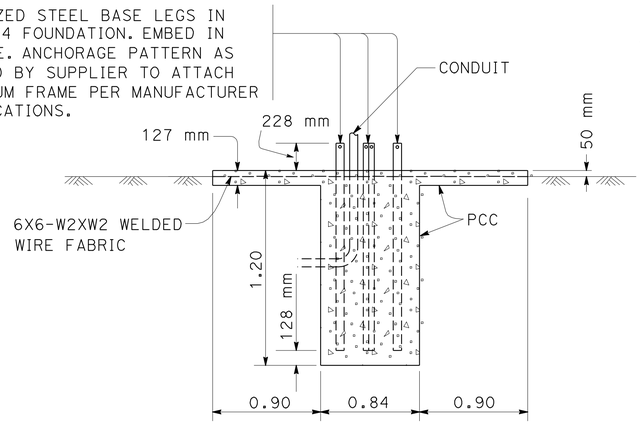

SECTION A-A

NOTES: (THIS DETAIL)

1. GLOSSARY

MCB - SINGLE POLE 15 AMPERE MAIN CIRCUIT BREAKER
ECB - SINGLE POLE 15 AMPERE EQUIPMENT CIRCUIT BREAKER.
R - NEMA 15-15R DUPLEX RECEPTACLE
TB1 - 6 POSITION MINIMUM PHOENIX CONTACT #USK 10 OPEN CONSTRUCTION TERMINAL (OR EQUAL) BLOCK MOUNTED ON 230 mm DIN RAILING
- EARTH OR EQUIPMENT GROUND
- SURGE PROTECTOR

2. ALL AC CONDUCTORS SHALL BE #14 OR LARGER AND DC CONDUCTORS #18 OR LARGER.

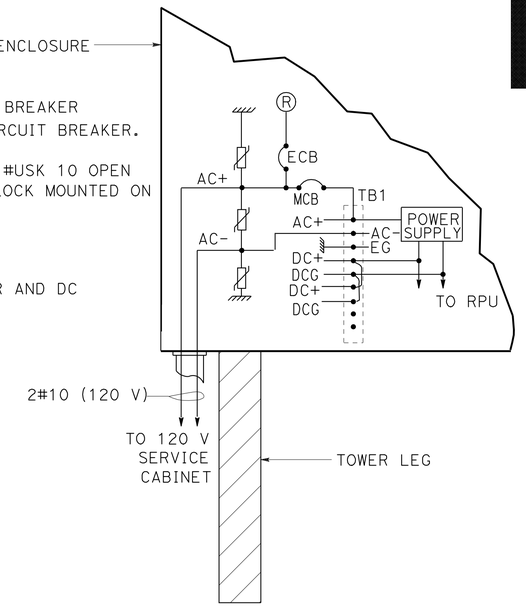

RPU POWER CONNECTION

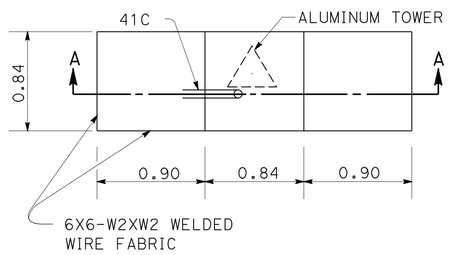

PLAN VIEW

FOUNDATION DETAIL

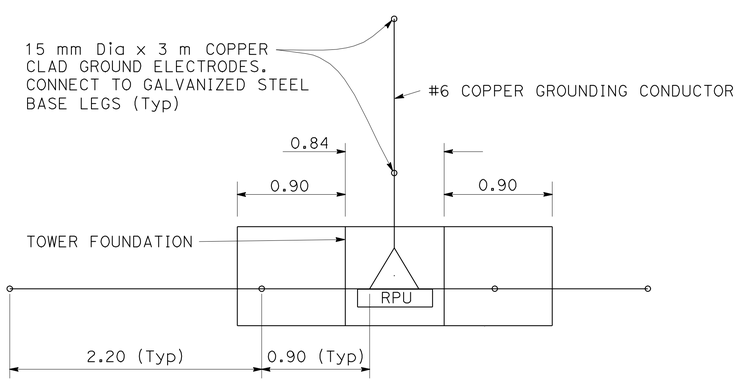

PLAN VIEW

GROUNDING DETAILS

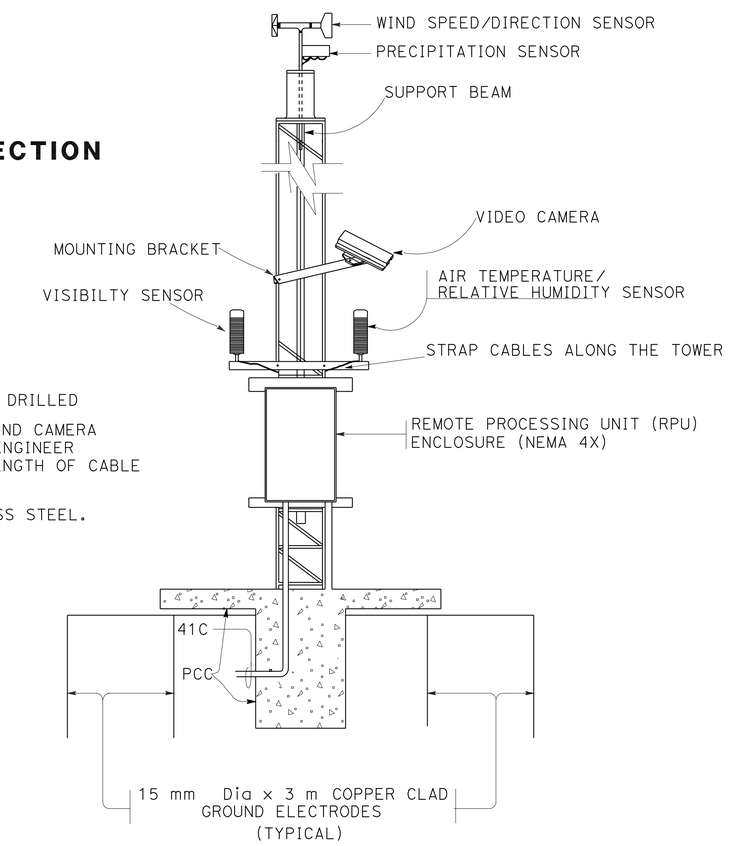

NOTES: (CAMERA INSTALLATION)

1. MOUNTING BRACKET SHALL BE PRE DRILLED
2. POSITION OF MOUNTING BRACKET AND CAMERA SHALL BE DETERMINED BY FIELD ENGINEER PER DESIRED CAMERA VIEW AND LENGTH OF CABLE ATTACHED TO THE CAMERA.
3. ALL HARDWARE SHALL BE STAINLESS STEEL.

ASSEMBLY INSTALLATION

ALL DIMENSIONS ARE IN METERS UNLESS OTHERWISE SHOWN

WEATHER MONITORING STATION
(ELECTRICAL DETAILS)

NO SCALE

E-17

THIS PLAN IS ACCURATE FOR ELECTRICAL WORK ONLY.

JR	7/2/09	REVISED BY / DATE REVISED
JASPAL SINGH	JORGE RAMIREZ	CALCULATED-DESIGNED BY / CHECKED BY
FUNCTIONAL SUPERVISOR	ALI BAKHDOUD	

STATE OF CALIFORNIA - DEPARTMENT OF TRANSPORTATION
Caltrans ELECTRICAL DESIGN

LAST REVISION 00-00-00 | DATE PLOTTED => 30-JUN-2010 | TIME PLOTTED => 17:02

Dist	COUNTY	ROUTE	KILOMETER POST TOTAL PROJECT	SHEET No.	TOTAL SHEETS
10	Sta	219,108	3.4/7.9, 44.3/44.9	464	522

Caltrans Metric

6/16/09
REGISTERED ELECTRICAL ENGINEER

6-28-10
PLANS APPROVAL DATE

REGISTERED PROFESSIONAL ENGINEER Jaspal Singh No. 16657 Exp. 6/30/10 ELECTRICAL STATE OF CALIFORNIA

THE STATE OF CALIFORNIA OR ITS OFFICERS OR AGENTS SHALL NOT BE RESPONSIBLE FOR THE ACCURACY OR COMPLETENESS OF ELECTRONIC COPIES OF THIS PLAN SHEET.

NOTES:

1. FOR NOTES AND SCHEDULES SEE SHEET E-19.
2. FOR COMPLETE RIGHT OF WAY DATA, SEE RIGHT OF WAY RECORD MAPS AT DISTRICT OFFICE.

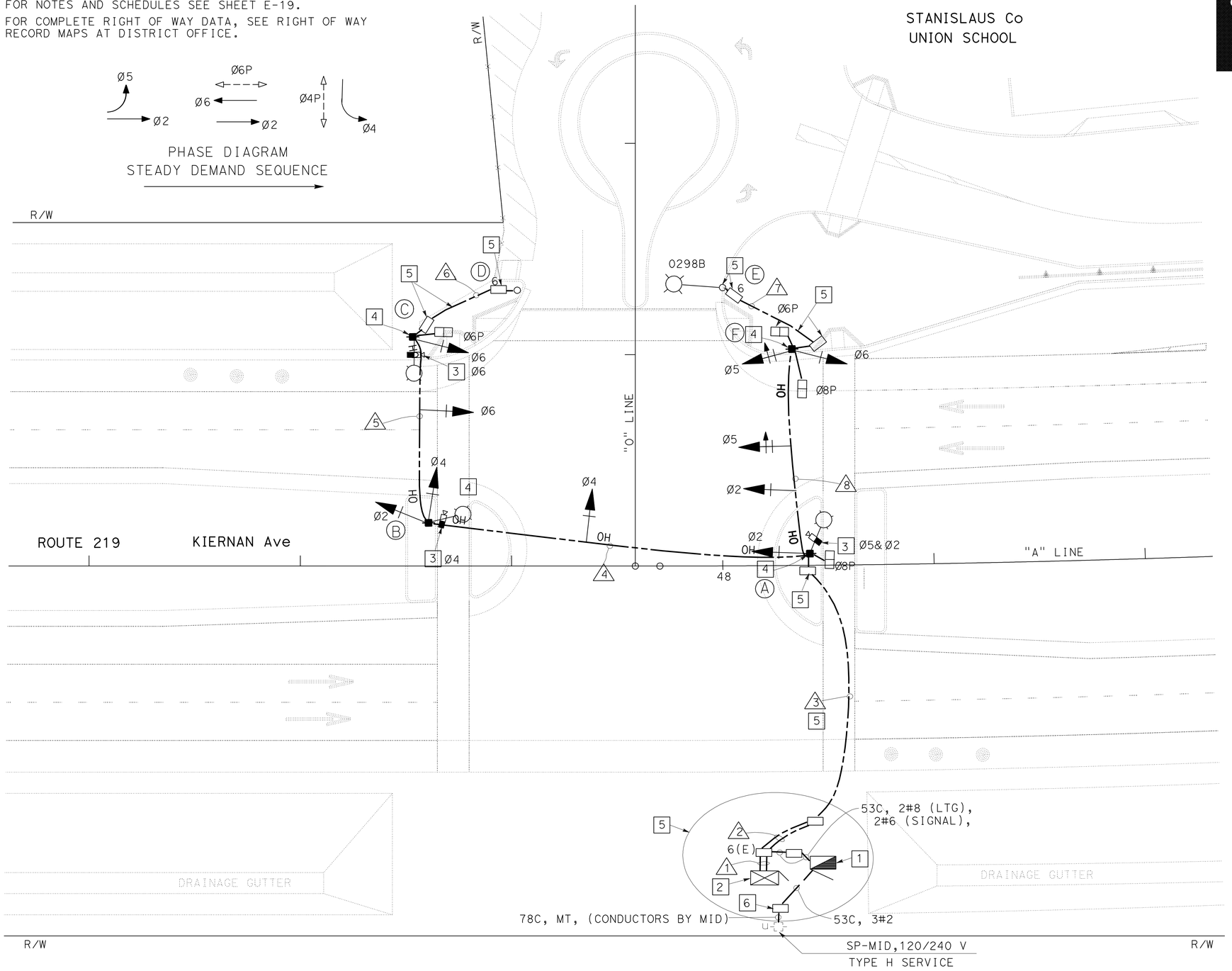

CONSTRUCTION STAGE 1A

ALL DIMENSIONS ARE IN METERS UNLESS OTHERWISE SHOWN

SIGNAL AND LIGHTING (LOCATION 1)

SCALE 1:200

E-18

THIS PLAN IS ACCURATE FOR ELECTRICAL WORK ONLY.

JASPAL SINGH	JR	7/2/09
JORGE RAMIREZ	REVISED BY	DATE REVISED
CALCULATED-DESIGNED BY		
CHECKED BY		
FUNCTIONAL SUPERVISOR		
ALI BAKHDOUD		

STATE OF CALIFORNIA - DEPARTMENT OF TRANSPORTATION
Caltrans **ELECTRICAL DESIGN**

LAST REVISION 00-00-00 | DATE PLOTTED => 30-JUN-2010 | TIME PLOTTED => 17:02

Dist	COUNTY	ROUTE	KILOMETER POST TOTAL PROJECT	SHEET No.	TOTAL SHEETS
10	Sta	219,108	3.4/7.9, 44.3/44.9	465	522

Caltrans Metric

6/16/09
REGISTERED ELECTRICAL ENGINEER

6-28-10
PLANS APPROVAL DATE

REGISTERED PROFESSIONAL ENGINEER Jaspal Singh No. 16657 Exp. 6/30/10 ELECTRICAL STATE OF CALIFORNIA

THE STATE OF CALIFORNIA OR ITS OFFICERS OR AGENTS SHALL NOT BE RESPONSIBLE FOR THE ACCURACY OR COMPLETENESS OF ELECTRONIC COPIES OF THIS PLAN SHEET.

NOTES: (FOR SHEET E-18)

1. 120/240 V, 1Ø, 3-WIRE, TYPE III-BF SERVICE EQUIPMENT ENCLOSURE WITH THE FOLLOWING CIRCUIT BREAKERS:

CTID No. 10382190002998S

AMPERES	VOLTS	POLES	NAME PLATE DESCRIPTION	METER	PHOTOELECTRIC CONTROL TYPE
100	240	2	MAIN BREAKER	YES	—
50	120	1	TRAFFIC SIGNAL	YES	—
30	240	2	LIGHTING	YES	—
15	120	1	LIGHTING CONTROL	YES	V
15	120	1	FB	YES	—
20	120	1	SPARE	YES	—
—	—	4	SPACE	—	—

2. STATE-FURNISHED MODEL 2070 CONTROLLER ASSEMBLY WITH BATTERY BACKUP SYSTEM AND WIRELESS MODEM.
3. VIDEO VEHICLE DETECTOR ATTACHED TO LUMINAIRE ARM ON TEMPORARY WOOD POLE. SEE DETAIL B ON SHEET E-22.
4. 12.2 m WOOD POLE WITH SIGNAL AND LIGHTING EQUIPMENT SEE DETAIL ON THIS SHEET.
5. TO REMAIN IN PLACE FOR PERMANENT SIGNAL, SEE SHEET E-2 FOR DETAILS.
6. PULL BOX PER MID REQUIREMENT.
7. ALL PULL BOXES ADJACENT TO SIGNAL STANDARDS SHALL BE No. 6(E) UNLESS OTHERWISE NOTED.

CONDUIT AND CONDUCTOR SCHEDULE

CONDUCTOR DESIGNATION			CONDUIT RUN NUMBER AND SIZE							
CABLE TYPE	WOOD POLE	PHASE	1	2	3	4	5	6	7	8
			2-103	2-103	2-103			78	103	
VEH-PED 12CSC / PPB 3CSC	A	2,5,8P / 8	1 / 1	1 / 1	1 / 1					
	B	2,4	1	1	1	1				
	C	6,6P	1	1	1	1	1			
	D	/ 6	1	1	1	1	1	1		
	E	/ 6	1	1	1				1	1
	F	5,6,6P,8P / 8	1	1	1 / 1				1	1 / 1
		TOTAL	4 / 3	4 / 3	4 / 4	2 / 1	1 / 1	1	1	1 / 2
AWG		CIRCUIT								
#6		SIGNAL	2							
#8		LIGHTING		2	2	2	2		2	2
VIVDS WIRING HARNESS		PHASE								
		Ø6	1	1	1	1	1			
		Ø2 & Ø5	1	1	1					
		Ø4	1	1	1					
		TOTAL	3	3	3	1	1			

POLE AND EQUIPMENT SCHEDULE

STANDARD			VEH SIG MTG			PED SIG MTG	PPB		HPS LUM	SPECIAL REQUIREMENTS
No.	TYPE	LMA	Ø	SPAN WIRE MOUNT	POLE MOUNT		Ø	ARROW		
A	WOOD POLE	1.8	2		SV-1-T	SP-1-T	8	←	200 W	
			2	SW-1						
			5	SW-1						
B	WOOD POLE	1.8	2		SV-2-T				200 W	
			4							
			4	SW-1						
C	WOOD POLE		6		SV-1-T	SP-1-T			200 W	
			6	SW-1						
D	1-A						6	→		
E	15TS	3.7					6	←	200 W	
F	WOOD POLE	1.8	5		SV-2-T	SP-2-T	8	→		
			6							

SW = SPAN WIRE

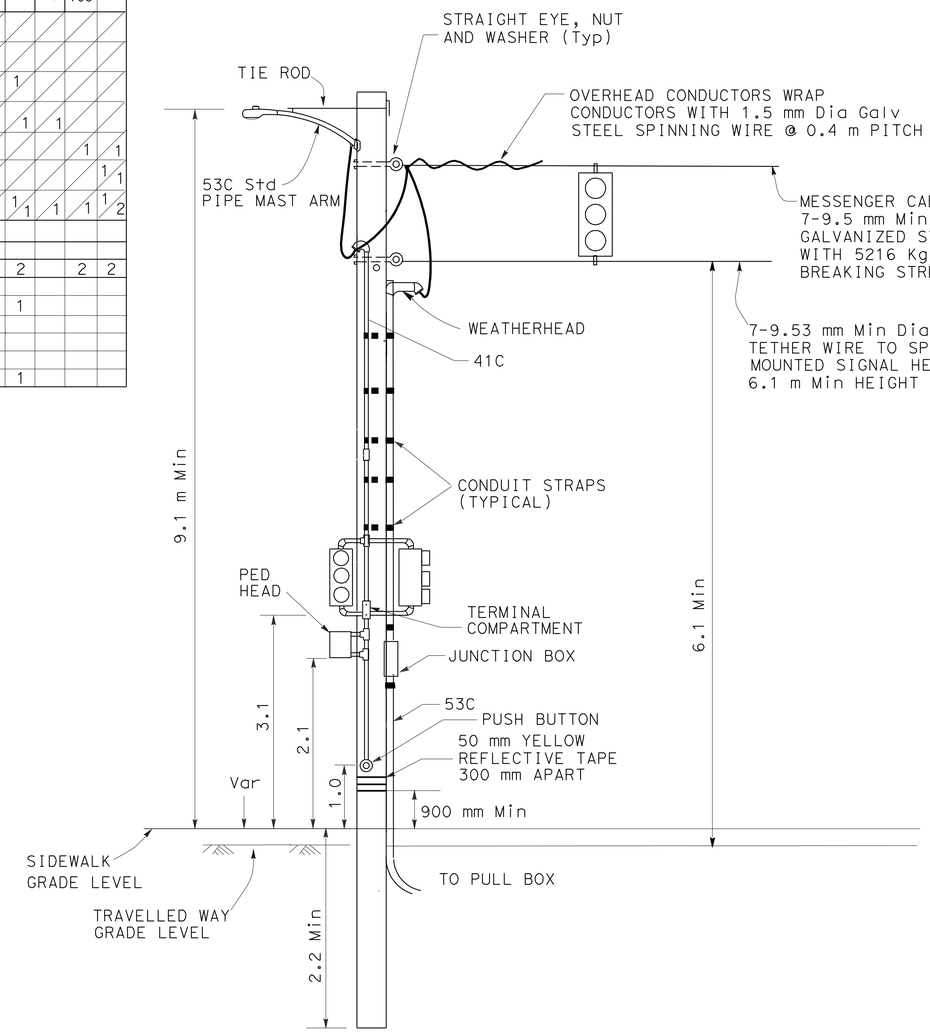

TEMPORARY SIGNAL AND LIGHTING INSTALLATION CONSTRUCTION STAGE 1A

ALL DIMENSIONS ARE IN METERS UNLESS OTHERWISE SHOWN

SIGNAL AND LIGHTING (LOCATION 1)

NO SCALE

E-19

THIS PLAN IS ACCURATE FOR ELECTRICAL WORK ONLY.

REVISED BY	DATE REVISED
JR	7/2/09

JASPAL SINGH — JORGE RAMIREZ — CALCULATED-DESIGNED BY — CHECKED BY — ALI BAKHDOUD — FUNCTIONAL SUPERVISOR

STATE OF CALIFORNIA - DEPARTMENT OF TRANSPORTATION
Caltrans ELECTRICAL DESIGN

LAST REVISION 00-00-00 | DATE PLOTTED => 30-JUN-2010 | TIME PLOTTED => 17:06

Dist	COUNTY	ROUTE	KILOMETER POST TOTAL PROJECT	SHEET No.	TOTAL SHEETS
10	Sta	219,108	3.4/7.9, 44.3/44.9	466	522

Jaspal Singh 6/16/09
REGISTERED ELECTRICAL ENGINEER

6-28-10
PLANS APPROVAL DATE

REGISTERED PROFESSIONAL ENGINEER Jaspal Singh No. 16657 Exp. 6/30/10 ELECTRICAL STATE OF CALIFORNIA

THE STATE OF CALIFORNIA OR ITS OFFICERS OR AGENTS SHALL NOT BE RESPONSIBLE FOR THE ACCURACY OR COMPLETENESS OF ELECTRONIC COPIES OF THIS PLAN SHEET.

Caltrans Metric

NOTES: (FOR THIS SHEET ONLY)

1. RL 120/240 V, 1Ø, 3-WIRE, TYPE III-BF SERVICE EQUIPMENT ENCLOSURE WITH THE FOLLOWING CIRCUIT BREAKERS FROM SHEET E-6:

CTID No. 10382190003358S

AMPERES	VOLTS	POLES	NAME PLATE DESCRIPTION	METER	PHOTOELECTRIC CONTROL TYPE
100	240	2	MAIN BREAKER	YES	——
30	240	2	HIGHWAY LIGHTING	YES	——
15	120	1	LIGHTING CONTROL	YES	V
15	120	1	FB	YES	——
15	120	1	SPARE	YES	6

2. 12.2 m WOOD POLE WITH LIGHTING EQUIPMENT, SEE DETAIL A SHEET E-22 THE LUMINAIRE SHALL BE 240 V, 200 W HPS.
3. RL WOOD POLE WITH LIGHTING EQUIPMENT FROM CONSTRUCTION STAGE 1A.
4. PULL BOX PER MID REQUIREMENT.
5. SERVICE EQUIPMENT ENCLOSURE SHALL REMAIN IN PLACE FOR PERMANENT SIGNAL, SEE SHEET E-5 FOR DETAILS. PART OF SIGNAL AND LIGHTING (LOCATION 2) BID ITEM.
6. RS CB AND INSTALL 50 A, 1P, 120 V CIRCUIT BREAKER AND LABEL AS 'TRAFFIC SIGNAL'
7. FOR COMPLETE RIGHT OF WAY DATA, SEE RIGHT OF WAY RECORD MAPS AT DISTRICT OFFICE.

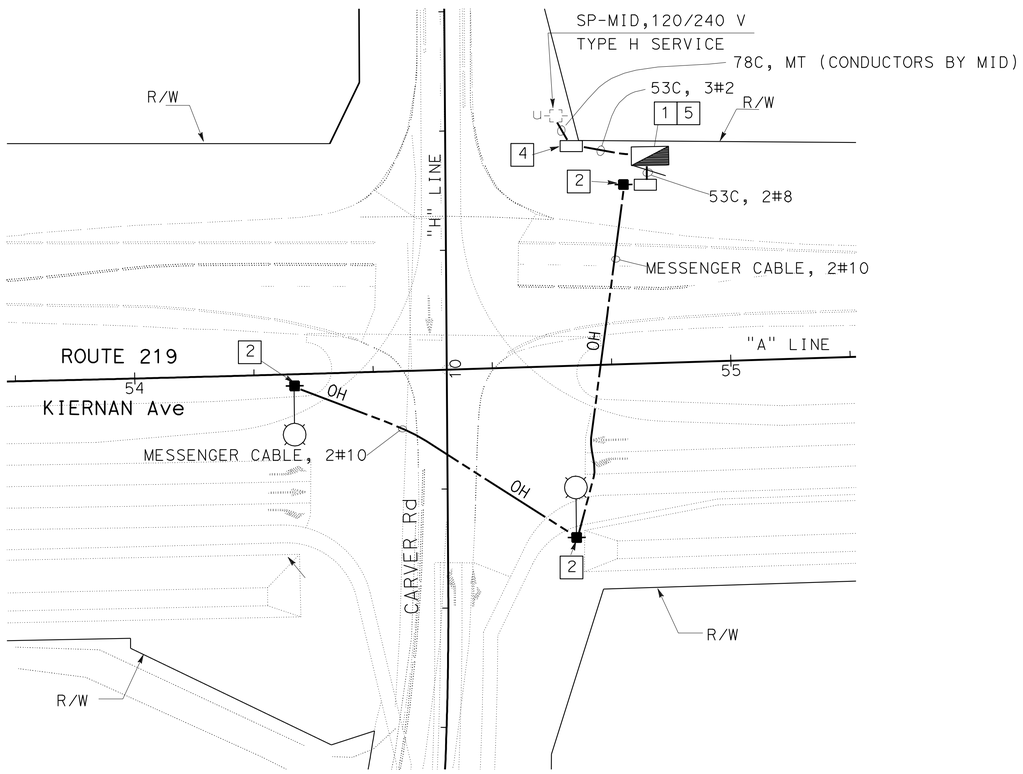

CONSTRUCTION STAGE 1A

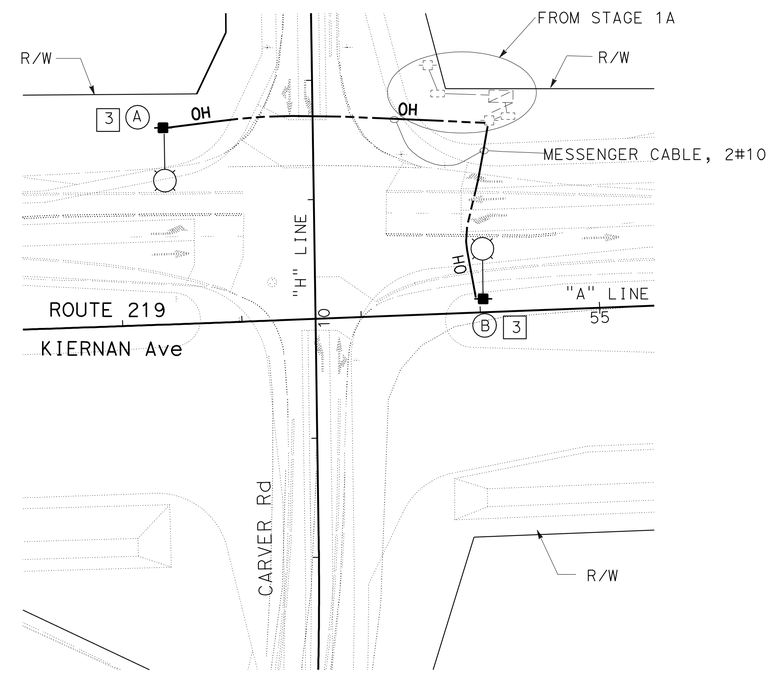

CONSTRUCTION STAGE 2A

ALL DIMENSIONS ARE IN METERS UNLESS OTHERWISE SHOWN

THIS PLAN IS ACCURATE FOR ELECTRICAL WORK ONLY.

LIGHTING (TEMPORARY)

SCALE 1:500

E-20

JR	7/2/09	REVISED BY	DATE REVISED
JASPAL SINGH	JORGE RAMIREZ	CALCULATED-DESIGNED BY	CHECKED BY
FUNCTIONAL SUPERVISOR	ALI BAKHDOUD		

STATE OF CALIFORNIA - DEPARTMENT OF TRANSPORTATION
Caltrans ELECTRICAL DESIGN

LAST REVISION 00-00-00 DATE PLOTTED => 30-JUN-2010 TIME PLOTTED => 16:32

Dist	COUNTY	ROUTE	KILOMETER POST TOTAL PROJECT	SHEET No.	TOTAL SHEETS
10	Sta	219,108	3.4/7.9, 44.3/44.9	467	522

REGISTERED ELECTRICAL ENGINEER 6/16/09

6-28-10
PLANS APPROVAL DATE

REGISTERED PROFESSIONAL ENGINEER Jaspal Singh No. 16657 Exp. 6/30/10 ELECTRICAL STATE OF CALIFORNIA

THE STATE OF CALIFORNIA OR ITS OFFICERS OR AGENTS SHALL NOT BE RESPONSIBLE FOR THE ACCURACY OR COMPLETENESS OF ELECTRONIC COPIES OF THIS PLAN SHEET.

Caltrans Metric

NOTES: (FOR THIS SHEET ONLY)

1. 120/240 V, 1Ø, 3-WIRE, TYPE III-BF SERVICE EQUIPMENT ENCLOSURE WITH THE FOLLOWING CIRCUIT BREAKERS:

CTID No. 10382190003917S

AMPERES	VOLTS	POLES	NAME PLATE DESCRIPTION	METER	PHOTOELECTRIC CONTROL TYPE
100	240	2	MAIN BREAKER	YES	—
50	120	1	TRAFFIC SIGNAL	YES	—
30	240	2	HIGHWAY LIGHTING	YES	—
15	120	1	LIGHTING CONTROL	YES	V
15	120	1	FB	YES	—
—	—	4	SPACE	—	—

2. 12.2 m WOOD POLE WITH LIGHTING EQUIPMENT, SEE DETAIL A SHEET E-22 THE LUMINAIRE SHALL BE 240 V, 200 W HPS.
3. RL WOOD POLE WITH LIGHTING EQUIPMENT FROM CONSTRUCTION STAGE 1A.
4. PULL BOX PER MID REQUIREMENT.
5. SERVICE EQUIPMENT ENCLOSURE SHALL REMAIN IN PLACE FOR PERMANENT SIGNAL, SEE SHEET E-5 FOR DETAILS. PART OF SIGNAL AND LIGHTING (LOCATION 3) BID ITEM.
6. FOR COMPLETE RIGHT OF WAY DATA, SEE RIGHT OF WAY RECORD MAPS AT DISTRICT OFFICE.

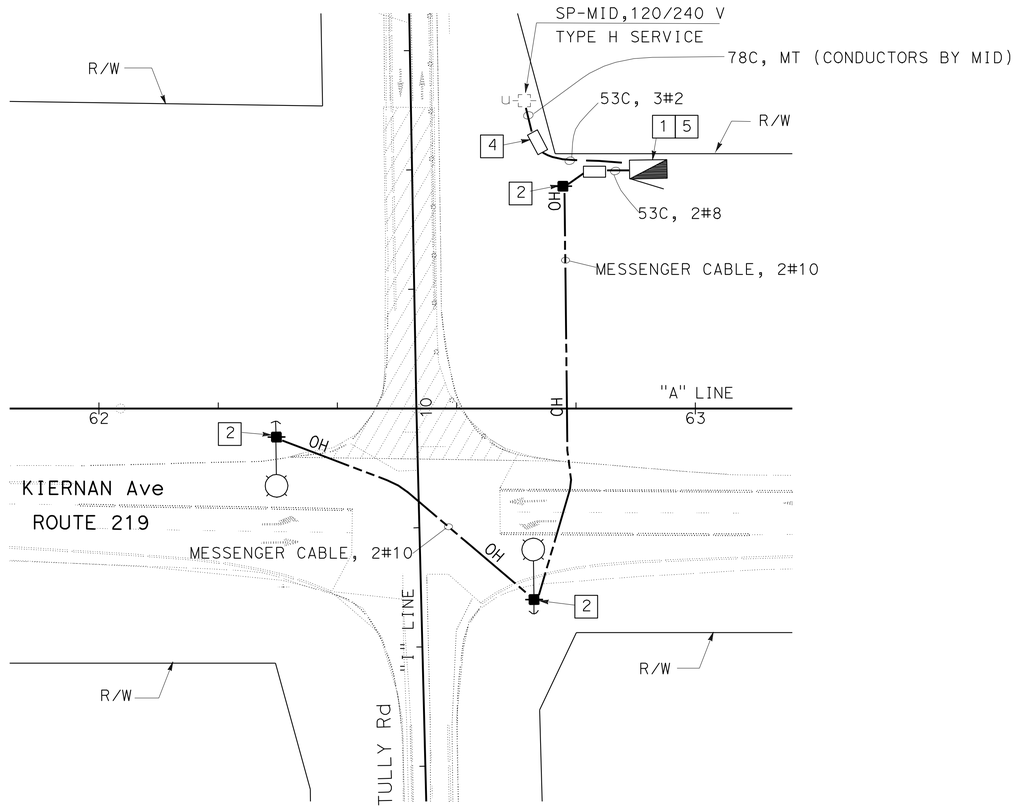

CONSTRUCTION STAGE 1A

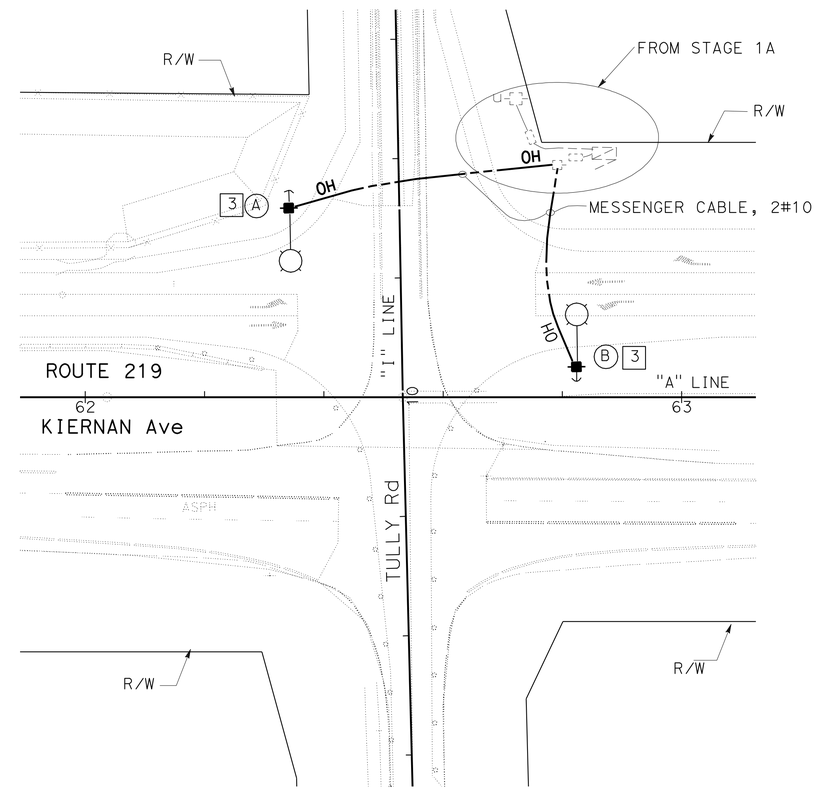

CONSTRUCTION STAGE 2A

ALL DIMENSIONS ARE IN METERS UNLESS OTHERWISE SHOWN

LIGHTING (TEMPORARY)

SCALE 1:500

E-21

THIS PLAN IS ACCURATE FOR ELECTRICAL WORK ONLY.

JASPAL SINGH	JR	7/2/09
JORGE RAMIREZ	REVISED BY	DATE REVISED
CALCULATED-DESIGNED BY		
CHECKED BY		
FUNCTIONAL SUPERVISOR		
ALI BAKHDOUD		

STATE OF CALIFORNIA - DEPARTMENT OF TRANSPORTATION
Caltrans ELECTRICAL DESIGN

LAST REVISION 00-00-00 | DATE PLOTTED => 30-JUN-2010 | TIME PLOTTED => 16:36

Dist	COUNTY	ROUTE	KILOMETER POST TOTAL PROJECT	SHEET No.	TOTAL SHEETS
10	Sta	219,108	3.4/7.9, 44.3/44.9	468	522

Caltrans Metric

6/16/09
REGISTERED ELECTRICAL ENGINEER

6-28-10
PLANS APPROVAL DATE

REGISTERED PROFESSIONAL ENGINEER Jaspal Singh No. 16657 Exp. 6/30/10 ELECTRICAL STATE OF CALIFORNIA

THE STATE OF CALIFORNIA OR ITS OFFICERS OR AGENTS SHALL NOT BE RESPONSIBLE FOR THE ACCURACY OR COMPLETENESS OF ELECTRONIC COPIES OF THIS PLAN SHEET.

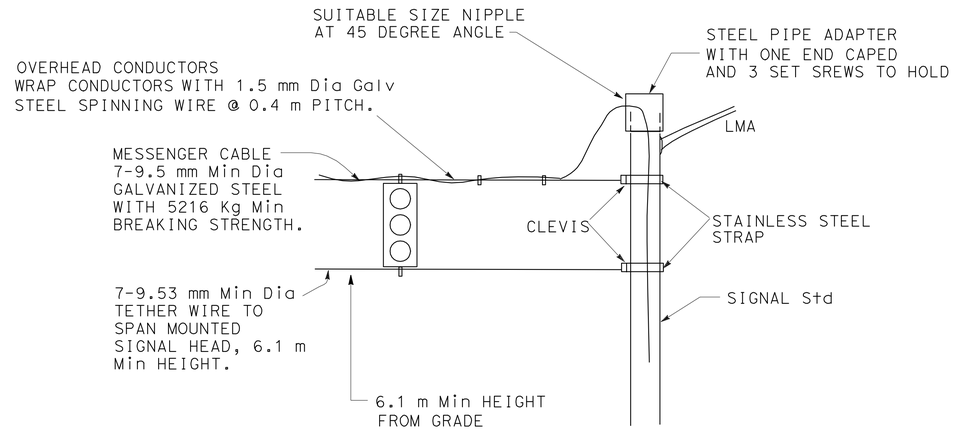

DETAIL C

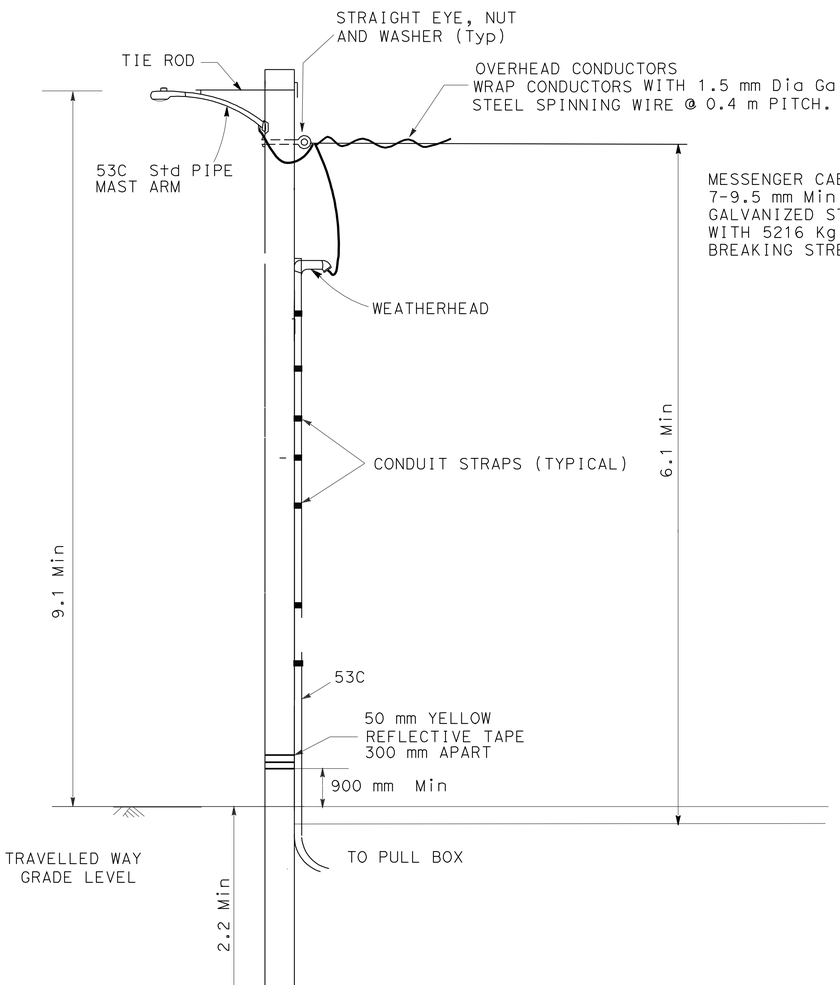

TEMPORARY LIGHTING INSTALLATION
DETAIL A

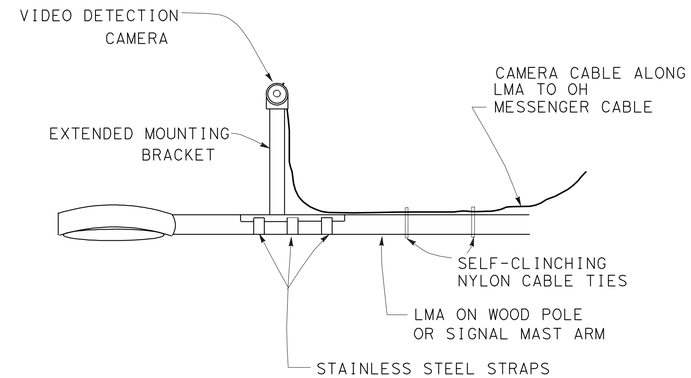

NOTES:

1. EXACT MOUNTING LOCATION OF VIDEO DETECTION CAMERA AND BRACKET SHALL BE DETERMINED BY THE CONTRACTOR AND APPROVED BY THE ENGINEER.
2. CABLE SHALL HAVE DRIP LOOPS AT ENTRANCE INTO SIGNAL CABLE.
3. CABLE SHALL NOT BE TWISTED BETWEEN VIDEO DETECTION CAMERA AND CONTROLLER CABINET.

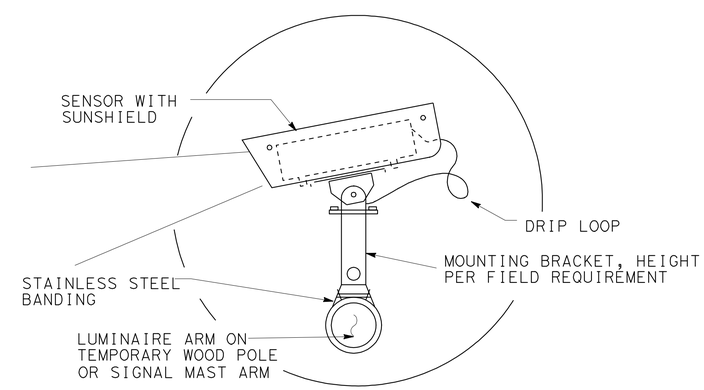

VIDEO DETECTION CAMERA MOUNTING
DETAIL B

ALL DIMENSIONS ARE IN METERS UNLESS OTHERWISE SHOWN

SIGNAL AND LIGHTING
(STAGE CONSTRUCTION)

NO SCALE

E-22

STATE OF CALIFORNIA - DEPARTMENT OF TRANSPORTATION
Caltrans **ELECTRICAL DESIGN**

FUNCTIONAL SUPERVISOR: ALI BAKHDOUD
CALCULATED-DESIGNED BY: JASPAL SINGH
CHECKED BY: JORGE RAMIREZ
REVISED BY: JR
DATE REVISED: 7/2/09

LAST REVISION 07-02-09 | DATE PLOTTED => 30-JUN-2010 | TIME PLOTTED => 16:32

Dist	COUNTY	ROUTE	KILOMETER POST TOTAL PROJECT	SHEET No.	TOTAL SHEETS
10	Sta	219,108	3.4/7.9, 44.3/44.9	469	522

REGISTERED ELECTRICAL ENGINEER 6/16/09

6-28-10
PLANS APPROVAL DATE

REGISTERED PROFESSIONAL ENGINEER Jaspal Singh No. 16657 Exp. 6/30/10 ELECTRICAL STATE OF CALIFORNIA

THE STATE OF CALIFORNIA OR ITS OFFICERS OR AGENTS SHALL NOT BE RESPONSIBLE FOR THE ACCURACY OR COMPLETENESS OF ELECTRONIC COPIES OF THIS PLAN SHEET.

Caltrans Metric

NOTES:

1. FOR NOTES AND SCHEDULES SEE SHEET E-24.
2. FOR COMPLETE RIGHT OF WAY DATA, SEE RIGHT OF WAY RECORD MAPS AT DISTRICT OFFICE.

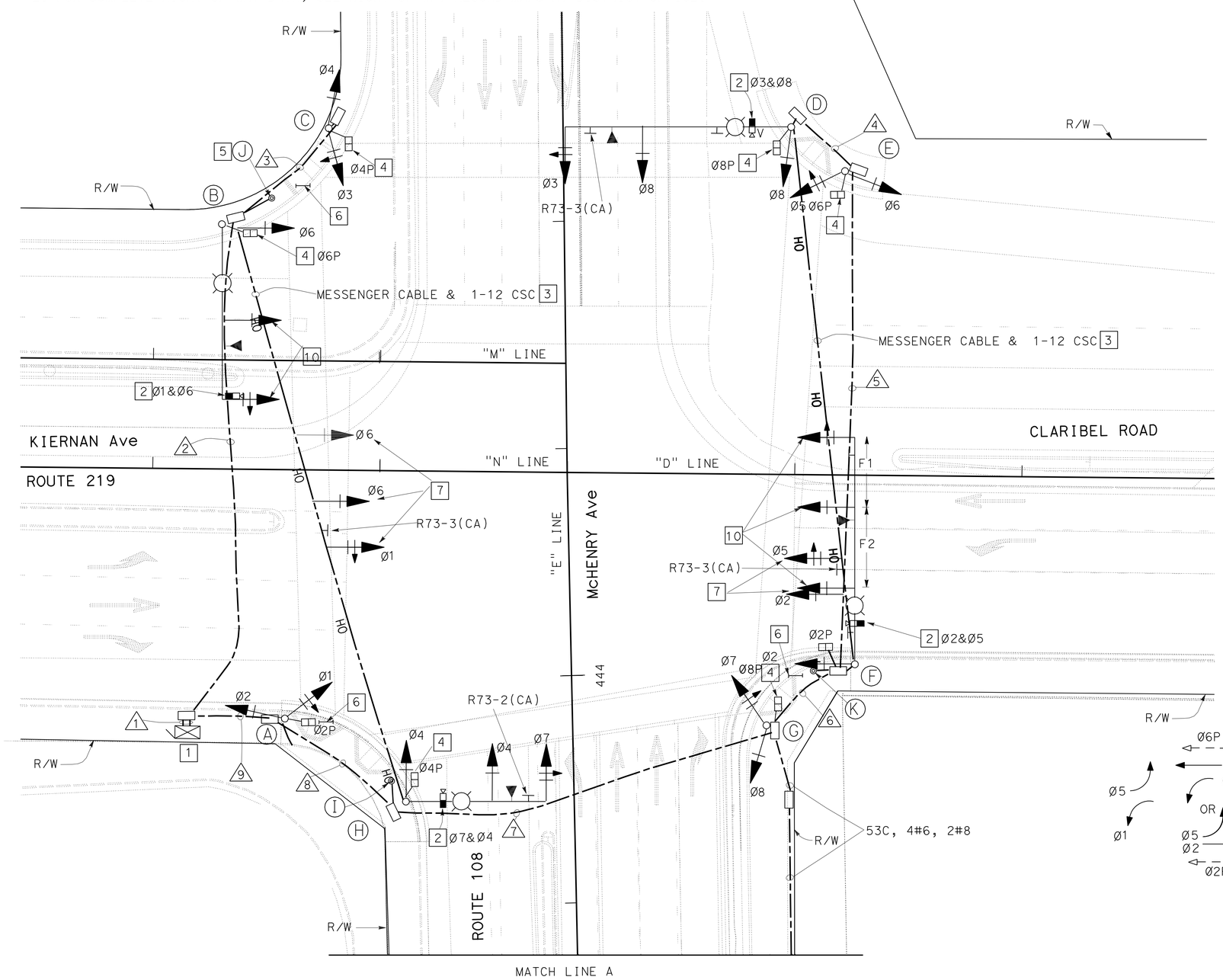

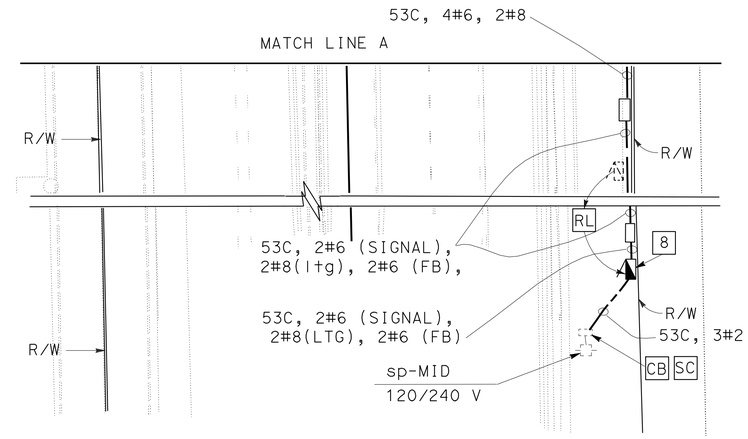

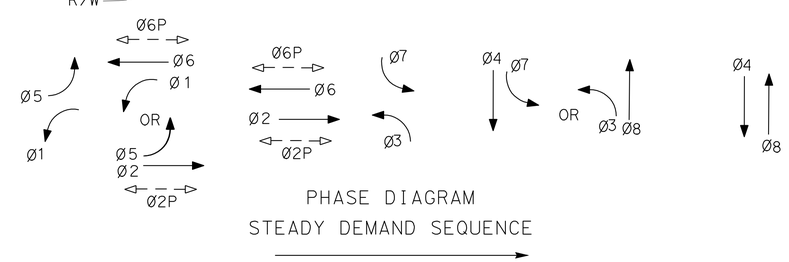

PHASE DIAGRAM
STEADY DEMAND SEQUENCE

CONSTRUCTION STAGE 1

SIGNAL AND LIGHTING (LOCATION 4)
EMERGENCY VEHICLE DETECTOR SYSTEM (LOCATION 4)

THIS PLAN IS ACCURATE FOR ELECTRICAL WORK ONLY.

ALL DIMENSIONS ARE IN METERS UNLESS OTHERWISE SHOWN

SCALE 1:200

E-23

JASPAL SINGH	JR
JORGE RAMIREZ	7/2/09
CALCULATED-DESIGNED BY	REVISED BY
CHECKED BY	DATE REVISED
FUNCTIONAL SUPERVISOR	
ALI BAKHDOUD	

STATE OF CALIFORNIA - DEPARTMENT OF TRANSPORTATION
Caltrans ELECTRICAL DESIGN

LAST REVISION 00-00-00
DATE PLOTTED => 25-JAN-2012
TIME PLOTTED => 07:45

Dist	COUNTY	ROUTE	KILOMETER POST TOTAL PROJECT	SHEET No.	TOTAL SHEETS
10	Sta	219,108	3.4/7.9, 44.3/44.9	470	522

Caltrans Metric

6/16/09
REGISTERED ELECTRICAL ENGINEER

6-28-10
PLANS APPROVAL DATE

REGISTERED PROFESSIONAL ENGINEER Jaspal Singh No. 16657 Exp. 6/30/10 ELECTRICAL STATE OF CALIFORNIA

THE STATE OF CALIFORNIA OR ITS OFFICERS OR AGENTS SHALL NOT BE RESPONSIBLE FOR THE ACCURACY OR COMPLETENESS OF ELECTRONIC COPIES OF THIS PLAN SHEET.

NOTES: (FOR SHEET E-23)

1. STATE-FURNISHED MODEL 2070 CONTROLLER ASSEMBLY WITH BATTERY BACKUP SYSTEM. ADD WIRELESS MODEM.
2. VIDEO VEHICLE DETECTOR ATTACHED TO LMA/SMA OF SIGNAL STANDARD, SEE DETAIL B ON SHEET E-22. ADJUST LOCATION DURING STAGE CONSTRUCTION 3A AND 3B.
3. OH MESSENGER CABLE WITH TETHER WIRE ATTACHED TO SIGNAL STANDARD, SEE INSTALLATION DETAIL C ON SHEET E-22.
4. DISCONNECT AND COVER PED HEAD FACE DURING STAGE 2A AND 2B.
5. INSTALL PPB POST DURING STAGE 3A.
6. TYPE 1 PEDESTRIAN BARRICADE.
7. SIGNAL HEAD ATTACHED TO MESSENGER CABLE AND TETHER CABLE, ADJUST LOCATION DURING STAGE CONSTRUCTION 3A AND 3B
8. RL 120/240 V, 1Ø, 3-WIRE, TYPE III-CF SERVICE EQUIPMENT ENCLOSURE WITH THE FOLLOWING CIRCUIT BREAKERS:

CTID No. 1038108002757SL

AMPERES	VOLTS	POLES	NAME PLATE DESCRIPTION	METER	PHOTOELECTRIC CONTROL TYPE
100	240	2	MAIN BREAKER	YES	—
50	120	1	TRAFFIC SIGNAL	YES	—
30	240	2	LIGHTING	YES	—
15	120	1	LIGHTING CONTROL	YES	V
30	120	1	FB	YES	—
15	120	1	SPARE	YES	—

9. REFER TO SIGN PLANS FOR SIGN DETAILS.
10. SIGNAL HEAD TO REMAIN DISCONNECTED AND COVERED DURING STAGE CONSTRUCTION.
11. ALL SIGNAL STANDARDS, CONTROLLER ASSEMBLY, CONDUITS AND PULL BOXES SHALL SHALL REMAIN IN PLACE FOR PERMANENT SIGNAL, SEE SHEET E-12 AND E-15 FOR DETAILS.
12. ALL PULL BOXES ADJACENT TO SIGNAL STANDARDS SHALL BE No. 6(E) UNLESS OTHERWISE INDICATED.

POLE AND EQUIPMENT SCHEDULE

STANDARD				VEH SIG MTG		PED SIG MTG	PPB		HPS LUM	SPECIAL REQUIREMENTS
No.	TYPE	SMA	LMA	MAST ARM	POLE		Ø	ARROW		
A	1-A				TV-2-T	SP-1-T	4	→		
B	29-5-161	15.2	4.6	MAS MAS	SV-1-T	SP-1-T			200 W	INSTALL TYPE R73-5(CA) AND TYPE D3 SIGNS ON SMA 9 F=7.0
C	1-A				TV-2-T	SP-1-T	6	→		
D	61-5-161	19.8	4.6	MAS MAS	SV-1-T	SP-1-T	6	←	200 W	INSTALL TYPE R73-3(CA) AND TYPE D3 SIGNS ON SMA 9 F=6.6
E	1-A				TV-2-T	SP-1-T	8	→		
F	61-5-161	19.8	4.6	MAS MAS MAS	SV-1-T	SP-1-T			200 W	INSTALL TYPE R73-6(CA) AND TYPE D3 SIGNS ON SMA 9 F1=6.6 F2=7.1
G	1-A				TV-2-T	SP-1-T	2	→		
H	26-4-161	12.2	4.6	MAS MAS	SV-1-T	SP-1-T			200 W	INSTALL TYPE R73-2(CA) AND TYPE D3 SIGNS ON SMA 9 F=5.0
I	PPB POST						2	←		
J	PPB POST						4	←		
K	PPB POST						8	←		

CONDUIT AND CONDUCTOR SCHEDULE

CONDUCTOR DESIGNATION				CONDUIT RUN NUMBER AND SIZE								
CABLE TYPE	POLE	PHASE		1	2	3	4	5	6	7	8	9
				3-103	103	78	78	103	103	2-103	2-103	2-103
VEH-PED 12CSC	A	1,2,2P	4	1 1								1 1
	B	1,6,6P		1	1							
	C	3,4,4P	6	1 1	1 1	1 1						
	D	3,8,8P	6	1 1			1 1	1 1	1 1	1 1	1 1	1 1
	E	5,6,6P	8	1 1				1 1	1 1	1 1	1 1	1 1
PPB 3CSC	F	2,5,2P		1					1	1	1	1
	G	7,8,8P	2	1 1						1 1	1 1	1 1
	H	4,7,4P		1							1	1
	I		2	1								1 1
	J		4	1	1							
	K		8	1					1	1	1	1
		TOTAL		8 8	2 2	1 1	1 1	2 2	3 3	4 4	5 5	6 6
AWG	CIRCUIT											
#6	SIGNAL			2						2	2	2
#8	LIGHTING				2		2	2	2	2	2	2
VIVDS WIRING HARNESS		PHASE										
		Ø1&Ø6		1	1							
		Ø2&Ø5		1					1	1	1	1
		Ø3&Ø8		1			1	1	1	1	1	1
		Ø4&Ø7		1							1	1
		TOTAL		4	1		1	1	2	2	3	3

CONSTRUCTION STAGE 1

THIS PLAN IS ACCURATE FOR ELECTRICAL WORK ONLY.

SIGNAL AND LIGHTING (LOCATION 4)

E-24

STATE OF CALIFORNIA - DEPARTMENT OF TRANSPORTATION
Caltrans ELECTRICAL DESIGN

FUNCTIONAL SUPERVISOR: ALI BAKHDOUD
CALCULATED-DESIGNED BY: JASPAL SINGH
CHECKED BY: JORGE RAMIREZ
REVISED BY: JR
DATE REVISED: 7/2/09

LAST REVISION 00-00-00
DATE PLOTTED => 25-JAN-2012
TIME PLOTTED => 07:45

DIST	COUNTY	ROUTE	KILOMETER POST TOTAL PROJECT	SHEET NO.	TOTAL SHEETS
10	Sta	219,108	3.4/7.9, 44.3/44.9	471	522

Caltrans Metric

Mark S. Turner
LICENSED LAND SURVEYOR

June 30, 2006
PLANS APPROVAL DATE

LICENSED LAND SURVEYOR — Mark S. Turner, No. 6228, Exp. 3-31-08 — STATE OF CALIFORNIA

The State of California or its officers or agents shall not be responsible for the accuracy or completeness of electronic copies of this plan sheet.

To get to the Caltrans web site, go to: http://www.dot.ca.gov

To accompany plans dated 6-28-10

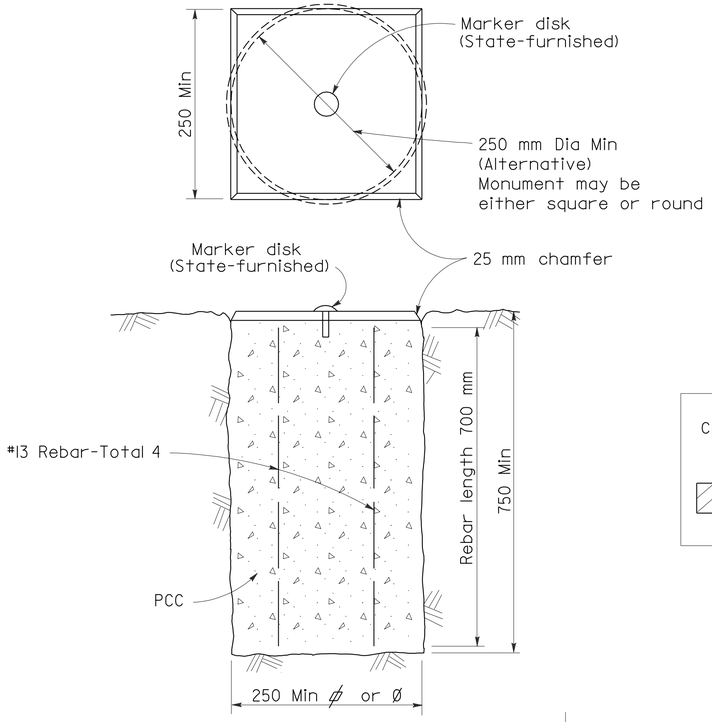

TYPE A

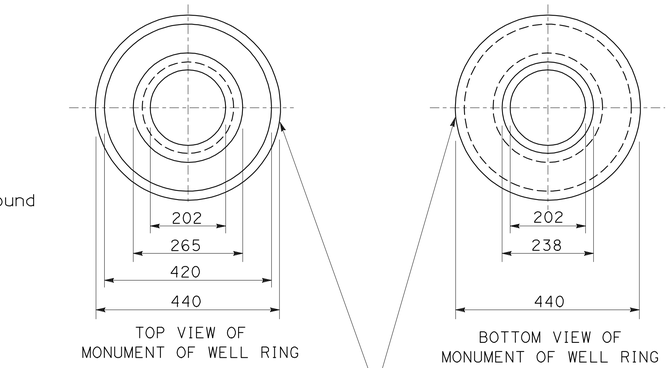

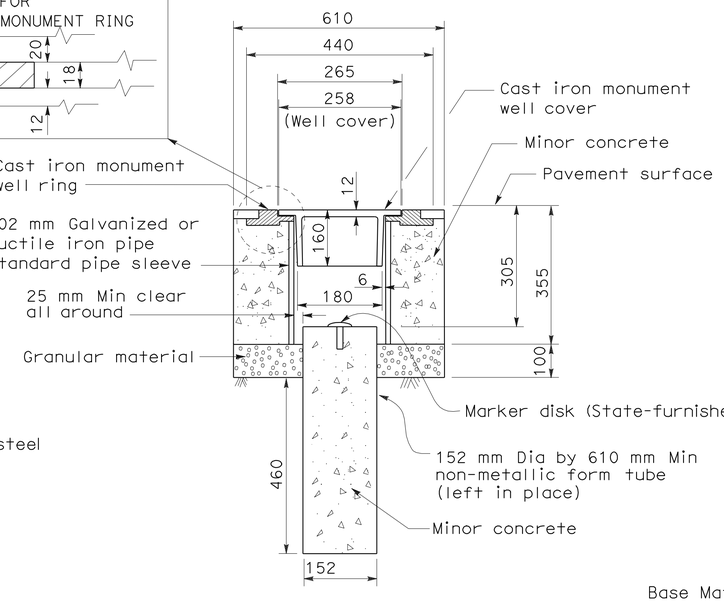

TYPE B

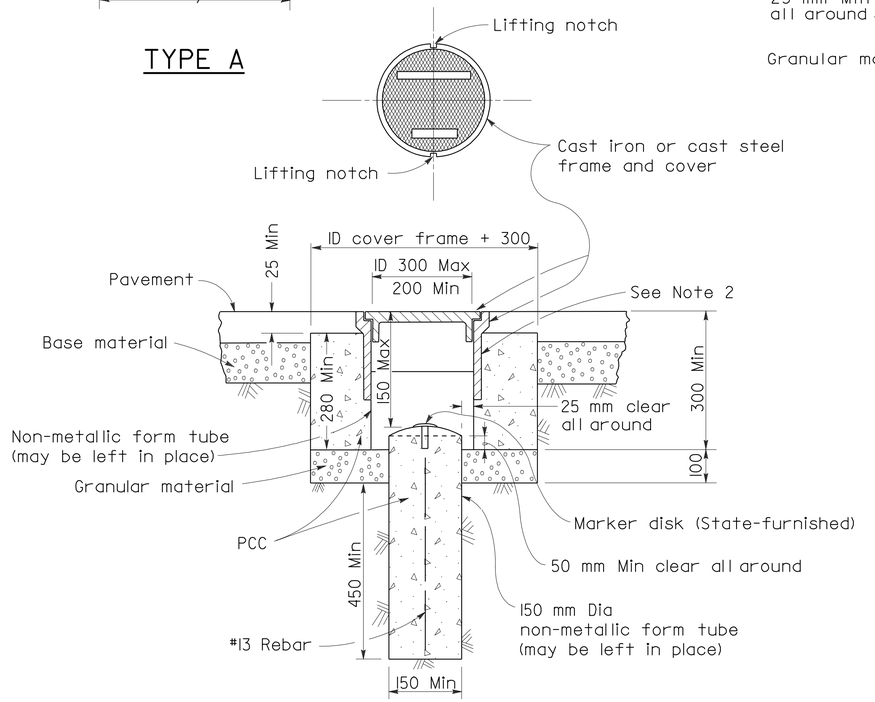

TYPE D
Alternative No. 1

NOTES

1. The configuration of the cast iron or cast steel frame and cover may vary from that shown.
2. Frame shall be embedded in the concrete a minimum of 75 mm.
3. Type D monument shall be either Alternative No. 1 or Alternative No. 2 at the contractor's option.
4. All portland cement concrete shall be Class 2 or minor concrete with 25 mm maximum aggregate.

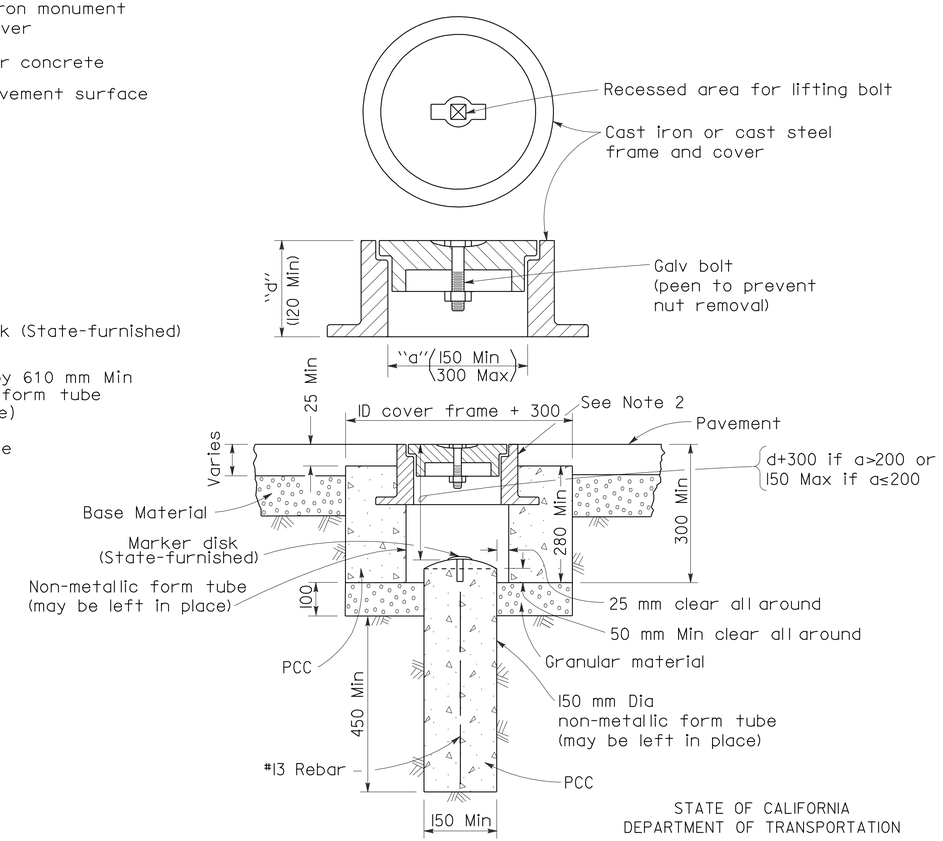

TYPE D
Alternative No. 2

STATE OF CALIFORNIA
DEPARTMENT OF TRANSPORTATION

SURVEY MONUMENTS

NO SCALE

ALL DIMENSIONS ARE IN
MILLIMETERS UNLESS OTHERWISE SHOWN

RSP A74 DATED JUNE 30, 2006 SUPERSEDES STANDARD PLAN A74
DATED JULY 1, 2004-PAGE 28 OF THE STANDARD PLANS BOOK DATED JULY 2004.

REVISED STANDARD PLAN RSP A74

2004 REVISED Std PLAN RSP A74

5-24-06

DIST	COUNTY	ROUTE	KILOMETER POST TOTAL PROJECT	SHEET NO.	TOTAL SHEETS
10	Sta	219,108	3.4/7.9, 44.3/44.9	472	522

Caltrans Metric

REGISTERED CIVIL ENGINEER

November 17, 2006
PLANS APPROVAL DATE

REGISTERED PROFESSIONAL ENGINEER Michael Janzen No. 44788 Exp. 03-31-08 CIVIL STATE OF CALIFORNIA

The State of California or its officers or agents shall not be responsible for the accuracy or completeness of electronic copies of this plan sheet.

To get to the Caltrans web site, go to: http://www.dot.ca.gov

To accompany plans dated 6-28-10

2004 REVISED Std PLAN RSP A87A

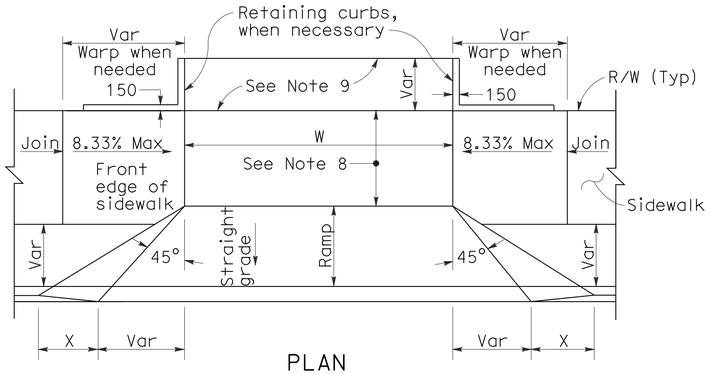

PLAN

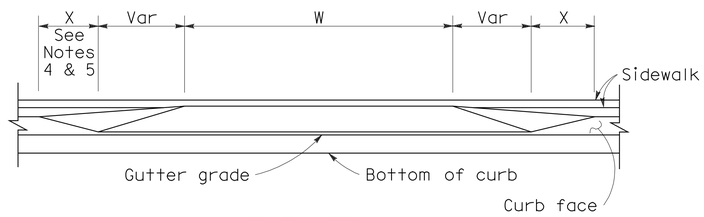

ELEVATION

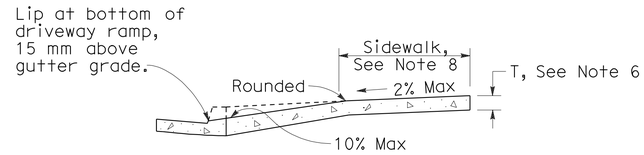

CASE A

Typical driveway, sidewalk not depressed

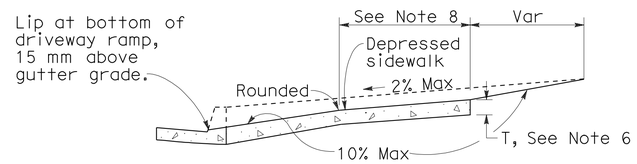

CASE B

Driveway with depressed sidewalk

SECTIONS

DRIVEWAYS

CURB QUANTITIES

TYPE	CUBIC METERS PER METER
A1-150	0.064
A1-200	0.075
A2-150	0.144
A2-200	0.155
A3-150	0.025
A3-200	0.035
B1-100	0.056
B1-150	0.073
B2-100	0.137
B2-150	0.152
B3-100	0.017
B3-150	0.027
B4	0.142
D-100	0.100
D-150	0.162
E	0.161

TABLE A

CURB TYPE	DIMENSIONS "H1"	"H2"	"W1"	"W2"
A1-150	350	150	190	40
A1-200	400	200	200	50
A2-150	300	150	790	40
A2-200	350	200	800	50
A3-150	150	130	185	35
A3-200	200	180	198	48
B1-100	300	100	200	70
B1-150	350	150	230	100
B2-100	250	100	800	70
B2-150	300	150	830	100
B3-100	100	80	185	55
B3-150	150	130	217	87
D-100	250	100	452	322
D-150	300	150	652	522

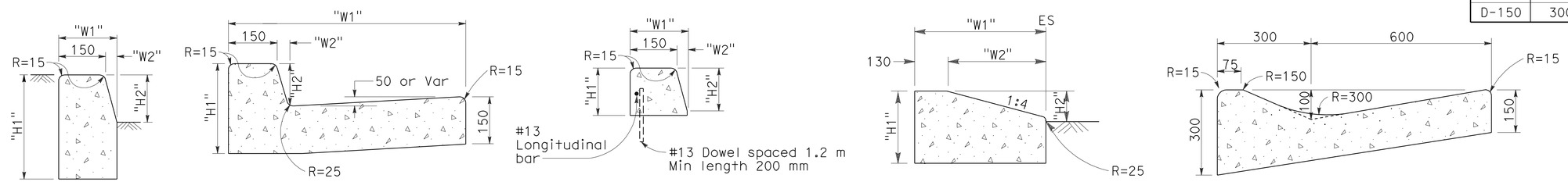

TYPE A1 CURBS
See Table A

TYPE A2 CURBS
See Table A

TYPE A3 CURBS
Superimposed on existing pavement
See Table A

TYPE D CURBS
See Table A

TYPE E CURB

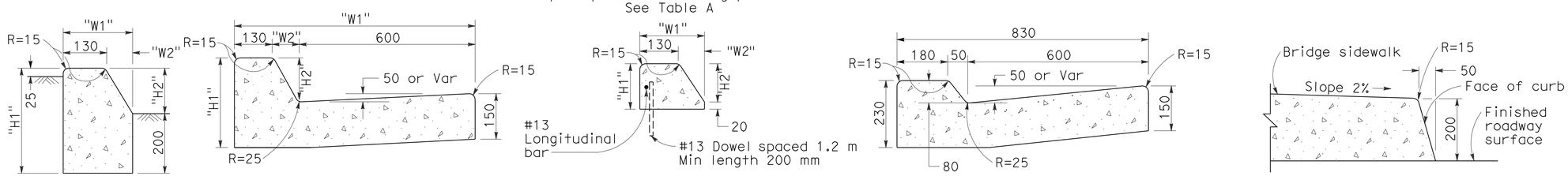

TYPE B1 CURBS
See Table A

TYPE B2 CURBS
See Table A

TYPE B3 CURBS
Superimposed on existing pavement
See Table A

TYPE B4 CURBS

TYPE H CURB
On Bridges

CURBS

NOTES

1. Case A driveway section typically applies.
2. Use Case B driveway section when ramp slopes would exceed 10% in Case A.
3. Use Case B driveway section when sidewalk cross slope would exceed 2% in Case A.
4. X=900 mm except for curb heights over 250 mm where 1:4 slopes shall be used on curb slope.
5. X is a variable when sidewalk is located where wheelchairs may traverse the surface. Slopes shall not exceed 8.33%.
6. Sidewalk and ramp thickness ``T'' at driveway shall be 100 mm for residental and 150 mm for commercial.
7. Difference in slope of the driveway ramp and the slope of a line between the gutter and a point on the roadway 1.5 meters from gutter line shall not exceed 15%. Reduce driveway ramp slope, not gutter slope, where required.
8. Minimum width of clear passageway for sidewalk shall be 1.22 meters.
9. Retaining curbs and acquisition of construction easement may be necessary for narrow sidewalks or curb heights in excess of 150 mm.
10. Across the pedestrian route at curb ramp locations, the gutter pan slope shall not exceed 25 mm of depth for each 600 mm of width.

STATE OF CALIFORNIA
DEPARTMENT OF TRANSPORTATION

CURBS AND DRIVEWAYS

NO SCALE

ALL DIMENSIONS ARE IN MILLIMETERS UNLESS OTHERWISE SHOWN

RSP A87A DATED NOVEMBER 17, 2006 SUPERSEDES STANDARD PLAN A87A DATED JULY 1, 2004-PAGE 115 OF THE STANDARD PLANS BOOK DATED JULY 2004.

REVISED STANDARD PLAN RSP A87A

10-25-06

DIST	COUNTY	ROUTE	KILOMETER POST TOTAL PROJECT	SHEET NO.	TOTAL SHEETS
10	Sta	219,108	3.4/7.9, 44.3/44.9	473	522

REGISTERED CIVIL ENGINEER

December 16, 2005
PLANS APPROVAL DATE

REGISTERED PROFESSIONAL ENGINEER Hector David Cordova No. C41957 Exp. 3-31-06 CIVIL STATE OF CALIFORNIA

The State of California or its officers or agents shall not be responsible for the accuracy or completeness of electronic copies of this plan sheet.

To get to the Caltrans web site, go to: http://www.dot.ca.gov

To accompany plans dated 6-28-10

Caltrans Metric

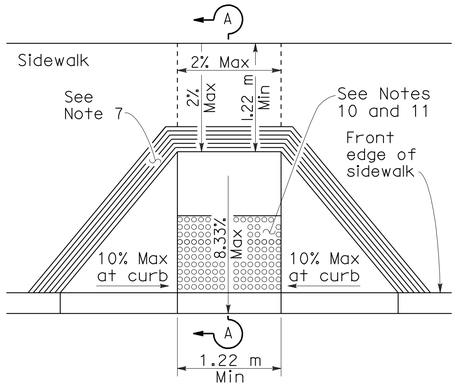

CASE A

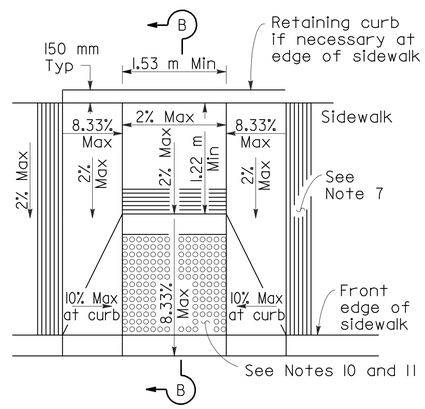

CASE B

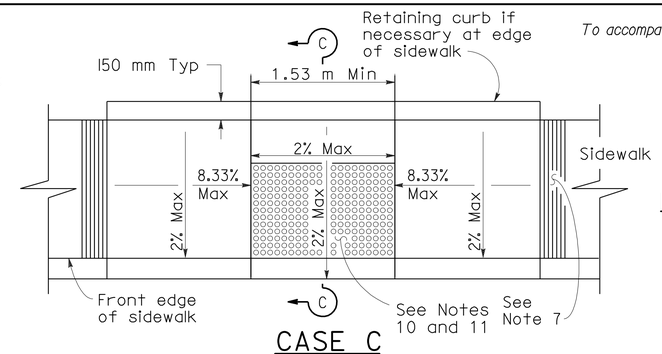

CASE C

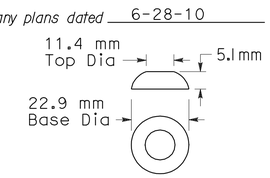

RAISED TRUNCATED DOME

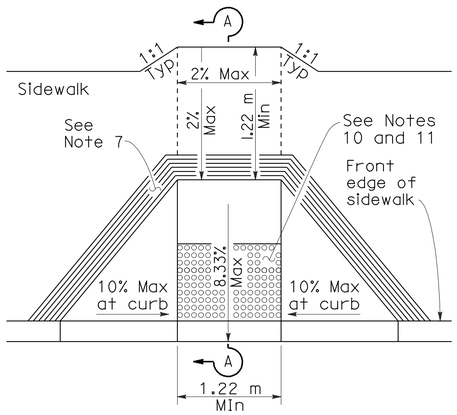

CASE D

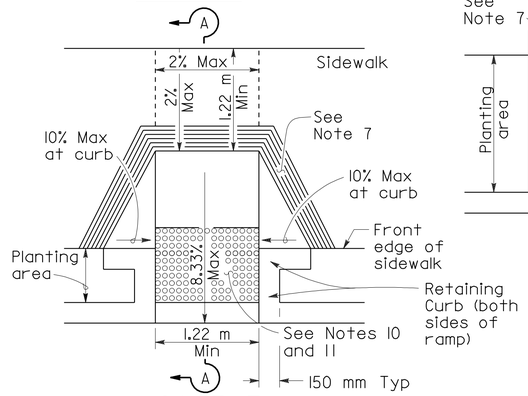

CASE E

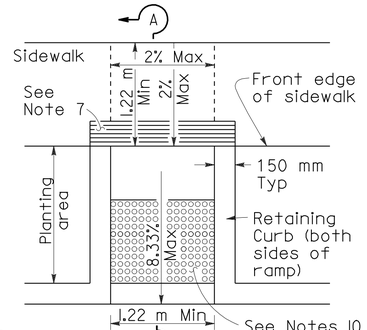

CASE F

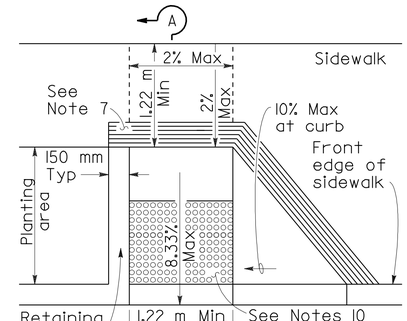

CASE G

See Note 4

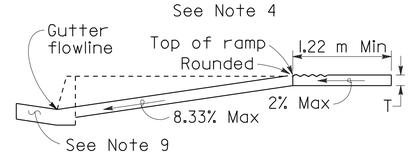

SECTION A-A

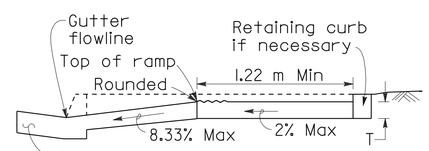

SECTION B-B

Depress entire sidewalk as required

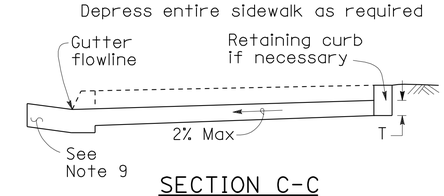

SECTION C-C

NOTES

1. As site conditions dictate, Case A through Case G curb ramps may be used for corner installations similar to those shown in Detail A and Detail B. The case of curb ramps used in Detail A do not have to be the same. Case A through Case G curb ramps also may be used at mid block locations, as site conditions dictate. For Cases B and C, the side of the curb ramp should always be perpendicular to curb face.
2. If distance from curb to back of sidewalk is too short to accommodate ramp and 1.22 m platform (landing) as shown in Case A, the sidewalk may be depressed longitudinally as in Case B, or C or may be widened as in Case D.
3. When ramp is located in center of curb return, crosswalk configuration must be similar to that shown for Detail B.
4. As site conditions dictate, the retaining curb side and the flared side of the Case G ramp shall be constructed in reversed position.
5. If located on a curve, the sides of the ramp need not be parallel, but the minimum width of the ramp shall be 1.22 m.
6. Side slope of ramp flares vary uniformly from a maximum of 10% at curb to conform with longitudinal sidewalk slope adjacent to top of the ramp, except in Case C and Case F.
7. The curb ramp shall be outlined, as shown, with a 305 mm wide border with 6 mm grooves approximately 19 mm on center. See grooving detail.
8. Transitions from ramps and landings to walks, gutters or streets shall be flush and free of abrupt changes.
9. Maximum slopes of adjoining gutters, the road surface immediately adjacent to the curb ramp, or accessible route shall not exceed 5 percent within 1.22 m of the top and bottom of the curb ramp.
10. Curb ramps shall have a detectable warning surface that extends the full width and 914 mm depth of the ramp. Detectable Warning Surfaces shall conform to the details on this plan and the requirements in the Special Provisions.
11. The edge of the detectable warning surface nearest the street shall be between 150 mm and 205 mm from the gutter flowline.
12. Sidewalk and ramp thickness, "T", shall be 90 mm minimum.
13. Utility pull boxes, manholes, vaults and all other utility facilities within the boundaries of the curb ramp will be relocated or adjusted to grade by the owner prior to, or in conjunction with, curb ramp construction.
14. For retrofit conditions, removal and replacement of curb apron will be at the Contractor's option, unless otherwise shown on project plans.

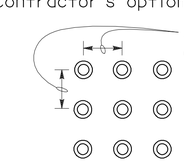

RAISED TRUNCATED DOME PATTERN (IN-LINE)

DETECTABLE WARNING SURFACE

See Note 10

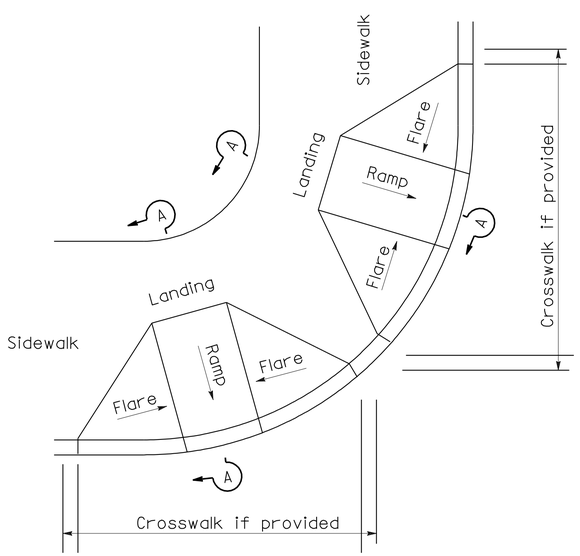

DETAIL A

TYPICAL TWO-RAMP CORNER INSTALLATION

See Note 1

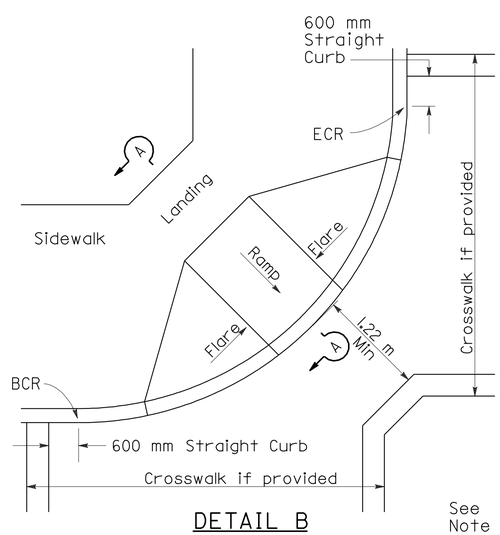

DETAIL B

TYPICAL ONE-RAMP CORNER INSTALLATION

See Notes 1 and 3

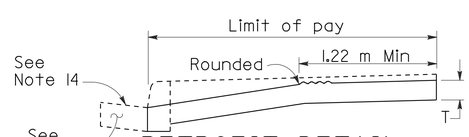

RETROFIT DETAIL

Existing curb and sidewalk

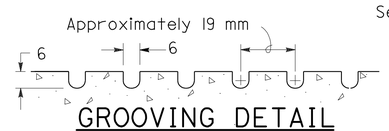

GROOVING DETAIL

STATE OF CALIFORNIA
DEPARTMENT OF TRANSPORTATION

CURB RAMP DETAILS

NO SCALE

ALL DIMENSIONS ARE IN MILLIMETERS UNLESS OTHERWISE SHOWN

RSP A88A DATED DECEMBER 16, 2005 SUPERSEDES STANDARD PLAN A88A DATED JULY 1, 2004-PAGE 117 OF THE STANDARD PLANS BOOK DATED JULY 2004.

REVISED STANDARD PLAN RSP A88A

2004 REVISED Std PLAN RSP A88A

12-16-05

DIST	COUNTY	ROUTE	KILOMETER POST TOTAL PROJECT	SHEET NO.	TOTAL SHEETS
10	Sta	219,108	3.4/7.9, 44.3/44.9	474	522

Caltrans Metric

H. David Cordova
REGISTERED CIVIL ENGINEER

December 16, 2005
PLANS APPROVAL DATE

REGISTERED PROFESSIONAL ENGINEER Hector David Cordova No. C41957 Exp. 3-31-06 CIVIL STATE OF CALIFORNIA

The State of California or its officers or agents shall not be responsible for the accuracy or completeness of electronic copies of this plan sheet.

To get to the Caltrans web site, go to: http://www.dot.ca.gov

To accompany plans dated 6-28-10

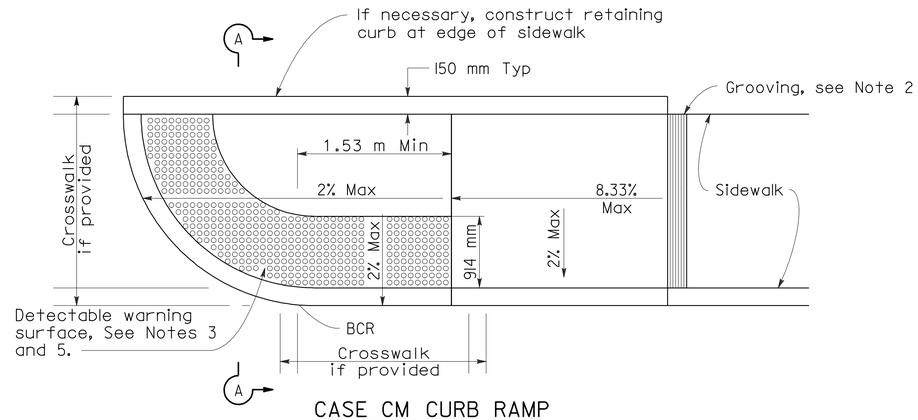

CASE CM CURB RAMP

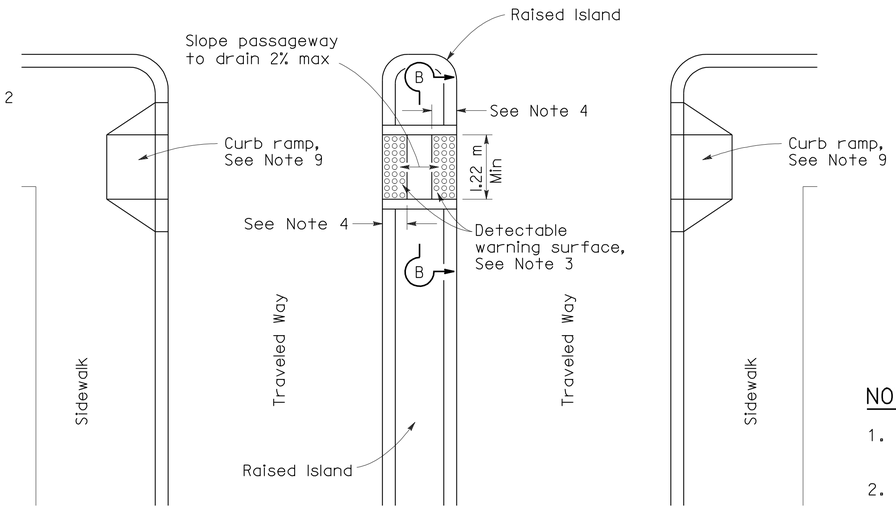

TYPE A PASSAGEWAY

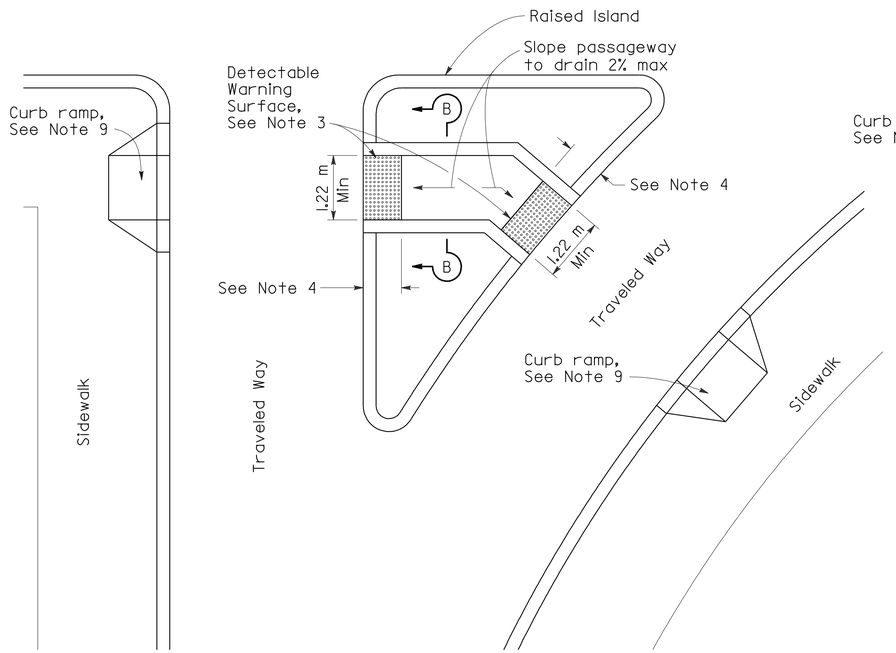

TYPE B PASSAGEWAY

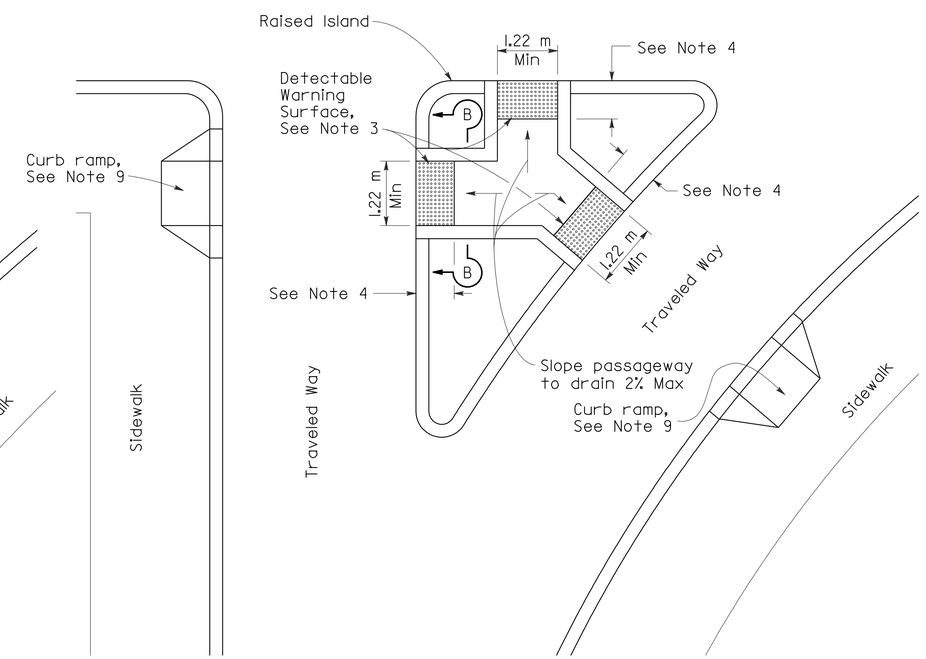

TYPE C PASSAGEWAY

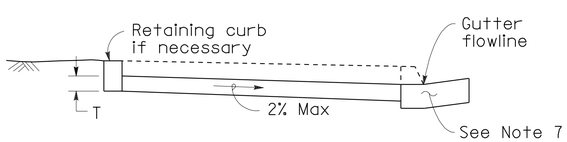

SECTION A-A

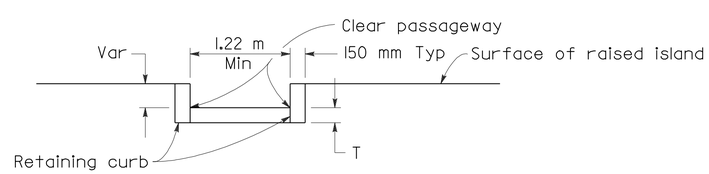

SECTION B-B

NOTES

1. Sidewalk, ramp and passageway thickness, ``T'', shall be 90 mm minimum.
2. For details of grooving used with Case CM curb ramp, see Revised Standard Plan RSP A88A.
3. For details of detectable warning surfaces, see Revised Standard Plan RSP A88A.
4. Where an island passage way length is less than 1.8 m, the detectable warning surface shall extend the full width and full depth of the passage way length. Where an island passage way length is greater than or equal to 1.8 m, but less than 2.44 m, each detectable warning surface shall extend the full width and 600 mm depth of the passage way length. Where an island passage way length is greater than or equal to 2.44 m, each detectable warning surface shall extend the full width and 914 mm depth of the passage way length.
5. For Case CM curb ramp, the edge of the detectable warning surface nearest the street shall be between 150 mm and 205 mm from the gutter flowline.
6. Transitions from ramps to walks, gutters or streets shall be flush and free of abrupt changes.
7. Maximum slopes of adjoining gutters, the road surface immediately adjacent to the curb ramp, or accessible route shall not exceed 5 percent within 1.22 m of the top and bottom of the curb ramp.
8. Utility pull boxes, manholes, vaults and all other utility facilities within the boundaries of the curb ramp will be relocated or adjusted to grade by the owner prior to, or in conjunction with, curb ramp construction.
9. For additional curb ramp details, see Revised Standard Plan RSP A88A.

STATE OF CALIFORNIA
DEPARTMENT OF TRANSPORTATION

CURB RAMP AND ISLAND PASSAGEWAY DETAILS

NO SCALE

ALL DIMENSIONS ARE IN MILLIMETERS UNLESS OTHERWISE SHOWN

RSP A88B DATED DECEMBER 16, 2005 SUPERSEDES STANDARD PLAN A88B DATED JULY 1, 2004-PAGE 118 OF THE STANDARD PLANS BOOK DATED JULY 2004.

REVISED STANDARD PLAN RSP A88B

2004 REVISED Std PLAN RSP A88B

12-16-05

DIST	COUNTY	ROUTE	KILOMETER POST TOTAL PROJECT	SHEET NO.	TOTAL SHEETS
10	Sta	219,108	3.4/7.9, 44.3/44.9	475	522

REGISTERED CIVIL ENGINEER

June 6, 2008
PLANS APPROVAL DATE

REGISTERED PROFESSIONAL ENGINEER — Hector David Cordova — No. C41957 — Exp. 3-31-10 — CIVIL — STATE OF CALIFORNIA

The State of California or its officers or agents shall not be responsible for the accuracy or completeness of electronic copies of this plan sheet.

To get to the Caltrans web site, go to: http://www.dot.ca.gov

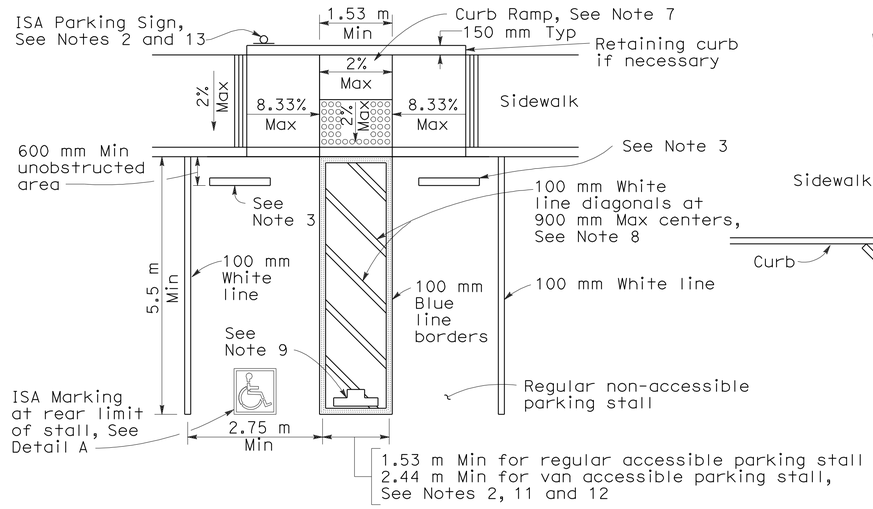

SINGLE PARKING STALL

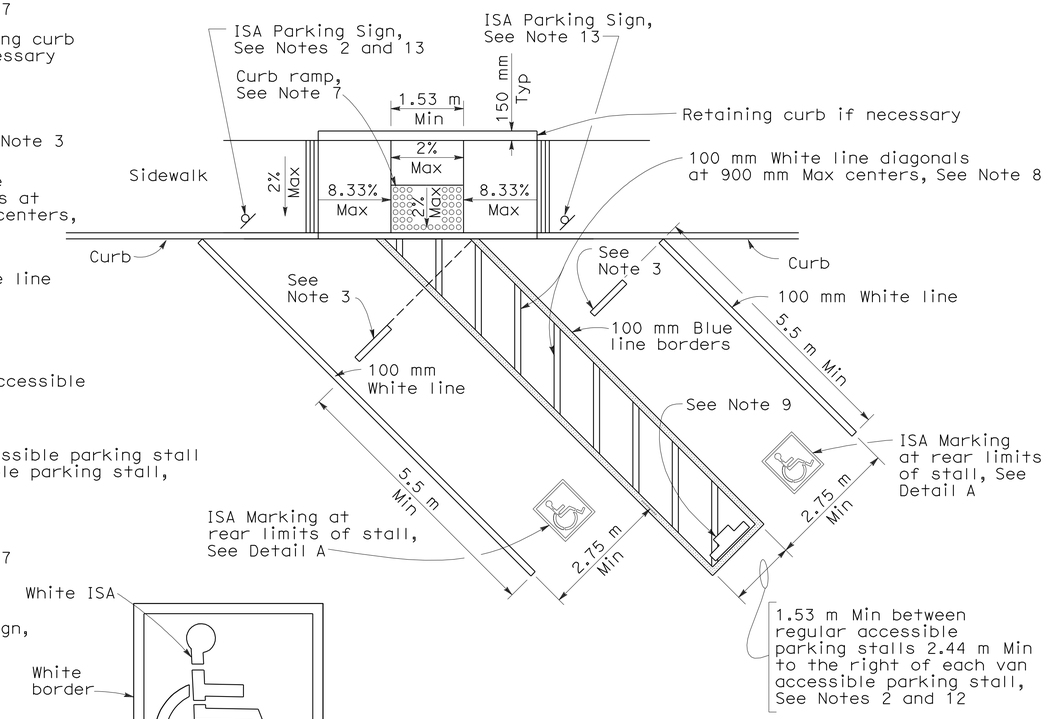

DIAGONAL DOUBLE PARKING STALLS

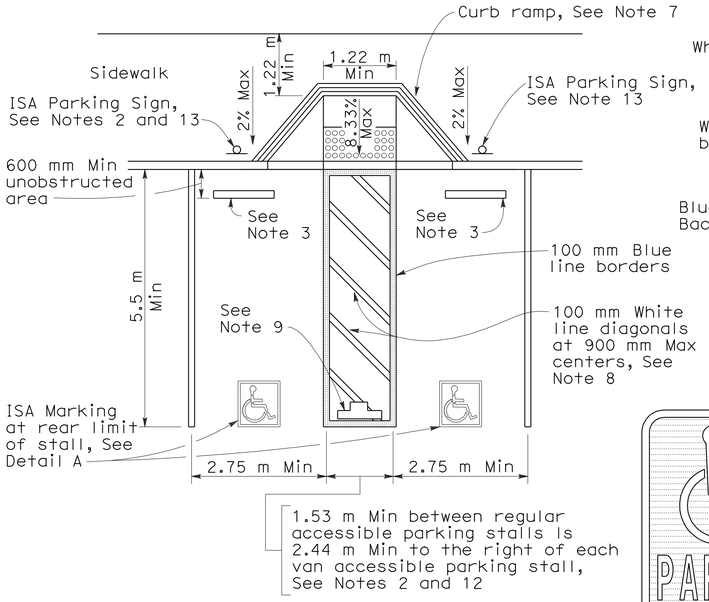

DOUBLE PARKING STALL

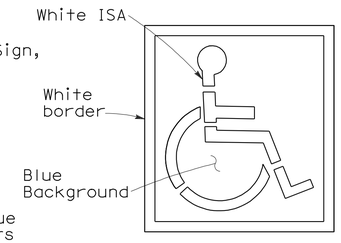

ISA MARKING
See Revised Std Plan RSP A24C

DETAIL A

TABLE A

Total Number of Parking Spaces or Stalls	Minimum Number of Disabled Accessible Parking Spaces or Stalls
1-25	1
26-50	2
51-75	3
76-100	4
101-150	5
151-200	6
201-300	7
301-400	8
401-500	9
501-1000	2 percent of total
Greater than 1001	20 plus 1 for each 100 or fraction thereof over 1001

SIGN R99 (CA)

SIGN R99C (CA)
See Note 6

PLAQUE R99B (CA)

SIGN R99 (CA) with PLAQUE R99B (CA)
See Note 6

SIGN R100B (CA)
See Note 10

SIGN R7-8b
See Notes 2 and 6

OFF-STREET PARKING SIGNS
(Parking lot or garage)
See Note 6

ISA = International Symbol of Accessibility

NOTES:

To accompany plans dated 6-28-10

1. Accessible parking spaces serving a particular building shall be located on the shortest accessible route of travel from adjacent parking to an accessible entrance. In parking facilities that do not serve a particular building, accessible parking shall be located on the shortest accessible route of travel to an accessible pedestrian entrance of the parking facility.
2. One in every eight accessible off-street parking stalls, but not less than one, shall be served by an accessible aisle of 2.44 m minimum width and shall be signed van accessible. The R7-8b sign shall be mounted below the R99B (CA) plaque or the R99C (CA) sign.
3. In each parking stall, a curb or bumper shall be provided and located to prevent encroachment of vehicles over the required width of walkways. Parking stalls shall be so located that persons with disabilities are not compelled to wheel or walk behind parked cars other than their own.
4. Surface slopes of accessible off-street parking stalls shall be the minimum possible and shall not exceed 2 percent in any direction.
5. Table A shall be used to determine the required number of accessible parking stalls in each parking lot or garage.
6. Where Plaque R99B (CA), Sign R99C (CA) or Sign R7-8b are installed, the bottom of the sign or plaque panel shall be a minimum of 2.1 m above the surrounding surface.
7. Curb ramps shall conform to the details shown on Revised Standard Plan RSP A88A.
8. Blue paint, instead of white may be used for marking accessibility aisles in areas where snow may cause white markings to not be visible.
9. The words "NO PARKING", shall be painted in white letters no less than 305 mm high and located so that it is visible to traffic enforcement officials. See Revised Standard Plan RSP A90B for details of the "NO PARKING" pavement marking.
10. A R100B (CA) sign shall be posted in a conspicuous place at each entrance to off-street parking facilities or immediately adjacent to and visible from each stall. The sign shall include the address where the towed vehicle may be reclaimed and the telephone number of the local traffic law enforcement agency.
11. Where a single (non-van) accessible parking space is provided, the loading and unloading access aisle shall be on the passenger side of the vehicle as the vehicle is going forward into the parking space.
12. Where a van accessible parking space is provided, the loading and unloading access aisle shall be 2.44 m wide minimum, and shall be on the passenger side of the vehicle as the vehicle is going forward into the parking space.
13. Accessible Parking Only Sign shall be Sign R99C (CA) or Sign R99 (CA) with Plaque R99B (CA).

STATE OF CALIFORNIA
DEPARTMENT OF TRANSPORTATION

ACCESSIBLE PARKING OFF-STREET

NO SCALE

ALL DIMENSIONS ARE IN MILLIMETERS UNLESS OTHERWISE SHOWN

RSP A90A DATED JUNE 6, 2008 SUPERSEDES RSP A90A DATED DECEMBER 16, 2005 AND STANDARD PLAN A90A DATED JULY 1, 2004-PAGE 119 OF THE STANDARD PLANS BOOK DATED JULY 2004.

REVISED STANDARD PLAN RSP A90A

2004 REVISED Std PLAN RSP A90A

119

6-3-08

DIST	COUNTY	ROUTE	KILOMETER POST TOTAL PROJECT	SHEET NO.	TOTAL SHEETS
10	Sta	219,108	3.4/7.9, 44.3/44.9	476	522

Caltrans Metric

H. David Cordova
REGISTERED CIVIL ENGINEER

June 6, 2008
PLANS APPROVAL DATE

REGISTERED PROFESSIONAL ENGINEER Hector David Cordova No. C41957 Exp. 3-31-10 CIVIL STATE OF CALIFORNIA

The State of California or its officers or agents shall not be responsible for the accuracy or completeness of electronic copies of this plan sheet.

To get to the Caltrans web site, go to: http://www.dot.ca.gov

To accompany plans dated 6-28-10

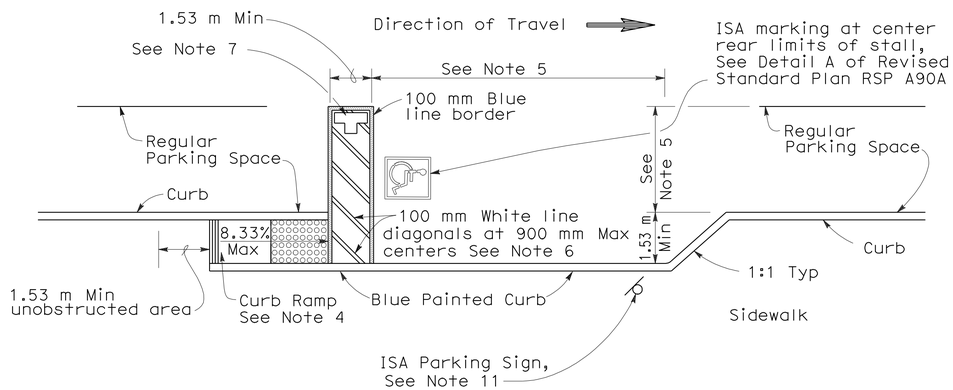

CONVENTIONAL

(See Note 9)

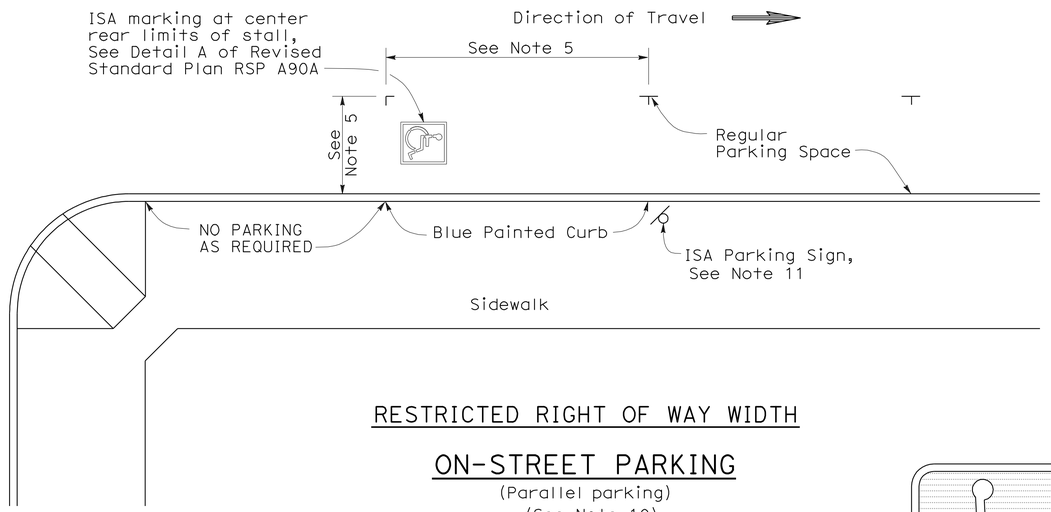

RESTRICTED RIGHT OF WAY WIDTH

ON-STREET PARKING

(Parallel parking)
(See Note 10)

PAVEMENT MARKING

See Note 7

SIGN R99 (CA)

SIGN R99C (CA)
See Note 3

PLAQUE R99B (CA)

SIGN R99 (CA) with PLAQUE R99B (CA)
See Note 3

ISA = International Symbol of Accessibility

NOTES:

1. Parking spaces shall be so located that persons with disabilities are not compelled to wheel or walk behind parked cars other than their own.
2. Surface slopes of accessible on-street parking spaces shall be the minimum feasible.
3. Where Plaque R99B (CA) or Sign R99C (CA) are installed, the bottom of the sign or plaque panel shall be a minimum of 2.1 m above the surrounding surface.
4. Curb ramps shall conform to the details shown on Revised Standard Plan RSP A88A.
5. Accessible on-street parking spaces shall not be smaller in length or width than that specified by the local jurisdiction for other parking spaces, but not less than 6.1 m in length and not less than 2.4 m in width.
6. Blue paint, instead of white may be used for marking accessibility aisles in areas where snow may cause white markings to not be visible.
7. The words "NO PARKING", shall be painted in white letters no less than 305 mm high on a contrasting background and located so that it is visible to traffic enforcement officials. See Standard Plan A24E for square foot area for painting the words "NO PARKING".
8. There shall be no obstructions on the sidewalk adjacent to and for the full length of the parking space, except for the ISA parking sign shown.
9. The Conventional detail should be the primary choice of accessible on-street parking. However, if the sidewalk lacks adequate space to construct a standard curb ramp, the Restricted Right of Way detail should be used.
10. If the Restricted Right of Way width detail is selected and it conflicts with a bus stop or other uses, this detail may apply to the other end of the block.
11. Accessible Parking Only Sign shall be Sign R99C (CA) or Sign R99 (CA) with Plaque R99B (CA).

STATE OF CALIFORNIA
DEPARTMENT OF TRANSPORTATION

ACCESSIBLE PARKING ON-STREET

NO SCALE

RSP A90B DATED JUNE 6, 2008 SUPERSEDES RSP A90B DATED DECEMBER 16, 2005 AND STANDARD PLAN A90B DATED JULY 1, 2004-PAGE 120 OF THE STANDARD PLANS BOOK DATED JULY 2004.

REVISED STANDARD PLAN RSP A90B

2004 REVISED Std PLAN RSP A90B

6-3-08

DIST	COUNTY	ROUTE	KILOMETER POST TOTAL PROJECT	SHEET NO.	TOTAL SHEETS
10	Sta	219,108	3.4/7.9, 44.3/44.9	477	522

Caltrans Metric

Raymond Don Tsztoo
REGISTERED CIVIL ENGINEER

June 6, 2008
PLANS APPROVAL DATE

REGISTERED PROFESSIONAL ENGINEER Raymond Don Tsztoo No. C37332 Exp. 6-30-08 CIVIL STATE OF CALIFORNIA

The State of California or its officers or agents shall not be responsible for the accuracy or completeness of electronic copies of this plan sheet.

To get to the Caltrans web site, go to: http://www.dot.ca.gov

To accompany plans dated 6-28-10

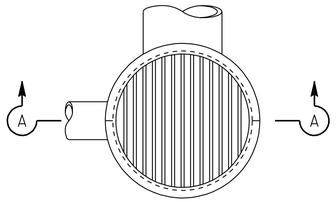

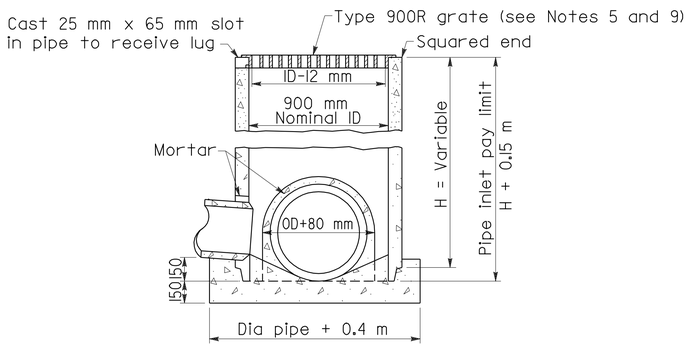

SECTION A-A

TYPE GCP

CONCRETE PIPE INLET WITH GRATE

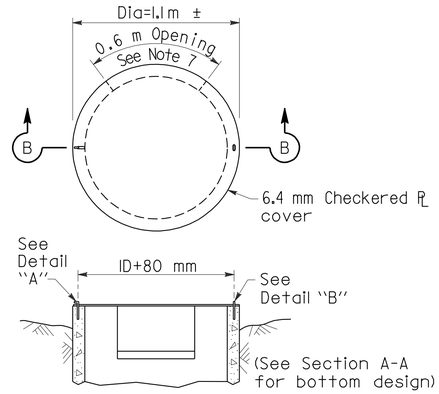

SECTION B-B

TYPE OCP or OCPI

CONCRETE PIPE INLET WITH STEEL COVER
(See Note 6)

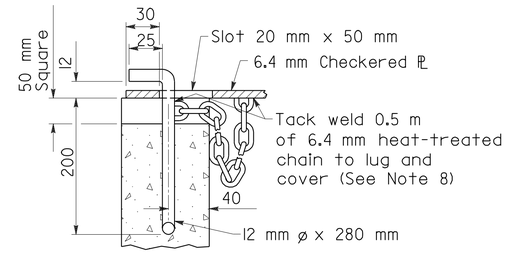

DETAIL "A"

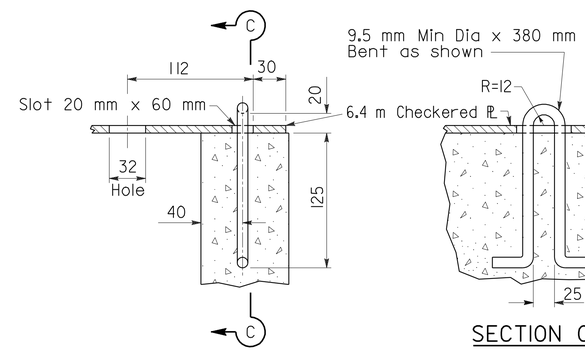

DETAIL "B"

SECTION C-C

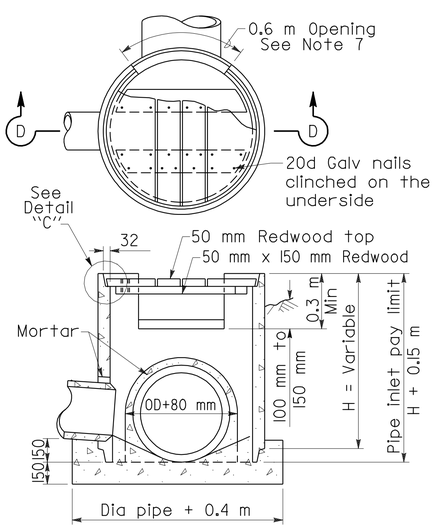

SECTION D-D

TYPE OCP or OCPI

CONCRETE PIPE INLET WITH REDWOOD COVER
(See Notes 6 and 10)

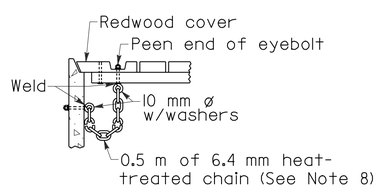

DETAIL "C"

NOTES

1. For details of steel pipe inlets, see Standard Plan D75A.
2. For details of ladder and steps and when ladder or steps are required, see Standard Plan D75C.
3. Inlet pipes shall not protrude into basin.
4. Except for inlets used for junction boxes, basin floors shall have minimum slope of 1:4 from all directions toward outlet pipe, and a wood trowel finish.
5. See Revised Standard Plan RSP D77A and Standard Plan D77B for Grate and Frame Details and Weights of Miscellaneous Iron and Steel.
6. Designation of Type OCPI pipe inlets on plans indicates trash racks are to be furnished and installed on all side openings. See Standard Plan D75C for Trash Rack details.
7. More than one side opening may be required. Location and number as ordered by the Engineer. Opening may be cast in pipe.
8. Chain to be provided when specified.
9. Place pipe so bars of grate will be parallel with main surface flow.
10. Redwood covers shall only be placed at locations designated on the plans.

STATE OF CALIFORNIA
DEPARTMENT OF TRANSPORTATION

PIPE INLETS

NO SCALE

ALL DIMENSIONS ARE IN MILLIMETERS UNLESS OTHERWISE SHOWN

RSP D75B DATED JUNE 6, 2008 SUPERSEDES STANDARD PLAN D75B
DATED July 1, 2004 - PAGE 153 OF THE STANDARD PLANS BOOK DATED July 2004.

REVISED STANDARD PLAN RSP D75B

2004 REVISED Std PLAN RSP D75B

To accompany plans dated 6-28-10

Caltrans Metric

DIST	COUNTY	ROUTE	KILOMETER POST TOTAL PROJECT	SHEET NO.	TOTAL SHEETS
10	Sta	219,108	3.4/7.9, 44.3/44.9	478	522

Raymond Don Tsztoo
REGISTERED CIVIL ENGINEER

June 6, 2008
PLANS APPROVAL DATE

REGISTERED PROFESSIONAL ENGINEER Raymond Don Tsztoo No. C37332 Exp. 6-30-08 STATE OF CALIFORNIA

The State of California or its officers or agents shall not be responsible for the accuracy or completeness of electronic copies of this plan sheet.

To get to the Caltrans web site, go to: http://www.dot.ca.gov

ANNULAR AND HELICAL PROFILE

COUPLING TYPE	PIPE CORRUGATION (mm)	PIPE SIZE (mm)	W OR A (mm)	PIPE WALL THICKNESS CSP (mm)	PIPE WALL THICKNESS CAP (mm)	BAND THICKNESS CSP (mm)	BAND THICKNESS CAP (mm)	BAR AND STRAP (CSP ONLY) STRAP THICKNESS (mm)	BOLTS (mm ø)	BAR Dia (mm)	BAR YIELD STRENGTH (MPa)	ANGLE DIMENSIONS CSP (mm)	ANGLE DIMENSIONS CAP (mm)	BOLTS (No.-mm ø) CSP	BOLTS (No.-mm ø) CAP	RIVETS ANGLE TO BAND CSP	RIVETS ANGLE TO BAND CAP	SPOT WELDS ANGLE TO BAND CSP
TWO PIECE INTEGRAL FLANGE	38 x 6.5	150 - 250	178	1.32 - 2.01	1.22 - 1.52	1.32	1.52							2-10	2-10			
		300 - 450	178	1.32 - 2.01		1.63								2-13				
	68 x 13	300 - 600	178	1.32 - 2.01	1.52 - 2.67	1.63	1.52							2-13	2-13			
UNIVERSAL	68 x 13	THROUGH 900	305	1.32 - 3.51	1.52 - 3.43	1.32	1.52					51 x 51 x 4.8	51 x 51 x 4.8	3-13	3-13	3-9.5 mm	3-9.5 mm	3-15 mm
		1050 - 1500	305	1.32 - 4.27	1.91 - 4.17	1.32	1.52					51 x 51 x 4.8	51 x 51 x 4.8	3-13	3-13	3-9.5 mm	3-9.5 mm	5-15 mm
		THROUGH 1800	305	1.32 - 4.27	4.17	1.32	2.67	2.01	13	22	220	51 x 51 x 4.8	51 x 51 x 4.8	3-13	3-13	3-9.5 mm	3-9.5 mm	5-15 mm
		1950 - 2100	413	4.27		2.01		DOUBLE 2.01	13	22	220							
ANNULAR	68 x 13	THROUGH 900	178	1.63 - 3.51	1.52 - 3.43	1.32	1.52	2.01	13	22	220	51 x 51 x 4.8	51 x 51 x 4.8	2-13	2-13	3-9.5 mm	3-9.5 mm	3-15 mm
		1050 - 1800	305	1.63 - 4.27	1.91 - 4.17	1.32	2.67	2.01	13	22	220	51 x 51 x 4.8	51 x 51 x 4.8	3-13	3-13	3-9.5 mm	3-9.5 mm	5-15 mm
		1950 - 2100	305	4.27		2.01		2.77	13	22	310	51 x 51 x 4.8		3-13		3-9.5 mm		5-15 mm
	75 x 25	1200 - 2250	355	1.63 - 2.77		1.32		2.01	13	22	220	51 x 51 x 4.8		3-13		3-9.5 mm		5-15 mm
		2400 - 3000	355	2.01 - 2.77		1.32		2.77	13	22	310	51 x 51 x 4.8		3-13		4-9.5 mm		
		1050 - 2700	355		1.52 - 3.43		1.52						51 x 51 x 4.8		3-13		3-9.5 mm	
HELICAL	68 x 13	THROUGH 900	305	1.32 - 3.51	1.52 - 3.43	1.32	1.52	2.01	13	22	220	51 x 51 x 4.8	51 x 51 x 4.8	3-13	3-13	3-9.5 mm	3-9.5 mm	3-15 mm
		1050 - 1800	305	1.32 - 4.27	1.91 - 4.17	1.32	1.52	2.01	13	22	220	51 x 51 x 4.8	51 x 51 x 4.8	3-13	3-13	3-9.5 mm	3-9.5 mm	5-15 mm
		1950 - 2100	305	4.27		2.01		2.77	13	22	310	51 x 51 x 4.8		3-13		3-9.5 mm		5-15 mm
	75 x 25	1200 - 2250	355	1.63 - 2.77		1.32		2.01	13	22	220	51 x 51 x 4.8		3-13		3-9.5 mm		5-15 mm
		2400 - 3000	355	2.01 - 2.77		1.32		2.77	13	22	310	51 x 51 x 4.8		3-13		4-9.5 mm		
		1050 - 2700	355		1.52 - 3.43		1.52						51 x 51 x 4.8		3-13		3-9.5 mm	
HUGGER	68 x 13 REROLLED END	300 - 1350	100	1.32 - 2.77		1.32						64 x 38 x 4.8	64 x 38 x 4.8	1-13				3-15 mm
		1500 - 1650	100	2.77		1.63						64 x 38 x 4.8	64 x 38 x 4.8	1-13				3-15 mm
		900 - 1200	100	3.51		1.63						64 x 38 x 4.8	64 x 38 x 4.8	1-13				3-15 mm
		THROUGH 1800	267	1.32 - 4.27		1.32		2.01	13	22	220							
		1950 - 2100	267	4.27		2.01		2.77	13	22	310							
	75 x 25 REROLLED END	1200 - 2250	267	1.63 - 2.77		1.32		2.01	13	22	220							
		2400 - 3000	267	2.01 - 2.77		1.32		2.77	13	22	310							
	125 x 25 REROLLED END	1200 - 1650	190	1.63 - 2.77		1.63		2.01	13	22	220	64 x 38 x 4.8	64 x 38 x 4.8	1-13				3-15 mm
		1800 - 2250	190	1.63 - 2.01		1.63		2.01	13	22	220	64 x 38 x 4.8	64 x 38 x 4.8	1-13				3-15 mm
		1200 - 2250	190	1.63 - 3.51		1.63		2.01	13	22	220							
		1200 - 3000	305 SEE	1.63 - 2.77		1.63		2.01	13	22	220							
		1200 - 2100	305 NOTE	3.51		1.63		2.01	13	22	220							
		2250 - 3000	305 11	3.51		1.63		DOUBLE 2.01	13	22	220							

SPIRAL RIB PROFILE

COUPLING TYPE	PIPE CORRUGATION (mm)	PIPE SIZE (mm)	W (mm)	PIPE WALL THICKNESS SSRP (mm)	PIPE WALL THICKNESS ASRP (mm)	BAND THICKNESS SSRP (mm)	BAND THICKNESS ASRP (mm)	BAR AND STRAP (SSRP ONLY) STRAP THICKNESS (mm)	BOLTS (mm ø)	BAR Dia (mm)	BAR YIELD STRENGTH (MPa)	ANGLE DIMENSIONS SSRP (mm)	ANGLE DIMENSIONS ASRP (mm)	BOLTS (No.- mm ø) SSRP	BOLTS (No.- mm ø) ASRP	RIVETS ANGLE TO BAND SSRP	RIVETS ANGLE TO BAND ASRP	SPOT WELDS ANGLE TO BAND SSRP
ANNULAR	68 x 13 * REROLLED END	600 - 900	305	1.63 - 2.77	1.52 - 2.67	1.32	1.52	2.01	13	22	220	51 x 51 x 4.8	51 x 51 x 4.8	3-13	3-13	3-9.5 mm	3-9.5 mm	5-15 mm
		1050 - 1500	305	1.63 - 2.77	1.91 - 2.67	1.32	2.67	2.01	13	22	220	51 x 51 x 4.8	51 x 51 x 4.8	3-13	3-13	3-9.5 mm	3-9.5 mm	5-15 mm
		1650 - 1800	305	1.63 - 2.77		1.32		2.01	13	22	220	51 x 51 x 4.8	51 x 51 x 4.8	3-13	3-13	3-9.5 mm	3-9.5 mm	5-15 mm
		1950 - 2900	305	2.01 - 2.77		2.01		2.77	13	22	310	51 x 51 x 4.8	51 x 51 x 4.8	3-13	3-13	3-9.5 mm	3-9.5 mm	5-15 mm
HUGGER	68 x 13 * REROLLED END	600 - 1800	267	1.63 - 2.77		1.32		2.01	13	22	220							
		1950 - 2100	267	2.77		2.01		2.77	13	22	310							

* See Note 14.

14. All profiles of Spiral Rib Pipe (19 mm x 19 mm ribs at 191 mm pitch and 19 mm x 25 mm ribs at 292 mm pitch in both steel and aluminum and 19 mm x 25 mm ribs at 216 mm pitch in steel only) shall be manufactured with rerolled ends. Corrugation profile of the rerolled ends shall be 68 mm x 13 mm annual corrugations with a minimum of two full corrugations at each end.

ALL DIMENSIONS ARE IN MILLIMETERS UNLESS OTHERWISE SHOWN

NOTES

1. All ferrous metal coupling band connection hardware shall be galvanized or electro-plated in accordance with the Standard Specifications.
2. For helically corrugated coupling bands, the connection angles may be oriented parallel to the pipe axis, provided connecting holes are slotted lengthwise sufficiently to allow adjustment for the helix angle.
3. Tension strap may be connected to band with either spot welds or fillet welds that develop minimum required strength of strap.
4. Use 32 mm gage line dimension on attached angle leg for rivets and spot welds.
5. Band thickness shall not be less than:
   a. 3 standard thicknesses lighter than the thickness of the pipe for Corrugated Steel Pipe.
   b. 2 standard thicknesses lighter than the thickness of the pipe and in no case lighter than 1.5 mm for Corrugated Aluminum Pipe.
6. Dimensions, thicknesses and strengths shown are minimum.
7. For pipe arches use same width band as for round pipe of equal periphery.
8. Fillet welds of equivalent strenght may be substituted for spot welds or rivets.
9. Spot welds shall develop minimum required strength of strap.
10. Pipe with rerolled ends having at least two 68 mm x 13 mm annular corrugations at each end with or without an upturned flange may be connected with any of the annular coupling bands shown for pipe of the same diameter and wall thickness and having 68 mm x 13 mm corrugations.
11. In the case of H-305 huggerbands, two piece bands are required for diameters through 2400 mm and three piece bands are required for diameters 2550 mm through 3000 mm.
12. Two piece bands are required for pipes greater than 1050 mm diameter.
13. The 57 mm x 51 mm x 2.8 mm thick galvanized die-formed angle connector may be used in lieu of the 51 mm x 51 mm 4.8 mm angle connector for standard joints only on pipes through 1800 mm diameter.

STATE OF CALIFORNIA
DEPARTMENT OF TRANSPORTATION

CORRUGATED METAL PIPE COUPLING DETAILS No. 5 STANDARD JOINT

NO SCALE

RSP D97E DATED JUNE 6, 2008 SUPERSEDES STANDARD PLAN D97E DATED July 1, 2004 - PAGE 187 OF THE STANDARD PLANS BOOK DATED July 2004.

REVISED STANDARD PLAN RSP D97E

2004 REVISED Std PLAN RSP D97E

05-19-08

To accompany plans dated 6-28-10

DIST	COUNTY	ROUTE	KILOMETER POST TOTAL PROJECT	SHEET NO.	TOTAL SHEETS
10	Sta	219,108	3.47/9.9 44.3/44.9	479	522

Caltrans Metric

Raymond Don Tsztoo
REGISTERED CIVIL ENGINEER

June 6, 2008
PLANS APPROVAL DATE

REGISTERED PROFESSIONAL ENGINEER Raymond Don Tsztoo No. C37332 Exp. 6-30-08 STATE OF CALIFORNIA

The State of California or its officers or agents shall not be responsible for the accuracy or completeness of electronic copies of this plan sheet.

To get to the Caltrans web site, go to: http://www.dot.ca.gov

ANNULAR AND HELICAL PROFILE

COUPLING TYPE	PIPE CORRUGATION (mm)	PIPE SIZE (mm)	W OR A (mm)	PIPE WALL THICKNESS CSP (mm)	PIPE WALL THICKNESS CAP (mm)	BAND THICKNESS CSP (mm)	BAND THICKNESS CAP (mm)	BAR AND STRAP (CSP ONLY) STRAP THICKNESS (mm)	BOLTS (mm ø)	BAR Dia (mm)	BAR YIELD STRENGTH (MPa)	ANGLE DIMENSIONS CSP (mm)	ANGLE DIMENSIONS CAP (mm)	BOLTS (No. - mm ø) CSP	BOLTS CAP	RIVETS ANGLE TO BAND CSP	RIVETS ANGLE TO BAND CAP	SPOT WELDS ANGLE TO BAND CSP
TWO PIECE INTEGRAL FLANGE	38 x 6.5	150-250	178	1.63-2.01	1.52	1.63	1.52							2-10	2-10			
	68 x 13	300-600	305		1.52-2.67		1.52								3-13			
UNIVERSAL	68 x 13	THROUGH 900	305	1.63-3.51	1.52-3.43	1.63	1.52	2.01	13	22	220	51 x 51 x 4.8	51 x 51 x 4.8	3-13	3-13	3-9.5 mm	3-9.5 mm	5-15 mm
		1050-1500	413	1.63-4.27	1.52-4.17	1.63	1.52	DOUBLE 2.01	13	22	220	51 x 51 x 6.4	51 x 51 x 6.4	4-13	4-13	5-9.5 mm	5-9.5 mm	
ANNULAR	68 x 13	THROUGH 900	305	1.63-3.51	1.52-3.43	1.63	1.52					51 x 51 x 4.8	51 x 51 x 4.8	3-13	3-13	3-9.5 mm	3-9.5 mm	5-15 mm
		1050-1500	305	1.63-2.01		1.63						51 x 51 x 4.8		3-13		3-9.5 mm		5-15 mm
		1050-1500	305	2.77-4.27	3.43-4.17	1.63	1.91					51 x 51 x 6.4	51 x 51 x 6.4	3-13	3-13	5-9.5 mm	5-9.5 mm	
		1650-1800	610		4.17		2.67						51 x 51 x 6.4		5-13		5-13 mm	
		1650-2100	610	2.77-4.27		1.63						51 x 51 x 6.4		5-13		7-9.5 mm		
		1050-1350	305		1.52-2.67		1.52						51 x 51 x 4.8		3-13		3-9.5 mm	
	75 x 25	1200-1500	355	1.63-2.01		1.63						51 x 51 x 4.8		3-13		3-9.5 mm		5-15 mm
		1200-1500	355	2.77		1.63						51 x 51 x 4.8		3-13		5-9.5 mm		
		1650-3000	635	1.63-2.77		1.63						51 x 51 x 4.8		5-13		9-9.5 mm		
		1050-1500	355		1.52-2.67		1.52						51 x 51 x 4.8		3-13		5-9.5 mm	
		1050-1500	355		3.43		1.91						51 x 51 x 6.4		3-13		5-9.5 mm	
		1650-2400	635		1.52-3.43		1.52						51 x 51 x 6.4		5-13		7-9.5 mm	
		2400-2700	635		3.43		1.91						51 x 51 x 6.4		5-13		7-9.5 mm	
HELICAL	68 x 13	THROUGH 900	305	1.63-3.51	1.52-3.43	1.63	1.52					51 x 51 x 4.8	51 x 51 x 4.8	3-13	3-13	3-9.5 mm	3-9.5 mm	5-15 mm
		1050-1350	305		1.52-2.67		1.52						51 x 51 x 4.8		3-13		3-9.5 mm	
		1050-1500	305	1.63-2.01		1.63						51 x 51 x 4.8		3-13		3-9.5 mm		5-15 mm
		1050-1500	305	2.77-4.27	3.43-4.17	1.63	1.91					51 x 51 x 6.4	51 x 51 x 6.4	3-13	3-13	5-9.5 mm	5-9.5 mm	
		1650-2100	610	2.77-4.27		1.63						51 x 51 x 6.4		5-13		7-9.5 mm		
		1650-1800	610		4.17		2.67						51 x 51 x 6.4		5-13		5-9.5 mm	
	75 x 25	1200-1500	355	1.63-2.01		1.63						51 x 51 x 4.8		3-13		3-9.5 mm		5-15 mm
		1200-1500	355	2.77		1.63						51 x 51 x 4.8		3-13		5-9.5 mm		
		1650-3000	635	1.63-2.77		1.63						51 x 51 x 4.8		5-13		9-9.5 mm		
		1050-1500	355		1.52-2.67		1.52						51 x 51 x 4.8		3-13		5-9.5 mm	
		1050-1500	355		3.43		1.91						51 x 51 x 6.4		3-13		5-9.5 mm	
		1650-2400	635		1.52-3.43		1.52						51 x 51 x 6.4		5-13		7-9.5 mm	
		2400-2700	635		3.43		1.91						51 x 51 x 6.4		5-13		7-9.5 mm	
HUGGER	68 x 13 REROLLED END	THROUGH 1200	267	2.77		1.63		2.01	13	22	220							
		1350 - 1650	267	2.77		1.63		DOUBLE 2.01	13	22	220							
		THROUGH 1350	267	1.63 - 2.01		1.63		2.01	13	22	220							
		THROUGH 1500	267	3.51		2.01		DOUBLE 2.01	13	22	220							
		1650 - 1800	267	3.51		2.77		DOUBLE 2.01	13	22	220							
		THROUGH 1800	267	4.27		2.77		DOUBLE 2.77	13	22	310							
	75 x 25 REROLLED END	1200 - 2100	267	2.77		2.01		DOUBLE 2.01	13	22	220							
		1200 - 2250	267	1.63 - 2.01		1.63		DOUBLE 2.01	13	22	220							
		2400 - 2550	267	2.01		2.01		DOUBLE 2.01	13	22	220							
		2250 - 3000	267	2.77		2.77		DOUBLE 2.77	13	22	310							

SPIRAL RIB PROFILE

COUPLING TYPE	PIPE CORRUGATION (mm)	PIPE SIZE (mm)	W (mm)	PIPE WALL THICKNESS SSRP (mm)	PIPE WALL THICKNESS ASRP (mm)	BAND THICKNESS SSRP (mm)	BAND THICKNESS ASRP (mm)	BAR AND STRAP (SSRP ONLY) STRAP THICKNESS (mm)	BOLTS (mm ø)	BAR Dia (mm)	BAR YIELD STRENGTH (MPa)	ANGLE DIMENSIONS SSRP (mm)	ANGLE DIMENSIONS ASRP (mm)	BOLTS (No.- mm ø) SSRP	BOLTS ASRP	RIVETS ANGLE TO BAND SSRP	RIVETS ANGLE TO BAND ASRP	SPOT WELDS ANGLE TO BAND SSRP
ANNULAR	68 x 13 * REROLLED END	600 - 900	305	1.63 - 2.77	1.52 - 2.67	1.63	1.52	2.01	13	22	220	51 x 51 x 4.8	51 x 51 x 4.8	3-13	3-13	3-9.5 mm	3-9.5 mm	5-15 mm
		1050 - 1500	305	1.63 - 2.01	1.90 - 2.67	1.63	1.90	2.01	13	22	220	51 x 51 x 4.8	51 x 51 x 4.8	3-13	3-13	3-9.5 mm	3-9.5 mm	5-15 mm
		1050 - 1500	305	2.77		1.63		2.01	13	22	220	51 x 51 x 6.4		3-13		5-9.5 mm		
		1650 - 2100	610	2.77		1.63		2.01	13	22	220	51 x 51 x 6.4		5-13		7-9.5 mm		
HUGGER	68 x 13 * REROLLED END	600 - 1350	267	1.63 - 2.01		1.63		2.01	13	22	220							
		600 - 1200	267	2.77		1.63		2.01	13	22	220							
		1350 - 1650	267	2.77		1.63		Double 2.01	13	22	220							

* See Note 13.

13. All profiles of Spiral Rib Pipe (19 mm x 19 mm ribs at 191 mm pitch and 19 mm x 25 mm ribs at 292 mm pitch in both steel and aluminum and 19 mm x 25 mm ribs at 216 mm pitch in steel only) shall be manufactured with rerolled ends. Corrugation profile of the rerolled ends shall be 68 mm x 13 mm annual corrugations with a minimum of two full corrugations at each end.

ALL DIMENSIONS ARE IN MILLIMETERS UNLESS OTHERWISE SHOWN

NOTES

1. All ferrous metal coupling band connection hardware shall be galvanized or electro-plated in accordance with the Standard Specifications.
2. For helically corrugated coupling bands, the connection angles may be oriented parallel to the pipe axis, provided connecting holes are slotted lengthwise sufficiently to allow adjustment for the helix angle.
3. Tension strap may be connected to band with either spot welds or fillet welds that develop minimum required strength of strap.
4. Use 32 mm gage line dimension on attached angle leg for rivets and spot welds.
5. Band thickness shall not be less than:
   a. 3 standard thicknesses lighter than the thickness of the pipe for corrugated steel pipe.
   b. 2 standard thicknesses lighter than the thickness of the pipe and in no case lighter than 1.5 mm for corrugated aluminum pipe.
6. Dimensions, thicknesses and strengths shown are minimum.
7. For pipe arches use same width band as for round pipe of equal periphery.
8. Fillet welds of equivalent strength may be substituted for spot welds or rivets.
9. Spot welds shall develop minimum required strength of strap.
10. Pipe with rerolled ends having at least two 68 mm x 13 mm annular corrugations at each end with or without an upturned flange may be connected with any of the annular coupling bands shown for pipe of the same diameter and wall thickness and having 68 mm x 13 mm corrugations.
11. In the case of H-305 huggerbands, two piece bands are required for diameters through 2400 mm and three piece bands are required for diameters 2550 mm through 3000 mm.
12. Two piece bands are required for pipes greater than 1050 mm diameter.

STATE OF CALIFORNIA
DEPARTMENT OF TRANSPORTATION

CORRUGATED METAL PIPE COUPLING DETAILS No. 6 POSITIVE JOINT

NO SCALE

RSP D97F DATED JUNE 6, 2008 SUPERSEDES STANDARD PLAN D97F
DATED July 1, 2004 - PAGE 188 OF THE STANDARD PLANS BOOK DATED July 2004.

REVISED STANDARD PLAN RSP D97F

2004 REVISED Std PLAN RSP D97F

05-19-08

To accompany plans dated 6-28-10

Caltrans Metric

DIST	COUNTY	ROUTE	KILOMETER POST TOTAL PROJECT	SHEET NO.	TOTAL SHEETS
10	Sta	219,108	3.4/7.9, 44.3/44.9	480	522

Raymond Don Tsztoo
REGISTERED CIVIL ENGINEER

June 6, 2008
PLANS APPROVAL DATE

REGISTERED PROFESSIONAL ENGINEER Raymond Don Tsztoo No. C37332 Exp. 6-30-08 STATE OF CALIFORNIA

The State of California or its officers or agents shall not be responsible for the accuracy or completeness of electronic copies of this plan sheet.

To get to the Caltrans web site, go to: http://www.dot.ca.gov

ANNULAR AND HELICAL PROFILE

COUPLING TYPE	PIPE CORRUGATION (mm)	PIPE SIZE (mm)	W OR A (mm)	PIPE WALL THICKNESS CSP (mm)	PIPE WALL THICKNESS CAP (mm)	BAND THICKNESS CSP (mm)	BAND THICKNESS CAP (mm)	BAR AND STRAP (CSP ONLY) STRAP THICKNESS (mm)	BAR AND STRAP (CSP ONLY) BOLTS (mm ø)	BAR AND STRAP (CSP ONLY) BAR Dia (mm)	ANGLE DIMENSIONS CSP (mm)	ANGLE DIMENSIONS CAP (mm)	ANGLE BOLTS (No.-mm ø) CSP	ANGLE BOLTS (No.-mm ø) CAP	ANGLE RIVETS ANGLE TO BAND CSP	ANGLE RIVETS ANGLE TO BAND CAP	ANGLE SPOT WELDS ANGLE TO BAND CSP
TWO PIECE INTEGRAL FLANGE	38 x 6.5	150	178	1.63 - 4.27		1.32							3-10				
	38 x 6.5	200 - 250	178	1.63 - 4.27	1.52 - 4.17	1.63	1.52						3-10	3-10			
ANNULAR	68 x 13	THROUGH 600	305	1.63 - 4.27	1.52 - 4.17	1.63	1.52				51 x 51 x 4.8	51 x 51 x 4.8	3-13	3-13	3-9.5 mm	3-9.5 mm	3-15 mm
HUGGER	68 x 13 REROLLED END	THROUGH 600	267	1.63 - 4.27		1.63		2.01	13	22	51 x 51 x 4.8	51 x 51 x 4.8	3-13	3-13	3-9.5 mm	3-9.5 mm	3-15 mm

SPIRAL RIB PROFILE

COUPLING TYPE	PIPE CORRUGATION (mm)	PIPE SIZE (mm)	W (mm)	PIPE WALL THICKNESS SSRP (mm)	PIPE WALL THICKNESS ASRP (mm)	BAND THICKNESS SSRP (mm)	BAND THICKNESS ASRP (mm)	BAR AND STRAP (SSRP ONLY) STRAP THICKNESS (mm)	BAR AND STRAP (SSRP ONLY) BOLTS (mm ø)	BAR AND STRAP (SSRP ONLY) BAR Dia (mm)	ANGLE DIMENSIONS SSRP (mm)	ANGLE DIMENSIONS ASRP (mm)	ANGLE BOLTS (No.- mm ø) SSRP	ANGLE BOLTS (No.- mm ø) ASRP	ANGLE RIVETS ANGLE TO BAND SSRP	ANGLE RIVETS ANGLE TO BAND ASRP	ANGLE SPOT WELDS ANGLE TO BAND SSRP
ANNULAR	68 x 13 ✳ REROLLED END	600	305	1.63 - 4.27	1.52 - 4.17	1.63	1.52				51 x 51 x 4.8	51 x 51 x 4.8	3-13	3-13	3-9.5 mm	3-9.5 mm	3-15 mm
HUGGER	68 x 13 ✳ REROLLED END	600	267	1.63 - 4.27		1.63		2.01	13	22							

✳ See Note 12.

NOTES

1. All ferrous metal coupling band connection hardware shall be galvanized or electroplated in accordance with the Standard Specifications.
2. For helically corrugated coupling bands, the connection angles may be oriented parallel to the pipe axis, provided connecting holes are slotted lengthwise sufficiently to allow adjustment for the helix angle.
3. Tension straps may be connected to band with either spot welds or fillet welds that develop minimum required strength of strap.
4. Use 32 mm gage line dimension on attached angle leg for rivets and spot welds.
5. Band thickness shall not be less than:
   a. 3 standard thickness lighter than the thickness of the pipe for corrugated steel pipe.
   b. 2 standard thickness lighter than the thickness of the pipe and in no case lighter than 1.5 mm for corrugated aluminum pipe.
6. Dimensions, thickness and strengths shown are minimum.
7. For pipe arches use same width band as for round pipe of equal periphery.
8. Fillet welds of equivalent strength may be substituted for spot welds or rivets.
9. Spot welds shall develop minimum required strength of strap.
10. Pipe with rerolled ends having at least two 68 mm x 13 mm annular corrugations at each end with or without an upturned flange may be connected with any of the annular coupling bands shown for pipe of the same diameter and wall thickness and having 68 mm x 13 mm corrugations.
11. For downdrain applications, two piece integral flange couplers shall have factory applied sleeve type rubber gaskets with a minimum length of 175 mm measured along the length of the pipe.
12. All profiles of Spiral Rib Pipe (19 mm x 19 mm ribs at 191 mm pitch and 19 mm x 25 mm ribs at 292 mm pitch in both steel and aluminum and 19 mm x 25 mm ribs at 216 mm pitch in steel only) shall be manufactured with rerolled ends. Corrugation profile of the rerolled ends shall be 68 mm x 13 mm annual corrugations with a minimum of two full corrugations at each end.

STATE OF CALIFORNIA
DEPARTMENT OF TRANSPORTATION

CORRUGATED METAL PIPE COUPLING DETAILS No. 7 DOWNDRAIN

NO SCALE

ALL DIMENSIONS ARE IN MILLIMETERS UNLESS OTHERWISE SHOWN

RSP D97G DATED JUNE 6, 2008 SUPERSEDES STANDARD PLAN D97G
DATED July 1, 2004 - PAGE 189 OF THE STANDARD PLANS BOOK DATED July 2004.

REVISED STANDARD PLAN RSP D97G

2004 REVISED Std PLAN RSP D97G

05-19-08

DIST	COUNTY	ROUTE	KILOMETER POST TOTAL PROJECT	SHEET NO.	TOTAL SHEETS
10	Sta	219,108	3.4/7.9 44.3/44.9	481	522

Caltrans Metric

LICENSED LANDSCAPE ARCHITECT

March 7, 2008
PLANS APPROVAL DATE

LICENSED LANDSCAPE ARCHITECT
Gregory A. Balzer 2576
Signature
02-28-2009
Renewal Date
02-21-08
Date
STATE OF CALIFORNIA

The State of California or its officers or agents shall not be responsible for the accuracy or completeness of electronic copies of this plan sheet.

To get to the Caltrans web site, go to: http://www.dot.ca.gov

To accompany plans dated 6-28-10

2004 REVISED Std PLAN RSP H2

EXISTING	PROPOSED	ITEM DESCRIPTION
		WATER METER (WM)
		BACKFLOW PREVENTER ASSEMBLY (BPA)
		BACKFLOW PREVENTER ASSEMBLY IN ENCLOSURE (BPAE)
		BACKFLOW PREVENTER ENCLOSURE (BPE)
		BOOSTER PUMP (BP)
		TRUCK LOADING STANDPIPE (TLS)
fs	FS	FLOW SENSOR (FS)
		MASTER IRRIGATION CONTROLLER (MIC)
		AUXILIARY IRRIGATION CONTROLLER (AIC)
		IRRIGATION CONTROLLER (IC)/ IRRIGATION CONTROLLER (IC) (BATTERY)
		IRRIGATION CONTROLLER(S) IN CONTROLLER ENCLOSURE CABINET (ICC)
		CONTROL AND NEUTRAL CONDUCTORS (CNC)
scc	SCC	SPRINKLER CONTROL CONDUIT (SCC)
		CONDUIT (COND)
		IRRIGATION SLEEVE
dip	DIP	DUCTILE IRON PIPE (SUPPLY LINE) (MAIN) (DIP)
		GALVANIZED STEEL PIPE (SUPPLY LINE) (MAIN) (GSP)
		GALVANIZED STEEL PIPE (SUPPLY LINE) (LATERAL) (GSP)
		PLASTIC PIPE (PR 200) (SUPPLY LINE) (MAIN)
		PLASTIC PIPE (PR 200) (SUPPLY LINE) (LATERAL)
		PLASTIC PIPE (IRRIGATION LINE)
		REMOTE CONTROL VALVE (RCV) REMOTE CONTROL VALVE (MASTER) (RCVM)
		MANUAL CONTROL VALVE (MCV)
		VALVE ASSEMBLY UNIT (VAU)
		WYE STRAINER (WS)
		FILTER ASSEMBLY UNIT (FAU)
		GATE VALVE (GV)
		BALL VALVE (BV)

EXISTING	PROPOSED	ITEM DESCRIPTION
		QUICK COUPLING VALVE (QCV)
		CAM COUPLING ASSEMBLY (CCA)
		PRESSURE REDUCING VALVE (PRV)
		PRESSURE RELIEF VALVE (PRLV)
		FLOW CONTROL VALVE (FCV)
		COMBINATION AIR RELEASE VALVE (CARV)
		CHECK VALVE (CV)
		FLUSH VALVE (FV)
		NOZZLE LINE W/TURNING UNION
		IRRIGATION SYSTEM
		IRRIGATION SYSTEM TO BE REMOVED
		CHAIN LINK GATE
		QUICK COUPLING VALVE W/SPRINKLER PROTECTOR
3	3	SPRINKLER W/SPRINKLER PROTECTOR
		CONNECT TO EXISTING SYSTEM
		CAP
		CAP EXISTING

VALVE CODE

- RCV SIZE (mm)
- IRRIGATION CONTROLLER
- CONTROLLER STATION
- VALVE IN PARALLEL (IF APPLICABLE)
- L/min
- QUANTITY OF SPRINKLERS (WHEN SHOWN)

* 63.5-A-2b-151.4-60

- MCV SIZE (mm)
- VALVE NUMBER
- L/min
- QUANTITY OF TYPE SPRINKLERS (WHEN SHOWN)

* 50.8-3-113.5-50

* VALVE CODES FOR EXISTING VALVES ARE SHOWN IN A DASHED ENCLOSURE.

STATE OF CALIFORNIA
DEPARTMENT OF TRANSPORTATION

PLANTING AND IRRIGATION SYMBOLS

NO SCALE

ALL DIMENSIONS ARE IN MILLIMETERS UNLESS OTHERWISE SHOWN

RSP H2 DATED MARCH 7, 2008 SUPERSEDES STANDARD PLAN H2 DATED JULY 1, 2004 - PAGE 202 OF THE STANDARD PLANS BOOK DATED JULY 2004.

REVISED STANDARD PLAN RSP H2

2-20-08

DIST	COUNTY	ROUTE	KILOMETER POST TOTAL PROJECT	SHEET NO.	TOTAL SHEETS
10	Sta	219,108	3.4/7.9, 44.3/44.9	482	522

Randell D. Hiatt
REGISTERED CIVIL ENGINEER

June 6, 2008
PLANS APPROVAL DATE

REGISTERED PROFESSIONAL ENGINEER
Randell D. Hiatt
No. C50200
Exp. 6-30-09
CIVIL
STATE OF CALIFORNIA

The State of California or its officers or agents shall not be responsible for the accuracy or completeness of electronic copies of this plan sheet.

To get to the Caltrans web site, go to: http://www.dot.ca.gov

To accompany plans dated 6-28-10

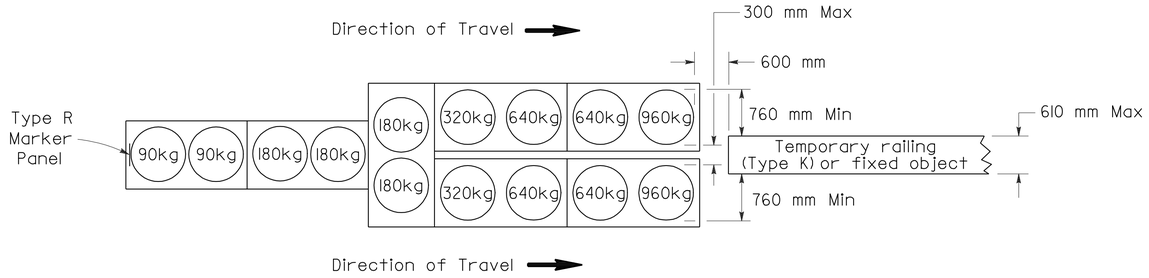

ARRAY 'TU14'

Approach speed 70 km/h or more

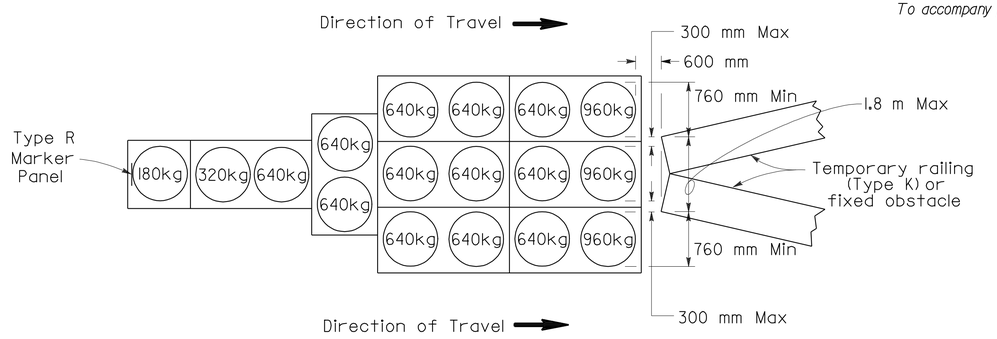

ARRAY 'TU17'

Approach speed less than 70 km/h

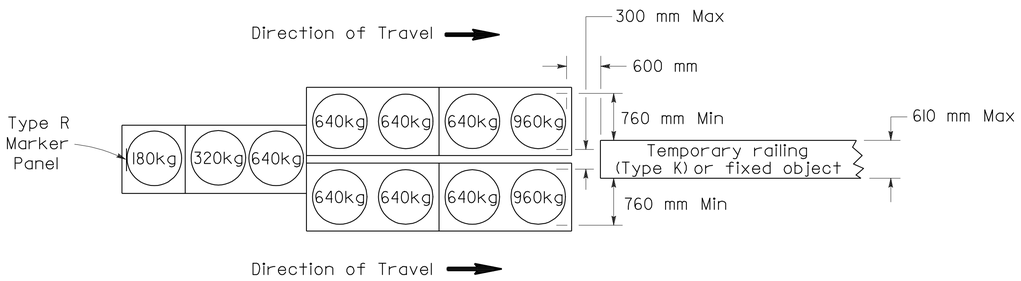

ARRAY 'TU11'

Approach speed less than 70 km/h

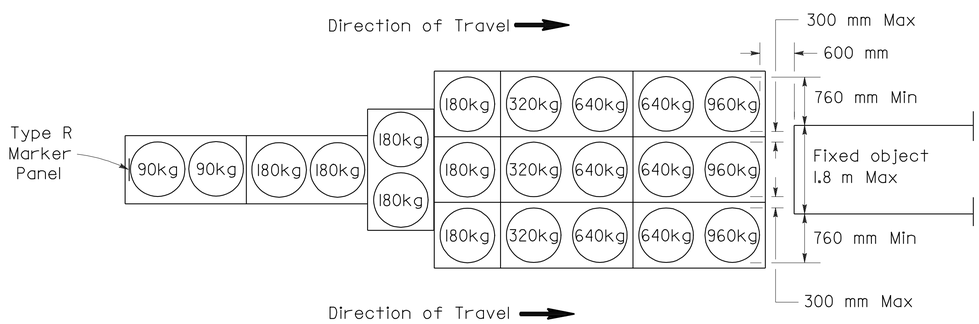

ARRAY 'TU21'

Approach speed 70 km/h or more

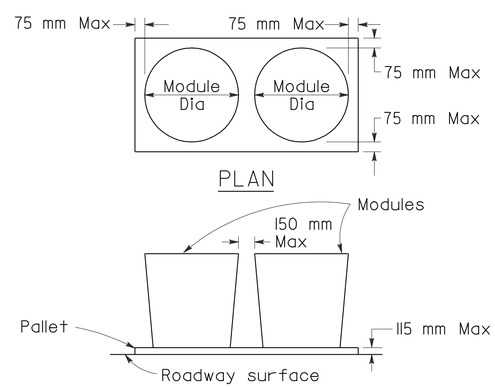

CRASH CUSHION PALLET DETAIL

See Note 7

NOTES

1. (XXX) Indicates sand filled module location and mass of sand in kilograms for each module. Module spacing is based on the greater diameter of the module.
2. All sand masses are nominal.
3. Temporary crash cushion arrays shall not encroach on the traveled way.
4. Place the top of Type R marker panel 25 mm below the module lid.
5. Refer to Standard Plan A73B for marker details.
6. Approach speeds indicated conform to NCHRP 350 Report criteria.
7. Use of Pallets is optional.

STATE OF CALIFORNIA
DEPARTMENT OF TRANSPORTATION

TEMPORARY CRASH CUSHION, SAND FILLED (UNIDIRECTIONAL)

NO SCALE

ALL DIMENSIONS ARE IN MILLIMETERS UNLESS OTHERWISE SHOWN

RSP T1A DATED JUNE 6, 2008 SUPERSEDES STANDARD PLAN T1A
DATED July 1, 2004 - PAGE 211 OF THE STANDARD PLANS BOOK DATED July 2004.

REVISED STANDARD PLAN RSP T1A

2004 REVISED Std PLAN RSP T1A

5-16-08

DIST	COUNTY	ROUTE	KILOMETER POST TOTAL PROJECT	SHEET NO.	TOTAL SHEETS
10	Sta	219,108	3.4/7.9, 44.3/44.9	483	522

Caltrans Metric

Randell D. Hiatt
REGISTERED CIVIL ENGINEER

June 6, 2008
PLANS APPROVAL DATE

REGISTERED PROFESSIONAL ENGINEER
Randell D. Hiatt
No. C50200
Exp. 6-30-09
CIVIL
STATE OF CALIFORNIA

The State of California or its officers or agents shall not be responsible for the accuracy or completeness of electronic copies of this plan sheet.

To get to the Caltrans web site, go to: http://www.dot.ca.gov

To accompany plans dated 6-28-10

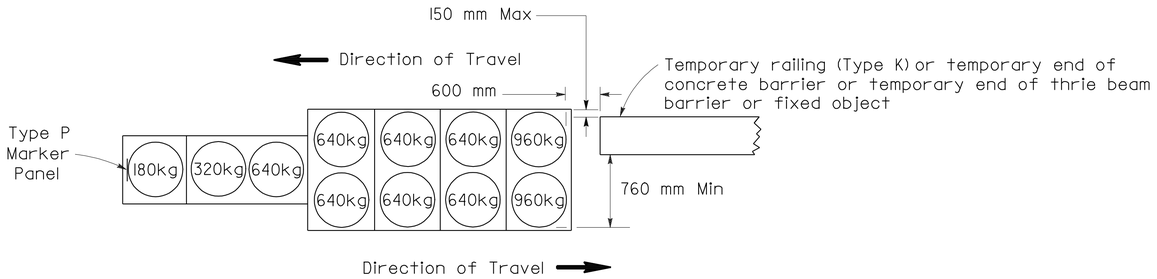

ARRAY 'TBI1'

Approach speed less than 70 km/h

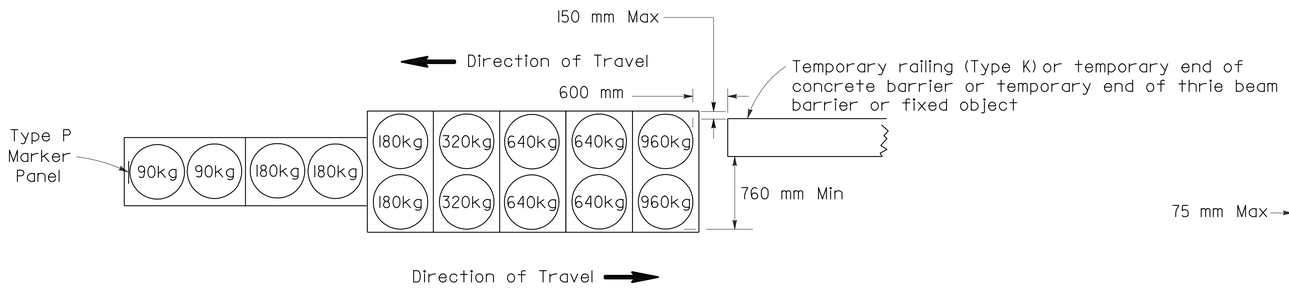

ARRAY 'TBI4'

Approach speed 70 km/h or more

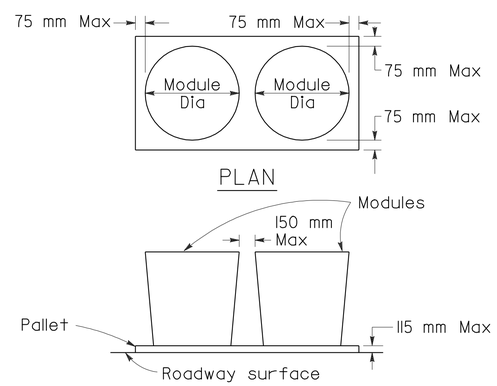

CRASH CUSHION PALLET DETAIL

See Note 7

NOTES

1. (XXX) Indicates sand filled module location and mass of sand in kilograms for each module. Module spacing is based on the greater diameter of the module.
2. All sand masses are nominal.
3. Temporary crash cushion arrays shall not encroach on the traveled way.
4. Place the Type P marker panel so that the bottom of the panel rests upon the pallet.
5. Refer to Standard Plan A73B for marker details.
6. Approach speeds indicated conform to NCHRP 350 Report criteria.
7. Use of Pallets is optional.

STATE OF CALIFORNIA
DEPARTMENT OF TRANSPORTATION

TEMPORARY CRASH CUSHION, SAND FILLED (BIDIRECTIONAL)

NO SCALE

ALL DIMENSIONS ARE IN MILLIMETERS UNLESS OTHERWISE SHOWN

RSP T1B DATED JUNE 6, 2008 SUPERSEDES STANDARD PLAN T1B DATED July 1, 2004 - PAGE 212 OF THE STANDARD PLANS BOOK DATED July 2004.

REVISED STANDARD PLAN RSP T1B

2004 REVISED Std PLAN RSP T1B

5-16-08

DIST	COUNTY	ROUTE	KILOMETER POST TOTAL PROJECT	SHEET NO.	TOTAL SHEETS
10	Sta	219,108	3.4/7.9, 44.3/44.9	484	522

Caltrans Metric

Randell D. Hiatt
REGISTERED CIVIL ENGINEER

June 6, 2008
PLANS APPROVAL DATE

REGISTERED PROFESSIONAL ENGINEER
Randell D. Hiatt
No. C50200
Exp. 6-30-09
CIVIL
STATE OF CALIFORNIA

The State of California or its officers or agents shall not be responsible for the accuracy or completeness of electronic copies of this plan sheet.

To get to the Caltrans web site, go to: http://www.dot.ca.gov

To accompany plans dated 6-28-10

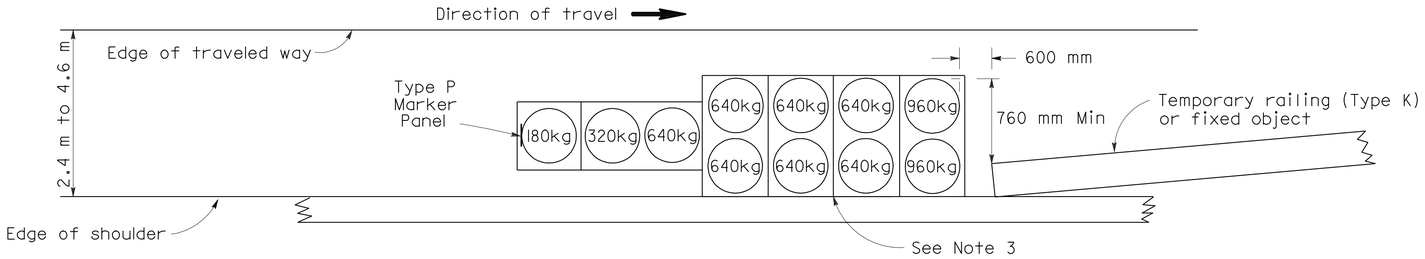

ARRAY 'TSI1'

Approach speed less than 70 km/h
See Note 9

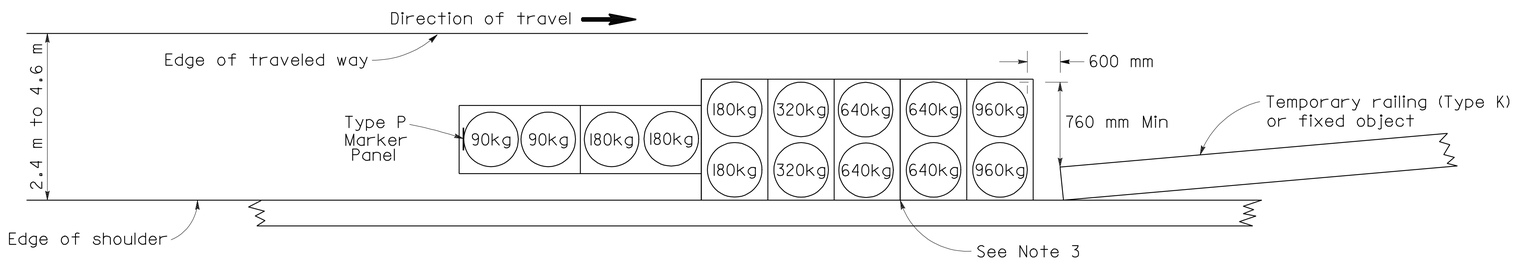

ARRAY 'TSI4'

Approach speed 70 km/h or more
See Note 9

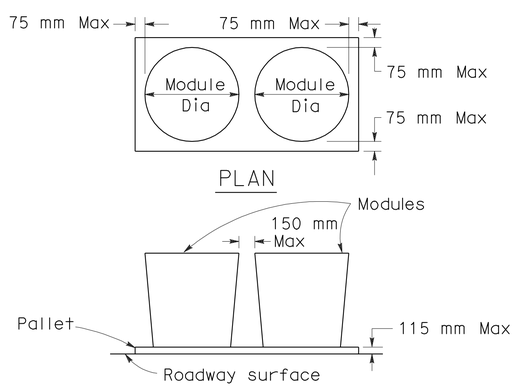

CRASH CUSHION PALLET DETAIL

See Note 11

NOTES

1. (XXX) Indicates sand filled module location and mass of sand in kilograms for each module. Module spacing is based on the greater diameter of the module.
2. All sand masses are nominal.
3. The temporary crash cushion arrays shown on this plan shall be used only in locations where there will be traffic on one side of the temporary crash cushion array.
4. If the fixed object or approach end of the temporary railing is less than 4.60 meters from the edge of traveled way, a temporary crash cushion is required.
5. Temporary crash cushion arrays shall not encroach on the traveled way.
6. Arrays for median shoulders shall conform to details shown on this plan for outside shoulders.
7. Place the Type P marker panel so that the bottom of the panel rest upon the pallet and faces traffic.
8. Refer to Standard Plan A73B for marker details.
9. For shoulder widths less than 2.4 m, appropriate approved crash cushion protection, other than sand filled modules, shall be provided at fixed objects and at approach ends of temporary railing. The specific type of crash cushion shall be as shown on the project plans or as specified in the Special Provisions, or if not shown on the project plans or specified in the Special Provisions, shall be as approved by the Engineer.
10. Approach speeds indicated conform to NCHRP 350 Report criteria.
11. Use of Pallets is optional.

STATE OF CALIFORNIA
DEPARTMENT OF TRANSPORTATION

TEMPORARY CRASH CUSHION, SAND FILLED (SHOULDER INSTALLATIONS)

NO SCALE

ALL DIMENSIONS ARE IN MILLIMETERS UNLESS OTHERWISE SHOWN

RSP T2 DATED JUNE 6, 2008 SUPERSEDES STANDARD PLAN T2
DATED July 1, 2004 - PAGE 213 OF THE STANDARD PLANS BOOK DATED July 2004.

REVISED STANDARD PLAN RSP T2

2004 REVISED Std PLAN RSP T2

5-16-08

DIST	COUNTY	ROUTE	KILOMETER POST TOTAL PROJECT	SHEET NO.	TOTAL SHEETS
10	Sta	219,108	3.4/7.9, 44.3/44.9	485	522

Caltrans Metric

Greg W. Edwards
REGISTERED CIVIL ENGINEER

April 28, 2005
PLANS APPROVAL DATE

REGISTERED PROFESSIONAL ENGINEER Greg W. Edwards No. C36386 Exp. 6-30-06 CIVIL STATE OF CALIFORNIA

The State of California or its officers or agents shall not be responsible for the accuracy or completeness of electronic copies of this plan sheet.

To get to the Caltrans web site, go to: http://www.dot.ca.gov

To accompany plans dated 6-28-10

TYPICAL LANE CLOSURE

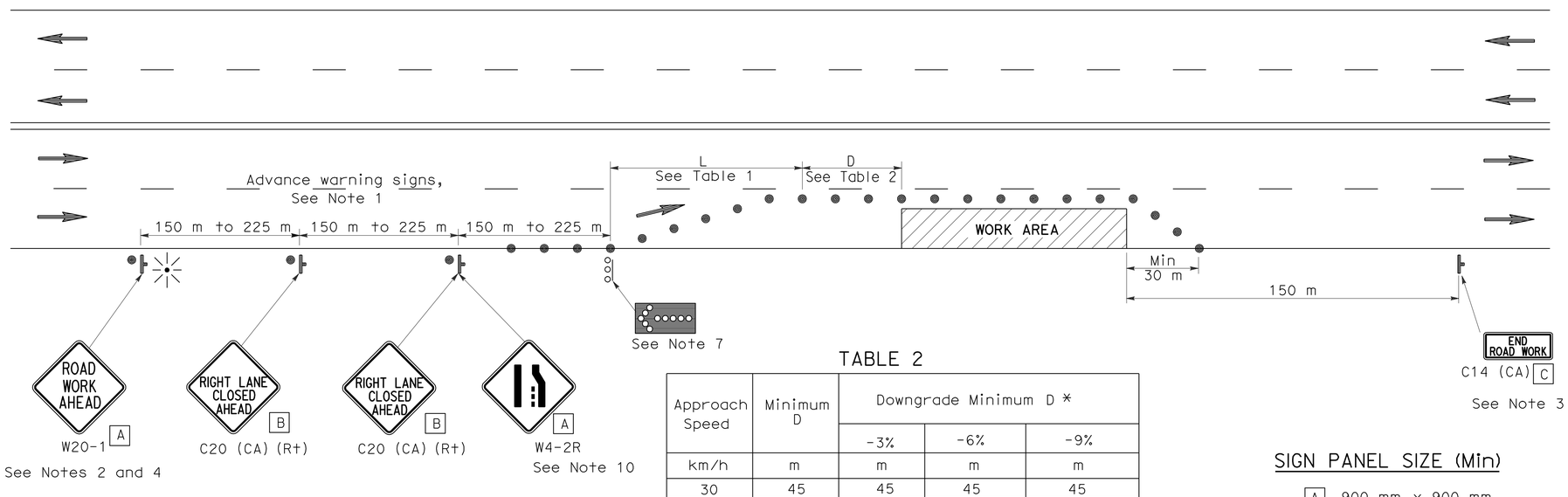

TABLE 2

Approach Speed	Minimum D	Downgrade Minimum D *		
		-3%	-6%	-9%
km/h	m	m	m	m
30	45	45	45	45
40	45	50	50	53
50	45	66	70	74
60	45	87	92	97
70	65	1 10	1 16	124
80	85	136	144	154

* Use on sustained downgrade steeper than or equal to grades shown and longer than 1.6 km.

SIGN PANEL SIZE (Min)

- A 900 mm x 900 mm
- B 914 mm x 914 mm
- C 914 mm x 457 mm

LEGEND

- Traffic Cone
- Temporary Sign
- Direction of Travel
- Flashing Arrow Sign (FAS)
- FAS Support or Trailer
- Portable Flashing Beacon

NOTES

Unless otherwise specified in the special provisions, all temporary warning signs shall have black legend on orange background.

California code are designated by (CA). Otherwise, Federal codes are shown.

NOTES

1. Where approach speeds are low, advance warning signs may be placed at 90 m spacing and placed closer in urban areas.
2. Each advance warning sign shall be equipped with at least two flags for daytime closure. Each flag shall be at least 400 mm x 400 mm in size and shall be orange or fluorescent red-orange in color. Flashing beacons shall be placed at the locations indicated for lane closure during hours of darkness.
3. A C14 (CA) "END ROAD WORK" sign, as appropriate, shall be placed at the end of the lane closure unless the end of work area is obvious, or ends within a larger project's limits.
4. If the W20-1 sign would follow within 600 m of a stationary W20-1 or C11 (CA) "ROAD WORK NEXT _____ MILES", use a C20 (CA) sign for the first advance warning sign.
5. All cones used for lane closures during the hours of darkness shall be fitted with retroreflective bands (or sleeves) as specified in the specifications.
6. Portable delineators, placed at one-half the spacing indicated for traffic cones, may be used instead of cones for daytime closures only.
7. Flashing arrow sign shall be either Type I or Type II.
8. The maximum spacing between cones along a tangent shall be 15 m and along a taper shall be approximately as shown in Table 1.
9. For approach speeds over 80 km/h, use the "Traffic Control System for Lane Closure On Freeways And Expressways" plan for lane closure details and requirements.
10. When specified in the special provisions, a W4-2 "LANE ENDS" symbol sign is to be used in place of the C20 (CA) "RIGHT LANE CLOSED AHEAD" sign.

TABLE I

Approach Speed	* Minimum L	** Max spacing of cones along taper
km/h	m	m
30	38	6
40	38	8
50	98	10
60	98	12
70	183	14
80	183	15
Over 80	See Note 9	

* Use L for lane widths less than or equal to 3.6 m.

** See Note 8

STATE OF CALIFORNIA
DEPARTMENT OF TRANSPORTATION

TRAFFIC CONTROL SYSTEM FOR LANE CLOSURE ON MULTILANE CONVENTIONAL HIGHWAYS

NO SCALE

ALL DIMENSIONS ARE IN MILLIMETERS UNLESS OTHERWISE SHOWN

RSP T11 DATED APRIL 28, 2005 SUPERSEDES STANDARD PLAN T11 DATED JULY 1, 2004-PAGE 220 OF THE STANDARD PLANS BOOK DATED JULY 2004.

REVISED STANDARD PLAN RSP T11

2004 REVISED Std PLAN RSP T11

DIST	COUNTY	ROUTE	KILOMETER POST TOTAL PROJECT	SHEET NO.	TOTAL SHEETS
10	Sta	219,108	3.4/7.9, 44.3/44.9	486	522

Greg W. Edwards
REGISTERED CIVIL ENGINEER

April 28, 2005
PLANS APPROVAL DATE

REGISTERED PROFESSIONAL ENGINEER Greg W. Edwards No. C36386 Exp. 6-30-06 CIVIL STATE OF CALIFORNIA

The State of California or its officers or agents shall not be responsible for the accuracy or completeness of electronic copies of this plan sheet.

To get to the Caltrans web site, go to: http://www.dot.ca.gov

Caltrans Metric

To accompany plans dated 6-28-10

LEGEND

- Traffic Cone
- Temporary Sign
- Direction of Travel
- Flashing Arrow Sign (FAS)
- FAS Support or Trailer
- Portable Flashing Beacon

TABLE 1

Approach Speed	*Minimum L	** Max spacing of cones along taper
km/h	m	m
30	38	6
40	38	8
50	98	10
60	98	12
70	183	14
80	183	15
Over 80	See Note 11	

* Use L for lane widths less than or equal to 3.6 m.

** See Note 10

TABLE 2

Approach Speed	Minimum D	Downgrade Minimum D *		
		-3%	-6%	-9%
km/h	m	m	m	m
30	45	45	45	45
40	45	50	50	53
50	45	66	70	74
60	45	87	92	97
70	65	110	116	124
80	85	136	144	154

* Use on sustained downgrade steeper than or equal to grades shown and longer than 1.6 km.

TYPICAL CLOSING OF HALF ROADWAY

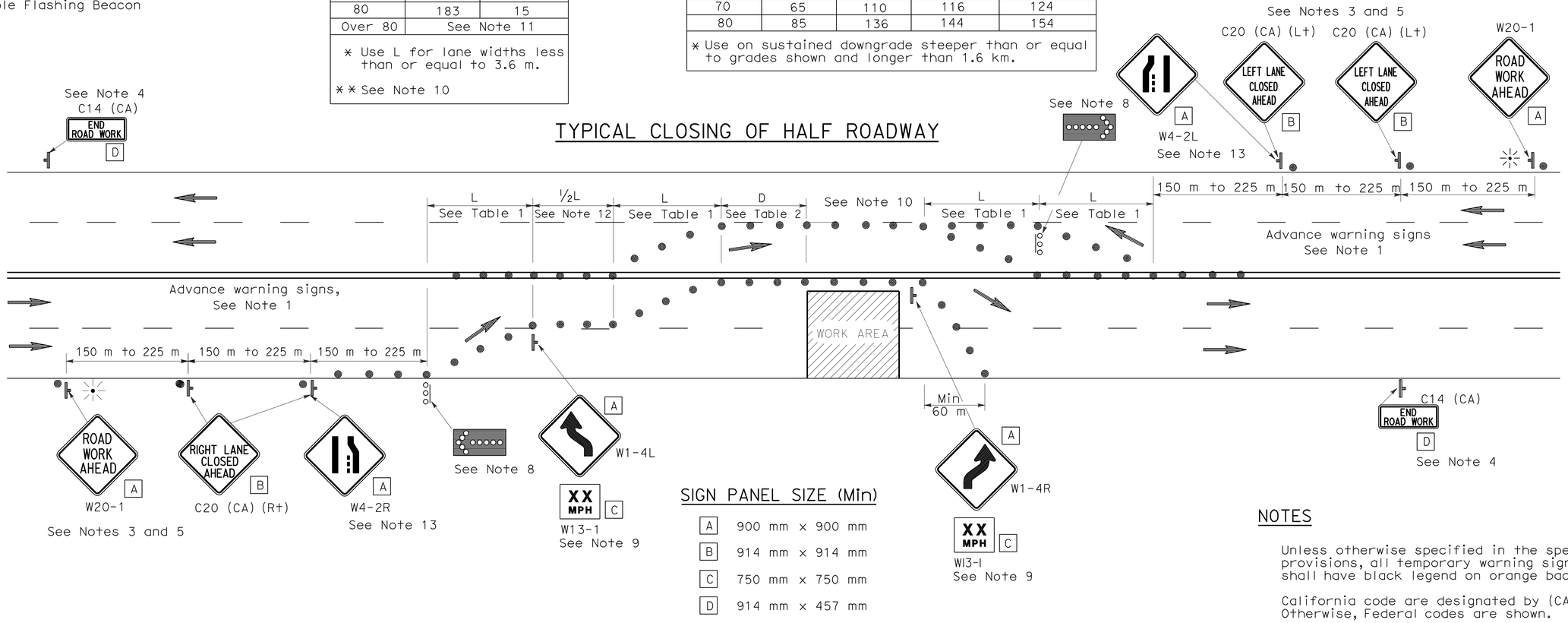

SIGN PANEL SIZE (Min)

A	900 mm x 900 mm
B	914 mm x 914 mm
C	750 mm x 750 mm
D	914 mm x 457 mm

NOTES

Unless otherwise specified in the special provisions, all temporary warning signs shall have black legend on orange background.

California code are designated by (CA). Otherwise, Federal codes are shown.

NOTES

1. Where Approach speeds are low, advance warning signs may be placed at 90 m spacing and placed closer in urban areas.
2. At least one person shall be assigned to provide full time maintenance of traffic control devices for lane closure unless, otherwise directed by the Engineer.
3. Each advance warning sign in each direction of travel shall be equipped with at least two flags for daytime closure. Each flag shall be at least 400 mm x 400 mm in size and shall be orange or fluorescent red-orange in color. Flashing beacons shall be placed at the locations indicated for lane closure during hours of darkness.
4. A C14 (CA) "END ROAD WORK" sign, as appropriate, shall be placed at the end of the lane closure unless the end of work area is obvious, or ends within a larger project's limits.
5. If the W20-1 sign would follow within 600 m of a stationary W20-1 or C11 (CA) "ROAD WORK NEXT _____ MILES", use a C20 (CA) sign for the first advance warning sign.
6. All cones used for lane closures during the hours of darkness shall be fitted with retroreflective bands (or sleeves) as specified in the specifications.
7. Portable delineators, placed at one-half the spacing indicated for traffic cones, may be used instead of cones for daytime closures only.
8. Flashing arrow signs shall be either Type I or Type II.
9. Advisory speed will be determined by the Engineer. The W13-1 Sign will not be required when advisory speed is more than the posted or maximum speed limit.
10. The maximum spacing between cones along a tangent shall be 15 m and along a taper shall be approximately as shown in Table 1.
11. For approach speeds over 80 km/h, use the "Traffic Control System For Lane Closure On Freeways And Expressways" plan for lane closure details and requirements.
12. Unless otherwise specified in the special provisions, the (½ L) shown between the two (L) lane closure tapers shall be used.
13. When specified in the special provisions, a W4-2 "Lane Ends" symbol sign is to be used in place of the C20 (CA) "RIGHT (LEFT) LANE CLOSED AHEAD" sign.

STATE OF CALIFORNIA
DEPARTMENT OF TRANSPORTATION

TRAFFIC CONTROL SYSTEM FOR LANE CLOSURE ON MULTILANE CONVENTIONAL HIGHWAYS

NO SCALE

ALL DIMENSIONS ARE IN MILLIMETERS UNLESS OTHERWISE SHOWN

RSP T12 DATED APRIL 28, 2005 SUPERSEDES STANDARD PLAN T12 DATED JULY 1, 2004-PAGE 221 OF THE STANDARD PLANS BOOK DATED JULY 2004.

REVISED STANDARD PLAN RSP T12

2004 REVISED Std PLAN RSP T12

NOTES

Unless otherwise specified in the special provisions, all temporary warning signs shall have black legend on orange background.

California code are designated by (CA). Otherwise, Federal codes are shown.

To accompany plans dated 6-28-10

Caltrans Metric

DIST	COUNTY	ROUTE	KILOMETER POST TOTAL PROJECT	SHEET No.	TOTAL SHEETS
10	Sta	219,108	3.4/7.9, 44.3/44.9	487	522

REGISTERED CIVIL ENGINEER

April 28, 2005
PLANS APPROVAL DATE

REGISTERED PROFESSIONAL ENGINEER G.W. Edwards No. C36386 Exp. 6-30-06 CIVIL STATE OF CALIFORNIA

The State of California or its officers or agents shall not be responsible for the accuracy or completeness of electronic copies of this plan sheet.

To get to the Caltrans web site, go to: http://www.dot.ca.gov

TYPICAL LANE CLOSURE WITH REVERSIBLE CONTROL

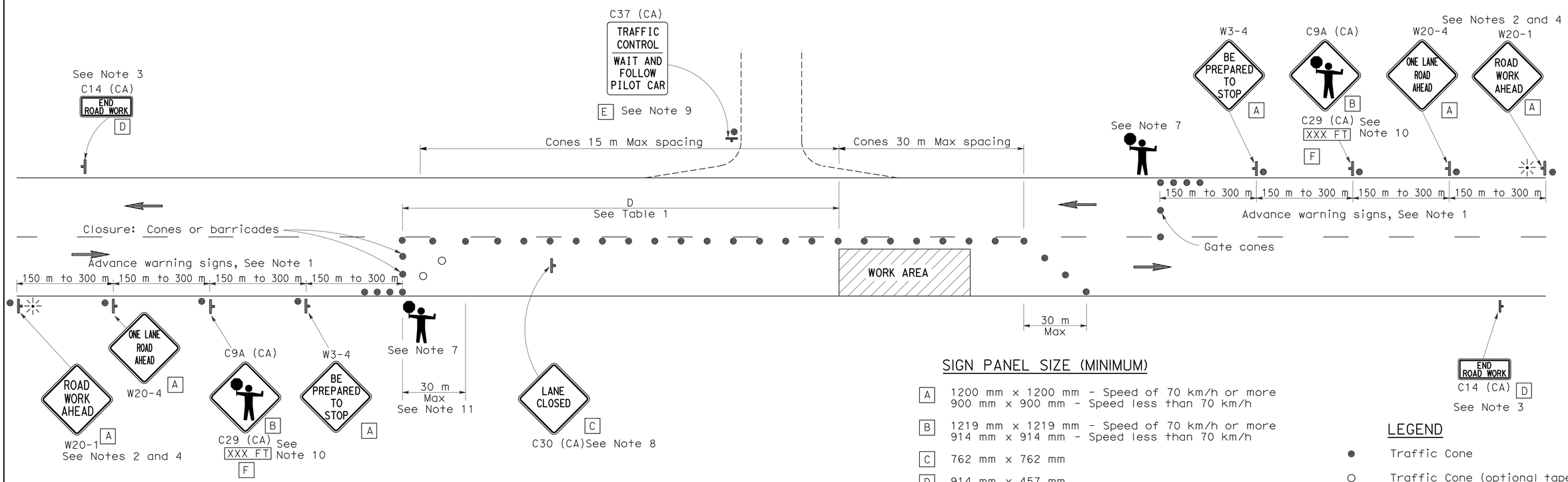

SIGN PANEL SIZE (MINIMUM)

- A — 1200 mm x 1200 mm - Speed of 70 km/h or more; 900 mm x 900 mm - Speed less than 70 km/h
- B — 1219 mm x 1219 mm - Speed of 70 km/h or more; 914 mm x 914 mm - Speed less than 70 km/h
- C — 762 mm x 762 mm
- D — 914 mm x 457 mm
- E — 914 mm x 1067 mm
- F — 914 mm x 229 mm

LEGEND

- Traffic Cone
- Traffic Cone (optional taper)
- Temporary Sign
- Direction of Travel
- Portable Flashing Beacon
- Flagger

NOTES

1. Where approach speeds are low, advance warning signs may be placed at 90 m spacing, and closer in urban areas.
2. Each advance warning sign in each direction of travel shall be equipped with at least two flags for daytime closure. Each flag shall be at least 400 mm x 400 mm in size and shall be orange or fluorescent red-orange in color. Flashing beacons shall be placed at the locations indicated for lane closure during hours of darkness.
3. A C14 (CA) "END ROAD WORK" sign, as appropriate, shall be placed at the end of the lane control unless the end of work area is obvious, or ends within a larger project's limits.
4. If the W20-1 sign would follow within 600 m of a stationary W20-1 or C11 (CA) "ROAD WORK NEXT_____ MILES", use a C16 (CA) sign for the first advance warning sign.
5. All cones used for lane closures during the hours of darkness shall be fitted with retroreflective bands (or sleeves) as specified in the specifications.
6. Portable delineators, placed at one-half the spacing indicated for traffic cones, may be used instead of cones for daytime closures only.
7. Additional advance flaggers may be required. Flagger should stand in a conspicuous place, be visible to approaching traffic as well as approaching vehicles after the first vehicle has stopped. During the hours of darkness, the flagging-station and flagger shall be illuminated and clearly visible to approaching traffic. The illumination footprint of the lighting on the ground shall be at least 6 m in diameter. Place a minimum of four cones at 15 m intervals in advance of flagger station as shown.
8. Place C30 (CA) "LANE CLOSED" sign at 150 to 300 m intervals throughout extended work areas. They are optional if the work area is visible from the flagger station.
9. When a pilot car is used, place a C37 (CA) "TRAFFIC CONTROL-WAIT AND FOLLOW PILOT CAR" sign at all intersections within traffic control area. Signs shall be clean and visible at all times.
10. An optional C29 (CA) sign may be placed below the C9A (CA) sign.
11. Traffic cones or barricades may be placed on the optional taper as shown, barricades shall be Type I, II, or III.

TABLE I

Approach Speed	Minimum D	Downgrade Minimum D *
km/h	m	m
30	60	72
40	60	72
50	60	72
60	90	108
70	90	108
80	150	180
90	150	180
100	150	180
110	170	204

* Use on substained downgrade steeper than -3 percent and longer than 1.6 km.

STATE OF CALIFORNIA
DEPARTMENT OF TRANSPORTATION

TRAFFIC CONTROL SYSTEM FOR LANE CLOSURE ON TWO LANE CONVENTIONAL HIGHWAYS

NO SCALE

ALL DIMENSIONS ARE IN MILLIMETERS UNLESS OTHERWISE SHOWN

RSP T13 DATED APRIL 28, 2005 SUPERSEDES STANDARD PLAN T13 DATED JULY 1, 2004-PAGE 222 OF THE STANDARD PLANS BOOK DATED JULY 2004.

REVISED STANDARD PLAN RSP T13

2004 REVISED Std PLAN RSP T13

DIST	COUNTY	ROUTE	KILOMETER POST TOTAL PROJECT	SHEET NO.	TOTAL SHEETS
10	Sta	219,108	3.4/7.9, 44.3/44.9	488	522

Caltrans Metric

Greg W. Edwards
REGISTERED CIVIL ENGINEER

April 28, 2005
PLANS APPROVAL DATE

REGISTERED PROFESSIONAL ENGINEER
Greg W. Edwards
No. C36386
Exp. 6-30-06
CIVIL
STATE OF CALIFORNIA

The State of California or its officers or agents shall not be responsible for the accuracy or completeness of electronic copies of this plan sheet.

To get to the Caltrans web site, go to: http://www.dot.ca.gov

To accompany plans dated 6-28-10

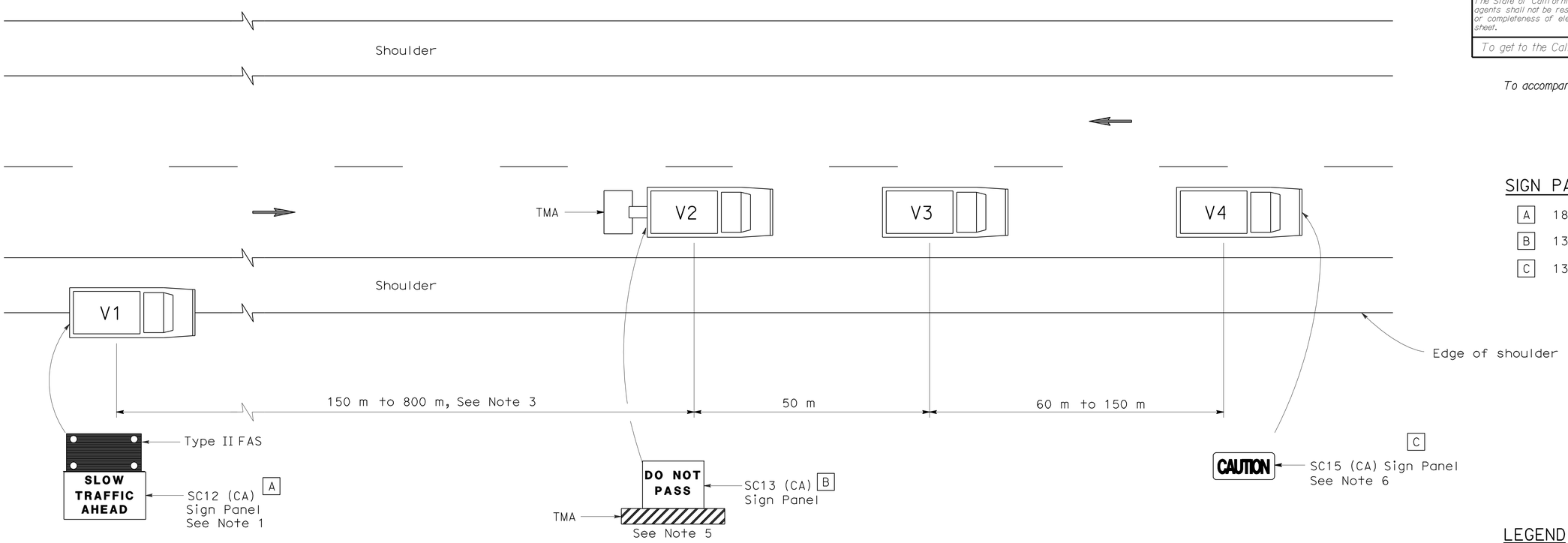

SIGN PANEL SIZE (Min)

A	1829 mm x 1067 mm
B	1372 mm x 1067 mm
C	1372 mm x 610 mm

LEGEND

V1	Sign Vehicle
V2	Shadow Vehicle
V3	Work/Application Vehicle
V4	Sign Vehicle
TMA	Truck-Mounted Attenuator
→	Direction of Travel
▭	Flashing Arrow Sign (FAS) in flashing caution mode

NOTES

1. Either a changeable message sign or a SC12 (CA) "SLOW TRAFFIC AHEAD" sign shall be mounted on the rear of sign vehicle V1. A Type II flashing arrow sign may be used with the SC12 (CA) sign panel.
2. Sign vehicle V1 should be positioned where highly
3. If traffic queues develop, sign vehicle V1 should be
4. Vehicle-mounted sign panels shall be Type III, IV VII, VIII, or IX retroreflective sheeting, black on white, black on orange, or black on fluorescent orange, with 150 mm minimum series D letters per Caltrans sign specifications.
5. Gross Vehicle Weight of shadow vehicle shall be a minimum of 9000 kilograms and shall be equipped with a truck-mounted attenuator. The sign panel shown shall be mounted on the rear of shadow vehicle V2. The message "LANE CLOSED" may be used in place of the "DO NOT PASS" message.
6. The sign panel shown shall be mounted on the front of sign vehicle V4, facing opposing traffic.
7. All vehicles shall be equipped with flashing or rotating amber lights.
8. Sign vehicle V4 will not be required when the work and vehicles V2 and V3 are 0.6 m or more from the centerline of the highway during the work or application operations.
9. All vehicles used for lane closures shall be equipped with two-way radios and the vehicle operators shall maintain communication during the work or application operation.
10. This plan shall not be used where workers would be on foot in the work area. Use a stationary type lane closure (Revised Standard Plan RSP T13) for this condition.
11. When multiple work vehicles are used in close proximity to each other, only one shadow vehicle is required and spacing between work vehicles shall be minimized in order to deter traffic from entering the closed lane.

STATE OF CALIFORNIA
DEPARTMENT OF TRANSPORTATION

TRAFFIC CONTROL SYSTEM FOR MOVING LANE CLOSURE ON TWO LANE HIGHWAYS

NO SCALE

ALL DIMENSIONS ARE IN MILLIMETERS UNLESS OTHERWISE SHOWN

RSP T17 DATED APRIL 28, 2005 SUPERSEDES STANDARD PLAN T17 DATED JULY 1, 2004-PAGE 226 OF THE STANDARD PLANS BOOK DATED JULY 2004.

REVISED STANDARD PLAN RSP T17

2004 REVISED Std PLAN RSP T17

DIST	COUNTY	ROUTE	KILOMETER POST TOTAL PROJECT	SHEET NO.	TOTAL SHEETS
10	Sta	219,108	3.4/7.9, 44.3/44.9	489	522

Caltrans Metric

REGISTERED ELECTRICAL ENGINEER

October 5, 2007
PLANS APPROVAL DATE

REGISTERED PROFESSIONAL ENGINEER Jeffery G. McRae No. E14512 Exp. 6-30-08 ELECTRICAL STATE OF CALIFORNIA

The State of California or its officers or agents shall not be responsible for the accuracy or completeness of electronic copies of this plan sheet.

To get to the Caltrans web site, go to: http://www.dot.ca.gov

To accompany plans dated 6-28-10

ELECTROLIERS

STANDARD TYPES
15, 15D
15 STRUCTURE
21, 21D STRUCTURE
30
31
32
35
36-20A

High mast lighting standard

Double arm lighting standard

Existing electrolier

Electrolier foundation (Future installation)

NOTES

1. Luminaires shall be 310 W HPS when installed on Type 21, 21D, 30, 31, 32, 35 and 36-20A Standards, unless otherwise specified. Luminaires shall be 200 W HPS when installed on other type standards or poles, unless otherwise specified.
2. Luminaires shall be the cutoff type, ANSI Type III medium cutoff lighting distribution, unless otherwise specified.
3. Variations noted adjacent to symbol on project plans.

Electrolier (see project notes or project plans)

Luminaire on wood pole

STANDARD NOTES

- AB — Abandon. If applied to conduit, remove conductors.
- BC — Install pull box in existing conduit run.
- BP — Pedestrian barricade, type as indicated on plan.
- CB — Install conduit into existing pull box.
- CC — Connect new and existing conduit. Remove existing conductors and install conductors as indicated.
- CF — Conduit to remain for future use. Remove conductors. Install pull wire or rope.
- DH — Detector handhole.
- FA — Foundation to be abandoned.
- IS — Install sign on signal mast arm.
- NS — No slip base on standard.
- PEC — Photoelectric control.
- PEU — Photoelectric unit.
- RC — Equipment or material to be removed and become the property of the Contractor.
- RE — Remove electrolier, fuses and ballast. Tape ends of conductors.
- RL — Relocate equipment.
- RR — Remove and reuse equipment.
- RS — Remove and salvage equipment.
- SC — Splice new to existing conductors.
- SD — Service disconnect.
- SF — Standard to remain for future use. Remove luminaire, pole conductors, fuses and ballast. Tape disconnects.
- TSP — Telephone service point.

ABBREVIATIONS AND EQUIPMENT DESIGNATIONS

PROPOSED	EXISTING	
BBS	bbs	Battery backup system
BC	bc	Bolt circle
C	C	Conduit
CCTV	cctv	Closed circuit television
CKT	ckt	Circuit
CMS	cms	Changeable message sign
DLC	dlc	Loop detector lead-in cable
EMS	ems	Extinguishable message sign
EVC	evc	Emergency vehicle cable
EVD	evd	Emergency vehicle detector
FB	fb	Flashing beacon
FBCA	fbca	Flashing beacon control assembly
FBS	fbs	Flashing beacon with slip base
FO	fo	Fiber optic
G	G	Ground (Equipment Grounding Conductor)
GFCI	GFCI	Ground fault circuit interrupt
HAR	har	Highway advisory radio
HEX	hex	Hexagonal
HPS	hps	High pressure sodium
IISNS	iisns	Internally illuminated street name sign
ISL	isl	Induction sign lighting
LED	led	Light emitting diode
LMA	lma	Luminaire mast arm
LPS	lps	Low pressure sodium
LTG	ltg	Lighting
LUM	lum	Luminaire
MAT	mat	Mast arm mounted vehicle signal faces, top attachment
MAS	mas	Mast arm mounted vehicle signal faces, side attachment
MAS-4A	mas-4A	Mast arm mounted vehicle signal faces, side attachment - 4 signal section
MAS-4B	mas-4B	
MAS-4C	mas-4C	
MAS-5A	mas-5A	Mast arm mounted vehicle signal faces, side attachment - 5 signal section
MAS-5B	mas-5B	
MC	mc	Mercury contactor
M/M	m/m	Multiple to multiple transformer
MT	mt	Conduit with pull wire or rope only
MTG	mtg	Mounting
	mv	Mercury vapor lighting fixture
N	N	Neutral (Grounded Conductor)
NC	NC	Normally closed
NO	NO	Normally open
PB	pb	Pull box
PEC	pec	Photoelectric control (Type I, II, III, IV or V as shown)
PED	ped	Pedestrian
PEU	peu	Photoelectric unit
PPB	ppb	Pedestrian push button
RL	RL	Relocated equipment
RM	rm	Ramp metering
SB	sb	Slip base
SIC	sic	Signal interconnect cable
SIG	sig	Signal
SMA	sma	Signal mast arm
SNS	sns	Street name sign
SP	sp	Service point
TDC	tdc	Telephone demarcation cabinet
TMS	tms	Traffic monitoring station
TOS	tos	Traffic Operations System
VEH	veh	Vehicle
XFMR	xfmr	Transformer
COMM	comm	Communication
RWIS	rwis	Roadway weather information system

SOFFIT AND WALL MOUNTED LUMINAIRES

Pendant, 70 W HPS unless otherwise specified.

Flush, 70 W HPS unless otherwise specified.

Wall surface, 70 W HPS unless otherwise specified.

Existing soffit or wall luminaire to remain unmodified.

Existing soffit or wall luminaire to be modified as specified.

NOTE

Arrow indicates "street side" of luminaire.

STATE OF CALIFORNIA
DEPARTMENT OF TRANSPORTATION

ELECTRICAL SYSTEMS (SYMBOLS AND ABBREVIATIONS)

NO SCALE

ALL DIMENSIONS ARE IN MILLIMETERS UNLESS OTHERWISE SHOWN

RSP ES-1A DATED OCTOBER 5, 2007 SUPERSEDES STANDARD PLAN ES-1A DATED JULY 1, 2004-PAGE 413 OF THE STANDARD PLANS BOOK DATED JULY 2004.

REVISED STANDARD PLAN RSP ES-1A

2004 REVISED Std PLAN RSP ES-1A

6-27-07

DIST	COUNTY	ROUTE	KILOMETER POST TOTAL PROJECT	SHEET NO.	TOTAL SHEETS
10	Sta	219,108	3.4/7.9, 44.3/44.9	490	522

Caltrans Metric

Jeffery G. McRae
REGISTERED ELECTRICAL ENGINEER

October 5, 2007
PLANS APPROVAL DATE

REGISTERED PROFESSIONAL ENGINEER
Jeffery G. McRae
No. E14512
Exp. 6-30-08
ELECTRICAL
STATE OF CALIFORNIA

The State of California or its officers or agents shall not be responsible for the accuracy or completeness of electronic copies of this plan sheet.

To get to the Caltrans web site, go to: http://www.dot.ca.gov

To accompany plans dated 6-28-10

CONDUIT

PROPOSED	EXISTING	
		Lighting conduit, unless otherwise indicated or noted
		Traffic signal conduit
C	c	Communication conduit
T	t	Telephone conduit
F	f	Fire alarm conduit
FO	fo	Fiber optic conduit
		Conduit termination (RSP ES-9A C)
R	r	Conduit riser in/on structure or Service pole

SERVICE EQUIPMENT

PROPOSED	EXISTING	
OH	oh	Overhead lines
U	u	Wood pole "U" indicates utility owned
		Pole guy-with anchor
		Utility transformer-ground mounted
III		Service equipment enclosure type
		Service equipment enclosure door indicates front of enclosure
T	t	Telephone demarcation cabinet

POLE-MOUNTED SERVICE DESIGNATION

TYPE H SERVICE - 8.8 m

Type of installation

Pole height above grade

ILLUMINATED OVERHEAD SIGN

PROPOSED	EXISTING	
		Overhead sign - Single post
		Overhead sign - Two post
		Overhead sign - Mounted on structure
		Overhead sign with electrolier

SIGNAL EQUIPMENT

PROPOSED	EXISTING	
		Pedestrian signal face
		Pedestrian push button post
		Pedestrian barricade
		Vehicle signal face (with backplate, 3-Section: red, yellow and green)
		Vehicle signal face with angle visors
PV	PV	Modifications of basic symbols: "L" Indicates all non-arrow sections louvered "LG" Indicates louvered green section only "PV" indicates 300 mm programmed visibility sections "200" indicates all 200 mm sections (only when specified)
		Type 15TS and Vehicle signal face
		Vehicle signal face with red, yellow and green left arrow sections
		Vehicle signal face with red and yellow sections and up green arrow
		Vehicle signal face (5 Section) with red, yellow and green sections and yellow and green right arrows
		Type 1 Standard and attached vehicle signal faces
		Standard with signal mast arm only and attached vehicle signal faces and internally illuminated street name sign
		Type 33 Standard, Left-turn vehicle signal face and sign
		Standard with luminaire and signal mast arms and attached vehicle signal faces
		Cantilever flashing beacon Type 9 Frame, with a sign unless otherwise specified or indicated
Y Y	Y Y	Type 15-FBS Standard with two vehicle signal face sections with lens, backplate and visor with a sign
R	Y	Flashing beacon. One vehicle signal face section with lens, backplate and visor. "R" indicates red indication, "Y" indicates yellow indication
		Controller assembly. Door indicates front of cabinet
		Guard post
		Type 1 Standard with "Meter On" sign
		Emergency vehicle detector

NOTES

1. All signal sections shall be 300 mm unless shown otherwise.
2. Signal heads shall be provided with backplates unless shown otherwise.
3. Signal indication shall be LED.

STATE OF CALIFORNIA
DEPARTMENT OF TRANSPORTATION

ELECTRICAL SYSTEMS (SYMBOLS AND ABBREVIATIONS)

NO SCALE

ALL DIMENSIONS ARE IN MILLIMETERS UNLESS OTHERWISE SHOWN

RSP ES-1B DATED OCTOBER 5, 2007 SUPERSEDES STANDARD PLAN ES-1B DATED JULY 1, 2004-PAGE 414 OF THE STANDARD PLANS BOOK DATED JULY 2004.

REVISED STANDARD PLAN RSP ES-1B

2004 REVISED Std PLAN RSP ES-1B

8-9-07

DIST	COUNTY	ROUTE	KILOMETER POST TOTAL PROJECT	SHEET NO.	TOTAL SHEETS
10	Sta	219,108	3.4/7.9, 44.3/44.9	491	522

Caltrans Metric

Jeffery G. McRae
REGISTERED ELECTRICAL ENGINEER

October 5, 2007
PLANS APPROVAL DATE

REGISTERED PROFESSIONAL ENGINEER
Jeffery G. McRae
No. E14512
Exp. 6-30-08
ELECTRICAL
STATE OF CALIFORNIA

The State of California or its officers or agents shall not be responsible for the accuracy or completeness of electronic copies of this plan sheet.

To get to the Caltrans web site, go to: http://www.dot.ca.gov

To accompany plans dated 6-28-10

EQUIPMENT IDENTIFICATION

ILLUMINATED SIGN IDENTIFICATION NUMBER:

Sign No. 12345 — Sign number - Place on post or structure

10 ISL SCI 1.0

- 1.0 — Transformer rating (kVA)
- SCI — Lighting control type
- ISL — Number and type of fixtures

Do NOT place on standard or structure

ELECTROLIER OR EQUIPMENT IDENTIFICATION NUMBER:

12345 - 4.6

- 4.6 — Mast arm length in meters, if shown. Do not place on standard or structure.
- 12345 — Equipment number - Place on standard or structure. Existing equipment numbers are shown in parenthesis

CONDUIT AND CONDUCTOR IDENTIFICATION:

41C, 2#10, 15#14, 2 DLC

- 2#10, 15#14, 2 DLC — Number and size of conductors and cables
- 41C — Size of conduit in millimeters

Ø1, Ø2, Ø2P, etc.	Traffic phase identification for signal faces, detectors and phase diagrams
1 2 3	Project note numbers
A B C	Equipment description, installation or item numbers
1 2 3	Conduit run numbers

SIGNAL AND LIGHTING STANDARD (TYPICAL DESIGNATION):

19A - 3 - 161

- 161 — Wind velocity=161 km/h
- 3 — Case 3 arm loading
- 19A — Standard type
- Standard Plan sheet number
- Detail number or letter

WIRING DIAGRAM LEGEND

P	Pole
CB	Circuit breaker
A	Ampere
V	Volt
M	Metered
UM	Unmetered
NB	Neutral bus
GB	Ground bus
G	Equipment grounding conductor
N	Grounded conductor (Neutral)

- External conductor
- Conductor or bus
- Tie point
- Contactor coil
- Contactor, Contact NO
- Terminal blocks
- Contactor, Contact NC
- Enclosure bond
- Grounding electrode
- Circuit breaker
- Receptacle

PULL BOXES

PROPOSED EXISTING

Pull box-No. 5 unless otherwise indicated or noted.

3 9A(21)

Pull box-Additional designations or descriptions

3 = No. 3½ pull box
5 = No. 5 pull box
6 = No. 6 pull box
7 = No. 7 (Ceiling pull box)
8 = No. 8 (Pendant soffit pull box)
9 = No. 9 pull box
9A = No. 9A pull box

(C) = Communications pull box
(E) = Pull box with extension
(S) = Sprinkler control pull box
(21) = Anchor bolts and conduit for future installation of Type 21 Standard
(T) = Traffic pull box

MISCELLANEOUS EQUIPMENT

PROPOSED	EXISTING	
CMS	cms	Changeable message sign
		Closed circuit television camera
		Highway advisory radio pole and antenna
EMS	ems	Extinguishable message sign
		Detection device
M V	m v	M = Microwave sensor V = Video image sensor

VEHICLE DETECTORS

5 J 9 U

- Vehicle detector designation
- U = Upper, L = Lower
- Slot number in input file
- Input file (I or J)
- Phase

PROPOSED	EXISTING	
		Type A detector loop. Outline of sawcut shown.
		Type B detector loop. Outline of sawcut shown.
		Type C detector loop. Outline of sawcut shown.
		Type D detector loop. Outline of sawcut shown.
		Type E detector loop. Outline of sawcut shown.
		Type Q detector loop. Outline of sawcut shown.
		Magnetic detector
DH	dh	Detector handhole
		Microwave or video detection zone

STATE OF CALIFORNIA
DEPARTMENT OF TRANSPORTATION

ELECTRICAL SYSTEMS (SYMBOLS AND ABBREVIATIONS)

NO SCALE

ALL DIMENSIONS ARE IN MILLIMETERS UNLESS OTHERWISE SHOWN

RSP ES-1C DATED OCTOBER 5, 2007 SUPERSEDES STANDARD PLAN ES-1C DATED JULY 1, 2004-PAGE 415 OF THE STANDARD PLANS BOOK DATED JULY 2004.

REVISED STANDARD PLAN RSP ES-1C

2004 REVISED Std PLAN RSP ES-1C

10-1-07

DIST	COUNTY	ROUTE	KILOMETER POST TOTAL PROJECT	SHEET NO.	TOTAL SHEETS
10	Sta	219,108	3.4/7.9, 44.3/44.9	492	522

Jeffery G. McRae
REGISTERED ELECTRICAL ENGINEER

October 5, 2007
PLANS APPROVAL DATE

REGISTERED PROFESSIONAL ENGINEER Jeffery G. McRae No. E14512 Exp. 6-30-08 ELECTRICAL STATE OF CALIFORNIA

The State of California or its officers or agents shall not be responsible for the accuracy or completeness of electronic copies of this plan sheet.

To get to the Caltrans web site, go to: http://www.dot.ca.gov

To accompany plans dated 6-28-10

Caltrans Metric

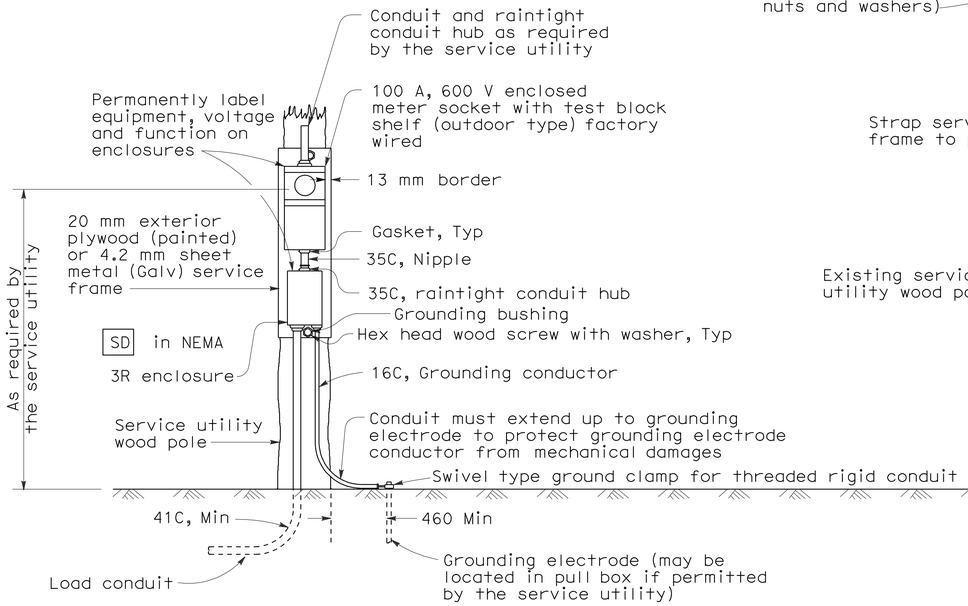

TYPE SCE-1 SERVICE

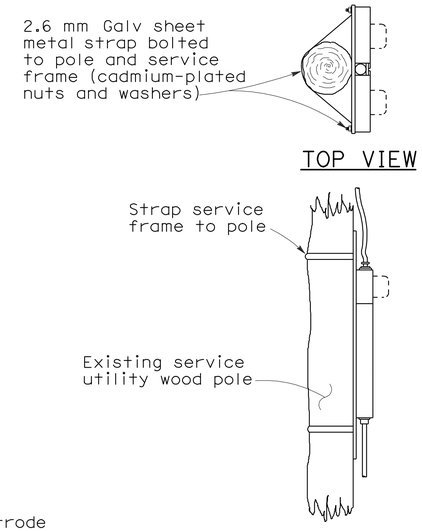

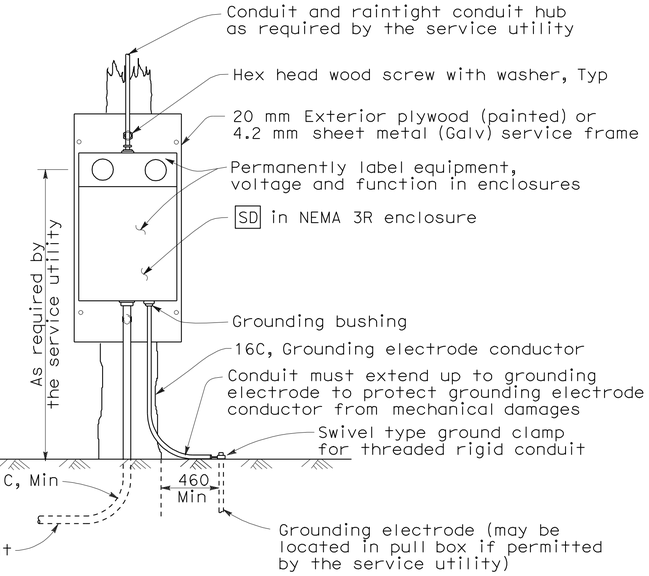

TYPE SCE-2 SERVICE

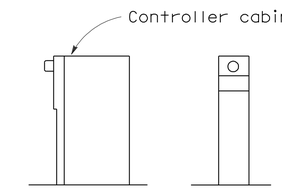

TYPE OF SERVICE (TYPICAL)

Type II service equipment enclosure mounted on a side of a controller cabinet.
Type III complete free-standing service equipment enclosure.

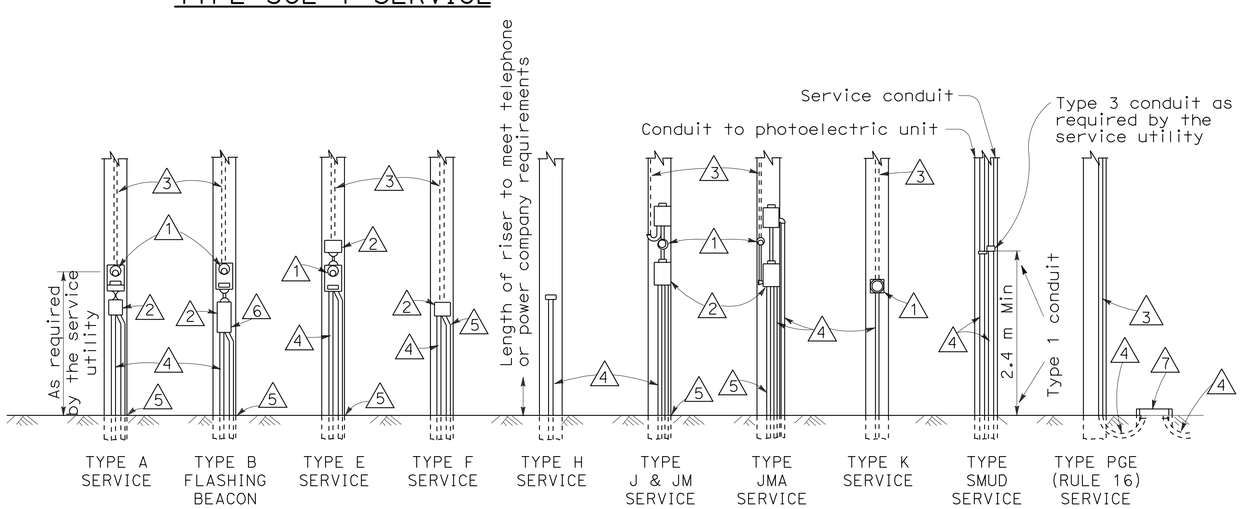

NOTES

1. Meter socket.
2. Service enclosure with a minimum 60 A rated main circuit breaker, unless otherwise shown.
3. (a) Utility owned pole. The service utility will furnish and install required service riser, PEU with conductors and other equipment as needed.
   (b) State owned pole. The Contractor shall furnish and install required service riser and equipment.
4. Conduit, length and size as required.
5. 16C, 1#6. See "Service Grounding" detail.
6. Flashing beacon control assembly.
7. Service pull box, No. 5 unless otherwise noted, furnished and installed by the Contractor. Service utility shall determine the exact location.

POLE MOUNTED SERVICE INSTALLATIONS

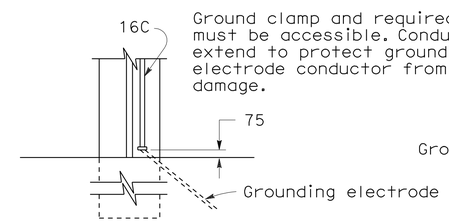

TYPE A

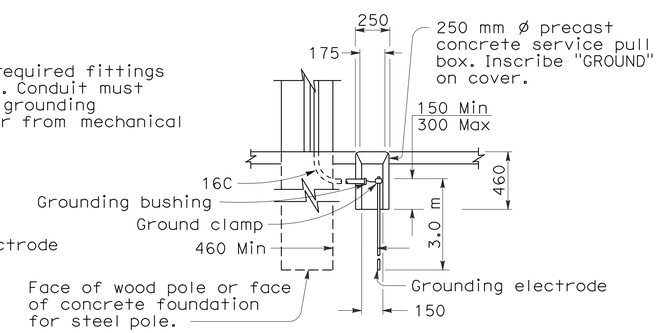

TYPE B

Use where service utility requires 460 mm clearance between grounding electrode and the pole or service equipment enclosure. Installation shown is for sidewalk or paved areas. In unpaved areas, omit special service pull box and locate ground clamp above ground or locate ground clamp in nearest pull box.

SERVICE GROUNDING

STATE OF CALIFORNIA
DEPARTMENT OF TRANSPORTATION

ELECTRICAL SYSTEMS (SERVICE EQUIPMENT)

NO SCALE

ALL DIMENSIONS ARE IN MILLIMETERS UNLESS OTHERWISE SHOWN

RSP ES-2A DATED OCTOBER 5, 2007 SUPERSEDES STANDARD PLAN ES-2A DATED JULY 1, 2004-PAGE 416 OF THE STANDARD PLANS BOOK DATED JULY 2004.

REVISED STANDARD PLAN RSP ES-2A

2004 REVISED Std PLAN RSP ES-2A

7-2-07

DIST	COUNTY	ROUTE	KILOMETER POST TOTAL PROJECT	SHEET NO.	TOTAL SHEETS
10	Sta	219,108	3.4/7.9, 44.3/44.9	493	522

Caltrans Metric

Jeffery G. McRae
REGISTERED ELECTRICAL ENGINEER

October 5, 2007
PLANS APPROVAL DATE

REGISTERED PROFESSIONAL ENGINEER
Jeffery G. McRae
No. E14512
Exp. 6-30-08
ELECTRICAL
STATE OF CALIFORNIA

The State of California or its officers or agents shall not be responsible for the accuracy or completeness of electronic copies of this plan sheet.

To get to the Caltrans web site, go to: http://www.dot.ca.gov

To accompany plans dated 6-28-10

NOTES-TYPE III SERVICE EQUIPMENT ENCLOSURES:

1. Service equipment enclosure and metering equipment shall meet the requirements of the service utility. The meter area shall have a sealable, lockable, weathertight cover that can be removed without the use of tools.

2. Service equipment enclosures shall be factory wired and conform to NEMA standards.

3. Dimensions of service equipment enclosures shall meet the requirements of the service utility.

4. The dead front panels on Type III-A service equipment enclosures shall have a continuous stainless steel or aluminum piano hinge. The panel in front of the breakers shall be secured with a latch or captive screws. No live parts shall be mounted on the dead front panel.

5. The exterior door shall have provisions for padlocking. The padlock hole shall be a minimum diameter of 11 mm.

6. Enclosures housing transformers of more than one kVA shall have effective screened ventilation louvers of not less than 32 000 mm^2. Screen shall be stainless steel No. 304, with a No. 10 size mesh. Framed screen shall be secured with at least four bolts.

7. Fasteners on the exterior of the enclosure shall be vandal-resistant and shall not be removable from the exterior. Screws, nuts, bolts and washers shall be stainless steel.

8. Landing lugs for incoming service conductors shall be compatible with either copper or aluminum conductors sized to suit the conductors shown on the plan. Landing lugs shall be copper or tin-plated aluminum. Neutral bus shall be rated for 125 A and be suitable for copper or aluminum conductors unless otherwise specified. The terminal shall include but not be limited to:

   a) Incoming terminals (landing lugs)
   b) Neutral lugs
   c) Solid neutral terminal strip

9. At least 6 standard single pole circuit breaker spaces, 20 mm nominal, shall be provided for branch circuits. Circuit breaker interiors shall be copper. Interiors of enclosure shall accept plug-in or cable-in/cable-out circuit breakers.

10. Control wiring shall be 600 V, 14 stranded machine tool wire. Where subject to flexing, 19 strand wire shall be used.

11. Main bus shall be rated for 125 A and shall be tin-plated copper.

12. A plastic laminated wiring diagram shall be provided with brass mounting eyelets and attached to the inside of the enclosure and the wiring diagram shall affixed to the interior with a UL or ETL approved method.

13. An engraved phenolic nameplate on the dead front panel indicating the function of each circuit or device shall be installed with stainless steel rivets or stainless steel screws:

    a) Adjacent to the breaker or device with character size a minimum of 3 mm.

    b) At the top of the exterior door panel indicating system number, voltage level and number of phases with character size a minimum of 5 mm.

14. The plan shows the approximate location of devices within the enclosure. Components may be rearranged, however, the "working" clearances within the service equipment enclosure shall be maintained.

15. In unpaved areas a raised portland cement concrete pad 600 mm x 100 mm x width of foundation shall be constructed in front of new service equipment enclosure installation. Pad shall be set to elevation of foundation.

16. Foundation shall extend 50 mm minimum beyond edge of service equipment enclosure.

17. Internal bus, where shown, is typical only. Alternative design of proposed service equipment enclosure shall be submitted to the Engineer for approval.

18. Plug-in circuit breakers may be mounted in the vertical or horizontal position. Cable-in/cable-out circuit breakers shall be mounted in the vertical position.

19. Type III-AF and Type III-BF service equipment enclosures shall have the meter viewing windows located on the front side of the service equipment enclosures.

20. Type III-AR and Type III-BR service equipment enclosures shall be similarly constructed as Type III-AF and Type III-BF respectively, except the meter viewing windows shall be located on the back side of the service equipment enclosures.

21. Minimum clearance shall be required for front and back of service equipment enclosure per National Electrical Code, Article 110.26, "Spaces About Electric Equipment (600 Volts, Nominal, or Less)".

STATE OF CALIFORNIA
DEPARTMENT OF TRANSPORTATION

ELECTRICAL SYSTEMS (SERVICE EQUIPMENT NOTES TYPE III SERIES)

NO SCALE

ALL DIMENSIONS ARE IN MILLIMETERS UNLESS OTHERWISE SHOWN

RSP ES-2C DATED OCTOBER 5, 2007 SUPERSEDES STANDARD PLAN ES-2C DATED JULY 1, 2004-PAGE 418 OF THE STANDARD PLANS BOOK DATED JULY 2004.

REVISED STANDARD PLAN RSP ES-2C

2004 REVISED Std PLAN RSP ES-2C

DIST	COUNTY	ROUTE	KILOMETER POST TOTAL PROJECT	SHEET NO.	TOTAL SHEETS
10	Sta	219,108	3.4/7.9, 44.3/44.9	494	522

Caltrans Metric

REGISTERED ELECTRICAL ENGINEER

October 5, 2007
PLANS APPROVAL DATE

REGISTERED PROFESSIONAL ENGINEER Jeffery G. McRae No. E14512 Exp. 6-30-08 ELECTRICAL STATE OF CALIFORNIA

The State of California or its officers or agents shall not be responsible for the accuracy or completeness of electronic copies of this plan sheet.

To get to the Caltrans web site, go to: http://www.dot.ca.gov

To accompany plans dated 6-28-10

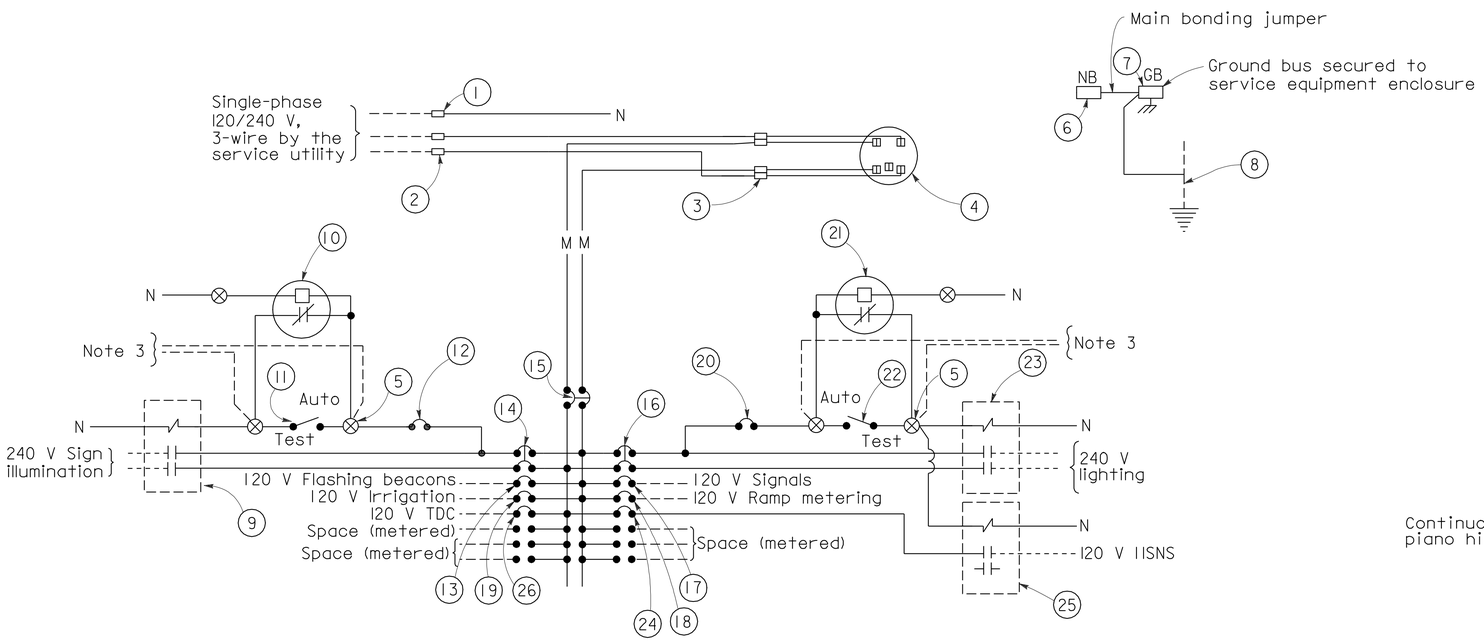

120/240 V SERVICE WIRING DIAGRAM (TYPICAL)

TYPE III-B SERVICE (120/240 V) EQUIPMENT LEGEND		
ITEM No.	COMPONENT	NAME PLATE DESCRIPTION
1	Neutral lug	
2	Landing lug (Note 6)	
3	Test bypass facility	
4	Meter socket and support	
5	Terminal blocks	
6	Neutral bus	
7	Ground bus	
8	Grounding electrode	
9	30 A, 2PNO Contactor	Sign Illumination
10	Photoelectric unit (Note 7)	
11	15 A, 1P, Test switch	Sign Illumination Test Switch
12	15 A, 120 V, 1P, CB	Sign Illumination Control
13	15 A, 120 V, 1P, CB	Flashing Beacon
14	30 A, 240 V, 2P, CB	Sign Illumination
15	100 A, 240 V, 2P, CB	Main Breaker
16	30 A, 240 V, 2P, CB	Lighting
17	50 A, 120 V, 1P, CB	Signals
18	30 A, 120 V, 1P, CB	Ramp Metering
19	20 A, 120 V, 1P, CB	Irrigation
20	15 A, 120 V, 1P, CB	Lighting Control
21	Photoelectric unit (Note 7)	
22	15 A, 1P, Test switch	Lighting Test Switch
23	60 A, 2PNO Contactor	Lighting
24	15 A, 120 V, 1P, CB	IISNS
25	30 A, 2PNO Contactor	IISNS
26	20 A, 120 V, 1P, CB	Telephone Demarcation Cabinet

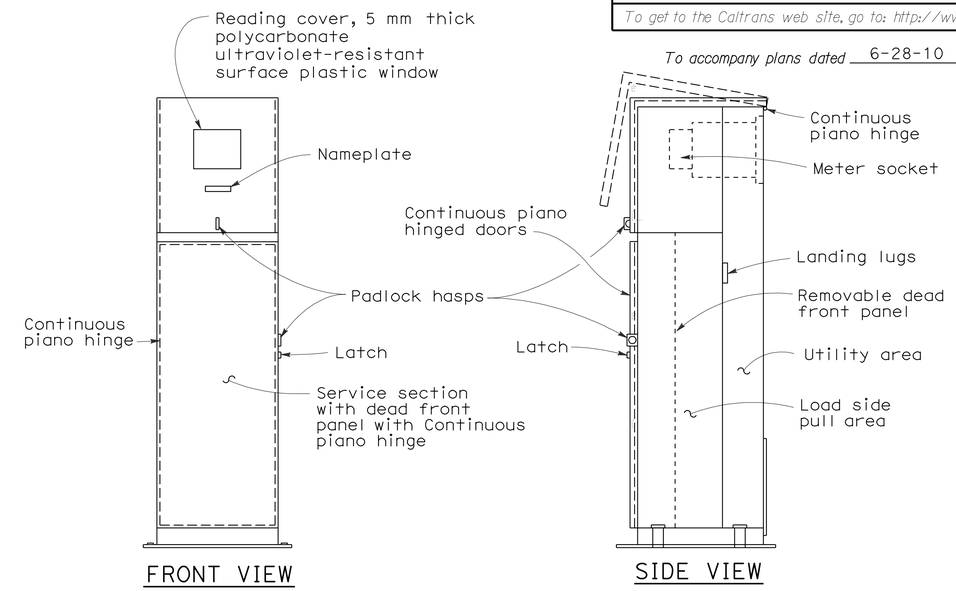

FRONT VIEW

SIDE VIEW

TYPE III-BF SERVICE EQUIPMENT ENCLOSURE WITH PROVISIONS FOR ONE 100 A METER (TYPICAL)

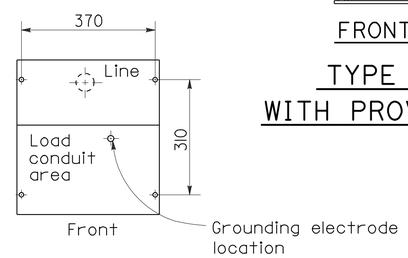

BASE FOR TYPE III-B SERVICE EQUIPMENT ENCLOSURE

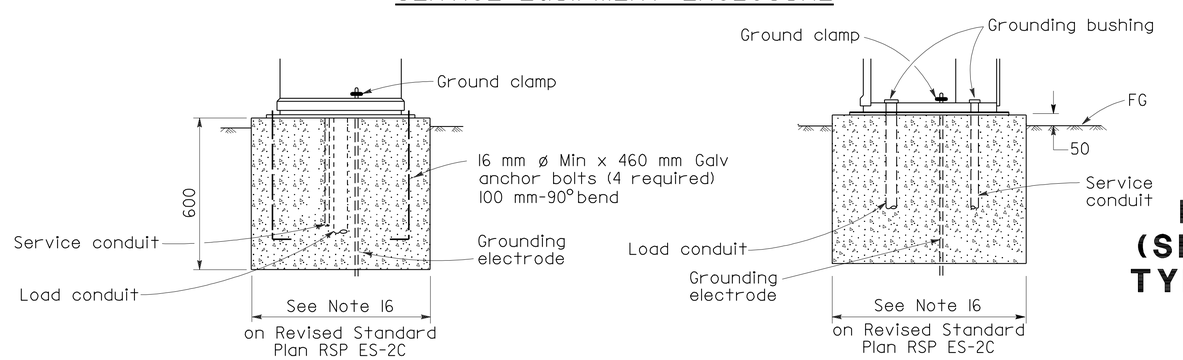

FRONT VIEW

SIDE VIEW

TYPE III-B SERVICE EQUIPMENT ENCLOSURE FOUNDATION DETAILS

NOTES (FOR SERVICE EQUIPMENT ENCLOSURE)

1. Voltage ratings of service equipment shall conform to the service voltages indicated on the plans.
2. Unless otherwise indicated on the plans, service equipment items shall be provided for each service equipment enclosure as shown.
3. Connect to remote test switch mounted on lighting standards, sign post or structure when required.
4. Items No. 1 and 6 shall be isolated from the service equipment enclosure.
5. Meter sockets shall be 5 clip type.
6. The landing lug shall be suitable for multiple conductors.
7. Type V photoelectric control shall be used unless otherwise indicated on the plans.

STATE OF CALIFORNIA
DEPARTMENT OF TRANSPORTATION

ELECTRICAL SYSTEMS (SERVICE EQUIPMENT AND TYPICAL WIRING DIAGRAM, TYPE III -B SERIES)

NO SCALE

ALL DIMENSIONS ARE IN MILLIMETERS UNLESS OTHERWISE SHOWN

RSP ES-2E DATED OCTOBER 5, 2007 SUPERSEDES STANDARD PLAN ES-2E DATED JULY 1, 2004-PAGE 420 OF THE STANDARD PLANS BOOK DATED JULY 2004.

REVISED STANDARD PLAN RSP ES-2E

2004 REVISED Std PLAN RSP ES-2E

8-9-07

DIST	COUNTY	ROUTE	KILOMETER POST TOTAL PROJECT	SHEET NO.	TOTAL SHEETS
10	Sta	219,108	3.4/7.9, 44.3/44.9	495	522

Jeffery G. McRae
REGISTERED ELECTRICAL ENGINEER

October 5, 2007
PLANS APPROVAL DATE

REGISTERED PROFESSIONAL ENGINEER Jeffery G. McRae No. E14512 Exp. 6-30-08 ELECTRICAL STATE OF CALIFORNIA

The State of California or its officers or agents shall not be responsible for the accuracy or completeness of electronic copies of this plan sheet.

To get to the Caltrans web site, go to: http://www.dot.ca.gov

Caltrans Metric

To accompany plans dated 6-28-10

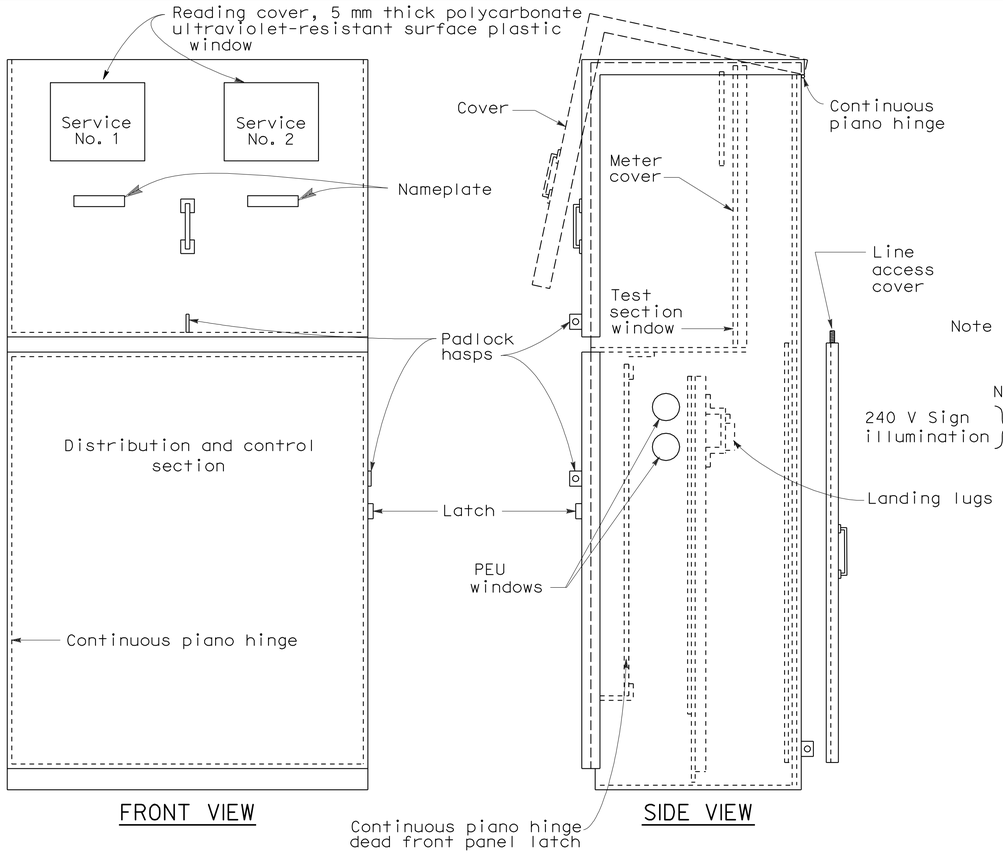

TYPE III-CF SERVICE EQUIPMENT ENCLOSURE WITH PROVISIONS FOR TWO 100 A METERS (TYPICAL)

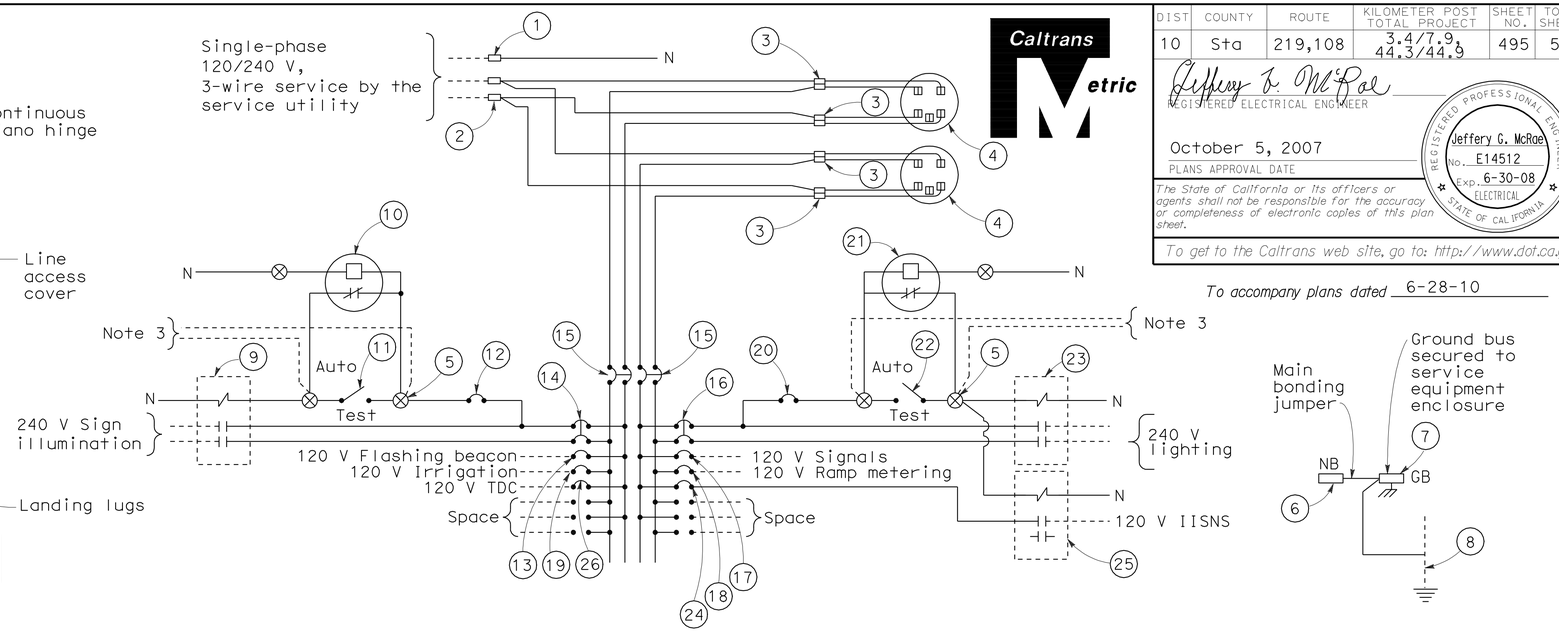

120/240 V SERVICE WIRING DIAGRAM (TYPICAL)

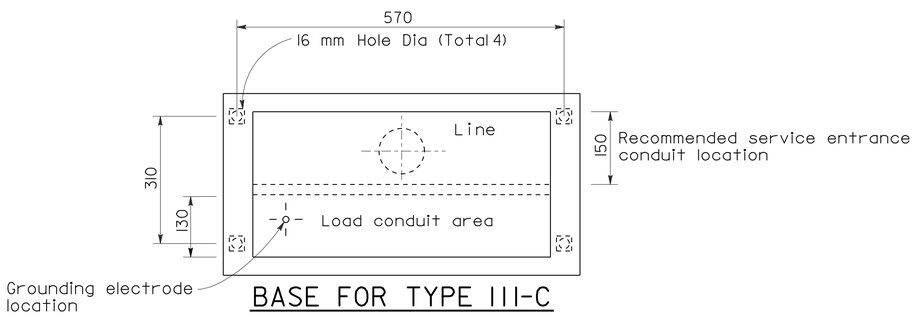

BASE FOR TYPE III-C SERVICE EQUIPMENT ENCLOSURE

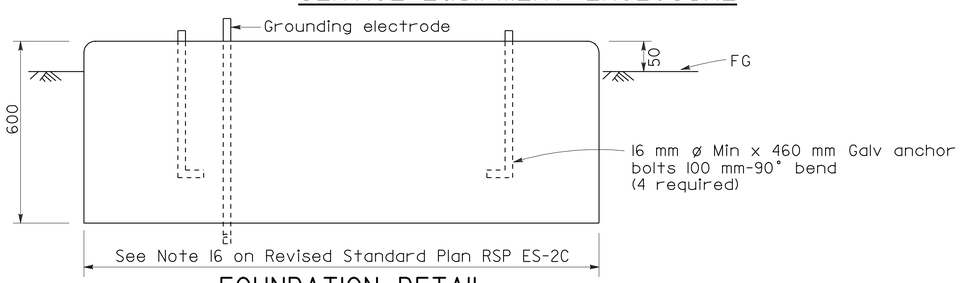

FOUNDATION DETAIL

TYPE III-C SERVICE (120/240 V) EQUIPMENT LEGEND

ITEM No.	COMPONENT	NAME PLATE DESCRIPTION	ITEM No.	COMPONENT	NAME PLATE DESCRIPTION
1	Neutral lug		14	30 A,240 V,2P,CB	Sign Illumination
2	Landing lug (Note 6)		15	100 A,240 V,2P,CB	Main Breaker
3	Test bypass facility		16	30 A,240 V,2P,CB	Lighting
4	Meter socket and support		17	50 A,120 V,1P,CB	Signals
5	Terminal blocks		18	30 A,120 V,1P,CB	Ramp Metering
6	Neutral bus		19	20 A,120 V,1P,CB	Irrigation
7	Ground bus		20	15 A,120 V,1P,CB	Lighting Control
8	Grounding electrode		21	Photoelectric unit(Note 7)	
9	30 A,2PNO, Contactor	Sign Illumination	22	15 A,1P,Test switch	Lighting Control
10	Photoelectric unit (Note 7)		23	60 A,2PNO Contactor	Lighting
11	15 A,1P, Test switch	Sign Illumination Test Switch	24	15 A,120 V,1P,CB	IISNS
12	15 A,120 V,1P,CB	Sign Illumination Control	25	30 A,2PNO Contactor	IISNS
13	15 A,120 V,1P,CB	Flashing Beacon	26	20 A,120 V,1P,CB	Telephone Demarcation Cabinet

NOTES (FOR SERVICE EQUIPMENT ENCLOSURE)

1. Voltage ratings of service equipment shall conform to the service voltages indicated on the plans.
2. Unless otherwise indicated on the plans, service equipment items shall be provided for each service equipment enclosure as shown.
3. Connect to remote test switch mounted on lighting standards, sign post or structure when required.
4. Items No. 1 and 6 shall be isolated from the service equipment enclosure.
5. Meter sockets shall be 5 clip type.
6. The landing lug shall be suitable for multiple conductors.
7. Type V photoelectric control shall be used unless otherwise indicated on the plans.

STATE OF CALIFORNIA
DEPARTMENT OF TRANSPORTATION

ELECTRICAL SYSTEMS (SERVICE EQUIPMENT AND TYPICAL WIRING DIAGRAM TYPE III -C SERIES)

NO SCALE

ALL DIMENSIONS ARE IN MILLIMETERS UNLESS OTHERWISE SHOWN

RSP ES-2F DATED OCTOBER 5, 2007 SUPERSEDES STANDARD PLAN ES-2F DATED JULY 1, 2004-PAGE 421 OF THE STANDARD PLANS BOOK DATED JULY 2004.

REVISED STANDARD PLAN RSP ES-2F

2004 REVISED Std PLAN RSP ES-2F

8-9-07

DIST	COUNTY	ROUTE	KILOMETER POST TOTAL PROJECT	SHEET NO.	TOTAL SHEETS
10	Sta	219,108	3.4/7.9, 44.3/44.9	496	522

Caltrans Metric

REGISTERED ELECTRICAL ENGINEER

October 5, 2007
PLANS APPROVAL DATE

REGISTERED PROFESSIONAL ENGINEER Jeffery G. McRae No. E14512 Exp. 6-30-08 ELECTRICAL STATE OF CALIFORNIA

The State of California or its officers or agents shall not be responsible for the accuracy or completeness of electronic copies of this plan sheet.

To get to the Caltrans web site, go to: http://www.dot.ca.gov

To accompany plans dated 6-28-10

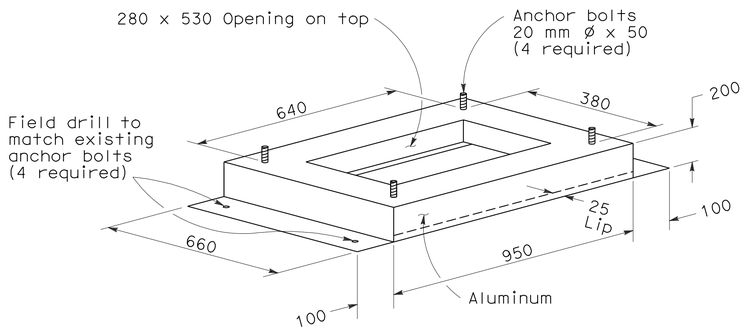

TYPE PR CABINET ADAPTER

1. Material: 4.78 thickness aluminum plate.
2. Mount adapter on Type P or Type R cabinet foundation.

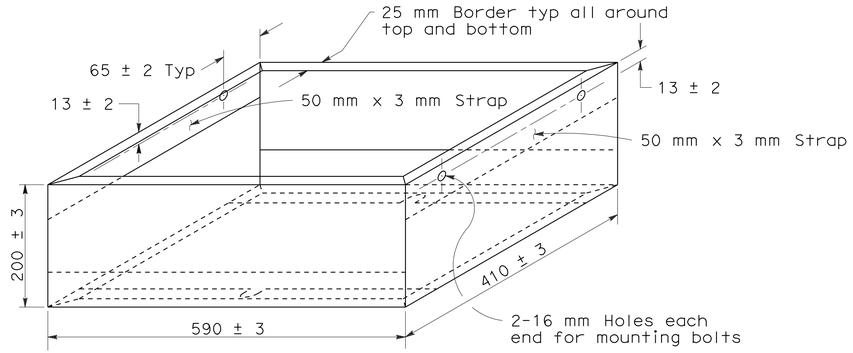

TYPE M CABINET ADAPTER

1. Mount adapter on Type M cabinet foundation.
2. Mounting bolts shall be 10 mm ø minimum size.
3. Aluminum (4.78 mm thickness).

The flasher transfer relay shall intermate with a CINCH-JONES Socket S-408-SB or equal connected as follows:

Pin No.	Circuit	Pin No.	Circuit
1	Coil	5	Common, Circuit #1
2	Coil	6	Common, Circuit #2
3	NC Circuit #1	7	NO Circuit #1
4	NC Circuit #2	8	NO Circuit #2

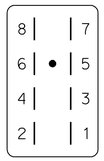

CONNECTOR SOCKET
FLASH TRANSFER RELAY

The flasher shall intermate with a CINCH-JONES Socket S-406-SB or equal connected as follows:

Pin No.	Circuit	Pin No.	Circuit
7	Load, Circuit #1	10	ac+
8	Load, Circuit #2	11	ac-
9	Chassis Ground	12	Not used

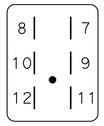

CONNECTOR SOCKET
SOLID STATE FLASHER UNIT

The Solid-state switching device shall intermate with a CINCH-JONES Socket S-2412-SB or equal connected as follows:

Pin No.	Circuit	Pin No.	Circuit
1	ac + Lights	7	Green or Walk Output
2	Chassis Ground	8	Yellow Input
3	Red or Don't Walk Output	9	dc+ (15 to 24 V)
4	Not used	10	Green or Walk Input
5	Yellow Output	11	ac-
6	Red or Don't Walk Input	12	Not used

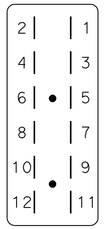

CONNECTOR SOCKET
SOLID STATE SWITCHING DEVICE

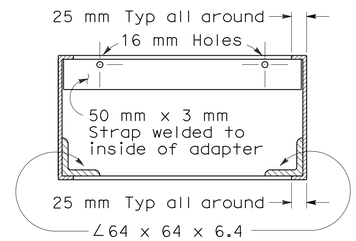

SECTION A-A

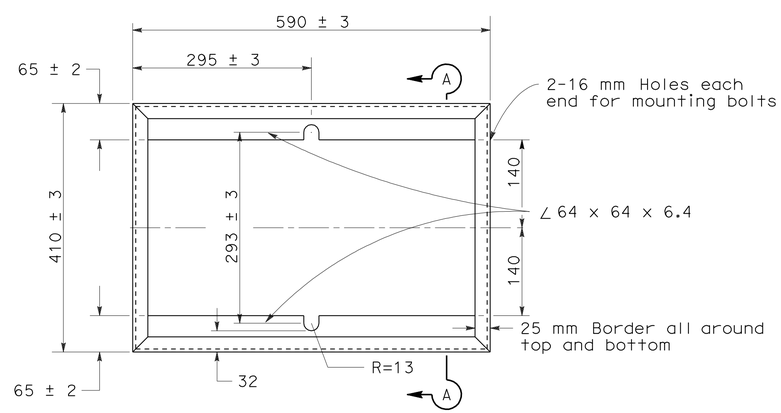

TOP VIEW

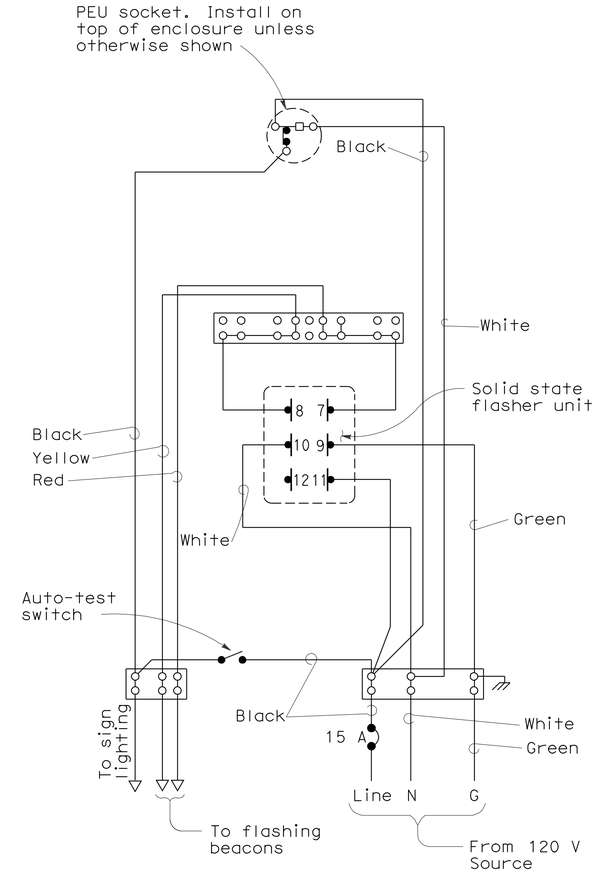

WIRING DIAGRAM
LED FLASHING BEACON CONTROL ASSEMBLY

STATE OF CALIFORNIA
DEPARTMENT OF TRANSPORTATION

ELECTRICAL SYSTEMS (CONTROLLER CABINET DETAILS)

NO SCALE

ALL DIMENSIONS ARE IN
MILLIMETERS UNLESS OTHERWISE SHOWN

RSP ES-3B DATED OCTOBER 5, 2007 SUPERSEDES STANDARD PLAN ES-3B
DATED JULY 1, 2004-PAGE 424 OF THE STANDARD PLANS BOOK DATED JULY 2004.

REVISED STANDARD PLAN RSP ES-3B

2004 REVISED Std PLAN RSP ES-3B

6-27-07

DIST	COUNTY	ROUTE	KILOMETER POST TOTAL PROJECT	SHEET NO.	TOTAL SHEETS
10	Sta	219,108	3.4/7.9, 44.3/44.9	497	522

Caltrans Metric

Jeffery G. McRae
REGISTERED ELECTRICAL ENGINEER

October 5, 2007
PLANS APPROVAL DATE

REGISTERED PROFESSIONAL ENGINEER Jeffery G. McRae No. E14512 Exp. 6-30-08 ELECTRICAL STATE OF CALIFORNIA

The State of California or its officers or agents shall not be responsible for the accuracy or completeness of electronic copies of this plan sheet.

To get to the Caltrans web site, go to: http://www.dot.ca.gov

To accompany plans dated 6-28-10

NOTES - CONTROLLER CABINETS

1. Cabinet dimensions are nominal.
2. Foundations shall be located to provide 600 mm minimum clearance between face of curb and any portion of cabinet.
3. Type G, M, P, R, S and Model 336 cabinets shall be installed with the back toward the nearest lane of traffic.
4. The controller cabinet ground bus shall be bonded to the controller equipment enclosure.
5. In unpaved areas, a raised portland cement concrete pad shall be constructed in front of each controller cabinet. Pad shall be 900 mm x 900 mm x 100 mm for Type G cabinets and shall be 900 mm x 100 mm thick x width of foundation for Types M, P, R, S and Model 336 cabinets.
6. In unpaved areas, the top of foundation for Type G, P, R and S cabinets shall be 150 mm above surrounding grade. Top of foundation for Type M or Model 336 cabinet shall be 460 mm above surrounding grade.
7. In sidewalks and other paved areas, top of foundation for Type G cabinet shall be level with surrounding grade. Top of foundation for Type P, R and S cabinets shall be 90 mm above surrounding grade.
8. The steel pedestal, base plate, bolt circle and foundation for Type G cabinet shall be the same as that shown for a Type 1-C Standard. Pedestal shall be 640 mm - 760 mm in length. Anchor bolts shall be 19 mm ø x 460 mm with a 50 mm - 90° bend. Four bolts required per cabinet.
9. Type G cabinet shall be provided with a slipfitter to permit mounting an 114 mm outside diameter pedestal. Slipfitter shall be bolted to bottom of the cabinet.
10. Type G cabinet shall be provided with 8 screened, raintight holes, 13 mm diameter or larger, in the bottom of the cabinet.
11. A 25 mm drain shall be provided through the foundation of a Type M or Model 336 cabinet. Drain pipe shall be screened.
12. See Table for cabinet and foundation dimensions; "D" = Depth, "H" = Height and "W" = Width.
13. Cabinet shelves shall be adjustable for vertical spacing and shall be removable. Type M, P, R and S cabinets shall be provided with a minimum of two shelves.
14. Anchor bolts for Type M, P, R, S and Model 336 cabinets shall be 19 mm ø x 460 mm with a 50 mm - 90° bend.
15. An approved mastic or caulking compound shall be placed on the foundation prior to placing the cabinet to seal openings between bottom of cabinet and foundation.
16. Controller units, plug-mounted equipment, shelf-mounted equipment and wall-mounted equipment shall be located to permit safe and easy removal or replacement without removing any other piece of equipment.
17. Cabinet fan may be installed at an alternate location near the top of the cabinet when approved by the Engineer.
18. Where telephone interconnect is required, a minimum of 130 mm clear vertical space shall be provided inside the cabinet for the equipment.
19. Telephone interconnect conductors shall be enclosed in a 21C or larger conduit through the foundation. Type 4 metal conduit shall be used to separate telephone and power conductors in cabinets and pedestals.
20. For Model 332, 334 and 336 cabinet details, see "Traffic signal controller equipment specifications".

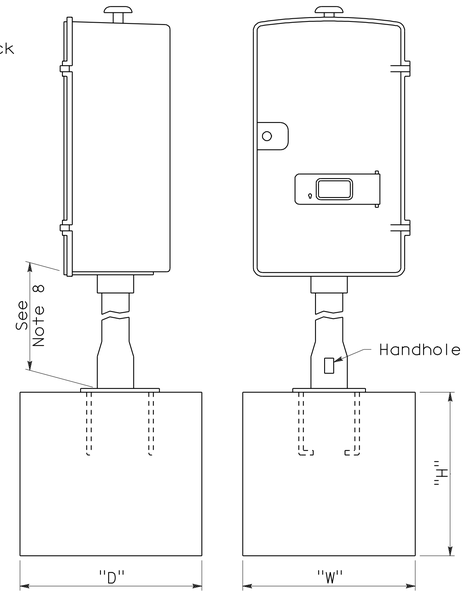

FOUNDATION FOR TYPE G CABINET

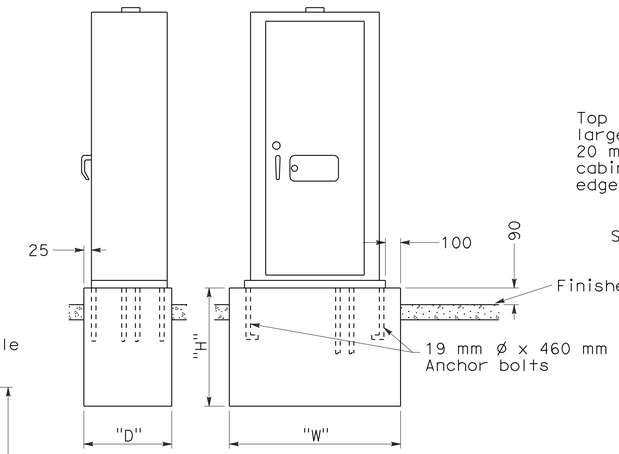

FOUNDATION FOR TYPE P, R AND S CABINETS

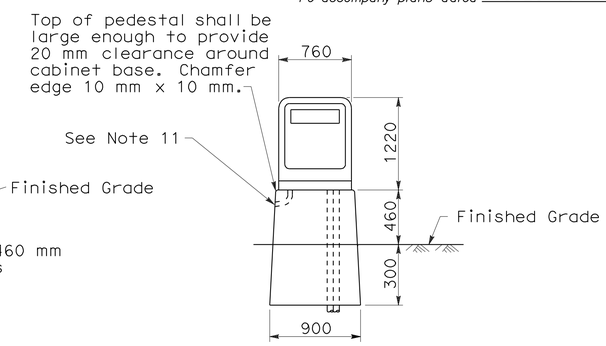

PEDESTAL FOUNDATION FOR TYPE M OR MODEL 336 CABINET

CABINET	FOUNDATION		
TYPE/ MODEL	H (mm)	W (mm)	D (mm)
G	900	600	600
M 336	760	900	560
P	460	1330	710
R	460	1330	710
S	460	1820	710

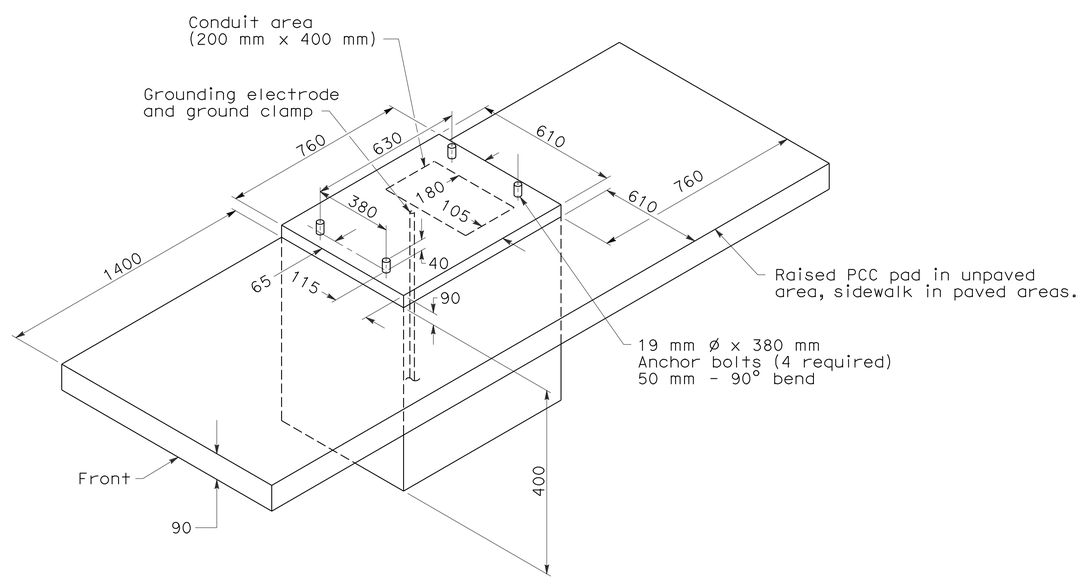

FOUNDATION DETAILS
For Model 332 and 334 cabinets

STATE OF CALIFORNIA
DEPARTMENT OF TRANSPORTATION

ELECTRICAL SYSTEMS (CONTROLLER CABINET DETAILS)

NO SCALE

ALL DIMENSIONS ARE IN MILLIMETERS UNLESS OTHERWISE SHOWN

RSP ES-3C DATED OCTOBER 5, 2007 SUPERSEDES STANDARD PLAN ES-3C DATED JULY 1, 2004-PAGE 425 OF THE STANDARD PLANS BOOK DATED JULY 2004.

REVISED STANDARD PLAN RSP ES-3C

2004 REVISED Std PLAN RSP ES-3C

6-27-07

DIST	COUNTY	ROUTE	KILOMETER POST TOTAL PROJECT	SHEET NO.	TOTAL SHEETS
10	Sta	219,108	3.4/7.9, 44.3/44.9	498	522

Caltrans Metric

Jeffery G. McRae
REGISTERED ELECTRICAL ENGINEER

October 5, 2007
PLANS APPROVAL DATE

REGISTERED PROFESSIONAL ENGINEER Jeffery G. McRae No. E14512 Exp. 6-30-08 ELECTRICAL STATE OF CALIFORNIA

The State of California or its officers or agents shall not be responsible for the accuracy or completeness of electronic copies of this plan sheet.

To get to the Caltrans web site, go to: http://www.dot.ca.gov

To accompany plans dated 6-28-10

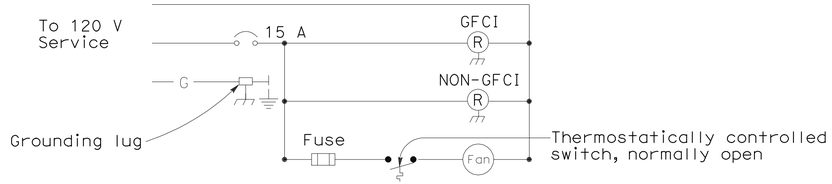

WIRING DIAGRAM

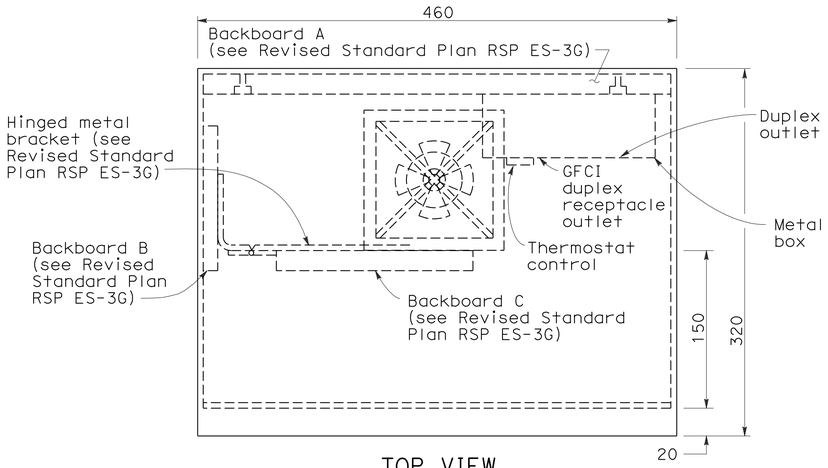

TOP VIEW

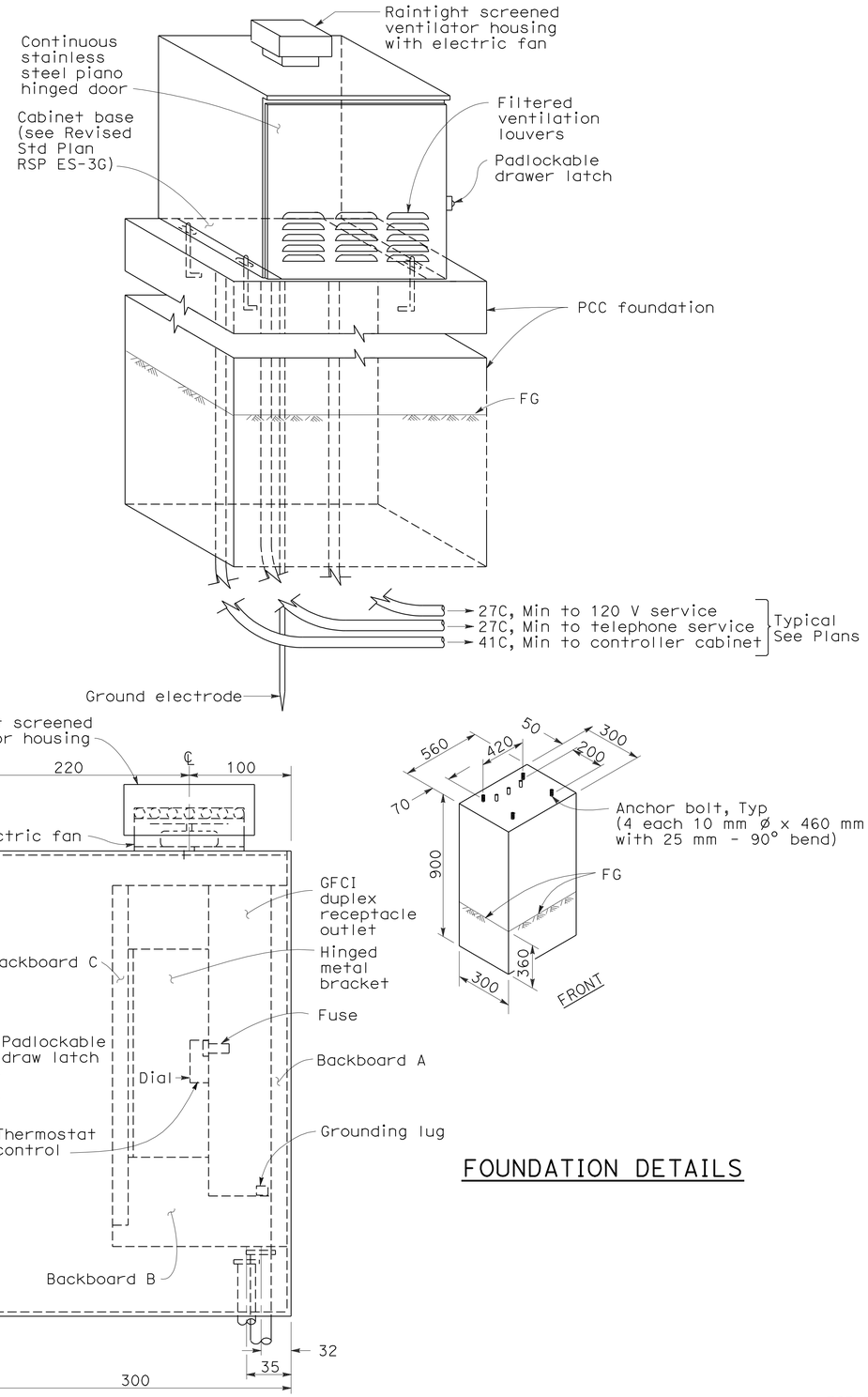

FOUNDATION DETAILS

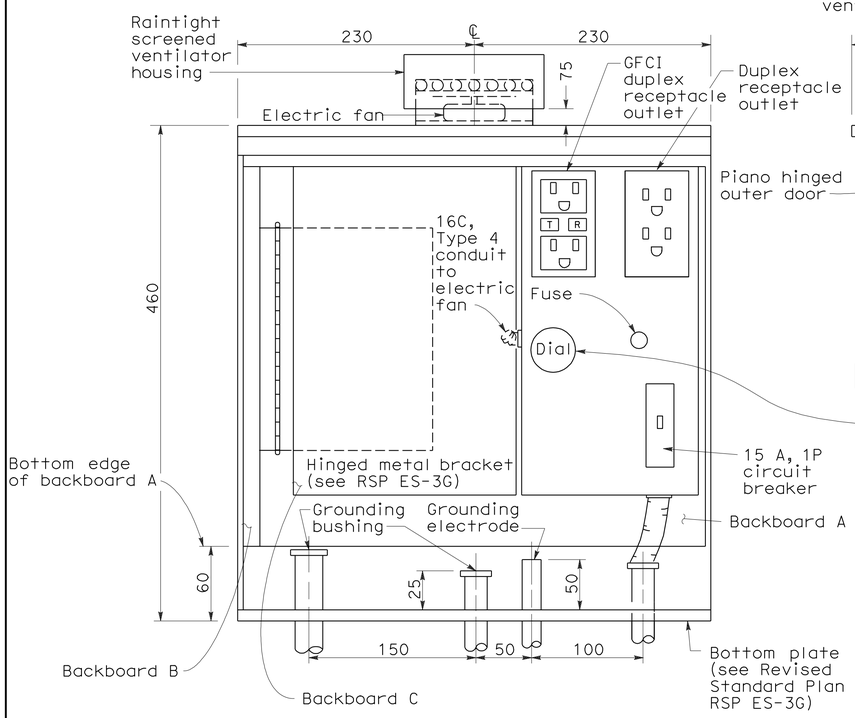

FRONT VIEW
(Outer door removed)

SIDE VIEW

NOTES

1. Telephone demarcation cabinet shall be furnished with mounting boards, thermostat, fan, outlet box, circuit breaker and outlet plate. Dimensions are nominal.
2. An approved mastic or caulking compound shall be placed on the foundation prior to placing the cabinet to seal openings between bottom of cabinet and foundation.
3. In unpaved areas, a raised PCC pad shall be placed in front of the telephone demarcation cabinet. Pad shall be 560 mm x 900 mm x 100 mm thick, with 50 mm above the finished grade.
4. All conduits shall be bonded to the enclosure.
5. Telephone demarcation cabinet:
   a) Material shall be anodized aluminum (3.2 mm thick).
   b) Fabrication shall conform to the requirements of the Standard Specifications.
   c) Ventilation louvers shall be located in door.
   d) Door shall be lockable with padlock.
   e) Fan shall be mounted in a ventilator housing.
   f) Fan capacity shall be at least 0.7 m^3 per minute.
   g) Fan shall be thermostatically controlled and adjustable to turn on between 32°C and 65°C.
   h) Fan circuit shall be fused at 175 percent of the fan motor capacity.
6. Hardware for fastening of mounting boards:
   a) Fasten backboard A and backboard B to telephone demarcation cabinet with 5 mm ø x 20 mm stainless steel carriage bolts (8 required).
   b) Fasten hinged metal bracket to backboard B and backboard C to hinged metal bracket with number 10 mm x 20 mm wood screws (9 required).

STATE OF CALIFORNIA
DEPARTMENT OF TRANSPORTATION

ELECTRICAL SYSTEMS (TELEPHONE DEMARCATION CABINET, TYPE C)

NO SCALE

ALL DIMENSIONS ARE IN MILLIMETERS UNLESS OTHERWISE SHOWN

RSP ES-3F DATED OCTOBER 5, 2007 SUPERSEDES STANDARD PLAN ES-3F DATED JULY 1, 2004-PAGE 428 OF THE STANDARD PLANS BOOK DATED JULY 2004.

REVISED STANDARD PLAN RSP ES-3F

2004 REVISED Std PLAN RSP ES-3F

7-2-07

DIST	COUNTY	ROUTE	KILOMETER POST TOTAL PROJECT	SHEET NO.	TOTAL SHEETS
10	Sta	219,108	3.4/7.9, 44.3/44.9	499	522

Jeffery G. McRae
REGISTERED ELECTRICAL ENGINEER

October 5, 2007
PLANS APPROVAL DATE

REGISTERED PROFESSIONAL ENGINEER Jeffery G. McRae No. E14512 Exp. 6-30-08 ELECTRICAL STATE OF CALIFORNIA

The State of California or its officers or agents shall not be responsible for the accuracy or completeness of electronic copies of this plan sheet.

To get to the Caltrans web site, go to: http://www.dot.ca.gov

To accompany plans dated 6-28-10

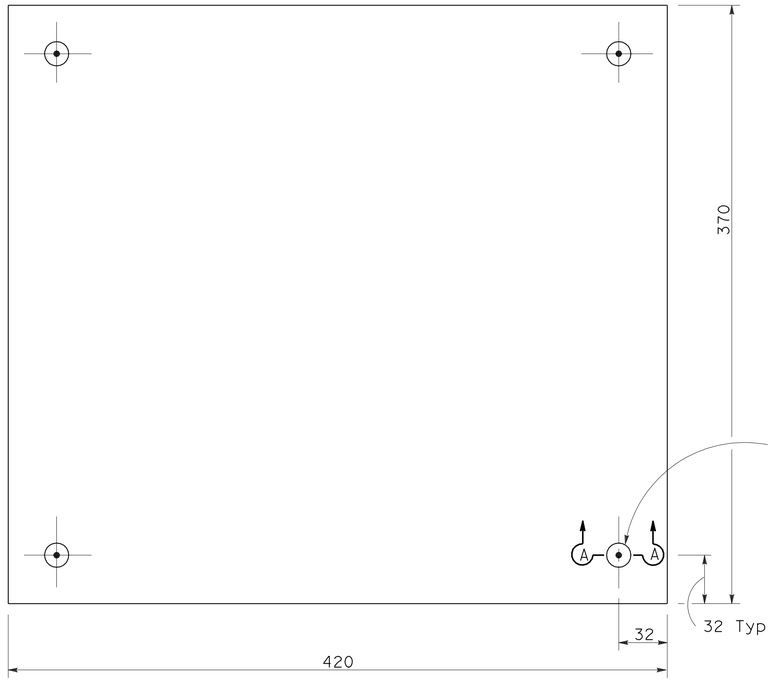

BACKBOARD A
(Material: 18 mm A-C plywood)

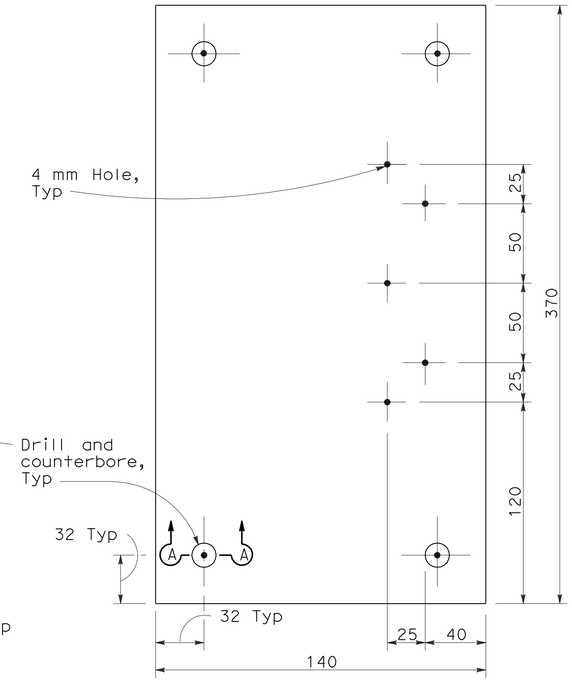

BACKBOARD B
(Material: 18 mm A-C plywood)

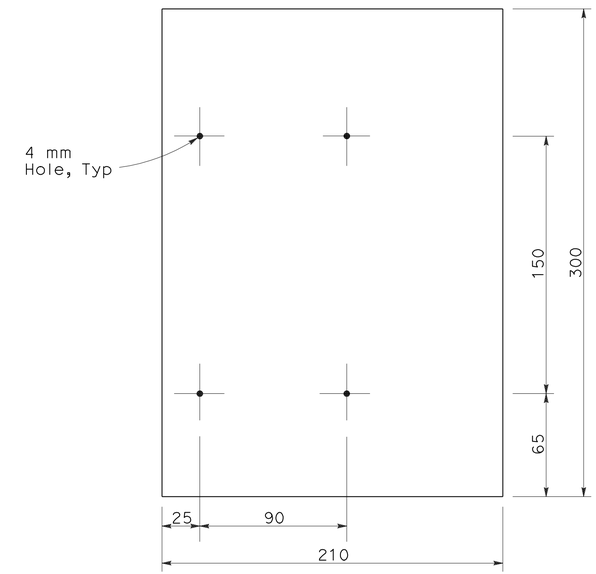

BACKBOARD C
(Material: 18 mm A-C plywood)

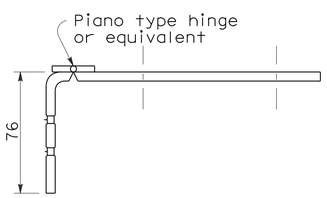

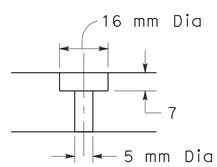

SECTION A-A

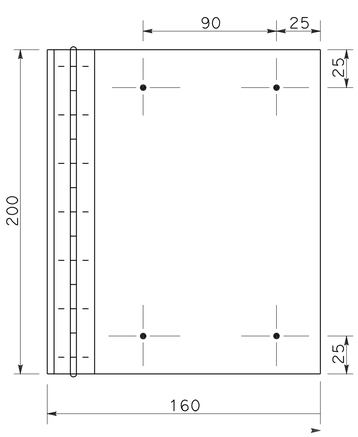

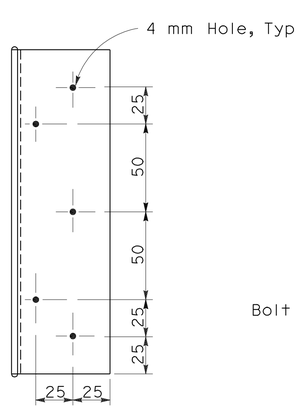

HINGED METAL BRACKET

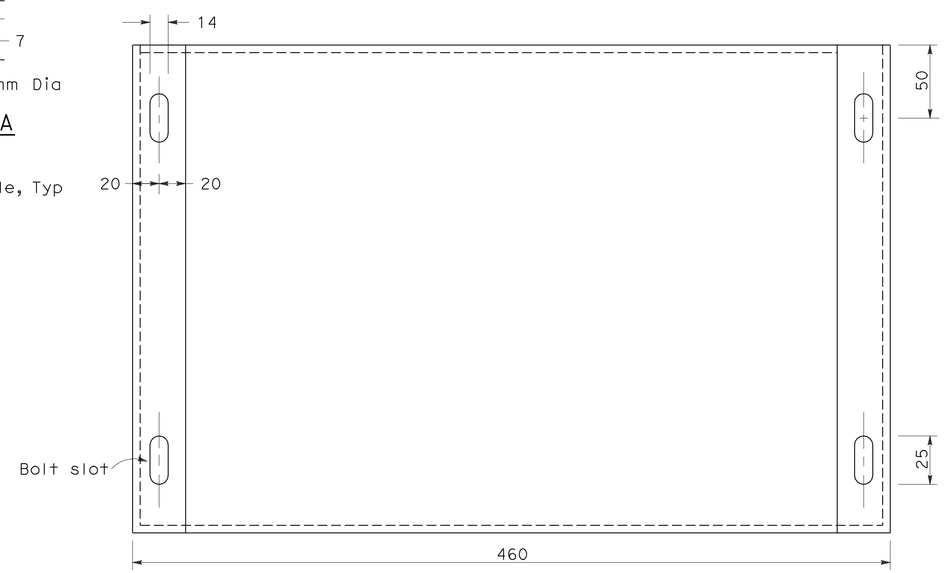

CABINET BASE
(Material: 3.42 mm Galvanized Steel)

STATE OF CALIFORNIA
DEPARTMENT OF TRANSPORTATION

ELECTRICAL SYSTEMS (TELEPHONE DEMARCATION CABINET, TYPE C DETAILS)

NO SCALE

ALL DIMENSIONS ARE IN MILLIMETERS UNLESS OTHERWISE SHOWN

RSP ES-3G DATED OCTOBER 5, 2007 SUPERSEDES STANDARD PLAN ES-3G DATED JULY 1, 2004-PAGE 429 OF THE STANDARD PLANS BOOK DATED JULY 2004.

REVISED STANDARD PLAN RSP ES-3G

2004 REVISED Std PLAN RSP ES-3G

10-1-07

DIST	COUNTY	ROUTE	KILOMETER POST TOTAL PROJECT	SHEET NO.	TOTAL SHEETS
10	Sta	219,108	3.4/7.9, 44.3/44.9	500	522

Jeffery G. McRoe
REGISTERED ELECTICAL ENGINEER

June 6, 2008
PLANS APPROVAL DATE

REGISTERED PROFESSIONAL ENGINEER Jeffery G. McRoe No. E14512 Exp. 6-30-10 ELECTRICAL STATE OF CALIFORNIA

The State of California or its officers or agents shall not be responsible for the accuracy or completeness of electronic copies of this plan sheet.

To get to the Caltrans web site, go to: http://www.dot.ca.gov

To accompany plans dated 6-28-10

VISORS

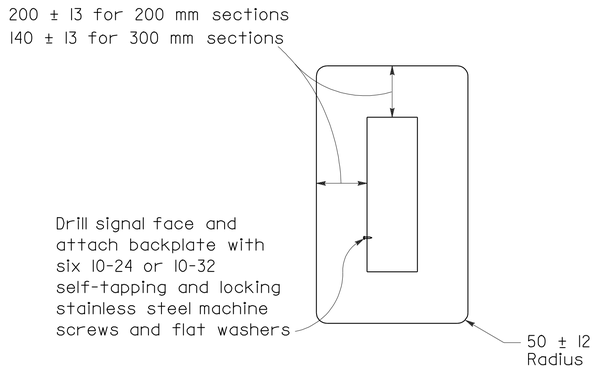

200 mm AND 300 mm SECTIONS

BACKPLATE

1.5 mm minimum thickness 3001-14 aluminum, or plastic when specified

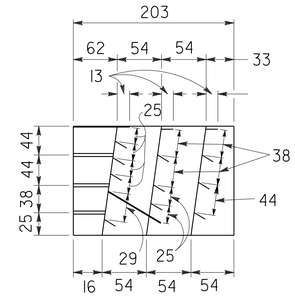

SECTION A-A

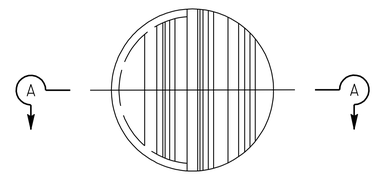

FRONT VIEW

DIRECTIONAL LOUVER

Directional louvers shall be oriented as directed by the Engineer and secured in place with one plated brass machine screw and nut.

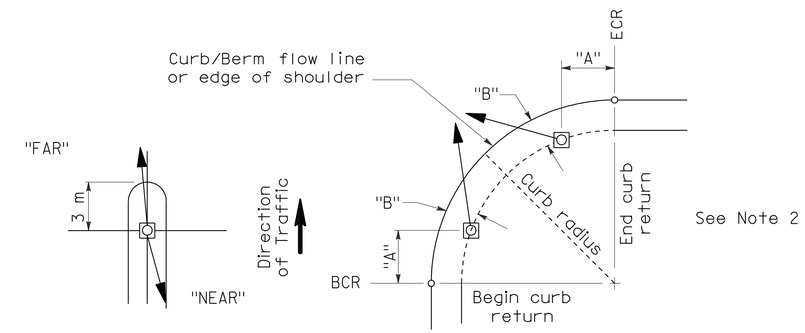

NOTES:

1. Typical signal pole placement unless dimensioned on plans.
2. For "A" and "B" dimensions, see Pole Schedule, or as directed by the Engineer.

SIGNAL STANDARD PLACEMENT DIMENSIONS AND EQUIPMENT LOCATIONS

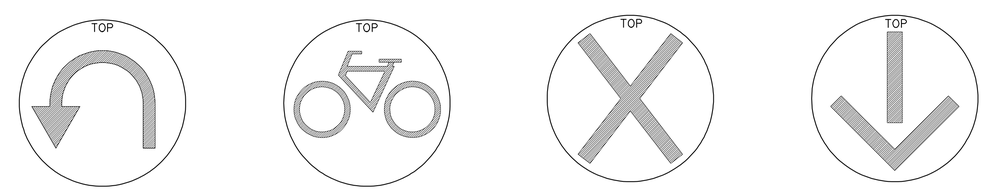

U-TURN SIGNAL FACE | BICYCLE SIGNAL FACE | LANE CONTROL SIGNAL FACE | LANE CONTROL SIGNAL FACE

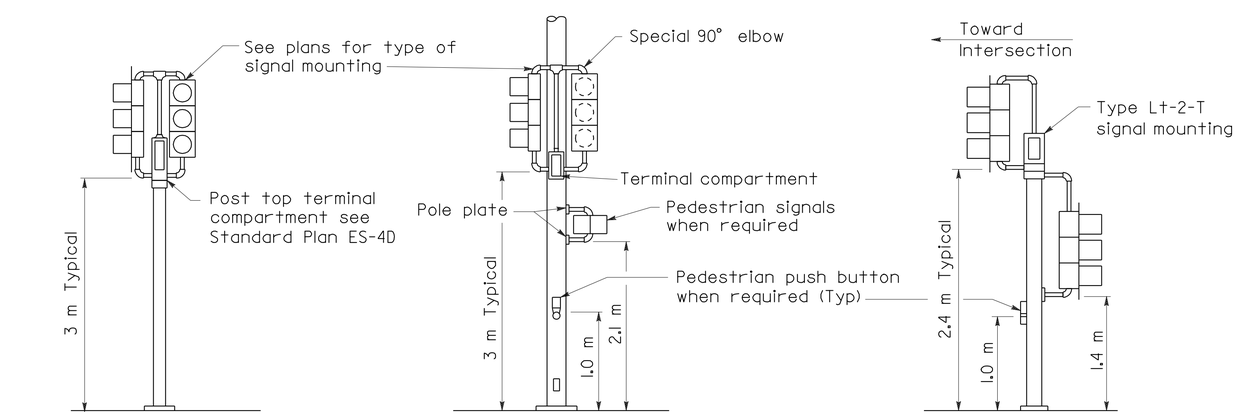

TOP MOUNTED SIGNALS (TV)

Type I-A, I-B, I-C and I-D standard as indicated on the plans

SIDE MOUNTED SIGNALS (SV AND SP)

Normally used on standards with luminaire or signal mast arm

LEFT TURN LANE SIGNAL

Type I-A, I-B, I-C and I-D standard as indicated on plans

TYPICAL SIGNAL INSTALLATIONS

STATE OF CALIFORNIA
DEPARTMENT OF TRANSPORTATION

ELECTRICAL SYSTEMS (SIGNAL HEADS AND MOUNTINGS)

NO SCALE

ALL DIMENSIONS ARE IN MILLIMETERS UNLESS OTHERWISE SHOWN

RSP ES-4C DATED JUNE 6, 2008 SUPERSEDES STANDARD PLAN ES-4C DATED July 1, 2004 - PAGE 433 OF THE STANDARD PLANS BOOK DATED July 2004.

REVISED STANDARD PLAN RSP ES-4C

2004 REVISED Std PLAN RSP ES-4C

5-19-08