Dist	COUNTY	ROUTE	POST MILES TOTAL PROJECT	SHEET No.	TOTAL SHEETS
09	Mno	6	4.0/5.5	1	16

ACNH-P006(009)E

STATE OF CALIFORNIA
DEPARTMENT OF TRANSPORTATION

PROJECT PLANS FOR CONSTRUCTION ON
STATE HIGHWAY

IN MONO COUNTY AT AND NEAR CHALFANT FROM 0.4 MILE SOUTH OF HUNTER AVENUE TO 0.7 MILE SOUTH OF PETROGLYPH ROAD

TO BE SUPPLEMENTED BY STANDARD PLANS DATED MAY 2006

INDEX OF PLANS

SHEET No.	DESCRIPTION
1	TITLE AND LOCATION MAP
2	TYPICAL CROSS SECTIONS
3-5	LAYOUTS
6	CONSTRUCTION DETAILS
7	CONSTRUCTION AREA SIGNS
8	PAVEMENT DELINEATION QUANTITIES
9-10	SIGN DETAILS AND QUANTITIES
11	SUMMARY OF QUANTITIES
12-16	REVISED AND NEW STANDARD PLANS

THE STANDARD PLANS LIST APPLICABLE TO THIS CONTRACT IS INCLUDED IN THE NOTICE TO BIDDERS AND SPECIAL PROVISIONS BOOK.

LOCATION MAP

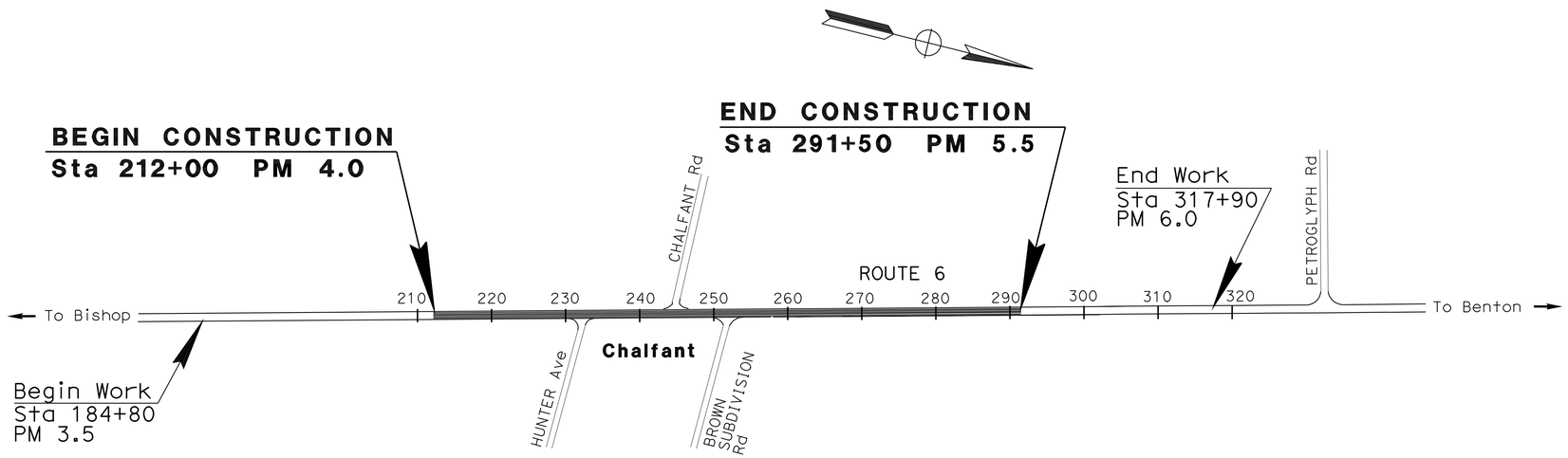

NO SCALE

THE CONTRACTOR SHALL POSSESS THE CLASS (OR CLASSES) OF LICENSE AS SPECIFIED IN THE "NOTICE TO BIDDERS."

PROJECT MANAGER: BRIAN MC ELWAIN

DESIGN ENGINEER: TRUMAN DENIO

12-15-11
PROJECT ENGINEER DATE
REGISTERED CIVIL ENGINEER

February 27, 2012
PLANS APPROVAL DATE

REGISTERED PROFESSIONAL ENGINEER
LIANNE TALBOT
No. 74599
Exp. 12-31-13
CIVIL
STATE OF CALIFORNIA

THE STATE OF CALIFORNIA OR ITS OFFICERS OR AGENTS SHALL NOT BE RESPONSIBLE FOR THE ACCURACY OR COMPLETENESS OF SCANNED COPIES OF THIS PLAN SHEET.

DATE PLOTTED => 21-MAR-2012
TIME PLOTTED => 0952

CONTRACT No.	09-352604
PROJECT ID	0900020112

LAST REVISION 12-15-11

Dist	COUNTY	ROUTE	POST MILES TOTAL PROJECT	SHEET No.	TOTAL SHEETS
09	Mno	6	4.0/5.5	2	16

REGISTERED CIVIL ENGINEER 12-15-11 DATE

2-27-12
PLANS APPROVAL DATE

REGISTERED PROFESSIONAL ENGINEER LIANNE TALBOT No. 74599 Exp. 12-31-13 CIVIL STATE OF CALIFORNIA

THE STATE OF CALIFORNIA OR ITS OFFICERS OR AGENTS SHALL NOT BE RESPONSIBLE FOR THE ACCURACY OR COMPLETENESS OF SCANNED COPIES OF THIS PLAN SHEET.

NOTES:

1. DIMENSIONS OF THE PAVEMENT STRUCTURES (STRUCTURAL SECTIONS) ARE SUBJECT TO TOLERANCES SPECIFIED IN THE STANDARD SPECIFICATIONS.
2. SUPERELEVATIONS AS SHOWN OR AS DIRECTED BY THE ENGINEER.

ABBREVIATIONS:

CP - CATCH POINT
TL - TRIM LINE

TYPICAL STRUCTURAL SECTION

1 — 0.50′ HMA (TYPE A)
0.35′ CI 2 AB

2 — Exist 0.65′ AC Typ

DESIGN DESIGNATION

ADT (2012) = 1020	D = 64.29%
ADT (2032) = 1120	TI_{20} = 9.5
DHV (2012) = 110	V = 65 mph
DHV (2032) = 120	T = 23%

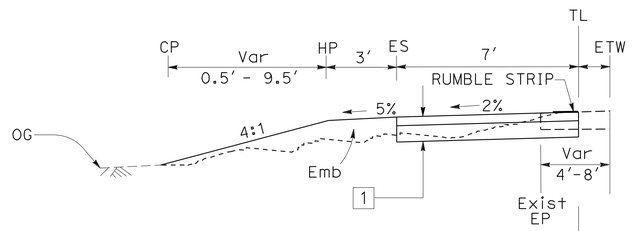

Sta 228+83 TO 236+21
Sta 243+80 TO 244+31
Sta 246+43 TO 253+79
Sta 254+61 TO 255+32

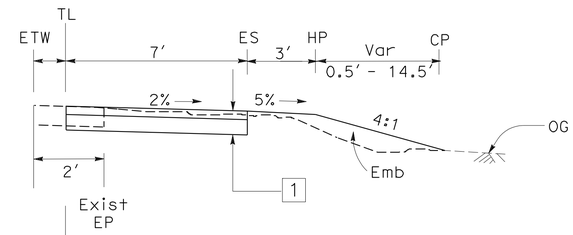

Sta 272+09 TO 272+90

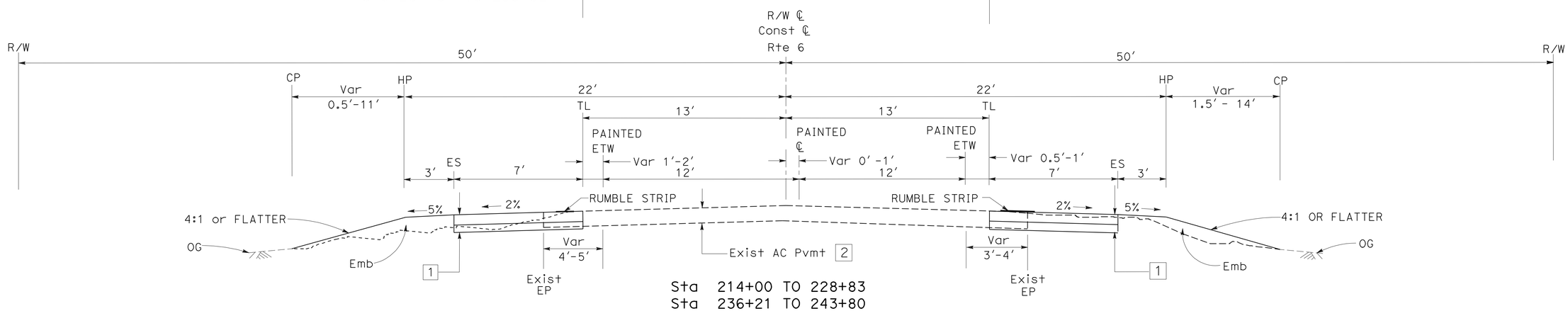

Sta 214+00 TO 228+83
Sta 236+21 TO 243+80
Sta 255+32 TO 272+09
Sta 272+90 TO 289+50

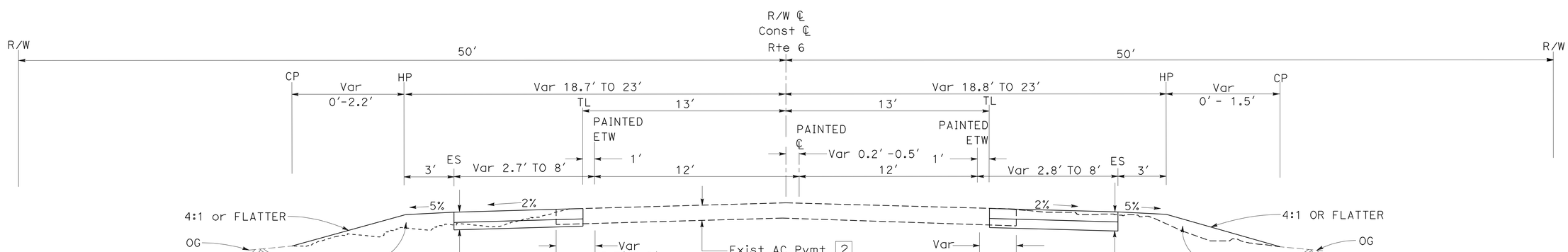

ROUTE 6

Sta 212+00 TO 214+00
Sta 289+50 TO 291+50

TYPICAL CROSS SECTIONS X-1

NO SCALE

STATE OF CALIFORNIA - DEPARTMENT OF TRANSPORTATION
Caltrans
DESIGN

FUNCTIONAL SUPERVISOR: TRUMAN DENIO
CALCULATED-DESIGNED BY: LIANNE TALBOT
CHECKED BY: TRUMAN DENIO
REVISED BY
DATE REVISED

LAST REVISION 12-15-11
DATE PLOTTED => 14-MAR-2012
TIME PLOTTED => 14:41

Dist	COUNTY	ROUTE	POST MILES TOTAL PROJECT	SHEET No.	TOTAL SHEETS
09	Mno	6	4.0/5.5	3	16

REGISTERED CIVIL ENGINEER 12-15-11 DATE

2-27-12
PLANS APPROVAL DATE

REGISTERED PROFESSIONAL ENGINEER LIANNE TALBOT No. 74599 Exp 12-31-13 CIVIL STATE OF CALIFORNIA

THE STATE OF CALIFORNIA OR ITS OFFICERS OR AGENTS SHALL NOT BE RESPONSIBLE FOR THE ACCURACY OR COMPLETENESS OF SCANNED COPIES OF THIS PLAN SHEET.

NOTE:
FOR ACCURATE RIGHT OF WAY DATA, CONTACT
RIGHT OF WAY ENGINEERING AT THE DISTRICT OFFICE.

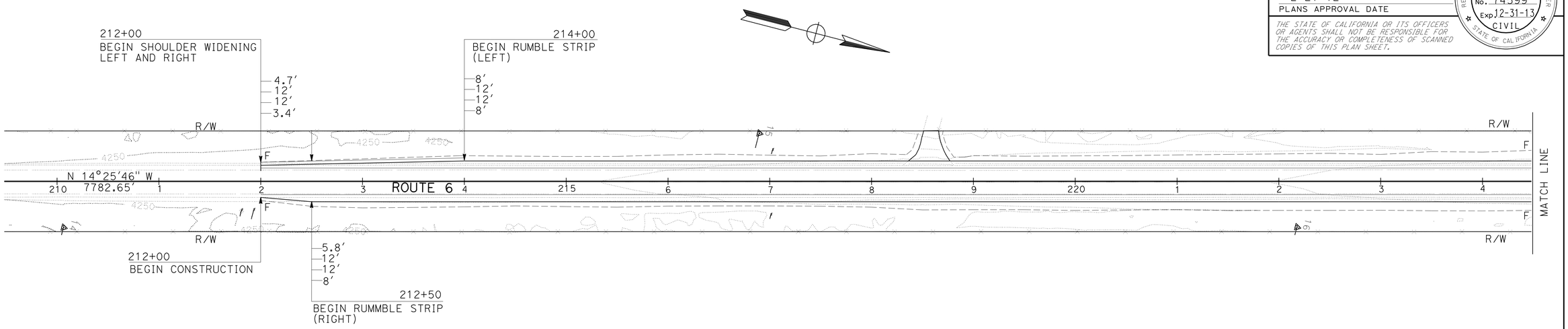

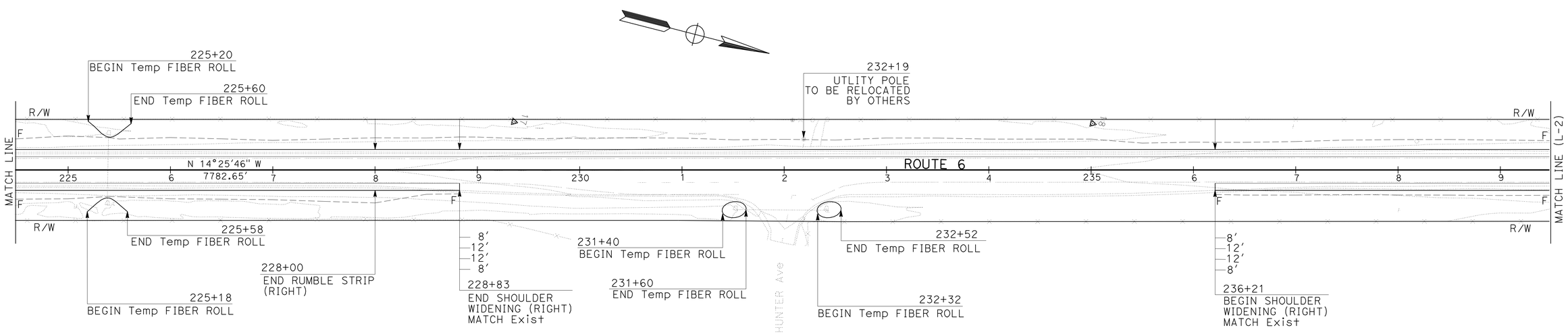

LAYOUT L-1

SCALE: 1" = 50′

STATE OF CALIFORNIA - DEPARTMENT OF TRANSPORTATION
Caltrans
DESIGN

FUNCTIONAL SUPERVISOR: TRUMAN DENIO
CALCULATED-DESIGNED BY: LIANNE TALBOT
CHECKED BY: TRUMAN DENIO
REVISED BY
DATE REVISED

LAST REVISION 12-15-11
DATE PLOTTED => 14-MAR-2012
TIME PLOTTED => 14:41

Dist	COUNTY	ROUTE	POST MILES TOTAL PROJECT	SHEET No.	TOTAL SHEETS
09	Mno	6	4.0/5.5	4	16

REGISTERED CIVIL ENGINEER 12-15-11 DATE

2-27-12
PLANS APPROVAL DATE

REGISTERED PROFESSIONAL ENGINEER LIANNE TALBOT No. 74599 Exp. 12-31-13 CIVIL STATE OF CALIFORNIA

THE STATE OF CALIFORNIA OR ITS OFFICERS OR AGENTS SHALL NOT BE RESPONSIBLE FOR THE ACCURACY OR COMPLETENESS OF SCANNED COPIES OF THIS PLAN SHEET.

NOTE:
FOR ACCURATE RIGHT OF WAY DATA, CONTACT
RIGHT OF WAY ENGINEERING AT THE DISTRICT OFFICE.

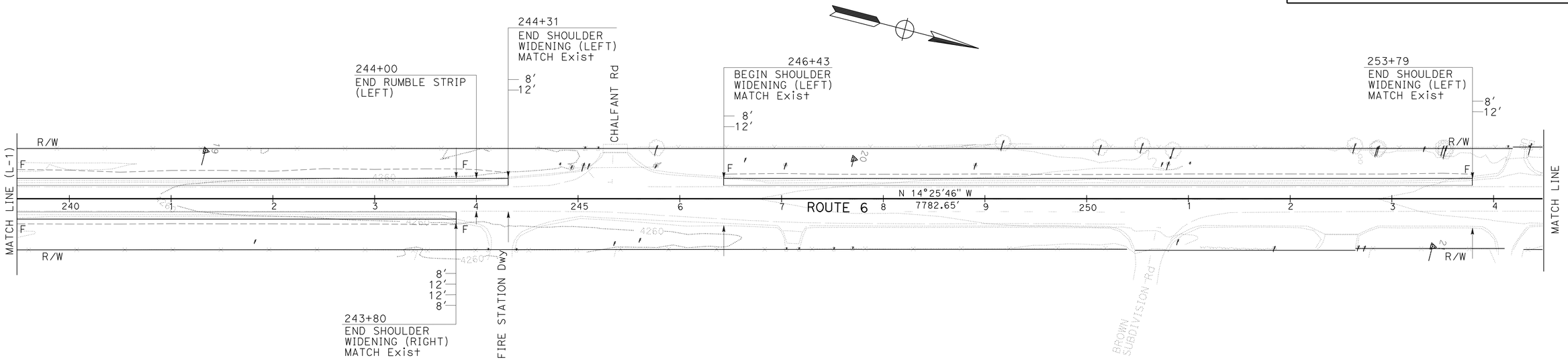

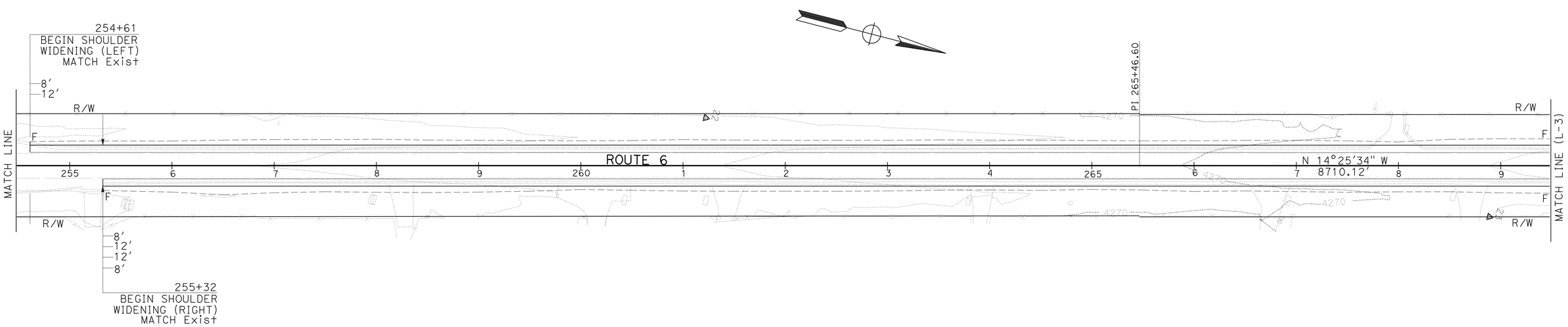

LAYOUT L-2

SCALE: 1" = 50′

REVISED BY	DATE REVISED

CALCULATED-DESIGNED BY	CHECKED BY
LIANNE TALBOT	TRUMAN DENIO

FUNCTIONAL SUPERVISOR: TRUMAN DENIO

STATE OF CALIFORNIA - DEPARTMENT OF TRANSPORTATION

Caltrans® DESIGN

LAST REVISION 12-15-11 | DATE PLOTTED => 14-MAR-2012 | TIME PLOTTED => 14:41

Dist	COUNTY	ROUTE	POST MILES TOTAL PROJECT	SHEET No.	TOTAL SHEETS
09	Mno	6	4.0/5.5	5	16

REGISTERED CIVIL ENGINEER 12-15-11 DATE

2-27-12
PLANS APPROVAL DATE

REGISTERED PROFESSIONAL ENGINEER
LIANNE TALBOT
No. 74599
Exp 12-31-13
CIVIL
STATE OF CALIFORNIA

THE STATE OF CALIFORNIA OR ITS OFFICERS OR AGENTS SHALL NOT BE RESPONSIBLE FOR THE ACCURACY OR COMPLETENESS OF SCANNED COPIES OF THIS PLAN SHEET.

NOTE:
FOR ACCURATE RIGHT OF WAY DATA, CONTACT
RIGHT OF WAY ENGINEERING AT THE DISTRICT OFFICE.

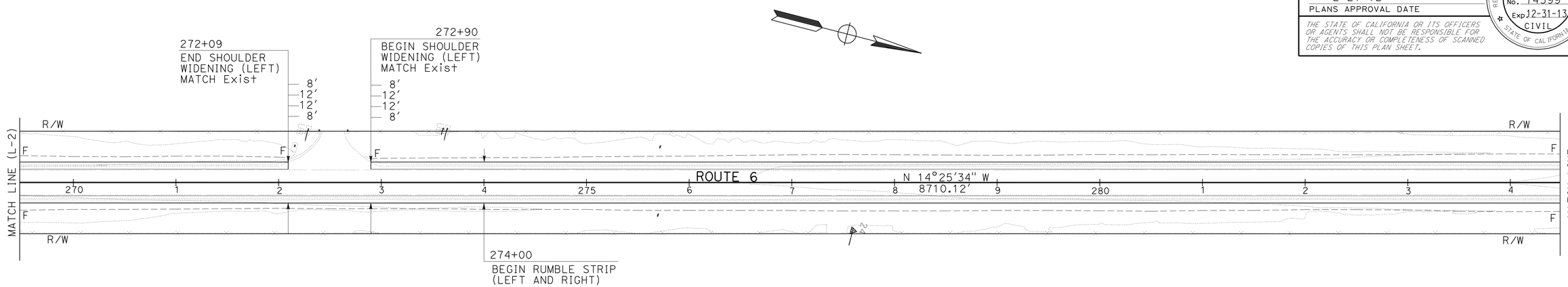

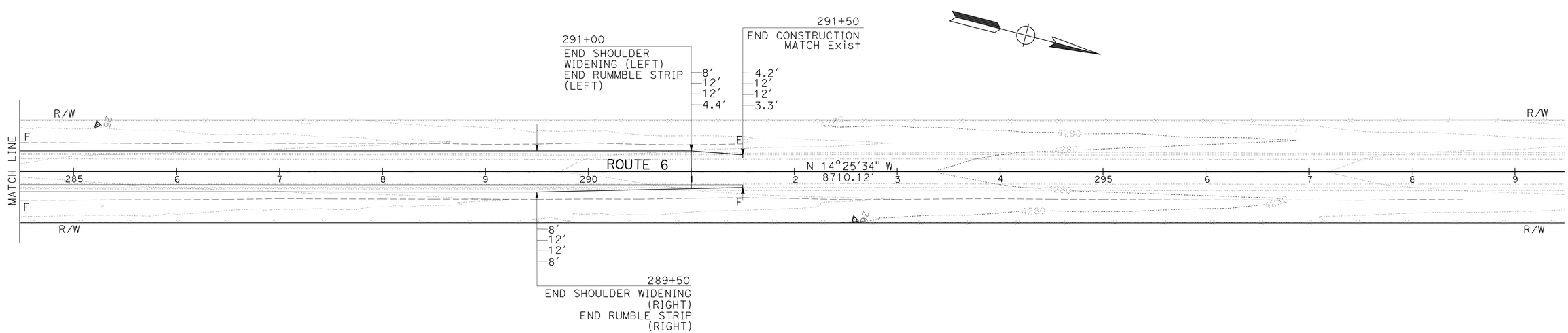

LAYOUT
SCALE: 1" = 50′ **L-3**

REVISED BY	DATE REVISED
LIANNE TALBOT	TRUMAN DENIO
CALCULATED-DESIGNED BY	CHECKED BY
FUNCTIONAL SUPERVISOR	TRUMAN DENIO

STATE OF CALIFORNIA - DEPARTMENT OF TRANSPORTATION
Caltrans
DESIGN

LAST REVISION 12-15-11
DATE PLOTTED => 14-MAR-2012
TIME PLOTTED => 14:41

Dist	COUNTY	ROUTE	POST MILES TOTAL PROJECT	SHEET No.	TOTAL SHEETS
09	Mno	6	4.0/5.5	6	16

REGISTERED CIVIL ENGINEER 12-15-11 DATE

2-27-12
PLANS APPROVAL DATE

REGISTERED PROFESSIONAL ENGINEER LIANNE TALBOT No. 74599 Exp 12/31/13 CIVIL STATE OF CALIFORNIA

THE STATE OF CALIFORNIA OR ITS OFFICERS OR AGENTS SHALL NOT BE RESPONSIBLE FOR THE ACCURACY OR COMPLETENESS OF SCANNED COPIES OF THIS PLAN SHEET.

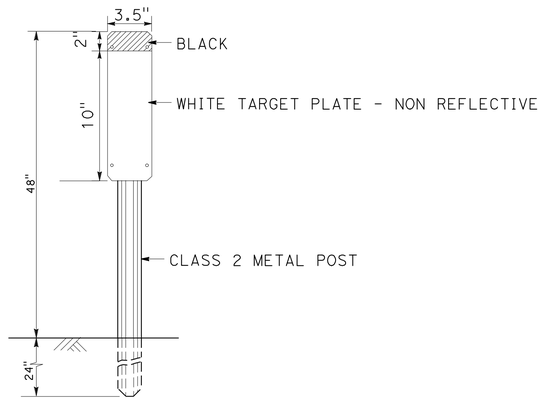

MARKER (CULVERT) PLATE AND POST DETAIL

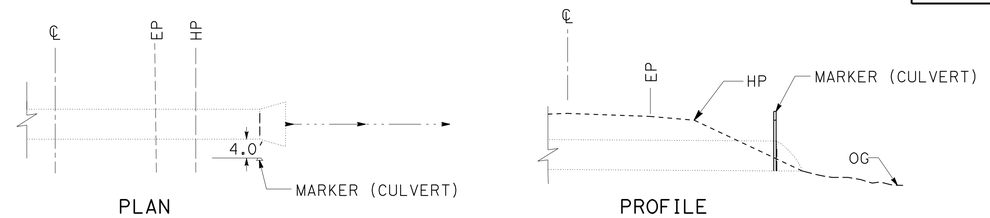

TYPICAL MARKER (CULVERT) PLACEMENT

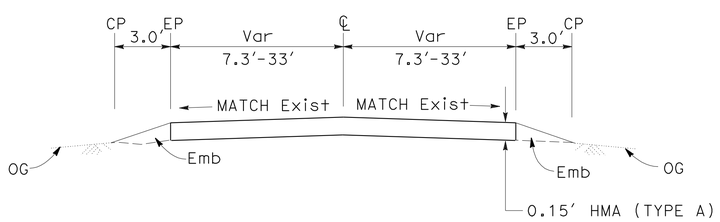

SECTION A-A

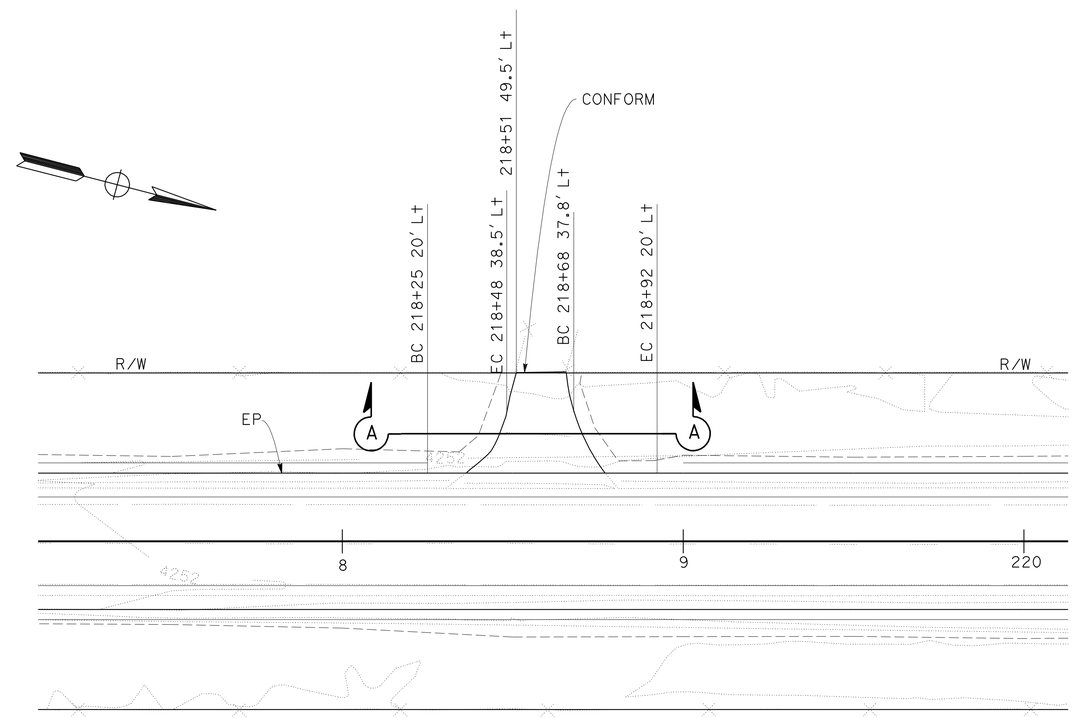

SOUTHERN CALIFORNIA EDISION ROAD CONNECTION

Sta 218+58

CONSTRUCTION DETAILS

NO SCALE

C-1

STATE OF CALIFORNIA - DEPARTMENT OF TRANSPORTATION
Caltrans
DESIGN

FUNCTIONAL SUPERVISOR: TRUMAN DENIO
CALCULATED-DESIGNED BY: LIANNE TALBOT
CHECKED BY: TRUMAN DENIO
REVISED BY
DATE REVISED

LAST REVISION 12-15-11
DATE PLOTTED => 14-MAR-2012
TIME PLOTTED => 14:41

Dist	COUNTY	ROUTE	POST MILES TOTAL PROJECT	SHEET No.	TOTAL SHEETS
09	Mno	6	4.0/5.5	7	16

REGISTERED CIVIL ENGINEER 12-15-11 DATE

2-27-12
PLANS APPROVAL DATE

REGISTERED PROFESSIONAL ENGINEER LIANNE TALBOT No. 74599 Exp 12-31-13 CIVIL STATE OF CALIFORNIA

THE STATE OF CALIFORNIA OR ITS OFFICERS OR AGENTS SHALL NOT BE RESPONSIBLE FOR THE ACCURACY OR COMPLETENESS OF SCANNED COPIES OF THIS PLAN SHEET.

NOTES:

1. LOCATION AND POSITION OF CONSTRUCTION AREA SIGNS AND PORTABLE CHANGEABLE MESSAGE SIGNS ARE APPROXIMATE. EXACT LOCATION TO BE DETERMINED BY THE ENGINEER.
2. MESSAGE ON PORTABLE CHANGEABLE MESSAGE SIGN WILL BE DETERMINED BY THE ENGINEER.

LEGEND:

(X) - PLACEMENT TYPE

- CONSTRUCTION AREA SIGNS (ONE POST)

(A)

ROAD WORK AHEAD — W20-1, 48" x 48", ON 4" x 6" POST

SHOULDER WIDENING — C23B (CA), 42" x 18"

(B)

END ROAD WORK — G20-2, 36" x 18", 4" x 4" POSTS

(C)

ROAD WORK AHEAD — W20-1, 36" x 36", ON 4" x 6" POST

STATIONARY MOUNTED CONSTRUCTION AREA SIGNS		
PLACEMENT TYPE	NUMBER OF POSTS AND SIZE	NUMBER OF SIGNS
(A)	1 - 4" x 6"	2
(B)	1 - 4" x 4"	5
(C)	1 - 4" x 6"	3

PORTABLE CHANGEABLE MESSAGE SIGNS		
MESSAGING FOR ONE-WAY TRAFFIC CONTROL		
FIRST FRAME	SECOND FRAME	THIRD FRAME
FLAGGER AHEAD	REDUCE SPEED	EXPECT DELAYS

PORTABLE CHANGEABLE MESSAGE SIGN
No. OF SIGNS
2

NOTES:

1. PORTABLE CHANGEABLE MESSAGE SIGN LOCATIONS TO BE CONFIRMED BY THE ENGINEER BEFORE THE ACTUAL CLOSURE.
2. ALTERNATE MESSAGES MUST BE APPROVED BY THE ENGINEER.
3. MESSAGES MAY BE ALTERED BY THE ENGINEER.
4. WHEN CONSTRUCTION OPERATIONS ARE NOT ACTIVELY IN PROGRESS, PORTABLE CHANGEABLE MESSAGE SIGNS SHALL NOT DISPLAY A MESSAGE UNLESS DIRECTED BY THE ENGINEER.

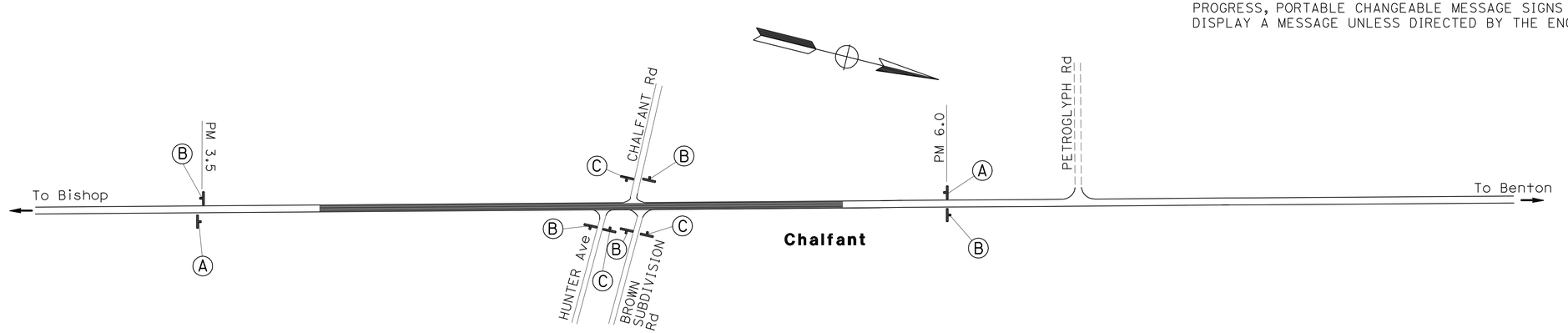

THIS PLAN ACCURATE FOR CONSTRUCTION AREA SIGN WORK ONLY.

CONSTRUCTION AREA SIGNS
NO SCALE

CS-1

STATE OF CALIFORNIA - DEPARTMENT OF TRANSPORTATION
Caltrans DESIGN

FUNCTIONAL SUPERVISOR: TRUMAN DENIIO
CALCULATED-DESIGNED BY: LIANNE TALBOT
CHECKED BY: TRUMAN DENIIO
REVISED BY
DATE REVISED

LAST REVISION 12-15-11
DATE PLOTTED => 14-MAR-2012
TIME PLOTTED => 14:41

Dist	COUNTY	ROUTE	POST MILES TOTAL PROJECT	SHEET No.	TOTAL SHEETS
09	Mno	6	4.0/5.5	8	16

REGISTERED CIVIL ENGINEER 12-15-11 DATE

2-27-12
PLANS APPROVAL DATE

REGISTERED PROFESSIONAL ENGINEER LIANNE TALBOT No. 74599 Exp. 12-31-13 CIVIL STATE OF CALIFORNIA

THE STATE OF CALIFORNIA OR ITS OFFICERS OR AGENTS SHALL NOT BE RESPONSIBLE FOR THE ACCURACY OR COMPLETENESS OF SCANNED COPIES OF THIS PLAN SHEET.

NOTES:
1. THIS PLAN ACCURATE FOR PAVEMENT DELINEATION WORK ONLY
2. (N) NOT A SEPARATE ITEM, FOR INFORMATION ONLY.

PAINT TRAFFIC STRIPE (2-COAT)

STATION TO STATION (LOCATION)			LENGTH (N)	DETAIL No. 27B
			LF	LF
211+00	-	229+50	1850	3700
229+50	-	235+50	600	600
235+50	-	244+50	900	1800
244+50	-	254+50	1000	1000
254+50	-	292+50	3800	7600
TOTAL				14,700

REMOVE DELINEATOR

Sta TO Sta	REMOVE DELINEATOR
	EA
212+00 TO 291+50	43
TOTAL	43

HIGHWAY POST MARKER

STATION	L†	R†	EA	MESSAGE
211+80		X	1	006 Mno 4.0
238+18	X		1	006 Mno 4.5
264+79		X	1	006 Mno 5.0
291+53	X		1	006 Mno 5.5
TOTAL			4	

MARKER (CULVERT)

STATION	L†	R†	MARKER (CULVERT)
			EA
225+39	X	X	2
TOTAL			2

DELINEATOR (CLASS 2)

STA	L†	R†	DELINEATOR (CLASS 2) TYPE E	TYPE F	REMARKS
			EA	EA	
212+00	X	X	2		
217+30	X	X	2		
222+60	X	X	2		
227+90	X	X	2		
230+00		X		1	
231+00		X	1		
233+00		X		1	
233+20	X		1		
234+00		X		1	
238+50	X	X	2		
242+50	X		1		
243+80	X	X	1	1	INSTALL TYPE E R† AND TYPE F L†
244+67	X			1	
246+10	X		1		
247+10	X			1	
247+50		X	1		
249+00		X		1	
249+10	X		1		
250+00		X	1		
251+20		X		1	
252+00		X		1	
254+80	X	X	2		
259+60	X	X	2		
264+90	X	X	2		
270+20	X	X	2		
275+50	X	X	2		
280+80	X	X	2		
286+10	X	X	2		
291+40	X	X	2		
SUBTOTAL			34	9	
TOTAL			43		

PAVEMENT DELINEATION QUANTITIES
PDQ-1

STATE OF CALIFORNIA - DEPARTMENT OF TRANSPORTATION
Caltrans® DESIGN

FUNCTIONAL SUPERVISOR: TRUMAN DENIO
CALCULATED-DESIGNED BY: LIANNE TALBOT
CHECKED BY: TRUMAN DENIO
REVISED BY
DATE REVISED

LAST REVISION 12-15-11
DATE PLOTTED => 14-MAR-2012
TIME PLOTTED => 14:41

Dist	COUNTY	ROUTE	POST MILES TOTAL PROJECT	SHEET No.	TOTAL SHEETS
09	Mno	6	4.0/5.5	9	16

REGISTERED CIVIL ENGINEER 12-15-11 DATE

2-27-12
PLANS APPROVAL DATE

REGISTERED PROFESSIONAL ENGINEER LIANNE TALBOT No. 74599 Exp. 12-31-13 CIVIL STATE OF CALIFORNIA

THE STATE OF CALIFORNIA OR ITS OFFICERS OR AGENTS SHALL NOT BE RESPONSIBLE FOR THE ACCURACY OR COMPLETENESS OF SCANNED COPIES OF THIS PLAN SHEET.

NOTES FOR W16-8:
BLACK ON YELLOW
5" UPPERCASE, D FONT
0.5" BORDER, 1.5" CORNER RADIUS
0.5" MARGIN, TRIMMED CORNERS

SIGN 4 7

NOTES FOR W16-8:
BLACK ON YELLOW
5" UPPERCASE, D FONT
0.5" BORDER, 1.5" CORNER RADIUS
0.5" MARGIN, TRIMMED CORNERS

SIGN 8 17

NOTES FOR W16-8:
BLACK ON YELLOW
5" UPPERCASE, D FONT
0.5" BORDER, 1.5" CORNER RADIUS
0.5" MARGIN, TRIMMED CORNERS

SIGN 12 18

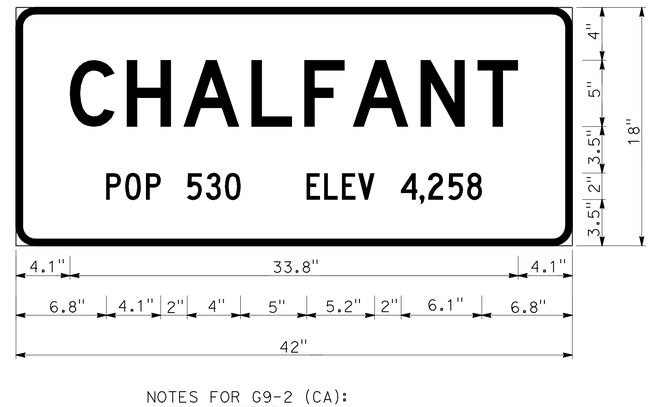

NOTES FOR G9-2 (CA):
WHITE ON GREEN
LINE 1 - 5" UPPERCASE, D FONT
LINE 2 - 2" UPPERCASE, C FONT
0.5" BORDER, 1.5" CORNER RADIUS
NO MARGIN, UNTRIMMED CORNERS

SIGN 1 21

SIGN DETAILS
NO SCALE **SD-1**

STATE OF CALIFORNIA - DEPARTMENT OF TRANSPORTATION
Caltrans DESIGN

FUNCTIONAL SUPERVISOR: TRUMAN DENIO
CALCULATED-DESIGNED BY: LIANNE TALBOT
CHECKED BY: JOEL NASH
REVISED BY
DATE REVISED

LAST REVISION 12-15-11
DATE PLOTTED => 14-MAR-2012
TIME PLOTTED => 14:42

Dist	COUNTY	ROUTE	POST MILES TOTAL PROJECT	SHEET No.	TOTAL SHEETS
09	Mno	6	4.0/5.5	10	16

REGISTERED CIVIL ENGINEER 12-15-11 DATE

2-27-12
PLANS APPROVAL DATE

REGISTERED PROFESSIONAL ENGINEER LIANNE TALBOT No. 74599 Exp. 12-31-13 CIVIL STATE OF CALIFORNIA

THE STATE OF CALIFORNIA OR ITS OFFICERS OR AGENTS SHALL NOT BE RESPONSIBLE FOR THE ACCURACY OR COMPLETENESS OF SCANNED COPIES OF THIS PLAN SHEET.

NOTE:
1. EXACT LOCATION OF ROADSIDE SIGNS TO BE DETERMINED BY THE ENGINEER.

SIGN SUMMARY

SIGN NUMBER	STATION	LEFT	RIGHT	CODE	MESSAGE	SIZE (L x D)	REMOVE ROADSIDE SIGN (EA)	ROADSIDE SIGN (ONE POST) (EA)	SIGN MATERIALS: FURNISH SINGLE SHEET ALUMINUM SIGN 0.063"-UNFRAMED (SQFT)	SINGLE FACED	BACKGROUND: SHEETING COLOR	BACKGROUND: RETROREFLECTIVE ASTM TYPE	LEGEND: SHEETING COLOR	LEGEND: RETROREFLECTIVE ASTM TYPE	GRAFFITI FILM: STANDARD	GRAFFITI FILM: PREMIUM	POSTS SIZE	FNBT	FSBT	FEBT	FWBT	REMARKS
1	211+93		X	G9-2 (CA)	CHALFANT	42" x 18"	1	1	5.25	X	GREEN	III	WHITE	VII		X	4" x 6"	X				SEE SHEET SD-1
2	217+01		X	R2-1 (60)	SPEED LIMIT 60	36" x 48"	1	1	12.00	X	WHITE	III	BLACK			X	6" x 6"	X				
				R48-1 (CA)	RADAR ENFORCED	36" x 18"			4.50	X	WHITE	III	BLACK			X		X				
3	217+02	X		R2-1 (65)	SPEED LIMIT 65	36" x 48"	1	1	12.00	X	WHITE	III	BLACK			X	6" x 6"		X			
				R48-1 (CA)	RADAR ENFORCED	36" x 18"			4.50	X	WHITE	III	BLACK			X			X			
4	225+08		X	W2-2	INTERSECTION	36" x 36"	1	1	9.00	X	YELLOW	III	BLACK		X		4" x 6"	X				
				W16-8	HUNTER AVE	36" x 24"			6.00	X	YELLOW	III	BLACK		X			X				SEE SHEET SD-1
5	232+18	X		W1-7	TWO-DIRECTION ARROW	48" x 24"	1	1	8.00	X	YELLOW	III	BLACK		X		4" x 6"				X	
				TYPE N-1 (CA)	OBJECT MARKER (OM1-3)	18" x 18"			2.25	X	YELLOW	III			X						X	
6	232+20		X	R1-1	STOP	36" x 36"	1	1	9.00	X	RED	VII	WHITE	VII	X		4" x 6"				X	
7	236+97	X		W2-2	INTERSECTION	36" x 36"	1	1	9.00	X	YELLOW	III	BLACK		X		4" x 6"		X			
				W16-8	HUNTER AVE	36" x 24"			6.00	X	YELLOW	III	BLACK		X				X			SEE SHEET SD-1
8	238+00		X	W2-2	INTERSECTION	36" x 36"	1	1	9.00	X	YELLOW	III	BLACK		X		4" x 6"		X			
				W16-8	CHALFANT ROAD	42" x 24"			7.00	X	YELLOW	III	BLACK		X				X			SEE SHEET SD-1
9	241+82		X	W11-8	EMERGENCY VEHICLES	36" x 36"	1	1	9.00	X	YELLOW	III	BLACK		X		4" x 6"	X				
10	245+10	X		R1-1	STOP	36" x 36"	1	1	9.00	X	RED	VII	WHITE	VII	X		4" x 6"			X		
11	245+35		X	W1-7	TWO-DIRECTION ARROW	48" x 24"	1	1	8.00	X	YELLOW	III	BLACK		X		4" x 6"			X		
				TYPE N-1 (CA)	OBJECT MARKER (OM1-3)	18" x 18"			2.25	X	YELLOW	III	BLACK		X					X		
12	245+60		X	W2-2	INTERSECTION	36" x 36"	1	1	9.00	X	YELLOW	III	BLACK		X		4" x 6"	X				
				W16-8	BROWN SUBD ROAD	36" x 30"			7.50	X	YELLOW	III	BLACK		X			X				SEE SHEET SD-1
13	246+64	X		W11-8	EMERGENCY VEHICLES	36" x 36"	1	1	9.00	X	YELLOW	III	BLACK		X		4" x 6"		X			
14	250+74	X		W1-7	TWO-DIRECTION ARROW	48"x 24"	1	1	8.00	X	YELLOW	III	BLACK		X		4" x 6"				X	
				TYPE N-1 (CA)	OBJECT MARKER (OM1-3)	18" x 18"			2.25	X	YELLOW	III	BLACK		X						X	
15	250+90		X	R1-1	STOP	36" x 36"	1	1	9.00	X	RED	VII	WHITE	VII		X	4" x 6"				X	
16	252+69	X		G8-1	CHALFANT RD ->	36" x 18"	1															
17	252+69	X		W2-2	INTERSECTION	36" x 36"		1	9.00	X	YELLOW	III	BLACK		X		4" x 6"		X			
				W16-8	CHALFANT ROAD	42" x 24"			7.00	X	YELLOW	III	BLACK		X				X			SEE SHEET SD-1
18	257+04	X		W2-2	INTERSECTION	36" x 36"	1	1	9.00	X	YELLOW	III	BLACK		X		4" x 6"		X			
				W16-8	BROWN SUBD ROAD	36" x 30"			7.50	X	YELLOW	III	BLACK		X				X			SEE SHEET SD-1
19	275+69		X	R2-1 (65)	SPEED LIMIT 65	36" x 48"	1	1	12.00	X	WHITE	III	BLACK			X	6" x 6"	X				
20	275+71	X		R2-1 (60)	SPEED LIMIT 60	36" x 48"	1	1	12.00	X	WHITE	III	BLACK			X	6" x 6"	X				
				R48-1 (CA)	RADAR ENFORCED	36" x 18"			9.00	X	RED	VII	WHITE	VII	X						X	
21	280+46	X		G9-2 (CA)	CHALFANT	42" x 18"		1	5.25	X	GREEN	III	WHITE	VII		X	4" x 6"		X			SEE SHEET SD-1
						TOTAL	19	20	247.25													

SIGN QUANTITIES
SQ-1

STATE OF CALIFORNIA - DEPARTMENT OF TRANSPORTATION
Caltrans DESIGN

FUNCTIONAL SUPERVISOR: TRUMAN DENIO
CALCULATED-DESIGNED BY: LIANNE TALBOT
CHECKED BY: DONNA HOLLAND
REVISED BY
DATE REVISED

LAST REVISION 12-15-11
DATE PLOTTED => 14-MAR-2012
TIME PLOTTED => 14:42

Dist	COUNTY	ROUTE	POST MILES TOTAL PROJECT	SHEET No.	TOTAL SHEETS
09	Mno	6	4.0/5.5	11	16

REGISTERED CIVIL ENGINEER 12-15-11 DATE

2-27-12
PLANS APPROVAL DATE

REGISTERED PROFESSIONAL ENGINEER LIANNE TALBOT No. 74599 Exp. 12-31-13 CIVIL STATE OF CALIFORNIA

THE STATE OF CALIFORNIA OR ITS OFFICERS OR AGENTS SHALL NOT BE RESPONSIBLE FOR THE ACCURACY OR COMPLETENESS OF SCANNED COPIES OF THIS PLAN SHEET.

NOTE:
(N) - NOT A SEPARATE PAY ITEM, FOR INFORMATION ONLY.

SHOULDER WIDENING QUANTITIES

STATION TO STATION LOCATION	ROADWAY EXCAVATION	CLASS 2 AB	HMA (TYPE A)	TACK COAT	EMBANKMENT
	CY	CY	TON	TON	CY (N)
212+00 TO 228+83	651	303	881	0.45	219
228+83 TO 236+21	145	69	200	0.10	86
236+21 TO 243+80	298	138	399	0.20	98
243+80 TO 244+31	12	6	16	0.01	6
246+43 TO 253+79	148	70	199	0.10	21
254+61 TO 255+32	18	8	27	0.01	2
255+32 TO 272+09	649	304	880	0.43	179
272+09 TO 272+90	23	11	32	0.01	7
272+90 TO 291+50	679	335	971	0.48	364
TOTAL	2623	1244	3605	1.79	982

RUMBLE STRIP

STATION TO STATION	LENGTH	L+	R+
	LF (N)	Sta	Sta
212+50 TO 214+00	150		1.50
214+00 TO 228+00	1400	14.00	14.00
228+00 TO 244+00	1600	16.00	
274+00 TO 289+50	1550	15.50	15.50
289+50 TO 291+00	150	1.50	
SUBTOTAL		47.00	31.00
TOTAL		78.00	

TEMPORARY FIBER ROLL

STATION TO STATION	L+	R+	TEMPORARY FIBER ROLL
			LF
225+18 TO 225+58		X	40
225+20 TO 225+60	X		40
231+40 TO 231+60		X	40
232+32 TO 232+52		X	40
TOTAL			160

SUMMARY OF QUANTITIES
Q-1

REVISED BY | DATE REVISED
LIANNE TALBOT | TRUMAN DENIO
CALCULATED-DESIGNED BY | CHECKED BY
FUNCTIONAL SUPERVISOR
TRUMAN DENIO
STATE OF CALIFORNIA - DEPARTMENT OF TRANSPORTATION
Caltrans
DESIGN

LAST REVISION 12-15-11 | DATE PLOTTED => 14-MAR-2012 | TIME PLOTTED => 14:42

DIST	COUNTY	ROUTE	POST MILES TOTAL PROJECT	SHEET NO.	TOTAL SHEETS
09	Mno	6	4.0/5.5	12	16

Randell D. Hiatt
REGISTERED CIVIL ENGINEER

June 6, 2008
PLANS APPROVAL DATE

REGISTERED PROFESSIONAL ENGINEER
Randell D. Hiatt
No. C50200
Exp. 6-30-09
CIVIL
STATE OF CALIFORNIA

The State of California or its officers or agents shall not be responsible for the accuracy or completeness of electronic copies of this plan sheet.

To accompany plans dated 2-27-12

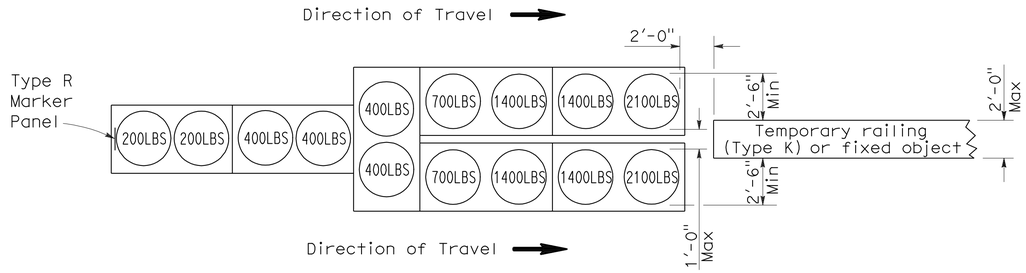

ARRAY `TU14'

Approach speed 45 mph or more

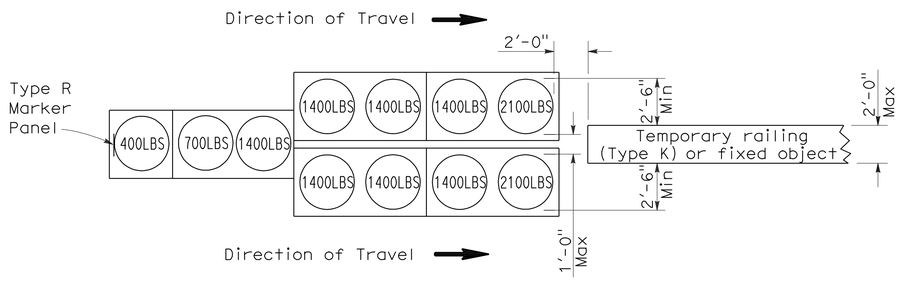

ARRAY `TU11'

Approach speed less than 45 mph

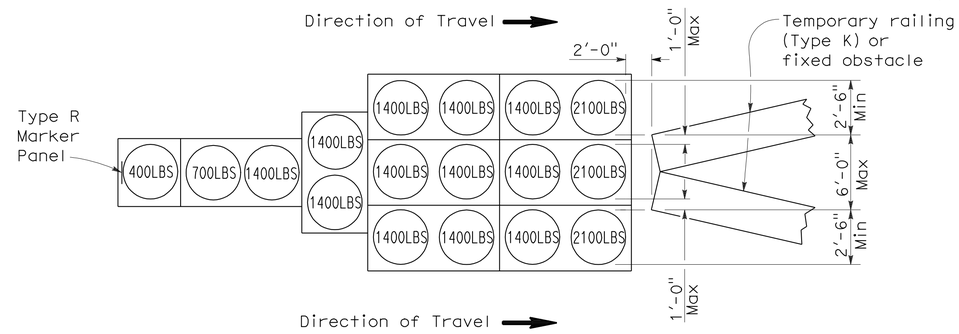

ARRAY `TU17'

Approach speed less than 45 mph

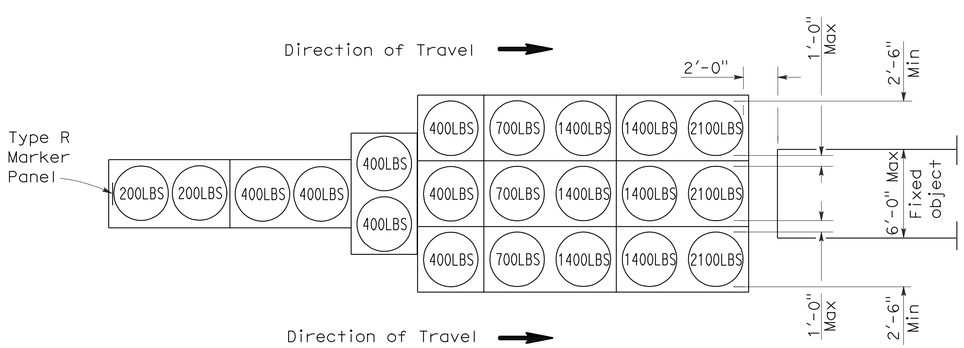

ARRAY `TU21'

Approach speed 45 mph or more

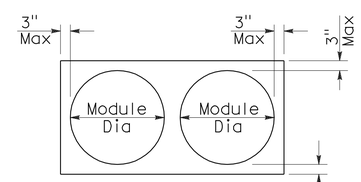

PLAN

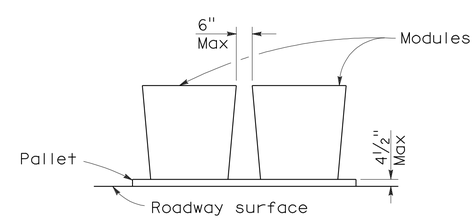

ELEVATION

CRASH CUSHION PALLET DETAIL

See Note 7

NOTES:

1. (XXX) Indicates sand filled module location and weight of sand in pounds for each module. Module spacing is based on the greater diameter of the module.
2. All sand weights are nominal.
3. Temporary crash cushion arrays shall not encroach on the traveled way.
4. Place the top of Type R marker panel 1" below the module lid.
5. Refer to Standard Plan A73B for marker details.
6. Approach speeds indicated conform to NCHRP 350 Report criteria.
7. Use of pallets is optional.

STATE OF CALIFORNIA
DEPARTMENT OF TRANSPORTATION

TEMPORARY CRASH CUSHION, SAND FILLED (UNIDIRECTIONAL)

NO SCALE

RSP T1A DATED JUNE 6, 2008 SUPERSEDES STANDARD PLAN T1A
DATED MAY 1, 2006 - PAGE 211 OF THE STANDARD PLANS BOOK DATED MAY 2006.

REVISED STANDARD PLAN RSP T1A

2006 REVISED STANDARD PLAN RSP T1A

DIST	COUNTY	ROUTE	POST MILES TOTAL PROJECT	SHEET NO.	TOTAL SHEETS
09	Mno	6	4.0/5.5	13	16

Randell D. Hiatt
REGISTERED CIVIL ENGINEER

June 6, 2008
PLANS APPROVAL DATE

REGISTERED PROFESSIONAL ENGINEER
Randell D. Hiatt
No. C50200
Exp. 6-30-09
CIVIL
STATE OF CALIFORNIA

The State of California or its officers or agents shall not be responsible for the accuracy or completeness of electronic copies of this plan sheet.

To accompany plans dated 2-27-12

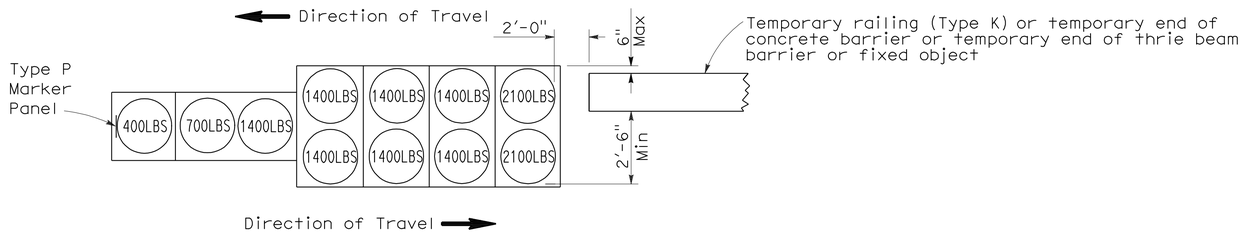

ARRAY 'TB11'

Approach speed less than 45 mph

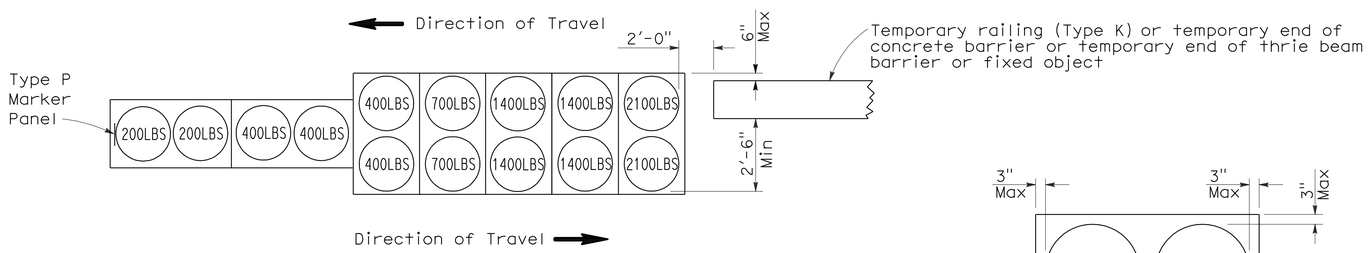

ARRAY 'TB14'

Approach speed 45 mph or more

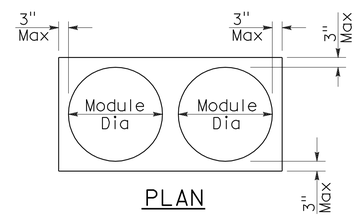

PLAN

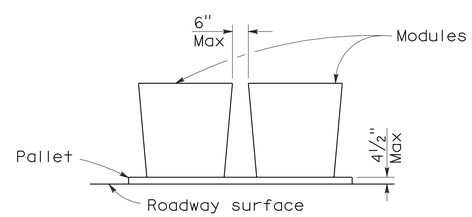

ELEVATION

CRASH CUSHION PALLET DETAIL

See Note 7

NOTES:

1. (XXX) Indicates sand filled module location and weight of sand in pounds for each module. Module spacing is based on the greater diameter of the module.
2. All sand weights are nominal.
3. Temporary crash cushion arrays shall not encroach on the traveled way.
4. Place the Type P marker panel so that the bottom of the panel rests upon the pallet.
5. Refer to Standard Plan A73B for marker details.
6. Approach speeds indicated conform to NCHRP 350 Report criteria.
7. Use of pallets is optional.

STATE OF CALIFORNIA
DEPARTMENT OF TRANSPORTATION

TEMPORARY CRASH CUSHION, SAND FILLED (BIDIRECTIONAL)

NO SCALE

RSP T1B DATED JUNE 6, 2008 SUPERSEDES STANDARD PLAN T1B
DATED MAY 1, 2006 - PAGE 212 OF THE STANDARD PLANS BOOK DATED MAY 2006.

REVISED STANDARD PLAN RSP T1B

2006 REVISED STANDARD PLAN RSP T1B

5-15-08

DIST	COUNTY	ROUTE	POST MILES TOTAL PROJECT	SHEET NO.	TOTAL SHEETS
09	Mno	6	4.0/5.5	14	16

Randell D. Hiatt
REGISTERED CIVIL ENGINEER

June 6, 2008
PLANS APPROVAL DATE

REGISTERED PROFESSIONAL ENGINEER
Randell D. Hiatt
No. C50200
Exp. 6-30-09
CIVIL
STATE OF CALIFORNIA

The State of California or its officers or agents shall not be responsible for the accuracy or completeness of electronic copies of this plan sheet.

To accompany plans dated 2-27-12

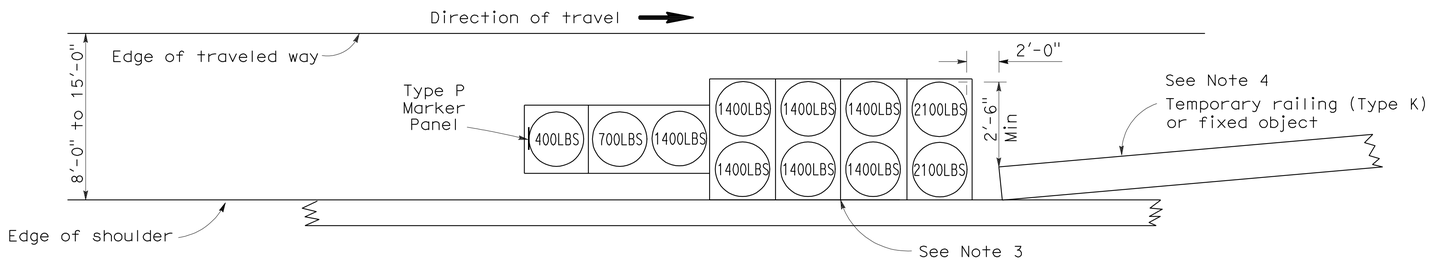

ARRAY 'TS11'

Approach speed less than 45 mph
See Note 9

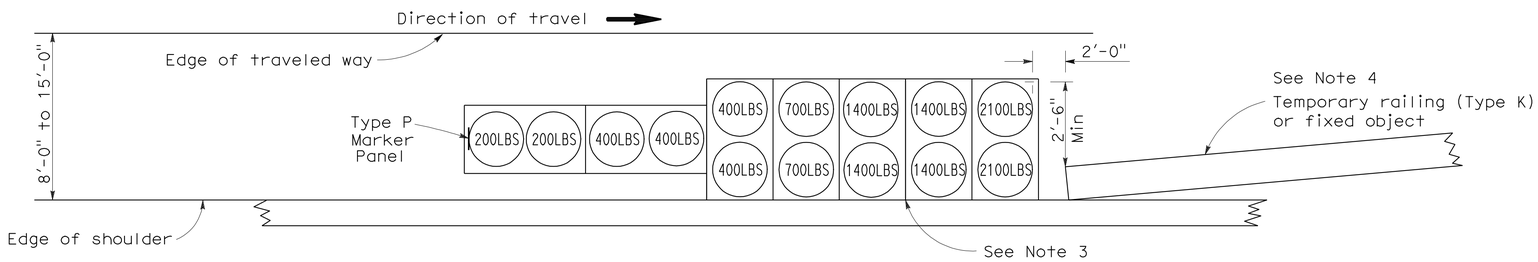

ARRAY 'TS14'

Approach speed 45 mph or more
See Note 9

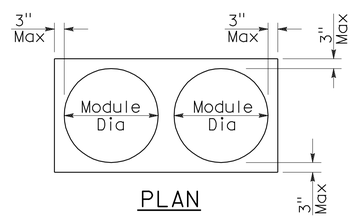

PLAN

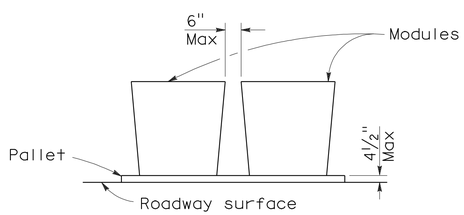

ELEVATION

CRASH CUSHION PALLET DETAIL

See Note 11

NOTES:

1. (XXX) Indicates sand filled module location and weight of sand in pounds for each module. Module spacing is based on the greater diameter of the module.
2. All sand weights are nominal.
3. The temporary crash cushion arrays shown on this plan shall be used only in locations where there will be traffic on one side of the temporary crash cushion array.
4. If the fixed object or approach end of the temporary railing is less than 15'-0" from the edge of traveled way, a temporary crash cushion is required in a construction or work zone.
5. Temporary crash cushion arrays shall not encroach on the traveled way.
6. Arrays for median shoulders shall conform to details shown on this plan for outside shoulders.
7. Place the Type P marker panel so that the bottom of the panel rests upon the pallet and faces traffic.
8. Refer to Standard Plan A73B for marker details.
9. For shoulder widths less than 8'-0", appropriate approved crash cushion protection, other than sand filled modules, shall be provided at fixed objects and at approach ends of temporary railing. The specific type of crash cushion shall be as shown on the project plans or as specified in the Special Provisions, or if not shown on the project plans or specified in the Special Provisions, shall be as approved by the Engineer.
10. Approach speeds indicated conform to NCHRP 350 Report criteria.
11. Use of pallets is optional.

STATE OF CALIFORNIA
DEPARTMENT OF TRANSPORTATION

TEMPORARY CRASH CUSHION, SAND FILLED (SHOULDER INSTALLATIONS)

NO SCALE

RSP T2 DATED JUNE 6, 2008 SUPERSEDES STANDARD PLAN T2
DATED MAY 1, 2006 - PAGE 213 OF THE STANDARD PLANS BOOK DATED MAY 2006.

REVISED STANDARD PLAN RSP T2

2006 REVISED STANDARD PLAN RSP T2

5-15-08

Dist	COUNTY	ROUTE	POST MILES TOTAL PROJECT	SHEET No.	TOTAL SHEETS
09	Mno	6	4.0/5.5	15	16

Randell D. Hiatt
REGISTERED CIVIL ENGINEER

May 20, 2011
PLANS APPROVAL DATE

REGISTERED PROFESSIONAL ENGINEER
Randell D. Hiatt
No. C50200
Exp. 6-30-11
CIVIL
STATE OF CALIFORNIA

The State of California or its officers or agents shall not be responsible for the accuracy or completeness of electronic copies of this plan sheet.

To accompany plans dated 2-27-12

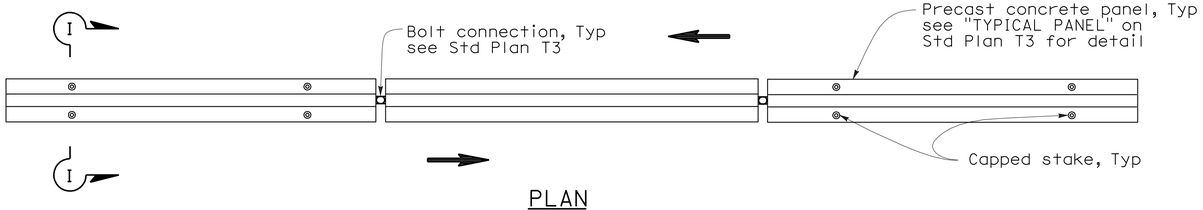

PLAN

RAILING STAKING CONFIGURATION FOR TWO-WAY TRAFFIC

See Note 1

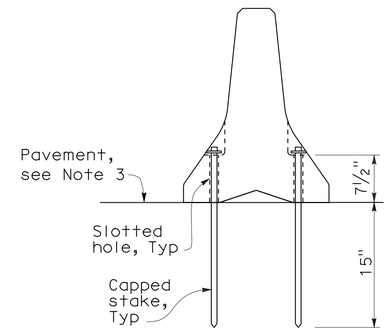

SECTION I-I

NOTES:

1. Where Type K Temporary Railing is placed as a temporary or long term barrier in two-way traffic on highways with less than 24" from the edge of traveled way, use four capped stakes per every other panel with end panels staked.
2. Where Type K Temporary Railing is placed 3" to 24" from the edge of an excavation on highways, use two capped stakes per panel along the traffic side.
3. Staked Type K Temporary Railing must be supported by at least 4" thick concrete, hot mix asphalt or existing asphalt concrete pavement.
4. The minimum yield strength for the washer must be 60,000 psi.
5. Direction of adjacent traffic indicated by ⟹.

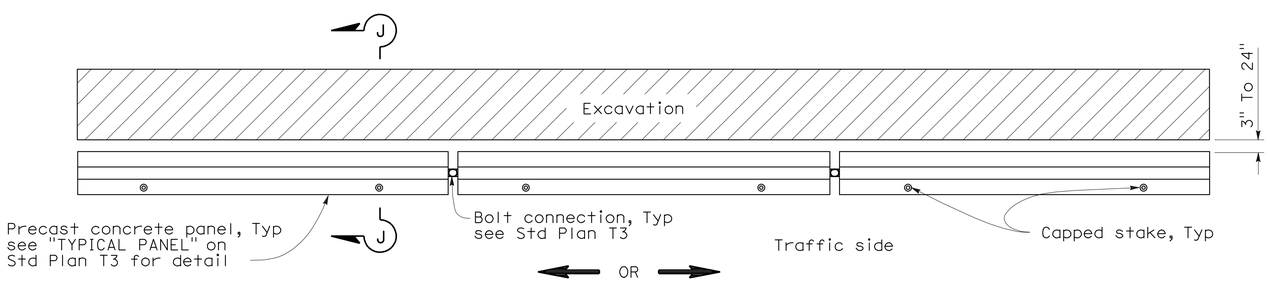

PLAN

RAILING STAKING CONFIGURATION ADJACENT TO AN EXCAVATION

See Note 2

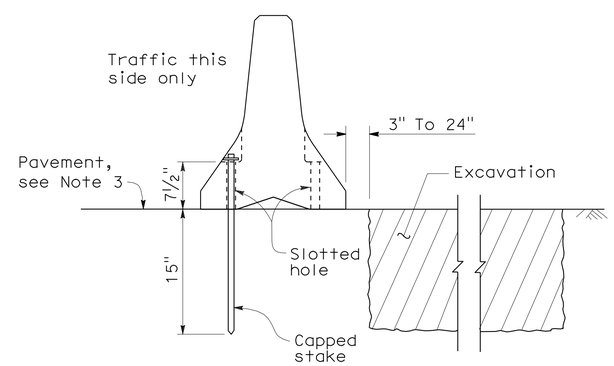

SECTION J-J

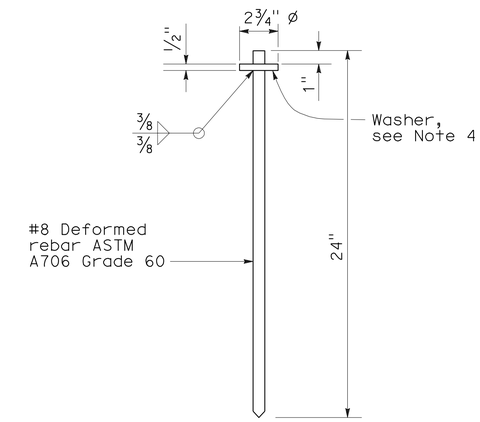

CAPPED STAKE DETAIL

STATE OF CALIFORNIA
DEPARTMENT OF TRANSPORTATION

TEMPORARY RAILING (TYPE K)

NO SCALE

NSP T3A DATED MAY 20, 2011 SUPPLEMENTS
THE STANDARD PLANS BOOK DATED MAY 2006.

NEW STANDARD PLAN NSP T3A

2006 NEW STANDARD PLAN NSP T3A

DIST	COUNTY	ROUTE	POST MILES TOTAL PROJECT	SHEET NO.	TOTAL SHEETS
09	Mno	6	4.0/5.5	16	16

Robert B Schott
LICENSED LANDSCAPE ARCHITECT

April 3, 2009
PLANS APPROVAL DATE

LICENSED LANDSCAPE ARCHITECT
Robert B. Schott 3695
Signature
11-30-10
Renewal Date
2-25-09
Date
STATE OF CALIFORNIA

The State of California or its officers or agents shall not be responsible for the accuracy or completeness of electronic copies of this plan sheet.

To accompany plans dated 2-27-12

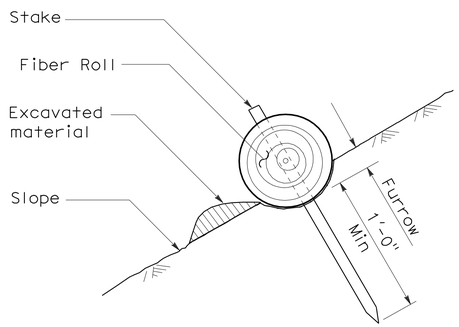

SECTION

TEMPORARY FIBER ROLL (TYPE 1)

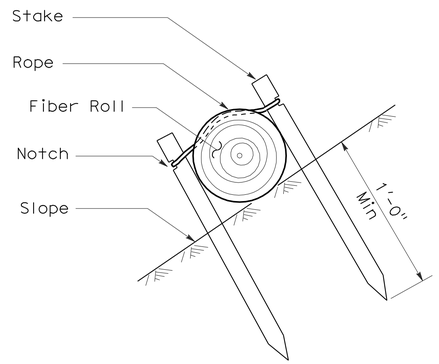

SECTION

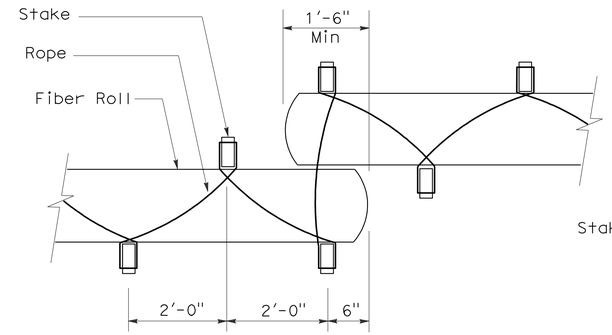

PLAN

TEMPORARY FIBER ROLL (TYPE 2)

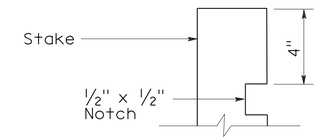

ELEVATION

STAKE NOTCH DETAIL

NOTES:

1. Temporary fiber roll spacing varies depending upon slope inclination.
2. Installations shown in the perspectives are for slope inclination of 10:1 and steeper.

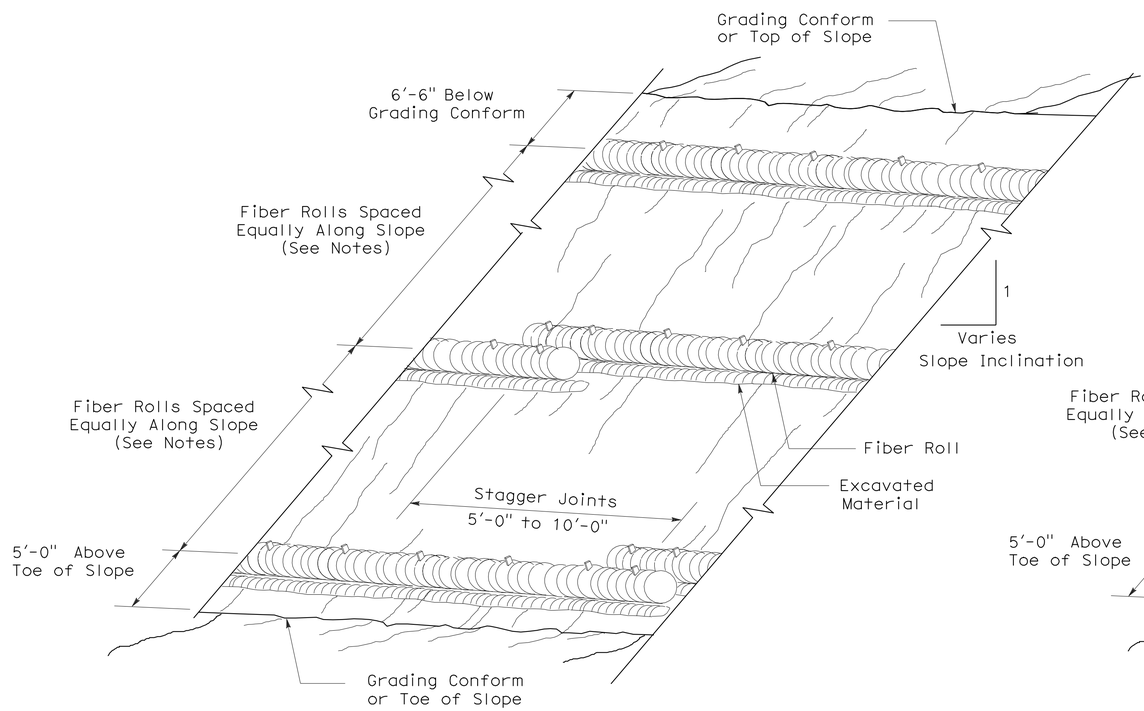

PERSPECTIVE

TEMPORARY FIBER ROLL (TYPE 1)

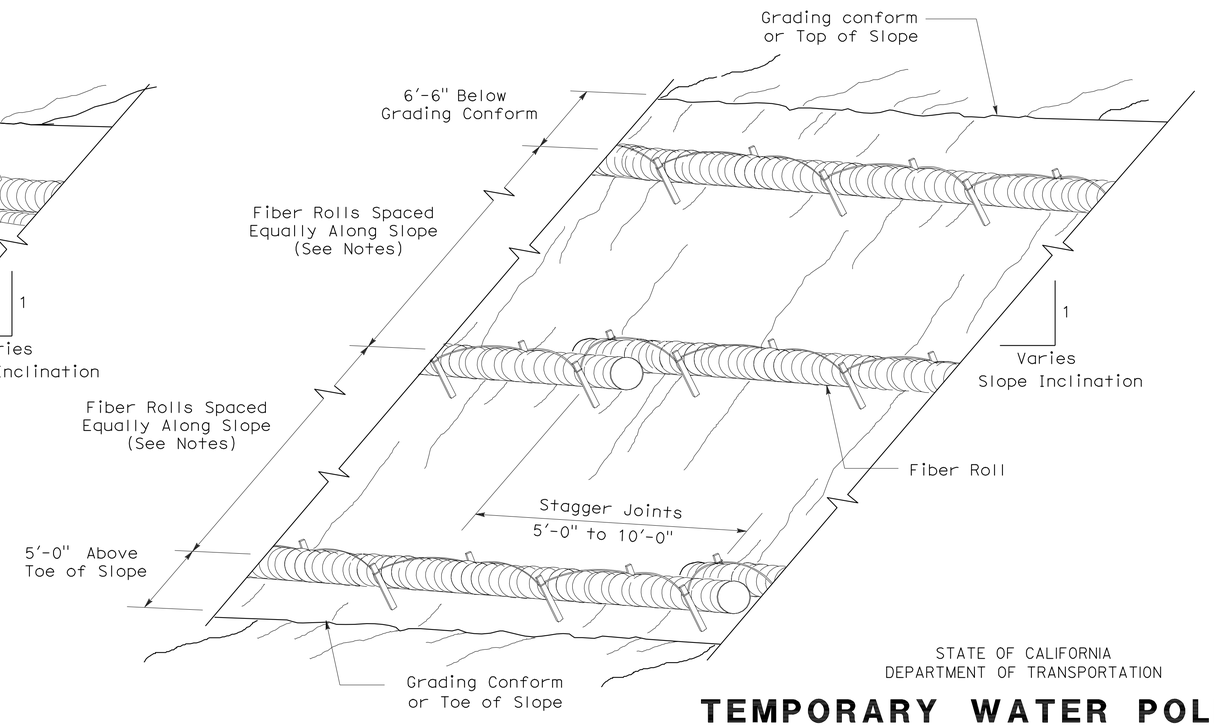

PERSPECTIVE

TEMPORARY FIBER ROLL (TYPE 2)

STATE OF CALIFORNIA
DEPARTMENT OF TRANSPORTATION

TEMPORARY WATER POLLUTION CONTROL DETAILS (TEMPORARY FIBER ROLL)

NO SCALE

RSP T56 DATED APRIL 3, 2009 SUPERSEDES STANDARD PLAN T56 DATED MAY 1, 2006 - PAGE 232 OF THE STANDARD PLANS BOOK DATED MAY 2006.

REVISED STANDARD PLAN RSP T56

2006 REVISED STANDARD PLAN RSP T56

2-23-09