Dist	COUNTY	ROUTE	POST MILES TOTAL PROJECT	SHEET No.	TOTAL SHEETS
09	Iny	395	45.6/50.3, 50.9/52.9	1	21

STATE OF CALIFORNIA

DEPARTMENT OF TRANSPORTATION

ACNH-P395(241)E

PROJECT PLANS FOR CONSTRUCTION ON

STATE HIGHWAY

IN INYO COUNTY NEAR LONE PINE FROM 0.7 MILE SOUTH OF COTTONWOOD ROAD TO 0.8 MILE NORTH OF CARROLL CREEK ROAD AND FROM 1.4 MILES NORTH OF CARROLL CREEK ROAD TO 0.4 MILE SOUTH OF LUBKEN CANYON ROAD

TO BE SUPPLEMENTED BY STANDARD PLANS DATED 2010

INDEX OF PLANS

SHEET No.	DESCRIPTION
1	TITLE AND LOCATION MAP
2-3	TYPICAL CROSS SECTIONS
4-9	CONSTRUCTION DETAILS
10-11	TEMPORARY WATER POLLUTION CONTROL DETAILS AND QUANTITIES
12	CONSTRUCTION AREA SIGNS
13-15	SUMMARY OF QUANTITIES
16-21	REVISED STANDARD PLANS

THE STANDARD PLANS LIST APPLICABLE TO THIS CONTRACT IS INCLUDED IN THE NOTICE TO BIDDERS AND SPECIAL PROVISIONS BOOK.

LOCATION MAP

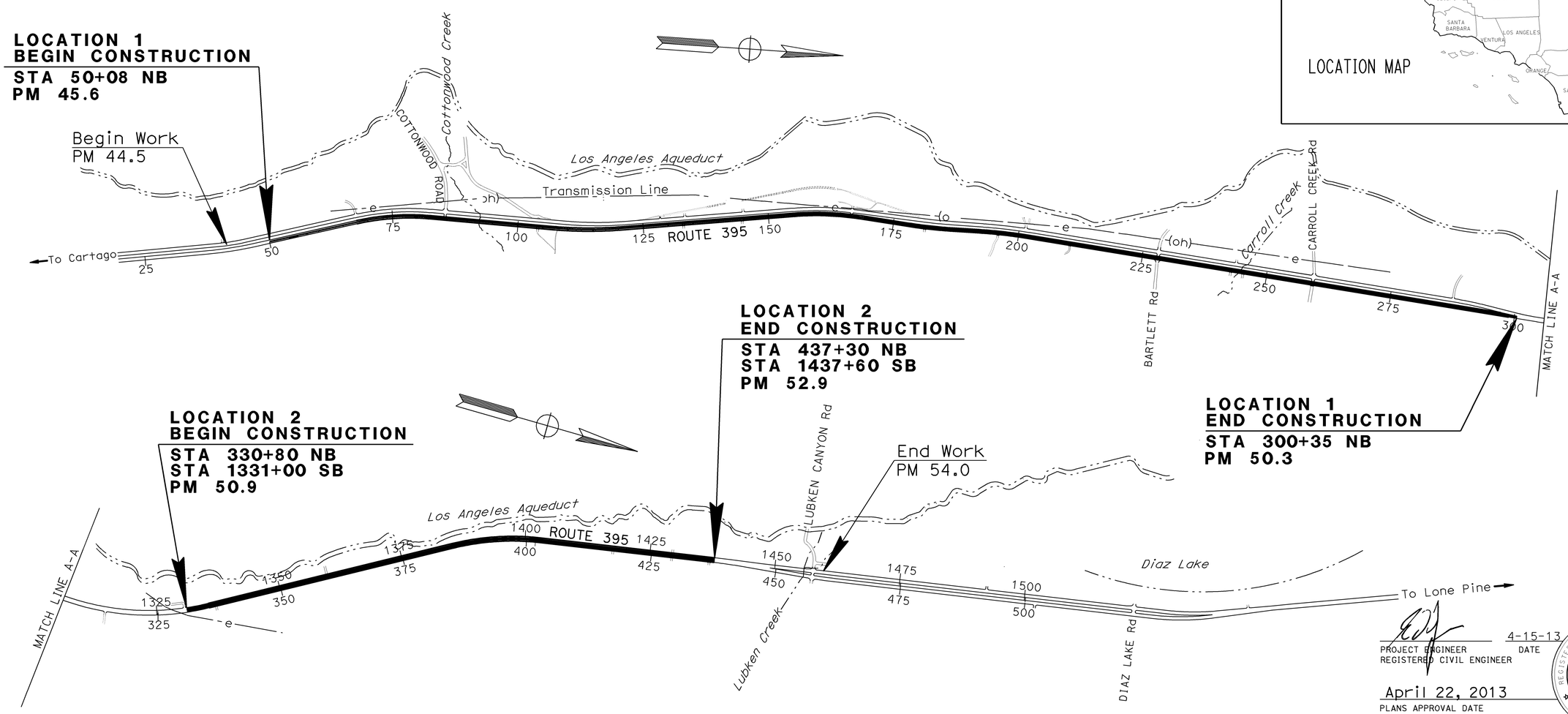

NO SCALE

THE CONTRACTOR SHALL POSSESS THE CLASS (OR CLASSES) OF LICENSE AS SPECIFIED IN THE "NOTICE TO BIDDERS."

PROJECT ENGINEER REGISTERED CIVIL ENGINEER — DATE 4-15-13

April 22, 2013
PLANS APPROVAL DATE

REGISTERED PROFESSIONAL ENGINEER — ENRICO DE JESUS — No. 79832 — Exp. 9-30-14 — CIVIL — STATE OF CALIFORNIA

THE STATE OF CALIFORNIA OR ITS OFFICERS OR AGENTS SHALL NOT BE RESPONSIBLE FOR THE ACCURACY OR COMPLETENESS OF SCANNED COPIES OF THIS PLAN SHEET.

PROJECT MANAGER: BRIAN MCELWAIN
DESIGN MANAGER: BRIAN WESLING

CONTRACT No.	09-351604
PROJECT ID	0900020081

LAST REVISION 04-15-13 — DATE PLOTTED => 06-JUN-2013 TIME PLOTTED => 10:30

Dist	COUNTY	ROUTE	POST MILES TOTAL PROJECT	SHEET No.	TOTAL SHEETS
09	Iny	395	45.6/50.3, 50.9/52.9	2	21

REGISTERED CIVIL ENGINEER 4-15-13 DATE

4-22-13
PLANS APPROVAL DATE

REGISTERED PROFESSIONAL ENGINEER ENRICO DE JESUS No. 79832 Exp. 9-30-14 CIVIL STATE OF CALIFORNIA

THE STATE OF CALIFORNIA OR ITS OFFICERS OR AGENTS SHALL NOT BE RESPONSIBLE FOR THE ACCURACY OR COMPLETENESS OF SCANNED COPIES OF THIS PLAN SHEET.

NOTES:

1. DIMENSIONS OF THE PAVEMENT STRUCTURES (STRUCTURAL SECTIONS) ARE SUBJECT TO TOLERANCES SPECIFIED IN THE STANDARD SPECIFICATIONS.
2. SUPERELEVATION AS SHOWN OR AS DIRECTED BY THE ENGINEER.
3. EXACT DEPTH MAY VARY DEPENDING ON JOB MIX FORMULA.
4. EXACT LOCATIONS AND TYPES OF HMA DIKE ARE SHOWN IN THE SUMMARY OF QUANTITIES SHEETS.

ABBREVIATIONS:

CIPR - COLD IN-PLACE RECYCLING
HMA-SP (TYPE A)- HOT MIX ASPHALT, SUPERPAVE (TYPE A)

DESIGN DESIGNATION

2013 AADT = 6,370	D = 74.08%
2023 AADT = 7,110	T = 21.7%
2013 DHV = 1,040	V = 65 mph
CLIMATE REGION = DESERT	TI(20) = 11.5

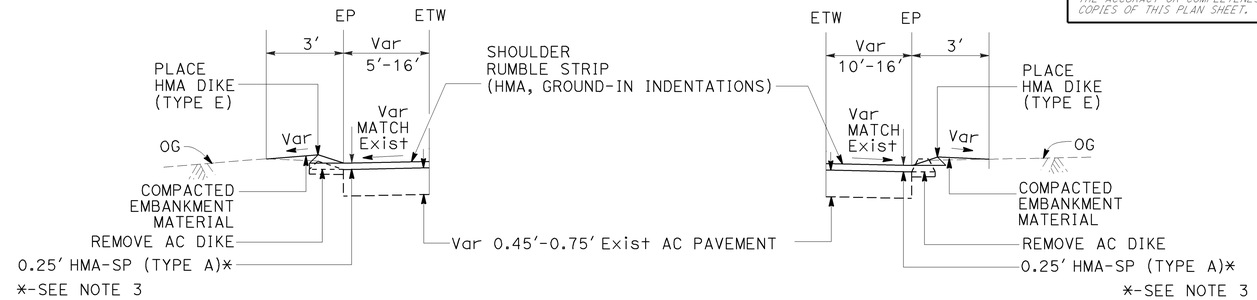

237+07 TO 240+72

147+82 TO 156+57

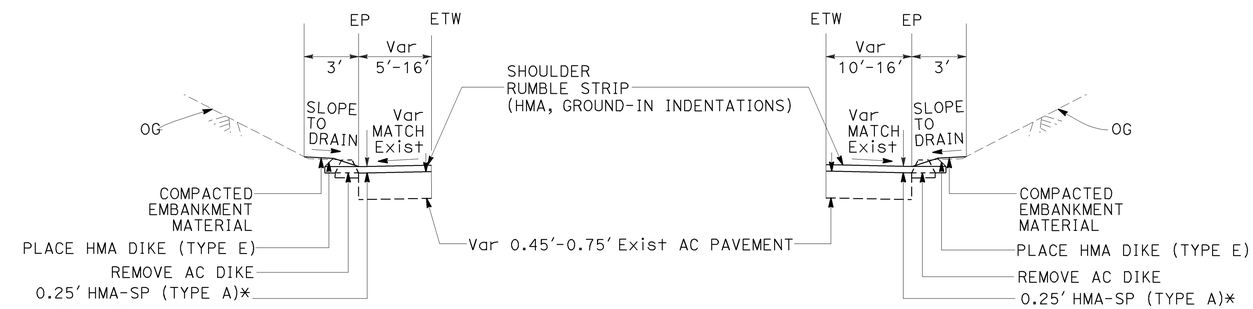

70+04 TO 74+47 75+52 TO 79+52
92+07 TO 114+57 131+35 TO 142+75
181+07 TO 188+57 204+07 TO 227+19

69+98 TO 74+27 75+59 TO 80+17
92+07 TO 105+37 131+57 TO 142+32

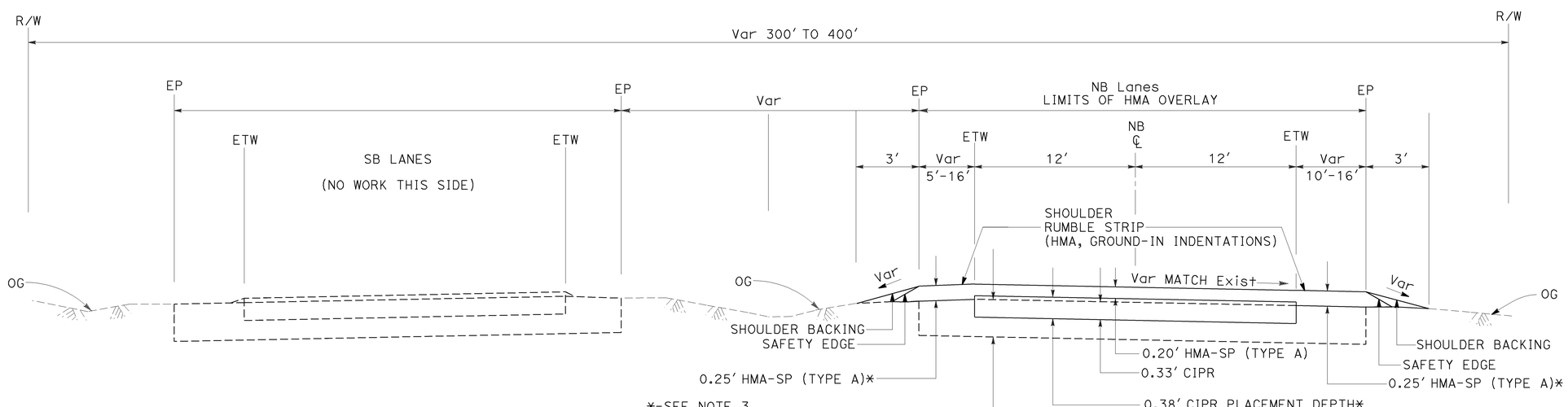

LOCATION 1
ROUTE 395
PM 45.6-50.3
STA 50+08 TO STA 300+35 (NB)

TYPICAL CROSS SECTIONS X-1

NO SCALE

STATE OF CALIFORNIA - DEPARTMENT OF TRANSPORTATION
Caltrans
DESIGN

FUNCTIONAL SUPERVISOR: BRIAN WESLING
CALCULATED-DESIGNED BY: ENRICO DE JESUS
CHECKED BY: BRIAN WESLING
REVISED BY
DATE REVISED

LAST REVISION 04-15-13
DATE PLOTTED => 06-JUN-2013
TIME PLOTTED => 10:30

Dist	COUNTY	ROUTE	POST MILES TOTAL PROJECT	SHEET No.	TOTAL SHEETS
09	Iny	395	45.6/50.3, 50.9/52.9	3	21

REGISTERED CIVIL ENGINEER DATE 4-15-13

PLANS APPROVAL DATE 4-22-13

REGISTERED PROFESSIONAL ENGINEER ENRICO DE JESUS No. 79832 Exp. 9-30-14 CIVIL STATE OF CALIFORNIA

THE STATE OF CALIFORNIA OR ITS OFFICERS OR AGENTS SHALL NOT BE RESPONSIBLE FOR THE ACCURACY OR COMPLETENESS OF SCANNED COPIES OF THIS PLAN SHEET.

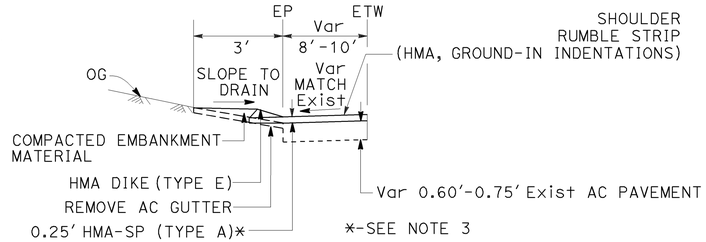

1343+44 SB TO 1358+84 SB 1359+20 SB TO 1374+01 SB
1378+27 SB TO 1392+70 SB 1402+27 SB TO 1408+22 SB
1411+46 SB TO 1429+55 SB

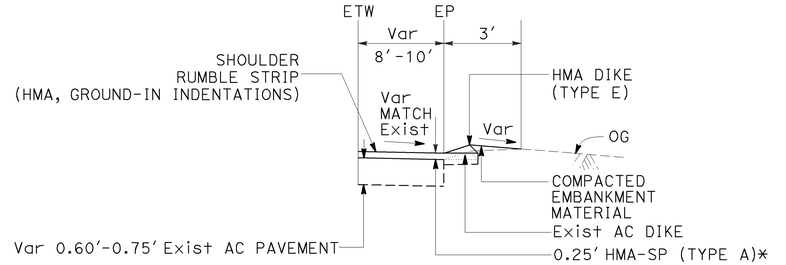

429+83 NB TO 436+20 NB

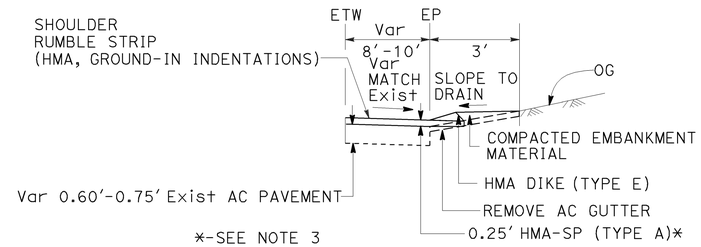

402+64 NB TO 408+39 NB 411+67 NB TO 427+17 NB

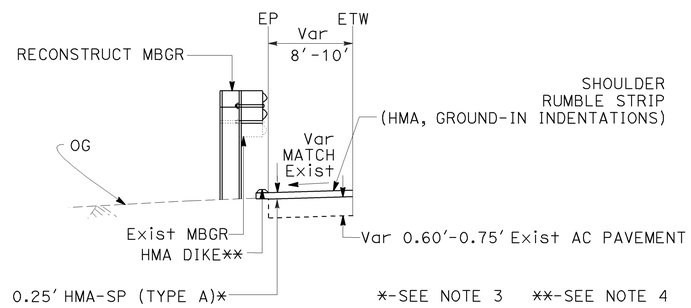

1343+06.5 SB TO 1343+44 SB

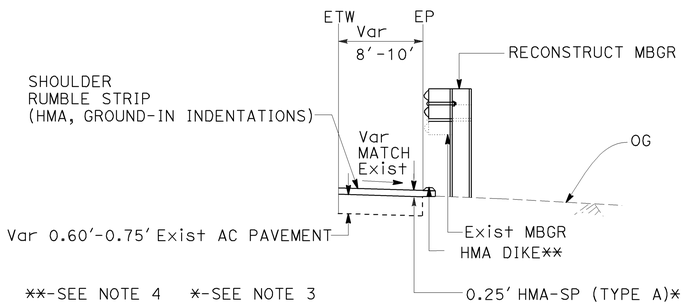

339+69 NB TO 340+06.5 NB 344+81.5 NB TO 345+19 NB
373+30 NB TO 373+67.5 NB 383+42.5 NB TO 383+80 NB
387+86 NB TO 388+23.5 NB 401+23.5 NB TO 401+61 NB

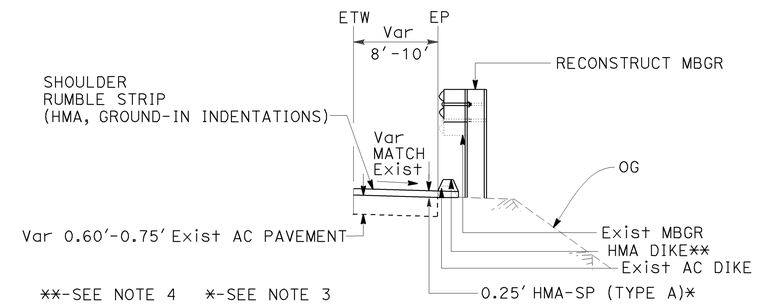

340+06.5 NB TO 344+81.5 NB 373+67.5 TO 383+42.5 NB
388+23.5 NB TO 401+23.5 NB

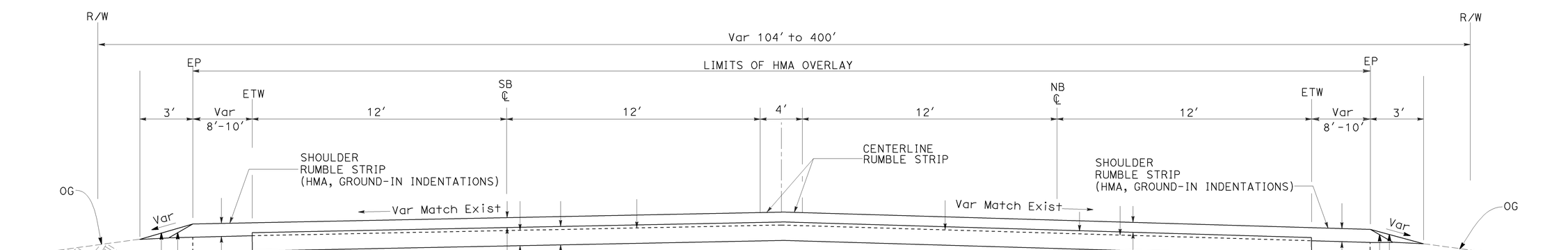

LOCATION 2
ROUTE 395
PM 50.9 - 52.9
STA 330+80 TO STA 437+30 NB
STA 1331+00 TO STA 1437+60 SB

TYPICAL CROSS SECTIONS X-2

NO SCALE

STATE OF CALIFORNIA - DEPARTMENT OF TRANSPORTATION
DESIGN
FUNCTIONAL SUPERVISOR: BRIAN WESLING
CALCULATED-DESIGNED BY: ENRICO DE JESUS
CHECKED BY: BRIAN WESLING
REVISED BY
DATE REVISED

LAST REVISION 04-15-13 DATE PLOTTED => 06-JUN-2013 TIME PLOTTED => 10:30

Dist	COUNTY	ROUTE	POST MILES TOTAL PROJECT	SHEET No.	TOTAL SHEETS
09	Iny	395	45.6/50.3, 50.9/52.9	4	21

REGISTERED CIVIL ENGINEER 4-15-13 DATE

4-22-13
PLANS APPROVAL DATE

REGISTERED PROFESSIONAL ENGINEER ENRICO DE JESUS No. 79832 Exp. 9-30-14 CIVIL STATE OF CALIFORNIA

THE STATE OF CALIFORNIA OR ITS OFFICERS OR AGENTS SHALL NOT BE RESPONSIBLE FOR THE ACCURACY OR COMPLETENESS OF SCANNED COPIES OF THIS PLAN SHEET.

LEGEND:

- LIMITS OF COLD PLANE AC AND HMA-SP (TYPE A)
- HMA-SP (TYPE A)
- DIRECTION OF TRAVEL

ABBREVIATIONS:

CIPR - COLD IN- PLACE RECYCLING
HMA-SP (TYPE A) - HOT MIX ASPHALT, SUPERPAVE (TYPE A)
TL- TRIM LINE

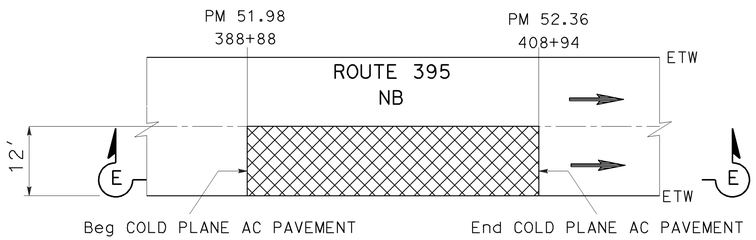

COLD PLANE AC PAVEMENT LOC 2 (NB LANE 2)

388+88 TO 408+94

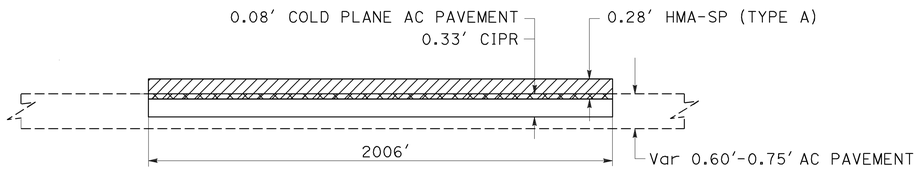

SECTION E-E

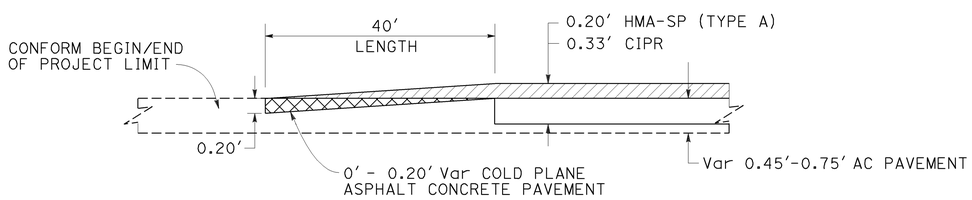

SECTION C-C

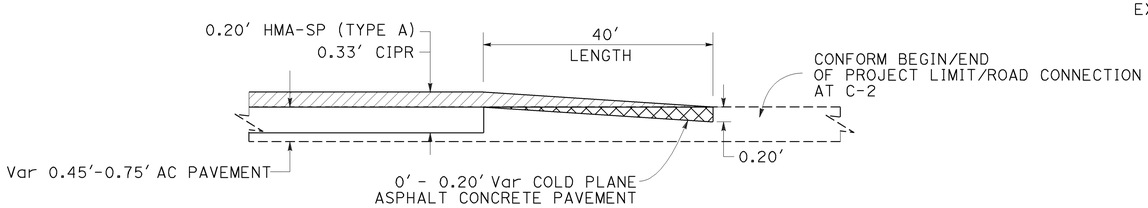

SECTION D-D

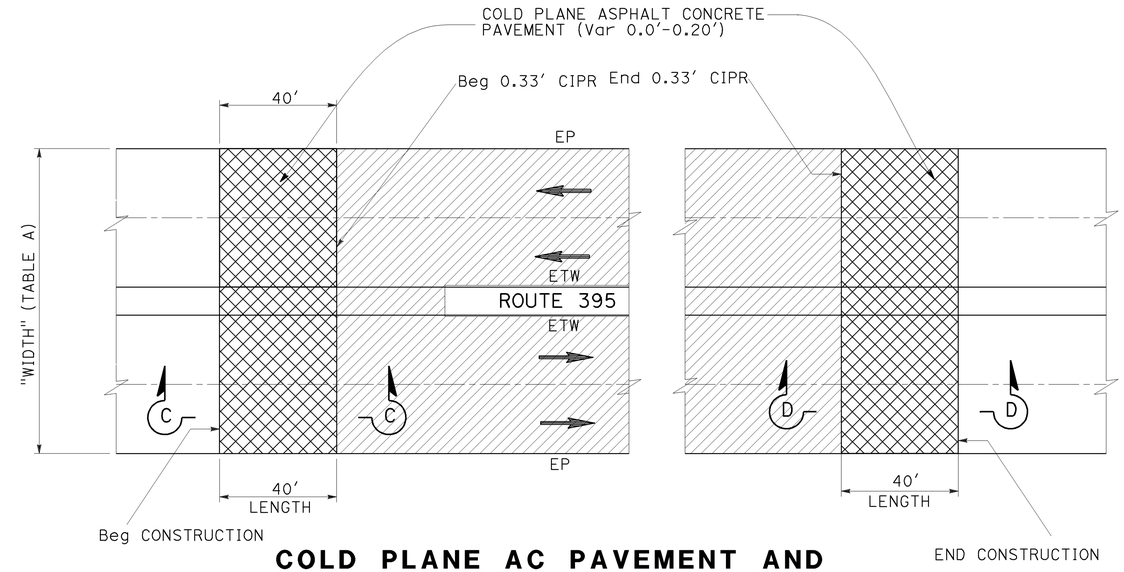

COLD PLANE AC PAVEMENT AND HMA-SP (TYPE A) PAVING LIMITS LOC 2 (NB/SB)

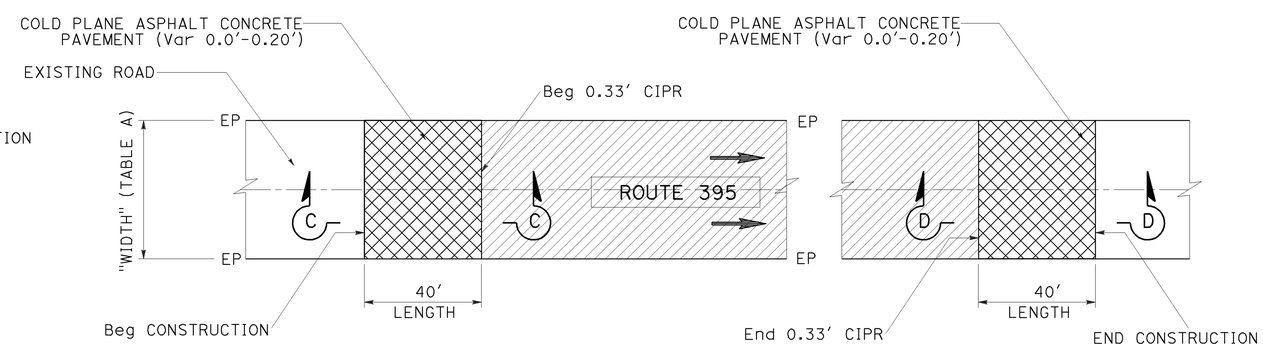

COLD PLANE AC PAVEMENT AND HMA-SP (TYPE A) PAVING LIMITS LOC 1 (NB)

TABLE A
ROAD CONNECTION COLD PLANE AND HMA-SP (TYPE A) PAVING LIMITS

Loc	STA	DESCRIPTION	LENGTH	WIDTH	DEPTH	NOTES
1	50+08 NB	CONFORM GRIND	40'	39'	0.20'	BEGIN CONSTRUCTION, LOCATION 1 NB
	300+35 NB	CONFORM GRIND	40'	39'	0.20'	END CONSTRUCTION, LOCATION 1 NB
2	330+80 NB	CONFORM GRIND	40'	72'	0.20'	BEGIN CONSTRUCTION, LOCATION 2 NB/SB
	437+30 NB	CONFORM GRIND	40'	72'	0.20'	END CONSTRUCTION, LOCATION 2 NB/SB

CONSTRUCTION DETAILS

NO SCALE

C-1

STATE OF CALIFORNIA - DEPARTMENT OF TRANSPORTATION
Caltrans
DESIGN

FUNCTIONAL SUPERVISOR: BRIAN WESLING
CALCULATED-DESIGNED BY: ENRICO DE JESUS
CHECKED BY: BRIAN WESLING
REVISED BY
DATE REVISED

LAST REVISION 04-15-13
DATE PLOTTED => 06-JUN-2013
TIME PLOTTED => 10:30

Dist	COUNTY	ROUTE	POST MILES TOTAL PROJECT	SHEET No.	TOTAL SHEETS
09	Iny	395	45.6/50.3, 50.9/52.9	5	21

REGISTERED CIVIL ENGINEER 4-15-13 DATE

4-22-13
PLANS APPROVAL DATE

REGISTERED PROFESSIONAL ENGINEER ENRICO DE JESUS No. 79832 Exp. 9-30-14 CIVIL STATE OF CALIFORNIA

THE STATE OF CALIFORNIA OR ITS OFFICERS OR AGENTS SHALL NOT BE RESPONSIBLE FOR THE ACCURACY OR COMPLETENESS OF SCANNED COPIES OF THIS PLAN SHEET.

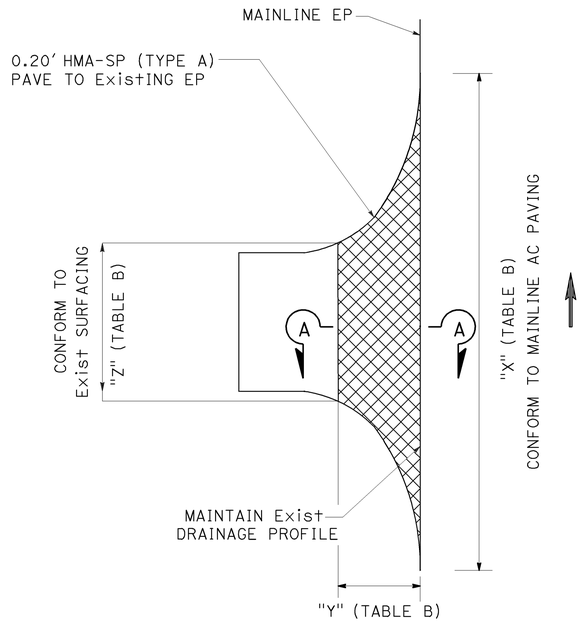

TYPICAL ROAD CONNECTION AND MEDIAN CROSSOVER COLD PLANE AC PAVEMENT AND HMA-SP (TYPE A) PAVING LIMITS

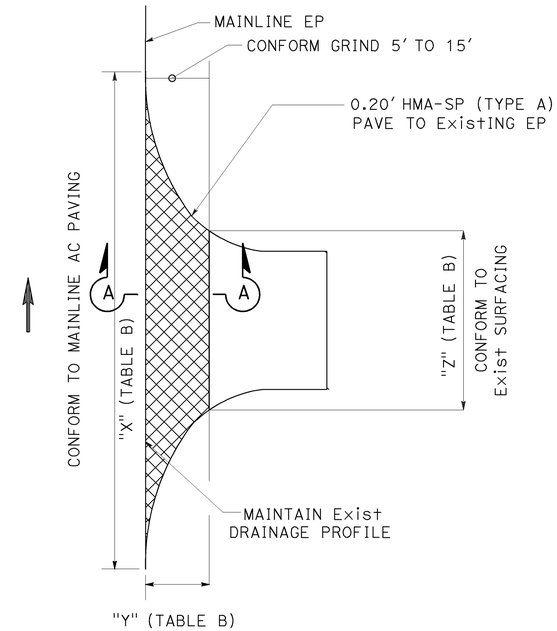

TYPICAL PAVED ROAD CONNECTION COLD PLANE AC PAVEMENT AND HMA-SP (TYPE A) PAVING LIMITS

TABLE B

COLD PLANE AC PAVEMENT AND HMA-SP (TYPE A) PAVING LIMITS

Loc	STA	Lt	Rt	"X"	"Y"	"Z"	NOTES
1	85+65 NB	X		102'	15'	51'	MEDIAN CROSSOVER- COTTONWOOD Rd, Lt
	107+50 NB		X	64'	5'	34'	ROAD CONNECTION, Rt
	133+00 NB		X	64'	5'	34'	ROAD CONNECTION, Rt
	144+75 NB		X	64'	5'	34'	ROAD CONNECTION, Rt
	166+80 NB	X		75'	15'	42'	MEDIAN CROSSOVER, Lt
	181+75 NB		X	64'	5'	34'	ROAD CONNECTION, Rt
	199+50 NB		X	64'	5'	34'	ROAD CONNECTION, Rt
	211+00 NB		X	64'	5'	34'	ROAD CONNECTION, Rt
	229+00 NB		X	116'	5'	40'	ROAD CONNECTION-BARTLETT Rd, Rt
	229+00 NB	X		98'	15'	50'	MEDIAN CROSSOVER-BARTLETT Rd, Lt
	243+90 NB		X	64'	5'	34'	ROAD CONNECTION, Rt
	246+35 NB		X	64'	5'	34'	ROAD CONNECTION, Rt
	259+30 NB		X	64'	5'	34'	ROAD CONNECTION- CARROLL CREEK Rd, Rt
	259+30 NB	X		98'	15'	50'	MEDIAN CROSSOVER- CARROLL CREEK Rd, Lt
2	402+40 NB		X	64'	5'	34'	ROAD CONNECTION, Rt
	429+00 NB		X	64'	5'	34'	ROAD CONNECTION, Rt
	436+50 NB		X	64'	5'	34'	ROAD CONNECTION, Rt
2	1358+85 SB	X		64'	5'	34'	ROAD CONNECTION, Lt

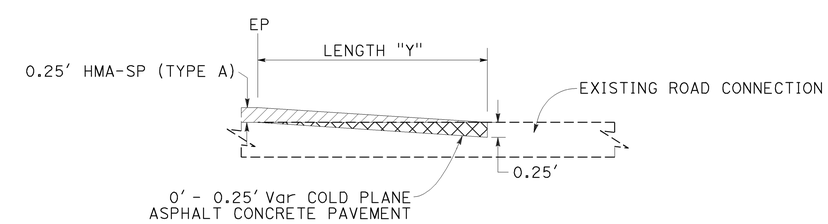

SECTION A-A

CONSTRUCTION DETAILS

NO SCALE

C-2

STATE OF CALIFORNIA - DEPARTMENT OF TRANSPORTATION
Caltrans® DESIGN

FUNCTIONAL SUPERVISOR: BRIAN WESLING
CALCULATED-DESIGNED BY: ENRICO DE JESUS
CHECKED BY: BRIAN WESLING
REVISED BY
DATE REVISED

LAST REVISION 04-15-13
DATE PLOTTED => 06-JUN-2013
TIME PLOTTED => 10:30

Dist	COUNTY	ROUTE	POST MILES TOTAL PROJECT	SHEET No.	TOTAL SHEETS
09	Iny	395	45.6/50.3, 50.9/52.9	6	21

REGISTERED CIVIL ENGINEER 4-15-13 DATE

4-22-13
PLANS APPROVAL DATE

REGISTERED PROFESSIONAL ENGINEER ENRICO DE JESUS No. 79832 Exp. 9-30-14 CIVIL STATE OF CALIFORNIA

THE STATE OF CALIFORNIA OR ITS OFFICERS OR AGENTS SHALL NOT BE RESPONSIBLE FOR THE ACCURACY OR COMPLETENESS OF SCANNED COPIES OF THIS PLAN SHEET.

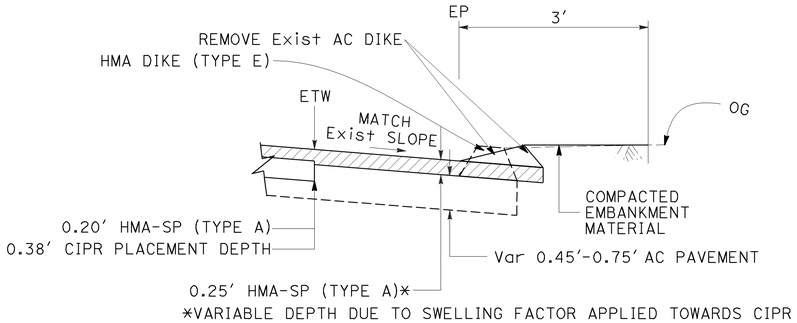

HMA DIKE PAVING DETAIL (TYPICAL)
REMOVE AC DIKE AND PLACE HMA DIKE (TYPE E)

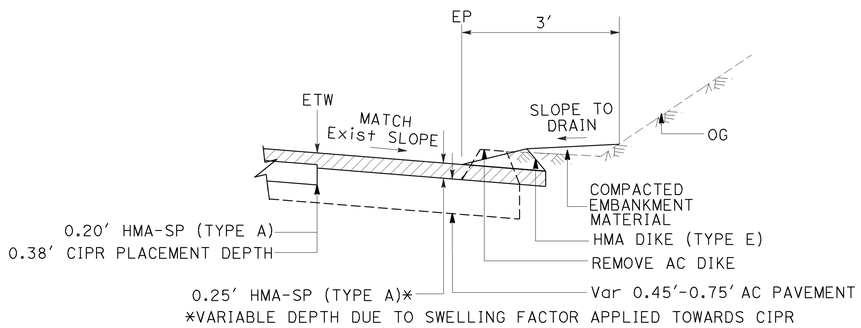

HMA DIKE PAVING DETAIL (TYPICAL)
REMOVE AC DIKE AND PLACE HMA DIKE (TYPE E)

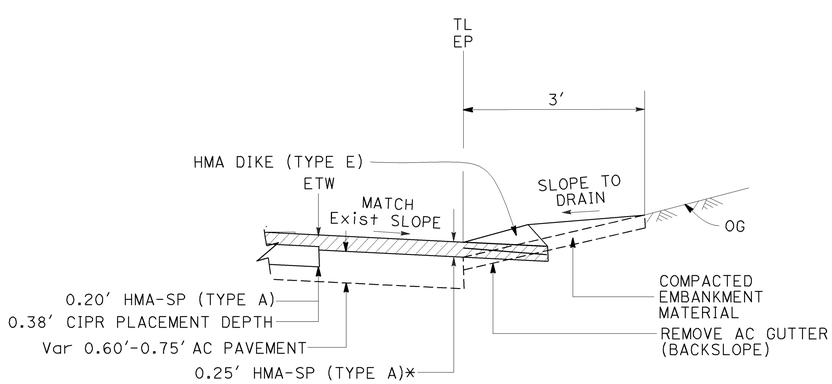

HMA DIKE PAVING DETAIL (TYPICAL)
REMOVE AC GUTTER (BACKSLOPE)
AND PLACE HMA DIKE (TYPE E)

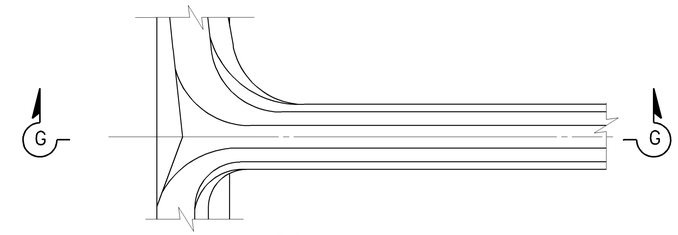

PLAN

HMA OVERSIDE DRAIN (TYPICAL)
(REFER TO STANDARD PLANS FOR DETAILS)

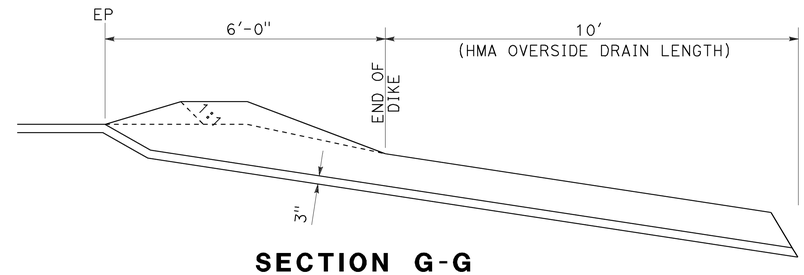

SECTION G-G
HMA OVERSIDE DRAIN PAVING DETAIL (TYPICAL)

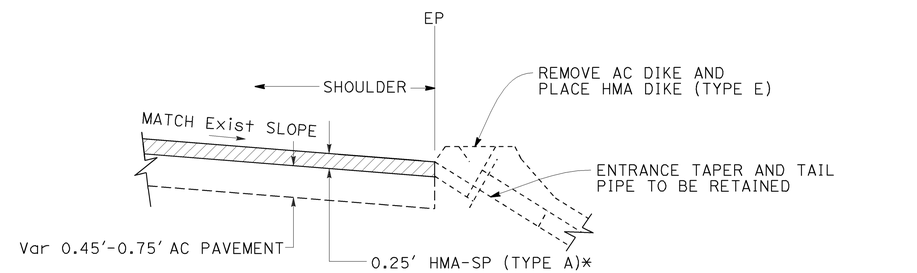

SECTION A-A

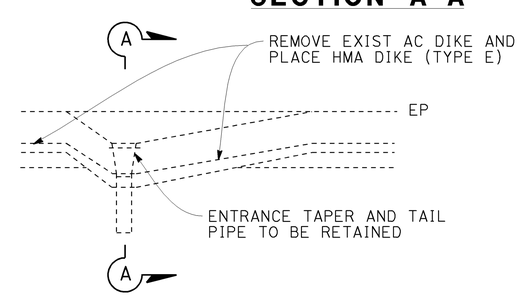

PLAN

HMA DIKE PAVING DETAIL (TYPICAL)
AT PIPE DOWNDRAINS

STA 158+20 (R+), 346+25 (R+), 384+13 (R+)
406+46 (R+), 435+51 (R+)

CONSTRUCTION DETAILS
NO SCALE **C-3**

STATE OF CALIFORNIA - DEPARTMENT OF TRANSPORTATION
Caltrans®
DESIGN

FUNCTIONAL SUPERVISOR: BRIAN WESLING
CALCULATED-DESIGNED BY: ENRICO DE JESUS
CHECKED BY: BRIAN WESLING
REVISED BY
DATE REVISED

LAST REVISION 04-15-13
DATE PLOTTED => 06-JUN-2013
TIME PLOTTED => 10:30

Dist	COUNTY	ROUTE	POST MILES TOTAL PROJECT	SHEET No.	TOTAL SHEETS
09	Iny	395	45.6/50.3, 50.9/52.9	7	21

REGISTERED CIVIL ENGINEER 4-15-13 DATE

4-22-13
PLANS APPROVAL DATE

REGISTERED PROFESSIONAL ENGINEER ENRICO DE JESUS No. 79832 Exp. 9-30-14 CIVIL STATE OF CALIFORNIA

THE STATE OF CALIFORNIA OR ITS OFFICERS OR AGENTS SHALL NOT BE RESPONSIBLE FOR THE ACCURACY OR COMPLETENESS OF SCANNED COPIES OF THIS PLAN SHEET.

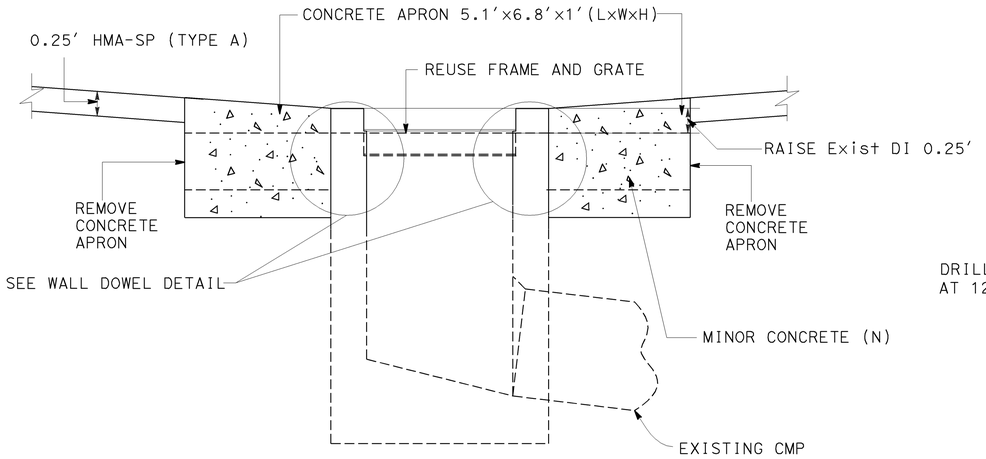

SECTION B-B
ADJUST INLET
GRATE DRAIN INLET
Sta 1331+30

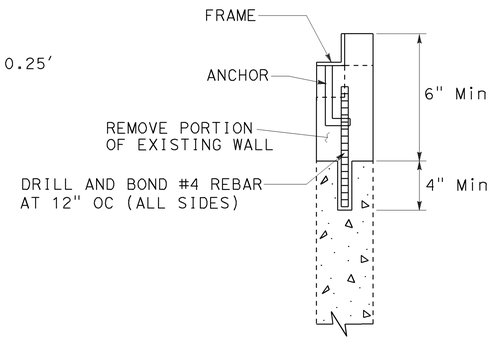

ADJUST INLET
GRATE DRAIN INLET
WALL DOWEL DETAILS
Sta 1331+30

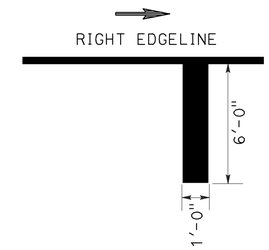

CHP MARKING DETAILS

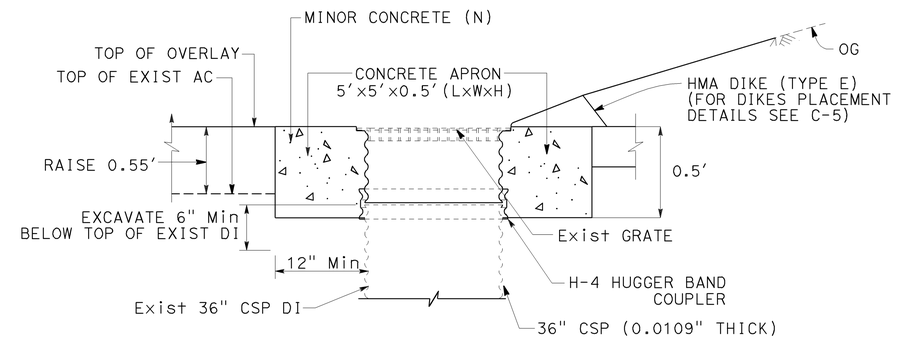

SECTION A-A

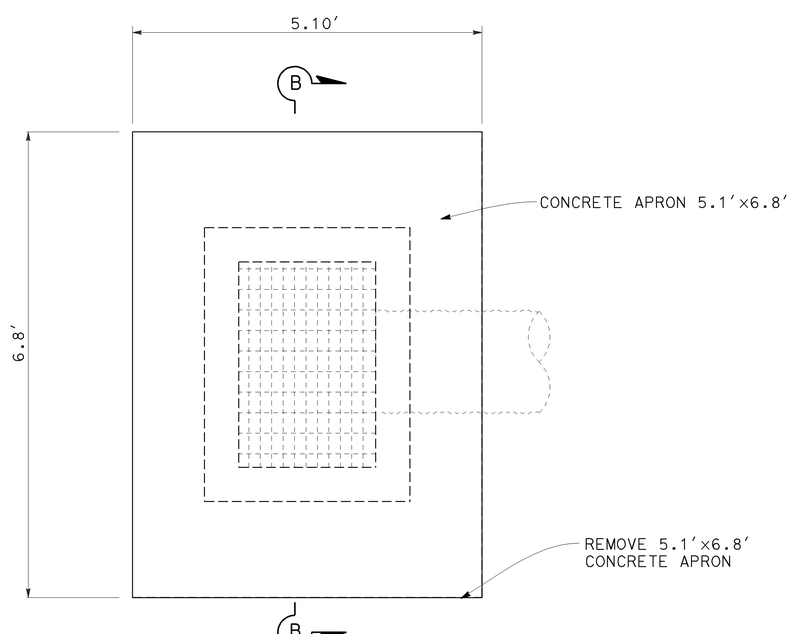

PLAN
ADJUST INLET
Sta 1331+30

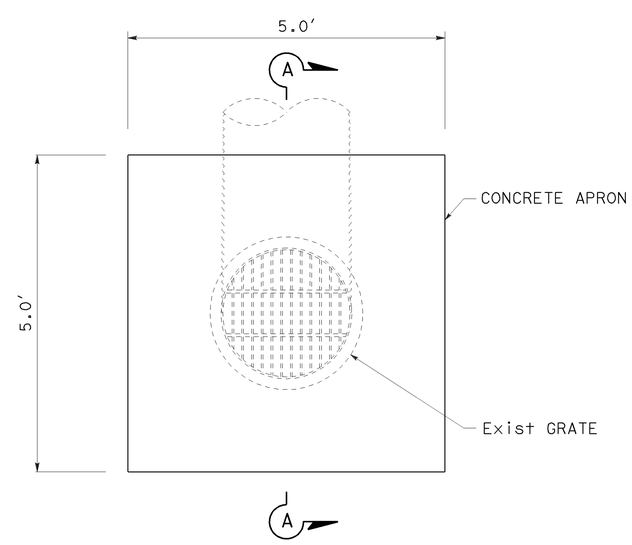

PLAN
ADJUST INLET
STA 1353+87

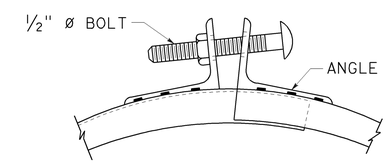

BOLT DETAIL

CONSTRUCTION DETAILS
NO SCALE

C-4

STATE OF CALIFORNIA - DEPARTMENT OF TRANSPORTATION
Caltrans DESIGN

FUNCTIONAL SUPERVISOR: BRIAN WESLING
CALCULATED-DESIGNED BY: ENRICO DE JESUS
CHECKED BY: BRIAN WESLING
REVISED BY
DATE REVISED

LAST REVISION 04-15-13 | DATE PLOTTED => 06-JUN-2013 | TIME PLOTTED => 10:30

Dist	COUNTY	ROUTE	POST MILES TOTAL PROJECT	SHEET No.	TOTAL SHEETS
09	Iny	395	45.6/50.3, 50.9/52.9	8	21

REGISTERED CIVIL ENGINEER 4-15-13 DATE

4-22-13
PLANS APPROVAL DATE

REGISTERED PROFESSIONAL ENGINEER ENRICO DE JESUS No. 79832 Exp. 9-30-14 CIVIL STATE OF CALIFORNIA

THE STATE OF CALIFORNIA OR ITS OFFICERS OR AGENTS SHALL NOT BE RESPONSIBLE FOR THE ACCURACY OR COMPLETENESS OF SCANNED COPIES OF THIS PLAN SHEET.

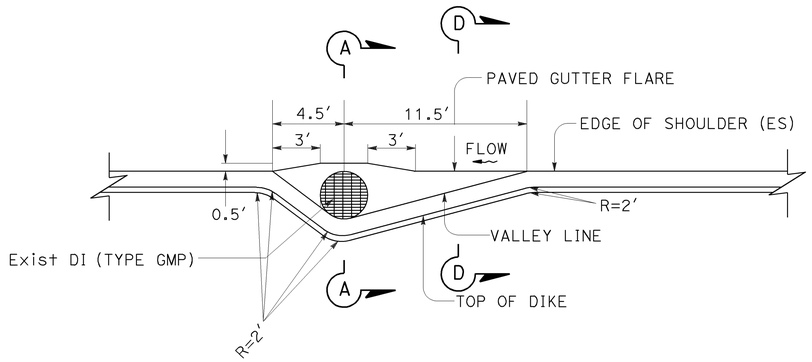

PLAN

HMA DIKE AT Exist DI

Sta 1357+78

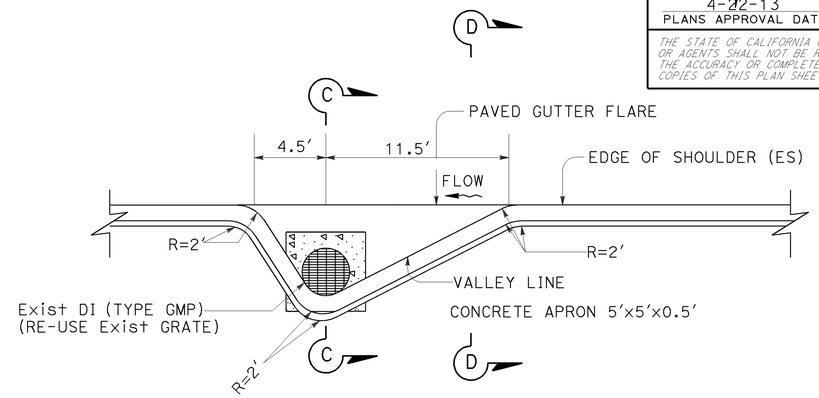

PLAN

HMA DIKE AT Exist DI

Sta 1353+87

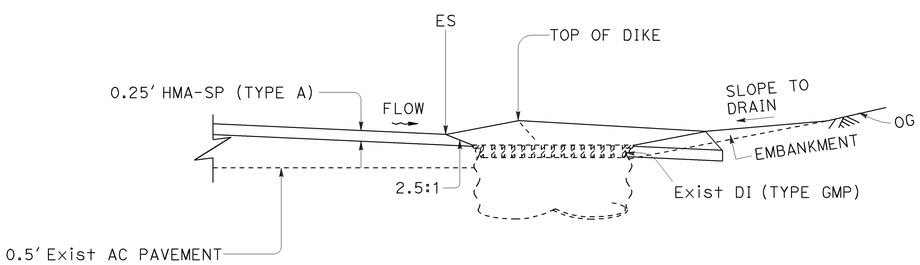

SECTION A-A

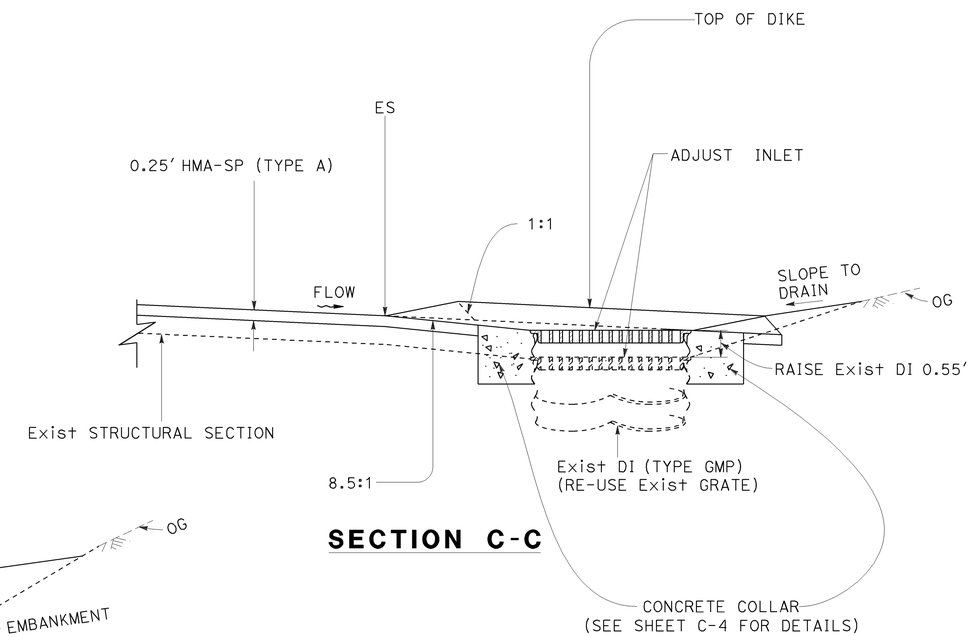

SECTION C-C

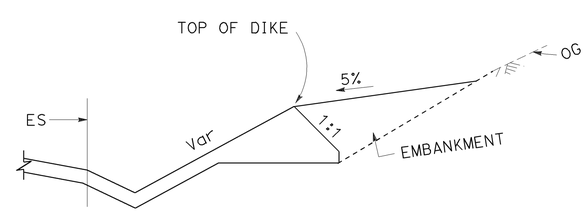

SECTION D-D

CONSTRUCTION DETAILS

NO SCALE

C-5

STATE OF CALIFORNIA - DEPARTMENT OF TRANSPORTATION

Caltrans

DESIGN

FUNCTIONAL SUPERVISOR: BRIAN WESLING

CALCULATED-DESIGNED BY: ENRICO DE JESUS

CHECKED BY: BRIAN WESLING

REVISED BY | DATE REVISED

LAST REVISION 04-15-13 | DATE PLOTTED => 06-JUN-2013 | TIME PLOTTED => 10:30

Dist	COUNTY	ROUTE	POST MILES TOTAL PROJECT	SHEET No.	TOTAL SHEETS
09	Iny	395	45.6/50.3, 50.9/52.9	9	21

REGISTERED CIVIL ENGINEER 4-15-13 DATE

4-22-13
PLANS APPROVAL DATE

REGISTERED PROFESSIONAL ENGINEER ENRICO DE JESUS No. 79832 Exp. 9-30-14 CIVIL STATE OF CALIFORNIA

THE STATE OF CALIFORNIA OR ITS OFFICERS OR AGENTS SHALL NOT BE RESPONSIBLE FOR THE ACCURACY OR COMPLETENESS OF SCANNED COPIES OF THIS PLAN SHEET.

NOTES:

1. FOR ADDITIONAL RUMBLE STRIP DETAILS SEE A40B OF THE STANDARD PLANS.
2. FOG SEAL COAT APPLIED TO THE GROUND AREAS SHALL NOT COVER THE EXISTING TRAFFIC STRIPE.
3. PAINT TRAFFIC STRIPE (1-COAT) FOR DETAIL 28 PRIOR TO GRINDING THE CENTERLINE RUMBLESTRIP.

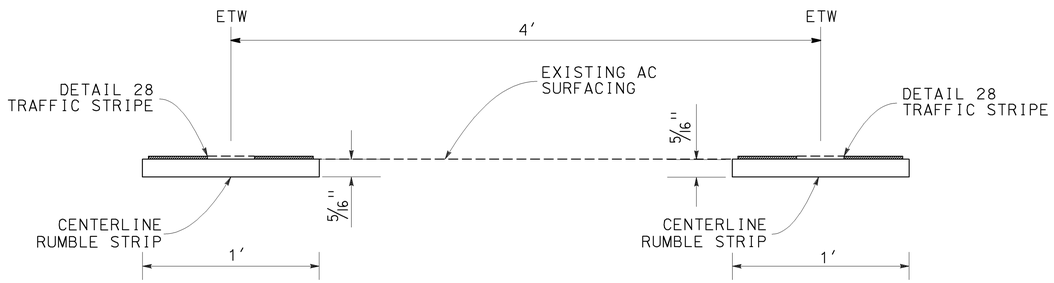

SECTION B-B

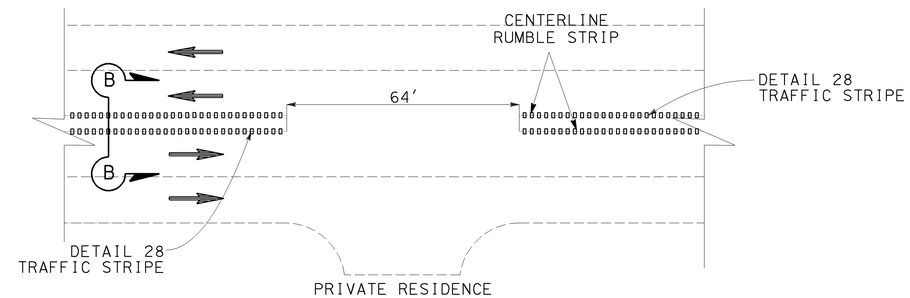

RUMBLE STRIP AT UNDIVIDED MEDIAN
STA 429+00

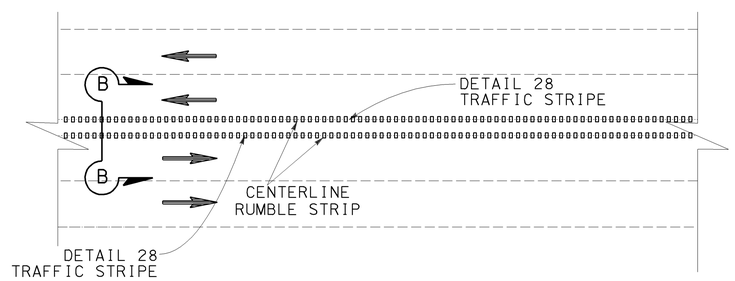

RUMBLE STRIP AT UNDIVIDED MEDIAN
AT LOCATION 2
330+80 NB TO 437+30 NB
1331+00 SB TO 1437+00 SB

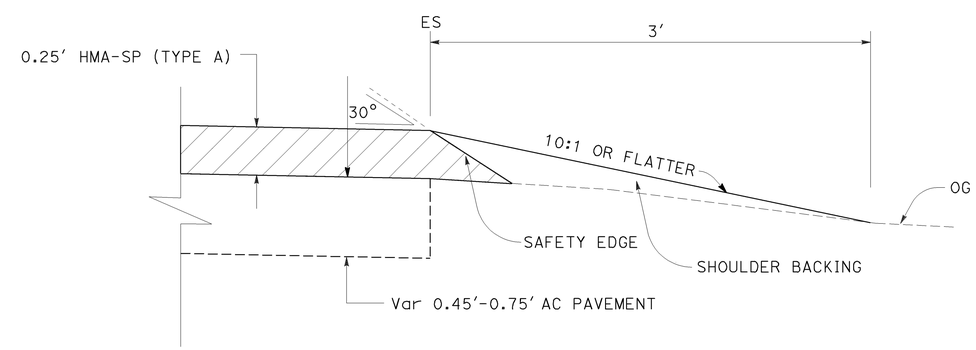

SHOULDER BACKING DETAIL (TYPICAL)

CONSTRUCTION DETAILS
NO SCALE **C-6**

STATE OF CALIFORNIA - DEPARTMENT OF TRANSPORTATION
Caltrans® **DESIGN**

FUNCTIONAL SUPERVISOR: BRIAN WESLING
CALCULATED-DESIGNED BY: ENRICO DE JESUS
CHECKED BY: BRIAN WESLING
REVISED BY
DATE REVISED

LAST REVISION 03-07-13
DATE PLOTTED => 06-JUN-2013
TIME PLOTTED => 10:30

Dist	COUNTY	ROUTE	POST MILES TOTAL PROJECT	SHEET No.	TOTAL SHEETS
09	Iny	395	45.6/50.3, 50.9/52.9	10	21

REGISTERED CIVIL ENGINEER 4-15-13 DATE

4-22-13
PLANS APPROVAL DATE

REGISTERED PROFESSIONAL ENGINEER ENRICO DE JESUS No. 79832 Exp. 9-30-14 CIVIL STATE OF CALIFORNIA

THE STATE OF CALIFORNIA OR ITS OFFICERS OR AGENTS SHALL NOT BE RESPONSIBLE FOR THE ACCURACY OR COMPLETENESS OF SCANNED COPIES OF THIS PLAN SHEET.

NOTE:
EXACT LOCATION AND POSITION OF TEMPORARY DRAINAGE PROTECTION AS APPROVED BY THE ENGINEER.

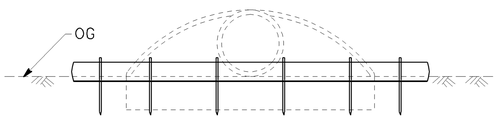

ELEVATION

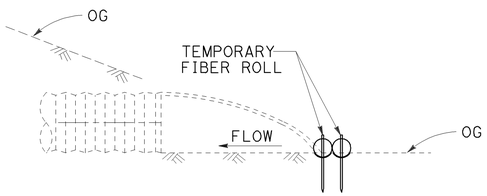

TYPICAL CROSS-SECTION

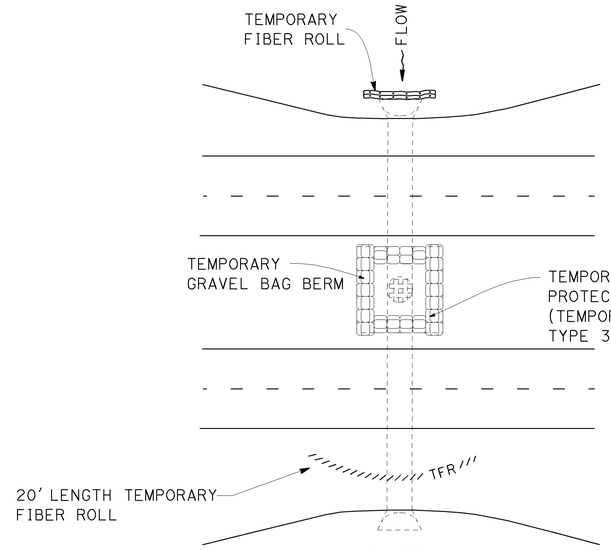

PLAN

TEMPORARY FIBER ROLL
TEMPORARY DRAINAGE INLET PROTECTION
(DRY CULVERT INLET)

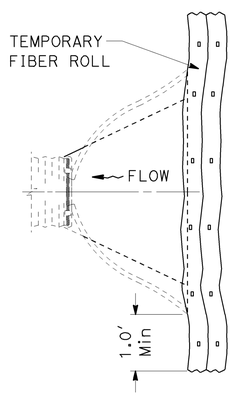

PLAN

TEMPORARY FIBER ROLL
(DRY CULVERT INLET)

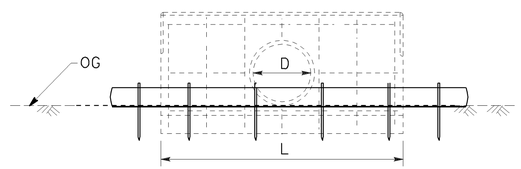

FRONT ELEVATION
SINGLE HEADWALL

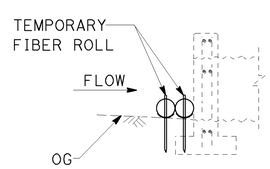

TYPICAL CROSS-SECTION

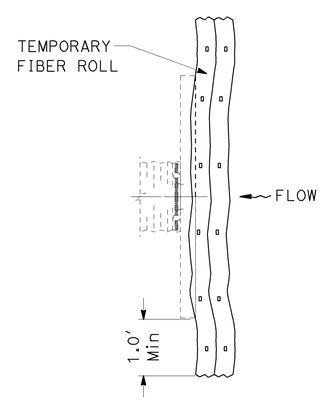

PLAN

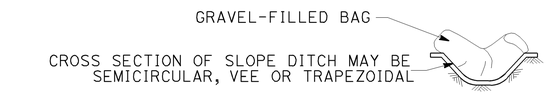

SECTION B-B

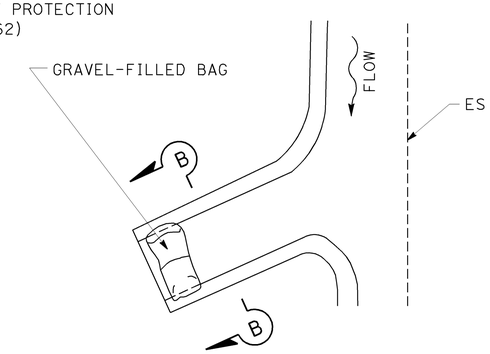

PLAN

TEMPORARY GRAVEL BAG BERM
AT ASPHALT CONCRETE OVERSIDE DRAIN (TYPICAL)

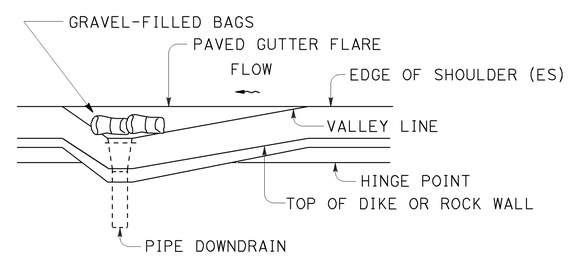

TEMPORARY GRAVEL BAG BERM
AT PIPE DOWNDRAIN (TYPICAL)

TEMPORARY WATER POLLUTION CONTROL DETAILS

NO SCALE

WPCD-1

STATE OF CALIFORNIA - DEPARTMENT OF TRANSPORTATION
Caltrans
DESIGN

FUNCTIONAL SUPERVISOR: BRIAN WESLING
CALCULATED-DESIGNED BY: ENRICO DE JESUS
CHECKED BY: BRIAN WESLING
REVISED BY
DATE REVISED

LAST REVISION 04-15-13
DATE PLOTTED => 06-JUN-2013
TIME PLOTTED => 10:30

Dist	COUNTY	ROUTE	POST MILES TOTAL PROJECT	SHEET No.	TOTAL SHEETS
09	Iny	395	45.6/50.3, 50.9/52.9	11	21

REGISTERED CIVIL ENGINEER 4-15-13 DATE

4-22-13
PLANS APPROVAL DATE

REGISTERED PROFESSIONAL ENGINEER ENRICO DE JESUS No. 79832 Exp. 9-30-14 CIVIL STATE OF CALIFORNIA

THE STATE OF CALIFORNIA OR ITS OFFICERS OR AGENTS SHALL NOT BE RESPONSIBLE FOR THE ACCURACY OR COMPLETENESS OF SCANNED COPIES OF THIS PLAN SHEET.

NOTE:
1. EXACT LOCATION AND POSITION OF TEMPORARY DRAINAGE PROTECTION AS APPROVED BY THE ENGINEER.

TEMPORARY DRAINAGE INLET PROTECTION, GRAVEL BAG BERM AND FIBER ROLL

LOCATION	STATION	L†	R†	TEMPORARY DRAINAGE INLET PROTECTION EA	TEMPORARY FIBER ROLL LF	TEMPORARY GRAVEL BAG BERM LF	DESCRIPTION
1 NB	51+14	X			35		CULVERT INLET AND OUTLET
	65+92		X		20		CULVERT OUTLET
	69+09		X		35		CULVERT INLET AND OUTLET
	71+20	X			35		CULVERT INLET AND OUTLET
	74+47		X			4	AC OVERSIDE DRAIN
	74+27	X				4	AC OVERSIDE DRAIN
	76+48	X		1	20	64	DRAINAGE INLET @ MEDIAN * AND CULVERT OUTLET
	79+52	X				4	AC OVERSIDE DRAIN
	80+17		X			4	PIPE DOWNDRAIN
	83+87		X		20		CULVERT OUTLET
	92+85	X		1	20	64	DRAINAGE INLET @ MEDIAN * AND CULVERT OUTLET
	92+07		X			4	AC OVERSIDE DRAIN
	92+07	X				4	AC OVERSIDE DRAIN
	121+89	X			35		CULVERT INLET AND OUTLET
	129+81	X			42		CULVERT INLET AND OUTLET
	142+32		X			4	AC OVERSIDE DRAIN
	142+75	X				4	AC OVERSIDE DRAIN
	146+18	X		1	20	64	DRAINAGE INLET @ MEDIAN * AND CULVERT OUTLET
	156+57		X			2	PIPE DOWNDRAIN
	161+49	X		1	20	64	DRAINAGE INLET @ MEDIAN * AND CULVERT OUTLET
	173+10	X			35		CULVERT INLET AND OUTLET
	181+07	X				4	AC OVERSIDE DRAIN
	195+35	X			35		CULVERT INLET AND OUTLET
	202+67	X			35		CULVERT INLET AND OUTLET
	228+54	X			35		CULVERT INLET AND OUTLET
	227+19	X				4	AC OVERSIDE DRAIN
	240+72	X				4	AC OVERSIDE DRAIN
	245+97	X			50		CULVERT INLET AND OUTLET
	262+86	X			35		CULVERT INLET AND OUTLET
	293+49	X			35		CULVERT INLET AND OUTLET
2 NB	336+26		X		35		CULVERT INLET AND OUTLET
	343+65		X		40		CULVERT INLET AND OUTLET
	341+02		X			2	PIPE DOWNDRAIN
	372+24		X			4	AC OVERSIDE DRAIN
	374+80		X		35		CULVERT INLET AND OUTLET
	378+27		X			4	AC OVERSIDE DRAIN
	379+55		X		33		CULVERT INLET AND OUTLET
	378+36		X			2	PIPE DOWNDRAIN
	392+70		X			4	AC OVERSIDE DRAIN
	400+14		X		35		CULVERT INLET AND OUTLET
	402+27		X			4	AC OVERSIDE DRAIN
	400+43		X			2	PIPE DOWNDRAIN
	411+67		X			4	AC OVERSIDE DRAIN
	411+23		X		50		CULVERT INLET AND OUTLET
	427+17		X			4	AC OVERSIDE DRAIN
	434+12		X			2	PIPE DOWNDRAIN
	435+52		X		33		CULVERT INLET AND OUTLET
2 SB	1331+30	X		1	20	64	DRAINAGE INLET* AND CULVERT OUTLET
	1343+06.5	X				4	AC OVERSIDE DRAIN
	1353+87	X		1	20	64	DRAINAGE INLET* AND CULVERT OUTLET
	1357+78	X		1	20	64	DRAINAGE INLET* AND CULVERT OUTLET
	1372+24	X				4	AC OVERSIDE DRAIN
	1378+27	X				4	AC OVERSIDE DRAIN
	1392+70	X				4	AC OVERSIDE DRAIN
	1402+27	X				4	AC OVERSIDE DRAIN
	1411+46	X				4	AC OVERSIDE DRAIN
	1429+55	X				4	AC OVERSIDE DRAIN
	TOTAL			7	883	554	

* DI PROTECTION TYPE 3B

TEMPORARY CONCRETE WASHOUT

LOCATION	STATION	L†	R†
2 SB	1331+30	X	
	1353+87	X	

TEMPORARY WATER POLLUTION CONTROL QUANTITIES WPCQ-1

STATE OF CALIFORNIA - DEPARTMENT OF TRANSPORTATION
Caltrans DESIGN

FUNCTIONAL SUPERVISOR: BRIAN WESLING

CALCULATED-DESIGNED BY: ENRICO DE JESUS
CHECKED BY: BRIAN WESLING

REVISED BY
DATE REVISED

LAST REVISION 04-15-13
DATE PLOTTED => 06-JUN-2013
TIME PLOTTED => 10:30

Dist	COUNTY	ROUTE	POST MILES TOTAL PROJECT	SHEET No.	TOTAL SHEETS
09	Iny	395	45.6/50.3, 50.9/52.9	12	21

REGISTERED CIVIL ENGINEER 4-15-13 DATE

4-22-13
PLANS APPROVAL DATE

REGISTERED PROFESSIONAL ENGINEER ENRICO DE JESUS No. 79832 Exp. 9-30-14 CIVIL STATE OF CALIFORNIA

THE STATE OF CALIFORNIA OR ITS OFFICERS OR AGENTS SHALL NOT BE RESPONSIBLE FOR THE ACCURACY OR COMPLETENESS OF SCANNED COPIES OF THIS PLAN SHEET.

NOTES:

1. FOR SIGN INSTALLATION DETAILS AND DIMENSIONS NOT SHOWN SEE STANDARD PLANS.
2. SEE TABLE FOR PLACEMENT TYPE.
3. EXACT SIGN LOCATIONS TO BE DETERMINED BY THE ENGINEER.

LEGEND:

→ - DIRECTION OF TRAVEL

STATIONARY MOUNTED CONSTRUCTION AREA SIGNS

Loc	PM	STATION	PLACEMENT		REMARKS
1 NB	44.50		D	2,2	BEGIN WORK, NB
	44.50		D	3,3	END WORK, SB
	46.22	85+65	F	1	MEDIAN CROSSOVER-COTTONWOOD Rd, Lt
	47.78	166+80	F	1	PAVED MEDIAN CROSSOVER, Lt
	48.61	211+00	G	1	ROAD CONNECTION, Rt
	48.94	229+00	E	1,1	MEDIAN CROSSOVER-BARTLETT Rd
	49.52	259+30	E	1,1	MEDIAN CROSSOVER-CAROLL CREEK Rd
2	51.40	1358+85	C	1	ROAD CONNECTION, Rt
	53.27	456+99	E	1,1	MEDIAN CROSSOVER-LUBKEN CYN Rd
	54.00	495+71	A	3	END WORK, NB
	54.00	1496+00	A	2	BEGIN WORK, SB

PORTABLE CHANGEABLE MESSAGE SIGNS

USE CAUTION	REDUCE SPEED	LANE CLOSED AHEAD

1. PORTABLE CHANGEABLE MESSAGE SIGN LOCATIONS TO BE CONFIRMED BY THE ENGINEER BEFORE THE ACTUAL CLOSURE.
2. ALTERNATE MESSAGES MUST BE APPROVED BY THE ENGINEER.
3. MESSAGE MAY BE ALTERED BY THE ENGINEER.
4. PORTABLE CHANGEABLE MESSAGE SIGNS SHALL BE DISPLAYED DURING SWEEPING OPERATIONS AND WHEN CONSTRUCTION OPERATIONS ARE ACTIVELY IN PROGRESS UNLESS ORDERED OTHERWISE BY THE ENGINEER.

STATIONARY MOUNTED CONSTRUCTION AREA SIGNS

LAYOUT	SIGN CODE	PANEL SIZE	SIGN MESSAGE	No. OF SIGNS	No. OF POST AND SIZE
1	W20-1	36" x 36"	ROAD WORK AHEAD	10	10 - 4" x 6"
2	W20-1	48" x 48"	ROAD WORK AHEAD	3	3 - 6" x 6"
	C23B (CA) (SPECIAL)	48" x 30"	PAVEMENT MAINTENANCE	3	
3	G20-2	36" x 18"	END ROAD WORK	3	3 - 4" x 4"

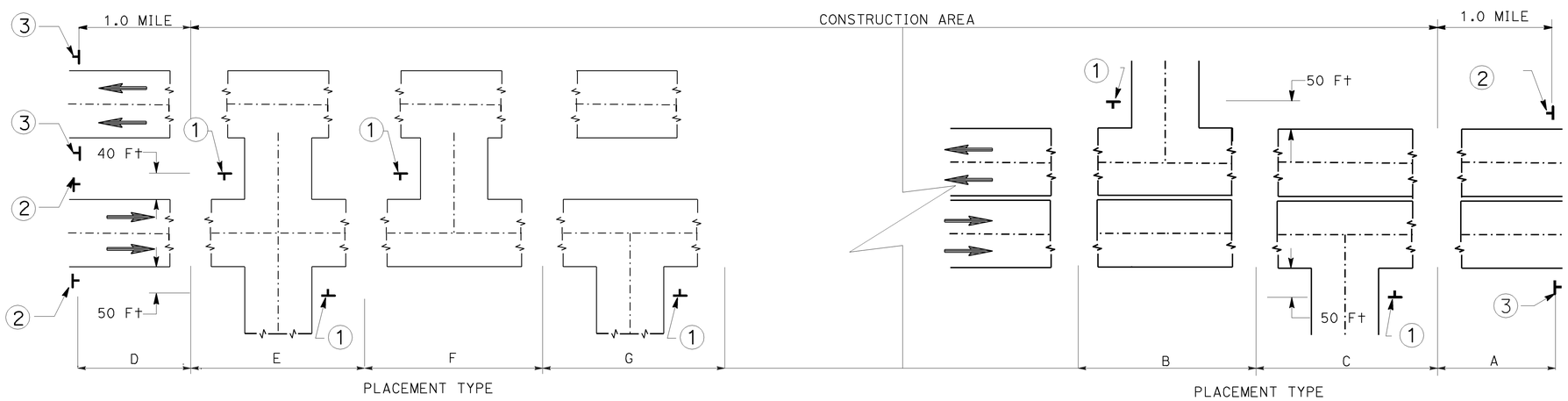

TYPICAL SIGN PLACEMENT FOR DIVIDED HIGHWAY

TYPICAL SIGN PLACEMENT FOR UNDIVIDED HIGHWAY

APPROVED FOR CONSTRUCTION AREA SIGN WORK ONLY

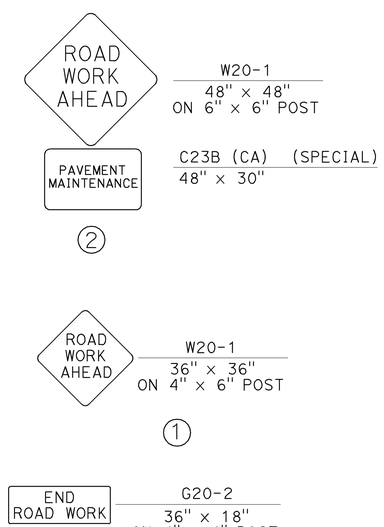

CONSTRUCTION AREA SIGNS

NO SCALE

CS-1

STATE OF CALIFORNIA - DEPARTMENT OF TRANSPORTATION
Caltrans DESIGN

FUNCTIONAL SUPERVISOR: BRIAN WESLING
CALCULATED-DESIGNED BY: ENRICO DE JESUS
CHECKED BY: BRIAN WESLING
REVISED BY / DATE REVISED

LAST REVISION 04-15-13 | DATE PLOTTED => 06-JUN-2013 | TIME PLOTTED => 10:30

Dist	COUNTY	ROUTE	POST MILES TOTAL PROJECT	SHEET No.	TOTAL SHEETS
09	Iny	395	45.6/50.3, 50.9/52.9	13	21

REGISTERED CIVIL ENGINEER 4-15-13 DATE

4-22-13
PLANS APPROVAL DATE

REGISTERED PROFESSIONAL ENGINEER ENRICO DE JESUS No. 79832 Exp. 9-30-14 CIVIL STATE OF CALIFORNIA

THE STATE OF CALIFORNIA OR ITS OFFICERS OR AGENTS SHALL NOT BE RESPONSIBLE FOR THE ACCURACY OR COMPLETENESS OF SCANNED COPIES OF THIS PLAN SHEET.

ABBREVIATIONS:

HMA-SP (TYPE A)- HOT MIX ASPHALT, SUPERPAVE (TYPE A)

ROADWAY QUANTITIES

LOCATION	STATION TO STATION	COLD IN-PLACE RECYCLING	EMULSIFIED RECYCLING AGENT (COLD IN-PLACE RECYCLING)	ASPHALTIC EMULSION (COLD IN-PLACE RECYCLING)	SAND COVER (COLD IN-PLACE RECYCLING)	HMA-SP (TYPE A)	TACK COAT	SHOULDER BACKING	COLD PLANE ASPHALT CONCRETE PAVEMENT	CEMENT (COLD IN-PLACE RECYCLING)
		SQYD	TON	TON	TON	TON	TON	TON	SQYD	TON
1 NB	50+08 TO 300+35	69,000	540	39	117	17,100	50	1,700	1,200	142.7
2 NB	330+80 TO 437+30	31,000	245	18	45	5650	19	300	3,300	64.2
2 SB	1331+00 TO 1437+60	31,000	245	18	45	5650	19	300	400	64.2
SAFETY EDGE						120				
HMA DIKE*						612.8				
TOTAL		131,000	1030	75	207	29,132.8	88	2,300	4,900	271.1

SAFETY EDGE

LOCATION	STATION TO STATION	SIDE	SAFETY EDGE LF (N)
1 NB	50+08 TO 300+35	L†	18,200
		R†	19,000
2 SB	1331+00 TO 1437+60	L†	2,920
2 NB	330+80 TO 437+30	R†	4,710
TOTAL			44,830

HOT MIX ASPHALT DIKE, OVERSIDE DRAIN AND VALLEY GUTTER

LOCATION	STATION TO STATION	L†	R†	REMOVE AC DIKE	REMOVE AC GUTTER (BACKSLOPE)	PLACE HMA DIKE (TYPE E)		PLACE HMA DIKE (TYPE C)		PLACE HMA DIKE (TYPE F)		HMA-SP (TYPE A)	PLACE HMA (Misc AREA)	REMOVE AC OVERSIDE DRAIN	HMA OVERSIDE DRAIN	HMA OVERSIDE DRAIN LENGTH	ROADWAY EXCAVATION	EMBANKMENT
				LF	LF	LF	TON (N)	LF	TON (N)	LF	TON (N)	TON*	SQYD**	EA	EA (N)	LF (N)	CY	CY (N)
1 NB	70+04 TO 74+47	X		443		443	11.3					12.7	8.5	1	1	10	4.3	3.9
	69+98 TO 74+27		X	429		429	10.9					12.3	8.5	1	1	10	4.2	3.8
	75+52 TO 79+52	X		400		400	10.2					11.6	8.5	1	1	10	3.9	3.5
	75+59 TO 80+17		X	458		458	11.7					13.1	5.0				4.5	4.0
	92+07 TO 114+57	X		2250		2250	57.3					58.7	8.5	1	1	10	21.9	19.8
	92+07 TO 105+37		X	1330		1330	33.8					35.2	8.5	1	1	10	12.9	11.7
	131+35 TO 142+75	X		1140		1140	29.0					29.4	8.5	1	1	10	10.7	4.8
	131+57 TO 142+32		X	1075		1075	27.4					29.8	8.5	1	1	10	10.8	4.8
	147+82 TO 156+57		X	875		875	22.3					23.7	5.0				8.5	3.8
	181+07 TO 188+57	X		750		750	19.1					20.5	8.5	1	1	10	7.3	3.3
	204+07 TO 227+19	X		2312		2312	58.8					60.2	8.5	1	1	10	22.5	10.0
	237+07 TO 240+72	X		365		365	9.3					10.7	8.5	1	1	10	3.5	1.5
2 NB	339+69 TO 340+06.5		X					37.5	0.3			0.3						
	344+81.5 TO 345+19		X					37.5	0.3			0.3						
	340+06.5 TO 344+81.5		X	475						475	6.1	7.0	5.0					
	373+30 TO 373+67.5		X					37.5	0.3			0.3						
	373+67.5 TO 383+42.5		X	975						975	12.6	13.4	5.0					
	383+42.5 TO 383+80		X					37.5	0.3			0.3						
	387+86 TO 388+23.5		X					37.5	0.3			0.3						
	388+23.5 TO 401+23.5		X	1300						1300	16.8	17.8	5.0					
	401+23.5 TO 401+61		X					37.5	0.3			0.3						
	402+64 TO 408+39		X		575	575	14.6					15.1					15.7	16.3
	411+67 TO 427+17		X		1550	1550	39.4					42.2	17.0	2	2	10,10	45.2	47.0
	429+83 TO 436+20		X	637		637	8.2					9.0	5.0				5.2	5.6
2 SB	1343+44 TO 1358+84	X			1540	1540	39.2					42.2	18.0	1	1	10	46.0	47.8
	1343+06.5 TO 1343+44	X						37.5	0.3			1.7	8.5	1	1	10		
	1359+20 TO 1374+01	X			1481	1481	37.7					39.1	5.0	1	1	10	43.2	44.9
	1378+27 TO 1392+70	X			1443	1443	36.7					39.5	17.0	2	2	10,10	42.1	43.8
	1402+27 TO 1408+22	X			595	595	15.1					16.5	8.5	1	1	10	17.4	18.0
	1411+46 TO 1429+55	X			1809	1809	46.0					48.9	17.0	2	2	10,10	52.8	54.9
TOTAL				15,214	8,993	21,457		262.5		2,750		612.8	197.5	20			382.6	

* THIS QUANTITY IS FOR HMA OVERSIDE DRAINS, VALLEY GUTTER AT PIPE DOWNDRAINS AND PLACE HMA DIKES.
** THIS QUANTITY IS FOR AREA FOR HMA OVERSIDE DRAINS AND VALLEY GUTTER AT PIPE DOWNDRAINS.
(N) - NOT A SEPARATE PAY ITEM, FOR INFORMATION ONLY.

SUMMARY OF QUANTITIES

NO SCALE

Q-1

STATE OF CALIFORNIA - DEPARTMENT OF TRANSPORTATION
Caltrans
DESIGN

FUNCTIONAL SUPERVISOR: BRIAN WESLING
CALCULATED-DESIGNED BY: ENRICO DE JESUS
CHECKED BY: BRIAN WESLING
REVISED BY
DATE REVISED

LAST REVISION 04-15-13 | DATE PLOTTED => 06-JUN-2013 | TIME PLOTTED => 10:30

Dist	COUNTY	ROUTE	POST MILES TOTAL PROJECT	SHEET No.	TOTAL SHEETS
09	Iny	395	45.6/50.3, 50.9/52.9	14	21

REGISTERED CIVIL ENGINEER 4-15-13 DATE

4-22-13
PLANS APPROVAL DATE

REGISTERED PROFESSIONAL ENGINEER ENRICO DE JESUS No. 79832 Exp. 9-30-14 CIVIL STATE OF CALIFORNIA

THE STATE OF CALIFORNIA OR ITS OFFICERS OR AGENTS SHALL NOT BE RESPONSIBLE FOR THE ACCURACY OR COMPLETENESS OF SCANNED COPIES OF THIS PLAN SHEET.

(N) - NOT A SEPARATE PAY ITEM, FOR INFORMATION ONLY.

RECONSTRUCT METAL BEAM GUARD RAILING

LOCATION	STATION TO STATION	L+	R+	BURIED POST END ANCHOR EA (N)	LENGTH LF	TREATED WOOD WASTE LB
2 NB	340+06.5 TO 344+81.5		X		475	6,230
	373+67.5 TO 383+42.5		X		975	11,830
	388+23.5 TO 401+23.5		X		1300	15,470
2 SB	1342+06.5 TO 1343+44	X		1	137.5	2,030
	1394+48.5 TO 1399+98.5	X			550	7,070
TOTAL					3,437.5	42,630

PAINT TRAFFIC STRIPE (2-COAT)

LOCATION	DIRECTION	STATION TO STATION (LOCATION)		DETAIL No. 11	24	27B	28	38A
				LF	LF	LF	LF	LF
1	NB	50+08	300+35	25,027	24,673	25,027		275
2	NB	330+80	437+30	10,650		10,650	10,650	
	SB	1331+00	1437+60	10,660		10,660	10,660	
		SUBTOTAL		46,337	24,673	46,337	21,310	275
TOTAL				138,932				

ALTERNATIVE FLARED TERMINAL SYSTEM

LOCATION	STATION TO STATION	L+	R+	EA
2 NB	339+69 TO 340+06.5		X	1
	344+81.5 TO 345+19		X	1
	373+30 TO 373+67.5		X	1
	383+42.5 TO 383+80		X	1
	387+86 TO 388+23.5		X	1
	401+23.5 TO 401+61		X	1
2 SB	1341+69 TO 1342+06.5	X		1
	1394+11 TO 1394+48.5	X		1
	1399+98.5 TO 1400+36	X		1
TOTAL				9

REMOVE METAL BEAM GUARD RAILING

LOCATION	STATION TO STATION	L+	R+	LF
2 NB	339+69 TO 340+06.5		X	37.5
	344+81.5 TO 345+19		X	37.5
	373+30 TO 373+67.5		X	37.5
	383+42.5 TO 383+80		X	37.5
	387+86 TO 388+23.5		X	37.5
	401+23.5 TO 401+61		X	37.5
2 SB	1341+69 TO 1342+06.5	X		37.5
	1394+11 TO 1394+48.5	X		37.5
	1399+98.5 TO 1400+36	X		37.5
TOTAL				337.5

THERMOPLASTIC PAVEMENT MARKING

LOCATION	STATION	SIDE L+	SIDE R+	TYPE V ARROW EA (N)	TYPE V ARROW SQFT	TYPE III (L) ARROW EA (N)	TYPE III (L) ARROW SQFT	LIMIT LINE LF (N)	LIMIT LINE SQFT	STOP EA (N)	STOP SQFT	CHP MARKING (1.0'x6.0') EA (N)	CHP MARKING (1.0'x6.0') SQFT
1 NB	73+11		X									1	6
	82+40					1	42						
	83+50	X	X	2	66								
	84+70	X	X	2	66								
	84+70	X				1	42						
	85+40	X						26	26	1	22		
	126+11		X									1	6
	165+00	X	X	2	66								
	165+20	X	X	2	66								
	166+80	X						25	25	1	22		
	182+27		X									1	6
	227+00	X	X	2	66								
	227+20	X	X	2	66								
	229+00	X						35	35	1	22		
	229+00		X					48	48	1	22		
	232+80		X									1	6
	257+30	X	X	2	66								
	258+50	X	X	2	66								
	259+30	X						30	30	1	22		
	288+16		X									1	6
2 NB	342+50		X									1	6
	395+50		X									1	6
2 SB	1360+86	X										1	6
	1415+11	X										1	6
SUB-TOTAL					528		84		164		110		54
TOTAL								940					

REMOVE THERMOPLASTIC PAVEMENT MARKINGS

LOCATION	STATION	SIDE L+	SIDE R+	TYPE V ARROW EA (N)	TYPE V ARROW SQFT	TYPE III (L) ARROW EA (N)	TYPE III (L) ARROW SQFT	LIMIT LINE EA (N)	LIMIT LINE SQFT	STOP EA (N)	STOP SQFT	CHP MARKER (1.0'x6.0') EA (N)	CHP MARKER (1.0'x6.0') SQFT
1 NB	73+11		X									1	6
	83+50	X	X	2	66								
	84+70	X	X	2	66								
	84+70	X				1	42						
	85+40	X						1	26	1	22		
	126+11		X									1	6
	165+00	X	X	2	66								
	165+20	X	X	2	66								
	166+80	X						1	25	1	22		
	181+23		X									1	6
	227+00	X	X	2	66								
	227+20	X	X	2	66								
	229+00	X						1	35	1	22		
	229+00		X					1	48	1	22		
	232+80		X									1	6
	257+30	X	X	2	66								
	258+50	X	X	2	66								
	259+30	X						1	30	1	22		
	288+16		X									1	6
2 NB	342+50		X									1	6
	395+50		X									1	6
2 SB	1360+86	X										1	6
	1415+11	X										1	6
SUB-TOTAL					528		42		164		110		54
TOTAL								898					

SUMMARY OF QUANTITIES
Q-2

STATE OF CALIFORNIA - DEPARTMENT OF TRANSPORTATION
Caltrans® DESIGN

FUNCTIONAL SUPERVISOR: BRIAN WESLING
CALCULATED-DESIGNED BY: ENRICO DE JESUS
CHECKED BY: BRIAN WESLING
REVISED BY
DATE REVISED

LAST REVISION 04-15-13
DATE PLOTTED => 21-JUN-2013
TIME PLOTTED => 09:16

Dist	COUNTY	ROUTE	POST MILES TOTAL PROJECT	SHEET No.	TOTAL SHEETS
09	Iny	395	45.6/50.3, 50.9/52.9	15	21

REGISTERED CIVIL ENGINEER 4-15-13 DATE

4-22-13 PLANS APPROVAL DATE

REGISTERED PROFESSIONAL ENGINEER ENRICO DE JESUS No. 79832 Exp. 9-30-14 CIVIL STATE OF CALIFORNIA

THE STATE OF CALIFORNIA OR ITS OFFICERS OR AGENTS SHALL NOT BE RESPONSIBLE FOR THE ACCURACY OR COMPLETENESS OF SCANNED COPIES OF THIS PLAN SHEET.

RUMBLE STRIP

LOCATION	STATION TO STATION	DIRECTION	LENGTH (N)	SHOULDER RUMBLE STRIP (GROUND-IN INDENTATION)		CENTERLINE RUMBLE STRIP	PAINT TRAFFIC STRIPE (1- COAT) DETAIL 28
				Lt	Rt		
			LF	Sta	Sta	Sta	LF
1 NB	50+08 TO 300+35	NB	25,027	246.54	243.35	-	
2 NB	330+80 TO 437+30	NB	10,650	-	104.58	105.86	10,650
2 SB	1331+00 TO 1437+60	SB	10,660	105.96	-	105.96	10,660
SUBTOTAL				352.50	347.93	211.82	
TOTAL				700.43		211.82	21,310

NOTE: PLACE DETAIL 28 PAINT TRAFFIC STRIPE (1-COAT) PRIOR TO CONSTRUCTING CENTERLINE RUMBLE STRIP

TEMPORARY TRAFFIC STRIPE (PAINT)

LOCATION	DIRECTION	STATION TO STATION (LOCATION)		DETAIL No.				
				11	24	27B	28	38A
				LF	LF	LF	LF	LF
1	NB	50+08	300+35	25,027	24,673	25,027		275
2	NB	330+80	437+30	10,650		10,650	10,650	
	SB	1331+00	1437+60	10,660		10,660	10,660	
SUBTOTAL				46,337	24,673	46,337	21,310	275
TOTAL				138,932				

REMOVE MARKER

LOCATION	STATION	SIDE		OBJECT MARKER (TYPE L-1)	MILEPOST MARKER	REMARKS
		Lt	Rt	EA	EA	
1 NB	69+98		X	1		
	73+31		X		1	PM 46.0
	75+52	X		1		
	75+59		X	1		
	92+07		X	1		
	92+07	X		1		
	99+71	X			1	PM 46.5
	131+35	X		1		
	131+57		X	1		
	147+82		X	1		
	181+07	X		1		
	204+07	X		1		
	237+07	X		1		
2 NB	345+21.5		X	1		
	379+42.5		X	1		
	394+30.5		X	1		
2 SB	1341+26.5	X		1		
	1399+70.5	X		1		
SUB-TOTAL				16	2	
TOTAL				18		

OBJECT MARKER

LOCATION	STATION	SIDE		OBJECT MARKER (TYPE L-1)
		Lt	Rt	EA
1 NB	70+04	X		1
	69+98		X	1
	75+52	X		1
	75+59		X	1
	92+07		X	1
	92+07	X		1
	131+35	X		1
	131+57		X	1
	147+82		X	1
	181+07	X		1
	204+07	X		1
	237+07	X		1
2 NB	345+21.5		X	1
	379+42.5		X	1
	394+30.5		X	1
	394+30.5		X	1
	417+80		X	1
	429+83		X	1
2 SB	1341+26.5	X		1
	1372+24	X		1
	1392+70	X		1
	1399+70.5	X		1
	1408+22	X		1
	1429+55	X		1
TOTAL				24

REMOVE DELINEATOR

LOCATION	STATION TO STATION	SIDE		DELINEATOR	
		Lt	Rt	TYPE G	TYPE F
				EA	EA
1 NB	69+98 TO 74+27		X		3
	92+07 TO 114+57	X		5	
	92+07 TO 105+37		X		8
	131+35 TO 142+32	X		2	
	131+57 TO 142+72		X		6
	181+07 TO 188+57	X		5	
	204+07 TO 227+19	X		3	
2 NB	345+21.5 TO 349+96.5		X		1
	379+42.5 TO 389+17.5		X		3
	394+30.5 TO 407+30.5		X		3
	429+83 TO 436+20		X		1
2 SB	1340+26.5 TO 1341+26.5		X		1
	1394+200.5 TO 1399+70.5		X		1
TOTAL				42	

DELINEATOR (CLASS 2)

LOCATION	STATION TO STATION	SIDE		DELINEATOR	
		Lt	Rt	TYPE G EA	TYPE F EA
1 NB	69+98 TO 74+27		X		3
	92+07 TO 114+57	X		5	
	92+07 TO 105+37		X		8
	131+35 TO 142+32	X		2	
	131+57 TO 142+72		X		6
	181+07 TO 188+57	X		5	
	204+07 TO 227+19	X		3	
2 NB	345+21.5 TO 349+96.5		X		1
	379+42.5 TO 389+17.5		X		3
	394+30.5 TO 407+30.5		X		3
	429+83 TO 436+20		X		1
2 SB	1340+26.5 TO 1341+26.5		X		1
	1394+200.5 TO 1399+70.5		X		1
TOTAL				42	

MILEPOST MARKER

LOCATION	STATION	SIDE		MILEPOST MARKER	MESSAGE
		Lt	Rt	EA	
1 NB	73+11		X	1	395 Iny R46.0
	99+71	X		1	395 Iny R46.5
TOTAL				2	

ADJUST INLET

LOCATION	STATION	EA	SIDE	
			Lt	Rt
2 SB	1331+30	1	X	
	1353+87	1	X	
TOTAL		2		

SUMMARY OF QUANTITIES
Q-3

STATE OF CALIFORNIA - DEPARTMENT OF TRANSPORTATION
DESIGN
Caltrans

FUNCTIONAL SUPERVISOR: BRIAN WESLING
CALCULATED-DESIGNED BY: ENRICO DE JESUS
CHECKED BY: BRIAN WESLING
REVISED BY
DATE REVISED

LAST REVISION 04-15-13
DATE PLOTTED => 06-JUN-2013
TIME PLOTTED => 10:31

DIST	COUNTY	ROUTE	POST MILES TOTAL PROJECT	SHEET No.	TOTAL SHEETS
09	Iny	395	45.6/50.3, 50.9/52.9	16	21

REGISTERED CIVIL ENGINEER

January 20, 2012
PLANS APPROVAL DATE

REGISTERED PROFESSIONAL ENGINEER Cornelis M. Hakim No. C55610 Exp. 12-31-12 CIVIL STATE OF CALIFORNIA

THE STATE OF CALIFORNIA OR ITS OFFICERS OR AGENTS SHALL NOT BE RESPONSIBLE FOR THE ACCURACY OR COMPLETENESS OF SCANNED COPIES OF THIS PLAN SHEET.

TO ACCOMPANY PLANS DATED 4-22-13

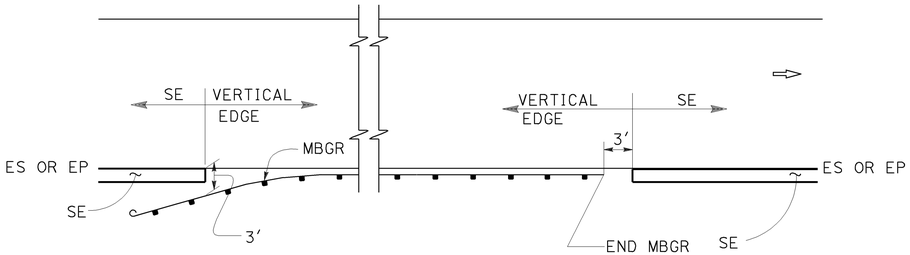

MBGR

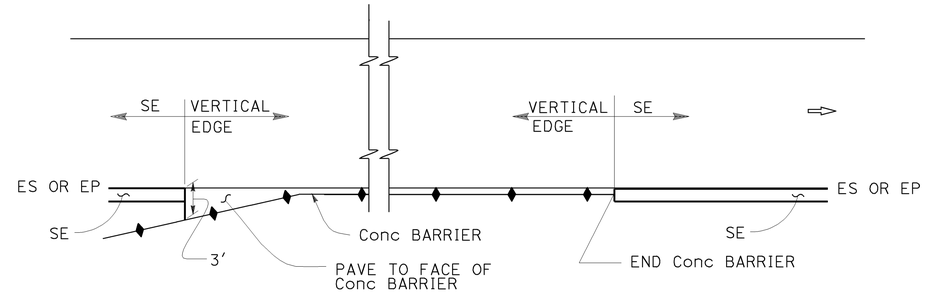

CONCRETE BARRIER

ABBREVIATIONS:

SE SAFETY EDGE

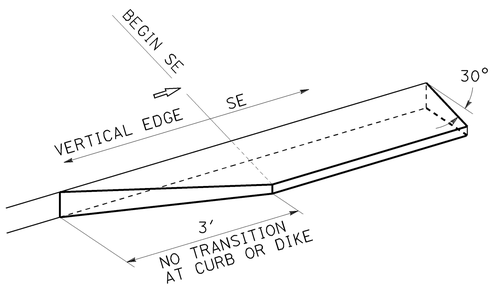

TRANSITION DETAIL FOR CONCRETE ONLY

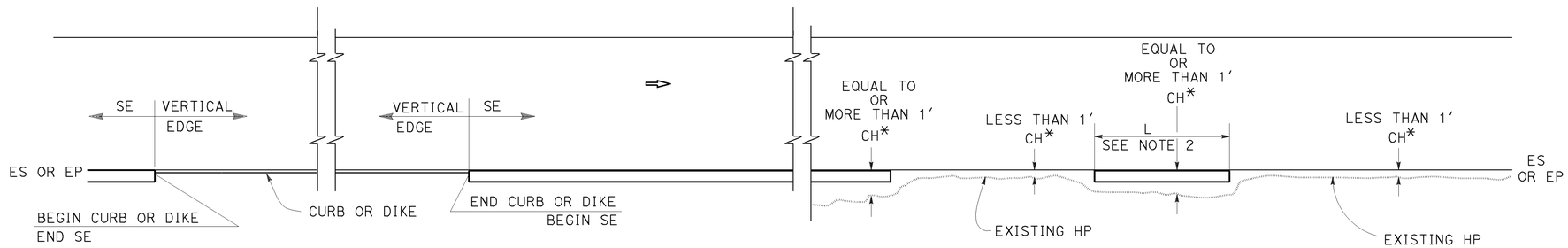

CURB OR DIKE

NARROW SIDE SLOPE

* CH = Distance from ES or EP to existing HP.

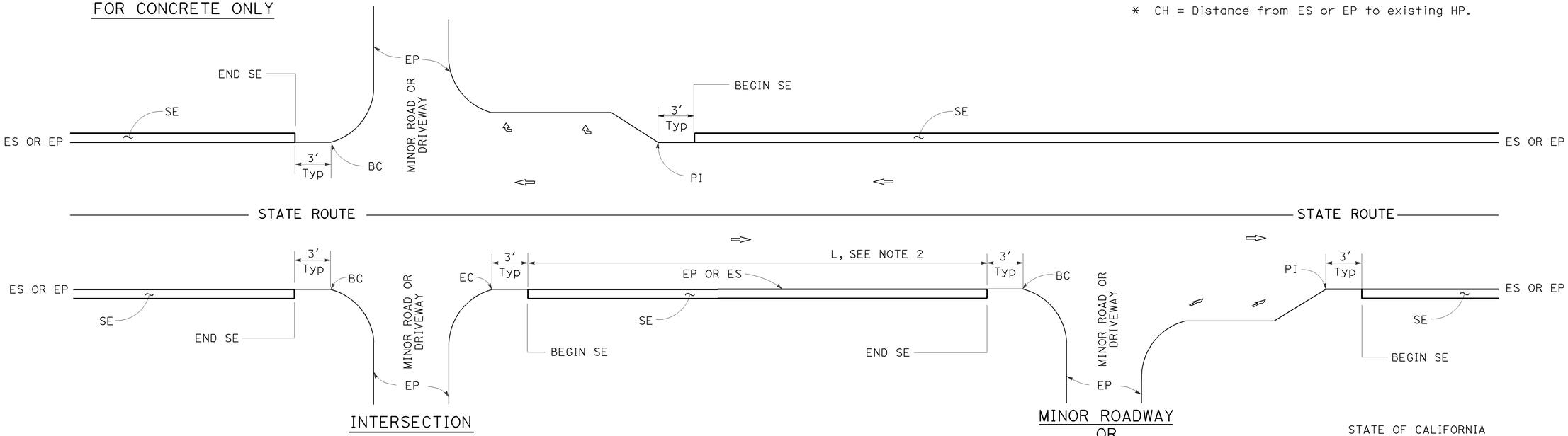

INTERSECTION

MINOR ROADWAY OR DRIVEWAY

DRIVEWAY AND INTERSECTION

NOTES:

1. For details not shown, see Revised Standard Plans RSP P75 and RSP P76.
2. Safety edge is optional when L is less than 30′.

STATE OF CALIFORNIA
DEPARTMENT OF TRANSPORTATION

PAVEMENT EDGE TREATMENTS

NO SCALE

RSP P74 DATED JANUARY 20, 2012 SUPPLEMENTS THE STANDARD PLANS BOOK DATED 2010.

REVISED STANDARD PLAN RSP P74

2010 REVISED STANDARD PLAN RSP P74

03-01-13

01-05-12

DIST	COUNTY	ROUTE	POST MILES TOTAL PROJECT	SHEET No.	TOTAL SHEETS
09	Iny	395	45.6/50.3, 50.9/52.9	17	21

REGISTERED CIVIL ENGINEER

January 20, 2012
PLANS APPROVAL DATE

REGISTERED PROFESSIONAL ENGINEER Cornelis M. Hakim No. C55610 Exp. 12-31-12 CIVIL STATE OF CALIFORNIA

THE STATE OF CALIFORNIA OR ITS OFFICERS OR AGENTS SHALL NOT BE RESPONSIBLE FOR THE ACCURACY OR COMPLETENESS OF SCANNED COPIES OF THIS PLAN SHEET.

TO ACCOMPANY PLANS DATED 4-22-13

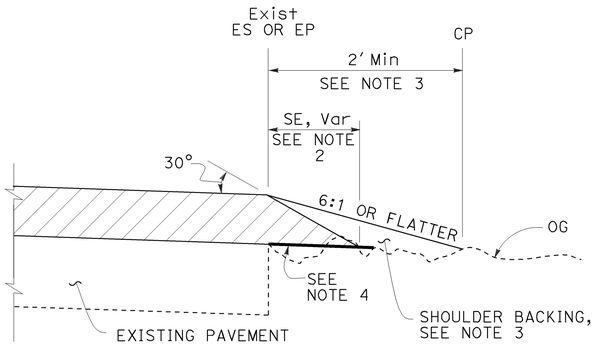

CASE A
Safety Edge

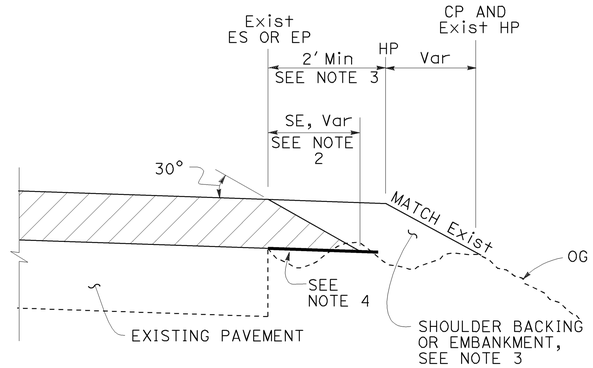

CASE B
Safety Edge

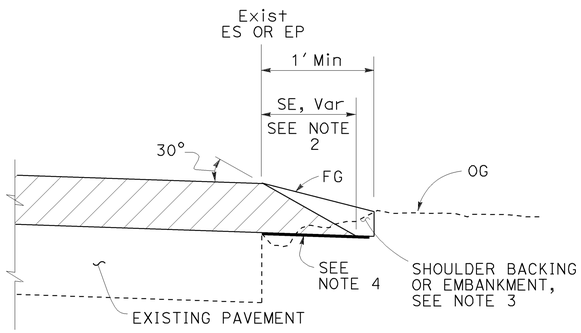

CASE C
Safety Edge

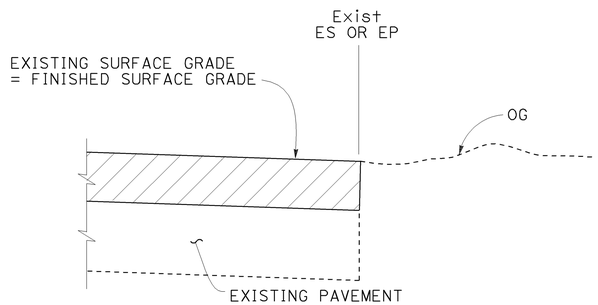

CASE D
Vertical Edge

LEGEND:

- HMA OVERLAY
- HMA OR CONCRETE OVERLAY
- CONCRETE OVERLAY

ABBREVIATIONS:

SE SAFETY EDGE
TT TOTAL THICKNESS OF SE

TABLE A
EDGE TREATMENT FOR VARIOUS OVERLAY THICKNESS AND CONDITIONS

	OVERLAY THICKNESS	
FIELD CONDITION	LESS THAN 0.15'	0.15' OR MORE
Exist SLOPE 6:1 OR FLATTER	CASE E	CASE A
Exist SLOPE 3:1 TO 6:1	CASE E	CASE B
Exist SLOPE STEEPER THAN 3:1	CASE F	CASE F
CUT SECTION (REPLACE, COLD PLANE, MILL PAVEMENT)	CASE D	CASE C

ADDITIONAL HMA OR CONCRETE QUANTITIES FOR SE/SIDE/MILE

TYPICAL CROSS SECTION	TT	TOTAL ADDITIONAL MATERIAL FOR SE/SIDE/MILE		
		HMA (TON)	CONCRETE (CY)*	CONCRETE (CY)**
TT	0.15'	NA	NA	NA
	0.20'	13.7	NA	NA
	0.30'	30.9	NA	NA
	0.40'	54.9	NA	NA
	0.45'	69.4	NA	NA
TT 0.43'	0.50'	84.2	NA	NA
	0.60'	113.9	NA	NA
	0.70'	143.6	70.9	94.2
	0.80'	173.3	85.6	112.2
	0.90'	203.0	100.3	130.2
	1.00'	232.7	114.9	148.2
	1.10'	262.4	129.6	166.2
	1.20'	292.1	144.3	184.2

* For Detail "A"
** For Optional Detail "A"

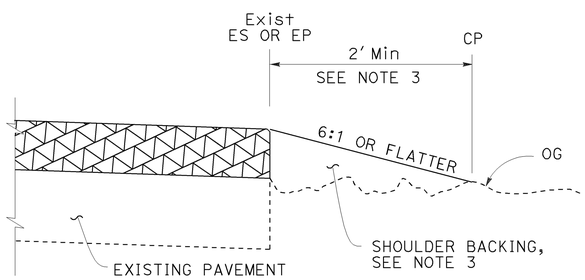

CASE E
Vertical Edge

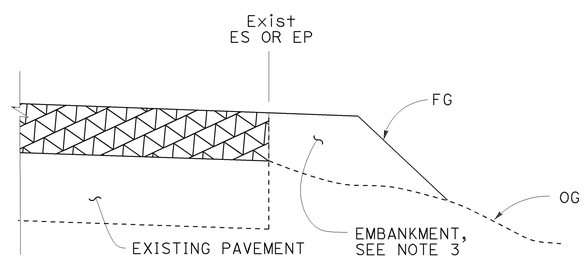

CASE F
Vertical Edge
* See Table A and Revised Std Plan RSP P74

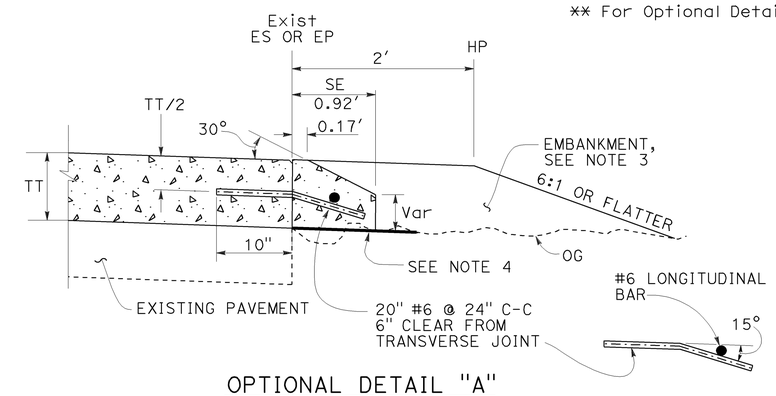

OPTIONAL DETAIL "A"
For concrete overlay
See Note 5

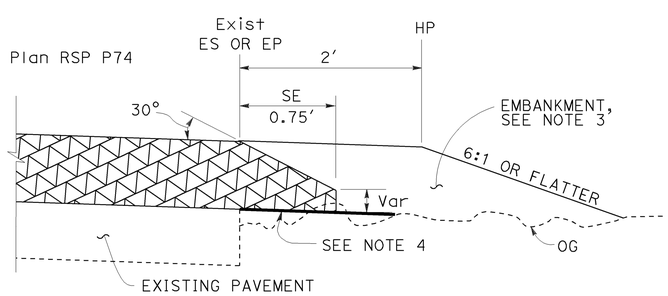

DETAIL "A"
For HMA overlay thickness more than 0.43' or concrete overlay

NOTES:

1. For limits of safety edge and vertical edge treatments, see Revised Standard Plan RSP P74.
2. Details shown for HMA overlay thickness less than 0.43'. See Detail "A" for HMA overlay thickness more than 0.43' or concrete overlay.
3. For locations and limits of shoulder backing or embankment see project plans.
4. Grade existing ground to place safety edge. 1' minimum width
5. Safety edge transverse joint must match overlay transverse joint. End of #6 longitudinal bar must be 2" ±½" clear from transverse joint.
6. Safety edge is not needed in the area of MBGR, barrier, right turn lane and acceleration lane. See Revised Standard Plan RSP P74.

STATE OF CALIFORNIA
DEPARTMENT OF TRANSPORTATION

PAVEMENT EDGE TREATMENTS-OVERLAYS

NO SCALE

RSP P75 DATED JANUARY 20, 2012 SUPPLEMENTS THE STANDARD PLANS BOOK DATED 2010.

REVISED STANDARD PLAN RSP P75

2010 REVISED STANDARD PLAN RSP P75

03-01-13

01-09-12

Dist	COUNTY	ROUTE	POST MILES TOTAL PROJECT	SHEET No.	TOTAL SHEETS
09	Iny	395	45.6/50.3, 50.9/52.9	18	21

REGISTERED CIVIL ENGINEER

April 19, 2013
PLANS APPROVAL DATE

REGISTERED PROFESSIONAL ENGINEER
Gurinderpal Bhullar
No. C48815
Exp. 9-30-14
CIVIL
STATE OF CALIFORNIA

THE STATE OF CALIFORNIA OR ITS OFFICERS OR AGENTS SHALL NOT BE RESPONSIBLE FOR THE ACCURACY OR COMPLETENESS OF SCANNED COPIES OF THIS PLAN SHEET.

TO ACCOMPANY PLANS DATED 4-22-13

2010 REVISED STANDARD PLAN RSP T9

TABLE 1

TAPER LENGTH CRITERIA AND CHANNELIZING DEVICE SPACING

SPEED (S)	MINIMUM TAPER LENGTH * FOR WIDTH OF OFFSET 12 FEET (W)				MAXIMUM CHANNELIZING DEVICE SPACING		
					X	Y	Z **
	TANGENT 2L	MERGING L	SHIFTING L/2	SHOULDER L/3	TAPER	TANGENT	CONFLICT
mph	ft	ft	ft	ft	ft	ft	ft
20	160	80	40	27	20	40	10
25	250	125	63	42	25	50	12
30	360	180	90	60	30	60	15
35	490	245	123	82	35	70	17
40	640	320	160	107	40	80	20
45	1080	540	270	180	45	90	22
50	1200	600	300	200	50	100	25
55	1320	660	330	220	55	110	27
60	1440	720	360	240	60	120	30
65	1560	780	390	260	65	130	32
70	1680	840	420	280	70	140	35

* - For other offsets, use the following merging taper length formula for L:
For speed of 40 mph or less, $L = WS^2/60$
For speed of 45 mph or more, $L = WS$

Where: L = Taper length in feet
W = Width of offset in feet
S = Posted speed limit, off-peak 85th-percentile speed prior to work starting, or the anticipated operating speed in mph

** - Use for taper and tangent sections where there are no pavement markings or where there is a conflict between existing pavement markings and channelizers (CA).

TABLE 2

LONGITUDINAL BUFFER SPACE AND FLAGGER STATION SPACING

SPEED *	Min D **	DOWNGRADE Min D ***		
		-3%	-6%	-9%
mph	ft	ft	ft	ft
20	115	116	120	126
25	155	158	165	173
30	200	205	215	227
35	250	257	271	287
40	305	315	333	354
45	360	378	400	427
50	425	446	474	507
55	495	520	553	593
60	570	598	638	686
65	645	682	728	785
70	730	771	825	891

* - Speed is posted speed limit, off-peak 85th-percentile speed prior to work starting, or the anticipated operating speed in mph

** - Longitudinal buffer space or flagger station spacing

*** - Use on sustained downgrade steeper than -3 percent and longer than 1 mile.

TABLE 3

ADVANCE WARNING SIGN SPACING

ROAD TYPE	DISTANCE BETWEEN SIGNS *		
	A	B	C
	ft	ft	ft
URBAN - 25 mph OR LESS	100	100	100
URBAN - MORE THAN 25 mph TO 40 mph	250	250	250
URBAN - MORE THAN 40 mph	350	350	350
RURAL	500	500	500
EXPRESSWAY / FREEWAY	1000	1500	2640

* - The distances are approximate, are intended for guidance purposes only, and should be applied with engineering judgment. These distances should be adjusted by the Engineer for field conditions, if necessary, by increasing or decreasing the recommmended distances.

STATE OF CALIFORNIA
DEPARTMENT OF TRANSPORTATION

TRAFFIC CONTROL SYSTEM FOR LANE CLOSURE ON FREEWAYS AND EXPRESSWAYS

NO SCALE

RSP T9 DATED APRIL 19, 2013 SUPPLEMENTS THE STANDARD PLANS BOOK DATED 2010.

REVISED STANDARD PLAN RSP T9

1-23-13

TO ACCOMPANY PLANS DATED 4-22-13

Dist	COUNTY	ROUTE	POST MILES TOTAL PROJECT	SHEET No.	TOTAL SHEETS
09	Iny	395	45.6/50.3, 50.9/52.9	19	21

REGISTERED CIVIL ENGINEER

April 19, 2013
PLANS APPROVAL DATE

REGISTERED PROFESSIONAL ENGINEER Gurinderpal Bhullar No. C48815 Exp. 9-30-14 CIVIL STATE OF CALIFORNIA

THE STATE OF CALIFORNIA OR ITS OFFICERS OR AGENTS SHALL NOT BE RESPONSIBLE FOR THE ACCURACY OR COMPLETENESS OF SCANNED COPIES OF THIS PLAN SHEET.

NOTES:

See Revised Standard Plan RSP T9 for tables.

Use cone spacing X for taper segment, Y for tangent segment or Z for conflict situations, as approriate, per Table 1, unless X, Y, or Z cone spacing is shown on this sheet.

Unless otherwise specified in the special provisions, all temporary warning signs shall have black legend on fluorescent orange background.

California codes are designated by (CA). Otherwise, Federal (MUTCD) codes are shown.

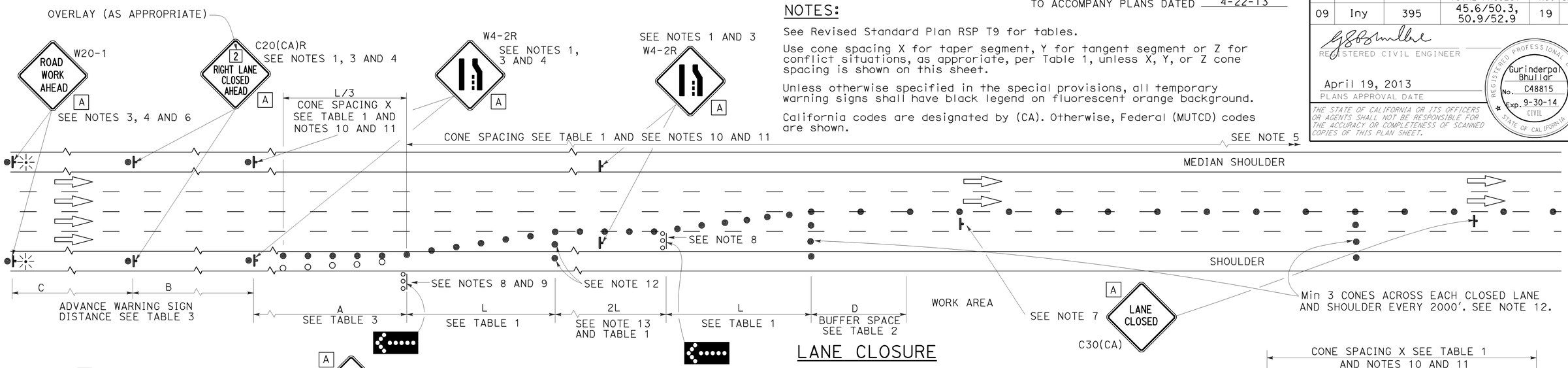

LANE CLOSURE

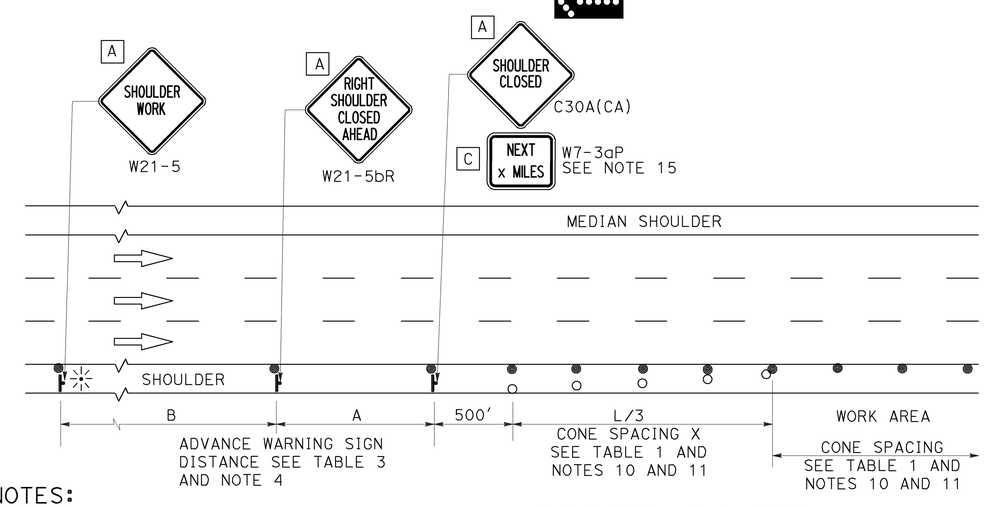

SHOULDER CLOSURE

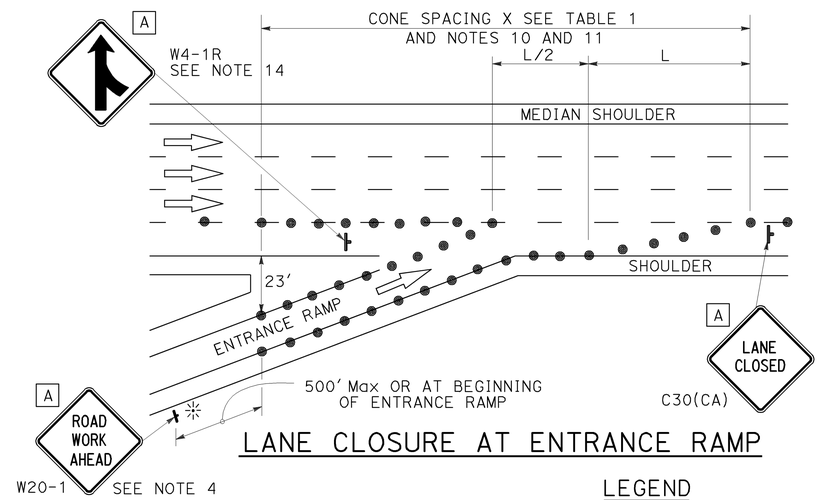

LANE CLOSURE AT ENTRANCE RAMP

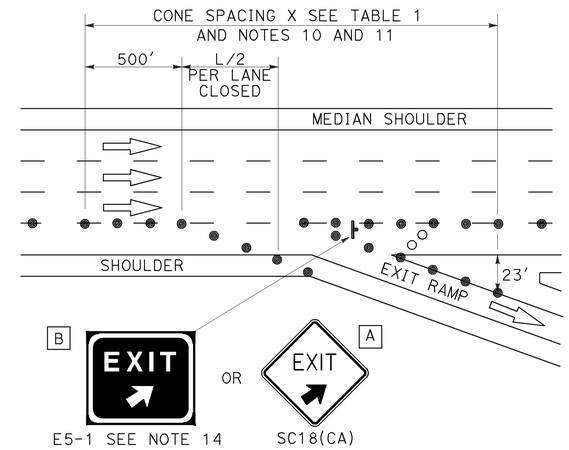

LANE CLOSURE AT EXIT RAMP

NOTES:

1. Median lane closures shall conform to the details as shown except that C20(CA)L and W4-2L signs shall be used.
2. At least one person shall be assigned to provide full time maintenance of traffic control devices for lane closures.
3. Duplicate sign installations are not required:
   a) On opposite shoulder if at least one-half of the available lanes remain open to traffic.
   b) In the median if the width of the median shoulder is less than 8' and the outside lanes are to be closed.
4. Each advance warning sign on each side of the roadway shall be equipped with at least two flags for daytime closure. Each flag shall be at least 16" x 16" in size and shall be orange or fluorescent red-orange in color. Flashing beacons shall be placed at the locations indicated for lane closure during hours of darkness.
5. A G20-2 "END ROAD WORK" sign, with minimum size of 48" x 24" as appropriate, shall be placed at the end of the lane closure unless the end of work area is obvious or ends within a larger project's limits.
6. If the W20-1 sign would follow within 2000' of a stationary W20-1 or G20-1 "ROAD WORK NEXT _____ MILES", use a C20(CA) sign for the first advance warning sign.
7. Place a C30(CA) sign every 2000' throughout length of lane closure.
8. One flashing arrow sign for each lane closed. The flashing arrow signs shall be Type I.
9. A minimum 1500' of sight distance shall be provided where possible for vehicles approaching the first flashing arrow sign. Lane closures shall not begin at top of crest vertical curve or on a horizontal curve.
10. All cones used for lane closures during the hours of darkness shall be fitted with retroreflective bands (or sleeves) as specified in the specifications.
11. Portable delineators, placed at one-half the spacing indicated for traffic cones may be used instead of cones for daytime closures only.
12. Unless otherwise specified in the special provisions, a minimum of 3 cones shall be placed transversely across each closed lane and shoulder at each location where a taper across a traffic lane ends and every 2000' as shown on the "Lane Closure" detail. Two Type II barricades may be used instead of the 3 cones. The transverse alignment of the cones or barricades on the closed shoulder may be shifted from the transverse alignment to provide access to the work.
13. Unless otherwise specified in the special provisions, the 2L tangent shown along lane lines shall be used between the L tapers required for each closed traffic lane.
14. Unless otherwise specified in the special provisions, the E5-1 or SC18(CA) and W4-1 signs shall be used as shown.
15. A W7-3aP "NEXT____MILES" plaque must be used if theshoulder closure extends beyond the distance that can be perceived by road users.

LEGEND

- TRAFFIC CONE
- TRAFFIC CONE (OPTIONAL TAPER)
- TEMPORARY TRAFFIC CONTROL SIGN
- FLASHING ARROW SIGN (FAS)
- FAS SUPPORT OR TRAILER
- PORTABLE FLASHING BEACON

SIGN PANEL SIZE (Min)

A	48" x 48"
B	72" x 60"
C	36" x 30"

STATE OF CALIFORNIA
DEPARTMENT OF TRANSPORTATION

TRAFFIC CONTROL SYSTEM FOR LANE CLOSURE ON FREEWAYS AND EXPRESSWAYS

NO SCALE

RSP T10 DATED APRIL 19, 2013 SUPERSEDES STANDARD PLAN T10 DATED MAY 20, 2011 - PAGE 237 OF THE STANDARD PLANS BOOK DATED 2010.

REVISED STANDARD PLAN RSP T10

2010 REVISED STANDARD PLAN RSP T10

12-18-12

Dist	COUNTY	ROUTE	POST MILES TOTAL PROJECT	SHEET No.	TOTAL SHEETS
09	Iny	395	45.6/50.3, 50.9/52.9	20	21

REGISTERED CIVIL ENGINEER

April 19, 2013
PLANS APPROVAL DATE

REGISTERED PROFESSIONAL ENGINEER Gurinderpal Bhullar No. C48815 Exp. 9-30-14 CIVIL STATE OF CALIFORNIA

THE STATE OF CALIFORNIA OR ITS OFFICERS OR AGENTS SHALL NOT BE RESPONSIBLE FOR THE ACCURACY OR COMPLETENESS OF SCANNED COPIES OF THIS PLAN SHEET.

TO ACCOMPANY PLANS DATED 4-22-13

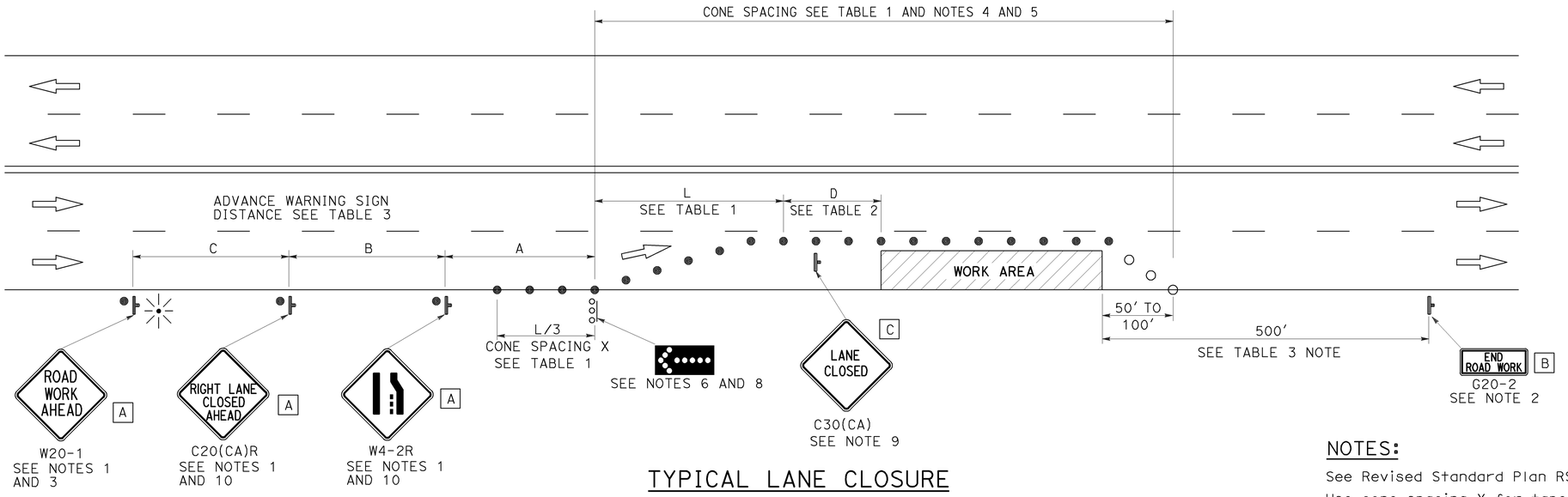

TYPICAL LANE CLOSURE

NOTES:

See Revised Standard Plan RSP T9 for tables.

Use cone spacing X for taper segment, Y for tangent segment or Z for conflict situations, as approriate, per Table 1, unless X, Y, or Z cone spacing is shown on this sheet.

Unless otherwise specified in the special provisions, all temporary warning signs shall have black legend on fluorescent orange background.

California codes are designated by (CA). Otherwise, Federal (MUTCD) codes are shown.

NOTES:

1. Each advance warning sign shall be equipped with at least two flags for daytime closure. Each flag shall be at least 16" x 16" in size and shall be orange or fluorescent red-orange in color. Flashing beacons shall be placed at the locations indicated for lane closure during hours of darkness.
2. A G20-2 "END ROAD WORK" sign, as appropriate, shall be placed at the end of the lane closure unless the end of work area is obvious, or ends within a larger project's limits.
3. If the W20-1 sign would follow within 2000' of a stationary W20-1 or G20-1 "ROAD WORK NEXT _____ MILES", use a C20(CA) sign for the first advance warning sign.
4. All cones used for lane closures during the hours of darkness shall be fitted with retroreflective bands (or sleeves) as specified in the specifications.
5. Portable delineators, placed at one-half the spacing indicated for traffic cones, may be used instead of cones for daytime closures only.
6. Flashing arrow sign shall be either Type I or Type II.
7. For approach speeds over 50 mph, use the "Traffic Control System for Lane Closure On Freeways And Expressways" plan for lane closure details and requirements.
8. A minimum 1500' of sight distance shall be provided where possible for vehicles approaching the first flashing arrow sign. Lane closures shall not begin at the top of crest vertical curve or on a horizontal curve.
9. Place a C30(CA) sign every 2000' throughout length of lane closure.
10. Median lane closures shall conform to the details as shown except that C20(CA)L and W4-2L signs shall be used.
11. At least one person shall be assigned to provide full time maintenance of traffic control devices for lane closure unless, otherwise directed by the Engineer.

LEGEND

- TRAFFIC CONE
- TRAFFIC CONE (OPTIONAL TAPER)
- TEMPORARY TRAFFIC CONTROL SIGN
- FLASHING ARROW SIGN (FAS)
- FAS SUPPORT OR TRAILER
- PORTABLE FLASHING BEACON

SIGN PANEL SIZE (Min)

A	48" x 48"
B	36" x 18"
C	30" x 30"

STATE OF CALIFORNIA
DEPARTMENT OF TRANSPORTATION

TRAFFIC CONTROL SYSTEM FOR LANE CLOSURE ON MULTILANE CONVENTIONAL HIGHWAYS

NO SCALE

RSP T11 DATED APRIL 19, 2013 SUPERSEDES STANDARD PLAN T11 DATED MAY 20, 2011 - PAGE 239 OF THE STANDARD PLANS BOOK DATED 2010.

REVISED STANDARD PLAN RSP T11

2010 REVISED STANDARD PLAN RSP T11

4-2-13

Dist	COUNTY	ROUTE	POST MILES TOTAL PROJECT	SHEET No.	TOTAL SHEETS
09	Iny	395	45.6/50.3, 50.9/52.9	21	21

REGISTERED CIVIL ENGINEER

April 19, 2013
PLANS APPROVAL DATE

REGISTERED PROFESSIONAL ENGINEER Gurinderpal Bhullar No. C48815 Exp. 9-30-14 CIVIL STATE OF CALIFORNIA

THE STATE OF CALIFORNIA OR ITS OFFICERS OR AGENTS SHALL NOT BE RESPONSIBLE FOR THE ACCURACY OR COMPLETENESS OF SCANNED COPIES OF THIS PLAN SHEET.

TO ACCOMPANY PLANS DATED 4-22-13

2010 REVISED STANDARD PLAN RSP T15

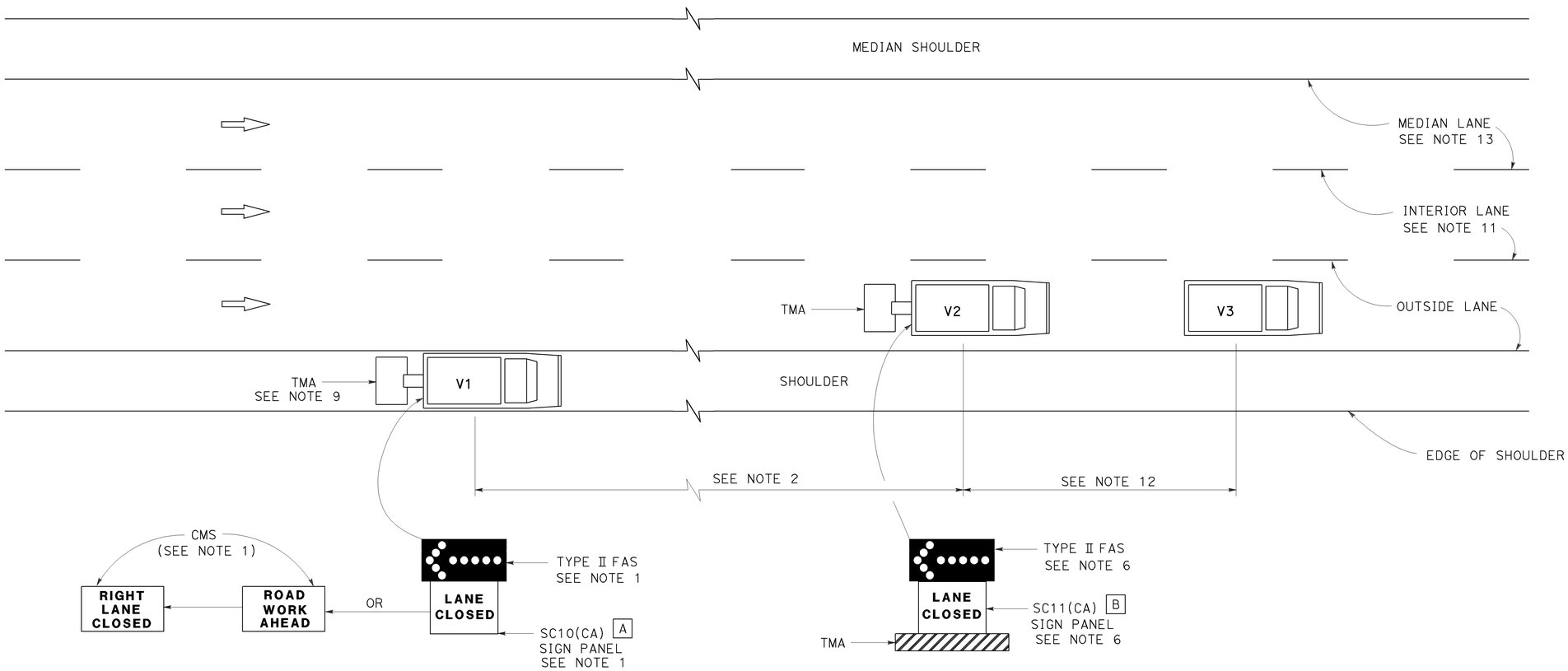

MOVING LANE CLOSURE ON MEDIAN LANE OR OUTSIDE LANE OF MULTILANE HIGHWAYS

SIGN PANEL SIZE (Min)

A 66" × 36"

B 54" × 42"

LEGEND

V1	SIGN VEHICLE
V2	SHADOW VEHICLE
V3	WORK/APPLICATION VEHICLE
	FLASHING ARROW SIGN (FAS)
CMS	CHANGEABLE MESSAGE SIGN
TMA	TRUCK-MOUNTED ATTENUATOR

NOTES:

1. Either a changeable message sign or a SC10(CA) sign panel and a Type II flashing arrow sign shall be mounted on the rear of sign vehicle V1. The changeable message sign shall be sequenced to show the "ROAD WORK AHEAD" message first, followed by the "RIGHT LANE CLOSED" message. For median lane closure, the flashing arrow symbol shall be reversed with the arrowhead on the right and the changeable message sign shall show "LEFT LANE CLOSED".
2. If traffic queues develop, sign vehicle V1 should be positioned upstream from the end of queue. Sign vehicle V1 shall be positioned where highly visible when shoulders are not available.
3. A minimum sight distance of 1500′ should be provided in advance of sign vehicle V1.
4. Sign vehicle V1 should remain at the beginning of horizontal or vertical curves until the other vehicles (V2 and V3) are far enough beyond the curve to resume the minimum sight distance of 1500′.
5. Vehicle-mounted sign panels shall have Type III or above retroreflective sheeting, black on white, or black on fluorescent orange, with 6" minimum series D letters per Caltrans sign specifications.
6. Shadow vehicle V2 shall be equipped with a truck-mounted attenuator. The sign panel shown and a Type II flashing arrow sign shall be mounted on the rear of shadow vehicle V2. For median lane closure the flashing arrow sign symbol shall be displayed with the arrowhead on the right.
7. All vehicles used for lane closures shall be equipped with two-way radios, and the vehicle operators shall maintain communication during the work or application operation.
8. All vehicles shall be equipped with flashing or rotating amber lights.
9. If sign vehicle V1 encroaches into the traffic lane due to insufficient shoulder width, sign vehicle V1 shall be equipped with a truck-mounted attenuator. Sign vehicle V1 shall stay as close to the edge of shoulder as practicable.
10. Where workers would be on foot in the work area, a stationary type lane closure (Revised Standard Plan T10, T11, etc., as applicable) shall be used instead of this plan.
11. For moving lane closure on interior lane of multilane highways, use Revised Standard Plan T16.
12. The spacing between work vehicle(s) and the shadow vehicles, and between each shadow vehicle should be minimized to deter road users from driving in between.
13. When the work/application vehicle V3 occupies the median lane, sign vehicle V1 should drive in the median shoulder and indicate left lane closed ahead.

STATE OF CALIFORNIA
DEPARTMENT OF TRANSPORTATION

TRAFFIC CONTROL SYSTEM FOR MOVING LANE CLOSURE ON MULTILANE HIGHWAYS

NO SCALE

RSP T15 DATED APRIL 19, 2013 SUPERSEDES STANDARD PLAN T15
DATED MAY 20, 2011 - PAGE 243 OF THE STANDARD PLANS BOOK DATED 2010.

REVISED STANDARD PLAN RSP T15

12-18-12