INDEX OF PLANS

SHEET No.	DESCRIPTION
1	TITLE AND LOCATION MAP
2	TYPICAL CROSS SECTIONS
3-4	CONSTRUCTION DETAILS
5	CONSTRUCTION AREA SIGNS
6	SUMMARY OF QUANTITIES
7-10	REVISED & NEW STANDARD PLANS

THE STANDARD PLAN LIST APPLICABLE TO THIS PROJECT IS INCLUDED IN THE NOTICE TO BIDDERS AND SPECIAL PROVISIONS BOOK.

STATE OF CALIFORNIA

DEPARTMENT OF TRANSPORTATION

PROJECT PLANS FOR CONSTRUCTION ON

STATE HIGHWAY

IN INYO COUNTY
IN DEATH VALLEY NATIONAL PARK
AT AND NEAR FURNACE CREEK
FROM 3.6 MILES EAST OF NORTH HIGHWAY
TO 0.1 MILE WEST OF BADWATER ROAD

TO BE SUPPLEMENTED BY STANDARD PLANS DATED MAY 2006

Dist	COUNTY	ROUTE	POST MILES TOTAL PROJECT	SHEET No.	TOTAL SHEETS
09	Iny	190	96.8/111.6	1	10

LOCATION MAP

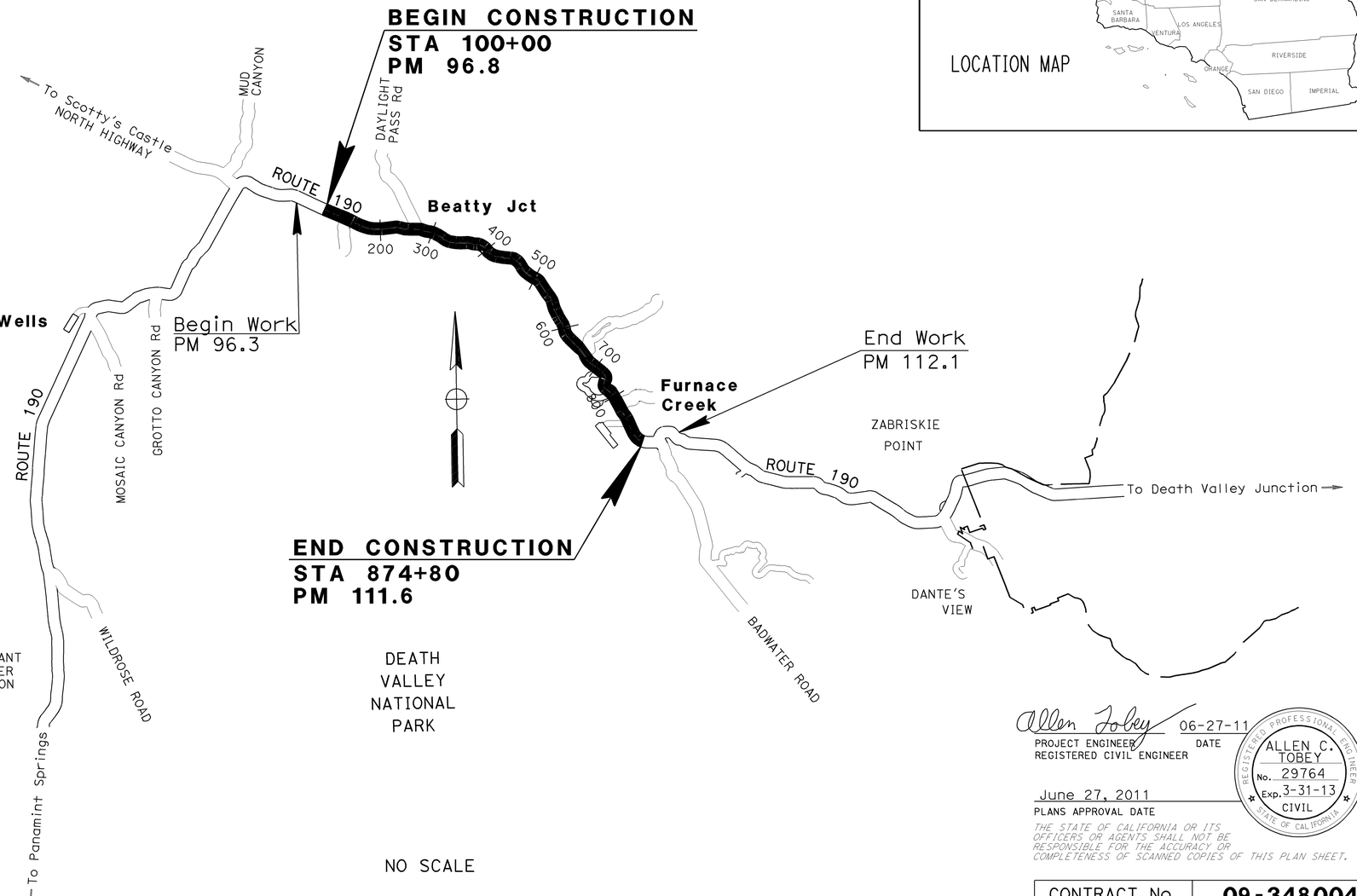

Allen Tobey 06-27-11
PROJECT ENGINEER DATE
REGISTERED CIVIL ENGINEER

REGISTERED PROFESSIONAL ENGINEER
ALLEN C. TOBEY
No. 29764
Exp. 3-31-13
CIVIL
STATE OF CALIFORNIA

June 27, 2011
PLANS APPROVAL DATE

THE STATE OF CALIFORNIA OR ITS OFFICERS OR AGENTS SHALL NOT BE RESPONSIBLE FOR THE ACCURACY OR COMPLETENESS OF SCANNED COPIES OF THIS PLAN SHEET.

PROJECT MANAGER: JOHN FOX
DESIGN ENGINEER: JOHN FOX

THE CONTRACTOR SHALL POSSESS THE CLASS (OR CLASSES) OF LICENSE AS SPECIFIED IN THE "NOTICE TO BIDDERS."

CONTRACT No.	09-348004
PROJECT ID	0900020095

LAST REVISION 06-27-11
DATE PLOTTED => 05-JUL-2011
TIME PLOTTED => 16:24

Dist	COUNTY	ROUTE	POST MILES TOTAL PROJECT	SHEET No.	TOTAL SHEETS
09	Iny	190	96.8/111.6	2	10

Allen Tobey 06-27-11
REGISTERED CIVIL ENGINEER DATE

06-27-2011
PLANS APPROVAL DATE

REGISTERED PROFESSIONAL ENGINEER
ALLEN C.TOBEY
No. 29764
Exp.03-31-13
CIVIL
STATE OF CALIFORNIA

THE STATE OF CALIFORNIA OR ITS OFFICERS OR AGENTS SHALL NOT BE RESPONSIBLE FOR THE ACCURACY OR COMPLETENESS OF SCANNED COPIES OF THIS PLAN SHEET.

NOTES:

1. DIMENSIONS OF THE PAVEMENT STRUCTURES (STRUCTURAL SECTIONS) ARE SUBJECT TO TOLERANCES SPECIFIED IN THE STANDARD SPECIFICATIONS
2. SUPERELEVATION AS SHOWN OR AS DIRECTED BY THE ENGINEER
3. FOR ACCURATE RIGHT OF WAY, CONTACT RIGHT OF WAY ENGINEERING AT THE DISTRICT OFFICE.
4. STATIONING SHOWN IS FOR CONSTRUCTION PURPOSES ONLY.

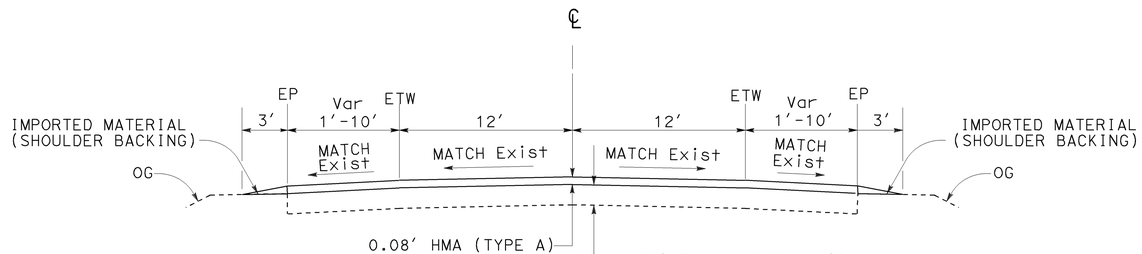

ROUTE 190

STA 100+00 TO STA 874+80
PM 96.8 TO PM 111.6

EXISTING UTILITY FACILITIES HAVE NOT BEEN PLOTTED ON THESE PLANS

TYPICAL CROSS SECTIONS

NO SCALE **X-1**

STATE OF CALIFORNIA - DEPARTMENT OF TRANSPORTATION
Caltrans® MAINTENANCE ENGINEERING

FUNCTIONAL SUPERVISOR: JOHN FOX

CALCULATED-DESIGNED BY: ALLEN TOBEY
CHECKED BY: MONTASHEEMA AFROZE

REVISED BY	DATE REVISED
MA	05-09-11
AT	06-27-11

LAST REVISION DATE PLOTTED => 05-JUL-2011
TIME PLOTTED => 16:24
06-27-11

BORDER LAST REVISED 7/2/2010
USERNAME => S123915
DGN FILE => 934800ca001.dgn
RELATIVE BORDER SCALE IS IN INCHES 0 1 2 3
UNIT 2480
PROJECT NUMBER & PHASE 09000200951

Dist	COUNTY	ROUTE	POST MILES TOTAL PROJECT	SHEET No.	TOTAL SHEETS
09	Iny	190	96.8/111.6	3	10

Allen Tobey 06-27-11
REGISTERED CIVIL ENGINEER DATE

06-27-11
PLANS APPROVAL DATE

REGISTERED PROFESSIONAL ENGINEER
ALLEN C. TOBEY
No. 29764
Exp 3-31-13
CIVIL
STATE OF CALIFORNIA

THE STATE OF CALIFORNIA OR ITS OFFICERS OR AGENTS SHALL NOT BE RESPONSIBLE FOR THE ACCURACY OR COMPLETENESS OF ELECTRONIC COPIES OF THIS PLAN SHEET.

LEGEND

- LIMITS OF COLD PLANE AC PAVEMENT (Var 0.0'-0.08'),0.08' HMA (TYPE A)
- LIMITS OF 0.08' HMA (TYPE A)
- LIMITS OF 0.25' COLD PLANE AC, 0.25' HMA (TYPE A)
- DIRECTION OF TRAVEL

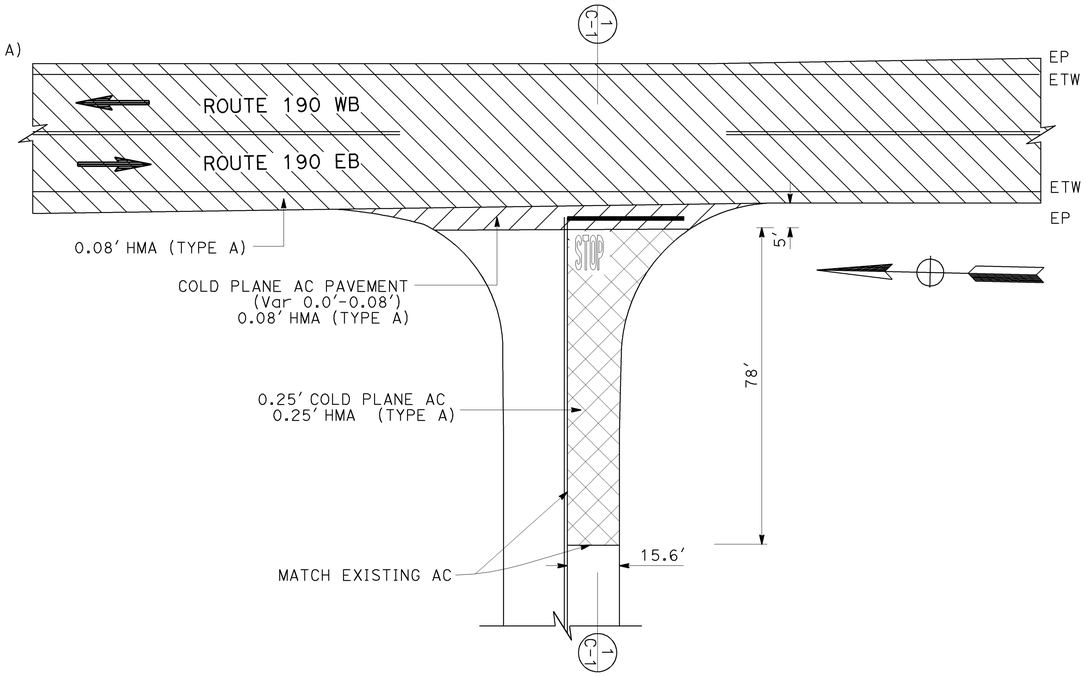

COLD PLANE ASPHALT CONCRETE
REMOVE AC AND HMA LIMITS
AT GOLF COURSE ROAD INTERSECTION

STATION 817+50

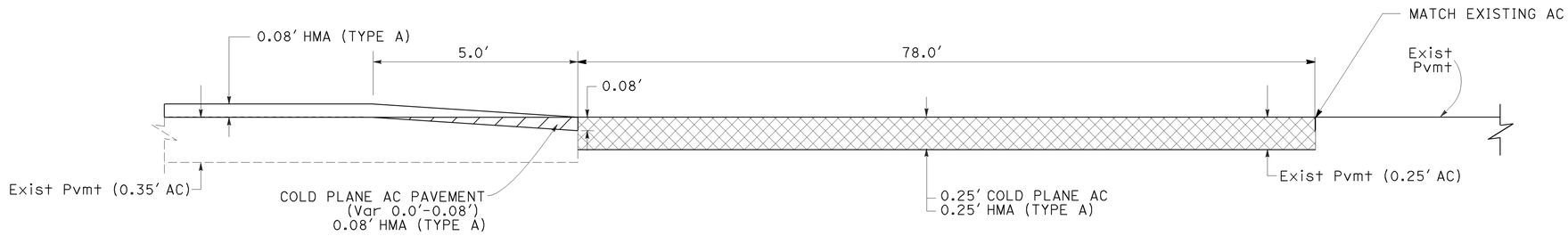

COLD PLANE AC PAVEMENT
AND HMA (TYPE A) DETAIL

1

STATION 817+50

EXISTING UTILITY FACILITIES HAVE NOT BEEN PLOTTED ON THESE PLANS

CONSTRUCTION DETAILS

NO SCALE **C-1**

STATE OF CALIFORNIA - DEPARTMENT OF TRANSPORTATION
Caltrans MAINTENANCE ENGINEERING

FUNCTIONAL SUPERVISOR: JOHN FOX
CALCULATED-DESIGNED BY: ALLEN TOBEY
CHECKED BY: MONTASHEEMA AFROZE
REVISED BY: AT
DATE REVISED: 06-27-11
MA: 06-08-11

LAST REVISION 06-27-11
DATE PLOTTED => 05-JUL-2011
TIME PLOTTED => 16:24

Dist	COUNTY	ROUTE	POST MILES TOTAL PROJECT	SHEET No.	TOTAL SHEETS
09	Iny	190	96.8/111.6	4	10

Allen Tobey 06-27-11
REGISTERED CIVIL ENGINEER DATE

06-27-11
PLANS APPROVAL DATE

REGISTERED PROFESSIONAL ENGINEER — ALLEN C. TOBEY — No. 29764 — Exp 3-31-13 — CIVIL — STATE OF CALIFORNIA

THE STATE OF CALIFORNIA OR ITS OFFICERS OR AGENTS SHALL NOT BE RESPONSIBLE FOR THE ACCURACY OR COMPLETENESS OF ELECTRONIC COPIES OF THIS PLAN SHEET.

TABLE A
COLD PLANE ASPHALT CONCRETE PAVEMENT

STATION	DESCRIPTION	LENGTH	WIDTH	DEPTH	NOTES
100+00-100+20	CONFORM GRIND	20.0′	26.5′	0.08′	BEGIN CONSTRUCTION
253+80	CONFORM GRIND	5.0′	30.0′	0.08′	DAYLIGHT PASS ROAD, L†
653+73	CONFORM GRIND	5.0′	29.0′	0.08′	COW CREEK Rd, L†
742+15	CONFORM GRIND	5.0′	200.0′	0.08′	BORAX MILL ROAD, R†
793+60	CONFORM GRIND	5.0′	73.0′	0.08′	FURNACE CREEK CAMPGROUND, R†
804+40	CONFORM GRIND	5.0′	78.0′	0.08′	VISITOR CENTER SERVICE ROAD ENTRANCE, R†
808+13	CONFORM GRIND	5.0′	36.0′	0.08′	VISITOR CENTER SERVICE ROAD EXIT, R†
812+85	CONFORM GRIND	5.0′	39.0′	0.08′	DUMP STATION ROAD EXIT,L†
813+75	CONFORM GRIND	5.0′	50.0′	0.08′	DEATH VALLEY VISITOR CENTER/AIRPORT Rd, R†
816+20	CONFORM GRIND	5.0′	62.0′	0.08′	CHEVRON GAS STATION ENTRANCE, R†
817+50	CONFORM GRIND	5.0′	131.0′	0.08′	GOLF COURSE ROAD, R†
817+50	COLD PLANE	20.0′	78.0′	0.25′	GOLF COURSE ROAD, R†
818+30	CONFORM GRIND	5.0′	36.0′	0.08′	DUMP STATION ROAD ENTRANCE,L†
828+80	CONFORM GRIND	5.0′	280.0′	0.08′	FURNACE CREEK RANCH, R†
843+10	CONFORM GRIND	5.0′	38.0′	0.08′	TEXAS SPRINGS ROAD, L†
843+10	CONFORM GRIND	5.0′	22.0′	0.08′	TUMPISA ROAD, R†
874+60-874+80	CONFORM GRIND	20.0′	23.7′	0.08′	END CONSTRUCTION

TYPICAL CONFORM COLD PLANE DETAIL

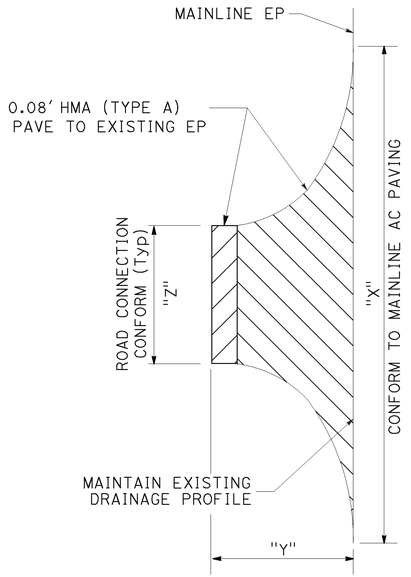

TYPICAL ROAD CONNECTION HMA PAVING LIMITS

ROAD CONNECTION PAVING LIMITS

STATION	L†	R†	"X"	"Y"	"Z"	DESCRIPTION
126+41		X	120.0′	15.0′	43.0′	SALT CREEK ROAD
253+80	X		103.0′	48.0′	30.0′	DAYLIGHT PASS ROAD/ BEATTY CUTOFF ROAD
653+73	X		208.0′	101.0′	29.0′	COW CREEK
742+15		X	200.0′	5.0′	190.0	BORAX MILL ROAD
793+60		X	144.0′	27.0′	73.0′	FURNACE CREEK CAMPGROUND
804+40		X	78.0′	5.0′	68.0′	VISITOR CENTER SERVICE ROAD, ENTRANCE
808+13		X	36.0′	5.0′	26.0′	VISITOR CENTER SERVICE ROAD, EXIT
812+85	X		50.0′	5.0′	40.0′	DUMP STATION ROAD, EXIT
813+75		X	116.0′	24.0′	39.0′	DEATH VALLEY VISITOR CENTER/ AIRPORT ROAD
816+20		X	62.0′	5.0′	52.0′	CHEVRON GAS STATION, ENTRANCE
817+50		X	71.0′	78.0′	15.6′	GOLF COURSE ROAD
818+30	X		36.0′	5.0′	26.0′	DUMP STATION ROAD, ENTRANCE
828+80		X	280.0′	5.0′	270.0′	FURNACE CREEK RANCH
843+10	X		140.0′	32.0′	38.0′	TEXAS SPRINGS ROAD
843+10		X	72.0′	25.0′	22.0′	TUMPISA ROAD

EXISTING UTILITY FACILITIES HAVE NOT BEEN PLOTTED ON THESE PLANS

CONSTRUCTION DETAILS
NO SCALE **C-2**

REVISED BY	DATE REVISED
MA	06-08-11
AT	06-27-11

ALLEN TOBEY — CALCULATED-DESIGNED BY
MONTASHEEMA AFROZE — CHECKED BY
JOHN FOX — FUNCTIONAL SUPERVISOR

STATE OF CALIFORNIA - DEPARTMENT OF TRANSPORTATION
Caltrans MAINTENANCE ENGINEERING

LAST REVISION 06-27-11 | DATE PLOTTED => 05-JUL-2011 | TIME PLOTTED => 16:24

BORDER LAST REVISED 7/2/2010 | USERNAME => S123915 | DGN FILE => 934800ga002.dgn | RELATIVE BORDER SCALE IS IN INCHES 0 1 2 3 | UNIT 2480 | PROJECT NUMBER & PHASE 09000200951

Dist	COUNTY	ROUTE	POST MILES TOTAL PROJECT	SHEET No.	TOTAL SHEETS
09	Iny	190	96.8/111.6	5	10

Allen Tobey 06-27-11
REGISTERED CIVIL ENGINEER DATE

06-27-2011
PLANS APPROVAL DATE

REGISTERED PROFESSIONAL ENGINEER
ALLEN C.TOBEY
No. 29764
Exp.03-31-13
CIVIL
STATE OF CALIFORNIA

THE STATE OF CALIFORNIA OR ITS OFFICERS OR AGENTS SHALL NOT BE RESPONSIBLE FOR THE ACCURACY OR COMPLETENESS OF SCANNED COPIES OF THIS PLAN SHEET.

NOTES:

1. FOR SIGN INSTALLATION DETAILS AND DIMENSIONS NOT SHOWN SEE STANDARD PLANS.
2. SIGNS IN CONFLICT WITH ADJACENT, ON-GOING PROJECTS SHALL BE COVERED UPON INSTALLATION AS DIRECTED BY THE ENGINEER.
3. EXACT SIGN LOCATIONS TO BE DETERMINED BY THE ENGINEER.

LEGEND:

→ - DIRECTION OF TRAVEL

STATIONARY MOUNTED CONSTRUCTION AREA SIGNS

ROUTE	PM	STATION	PLACEMENT	REMARKS
190	96.30	73+60	A	BEGIN WORK
190	97.33	126+41	D	SALT CREEK ROAD, R†
190	99.77	253+80	C	DAYLIGHT PASS Rd/ BEATTY CUTOFF, L†
190	107.41	653+73	D	COW CREEK ROAD, L†
190	108.30	707+25	D	BORAX MILL LOOP ROAD,WEST END,EXIT, R†
190	109.07	742+15	D	BORAX MILL ROAD, EAST END, R†
190	110.06	793+60	D	FURNACE CREEK CAMPGROUND, R†
190	110.44	813+75	D	DEATH VALLEY VISITOR CENTER/AIRPORT ROAD, R†
190	110.52	817+50	D	GOLF COURSE ROAD, R†
190	110.72	828+80	D	FURNACE CREEK RANCH, R†
190	110.99	843+10	B	TEXAS SPRINGS ROAD,L†, TUMPISA ROAD,R†
190	111.73	881+38	C	BADWATER ROAD, R†
190	112.10	901+20	A	END WORK

PORTABLE CHANGEABLE MESSAGE SIGNS

MESSAGE FOR 2 LANE SECTIONS

EXPECT DELAYS	REDUCE SPEED	PREPARE TO STOP
USE CAUTION		

1. PORTABLE CHANGEABLE MESSAGE SIGN LOCATIONS TO BE CONFIRMED BY THE ENGINEER BEFORE THE ACTUAL CLOSURE.
2. ALTERNATE MESSAGES MUST BE APPROVED BY THE ENGINEER.
3. MESSAGE MAY BE ALTERED BY THE ENGINEER.
4. PORTABLE CHANGEABLE MESSAGE SIGNS SHALL BE DISPLAYED DURING SWEEPING OPERATIONS AND WHEN CONSTRUCTION OPERATIONS ARE ACTIVELY IN PROGRESS UNLESS ORDERED OTHERWISE BY THE ENGINEER.

STATIONARY MOUNTED CONSTRUCTION AREA SIGNS

LAYOUT	SIGN CODE	PANEL SIZE	SIGN MESSAGE	TOTAL No. OF SIGNS	TOTAL No. OF POSTS AND SIZE
①	W20-1	36" × 36"	ROAD WORK AHEAD	13	13 - 4" × 6"
②	W20-1	48" × 48"	ROAD WORK AHEAD	2	2 - 6" × 6"
	C23B (CA)	60" × 24"	PAVEMENT MAINTENANCE	2	
③	G20-2	36" × 18"	END ROAD WORK	4	4 - 4" × 4"

MAINTAINING EXISTING TRAFFIC MANAGEMENT SYSTEM ELEMENTS DURING CONSTRUCTION

ROUTE	PM	No.	REMARKS
190	99.70	2	TRAFFIC COUNT STATION
190	99.80	2	TRAFFIC COUNT STATION
190	110.44	2	TRAFFIC COUNT STATION
TOTAL		6	

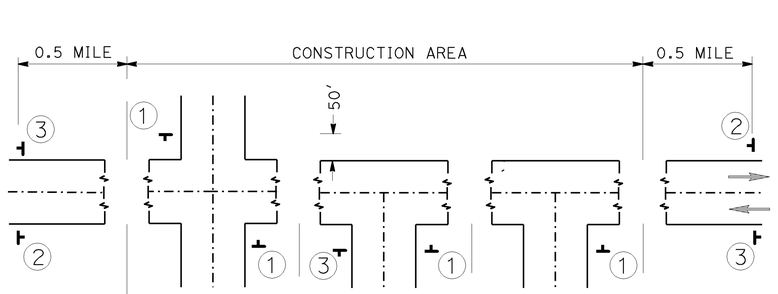

TYPICAL SIGN PLACEMENT FOR UNDIVIDED HIGHWAY

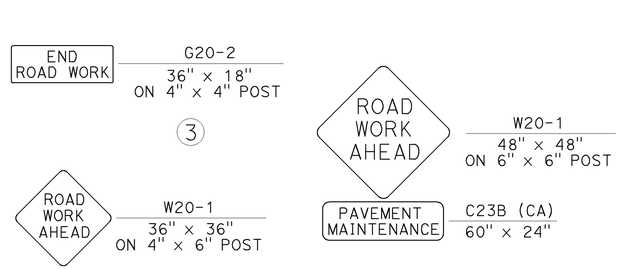

TYPICAL SIGN LAYOUT

THIS PLAN ACCURATE FOR CONSTRUCTION AREA SIGN WORK ONLY.

CONSTRUCTION AREA SIGNS
NO SCALE

CS-1

CALCULATED-DESIGNED BY	MONTASHEEMA AFROZE	
CHECKED BY	ALLEN TOBEY	
FUNCTIONAL SUPERVISOR	JOHN FOX	
REVISED BY	MA	AT
DATE REVISED	06-08-11	06-27-11

STATE OF CALIFORNIA - DEPARTMENT OF TRANSPORTATION
Caltrans® MAINTENANCE ENGINEERING

LAST REVISION 06-27-11 | DATE PLOTTED => 05-JUL-2011 | TIME PLOTTED => 16:24

BORDER LAST REVISED 7/2/2010 | USERNAME => S123915 | DGN FILE => 9348001a001.dgn | RELATIVE BORDER SCALE IS IN INCHES 0 1 2 3 | UNIT 2480 | PROJECT NUMBER & PHASE 09000200951

NOTE:
(N) NOT A SEPARATE PAY ITEM, FOR INFORMATION ONLY.

Dist	COUNTY	ROUTE	POST MILES TOTAL PROJECT	SHEET No.	TOTAL SHEETS
09	Iny	190	96.8/111.6	6	10

Allen Tobey 06-27-11
REGISTERED CIVIL ENGINEER DATE

06-27-2011
PLANS APPROVAL DATE

REGISTERED PROFESSIONAL ENGINEER
ALLEN C.TOBEY
No. 29764
Exp.03-31-13
CIVIL
STATE OF CALIFORNIA

THE STATE OF CALIFORNIA OR ITS OFFICERS OR AGENTS SHALL NOT BE RESPONSIBLE FOR THE ACCURACY OR COMPLETENESS OF SCANNED COPIES OF THIS PLAN SHEET.

ROADWAY QUANTITIES

STATION	HOT MIX ASPHALT (TYPE A)	COLD PLANE AC PAVEMENT	IMPORTED MATERIAL (SHOULDER BACKING)	TACK COAT	SAND COVER (N)
	TON	SQYD	TON	TON	TON
100+00 - 874+80	12,876	1021	2417	58	233
TOTAL	12,876	1021	2417	58	233

PAINT TRAFFIC STRIPE (2-COAT)

STATION	DETAIL NUMBER			
	5	18	21	27B
	LF	LF	LF	LF
100+00 - 874+80	31,123	27,931	17,725	154,184
TOTAL	230,963			

REMOVE THERMOPLASTIC PAVEMENT MARKING

STATION	SQFT
100+00 - 874+80	458
TOTAL	458

THERMOPLASTIC PAVEMENT MARKINGS

STATION	LIMIT LINE		"STOP"	
	LF (N)	SQFT	EA (N)	SQFT
100+00 - 874+80	297	297	8	176
TOTAL	473			

SUMMARY OF QUANTITIES
Q-1

CALCULATED-DESIGNED BY
CHECKED BY
ALLEN TOBEY
MONTASHEEMA AFROZE
REVISED BY
DATE REVISED
AT
06-27-11
MA
06-08-11
FUNCTIONAL SUPERVISOR
JOHN FOX
STATE OF CALIFORNIA - DEPARTMENT OF TRANSPORTATION
Caltrans® MAINTENANCE ENGINEERING

LAST REVISION DATE PLOTTED => 05-JUL-2011
TIME PLOTTED => 16:24

DIST	COUNTY	ROUTE	POST MILES TOTAL PROJECT	SHEET NO.	TOTAL SHEETS
09	Iny	190	96.8/111.6	7	10

Randell D. Hiatt
REGISTERED CIVIL ENGINEER

June 6, 2008
PLANS APPROVAL DATE

Randell D. Hiatt
No. C50200
Exp. 6-30-09
CIVIL
REGISTERED PROFESSIONAL ENGINEER
STATE OF CALIFORNIA

The State of California or its officers or agents shall not be responsible for the accuracy or completeness of electronic copies of this plan sheet.

To accompany plans dated 06-27-2011

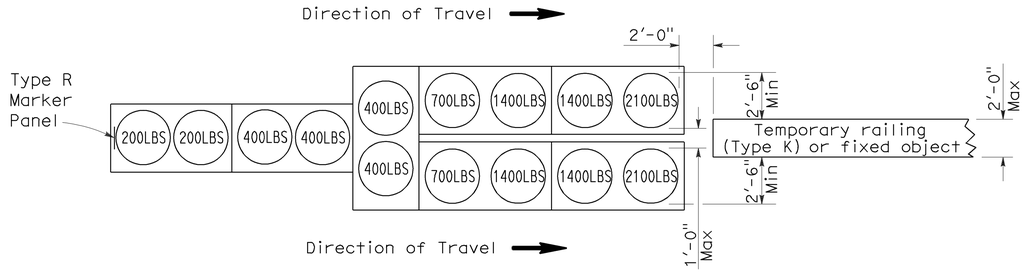

ARRAY 'TU14'

Approach speed 45 mph or more

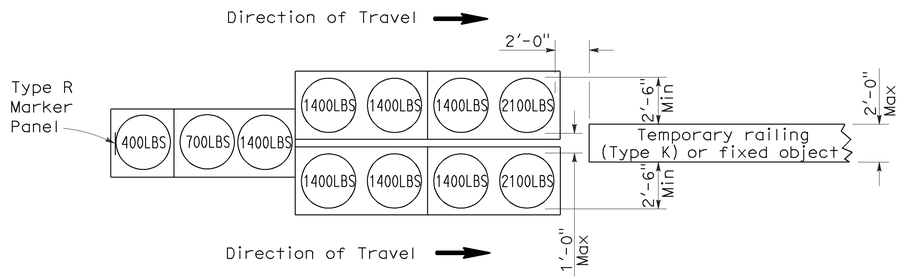

ARRAY 'TU11'

Approach speed less than 45 mph

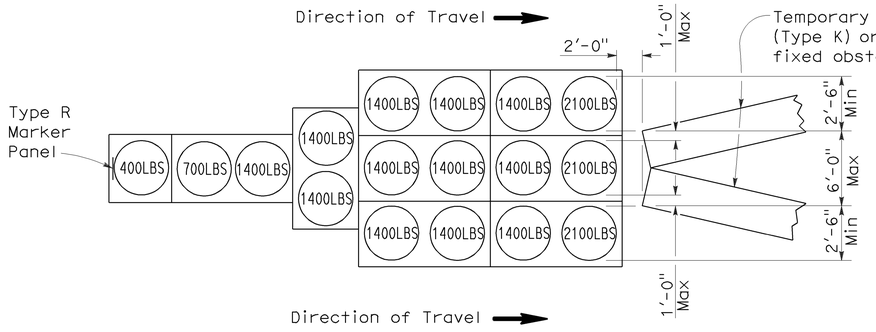

ARRAY 'TU17'

Approach speed less than 45 mph

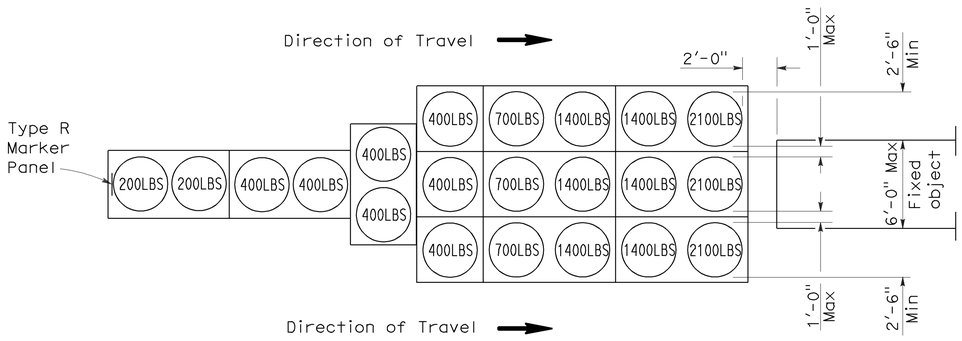

ARRAY 'TU21'

Approach speed 45 mph or more

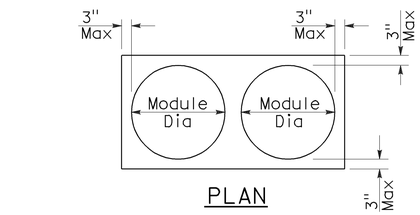

PLAN

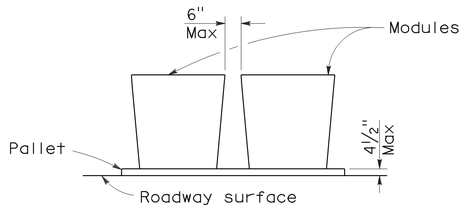

ELEVATION

CRASH CUSHION PALLET DETAIL

See Note 7

NOTES:

1. (XXX) Indicates sand filled module location and weight of sand in pounds for each module. Module spacing is based on the greater diameter of the module.
2. All sand weights are nominal.
3. Temporary crash cushion arrays shall not encroach on the traveled way.
4. Place the top of Type R marker panel 1" below the module lid.
5. Refer to Standard Plan A73B for marker details.
6. Approach speeds indicated conform to NCHRP 350 Report criteria.
7. Use of pallets is optional.

STATE OF CALIFORNIA
DEPARTMENT OF TRANSPORTATION

TEMPORARY CRASH CUSHION, SAND FILLED (UNIDIRECTIONAL)

NO SCALE

RSP T1A DATED JUNE 6, 2008 SUPERSEDES STANDARD PLAN T1A
DATED MAY 1, 2006 - PAGE 211 OF THE STANDARD PLANS BOOK DATED MAY 2006.

REVISED STANDARD PLAN RSP T1A

2006 REVISED STANDARD PLAN RSP T1A

5-15-08

DIST	COUNTY	ROUTE	POST MILES TOTAL PROJECT	SHEET NO.	TOTAL SHEETS
09	Iny	190	96.8/111.6	8	10

Randell D. Hiatt
REGISTERED CIVIL ENGINEER

June 6, 2008
PLANS APPROVAL DATE

REGISTERED PROFESSIONAL ENGINEER
Randell D. Hiatt
No. C50200
Exp. 6-30-09
CIVIL
STATE OF CALIFORNIA

The State of California or its officers or agents shall not be responsible for the accuracy or completeness of electronic copies of this plan sheet.

To accompany plans dated 06-27-2011

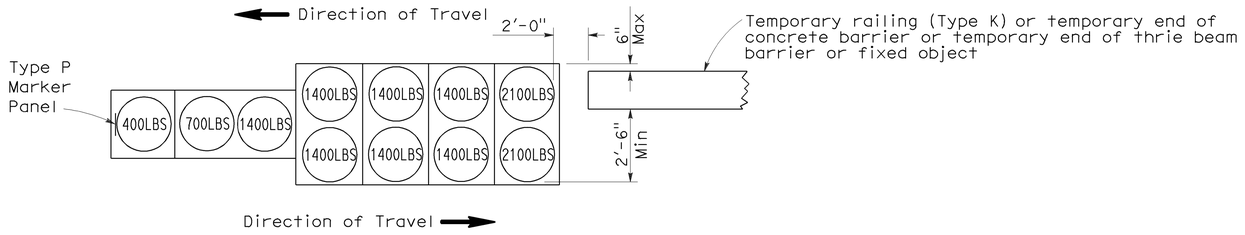

ARRAY 'TB11'

Approach speed less than 45 mph

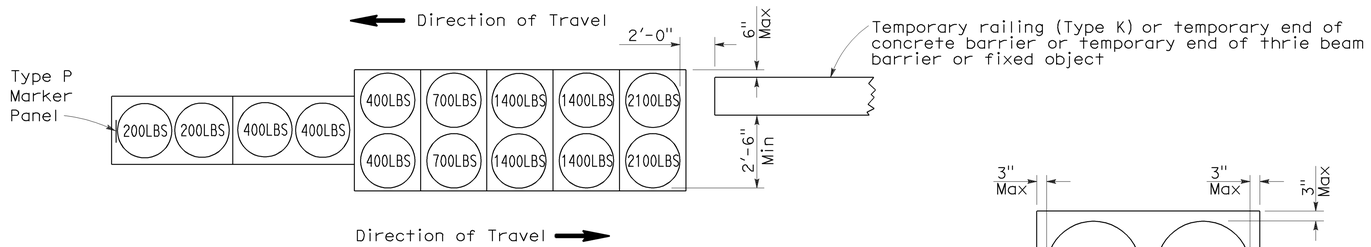

ARRAY 'TB14'

Approach speed 45 mph or more

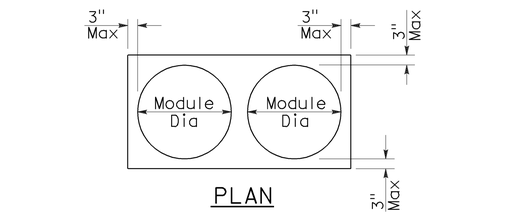

CRASH CUSHION PALLET DETAIL

See Note 7

NOTES:

1. (XXX) Indicates sand filled module location and weight of sand in pounds for each module. Module spacing is based on the greater diameter of the module.
2. All sand weights are nominal.
3. Temporary crash cushion arrays shall not encroach on the traveled way.
4. Place the Type P marker panel so that the bottom of the panel rests upon the pallet.
5. Refer to Standard Plan A73B for marker details.
6. Approach speeds indicated conform to NCHRP 350 Report criteria.
7. Use of pallets is optional.

STATE OF CALIFORNIA
DEPARTMENT OF TRANSPORTATION

TEMPORARY CRASH CUSHION, SAND FILLED (BIDIRECTIONAL)

NO SCALE

RSP T1B DATED JUNE 6, 2008 SUPERSEDES STANDARD PLAN T1B
DATED MAY 1, 2006 - PAGE 212 OF THE STANDARD PLANS BOOK DATED MAY 2006.

REVISED STANDARD PLAN RSP T1B

2006 REVISED STANDARD PLAN RSP T1B

5-15-08

DIST	COUNTY	ROUTE	POST MILES TOTAL PROJECT	SHEET NO.	TOTAL SHEETS
09	Iny	190	96.8/111.6	9	10

Randell D. Hiatt
REGISTERED CIVIL ENGINEER

June 6, 2008
PLANS APPROVAL DATE

REGISTERED PROFESSIONAL ENGINEER
Randell D. Hiatt
No. C50200
Exp. 6-30-09
CIVIL
STATE OF CALIFORNIA

The State of California or its officers or agents shall not be responsible for the accuracy or completeness of electronic copies of this plan sheet.

To accompany plans dated 06-27-2011

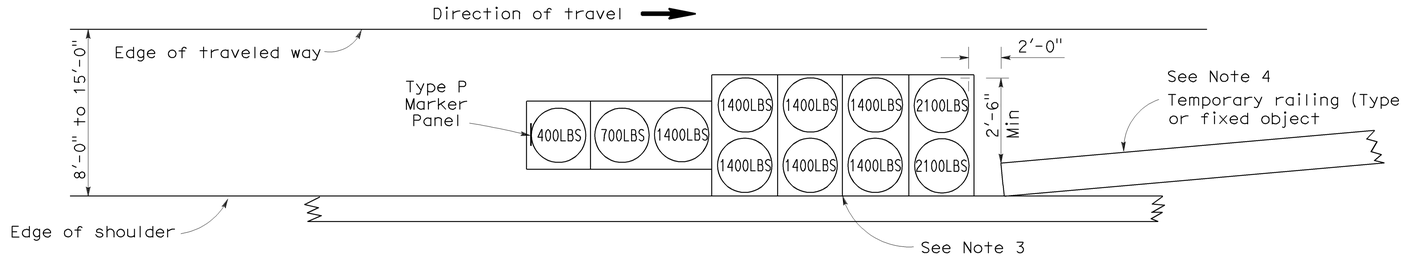

ARRAY 'TS11'

Approach speed less than 45 mph
See Note 9

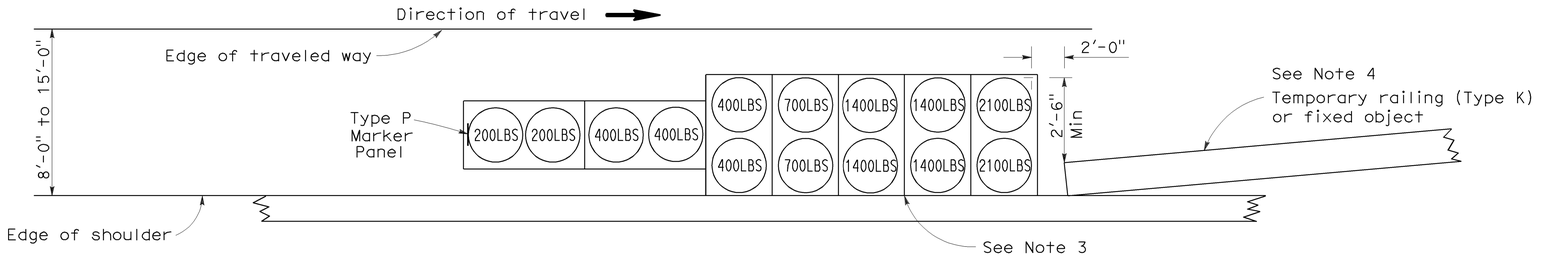

ARRAY 'TS14'

Approach speed 45 mph or more
See Note 9

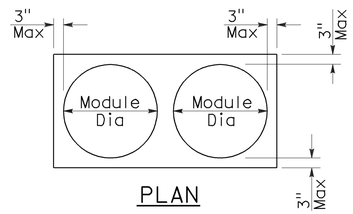

PLAN

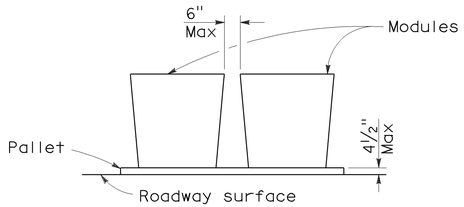

ELEVATION

CRASH CUSHION PALLET DETAIL

See Note 11

NOTES:

1. (XXX) Indicates sand filled module location and weight of sand in pounds for each module. Module spacing is based on the greater diameter of the module.
2. All sand weights are nominal.
3. The temporary crash cushion arrays shown on this plan shall be used only in locations where there will be traffic on one side of the temporary crash cushion array.
4. If the fixed object or approach end of the temporary railing is less than 15'-0" from the edge of traveled way, a temporary crash cushion is required in a construction or work zone.
5. Temporary crash cushion arrays shall not encroach on the traveled way.
6. Arrays for median shoulders shall conform to details shown on this plan for outside shoulders.
7. Place the Type P marker panel so that the bottom of the panel rests upon the pallet and faces traffic.
8. Refer to Standard Plan A73B for marker details.
9. For shoulder widths less than 8'-0", appropriate approved crash cushion protection, other than sand filled modules, shall be provided at fixed objects and at approach ends of temporary railing. The specific type of crash cushion shall be as shown on the project plans or as specified in the Special Provisions, or if not shown on the project plans or specified in the Special Provisions, shall be as approved by the Engineer.
10. Approach speeds indicated conform to NCHRP 350 Report criteria.
11. Use of pallets is optional.

STATE OF CALIFORNIA
DEPARTMENT OF TRANSPORTATION

TEMPORARY CRASH CUSHION, SAND FILLED (SHOULDER INSTALLATIONS)

NO SCALE

RSP T2 DATED JUNE 6, 2008 SUPERSEDES STANDARD PLAN T2
DATED MAY 1, 2006 - PAGE 213 OF THE STANDARD PLANS BOOK DATED MAY 2006.

REVISED STANDARD PLAN RSP T2

2006 REVISED STANDARD PLAN RSP T2

5-15-08

Dist	COUNTY	ROUTE	POST MILES TOTAL PROJECT	SHEET No.	TOTAL SHEETS
09	Iny	190	96.8/111.6	10	10

Randell D. Hiatt
REGISTERED CIVIL ENGINEER

May 20, 2011
PLANS APPROVAL DATE

REGISTERED PROFESSIONAL ENGINEER
Randell D. Hiatt
No. C50200
Exp. 6-30-11
CIVIL
STATE OF CALIFORNIA

The State of California or its officers or agents shall not be responsible for the accuracy or completeness of electronic copies of this plan sheet.

To accompany plans dated 06-27-2011

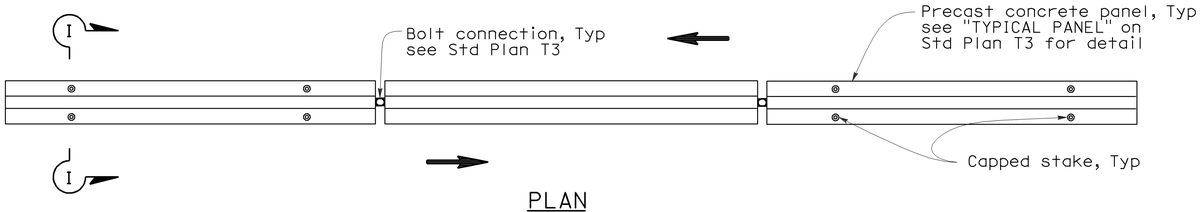

PLAN

RAILING STAKING CONFIGURATION FOR TWO-WAY TRAFFIC

See Note 1

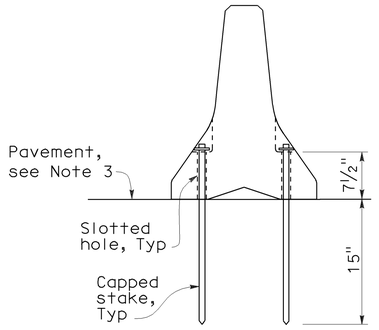

SECTION I-I

NOTES:

1. Where Type K Temporary Railing is placed as a temporary or long term barrier in two-way traffic on highways with less than 24" from the edge of traveled way, use four capped stakes per every other panel with end panels staked.
2. Where Type K Temporary Railing is placed 3" to 24" from the edge of an excavation on highways, use two capped stakes per panel along the traffic side.
3. Staked Type K Temporary Railing must be supported by at least 4" thick concrete, hot mix asphalt or existing asphalt concrete pavement.
4. The minimum yield strength for the washer must be 60,000 psi.
5. Direction of adjacent traffic indicated by ⟹.

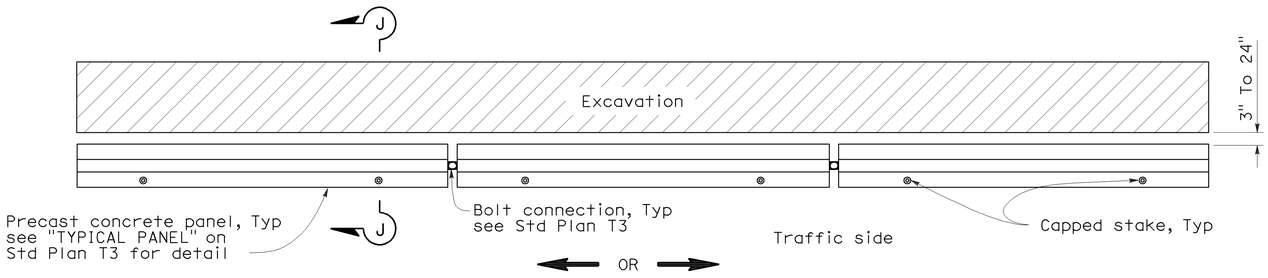

PLAN

RAILING STAKING CONFIGURATION ADJACENT TO AN EXCAVATION

See Note 2

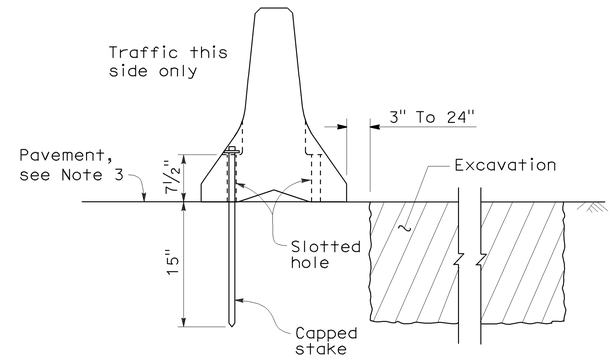

SECTION J-J

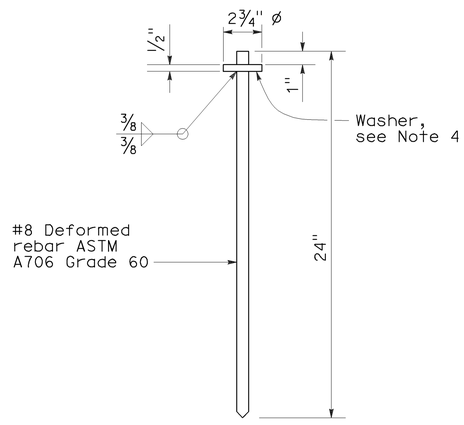

CAPPED STAKE DETAIL

STATE OF CALIFORNIA
DEPARTMENT OF TRANSPORTATION

TEMPORARY RAILING (TYPE K)

NO SCALE

NSP T3A DATED MAY 20, 2011 SUPPLEMENTS
THE STANDARD PLANS BOOK DATED MAY 2006.

NEW STANDARD PLAN NSP T3A

2006 NEW STANDARD PLAN NSP T3A

8-31-10